https://truckmanualshub.com/

BQ-TADANO

2009 BQ-TADANO LTD.

eration and Maintenance Manual

GT-550E-2 / O1-1E

Operation and Maintenance Manual

Truck Crane

Model **GT-550E-2**

Applicable Serial No. GT

CAUTION: Read this manual before operat

Save this manual for future refe

https://truckmanualshub.com/

Safety

Most accidents that occur during crane operation and maintenance are caused by failure to observe basic safety rules and precautions. Before operating your machine or performing maintenance, read and become familiar with all the safety precautions and recommendations given in this section. Remember that failure to observe even a single precaution could involve you and the people around the machine in a serious accident.

Foreseeing potential dangers is vital for preventing accidents. All personnel working with the machine, including the supervisor, crane operator and oiler, should be sensitive to potentially dangerous situations and take the necessary measures to prevent accidents.

Safety precautions and recommendations are outlined in this section and are also included in the operation and maintenance instructions given in subsequent sections. Warning labels are also provided on the machine.
The cautionary instructions in this manual are identified as “DANGER”, “WARNING”, “CAUTION” or “NOTICE”. These terms are defined as follows:

⚠ DANGER

⚠ DANGER indicates an imminently hazardous situation, which, if not avoided, would result in death or serious injury.

⚠ WARNING

⚠ WARNING indicates a potentially hazardous situation, which, if not avoided, could result in death or serious injury.

⚠ CAUTION

⚠ CAUTION indicates a potentially hazardous situation, which, if not avoided, may result in a minor or moderate injury.

[NOTICE]
◆NOTICE indicates an important operational or maintenance procedure or condition, which, if not strictly observed, can result in damage to machine components or deteriorated machine performance.

It is virtually impossible to anticipate every situation that might present a hazard. The safety precautions given in this manual and on the machine labels are not exhaustive.
It is important, therefore, to strictly follow the instructions in this manual and be sensitive to potential dangers in order to prevent bodily injury and damage to the machine.

Remember that your most important duty is to ensure the safety of you, your co-workers and any other people in the area.

https://truckmanualshub.com/

Safety Rules

⚠ WARNING

⚠ Use of improper or unauthorized method during operation or maintenance of this machine can be dangerous and could lead to serious injury or death. Read this manual thoroughly and be familiar with the proper operating and maintenance procedures before using the machine. Do not operate the machine or perform maintenance on it until you understand the instructions in this manual.

⚠ CAUTION

⚠ "Safety Rules" section describes the general instructions about operation with a hydraulic truck crane. For more detailed instructions about your machine, see corresponding pages (white pages) of this manual.
The figures in this manual are for reference showing the important points. They may be different from an actual machine.

Before Operation ····· A-2
Rules for Operation (Setting Outriggers) ····· A-7
Rules for Operation (General) ····· A-8
Rules for Operation (Weather) ····· A-17
Rules for Operation (Power Lines, Radio Waves) ····· A-18
Rules for Operation (Special Operation) ····· A-20
After Operation ····· A-20
Rules for Road Travel ····· A-21
Rules for Inspection and Maintenance ····· A-22

Before Operation

⚠ Qualifications of the Operator

The operator must be fully trained and qualified.
The operator must be fully familiar with on-site safety rules, and national and local crane operation regulations.

⚠ Study the Operation and Maintenance Manual

Improper operation, inspection or maintenance can damage the machine or cause injury or death.
Study the manual carefully. Become familiar with the proper procedures for operation, inspection and maintenance.
Keep the Operation and Maintenance Manual in the crane operator's cab so that it is always readily accessible.

⚠ Follow All Instructions and Warnings

The Operation and Maintenance Manual and the warning labels on the machine contain instructions and must be followed to ensure safe operation.
Read and understand all DANGER, WARNING and CAUTION labels. Neglecting these instructions and warnings can result in injury or death.
If the manual is lost or any labels (decals) become illegible, order replacements from the nearest authorized TADANO distributor or dealer.

https://truckmanualshub.com/

⚠Always Maintain Labels

The warning labels on various parts of the machine provide important instructions for safe operation. Always keep the labels (decals) clean and visible. Should labels become lost or damaged, order replacements from the nearest authorized TADANO distributor or dealer.

⚠Wear Proper Clothing

Sloppy clothing may result in sleeves or cuffs being caught and then cause an accident.

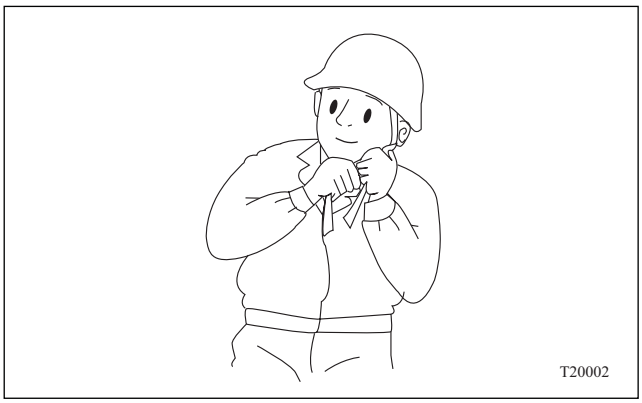

⚠Wear Approved Protective Gear

To ensure safety, always wear a hard hat and safety shoes. Also protective goggles, dust mask, earplugs, work gloves, safety belt, etc. must be worn as the situation requires. Check that all protective gear is in good condition before wearing it.

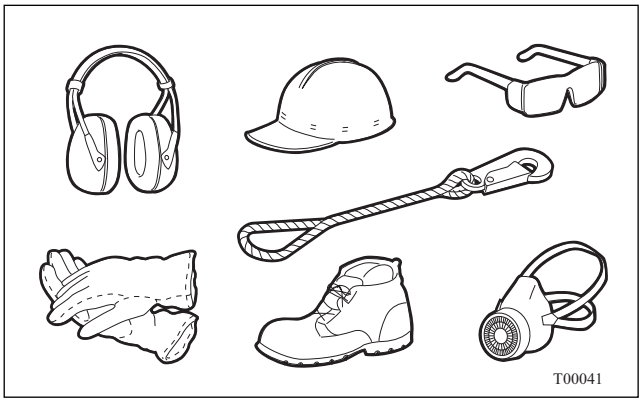

⚠Avoid Overwork. Never Operate under the Influence of Alcohol or Drugs

If the operator is tired, lacking in sleep, or under the influence of medication or alcohol, the probability of an accident event is greatly increased since attentiveness and judgment are impaired. Maintain proper physical fitness for crane operation.

⚠Keep All Footings and Shoes Clean

Oil, water or mud on soles of shoes, steps or decks can cause slip off and fall mishaps or cause accidental release of a control pedal. Always remove oil, mud, water or snow before operation and keep shoes and floor of the operator's cab clean.
Do not leave any parts or tools on the operator's cab floor or passageway.

⚠Safely Climbing onto and Descending from the Machine

Do not jump onto or off the machine.
Do not climb onto or descend from the machine with objects in hand.
Only climb onto or descend from the machine while it is completely at standstill. Use the handrails and steps, always support your hands and feet firmly (three point support); that is, one hand-two feet or two hands-one foot.
Never use the steering wheel or control levers as handrails.

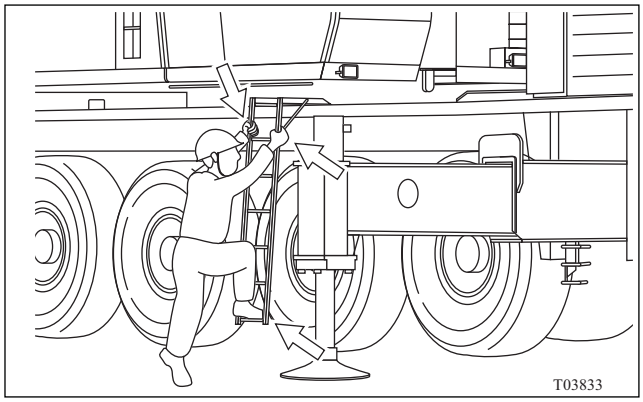

https://truckmanualshub.com/

⚠Correctly Position the Seat

Incorrect positioning of the operator's seat can result in mistakes or fatigue, possibly leading to an accident.
Before operating the machine, correctly position the seat so that the pedals and levers can be manipulated correctly.

⚠Maintain Good Visibility

Fouled window panels, lights or rearview mirrors can limit the operator's visibility, impairing safe operation. Always keep the window panels and light lenses clean.
Position mirrors correctly as required by job conditions.

⚠Perform Pre-Operation Inspection

Neglecting routine inspections and maintenance can shorten service life of the machine or even result in an accident.
Before starting operation (and before taking over a shift), perform the pre-operation inspection on the carrier and the upper structure to ensure that the machine is in proper condition and free from any problems.
Should any problem be found, report it to the responsible person, remedy it, and only then start operation.

⚠Do Not Operate a Machine Being Inspected or Serviced

Operating the machine while it is undergoing inspection or maintenance work can cause damage or an accident.
Post a "DO NOT OPERATE" sign on the operator's cab door or any control lever. Do not attempt to operate the machine until the sign is removed by maintenance personnel.

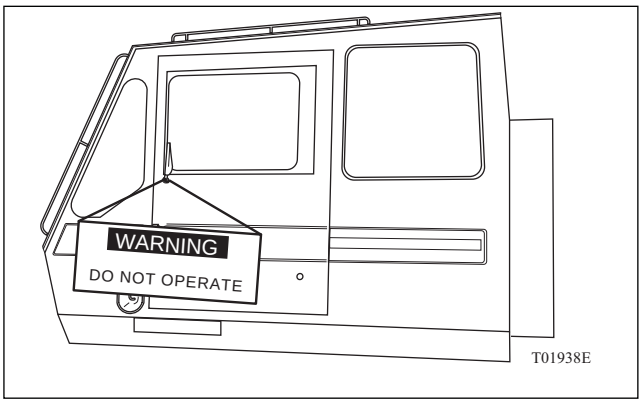

⚠Check the Position of Controls before Starting the Engine

If any control lever is in a position other than "neutral", the machine may initiate some mechanical or hydraulic function as soon as the engine is turned over. This situation is very dangerous. Start the engine only when completely sure that all controls are in the proper neutral or inactive position.

⚠Make Sure Work Area Is Safe before Starting the Engine

Starting the engine without performing a thorough safety check of the work area may cause damage to the machine or injury or death.
Make sure there are no personnel or obstacles underneath or around the machine.
Before starting the engine, sound the horn to warn any nearby personnel.

https://truckmanualshub.com/

⚠Start the Engine from the Operator's Cab Only

If the engine is started from any location other than the crane operator's cab, it can become impossible to avoid a dangerous hazard if some machine action is initiated when the engine turns over.
Start the engine only from the operator's seat.

⚠Inspection after Starting the Engine

Failure to perform a basic inspection after starting the engine can result in not detecting fault or abnormality with the machine.
Inspect the machine in a safe location that is free from obstacles and people other than maintenance personnel.
Allow the engine to warm up after it is started while the instrument readings and checking the machine components. Once the engine is properly warmed up, make a safety check of the work area, and run the machine without a load to check out condition of the controls, machine elements and safety devices.

⚠Warm Up the Machine

Failure to properly warm-up the engine and various other machine components can result in decrease in service life of the machine or malfunctions. In winter, run the engine for at least five minutes for proper warm-up.
Then, run the engine at low speed without a load to warm up the hydraulic oil and other machine components.

⚠Night Operation

Operation in the dark makes it difficult to ensure good footing, and to locate nearby persons or obstacles, increasing the probability of an accident.
When operating at night, turn on all working lamps.
Provide ancillary portable lighting equipment to illuminate the work area.

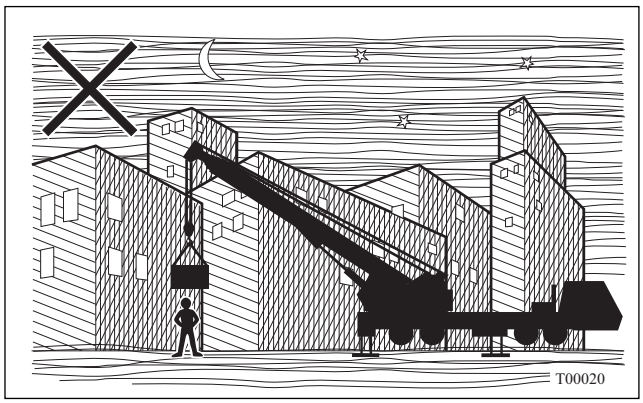

⚠Keep the Engine Clean

Dead leaves, paper dust and oil stains on and around the engine can catch fire. Remove all such debris before commencing operation.

⚠Keep Unauthorized Personnel Away from the Work Area

Unauthorized personnel or vehicles in the work area can result in collision accidents, injury or death.
Before operation, make sure there are no unauthorized personnel or obstacles within the work area.
If the work area is situated near heavy traffic, post a control person to prevent vehicular accidents.
Barricade the work area with appropriate means either colored tape or rope.

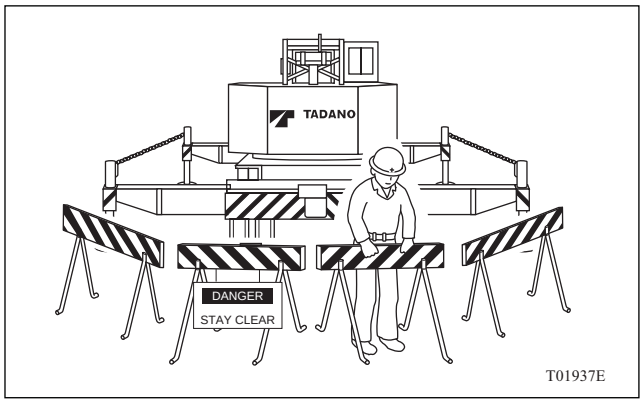

https://truckmanualshub.com/

⚠Anticipate Accident Situations

To deal with possible accidents or fires, equip the crane with a first-aid kit and fire extinguisher. Be aware of the locations of these safety items, and learn how to use them properly.
An emergency contact person and emergency liaison plan should be carefully prepared, and all personnel concerned must be made aware of the details.

⚠Observe Work-site Rules

Neglecting work-site rules can result in accidents.
To ensure safe operation, observe all work-site rules covering prohibited practices, precautions and correct procedures.

⚠Post a Signal Person

Assign a signal person for all crane operations as necessary and always follow instructions especially when:

- **Working near power lines.**
- **The load is hidden from the crane operator's view.**
- **Moving the carrier along narrow roads or when the operator's vision is obscured.**

The signal person and the operator should communicate with each other using mobile transceiver phones.

⚠Hold Work Site Meetings with Concerned All Personnel

Lack of sufficient communications with concerned personnel can result in accidents.
Before starting the job, set up a liaison meeting with the site supervisor, rigging personnel, signal person, etc., to agree on the following details:

- **Mass of load, lifting height (per rated lifting capacity table), locations of loading and unloading, work area of the machine, craning procedures, rigging methods, etc.**
- **Conditions of ground where crane is set as well as whether city-water and gas pipings are buried.**
- **Overturning prevention by use of block plates and outriggers.**
- **Mutually agreed upon and OSHA approved signal conventions between rigging personnel and signal person.**
- **Designation of off-limit areas, provision of barricade.**
- **Work stations of all relevant workers.**
- **Emergency liaison plan and emergency contact person, as well as the safety/health organization.**

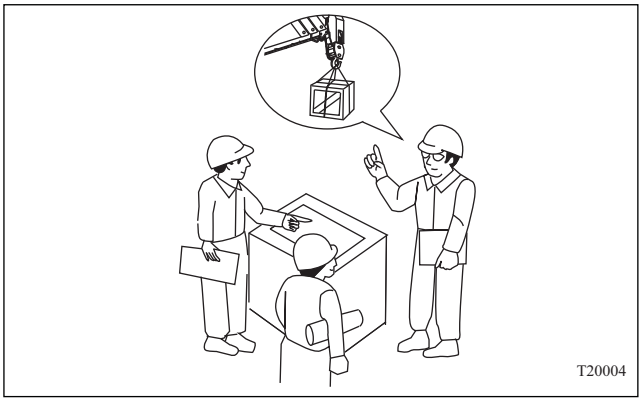

https://truckmanualshub.com/

⚠ Always Study Work-site Conditions Carefully

Pay due attention to surrounding conditions.
Before starting the job, inspect the work area, check routes to the work area, and monitor the presence of any obstacles and locations of other machinery.
Note changes in the surroundings or site conditions as crane operations are carried out.

⚠ Multi-Crane Operation

In lift situations involving the coordination of two or more cranes, establish an agreed system for communications and assign a signal person. The crane operators must proceed cautiously, strictly observing all instructions of the signal person.

Rules for Operation (Setting Outriggers)

⚠ Set the Crane on Firm Level Ground

The machine should not be located on soft ground, which can lead to sinking, sliding or overturning, nor on the edge of a pit, bank or slope.
If the ground conditions are doubtful, use blocks or steel plates of sufficient strength and size below the outrigger floats to disperse the load.

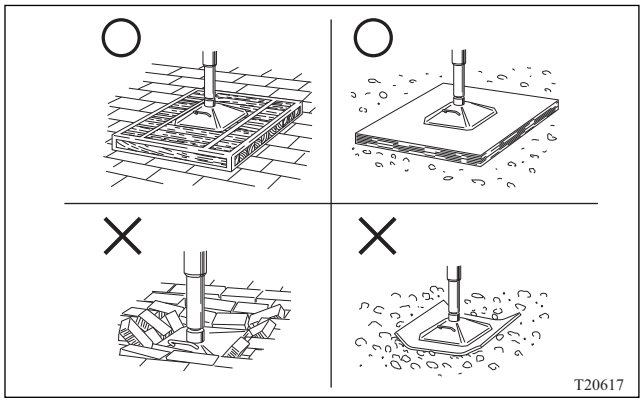

⚠ Set the Crane Level

If the crane is tilted, and the load is swung over the side, the load radius will increase, and the machine can overturn.
When setting the outriggers, level the machine carefully using a level.

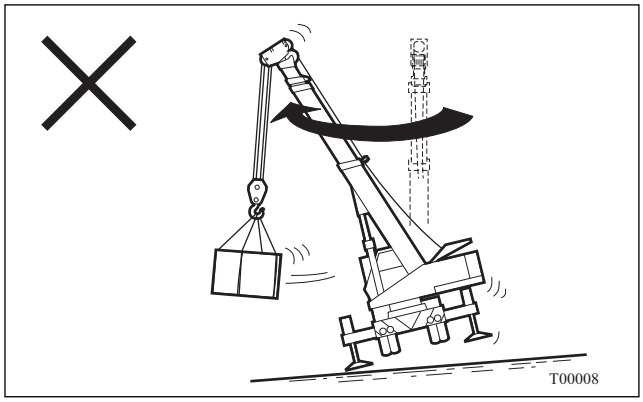

https://truckmanualshub.com/

⚠Fully Extend the Outriggers

If the outriggers are not extended correctly, the crane may become unstable, causing the crane to overturn.

As a general rule, always extend the outriggers fully, even if the crane is rated for operation with the outriggers at middle or minimum extension. If it is absolutely necessary to use the outriggers at middle or minimum extension, make sure the machine is within the rated limits.

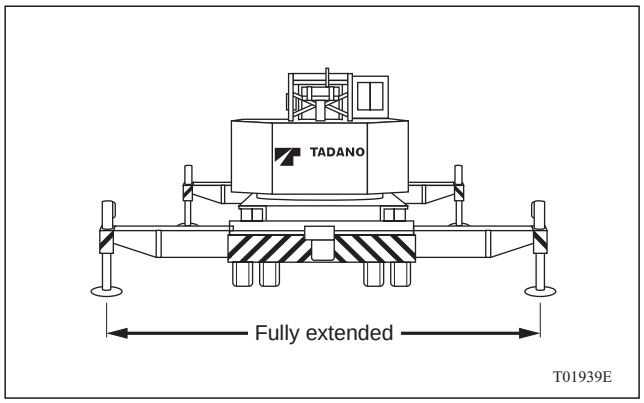

⚠Check the Outrigger Setting

Incorrect setting of the outriggers can decrease the load lifting capacity of the machine and result in overturning. To avoid crane instability, make sure:

- **The machine is absolutely level.**
- **All outrigger floats are stable and set firmly on the ground or blocks.**
- **All tires are clear of the ground.**
- **The outriggers are secured with lock pins (if lock pins are available).**

Rules for Operation (General)

⚠Observe Working Conditions

Operating the crane under conditions (outrigger beam length, boom length, load radius, etc.) other than specified in the rated lifting capacity table can cause overturn even when not lifting a load.

Follow all instructions in the rated lifting capacity table.

⚠Do not Exceed Rated Lifting Capacity

Exceeding the rated lifting capacity will overload the machine. Damage or overturning can result from this practice.

Check the rated lifting capacity table before operating to ensure that the lift is safe. Load lifting capacity of the crane varies depending on boom length and load radius. Never exceed the lifting capacity in the table.

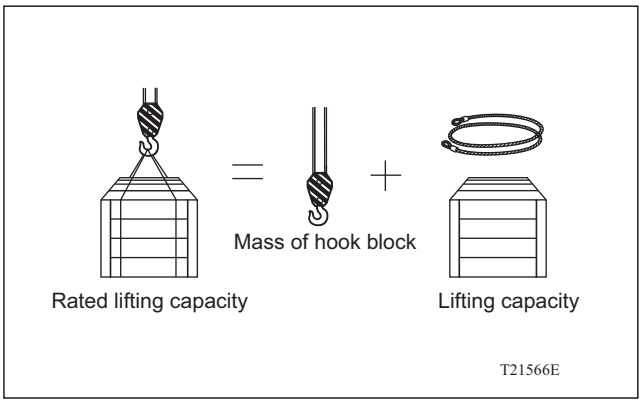

⚠Use Safety Devices Correctly

Improper use of safety devices including the overload cutout can lead to damage or overturn the crane.

Use all safety devices according to instructions in the manual.

https://truckmanualshub.com/

⚠ Do Not Rely Exclusively on Safety Devices

A safety device is not a substitute for human skill and judgment.
The overload cutout, for example, does not warn the operator about conditions on the ground, effects of wind, improperly adjusted devices, load being pulled sideways, or other possibly hazardous situations.
All safety devices are merely auxiliary means to help the operator perform the task at hand. Safe crane work requires the qualities of a good operator, such as skill, experience, judgment, and safety awareness.

⚠ Do Not Deactivate Any Safety Devices

Avoid any action that impairs normal operation of the safety devices.
Intentionally deactivating any safety device may result in the inability to detect overloading or overwinding during operation, and lead to a serious accident.
Ensure that all safety devices are functioning correctly before starting any operation.

⚠ Before Lifting a Load

Make sure of the following before attempting to pick up a load:

- **The mass does not exceed the rated lifting capacity.**
- **The number of rope parts conforms to the standard in the rated lifting capacity table.**
- **A proper load handling device is used and the load is securely rigged.**
- **The hook block is located directly above the center of gravity of the load.**
- **The wire ropes runs are plumb so that the load can be lifted vertically.**
- **The safety latch on the hook is working properly.**
- **The wire rope has no entanglement or disorderly winding on the drum.**

⚠ Rig the Load Securely

Improper rigging procedure can result in the lifted load being dropped. Rig the load securely, paying special attention to the following points:

- **Know the mass, shape and center of gravity of the load, and use suitable load handling devices and rigging hardware.**
- **The load handling devices including wire ropes, chains and rigging hardware must have enough strength and be free from damage or excessive wear.**
- **Rig the load so that it is suspended at a point above its center of gravity. Otherwise, the load can overturn or come loose of the handling device when it is raised. Also, wire ropes and chains must not be crossed or twisted around each other.**
- **Do not rig the load with a single wire rope. Such rigging practice is very dangerous as the load can rotate, and untwist the wire rope, reducing its strength.**
- **When rigging a load with sharp corners, fit protective softeners at the load corners to protect the wire ropes and the load itself against damage.**

⚠ Consider Boom Deflection before Lifting the Load

When a load is lifted, the boom will deflect downward, increasing the load radius. Swaying of the load also poses a hazard to the people around the crane, and may lead to overloading.
If the load starts to sway when lifted clear of the ground, lower the load back on the ground.
When lifting a heavy load or using the extended boom, anticipate the possible increase in the boom load radius.

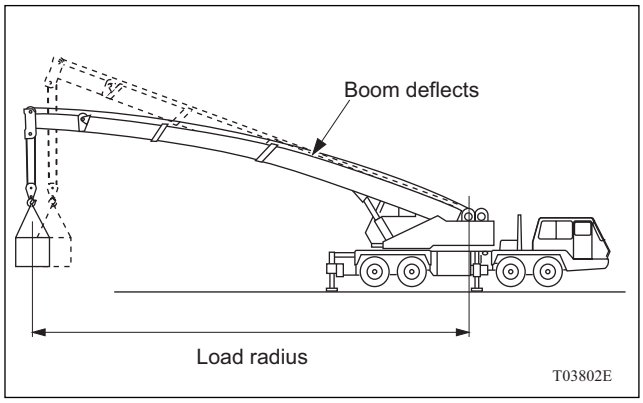

https://truckmanualshub.com/

⚠Lift Single Loads Only

Do not lift two or more loads simultaneously even if their total mass is within the specified rated lifting capacity; otherwise, the loads may lose balance. It is usually not possible to maintain complete attention to multiple loads.

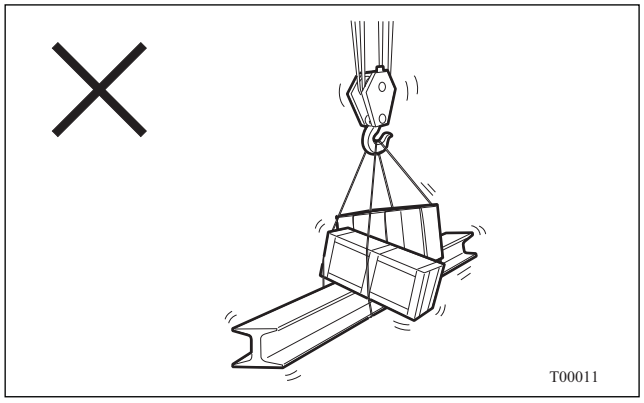

⚠Operate According to Signals

If signals are not obeyed or if signals are improperly made, accidents can occur.
Follow instructions of the signal person. An emergency shut down signal must be acknowledged whoever gives it.

⚠Operate the Crane from the Operator's Cab Only

Controlling the machine from outside the cab, through the cab window, is strictly forbidden and extremely dangerous.

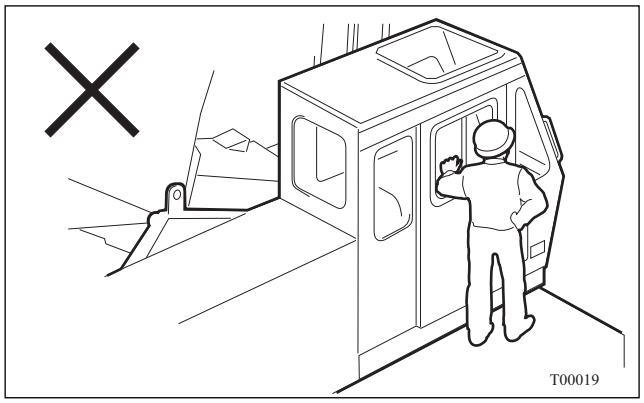

⚠Conduct a Safety Check within the Load Radius of the Crane before Starting Operation

Any person located close to the crane may become caught between machine components or between the counterweight and a fixed obstacle. Before starting any swing motion, make sure that there is no one nearby. Sound the horn to warn all immediate personnel of crane startup.
During crane operations, fence off or barricade the work area to prevent unauthorized persons from approaching the machine.

⚠Be Extremely Careful When Raising the Load Clear of the Ground

Stop lifting the load once the rigging is fully taut, check that the load is suspended at a point just above its center of gravity, and that the load is not stuck to the ground or interfering with a nearby body or structure.
Lift the load vertically. When the load clears the ground, stop lifting and suppress any swaying; then check that the rigging is secure, the load is in a stable position, and the crane is not overloaded.
Then, recommence the lift again.

⚠Do Not Lift the Load Clear of the Ground by Raising or Extending the Boom

Raise a load clear of the ground by vertical hoisting only.
Raising or extending the boom to lift a load clear of the ground will cause the load to sway, posing a hazard.
If the boom is elevated to raise a load clear of the ground, the crane will not be automatically stopped even in case of an overload. An overloaded machine can overturn or be damaged.

https://truckmanualshub.com/

⚠ Move a Lifted Load Carefully

When the crane state comes near the full rating, the AML gives an intermittent alarm. Operate the crane more carefully and slow the load-moving speed.
Take best care for over-loading in boom-lowering operation which enlarges the load radius.

⚠ Do Not Lift an Unknown Load

Attempting to uproot a garden tree or raise an object buried or driven into the ground can severely overload various components of the machine, possibly causing the machine to overturn or be damaged. Do not attempt to pull up poles or piles driven into the ground, trees or any objects buried or frozen in mud or sand.
Only lift objects free from all restraining forces.

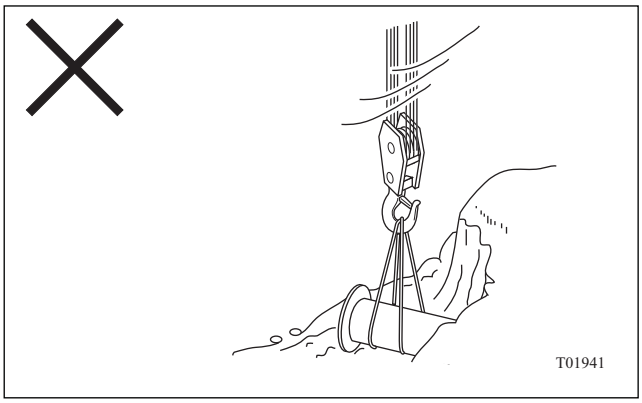

⚠ Avoid Overloading

A load below the rated lifting capacity can still cause overloading of the crane if swaying occurs.
Do not trigger overloading while telescoping out or lowering the boom. These actions increase the load radius and are destabilizing.

⚠ When Overloading Occurs

When overloading occurs, never attempt to raise or lower the boom rapidly. This situation is very dangerous as the machine can readily overturn.
Immediately set the load on the ground by carefully unwinding the wire rope off the winch drum.

⚠ Operate the Crane Carefully

Operating the controls too abruptly can result in an accident: a swaying load can hit an object or damage the machine.
Operate all control levers and pedals smoothly and in a steady manner.

⚠ Do Not Make Inadvertent Swing

When the front jack is not employed, lifting capacities in the over-front area are inferior to those in the over-rear and over-side areas. The crane may be overturned if inadvertently swung to the over-front area with a load lifted in the rear or side area.
Depending on boom length, boom angle, and outrigger extension, even the unloaded crane may overturn because of inadvertent swing.
Before operation, confirm the living capacity by the rated lifting capacity table. If there is an inferior capacity area, place signal corns or ropes for swing restriction to avoid swing into such a perilous area.

⚠ Swing the Crane Carefully

If the swing speed is too high, substantial centrifugal force is applied to a load, resulting in an increased load radius. As a result, the machine may become overloaded and overturn.
Stopping a swing operation abruptly can cause a load to sway posing a hazard to nearby personnel and possibly leading to boom failure.
Swing all loads slowly. Carefully stop any swinging. Be extremely cautious when working with an extended boom.

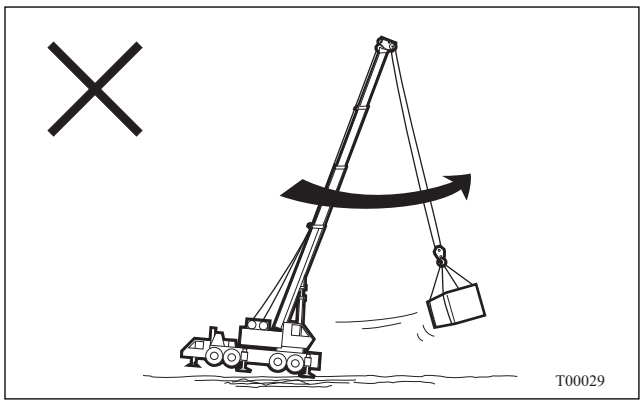

https://truckmanualshub.com/

⚠ Be Careful during Complex Operations

Actions of the crane will be slower during complex operations. When switching from a complex operation to a simple operation, action of the machine will become faster. When executing a complex operation, do not change speed immediately.
Do not attempt any complex operation until fully familiar with the crane operation.

⚠ Avoid Contact with Obstacles

While moving a load, be absolutely sure that the load or any part of the crane does not come into contact with nearby structures or other objects.
When working on a site where potential obstacles are present, post a signal person, and only move the load while following instructions.

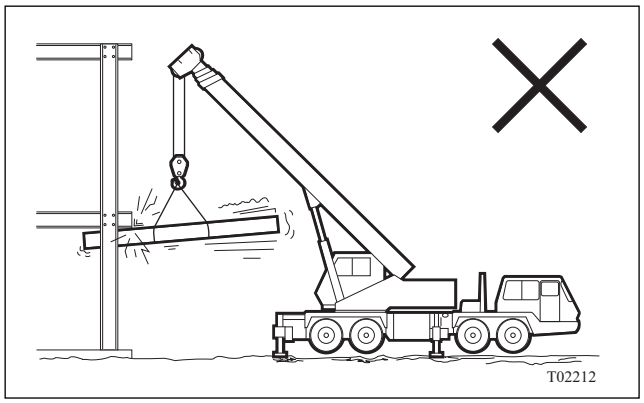

⚠ Operate the Crane with Correct Boom Position

When the boom configuration is irregular for purpose of inspection or maintenance, never attempt to lift a load.
During crane operation, check that all the boom sections are telescoping in the correct sequence. The rated lifting capacity table has been developed based on assumption that the boom sections are telescoped in the correct sequence.

⚠ Do Not Extend the Boom Excessively

An excessively extended boom decreases the rated lifting capacity and also can cause overswing of the load or lower working efficiency.
Keep the length of the boom as short as possible during operation.

⚠ Be Careful When the Boom Is at Maximum Permissible Angle

When the boom is raised to its maximum permissible angle, there exists minimum horizontal clearance between the boom and the load. A swaying load may hit the boom or jib, and cause damage. Handle the load carefully so that it does not strike the boom or jib.

⚠ Be Careful in Demolition Work

It is very dangerous to lift parts or components of a structure undergoing demolition, if the mass and center of gravity are unknown. Before starting operation, ascertain the mass and center of gravity of the loads, and establish the lift procedure to be taken.

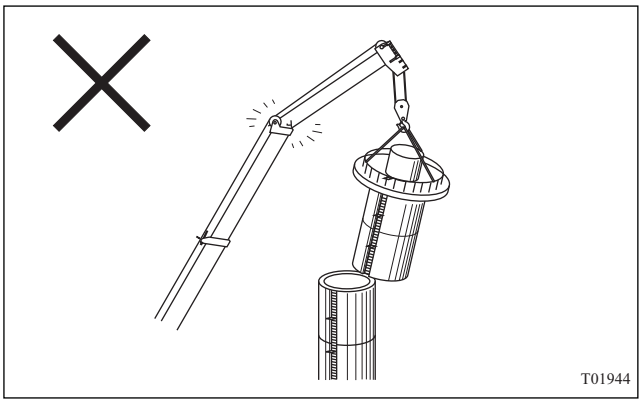

⚠ Carefully Lift a Load in Water

When handling a load submerged in water, it is important not to lift the load out “all at once” when it appears above the water’s surface. The load may be impregnated with water and heavier than expected. Allow the load to drain while raising it slowly.
A load lifted out of water, even when fully drained, weighs more than it did when submerged because of buoyancy effects. Lift the load carefully so as not to cause overloading.

https://truckmanualshub.com/

⚠ Handle Wide Loads Carefully

Be careful when lifting a wide load. The load can swing and hit a rigging person, the crane itself or a nearby structure.
Use tethers tied to either or both ends of the load to control the position and/or movement of the load.

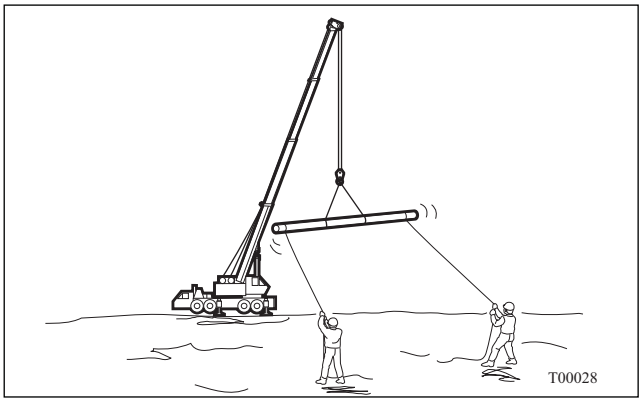

⚠ Do Not Overwind the Hook Block

When the boom is lowered or extended, the hook block is wound up.
Usually, overwinding the hook block will cause the overwind cutout device to trip and the winch automatically stops. However, if the device is damaged or the automatic stop function has been deactivated for some reason, the hook block can impact the boom head.
Always be aware of the position of the hook block. If the hook block approaches the boom head, wind off the wire rope to lower the hook block and avoid contact.

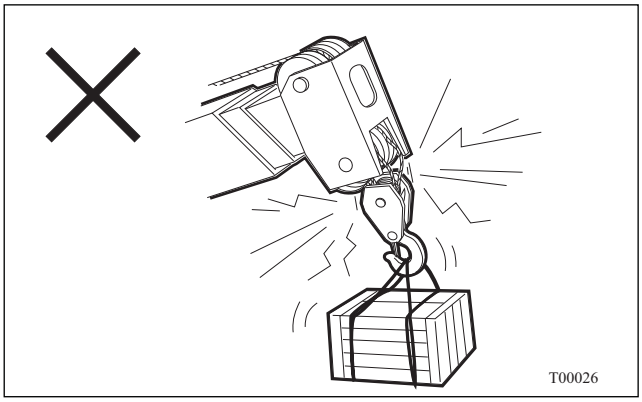

⚠ Know of the Number of Wire Rope Parts

If the number of the part lines is greater than specified for the boom length, the hoist line may become too short. As a result, the line can unwind off the winch drum causing the wire rope to be damaged or broken.
When lowering a very light load, or a bare hook block, the rope will unwind off the winch drum at a faster rate. The rope may then become improperly wound.
Use a number of part lines appropriate to the boom length.

⚠ Wire Rope Must Be Properly Wound on the Drum

Lifting a load with the wire rope improperly wound on the winch drum can lead to damage of the wire rope, not only decreasing service life of the rope but possibly breaking wires and strands which can lead to ultimate failure.
After reeving or replacement of the wire rope, make sure that the line is properly seated in the sheaves and on the winch drum.

⚠ Do Not Unwind the Wire Rope

If the entire rope is unwound from the winch drum, the frictional anchoring force will be insufficient to support a load. The rope will break or become damaged.
At least three winds of rope must always be left on the winch drum. This condition applies particularly when a load must be lowered below ground level such as a trench or excavation.

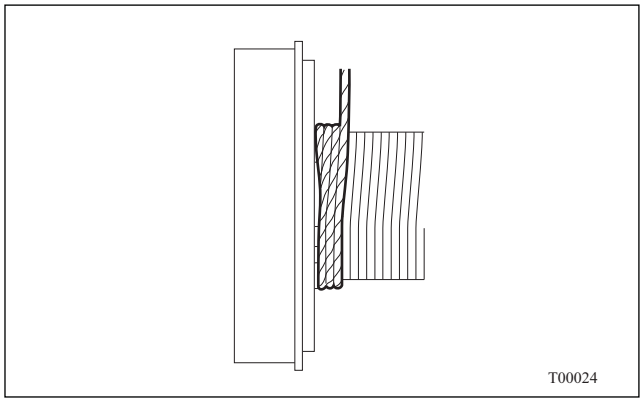

https://truckmanualshub.com/

⚠ Do Not Leave a Load Suspended

Do not leave a load in a hoisted position. Actuate the winch brake to hold the load safely. Use working procedures that minimize the duration a load is left suspended.

⚠ Use the Crane Only for Approved Applications

The crane is designed to lift a freely suspended vertical load. Never attempt to lift persons, or push/pull a load with the boom.

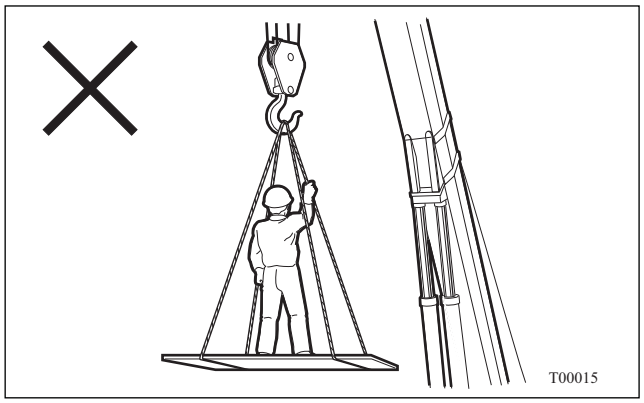

⚠ Do Not Anchor the Machine

Do not attempt to hold down the crane frame or outrigger or contrary side to the lifted load, using wire rope.
This practice might lead to crane damage or an accidents.

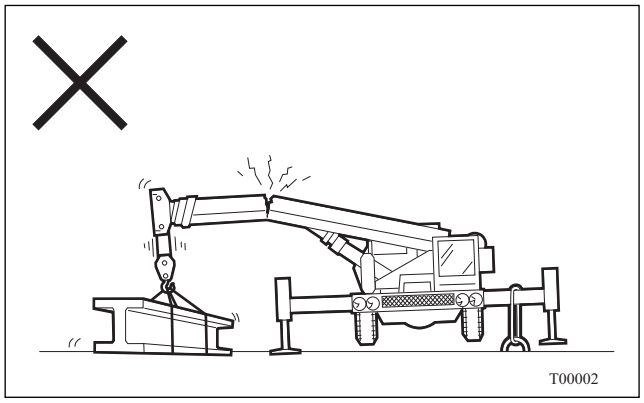

⚠ Do Not Add Counterweights

Installing a counterweight(s) other than those specified can damage the machine, or cause the machine to overturn to the rear owing to decreased rearward stability.
Never install or place a counterweight(s) or equivalent other than those specified.

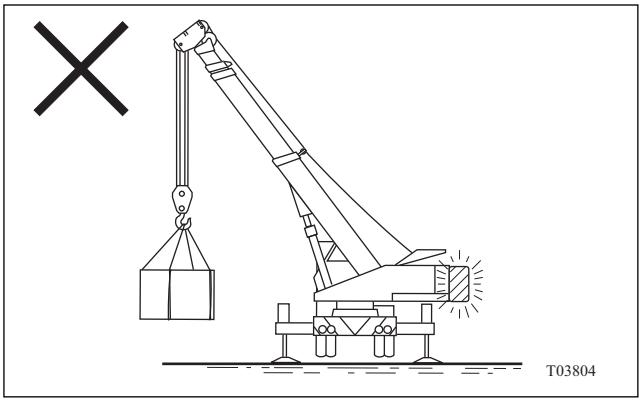

⚠ Do Not Position Any Part of Your Body Out of the Window on the Boom Side

Sticking any part of your body out from the window on the boom side can result in being caught between the moving boom and the window frame. Serious injury or death can result from this dangerous practice.
If the window is equipped with a confining guard, do not remove it.

⚠ Do Not Look Away from the Load While Operating the Crane

Looking away from the load, eating or performing any other action that can detract from awareness while operating the crane is very dangerous. During operation, concentrate all attention on the load and the signal person.

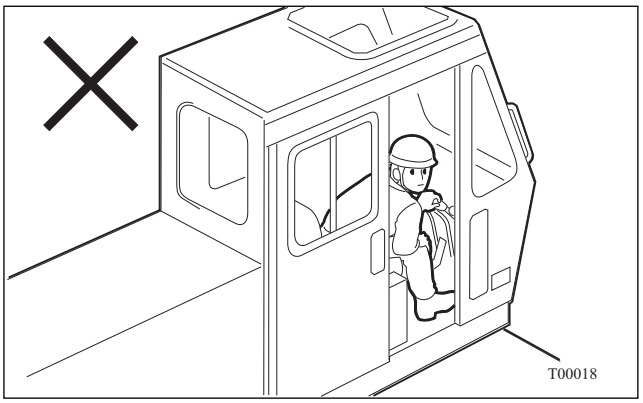

https://truckmanualshub.com/

⚠ Do Not Pass a Load over Any Person

Passing a load over a person(s) is very dangerous and must be avoided.
Do not allow anyone to enter the area below the boom or the load.

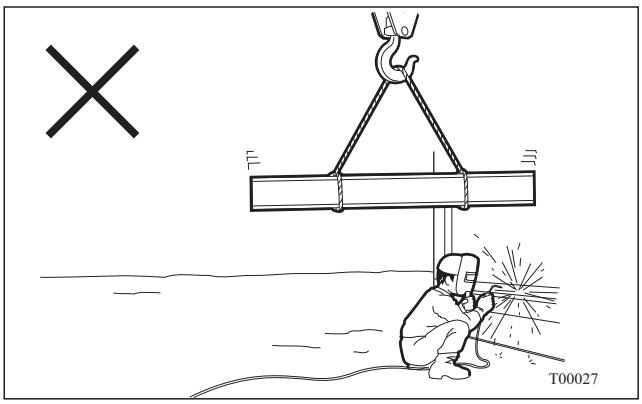

⚠ Do Not Pull a Load Sideways, Do Not Lift a Load Obliquely, Do not Drag a Load

Pulling a load sideways, lifting a load obliquely or attempting to drag a load is very dangerous. Such actions can damage the boom, jib or swing mechanism, and lead to overturning of the crane.
Do not attempt to draw in a load that is located outside the load radius. To handle such a load, move the crane to the vicinity of the load, and lift it vertically.

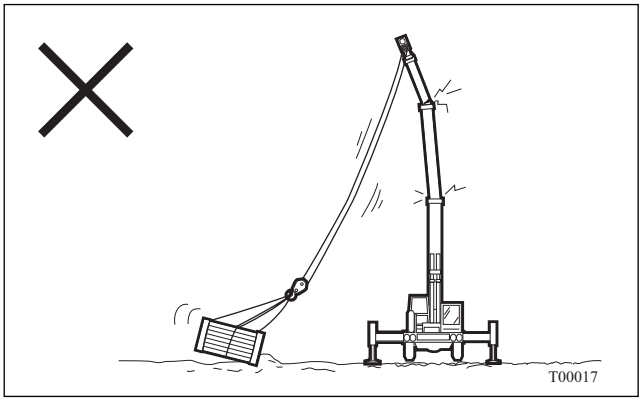

⚠ Do Not Leave the Operator's Cab While a Load Is Suspended

Before leaving the operator's cab for any reason, be sure to:

- **Lower the load to the ground.**
- **Fully retract the boom and stow it.**
- **Actuate all brakes.**
- **Place all control levers in their neutral positions.**
- **Shut off the engine, and remove the starter key.**
- **Lock the crane operator's cab door.**

⚠ Never Allow Anyone to Ride on the Machine, Except the Operator

If any persons other than the operator (in the operator's seat) are on the machine, they must be stationed inside the operator's cab.

⚠ Do Not Allow Anyone to Ride on the Machine

Persons on the machine other than the operator (in the operator's seat) may fall or be caught by a machine component or other objects. Other persons cause distraction and can disturb the attention and work of the operator.

⚠ Do Not Push or Pull an Object with the Boom

Never use the boom to push or pull an object. Do not use the boom to thrust up an object or force the boom into an object.
To move an object, use a machine designed for that purpose, such as a fork lift truck or carryall.
Do not use the crane in applications other than those specified.

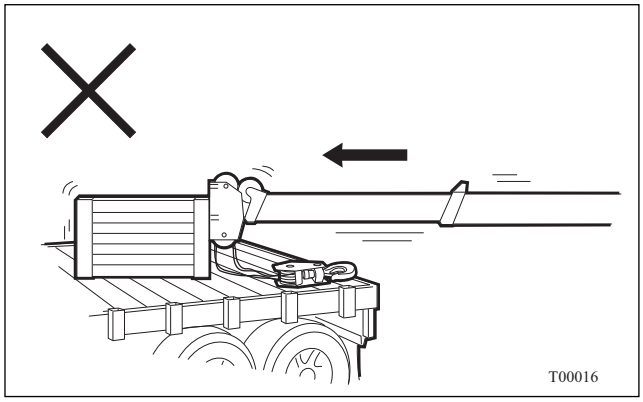

https://truckmanualshub.com/

⚠Caution while Using the Jib (1)

Never attempt to lift separate loads on both the boom and jib at the same time, or a single load using both the main and auxiliary winches.
Such practices can damage the boom or jib, or overturn the machine.

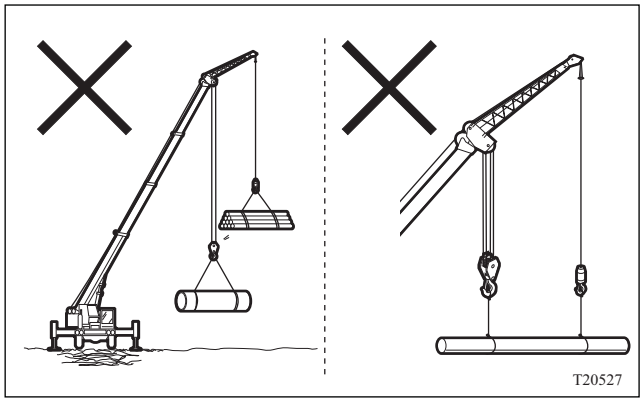

⚠Caution while Using the Jib (2)

Lifting a load on the boom with the jib mounted should be avoided, if possible.
If conditions require such a lift, observe the instructions given in the "AML" section of the manual and perform the operation with the utmost care and attention.

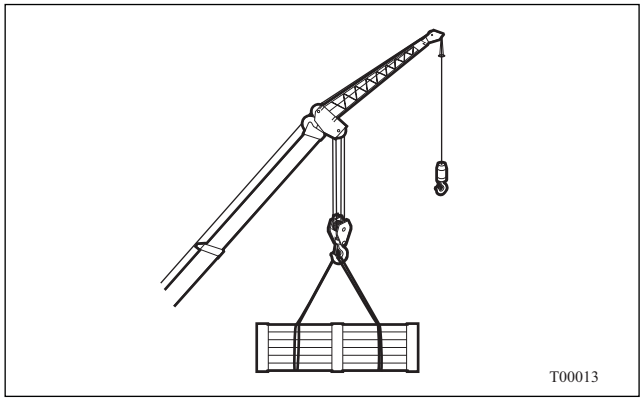

⚠Mount and Stow the Jib Correctly

Failure to observe the specified procedures for mounting and stowing the jib can damage the jib, or may cause the jib to drop.
Be sure to mount and stow the jib in the correct manner by referring to the "Jib" section in the manual.

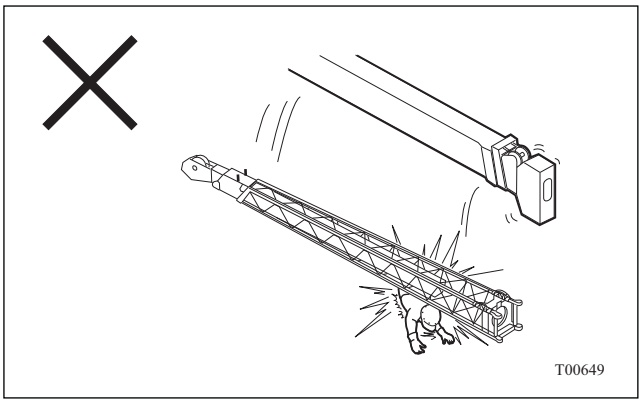

https://truckmanualshub.com/

Rules for Operation (Weather)

⚠ Stop Operation When Visibility Becomes Poor

During bad weather such as rain, snow or fog, stop operation and stow the machine. Wait until visibility improves before resuming operation.

⚠ Stop Operation When Strong Winds are Present

Under strong winds, a lifted load will start swaying, posing a danger to working personnel and nearby structures and also possibly damaging the boom or overturning the machine.

The influence of cross wind on machine stability is directly proportional to length of the boom and size of the load.

When the maximum instantaneous (i.e. gust) wind speed exceeds 10 m/sec, stop crane operation and stow the boom.

When the boom is substantially extended or a large-sized load is lifted, stop crane operation even if the wind speed is below 10 m/sec if there is any possible danger.

The table below lists wind speed ranges and the ground conditions for each range. Note that the wind speeds in the table are those at a point 10 m above open level ground.

Wind speed (m/sec)	Ground conditions
5.5– 8.0	Dust is raised, paper whirls up, and small branches sway.
8.0–10.8	Shrubs with leaves start swaying. Wave crests are apparent in ponds or swamps.
10.8–13.9	Tree branches move. Power lines whistle. It is difficult to open an umbrella.
13.9–17.2	Whole trees sway. It is difficult to walk against the wind.

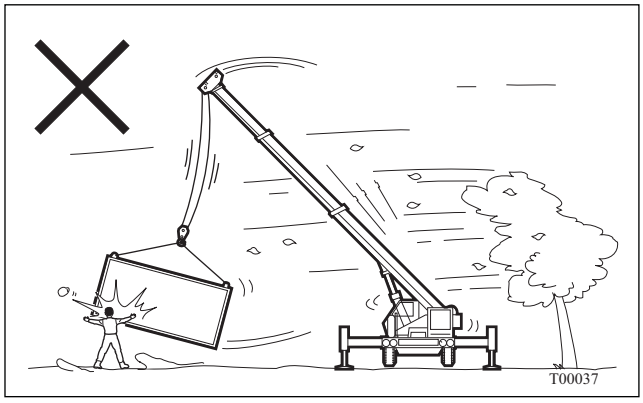

⚠ Stop All Operation If There is Any Likelihood of Lightning

Lightning can not only damage the machine but also injure the operator and working personnel. If lightning is forecast or expected, stop operation, stow the boom, and leave the machine.

If the machine is struck by lightning:

- **Stay in the cab. Do not try to move out.**
- **Warn people around not to approach the machine.**
- **Afterward, inspect the entire crane carefully and have any damaged parts repaired.**

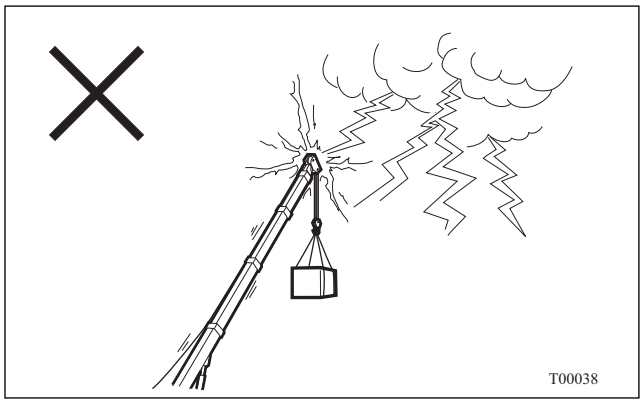

https://truckmanualshub.com/

⚠ Cautions in Cold Weather

- **Snow or ice on the crane should be removed before operation; it is especially important to eliminate any accumulation on the boom, as it could fall and injure someone when the boom is moved.**
- **Do not let bare skin come in contact with the machine's metallic parts when the temperature is below freezing. Skin can freeze to the metallic surface, if any moisture is present.**
- **Warm up the machine sufficiently. Then, check that the machine is functioning correctly. Remove ice and dry machine components as required.**
- **After starting operation, run the machine slowly until oils fully circulates through all machine components.**
- **Before lifting, make sure that the load is not frozen to the ground or any other objects. Attempting to lift a load which is frozen to the ground can result in severe overloading and is very dangerous.**
- **If possible, stow the machine indoors so that the tires are not frozen to the ground. Remove mud from the undercarriage.**
- **Maintain the battery. Use oils and fuel rated for cold weather.**

Rules for Operation (Power Lines, Radio Waves)

⚠ Prevent Electric Shock Accidents

Approaching too close to power lines can result in electric shock accidents. If conditions absolutely require operation near power lines or distribution lines, implement the following preventive measures:

- **Meet with the power company concerned to develop a relevant safety plan.**
- **Require that working personnel wear approved insulating shoes.**
- **Keep the crane and load beyond the required distance (stipulated by national or local laws and regulations) and away from power lines.**
- **Post a full-time signal person to ensure the machine or load does not approach power lines or unauthorized personnel do not enter the work area.**
- **Personnel on the ground must not directly touch the machine or load. When necessary to control the lifted load, use dry fiber ropes as tethers to prevent the load from rotating or swaying.**
- **Do not place a load below or near power lines.**
- **Operate the crane slowly with the utmost care and attention.**

(The data shown below describes the required distance recommended by Japanese power companies.)

Voltage		Required stand-off distance
Low voltage	100 V, 200 V	2 meters
High voltage	6,600 V	
Extra high voltage	22,000 V	3 meters
	66,000 V	4 meters
	154,000 V	5 meters
	187,000 V	6 meters
	275,000 V	7 meters
	500,000 V	11 meters

Should an electric shock accident occur, do not panic. Follow the instructions below:

- **Contact the power company to cut off the power and obtain instructions for emergency action.**
- **Direct all personnel around the machine to evacuate the site. Strictly control the site and keep everyone away from the electrified crane and load.**

https://truckmanualshub.com/

- **The operator should stay calm and cautiously move the crane and load away from the power lines to the required stand-off distance, and only then leave the cab.**
- **Should the machine be damaged and/or disabled, stay in the operator's seat until the power is cut off. If this is impossible, jump directly from the cab as far as possible. Do not touch any parts of the machine which may be electrified and can cause shock.**
- **After the accident, contact an authorized BQ-TADANO distributor or dealer to report the accident and discuss the measures, and inspection and repairs required.**

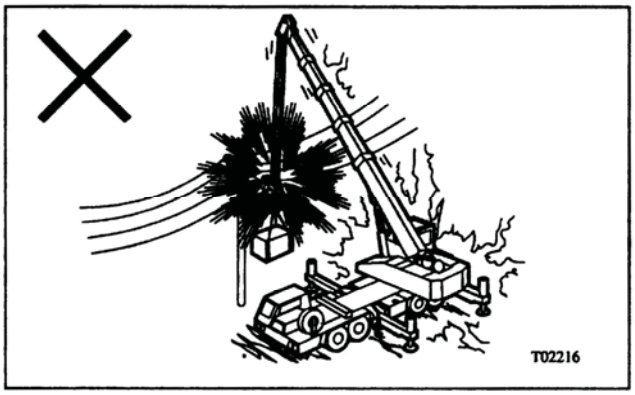

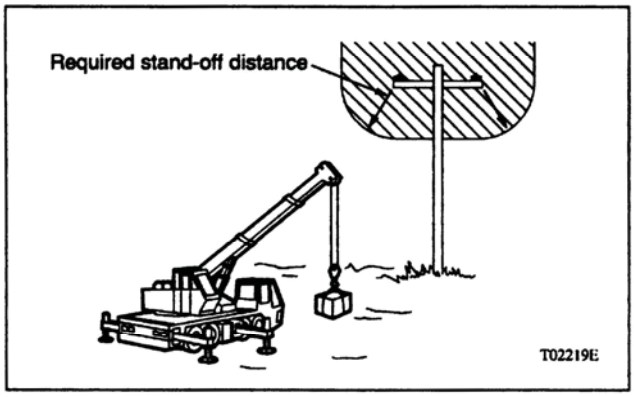

⚠ Be Careful about High-Power Radio Waves

In areas near sources of high-power radio or TV station transmitters, a current can be induced in the crane structure. Electrified crane components can then result. Also, electronic devices such as the overload cutout may be damaged.
If necessary, ground the hook block to discharge any induced voltage and only then start rigging.

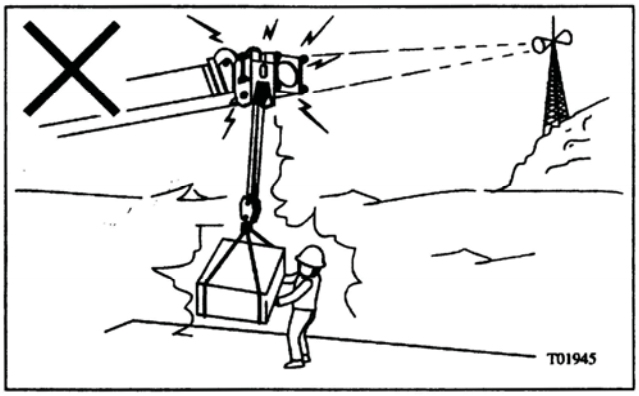

https://truckmanualshub.com/

Rules for Operation (Special Operation)

⚠Be Cautious in Multi-Crane Operation

Lifting a load with two or more cranes can be dangerous. In these operations, loads are lifted at points other than directly above the center of gravity and there is possibility of the load falling, the machine being overturned, or the boom failing.
In multi-crane lifting operations, be absolutely careful, and adhere to the following instructions:

- **Meet with personnel to determine the proper working procedure and lift strategy.**
- **Assign a work leader, and follow instructions.**
- **Equip every person concerned with an appropriate communications device.**
- **Set each crane level on firm ground with the outriggers fully extended.**
- **The cranes used must have the same performance, characteristics and sufficient capacity for handling the load. Make sure that the cranes have the same settings for the boom length, boom angle, and number of rope parts.**
- **Lift the load so that the wire rope(s) of each crane are only subjected to vertical line pulls.**
- **Attempt to rig the load so that all the cranes are loaded equally.**
- **To move the load, use only the winches and booms. Swinging operations should be avoided. Do not perform hoisting, elevating (or telescoping) of the boom or swinging at the same time.**
- **To prevent overloading, operate the separate cranes simultaneously.**

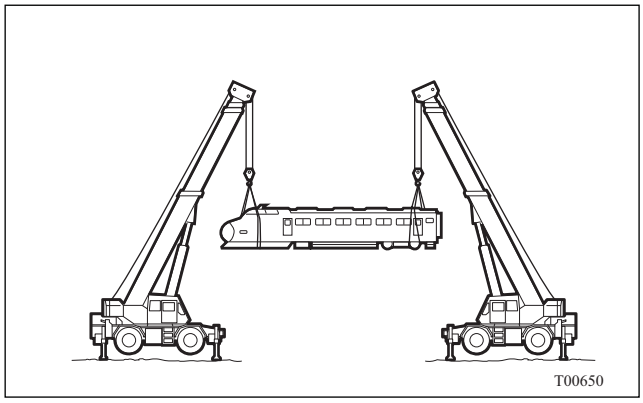

After Operation

⚠After Operation, Stow the Machine

Leaving the machine unattended should be avoided. Once operation is complete, stow the machine.

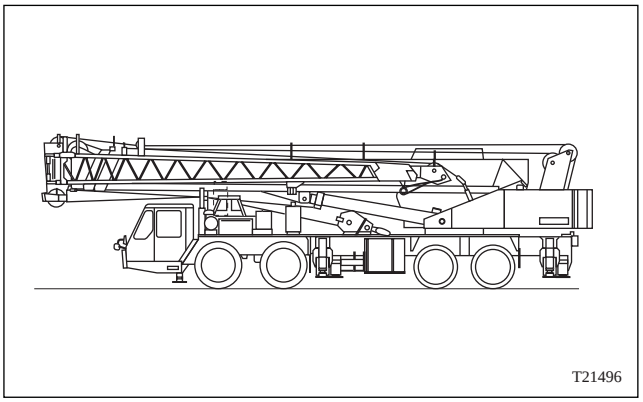

⚠Cautions for Refilling the Fuel

Fuel and other oils are highly flammable and dangerous.
Handle combustibles very carefully.
While refueling, observe the following instructions:

- **Stop the engine.**
- **Refuel the machine outdoors in a well-ventilated place.**
- **Keep sources of flames or sparks away from the fuel.**
- **Wear a protective mask.**
- **Do not refuel in excess of fuel tank capacity.**

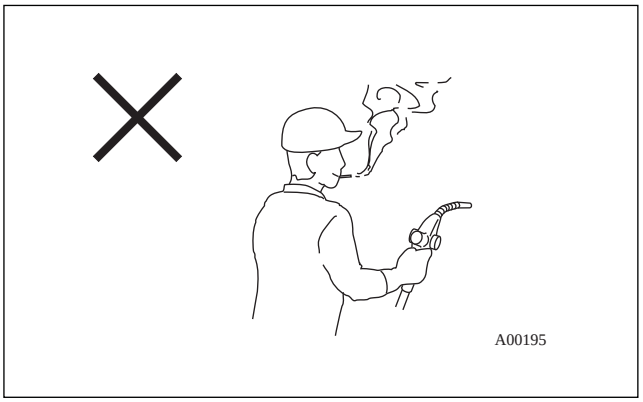

https://truckmanualshub.com/

Rules for Road Travel

⚠Observe All Vehicles Code Requirements for Travel on Public Roads

Some national and local laws and rules exist regarding the travel of crane vehicles on public roads. Before traveling on roads, study the requirements for road travel for the crane, and strictly obey all the regulations.

⚠Driving Crane (Carrier) in Road Travel Configuration

A swaying hook block or boom, or extended outriggers pose extreme hazards during crane road travel. Before traveling, stow the hook block and boom in position, and lock the outrigger beams, etc., in position (if lock pins are available). Give a traveling configuration to the machine by referring to the manual.

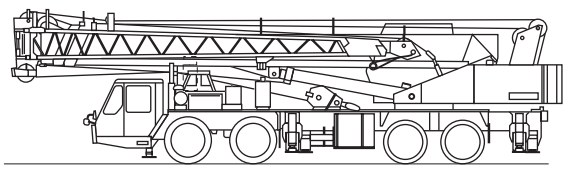

T21496

⚠Do Not Travel with Any Cargo on the Crane

Carrying cargo on a traveling crane can result in a spill or fall. Use a vehicle designed specifically for cargo transport.

⚠Be Aware of Overhead Obstacles

Pay attention to overhead clearance when passing under electric car wires, highway or railway bridges, and passing through a tunnel.
If the planned route necessitates travel below overhead railway lines or overhead bridges or through a tunnel, check the clearances in advance.

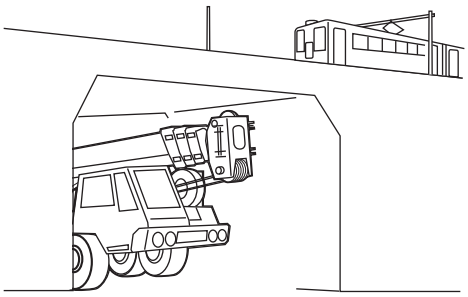

T21495

https://truckmanualshub.com/

Rules for Inspection and Maintenance

⚠Do Not Adjust or Disassemble the Hydraulic Equipment

The hydraulic equipment including the safety valve and pneumatic equipment have been strictly inspected and carefully adjusted before shipment from the factory.
Disassembly or improper adjustment of the hydraulic or pneumatic equipment can cause failures in safety and functional features.
For disassembly or adjustment, contact an authorized BQ-TADANO distributor or dealer.

⚠Do Not Modify the Machine

Unauthorized modification may affect the performance, safety and strength of the crane and can lead to damage or overturning.
Never modify any part or aspect of the machine.

⚠When an Irregularity is Detected

An irregularity which remains unremedied can cause a more serious failure or accident.
If an irregularity is found during inspection work, immediately determine the cause, then adjust and maintain the component in question to prevent a failure or accident.

⚠Inspect and Maintain at Regular Intervals

Sloppy inspection or maintenance work makes it impossible to detect faults at an early stage.
Perform inspection and maintenance at specified intervals to ensure fault prevention and early detection of potential problems.

⚠Become Familiar with Procedures for Inspection and Maintenance

Improper inspection and maintenance procedures can lead to damage of the machine, and may cause injury or even death.
Read the "Inspection and Maintenance" section in the manual and become thoroughly familiar with all instructions given. Do not perform any inspection or maintenance work until the instructions are understood.
When inspection or maintenance work is more complicated, consult an authorized BQ-TADANO distributor or dealer.

⚠Wear Safe Clothing

Loose clothing may lead to sleeves or cuffs being caught by a projection or control lever on the machine.
Do not wear work clothing fouled with fuel or oil. It can readily catch fire.

⚠Wear Protective Gear

Performing inspection or maintenance work without wearing the proper protective gear can result in burns, cuts, falling accidents, or eye injuries.
Always wear a hard hat, and safety shoes, also safety goggles, dust mask, earplugs, protective gloves, safety belt, etc., as the situation requires.

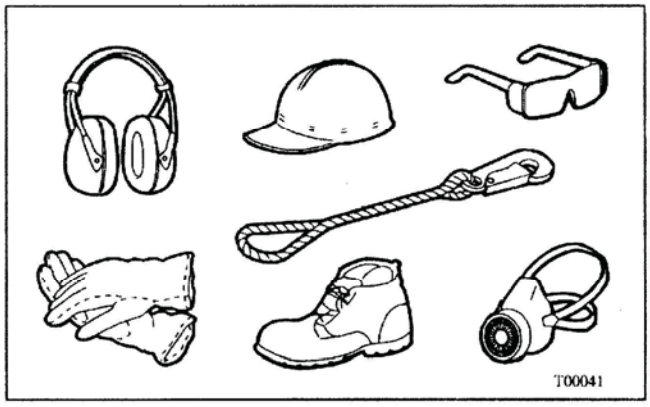

https://truckmanualshub.com/

⚠ Meet with Working Personnel

Working together with other persons on inspection or maintenance tasks without observing mutually agreed upon procedures can result in an accident. Meet with all involved personnel to agree on the detailed tasks. Also, assign a work leader, and always follow his or her instructions.

⚠ Provide Effective Ventilation

Performing inspection or maintenance work in a confined space without effective ventilation can lead to toxic poisoning.
Be very careful when handling fuel, wash oil, and paint.
When starting the engine in an enclosed space, provide a means of positive ventilation. Connect a hose from the exhaust to vent the fumes outdoors. Open doors and windows to allow fresh air circulation. Install a ventilator as required.

⚠ Fire Prevention

To prevent the risk of fire during inspection and maintenance work requiring handling of potentially flammable substances, observe the following instructions.

- **Use a non-flammable cleaning liquid to wash parts and components.**
- **Store fuel and oils away from fire.**
- **Do not allow sources of flames or sparks near any substance that is combustible.**
- **Do not smoke cigar or cigarette.**
- **Always carry a fire extinguisher in the operator's cab.**
- **When checking fuel, oils, and battery liquid, use an explosion-proof lamp.**
- **When grinding or welding, keep flammable substances away from flying sparks or molten metal.**

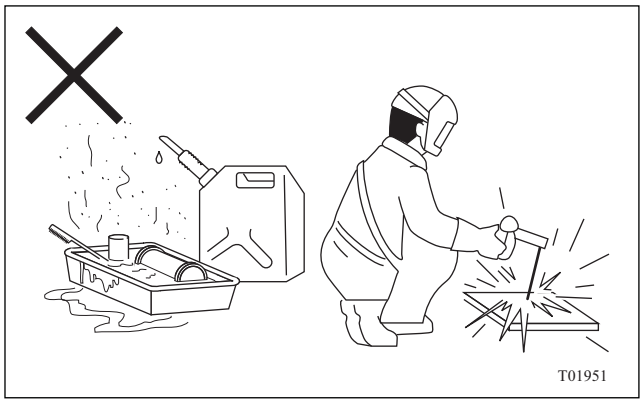

⚠ About Illumination

Inspection or maintenance work in a poorly illuminated environment can lead to injury. Before starting the work, provide proper illumination.
Never use the exposed flame of a match or lighter for illumination, a fire accident may occur. The emitted gas from open lead storage batteries can explode.
Use explosion-preventive type illuminating devices when checking fuel and battery liquid level.

https://truckmanualshub.com/

⚠Clean the Machine before Inspection or Maintenance

Dirt and debris on the machine not only prevents easy detection of faulty components or parts but also can be trapped in components or parts. Also, dust or mud can enter your eyes or cause you to slip and be injured.
Before starting general inspection or maintenance activities, wash the machine to ensure a safe work area.

⚠Cautions for Washing the Machine

Wet footing can cause to slip and fall injuries.
Always wear non-slip shoes.
When washing the machine with high-pressure steam, the jet can penetrate skin or flying mud can cause eye damage. Always wear suitable protective gear during washing.
Do not direct water to electrical equipment, discharge and/or shortcircuits can result and lead to damage.

⚠Inspect and Maintain the Machine on Level Ground

It is difficult to inspect the machine properly if it is parked on a slope or grade. Also, the machine is liable to start moving if not parked properly.
Park the crane on firm flat ground, activate the parking brake, and chock the tires.

⚠Keep the Work Area Clean and Tidy

Performing inspection or maintenance work in a disorderly place can lead to personal injury or a falling accident.
Remove obstacles.

⚠Labeling for Inspection or Maintenance Work

If any unauthorized person starts the engine during inspection or maintenance work, the machine may be damaged or injury or even death may result.
When performing inspection or maintenance work, remove the starter key, and post a “DO NOT OPERATE” or “TAG OUT” sign on the door or control levers of the operator’s cab as a warning.
Also, post relevant warning signs at entry to the work area to prevent access of unauthorized personnel.

⚠Start Inspection or Maintenance after the Machine Has Cooled Down

When the crane is operated, various machine components become very hot and can cause burns.
These components include the engine, muffler, engine cooling water, radiator, hydraulic oil, reducer, hydraulic equipment and hydraulic piping.
Allow these components and areas to cool down before starting inspection or maintenance work.

⚠Beware of High-Pressure Oils

High-pressure fuel or hydraulic oil that comes into contact with skin or eyes can cause serious injury.
To avoid this danger:

- Release internal pressure, and only then, disconnect any piping.
- To check for leakage, wear protective goggles and gloves and use a piece of cardboard or wood as a monitor. Leaking high-pressure oil may be invisible.
  Keep bare hands away from all leaking components.
- Immediately obtain medical attention when high-pressure oil accidentally cuts into skin or affects the eyes.

https://truckmanualshub.com/

⚠ Inspect or Maintain Equipment with the Engine Shut Down

Performing inspection or maintenance work while the engine is running is very dangerous, and should be avoided. Unless otherwise necessary, be sure to shut down the engine before starting inspection or maintenance procedures.

⚠ Use Two Persons for Inspection or Maintenance with the Engine Running

If for some reason it is necessary to perform an inspection or maintenance procedure with the engine running, post at least two persons—one in the operator's cab to shut down the engine immediately when necessary, and the other(s) to perform maintenance. During the maintenance, ensure safety of all persons involved in the work.

⚠ Use Proper Tools

Performing inspection or maintenance work without the proper tools not only decreases work efficiency but also can lead to damage to parts or even injury. Do not use improper or damaged tools.

⚠ Beware of Overhead Obstacles and Footing

Lack of awareness or loose footing can cause head impact with the hook block, boom, or jib or slip and falls off the machine.
Always be careful about overhead obstacles and footing. Walk on the non-slip strips if provided on the machine.

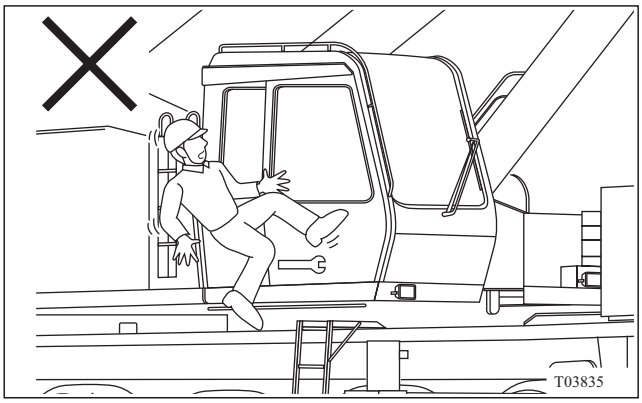

⚠ Cautions for Working at Heights

Working at heights involves the possibility of falling. To reduce this risk, remove all obstacles, and any spilled grease and oil. Keep all footing areas clean and tidy.
To climb onto and descend from a position of high elevation, face the machine directly. Use the handrails and steps, always be supported by at least three points of your hands and feet.
Be careful not to slip. When non-slip strips are provided on the machine, walk on them.
Use safety equipment such as safety belts ties, lanyards and platforms as the situation requires.

⚠ Cautions for Working Under the Machine

When working under the crane with the jack cylinders extended, place supports and wood blocks beneath the outriggers to support the machine securely. Do not work under the crane unless the machine is securely and positively supported.

⚠ Do Not Stick Any Part of Your Body Out from the Window on the Boom Side

Sticking any part of your body out from the window on the boom side can result in being caught between the moving boom and the window frame. Serious injury or death can result from this dangerous practice.
If the window is equipped with a confining guard, do not remove it.

https://truckmanualshub.com/

⚠Keep Away from Moving Parts

Inadvertent motion of the machine, or contacting a moving part can cause personal injury and even death.
When necessary to inspect or maintain the machine while running, do not approach moving parts such as the boom, elevating cylinder, winch, fan, fan belt, and propeller shaft, etc.
Keep hands and clothing away from moving parts.

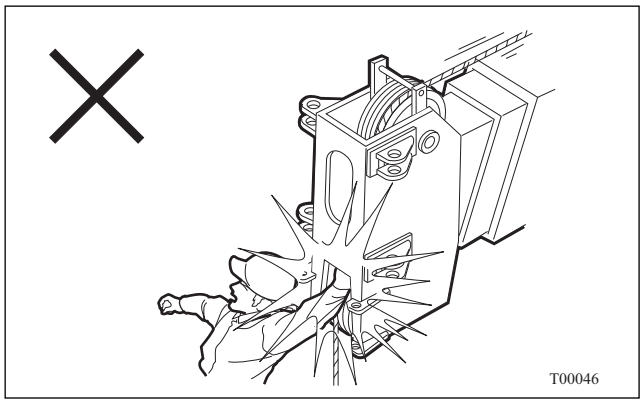

⚠Beware of an Overheated Cooling System

Do not unfasten the radiator cap while the engine cooling water is hot. Hot steam and water can spurt out, causing burns.
First allow the radiator to cool down. Then, loosen the cap very slowly while facing away to release the internal pressure.

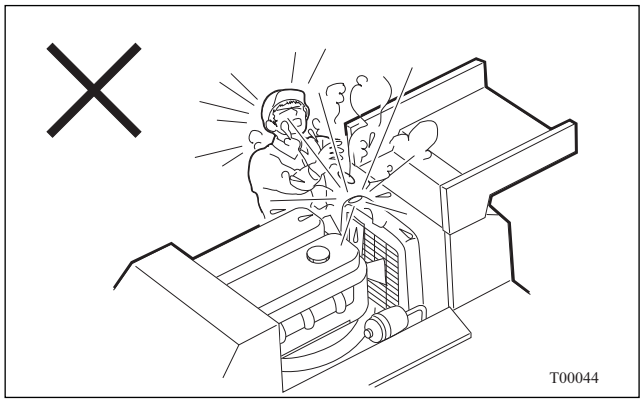

⚠Lock the Inspection Hole Covers

An inspection hole cover that remains open can be closed abruptly by a gust, etc., causing hands or a leg to be caught and injured.
If an inspection hole cover or access door, or the operator's cab door must remain open, secure in position.

⚠Do Not Allow Tools and Parts to Drop

When working through an inspection hole while facing down, be careful not to drop objects into the hole. Such mistakes can damage or lead to malfunction of the machine. Do not keep objects which are not needed for inspection in open pockets.
Recover any object or tool that has dropped into the machine.

⚠Beware of Oil Smears

Oil smears on the clutch, lining and brake disks can decrease braking effectiveness. Always keep these assemblies free from oil accumulation.

⚠Beware of Dust

Be careful not to inhale dust during inspection or maintenance work. To inspect or maintain brakes and linings, remove dust using a vacuum cleaner. Do not use compressed air because this action will scatter dust into the air.

https://truckmanualshub.com/

⚠About Starting the Engine with Booster Cables

Using improper booster cables to start the engine can cause the battery to explode or damage the machine.

When starting the engine using booster cables, wear protective goggles. This procedure requires two persons; one person must be seated in the operator's cab. The procedure consists of:

(1) Use an assist vehicle with a battery rated for 24 V. Do not use a 12 V or 48 V supply.

(2) Set the starter key to "OFF" position both for the dead vehicle and assist vehicle.

(3) Connect the booster cables in the following order:

[1] "+" terminal of the battery on the dead vehicle.

[2] "+" terminal of the battery on the assist vehicle.

[3] "-" terminal of the battery on the assist vehicle.

[4] A portion of the frame or engine block of the dead vehicle, apart from its battery.

(4) Start the engine of the assist vehicle.

(5) Start the engine of the dead vehicle.

(6) Once the engine of the dead vehicle has successfully started, disconnect the booster cables in the order of [4], [3], [2] and [1].

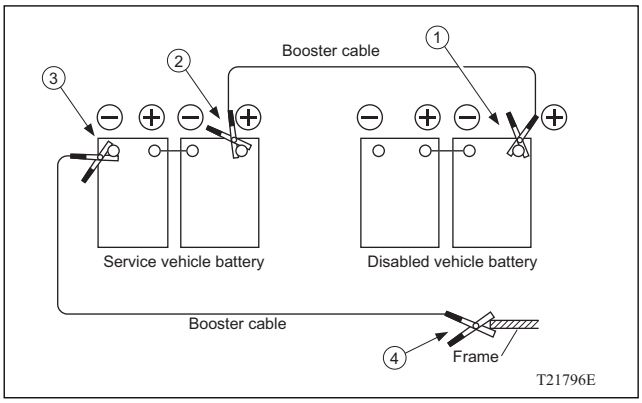

⚠Disconnect the Battery Cable before Inspecting or Maintaining the Electrical System

Inspecting or maintaining the electrical system without disconnecting the battery cable can cause the wiring to be shortcircuited, possibly damaging the electrical and electronic systems.

Before inspecting or maintaining the electrical system, disconnect the battery cable from the minus terminal (ground side) of the battery.

⚠Be Cautious about Battery Fluid

The battery fluid contains dilute sulfuric acid. Battery fluid entering the eyes could cause blindness, and battery fluid on skin can cause burns. When handling the battery, wear protective goggles, protective gloves, and long-sleeved clothing.

If battery fluid touches your eyes or skin, wash with a large amount of fresh water and seek medical attention immediately.

⚠Prevent Explosion of the Battery

The battery releases hydrogen gas. Do not light a match or lighter near the battery.

To check the battery fluid level, use a flash light.

If battery fluid is frozen in extreme freezing weather, do not charge the battery or start the engine with an alternative power supply.

Warm up the battery to 15°C so to avoid trouble.

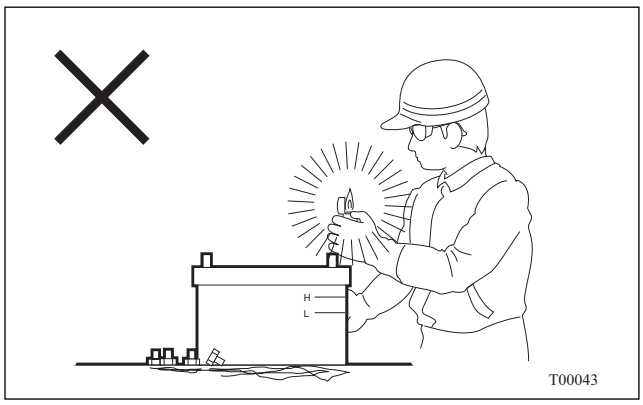

⚠Careful Handling of Wire Ropes

Careless handling of wire ropes can shorten their service life, or cause them to break. Handle wire ropes properly by observing all instructions in the manual.

⚠ Cautions for Adjusting Tire Pressure

When adjusting tire pressures, never stand facing the side of the tire. The tire may burst or wheel parts can fly off and cause injury or even death.
Place a tire cage over the wheel and stand behind the tire treads.

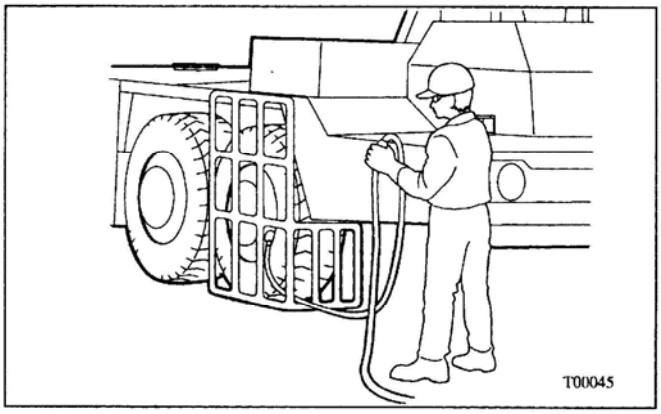

⚠ Assign Replacement or Maintenance Work of Tires to Trained Personnels

Replacing or maintaining tires requires special facilities and skill. Inadequate procedures and tools can cause accidents.
For further information about replacement or maintenance of tires, contact an authorized BQ-TADANO distributor or dealer or other specialist.

⚠ Use Genuine Parts Only

Use of non-factory approved parts can lead to failures in safety and functional systems.
To replace parts such as filters, etc., observe the parts list and use only the specified factory approved genuine items.

⚠ Use Specified Oils

When replenishing or replacing oils, use recommended brands or grades of oils and greases.
Mixing different brands may change properties of the oil or grease owing to possible chemical reactions, and be detrimental to machine components.
When using oil or grease of a brand different from that in the machine, remove all existing oil or grease, and then refill with the new replacement oil or grease.

⚠ Verification after Maintenance

Verification of proper component or mechanism function after maintenance work is essential.
Be sure to check that the maintained areas are working correctly, that there is no oil leakage, and all bolts have been securely tightened.
Remember that all "maintenance work" should include positive verification of correct machine operation.

⚠ About Waste Disposal

Waste oils, used filters, and other such petrochemical-related products, if disposed of thoughtlessly, will cause environmental contamination.
Obtain a proper-sized vessel before releasing waste oils from the machine. Never discharge waste oils on the ground or into rivers, lakes or marshes.
Follow all governing environmental rules and regulations when disposing of oils, fuels, cooling water, brake fluid, solvents, filters, batteries or any other damaging substances.

https://truckmanualshub.com/

Warning Labels

There are several warning labels affixed to your machine. These labels give important warnings and precautions which must be observed to ensure safety. This section reviews these warnings and precautions, and shows the location of the labels. All the information on the labels is vital for preventing accidents; familiarize yourself thoroughly with it.

Make sure that the labels are not soiled. Clean them if words are illegible or pictures are unclear.

Replace a damaged or missing label. New labels are available from your nearest authorized BQ-TADANO distributor or dealer.

https://truckmanualshub.com/

Warning Labels-Location and Contents

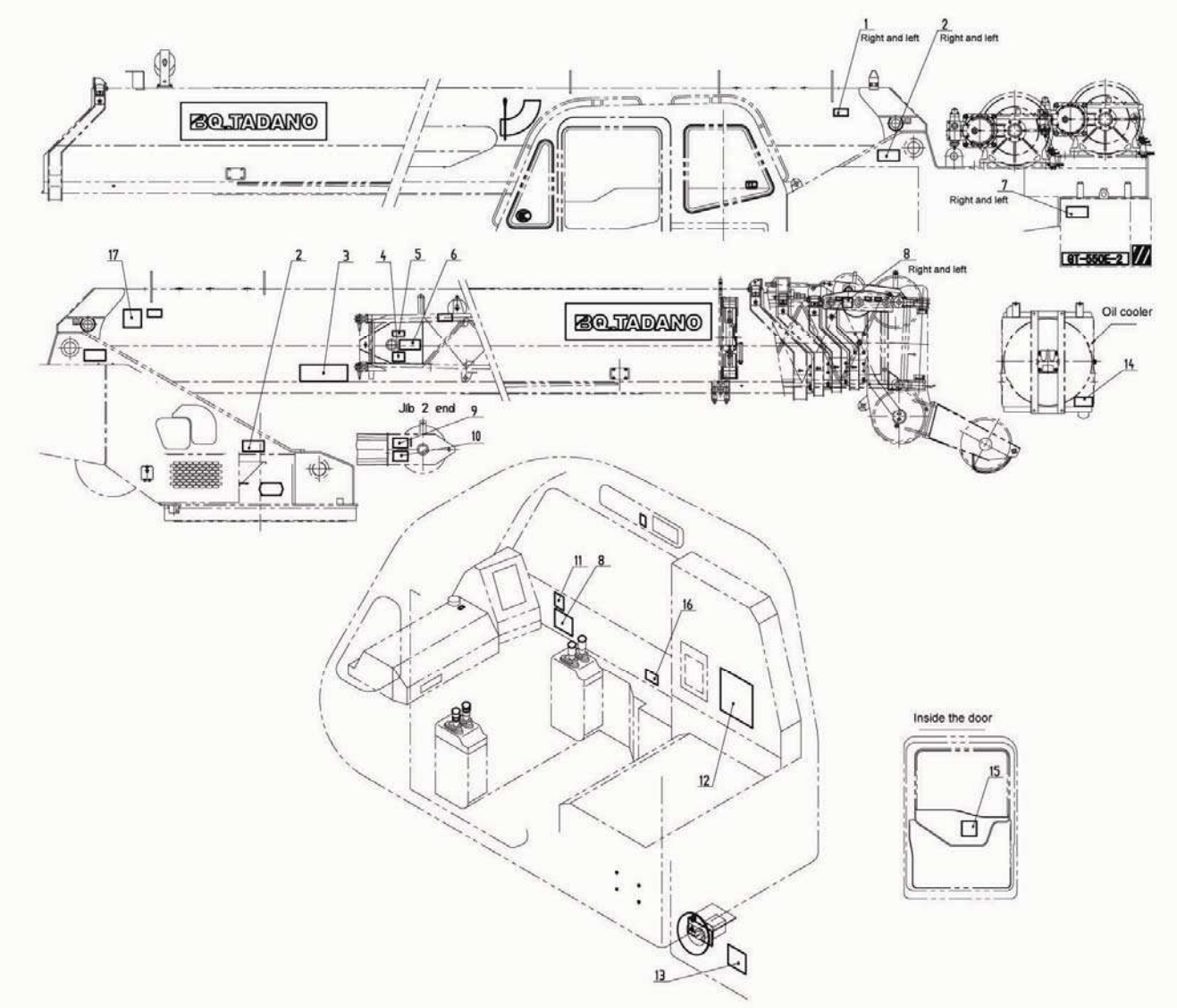

1. PROHIBITION OF CLIMBING ON BOOM JIB AND OUTRIGGERS
2. CAUTION TO BOOM IN MOTION
3. JIB PIN STATUS
4. WARNING IN JIB OFFSET
5. WARNING ON STOWING THE SINGLE TOP
6. JIB HANDLING INSTRUCTIONS
7. CAUTION TO BOOM SWING
8. CAUTION IN JIB OFFSET
9. WARNING ON TOP JIB
10. CAUTION IN HANDLING JIB
11. CAUTION TO OVERRIDE FUNCTION
12. CAUTION TO LIVE LINES
13. CAUTION IN HANDLING OVERRIDE KEY SWITCH
14. CAUTION TO OIL COOLER FAN
15. CAUTION IN HANDLING CONTROL CONSOLE
16. CAUTION IN HANDLING SWING ROCK PIN
17. STOWING AUXILIARY WINCH ROPE

https://truckmanualshub.com/

1. PROHIBITION OF CLIMBING ON BOOM, JIB AND OUTRIGGERS

2. CAUTION TO BOOM IN MOTION

3. JIB PIN STATUS

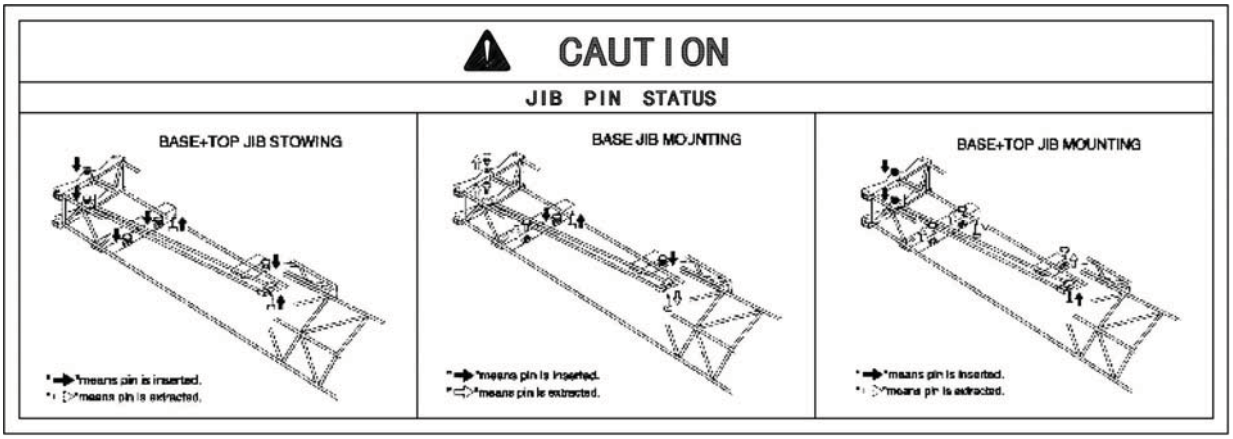

https://truckmanualshub.com/

4. WARNING IN JIB OFFSET

WARNING

MAKE SURE JIB SET STATUS IS SELECTED ON AUTOMATIC MOMENT LIMITER BEFORE ERECTING AND STOWING JIB OR CHANGING JIB OFFSET ANGLE.
DON'T EXETEND THE BOOM, OR BASE JIB COULD BE DAMEGED.

5. WARNING ON STOWING THE SINGLE TOP

WARNING

MAKE SURE THE SINGLE TOP IS STOWED BEFORE MOUNTING THE JIB, OR THE JIB COULD DAMEGED.

6. JIB HANDLING INSTRUCTIONS

CAUTION

JIB HANDLING INSTRUCTIONS

- Before operating crane or traveling on road check stowing pin (A), (B), (C) and pivot pin (D).
  Jib will fall off if operation or travel is started with these pins out of position.
- When handling the pins (A), (B), (C) and (D).
  1. Retract the boom completely.
  2. Do not lower the boom below 0°.
- When stowing the jib, insert stowing pin (A), (B), and (C) to secure jib to the boom.

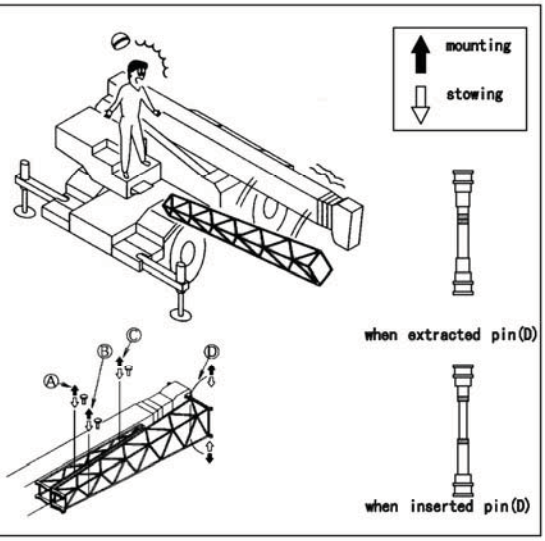

7. CAUTION TO BOOM SWING

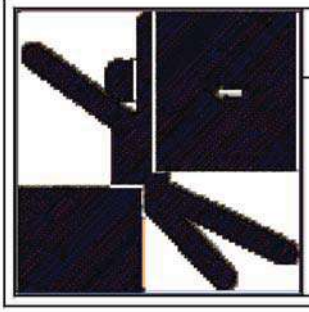

DANGER

SWINGING STRUCTURE STAY CLEAR TO PREVENT SEVERE PERSONAL INJURY OR DEATH.

https://truckmanualshub.com/

8. CAUTION IN JIB OFFSET

CAUTION

For jib offset(tilt)25° ,45° operation,be sure to store single top.
Never fail to install offset(tilt)lock pin at 5° ,25° ,or 45° position to prevent the jib form falling and causing injury or equipment damage.

9. WARNING ON TOP JIB

WARNING

HAZARDOUS CONDITION CAN CAUSE SEVERE INJURY
USE A TAGLINE TO PREVENT RAPID SWING OF TOP JIB FORM BASE JIB WHEN TOP JIB IS RELEASED AT CONNECTING PIN.
KEEP ALL PERSONNEL AWAY FORM TOP JIB SWING PATH.

10. CAUTION IN HANDLING JIB

DANGER

WHEN MOUNTING OR STOWING THE JIB,YOU SHOULD KNOW AND FOLLOW THE BQTADANO INSTRUCTION MANUAL. FAILURE TO FOLLOW THE BQTADANO INSTRUCTION MANUAL MAY RESULT IN PROPERTY DAMAGE AND OR PERSONAL INJURY OR DEATH.

11. CAUTION TO OVERRIDE FUNCTION

WARNING

WHEN THE OVERRIDE KEY SWITCH LOCATED OUTSIDE THE CRANE CAB IS ACTIVATED, AND THE AML OVERRIDE KEY SWITCH LOCATED IN THE RIGHT SIDE OF THE AML IS IN OVERRIDE, THE SYMBOL AML LIGHTS UP.
ALL SAFETY STOP FUNCTION WILL BE DISABLED WITH THIS LIGHT ON.
CONTINOUS SAFE OPERATION IS CONTRLED ONLY BY THE OPERATOR

12. CAUTION TO LIVE LINES

DANGER

ELECTROCUTION HAZARD

CAN CAUSE SERIOUS INJURY OR DEATH.
NEVER OPERATE THIS CRANE WITHIN ANY DISTANCE OF A POWER SOURCE OR POWER LINE,WITHOUT FIRST NOTIFYING THE POWER OR UTILITY COMPANY.

THIS MACHINE IS NOT EQUIPPED WITH ANY WARNING OR INSULATING DEVICES. ALLOW FOR BOOM DEFLECTION,ELECTRICAL POWER LINE,AND LOAD LINE SWAYING.

NEVER OPERATE CRANE,ANY PART THEREOF OR LOAD WITHIN 6m OF ANY ELECTRICAL POWER LINE OR POWER SOURCE OR SUCH DISTANCE AS IS SPECIFIED OR REQUIRED BY LOCAL OR OTHER APPLICABLE SAFETY CODES OR REGULATIONS.

NEVER OPERATE,SERVICE OR MAINTAIN THIS CRANE WITHOUT PROPER INSTRUCTIONS. IT IS THE EMPLOYER'S RESPONSIBILITY TO PROVIDE ALL SAFETY DEVICES OR MEANS THAT MAY BE NECESSARY OR REQUIRED FOR ANY USE, OPERATION,SET-UP OR SERVICE.

DANGER

THIS MACHINE IS NOT EQUIPPED WITH ANY WARNING OR INSULATING DEVICES. EXTREME CAUTION MUST BE EXERCISED BY ALL PERSONNEL WORKING WITH AND AROUND THIS MACHINE WHEN IN THE PROXIMITY OF ENERGIZED POWER SOURCE OR POWER LINES.
DEATH OR SERIOUS INJURY CAN RESULT FROM CONTACT OR INADEQUATE CLEARANCE.
ALL PERSONNEL MUST BE ADEQUATELY WARNED OF SAFETY PROCEDURES.

13. CAUTION IN HANDLING OVERRIDE KEY SWITCH

WARNING

THIS KEY SWITCH BYPASSES CONTROL LEVER LOCKOUT FUNCTION OF AUTOMATIC MOMENT LIMITER (AML-L). THE SWITCH MAY BE ONLY USED BY AUTHORIZED PERSONNEL DURING EMERGENCY SITUATIONS. FAILURE TO FOLLOW THIS INSTRUCTION MAY RESULT IN PROPERTY DAMAGE AND OR PRESONAL INJURY.

14. CAUTION TO OIL COOLER FAN

DANGER

KEEP HANDS AWAY.
FAN STARTS AUTOMATICALLY.
STOP ENGINE TO SERVICE.

https://truckmanualshub.com/

15. CAUTION IN HANDLING CONTROL CONSOLE

WARNING

PULL THE CONTROL CONSOLE BACKWARD TO THE STOWING POSITION WHEN TRAVELING OR GETTING OUT OF THE CAB.

FOLD UP THE ARMREST BEFORE ADJUSTING THE ANGLE OF CONTROL CONSOL.

TAKE CARE TO CLOSE THE DOOR WHEN THE CONTROL CONSOLE IS UPRIGHT.

16. CAUTION IN HANDLING SWING ROCK PIN

CAUTION

USE THE SWING LOCK DURING CRANE OPERATION.

THE SWING LOCK IS ENABLED ONLY WHEN THE BOOM FACES THE FRONT OR REAR.

17. STOWING AUXILIARY WINCH ROPE

CAUTION

STOWING AUXILIARY WINCH ROPE

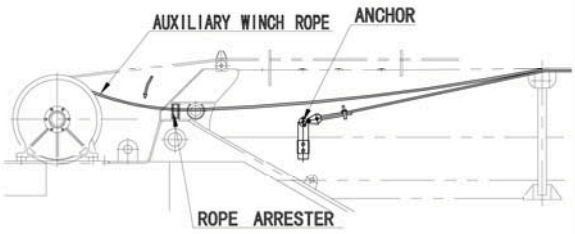

1. PASS OVER AUXILIARY WINCH ROPE TO ROPE ARRETER.
2. ATTACH ROPE SOCKT TO ANCHOR.
3. TAKE IN ROPE UNTIL ROPE IS A LITTLE SLACK.
   TAKE CARE NOT TO OVERTENSION ROPE.

https://truckmanualshub.com/

Contents

Safety ····· A-1
Safety Rules ····· A-2
Before Operation ····· A-2
Rules for Operation (Setting Outriggers) ····· A-7
Rules for Operation (General) ····· A-8
Rules for Operation (Weather) ····· A-17
Rules for Operation (Power Lines, Radio Waves) ····· A-18
Rules for Operation (Special Operation) ····· A-20
After Operation ····· A-20
Rules for Road Travel ····· A-21
Rules for Inspection and Maintenance ····· A-22
Warning Labels ····· A-29
Warning Labels-Location and Contents ····· A-30
Contents ····· 1
Preface ····· 3
Servicing and Ordering Parts ····· 4
Components ····· 5
Layout of Controls ····· 6
Terminology ····· 9

[OPERATION]
Carrier Traveling Procedure—Summary ····· 11
Preparatory Steps ····· 11
Outrigger Operations for Traveling a Small Distance ····· 12
Crane Operation Procedure—Summary ····· 13
Preparatory Steps ····· 13
During Operation ····· 14
At the End of Operation ····· 15
How to Read Performance Data Plate ····· 16
Working Radius/ Lifting Height Chart ····· 16
Rated Lifting Capacity Table ····· 18
Working Area Chart ····· 22
AML (Overload Prevention Device) ····· 24
Configuration and Functions of the AML System ····· 25
Controls ····· 29
Names and Functions of AML Main Unit Parts ····· 30
Selecting Operational Status ····· 36
AML Pre-operational Inspection ····· 39
How to Use the Working Range Limit Function ····· 40
Display Alteration ····· 44
Recovery from a Stop ····· 45
Display and Disposition of Failure Messages ····· 48
Disposition of System Troubles ····· 51
Other Safety Devices ····· 52
Overwind Cutout Device ····· 52
Front Jack Overload Warning Device ····· 53
External Warning Lamps (Option) ····· 53
Starting and Stopping the Engine ····· 54
Control ····· 54
Pre-starting Checks ····· 54
Starting the Engine ····· 55
Stopping the Engine ····· 56
Operating the PTO and Warming Up the Machine ····· 57
Operating the PTO ····· 57
Warming Up the Machine ····· 57
Checks to Make during Warmup ····· 57
Outriggers ····· 58
Setting the Crane ····· 58
Controls ····· 59
Extending the Outriggers ····· 60
Level Adjustments ····· 62
Front Jack ····· 63
Stowing the Outriggers ····· 64
Crane Operator's Cab ····· 66
Opening and Closing the Door ····· 66
Opening and Closing the Windows ····· 67
Adjusting the Seat Position ····· 67
Adjusting Position of the Lever Stands ····· 68
Acceleration ····· 70
Controls ····· 70
Hoisting ····· 72
Controls (ISO Layout) ····· 72
Hoisting Up and Down ····· 73
Other Winch-related Controls and Devices ····· 74
Telescoping the Boom ····· 75
Controls (ISO Layout) ····· 75
Extending and Retracting the Boom ····· 77
Emergency Telescoping Procedure ····· 79
Elevating the Boom ····· 81
Controls (ISO Layout) ····· 81
Raising and Lowering the Boom ····· 81
Elevation Slow Stop ····· 83
Swinging the Boom ····· 84
Controls ····· 84
Swinging the Boom ····· 85
Swing Stop ····· 87

https://truckmanualshub.com/

Taking Out and Stowing the Main Hook Block ·····88
Taking Out Main Hook Block ·····88
Stowing Main Hook Block ·····89
Reeving Wire Rope ·····90
Standard Number of Parts of Line ·····90
Reeving Procedure ·····93
Single Top ·····95
Components ·····95
Single Top Lift ·····96
Mounting the Single Top ·····96
Stowing the Single Top ·····98
Jib ·····101
Components ·····101
Jib Lift ·····102
Mounting the Base Jib ·····104
Mounting the Base Jib and the Top Jib ·····110
Changing the Jib Offset Angle ·····117
Stowing the Base Jib ·····120
Stowing the Base Jib and the Top Jib ·····125
Air Conditioner (Option) ·····128
Components ·····129
How to Use ·····131
Error Display on the Display Panel ·····133
Equipment Inside the Cab ·····134
Heater (option) ·····134
Other Equipment ·····135
Equipment Outside the Cab ·····139
Winch drum monitor mirror (option) ·····139

【INSPECTION AND MAINTENANCE】

Inspection and Maintenance ·····140
Pre-Operational and Periodic Inspection ·····141
Safety Parts Requiring Regular Replacement ·····144
Greasing ·····145
Maintenance Table ·····145
Greasing Chart ·····146
Gear Oil ·····148
Maintenance Table ·····148
Winch Speed Reducer Oil Level Check ·····149
Winch Speed Reducer Oil Replacement ·····149
Swing Speed Reducer Oil Level Check ·····150
Swing Speed Reducer Oil Replacement ·····150
Hydraulic System ·····151
Maintenance Table ·····151
Oil Level Check (Hydraulic Oil Tank) ·····152
Oil Replacement (Hydraulic Oil Tank) ·····152
Oil Level Check (Oil Reservoir) ·····153
Oil Replacement (Oil Reservoir) ·····153
Return Filter Replacement (Hydraulic Oil Tank) 154
Air Breather Replacement (Hydraulic Oil Tank) 154
Return Filter Replacement (Drain Circuit) ·····155
Line Filter Cleaning (Accumulator Circuit) ·····155
Line Filter Replacement (Winch Brake Circuit) ·····155
Line Filter Replacement (Automatic Stop Circuit) ·····156
Swing System ·····157
Maintenance Table ·····157
Swing Bearing Mounting Bolt Check ·····157
Accelerator System ·····158
Maintenance Table ·····158
Accelerator Circuit Bleeding ·····158
Electrical System ·····159
Maintenance Table ·····159
Fuses Replacement ·····159
Air Conditioner (Option) ·····161
Maintenance Table ·····161
Condenser Check and Cleaning ·····161
Refrigerant Level Check ·····161
Refrigerant Piping Connection Check ·····162
Inside Air Filter Check and Cleaning ·····162
Outside Air Filter Replacement ·····162
V-belt Check ·····163
Parts Recommended Regular Replacement ·····163
Wire Ropes ·····164
Proper Handling of Wire Ropes ·····164
Wire Rope Replacement ·····165

【INFORMATION AND DATA】

Conversion ·····170
Major Specifications ·····171
Crane Specifications ·····171
Overall Dimensions ·····172
Mass ·····173
Relief Valve Pressure ·····173
Wire Rope Specifications ·····173
Other ·····173
Oils and Greases ·····174
Oil and Grease Table ·····174
Consumable Parts ·····175
Filters ·····175
Fuses ·····175

https://truckmanualshub.com/

Preface

This manual is intended as a guide to help you operate and maintain your **BQ-TADANO** crane safely and correctly. This manual covers cranes of the following specification number.

Specification number (The specification number of your crane is given on the nameplate as shown below.)	GT-550E-2-B0101

Nameplate: Located on the side of the crane operator's cab.

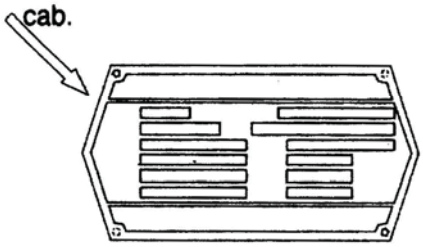

Please see the separate manuals for operation and maintenance of the crane carrier and crane operator's cab heater.

The "OPERATION" section of this manual describes the basic procedures for operating the crane. Read it carefully and familiarize yourself with the correct procedures for operating the crane. Your operating skill will improve as your knowledge of the crane and its capabilities deepens.

The "MAINTENANCE" section covers the procedures for inspecting and servicing the crane. Proper inspection and servicing is essential for minimizing problems and obtaining optimum performance. Follow the instructions in this section to perform inspection and servicing properly.

Note that the illustrations in the manual may differ slightly from your machine. Also, some illustrations show the machine's components with their covers and guards removed to facilitate explanation.

If you transfer this machine, also hand this manual together with the machine for the convenience of the next use of this machine.

Please note that, for product improvement, some changes may have been incorporated in your machine that are not covered in this manual.

If you have any questions regarding your crane or this manual, contact your nearest **BQ-TADANO** distributor or dealer.

https://truckmanualshub.com/

Servicing and Ordering Parts

When contacting the TADANO distributor or dealer for repairs or to order parts, please specify the following information:

(1) Specification number
(2) Production serial number
(3) Year of production

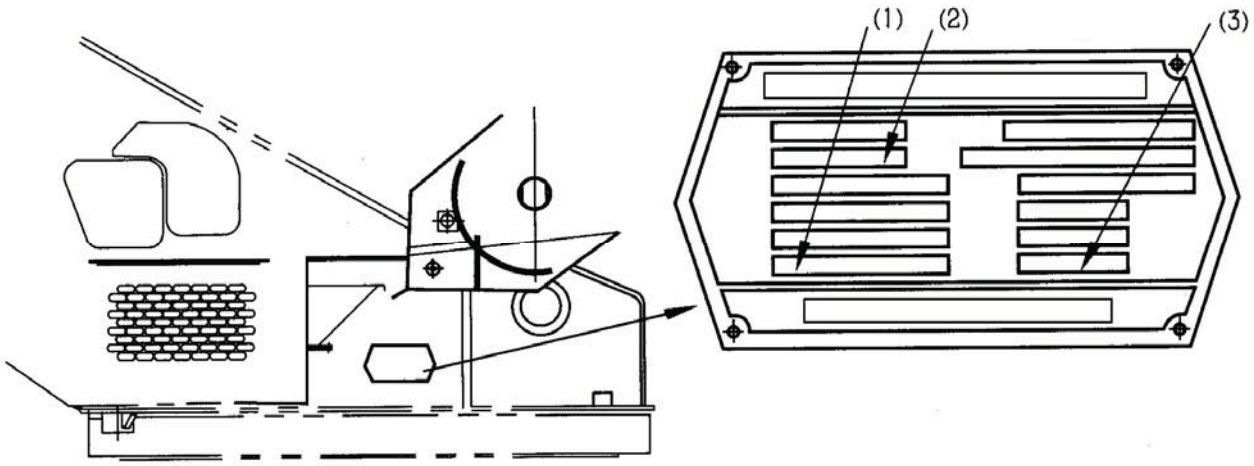

(4) Details of the problem, or the listing, number and quantity of desired parts

https://truckmanualshub.com/

Components

The directional terms (front, rear, right and left) used in this manual are defined with reference to the driver's position when seated in the carrier driver's cab. Their definitions remain the same even when the crane's upper structure is turned.

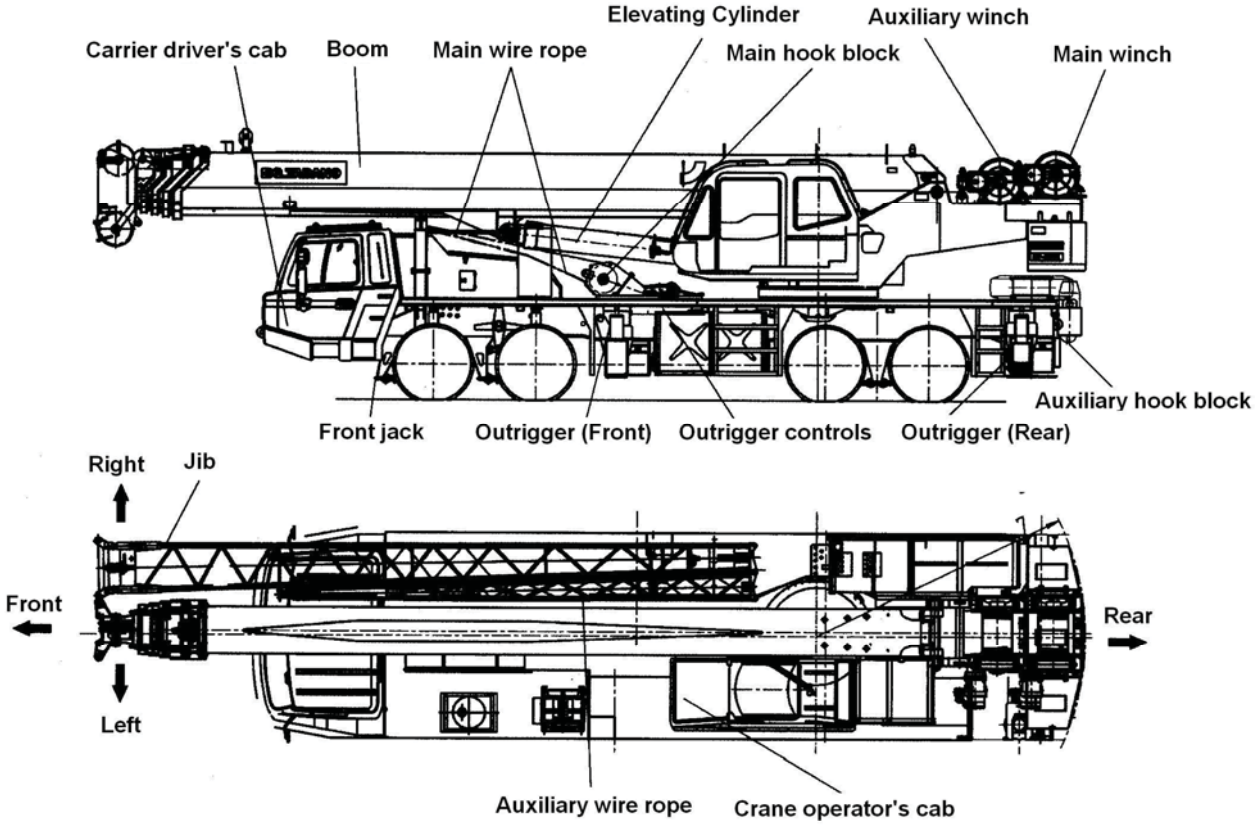

◆ The illustrations may slightly differ from the actual machine, due to designing alteration.

https://truckmanualshub.com/

Layout of Controls

Inside the Cab (ISO layout)

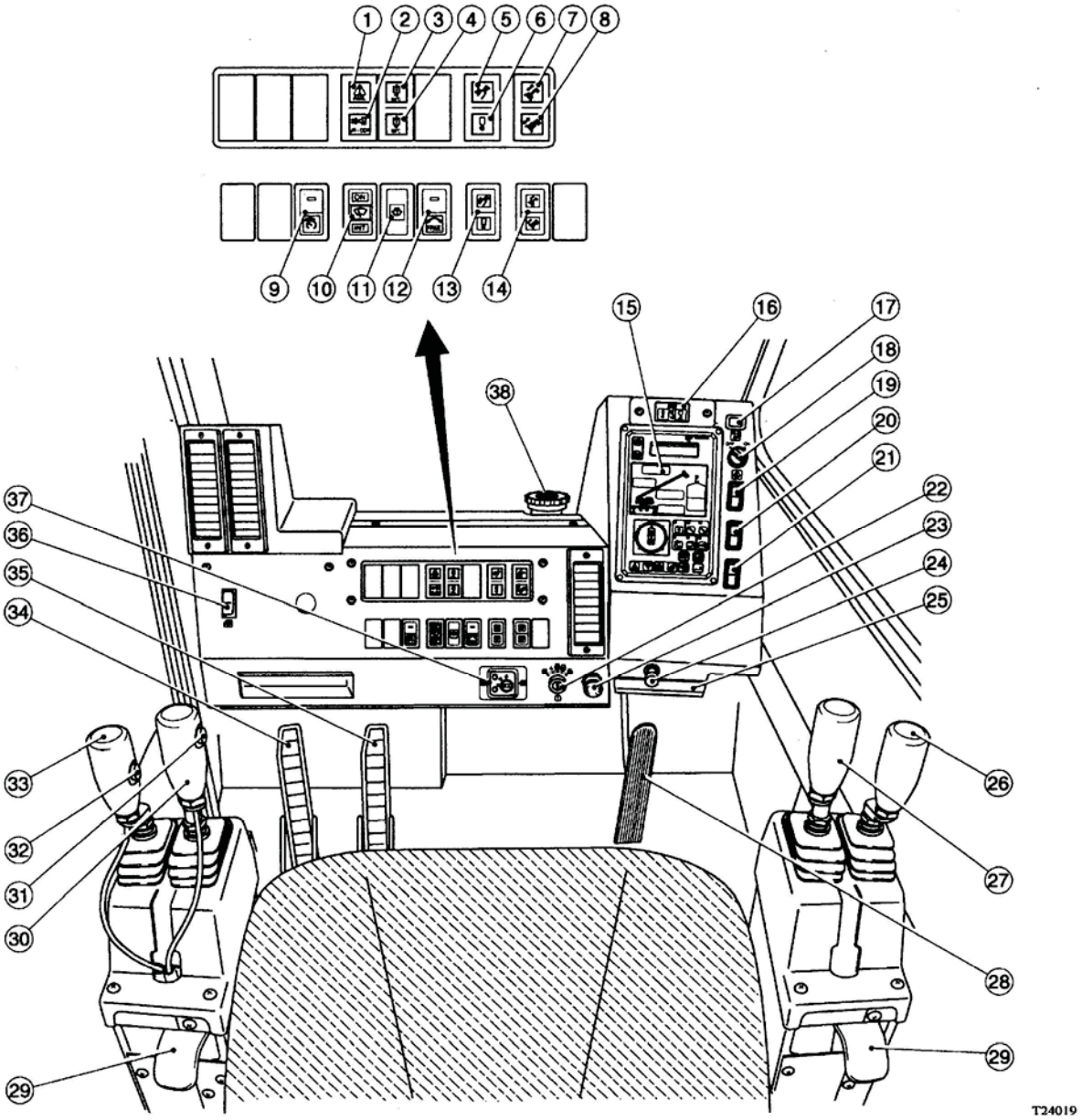

(BQ-TADANO layout)

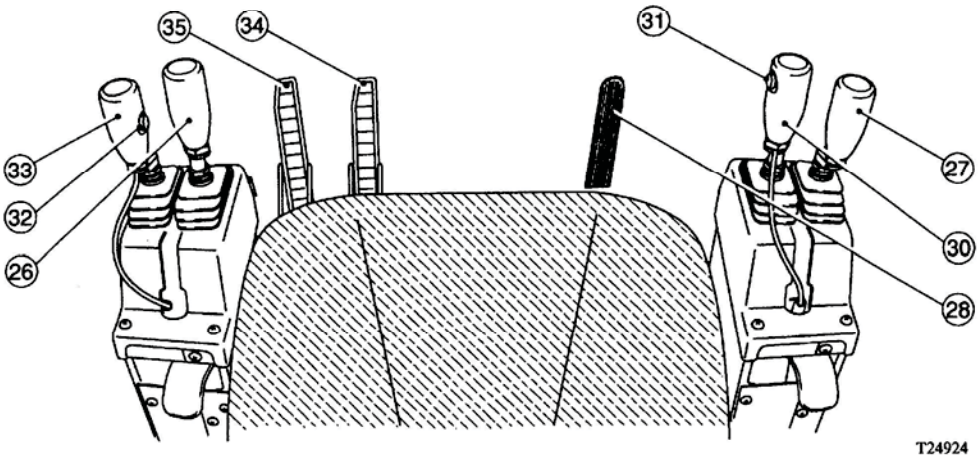

https://truckmanualshub.com/

1. AML cancellation warning lamp ····· 29
2. Jib lock indicator lamp ····· 100
3. Hydraulic oil pressure 50°C indicator lamp ····· 126
4. Hydraulic oil pressure 85°C warning lamp ····· 126
5. Boom telescoping operation indicator lamp ····· 75
6. Auxiliary hoist operation indicator lamp ····· 72
7. Boom telescoping mode II indicator lamp ····· 75
8. Boom telescoping mode I indicator lamp ····· 75
9. Low noise mode switch ····· 126
10. Front wiper switch ····· 126 → 136
11. Front washer switch ····· 126
12. Swing free/lock selector switch ····· 84
13. Boom telescoping /auxiliary hoist control selector switch ····· 72, 75
14. Boom telescoping mode I/II switch ····· 75
15. AML (overload prevention device) ····· 29
16. Winch drum rotation indicator (option) ····· 72
17. Overwind cutout release switch ····· 52, 72
18. AML override switch ····· 29
19. Swing brake switch ····· 84
20. Swing stop override switch ····· 84
21. Slow elevation stop switch ····· 81
22. Starter switch ····· 54
23. Accelerator lock knob ····· 70
24. Cigarette lighter ····· 126
25. Ashtray ····· 126
26. Boom elevating control lever ····· 81
27. Main hoist control lever ····· 72
28. Accelerator pedal ····· 70
29. Lever stand unlock lever ····· 66
30. Boom telescoping /auxiliary hoist control lever ····· 72, 75
31. Head/end boom extension switch ····· 75
32. Horn switch ····· 84
33. Swing control lever ····· 84
34. Boom telescoping control pedal ····· 75
35. Boom elevating control pedal ····· 81
36. Power window switch ····· 66
37. Heater control panel (option) ····· 125
38. Oil reservoir ····· 70

https://truckmanualshub.com/

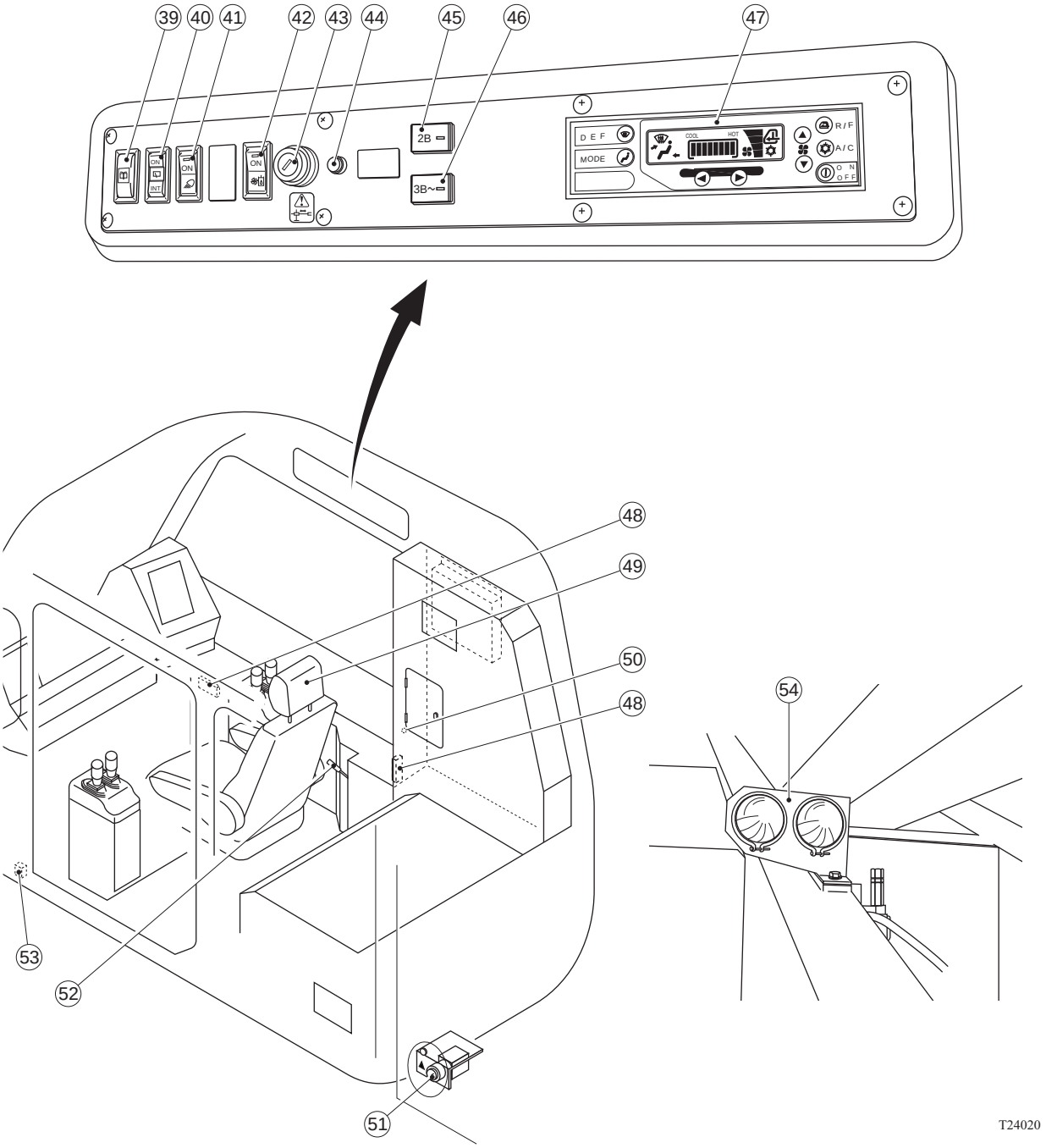

39. Roof washer switch ····· 126
40. Roof wiper switch ····· 126
41. Flood lamp switch ····· 126
42. Oil cooler switch ····· 126
43. Emergency outrigger control switch ····· 29
44. Emergency outrigger control indicator lamp ····· 29
45. 2nd boom emergency telescoping switch ····· 75
46. 3rd/4th/top boom emergency telescoping switch ····· 75
47. Air conditioner control panel (option) ····· 119
48. Cab lamp ····· 126
49. Seat ····· 66
50. Fan switch (option) ····· 126
51. Override key switch ····· 29
52. Swing lock lever ····· 11, 84
53. Power window close switch ····· 66
54. External warning lamps ····· 52

https://truckmanualshub.com/

Terminology

This section provides the meaning of some important terms used in this manual.

Load Radius, Lifting Height

"Load radius" refers to the horizontal distance between the crane's center of rotation and the vertical center of the lifted load.
A "lifting height" is defined for each load radius and refers to the vertical distance between the ground and the bottom of the hook block raised to its uppermost position.

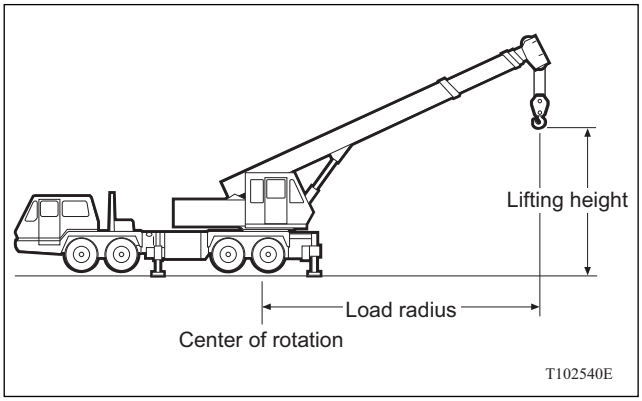

Maximum Lifting Height

"Maximum lifting height" refers to the maximum lifting height allowed.

Boom Length, Boom Angle

"Boom length" refers to the distance from the pivot pin at the foot of the boom to the center axis of the sheave (s) at the boom head.
"Boom angle" refers to the angle formed by the boom's centerline and the horizontal.

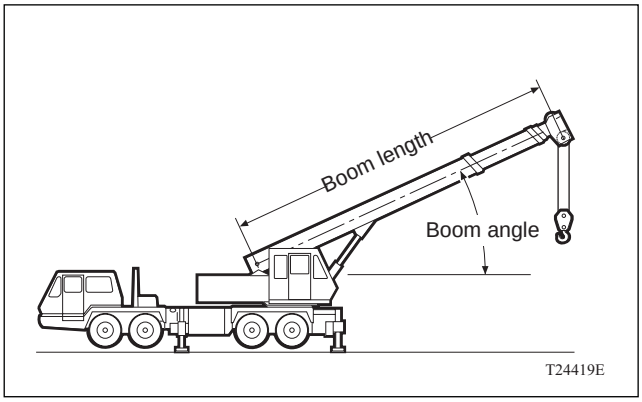

Jib Length, Jib Offset Angle

"Jib length" refers to the center-to-center distance as illustrated in the figure below.
"Jib offset angle" refers to the angle formed by the centerline of an extended jib and the centerline of the boom.

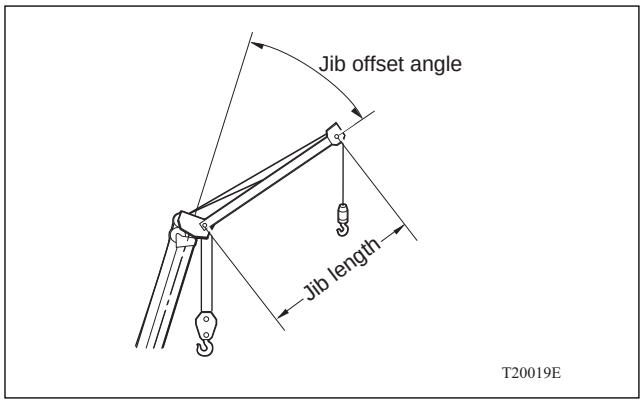

Rated Lifting Capacity

"Rated Lifting capacity" refers to the maximum allowable load for a particular boom length and load radius. The mass of load handling devices such as hook blocks and slings, shall be considered part of the load and must be deducted from rated lifting capacities.
The mass of individual hook blocks are indicated in the "INFORMATION AND DATA" section at the end of this manual.

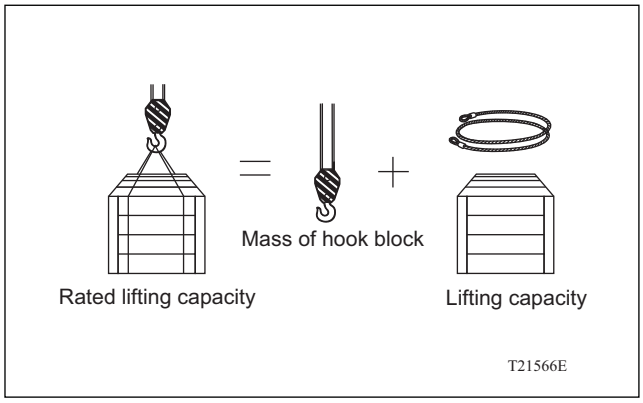

Without Load

"Without load" is used to indicate that no load is being lifted on the hook block.

https://truckmanualshub.com/

Stability Section, Strength Section

"Stability section" refers to the section of the rated lifting capacities table in which the major factor for determining lifting capacity is the stability of the crane.
"Strength section" refers to the section of the rated lifting capacity table in which the major factor for determining lifting capacity is the structural strength of the crane.
In the rated lifting capacities table, the capacities given above the blue line are those determined based on structural strength, and the capacities given below are determined based on stability.

Over-front, Over-rear, Over-side

"Over-front" refers to the forward working area of the carrier for which lifting capacities have been rated and listed in the rated lifting capacities table.
"Over-rear" corresponds to the rear working area for which lifting capacities have been rated and listed in the rated lifting capacities table.
"Over-side" refers to the working areas not included in "over-front" and "over-rear".

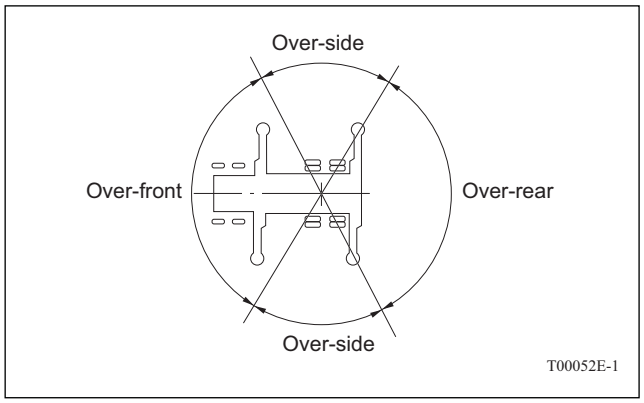

Over-front, Over-rear and Over-side Capacities

"Over-front capacity", "over-rear capacity" and "over-side capacity" refer to the rated lifting capacity that can be lifted in the over-front, over-rear and over-side areas, respectively.

360-degree Capacity

"360-degree capacity" means that the lifting capacities are the same regardless of the area in which the load is lifted.

Outrigger Extension Widths

"Outrigger extension width" refers to the horizontal distance between the centers of the right and left outrigger floats when the outriggers are extended.

(1) Full extension width of outriggers (L1)
The distance between outriggers when they are fully extended.

(2) Middle extension width of outriggers (L2)
The distance between outriggers when they are extended halfway.

(3) Minimum extension width of outriggers (L3)
The distance between outriggers when they are not extended.

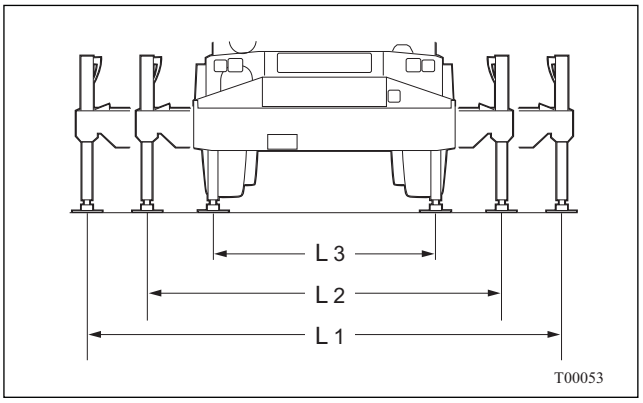

Capacities with Outriggers at Full Extension, Middle Extension and Minimum Extension

(1) Capacities with outriggers at full extension
Lifting capacities specified for a crane supported on fully extended outriggers.

(2) Capacities with outriggers at middle extension
Lifting capacities specified for a crane supported on outriggers extended halfway.

(3) Capacities with outriggers at minimum extension
Lifting capacities specified for a crane supported on outriggers not extended.

Raising Load Just Clear of Ground

This phrase is used to express the operation where the load is hoisted up a few centimeters above the ground and held at that position.

https://truckmanualshub.com/

OPERATION

https://truckmanualshub.com/

Carrier Traveling Procedure—Summary

⚠ WARNING

⚠This summary describes briefly the essential steps for traveling the crane. For detailed information on the individual procedures, refer to the appropriate pages in this section of the manual. Do not travel until you have a complete understanding of all the instructions and information given in this section.

⚠The precautions you must observed when traveling are described in the "Safety" section at the beginning of this manual. Carefully read the section before traveling the crane.

⚠If you find anything abnormal with the crane during traveling, stop the operation immediately, check and locate the cause, and repair any faulty components. To prevent accidents, do not travel until repairs have been completed.

Preparatory Steps

◆For detailed information on the individual procedures, refer to the sections shown in parentheses.

1. Set the crane as described in "At the End of Operation" of "Crane Operation Procedure-Summary" section.
("Crane Operation Procedure-Summary" ·····P. 13)

2. Make sure that the wire rope is reeved through the rope guide.
("Taking Out and Stowing the Main Hook Block" ·····P. 88)

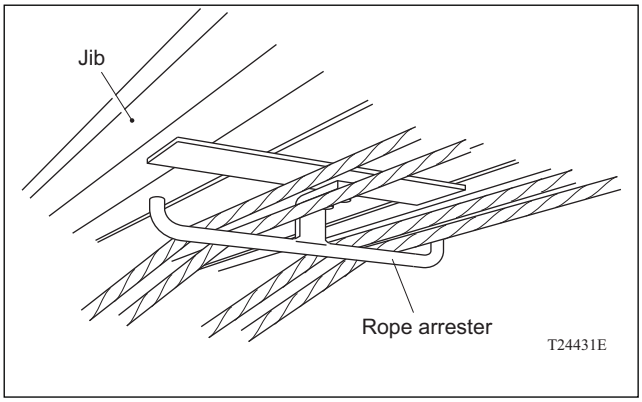

3. Check that the swing brake switch is turned on.
("Swinging the Boom" ·····P. 84)

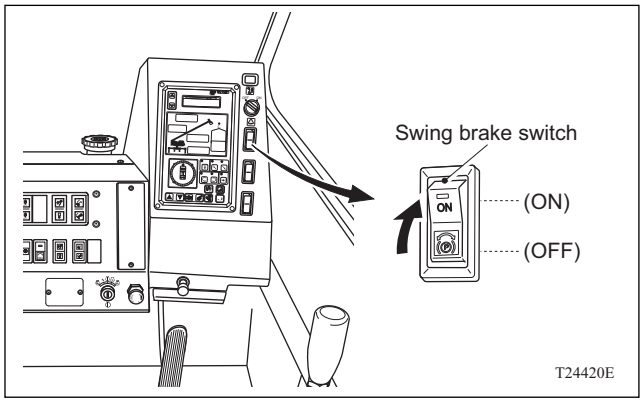

◆Activate swing lock lever only to travel for a small distance with the crane out of traveling configuration for unavoidable reasons.
Swing lock is not available while the boom is stowed on the boom rest.

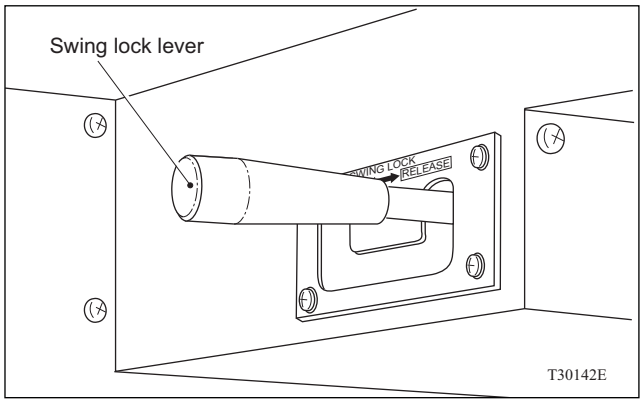

https://truckmanualshub.com/

Outrigger Operations for Traveling a Small Distance

⚠ WARNING

⚠ If the crane is moved without proper traveling precautions, it may overturn.
For traveling without setting the crane in traveling configuration, make the following preparations for preventing overturning:

- **Make sure that the tire air pressure is kept at the specified value (850 kPa [8.5 kgf/cm²]). If the air pressure is not insufficient, inflate the tires.**
- **Retract the boom fully (to the length of 11.1 m), set the boom angle to 45°, retract the jib fully (to the length of 9.0 m), and set the jib offset angle to 5°.**
- **Orient the boom directly forward or backward and fix it with the swing lock pin before applying the swing brake.**
- **Observe the specified boom elevation angle. For detailed information, refer to the "Weight Distribution Chart" in the INFORMATION AND DATA section.**

⚠ To prevent overturning, do not travel with a load hoisted.
⚠ To prevent overturning, do not perform crane operation during traveling.
⚠ Do not travel on the soft ground. Otherwise the tires may fall in the ground and the crane may overturn.
⚠ For safety, avoid starting or stopping suddenly.

1. Set the crane as in the above described warning.
2. If the front jack is already extended, retract it.
3. Perform the jack stowing operation until the jack floats are raised slightly from the ground.
4. Travel slowly at the speed below 5 km/h paying attention to the surroundings.
5. After traveling, set the outriggers immediately.

https://truckmanualshub.com/

Crane Operation Procedure—Summary

⚠ WARNING

⚠This summary describes briefly the essential steps for crane operation from start to finish. For detailed information on the individual procedures, refer to the appropriate pages in this section of the manual. Do not operate the crane until you have a complete understanding of all the instructions and information given in this section.

⚠The precautions you must observe during crane operation are described in the "Safety" section at the beginning of this manual. Carefully read the section before operating the crane.

⚠If you find anything abnormal with the crane during operation, stop the operation immediately, check and locate the cause, and repair any faulty components. To prevent accidents, do not operate the crane until repairs have been completed.

Preparatory Steps

◆For detailed information on the individual procedures, refer to the sections shown in parentheses.

1. Perform pre-operational inspection.
(“Pre-operational and Periodic Inspection” ·····P. 132)

2. Enter the cab, and adjust the seat and each lever stand so that the levers and all other controls can be operated easily.
(“Crane Operator’s Cab” ·····P. 66)

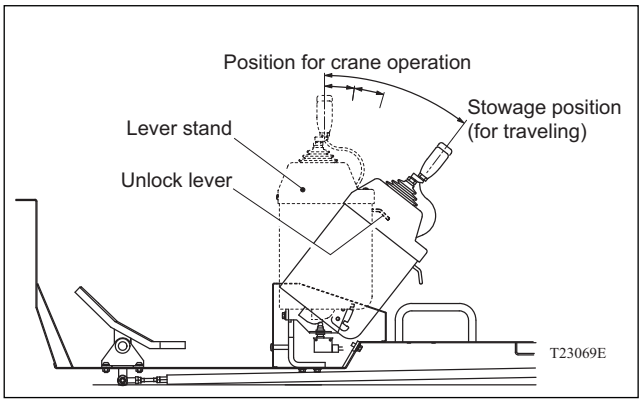

3. Make sure that the controls in the crane operator’s cab are in the following positions:
(1) Main and auxiliary hoist levers, boom telescoping lever, boom elevating lever and swing lever ···Neutral
(2) Swing brake switch ·····“ON”
(3) Swing stop override switch ·····Activated
(4) Slow elevation stop switch ·····Activated
(5) Emergency outrigger control switch ·····“OFF”

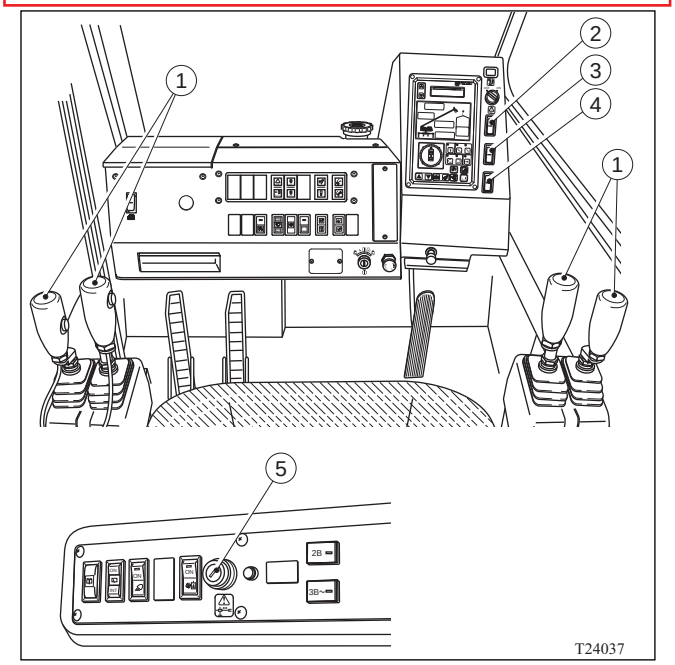

4. Start the engine by using the starter switch in the carrier driver’s cab.
(“Starting and Stopping the Engine” ·····P. 54)

5. Engage the PTO.
(“Operating the PTO and Warming Up the Machine” ·····P. 57)

6. Let the machine warm up. While it is warming up, check that all meter and monitor displays are normal and that the machine is not making any abnormal sounds.
(“Operating the PTO and Warming Up the Machine” ·····P. 57)

7. Fully extend the outriggers and level the crane.
(“Outriggers” ·····P. 58)

8. Extend the front jack.
(“Outriggers” ·····P. 58)

https://truckmanualshub.com/

9. Enter the crane operator's cab, and adjust the seat and the length of each lever so that you can easily operate the levers and all other controls.
("Crane Operator's Cab" ·····P. 66)

10. In the crane operator's cab, turn the starter switch ON.

11. Select the operational status on the AML.
("AML <Overload Prevention Device>" ·····P. 24)

12. Take out the main hook block from its stowed position.
("Taking Out and Stowing the Main Hook Block" ···P. 88)

13. Perform the preoperational checks for after the engine has been started.
("Preoperational and Periodic Inspection" ·····P. 132)

14. Reeve the wire rope round the main hook block sheaves as required for the operation.
◆Register the number of part lines of rope on the AML if the actual number is smaller than the standard one.
("Reeving the Wire Rope"·····P. 90)

15. Mount the single top or jib as necessary.
("Single Top" ·····P. 95)
("Jib" ·····P. 100)

16. Select the operational status on the AML, when the single-top sheave system or the jib is installed.
("AML <Overload Prevention Device>" ·····P. 24)

During Operation

1. Follow the rated lifting capacity table to eliminate any possibility of overloading.
("How to Read Performance Data Plate" ·····P. 16)
("Acceleration" ·····P. 70)
("Hoisting" ·····P. 72)
("Telescoping the Boom" ·····P. 75)
("Elevating the Boom" ·····P. 81)
("Swinging the Boom" ·····P. 84)
("Single Top" ·····P. 95)
("Jib" ·····P. 100)
◆When the AML activates an alarm in response to overloading, take appropriate corrective measures.
("AML <Overload Prevention Device>" ·····P. 24)
◆When an error occurs in the AML system, take the corrective measure indicated by the failure message displayed on the AML.
("AML <Overload Prevention Device>" ·····P. 24)
◆When a safety device other than the AML is activated (such as the overwind cutout device), take the appropriate corrective measures.
("Other Safety Devices" ·····P. 52)
◆Use the air conditioner, and other equipment in the crane operator's cab, as necessary.
("Equipment Inside the Cab" ·····P. 125)
◆When the ambient temperature is high, use the oil cooler as necessary.
("Equipment Inside the Cab" ·····P. 125)

https://truckmanualshub.com/

At the End of Operation

1. Stow the single top or jib.
(“Single Top” ·····P. 95)
(“Jib” ·····P. 100)

2. Stow the main hook block and stow the boom on the boom rest.
(“Taking Out and Stowing the Main Hook Block” ·····P. 88)

3. Make sure that the controls in the crane operator’s cab are in the following positions:
(1) Hoist, boom telescoping, boom elevating, and swing levers ·····Neutral
(2) Swing brake switch ·····“ON”

4. Return the lever stand to the stowage position.

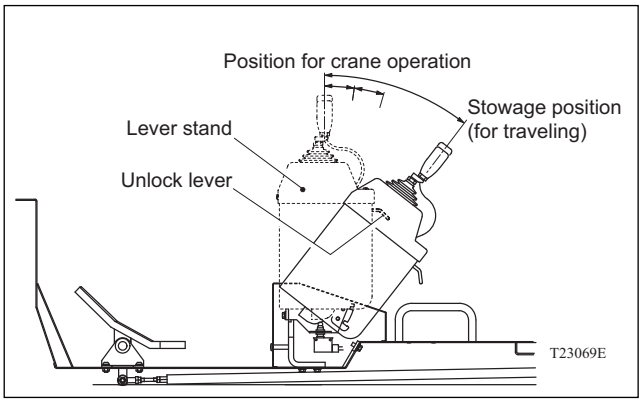

5. Shut off the air conditioner, oil cooler and all other equipment.
(“Equipment Inside the Cab” ·····P. 125)

6. Close all the crane operator’s cab windows.

7. Remove the key from the starter switch in the crane operator’s cab.
(“Starting and Stopping the Engine”·····P.54)

8. Get out of the crane operator’s cab and lock the door.
(“Crane Operator’s Cab” ·····P.66)

9. Retract the front jack.
(“Outriggers” ·····P. 58)

10. Retract the outriggers completely.
(“Outriggers” ·····P. 58)

11. Disengage the PTO.
(“Operating the PTO and Warming Up the Machine” ·····P. 57)

12. Stop the engine by using the starter switch in the carrier driver’s cab.
(“Starting and Stopping the Engine” ·····P. 54)

13. Perform the post-operational checks for the same points as for the pre-operational checks. If anything abnormal is found, have it repaired before operating the crane again.

How to Read Performance Data Plate

Working Radius/ Lifting Height Chart

◆ The following diagram is an example of the working radius/ lifting height chart. The chart for your crane is located inside the crane operator's cab.

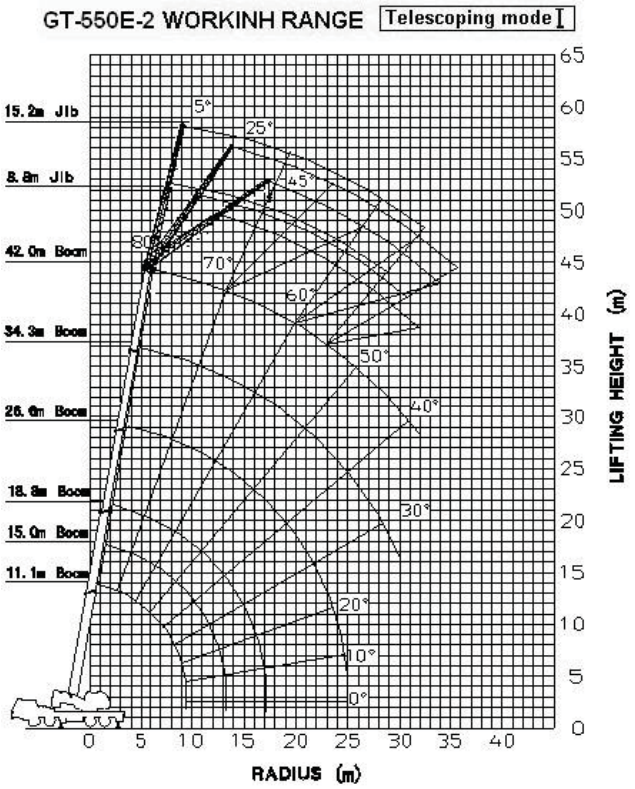

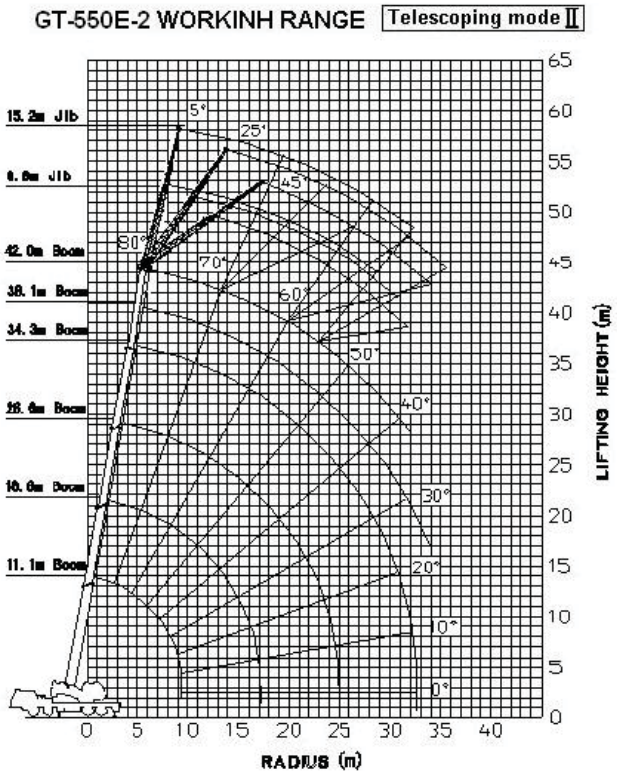

The working radius/ lifting height chart provides the load radii and lifting heights in relation to different boom lengths (jib lengths) and boom angles (jib offset angles). Use the chart in conjunction with the rated lifting capacity table when making an operation plan.

◆While points A and B in the figure are at the same load radius, point A denotes the boom angle (or jib offset angle), and point B the lifting height.

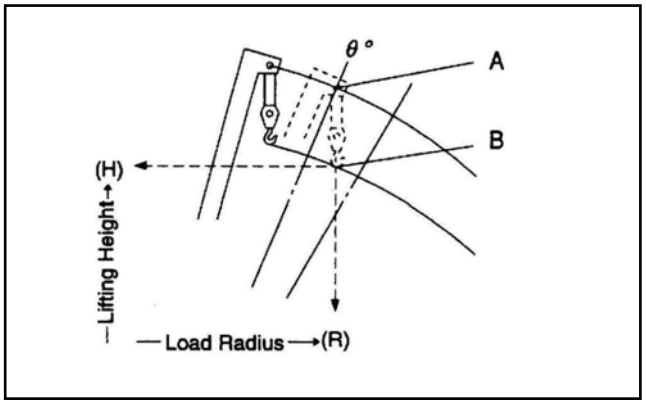

◆The working radius/ lifting height chart does not include the effect of boom deflection. The greater the mass o(the load is, the more the boom deflects, causing the load radius to increase somewhat. Take this effect into consideration when reading the working radius / lifting height chart.

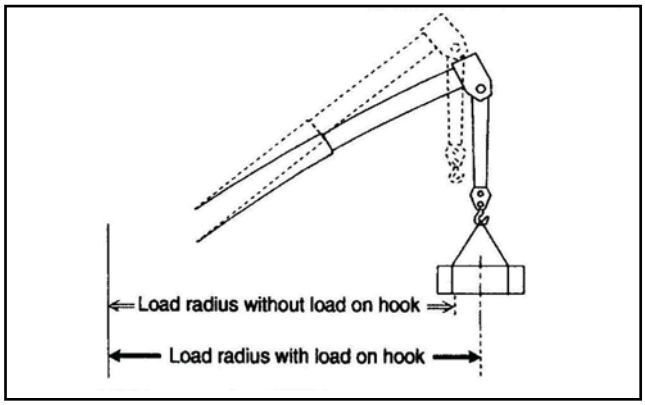

Boom Telescoping Mode and Boom Length

The telescoping mode I (the 2nd boom section extends first during boom extension) and the telescoping mode II (the 3rd through top boom sections extend first during boom extension) are available. When the boom length is any of the values listed in the load radius /lifting height chart and the rated lifting capacity table, the boom condition is among the one shown below.

Telescoping mode I （2nd boom section extends first.）

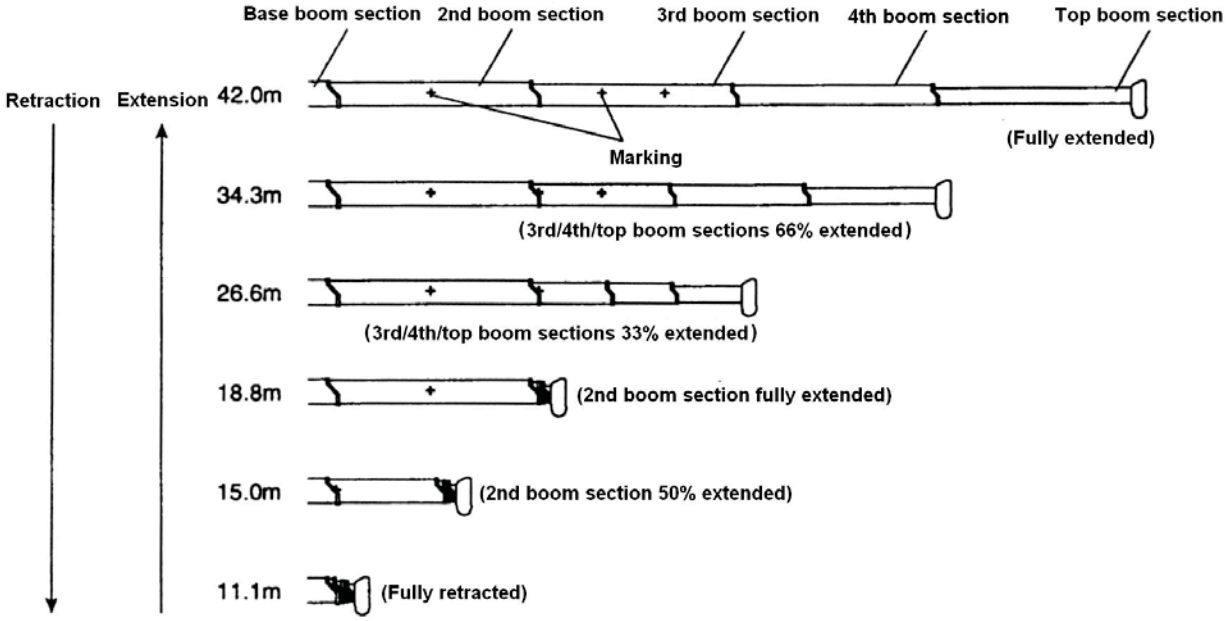

Telescoping mode II （3rd/4th/top boom sections extend first.）

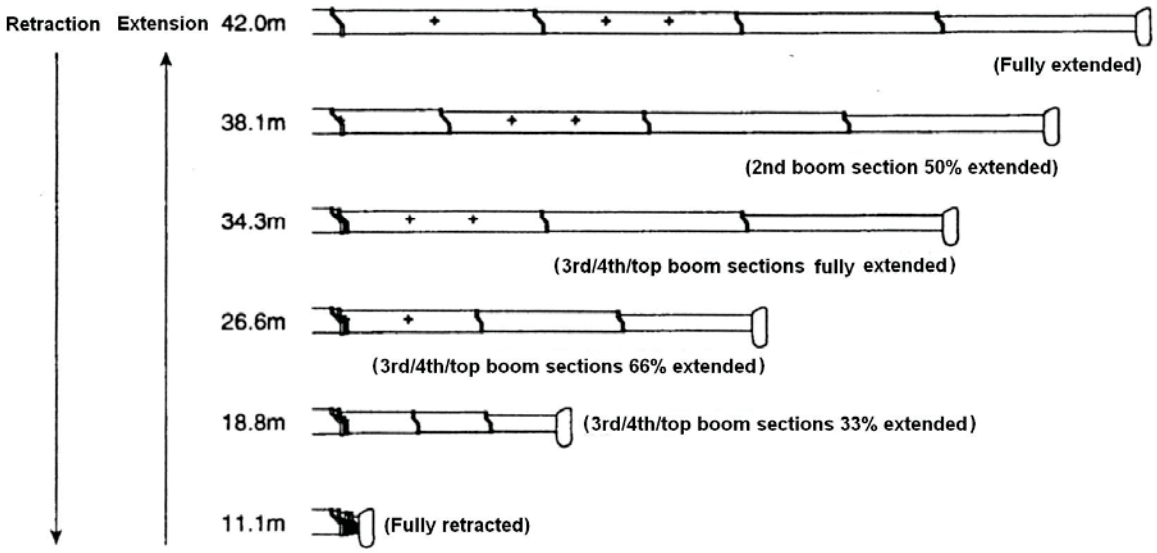

https://truckmanualshub.com/

Rated Lifting Capacity Table

⚠ WARNING

⚠ The values shown in the rated lifting capacity table are based on ideal conditions where the crane is set level on a firm surface, there is no wind or side load, and the load is not swinging. When operating the crane under these conditions is not possible, reduce the load as necessary according to the actual operating conditions.

◆The table shown below is an example of the rated lifting capacity table. The rated lifting capacity table for your crane is located in the crane operator's cab.
◆In the rated lifting capacity table, the values above the blue line are based on the structural strength of the crane, whereas the values below that line are based on the stability of the crane.
◆The stability limit of the rated lifting capacities does not exceed the values calculated in the Part 2/ISO 4305.
◆For the rated lifting capacities for the boom lengths which are not listed in the chart, see the AML display.

Rated lifting capacities tables are set up as shown below with the kind of job and the outrigger extension conditions. For actual values see the rated lifting capacity tables provided in the crane operator's cab.

Operation	Outrigger extension
• Boom lift • Single top lift	Full extension (6.8 m)
	Middle extension (4.6 m)
	Minimum extension (2.39 m)
• Jib lift	Full extension (6.8 m)
	Middle extension (4.6 m)

Below are some examples of rated lifting capacities tables.

[Example 1: Boom lift with outriggers fully extended]

GT-550E-2 RATED LIFTING CAPACITIES (BOOM)

UNIT：kg CLASS OF CRANE：C3

Outrigger max extended6.8m										
Working radius	11.1m boom	15.0m boom	18.8m boom		26.6m boom		34.3m boom		38.1m boom	42.0m boom
3.0	55,000	40,000	28,000	20,000						
3.5	43,700	40,000	28,000	20,000						
4.0	38,500	38,100	28,000	20,000						
4.5	34,200	33,800	28,000	19,800	20,000	14,000				
5.0	30,800	30,400	28,000	19,000	20,000	14,000				
5.5	27,800	27,400	27,200	18,200	20,000	13,600				
6.0	25,400	25,000	24,700	17,500	20,000	12,800	14,000	8,000		
6.5	23,200	22,800	22,500	16,800	18,900	12,000	14,000	8,000		
7.0	21,400	21,000	20,700	16,200	17,800	11,400	13,500	8,000	8,000	8,000
7.5	19,700	19,300	19,100	15,700	16,700	10,800	13,000	8,000	8,000	8,000
8.0	18,300	17,900	17,600	15,200	15,800	10,200	12,500	8,000	8,000	8,000
9.0	15,200	14,600	14,200	14,300	14,200	9,300	11,300	7,600	8,000	8,000
10.0		11,600	11,300	13,500	12,500	8,500	10,400	7,000	7,500	8,000
11.0		9,500	9,100	11,400	10,300	7,800	9,600	6,400	6,900	7,500
12.0		7,800	7,500	9,600	8,600	7,200	8,800	5,800	6,400	6,900
14.0			5,100	7,200	6,200	6,200	6,800	4,900	5,500	5,900
16.0			3,500	5,500	4,500	5,400	5,100	4,200	4,700	5,200
18.0					3,300	4,700	3,900	3,600	4,100	4,200
20.0					2,400	3,700	3,000	3,200	3,600	3,200
22.0					1,700	3,000	2,200	2,800	2,800	2,500
24.0					1,200	2,400	1,600	2,500	2,200	1,900
26.0							1,200	2,100	1,800	1,400
28.0							800	1,700	1,400	1,000
30.0							500	1,400	1,000	700
32.0								1,100	700	450
34.0									500	
Telescoping condition（%）										
Telescoping mode	Ⅰ,Ⅱ	Ⅰ	Ⅰ	Ⅱ	Ⅰ	Ⅱ	Ⅰ	Ⅱ	Ⅱ	Ⅰ,Ⅱ
2nd boom	0	50	100	0	100	0	100	0	50	100
3rd boom	0	0	0	33	33	66	66	100	100	100
4th boom	0	0	0	33	33	66	66	100	100	100
Top boom	0	0	0	33	33	66	66	100	100	100

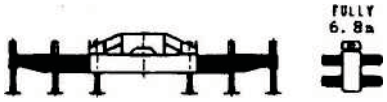

[Example 2: Jib lift with outriggers fully extended]

UNIT：kg CLASS OF CRANE：C3

Outrigger max extended 6.8m						
	42.0m Boom					
	8.8m Jib			15.2m Jib		
Boom angle	5°offset	25°offset	45°offset	5°orffset	25°offset	45°offset
80°	3500	2500	1400	2300	1150	750
75°	3500	2330	1380	2100	1040	670
72°	3300	2250	1350	1950	1000	630
70°	3000	2100	1320	1750	950	610
65°	2300	1900	1250	1440	880	560
60°	1400	1300	1150	1100	830	520
55°	750	700	650	500	400	

UNIT：kg CLASS OF CRANE：C3

Outrigger max extended6.8m						
	38.1m Boom (Telescoping mode Ⅱ) or less than that					
	8.8m Jib			15.2m Jib		
Boom angle	5°offset	25°offset	45°offset	5°offset	25°offset	45°offset
80°	3500	2500	1400	2300	1150	750
75°	3500	2330	1380	2100	1040	670
72°	3300	2250	1350	1950	1000	630
70°	3000	2100	1320	1750	950	610
65°	2300	1900	1250	1440	880	560
60°	1900	1600	1150	1220	830	520
55°	1450	1350	1080	1100	750	490
50°	950	850	800	650	550	450
45°	500	450	450			

UNIT：kg CLASS OF CRANE：C3

Outrigger max extended 6.8m						
	34.3m Boom (Telescoping mode Ⅰ)or less than that					
	8.8m Jib			15.2m Jib		
Boom angle	5°offset	25°offset	45°offset	5°offset	25°offset	45°offset
80°	3500	2500	1400	2300	1150	750
75°	3500	2330	1380	2100	1040	670
72°	3300	2250	1350	1950	1000	630
70°	3000	2100	1320	1750	950	610
65°	2300	1900	1250	1440	880	560
60°	1900	1600	1150	1220	830	520
55°	1450	1350	1080	1100	750	490
50°	950	850	800	650	550	450
45°	500	450	450			

Boom Lift

See the applicable section of the rated lifting capacity table and find the rated lifting capacity value that corresponds to the boom length and load radius

(1) Use the section of the rated lifting capacity table that corresponds to the status of the outriggers, front jack and working area.

(2) Take rated lifting capacity value W (tons) that corresponds to the desired telescoping mode, load radius R (m) and boom length L (m).

Outriggers fully extended ·····						
Load radius(m)	**m boom	**m boom	Lm boom		**m boom	
*						
*						
R			W			
*						

Telescoping mode	I , II	I	I	□	□	

◆The rated lifting capacity values for boom lift assume a boom with jib and single top stowed.

◆The rated lifting capacity values for boom lift are based on the load radius. The load radii shown in the rated lifting capacity table include the deflection of the boom under the mass of a load. When determining capacity from the table, therefore, find the rated lifting capacity value based on the actual measured load radius.

◆When the actual boom length exceeds the length specified for a certain boom extension, check the rated lifting capacity value for the specified length and for one stage longer, and use the smaller of the two. (The value may be different from that indicated by the AML)

◆When the front jack is not extended, note that the lifting capacity in the over-front area is poorer than in the over-rear and over-side areas. Keep this in mind when swinging the load from the over-rear or an over-side area to the over-front area.

◆The mass of load handling devices such as hook blocks and slings, shall be considered part of the load and must be deducted from rated lifting capacities.

Jib Lift

See the applicable section of the rated lifting capacity table and find the rated lifting capacity value that corresponds to the boom length and load radius.

(1) Use the section of the rated lifting capacity table that corresponds to the status of the outriggers, front jack, working area, boom length and boom telescoping mode.

(2) Take rated lifting capacity value W (tons) that corresponds to the desired jib length L (m), jib offset angle (°) and boom angle (°).

Outriggers fully extended ·····						
Boom angle	Telescoping mode Ⅱ ·····					
	Lm Jib					
	5° offset		25' offset		45° offset	
	R		R		R	
*						
*						
θ				W		
*						

◆The mass of load handling devices such as 4.5-ton hook and slings, shall be considered part of the load and must be deducted from rated lifting capacities.

Single Top Lift

For operations with the single top mounted, use the boom lift section of the rated lifting capacity table to find the allowable load. Find the rated lifting capacity value based on boom length and load radius. From that value, subtract the mass of the main hook block. The resultant value is the rated lifting capacity for a single top lift. However, remember that the maximum rated lifting capacity for a single top lift is 4,500 kg. When the result of the above calculation (< table value > - < main hook block mass >) is over 4,500 kg, always regard the rated lifting capacity as 4,500 kg.

https://truckmanualshub.com/

Working Area Chart

⚠ WARNING

⚠ While the swing stop override switch is shifted to OFF, the crane does not automatically stop even if it is overloaded by boom swing from an area allotted with greater lifting capacities to an area allotted with smaller lifting capacities.
Do not turn the swing stop override switch to OFF unless for unavoidable reasons.

Applicable rated lifting capacities change as the ranges of the over-front area, the over-side areas, and the over-rear area vary, depending on the outrigger extension width and whether the front jack is used.

The following figures show examples of the rated lifting capacity in each condition.
The diagram indicating the working ares and their corresponding rated lifting capacities for your crane is included in the data plate file located in the crane operator's cab.

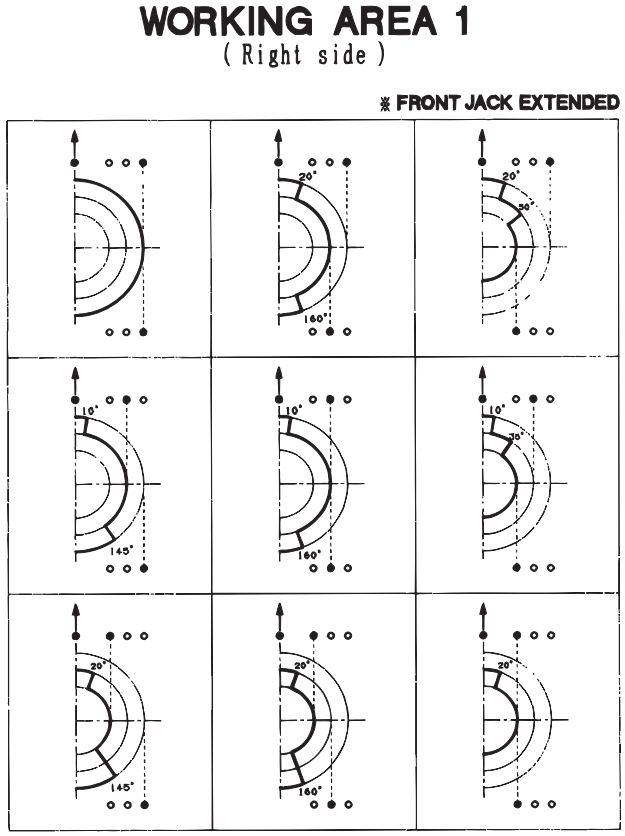

Select the diagram that agrees with the desired condition of outrigger and front jack and see the lifting capacity for each working area.

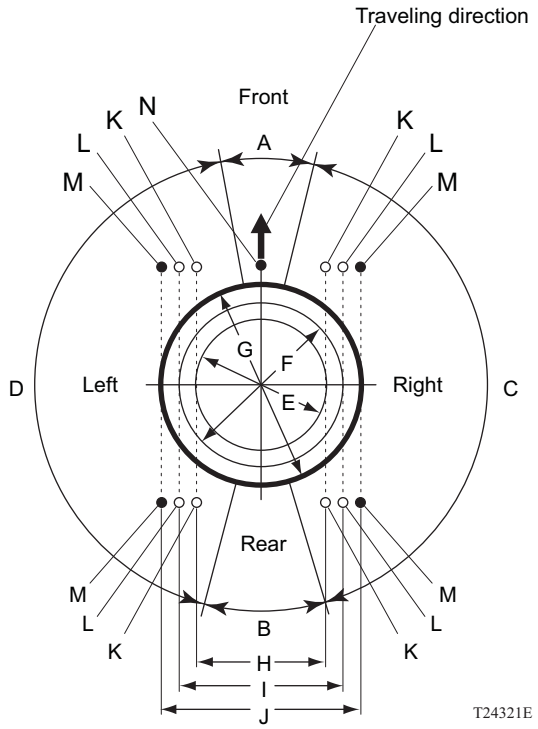

A: Over-front area
B: Over-rear area
C: Over-side area (right)
D: Over-side area (left)
E: Rated lifting capacity (capacity with outriggers at minimum extension)
F: Rated lifting capacity (capacity with outriggers at middle extension)
G: Rated lifting capacity (capacity with outriggers at full extension)
H: Minimum extension width of outriggers
I: Middle extension width of outriggers
J: Full extension width of outriggers
K: Position of outrigger jack with the beam not extended
L: Position of outrigger jack with the beam extended halfway
M: Position of outrigger jack with the beam extended fully
N: Front jack

https://truckmanualshub.com/

◆The area inside the bold line in the figure above shows the applicable rated lifting capacities.
◆Black marks among K, L, and M represent the actual positions of outrigger jacks. The black marks in the above figure shows that the left and right outriggers are extended fully.

–Example–
While the outrigger extension is as shown below and the front jack is used (extended), the rated lifting capacities determined for each working area for boom lift are as follows:
(1) Over-front area (340°–10°): capacities with outriggers at full extension
(2) Over-right area (10°–145°): capacities with outriggers at middle extension
(3) Over-rear area (145°–200°): capacities with outriggers at full extension
(4) Over-left area (200°–340°): capacities with outriggers at middle extension
If the outrigger extension is as shown below, the lifting capacity turns from the one with outriggers at full extension into the one with outriggers at middle extension when the boom passes the left rear (200° point) while swung from the over-rear area into the over-left area.
The lifting capacity turns from the one with outriggers at middle extension into the one with outriggers at full extension when the boom is swung further into the over-left area (340°–10°).

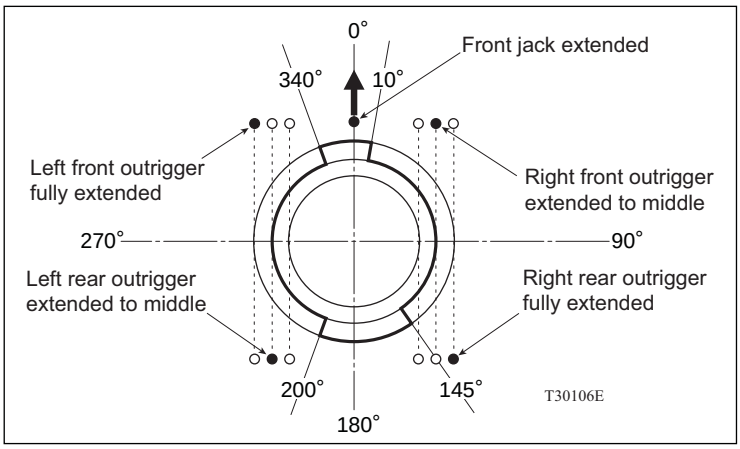

https://truckmanualshub.com/

AML (Overload Prevention Device)

⚠ WARNING

⚠ The AML operates properly only when it is used exactly as instructed in this manual. If you do not follow the specified AML and crane operating procedures, the crane could overturn or be damaged, causing a serious accident. Be sure to observe the following precautions for safe operation.

- **Never perform any operation with the AML deactivated.**
- **Place the crane on firm and level ground with the outriggers extended and adjust the crane so that it is level.**
- **Before starting operation, perform pre-operational checks on the AML to ensure that it is operating properly.**
- **Always make sure that the actual outrigger extension width and the representation of the outrigger extension width on the AML display conform. Otherwise the crane may overturn.**
- **While the swing stop cancel switch is shifted to OFF, swinging will not stop automatically even if overloading occurs. The rated lifting capacity may vary during boom swing, depending on the outrigger extension width and the front jack condition. When swinging the load to the area allotted for smaller rated lifting capacities after lifting it in the area allotted for greater rated lifting capacities, pay attention not to overload the crane after understanding the section “How to Read Performance Data Plate”.**
  If the alarm buzzer sounds and the moment ratio indication on the AML exceeds 100% while a load is swung, stop swinging immediately. Then lower the load or swing the boom back. (For the specified values which trigger the alarm, see “Configuration and Functions of the AML System” section.)
- **When the AML exceeds the specified value, the alarm will sound intermittently. Slow the crane operation and take great care. (For the specified values, see the “Configuration and Functions of the AML System” section.)**
- **Do not lift a load on the boom with the jib mounted. If this must be done by unavoidable reasons, a boom lift status, and not a jib lift status, should be selected on the AML.**
  In this case, a precautionary warning is output when the moment is below 75% and a limit warning is output when the moment is below 85%. Remember that the warnings will be output earlier. (For the moment values corresponding to the warning types, see the "Configuration and Functions of the AML System".)

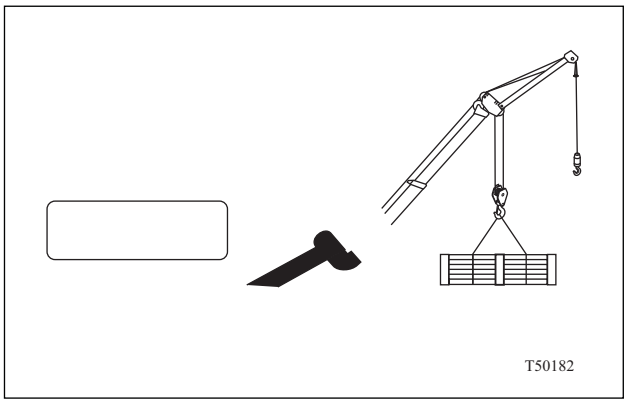

- **Do not lift a single load using both the boom and jib. If this must be done by unavoidable reasons, a jib lift status, and not a boom lift status, should be selected on the AML. (The figure shows a 5° offset angle with the first jib section extended.) Make sure that the mass of the load (including the mass of the load handling devices) is less than the specified rated lifting capacity for the jib. If the load is left held up only by the auxiliary wire rope when the main wire rope is loosened, the load's center of gravity moves to give an increased figure in moment display. Take care to overloading.**

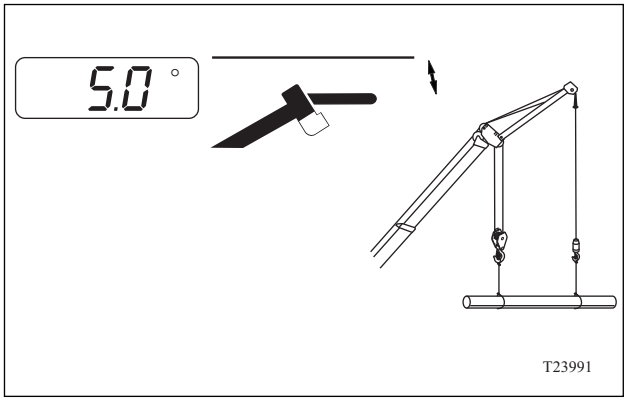

https://truckmanualshub.com/

- **When the crane is automatically stopped during operation toward critical condition (hoisting up, boom extension or boom lowering), operate the appropriate controls to move toward the non-critical condition (hoist down, retract boom or raise boom).**
- **Do not raise the boom to raise the load clear of the ground. Doing so is dangerous because the crane will not stop automatically even when it is overloaded. Hoist up the load to raise it clear of the ground. Once the load has cleared the ground, stop hoisting and check for safety.**

[NOTICE]

◆While the elevating cylinder is extended or retracted to the full stroke, the display of the AML becomes erroneous. In this case, elevate the boom in the opposite direction to terminate the stroke end condition.

Configuration and Functions of the AML System

The AML (Automatic Moment Limiter) system is a safety device provided to prevent overloading of the crane which may cause it to overturn or be damaged.
The AML system has various kinds of functions, including the following four typical functions. Based on the registered work conditions by operator selection and the signals from various sensors, the crane operations are controlled.

(1) Automatic stop function for overloading

The AML calculates and compares the working and rated moment values and displays them as a percentage. When the working moment exceeds the rated moment (100% or more), failure message is shown, alarm buzzer sounds, and the crane operation toward the critical side stops.

(2) Automatic stop function by boom upper angle restriction

To prevent jib from contacting the hook block or wire rope during boom lift or single top lift, a message and an alarm is output and boom raising and boom retraction are halted in the following conditions:

- The boom is raised over approx. 76° while the boom extension is less than approx. 2 m.
- The boom extension is reduced less than approx. 2 m while the boom angle is over approx. 76°.

(3) Working range limit functions

When any working range limit is registered to AML, the crane is controlled so that the crane work posture does not exceed this registered working range limit. When the boom reaches the previously registered restriction, buzzer sounds, and the crane operation stops.

(4) Slow stop function

The elevating speed slows down before the boom stops slowly in the following conditions:

- Boom (lowering) stopping by overloading
- Boom (raising) stopping by boom upper angle restriction
- Boom reaches the stroke end (while raised and lowered)
- Boom (raising and lowering) stopping by working range limit function

https://truckmanualshub.com/

The situation of automatic stop due to automatic stop function and working range limit function is as listed below, depending on the working condition:

◎: Slow stop ○: Stop

Automatic stop by overloading	Hoisting up	○
	Boom lowering	◎
	Boom extension	○
	Swing	○
Boom upper angle restriction	Boom raising	◎
	Boom retraction	○
Stop at stroke end	Boom raising/loweing	◎
Stop by working range restriction	Boom raising/lowering	◎
	Boom extension	○
	Swing	○

◆While the elevation slow stop cancel switch is in “OFF” position, the slow stop function for boom elevation is deactivated.

◆While the automatic swing stop function is in “OFF” position, swing does not stop automatically.

https://truckmanualshub.com/

AML System Configuration

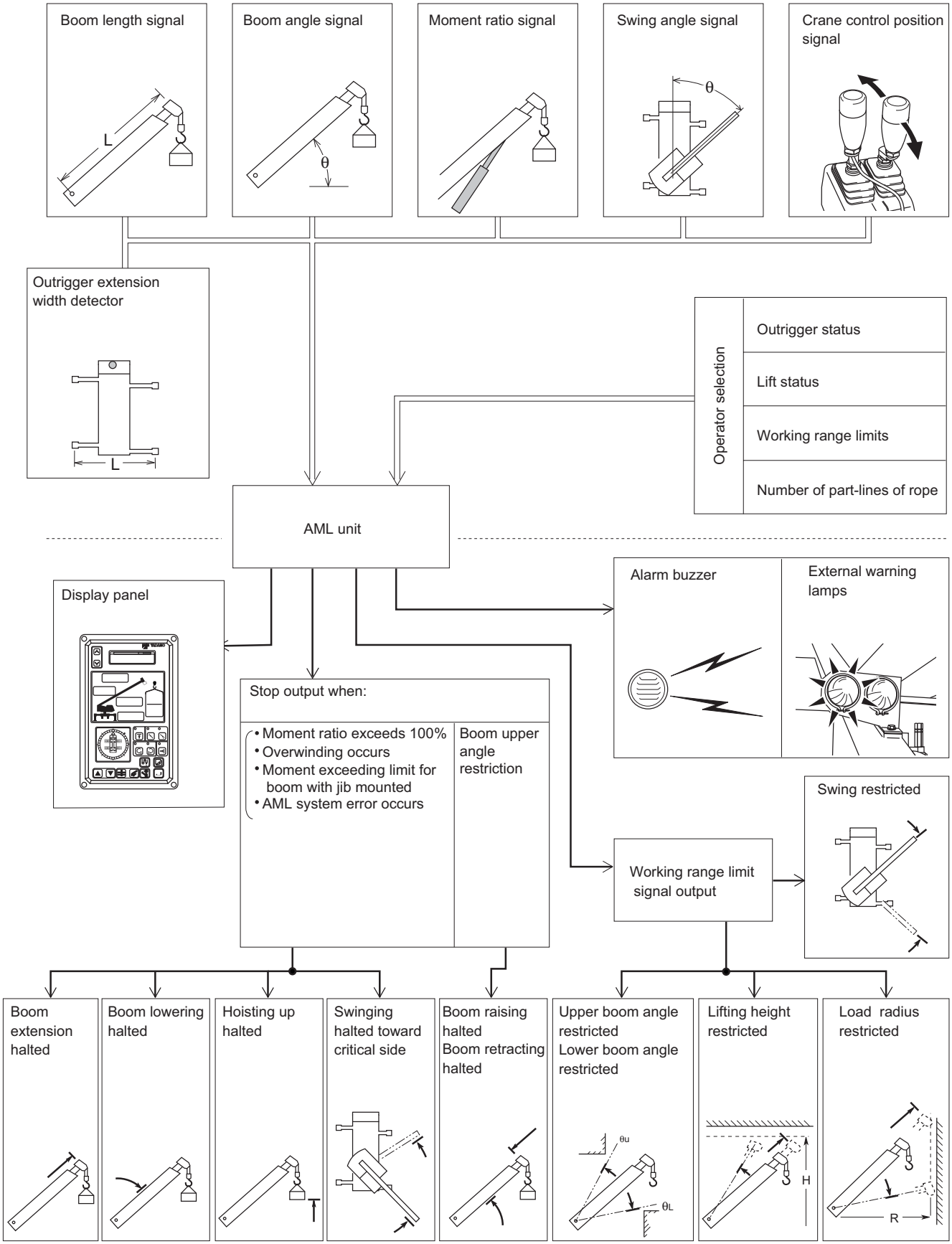

T24085E

https://truckmanualshub.com/

Automatic Stop Functions

Causes of automatic stop		Operation	Halted movement
• Moment ratio exceeds 100% (*1) • Overwinding • AML system error		• Boom lift • Single top lift • Jib lift	• Hoisting up • Boom lowering • Boom extension • Boom swing
Working range limit	Upper boom angle restricted		• Boom raising
	Lower boom angle restricted		• Boom lowering
	Lifting height restricted		• Boom raising • Boom extension
	Load radius restricted		• Boom lowering • Boom extension
	Swing restricted		• Boom swing
• Boom upper angle restriction		• Boom lift • Single top lift	• Boom raising • Boom retraction

(*1): For the boom lift with the jib mounted, automatic stop will work when the moment exceeds 85%.

Alarm Functions

Condition	Alarm
Winch lever is moved toward critical side (hoist up, boom lowering or boom extension) while overwinding condition exists.	Moment display: Displays [Warning:0024]. Buzzer: Sounds continuously.
Overwind cutout function is released with the winch overwound.	Moment display: Displays [Warning:0015]. External warning lamps: Red lamp is lit. Buzzer: Sounds continuously.
Moment ratio exceeds 90%	Moment display: Yellow segment(s) is lit. External warning lamps : Orange lamp is lit. Buzzer: Sounds intermittently.
Moment ratio exceeds 100%	Moment display: Displays [Warning:0023]. External warning lamps: Red lamp is lit. Buzzer: Sounds continuously.
AML system error	Moment display: Displays failure messages. Buzzer: Sounds 3 seconds.
Working range limit function activated.	Moment display: Displays failure messages. Associated restriction indicator lamp flashes. Buzzer: Sounds continuously. AML buzzer: Sounds 3 seconds.
Slow stop control	Moment display: Displays [Warning:0081]or[0082] Buzzer: Sounds intermittently.
Boom lift with jib mounted on boom	
(1) Moment ratio is between 75%and 85%	Moment display: Green segment(s) is lit. External warning lamps: Orange lamp is lit. Buzzer: Sounds intermittently.
(2) Moment ratio exceeds 85%	Moment display: Displays [Warning:0088]. External warning lamps : Red lamp is lit. Buzzer: Sounds continuously.

◆In the above table, "Buzzer" is the device outside the AML unit, outputting buzzing sound.
"AML buzzer" is the device inside the AML unit, outputting beeping sound.
◆The AML buzzer sounds for 3 seconds every time a message appears. It outputs long sounds when slow stop control is activated and outputs short sounds when other controls are activated.

https://truckmanualshub.com/

Controls

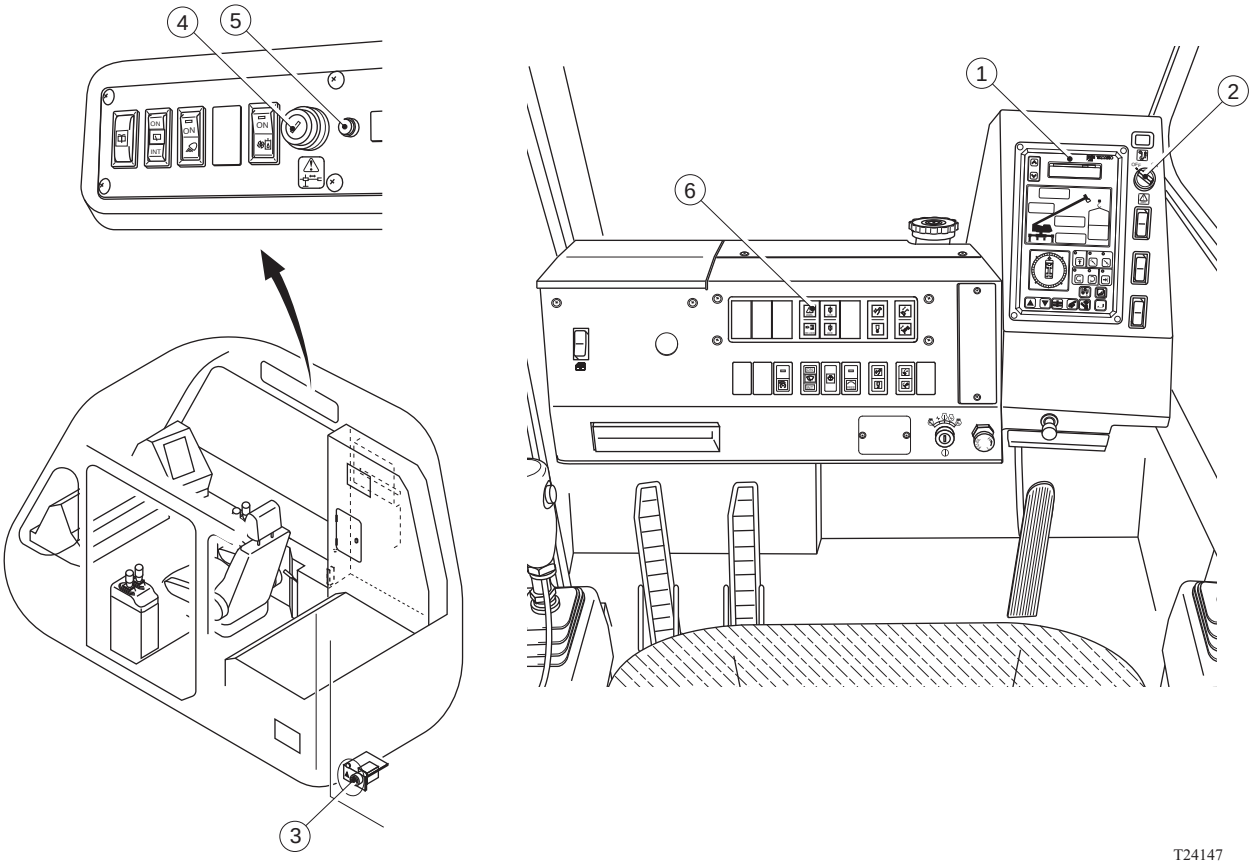

1. AML unit
2. AML override switch
3. Override key switch
4. Emergency outrigger control switch
5. Emergency outrigger control indicator lamp
6. AML cancellation warning lamp

AML Override Switch
Override Key Switch

These are emergency switches provided to stow the boom when failure occurs in the AML system.
For details, see the “Disposition of System Troubles” section.

Emergency Outrigger Control Switch

This switch is used to enable registering outrigger extension width temporarily on the AML and to sustain crane operation while an error occurs on the outrigger extension detector.
◆For details, see the "Disposition of System Troubles" section.

https://truckmanualshub.com/

Names and Functions of AML Main Unit Parts

AML LIIB

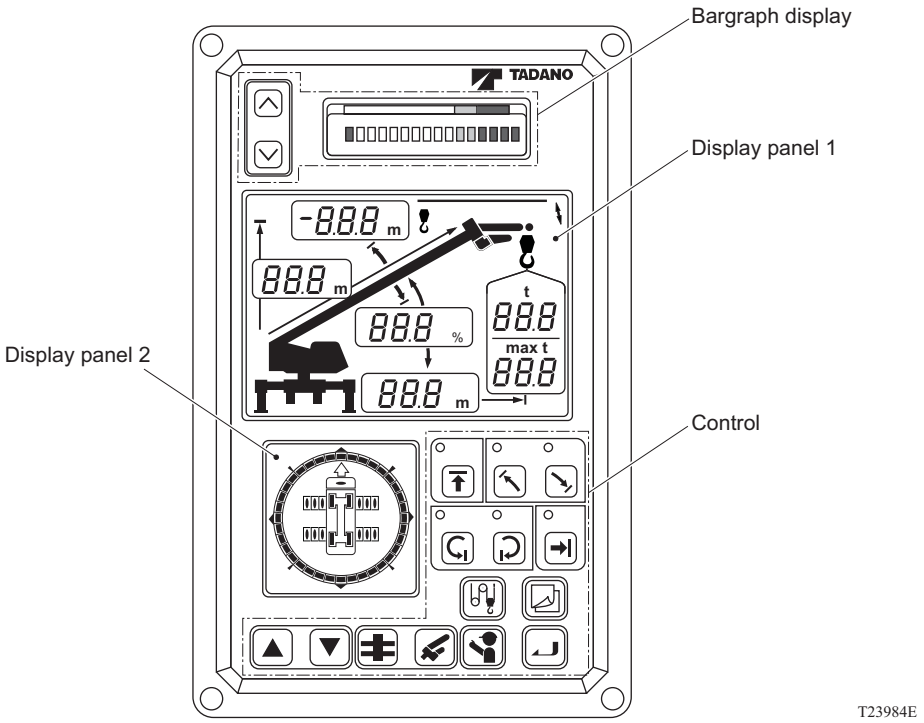

https://truckmanualshub.com/

Bargraph Display

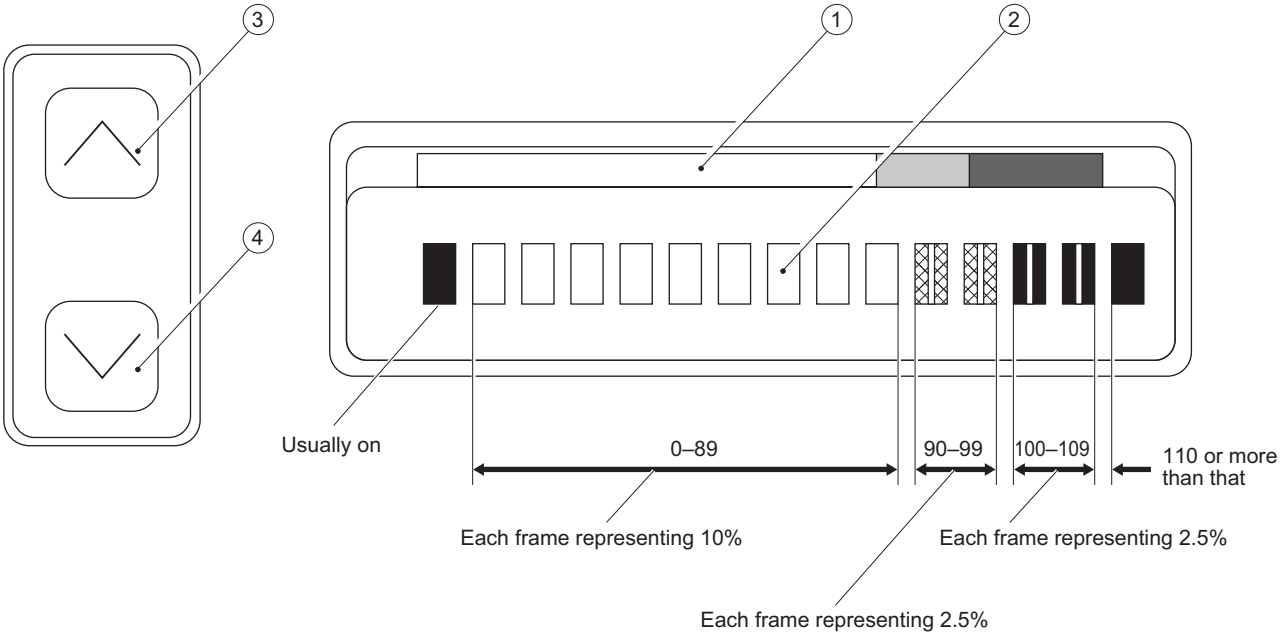

T23213E

1. Moment ratio mark

The moment ratios on the bargraph are color coded as follows:
safe (green), notice (yellow) and limit (red).

2. Moment display

Normally displays a moment ratio on a bargraph.
Displays the main-circuit oil pressure and torque converter oil pressure when the display alteration key is held down.
Also displays error messages when the AML or any of its associated devices fail(s).

3. Scroll-up key

Used to see the previous lines of message displayed on the moment display.

4. Scroll-down key

Used to see the next lines of messages displayed on the moment display.

https://truckmanualshub.com/

Display Panel 1

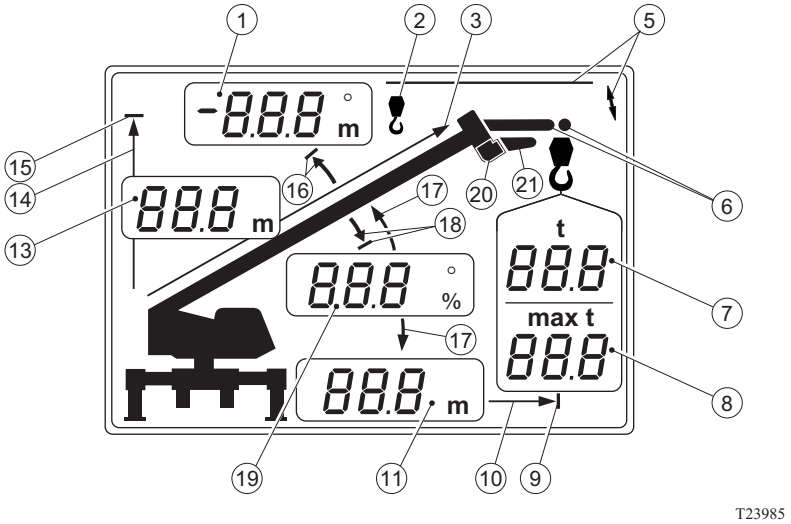

1. Jib angle display
When jib lift is selected, the jib angle offset is displayed. When the number of part-lines of rope select key is pressed, or the display select key is kept being pressed, the number of part-lines of ropes is displayed. Also, when the upper boom angle restriction function is activated, the registered upper boom angle limit value is displayed as long as the register key is kept being pressed.

2. Number of part-lines of indicative symbol
This symbol shows that the jib angle display (1) indicates the number of part-lines of rope

3. Boom length indicative symbol
This symbol, while marked up, means the value in the boom length display [13] is a boom length value.

5. Jib angle indicative symbol
Comes on to indicate that the value shown in the jib angle display [1] represents the offset angle.

6. Jib lift indicative symbol
Comes on when the jib lift is selected to represent the registered jib status.

7. Real load display
Displays the real load.

8. Rated lifting capacity display
Displays the rated lifting capacity.

9. Load radius limit restriction indicative symbol
Comes on to indicate that the value shown in the load radius display [11] represents the load radius limit. Note that the load radius indicative symbol [10] is also displayed at the same time.

10. Load radius indicative symbol
Indicates that the value shown in the load radius display [11] represents the load radius.

11. Load radius display
Normally displays the crane's load radius.
When the load radius limit restriction function is activated, the load radius limit restriction value is displayed while the register key is held down.

13. Boom length display
Usually displays boom length.
Displays the lifting height while the display alteration key is pressed.
When the lifting height restriction function is effective, this displays lifting height restriction value, while the register key is being pressed.

14. Lifting height indicative symbol
This symbol, while marked up, means the value in the boom length display [13] is a lifting height.

https://truckmanualshub.com/

15. Lifting height restriction symbol
This symbol, while marked up, means the value in the boom length display [13] is a lifting height restriction value.
The lifting height symbol [14] is marked up simultaneously.

16. Upper boom angle limit restriction symbol
Indicates that the jib angle display [1] displays the registered boom angle upper restricted value.

17. Boom angle indicative symbol
Indicates that the boom angle display [19] displays the boom angle.

18. Lower boom angle limit restriction symbol
Indicates that the boom angle display [19] displays the registered lower boom angle restricted value.

19. Boom angle display
Normally displays the boom angle.
Displays the moment % when the display alteration key is held down. When the restriction function is activated, the lower boom angle limit restriction value is displayed while the register key is held down.

20. Boom lift indicative symbol
Comes on when the boom lift is selected.

21. Single-top lift indicative symbol
Comes on when the single-top lift is selected.

https://truckmanualshub.com/

Controls

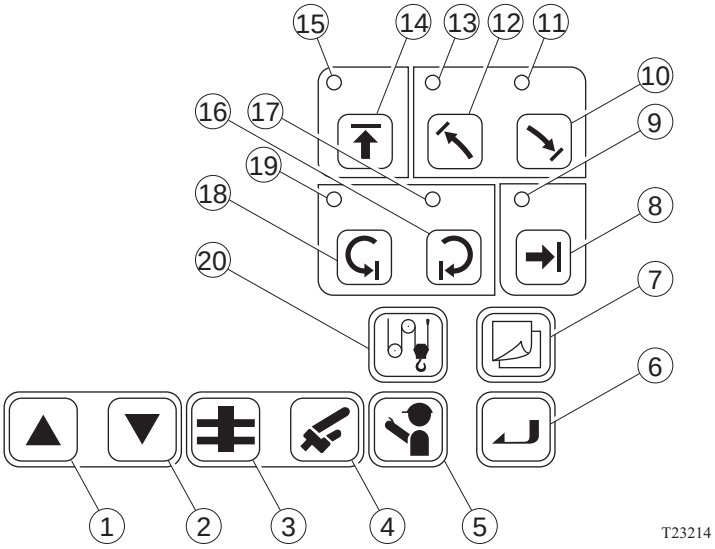

1. Increase key
Used to increase the selected value.

2. Decrease key
Used to decrease the selected value.

3. Outrigger mode select key
Used to select the outrigger status.

4. Lift mode select key
Used to select the lift status.

5. Check key
Used to check the AML system functions.

6. Register key
Used to register the selected state.

7. Display alteration key
Used to alternate the displays on display panel 1.

8. Load radius restriction key
Use to activate and cancel the load radius limiting function.

9. Load radius restriction indicator lamp
Lights up when the load radius limiting function is activated.

10. Lower boom angle limit restriction key
Used to activate and cancel the lower most boom angle limiting function.

11. Lower boom angle limit restriction indicator lamp
Lights up when the lowermost boom angle limiting function is activated.

12. Upper boom angle limit restriction key
Used to activate and cancel the upper most boom angle limiting function.

13. Upper boom angle limit restriction indicator lamp
Lights up when the uppermost boom angle limiting function is activated.

14. Lifting height restriction key
Used to activate and cancel the lifting height limiting function.

15. Lifting height restriction indicator lamp
Lights up when lifting height limiting function is activated.

16. Right swing restriction key
Used to activate and cancel the right swing limiting function.

17. Right swing restriction indicator lamp
Lights up when the right swing limiting function is activated.

https://truckmanualshub.com/

18. Left swing restriction key
Used to activate and cancel the left swing limiting function.

19. Left swing restriction indicator lamp
Lights up when the left swing limiting function is activated.

20. Number of part-lines of rope select key
Used to register a number of part-lines of rope.

Display Panel 2

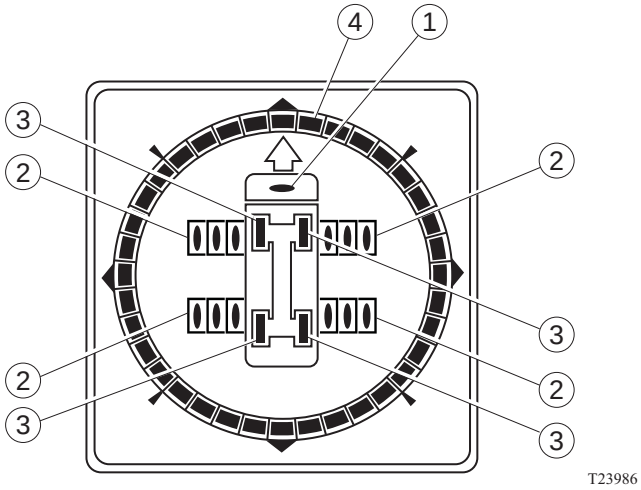

1. Front jack symbol
Indicates that the front jack is used.

2. Outrigger state indicative symbol
Displays the way the outriggers are extended.

3. "On-rubber" (Outrigger-not-in-use) state indicative symbol
Comes on when the starter switch in the crane operator’s cab is turned “ON”.

5. Boom position indicator
Displays the boom position in 10° increments.

https://truckmanualshub.com/

Selecting Operational Status

⚠ WARNING

⚠ Should the operational status be incorrectly registered, the crane might overturn or be damaged, leading to a serious accident. Prior to every operation, check that the registered status corresponds to the actual status of the crane.

Selecting Outrigger Status

◆The "on-rubber" state indicative symbol is marked up when the power supply is turned on (the PTO switch in the carrier driver's cab is turned ON after the engine is started). (The outrigger state indicative symbols and front jack symbol remain off.)

◆Turning the power off (PTO switch: OFF) automatically erases all the previous settings stored in memory after approximately 2 hours. To resume the operation more than 2 hours after the power has been last turned off, enter the settings all over again.

Register the outrigger status using the outrigger mode select key and register key.

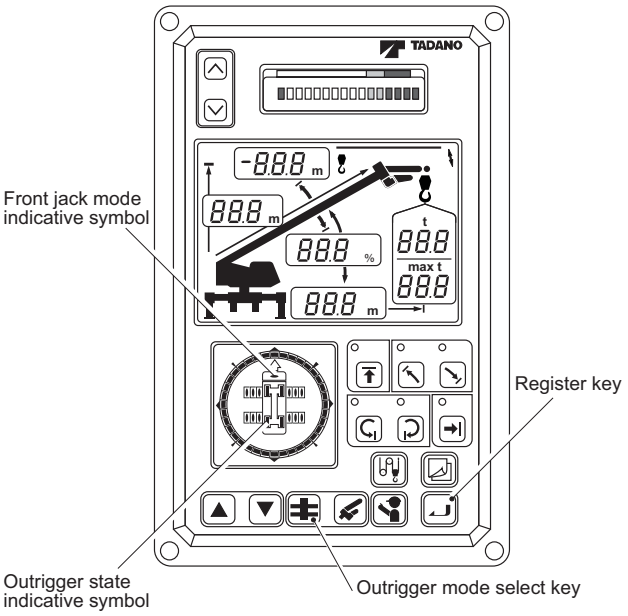

T24099E

When the outrigger mode select key is pressed, the outrigger state indicative symbols and front jack symbol flash in accordance with the status that the AML detects on.

After making sure that the display conforms to the actual outrigger conditions, press the register key. The outrigger state indicative symbol will change from flashing into being marked up continuously and the moment display, rated lifting capacity display and real load display will return to normal display conditions, meaning that the state has been registered.

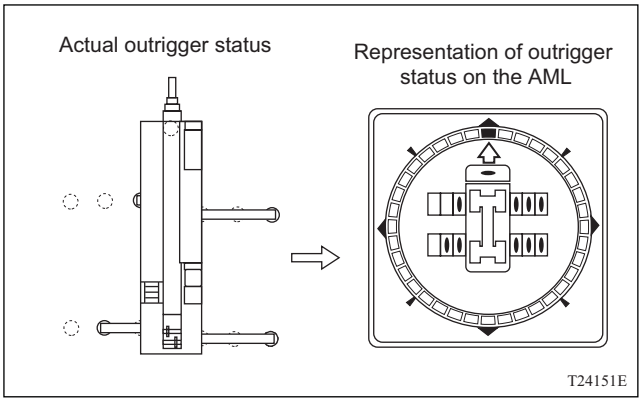

T24151E

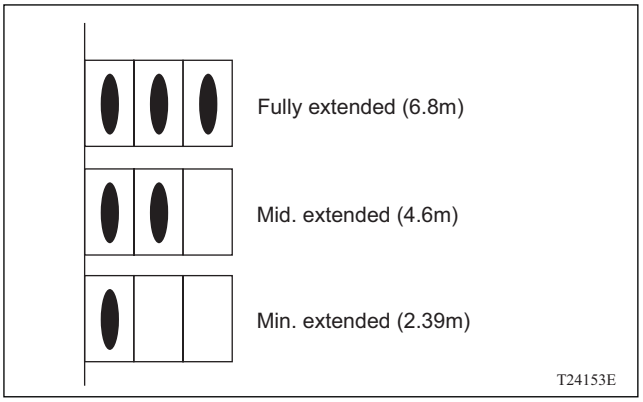

T24153E

◆If an outrigger or the front jack is stowed after registration of outrigger status, the registered status is erased. In this case, register the outrigger status again before starting crane operation.

https://truckmanualshub.com/

Selecting Lift Status

◆The boom lift status is the default status and is automatically selected (the boom indicator lamp lights) when the power supply is turned on (the PTO switch is placed in the ON position).

◆Turning the power off (PTO switch: OFF) automatically erases all the previous settings stored in memory after approximately 2 hours. To resume the operation more than 2 hours after the power was last turned off, enter the settings all over again.

Register the lift status using the lift mode select key and register key.

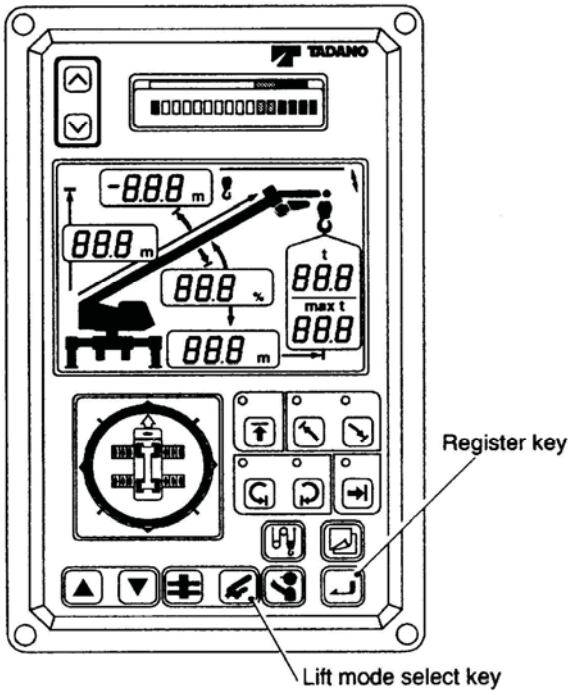

T23988E

Each time the lift mode select key is pressed, the mode changes. The status changes in numerical sequence, from (1) to (9), as shown below. The display returns to (1) if you press the switch when status (9) is shown on the display. Select the status that corresponds to the actual lift status.

◆After making sure that the display conforms to the actual lift status, press the register key. The corresponding lift indicative symbol will change from flashing into being marked up continuously and the moment display, rated lifting capacity display and real load display will return to normal display conditions, meaning that the status has been registered.

(When the jib set status is selected, the jib lift indicative symbol will remain flashing.)

◆Select the boom lift status when lifting a load on the boom with the jib mounted.

◆Select a jib lift status when lifting a single load using both the boom and jib.

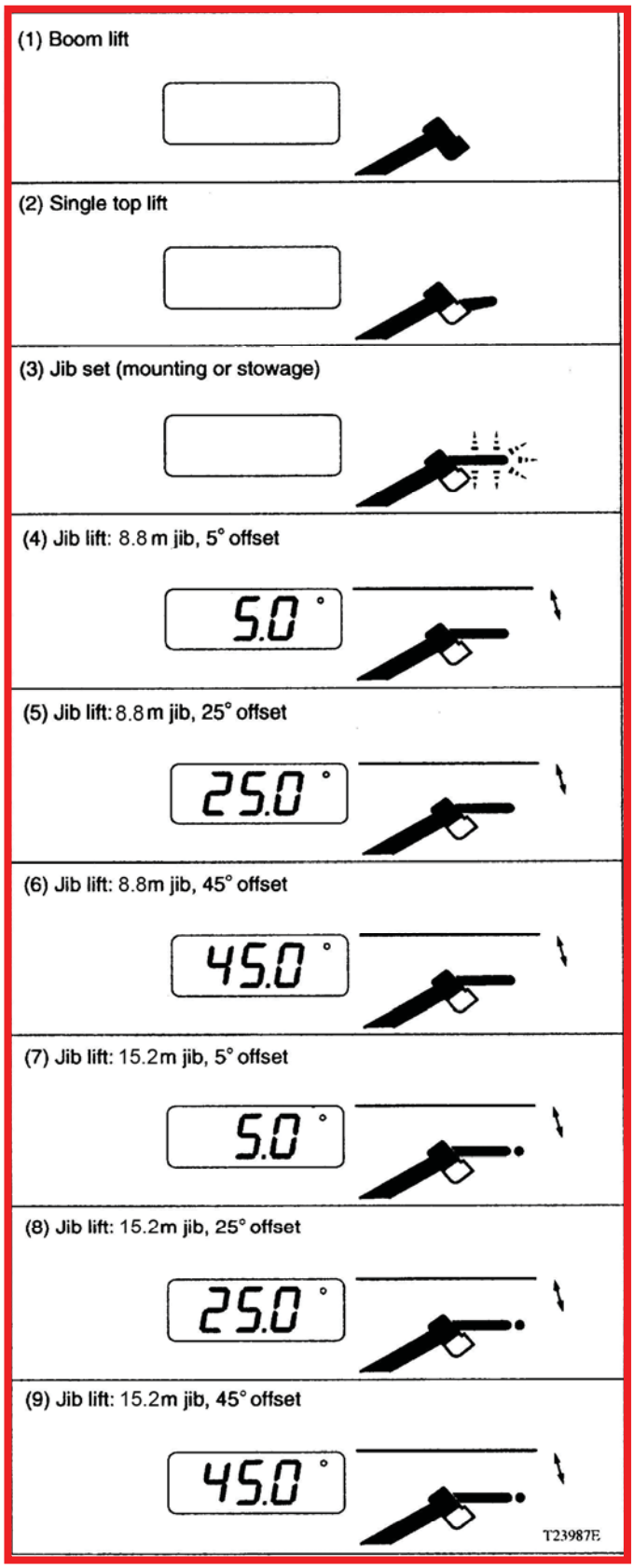

https://truckmanualshub.com/

Selecting Number of Part-lines of Rope

[NOTICE]

◆If the registered number of part-lines of rope is smaller than the standard number, a maximum allowable lifting load is limited, depending on the registered number. In case the number is registered as '0', however, a process takes place as if the standard number were registered.

◆Similarly, a process takes place on the basis of the standard number of part-lines of rope if the registered number is larger than the standard number or other than the values specified for your model.

◆When the power supply is turned on (i.e. PTO switch ON), the standard number of part-lines of rope corresponding to a work condition is selected.

Register the number of part-lines of rope by use of the number of part-lines of rope select key, as follows:

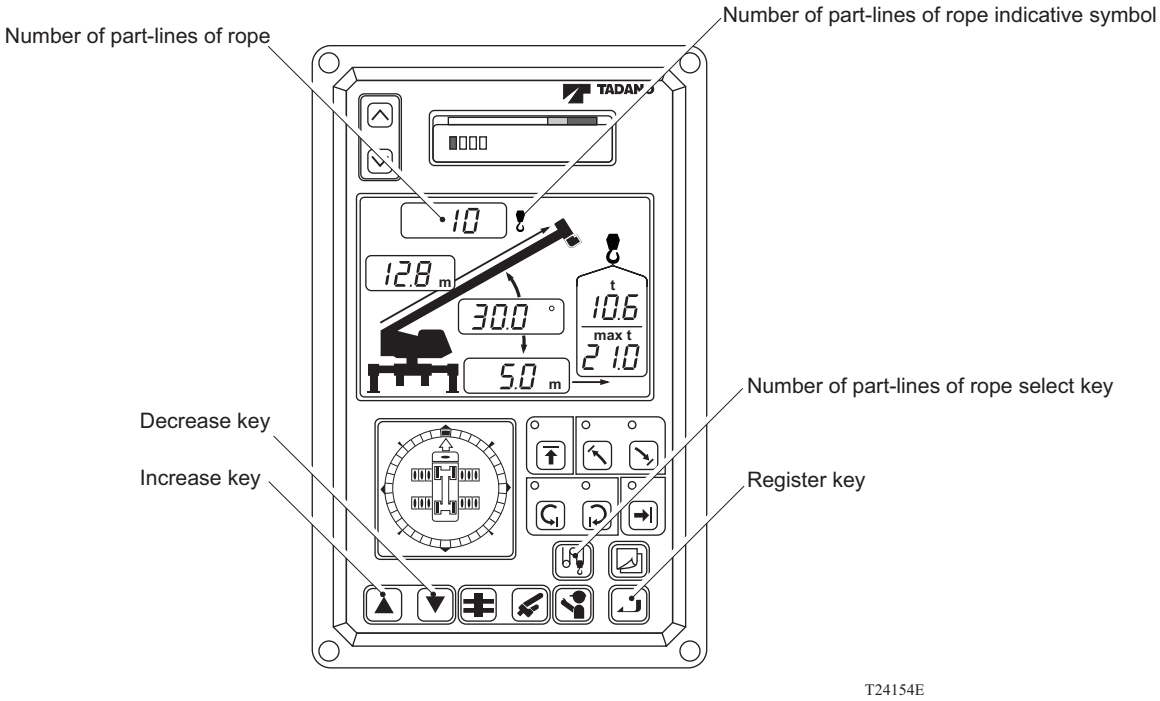

1. Press the number of part-lines of rope select key. The number of part-lines of rope symbol will flash, and the number of part-lines of rope will be shown on the jib angle display in a flashing mode.

2. Press the increase or the decrease key to set the number of part-lines of rope at a desired value.

◆When the increase or the decrease key is pressed, a numeral showing the number of rope changes from flashing to being marked up, showing a fixed value for the increase or decrease.

◆When the increase or the decrease key is kept pressed, the number of rope continuously increases or decreases.

3. Once the intended number of part-lines of rope is set, press the register key and register the number. Then, the number of part-lines of rope symbol is turned off and the jib angle display returns to a normal status.

◆The number of part-lines of rope can be confirmed by pressing the display alteration key.

https://truckmanualshub.com/

AML Pre-operational Inspection

⚠ WARNING

⚠ Operating the crane with a malfunctioning AML could cause the crane to overturn or be damaged. Be sure to perform the pre-operational inspection on the AML system and start the crane only after ensuring that the system is operating properly.

Before starting operation, check that the AML works in good condition, as follows:

1. Press the check key and make sure that the AML is in the following conditions:

- Moment display.....All segments are marked up.
- Display panel (1 and 2)...All segments are marked up.
- Working range restriction indicator lamp .....All six lamps light up.
- Alarm buzzer.....Sounds continuously.
- Movement toward critical sides .....Automatically halted

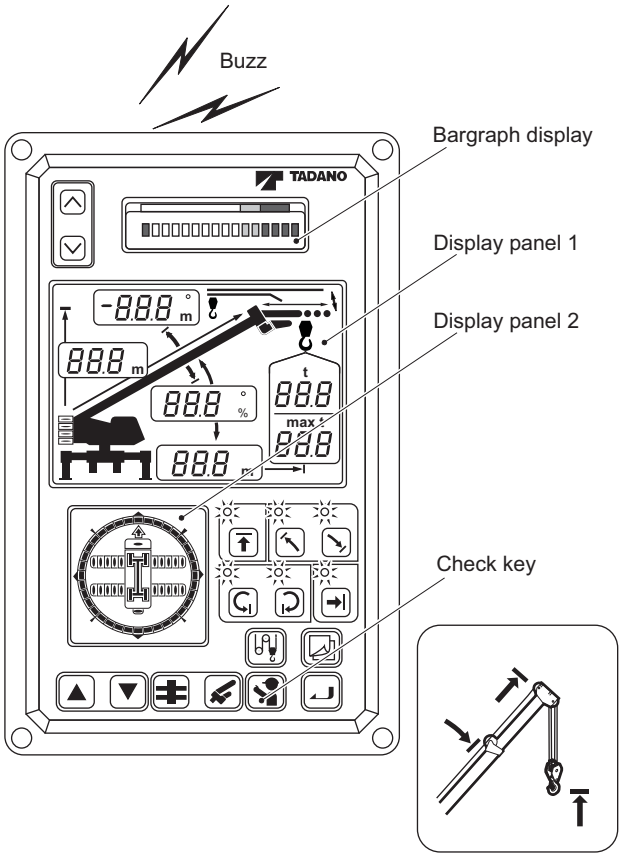

T24045E

2. Press either the set key, display alteration key or check key to return the display to the normal condition.

3. Make sure that the display on the display panels conforms to the actual crane conditions.

(1) Boom length
(2) Boom angle
(3) Jib angle.....shown while jib lift is selected
(4) Real load.....Make sure that the approximate mass of the hook block while no load is on the hook block.

◆The real load is not shown correctly if the lift status is not registered correctly.

(5) Outrigger state indicative symbol
(6) Front jack symbol
(7) Boom position indicator

◆If the AML does not work properly, have it checked and repaired by the nearest TADANO distributor or dealer.

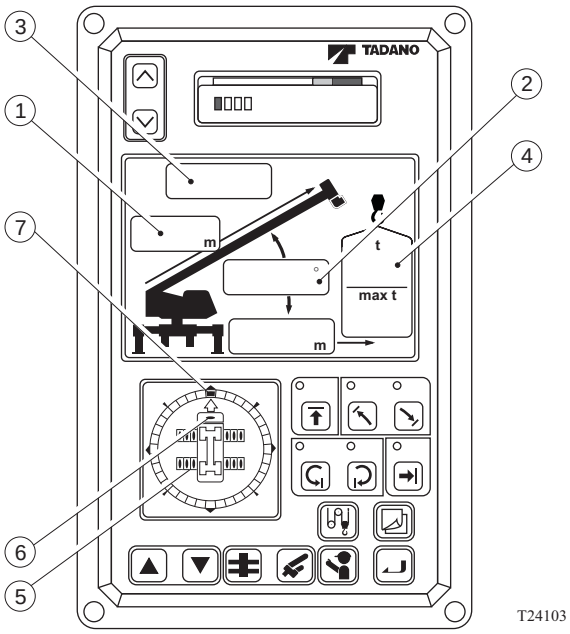

T24103

https://truckmanualshub.com/

How to Use the Working Range Limit Function

[NOTICE]

◆If the selected working range limits allow the crane to approach too close to an obstruction, the crane may be contacted or hit, depending on the operational status and the manner in which the load is handled. When selecting limits, allow sufficient clearance.

The working range restricting function makes the boom automatically stop at the previously registered boom angles (upper and lower), lifting height and radius.
If makes the alarm sound when the boom reaches the previously registered swing restriction.
The function is useful for handing a load in a confined place because it defines the area in which the boom can operate.
◆Turning the power off (PTO switch: OFF) automatically erases all the previous settings stored in memory after approximately 2 hours. To resume the operation more than 2 hours after the power has been last turned off, enter the settings all over again.

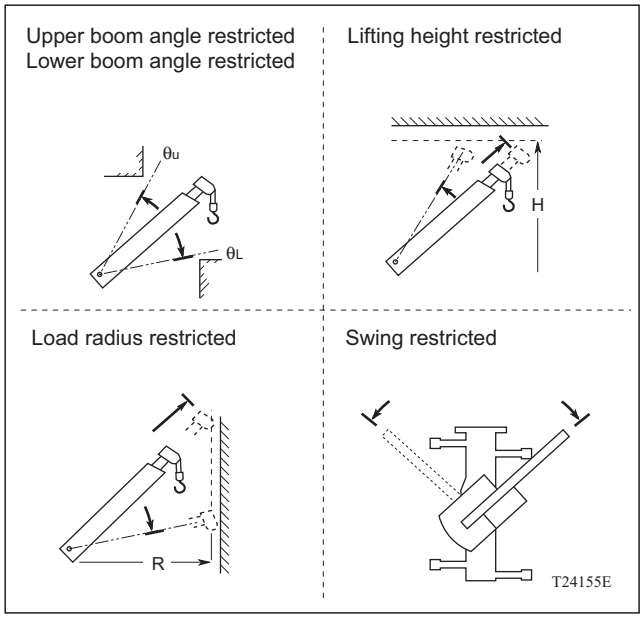

Boom Angle Limit

Raise or lower the boom to the desired angle, and press the boom upper or lower limit restriction key. The corresponding limit restriction indicator lamp will flash and the buzzer will sound continuously, indicating that the limit boom angle has been registered in the memory. When the boom is moved back to an angle within the set limit, the limit restriction indicator lamp stops flashing and stays illuminated and the buzzer stops.
Thereafter, the upper or lower boom angle limit restriction indicator lamp flashes and the buzzer sounds continuously whenever the upper or lower limit previously registered is reached.
To cancel the boom angle limit function, press the boom angle limit restriction key again. The corresponding boom angle limit restriction indicator lamp will go off.

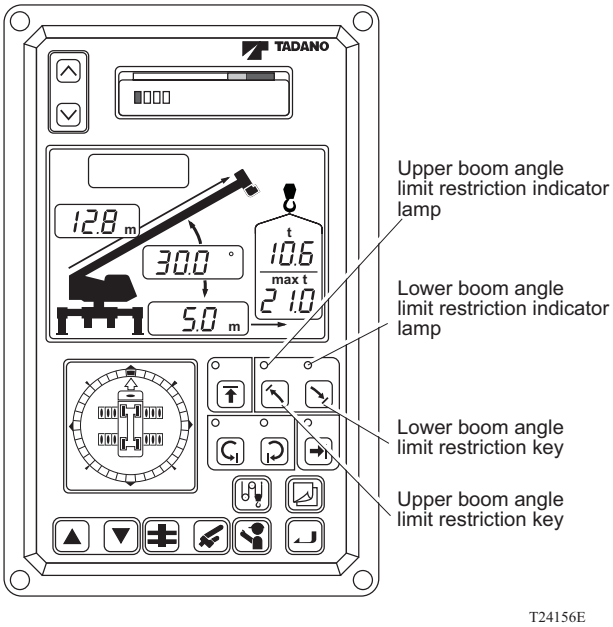

https://truckmanualshub.com/

Lifting Height Limit

Move the boom to the desired height, and press the lifting height restriction key. The lifting height restriction indicator lamp will flash and the buzzer will sound continuously, indicating that the limit height has been registered in the memory. When the boom is moved back to a height within the set limit, the lifting height restriction indicator lamp stops flashing and stays illuminated and the buzzer stops.
Thereafter, the lifting height restriction indicator lamp flashes and the buzzer sounds continuously whenever the height limit previously registered is reached.
To cancel the height limit function, press the lifting height restriction key again. The corresponding lifting height restriction indicator lamp will go off.

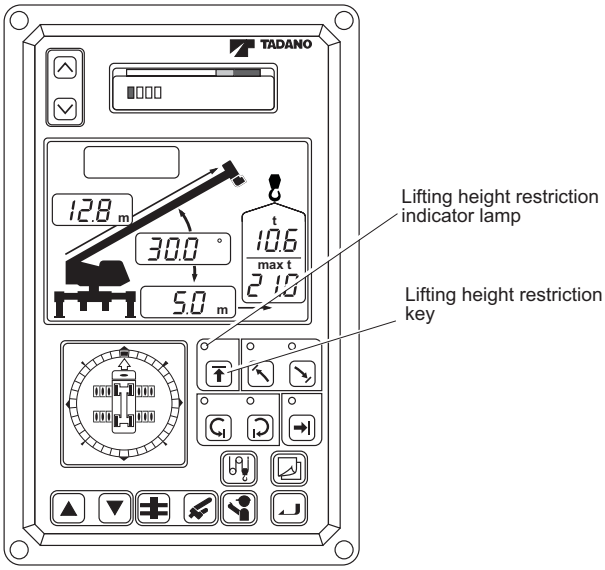

T24157E

Swing Limit

Swing the boom to the desired position, and press a swing restriction key. The corresponding swing restriction indicator will flash and the buzzer will sound continuously, indicating that the swing angle limit has been registered in the memory. When the boom is swing back to an angle within the set limit, the swing restriction lamp stops flashing and stays illuminated and the buzzer stops. Thereafter, a swing restriction indicator lamp flashes, the swinging boom stops automatically, and the buzzer sounds whenever the limit previously registered is reached. To cancel the swing limit function, press the corresponding swing restriction key again. The corresponding swing restriction indicator lamp will go out.
◆ When registering the swing angle limit, register both the right and left boom swinging restriction positions. Registering only one side cannot fulfill this working range limit function nor make the alarm buzzer sound.
◆ In case that the swing stop override switch is set to "OFF," the swinging boom will not stop automatically even when the limit previously registered is reached. Be very careful in performing swing operation as only the swing restriction indicator lamp flashes, a message is displayed, and the AML buzzer beeps for three seconds.

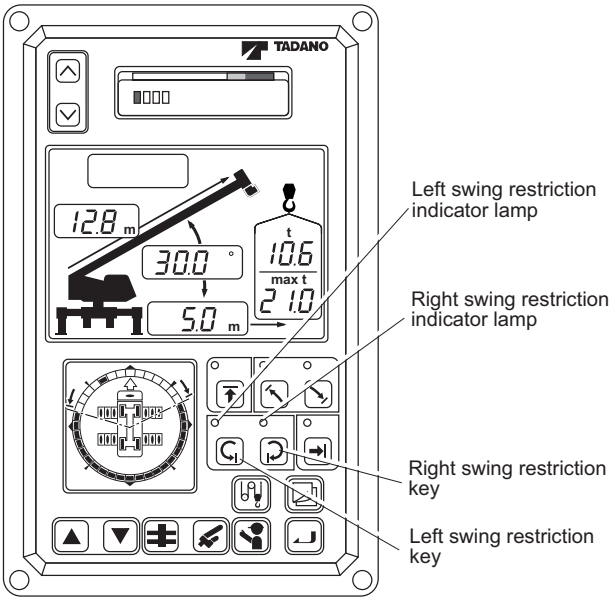

T24158E

https://truckmanualshub.com/

Load Radius Limit

Move the boom to the desired load radius, and press the load radius restriction key. The load radius restriction indicator lamp will flash and the buzzer will sound continuously, indicating that the limit load radius has been registered in the memory. When the boom is moved back toward the non-critical side, the load radius restriction indicator lamp stops flashing and stays illuminated and the buzzer stops.
The load radius restriction indicator lamp flashes and the buzzer sounds continuously whenever the limit previously registered is reached.
To cancel the load radius limit function, press the load radius restriction key again. The corresponding load radius restriction indicator lamp will go off.

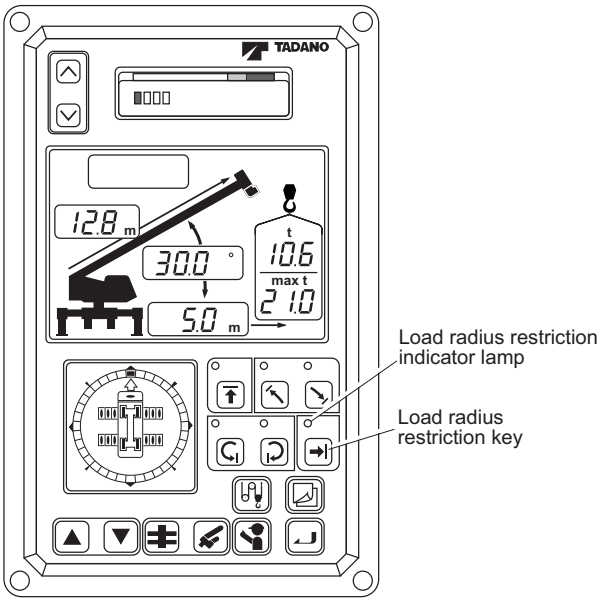

T24159E

https://truckmanualshub.com/

Display of Working Range Restriction Values

Press in the register key while working range restricting functions are registered.
While the key is being pressed in, the registered working range restriction values are displayed. On the moment display will be displayed a message “Working range”.
◆This display is not available when preoperational AML check is made and when working state is registered.
◆When working range restricting functions are not registered, the message “–––” will be displayed.

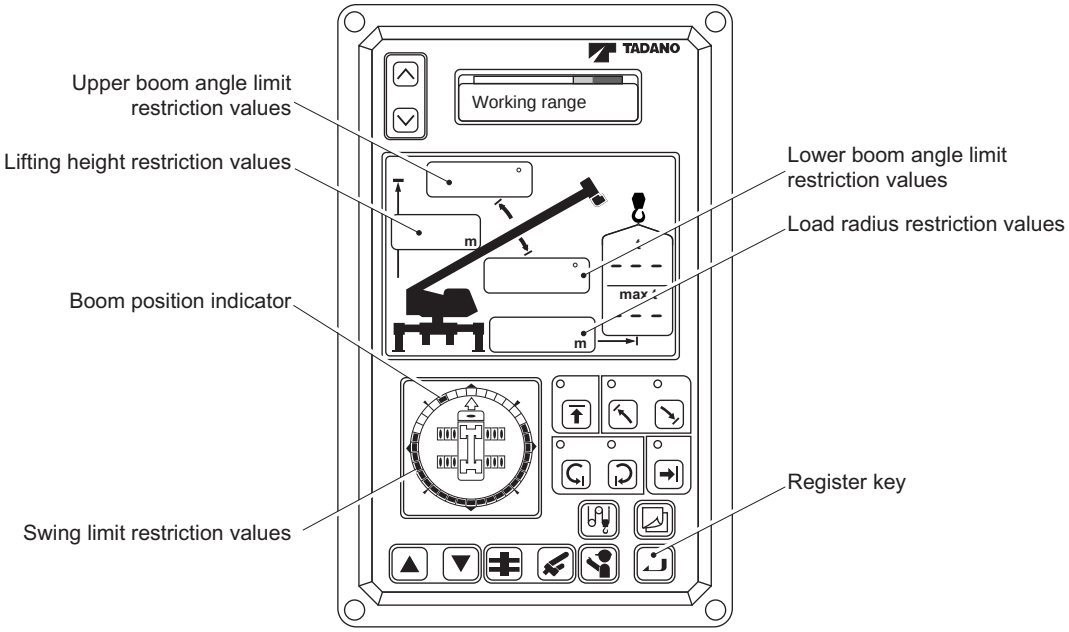

https://truckmanualshub.com/

Display Alteration

Displays on the moment display and the display panel 1 can be altered, as shown below in the figures, while the display alteration key is being pushed. The indicative symbols are displayed, too.

Moment Display

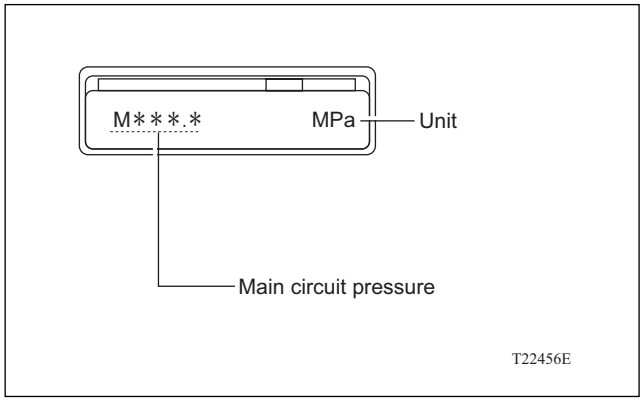

Display Panel 1

◆Displays on the real load display and the rated lifting capacity display do not alter even when the display alteration key is pressed in.

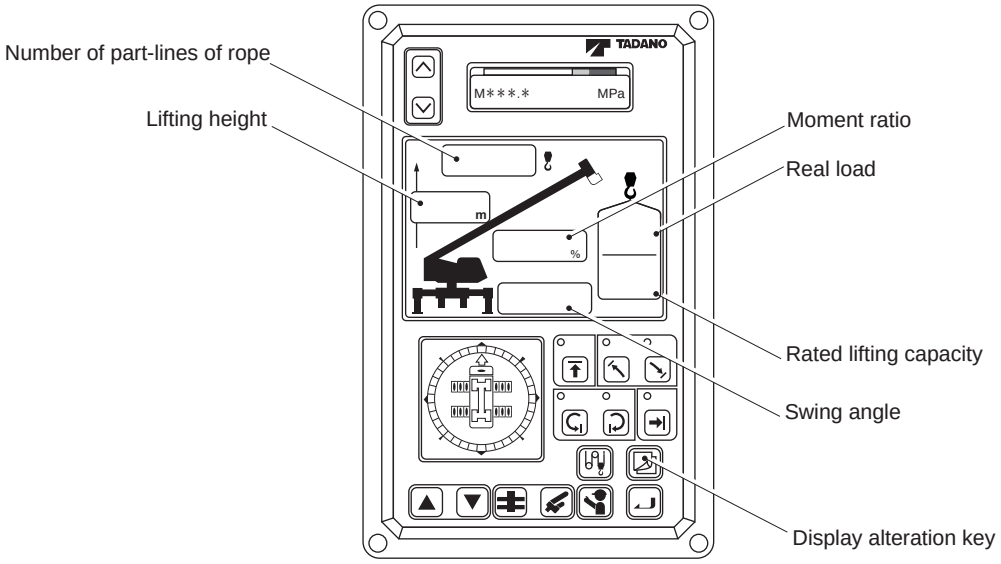

T24090E

https://truckmanualshub.com/

Recovery from a Stop

Restore the crane operation according to the following steps.

(1) When moment is more than 100 %

- Moment display: [Warning:0023]
- Buzzer sounds continuously.

(2) When the limit moment for the boom lift with the jib mounted is exceeded

- Moment display: [Warning:0088]
- Buzzer sounds continuously.

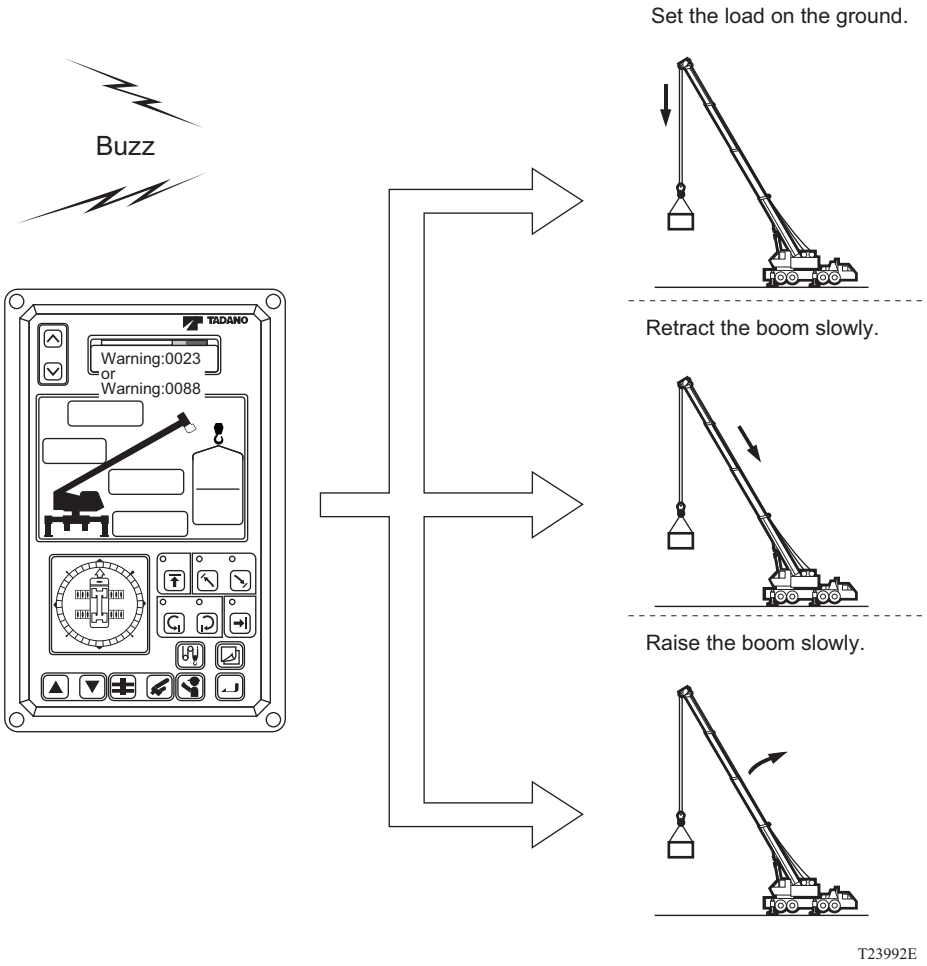

https://truckmanualshub.com/

(3) Two-blocking

- Moment display: [Warning:0024]
- Buzzer sounds intermittently.

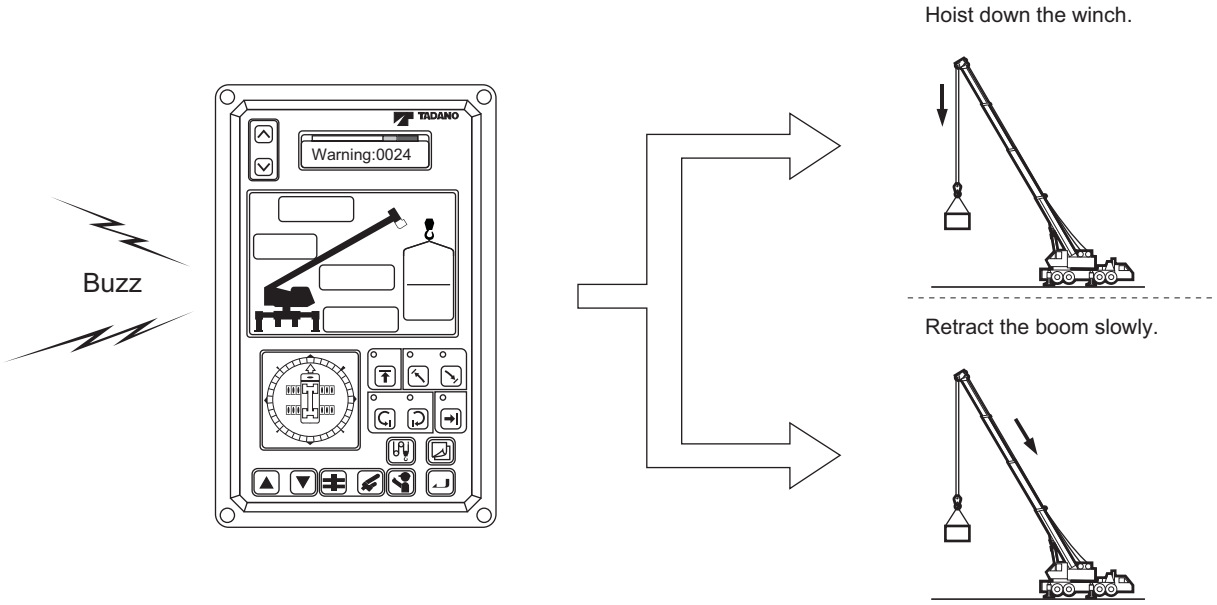

T23993E

(4) When rearward stability control function works

- Moment display: [Warning:0025]

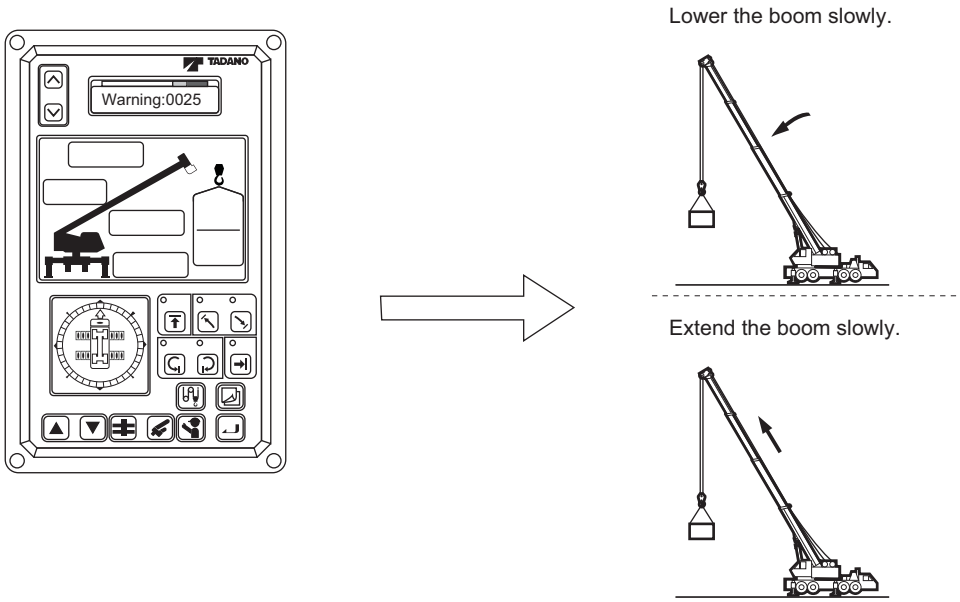

T24100E

https://truckmanualshub.com/

(5)When upper boom angle restriction function works:
- Moment display: [Warning:0026] is shown.
- Buzzer: Continuous
- Upper boom angle restriction indicator lamp flashes.

(6)When lower boom angle restriction function works:
- Moment display: [Warning:0027] is shown.
- Buzzer: Continuous
- Lower boom angle restriction indicator lamp flashes.

(7)When lifting height restriction function works:
- Moment display: [Warning:0028] is shown.
- Buzzer: Continuous
- Lifting height restriction indicator lamp flashes.

(8)When load radius restriction function works:
- Moment display: [Warning:0029] is shown.
- Buzzer: Continuous
- Load radius restriction indicator lamp flashes.

(9)When swing angle restriction function works:
- Moment display: [Warning:0042 or 0043] is shown.
- Buzzer: Continuous
- Swing restriction indicator lamp flashes.

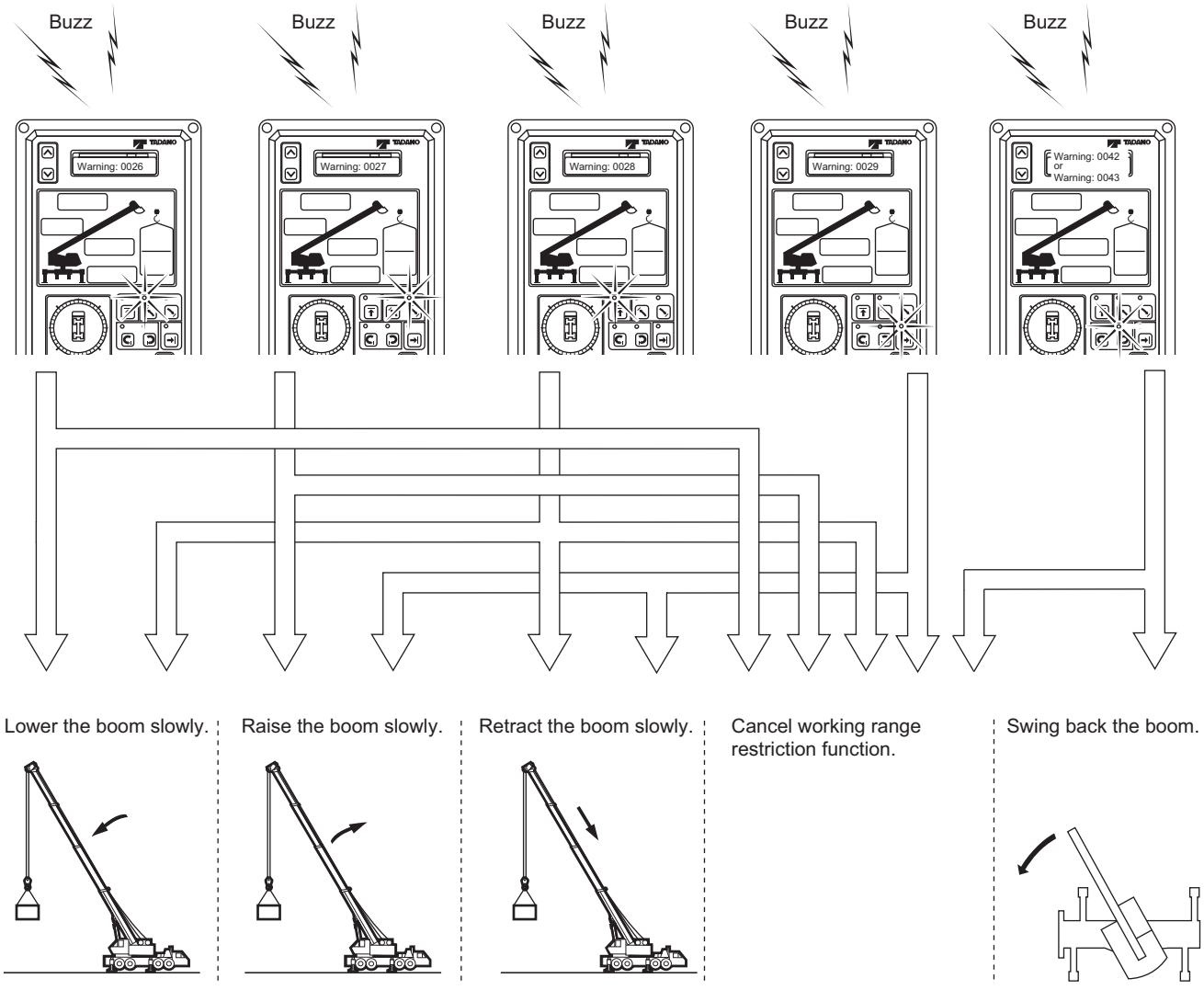

T24102E

https://truckmanualshub.com/

Display and Disposition of Failure Messages

When failure messages are shown on the AML moment display, the AML buzzer sounds for 3 seconds. Stop working and take appropriate action.

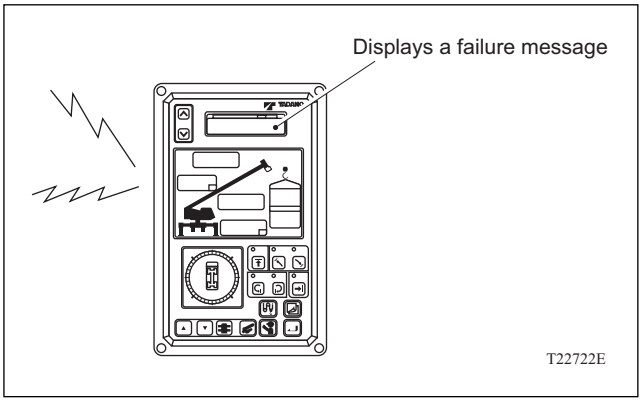

Messages	Meanings	Causes	Solutions
[Warning:0001]	R.F. outrigger retracts	Outrigger beam retracts and extended width decreases.	Re-extend outrigger.
[Warning:0002]	R.R. outrigger retracts		
[Warning:0003]	L.F. outrigger retracts		
[Warning:0004]	L.R. outrigger retracts		
[Warning:0010]	Approaching to the swing limit	The boom is swung close to the registered swing limit. (This message appears while the swing limit is registered and the swing stop override switch is set to OFF.)	Swing in the opposite direction. Cancel the swing limit function.
[Warning:0015]	Overwinding (with overwind cutout function deactivated)	Main (or auxiliary) winch is wound excessively.	Hoist down the main (or auxiliary) winch.
[Warning:0024]	Stops by overwinding		
[Error:0016]	Operational status not applied <case 1>	Wrong registration of operational status (boom lift, jib lift, single top lift, outrigger)	Register operational status again.
[Error:0017]	Operational status not applied <case 2>		
[Error:0018] [Error:0019] [Error:0020] [Error:0021]	Wrong telescoping order	Boom telescoping order is out of the normal condition after emergency telescoping, etc.	Return the telescoping order to the normal one. If the message is output while the telescoping order is normal, check or repair is required. Contact nearest TADANO distributor or dealer.
[Warning:0023]	Stops at moment ratio 100%	Moment ratio beyond 100 %	Hoist down winch. Raise boom angle. Retract boom.
[Warning: 0025]	Stops by upper boom angle restriction	Automatic stop to prevent jib from contacting jib or wire ropes by boom raising or boom retraction	Lower the boom. Extend the boom.
[Warning:0026]	Upper boom angle restricted	Boom is raised above the upper boom angle restriction.	Lower the boom. Cancel upper boom angle restriction.

https://truckmanualshub.com/

Messages	Meanings	Causes	Solutions
[Warning:0027]	Lower boom angle restricted	Boom is lowered below the lower boom angle restriction.	Raise the boom. Cancel lower boom angle restriction.
[Warning:0028]	Lifting height restricted	Lifting height is beyond lifting height restriction.	Lower the boom. Retract the boom. Cancel lifting height restriction.
[Warning:0029]	Load radius restricted	Load radius is beyond load radius restriction.	Raise the boom. Retract the boom. Cancel load radius restriction.
[Warning:0042]	Right swing angle restricted	Boom is swung beyond the swing restriction.	Swing back the boom. Cancel the swing restriction function.
[Warning:0043]	Left swing angle restricted		
[Warning:0046]	Unexpected outrigger retraction	Outrigger is retracted.	Register operational status again.
[Warning:0057]	R.F. outrigger state change	Outrigger state change as to decrease extension. Crane performance shifted to that with smaller outrigger extension.	Re-extend outrigger. Register operational status again.
[Warning:0058]	R.R. outrigger state change		
[Warning:0059]	L.F. outrigger state change		
[Warning:0060]	L.R. outrigger state change		
[Error:0006]	Pins inserted in jib	Jib connecting pin and jib set pin inserted.	Set the pins on the jib to normal conditions.
[Warning:0011]	Connecting pin uninserted	Jib connecting pin is not inserted.	
[Warning:0077]	Front jack moved	Front jack is operated.	Extend the front jack again and re-register the front jack status.
[Warning:0081]	Elevation slowed down	Elevation slow stop function is activated and the elevation speed is reduced because the limit angle is approaching due to boom elevation.	Stop operation. Elevate the boom to the opposite direction. Cancel the boom angle restriction. Move the boom toward non-critical side.
[Warning:0082]	Swinging slowed down	Swing slow stop function is activated and the swing speed is reduced because the limit angle is approaching due to boom swing.	Stop operation. Swing back the boom. Retract the boom. Raise the boom. Cancel the swing restriction function.
[Warning:0085]	Stroke end of elevation cylinder	Boom elevation is automatically stopped as it reaches the stroke end.	Stop operation. Operate in the opposite direction.
[Warning:0088]	Moment exceeding limit for boom with jib mounted	During lifting a load on the boom with the jib moment ratio beyond 85%.	Hoist down the winch. Raise the boom. Retract the boom.
Others	———	AML main body or detector defective	Check or repair required. Contact nearest TADANO distributor or dealer. For crane stowing, see “Disposition of System Troubles”.

https://truckmanualshub.com/

Disposition of System Troubles

How to Use AML Override Switch and Override Key Switch

⚠ WARNING

⚠ Keeping the AML override switch set to ON and the override key switch set to ON cancels the AML's safety feature, the stop function. Using these switches during normal operation is extremely dangerous. Do not use these switches during normal operation. Use the switches only when operation has been disabled due to failure of the AML system. Be sure to set the load on the ground and retract the boom before using the switch. Use the elevating and/or swing functions to stow the boom.

If restoring operations after a failure message appears does not normalize crane operations, the AML is in trouble. When the system is out of order, crane operation becomes impossible.

The AML override switch and override key switch are only intended for use to stow the boom. Insert the key into the key hole and turn the switch to ON. The crane operation is available and the AML cancellation warning lamp lights up while the AML override switch is kept in the ON position in this condition.

◆The key should be kept by a person who takes care of the crane, or a person responsible for job-site works.

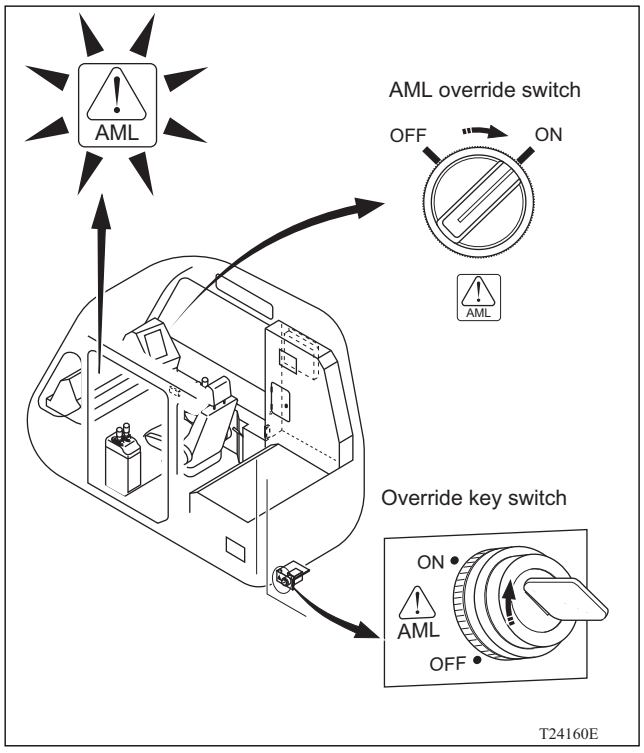

How to Use Emergency Outrigger Control Switch

⚠ WARNING

⚠ Use the emergency outrigger control switch only when the crane is in an emergency. After the operation, contact your nearest TADANO distributor or dealer to repair the outrigger detection device.

When the outrigger extension detection device, such as a code reel, breaks down, the registered outrigger state in the AML is cancelled to make the crane inoperable. In this emergency, use the emergency outrigger control switch to register the outrigger state into AML, and the indicator lamp will light up.

1. Set the emergency outrigger control switch to ON. The emergency outrigger control indicator lamp will light up and the outrigger state on the AML will be set to the default status.

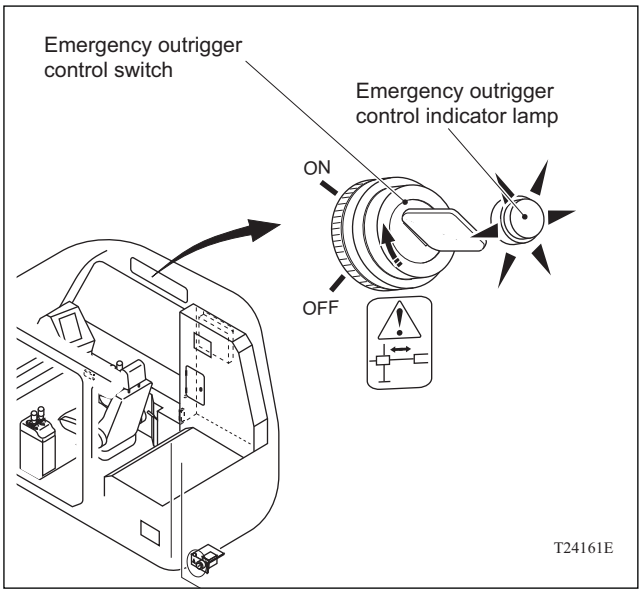

https://truckmanualshub.com/

2. Press the outrigger mode select key in conformity with the actual outrigger extension width.

◆Each time the outrigger mode select key is pressed, the status changes in numerical sequence, from (1) to (6), as shown below. The display returns to (1) if you press the switch when status (6) is displayed on the screen.

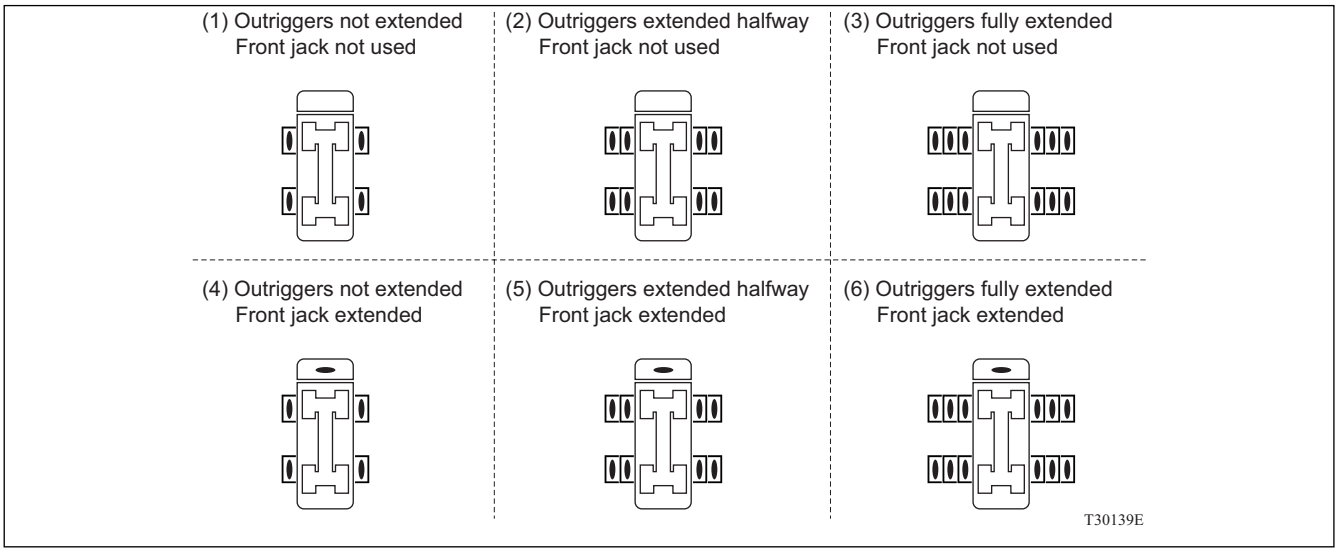

◆When the front, rear, right and left outrigger extension widths differ, select the smaller width.

◆The outrigger state indicative symbol is switched with flashing.

3. After selecting the intended outrigger status and front jack status, press the register key to register the status. The outrigger state indicative symbol will stop flashing and become marked up.

4. Register the lift status.

◆See “Selecting Lift Status” section.

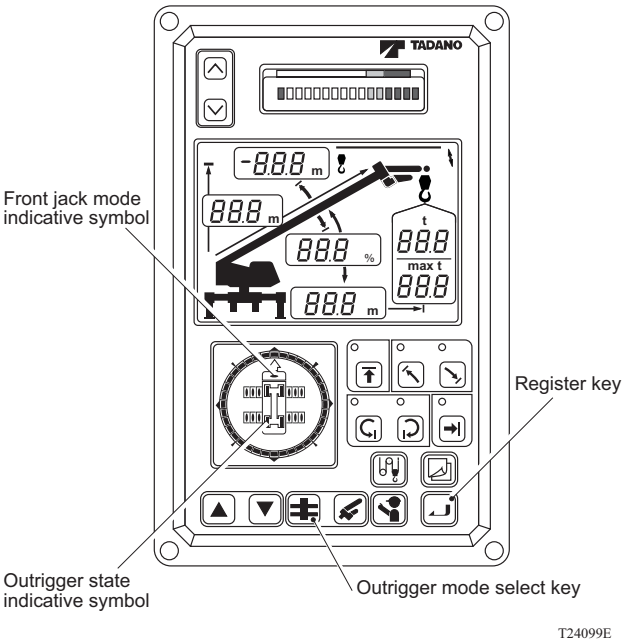

https://truckmanualshub.com/

Other Safety Devices

Overwind Cutout Device

The overwind cutout device prevents damage to the crane that would be caused by pulling the hook block into the boom head. When the hook block approaches the boom head, single top or jib, the overwind cutout device detects it and sends a signal to the AML, which then stops any further crane action toward the critical condition.

When overwinding is detected, the crane will be set in the following status:

(1) Any operation involving action toward the critical state (hoisting up, extending or lowering the boom) is halted.

(2) If a critical-state operation is attempted, the alarm buzzer sounds to alert the operator.

When the crane is automatically stopped because the overwind cutout device has been activated, retract the boom or hoist down to move the hook block away from the boom head, single top or jib.

◆The overwind cutout device for the jib can also be used for the single top.

◆When the jib or single top is mounted, be sure to connect the leads of the overwind cutout device correctly. If the leads are not connected, the AML assumes an overwind condition, and all actions toward the critical condition are automatically stopped.

◆Once overwinding has occurred, alarm buzzer keeps sounding till the hook block is lowered.

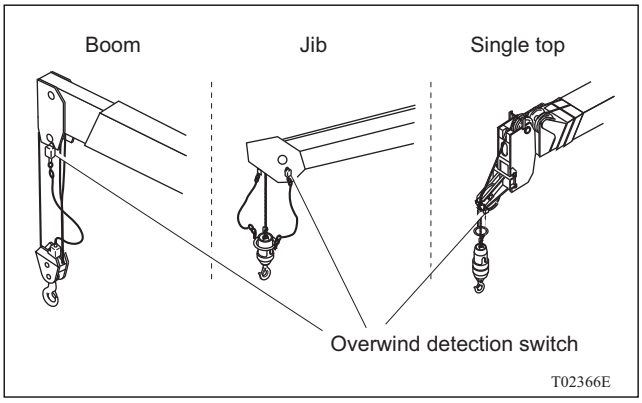

Deactivation of Overwind Cutout Function

⚠ WARNING

⚠ When the overwind cutout function is deactivated, the automatic stop function will not operate even if the hook block is overwound. Be careful not to overwind when deactivating the overwind cutout function is unavoidable or specifically required.

Use the overwind cutout release switch to deactivate the overwind cutout function. The overwind cutout function may hinder stowing the main hook block and mounting or stowing the jib. To prevent this, you can temporarily deactivate the function by keeping the overwind cutout release switch pressing.

◆Overwind cutout function is deactivated while the jib set status is registered on the AML.

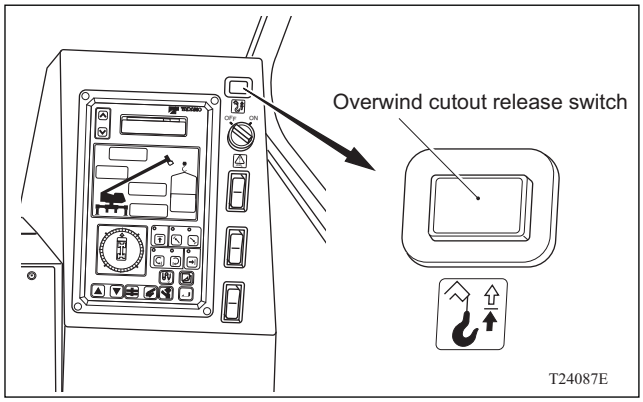

https://truckmanualshub.com/

Front Jack Overload Warning Device

⚠ WARNING

⚠ The horn sounds during an operation with the front jack extended to signal that there is an overload on the front jack. Move the boom until the horn stops.

The purpose of the front jack overload warning device is to prevent damage to the carrier's chassis frame by an excessive load during an operation with the front jack extended. When a load exceeding the limit is placed on the front jack, the horn sounds, warning the operator of an overload.

◆On certain surface, the horn may sound even if the load is within the limit. For example, when the ground supporting the front outriggers is soft, the load on the front jack may increase, causing the horn to sound. In such a case, check the ground support conditions of the outriggers and front jack.

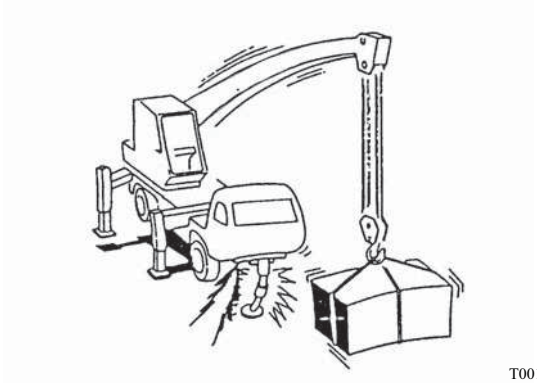

T00143

External Warning Lamps (Option)

⚠ WARNING

⚠ When the external warning lamp in red lights, crane operation to the critical side stops. Do not cancel AML stop function to continue crane operation. Operate the crane toward safety side and then the work after lamp lighting has changed from red to orange, or lamp has gone off.

The external warning lamps are to inform the people engaged in work around the crane of AML conditions. While any of the following functions are deactivated, the red lamp lights up in addition to inform the people engaged in work that an automatic stop function is deactivated.

(1) Overwind cutout function
(2) Swing stop function
(3) Automatic stop by the AML (caused by the moment exceeding 100%, working range limit, etc.)

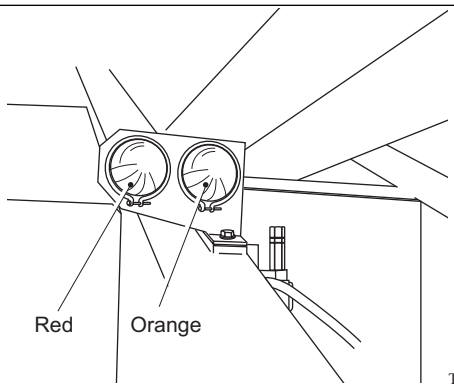

T23175E

Color	Crane (or AML) conditions
Not lighted	Safe
Orange	Not in danger, but attention needed • Moment ratio is within the range in which alarm function is activated.
Red	(1) In danger (Motion to critical side stops) • Moment ratio exceeds the limit at which automatic stop function is activated. (2) Automatic stop function cancelled • Swing stop function is shifted to “OFF”. • Overwind cutout function is deactivated. • AML override switch and override key switch are turned ON.

https://truckmanualshub.com/

Starting and Stopping the Engine

Control

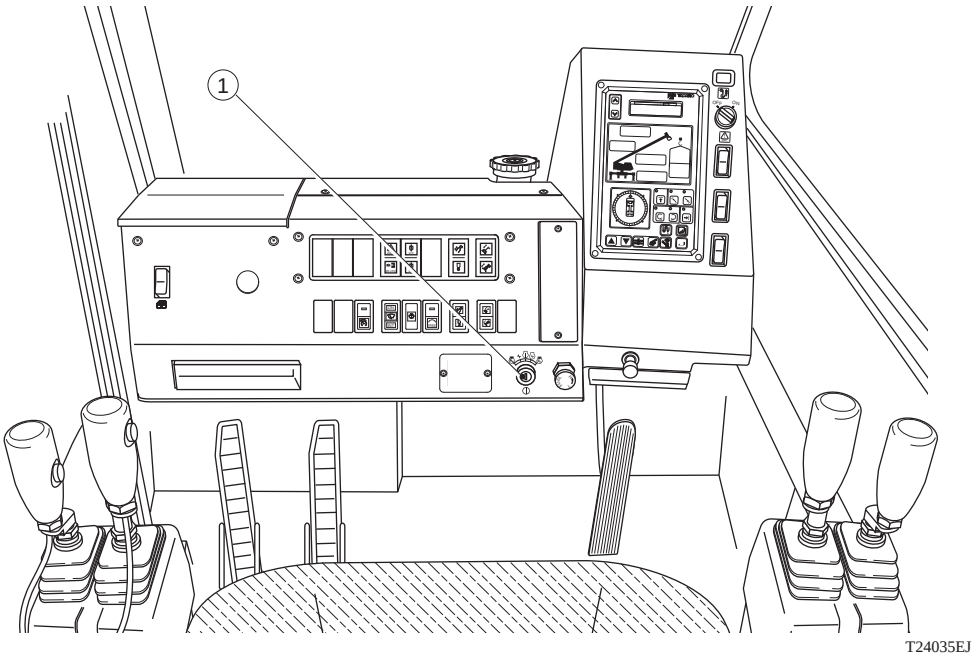

1. Starter switch

Pre-starting Checks

Before starting the engine, perform the following inspection and checks:

1. Perform the pre-operational inspection.

2. Make sure that the controls in the crane operator's cab are placed in the following positions:

(1) Main and auxiliary hoist levers, boom telescoping lever, boom elevating lever and swing lever ···Neutral
(2) Swing brake switch ·····“ON”
(3) Swing stop override switch·····Activated
(4) Slow elevation stop switch ·····Activated
(5) Emergency outrigger control switch·····“OFF”

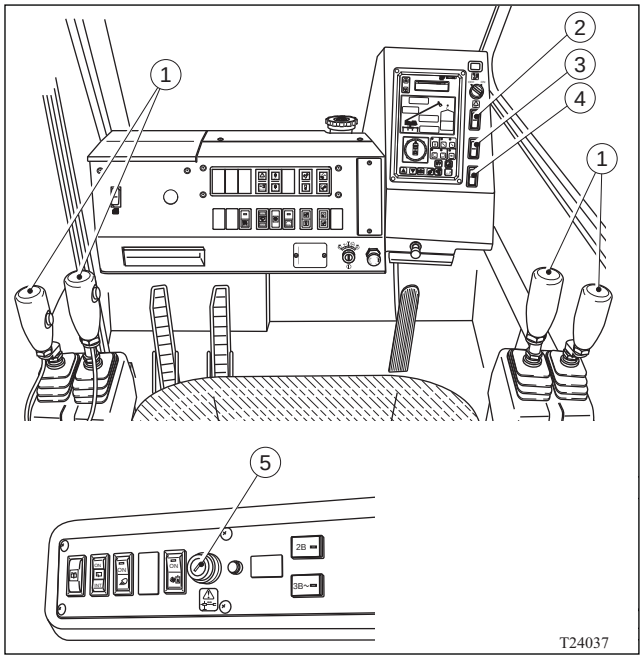

https://truckmanualshub.com/

Starting the Engine

[NOTICE]

◆Do not hold the starter switch in the START position for more than 15 seconds, as this practice will overheat the starter motor. If the first attempt to start the engine fails, wait at least 30 seconds before trying again.

◆The engine can be started from both the carrier driver's cab and crane operator's cab. Normally, however, use the starter switch in the carrier driver's cab. Use the switch in the crane operator's cab only when the engine stalls during operation.

Starting Engine from Carrier Driver's Cab

◆For a detailed explanation of the engine starting procedure, see the Crane Carrier Operation and Maintenance Manual.

1. Place the gearshift in the neutral position and activate the parking brake.

2. Make sure that the PTO switch is in the OFF position.

3. Turn the starter switch to the START position to crank the engine.

Starting Engine from Crane Operator's Cab

◆When the engine is cold, use the starter switch in the carrier driver's cab.

1. Turn the starter switch to the START position to crank the engine. Release the key immediately once the engine has started.

◆The starter switch positions and their functions are as follows:

"START" • • • • • •Starts the engine. Release the key after the engine has started. The switch will automatically return to ON.

"ON" • • • • • • • • •Supplies current to the electrical circuits. Keep the key in this position during crane operation.

"OFF" • • • • • • • •The key can be inserted and removed in this position. Keep the key in this position when the engine is stationary.

"ACC" • • • • • • • •The power windows, fan, washer, wiper, horn, and flood lamps can be used with the engine off.

"STOP" • • • • • • •Stops the engine. Releasing the key automatically returns the switch to “ACC” position.

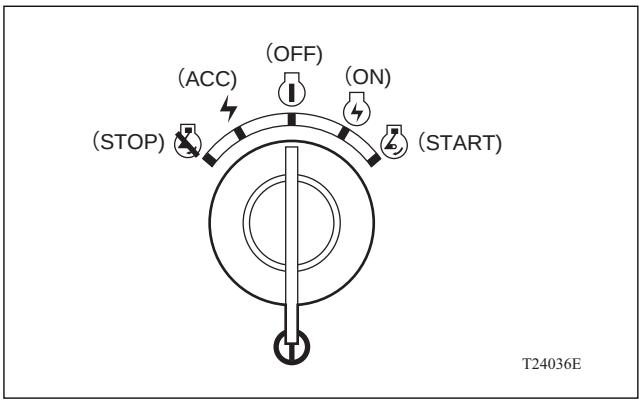

https://truckmanualshub.com/

Stopping the Engine

◆The engine can be stopped from both the carrier driver's cab and crane operator's cab. Normally, however, use the starter switch in the carrier driver's cab to stop the engine. Use the switch in the crane operator's cab only when the engine must be stopped during operation.

Stopping Engine from the Carrier Driver's Cab

◆For a detailed explanation of how to stop the engine, see the separate Crane Carrier Operation and Maintenance Manual.

1. Make sure that the PTO switch is in the OFF position.

2. Turn the key to the stop position to stop the engine.

Stopping Engine from the Crane Operator's Cab

1. Turn the starter switch to the STOP position. Turn it to OFF position immediately after the engine has stopped.

https://truckmanualshub.com/

Operating the PTO and Warming Up the Machine

Operating the PTO

"PTO" is an abbreviation for "Power Take Off". The PTO, by engaging the gears, transmits engine power to the hydraulic pump.
When the PTO gears are engaged (PTO is ON) after starting the engine, the hydraulic pump is driven, making hydraulic pressure available for operating the crane. The hydraulic pump stops when the PTO is disengaged (PTO is OFF) and the power from the engine is interrupted.

Engaging the PTO

1. Depress the clutch pedal all the way and place the PTO switch in the ON position. The PTO lamp will light up.
◆The location of the PTO switch depends on the crane carrier. See the separate Crane Carrier Operation and Maintenance Manual.
◆For a transmission Hi/Lo switch installed Mitsubishi carrier, tip the switch to H side.

2. Slowly release the clutch pedal and remove your foot.

Disengaging the PTO

1. Depress the clutch pedal all the way and place the PTO switch in the OFF position. The PTO lamp will go out.

2. Release the clutch pedal.

Warming Up the Machine

[NOTICE]
◆Be sure to allow your machine to warm up before the start of every operation. This is especially important in cold weather when the engine and hydraulic oil viscosities are high. If you start an operation without sufficiently warming up the engine and machine, highly viscous oils may cause damage to the engine and hydraulic system.
◆For this machine, the hydraulic oil temperature should be within the range of 30°C to 60°C. Operate the crane at low engine speed until the oil temperature reaches 30°C or higher.

1. Let the engine warm up at idling speed for approximately five minutes after engaging the PTO. When it is very cold, extend the warm up time as necessary, according to the ambient temperature.

2. Increase the engine speed to between 800 and 1,000 min^{-1} and operate the crane without a load for approximately five to ten minutes. When it is very cold, extend the operating time according to the atmospheric temperature.

3. Start a loaded operation after the machine has been sufficiently warmed up without a load.

Checks to Make during Warmup

◆Check the instruments and monitors in the carrier driver's cab as instructed in the separate Crane Carrier Operation and Maintenance Manual.

Check the engine, hydraulic pumps, hydraulic motors, swing bearing and each pivot pin for any unusual sound. If any are found, stop operation immediately and contact your nearest TADANO distributor or dealer to have them inspect your machine.

https://truckmanualshub.com/

Outriggers

Setting the Crane

⚠ WARNING

⚠ If the crane is set on inappropriate ground, it is possible that the crane could overturn. Always set the crane on firm ground.

The most important factor for safe crane operation is setting the outriggers on ground firm enough to support both the mass of the crane and the load to be lifted.
The crane is normally supported by four outriggers during operation, but in certain operating positions, a large part of the crane mass and lifted load mass may end up being supported by only one outrigger. If this occurs when the outriggers are set on soft ground, the outrigger floats may sink into the ground, causing the crane to list and, in the worst case, overturn.
Some surfaces may appear to be firm, when in fact they are not hard enough to support the machine. Be especially careful of the following surfaces:
(1) Asphalt pavement
(2) Sidewalk or other areas with stone pavement
(3) Areas that have been filled in after excavation
(4) Reclaimed land
(5) Areas near the shoulder of a road or the edge of a pit

Preparing the Ground

When it is unavoidable to set the crane on soft ground or on ground that cannot bear the load of the crane plus a load to be lifted, carry out the following procedures:
(1) Grade a slope or rough surface so that the crane can be set in a level position.
(2) Place steel plates or wood blocks on the surfaces where the outrigger floats are to be located, in order to distribute the bearing pressure over a larger area. The steel plates and wood blocks must be sufficiently strong and large in area and also appropriate for the ground condition. The outrigger floats must be set at the center of the plates or blocks.

https://truckmanualshub.com/

Controls

◆The illustration shows the right side of the crane carrier. The lever arrangement on the left side is symmetrical to this.

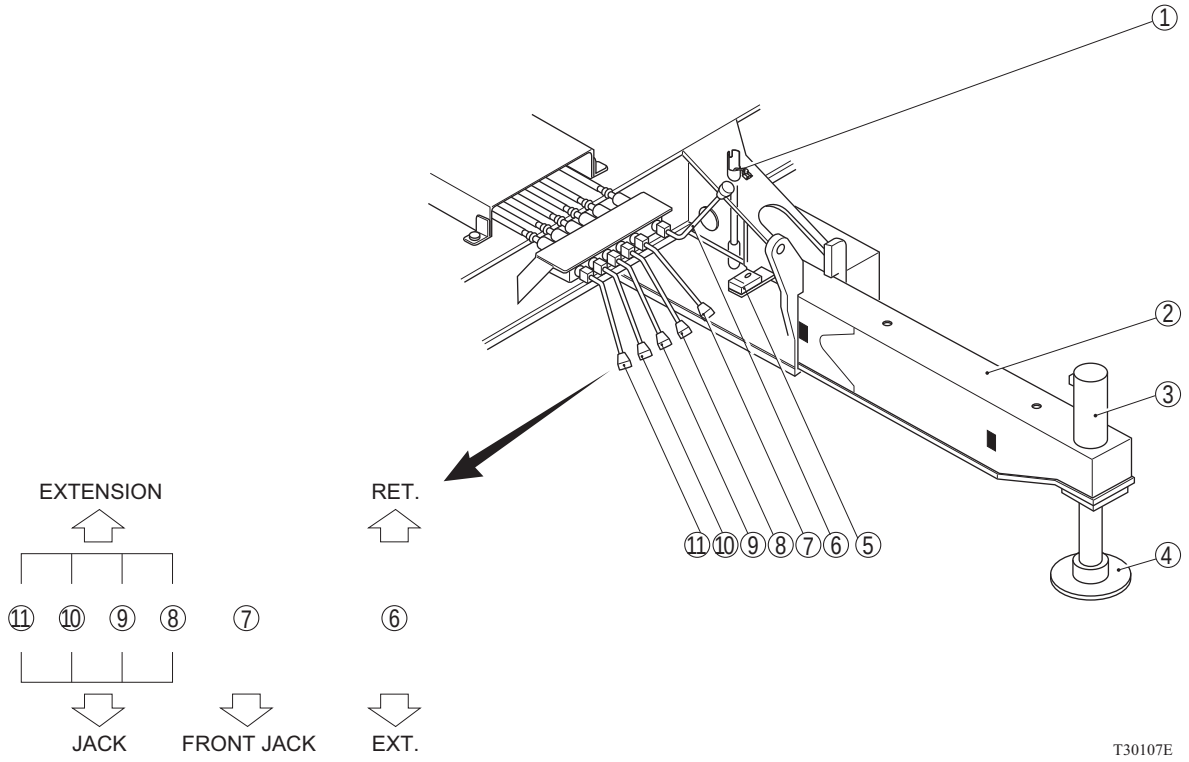

1. Lock pin
2. Outrigger beam
3. Jack cylinder
4. Outrigger float
5. Bubble level
6. Extend/retract control lever
7. Front jack lever
8. Individual control lever (left front)
9. Individual control lever (right front)
10. Individual control lever (left rear)
11. Individual control lever (right rear)

https://truckmanualshub.com/

Extending the Outriggers

⚠ WARNING

⚠ Outriggers with improperly extended beams cannot assure safety. Adhere to the rated lifting capacity table, which specifies the correct beam length for different lifting capacities. Make it a rule to fully extend the beams whenever possible even on a crane which is rated for operation on outriggers at half extension.

⚠ The machine can sometimes remain level even when it is supported on only three jacks. Operating the machine in such a condition is very dangerous. After extending the outriggers, make sure that all outrigger floats are in contact with the ground. Any unseated float must be lowered so that it is in firm contact with the ground.

⚠ If the crane is not level on the ground, the load radius will increase when the load is swung toward the lower side. In the worst case, this could cause the crane to overturn. Always use the bubble levels to make sure that the crane is level after extending the outriggers.

⚠ Operating on outriggers when any tires are in contact with the ground will reduce machine stability. Extend jacks and, if necessary, place blocking under the outrigger floats to raise the tires clear of the ground.

⚠ The outrigger beams may accidentally retract during operation if they are not properly locked with the lock pins. Be sure to secure the outrigger beams with the lock pins whenever they are extended.

[NOTICE]

◆If an outrigger or the front jack is stowed after registration of outrigger status, the registered status is erased. In this case, register the outrigger status again before starting crane operation.

Full Extension Procedure

1. Remove all four lock pins.

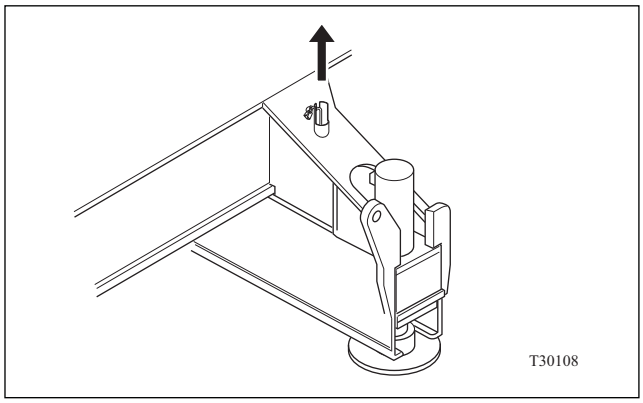

2. Place the two individual control levers of the outriggers on your side to EXTENSION. Then move the extend/retract control lever toward EXT. to extend the outrigger beams fully.

◆The figure below shows an outrigger on the left side of the carrier.

⚠ WARNING

⚠ When extending four outrigger beams simultaneously, check the other side of the carrier well before operation.

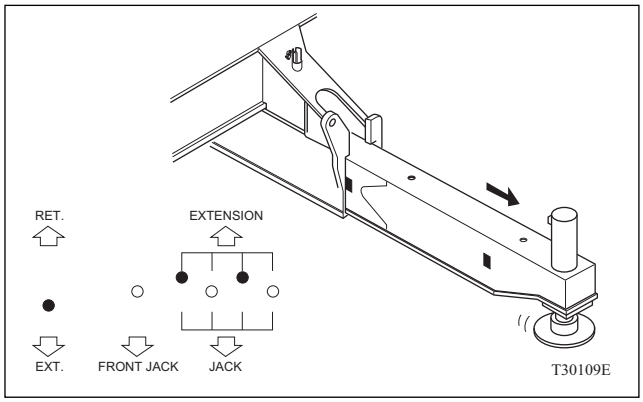

3. Insert the lock pins to lock the extended outrigger beams.

https://truckmanualshub.com/

4. Go the the other side of the carrier. Place the two individual control levers of the outriggers on your side to EXTENSION. Then move the extend/retract control lever toward EXT. to extend the outrigger beams fully.
◆The figure below shows an outrigger on the right side of the carrier.

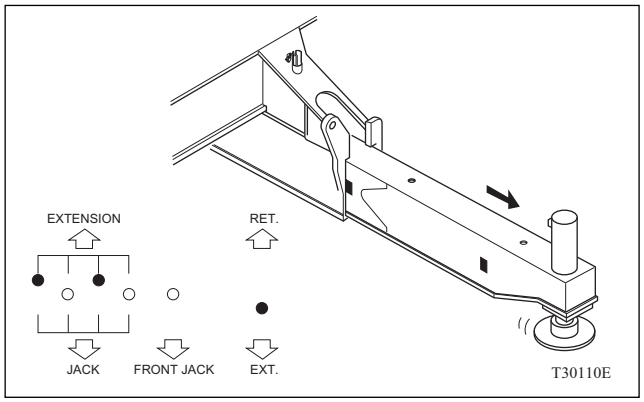

5. Insert the lock pins to lock the extended outrigger beams.

6. Place all four individual control levers in the JACK position. Move the extend/retract control lever toward EXT. to fully extend the jack cylinders.

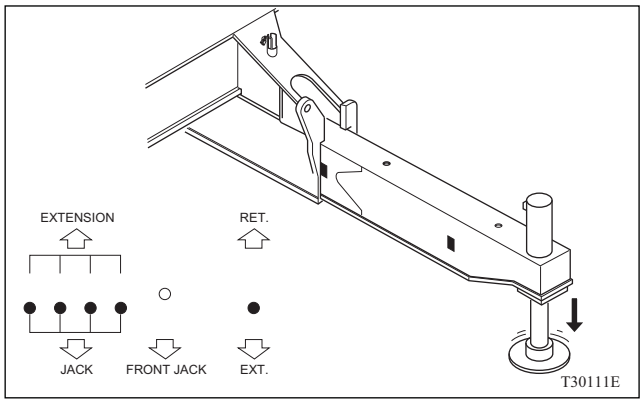

7. After all four jack cylinders are fully extended, return the extend/retract control lever and all the individual control levers to the neutral position.

8. Use the bubble levels to make sure that the crane is level. If the crane is not level, refer to the "Level Adjustment" section for detailed instructions on leveling the crane.

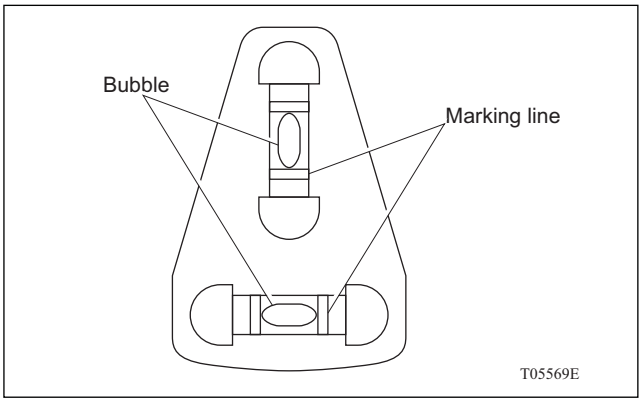

Middle Extension Procedure

1. Extend the outrigger beams to the mid. extended mark (4.6 m) in the same procedure as the full extension procedure.

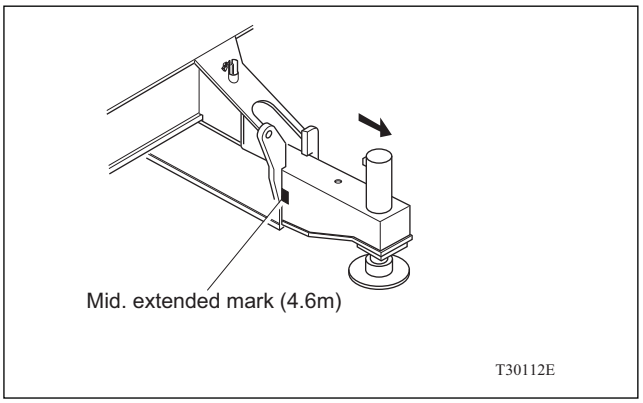

2. Insert four lock pins into the pin holes to lock the outrigger beams.

3. Extend all the jack cylinders fully in the same procedure as the full extension procedure.

https://truckmanualshub.com/

Minimum Extension Procedure

1. Retract all four outrigger beams fully and inset four lock pins into the pin holes to lock the outrigger beams.

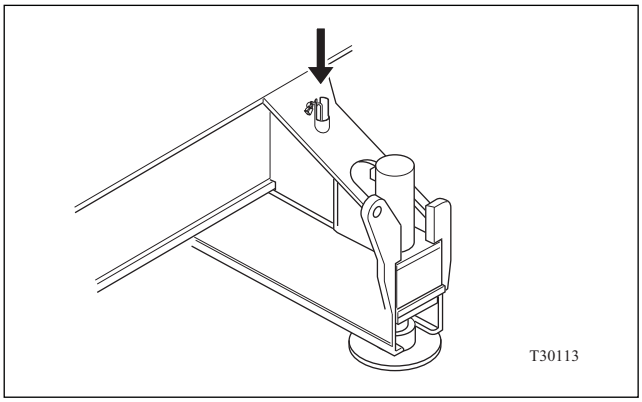

2. Extend all the jack cylinders fully in the same procedure as the full extension procedure.

Level Adjustments

Using the Bubble Level

“Setting the vehicle level” refers to the condition that the vehicle is set so that the bubbles in the spirit level are between the marking lines.
Check the position of the bubbles in the bubble level. If a bubble is off-center, it means that the crane is not level, and the side of the crane in the direction of the bubble is higher.
—Example—
A bubble in the glass level is off-center and to the right.
= The crane is listing to the left.

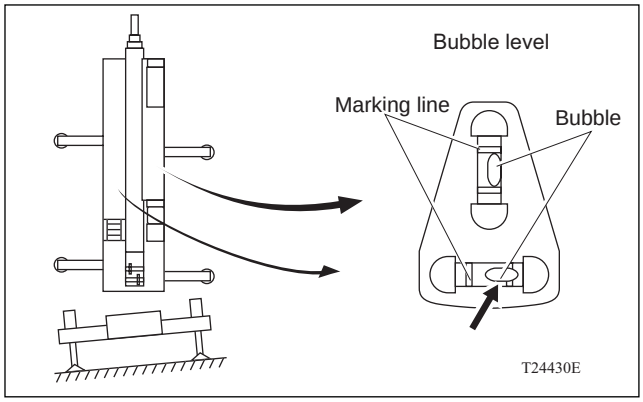

Adjustment

The crane should be adjusted to a level position by retracting (extending) the jack cylinders located on the higher (lower) side of the crane. The following explanation assumes that the right side of the crane is higher (lower).

1. Place the right front and right rear individual control levers (levers corresponding to the higher (lower) side) in the JACK position. Move the extend/retract control lever toward RET. (EXT.) a little at a time to retract (extend) the jack cylinders on the right side of the crane.

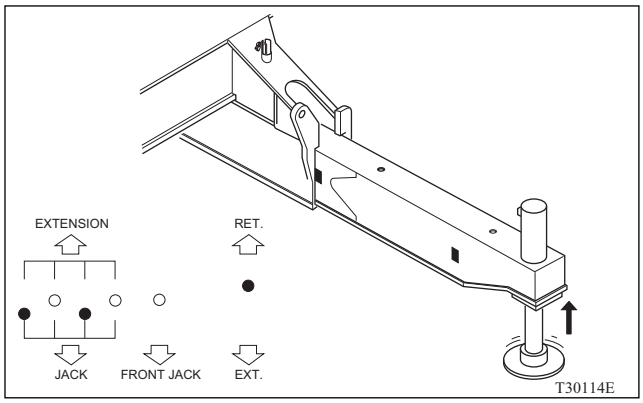

https://truckmanualshub.com/

2. If the bubbles in the spirit level is between the marking lines, the vehicle is set level. Return the extend/retract control lever and individual control levers to the neutral position.

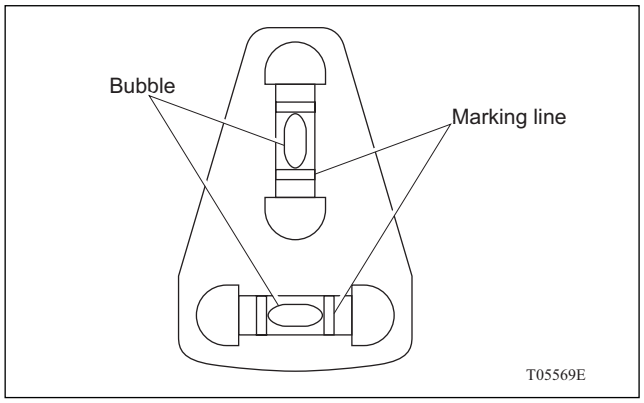

3. Make sure that all four outrigger floats are in contact with the ground. Any unseated outrigger floats must be lowered until they are in firm contact with the ground.

Front Jack

Extension

◆Extend the front jack only after extending and setting the outriggers to install the crane level.

1. Place the front jack lever in the FRONT JACK position. Move the extend/retract control lever toward EXT. The front jack will start extending.

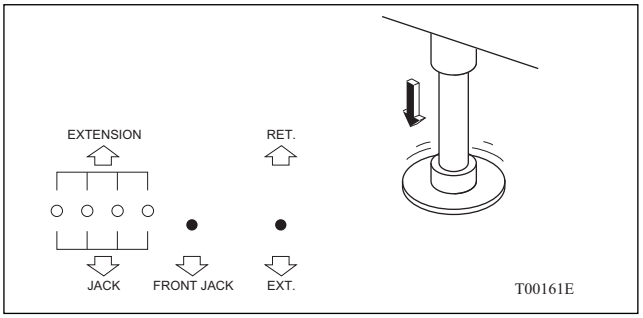

2. Keep the extend/retract control lever toward EXT. for approx. 3 seconds after the front jack float has reached the ground. Then, return the extend/retract control lever and front jack lever to the neutral position.

Retraction

[NOTICE]

◆Retract the front jack before retracting the outriggers. If the outriggers are retracted without first retracting the front jack, the carrier chassis frame will be damaged.

1. Place the front jack lever in the FRONT JACK position. Move the extend/retract control lever toward RET. The front jack will start retracting.

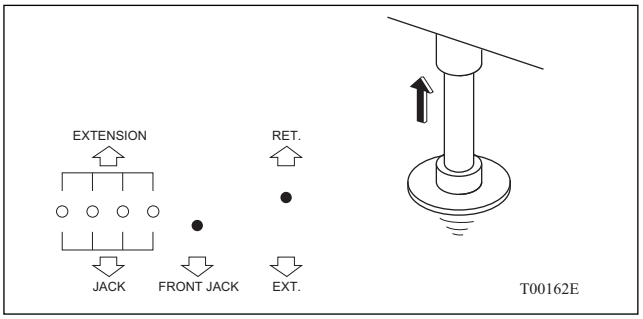

2. Once the front jack has been completely retracted, return the extend/retract control lever and front jack lever to their neutral position.

https://truckmanualshub.com/

Stowing the Outriggers

⚠ WARNING

⚠ If the outriggers are retracted with the boom extended, the crane may overturn. Fully retract the boom and stow it on the boom rest before retracting the outriggers.

⚠ Traveling with the crane without first securing the retracted outriggers with the lock pins is dangerous. The outrigger beams could accidentally extend during travel. Be sure to securely pin the outrigger beams whenever they are stowed.

[NOTICE]

◆Retract the front jack before retracting the outriggers. If the outriggers are retracted the front jack left extended, the carrier chassis frame will be damaged.

1. Place all four individual control levers in the JACK position. Move the extend/retract control lever toward RET. and fully retract the jack cylinders.

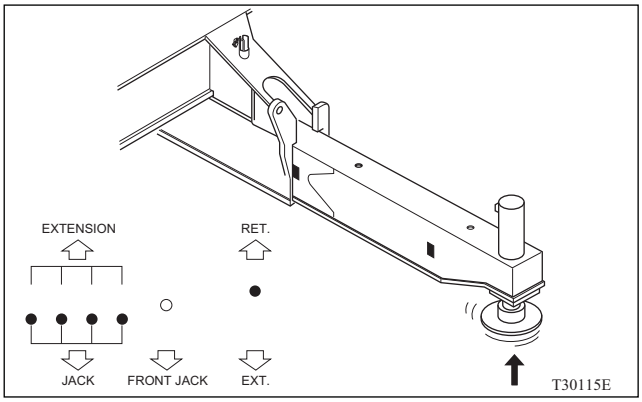

2. Remove all four lock pins.

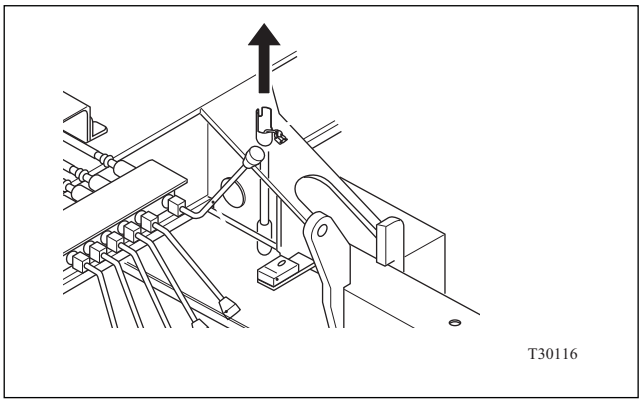

3. Place the two individual control levers of the outriggers on your side to EXTENSION. Then move the extend/retract control lever toward RET. to retract the outrigger beams fully.

◆The figure below shows an outrigger on the left side of the carrier.

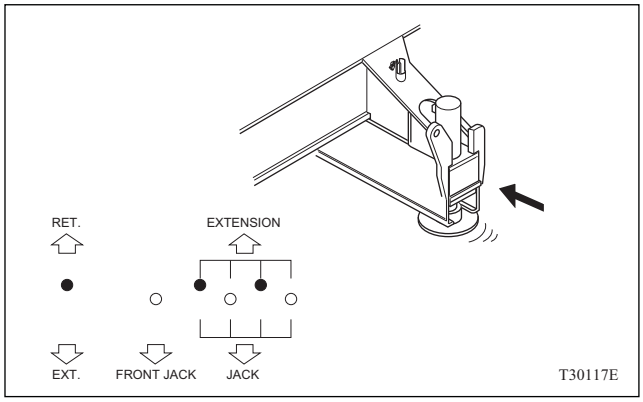

4. Go the the other side of the carrier. Place the two individual control levers of the outriggers on your side to EXTENSION. Then move the extend/retract control lever toward RET. to retract the outrigger beams fully.

◆The figure below shows an outrigger on the right side of the carrier.

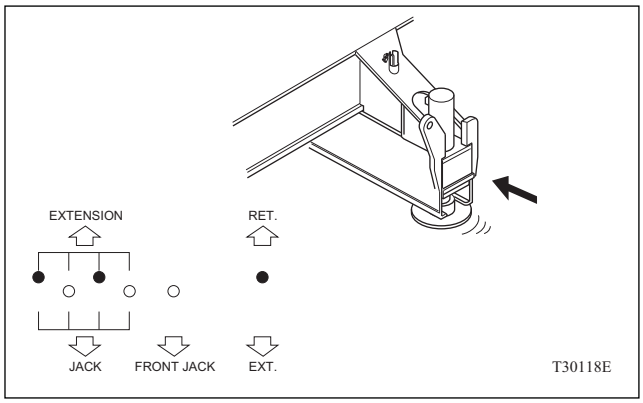

5. After all four outrigger beams are fully retracted, return the extend/retract control lever and all the individual control levers to the neutral position.