https://truckmanualshub.com/

Kubota
For Earth, For Life

KX019-4

KUBOTA MINI EXCAVATOR

https://truckmanualshub.com/

SUPERIOR PERFORMANCE

Kubota's new KX019-4 mini excavator raises the standard in the 1.5-2.0 tonne category with a powerful digging force and a wider working range that rival higher-end excavators. And with enhanced accessibility to sites such as roadsides or residential areas, the KX019-4 gets the jobs done easier from large construction areas to the tightest of places.

https://truckmanualshub.com/

SUPERIOR PERFORMANCE

Enhanced digging force

The KX019-4 delivers an impressive bucket digging force. Its powerful and well-balanced arm and bucket allow the operator to dig faster and more efficiently even in the toughest conditions.

Kubota original engine

The KX019-4 is powered by Kubota's impressive D902 16 PS engine. Engineered with the power to maximise digging and lifting performance, it also delivers minimised noise and vibration, meeting all current engine emission regulations.

Short-pitched rubber crawler and double-flanged track rollers

The KX019-4 features a short-pitched rubber crawler that minimises vibration and double-flanged rollers that help improve stability and travel performance.

Variable track gauge

To optimise stability when using heavy attachments, the KX019-4 tracks can be expanded to a maximum of 1,300mm and retracted to 990mm to make passing through narrow doorways and tight work possible. Either adjustment can be made in just seconds by operating the independent track gauge lever.

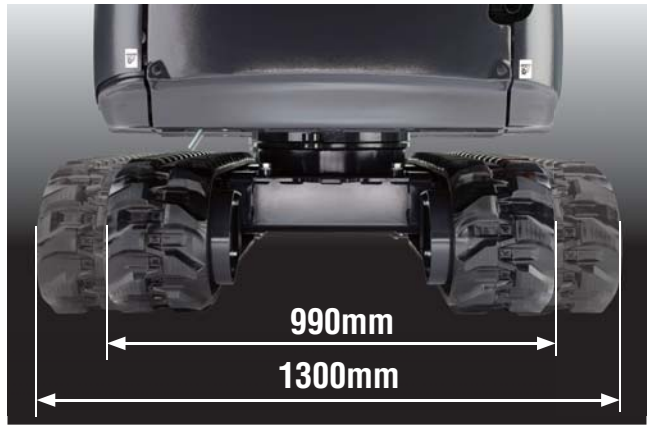

Auto-shift

The auto-shift system enables automatic travel shift from high to low depending on traction effort and terrain. This gives smoother operations when dozing and turning.

https://truckmanualshub.com/

DELUXE INTERIOR

Offering one of the largest cabins in its class with ample legroom, adjustable seating and a wide door, the KX019-4 brings more comfort to tough work. Combined with the handy new multifunctional digital panel, operations are now easier than ever.

https://truckmanualshub.com/

DELUXE INTERIOR

Time

Hour meter

Tachometer

A. Fuel level gauge
B. Water temperature gauge
C. Warning lamps (overheating, hydraulic, battery)
D. LCD display (time, hour, rpm)

Spacious cabin

To minimise fatigue, our new larger cabin delivers more comfort over our previous model. It provides more legroom with a flat floor plus an adjustable suspension seat.

Easy cabin entry and exit

Increasing the cabin door width by 30% at the narrowest point allows quick access to and from the cabin making operations that require frequent exiting, such as trenching and piping, much easier.

New digital panel

Following the excellence of Kubota's Intelligent Control System, the new digital panel puts convenience at the operator's fingertips. The user-friendly digital panel is positioned to the front right corner of the operator for better visibility, and features one-touch button operation to view the time, hour meter and tachometer. Warning lamps with code numbers on the display will alert you in case of emergencies such as overheating, hydraulic problems or low battery. Programming of the anti-theft keys can also be easily performed with the digital panel.
With easier access, simpler settings, easy-to-read indicators and alerts, you'll always be aware of the excavator's functioning status.

Proportional flow control of auxiliary circuit (SP1) and maximum oil flow setting

An auxiliary circuit (SP1) comes standard on the KX019-4. The convenient thumb-operated switch allows easy proportional flow control of auxiliary circuit SP1, while a forefinger-operated on/off switch enables simple operation of special applications that require a constant oil flow.
The maximum oil flow setting is conveniently adjustable from the digital panel – no additional tools or complex manual adjusting procedures are necessary. You can even programme up to five oil flow rates corresponding to specific attachments into the memory on the digital panel. The programmed settings can be quickly retrieved for the next job.

https://truckmanualshub.com/

EASY MAINTENANCE SAFETY/DURABILITY

The KX019-4 offers added peace-of-mind with extremely high levels of safety and durability. Furthermore, Kubota simplifies inspections and repairs with easier accessibility to the major components.

https://truckmanualshub.com/

EASY MAINTENANCE SAFETY/DURABILITY

Easy maintenance

Kubota has made routine maintenance extremely simple by consolidating primary engine components onto one side for easier access. Engine and other vital components can be inspected quickly and easily.

***A.* Air cleaner**

***B.* Water separator**

***C.* Fuel filter**

***D.* Alternator**

***E.* Starter motor**

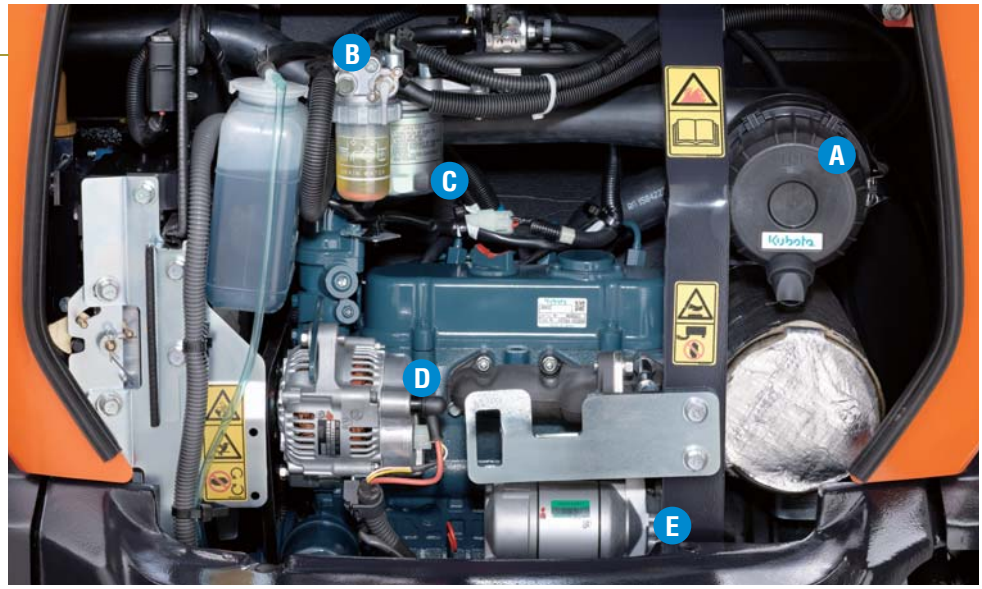

Topside boom cylinder

For increased reliability when performing in hazardous conditions, including demolition jobs when a breaker is fitted, the boom cylinder has been positioned on the topside of the boom to prevent cylinder damage.

Integrated travel motor hoses

Kubota has enclosed the travel motor hoses within the track frame for added protection.

Standard Equipment

Engine/Fuel system

- Double-element air cleaner
- Fuel refueling buzzer
- Extended fuel filler

Undercarriage

- 230 mm rubber track
- 2-speed travel
- Variable track
- Double flange track roller
- Short pitched rubber crawler

Hydraulic system

- Pressure accumulator
- Hydraulic pressure checking ports
- Third line hydraulic direct return for AUX
- Variable displacement pump
- Straight travel circuit

Safety system

- Engine start safety system on the left console
- Travel lock system
- Swivel lock system
- Kubota original anti-theft system
- Battery isolator

Working equipment

- 1190 mm arm
- Auxiliary hydraulic circuit piping to the arm's end
- 2 working lights on the cabin and 1 light on the boom

Cabin

- ROPS (Roll-over Protective Structure, ISO3471)
- TOPS (Tip-Over Protective Structure)
- OPG (Operator Protective Guard, Level 1)
- Weight-adjustable semi suspension seat
- Retractable seatbelt
- Hydraulic pilot control levers with wrist rests
- Cabin heater for defrosting and demisting with air ventilation
- Emergency exit hammer
- Front window power-assisted with gas damper
- 12V power outlet
- Location for radio
- Switch and harness for beacon light
- Digital panel with diagnosis function
- Front guard fixing point
- Side mirror

Canopy

- ROPS (Roll-over Protective Structure, ISO3471)
- TOPS (Tip-Over Protective Structure)
- OPG (Operator Protective Guard, Level 1)
- Weight-adjustable semi suspension seat
- Retractable seatbelt
- Hydraulic pilot control levers with wrist rests
- 12V power outlet
- Switch and harness for beacon light
- Digital panel with diagnosis function
- Front guard fixing point

Optional Equipment

- Radio installation kit on the cabin (Radio bracket, antenna, 2 speakers)
- 2 working lights on the canopy
- Travel pedal
- Front guard on the cabin/canopy

https://truckmanualshub.com/

SPECIFICATIONS

*With rubber shoe type

Model			KX019-4
Machine weight	Cabin / Canopy	kg	1780 / 1680
Operating weight	Cabin / Canopy	kg	1855 / 1755
Bucket capacity, std. SAE/CECE		m^3	0.04
Bucket width	With side teeth	mm	474
	Without side teeth	mm	450
Engine	Model		D902-BH
	Type		Water-cooled, diesel engine E-TVCS
	Output ISO9249	PS/rpm	16 / 2300
		kW/rpm	11.8 / 2300
	Number of cylinders		3
	Bore x Stroke	mm	72 x 73.6
	Displacement	cc	898
Overall length		mm	3870
Overall height	Cabin	mm	2330
	Canopy	mm	2350
Swivelling speed		rpm	9.1
Rubber shoe width		mm	230
Tumbler distance		mm	1230
Dozer size (width x height)		mm	990 / 1300 x 230
Hydraulic pumps	P1, P2		Variable displacement pump
	Flow rate	ℓ/min	17.3
	Hydraulic pressure	MPa (kgf/cm^2)	21.6 (220)
	P3		Gear Type
	Flow rate	ℓ/min	10.4
	Hydraulic pressure	MPa (kgf/cm^2)	20.6 (210)
Max. digging force	Arm	kN (kgf)	7.8 (790)
	Bucket	kN (kgf)	15.9 (1620)
Boom swing angle (left/right)		deg	75 / 60
Auxiliary circuit	Flow rate	ℓ/min	27.7
	Hydraulic pressure	MPa (kgf/cm^2)	21.6 (220)
Hydraulic reservoir		ℓ	28
Fuel tank capacity		ℓ	21
Max. travelling speed	Low	km/h	2.2
	High	km/h	4.0
Ground contact pressure	Cabin	kPa (kgf/cm^2)	27.4 (0.28)
	Canopy	kPa (kgf/cm^2)	26.5 (0.27)
Ground clearance		mm	160

*Machine weight: with 35kg standard bucket and fully served
*Operating weight: with 75kg operator, 35kg standard bucket and fully served

WORKING RANGE

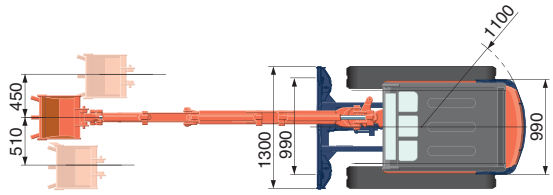

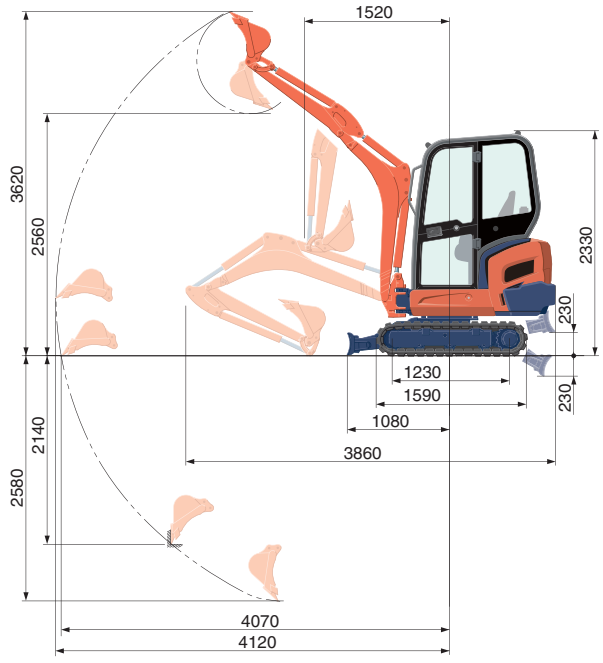

1190 mm arm
Unit: mm

LIFTING CAPACITY

Cabin, Rubber version

kN (ton)

Lift Point Height	Lifting point radius (2m)			Lifting point radius (max.)		
	Over-front		Over-side	Over-front		Over-side
	Blade Down	Blade UP		Blade Down	Blade UP	
1.5m	2.2 (0.23)	2.3 (0.23)	2.3 (0.23)	–	–	–
1.0m	4.0 (0.41)	4.0 (0.41)	4.0 (0.41)	–	–	–
0.5m	5.2 (0.53)	4.5 (0.46)	4.5 (0.46)	2.3 (0.23)	1.9 (0.20)	2.0 (0.20)
0m	5.4 (0.55)	4.3 (0.44)	4.4 (0.45)	–	–	–

*The lifting capacities are based on ISO 10567 and do not exceed 75% of the static tilt load of the machine or 87% of the hydraulic lifting capacities of the machine.
**The excavator bucket, hook, sling and other lifting accessories are not included on this table.

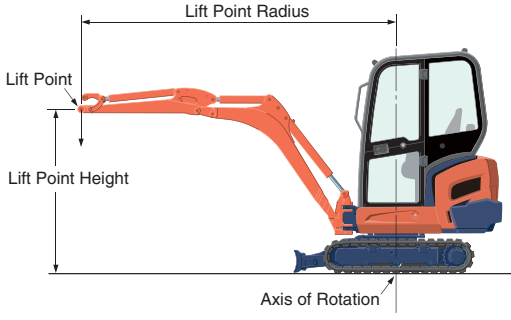

* Working ranges are with Kubota standard bucket, without quick coupler.
* Specifications are subject to change without notice for purpose of improvement.

★ ***All images shown are for brochure purposes only.***
When operating the excavator, wear clothing and equipment in accordance to local legal and safety regulations.

KUBOTA EUROPE S.A.S.
19 à 25, Rue Jules - Vercruysse -
Zone Industrielle - B.P. 50088
95101 Argenteuil Cedex France
Téléphone : (33) 01 34 26 34 34
Télécopieur : (33) 01 34 26 34 99

KUBOTA Baumaschinen GmbH
Steinhauser Straße 100
D-66482 Zweibrücken Germany
Telefon : (49) 0 63 32 - 487 - 312
F a x : (49) 0 63 32 - 487 - 101

http://www.kubota-global.net

Cat. No.0000-01-EU Printed in Japan '11-02D. ◁2▷0