https://truckmanualshub.com/

Genie®
A TEREX COMPANY

Service Manual

	Serial Number Range
GTH-636	from GTH0606A-8418 to GTH0610A-13771
GTH-644	from GTH0606A-8418 from GTH0606B-6271
GTH-842	from GTH0806A-8418 from GTH0806B-6958
GTH-844	from GTH0806A-8418 to GTH0812-16605 from GTH0806B-6956
GTH-1048	from GTH1006A-8418 to GTH1007A-11442
GTH-1056	from GTH1006A-8418 to GTH-1007A-11442

Part No. 97487
Rev D
June 2007

Downloaded from www.Manualslib.com manuals search engine

https://truckmanualshub.com/

Introduction

Important

Read, understand and obey the safety rules and operating instructions in the appropriate Operator's Manual on your machine before attempting any maintenance or repair procedure.

This manual provides detailed scheduled maintenance information for the machine owner and user. It also provides troubleshooting and repair procedures for qualified service professionals.

Basic mechanical, hydraulic and electrical skills are required to perform most procedures. However ,several procedures require specialized skills, tools, lifting equipment and a suitable workshop. In these instances, we strongly recommend that maintenance and repair be performed at an authorized Genie dealer service center.

Technical Publications

Genie Industries has endeavored to deliver the highest degree of accuracy possible. However, continuous improvement of our products is a Genie policy. Therefore, product specifications are subject to change without notice.

Readers are encouraged to notify Genie of errors and send in suggestions for improvement. All communications will be carefully considered for future printings of this and all other manuals.

Contact Us:

PO Box 97030
Redmond, WA 98073-9730 USA

www.genieindustries.com
e-mail: techsup@genieind.com

Copyright © 2006 by Genie Industries

97487 Rev D June 2007
First Edition, Fourth Printing

"Genie" is a registered trademark of Genie Industries in the USA and many other countries.
"GTH" is a trademark of Genie Industries.

Printed on recycled paper

Printed in U.S.A.

Downloaded from www.Manualslib.com manuals search engine

https://truckmanualshub.com/

Serial Number Legend

Genie
A TEREX COMPANY

Genie Industries
18340 NE 76th Street
Redmond, WA 98052
USA

MODEL: GTH844

SERIAL NUMBER: GTH0806A-8454

ATTACHMENT:

MANUFACTURE DATE: 02/20/06

TOTAL TRUCK WEIGHT(LBS): 22,010lbs / 9,984kg

MAX LIFT CAPACITY(LBS):
8000 LBS

LIFT CAPACITY(LBS)
AT MAX LIFT HEIGHT: 6000 LBS
OUTRIGGERS UP: N/A
OUTRIGGERS DOWN: N/A

THIS FORKLIFT TRUCK COMPLIES WITH:
ASME B56.6-2002 SAFETY STD FOR ROUGH TERRAIN FORKLIFT TRUCK

TH08 06 A - 1234

Model

Year of manufacture

Facility code

Sequence number

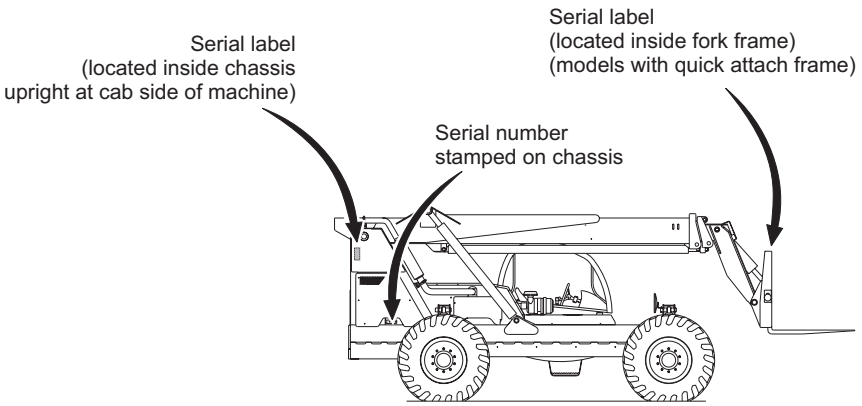

Downloaded from www.Manualslib.com manuals search engine

https://truckmanualshub.com/

This page intentionally left blank.

Downloaded from www.Manualslib.com manuals search engine

https://truckmanualshub.com/

Safety Rules

Danger

Failure to obey the instructions and safety rules in this manual and the appropriate Operator's Manual on your machine will result in death or serious injury.

Many of the hazards identified in the operator’s manual are also safety hazards when maintenance and repair procedures are performed.

Do Not Perform Maintenance Unless:

- ☑ You are trained and qualified to perform maintenance on this machine.
- ☑ You read, understand and obey:
  - manufacturer’s instructions and safety rules
  - employer’s safety rules and worksite regulations
  - applicable governmental regulations
- ☑ You have the appropriate tools, lifting equipment and a suitable workshop.

Downloaded from www.Manualslib.com manuals search engine

https://truckmanualshub.com/

SAFETY RULES

Personal Safety

Any person working on or around a machine must be aware of all known safety hazards. Personal safety and the continued safe operation of the machine should be your top priority.

Read each procedure thoroughly. This manual and the decals on the machine, use signal words to identify the following:

Safety alert symbol—used to alert personnel to potential personal injury hazards. Obey all safety messages that follow this symbol to avoid possible injury or death.

DANGER Indicates an imminently hazardous situation which, if not avoided, will result in death or serious injury.

WARNING Indicates a potentially hazardous situation which, if not avoided, could result in death or serious injury.

CAUTION Indicates a potentially hazardous situation which, if not avoided, may cause minor or moderate injury.

NOTICE Indicates a potentially hazardous situation which, if not avoided, may result in property damage.

Be sure to wear protective eye wear and other protective clothing if the situation warrants it.

Be aware of potential crushing hazards such as moving parts, free swinging or unsecured components when lifting or placing loads. Always wear approved steel-toed shoes.

Workplace Safety

Be sure to keep sparks, flames and lighted tobacco away from flammable and combustible materials like battery gases and engine fuels. Always have an approved fire extinguisher within easy reach.

Be sure that all tools and working areas are properly maintained and ready for use. Keep work surfaces clean and free of debris that could get into machine components and cause damage.

Be sure any forklift, overhead crane or other lifting or supporting device is fully capable of supporting and stabilizing the weight to be lifted. Use only chains or straps that are in good condition and of ample capacity.

Be sure that fasteners intended for one time use (i.e., cotter pins and self-locking nuts) are not reused. These components may fail if they are used a second time.

Be sure to properly dispose of old oil or other fluids. Use an approved container. Please be environmentally safe.

Be sure that your workshop or work area is properly ventilated and well lit.

Downloaded from www.Manualslib.com manuals search engine

https://truckmanualshub.com/

Table of Contents

Introduction

Important Information ..... *ii*

Serial Number Legend ..... *iii*

Section 1 **Safety Rules**

General Safety Rules ..... *v*

Section 2 **Rev** **Specifications**

D Machine Specifications ..... 2 - 1

Performance Specifications ..... 2 - 3

Hydraulic Specifications ..... 2 - 4

Manifold Component Specifications ..... 2 - 6

John Deere 4045TF270 Engine ..... 2 - 7

John Deere 4045TF275 Engine ..... 2 - 8

Deutz BF4 2012 Engine ..... 2 - 9

Perkins 1104C-44T Engine ..... 2 - 10

Perkins 1104C-44TA Engine ..... 2 - 11

Dana T12000 Transmission ..... 2 - 12

Dana T20000 Transmission ..... 2 - 12

Dana Planetary 212 Drive Axle ..... 2 - 13

Dana Planetary 213 Drive Axle ..... 2 - 13

Hydraulic Hose and Fitting Torque Specifications ..... 2 - 14

SAE and Metric Fasteners Torque Charts ..... 2 - 15

Section 3 **Rev** **Scheduled Maintenance Procedures**

Introduction ..... 3 - 1

Pre-delivery Preparation Report ..... 3 - 3

Maintenance Inspection Report ..... 3 - 5

Downloaded from www.Manualslib.com manuals search engine

https://truckmanualshub.com/

TABLE OF CONTENTS

Section 3	Rev	Scheduled Maintenance Procedures, continued	
	C	**Checklist A Procedures**	
		A-1 Inspect the Manuals and Decals	3 - 7
		A-2 Perform Pre-operation Inspection	3 - 8
		A-3 Perform Function Tests	3 - 8
		A-4 Lubricate the Machine	3 - 9
		A-5 Perform Engine Maintenance - John Deere and Perkins Models	3 - 11
		A-6 Perform Transmission Maintenance	3 - 11
		A-7 Perform Engine Maintenance - Deutz Models	3 - 12
		A-8 Perform 30 Day Service	3 - 12
		A-9 Perform Transmission Maintenance - GTH-636, GTH-644, GTH-842 and GTH-844 Models	3 - 13
		A-10 Perform Engine Maintenance - Perkins Models	3 - 13
		A-11 Perform Axle Maintenance	3 - 14
		A-12 Perform Engine Maintenance - John Deere Models	3 - 14
		A-13 Perform Transmission Maintenance - GTH-636, GTH-644, GTH-842 and GTH-844 Models	3 -- 15
		A-14 Perform Transmission Maintenance	3 - 15
		A-15 Perform Axle Maintenance	3 - 16
	B	**Checklist B Procedures**	
		B-1 Inspect the Battery	3 - 17
		B-2 Inspect the Electrical Wiring	3 - 17
		B-3 Check the Exhaust System	3 - 18
		B-4 Inspect the Engine Air Filter	3 - 19
		B-5 Inspect the Tires, Wheels and Lug Nut Torque	3 - 19
		B-6 Perform Hydraulic Oil Analysis	3 - 20
		B-7 Inspect the Fuel and Hydraulic Tank Cap Venting Systems	3 - 21
		B-8 Check the Boom Wear Pads	3 - 22
		B-9 Lubricate the Driveshafts	3 - 23
		B-10 Perform Engine Maintenance - John Deere Models	3 - 23

Downloaded from www.Manualslib.com manuals search engine

https://truckmanualshub.com/

TABLE OF CONTENTS

Section 3	Rev	Scheduled Maintenance Procedures, continued	
	B	**Checklist C Procedures**	
		C-1 Perform Engine Maintenance - Deutz Models	3 - 24
		C-2 Perform Engine Maintenance - John Deere Models	3 - 24
		C-3 Perform Axle Maintenance	3 - 25
		C-4 Perform Transmission Maintenance - GTH-1048 and GTH-1056 Models	3 - 25
		C-5 Perform Engine Maintenance - Perkins Models	3 - 26
		C-6 Perform Axle Maintenance	3 - 26
		C-7 Perform Axle Maintenance	3 - 27
	B	**Checklist D Procedures**	
		D-1 Inspect the Forks	3 - 28
		D-2 Adjust the Boom Sequencing Chains	3 - 28
		D-3 Replace the Hydraulic Tank Return Filter Element	3 - 31
		D-4 Perform Engine Maintenance - Deutz Models	3 - 32
		D-5 Perform Transmission Maintenance	3 - 32
		D-6 Perform Axle Maintenance	3 - 33
		D-7 Perform Engine Maintenance - Perkins Models	3 - 33
		D-8 Perform Engine Maintenance - Deutz Models	3 - 34
	C	**Checklist E Procedures**	
		E-1 Test or Replace the Hydraulic Oil	3 - 35
		E-2 Perform Engine Maintenance - John Deere Models	3 - 36
		E-3 Perform Engine Maintenance - Perkins Models	3 - 36
		E-4 Perform Engine Maintenance - Perkins Models	3 - 37
		E-5 Perform Engine Maintenance - Perkins Models	3 - 37
		E-6 Perform Engine Maintenance - John Deere Models	3 - 38
		E-7 Perform Engine Maintenance - Perkins Models	3 - 38
		E-8 Perform Engine Maintenance - Deutz Models	3 - 39
		E-9 Perform Engine Maintenance - Perkins Models	3 - 39

Downloaded from www.Manualslib.com manuals search engine

https://truckmanualshub.com/

TABLE OF CONTENTS

Section 4	Rev	Repair Procedures	
		Introduction	4 - 1
	C	**Boom Components**	
		1-1 Boom Angle Limit Switch (all models except GTH-636)	4 - 2
		1-2 Boom	4 - 3
		1-3 Boom Lift Cylinder	4 - 15
		1-4 Boom Extension Cylinder	4 - 17
		1-5 Fork Level Cylinder	4 - 18
		1-6 Fork Rotate Cylinder (option)	4 - 20
	B	**Operator's Compartment**	
		2-1 Operator's Compartment	4 - 23
		2-2 Machine Controls	4 - 32
	C	**Fuel and Hydraulic Tanks**	
		3-1 Fuel Tank	4 - 38
		3-2 Hydraulic Tank	4 - 39
	B	**Engines**	
		4-1 Engines	4 - 40
		4-2 Engine Fault Codes - John Deere 4045TF275 Engine	4 - 41
	C	**Transmission**	
		5-1 Transmission	4 - 42
	B	**Hydraulic Pumps**	
		6-1 Hydraulic Pump	4 - 44
	C	**Manifolds**	
		7-1 Main Valve Manifold Components	4 - 48
		7-2 Tilt Limiter Manifold Components	4 - 49
		7-3 Dual Pilot Check Manifold Components	4 - 50
		7-4 Boom Activated Rear Lock-up Manifold Components	4 - 51
		7-5 Fork Rotate Speed Manifold Components (option)	4 - 52

Downloaded from www.Manualslib.com manuals search engine

https://truckmanualshub.com/

Section 4 **Rev** **Repair Procedures**, continued

7-6 Control Block Manifold Components ..... 4 - 53
7-7 Fork Tilt Manifolds Components ..... 4 - 54
7-8 Rear Lock-up Manifold Components ..... 4 - 55
7-9 Parking Brake Manifold Components ..... 4 - 56
7-10 Differential Lock-up Manifold Components (optional on GTH-636 and GTH-644) ..... 4 - 57
7-11 Sway Manifold Components ..... 4 - 58
7-12 Fork Rotate Manifold Components (option) ..... 4 - 59
7-13 Sway Directional Manifold Components ..... 4 - 60
7-14 Outrigger Manifold Components - GTH-1048 and GTH-1056 ..... 4 - 61
7-15 Controller Relief (Drop Block) Manifold - GTH-636, GTH-1048 and GTH-1056 ..... 4 - 62
7-16 Boom Lift and Boom Extension Cylinders Manifold Components ..... 4 - 63
7-17 Fork Level Cylinder Manifold Components ..... 4 - 64
7-18 Fork Rotate Cylinder Manifold Components (option) ..... 4 - 65
7-19 Pump Destroke Manifold Components ..... 4 - 66
7-20 Extend Cylinder Relief Valve Manifold - GTH-636, GTH-1048 and GTH-1056 ..... 4 - 67
7-21 Boom Activated Sway Lock-up Manifold Components ..... 4 - 68
7-22 Valve Adjustments - Control Block Manifold ..... 4 - 69
7-23 Valve Adjustments - Tilt Limiter Manifold ..... 4 - 71
7-24 Valve Coils ..... 4 - 72

D **Axle Components**

8-1 Axles ..... 4 - 73

A **Outriggers**

9-1 Outriggers ..... 4 - 76

Downloaded from www.Manualslib.com manuals search engine

https://truckmanualshub.com/

TABLE OF CONTENTS

Section 5	Rev		Troubleshooting	
			Introduction	5 - 1
	A	1-1	Engine Fault Codes - GTH-1048 and GTH-1056	5 - 2
	A	1-2	Hydraulic Pump	5 - 4
	B	1-3	Boom Functions	5 - 6
	A	1-4	Drive Functions	5 - 13
	A	1-5	Steer Functions	5 - 14
	A	1-6	Brake Functions	5 - 17
	A	1-7	Sway Functions	5 - 18

Downloaded from www.Manualslib.com manuals search engine

https://truckmanualshub.com/

TABLE OF CONTENTS

Section 6	Rev	Schematics	
		Introduction	6 - 1
	A	Electrical Component and Limit Switch Legends	6 - 2
	B	Electrical and Hydraulic Symbols Legends	6 - 3
	C	Electrical Schematic - GTH-636 with John Deere Power	6 - 4
	B	Electrical Schematic - GTH-636 with Perkins Power	6 - 6
	C	Electrical Schematic - GTH-644, GTH-842 and GTH-844 with John Deere Power	6 - 8
	B	Electrical Schematic - GTH-644, GTH-842 and GTH-844 with Perkins Power	6 - 10
	B	Electrical Schematic - GTH-644, GTH-842 and GTH-844 with Deutz Power	6 - 12
	C	Electrical Schematic - GTH-1048 and GTH-1056 with John Deere Power	6 - 14
	B	Electrical Schematic - GTH-1048 and GTH-1056 with Perkins Power	6 - 16
	C	Hydraulic Schematic - GTH-636 with Single Joystick	6 - 18
	A	Hydraulic Schematic - GTH-636 with Dual Joysticks	6 - 19
	B	Hydraulic Schematic - GTH-644, GTH-842 and GTH-844 with Single Joystick	6 - 20
	A	Hydraulic Schematic - GTH-644, GTH-842 and GTH-844 with Dual Joysticks	6 - 21
	C	Hydraulic Schematic - GTH-1048 and GTH-1056 with Single Joystick	6 - 22
	A	Hydraulic Schematic - GTH-1048 and GTH-1056 with Dual Joysticks	6 - 23

Downloaded from www.Manualslib.com manuals search engine

https://truckmanualshub.com/

This page intentionally left blank.

Downloaded from www.Manualslib.com manuals search engine

https://truckmanualshub.com/

Specifications

REV D

Machine Specifications

Fluid capacities	
GTH-636, GTH-644, GTH-842 and GTH 844	
Fuel tank	30 gallons 113.6 liters
Hydraulic tank	34 gallons 128.7 liters
Hydraulic system (including tank)	50 gallons 189.3 liters

For operational specifications, refer to the Operator's Manual.

GTH-1048 and GTH-1056	
Fuel tank	30 gallons 113.6 liters
Hydraulic tank	48 gallons 181.7 liters
Hydraulic system (including tank)	66 gallons 249.8 liters

Continuous improvement of our products is a Genie policy. Product specifications are subject to change without notice.

Downloaded from www.Manualslib.com manuals search engine

https://truckmanualshub.com/

SPECIFICATIONS REV D

Tires and wheels	
Tire size	13.00 x 24
Tire ply rating	12
Weight, rough terrain tire (air filled)	270 lbs 122.5 kg
Weight, rough terrain tire (calcium chloride filled)	815 ±35 lbs 370 ±16 kg
Weight, rough terrain tire (foam filled)	836 ±35 lbs 379 ±16 kg
Weight, rock lug tire (calcium chloride filled)	835 ±35 lbs 379 ±16 kg
Weight, rock lug tire (foam filled)	886 ±35 lbs 402 ±16 kg

Tire size	14.00 x 24
Tire ply rating	12
Weight, rough terrain tire (air filled)	270 lbs 122.5 kg
Weight, rough terrain tire (calcium chloride filled)	965 ±35 lbs 438 ±16 kg
Weight, rough terrain tire (foam filled)	967 ±35 lbs 439 ±16 kg
Weight, rock lug tire (calcium chloride filled)	982 ±35 lbs 445 ±16 kg
Weight, rock lug tire (foam filled)	1013 ±35 lbs 459 ±16 kg

All models	
Tire pressure (models without foam filled tires)	50 psi 3.45 bar
Lug nut torque	465 ft-lbs 630 Nm
Lug pattern	10 x 13.189
Wheel diameter	24 in 60.1 cm
Wheel width	9 in 22.9 cm

Continuous improvement of our products is a Genie policy. Product specifications are subject to change without notice.

Downloaded from www.Manualslib.com manuals search engine

https://truckmanualshub.com/

Performance Specifications

Drive speed, maximum	
GTH-636 and GTH-842	18 mph 29 km/h
GTH-644 and GTH-844	17 mph 27.4 km/h
GTH-1048 and GTH-1056	19 mph 30.6 km/h

Draw bar pull	
GTH-636, GTH-644, GTH-842 and GTH-844	19,200 lbs 8427 kg
GTH-1048 and GTH-1056	26,500 lbs 12045 kg

Lift capacity, maximum	
GTH-636 and GTH-644	6000 lbs 2727 kg
GTH-842 and GTH-844	8000 lbs 3636 kg
GTH-1048 and GTH-1056	10,000 lbs 4545 kg

Boom function speeds, maximum	
GTH-636	
Boom up	12 to 14 seconds
Boom down	16 to 18 seconds
Boom extend	6 to 8 seconds
Boom retract	9 to 11 seconds
Chassis sway	11 to 13 seconds
Fork tilt up	11 to 13 seconds

Boom function speeds, maximum	
GTH-644, GTH-842 and GTH-844	
Boom up	14 to 16 seconds
Boom down	10 to 12 seconds
Boom extend	17 to 19 seconds
Boom retract	13 to 15 seconds
Chassis sway	9 to 12 seconds
Fork tilt up	7 to 9 seconds

GTH-1048	
Boom up	12 to 14 seconds
Boom down	13 to 15 seconds
Boom extend	16 to 18 seconds
Boom retract	15 to 17 seconds
Fork rotate	19 to 21 seconds
Chassis sway	11 to 13 seconds
Fork tilt up	11 to 13 seconds
GTH-1056	
Boom up	17 to 19 seconds
Boom down	23 to 25 seconds
Boom extend	14 to 16 seconds
Boom retract	13 to 15 seconds
Chassis sway	11 to 13 seconds
Fork tilt up	11 to 13 seconds
All models	
Fork tilt down	11 to 13 seconds
Fork rotate	19 to 21 seconds

Continuous improvement of our products is a Genie policy. Product specifications are subject to change without notice.

Downloaded from www.Manualslib.com manuals search engine

https://truckmanualshub.com/

SPECIFICATIONS REV D

Hydraulic Specifications

Hydraulic Oil Specifications
GTH-636/644 before serial number GTH0607A-11526
GTH-842/844 before serial number GTH0807A-11526
GTH-1048/1056 before serial number GTH1007A-11443

Hydraulic oil type	Chevron Rykon AW ISO46 equivalent
ISO viscosity grade	46
Viscosity index	97
Cleanliness level, minimum	15/13
Water content, maximum	200 ppm

Genie specifications require hydraulic oils which are designed to give maximum protection to hydraulic systems, have the ability to perform over a wide temperature range, and have a minimum viscosity index rating of 97. They should provide excellent antiwear, oxidation, corrosion inhibition, seal conditioning, and foam and aeration suppression properties.

Optional Fluids

Biodegradable	Petro Canada Environ MV46 Statoil Hydra Way Bio Pa 32 BP Biohyd SE-S
Fire resistant	UCON Hydrolube HP-5046 Quintolubric 822
Mineral based	Chevron Rykon MV Shell Tellus T32 Shell Tellus T46 Chevron Aviation A

NOTICE Continued use of Chevron Aviation A hydraulic fluid when ambient temperatures are consistently above 32°F / 0°C may result in component damage.

Note: Use Chevron Aviation A hydraulic fluid when ambient temperatures are consistently below 0°F / -17°C.

Note: Use Shell Tellus T46 hydraulic oil when oil temperatures consistently exceed 205°F / 96°C.

Note: Genie specifications require additional equipment and special installation instructions for the approved optional fluids. Consult the Genie Industries Service Department before use.

Hydraulic Specifications

Hydraulic Oil Specifications
GTH-636/644 after serial number GTH0607A-11525
GTH-842/844 after serial number GTH0807A-11525

Hydraulic oil type	Chevron Rykon MV equivalent
ISO viscosity grade	Multi-viscosity
Viscosity index	200
Cleanliness level, minimum	15/13
Water content, maximum	200 ppm

Genie specifications require hydraulic oils which are designed to give maximum protection to hydraulic systems, have the ability to perform over a wide temperature range, and the viscosity index should exceed 140. They should provide excellent antiwear, oxidation, corrosion inhibition, seal conditioning, and foam and aeration suppression properties.

Optional Fluids

Biodegradable	Petro Canada Environ MV46 Statoil Hydra Way Bio Pa 32 BP Biohyd SE-S
Fire resistant	UCON Hydrolube HP-5046 Quintolubric 822
Mineral based	Chevron Rykon MV Shell Tellus T32 Shell Tellus T46 Chevron Aviation A

NOTICE Continued use of Chevron Aviation A hydraulic fluid when ambient temperatures are consistently above 32°F / 0°C may result in component damage.

Note: Use Chevron Aviation A hydraulic fluid when ambient temperatures are consistently below 0°F / -17°C.

Note: Use Shell Tellus T46 hydraulic oil when oil temperatures consistently exceed 205°F / 96°C.

Note: Genie specifications require additional equipment and special installation instructions for the approved optional fluids. Consult the Genie Industries Service Department before use.

Downloaded from www.Manualslib.com manuals search engine

https://truckmanualshub.com/

Function Pump	
GTH-636	
Type:	Variable displacement piston pump
Flow rate @ 2500 rpm	0 to 35 gpm 0 to 132.5 L/min
Pump pressure (measured at test port GP1)	2800 psi 193 bar
GTH-644, GTH-842, GTH-844 and GTH-1056	
Type:	Variable displacement piston pump
Flow rate @ 2500 rpm	0 to 35 gpm 0 to 132.5 L/min
Pump pressure (measured at test port GP1)	3000 psi 206.9 bar
GTH-1048	
Type:	Variable displacement piston pump
Flow rate @ 2500 rpm	0 to 35 gpm 0 to 132.5 L/min
Pump pressure (measured at test port GP1)	3500 psi 206.9 bar

Continuous improvement of our products is a Genie policy. Product specifications are subject to change without notice.

Main Valve Manifold (all models)	
System relief valve pressure, maximum	3650 psi 251.7 bar

Control Block Manifold	
GTH-636, GTH-644, GTH-842 and GTH-844	
Steer relief valve pressure, maximum (measured at test port GP2)	2250 psi 155 bar
Pilot relief valve pressure, maximum (measured at test port GP3)	500 psi 34.5 bar
GTH-1048 and GTH-1056	
Steer relief valve pressure, maximum (measured at test port GP2)	2250 psi 155 bar
Pilot relief valve pressure, maximum (measured at test port GP5)	400 psi 27.6 bar

Tilt Limiter Manifold	
GTH-636, GTH-644, GTH-842 and GTH-844	
Tilt limiter relief valve pressure, maximum (measured at test port GP4)	1200 psi 82.7 bar
GTH-1048 and GTH-1056	
Tilt limiter relief valve pressure, maximum (measured at test port GP6)	1200 psi 82.7 bar

Boom Extend Relief Manifold	
GTH-636 (from serial number GTH0606A-8418 to GTH0606A-9022)	
Boom extend relief valve pressure, maximum	2000 psi 137.9 bar
GTH-1048 and GTH-1056	
Boom extend relief valve pressure, maximum	2500 psi 172.3 bar

Downloaded from www.Manualslib.com manuals search engine

https://truckmanualshub.com/

SPECIFICATIONS REV D

Manifold Component Specifications

Plug torque	
SAE No. 2	50 in-lbs / 6 Nm
SAE No. 4	13 ft-lbs / 18 Nm
SAE No. 6	18 ft-lbs / 24 Nm
SAE No. 8	50 ft-lbs / 68 Nm
SAE No. 10	55 ft-lbs / 75 Nm
SAE No. 12	75 ft-lbs / 102 Nm

Valve Coil Resistance

Description	Specification
Solenoid valve, 2 position 3 way 12V DC (schematic items DA, IA and JA)	8 to 10Ω
Solenoid valve, 2 position 4 way 12V DC (schematic items GA and GB)	8 to 10Ω
Solenoid valve, 3 position 4 way 12V DC (schematic items LA and MA)	4 to 6Ω
Solenoid valve, 2 position 2 way 12V DC (schematic item OA)	8 to 10Ω
Solenoid valve, 2 position 2 way 12V DC Sauer pump (black)(schematic item TA)	6.5 to 8.5Ω
Solenoid valve, 2 position 2 way 12V DC Rexroth pump (grey)(schematic item TA)	7.5 to 9.5Ω

Continuous improvement of our products is a Genie policy. Product specifications are subject to change without notice.

Downloaded from www.Manualslib.com manuals search engine

https://truckmanualshub.com/

John Deere 4045TF270 Engine

GTH-636, GTH-644, GTH-842 and GTH-844	
Displacement	275 cu in 4.5 liters
Number of cylinders	4
Bore & stroke	4.19 x 5 inches 106 x 127 mm
Horsepower	99 @ 2500 rpm 73.8 kw @ 2500 rpm
Firing order	1 - 3 - 4 - 2
Low idle Frequency	900 rpm 180 Hz
High idle Frequency	2600 rpm 520 Hz
Compression ratio	17:1
Valve clearances, cold	
Intake, allowable range	0.012 to 0.015 in 0.31 to 0.38 mm
Exhaust, allowable range	0.016 to 0.019 in 0.41 to 0.48 mm
Intake, recommended setting	0.14 in 0.36 mm
Exhaust, recommended setting	0.18 in 0.46 mm
Lubrication system	
Oil pressure (at rated speed with full load)	50±15 psi 3.4±1 bar
Oil capacity (including filter)	14 quarts 13.2 liters
Oil viscosity requirements	

Units ship with John Deere Engine Break-In Oil. During the break-in period, add John Deere Engine Break-In Oil as needed to maintain the specified oil level.
Extreme operating temperatures may require the use of alternative engine oils. For oil requirements, refer to the Engine Operator's Manual on your machine.

Injection system	
Injection pump make	Stanadyne
Peak injection pressure	10,000 psi 690 bar
Fuel requirement	

For fuel requirements, refer to the engine Operator's Manual on your machine.

Engine coolant	
Capacity	2.6 gallons 9.8 liters
Alternator	
Output	95 A, 14V DC
Battery	
Type	12V DC
Group	C31
Quantity	1
Cold cranking ampere @ 0°F	1000A
Reserve capacity @ 25A rate	200 minutes

Continuous improvement of our products is a Genie policy. Product specifications are subject to change without notice.

Downloaded from www.Manualslib.com manuals search engine

https://truckmanualshub.com/

SPECIFICATIONS REV D

John Deere 4045TF275 Engine

GTH-1048 and GTH-1056	
Displacement	275 cu in 4.5 liters
Number of cylinders	4
Bore & stroke	4.19 x 5 inches 106 x 127 mm
Horsepower	115 @ 2500 rpm 85.8 kw @ 2500 rpm
Firing order	1 - 3 - 4 - 2
Low idle Frequency	1000 rpm 200 Hz
High idle Frequency	2600 rpm 520 Hz
Compression ratio	17:1
Valve clearances, cold	
Intake, allowable range	0.012 to 0.015 in 0.31 to 0.38 mm
Exhaust, allowable range	0.016 to 0.019 in 0.41 to 0.48 mm
Intake, recommended setting	0.14 in 0.36 mm
Exhaust, recommended setting	0.18 in 0.46 mm
Lubrication system	
Oil pressure (at rated speed with full load)	50±15 psi 3.4±1 bar
Oil capacity (including filter)	14 quarts 13.2 liters
Oil viscosity requirements	

Units ship with John Deere Engine Break-In Oil. During the break-in period, add John Deere Engine Break-In Oil as needed to maintain the specified oil level.
Extreme operating temperatures may require the use of alternative engine oils. For oil requirements, refer to the Engine Operator's Manual on your machine.

Injection system	
Injection pump make	Stanadyne
Peak injection pressure	10,000 psi 690 bar
Fuel requirement	

For fuel requirements, refer to the engine Operator's Manual on your machine.

Engine coolant	
Capacity	7 gallons 26.5 liters
Alternator	
Output	95 A, 14V DC
Battery	
Type	12V DC
Group	C31
Quantity	1
Cold cranking ampere @ 0°F	1000A
Reserve capacity @ 25A rate	200 minutes

Continuous improvement of our products is a Genie policy. Product specifications are subject to change without notice.

Downloaded from www.Manualslib.com manuals search engine

https://truckmanualshub.com/

Deutz BF4 2012 Engine

GTH-644, GTH-842 and GTH-844	
Displacement	246 cu in 4 liters
Number of cylinders	4
Bore and stroke	3.97 x 4.96 inches 101 x 126 mm
Horsepower	100 @ 2500 rpm 74.6 kW @ 2500 rpm
Firing order	1 - 3 - 4 - 2
Compression ratio	19:1
Low idle Frequency	1000 rpm 200 Hz
High idle Frequency	2600 rpm 520 Hz
Valve clearance, cold	
Intake	0.01 in 0.3 mm
Exhaust	0.02 in 0.5 mm
Lubrication system	
Oil pressure	20 to 43 psi 1.4 to 3 bar
Oil capacity (including filter)	12.2 quarts 11.5 liters
Oil viscosity requirements	
Units ship with 15W-40. Extreme operating temperatures may require the use of alternative engine oils. For oil requirements, refer to the Engine Operation Manual on your machine.	

Injection system	
Injection pump make	Bosch PFM
Injector pressure, minimum	3190 psi 220 bar
Fuel requirement	
For fuel requirements, refer to the engine Operation Manual on your machine.	
Engine coolant	
Capacity	3 gallons 11.4 liters
Alternator	
Output	95 A, 14V DC
Fan belt (pretension / retension)	101 / 67 ±11 lbf 450 / 300 ±50 N
Battery	
Type	12V DC
Group	C31
Quantity	1
Cold cranking ampere @ 0°F	1000A
Reserve capacity @ 25A rate	200 minutes

Continuous improvement of our products is a Genie policy. Product specifications are subject to change without notice.

Downloaded from www.Manualslib.com manuals search engine

https://truckmanualshub.com/

SPECIFICATIONS REV D

Perkins 1104C-44T Engine

GTH-636, GTH-644, GTH-842 and GTH-844	
Displacement	269 cu in 4.4 liters
Number of cylinders	4
Bore and stroke	4.133 x 5 inches 105 x 127 mm
Horsepower	99.9 @ 2500 rpm 74.5 kW @ 2500 rpm
Firing order	1 - 3 - 4 - 2
Compression ratio	18.2:1
Low idle Frequency	1000 rpm 200 Hz
High idle Frequency	2520 rpm 504 Hz
Valve clearance, cold	
Intake	0.008 in 0.2 mm
Exhaust	0.018 in 0.45 mm
Lubrication system	
Oil pressure at high idle, minimum	43 psi 3 bar
Oil capacity (including filter)	7 quarts 6.5 liters
Oil viscosity requirements	
Units ship with 15W-40. Extreme operating temperatures may require the use of alternative engine oils. For oil requirements, refer to the Engine Operation and Maintenance Manual on your machine.	

Injection system	
Injection pump make	Delphi
Injector pressure, minimum	4380 psi 302 bar
Lift pump pressure	4.5 to 9.5 psi 0.31 to 0.66 bar
Fuel requirement	
For fuel requirements, refer to the engine Operation Manual on your machine.	
Engine coolant	
Capacity	4.75 gallons 18 liters
Alternator	
Output	85 A, 14V DC
Fan belt tension (new belt / used belt)	120 / 80 lbf 535 / 355 N
Battery	
Type	12V DC
Group	C31
Quantity	1
Cold cranking ampere @ 0°F	1000A
Reserve capacity @ 25A rate	200 minutes

Continuous improvement of our products is a Genie policy. Product specifications are subject to change without notice.

Downloaded from www.Manualslib.com manuals search engine

https://truckmanualshub.com/

Perkins 1104C-44TA Engine

GTH-1048 and GTH-1056	
Displacement	269 cu in 4.4 liters
Number of cylinders	4
Bore and stroke	4.133 x 5 inches 105 x 127 mm
Horsepower	127 @ 2200 rpm 94.7 kW @ 2200 rpm
Firing order	1 - 3 - 4 - 2
Compression ratio	18.2:1
Low idle Frequency	1000 rpm 200 Hz
High idle Frequency	2310 rpm 462 Hz
Valve clearance, cold	
Intake	0.008 in 0.2 mm
Exhaust	0.018 in 0.45 mm
Lubrication system	
Oil pressure at high idle, minimum	43 psi 3 bar
Oil capacity (including filter)	8.3 quarts 7.85 liters
Oil viscosity requirements	
Units ship with 15W-40. Extreme operating temperatures may require the use of alternative engine oils. For oil requirements, refer to the Engine Operation and Maintenance Manual on your machine.	

Injection system	
Injection pump make	Delphi
Injector pressure, minimum	4380 psi 302 bar
Lift pump pressure	4.5 to 9.5 psi 0.31 to 0.66 bar
Fuel requirement	
For fuel requirements, refer to the engine Operation Manual on your machine.	
Engine coolant	
Capacity	5 gallons 18.9 liters
Alternator	
Output	85 A, 14V DC
Fan belt tension (new belt / used belt)	120 / 80 lbf 535 / 355 N
Battery	
Type	12V DC
Group	C31
Quantity	1
Cold cranking ampere @ 0°F	1000A
Reserve capacity @ 25A rate	200 minutes

Continuous improvement of our products is a Genie policy. Product specifications are subject to change without notice.

Downloaded from www.Manualslib.com manuals search engine

https://truckmanualshub.com/

SPECIFICATIONS REV D

Dana T12000 Transmission

GTH-636, GTH-644, GTH-842 and GTH-844	
Transmission Type	3 speed powershift converter
Speeds, Forward	3
Speeds, Reverse	3
Torque Converter	
Maximum input	3300 rpm
Size	11 inches
Lubrication	
Oil capacity	13.6 quarts 12.9 liters
Oil viscosity requirements	
Units ship with Chevron RPM SAE 10W. Extreme operating temperatures may require the use of alternative transmission oils. For oil requirements, refer to the *Dana T12000 Maintenance Manual* (Dana part number 0109).	
Dana 0109 Maintenance Manual Genie part number	97489

Dana T20000 Transmission

GTH-1048 and GTH-1056	
Transmission Type	3 speed powershift converter
Speeds, Forward	3
Speeds, Reverse	3
Torque Converter	
Maximum input	3100 rpm
Size	12 inches
Lubrication	
Oil capacity	20 quarts 18.9 liters
Oil viscosity requirements	
Units ship with Chevron RPM SAE 10W. Extreme operating temperatures may require the use of alternative transmission oils. For oil requirements, refer to the *Dana T20000 Maintenance Manual* (Dana part number 0202).	
Dana 0202 Maintenance Manual Genie part number	115025

Continuous improvement of our products is a Genie policy. Product specifications are subject to change without notice.

Downloaded from www.Manualslib.com manuals search engine

https://truckmanualshub.com/

Dana Planetary 212 Drive Axle

GTH-636, GTH-644, GTH-842 and GTH-844	
Steering	Intergrated steer cylinder
Joints	Heavy duty double U-joints
Steering angle, maximum	55°
Front Axle Lubrication	
Front differential	9 quarts 8.5 liters
Axle planetary end (each)	1 quart 0.9 liter
Rear Axle Lubrication	
Rear differential	6 quarts 5.7 liters
Axle planetary end (each)	1 quart 0.9 liter
Oil viscosity requirements	
Differential	Chervron Supreme 80W90 LS
Planet ends	Chervron Supreme 80W90 LS

For additional axle information, refer to the *Dana 212 Axle Maintenance and Repair Manual* (Dana part number MO212S20).

Dana 212 Axle Maintenance and Repair Manual
Genie part number 97488

Dana Planetary 213 Drive Axle

GTH-1048 and GTH-1056	
Steering	Intergrated steer cylinder
Joints	Heavy duty double U-joints
Steering angle, maximum	55°
Front Axle Lubrication	
Front differential	15 quarts 14.2 liters
Axle planetary end (each)	2 quarts 1.9 liters
Rear Axle Lubrication	
Rear differential	15 quarts 14.2 liters
Axle planetary end (each)	2 quarts 1.9 liters
Oil viscosity requirements	
Differential	Chervron Supreme 80W90 LS
Planet ends	Chervron Supreme 80W90 LS

For additional axle information, refer to the *Dana 213 Axle Maintenance and Repair Manual* (Dana part number 0243).

Dana 213 Axle Maintenance and Repair Manual
Genie part number 115026

Continuous improvement of our products is a Genie policy. Product specifications are subject to change without notice.

Downloaded from www.Manualslib.com manuals search engine

https://truckmanualshub.com/

Hydraulic Hose and Fitting Torque Specifications

Your machine is equipped with 37° flared fittings and hose ends. Genie specifications require that fittings and hose ends be torqued to specification when they are removed and installed or when new hoses or fittings are installed.

Torque Procedure

JIC 37° fittings

NOTICE Use the *JIC 37° Fittings* table on this page to determine the correct number of flats for the proper tightening position.

1 Align the tube flare (hex nut) against the nose of the fitting body (body hex fitting) and tighten the hex nut to the body hex fitting to hand-tight, approximately 30 in-lbs / 3.4 Nm.

2 Make a reference mark on one of the flats of the hex nut, and continue it on to the body hex fitting with a permanent ink marker.

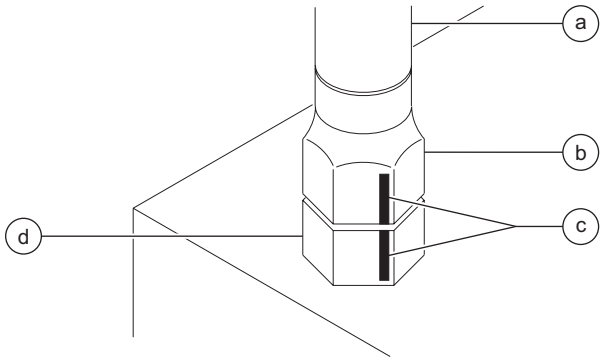

a hydraulic hose
b hex nut
c reference mark
d body hex fitting

JIC 37° Fittings
(swivel nut or hose connection)

SAE Dash size	Thread Size	Flats
-4	7/16-20	2
-6	9/16-18	1 1/4
-8	3/4-16	1
-10	7/8-14	1
-12	1 1/16-12	1
-16	1 5/16-12	1
-20	1 5/8-12	1
-24	1 7/8-12	1

3 Working clockwise on the body hex fitting, make a second mark with a permanent ink marker to indicate the proper tightening position.

NOTICE The marks indicate that the correct tightening positions have been determined. Use the second mark on the body hex fitting to properly tighten the joint after it has been loosened.

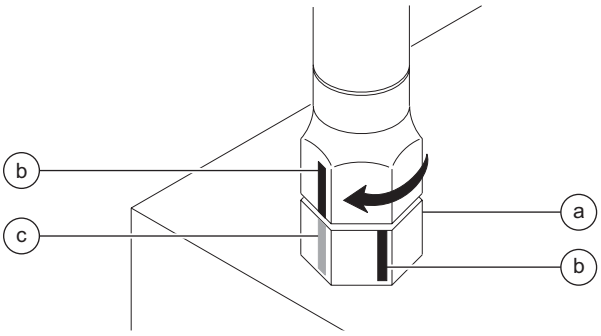

a body hex fitting
b reference mark
c second mark

4 Tighten the hex nut until the mark on the hex nut is aligned with the second mark on the body hex fitting.

5 Operate all machine functions and inspect the hoses and fittings and related components to

Downloaded from www.Manualslib.com manuals search engine

https://truckmanualshub.com/

SAE FASTENER TORQUE CHART

• This chart is to be used as a guide only unless noted elsewhere in this manual •

SIZE	THREAD	Grade 5				Grade 8				A574 High Strength Black Oxide Bolts	
		LUBED		DRY		LUBED		DRY		LUBED	
		in-lbs	Nm	in-lbs	Nm	in-lbs	Nm	in-lbs	Nm	in-lbs	Nm
1/4	20	80	9	100	11.3	110	12.4	140	15.8	130	14.7
	28	90	10.1	120	13.5	120	13.5	160	18	140	15.8
		LUBED		DRY		LUBED		DRY		LUBED	
		ft-lbs	Nm	ft-lbs	Nm	ft-lbs	Nm	ft-lbs	Nm	ft-lbs	Nm
5/16	18	13	17.6	17	23	18	24	25	33.9	21	28.4
	24	14	19	19	25.7	20	27.1	27	36.6	24	32.5
3/8	16	23	31.2	31	42	33	44.7	44	59.6	38	51.5
	24	26	35.2	35	47.4	37	50.1	49	66.4	43	58.3
7/16	14	37	50.1	49	66.4	50	67.8	70	94.7	61	82.7
	20	41	55.5	55	74.5	60	81.3	80	108.4	68	92.1
1/2	13	57	77.3	75	101.6	80	108.4	110	149	93	126
	20	64	86.7	85	115	90	122	120	162	105	142
9/16	12	80	108.4	110	149	120	162	150	203	130	176
	18	90	122	120	162	130	176	170	230	140	189
5/8	11	110	149	150	203	160	217	210	284	180	244
	18	130	176	170	230	180	244	240	325	200	271
3/4	10	200	271	270	366	280	379	380	515	320	433
	16	220	298	300	406	310	420	420	569	350	474
7/8	9	320	433	430	583	450	610	610	827	510	691
	14	350	474	470	637	500	678	670	908	560	759
1	8	480	650	640	867	680	922	910	1233	770	1044
	12	530	718	710	962	750	1016	990	1342	840	1139
1 1/8	7	590	800	790	1071	970	1315	1290	1749	1090	1477
	12	670	908	890	1206	1080	1464	1440	1952	1220	1654
1 1/4	7	840	1138	1120	1518	1360	1844	1820	2467	1530	2074
	12	930	1260	1240	1681	1510	2047	2010	2725	1700	2304
1 1/2	6	1460	1979	1950	2643	2370	3213	3160	4284	2670	3620
	12	1640	2223	2190	2969	2670	3620	3560	4826	3000	4067

METRIC FASTENER TORQUE CHART

• This chart is to be used as a guide only unless noted elsewhere in this manual •

Size (mm)	Class 4.6 (4.6)				Class 8.8 (8.8)				Class 10.9 (10.9)				Class 12.9 (12.9)			
	LUBED		DRY		LUBED		DRY		LUBED		DRY		LUBED		DRY	
	in-lbs	Nm	in-lbs	Nm	in-lbs	Nm	in-lbs	Nm	in-lbs	Nm	in-lbs	Nm	in-lbs	Nm	in-lbs	Nm
5	16	1.8	21	2.4	41	4.63	54	6.18	58	6.63	78	8.84	68	7.75	91	10.3
6	19	3.05	36	4.07	69	7.87	93	10.5	100	11.3	132	15	116	13.2	155	17.6
7	45	5.12	60	6.83	116	13.2	155	17.6	167	18.9	223	25.2	1.95	22.1	260	29.4
	LUBED		DRY		LUBED		DRY		LUBED		DRY		LUBED		DRY	
	ft-lbs	Nm	ft-lbs	Nm	ft-lbs	Nm	ft-lbs	Nm	ft-lbs	Nm	ft-lbs	Nm	ft-lbs	Nm	ft-lbs	Nm
8	5.4	7.41	7.2	9.88	14	19.1	18.8	25.5	20.1	27.3	26.9	36.5	23.6	32	31.4	42.6
10	10.8	14.7	14.4	19.6	27.9	37.8	37.2	50.5	39.9	54.1	53.2	72.2	46.7	63.3	62.3	84.4
12	18.9	25.6	25.1	34.1	48.6	66	64.9	88	69.7	94.5	92.2	125	81	110	108	147
14	30.1	40.8	40	54.3	77.4	105	103	140	110	150	147	200	129	175	172	234
16	46.9	63.6	62.5	84.8	125	170	166	226	173	235	230	313	202	274	269	365
18	64.5	87.5	86.2	117	171	233	229	311	238	323	317	430	278	377	371	503
20	91	124	121	165	243	330	325	441	337	458	450	610	394	535	525	713
22	124	169	166	225	331	450	442	600	458	622	612	830	536	727	715	970
24	157	214	210	285	420	570	562	762	583	791	778	1055	682	925	909	1233

Downloaded from www.Manualslib.com manuals search engine

https://truckmanualshub.com/

This page intentionally left blank.

Downloaded from www.Manualslib.com manuals search engine

https://truckmanualshub.com/

Scheduled Maintenance Procedures

Observe and Obey:

- ☑ Maintenance inspections shall be completed by a person trained and qualified on the maintenance of this machine.
- ☑ Scheduled maintenance inspections shall be completed daily, quarterly, semi-annually, annually and every 2 years as specified on the *Maintenance Inspection Report.*

⚠WARNING Failure to perform each procedure as presented and scheduled could result in death, serious injury or substantial damage.

- ☑ Immediately tag and remove from service a damaged or malfunctioning machine.
- ☑ Repair any machine damage or malfunction before operating the machine.
- ☑ Use only Genie approved replacement parts.
- ☑ Machines that have been out of service for a period longer than 3 months must complete the quarterly inspection.
- ☑ Unless otherwise specified, perform each maintenance procedure with the machine in the following configuration:
  - Machine parked on a firm, level surface
  - Boom in the stowed position
  - Key switch in the off position with the key removed
  - Wheels chocked

About This Section

This section contains detailed procedures for each scheduled maintenance inspection.

Each procedure includes a description, safety warnings and step-by-step instructions.

Symbols Legend

⚠ Safety alert symbol—used to alert personnel to potential personal injury hazards. Obey all safety messages that follow this symbol to avoid possible injury or death.

⚠DANGER Indicates an imminently hazardous situation which, if not avoided, will result in death or serious injury.

⚠WARNING Indicates a potentially hazardous situation which, if not avoided, could result in death or serious injury.

⚠CAUTION Indicates a potentially hazardous situation which, if not avoided, may cause minor or moderate injury.

NOTICE Indicates a potentially hazardous situation which, if not avoided, may result in property damage.

⊙ Indicates that a specific result is expected after performing a series of steps.

⊠ Indicates that an incorrect result has occurred after performing a series of steps.

Downloaded from www.Manualslib.com manuals search engine

https://truckmanualshub.com/

SCHEDULED MAINTENANCE PROCEDURES

Maintenance Symbols Legend

Note: The following symbols have been used in this manual to help communicate the intent of the instructions. When one or more of the symbols appear at the beginning of a maintenance procedure, it conveys the meaning below.

Indicates that tools will be required to perform this procedure.

Indicates that new parts will be required to perform this procedure.

Indicates that a cold engine will be required to perform this procedure.

Indicates that a warm engine will be required to perform this procedure.

Indicates that dealer service will be required to perform this procedure.

Pre-delivery Preparation Report

The pre-delivery preparation report contains checklists for each type of scheduled inspection.

Make copies of the *Pre-delivery Preparation* report to use for each inspection. Store completed forms as required.

Maintenance Schedule

There are five types of maintenance inspections that must be performed according to a schedule—daily, quarterly, semi-annually, annually, and two year. The *Scheduled Maintenance Procedures Section and the Maintenance Inspection Report* have been divided into five subsections—A, B, C, D, and E. Use the following chart to determine which group(s) of procedures are required to perform a scheduled inspection.

Inspection	Checklist
Daily or every 8 hours	A
Quarterly or every 250 hours	A + B
Semi-annually or every 500 hours	A + B + C
Annually or every 1000 hours	A + B + C + D
Two year or every 2000 hours	A + B + C + D + E

Maintenance Inspection Report

The maintenance inspection report contains checklists for each type of scheduled inspection.

Make copies of the *Maintenance Inspection Report* to use for each inspection. Store completed forms for three years.

Downloaded from www.Manualslib.com manuals search engine

https://truckmanualshub.com/

Pre-Delivery Preparation

Fundamentals

It is the responsibility of the dealer to perform the Pre-delivery Preparation.

The Pre-delivery Preparation is performed prior to each delivery. The inspection is designed to discover if anything is apparently wrong with a machine before it is put into service.

A damaged or modified machine must never be used. If damage or any variation from factory delivered condition is discovered, the machine must be tagged and removed from service.

Repairs to the machine may only be made by a qualified service technician, according to the manufacturer's specifications.

Scheduled maintenance inspections shall be performed by qualified service technicians, according to the manufacturer's specifications and the requirements listed in the responsibilities manual.

Instructions

Use the operator's manual on your machine.

The Pre-delivery Preparation consists of completing the Pre-operation Inspection, the Maintenance items and the Function Tests.

Use this form to record the results. Place a check in the appropriate box after each part is completed. Follow the instructions in the operator's manual.

If any inspection receives an N, remove the machine from service, repair and re-inspect it. After repair, place a check in the R box.

Legend

Y = yes, completed
N = no, unable to complete
R = repaired

Comments

Pre-Delivery Preparation	Y	N	R
Pre-operation inspection completed			
Maintenance items completed			
Function tests completed			

Model

Serial number

Date

Machine owner

Inspected by (print)

Inspector signature

Inspector title

Inspector company

Genie
A TEREX COMPANY

Genie Industries USA
18340 NE 76th Street
PO Box 97030
Redmond, WA 98073-9730
(425) 881-1800

Genie UK
The Maltings, Wharf Road
Grantham, Lincolnshire
NG31- 6BH England
(44) 1476-584333

Copyright © 2002 by Genie Industries. Genie® is a registered trademark of Genie Industries. Rev B

Downloaded from www.Manualslib.com manuals search engine

https://truckmanualshub.com/

This page intentionally left blank.

Downloaded from www.Manualslib.com manuals search engine

https://truckmanualshub.com/

Maintenance Inspection Report

Model

Serial number

Date

Hour meter

Machine owner

Inspected by (print)

Inspector signature

Inspector title

Inspector company

Instructions

- Make copies of this report to use for each inspection.
- Select the appropriate checklist(s) for the type of inspection to be performed.

☐	**Daily or 8 hour Inspection:**	**A**
☐	**Quarterly or 250 hour Inspection:**	**A+B**
☐	**Semi-annually or 500 hour Inspection:**	**A+B+C**
☐	**Annually or 1000 hour Inspection:**	**A+B+C+D**
☐	**2 Year or 2000 hour Inspection:**	**A+B+C+D+E**

- Place a check in the appropriate box after each inspection procedure is completed.
- Use the step-by-step procedures in this section to learn how to perform these inspections.
- If any inspection receives an “N”, tag and remove the machine from service, repair and re-inspect it. After repair, place a check in the “R” box.

Legend

Y = yes, acceptable

N = no, remove from service

R = repaired

Checklist A - Rev C		Y	N	R
A-1	Manuals and decals			
A-2	Pre-operation inspect			
A-3	Function tests			
A-4	Lubricate machine			
A-5	Engine maintenance - JDeere/Perkins models			
A-6	Transmission maintenance			
A-7	Engine maintenance - Deutz models			
Perform after 40 hours:				
A-8	30 day service			
Perform after 50 hours:				
A-9	Transmission maintenance			
Perform every 50 hours:				
A-10	Engine maintenance - Perkins models			
A-11	Axle maintenance			
Perform after 100 hours:				
A-12	Engine maintenance - John Deere models			
A-13	Axle maintenance			
A-14	Transmission maintenance			
Perform every 200 hours:				
A-15	Axle maintenance			

Checklist B - Rev B		Y	N	R
B-1	Battery			
B-2	Electrical wiring			
B-3	Exhaust system			
B-4	Engine air filter			
B-5	Tires and wheels			
B-6	Hydraulic oil			
B-7	Tank venting systems			
B-8	Boom wear pads			
B-9	Lubricate driveshafts			
B-10	Engine maintenance - John Deere models			

Checklist C - Rev B		Y	N	R
C-1	Engine maintenance - Deutz models			
C-2	Engine maintenance - John Deere models			
C-3	Axle maintenance			
C-4	Transmission maintenance			
C-5	Engine maintenance - Perkins models			
Perform every 700 hours:				
C-6	Axle maintenance			
Perform every 800 hours:				
C-7	Axle maintenance			

Comments

Downloaded from www.Manualslib.com manuals search engine

https://truckmanualshub.com/

MAINTENANCE INSPECTION REPORT

Model

Serial number

Date

Hour meter

Machine owner

Inspected by (print)

Inspector signature

Inspector title

Inspector company

Instructions

- Make copies of this report to use for each inspection.
- Select the appropriate checklist(s) for the type of inspection to be performed.

☐	**Daily or 8 hour Inspection:**	**A**
☐	**Quarterly or 250 hour Inspection:**	**A+B**
☐	**Semi-annually or 500 hour Inspection:**	**A+B+C**
☐	**Annually or 1000 hour Inspection:**	**A+B+C+D**
☐	**2 Year or 2000 hour Inspection:**	**A+B+C+D+E**

- Place a check in the appropriate box after each inspection procedure is completed.
- Use the step-by-step procedures in this section to learn how to perform these inspections.
- If any inspection receives an "N", tag and remove the machine from service, repair and re-inspect it. After repair, place a check in the "R" box.

Legend

Y = yes, acceptable
N = no, remove from service
R = repaired

Checklist D - Rev B		**Y**	**N**	**R**
D-1	Forks			
D-2	Sequencing chains			
D-3	Hydraulic return filter			
D-4	Engine maintenance - Deutz models			
D-5	Transmission			
D-6	Axle maintenance			
D-7	Engine maintenance - Perkins models			
Perform every 1500 hours:				
D-8	Engine maintenance - Deutz models			

Checklist E - Rev C		**Y**	**N**	**R**
E-1	Hydraulic oil			
E-2	Engine maintenance - John Deere models			
E-3	Engine maintenance - Perkins models			
Perform every 3000 hours:				
E-4	Engine maintenance - Perkins models			
Perform every 4000 hours:				
E-5	Engine maintenance - Perkins models			
Perform every 4500 hours:				
E-6	Engine maintenance - John Deere models			
Perform every 6000 hours:				
E-7	Engine maintenance - Perkins models			
Perform every 12,000 hours:				
E-8	Engine maintenance - Deutz models			
E-9	Engine maintenance - Perkins models			

Comments

Downloaded from www.Manualslib.com manuals search engine

https://truckmanualshub.com/

REV C

Checklist A Procedures

A-1
Inspect the Manuals and Decals

Note: Genie specifications require that this procedure be performed every 8 hours or daily, whichever comes first.

Maintaining the operator's and safety manuals in good condition is essential to safe machine operation. Manuals are included with each machine and should be stored in the container provided in the operator's compartment. An illegible or missing manual will not provide safety and operational information necessary for a safe operating condition.

In addition, maintaining all of the safety and instructional decals in good condition is mandatory for safe machine operation. Decals alert operators and personnel to the many possible hazards associated with using this machine. They also provide users with operation and maintenance information. An illegible decal will fail to alert personnel of a procedure or hazard and could result in unsafe operating conditions.

1 Check to make sure that the operator's and safety manuals are present and complete in the storage container in the operator's compartment.

2 Examine the pages of each manual to be sure that they are legible and in good condition.

⊙ Result: The operator's manual is appropriate for the machine and all manuals are legible and in good condition.

⊠ Result: The operator's manual is not appropriate for the machine or all manuals are not in good condition or is illegible. Remove the machine from service until the manual is replaced.

3 Open the operator's manual to the decals inspection section. Carefully and thoroughly inspect all decals on the machine for legibility and damage.

⊙ Result: The machine is equipped with all required decals, and all decals are legible and in good condition.

⊠ Result: The machine is not equipped with all required decals, or one or more decals are illegible or in poor condition. Remove the machine from service until the decals are replaced.

4 Always return the manuals to the storage container after use.

Note: Contact your authorized Genie distributor or Genie Industries if replacement manuals or decals are needed.

Downloaded from www.Manualslib.com manuals search engine

https://truckmanualshub.com/

CHECKLIST A PROCEDURES REV C

A-2
Perform Pre-operation Inspection

Note: Genie specifications require that this procedure be performed every 8 hours or daily, whichever comes first.

Completing a Pre-operation Inspection is essential to safe machine operation. The Pre-operation Inspection is a visual inspection performed by the operator prior to each work shift. The inspection is designed to discover if anything is apparently wrong with a machine before the operator performs the function tests. The Pre-operation Inspection also serves to determine if routine maintenance procedures are required.

Complete information to perform this procedure is available in the appropriate operator's manual. Refer to the Operator's Manual on your machine.

A-3
Perform Function Tests

Note: Genie specifications require that this procedure be performed every 8 hours or daily, whichever comes first.

Completing the function tests is essential to safe machine operation. Function tests are designed to discover any malfunctions before the machine is put into service. A malfunctioning machine must never be used. If malfunctions are discovered, the machine must be tagged and removed from service.

Complete information to perform this procedure is available in the appropriate operator's manual. Refer to the Operator's Manual on your machine.

Downloaded from www.Manualslib.com manuals search engine

https://truckmanualshub.com/

A-4
Lubricate the Machine

Note: Genie specifications require that this procedure be performed every 8 hours or daily, whichever comes first.

Greasing the specified locations is essential for good machine performance and service life. Operating the machine with little or no grease may cause the machine to perform poorly and continued use may cause component damage.

GTH-644, GTH-842 and GTH-844:

1 Fully extend the boom. Raise the boom as needed.

2 Apply a thin layer of grease to the underside of the number 3 boom tube where it makes contact with the number 2 boom tube lower wear pads. Refer to the illustration.

3 Apply a thin layer of grease to the underside of the number 2 boom tube where it makes contact with the number 1 boom tube lower wear pads.

4 Lubricate the top and side boom tube wear pads.

5 Return the boom to the stowed position.

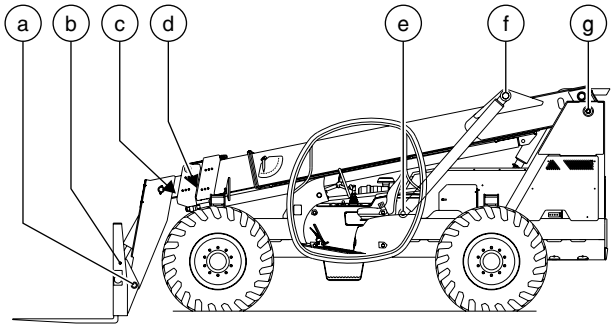

a fork frame pivot pin
b fork level cylinder rod-end pivot pin
c number 2 boom tube lower wear pads
d number 1 boom tube lower wear pads
e lift cylinder barrel-end pivot pin
f lift cylinder rod-end pivot pin
g boom pivot pin

6 Locate a grease fitting at one of the locations shown in the illustration.

7 Pump grease into the fitting until the joint is thoroughly lubricated.

8 Repeat this procedure, beginning with step 6, for each remaining grease fitting shown in the illustration.

Grease Specification
Chevron Ultra-duty grease, EP NLGI 2 (lithium based) or equivalent

Downloaded from www.Manualslib.com manuals search engine

https://truckmanualshub.com/

CHECKLIST A PROCEDURES REV C

GTH-636, GTH-1048 and GTH-1056:

1 Fully extend the boom. Raise the boom as needed.

2 Locate the grease fittings at both sides of all boom tubes except the innermost tube. Refer to the illustration.

3 Pump grease into the fittings until the inner boom rollers are thoroughly lubricated.

4 Lubricate the top boom tube wear pads.

Note: Do not lubricate the side wear pads at the boom rollers, if equipped.

5 Return the boom to the stowed position.

6 Locate a grease fitting at one of the locations shown in the illustration.

7 Pump grease into the fitting until the joint is thoroughly lubricated.

8 Repeat this procedure, beginning with step 6, for each remaining grease fitting shown in the illustration.

GTH-1048 and GTH-1056:

9 Locate the grease fittings on the stabilizer frame at the front of the machine.

10 Pump grease into each fitting until the joints are thoroughly lubricated.

11 Locate the grease fittings on the outriggers at the front of the machine.

12 Pump grease into each fitting until the joints are thoroughly lubricated.

Grease Specification
Chevron Ultra-duty grease, EP NLGI 2 (lithium based) or equivalent

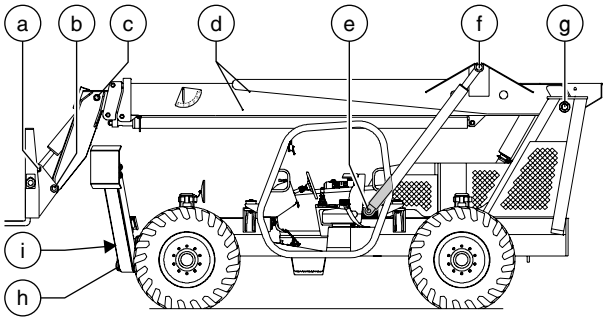

a fork frame pivot pin
b fork level cylinder rod-end pivot pin
c fork level cylinder barrel-end pivot pin
d boom grease fittings
e lift cylinder barrel-end pivot pin
f lift cylinder rod-end pivot pin
g boom pivot pin
h outrigger pivot pin (GTH-1048 and GTH-1056)
i outrigger frame (GTH-1048 and GTH-1056)

Downloaded from www.Manualslib.com manuals search engine

https://truckmanualshub.com/

A-5
Perform Engine Maintenance - John Deere and Perkins Models

Note: Engine specifications require that this procedure be performed every 8 hours or daily, whichever comes first.

Required maintenance procedures and additional engine information is available in the *John Deere 4045T270 Operator's Manual* (John Deere part number OMRG25204) OR the *John Deere 4045T275 Operator's Manual* (John Deere part number OMRG33324) OR the *Perkins 1104 Operation and Maintenance Manual* (Perkins part number SEBU7833-01).

John Deere 4045T270 Operator's Manual	
Genie part number	97492
John Deere 4045T275 Operator's Manual	
Genie part number	108444
Perkins 1104 Operation and Maintenance Manual	
Genie part number	117765

A-6
Perform Transmission Maintenance

Note: Transmission specifications require that this procedure be performed every 8 hours or daily, whichever comes first.

GTH-636, GTH-644, GTH-842 and GTH-844:

Required maintenance procedures and additional transmission information is available in the *Dana T12000 Maintenance Manual* (Dana part number 0109).

Dana T12000 Maintenance Manual	
Genie part number	97489

GTH-1048 and GTH-1056:

Required maintenance procedures and additional Transmission information is available in the *Dana T20000 Maintenance Manual* (Dana part number 0202).

Dana T20000 Maintenance Manual	
Genie part number	115025

Downloaded from www.Manualslib.com manuals search engine

https://truckmanualshub.com/

A-7
Perform Engine Maintenance - Deutz Models

Note: Engine specifications require that this procedure be performed every 10 hours or daily, whichever comes first.

Required maintenance procedures and additional engine information is available in the *Deutz 2012 Operation Manual* (Deutz part number 0297 9912).

Deutz 2012 Operation Manual	
Genie part number	108746

A-8
Perform 30 Day Service

The 30 day maintenance procedure is a one-time sequence of procedures to be performed after the first 30 days or 40 hours of usage. After this interval, refer to the maintenance checklists for continued scheduled maintenance.

1 Perform the following maintenance procedures:

John Deere models:

- A-12 Perform Engine Maintenance - John Deere Models
- B-5 Inspect the Tires, Wheels and Lug Nut Torque
- D-3 Replace the Hydraulic Tank Return Filter Element

Deutz models:

- B-5 Inspect the Tires, Wheels and Lug Nut Torque
- D-3 Replace the Hydraulic Tank Return Filter Element
- D-4 Perform Engine Maintenance - Deutz Models

Perkins models:

- B-5 Inspect the Tires, Wheels and Lug Nut Torque
- D-3 Replace the Hydraulic Tank Return Filter Element

Downloaded from www.Manualslib.com manuals search engine

https://truckmanualshub.com/

A-9
Perform Transmission Maintenance

GTH-636, GTH-644, GTH-842 and GTH-844

Note: Transmission specifications require that this one-time procedure be performed after 50 hours of operation.

Required maintenance procedures and additional transmission information is available in the *Dana T12000 Maintenance Manual* (Dana part number 0109).

Dana T12000 Maintenance Manual	
Genie part number	97489

A-10
Perform Engine Maintenance - Perkins Models

Note: Engine specifications require that this procedure be performed every 50 hours or weekly, whichever comes first.

Required maintenance procedures and additional engine information is available in the *Perkins 1104 Operation and Maintenance Manual* (Perkins part number SEBU7833-01).

Perkins 1104 Operation and Maintenance Manual	
Genie part number	117765

Downloaded from www.Manualslib.com manuals search engine

https://truckmanualshub.com/

A-11
Perform Axle Maintenance

Note: Axle specifications require that this procedure be performed every 50 hours or monthly, whichever comes first.

GTH-636, GTH-644, GTH-842 and GTH-844:

Required maintenance procedures and additional axle information is available in the *Dana 212 Axle Maintenance and Repair Manual* (Dana part number 0247).

Dana 212 Axle Maintenance and Repair Manual	
Genie part number	97488

GTH-1048 and GTH-1056:

Required maintenance procedures and additional axle information is available in the *Dana 213 Axle Maintenance and Repair Manual* (Dana part number 0243).

Dana 213 Axle Maintenance and Repair Manual	
Genie part number	115026

A-12
Perform Engine Maintenance - John Deere Models

Note: Engine specifications requires that this one-time procedure be performed after 100 hours of operation.

Required maintenance procedures and additional engine information is available in the *John Deere 4045T270 Operator's Manual* (John Deere part number OMRG25204) OR the *John Deere 4045T275 Operator's Manual* (John Deere part number OMRG33324).

John Deere 4045T270 Operator's Manual	
Genie part number	97492

John Deere 4045T275 Operator's Manual	
Genie part number	108444

Downloaded from www.Manualslib.com manuals search engine

https://truckmanualshub.com/

A-13
Perform Axle Maintenance

Note: Axle specifications require that this one-time procedure be performed after 100 hours of operation.

GTH-636, GTH-644, GTH-842 and GTH-844:

Required maintenance procedures and additional axle information is available in the *Dana 212 Axle Maintenance and Repair Manual* (Dana part number 0247).

Dana 212 Axle Maintenance and Repair Manual	
Genie part number	97488

GTH-1048 and GTH-1056:

Required maintenance procedures and additional axle information is available in the *Dana 213 Axle Maintenance and Repair Manual* (Dana part number 0243).

Dana 213 Axle Maintenance and Repair Manual	
Genie part number	115026

A-14
Perform Transmission Maintenance
GTH-636, GTH-644, GTH-842 and GTH-844

Note: Transmission specifications requires that this one-time procedure be performed after 100 hours of operation.

Required maintenance procedures and additional transmission information is available in the *Dana T12000 Maintenance Manual* (Dana part number 0109).

Dana T12000 Maintenance Manual	
Genie part number	97489

Downloaded from www.Manualslib.com manuals search engine

https://truckmanualshub.com/

A-15
Perform Axle Maintenance

Note: Axle specifications requires that this procedure be performed every 200 hours of operation.

GTH-636, GTH-644, GTH-842 and GTH-844:

Required maintenance procedures and additional axle information is available in the *Dana 212 Axle Maintenance and Repair Manual* (Dana part number 0247).

Dana 212 Axle Maintenance and Repair Manual	
Genie part number	97488

GTH-1048 and GTH-1056:

Required maintenance procedures and additional axle information is available in the *Dana 213 Axle Maintenance and Repair Manual* (Dana part number 0243).

Dana 213 Axle Maintenance and Repair Manual	
Genie part number	115026

Downloaded from www.Manualslib.com manuals search engine

https://truckmanualshub.com/

REV B

Checklist B Procedures

B-1
Inspect the Battery

Note: Genie requires that this procedure be performed every 250 hours or quarterly, whichever comes first.

Proper battery condition is essential to good engine performance and operational safety. Damaged cables and connections can result in engine component damage and hazardous conditions.

WARNING Electrocution hazard. Contact with hot or live circuits could result in death or serious injury. Remove all rings, watches and other jewelry.

WARNING Bodily injury hazard. Batteries contain acid. Avoid spilling or contacting battery acid. Neutralize battery acid spills with baking soda and water.

1 Put on protective clothing and eye wear.

2 Be sure that the battery cable connections are free of corrosion.

Note: Adding terminal protectors and a corrosion preventative sealant will help eliminate corrosion on the battery terminals and cables.

3 Be sure that the battery hold-downs and cable connections are tight.

B-2
Inspect the Electrical Wiring

Note: Genie requires that this procedure be performed every 250 hours or quarterly, whichever comes first.

Maintaining electrical wiring in good condition is essential to safe operation and good machine performance. Failure to find and replace burnt, chafed, corroded or pinched wires could result in unsafe operating conditions and may cause component damage.

WARNING Electrocution hazard. Contact with hot or live circuits could result in death or serious injury. Remove all rings, watches and other jewelry.

1 Inspect the following areas for burnt, chafed, corroded and loose wires:

- Inside of the operator's compartment
- Underside of the chassis
- Boom assembly

2 Inspect for a liberal coating of dielectric grease in the following locations:

- All harness connectors

3 Start the engine and raise the boom so there is enough room to access and remove all the covers attached to the chassis.

Downloaded from www.Manualslib.com manuals search engine

https://truckmanualshub.com/

4 Attach a lifting strap from an overhead crane to the boom. Support the boom. Do not apply any lifting pressure.

5 Remove all engine covers, hydraulic tank covers and chassis covers.

DANGER Crushing hazard. Death or serious injury could result if the boom should unexpectedly fall while working underneath the boom. Do not stand or work beneath a boom that is not properly supported.

6 Inspect the following areas for burnt, chafed, corroded, pinched and loose wires:

- Engine
- Transmission
- Manifolds
- Chassis

7 Inspect for a liberal coating of dielectric grease in all connections between the engine, transmission and the operator's compartment.

8 Install all covers removed in step 5.

9 Remove the lifting strap from the overhead crane.

10 Start the engine and lower the boom to the stowed position. Turn the machine off.

B-3
Check the Exhaust System

Note: Genie requires that this procedure be performed every 250 hours or quarterly, whichever comes first.

Maintaining the exhaust system is essential to good engine performance and service life. Running the engine with a damaged or leaking exhaust system can cause component damage and unsafe operating conditions.

WARNING Bodily injury hazard. Do not inspect while the engine is running. Remove the key to secure from operation.

CAUTION Bodily injury hazard. Beware of hot engine components. Contact with hot engine components may cause severe burns.

1 Remove the center engine cover and set aside.

2 Open the right side engine access cover.

3 Be sure that all fasteners are tight.

4 Inspect all welds for cracks.

5 Inspect for exhaust leaks; i.e., carbon buildup around seams and joints.

6 Close the right side engine access cover. Install the center engine access cover.

Downloaded from www.Manualslib.com manuals search engine

https://truckmanualshub.com/

B-4
Inspect the Engine Air Filter

Note: Genie requires that this procedure be performed every 250 hours or quarterly, whichever comes first. Perform this procedure more often if dusty conditions exist.

Maintaining the engine air filter in good condition is essential to good engine performance and service life. Failure to perform this procedure can lead to poor engine performance and component damage.

Note: Perform this procedure with the engine off.

1 Release the latches on the front cover of the air cleaner assembly. Remove the cover.

2 Gently twist and pull out the external or primary filter element.

3 Remove the inner or secondary filter element.

4 Clean the inside of the canister and the gasket with a damp cloth.

5 Inspect the primary and secondary air filter elements. If needed, blow from the inside out using low pressure dry compressed air, or carefully tap out dust.

6 Install the secodnary filter element first, then install the primary filter element.

7 Install the front cover onto the air cleaner assembly and secure the latches.

B-5
Inspect the Tires, Wheels and Lug Nut Torque

Note: Genie requires that this procedure be performed every 250 hours or quarterly, whichever comes first.

Maintaining the tires and wheels in good condition, including proper wheel fastener torque, is essential to safe operation and good performance. Tire and/or wheel failure could result in a machine tip-over. Component damage may also result if problems are not discovered and repaired in a timely fashion.

WARNING Bodily injury hazard. An overinflated tire can explode and could result in death or serious injury.

WARNING Tip over hazard. Do not use temporary flat tire repair products.

Note: The tires on some machines are foam filled and do not need air added to them.

1 Check all tire treads and sidewalls for cuts, cracks, punctures and unusual wear.

2 Check each wheel for damage, bends and cracks.

3 Check each lug nut for proper torque. Refer to Section 2, *Specifications*.

Downloaded from www.Manualslib.com manuals search engine

https://truckmanualshub.com/

Models with air or calcium chloride filled tires:

4 Put on protective clothing and eye wear.

5 Rotate the wheel until the tire stem is at the 12 o'clock position.

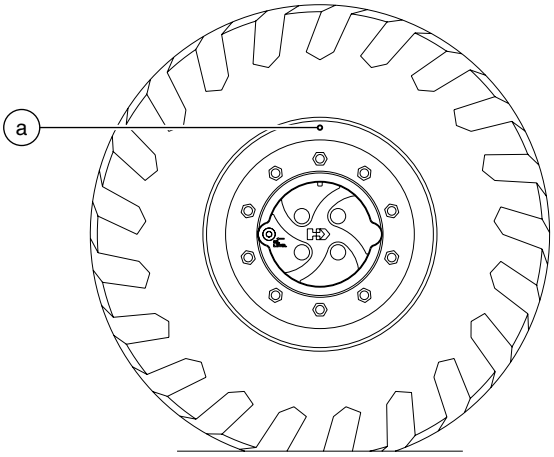

a valve stem

6 Check the air pressure in the tire. Refer to Section 2, *Specifications*.

⊙ Result - models with air-filled tires: The air pressure meets specification. The tire is at the correctly filled level.
Result - models with calcium chloride-filled tires: The air pressure meets specification, and a small amount of calcium chloride mixture leaks from the valve stem when checking the air pressure. The tire is at the correctly filled level.

⊠ Result - models with air-filled tires: The air pressure does not meet specification. Add air until the air pressure meets specification.
Result - models with calcium chloride-filled tires: The air pressure does not meet specification OR the tire does not release any calcium chloride mixture when checking the air pressure. Add calcium chloride mix to the tire as needed until it begins to leak out when depressing the valve stem, and add air until the air pressure meets specification.

7 Repeat this procedure beginning with step 5 for each remaining tire.

B-6
Perform Hydraulic Oil Analysis

Note: Genie requires that this procedure be performed every 250 hours or quarterly, whichever comes first.

Replacement or testing of the hydraulic oil is essential for good machine performance and service life. Dirty oil may cause the machine to perform poorly and continued use may cause component damage. Extremely dirty conditions may require oil changes to be performed more often. Refer to Section 2, *Specifications*.

Note: Before replacing the hydraulic oil, the oil may be tested by an oil distributor for specific levels of contamination to verify that changing the oil is necessary. **If the hydraulic oil is not replaced at the two year inspection, test the oil quarterly. Replace the oil when it fails the test.** See E-1, *Test or Replace the Hydraulic Oil.*

Downloaded from www.Manualslib.com manuals search engine

https://truckmanualshub.com/

B-7
Inspect the Fuel and Hydraulic Tank Cap Venting Systems

Note: Genie requires that this procedure be performed every 250 hours or quarterly, whichever comes first. Perform this procedure more often if dusty conditions exist.

Free-breathing fuel and hydraulic tank caps are essential for good machine performance and service life. A dirty or clogged tank cap may cause the machine to perform poorly and continued use may cause component damage. Extremely dirty conditions may require that the caps be inspected more often.

DANGER Explosion and fire hazard. Engine fuels are combustible. Perform this procedure in an open, well-ventilated area away from heaters, sparks, flames and lighted tobacco. Always have an approved fire extinguisher within easy reach.

Note: Perform this procedure with the engine off.

1 Remove the cap from the fuel tank.

2 Check for proper venting.

⊙ Result: Air passes through the fuel tank cap. Proceed to step 4.

⊠ Result: If air does not pass through the cap, clean or replace the cap. Proceed to step 3.

Note: When checking for positive tank cap venting, air should pass freely through the cap.

3 Using a mild solvent, carefully wash the cap venting system. Dry using low pressure compressed air. Repeat this procedure beginning with step 2.

4 Install the fuel tank cap onto the fuel tank.

5 Remove the breather cap from the hydraulic tank.

6 Check for proper venting.

⊙ Result: Air passes through the fuel tank cap. Proceed to step 8.

⊠ Result: If air does not pass through the cap, clean or replace the cap. Proceed to step 7.

Note: When checking for positive tank cap venting, air should pass freely through the cap.

7 Using a mild solvent, carefully wash the cap venting system. Dry using low pressure compressed air. Repeat this procedure beginning with step 6.

8 Install the breather cap onto the hydraulic tank.

Downloaded from www.Manualslib.com manuals search engine

https://truckmanualshub.com/

B-8
Check the Boom Wear Pads
GTH-644, GTH-842 and GTH-844

Note: Genie specifications require that this procedure be performed every 250 hours of operation.

1 Extend the boom until the wear pads are accessible.

2 Measure each upper wear pad.

⊙ Result: The measurement is within specification.

⊠ Result: The measurement is less than specification. Replace both wear pads. Refer to Repair Procedure 1-2, *How to Replace the Boom Wear Pads*.

2 Measure each side wear pad.

⊙ Result: The measurement is within specification.

⊠ Result: The measurement is less than specification. Replace all side wear pads. Refer to Repair Procedure 1-2, *How to Replace the Boom Wear Pads*.

2 Measure each lower wear pad.

⊙ Result: The measurement is within specification.

⊠ Result: The measurement is less than specification. Replace both wear pads. Refer to Repair Procedure 1-2, *How to Replace the Boom Wear Pads*.

Boom Wear Pad Specifications, GTH-644, GTH-842 and GTH-844	
Upper wear pad thickness, minimum	9/16 inch 14.3 mm
Side wear pad thickness, minimum	3/8 inch 9.5 mm
Lower wear pad thickness, minimum	9/16 inch 14.3 mm

Downloaded from www.Manualslib.com manuals search engine

https://truckmanualshub.com/

B-9
Lubricate the Driveshafts

Note: Genie requires that this procedure be performed every 250 hours or quarterly, whichever comes first.

Greasing the specified locations is essential for good machine performance and service life. Operating the machine with little or no grease may cause the machine to perform poorly and continued use may cause component damage.

1 Using a grease gun, thoroughly grease the driveshafts at each of the locations indicated in the illustration.

Grease Specification
Chevron Ultra-duty grease, EP NLGI 2 (lithium based) or equivalent

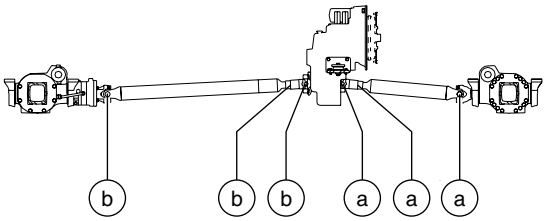

a rear driveshaft
b front driveshaft

B-10
Perform Engine Maintenance - John Deere Models

Note: Engine specifications require that this procedure be performed every 250 hours of operation.

Required maintenance procedures and additional engine information is available in the *John Deere 4045T270 Operator's Manual* (John Deere part number OMRG25204) OR the *John Deere 4045T275 Operator's Manual* (John Deere part number OMRG33324).

John Deere 4045T270 Operator's Manual	
Genie part number	97492
John Deere 4045T275 Operator's Manual	
Genie part number	108444

Downloaded from www.Manualslib.com manuals search engine

https://truckmanualshub.com/

Checklist C Procedures

REV B

C-1
Perform Engine Maintenance - Deutz Models

Note: Engine specifications require that this procedure be performed every 500 hours or semi-annually, whichever comes first.

Required maintenance procedures and additional engine information is available in the *Deutz 2012 Operation Manual* (Deutz part number 0297 9912).

Deutz 2012 Operation Manual	
Genie part number	108746

C-2
Perform Engine Maintenance - John Deere Models

Note: Engine specifications require that this procedure be performed every 500 hours or semi-annually, whichever comes first.

Required maintenance procedures and additional engine information is available in the *John Deere 4045T270 Operator's Manual* (John Deere part number OMRG25204) OR the *John Deere 4045T275 Operator's Manual* (John Deere part number OMRG33324).

John Deere 4045T270 Operator's Manual	
Genie part number	97492
John Deere 4045T275 Operator's Manual	
Genie part number	108444

Downloaded from www.Manualslib.com manuals search engine

https://truckmanualshub.com/

C-3
Perform Axle Maintenance

Note: Axle specifications require that this procedure be performed after 500 hours of operation.

GTH-636, GTH-644, GTH-842 and GTH-844:

Required maintenance procedures and additional axle information is available in the *Dana 212 Axle Maintenance and Repair Manual* (Dana part number 0247).

Dana 212 Axle Maintenance and Repair Manual	
Genie part number	97488

GTH-1048 and GTH-1056:

Required maintenance procedures and additional axle information is available in the *Dana 213 Axle Maintenance and Repair Manual* (Dana part number 0243).

Dana 213 Axle Maintenance and Repair Manual	
Genie part number	115026

C-4
Perform Transmission Maintenance
GTH-1048 and GTH-1056

Note: Transmission specifications require that this procedure be performed every 500 hours or semi-annually, whichever comes first.

Required maintenance procedures and additional transmission information is available in the *Dana T20000 Maintenance Manual* (Dana part number 0202).

Dana T20000 Maintenance Manual	
Genie part number	115025

Downloaded from www.Manualslib.com manuals search engine

https://truckmanualshub.com/

CHECKLIST C PROCEDURES REV B

C-5
Perform Engine Maintenance - Perkins Models

Note: Engine specifications require that this procedure be performed every 500 hours or annually, whichever comes first.

Required maintenance procedures and additional engine information is available in the *Perkins 1104 Operation and Maintenance Manual* (Perkins part number SEBU7833-01).

Perkins 1104 Operation and Maintenance Manual	
Genie part number	117765

C-6
Perform Axle Maintenance

Note: Axle specifications require that this procedure be performed every 700 hours of operation.

GTH-636, GTH-644, GTH-842 and GTH-844:

Required maintenance procedures and additional axle information is available in the *Dana 212 Axle Maintenance and Repair Manual* (Dana part number 0247).

Dana 212 Axle Maintenance and Repair Manual	
Genie part number	97488

GTH-1048 and GTH-1056:

Required maintenance procedures and additional axle information is available in the *Dana 213 Axle Maintenance and Repair Manual* (Dana part number 0243).

Dana 213 Axle Maintenance and Repair Manual	
Genie part number	115026

Downloaded from www.Manualslib.com manuals search engine

https://truckmanualshub.com/

C-7
Perform Axle Maintenance

Note: Axle specifications require that this procedure be performed every 800 hours of operation.

GTH-636, GTH-644, GTH-842 and GTH-844:

Required maintenance procedures and additional axle information is available in the *Dana 212 Axle Maintenance and Repair Manual* (Dana part number 0247).

Dana 212 Axle Maintenance and Repair Manual	
Genie part number	97488

GTH-1048 and GTH-1056:

Required maintenance procedures and additional axle information is available in the *Dana 213 Axle Maintenance and Repair Manual* (Dana part number 0243).

Dana 213 Axle Maintenance and Repair Manual	
Genie part number	115026

Downloaded from www.Manualslib.com manuals search engine

https://truckmanualshub.com/

Checklist D Procedures

REV B

D-1
Inspect the Forks

Note: Genie specifications require that this procedure be performed every 1000 hours or annually, whichever comes first OR whenever permanent deformation of the forks is suspected.

Maintaining the lifting forks in good condition is essential to safe operation and good machine performance. Failure to detect damage to the forks could result in a hazardous operating condition.

1 Thoroughly clean the lifting forks.

2 Inspect the forks for the following:

- Surface cracks
- Straightness of the blade and shank
- Fork angle at 90 ± 3 degrees
- Relative height of fork tips shall not differ more than 3% of blade length
- Excessive wear to the forks, fork mount or legible markings

Result: If any of the above criteria are not met, the fork shall be removed from service until it is repaired or replaced.

a shank
b blade

D-2
Adjust the Boom Sequencing Chains

Note: Genie specifications require that this procedure be performed every 1000 hours or annually, whichever comes first.

GTH-636, GTH-644, GTH-842, GTH-844 and GTH-1048:

1 Raise the boom to the horizontal position.

2 Extend the boom fully, then retract the boom approximately 1 inch / 25 mm.

3 On either side of the middle boom section, estimate the center. Place one end of a tape measure on the top surface of the boom directly above the estimated center.

4 Select a reference point on the sequencing chain. Measure the distance between the chain and the top surface of the boom. Note the measurement (1). Refer to the following illustrations.

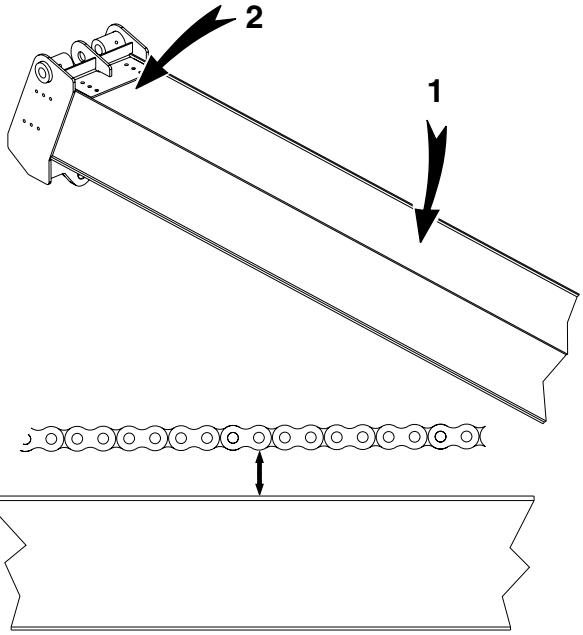

Downloaded from www.Manualslib.com manuals search engine

https://truckmanualshub.com/

5 Move to the fork end of the same boom section that was just measured.

6 Measure the distance between the top surface of the boom and the same reference point used on the sequencing chain in step 4. Note the measurement (2).

⊙ Result: The difference between measurements 1 and 2 is 0.25 to 0.5 inch / 6.35 to 12.7 mm. No adjustment to the chain is necessary. Proceed to step 10.

⊠ Result: The difference between measurements 1 and 2 is less than a 0.25 inch / 6.35 mm OR is greater than 0.5 inch / 12.7 mm. The chain requires adjustment. Proceed to step 7.

Note: The measurements taken in step 4 and step 6 must be taken from the same plane on the boom.

7 Working at the fork end of the large boom tube, locate the adjustable chain anchor on the top of boom section.

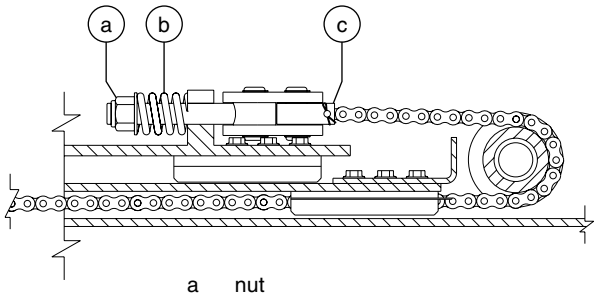

a nut
b spring
c chain anchor

8 Place an adjustable wrench across the flat part of the chain, just ahead of the chain anchor. Tighten the wrench onto the chain.

9 Using a 1 7/16 inch wrench, adjust the nut as required to tighten or loosen the chain. Repeat this procedure beginning with step 4.

10 Using a feeler gauge, check the gap between the coils of the spring. The gap should be no less than 0.030 inch / 0.76 mm.

Note: The spring coils should never be collapsed completely.

GTH-1056:

1 Raise the boom to the horizontal position.

2 Extend the boom fully, then retract the boom approximately 1 inch / 25 mm.

3 On either side of the number 2 boom tube, estimate the center. Place one end of a tape measure on the top surface of the boom directly above the estimated center.

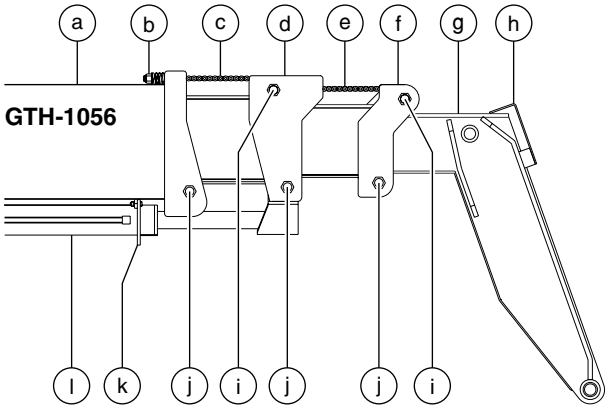

a number 0 boom tube
b chain tensioner
c boom tube 2 extension chain
d number 1 boom tube
e boom tube 3 extension chain
f number 2 boom tube
g number 3 boom tube
h front cover
i chain roller (hidden from view)
j boom roller (hidden from view)
k support loop
l extension cylinder

Downloaded from www.Manualslib.com manuals search engine

https://truckmanualshub.com/

CHECKLIST D PROCEDURES REV B

4 Select a reference point on the extension chain. Measure the distance between the chain and the top surface of the boom. Note the measurement (1). Refer to the following illustrations.

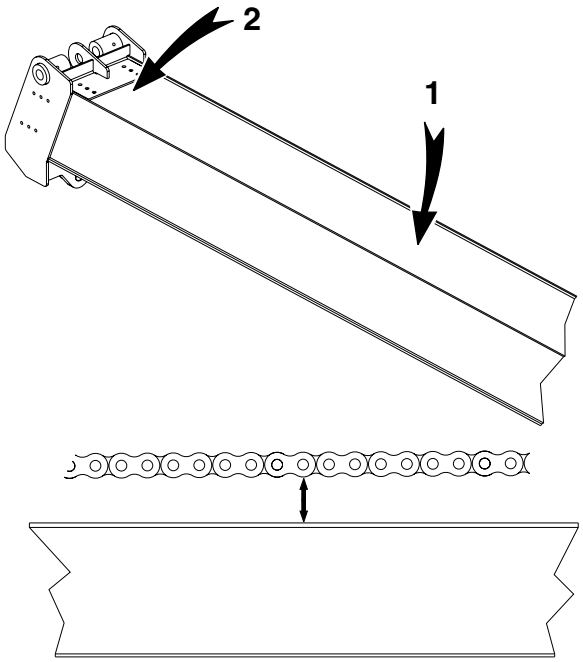

5 Move to the fork end of the same boom section that was just measured.

6 Measure the distance between the top surface of the boom and the same reference point used on the sequencing chain in step 4. Note the measurement (2).

Result: The difference between measurements 1 and 2 is 0.25 to 0.5 inch / 6.35 to 12.7 mm. No adjustment to the chain is necessary. Proceed to step 10.

Result: The difference between measurements 1 and 2 is less than a 0.25 inch / 6.35 mm OR is greater than 0.5 inch / 12.7 mm. The chain requires adjustment. Proceed to step 7.

Note: The measurements taken in step 4 and step 6 must be taken from the same plane on the boom.

7 Working at the fork end of the boom tube, locate the adjustable chain anchor on the top of the boom section.

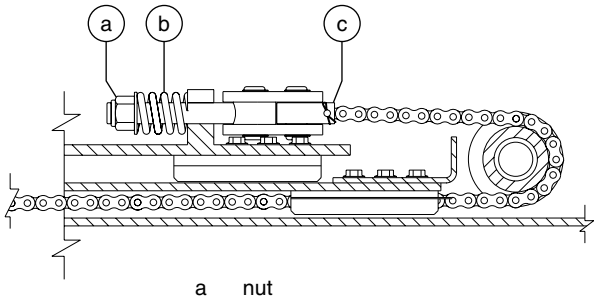

a nut
b spring
c chain anchor

8 Place an adjustable wrench across the flat part of the chain, just ahead of the chain anchor. Tighten the wrench onto the chain.

9 Using a 1 7/16 inch wrench, adjust the nut as required to tighten or loosen the chain. Repeat this procedure beginning with step 5.

10 Using a feeler gauge, check the gap between the coils of the spring. The gap should be no less than 0.030 inch / 0.76 mm.

Note: The spring coils should never be collapsed completely.

11 Repeat this procedure, beginning with step 4, for each extension chain of the boom assembly.

Downloaded from www.Manualslib.com manuals search engine

https://truckmanualshub.com/

D-3
Replace Hydraulic Tank Return Filter Element

Note: Genie specifications require that this procedure be performed every 1000 hours or annually, whichever comes first

Replacing the hydraulic return filter element is essential to good machine performance and service life. A dirty or clogged filter element may cause the machine to perform poorly and continued use may cause component damage. Extremely dirty conditions may require that the filter element be replaced more often.

CAUTION Bodily injury hazard. Beware of hot oil. Contact with hot oil may cause severe burns.

Note: Perform this procedure with the engine off.

1 Start the engine. Retract the boom and lower the forks to the ground. Shut off the engine.

2 Working from the rear of the machine, release the pressure in the oil reservoir by loosening the filler/breather cap.

3 Loosen, but do not remove, the four bolts on top of the return filter assembly.

CAUTION Bodily injury hazard. The return filter assembly cover is spring loaded. Do not remove the bolts.

4 Carefully push down and rotate the cover clockwise to remove.

5 Remove the cover spring and pull the filter element out using the swivel handle on the element.

Note: Before installing the new filter element, make sure both o-rings are in place inside the new filter element, then transfer the bypass valve into the new filter element.

6 Install the new filter element, cover spring and cover, making sure the o-ring is in place between the cover and the return filter assembly.

7 Securely tighten the four bolts that hold the fuel filter assembly cover in place. Do not over tighten.

8 Tighten the filler/breather cap.

9 Record the hours the filter element was replaced and keep with your maintenance records.

10 Start the engine.

11 Inspect the filter assembly to be sure that there are no leaks.

12 Clean up any oil that may have spilled during the installation procedure.

Downloaded from www.Manualslib.com manuals search engine

https://truckmanualshub.com/

CHECKLIST D PROCEDURES REV B

D-4
Perform Engine Maintenance - Deutz Models

Note: Engine specifications require that this procedure be performed every 1000 hours or annually, whichever comes first.

Required maintenance procedures and additional engine information is available in the *Deutz 2012 Operation Manual* (Deutz part number 0297 9912).

Deutz 2012 Operation Manual	
Genie part number	108746

D-5
Perform Transmission Maintenance

Note: Transmission specifications require that this procedure be performed every 1000 hours or annually, whichever comes first.

GTH-636, GTH-644, GTH-842 and GTH-844:

Required maintenance procedures and additional transmission information is available in the *Dana T12000 Maintenance Manual* (Dana part number 0109).

Dana T12000 Maintenance Manual	
Genie part number	97489

GTH-1048 and GTH-1056:

Required maintenance procedures and additional transmission information is available in the *Dana T20000 Maintenance Manual* (Dana part number 0202).

Dana T20000 Maintenance Manual	
Genie part number	115025

Downloaded from www.Manualslib.com manuals search engine

https://truckmanualshub.com/

D-6
Perform Axle Maintenance

Note: Axle specifications require that this procedure be performed every 1000 hours of operation.

GTH-636, GTH-644, GTH-842 and GTH-844:

Required maintenance procedures and additional axle information is available in the *Dana 212 Axle Maintenance and Repair Manual* (Dana part number 0247).

Dana 212 Axle Maintenance and Repair Manual	
Genie part number	97488

GTH-1048 and GTH-1056:

Required maintenance procedures and additional axle information is available in the *Dana 213 Axle Maintenance and Repair Manual* (Dana part number 0243).

Dana 213 Axle Maintenance and Repair Manual	
Genie part number	115026

D-7
Perform Engine Maintenance - Perkins Models

Note: Engine specifications require that this procedure be performed every 1000 hours.

Required maintenance procedures and additional engine information is available in the *Perkins 1104 Operation and Maintenance Manual* (Perkins part number SEBU7833-01).

Perkins 1104 Operation and Maintenance Manual	
Genie part number	117765

Downloaded from www.Manualslib.com manuals search engine

https://truckmanualshub.com/

CHECKLIST D PROCEDURES REV B

D-8
Perform Engine Maintenance - Deutz Models

Note: Engine specifications require the valves to be adjusted every 1500 hours of operation.

Required maintenance procedures and additional engine information is available in the *Deutz 2012 Operation Manual* (Deutz part number 0297 9912).

Deutz 2012 Operation Manual	
Genie part number	108746

Downloaded from www.Manualslib.com manuals search engine

https://truckmanualshub.com/

REV C

Checklist E Procedures

E-1
Test or Replace the Hydraulic Oil

Note: Genie specifications require that this procedure be performed every 2000 hours or two years, whichever comes first

Replacement or testing of the hydraulic oil is essential for good machine performance and service life. Dirty oil may cause the machine to perform poorly and continued use may cause component damage. Extremely dirty conditions may require oil changes to be performed more frequently. Refer to Section 2, *Specifications*.

NOTICE Component damage hazard. The work area and surfaces where this procedure will be performed must be clean and free of debris that could get into the hydraulic system.

Note: Before replacing the hydraulic oil, the oil may be tested by an oil distributor for specific levels of contamination to verify that changing the oil is necessary. **If the hydraulic oil is not replaced at the two year inspection, test the oil quarterly. Replace the oil when it fails the test.**

1 Lower the boom to the stowed position.

2 Remove oil cap from top of hydraulic tank.

3 Using an approved hand-operated pump, drain the hydraulic tank into a suitable container. Refer to Section 2, *Specifications*.

CAUTION Bodily injury hazard. Beware of hot oil. Contact with hot oil may cause severe burns.

4 Remove the drain plug from the rear of the tank.

5 Rinse out the inside of the tank using a mild solvent.

6 Install the drain plug and securely tighten. Do not over tighten.

7 Fill the tank with hydraulic oil until the fluid level is in the center of the sight glass at the rear of the tank.

8 Clean up any oil that may have spilled.

Downloaded from www.Manualslib.com manuals search engine

https://truckmanualshub.com/

CHECKLIST E PROCEDURES REV C

E-2
Perform Engine Maintenance - John Deere Models

Note: Engine specifications require that this procedure be performed every 2000 hours or two years, whichever comes first.

Required maintenance procedures and additional engine information is available in the *John Deere 4045T270 Operator's Manual* (John Deere part number OMRG25204) OR the *John Deere 4045T275 Operator's Manual* (John Deere part number OMRG33324).

John Deere 4045T270 Operator's Manual	
Genie part number	97492
John Deere 4045T275 Operator's Manual	
Genie part number	108444

E-3
Perform Engine Maintenance - Perkins Models

Note: Engine specifications require that this procedure be performed every 2000 hours.

Required maintenance procedures and additional engine information is available in the *Perkins 1104 Operation and Maintenance Manual* (Perkins part number SEBU7833-01).

Perkins 1104 Operation and Maintenance Manual	
Genie part number	117765

Downloaded from www.Manualslib.com manuals search engine

https://truckmanualshub.com/

E-4
Perform Engine Maintenance - Perkins Models

Note: Engine specifications require that this procedure be performed every 3000 hours or two years, whichever comes first.

Required maintenance procedures and additional engine information is available in the *Perkins 1104 Operation and Maintenance Manual* (Perkins part number SEBU7833-01).

Perkins 1104 Operation and Maintenance Manual	
Genie part number	117765

E-5
Perform Engine Maintenance - Perkins Models

Note: Engine specifications require that this procedure be performed every 4000 hours.

Required maintenance procedures and additional engine information is available in the *Perkins 1104 Operation and Maintenance Manual* (Perkins part number SEBU7833-01).

Perkins 1104 Operation and Maintenance Manual	
Genie part number	117765

Downloaded from www.Manualslib.com manuals search engine

https://truckmanualshub.com/

CHECKLIST E PROCEDURES REV C

E-6
Perform Engine Maintenance - John Deere Models

Note: Engine specifications require that this procedure be performed every 4500 hours or 60 months, whichever comes first.

Required maintenance procedures and additional engine information is available in the *John Deere 4045T270 Operator's Manual* (John Deere part number OMRG25204) OR the *John Deere 4045T275 Operator's Manual* (John Deere part number OMRG33324).

John Deere 4045T270 Operator's Manual	
Genie part number	97492

John Deere 4045T275 Operator's Manual	
Genie part number	108444

E-7
Perform Engine Maintenance - Perkins Models

Note: Engine specifications require that this procedure be performed every 6000 hours or every three years, whichever comes first.

Required maintenance procedures and additional engine information is available in the *Perkins 1104 Operation and Maintenance Manual* (Perkins part number SEBU7833-01).

Perkins 1104 Operation and Maintenance Manual	
Genie part number	117765

Downloaded from www.Manualslib.com manuals search engine

https://truckmanualshub.com/

E-8
Perform Engine Maintenance - Deutz Models

Note: Engine specifications require that this procedure be performed every 12,000 hours.

Required maintenance procedures and additional engine information is available in the *Deutz 2012 Operation Manual* (Deutz part number 0297 9912).

Deutz 2012 Operation Manual	
Genie part number	108746

E-9
Perform Engine Maintenance - Perkins Models

Note: Engine specifications require that this procedure be performed every 12,000 hours or every six years, whichever comes first.

Required maintenance procedures and additional engine information is available in the *Perkins 1104 Operation and Maintenance Manual* (Perkins part number SEBU7833-01).

Perkins 1104 Operation and Maintenance Manual	
Genie part number	117765

Downloaded from www.Manualslib.com manuals search engine

https://truckmanualshub.com/

This page intentionally left blank.

Downloaded from www.Manualslib.com manuals search engine

https://truckmanualshub.com/

Repair Procedures

Observe and Obey:

- ☑ Repair procedures shall be completed by a person trained and qualified on the repair of this machine.
- ☑ Immediately tag and remove from service a damaged or malfunctioning machine.
- ☑ Repair any machine damage or malfunction before operating the machine.

Before Repairs Start:

- ☑ Read, understand and obey the safety rules and operating instructions in the appropriate operator's manual on your machine.
- ☑ Be sure that all necessary tools and parts are available and ready for use.
- ☑ Use only Genie approved replacement parts.
- ☑ Read each procedure completely and adhere to the instructions. Attempting shortcuts may produce hazardous conditions.
- ☑ Unless otherwise specified, perform each repair procedure with the machine in the following configuration:
  - Machine parked on a firm, level surface
  - Boom in the stowed position
  - Key switch in the off position with the key removed
  - Wheels chocked

About This Section

Most of the procedures in this section should only be performed by a trained service professional in a suitably equipped workshop. Select the appropriate repair procedure after troubleshooting the problem.

Perform disassembly procedures to the point where repairs can be completed. Then to re-assemble, perform the disassembly steps in reverse order.

Symbols Legend

Safety alert symbol—used to alert personnel to potential personal injury hazards. Obey all safety messages that follow this symbol to avoid possible injury or death.

DANGER Indicates an imminently hazardous situation which, if not avoided, will result in death or serious injury.

WARNING Indicates a potentially hazardous situation which, if not avoided, could result in death or serious injury.

CAUTION Indicates a potentially hazardous situation which, if not avoided, may cause minor or moderate injury.

NOTICE Indicates a potentially hazardous situation which, if not avoided, may result in property damage.

⊙ Indicates that a specific result is expected after performing a series of steps.

⊠ Indicates that an incorrect result has occurred after performing a series of steps.

Downloaded from www.Manualslib.com manuals search engine

https://truckmanualshub.com/

Boom Components

REV C

1-1
Boom Angle Limit Switch (all models except GTH-636)

How to Adjust the Limit Switch

Note: Perform this procedure on a firm, level surface.

1 Start the engine.

2 **GTH-1056:** Raise the boom to 55°. Confirm with a digital level.
All other models: Raise the boom to 60°. Confirm with a digital level.

3 Working at the pivot end of the boom, locate and loosen the fasteners of the limit switch collar on the boom pivot at the exhaust side of the machine.

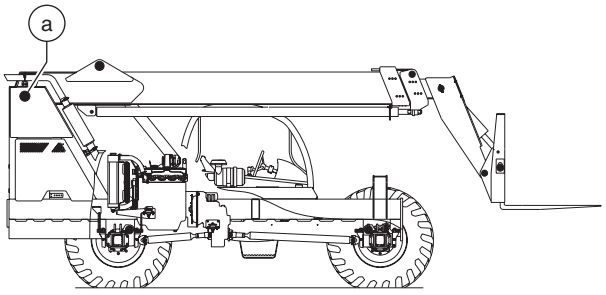

a boom pivot

4 Rotate the collar until the bottom of the collar ramp just contacts the roller head of the limit switch. Refer to the illustration below.

Note: Be sure the collar is parallel to the side of the boom.

5 Securely tighten the collar set screws.

6 Lower the boom approximately 6 feet / 2 m.

7 **GTH-1056:** Raise the boom to 55°. Confirm with a digital level.
All other models: Raise the boom to 60°. Confirm with a digital level.

8 Place the transmission into reverse 3. Release the parking brake.

Result: The machine should not move and the alarm should not sound. The limit switch is properly calibrated.

Result: The machine moves and the alarm sounds. The limit switch is not calibrated correctly. Repeat this procedure beginning with step 2.

Result: The machine moves and the alarm sounds. The limit switch is faulty. Replace the limit switch and repeat this procedure beginning with step 2.

9 Lower the boom 10°.

Result: The machine moves and the alarm sounds. The limit switch is calibrated correctly.

Result: The machine does not move and the alarm stops sounding. The limit switch collar is not parallel to the side of the boom. Repeat this procedure beginning with step 3.

10 Continue to lower the boom in 10° increments and test the drive function until the boom is in the stowed position.

Result: The machine moves and the alarm sounds. The limit switch is calibrated correctly.

Result: The machine does not move and the alarm stops sounding. The limit switch collar is not parallel to the side of the boom. Repeat this procedure beginning with step 3.

Downloaded from www.Manualslib.com manuals search engine

https://truckmanualshub.com/

1-2 Boom

How to Replace the Boom Wear Pads

1 Extend the boom until the wear pads are accessible.

2 **Lower wear pads (if equipped):** Attach a lifting strap from an overhead crane to the fork end of the boom. Lift the boom just enough to remove the weight from the pads and allow the pad to be replaced.

3 Remove the wear pad mounting fasteners and remove the wear pads from the boom.

4 Lubricate the wear surface of the new pads with multipurpose grease.

5 Install the new wear pads. Install and securely tighten the fasteners.

How to Replace the Boom Rollers (if equipped)

1 Extend the boom approximately half way out.

2 Attach a lifting strap from an overhead crane to the fork end of the boom. Lift the boom just enough to remove the weight from the lower rollers.

3 Remove the fasteners securing the boom roller pivot pin to the boom.

4 Use a soft metal drift to remove the pivot pin. Remove and replace the boom rollers.

⚠CAUTION Crushing hazard. The boom rollers could fall if not secured when the pivot pin is removed from the boom.

Note: Note the quantity and location of the thrust washers when removing the boom rollers.

How to Remove the Lifting Fork Frame

1 With the boom in the stowed position, attach a lifting strap from an overhead crane to the top of the lifting fork frame at the front of the boom. Support the frame. Do not apply any lifting pressure.

2 Remove the fasteners securing the fork level cylinder pivot pin to the lifting fork.

3 Use a soft metal drift to remove the pivot pin.

4 Remove the fasteners securing the fork frame pivot pin to the boom.

5 Use a soft metal drift to remove the pivot pin.

⚠CAUTION Crushing hazard. The fork frame could fall if not properly supported when the pivot pin is removed from the machine.

6 Remove the fork frame from the boom.

Downloaded from www.Manualslib.com manuals search engine

https://truckmanualshub.com/

How to Remove the Boom

WARNING Bodily injury hazard. This procedure requires specific repair skills, lifting equipment and a suitable workshop. Attempting this procedure without these skills and tools could result in death or serious injury and significant component damage. Dealer service is strongly recommended.

Note: When removing a hose assembly or fitting, the O-ring on the fitting and/or hose end must be replaced and then torqued to specification during installation. Refer to Section 2, *Hydraulic Hose and Fitting Torque Specifications.*

1 Remove the lifting fork. See 1-2, *How to Remove the Lifting Fork*.

2 Tag, disconnect and plug the two large hydraulic hoses from the manifolds of the extension cylinder. Cap the fittings on the manifolds.

GTH-644, GTH-842 and GTH-844:

3 Tag, disconnect and plug the hydraulic hoses from the hydraulic hard lines adjacent to the extension cylinder at the pivot end of the boom. Cap the fittings on the hard lines.

4 Remove the fasteners and clamps securing the hydraulic hoses, disconnected in steps 2 and 3, to the boom. Lay the hoses off to the side.

NOTICE Component damage hazard. Hoses can be damaged if they are kinked or pinched.

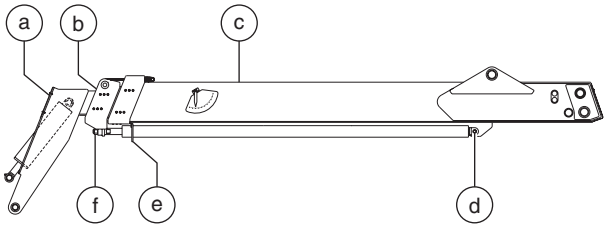

3-section boom

a boom tube number 3
b boom tube number 2
c boom tube number 1
d extension cylinder retaining pin
e extension cylinder support loop
f extension cylinder rod end nut

GTH-636, GTH-1048 and GTH-1056:

5 Tag, disconnect and plug the remaining boom supply hoses at the respective manifolds. Cap the fittings on the manifolds.

All models:

6 Attach a lifting strap from an overhead 10 ton / 10,000 kg crane to the boom. Support the boom. Do not apply any lifting pressure.

7 Select a boom lift cylinder. Attach a lifting strap from an overhead 1 ton / 1000 kg crane to the cylinder. Support the cylinder. Do not apply any lifting pressure.

8 Remove the fasteners securing the lift cylinder rod end pivot pin to the boom.

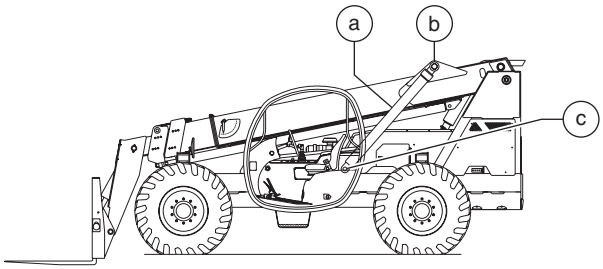

a lift cylinder
b rod end pivot pin
c barrel end pivot pin

Downloaded from www.Manualslib.com manuals search engine

https://truckmanualshub.com/

9 Use a soft metal drift to remove the rod end pivot pin from the cylinder.

DANGER Crushing hazard. The boom will fall if not properly supported when the lift cylinder pivot pin is removed from the machine.

DANGER Crushing hazard. The cylinder will fall if not properly supported when the pivot pin is removed.

10 Using the crane, raise the cylinder slightly.

11 Place a block measuring 3 x 3 x 3 inches / 7 x 7 x 7 cm between the cylinder manifold and the chassis.

12 Lower the cylinder until the cylinder manifold rests on the block.

WARNING Crushing hazard. Keep hands clear of the cylinder manifold when lowering the cylinder.

13 Repeat this procedure, beginning with step 7, for the other lift cylinder.

14 Using the crane, raise the boom to a horizontal position.

15 Remove the fasteners securing the boom pivot pin to the machine.

16 Use a soft metal drift to remove the pivot pin.

DANGER Crushing hazard. The boom will fall if not properly supported when the pivot pin is removed from the machine.

17 Carefully remove the boom assembly from the machine and place it on a structure capable of supporting it.

DANGER Crushing hazard. The boom could become unbalanced and fall if not properly supported when removed from the machine.

NOTICE Component damage hazard. The weight of the boom assembly may crush the hydraulic hard lines under the boom. Use caution when placing the boom assembly onto a structure capable of supporting it.

Downloaded from www.Manualslib.com manuals search engine

https://truckmanualshub.com/

How to Disassemble the Boom

WARNING Bodily injury hazard. This procedure requires specific repair skills, lifting equipment and a suitable workshop. Attempting this procedure without these skills and tools could result in death or serious injury and significant component damage. Dealer service is strongly recommended.

Note: When removing a hose assembly or fitting, the O-ring on the fitting and/or hose end must be replaced and then torqued to specification during installation. Refer to Section 2, *Hydraulic Hose and Fitting Torque Specifications.*

GTH-644, GTH-842 and GTH-844:

1 Remove the extension cylinder. See 1-4, *How to Remove the Boom Extension Cylinder*.

2 Remove the boom. See 1-2, *How to Remove the Boom*.

3 Tag, disconnect and plug the hydraulic hoses from the fork level cylinder manifolds. Cap the fittings.

WARNING Bodily injury hazard. Spraying hydraulic oil can penetrate and burn skin. Loosen hydraulic connections very slowly to allow the oil pressure to dissipate gradually. Do not allow oil to squirt or spray.

4 Attach a lifting strap from an overhead crane to the barrel end of the fork level cylinder. Support the cylinder. Do not apply any lifting pressure.

5 Remove the fasteners securing the fork level cylinder pivot pin to the boom.

6 Use a soft metal drift to remove the pivot pin. Remove the cylinder from the machine.

DANGER Crushing hazard. The cylinder will fall if not properly supported when the pivot pin is removed from the machine.

7 Tag, disconnect and plug the hydraulic hoses from the hydraulic hard lines at the top of the number 1 boom tube. Cap the hard lines.

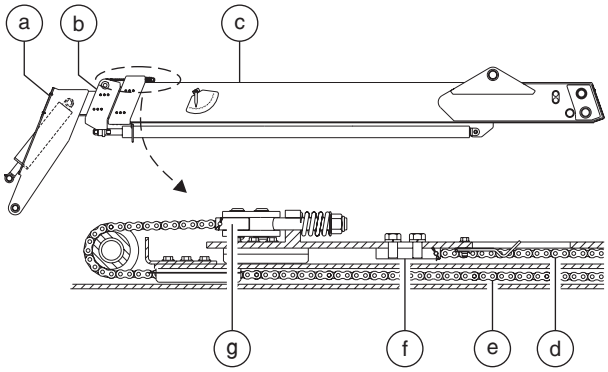

a boom tube number 3
b boom tube number 2
c boom tube number 1
d retraction chain
e extension chain
f fixed chain block
g chain tensioner

8 Remove the fasteners and clamps securing the hydraulic hard lines to the number 1 boom tube. Remove the hard lines and set them to the side.

NOTICE Component damage hazard. Hoses can be damaged if they are kinked or pinched.

Downloaded from www.Manualslib.com manuals search engine

https://truckmanualshub.com/

9 Remove the fasteners securing the chain tensioner of the number 3 extension chain to the number 1 boom tube.

10 Remove the fasteners securing the fixed chain block of the number 3 retraction chain to the number 1 boom tube.

Note: The fixed chain block of the number 3 retraction chain is secured to the inside of the number 1 boom tube and is hidden from view when installed.

11 Extend the number 2 boom tube assembly enough to access the inner wear pads of the number 1 boom tube.

12 Remove the top and side wear pads of the number 1 boom tube at the fork end of the boom.

13 Using a chain of sufficient capacity, secure together the numbers 2 and 3 boom tubes.

14 Attach a lifting strap from an overhead crane to the numbers 2 and 3 boom tube assembly at the fork end of the boom.

15 Support and slide the numbers 2 and 3 boom tube assembly approximately halfway out of the number 1 boom tube.

⚠WARNING Crushing hazard. The boom assembly may become unbalanced and fall when the numbers 2 and 3 boom tubes are moved if not secured together.

16 Using the crane, raise the front end of the numbers 2 and 3 boom tube assembly slightly and remove the bottom wear pads of the number 1 boom tube.

17 Support and slide the numbers 2 and 3 boom tube assembly out of the number 1 boom tube. Place the numbers 2 and 3 boom tube assembly on a structure capable of supporting it.

⚠DANGER Crushing hazard. The numbers 2 and 3 boom tube assembly may become unbalanced and fall when removed from the number 1 boom tube if not properly supported and attached to the overhead crane.

Note: During removal, the overhead crane strap will need to be adjusted for proper balancing.

18 Remove the fork level cylinder hydraulic hoses from the boom assembly.

19 Remove the fasteners securing the extension chain pivot pin to the number 3 boom tube.

20 Use a soft metal drift to remove the pivot pin. Remove the chain and set it to the side.

Note: Do not allow the chain to become twisted or dirty.

21 Extend the number 3 boom tube enough to access the inner wear pads of the number 2 boom tube.

22 Remove the top and side wear pads of the number 2 boom tube at the fork end of the boom.

Downloaded from www.Manualslib.com manuals search engine

https://truckmanualshub.com/

23 Support and slide the number 3 boom tube assembly approximately halfway out of the number 2 boom tube.

24 Using the crane, raise the fork end of the number 3 boom tube assembly slightly and remove the bottom wear pads of the number 2 boom tube.

25 Support and slide the number 3 boom tube assembly out of the number 2 boom tube. Place the number 3 boom tube assembly on a structure capable of supporting it.

WARNING Crushing hazard. The number 3 boom tube could become unbalanced and fall when removed from the number 2 boom tube if not properly supported and attached to the overhead crane.

Note: During removal, the overhead crane strap will need to be adjusted for proper balancing.

GTH-636 and GTH-1048:

1 Remove the extension cylinder. See 1-4, *How to Remove the Boom Extension Cylinder*.

2 Remove the boom. See 1-2, *How to Remove the Boom*.

3 Remove the access cover from the fork of the boom. Remove the clamp securing the hydraulic hoses to the top of the gooseneck at the fork end of the boom (if equipped).

4 Attach a lifting strap from an overhead crane to the rod end of the fork level cylinder.

5 Raise the cylinder enough to access the manifolds of the fork level cylinder.

6 Tag, disconnect and plug the hydraulic hoses from the fork level cylinder manifolds. Cap the fittings. Lower the cylinder.

WARNING Bodily injury hazard. Spraying hydraulic oil can penetrate and burn skin. Loosen hydraulic connections very slowly to allow the oil pressure to dissipate gradually. Do not allow oil to squirt or spray.

WARNING Crushing hazard. Keep hands clear of the cylinder when lowering.

NOTICE Component damage hazard. Hoses can be damaged if they are kinked or pinched.

7 Attach a lifting strap from an overhead crane to the barrel end of the fork level cylinder.

8 Remove the fasteners securing the fork level cylinder barrel-end pivot pin to the boom.

Downloaded from www.Manualslib.com manuals search engine

https://truckmanualshub.com/

9 Use a soft metal drift to remove the pivot pin. Remove the cylinder from the machine.

DANGER Crushing hazard. The cylinder will fall if not properly supported when the pivot pin is removed from the machine.

10 Working at the top of the boom assembly, tag, disconnect and plug the fork level hoses from the manifold at the top of the number 1 boom tube.

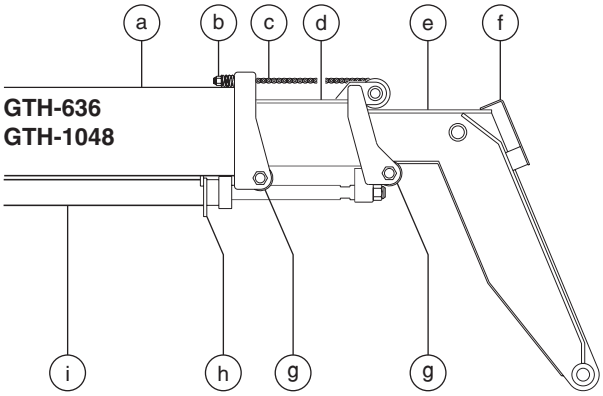

a number 1 boom tube
b chain tensioner
c extension chain
d number 2 boom tube
e number 3 boom tube
f front cover
g boom roller
h support loop
i extension cylinder

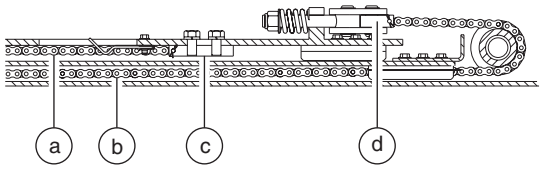

a retraction chain
b extension chain
c fixed chain block
d chain tensioner

11 Remove the fastener(s) securing the chain tensioner of the number 3 extension chain(s) to the number 1 boom tube.

Note: The GTH-636 has one chain; the GTH-1048 has two chains.

12 Remove the fasteners securing the fixed chain block of the number 3 retraction chain to the number 1 boom tube.

Note: The fixed chain block of the number 3 retraction chain is secured to the inside of the number 1 boom tube and is hidden from view when installed.

13 Attach a lifting strap from an overhead crane to the extension cylinder. Support the cylinder. Do not apply any lifting pressure.

14 Remove the nut securing the rod end of the extension cylinder to the number 2 boom tube.

15 Extend the number 2 boom tube assembly enough to access the inner wear pads of the number 1 boom tube.

WARNING Crushing hazard. The extension cylinder could fall if not properly supported when the number 2 boom tube assembly is extended.

16 Remove the wear pads of the number 1 boom tube at the fork end of the boom.

17 Using a chain of sufficient capacity, secure together the numbers 2 and 3 boom tubes.

18 Attach a lifting strap from an overhead crane to the numbers 2 and 3 boom tube assembly at the fork end of the boom.

Downloaded from www.Manualslib.com manuals search engine

https://truckmanualshub.com/

19 Support and slide the numbers 2 and 3 boom tube assembly approximately halfway out of the number 1 boom tube.

⚠WARNING Crushing hazard. The boom assembly could become unbalanced and fall when the numbers 2 and 3 boom tubes are moved if not secured together.

20 If equipped, remove the fasteners securing the side wear pads to the number 1 boom tube, and remove the wear pads.

21 Raise the front end of the numbers 2 and 3 boom tube assembly slightly and remove the boom rollers from the number 1 boom tube.

22 Support and slide the numbers 2 and 3 boom tube assembly out of the number 1 boom tube. Place the numbers 2 and 3 boom tube assembly on a structure capable of supporting it.

⚠WARNING Crushing hazard. The numbers 2 and 3 boom tube assembly could become unbalanced and fall when removed from the number 1 boom tube if not properly supported and attached to the overhead crane.

Note: During removal, the overhead crane strap will need to be adjusted for proper balancing.

23 Remove the fasteners securing the extension chain pivot pin to the number 3 boom tube.

24 Use a soft metal drift to remove the pivot pin. Remove the chain and set it to the side.

Note: Do not allow the chain to become twisted or dirty.

25 Extend the number 3 boom tube assembly enough to access the inner wear pads of the number 2 boom tube.

26 Remove the wear pads of the number 2 boom tube at the front end of the boom.

27 Attach a lifting strap from an overhead crane to the number 3 boom tube assembly at the fork end of the boom.

28 Support and slide the number 3 boom tube assembly approximately halfway out of the number 2 boom tube.

29 If equipped, remove the fasteners securing the side wear pads to the number 2 boom tube, and remove the wear pads.

30 Raise the front end of the number 3 boom tube assembly slightly and remove the boom rollers of the number 2 boom tube.

31 Support and slide the number 3 boom tube assembly out of the number 2 boom tube. Place the number 3 boom tube assembly on a structure capable of supporting it.

⚠WARNING Crushing hazard. The number 3 boom tube assembly could become unbalanced and fall when removed from the number 2 boom tube if not properly supported and attached to the overhead crane.

Note: During removal, the overhead crane strap will need to be adjusted for proper balancing.

Downloaded from www.Manualslib.com manuals search engine

https://truckmanualshub.com/

GTH-1056:

1 Remove the extension cylinder. See 1-4, *How to Remove the Boom Extension Cylinder*.

2 Remove the boom. See 1-2, *How to Remove the Boom*.

3 Remove the access cover from the front of the boom. Remove the clamp securing the fork level hoses to the number 3 boom tube.

4 Attach a lifting strap from an overhead crane to the rod end of the fork level cylinder.

5 Raise the cylinder enough to access the manifolds of the fork level cylinder.

6 Tag, disconnect and plug the fork level cylinder hoses from the cylinder manifolds. Cap the fittings. Lower the cylinder.

⚠WARNING Bodily injury hazard. Spraying hydraulic oil can penetrate and burn skin. Loosen hydraulic connections very slowly to allow the oil pressure to dissipate gradually. Do not allow oil to squirt or spray.

⚠WARNING Crushing hazard. Keep hands clear of the cylinder when lowering.

NOTICE Component damage hazard. Hoses can be damaged if they are kinked or pinched

7 Attach a lifting strap from an overhead crane to the barrel end of the fork level cylinder.

8 Remove the fasteners securing the fork level cylinder barrel-end pivot pin to the boom.

9 Use a soft metal drift to remove the pivot pin. Remove the cylinder from the machine.

⚠DANGER Crushing hazard. The cylinder will fall if not properly supported when the pivot pin is removed from the machine.

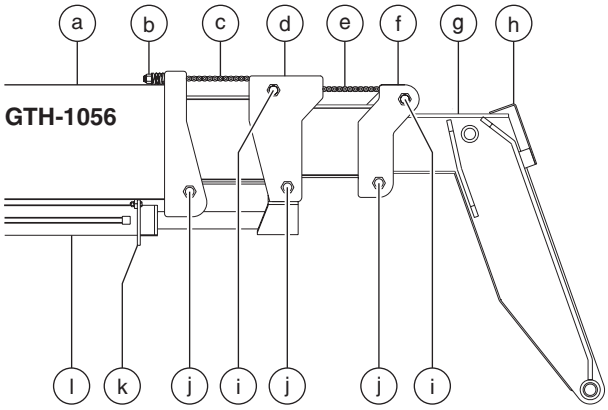

a number 0 boom tube
b chain tensioner
c boom tube 2 extension chain
d number 1 boom tube
e boom tube 3 extension chain
f number 2 boom tube
g number 3 boom tube
h front cover
i chain roller (hidden from view)
j boom roller (hidden from view)
k support loop
l extension cylinder
m rear cover
n cable track
o boom tube 2 retraction chain
p boom tube 3 retraction chain

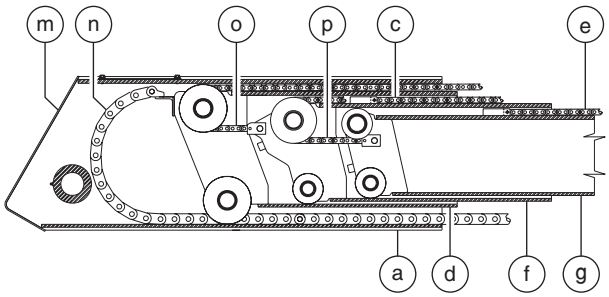

Downloaded from www.Manualslib.com manuals search engine

https://truckmanualshub.com/

10 Attach a lifting strap from an overhead crane to the extension cylinder. Support the cylinder. Do not apply any lifting pressure.

11 Remove the nut securing the rod end of the extension cylinder to the number 1 boom tube.

12 Extend the number 1 boom tube until the hose manifolds are accessible.

WARNING Crushing hazard. The boom assembly could fall when the number 1 boom tube is extended if not properly supported and attached to the overhead crane.

13 Tag, disconnect and plug the hydraulic hoses at the top of the hose manifolds at the top of the number 1 boom tube. Cap the fittings.

NOTICE Component damage hazard. Hoses can be damaged if they are kinked or pinched.

Note: Do not remove the hose manifolds at this time.

14 Remove the wear pads of the number 0 boom tube at the front end of the boom.

15 Manually return the boom tubes to the stowed position.

16 Remove the access cover from the rear of the boom.

17 Working with a screwdriver inside the rear of the boom, carefully remove eight of the external hinge link tabs from the end of the cable track where it attaches to the number 3 boom tube.

18 Using a screwdriver, carefully separate the cable track from the cable track mount at the rear of the number 3 boom tube.

19 Loosen evenly, then remove, the fasteners securing the chain tensioners of the boom tube 2 extension chains to the number 0 boom tube.

20 Remove the fasteners securing the fixed chain block of the boom tube 2 retraction chain to the top of the number 0 boom tube near the front of the tube.

Note: The fixed chain block of the boom tube 2 retraction chain is secured to the inside of the number 0 boom tube and is hidden from view when installed.

21 Using a chain of sufficient capacity, secure together the numbers 1, 2 and 3 boom tubes.

Note:To secure the boom tubes together, it may be helpful to loosen the boom roller fasteners at one side of the boom, wrapping the chain around the boom roller pin between the nut and the side of the boom.

22 Attach a lifting strap from an overhead crane to the numbers 1, 2 and 3 boom tube assemblies at the fork end of the boom.

23 Support and slide the numbers 1, 2 and 3 boom tube assemblies approximately halfway out of the number 0 boom tube.

WARNING Crushing hazard. The boom assembly could become unbalanced and fall when the numbers 1, 2 and 3 boom tubes are moved if not secured together.

24 If equipped, remove the fasteners securing the side wear pads to the number 0 boom tube, and remove the wear pads.

Downloaded from www.Manualslib.com manuals search engine

https://truckmanualshub.com/

25 Raise the fork end of the number 1 boom tube assembly slightly and remove the boom rollers from the number 0 boom tube.

26 Support and slide the numbers 1, 2 and 3 boom tube assemblies out of the number 0 boom tube. Place the numbers 1, 2 and 3 boom tube assemblies on a structure capable of supporting it.

WARNING Crushing hazard. The numbers 1, 2 and 3 boom tube assemblies could become unbalanced and fall when removed from the number 0 boom tube if not properly supported and attached to the overhead crane.

Note: During removal, the overhead crane strap will need to be adjusted for proper balancing.

27 Remove the chain tensioner from the end of both number 2 boom tube extension chains.

28 Remove the cable track mount bracket from the rear of the number 1 boom tube.

29 Remove the chain or device securing the booms together.

30 Evenly remove the fasteners securing the chain tensioners of the boom tube 3 extension chains to the number 1 boom tube.

31 Remove the fasteners securing the fixed chain block of the number 3 boom tube retraction chain to the top of the number 1 boom tube near the fork end of the tube.

Note: The fixed chain block of the number 3 boom tube retraction chain is secured to the inside of the number 1 boom tube and is hidden from view when installed.

32 Remove the hose manifolds from the top of the number 1 boom tube. Tag, disconnect and plug the hoses from the hose manifolds. Cap the fittings.

NOTICE Component damage hazard. Hoses can be damaged if they are kinked or pinched.

33 Remove the fork level cylinder hoses from the boom assembly.

34 Extend the number 2 boom tube approximately 12 inches / 30 cm.

35 Remove the chain rollers from the top of the number 1 boom tube at the front of the boom.

36 Remove the wear pads of the number 1 boom tube at the front end of the boom.

37 Manually return the boom tubes to the stowed position.

38 Using a chain of sufficient capacity, secure together the numbers 2 and 3 boom tubes.

39 Attach a lifting strap from an overhead crane to the numbers 2 and 3 boom tube assemblies at the fork end of the boom.

40 Support and slide the numbers 2 and 3 boom tube assemblies approximately halfway out of the number 1 boom tube.

WARNING Crushing hazard. The boom assembly could become unbalanced and fall when the numbers 2 and 3 boom tubes are moved if not secured together.

Downloaded from www.Manualslib.com manuals search engine

https://truckmanualshub.com/

41 If equipped, remove the fasteners securing the side wear pads to the number 1 boom tube, and remove the wear pads.

42 Raise the fork end of the number 2 boom tube assembly slightly and remove the boom rollers from the number 1 boom tube.

43 Support and slide the numbers 2 and 3 boom tube assemblies out of the number 1 boom tube. Place the numbers 2 and 3 boom tube assemblies on a structure capable of supporting it.

⚠WARNING Crushing hazard. The numbers 2 and 3 boom tube assemblies could become unbalanced and fall when removed from the number 1 boom tube if not properly supported and attached to the overhead crane.

Note: During removal, the overhead crane strap will need to be adjusted for proper balancing.

44 Remove the chain or device securing the booms together.

45 Extend the number 3 boom tube approximately 12 inches / 30 cm.

46 Remove the chain rollers from the top of the number 2 boom tube at the fork end of the boom.

47 Remove the wear pads of the number 2 boom tube at the fork end of the boom.

48 Attach a lifting strap from an overhead crane to the number 3 boom tube assembly at the fork end of the boom.

49 Support and slide the number 3 boom tube assembly approximately halfway out of the number 2 boom tube.

50 If equipped, remove the fasteners securing the side wear pads to the number 2 boom tube, and remove the wear pads.

51 Raise the fork end of the number 3 boom tube assembly slightly and remove the boom rollers of the number 2 boom tube.

52 Support and slide the number 3 boom tube assembly out of the number 2 boom tube. Place the number 3 boom tube assembly on a structure capable of supporting it.

⚠WARNING Crushing hazard. The number 3 boom tube assembly could become unbalanced and fall when removed from the number 2 boom tube if not properly supported and attached to the overhead crane.

Note: During removal, the overhead crane strap will need to be adjusted for proper balancing.

Downloaded from www.Manualslib.com manuals search engine

https://truckmanualshub.com/

1-3
Boom Lift Cylinder

How to Remove a Lift Cylinder

Note: When removing a hose assembly or fitting, the O-ring on the fitting and/or hose end must be replaced and then torqued to specification during installation. Refer to Section 2, *Hydraulic Hose and Fitting Torque Specifications.*

1 Attach an overhead 10 ton / 10,000 kg crane to the boom. Support the boom. Do not apply any lifting pressure.

2 Tag, disconnect and plug the two larger hydraulic hoses at the lift cylinder and manifold. Cap the fittings.

WARNING Bodily injury hazard. Spraying hydraulic oil can penetrate and burn skin. Loosen hydraulic connections very slowly to allow the oil pressure to dissipate gradually. Do not allow oil to squirt or spray.

NOTICE Component damage hazard. Hoses can be damaged if they are kinked or pinched.

3 Remove the fasteners securing the lift cylinder pivot pin to the chassis.

4 Use a soft metal drift to remove the pivot pin.

DANGER Crushing hazard. The boom will fall if not properly supported when the pivot pin is removed from the machine.

5 Using the overhead crane, raise the boom to a horizontal position.

6 Attach a lifting strap from an overhead crane to the lift cylinder. Support the cylinder. Do not apply any lifting pressure.

7 Remove the fasteners securing the lift cylinder collar to the boom. Remove the collar.

8 Remove the cylinder from the machine.

DANGER Crushing hazard. The cylinder will fall if not properly supported when removed from the machine.

Downloaded from www.Manualslib.com manuals search engine

https://truckmanualshub.com/

How to Bleed the Lift/Tilt Circuit

1 With the machine on a firm, level surface, start the engine and allow the engine to idle.

2 Raise the boom to full height, then lower the boom to the stowed position.

3 Repeat step 2.

4 Raise the tips of the lifting forks to full height, then continue to activate the fork tilt up function for a minimum of 60 seconds. Release the joystick.

5 Stop the engine.

6 Select one of the boom lift cylinders. Locate the bleed fitting at the top of the cylinder.

7 Securely install a clear hose onto the bleeder fitting. Place the other end of the hose into a suitable container to collect hydraulic fluid.

8 Using a wrench, carefully open the bleeder fitting on the cylinder and allow the pressurized fluid to drain through the hose and into the container. Close the bleeder fitting.

⚠WARNING Bodily injury hazard. Spraying hydraulic oil can penetrate and burn skin. Loosen hydraulic connections very slowly to allow the oil pressure to dissipate gradually. Do not allow oil to squirt or spray.

9 Start the engine and allow the engine to idle.

10 Activate the fork tilt up function for approximately 15 seconds.

11 Repeat this procedure beginning with step 8 until a steady stream of oil without air bubbles is visible through the bleeder hose.

12 Repeat this procedure for the other cylinder, beginning with step 6.

Downloaded from www.Manualslib.com manuals search engine

https://truckmanualshub.com/

1-4
Boom Extension Cylinder

How to Remove the Extension Cylinder

Note: When removing a hose assembly or fitting, the O-ring on the fitting and/or hose end must be replaced and then torqued to specification during installation. Refer to Section 2, *Hydraulic Hose and Fitting Torque Specifications.*

1 Raise the boom to a horizontal position.

2 Extend the boom approximately 1 foot / 30 cm.

3 Attach a lifting strap from an overhead crane to the extension cylinder. Support the cylinder. Do not apply any lifting pressure.

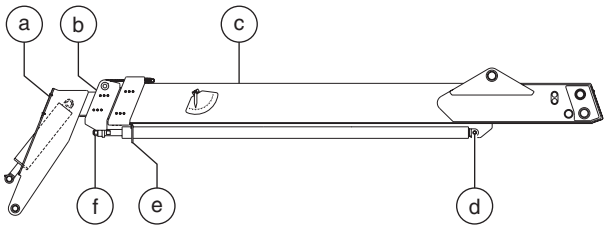

a boom tube number 3
b boom tube number 2
c boom tube number 1
d extension cylinder retaining pin
e extension cylinder support loop
f extension cylinder rod end nut

4 Remove the nut securing the rod end of the extension cylinder to the number 2 boom tube.

5 Remove the extension cylinder support loop from the number 3 boom tube.

6 Place a wooden block, which measures approximately 2 x 4 x 12 inches / 5 x 10 x 30 cm, onto the top of the number 2 boom tube in a way that will prevent the number 2 boom tube from retracting into the number 1 boom tube.

7 Retract the extension cylinder to the stowed position. Turn the machine off.

DANGER Crushing hazard. The extension cylinder will fall if not properly supported when the cylinder is retracted.

8 Tag, disconnect and plug the hydraulic hoses from the extension cylinder manifolds. Cap the fittings on the manifolds.

WARNING Bodily injury hazard. Spraying hydraulic oil can penetrate and burn skin. Loosen hydraulic connections very slowly to allow the oil pressure to dissipate gradually. Do not allow oil to squirt or spray.

NOTICE Component damage hazard. Hoses can be damaged if they are kinked or pinched.

9 Remove the fasteners securing the extension cylinder barrel end pivot pin to the boom.

10 Use a soft metal drift to remove the pivot pin. Remove the cylinder from the machine.

DANGER Crushing hazard. The extension cylinder will fall if not properly supported when the pivot pin is removed from the machine.

Downloaded from www.Manualslib.com manuals search engine

https://truckmanualshub.com/

1-5
Fork Level Cylinder

How to Remove the Fork Level Cylinder

1 With the boom in the stowed position, fully lower the tips of the lifting forks.

2 Remove the access cover from the fork of the boom.

3 Attach a lifting strap from an overhead crane to the top of the lifting fork frame. Support the frame. Do not apply any lifting pressure.

4 Attach a lifting strap from a second overhead crane to the barrel end of the fork level cylinder. Support the cylinder. Do not apply any lifting pressure.

5 Tag, disconnect and plug the fork level cylinder hoses from the cylinder manifolds. Cap the fittings.

WARNING Bodily injury hazard. Spraying hydraulic oil can penetrate and burn skin. Loosen hydraulic connections very slowly to allow the oil pressure to dissipate gradually. Do not allow oil to squirt or spray.

NOTICE Component damage hazard. Hoses can be damaged if they are kinked or pinched

6 Remove the fasteners securing the fork level cylinder rod-end pivot pin to the boom.

7 Use a soft metal drift to remove the pivot pin.

WARNING Crushing hazard. The lifting fork frame could fall if not properly supported when the pivot pin is removed from the machine.

8 Remove the fasteners securing the fork level cylinder barrel-end pivot pin to the boom.

9 Use a soft metal drift to remove the pivot pin. Remove the cylinder from the machine.

WARNING Crushing hazard. The cylinder could fall if not properly supported when the pivot pin is removed from the machine.

Downloaded from www.Manualslib.com manuals search engine

https://truckmanualshub.com/

How to Replace the Fork Level Cylinder Hoses

Note: When removing a hose assembly or fitting, the O-ring on the fitting and/or hose end must be replaced and then torqued to specification during installation. Refer to Section 2, *Hydraulic Hose and Fitting Torque Specifications.*

1 Fully retract the boom.

2 Fully lower the tips of the lifting forks.

3 Remove the covers from both ends of the boom.

4 Attach a lifting strap from an overhead crane to the top of the lifting fork frame. Support the frame. Do not apply any lifting pressure.

5 Tag, disconnect and plug the fork level cylinder supply hoses at the cylinder manifold. Cap the fittings on the manifold.

⚠WARNING Bodily injury hazard. Spraying hydraulic oil can penetrate and burn skin. Loosen hydraulic connections very slowly to allow the oil pressure to dissipate gradually. Do not allow oil to squirt or spray.

NOTICE Component damage hazard. Hoses can be damaged if they are kinked or pinched.

6 Tag, disconnect and plug the hydraulic hoses from the hydraulic hard lines at the top of the number 1 boom tube. Cap the hard lines.

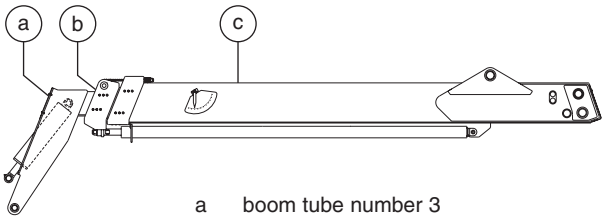

a boom tube number 3
b boom tube number 2
c boom tube number 1

7 Securely connect a 30 foot / 10 m length of rope to each end of the hoses disconnected in steps 5 and 6. Securely tie off the other end of each section of rope to the boom structure.

8 Working at the pivot end of the boom, select one of the hoses. Pull the hose out of the boom.

Note: Rope coming loose from either end of the hose or the boom during hose removal may result in a difficult reassembly. Be sure each section of rope is securely attached to both the hose and the boom structure before pulling the hose out of the boom.

9 Remove the rope from each end of the hose. Discard the hose.

10 Securely install a section of rope onto each end of the new hose assembly.

11 Install the new hose assembly into the boom by routing the hose over the roller at the pivot end of the boom. Using the rope, carefully pull the hose through the boom until each end is accessible.

12 Install both ends of the hose assembly onto the correct connection points. Torque to specification. Refer to Section 2, *Specifications*.

13 Repeat this procedure for the remaining hose to be replaced, beginning with step 8.

14 Remove the lifting strap from the fork frame.

15 Install the covers onto the front and rear of the boom. Install and securely tighten the retaining fasteners.

16 Bleed the fork level circuit. See 1-3, *How to Bleed the Lift/Tilt Circuit*.

Downloaded from www.Manualslib.com manuals search engine

https://truckmanualshub.com/

1-6
Fork Rotate Cylinder (option)

How to Remove the Fork Rotate Cylinder

1 Fully retract the boom.

2 Fully lower the tips of the lifting fork.

3 Attach a lifting strap from an overhead crane to the barrel end of the fork rotate cylinder. Support the cylinder. Do not apply any lifting pressure.

4 Tag, disconnect and plug the fork rotate cylinder hoses at the cylinder manifolds. Cap the fittings.

WARNING Bodily injury hazard. Spraying hydraulic oil can penetrate and burn skin. Loosen hydraulic connections very slowly to allow the oil pressure to dissipate gradually. Do not allow oil to squirt or spray.

NOTICE Component damage hazard. Hoses can be damaged if they are kinked or pinched

5 Remove the fasteners securing the fork rotate cylinder rod end pivot pin to the fork frame.

6 Use a soft metal drift to remove the pivot pin.

7 Remove the fasteners securing the fork rotate cylinder barrel end pivot pin to the pivot frame.

8 Use a soft metal drift to remove the pivot pin. Remove the cylinder from the machine.

WARNING Crushing hazard. The cylinder could fall if not properly supported when the pivot pin is removed from the machine.

Note: When installing the cylinder mount plate onto the boom, torque the fasteners to specification.

Torque specification	
Cylinder mount plate fasteners	380 ft-lbs 515 Nm

Downloaded from www.Manualslib.com manuals search engine

https://truckmanualshub.com/

How to Replace the Fork Rotate Cylinder Hoses

Note: When removing a hose assembly or fitting, the O-ring on the fitting and/or hose end must be replaced and then torqued to specification during installation. Refer to Section 2, *Hydraulic Hose and Fitting Torque Specifications.*

1 Fully retract the boom.

2 Fully lower the tips of the lifting fork until they rest on the ground.

3 Remove the covers from both ends of the boom.

4 Attach a lifting strap from an overhead crane to the top of the lifting fork frame. Support the frame. Do not apply any lifting pressure.

5 Attach a lifting strap from a second overhead crane to the barrel end of the fork level cylinder. Support the cylinder. Do not apply any lifting pressure.

6 Remove the fasteners securing the level cylinder rod end pivot pin to the lifting fork frame.

7 Use a soft metal drift to remove the pivot pin.

⚠WARNING Crushing hazard. The cylinder could fall if not properly supported when the pivot pin is removed from the machine.

⚠WARNING Crushing hazard. The lifting fork frame could fall if not properly supported when the pivot pin is removed from the machine.

8 Raise the fork level cylinder enough to access the supply hoses at the inside of the boom gooseneck.

Note: It may be necessary to tilt the fork frame away from the boom to provide room to raise the cylinder.

9 Tag, disconnect and plug the fork rotate cylinder supply hoses at the fittings inside the boom gooseneck. Cap the fittings.

⚠WARNING Bodily injury hazard. Spraying hydraulic oil can penetrate and burn skin. Loosen hydraulic connections very slowly to allow the oil pressure to dissipate gradually. Do not allow oil to squirt or spray.

NOTICE Component damage hazard. Hoses can be damaged if they are kinked or pinched.

10 Remove the clamp securing the hoses to the front of the boom.

11 Tag, disconnect and plug the hydraulic hoses from the hydraulic hard lines at the bulkhead under the number 1 boom tube. Cap the hard lines.

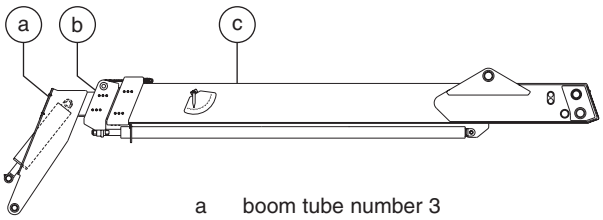

a boom tube number 3
b boom tube number 2
c boom tube number 1

12 Securely connect a 30 foot / 10 m length of rope to each end of the hoses disconnected in steps 9 and 11. Securely tie off the other end of each section of rope to the boom structure.

13 Working at the pivot end of the boom, select one of the hoses. Pull the hose out of the boom.

Note: Rope coming loose from either end of the hose or the boom during hose removal may result in a difficult reassembly. Be sure each section of rope is securely attached to both the hose and the boom structure before pulling the hose out of the boom.

Downloaded from www.Manualslib.com manuals search engine

https://truckmanualshub.com/

14 Remove the rope from each end of the hose. Discard the hose.

15 Securely install a section of rope onto each end of the new hose assembly.

16 Install the new hose assembly into the boom by routing the hose over the roller at the pivot end of the boom. Using the rope, carefully pull the hose through the boom until each end is accessible.

17 Install both ends of the hose assembly onto the correct connection points. Torque to specification. Refer to Section 2, *Specifications*.

18 Repeat this procedure for the remaining hose to be replaced, beginning with step 13.

19 Install the fork level cylinder. Use a soft metal drift to install the cylinder pivot pins.

20 Install and securely tighten all pivot pin retaining fasteners.

21 Remove the lifting strap from the fork frame and fork level cylinder.

22 Install the covers onto the front and rear of the boom. Install and securely tighten the retaining fasteners.

Bleed the Fork Rotate Circuit:

23 Start the engine and warm to operating temperature.

24 Looking from the cab towards the front of the boom, fully rotate the lifting fork frame in a clockwise direction. Turn the engine off.

25 Disconnect the hydraulic hose with the straight connector end fitting from the cylinder manifold.

26 Securely install a 24 inch / 60 cm hose extension into the hose disconnected in step 25. Place the other end of the hose into a suitable container to collect hydraulic fluid.

27 Start the engine and activate the fork rotate counter clockwise function until a steady stream of oil without air bubbles is flowing from the bleeder hose.

Note: This removes residual air from the barrel end of the cylinder circuit.

28 Looking from the cab towards the front of the boom, fully rotate the lifting fork frame in a clockwise direction. Turn the engine off.

29 Remove the hose extension from the hose.

30 Install the hose with the straight connector end fitting onto the cylinder manifold. Torque to specification. Refer to Section 2, *Specifications*.

31 Disconnect the hydraulic hose with the 90° connector end fitting from the cylinder manifold.

32 Securely install a 24 inch / 60 cm hose extension into the hose disconnected in step 31. Place the other end of the hose into a container to collect hydraulic fluid.

33 Start the engine and activate the fork rotate clockwise function until a steady stream of oil without air bubbles is flowing from the bleeder hose.

Note: This removes residual air from the rod end of the cylinder circuit.

34 Looking from the cab towards the front of the boom, fully rotate the lifting fork frame in a counter clockwise direction. Turn the engine off.

35 Remove the hose extension from the hose.

36 Install the hose with the 90° connector end fitting onto the cylinder manifold. Torque to specification. Refer to Section 2, *Specifications*.

37 Remove the lifting strap from the fork frame.

Downloaded from www.Manualslib.com manuals search engine

https://truckmanualshub.com/

REV B

Operator's Compartment

2-1 Operator's Compartment

How to Remove the Operator's Compartment

The operator's compartment is used to activate machine functions while sitting in the operator's drivers seat.

Within the operator's compartment there is a transmission column shifter, steering selector, 4-way controller, accelerator pedal, brake pedal and a differential lock switch. All of these components are replaceable.

For further information or assistance, consult the Genie Industries Service Department.

WARNING Bodily injury hazard. This procedure requires specific repair skills, lifting equipment and a suitable workshop. Attempting this procedure without these skills and tools could result in death or serious injury and significant component damage. Dealer service is required.

GTH-644, GTH-842 and GTH-844:

1 Locate and open the battery access door.

2 Disconnect the battery from the machine.

WARNING Electrocution hazard. Contact with electrically charged circuits could result in death or serious injury. Remove all rings, watches and other jewelry.

3 Working inside the operator's compartment, remove the fasteners securing the 4-way controller (joystick) to the side console.

4 Carefully lift the joystick away from the side console assembly.

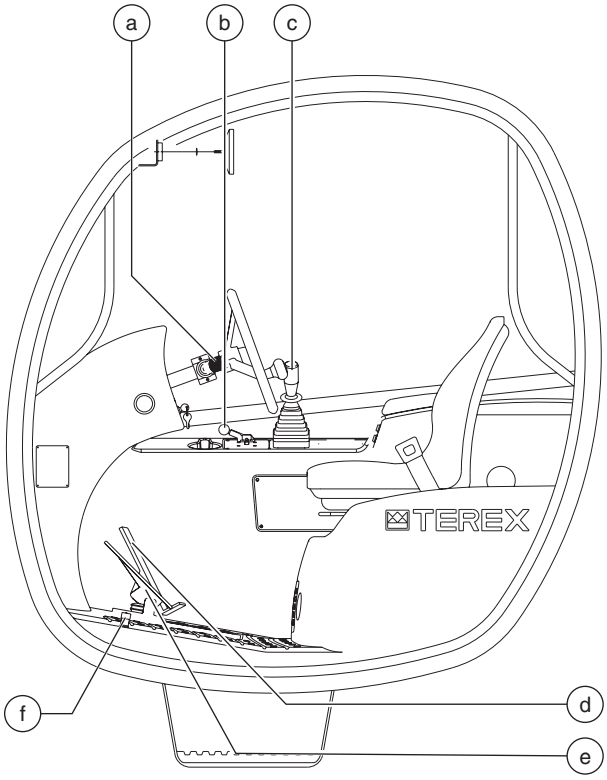

Illustration 1

a transmission column shifter
b steering selector
c 4-way controller (joystick)
d accelerator pedal
e brake pedal
f differential lock switch

5 Using Illustration 2 as a guide, tag, disconnect and plug the hoses from ports 1, 2, 3, 4 and P of the joystick. Cap the fittings.

WARNING Bodily injury hazard. Spraying hydraulic oil can penetrate and burn skin. Loosen hydraulic connections very slowly to allow the oil pressure to dissipate gradually. Do not allow oil to squirt or spray.

CAUTION Burn hazard. Contact with hot fluids or components may cause severe burns.

Downloaded from www.Manualslib.com manuals search engine

https://truckmanualshub.com/

OPERATOR'S COMPARTMENT REV B

6 Refering to Illustration 2, locate port T of the joystick. Tag, disconnect and plug the hose with the straight connector from the tee fitting at port T of the joystick. Cap the fitting.

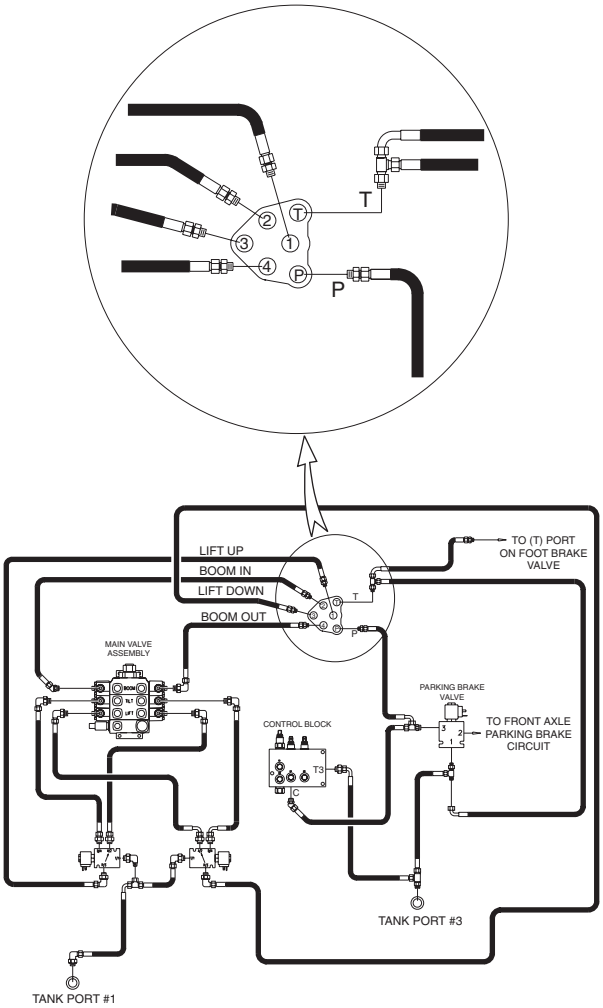

Illustration 2
4-way Controller Circuit

7 Remove the fasteners securing the steering selector to the side console. Set the fasteners aside.

8 Carefully lift the steering selector away from the side console assembly.

9 Tag, disconnect and plug the hoses at ports C1, C2 and R of the steering selector. Cap the fittings.

WARNING Bodily injury hazard. Spraying hydraulic oil can penetrate and burn skin. Loosen hydraulic connections very slowly to allow the oil pressure to dissipate gradually. Do not allow oil to squirt or spray.

CAUTION Burn hazard. Contact with hot fluids or components may cause severe burns.

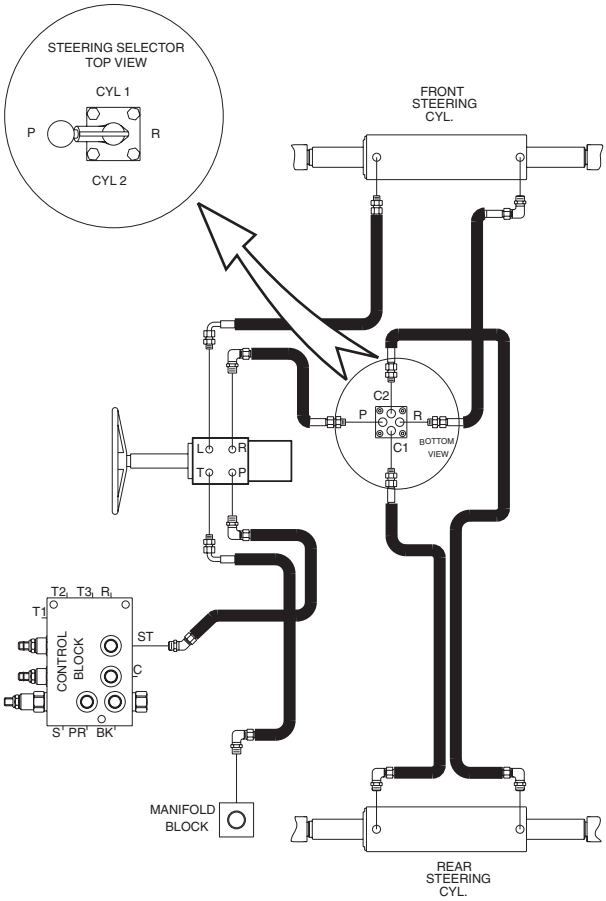

Illustration 3
Steer Circuit

Downloaded from www.Manualslib.com manuals search engine

https://truckmanualshub.com/

10 Remove the fasteners securing the steering orbitral inspection cover to the under side of the dash. Set the fasteners aside and remove the access panel.

11 Working through the orbitral inspection opening, tag, disconnect and plug the hoses at ports L, P and T of the steering orbitral. Cap the fittings.

WARNING Bodily injury hazard. Spraying hydraulic oil can penetrate and burn skin. Loosen hydraulic connections very slowly to allow the oil pressure to dissipate gradually. Do not allow oil to squirt or spray.

CAUTION Burn hazard. Contact with hot fluids or components may cause severe burns.

12 Remove the fasteners securing the pedal assembly to the floor. Set the fasteners aside.

13 Carefully lift the pedal assembly and place in a secure position, allowing access the underside of the pedal assembly.

14 Tag and disconnect the throttle cable from the accelerator pedal.

15 Tag and disconnect the wires at the clutch cut-off switch and the brake pressure switch. Refer to illustration 4.

NOTICE Component damage hazard. Wires can be damaged if they are kinked or pinched.

16 Remove the fasteners securing the foot-operated differential lock switch to the pedal assembly mount plate. Remove the switch. Set the fasteners aside.

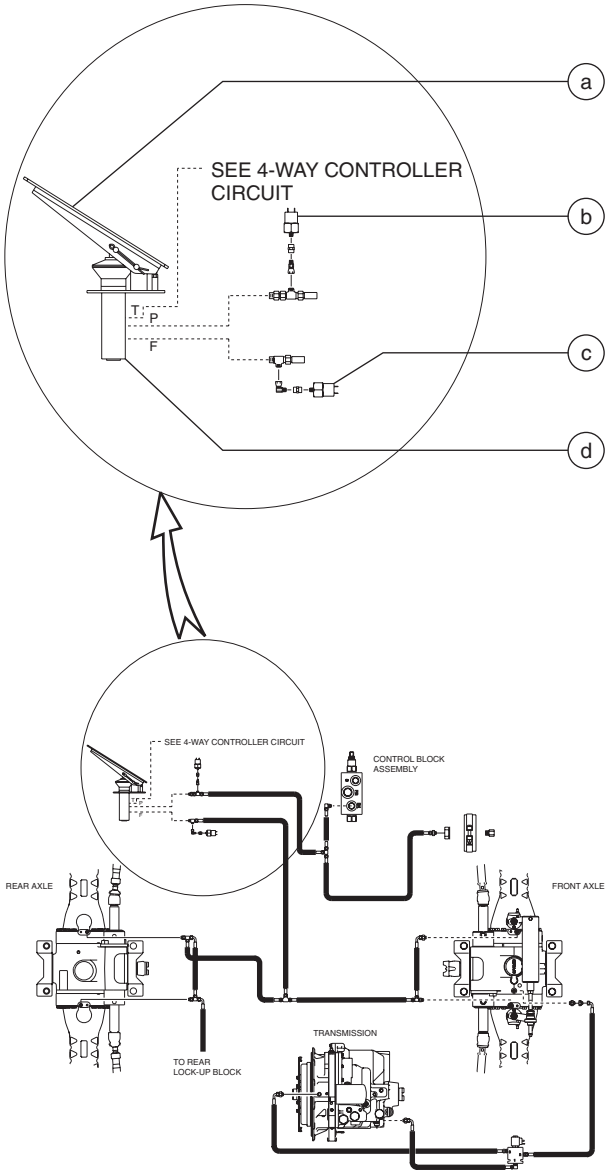

Illustration 4

Brake/Differential Lock Circuit

a brake pedal
b service brake pressure switch
c clutch cut-off pressure switch
d brake pedal actuator body

Downloaded from www.Manualslib.com manuals search engine

https://truckmanualshub.com/

OPERATOR'S COMPARTMENT REV B

17 Open the fuse block access panel located under the dash.

18 Tag and disconnect the blue wire of the differential lock switch from the 5 amp fuse in the lower right corner of the fuse block.

19 Tag, disconnect and plug the hoses at ports F and P of the brake pedal actuator body. Cap the fittings.

WARNING Bodily injury hazard. Spraying hydraulic oil can penetrate and burn skin. Loosen hydraulic connections very slowly to allow the oil pressure to dissipate gradually. Do not allow oil to squirt or spray.

CAUTION Burn hazard. Contact with hot fluids or components may cause severe burns.

20 Tag and disconnect the red wire from the 20 amp fuse in the top left corner of the fuse block.

21 Tag and disconnect the yellow wire of the rear lock-up switch from the white wire of the parking brake relay.

22 Remove the fasteners securing the steering column cover to the dash. Remove the covers. Set the fasteners aside.

23 Tag and disconnect the harness connector from the transmission control lever.

24 Remove the fasteners securing the dash panel to the operator's compartment. Carefully move the dash panel towards the front of the machine. Set the fasteners aside

25 Remove the grommet from the dash panel. Set the grommet aside and pull the connector of the transmission control harness through the opening.

NOTICE Component damage hazard. Wires can be damaged if they are kinked or pinched.

26 Tag and disconnect the connector with a red and black wire of the column mounted shifter harness, from the connector with two black wires of the instrument panel harness.

27 Tag and disconnect the white wire of the column mounted shifter wire harness from the parking brake relay.

28 Tag and disconnect the yellow wire from the parking brake relay.

29 Tag and disconnect the instrument panel harness from the main power harness.

Note: This harness connection is the quick disconnect screw type.

30 Tag and disconnect the red 8 gauge wires from one another.

31 Tag and disconnect the white, black and yellow wires from the sway control switch at the side console assembly.

NOTICE Component damage hazard. Wires can be damaged if they are kinked or pinched.

32 Remove the fasteners securing the seat to the operator's compartment. Remove the seat.

Downloaded from www.Manualslib.com manuals search engine

https://truckmanualshub.com/

33 Remove the engine air filter assembly from the machine.

34 Remove the fasteners securing the front and middle engine covers in place. Remove the covers. Set the fasteners aside.

35 Support and secure the operator's compartment to an adjustable table capable of supporting the weight and that will allow the operator's compartment to remain in an upright and stable position.

Note: Placing a wedge between the operator's compartment and the adjustable table may help keep the operator's compartment stable.

36 Remove the bottom fasteners securing the operator's compartment to the chassis.

37 Remove the top fasteners securing the operator's compartment to the chassis.

WARNING Crushing hazard. The operator's compartment will fall if not properly supported when the fasteners are removed from the machine.

38 Slowly move the operator's compartment away from the chassis while feeding all lose hoses, cables and wires through the opening of the operator's compartment.

NOTICE Component damage hazard. Hoses, cables and wires can be damaged if they are kinked or pinched.

Note: When installing the operator's compartment onto the chassis, torque the fasteners to specification.

Torque specification	
Operator's compartment mounting fasteners	750 ft-lbs 1017 Nm

GTH-636, GTH-1048 and GTH-1056:

1 Locate and open the battery access door.

2 Disconnect the battery from the machine.

WARNING Electrocution hazard. Contact with electrically charged circuits could result in death or serious injury. Remove all rings, watches and other jewelry.

3 Working inside the operator's compartment, remove the fasteners securing the 4-way controller (joystick) access cover to the side console.

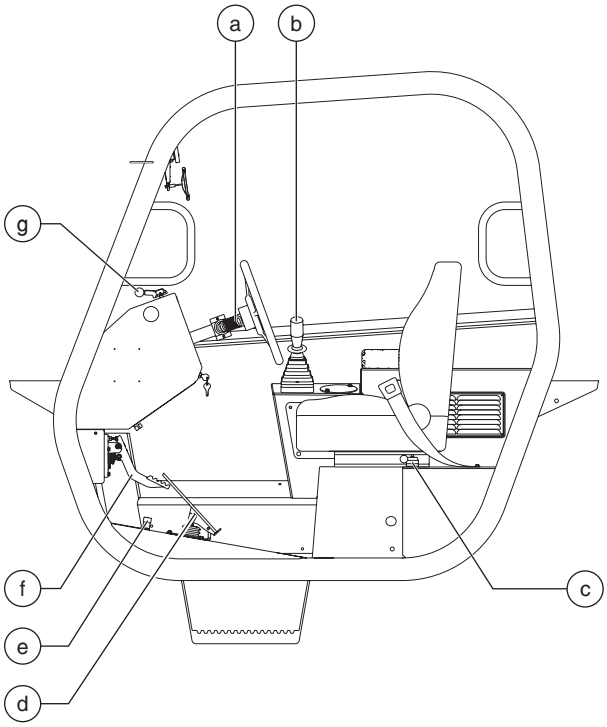

Illustration 1
Operator's Compartment

a transmission control lever
b 4-way controller (joystick)
c parking brake
d accelerator pedal
e differential lock switch
f brake pedal
g steering selector

Downloaded from www.Manualslib.com manuals search engine

https://truckmanualshub.com/

4 Tag, disconnect and plug the hoses from ports 1, 2, 3, 4 and P of the joystick. Cap the fittings. Refer to illustration 2.

WARNING Bodily injury hazard. Spraying hydraulic oil can penetrate and burn skin. Loosen hydraulic connections very slowly to allow the oil pressure to dissipate gradually. Do not allow oil to squirt or spray.

CAUTION Burn hazard. Contact with hot fluids or components may cause severe burns.

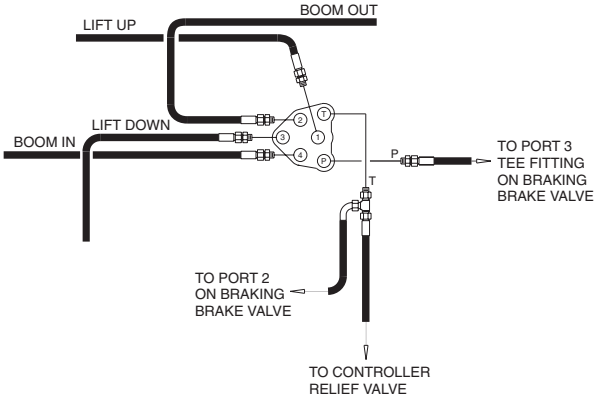

Illustration 2
Bottom View of 4-way Controller

5 Refering to Illustration 2, locate port T of the joystick. Tag, disconnect and plug the hose with the straight connector from the tee fitting at port T of the joystick. Cap the fitting.

6 Tag and disconnect all three red wires and the grey wire from the tilt relay, located inside the side console.

NOTICE Component damage hazard. Wires can be damaged if they are kinked or pinched.

7 Tag and disconnect the harness connector from the transmission control lever.

8 Remove the fasteners securing the left side dash panel in place.

9 Remove the grommet from the left side dash panel and set the grommet aside.

10 Carefully move the left dash panel away from the dash weldment. Pull the transmission control level harness connector through the opening. Set the panel aside in a secure position.

Downloaded from www.Manualslib.com manuals search engine

https://truckmanualshub.com/

11 Tag, disconnect and plug the hoses from ports C1, C2 and R of the steering selector. Cap the fittings. Refer to illustration 3.

⚠WARNING Bodily injury hazard. Spraying hydraulic oil can penetrate and burn skin. Loosen hydraulic connections very slowly to allow the oil pressure to dissipate gradually. Do not allow oil to squirt or spray.

⚠CAUTION Burn hazard. Contact with hot fluids or components may cause severe burns.

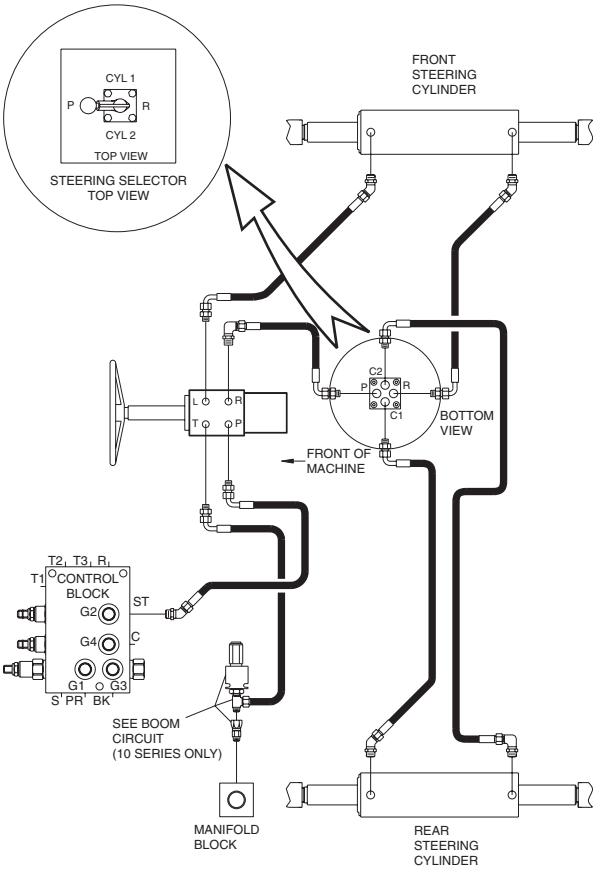

Illustration 3
Steer Circuit

12 Remove the fasteners securing the right side dash panel in place. Carefully move the dash panel away from the dash support. Place the dash panel in a secure position.

13 Tag and disconnect the dash panel harness from the main power harness.

Note: This harness connector is of the quick disconnect screw type.

14 Tag and disconnect the red 8 gauge wires from one another.

15 **GTH-1048 and GTH-1056:** Tag and disconnect the harness connector from the blink code enable switch.

16 **GTH-1048 and GTH-1056:** Tag and disconnect the yellow, brown, purple, orange and green wires from the left and right stabilizer control switches.

17 **GTH-1048 and GTH-1056:** Tag and disconnect the yellow wire from the sway control switch.

NOTICE Component damage hazard. Wires can be damaged if they are kinked or pinched.

18 Open the fuse block access panel located under the dash.

19 **GTH-1048 and GTH-1056:** Tag and disconnect the red wire from the 20 amp fuse in the upper left corner of the fuse block and the green wire from the 5 amp fuse in lower left corner of the fuse block.

20 Tag and disconnect the yellow wire of the rear lock-up switch from the white wire of the parking brake relay.

21 Tag, disconnect and plug the hoses from ports L, P and T of the steering orbitral. Cap the fittings. Refer to illustration 3.

Downloaded from www.Manualslib.com manuals search engine

https://truckmanualshub.com/

22 Remove the fasteners securing the brake actuator covers in place. Set the covers and fasteners aside.

23 Tag, disconnect and plug the hoses from ports A, P and T of the brake actuator. Cap the fittings. Refer to illustration 4.

WARNING Bodily injury hazard. Spraying hydraulic oil can penetrate and burn skin. Loosen hydraulic connections very slowly to allow the oil pressure to dissipate gradually. Do not allow oil to squirt or spray.

CAUTION Burn hazard. Contact with hot fluids or components may cause severe burns.

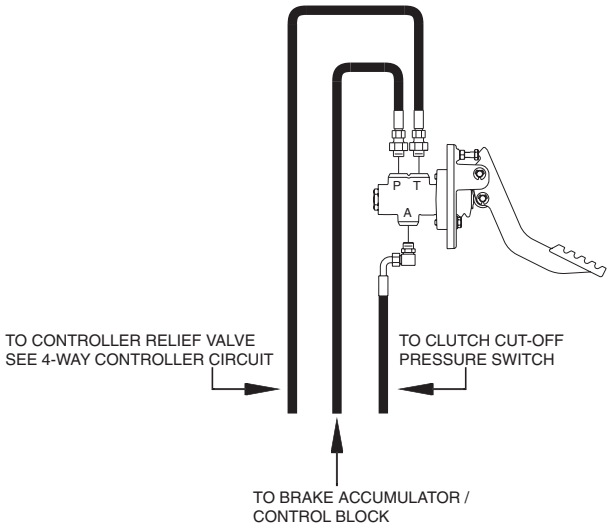

Illustration 4
Brake Actuator

24 Remove the fasteners securing the seat box cover in place. Set the cover and fasteners aside.

25 Working inside the seat box, tag, disconnect and plug the hoses from ports 1, 2 and 3 of the parking brake valve assembly. Cap the fittings. Refer to illustration 5.

WARNING Bodily injury hazard. Spraying hydraulic oil can penetrate and burn skin. Loosen hydraulic connections very slowly to allow the oil pressure to dissipate gradually. Do not allow oil to squirt or spray.

CAUTION Burn hazard. Contact with hot fluids or components may cause severe burns.

26 Tag and disconnect the orange and red wires from the parking brake pressure switch.

NOTICE Component damage hazard. Wires can be damaged if they are kinked or pinched.

27 Remove the fasteners securing the pedal assembly to the floor.

28 Carefully lift the pedal assembly and place in a secure position, allowing access to the underside of the accelerator pedal.

29 **GTH-636:** Tag and disconnect the throttle cable from the accelerator pedal.

30 **GTH-1048 and GTH-1056:** Tag and disconnect the wire harness connector from the accelerator pedal.

31 Remove the fasteners securing the foot operated differential lock switch in place and remove the switch.

32 **GTH-1048 and GTH-1056:** Tag and disconnected the blue wire of the differential lock switch from the 5 amp fuse in the lower right corner of the fuse block.

NOTICE Component damage hazard. Wires can be damaged if they are kinked or pinched.

Downloaded from www.Manualslib.com manuals search engine

https://truckmanualshub.com/

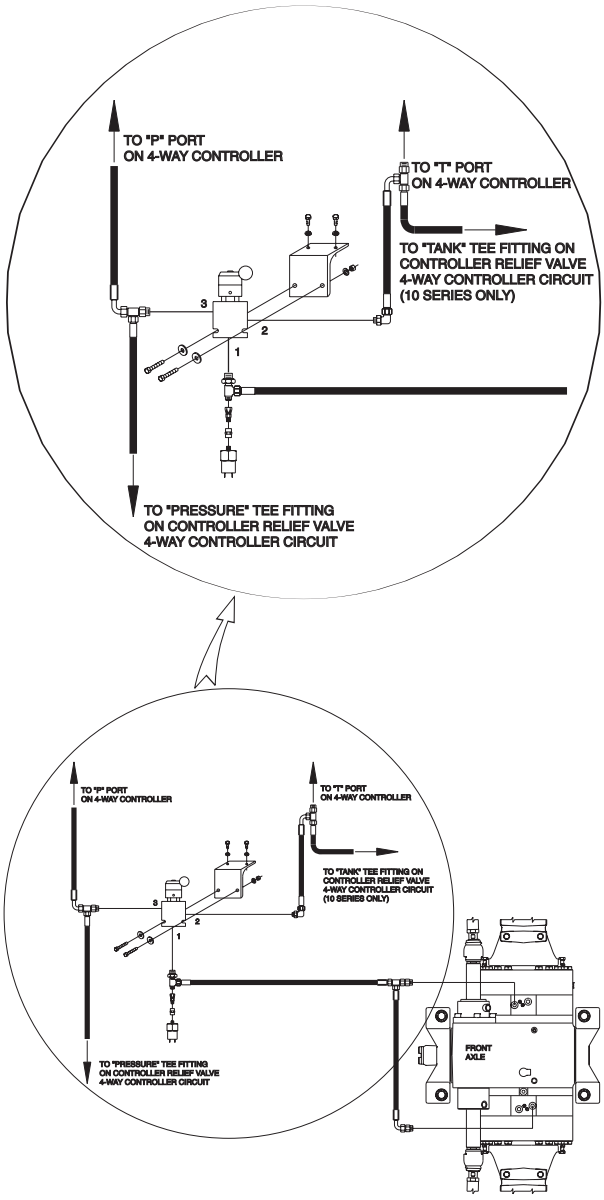

Illustration 5
Parking Brake Valve Assembly

33 Remove the fasteners securing the front and side hose covers in place. Remove the covers.

34 Remove the engine air filter assembly from the machine.

35 Remove the fasteners securing the top front cover and the top rear cover in place. Remove the covers.

36 Support and secure the operator's compartment to an adjustable table capable of supporting the weight and that will allow the operator's compartment to remain in an upright and stable position.

NOTICE Placing a wedge between the operator's compartment and the adjustable table may be required to keep the operator's compartment stable.

37 Remove the bottom fasteners securing the operator's compartment to the chassis.

38 Remove the top fasteners securing the operator's compartment to the chassis.

WARNING Crushing hazard. The operator's compartment will fall if not properly supported when the fasteners are removed from the machine.

39 Slowly move the operator's compartment away from the chassis while feeding all loose hoses, cables and wires through the opening of the operator's compartment.

NOTICE Component damage hazard. Hoses, cables and wires can be damaged if they are kinked or pinched.

Note: When installing the operator's compartment onto the chassis, torque the fasteners to specification. See 2-1, *How to Remove the Operator's Compartment*.

Downloaded from www.Manualslib.com manuals search engine

https://truckmanualshub.com/

2-2
Machine Controls

How to Remove the Steering Column and Orbitral

GTH-644, GTH-842 and GTH-844:

1 Locate and open the battery access door.

2 Disconnect the battery from the machine.

WARNING Electrocution hazard. Contact with electrically charged circuits could result in death or serious injury. Remove all rings, watches and other jewelry.

3 Remove the fasteners securing the steering orbitral inspection cover in place. Remove the cover.

4 Working through the orbitral inspection opening, tag, disconnect and plug the hoses at ports L, P, R and T of the steering orbitral. Cap the fittings.

WARNING Bodily injury hazard. Spraying hydraulic oil can penetrate and burn skin. Loosen hydraulic connections very slowly to allow the oil pressure to dissipate gradually. Do not allow oil to squirt or spray.

CAUTION Burn hazard. Contact with hot fluids or components may cause severe burns.

5 Remove the horn button from the steering wheel. Remove the nut securing the steering wheel to the column.

6 Separate the steering wheel from the steering column and set it aside.

7 Remove the fasteners securing the steering column cover to the dash. Remove the covers.

8 Tag and disconnect the Deutsch connector from the transmission control lever.

9 Tag and disconnect the black wire on the steering column, from the tan wire on the instrument panel harness.

10 Remove the fasteners securing the transmission control lever to the column. Carefully separate the lever from the column.

11 Remove the fasteners securing the dash panel to the operator's compartment.

12 Remove the grommet from the dash panel and set the grommet aside.

13 Carefully move the dash panel towards the front of the machine and pull the Deutsch connector through the panel hole. Place the dash panel in a secure position.

NOTICE Component damage hazard. Wires can be damaged if they are kinked or pinched.

14 Remove the fasteners securing the steering column to the steering orbitral. Carefully separate the components and remove them from the dash weldment.

Note: Assistance may be needed to perform this step.

Downloaded from www.Manualslib.com manuals search engine

https://truckmanualshub.com/

GTH-636, GTH-1048 and GTH-1056:

1 Locate and open the battery access door.

2 Disconnect the battery from the machine.

WARNING Electrocution hazard. Contact with electrically charged circuits could result in death or serious injury. Remove all rings, watches and other jewelry.

3 Remove the horn button from the steering wheel. Remove the nut securing the steering wheel to the column.

4 Separate the steering wheel from the steering column and set it aside.

5 Tag and disconnect the Deutsch connector from the transmission control lever.

6 Remove the fasteners securing the transmission control lever to the column. Carefully separate the lever from the column.

7 Remove the fasteners securing the left and right dash panels in place.

8 Remove the grommet from the left side dash panel and set the grommet aside.

9 Carefully move the left dash panel away from the dash weldment. Pull the Deutsch connector through the panel hole and place the dash panel in a secure position.

10 Carefully move the right dash panel away from the dash weldment and place in a secure position.

11 Tag and disconnect the black wire on the steering column, from the tan wire on the instrument panel harness.

12 Tag, disconnect and plug the hoses at ports L, P, R and T of the steering orbitral. Cap the fittings.

WARNING Bodily injury hazard. Spraying hydraulic oil can penetrate and burn skin. Loosen hydraulic connections very slowly to allow the oil pressure to dissipate gradually. Do not allow oil to squirt or spray.

CAUTION Burn hazard. Contact with hot fluids or components may cause severe burns.

13 Remove the fasteners securing the steering column to the steering orbitral. Carefully separate the components and remove them from the dash weldment.

Note: Assistance may be needed to perform this step.

Downloaded from www.Manualslib.com manuals search engine

https://truckmanualshub.com/

How to Remove the Steering Selector

GTH-644, GTH-842 and GTH-844:

1 Locate and open the battery access door.

2 Disconnect the battery from the machine.

WARNING Electrocution hazard. Contact with electrically charged circuits could result in death or serious injury. Remove all rings, watches and other jewelry.

3 Remove the fasteners securing the side console cover in place. Remove the cover.

4 Tag, disconnect and plug the hoses from ports C1, C2, P and R of the steering selector. Cap the fittings.

WARNING Bodily injury hazard. Spraying hydraulic oil can penetrate and burn skin. Loosen hydraulic connections very slowly to allow the oil pressure to dissipate gradually. Do not allow oil to squirt or spray.

CAUTION Burn hazard. Contact with hot fluids or components may cause severe burns.

5 Remove the fasteners securing the steering selector in place. Remove the steering selector.

GTH-636, GTH-1048 and GTH-1056:

1 Locate and open the battery access door.

2 Disconnect the battery from the machine.

WARNING Electrocution hazard. Contact with electrically charged circuits could result in death or serious injury. Remove all rings, watches and other jewelry.

3 Tag and disconnect the Deutsch connector from the transmission control lever.

4 Remove the fasteners securing the left side dash panel in place.

5 Remove the grommet from the left side dash panel and set the grommet aside.

6 Carefully move the left side dash panel away from the dash weldment. Pull the Deutsch connector through the panel hole and place the dash panel in a secure position.

NOTICE Component damage hazard. Wires can be damaged if they are kinked or pinched.

7 Tag, disconnect and plug the hoses from ports C1, C2, P and R of the steering selector. Cap the fittings.

WARNING Bodily injury hazard. Spraying hydraulic oil can penetrate and burn skin. Loosen hydraulic connections very slowly to allow the oil pressure to dissipate gradually. Do not allow oil to squirt or spray.

CAUTION Burn hazard. Contact with hot fluids or components may cause severe burns.

8 Remove the fasteners securing the steering selector in place. Remove the steering selector.

Downloaded from www.Manualslib.com manuals search engine

https://truckmanualshub.com/

How to Remove the 4-way Controller (joystick)

1 Locate and open the battery access door.

2 Disconnect the battery from the machine.

WARNING Electrocution hazard. Contact with electrically charged circuits could result in death or serious injury. Remove all rings, watches and other jewelry.

3 Remove the fasteners securing the 4-way controller (joystick) access cover to the side console. Set the cover to the side.

4 Tag, disconnect and plug the hoses from ports 1, 2, 3, 4, P and T of the joystick. Cap the fittings.

5 Tag and disconnect all three red wires and the grey wire from the tilt relay.

6 Remove the fasteners securing the joystick to the side console.

7 Remove the joystick from the side console.

How to Remove the Accelerator Pedal

1 Locate and open the battery access door.

2 Disconnect the battery from the machine.

WARNING Electrocution hazard. Contact with electrically charged circuits could result in death or serious injury. Remove all rings, watches and other jewelry.

3 Remove the fasteners securing the pedal assembly to the floor.

4 Carefully lift the pedal assembly and place in a secure position to allow access the underside of the accelerator pedal.

5 **GTH-1048 and GTH-1056:** Tag and disconnect the Deutsch connector from accelerator pedal. **All other models:** Tag and disconnect the throttle cable from accelerator pedal.

6 Remove the fasteners securing the accelerator pedal in place.

7 Set the fasteners aside and remove the accelerator pedal.

Downloaded from www.Manualslib.com manuals search engine

https://truckmanualshub.com/

How to Remove the Brake Actuator Pedal

GTH-644, GTH-842 and GTH-844:

1 Locate and open the battery access door.

2 Disconnect the battery from the machine.

WARNING Electrocution hazard. Contact with electrically charged circuits could result in death or serious injury. Remove all rings, watches and other jewelry.

3 Remove the fasteners securing the pedal assembly to the floor.

4 Carefully lift the pedal assembly and place in a secure position, to allow access to the underside of the brake pedal.

5 Tag and disconnect the wires at the clutch cut-off switch and the brake pressure switch.

6 Tag, disconnect and plug the hoses at ports F, P and T of the brake pedal actuator body. Cap the fittings.

WARNING Bodily injury hazard. Spraying hydraulic oil can penetrate and burn skin. Loosen hydraulic connections very slowly to allow the oil pressure to dissipate gradually. Do not allow oil to squirt or spray.

CAUTION Burn hazard. Contact with hot fluids or components may cause severe burns.

7 Remove the fasteners securing the brake actuator pedal in place. Remove the brake actuator pedal.

GTH-632, GTH-1048 and GTH-1056:

1 Locate and open the battery access door.

2 Disconnect the battery from the machine.

WARNING Electrocution hazard. Contact with electrically charged circuits could result in death or serious injury. Remove all rings, watches and other jewelry.

3 Remove the fasteners securing the brake actuator covers in place. Set the covers to the side.

4 Tag, disconnect and plug the hoses from ports A, P and T of the brake actuator. Cap the fittings.

WARNING Bodily injury hazard. Spraying hydraulic oil can penetrate and burn skin. Loosen hydraulic connections very slowly to allow the oil pressure to dissipate gradually. Do not allow oil to squirt or spray.

CAUTION Burn hazard. Contact with hot fluids or components may cause severe burns.

5 Remove the fasteners securing the brake actuator pedal in place. Remove the brake actuator pedal.

Downloaded from www.Manualslib.com manuals search engine

https://truckmanualshub.com/

How to Remove the Parking Brake Valve Assembly

GTH-636, GTH-1048 and GTH-1056

1 Locate and open the battery access door.

2 Disconnect the battery from the machine.

⚠WARNING Electrocution hazard. Contact with electrically charged circuits could result in death or serious injury. Remove all rings, watches and other jewelry.

3 Remove the fasteners securing the seat box cover in place. Set the cover to the side.

4 Tag, disconnect and plug the hoses from ports 1, 2 and 3 of the parking brake valve assembly, located inside the seat box. Cap the fittings.

⚠WARNING Bodily injury hazard. Spraying hydraulic oil can penetrate and burn skin. Loosen hydraulic connections very slowly to allow the oil pressure to dissipate gradually. Do not allow oil to squirt or spray.

⚠CAUTION Burn hazard. Contact with hot fluids or components may cause severe burns.

5 Tag and disconnect the orange and red wires from the parking brake pressure switch.

6 Remove the fasteners and the bracket securing the parking brake valve assembly in place. Remove the parking brake valve assembly.

Downloaded from www.Manualslib.com manuals search engine

https://truckmanualshub.com/

Fuel and Hydraulic Tanks

REV C

3-1
Fuel Tank

How to Remove the Fuel Tank

DANGER Explosion and fire hazard. Engine fuels are combustible. Remove the fuel tank in an open, well-ventilated area away from heaters, sparks, flames and lighted tobacco. Always have an approved fire extinguisher within easy reach.

DANGER Explosion and fire hazard. Never drain or store fuel in an open container due to the possibility of fire.

DANGER Explosion and fire hazard. When transferring fuel, connect a grounding wire between the machine and pump or container.

1 Disconnect the battery from the machine.

WARNING Electrocution hazard. Contact with electrically charged circuits could result in death or serious injury. Remove all rings, watches and other jewelry.

2 Remove the engine air filter assembly from the machine.

3 Remove the front portion of the engine enclosure assembly from the machine.

4 Remove the fuel filler cap from the tank.

5 Using an approved hand-operated pump, drain the fuel tank into a container of suitable capacity. Refer to Section 2, *Specifications*.

DANGER Explosion and fire hazard. When transferring fuel, connect a grounding wire between the machine and pump or container.

Note: Be sure to only use a hand operated pump suitable for use with gasoline and/or diesel fuel.

6 Tag, disconnect and plug the fuel supply hose.

7 Remove the fuel tank hold-down strap retaining fasteners. Remove the straps from the fuel tank.

8 Support and secure the fuel tank to an appropriate lifting device.

9 Remove the fuel tank from the machine.

NOTICE Component damage hazard. The fuel tank is plastic and may become damaged if allowed to fall.

Note: Clean the fuel tank and inspect for cracks and other damage before installing.

Downloaded from www.Manualslib.com manuals search engine

https://truckmanualshub.com/

3-2 Hydraulic Tank

The primary functions of the hydraulic tank are to cool, clean and deaerate the hydraulic fluid during operation. It has an internal return line filter with a filter condition indicator.

How to Remove the Hydraulic Tank

NOTICE Component damage hazard. The work area and surfaces where this procedure will be performed must be clean and free of debris that could get into the hydraulic system.

Note: When removing a hose assembly or fitting, the O-ring on the fitting and/or hose end must be replaced and then torqued to specification during installation. Refer to Section 2, *Hydraulic Hose and Fitting Torque Specifications.*

1 Lower the boom to the stowed position.

2 Raise the machine 15 inches / 40 cm.

3 Using a lift with a 1 ton / 1 kg minimum capacity, remove the counterweight from under the hydraulic tank at the pivot end of the machine.

⚠DANGER Tip over hazard. The counterweight is critical to machine stability. If the counterweight is not installed during re-assembly of the machine, the machine will become unstable and tip over, resulting in death or serious injury. Do not operate the machine without the counterweight installed onto the machine.

⚠WARNING Crushing hazard. The counterweight is extremely heavy. Keep your body clear when removing the counterweight.

4 Remove oil cap from top of hydraulic tank.

5 Using an approved hand-operated pump, drain the hydraulic tank into a suitable container. Refer to Section 2, *Specifications*.

⚠CAUTION Bodily injury hazard. Beware of hot oil. Contact with hot oil may cause severe burns.

6 Remove the fasteners securing the access covers at the rear of the machine. Remove the access covers.

7 Tag, disconnect and plug the hoses at the hydraulic tank. Cap the fittings.

⚠WARNING Bodily injury hazard. Spraying hydraulic oil can penetrate and burn skin. Loosen hydraulic connections very slowly to allow the oil pressure to dissipate gradually. Do not allow oil to squirt or spray.

8 Attach a lifting strap from an overhead crane to the top of the hydraulic tank. Support the tank. Do not apply any lifting pressure.

9 Remove the tank mounting fasteners. Lower the tank through the chassis to remove the tank from the machine.

⚠WARNING Crushing hazard. The hydraulic tank could become unbalanced and fall if not properly supported when removed from the machine.

Downloaded from www.Manualslib.com manuals search engine

https://truckmanualshub.com/

Engines

REV B

4-1 Engines

How to Repair the Deutz BF4 2012 Engine

Repair procedures and additional engine information is available in the *Deutz 2012 Engine Operation Manual* (Deutz part number 0297 9912) and the *Deutz 2012 Engine Workshop Manual* (Deutz part number 0312 0361)

Deutz 2012 Operation Manual Genie part number	108746
Deutz 2012 Workshop Manual Genie part number	108748

How to Repair the Perkins 1104C Engine

Repair procedures and additional engine information is available in the *Perkins 1104 Operation and Maintenance Manual* (Perkins part number SEBU7833-01) and the *Perkins 1104 Service Manual* (Perkins part number RENR9401).

Perkins 1104 Operation and Maintenance Manual Genie part number	117765
Perkins 1104 Service Manual Genie part number	117764

How to Repair the John Deere 4045T Engine

Repair procedures and additional engine information is available in the *John Deere 4045T270 Operator's Manual* (John Deere part number OMRG25204) and the *John Deere 4045T275 Operator's Manual* (John Deere part number OMRG33324) and the *John Deere 4045T Workshop Manual* (John Deere part number CTM104) and the *John Deere 4045T Alternator Manual* (John Deere part number CTM77) and the *John Deere 4045T Fuel Systems Manual* (John Deere part number CTM207).

John Deere 4045T270 Operator's Manual Genie part number	97492
John Deere 4045T275 Operator's Manual Genie part number	108444
John Deere 4045T Workshop Manual Genie part number	108443
John Deere 4045T Alternator Manual Genie part number	108502
John Deere 4045T Fuel Systems Manual Genie part number	108503

Downloaded from www.Manualslib.com manuals search engine

https://truckmanualshub.com/

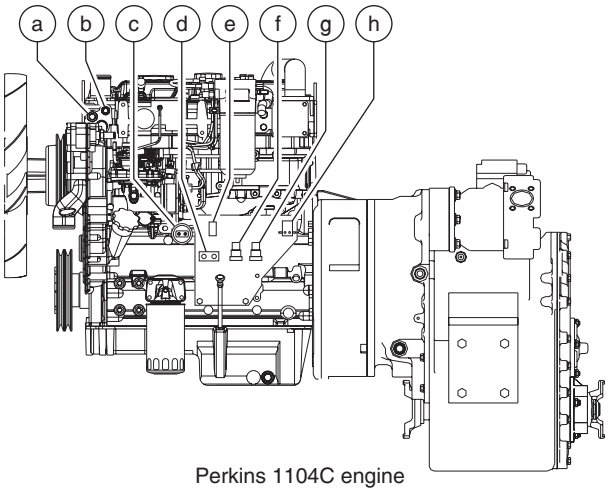

Perkins 1104C engine

a coolant temperature sender
b injection pump advance sender
c oil pressure sender
d cold start circuit breaker
e fuel lift pump fuse
e cold start relay
g lift pump relay
h starter solenoid

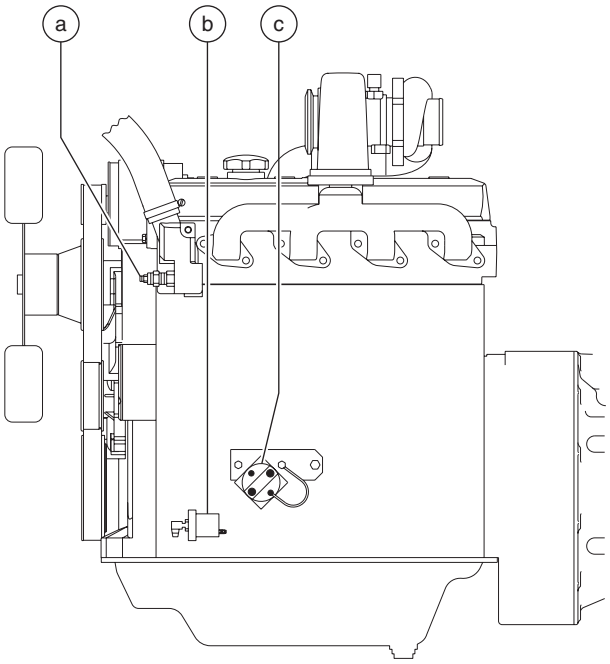

John Deere 4045T engine

a engine coolant temperature sender
b engine oil pressure sender
c starter relay

4-2 Engine Fault Codes - John Deere 4045TF275 Engine

How to Retrieve Engine Fault Codes

When an engine malfunction is detected by the engine Electronic Control Module (ECM), a fault code is recorded and the blink code light on the dashboard in the operator's compartment will turn on.

To learn the specifics of and how to use the fault codes, refer to Section 5, *Troubleshooting*.

Downloaded from www.Manualslib.com manuals search engine

https://truckmanualshub.com/

Transmission

REV C

5-1 Transmission

How to Remove the Transmission

WARNING Bodily injury hazard. This procedure requires specific repair skills, lifting equipment and a suitable workshop. Attempting this procedure without these skills and tools could result in death or serious injury and significant component damage. Dealer service is strongly recommended.

Note: When removing a hose assembly or fitting, the O-ring on the fitting and/or hose end must be replaced and then torqued to specification during installation. Refer to Section 2, *Hydraulic Hose and Fitting Torque Specifications.*

Note: Perform this procedure with the engine off and cool.

1 Disconnect the battery from the machine.

WARNING Electrocution hazard. Contact with electrically charged circuits could result in death or serious injury. Remove all rings, watches and other jewelry.

2 Chock the tires. Remove the driveshafts from the machine.

3 Remove the drain plug from the radiator and completely drain the radiator into a container of suitable capacity. Refer to Section 2, *Specifications*.

CAUTION Burn hazard. Contact with hot engine components or fluids may cause severe burns.

4 Tag, disconnect and plug the water lines at the heat exchanger. Cap the fittings.

Note: Do not disconnect the transmission cooler hoses from the heat exchanger.

5 Tag, disconnect and plug the hydraulic line at the top of the transmission. Cap the fitting.

WARNING Bodily injury hazard. Spraying hydraulic oil can penetrate and burn skin. Loosen hydraulic connections very slowly to allow the oil pressure to dissipate gradually. Do not allow oil to squirt or spray.

6 Tag and disconnect the wire harness from the transmission.

7 Support and secure the rear of the engine to a lifting device of suitable capacity. Do not apply any lifting pressure.

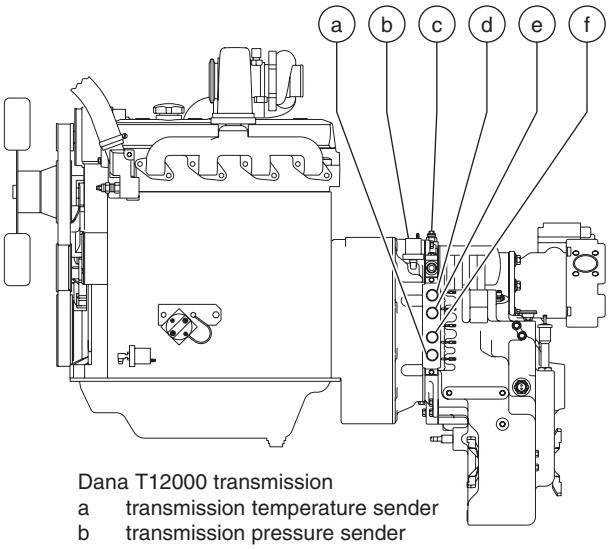

Dana T12000 transmission
- a transmission temperature sender
- b transmission pressure sender
- c transmission shift coil 'B' (drive reverse function)
- d transmission shift coil 'A' (drive forward function)
- e transmission shift coil 'D' (gear reduction)
- f transmission shift coil 'E' (gear reduction)

Note: refer to electrical schematic for additional transmission shift coil information.

Downloaded from www.Manualslib.com manuals search engine

https://truckmanualshub.com/

8 Attach a lifting strap from an overhead crane or similar lifting device to the transmission for support. Do not apply any lifting pressure.

9 Remove the fasteners securing the transmission to the chassis.

10 Remove the 2 inch / 5 cm access plug from the underside of the engine bellhousing.

11 Working through the access opening under the bellhousing, remove the fasteners securing the transmission drive plate to the engine flywheel.

Note: During reassembly, torque these fasteners to 26-29 ft-lbs / 36-39 Nm.

12 Remove the fasteners securing the transmission to the engine. Remove the transmission from the machine.

⚠WARNING Crushing hazard. The transmission will fall if not properly supported when the fasteners are removed.

Note: During reassembly, torque these fasteners to 60 ft-lbs / 81 Nm.

How to Repair the Transmission

Repair procedures and additional transmission information is available in the *Dana T12000 Transmission Maintenance and Repair Manual* (Dana part number 0109) and the *Dana T20000 Maintenance Manual* (Dana part number 0202).

Dana T12000 Transmission Manual	
Genie part number	97489
Dana T20000 Maintenance Manual	
Genie part number	115025

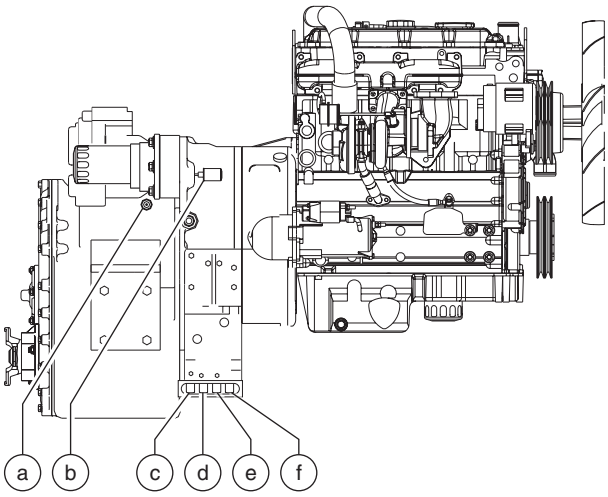

Dana T20000 transmission
- a transmission temperature sender (located opposite side of trans)
- b transmission pressure sender
- c transmission shift coil 'F' (drive forward function) (blue wire)
- d transmission shift coil 'R' (drive reverse function) (brown wire)
- e transmission shift coil '2' (gear reduction) (green wire)
- f transmission shift coil '1' (gear reduction) (yellow wire)

Note: refer to electrical schematic for additional transmission shift coil information.

Downloaded from www.Manualslib.com manuals search engine

https://truckmanualshub.com/

Hydraulic Pump

REV B

6-1
Hydraulic Pump

How to Test the Function Pump

Note: When removing a hose assembly or fitting, the fitting and/or hose end must be torqued to specification during installation. Refer to Section 2, *Hydraulic Hose and Fitting Torque Specifications.*

1 Tag, disconnect and plug the high pressure hydraulic hose from the main valve assembly. Cap the fitting on the main valve.

WARNING Bodily injury hazard. Spraying hydraulic oil can penetrate and burn skin. Loosen hydraulic connections very slowly to allow the oil pressure to dissipate gradually. Do not allow oil to squirt or spray.

Note: The high pressure hose is the smaller of the two hoses.

2 Connect a 0 to 5000 psi / 0 to 350 bar pressure gauge to the high pressure hose disconnected in step 1.

3 Hold the manual fuel shut-off lever on the engine in the closed position.

4 Observe the pressure gauge while cranking the engine.

Result:
GTH-636: If the pressure gauge reads 2800 psi / 193 bar, immediately stop. The pump is good.
GTH-644, GTH-842, GTH-844 and GTH-1056: If the pressure gauge reads 3000 psi / 207 bar, immediately stop. The pump is good.
GTH-1048: If the pressure gauge reads 3500 psi / 241 bar, immediately stop. The pump is good.

Result:
GTH-636: If the pressure fails to reach 2800 psi / 193 bar, the pump or pump coupling is bad and will need to be serviced or replaced.
GTH-644, GTH-842, GTH-844 and GTH-1056: If the pressure fails to reach 3000 psi / 207 bar, the pump or pump coupling is bad and will need to be serviced or replaced.
GTH-1048: If the pressure fails to reach 3500 psi / 241 bar, the pump or pump coupling is bad and will need to be serviced or replaced.

NOTICE Component damage hazard. There is no relief valve in the hydraulic pump and the pump can be damaged if the pressure is allowed to exceed specification. When testing the pump, crank the engine in one second intervals until the correct pressure is confirmed. Do not over-pressurize the pump.

5 Remove the pressure gauge and install the high pressure hose onto the pump. Torque to specification. Refer to Section 2, *Specifications*.

WARNING Bodily injury hazard. Spraying hydraulic oil can penetrate and burn skin. Loosen hydraulic connections very slowly to allow the oil pressure to dissipate gradually. Do not allow oil to squirt or spray.

Downloaded from www.Manualslib.com manuals search engine

https://truckmanualshub.com/

How to Adjust the Function Pump Pressure

1 Install a 0 to 3500 psi / 0 to 250 bar pressure gauge into test port 1 at the side of the hydraulic tank.

Note: **GTH-636, GTH-644, GTH-842 and GTH-844:** There are four test ports at the hydraulic tank. Test port 1 is closest to the tank; test port 4 is farthest from the tank.

Note: **GTH-1048 and GTH-1056:** There are six test ports at the hydraulic tank. Test port 1 is closest to the tank; test port 6 is farthest from the tank.

2 Start the engine. Allow the engine to idle after warming the engine to operating temperature.

3 Working at the hydraulic pump, loosen the set screw securing the lower of the two hex sockets of the DFR valve on the pump.

Note: The hydraulic pump is located on the top of the transmission at the cab side.

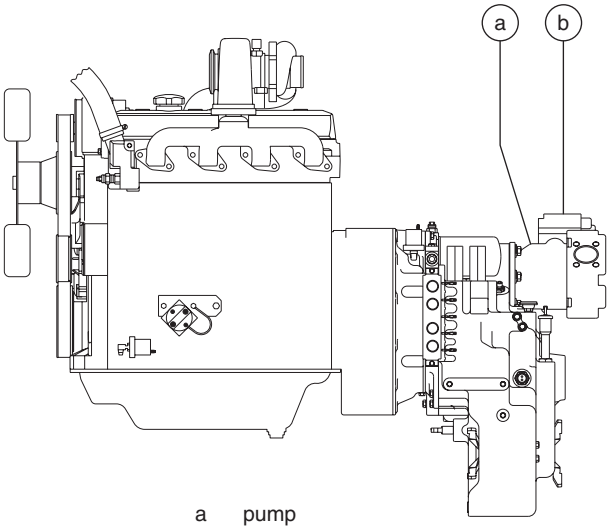

a pump
b DFR valve

4 Fully press and release the brake pedal 3 times, then observe the reading on the pressure gauge. Note the pressure. Refer to Section 2, *Specifications*.

Result: The pressure meets specification. Securely tighten the set screw. Proceed to step 6.

Result: The pressure fails to reach specification. Proceed to step 5.

5 Adjust the lower hex socket of the DFR valve. Turn it clockwise to increase the pressure or counterclockwise to decrease the pressure. Repeat this procedure beginning with step 4.

6 Turn the machine off. Remove the pressure gauge.

WARNING Bodily injury hazard. Spraying hydraulic oil can penetrate and burn skin. Loosen hydraulic connections very slowly to allow the oil pressure to dissipate gradually. Do not allow oil to squirt or spray.

Downloaded from www.Manualslib.com manuals search engine

https://truckmanualshub.com/

How to Remove the Function Pump

WARNING Bodily injury hazard. This procedure requires specific repair skills, lifting equipment and a suitable workshop. Attempting this procedure without these skills and tools could result in death or serious injury and significant component damage. Dealer service is strongly recommended.

Note: When removing a hose assembly or fitting, the O-ring on the fitting and/or hose end must be replaced and then torqued to specification during installation. Refer to Section 2, *Hydraulic Hose and Fitting Torque Specifications.*

Note: Perform this procedure with the engine off and cool.

1 Disconnect the battery from the machine.

WARNING Electrocution hazard. Contact with electrically charged circuits could result in death or serious injury. Remove all rings, watches and other jewelry.

2 Remove the oil cap from the top of the hydraulic tank.

3 Using an approved hand-operated pump, drain the hydraulic tank into a suitable container. Refer to Section 2, *Specifications*.

CAUTION Bodily injury hazard. Beware of hot oil. Contact with hot oil may cause severe burns.

4 Remove the engine air filter assembly from the machine.

5 Remove the front portion of the engine enclosure assembly from the machine.

6 Tag and disconnect the wire harness from the pump.

7 Tag and disconnect the case drain hose at the top of the pump. Cap the fitting on the pump.

8 Tag, disconnect and plug the large hydraulic supply line at the pump. Cap the fitting on the pump.

9 Tag, disconnect and plug the high pressure hose at the pump. Cap the fitting on the pump.

WARNING Bodily injury hazard. Spraying hydraulic oil can penetrate and burn skin. Loosen hydraulic connections very slowly to allow the oil pressure to dissipate gradually. Do not allow oil to squirt or spray.

10 Remove the fasteners securing the heat exchanger from the chassis bulkhead and let the heat exchanger hang down.

CAUTION Burn hazard. Contact with hot engine components may cause severe burns.

11 Remove the fasteners securing the pump to the transmission. Remove the pump from the machine.

Downloaded from www.Manualslib.com manuals search engine

https://truckmanualshub.com/

How to Install the Function Pump

1 Carefully install the hydraulic pump onto the transmission. Install the fasteners and tighten to finger tight.

2 Torque the fasteners evenly to 85 ft-lbs / 115 Nm.

3 Install the smaller high pressure hose onto the pump outlet. Torque the fasteners to 27-37 ft-lbs / 37-50 Nm.

4 Install the larger low pressure hose onto the pump outlet. Install the hose retaining rings and fasteners. Torque the fasteners to 55-66 ft-lbs / 74-90 Nm.

5 Working at the case drain at the top of the pump, fill the pump with hydraulic fluid until the fluid is at the top of the case drain fitting.

6 Install the case drain hose onto the pump and torque to specification. Refer to Section 2, *Specifications*.

7 Securely install the wire harness onto the pump.

8 Install the heat exchanger onto the chassis bulkhead. Install and securely tighten the fasteners. Do not over tighten.

9 Check the level of the hydraulic fluid in the hydraulic tank. Add fluid if needed.

10 Working inside the cab, press and hold the PUMP OFF button.

Note: The PUMP OFF button is located under the steering wheel.

11 Start the engine.

12 Release the PUMP OFF button for two seconds.

13 Press and hold the PUMP OFF button for one second, then release.

14 Repeat step 13.

15 Turn the machine off.

Downloaded from www.Manualslib.com manuals search engine

https://truckmanualshub.com/

Manifolds

REV C

7-1
Main Valve Manifold Components

The main valve manifold is located on the front of the hydraulic tank at the tailpipe side of the machine.

Index No.	Description	Schematic Item	Function	Torque
1	Directional valve, pilot operated	AA	Boom extend/retract	88 in-lbs / 10 Nm
2	Directional valve, pilot operated	AB	Lifting fork level	88 in-lbs / 10 Nm
3	Directional valve, pilot operated	AC	Boom up/down	88 in-lbs / 10 Nm
4	Relief valve, 3650 psi / 251 bar	AD	Manifold relief	73 ft-lbs / 100 Nm

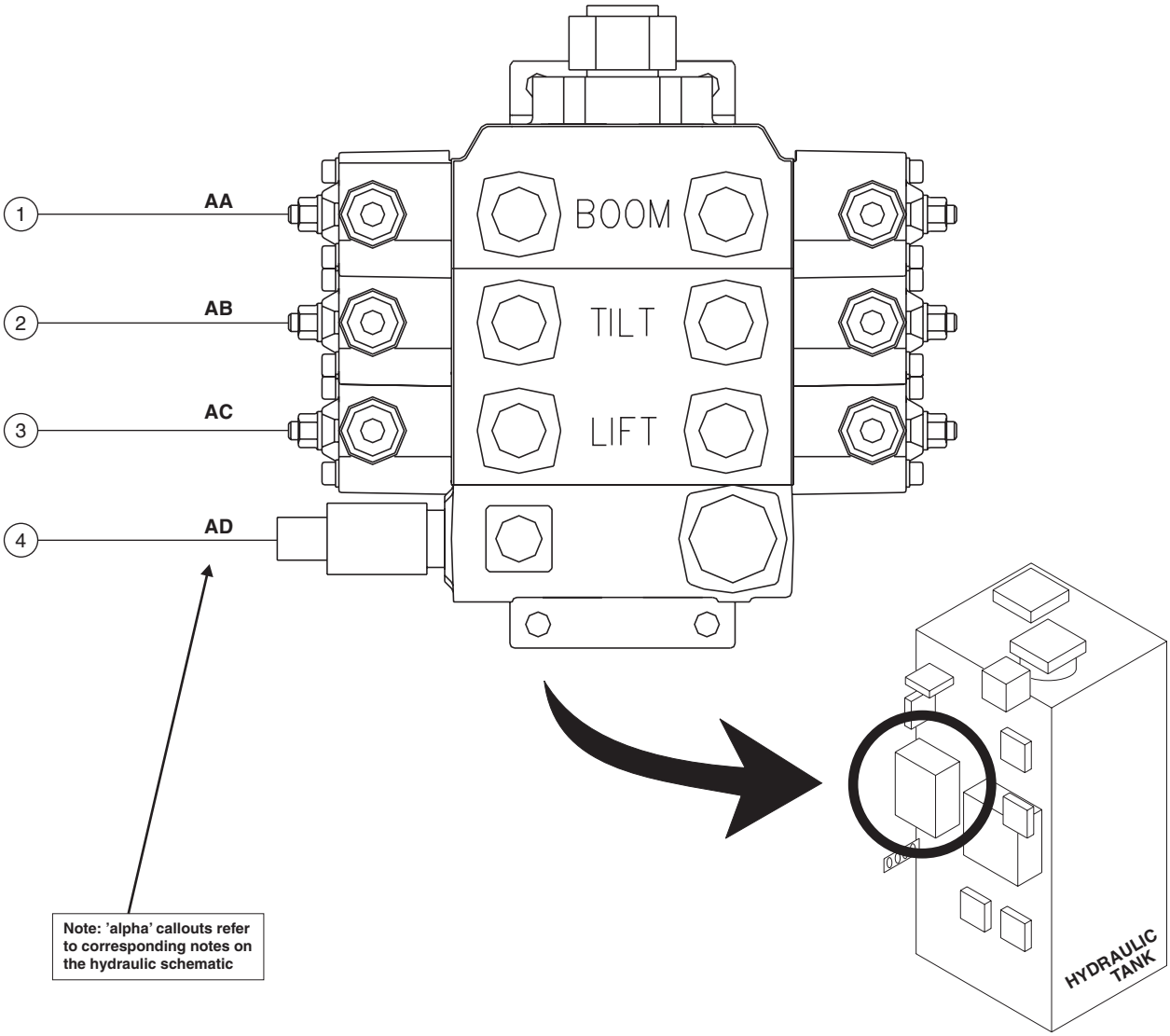

Downloaded from www.Manualslib.com manuals search engine

https://truckmanualshub.com/

7-2
Tilt Limiter Manifold Components

The tilt limiter manifold is located on the front of the hydraulic tank at the tailpipe side of the machine.

Index No.	Description	Schematic Item	Function	Torque
1	Relief valve, 1250 psi / 86.2 bar	BA	Fork level circuit	30-35 ft-lbs / 45-50 Nm

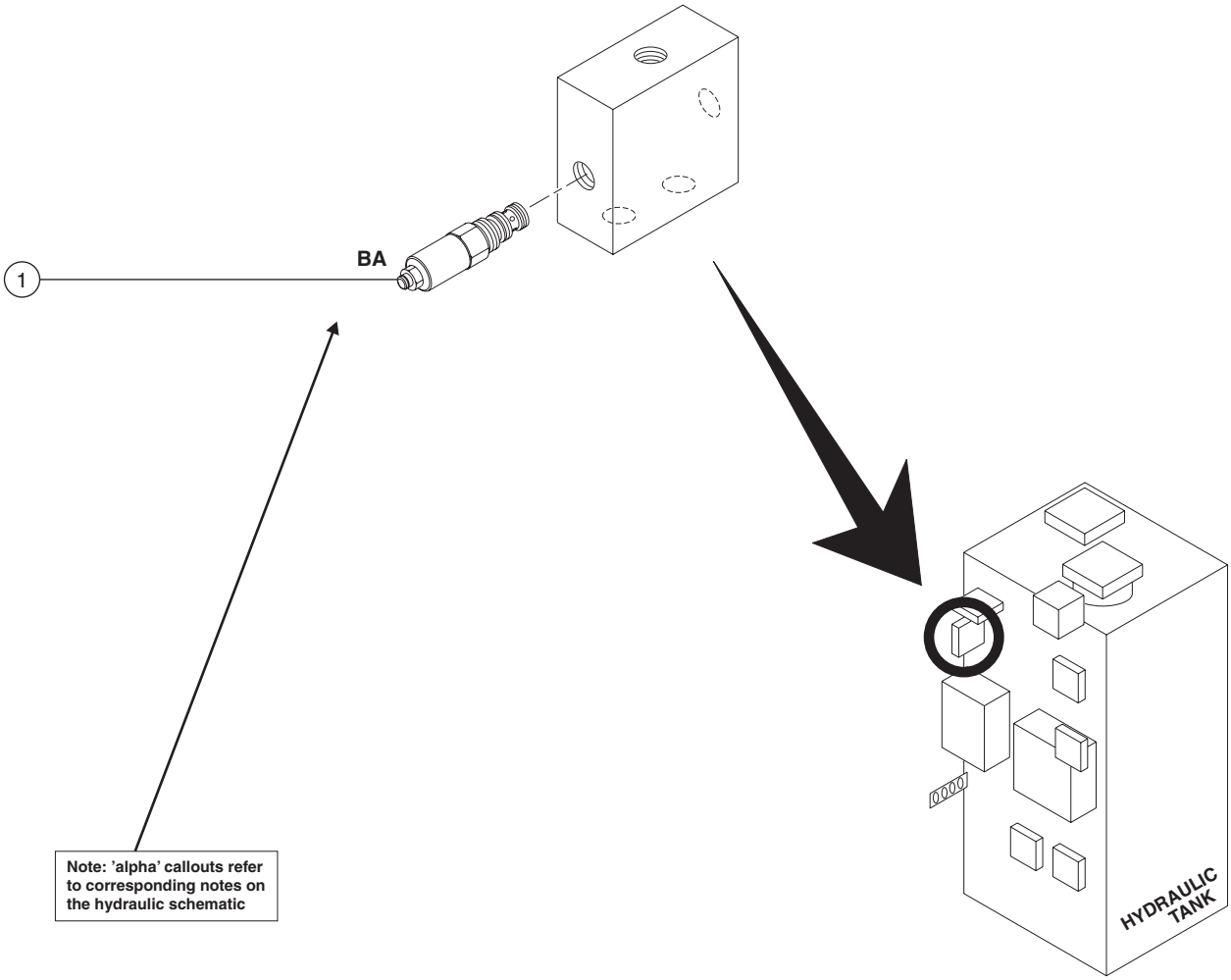

Downloaded from www.Manualslib.com manuals search engine

https://truckmanualshub.com/

7-3
Dual Pilot Check Manifold Components

The dual pilot check manifold is located on the front of the hydraulic tank at the tailpipe side of the machine

Index No.	Description	Schematic Item	Function	Torque
1	Check valve, pilot operated	CA	Boom lift circuit	30-35 ft-lbs / 45-50 Nm
2	Check valve, pilot operated	CB	Boom lift circuit	30-35 ft-lbs / 45-50 Nm

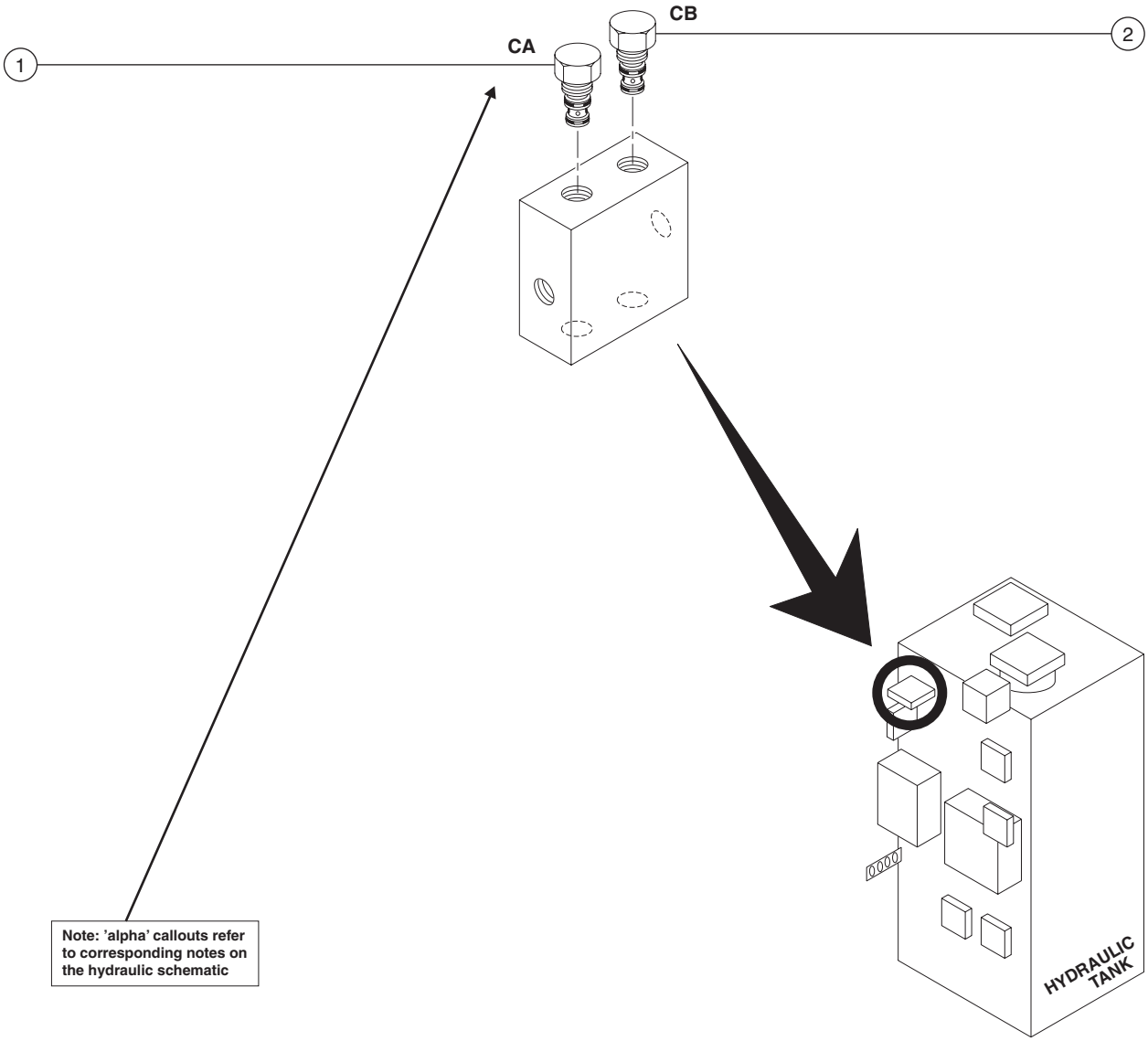

Downloaded from www.Manualslib.com manuals search engine

https://truckmanualshub.com/

7-4
Boom Activated Rear Lock-up Manifold Components

The rear lock-up manifold is located on the front of the hydraulic tank at the cab side of the machine.

Index No.	Description	Schematic Item	Function	Torque
1	Solenoid valve, 2 position 3 way	DA	Deactivates chassis sway circuit when boom is above 60°	20 ft-lbs / 27 Nm
	Coil nut			40 in-lbs / 4.5 Nm

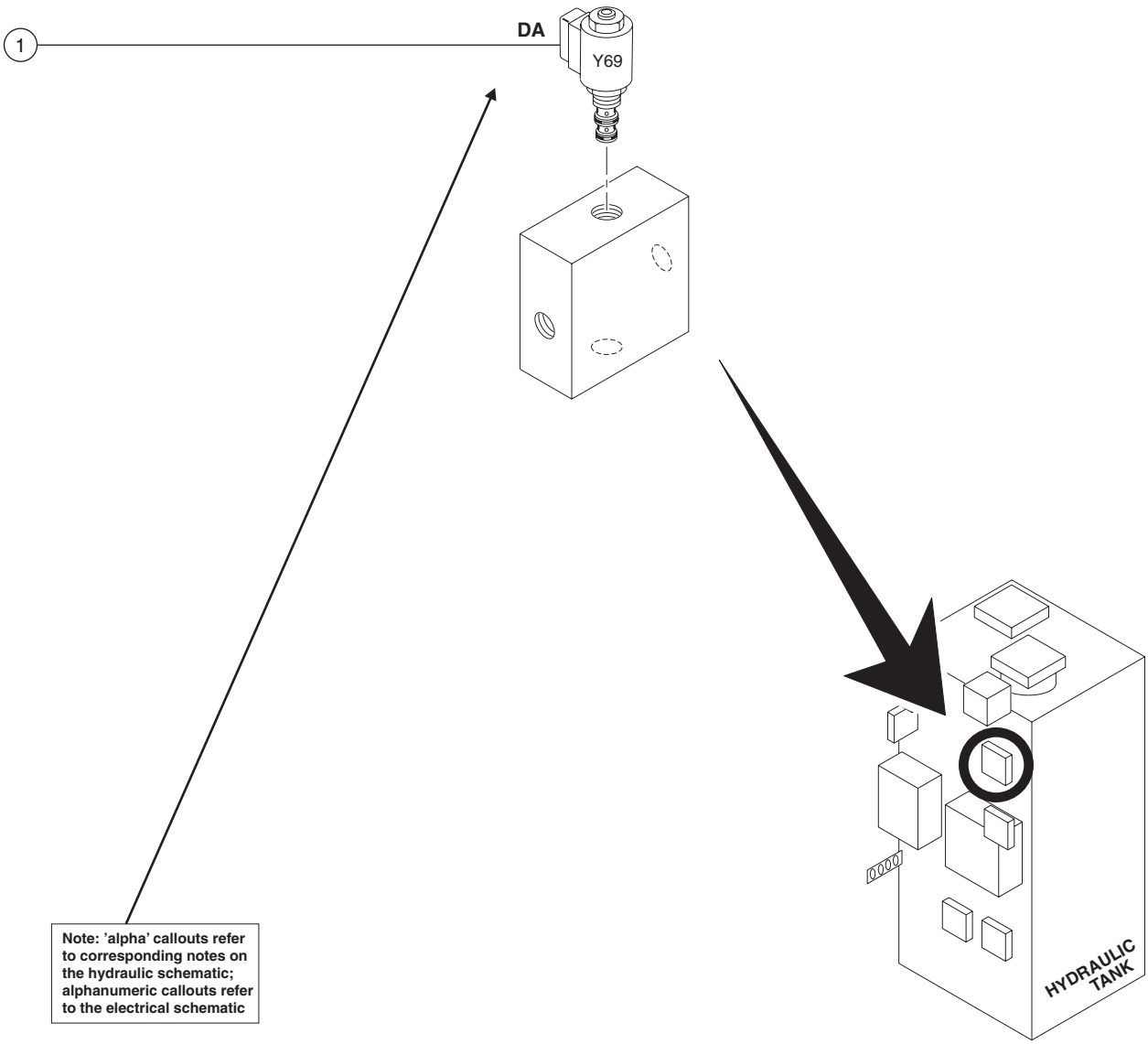

Downloaded from www.Manualslib.com manuals search engine

https://truckmanualshub.com/

7-5
Fork Rotate Speed Manifold Components (option)

The fork rotate speed manifold is located on the front of the hydraulic tank at the cab side of the machine.

Index No.	Description	Schematic Item	Function	Torque
1	Adjustable needle valve	EA	Fork rotate speed	30-35 ft-lbs / 40-47 Nm
	Adjustment nut			108 in-lbs / 12 Nm

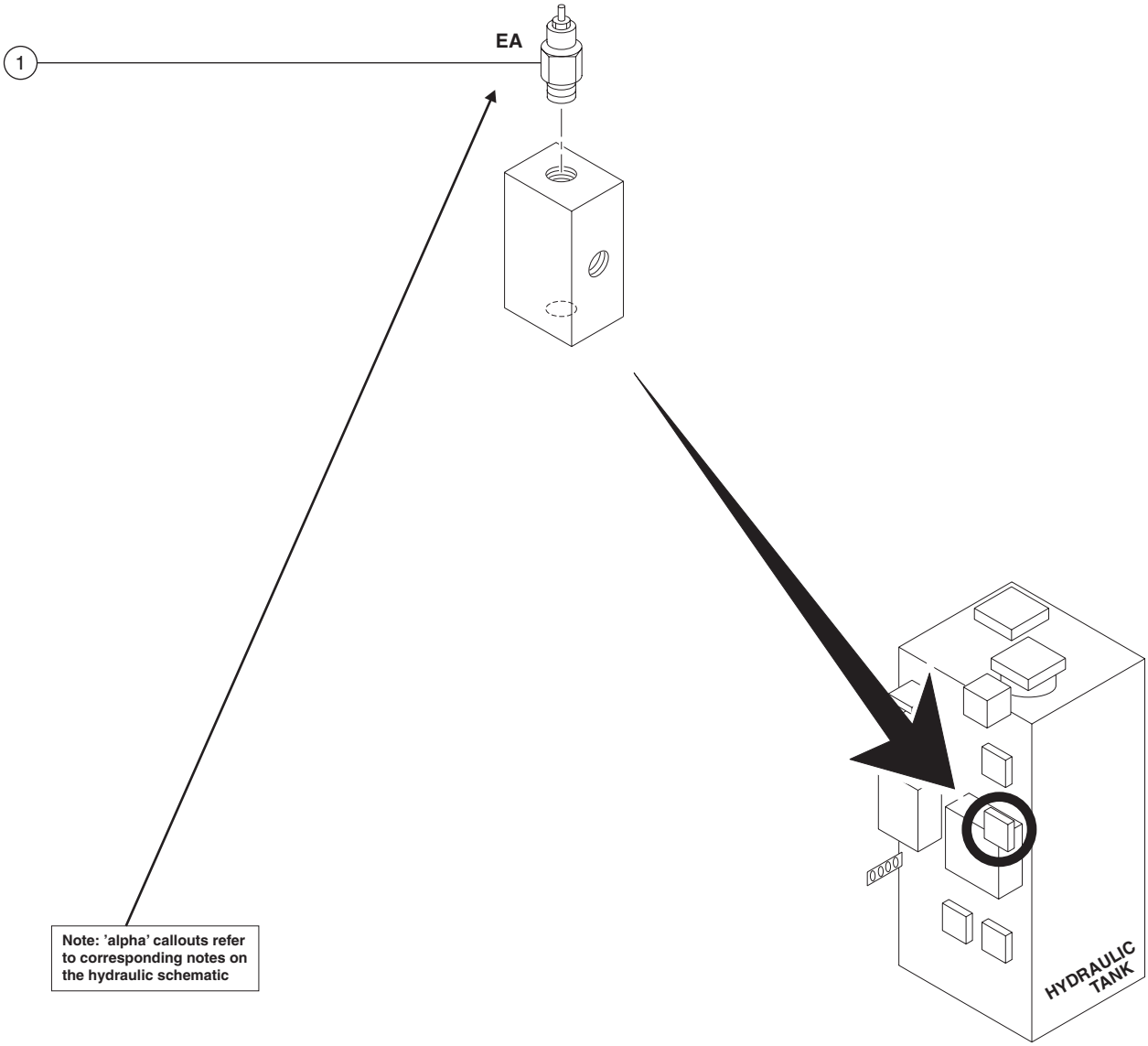

Downloaded from www.Manualslib.com manuals search engine

https://truckmanualshub.com/

7-6
Control Block Manifold Components

The control block manifold is located on the front of the hydraulic tank at the cab side of the machine.

Index No.	Description	Schematic Item	Function	Torque
1	Adjustable needle valve	FA	Chassis sway speed	30-35 ft-lbs / 40-47 Nm
	Adjustment nut			108 in-lbs / 12 Nm
2	Pressure reducing/relief valve, pilot operated, 500 psi / 34.5 bar	FB	Pilot pressure for boom up/down, boom extend/retract and parking brake circuits	30-35 ft-lbs / 40-47 Nm
3	Pressure reducing/relief valve, pilot operated, 2250 psi / 155 bar	FC	Steer left/right and fork rotate (option) circuits	30-35 ft-lbs / 40-47 Nm
4	Check valve	FD	Brake circuit	30-35 ft-lbs / 40-47 Nm

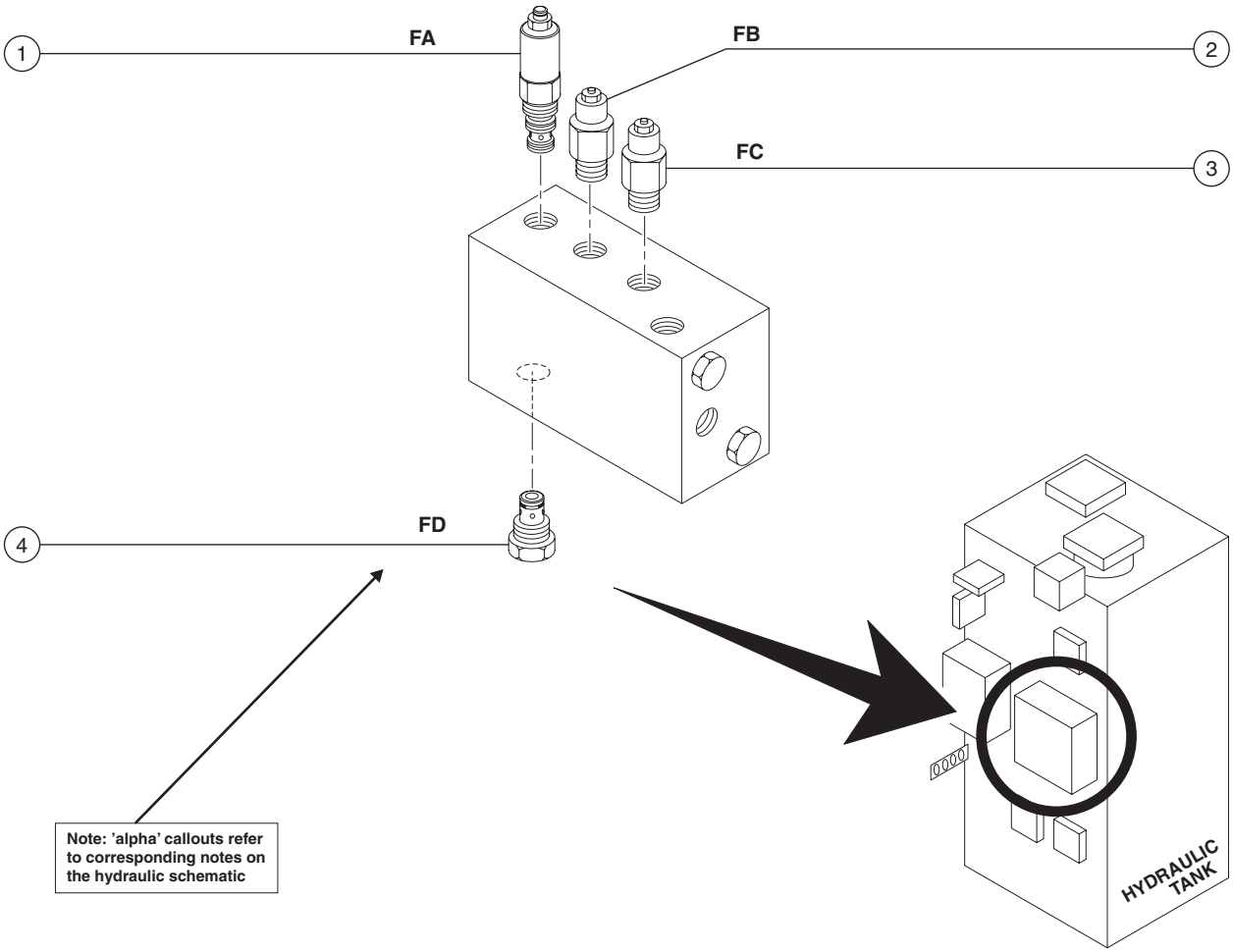

Downloaded from www.Manualslib.com manuals search engine

https://truckmanualshub.com/

7-7
Fork Tilt Manifolds Components

The fork tilt manifolds, used only on machines with single joystick, are located on the front of the hydraulic tank at the cab side of the machine.

Index No.	Description	Schematic Item	Function	Torque
—	Coil nut (items GA and GB)			40 in-lbs / 4.5 Nm
1	Solenoid valve, 2 position 4 way	GA	Tilts lifting forks down	20 ft-lbs / 27 Nm
2	Solenoid valve, 2 position 4 way	GB	Tilts lifting forks up	20 ft-lbs / 27 Nm

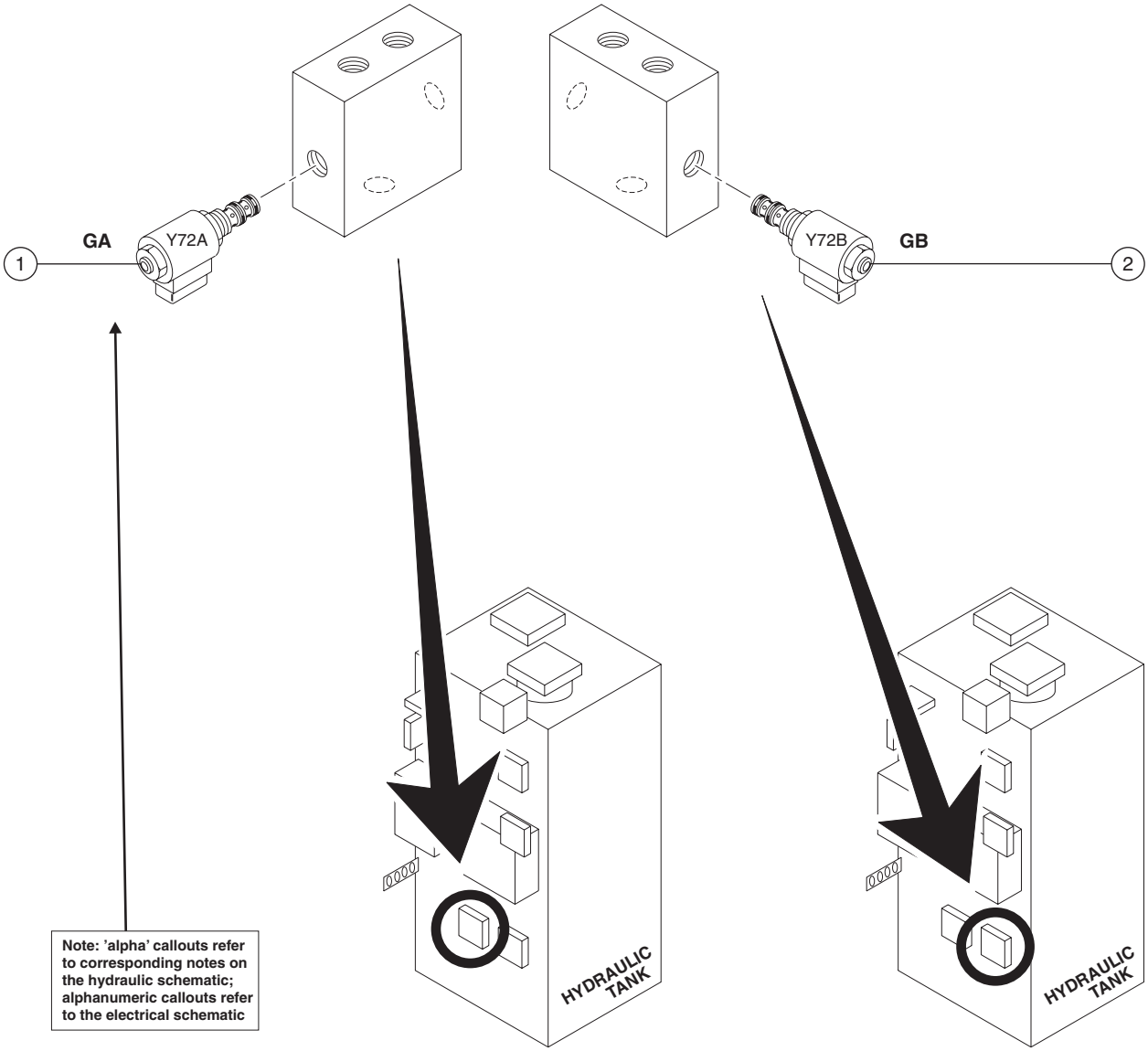

Downloaded from www.Manualslib.com manuals search engine

https://truckmanualshub.com/

7-8
Rear Lock-up Manifold Components

The rear lock-up manifold is located on top of the rear axle support bulkhead.

Index No.	Description	Schematic Item	Function	Torque
1	Check valve, pilot operated	HA	Left rear cylinder retract circuit	35-40 ft-lbs / 47-54 Nm
2	Check valve, pilot operated	HB	Left rear cylinder extend circuit	35-40 ft-lbs / 47-54 Nm
3	Check valve, pilot operated	HC	Right rear cylinder retract circuit	35-40 ft-lbs / 47-54 Nm
4	Check valve, pilot operated	HD	Right rear cylinder extend circuit	35-40 ft-lbs / 47-54 Nm
5	Shuttle valve, 2 position 3 way	HE	Chassis sway circuit	25-30 ft-lbs / 34-40 Nm
6	Directional valve, pilot operated	HF	Activates rear sway function	35-40 ft-lbs / 47-54 Nm
7	Directional valve, pilot operated	HG	Opens check valves	35-40 ft-lbs / 47-54 Nm
8	Relief valve, pilot operated, 500 psi / 34.5 bar	HH	Controls fluid pressure to cylinders	35-40 ft-lbs / 47-54 Nm

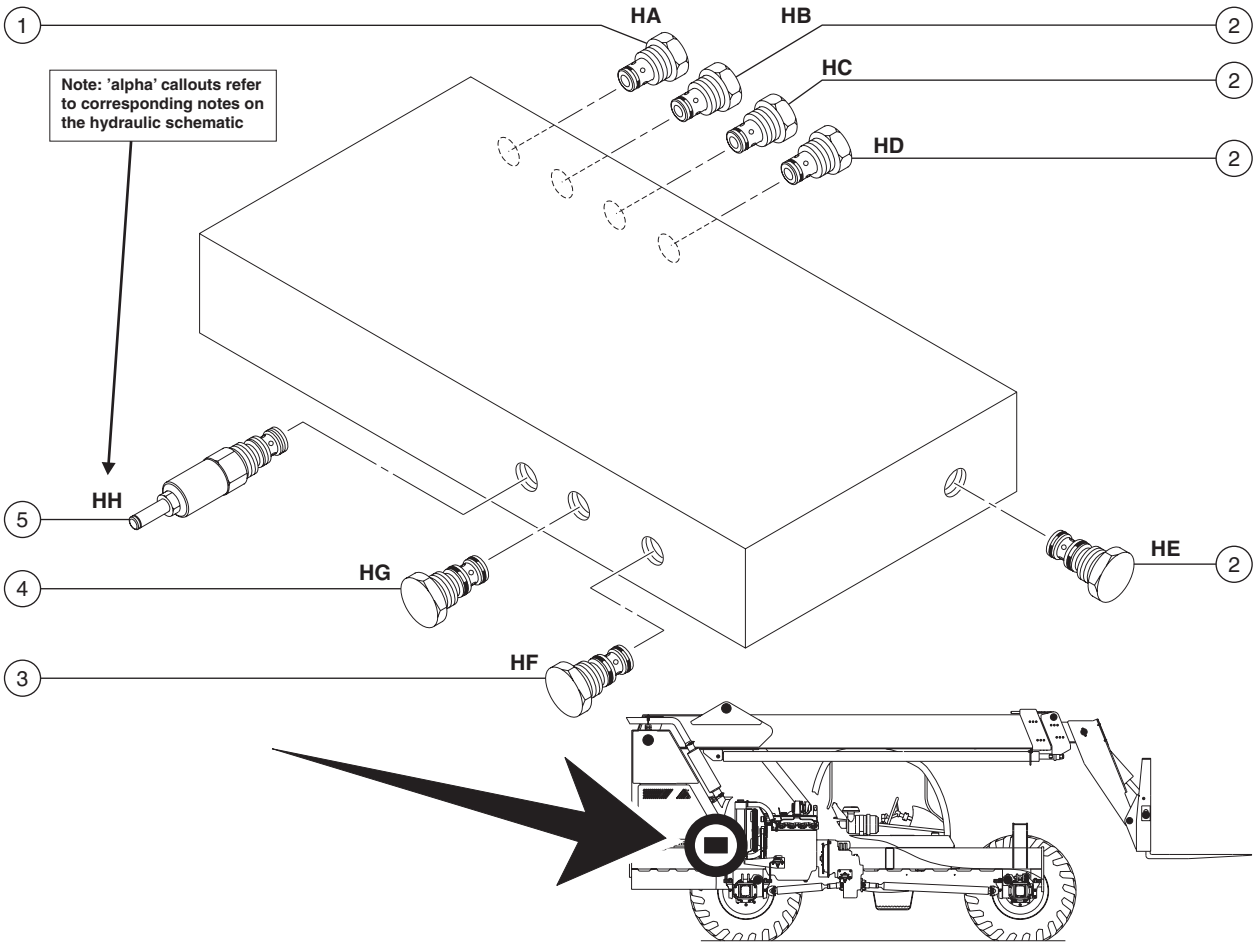

Downloaded from www.Manualslib.com manuals search engine

https://truckmanualshub.com/

7-9
Parking Brake Manifold Components

GTH-644, GTH-842 and GTH-844: The parking brake manifold is the outboard of the two similar manifolds located on the chassis main tube next to the cab, mounted directly to the chassis.
GTH-636, GTH-1048 and GTH-1056: The parking brake manifold located inside the cab, just to the left of the operator's seat.

Index No.	Description	Schematic Item	Function	Torque
1	Solenoid valve, 2 position 3 way (644, 842 and 844 models)	IA	Activates/releases parking brake	20 ft-lbs / 27 Nm
	Coil nut			40 in-lbs / 4.5 Nm
2	Manually-activated valve, 2 position 3 way (636, 1048 and 1056 models)	IA	Activates/releases parking brake	20 ft-lbs / 27 Nm

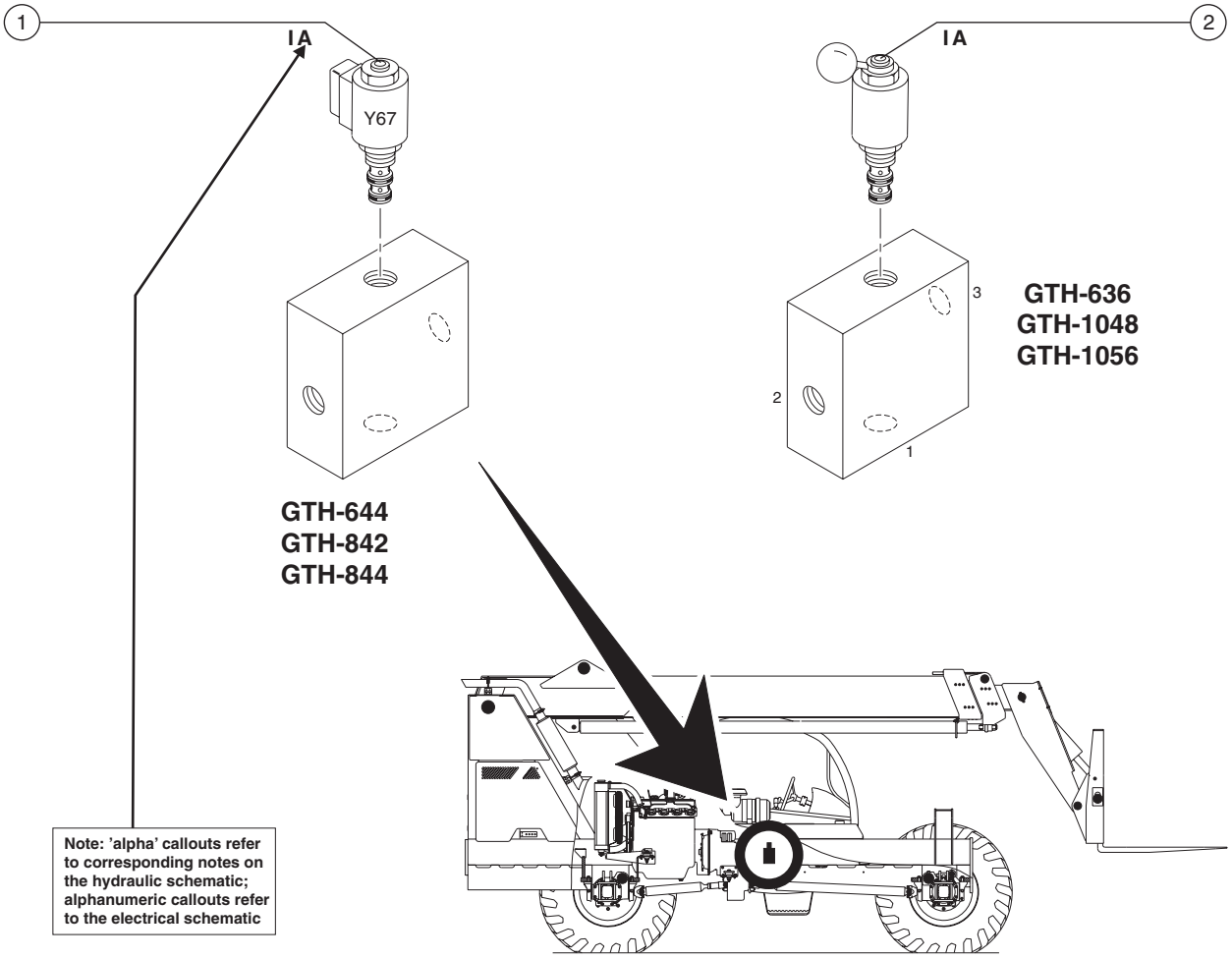

Downloaded from www.Manualslib.com manuals search engine

https://truckmanualshub.com/

7-10
Differential Lock-up Manifold Components (optional on GTH-636 and GTH-644)

The differential lock-up manifold is the inboard of the two similar manifolds located on the chassis main tube next to the cab, mounted closest to the centerline of the machine.

Index No.	Description	Schematic Item	Function	Torque
1	Solenoid valve, 2 position 3 way	JA	Releases parking brake	20 ft-lbs / 27 Nm
	Coil nut			40 in-lbs / 4.5 Nm

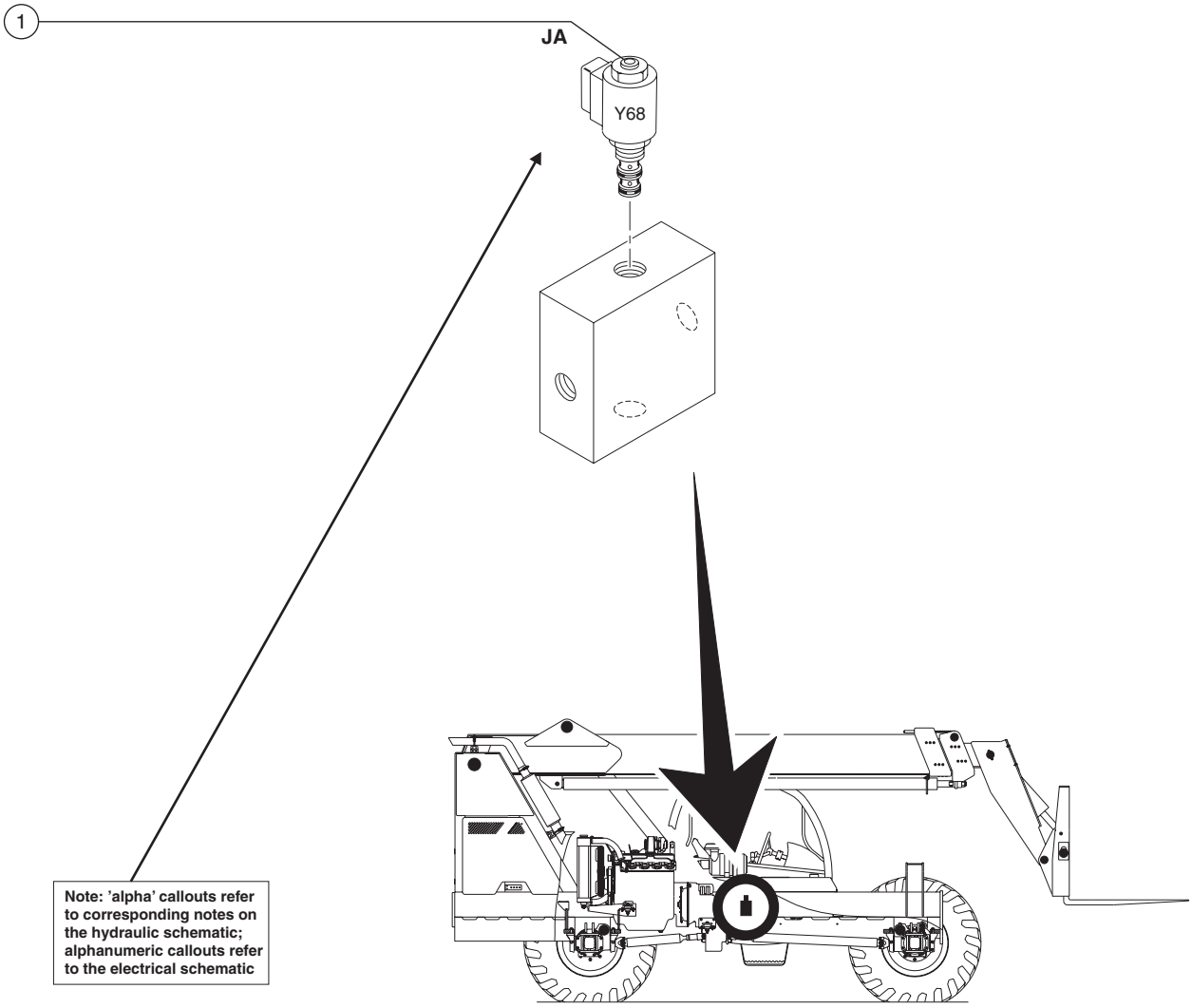

Downloaded from www.Manualslib.com manuals search engine

https://truckmanualshub.com/

7-11
Sway Manifold Components

The sway manifolds are located under an inspection cover on the front axle support bulkhead with the left sway manifold mounted on the cab side of the machine and the right sway manifold mounted on the exhaust side of the machine.

Index No.	Description	Schematic Item	Function	Torque
1	Check valve, pilot operated	KA	Left front cylinder extend circuit	30-35 ft-lbs / 40-47 Nm
2	Check valve, pilot operated	KB	Left front cylinder retract circuit	30-35 ft-lbs / 40-47 Nm
3	Check valve, pilot operated	KC	Right front cylinder retract circuit	30-35 ft-lbs / 40-47 Nm
4	Check valve, pilot operated	KD	Right front cylinder extend circuit	30-35 ft-lbs / 40-47 Nm

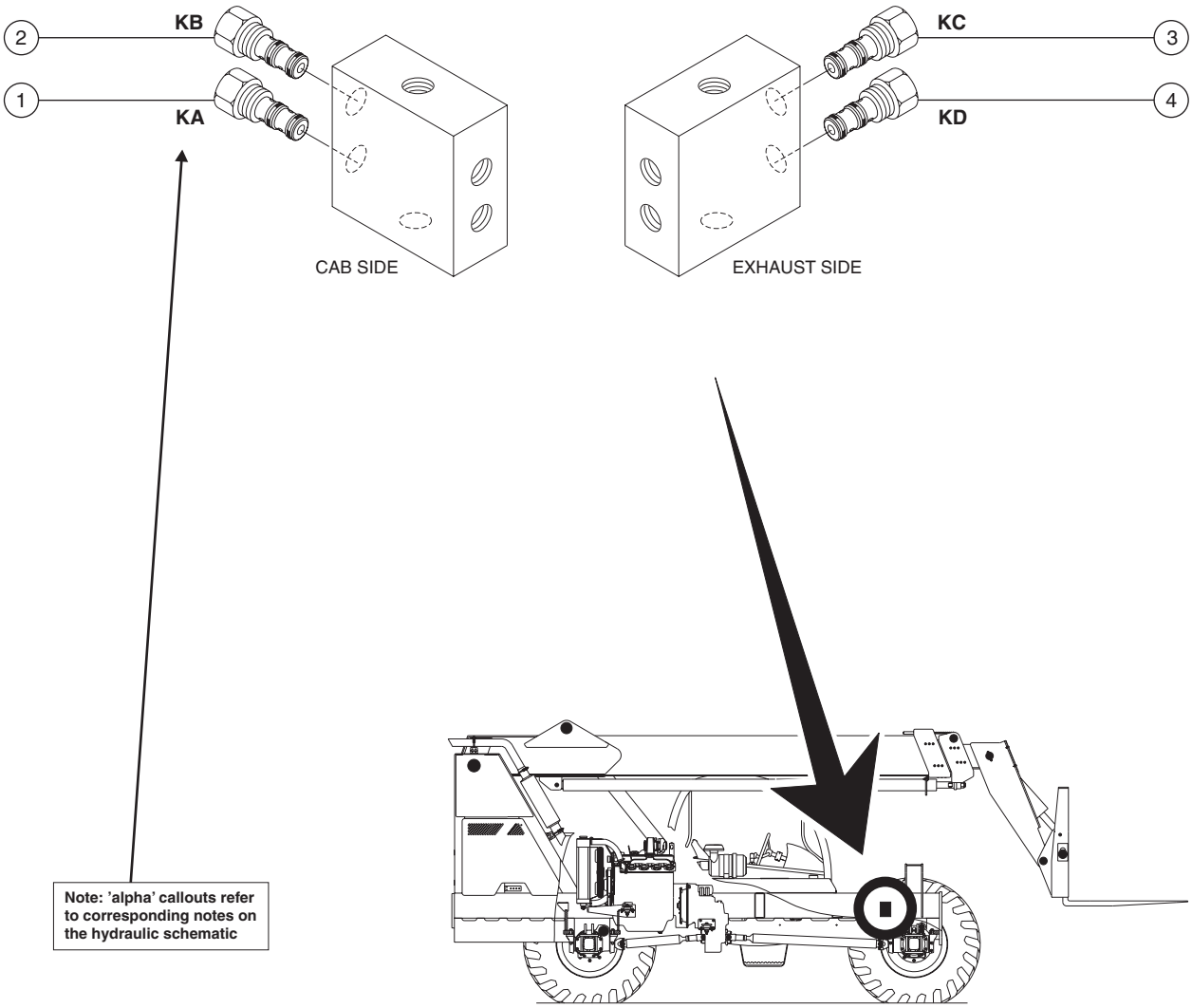

Downloaded from www.Manualslib.com manuals search engine

https://truckmanualshub.com/

7-12
Fork Rotate Manifold Components (option)

If equipped with the fork rotate option, the fork rotate manifold is located under the rear lock-up manifold on the rear axle support bulkhead at the cab side of the machine.

Index No.	Description	Schematic Item	Function	Torque
1	Solenoid valve, 3 position 4 way with manual override	LA	Rotate forks clockwise or counterclockwise	
	Coil nut			30 in-lbs / 3.4 Nm

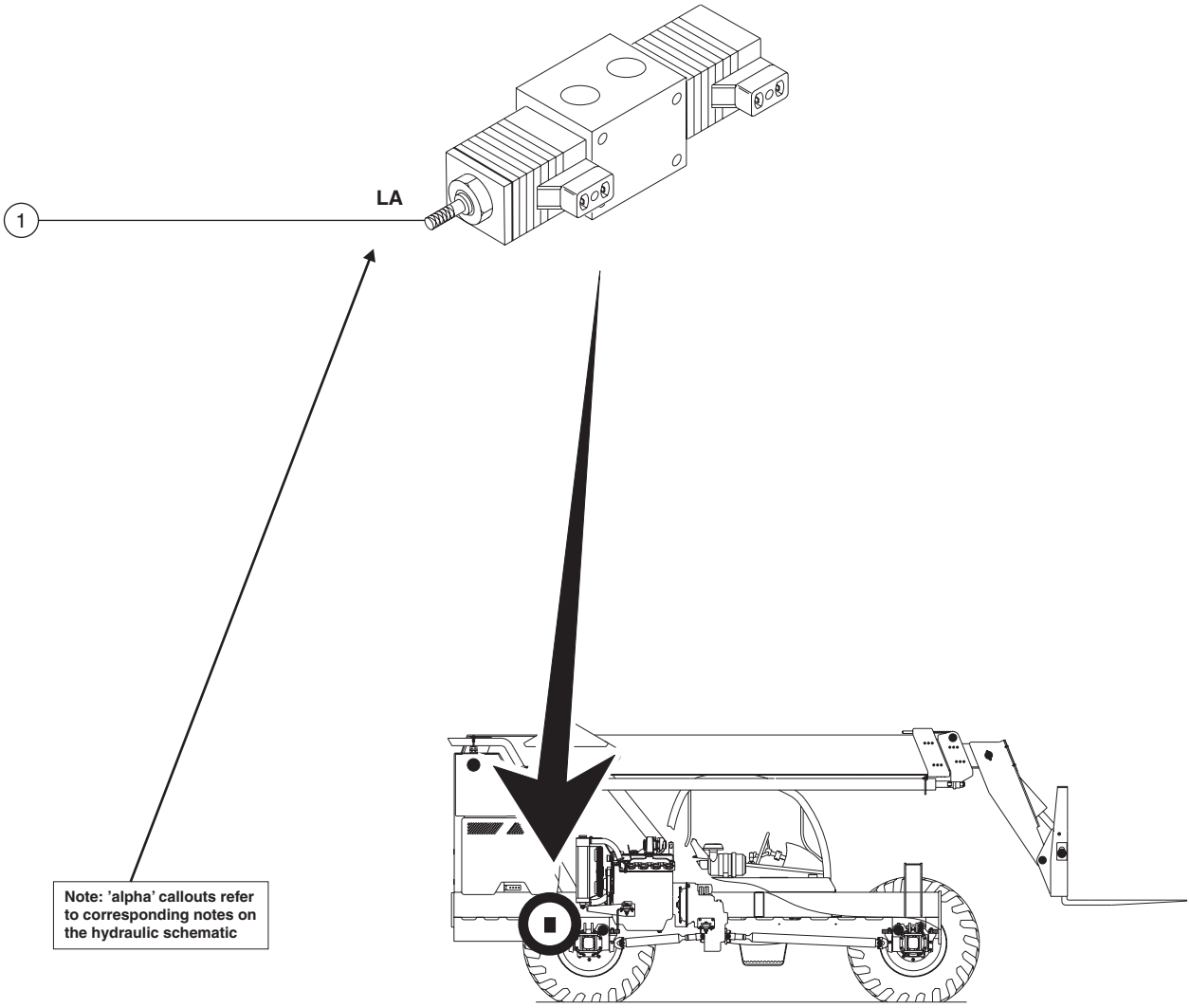

Downloaded from www.Manualslib.com manuals search engine

https://truckmanualshub.com/

7-13
Sway Directional Manifold Components

The sway directional manifold is located under the rear lock-up manifold on the rear axle support bulkhead at the exhaust side of the machine.

Index No.	Description	Schematic Item	Function	Torque
1	Solenoid valve, 3 position 4 way with manual override (models with single joystick)	MA	Rotate chassis clockwise or counterclockwise	
	Coil nut			30 in-lbs / 3.4 Nm
2	Pilot-operated directional valve (models with dual joysticks)	MA	Rotate chassis clockwise or counterclockwise	

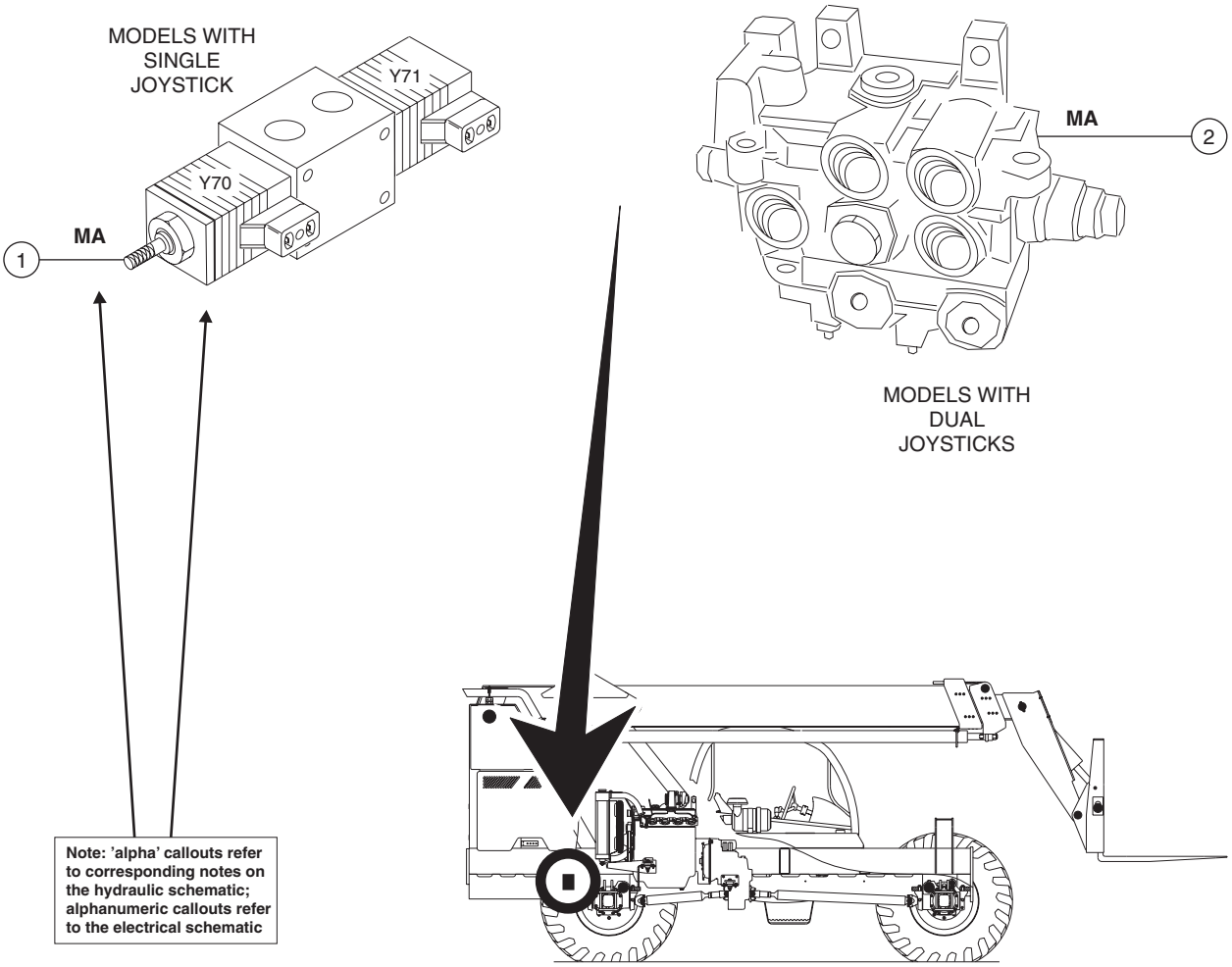

Downloaded from www.Manualslib.com manuals search engine

https://truckmanualshub.com/

7-14
Outrigger Manifold Components - GTH-1048 and GTH-1056

The outrigger manifold is located under the inspection cover on the front axle support bulkhead.

Index No.	Description	Schematic Item	Function	Torque
—	Coil nut			30 in-lbs / 3.4 Nm
1	Solenoid valve, 3 position 4 way with manual override	NA	Outrigger extend/retract circuit, cab side	
2	Solenoid valve, 3 position 4 way with manual override	NB	Outrigger extend/retract circuit, exhaust side	

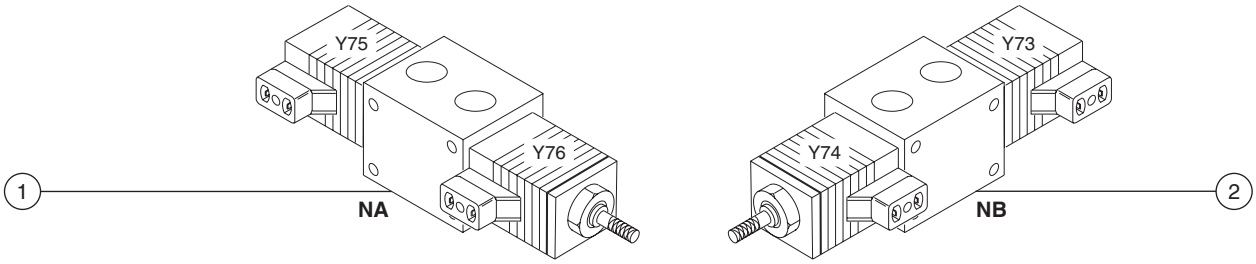

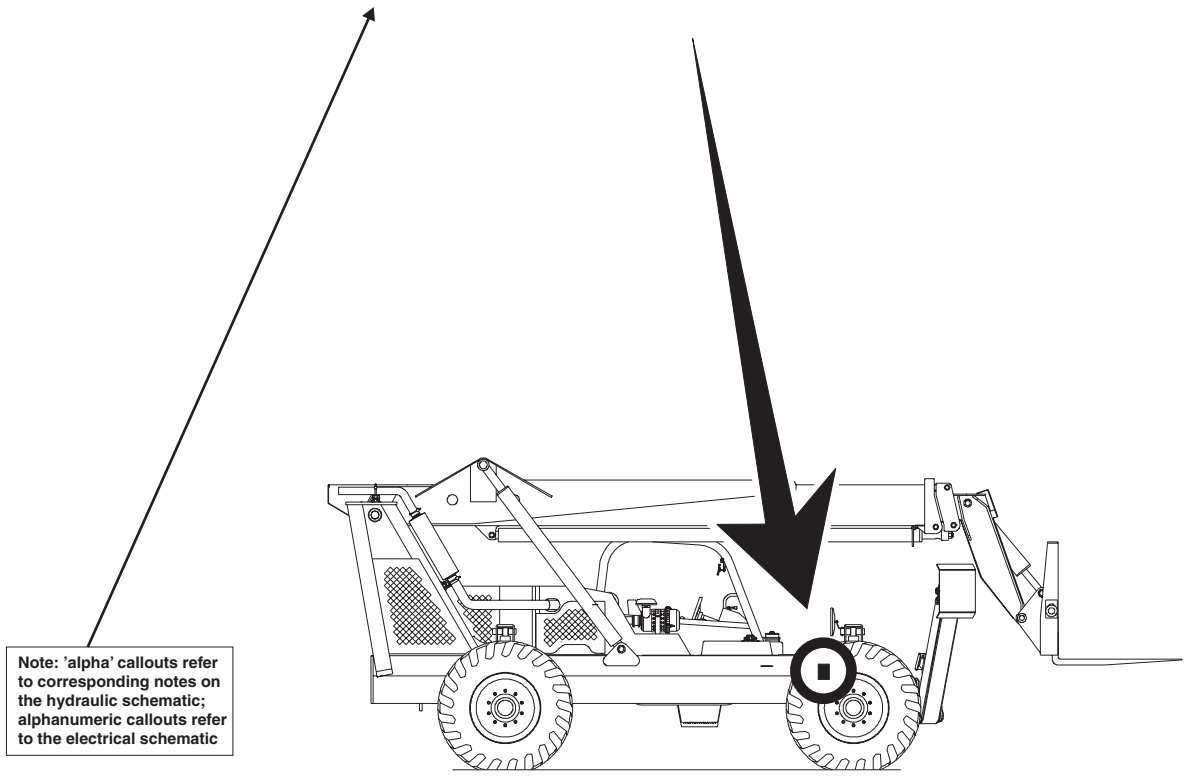

Downloaded from www.Manualslib.com manuals search engine

https://truckmanualshub.com/

7-15
Controller Relief (Drop Block) Manifold Components GTH-636, GTH-1048 and GTH-1056

The controller relief valve manifold is located inside the frame rail between the cab and the rear axle support bulkhead on the cab side of the machine.

Index No.	Description	Schematic Item	Function	Torque
1	Solenoid valve, 2 position 2 way with manual override	OA	Disengages hydraulic pump	20 ft-lbs / 27 Nm
	Coil nut			40 in-lbs / 4.5 Nm

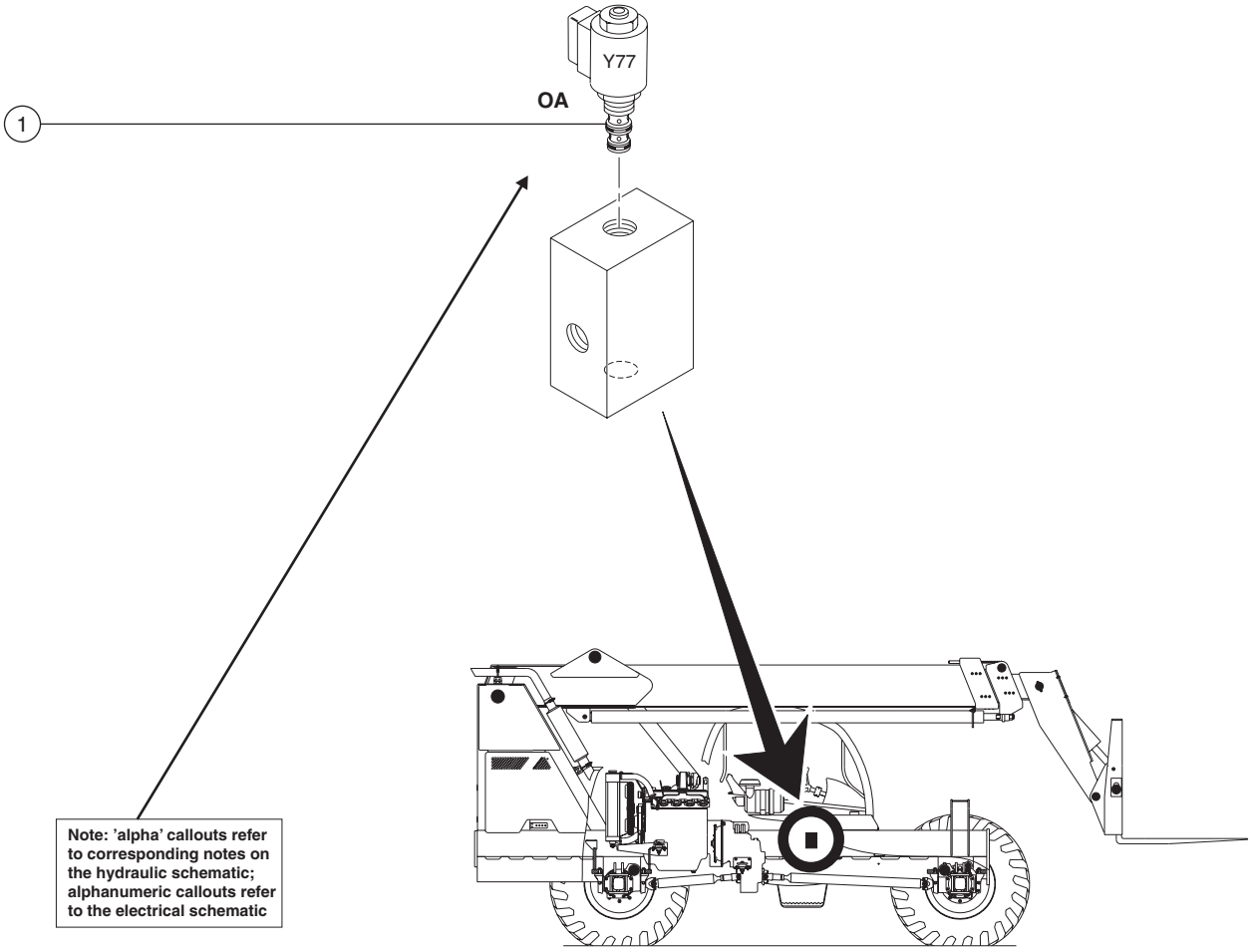

Downloaded from www.Manualslib.com manuals search engine

https://truckmanualshub.com/

7-16
Boom Lift and Boom Extension Cylinders Manifold Components

The manifolds are located on the respective cylinder(s).

Index No.	Description	Schematic Item	Function	Torque
1	Counterbalance valve	PA	Left boom up/down circuit (cab side)	45-50 ft-lbs / 61-67 Nm
2	Counterbalance valve	PB	Right boom up/down circuit (exhaust side)	45-50 ft-lbs / 61-67 Nm
3	Counterbalance valve	QA	Boom extend circuit (barrel end)	45-50 ft-lbs / 61-67 Nm
4	Counterbalance valve	QB	Boom retract circuit (rod end)	45-50 ft-lbs / 61-67 Nm

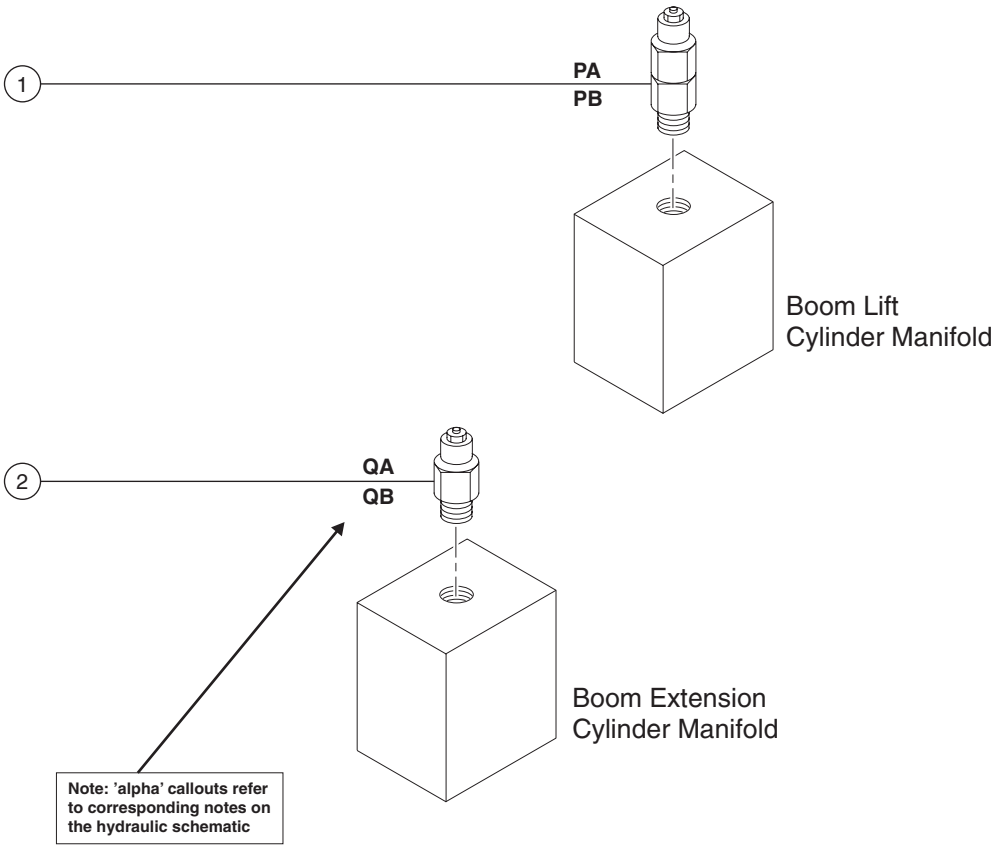

Downloaded from www.Manualslib.com manuals search engine

https://truckmanualshub.com/

7-17
Fork Level Cylinder Manifold Components

If equipped with the fork rotate option, the fork rotate cylinder manifold is located on the cylinder.

Index No.	Description	Schematic Item	Function	Torque
1	Check valve, pilot operated	RA	Fork up circuit	30-35 ft-lbs / 40-47 Nm
2	Counterbalance valve	RB	Fork up circuit	30-35 ft-lbs / 40-47 Nm
3	Check valve, pilot operated	RC	Fork down circuit	30-35 ft-lbs / 40-47 Nm

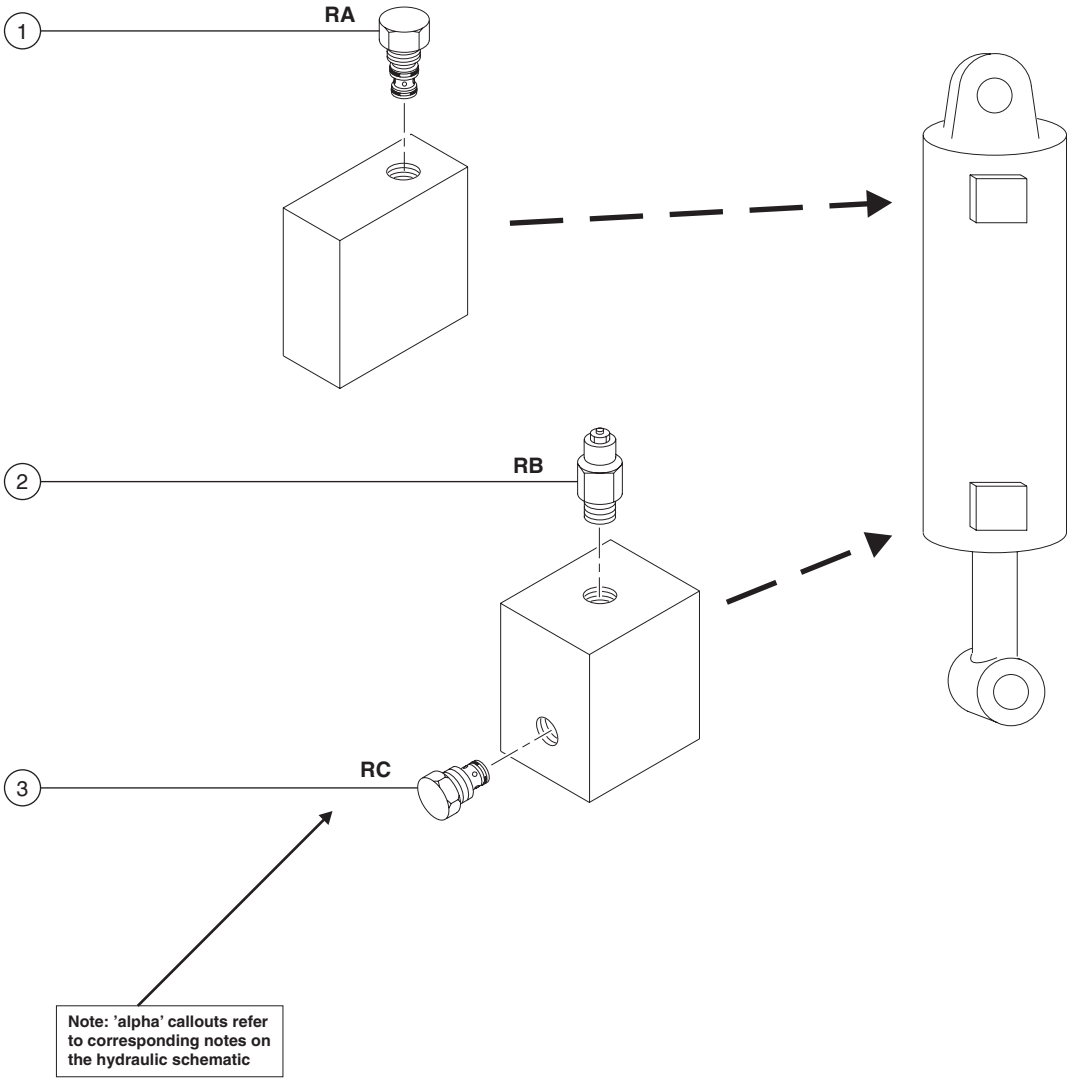

Downloaded from www.Manualslib.com manuals search engine

https://truckmanualshub.com/

7-18
Fork Rotate Cylinder Manifold Components (option)

The manifolds are located on the cylinder.

Index No.	Description	Schematic Item	Function	Torque
1	Check valve, pilot operated	SA	Rotate clockwise circuit	30-35 ft-lbs / 40-47 Nm
2	Check valve, pilot operated	SB	Rotate counterclockwise circuit	30-35 ft-lbs / 40-47 Nm

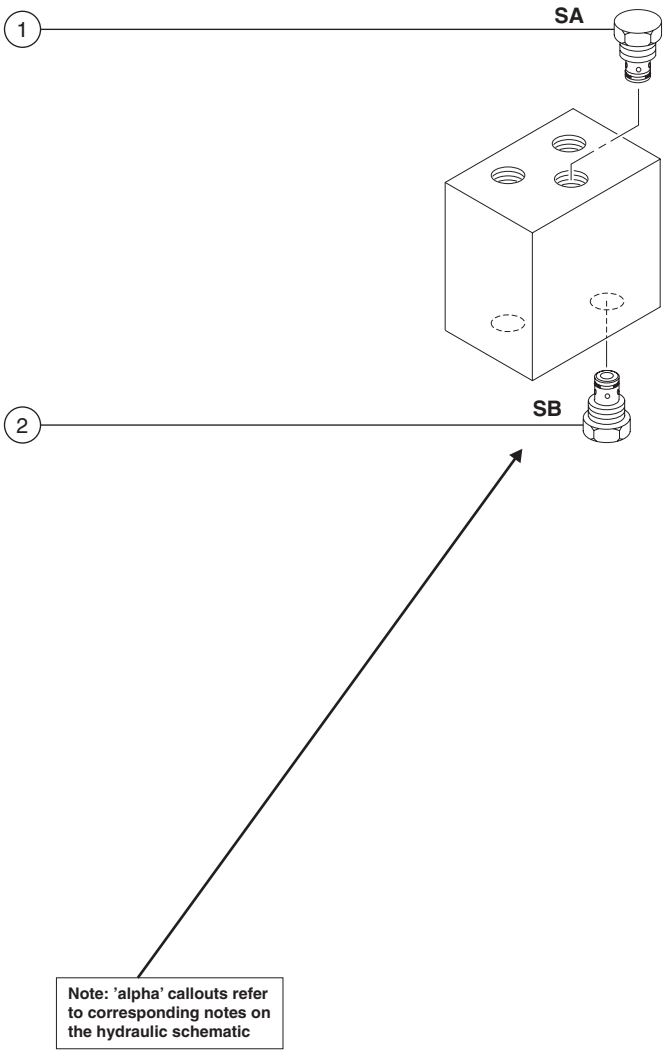

Downloaded from www.Manualslib.com manuals search engine

https://truckmanualshub.com/

7-19
Pump Destroke Manifold Components

The pump destroke manifold is located on the hydraulic pump next to the DFR valve.

Index No.	Description	Schematic Item	Function	Torque
1	Solenoid valve, 2 position 2 way	TA	Disengages hydraulic pump	20 ft-lbs / 27 Nm
	Coil nut			40 in-lbs / 4.5 Nm

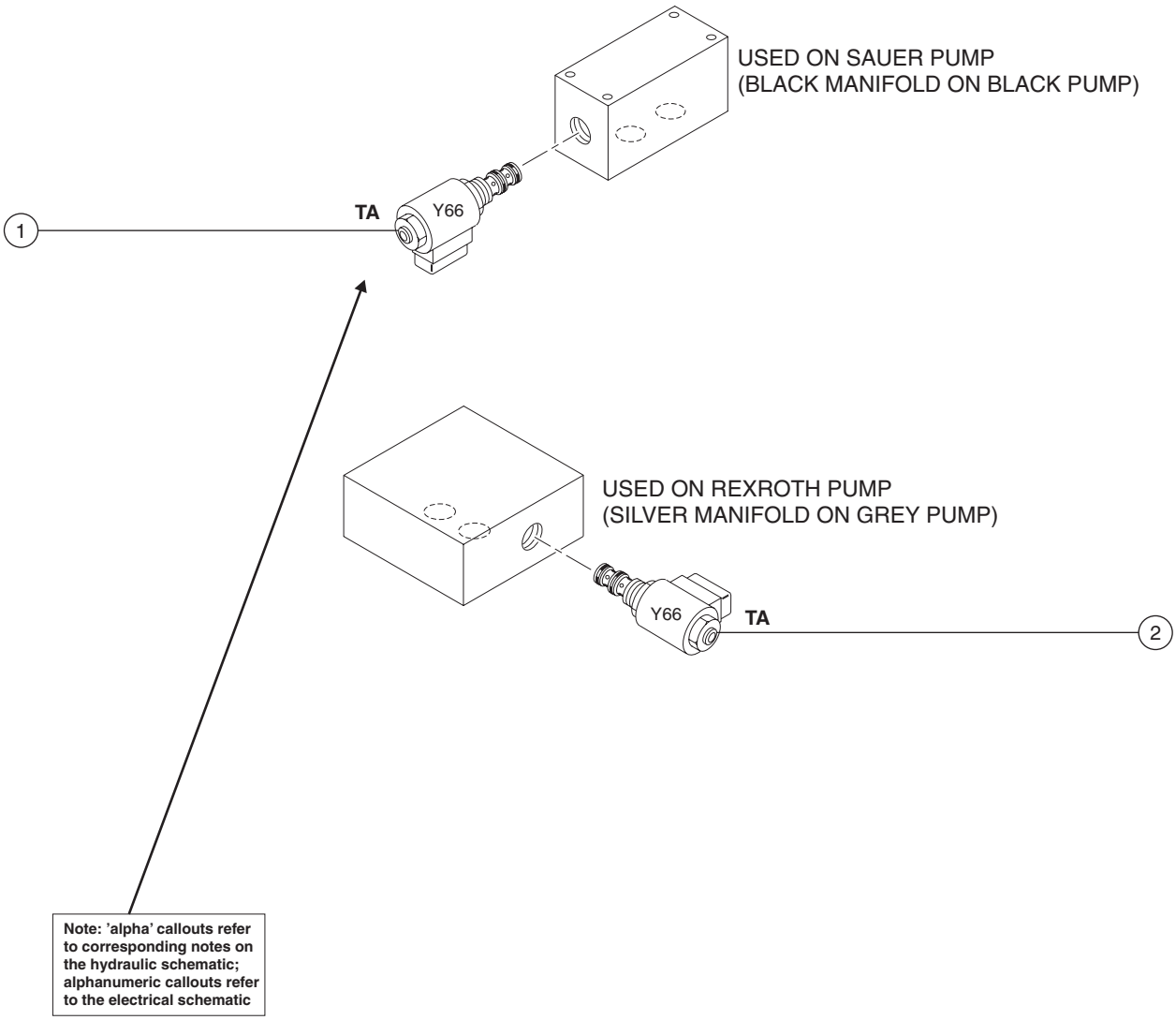

Downloaded from www.Manualslib.com manuals search engine

https://truckmanualshub.com/

7-20
Extend Cylinder Relief Manifold Components - GTH-636, GTH-1048 and GTH-1056

The extend cylinder relief manifold is located on the dump block at the front of the hydraulic tank.

Index No.	Description	Schematic Item	Function	Torque
1	Relief valve, 2000 psi / 137.9 bar (GTH-636 from serial number GTH0606A-8418 to GTH0606A-9022)	UA	Boom extend relief	20 ft-lbs / 27 Nm
—	Relief valve, 2500 psi / 172.3 bar (GTH-1048 and GTH-1056)	UA	Boom extend relief	20 ft-lbs / 27 Nm

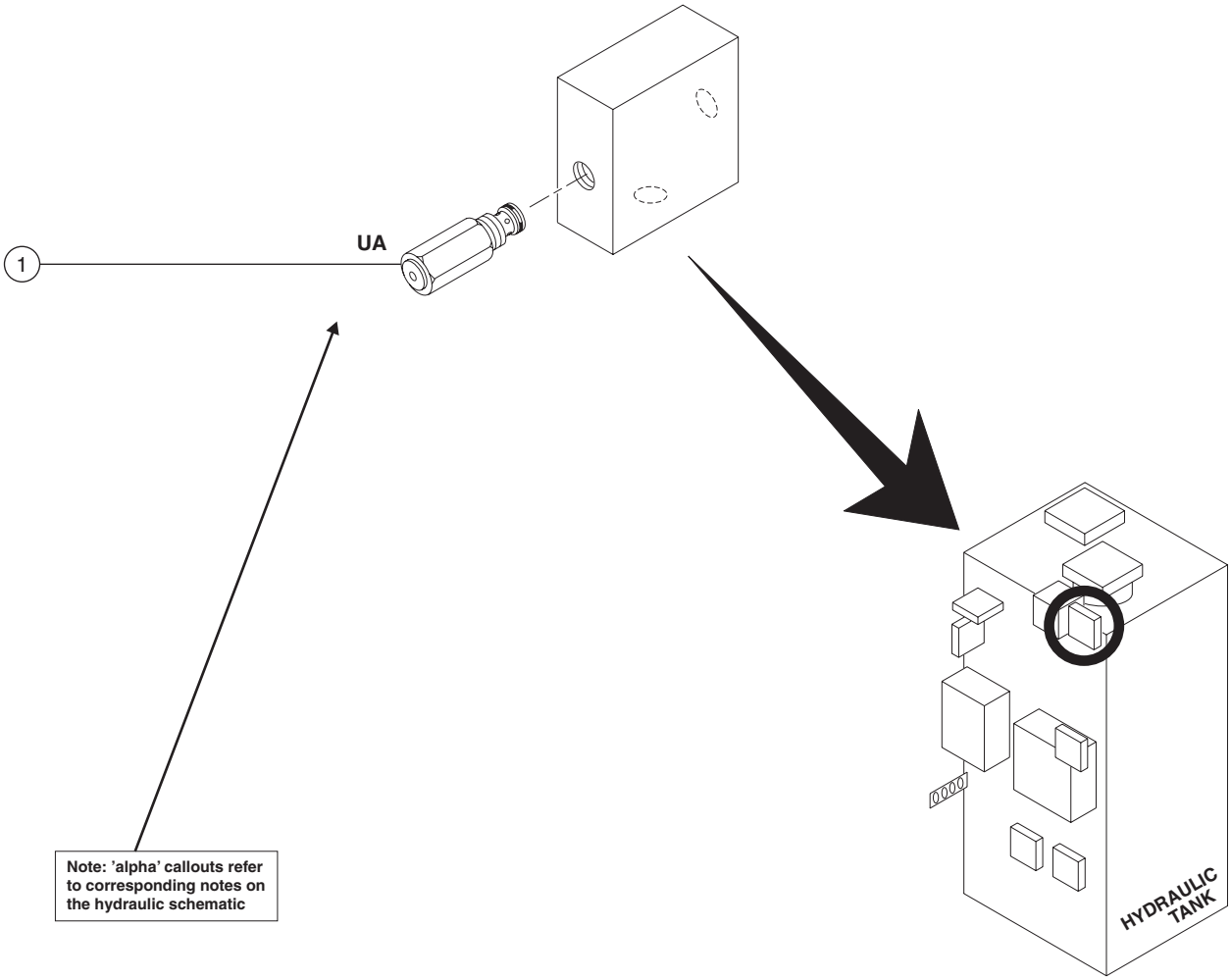

Downloaded from www.Manualslib.com manuals search engine

https://truckmanualshub.com/

7-21
Boom-activated Sway Lock-up Manifold Components (models with dual joysticks except GTH-636)

The boom-activated sway lock-up manifold, used on all machines with dual joysticks except the GTH-636, is mounted on the pilot operated sway directional valve.

Index No.	Description	Schematic Item	Function	Torque
—	Coil nut			40 in-lbs / 4.5 Nm
1	Solenoid valve, 2 position 2 way	VA	**GTH-644, GTH-842 and GTH-844:** Stops fluid flow to chassis sway circuit when boom is above 60°	20 ft-lbs / 27 Nm
1	Solenoid valve, 2 position 2 way	VA	**GTH-1048 and GTH-1056:** Stops fluid flow to chassis sway circuit when boom is above 55°	20 ft-lbs / 27 Nm

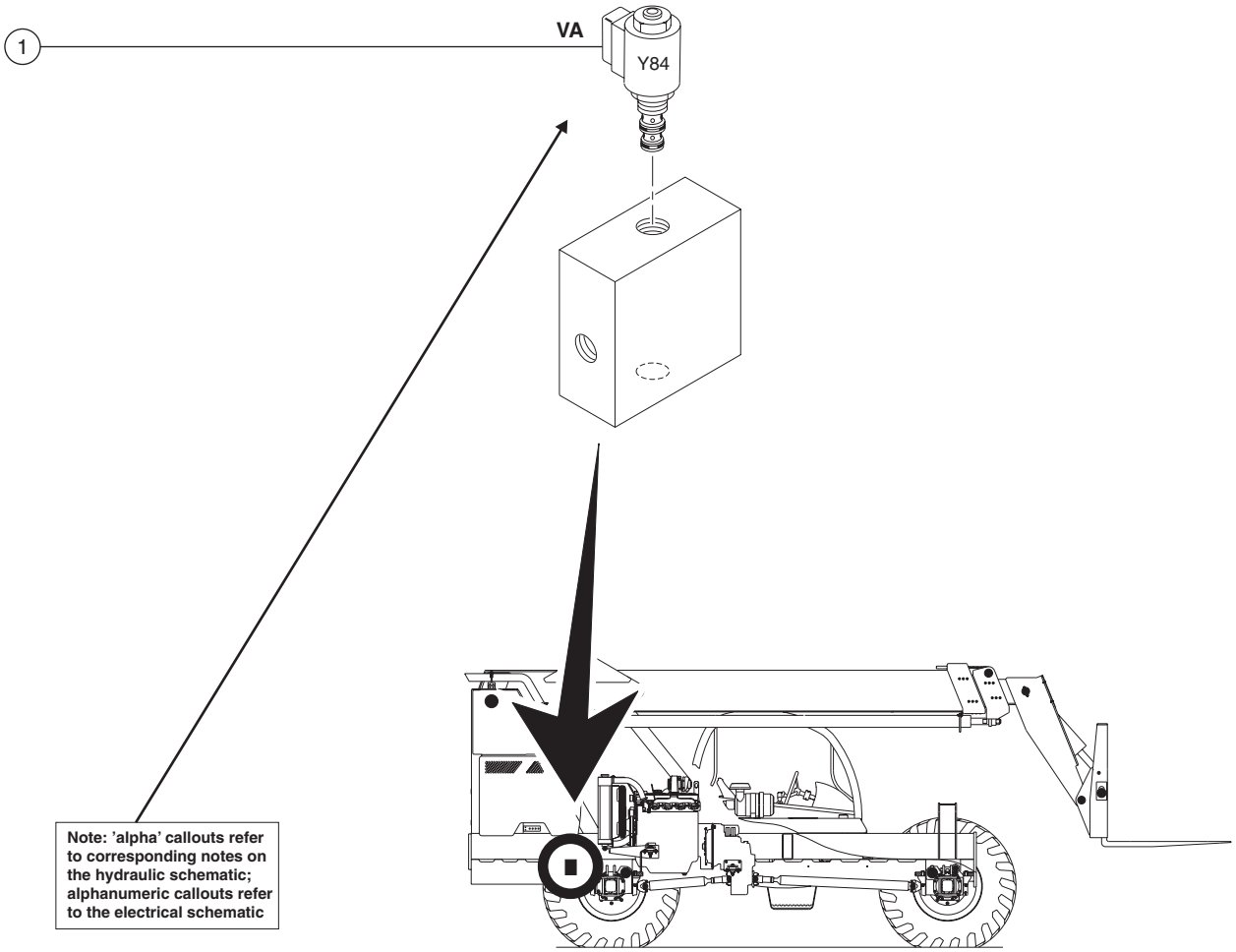

Downloaded from www.Manualslib.com manuals search engine

https://truckmanualshub.com/

7-22 Valve Adjustments - Control Block Manifold

How to Set the Steer System Pressure

Note: Be sure that the hydraulic oil level is visible in the inspection glass of the hydraulic tank.

1 Install a 0 to 3500 psi / 0 to 250 bar pressure gauge into test port 2 at the side of the hydraulic tank.

Note: There are four test ports at the hydraulic tank. Test port 1 is closest to the tank; test port 4 is farthest from the tank.

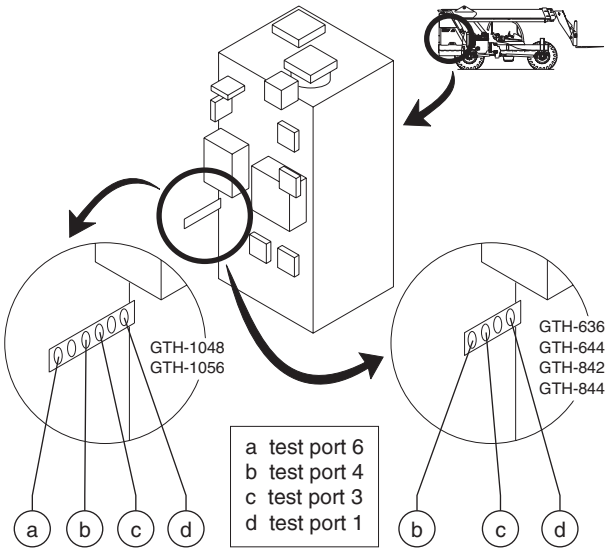

2 Start the engine. Allow the engine to idle after warming the engine to operating temperature.

3 Without operating any machine controls, observe the reading on the pressure gauge.

Result: The pressure gauge reads 2250 psi / 155 bar. The pressure setting is correct.

Result: The pressure gauge fails to read 2250 psi / 155 bar. The pressure setting needs to be adjusted. Continue to step 4.

4 Locate the boom lift/extend relief valve (schematic item FC) of the control block on the front of the hydraulic tank. Loosen the jam nut at the top of the valve. Turn the adjustment screw clockwise to increase the pressure or counterclockwise to decrease the pressure. Tighten the jam nut and repeat this procedure beginning with step 3.

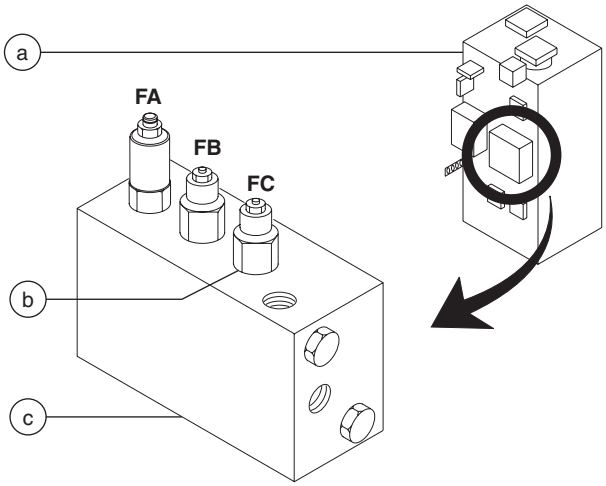

a hydraulic tank
b boom lift/extend relief valve
c control block manifold

Downloaded from www.Manualslib.com manuals search engine

https://truckmanualshub.com/

How to Set the Boom System Pilot Pressure

Note: Be sure that the hydraulic oil level is visible in the inspection glass of the hydraulic tank.

1 **GTH-636, GTH-644, GTH-842 and GTH-844:** Install a 0 to 3500 psi / 0 to 250 bar pressure gauge into test port 3 at the side of the hydraulic tank.

Note: There are four test ports at the hydraulic tank. Test port 1 is closest to the tank; test port 4 is farthest from the tank.

2 **GTH-1048 and GTH-1056:** Install a 0 to 3500 psi / 0 to 250 bar pressure gauge into test port 5 at the side of the hydraulic tank.

Note: There are six test ports at the hydraulic tank. Test port 1 is closest to the tank; test port 6 is farthest from the tank.

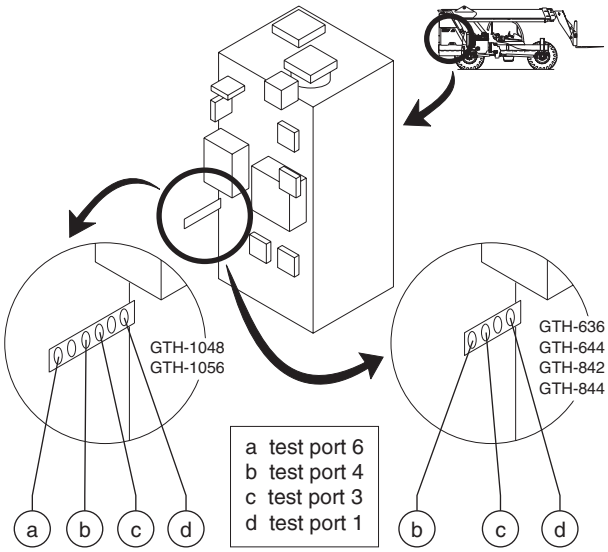

3 Start the engine. Allow the engine to idle after warming the engine to operating temperature.

4 Without operating any machine controls, observe the reading on the pressure gauge.

Result:
GTH-636, GTH-644, GTH-842 and GTH-844: The pressure gauge reads 500 psi / 34.5 bar. The pressure setting is correct.
GTH-1048 and GTH-1056: The pressure gauge reads 400 psi / 27.6 bar. The pressure setting is correct.

Result:
GTH-636, GTH-644, GTH-842 and GTH-844: The pressure gauge fails to read 500 psi / 34.5 bar. The pressure setting needs to be adjusted. Continue to step 5.
GTH-1048 and GTH-1056: The pressure gauge fails to read 500 psi / 34.5 bar. The pressure setting needs to be adjusted. Continue to step 5.

5 Locate the pilot pressure relief valve (schematic item FB) of the control block on the front of the hydraulic tank. Loosen the jam nut at the top of the valve. Turn the adjustment screw clockwise to increase the pressure or counterclockwise to decrease the pressure. Tighten the jam nut and repeat this procedure beginning with step 4.

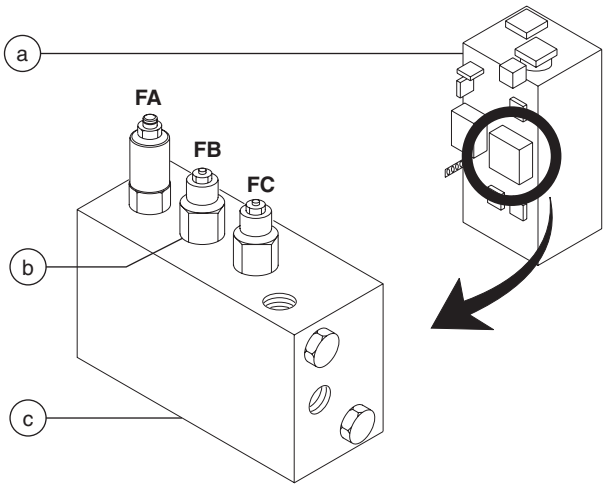

a hydraulic tank
b pilot pressure relief valve
c control block manifold

Downloaded from www.Manualslib.com manuals search engine

https://truckmanualshub.com/

7-23 Valve Adjustments - Tilt Limiter Manifold

How to Set the Tilt Limiter Pressure

Note: Be sure that the hydraulic oil level is visible in the inspection glass of the hydraulic tank.

Note: Two technicians are required to perform this procedure.

1 **GTH-636, GTH-644, GTH-842 and GTH-844:** Install a 0 to 3500 psi / 0 to 250 bar pressure gauge into test port 4 at the side of the hydraulic tank.

Note: There are four test ports at the hydraulic tank. Test port 1 is closest to the tank; test port 4 is farthest from the tank.

2 **GTH-1048 and GTH-1056:** Install a 0 to 3500 psi / 0 to 250 bar pressure gauge into test port 6 at the side of the hydraulic tank.

Note: There are six test ports at the hydraulic tank. Test port 1 is closest to the tank; test port 6 is farthest from the tank.

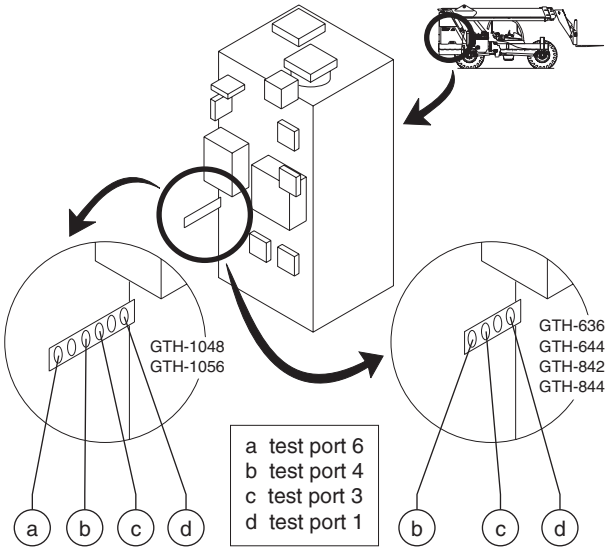

3 Start the engine. Allow the engine to idle after warming the engine to operating temperature.

4 Activate the fork level up function until the fork level cylinder is fully retracted, then continue to activate the function while observing the pressure on the gauge.

Result: The pressure gauge reads 1250 psi / 86.2 bar. The pressure setting is correct.

Result: The pressure gauge fails to read 1250 psi / 86.2 bar. The pressure setting needs to be adjusted. Continue to step 5.

5 Locate the tilt limiter relief valve (schematic item BA) of the tilt limiter manifold on the front of the hydraulic tank. Loosen the jam nut at the top of the valve. Turn the adjustment screw clockwise to increase the pressure or counterclockwise to decrease the pressure. Tighten the jam nut and repeat this procedure beginning with step 4.

Note: It may be necessary to perform this adjustment 5 or 6 times to ensure a correct pressure setting.

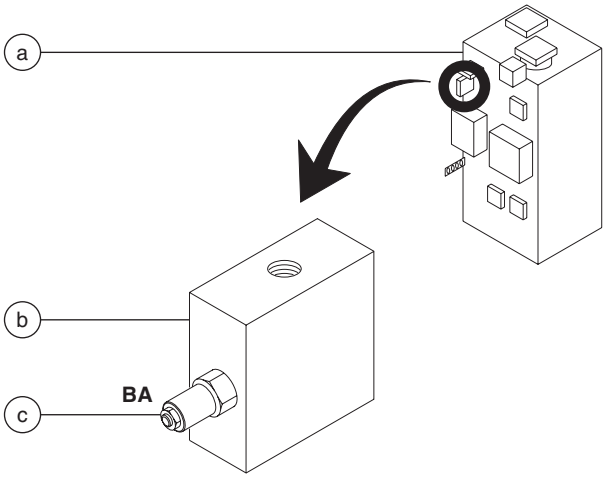

a hydraulic tank
b tilt limiter manifold
c tilt limiter relief valve

Downloaded from www.Manualslib.com manuals search engine

https://truckmanualshub.com/

7-24
Valve Coils

How to Test a Coil

A properly functioning coil provides an electromotive force which operates the solenoid valve. Critical to normal operation is continuity within the coil that provides this force field.

WARNING Electrocution hazard. Contact with electrically charged circuits could result in death or serious injury. Remove all rings, watches and other jewelry.

1 Start the engine.

2 While activating the appropriate machine function, apply a steel wrench to the tip of the solenoid valve. Release the wrench.

⊙ Result: The wrench sticks to the tip of the valve. The valve coil is functioning correctly.

⊠ Result: The wrench does not stick to the valve. The valve coil is not functioning correctly.

3 Disconnect the wire harness from the valve coil.

4 Using a multimeter set to read DC voltage, attach the positive lead to one of the terminals of the valve coil connector.

5 Attach the negative lead to a ground point on the chassis.

⊙ Result: The multimeter displays approximately 13V DC. The wire harness is good. Replace the valve coil.

⊠ Result: The multimeter displays 0V DC. The valve coil is good; the wire harness is faulty. Repair or replace the wire harness.

Downloaded from www.Manualslib.com manuals search engine

https://truckmanualshub.com/

REV D

Axle

8-1 Axles

How to Remove the Axle

WARNING Bodily injury hazard. This procedure requires specific repair skills, lifting equipment and a suitable workshop. Attempting this procedure without these skills and tools could result in death or serious injury and significant component damage. Dealer service is required.

1 Remove the fasteners securing the driveshaft to the transmission. Lower the end of the driveshaft to the ground.

2 Remove the fasteners securing the driveshaft to the axle. remove the driveshaft from the machine.

3 Loosen the lug nuts of both wheels on the axle to be removed. Do not remove the lug nuts.

4 Raise the end of the machine until the tires are off the ground. Place blocks under the chassis for support.

DANGER Crushing hazard. The chassis will fall if not properly supported.

5 Remove the lug nuts. Remove the tire and wheel assembly from both ends of the axle.

6 Support and secure the axle to an appropriate lifting device.

7 Working at one side of the machine, tag, disconnect and plug the fork level cylinder hoses at the cylinder manifold. Cap the fittings.

WARNING Bodily injury hazard. Spraying hydraulic oil can penetrate and burn skin. Loosen hydraulic connections very slowly to allow the oil pressure to dissipate gradually. Do not allow oil to squirt or spray.

NOTICE Component damage hazard. Hoses can be damaged if they are kinked or pinched.

8 Attach a lifting strap from an overhead crane to the barrel end of the axle level cylinder. Support the cylinder. Do not apply any lifting pressure.

9 Remove the fasteners securing the axle level cylinder barrel-end pivot pin to the chassis.

10 Use a soft metal drift to remove the pivot pin. Lower the cylinder onto the axle.

WARNING Crushing hazard. The cylinder will fall if not properly supported when the pivot pin is removed from the machine.

11 Repeat this procedure, beginning with step 6, for the other side of the axle.

12 Remove the fasteners securing the axle to the chassis. Remove the axle from the machine.

DANGER Crushing hazard. The axle will fall if not properly supported when the fasteners are removed from the machine.

Note: When installing the axle onto the chassis, torque the fasteners to specification.

Torque specification	
Axle mounting fasteners	380 ft-lbs 515 Nm

Downloaded from www.Manualslib.com manuals search engine

https://truckmanualshub.com/

How to Adjust the Front Axle Service Brakes

GTH-1048 and GTH-1056

When using the GTH-1048 and GTH-1056, most of the braking is performed by the front axle. As a result, the rear axle service brakes will rarely need to be adjusted. Should adjustment of the rear axle service brakes be required, contact the Genie Industries Service Dept.

1 Chock the tires.

2 Start the engine and allow the engine to idle.

3 Release the parking brake.

4 At the front axle, locate and remove the covers over the service brake adjustment screws. Refer to the following illustrations.

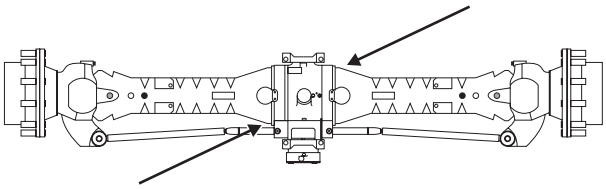

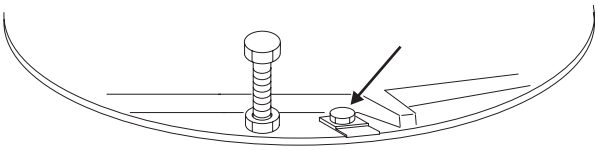

5 Turn both of the four-sided service brake adjustment screws in a counter clockwise direction until a slight resistance is detected.

6 Turn both of the four-sided service brake adjustment screws 3.75 turns in a clockwise direction.

7 Install the covers over the service brake adjustment screws. Securely tighten the fasteners. Do not over tighten.

How to Adjust the Parking Brakes

GTH-636, GTH-644, GTH-842 and GTH-844

1 Chock the tires.

2 Start the engine and allow the engine to idle.

3 Release the parking brake.

4 Remove the top inspection cover from the chassis at the fork end of the machine. Locate the parking brake cylinder on top of the drive axle.

5 Loosen the lock nut securing the threaded portion of the parking brake adjustment rod.

6 Turn the threaded rod of the cylinder out of the cylinder several turns.

7 Turn the threaded rod into the cylinder just until there is zero clearance between the bushing of the threaded rod, the lever actuator and the lever bracket.

Note: Turning the threaded rod too far into the cylinder will move the parking brake lever, resulting in a parking brake which does not function correctly. Do not over tighten the rod.

8 While holding the cylinder rod in position, securely tighten the cylinder rod jam nut.

9 Inspect the parking brake lever to confirm that the lever is not binding or in contact with axle casting.

10 Set the parking brake and stop the engine.

Downloaded from www.Manualslib.com manuals search engine

https://truckmanualshub.com/

How to Manually Release the Parking Brake

GTH-636, GTH-644, GHT-842 and GTH-844

1 Remove the top inspection cover from the chassis at the fork end of the machine. Locate the parking brake cylinder on top of the drive axle.

2 Loosen the lock nut securing the threaded portion of the parking brake adjustment rod.

3 Turn the threaded rod out of the cylinder until the parking brake is released, counting the number of revolutions the rod is turned.

Note: For ease in recalibrating the parking brake cylinder rod, it is helpful to keep an accurate count of revolutions that the rod is turned when releasing the brake.

GTH-1048 and GTH-1056

In the rare event of an engine failure, it may be necessary to release the brakes before moving the machine.

1 Chock the tires.

2 Working at the front axle, locate the four parking brake release bolts with jam nuts at the locations shown in the illustration. Fully loosen the jam nuts which secures the bolts in position.

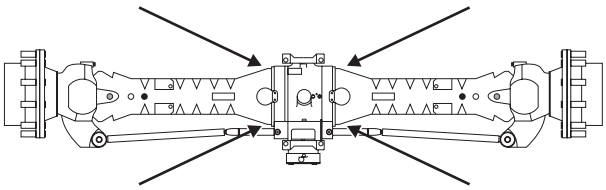

3 Turn the parking brake release bolts equally into the differential housing until the parking brake is released.

NOTICE Component damage hazard. Turning the parking brake release bolts into the housing in unequal amounts may damage the parking brake internally. Do not turn the parking brake release bolts into the housing in unequal amounts.

4 To reset the parking brake, turn the bolts in equal amounts out of the differential housing until the top of each bolt is 32 ±1 mm from the differential case. Securely tighten the jam nut. Do not over tighten.

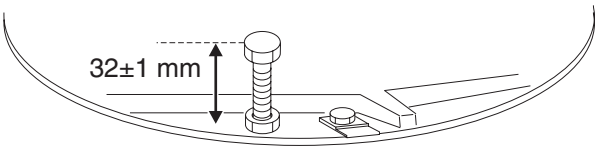

How to Repair the Axle

GTH-636, GTH-644, GHT-842 and GTH-844:

Repair procedures and additional axle information is available in the *Dana 212 Axle Maintenance and Repair Manual* (Dana part number 0247).

Dana 212 Axle Maintenance and Repair Manual	
Genie part number	97488

GTH-1048 and GTH-1056:

Repair procedures and additional axle information is available in the *Dana 213 Axle Maintenance and Repair Manual* (Dana part number 0243).

Dana 212 Axle Maintenance and Repair Manual	
Genie part number	115026

Downloaded from www.Manualslib.com manuals search engine

https://truckmanualshub.com/

Outriggers

REV A

9-1 Outriggers

How to Remove an Outrigger

1 Extend the outrigger until the pad just touches the ground. Do not rest the weight of the machine on the outrigger.

2 Tag, disconnect and plug the hydraulic supply hoses at the outrigger cylinder. Cap the fittings.

WARNING Bodily injury hazard. Spraying hydraulic oil can penetrate and burn skin. Loosen hydraulic connections very slowly to allow the oil pressure to dissipate gradually. Do not allow oil to squirt or spray.

NOTICE Component damage hazard. Hoses can be damaged if they are kinked or pinched.

3 Attach a lifting strap from an overhead crane to the outrigger assembly. Raise the outrigger to approximately 80°.

4 Remove the fasteners securing the outrigger cylinder rod-end pivot pin to the machine.

5 Use a soft metal drift to remove the pivot pin. Lower the cylinder onto the outrigger.

WARNING Crushing hazard. The cylinder may become unbalanced and fall if not properly supported when the pivot pin is removed from the machine.

6 Raise the outrigger assembly to a vertical position.

7 Remove the fasteners securing the outrigger pivot pin to the machine.

8 Use a soft metal drift to remove the pivot pin. Remove the outrigger assembly from the machine.

WARNING Crushing hazard. The outrigger will fall if not properly supported when the pivot pin is removed from the machine.

Downloaded from www.Manualslib.com manuals search engine

https://truckmanualshub.com/

How to Remove an Outrigger Cylinder

Note: When removing a hose assembly or fitting, the O-ring on the fitting and/or hose end must be replaced and then torqued to specification during installation. Refer to Section 2, *Hydraulic Hose and Fitting Torque Specifications.*

1 Extend the outrigger until the pad just touches the ground. Do not rest the weight of the machine on the outrigger.

2 Tag, disconnect and plug the two hydraulic supply hoses at the outrigger cylinder. Cap the fittings.

WARNING Bodily injury hazard. Spraying hydraulic oil can penetrate and burn skin. Loosen hydraulic connections very slowly to allow the oil pressure to dissipate gradually. Do not allow oil to squirt or spray.

NOTICE Component damage hazard. Hoses can be damaged if they are kinked or pinched.

3 Attach a lifting strap from an overhead crane to the barrel end of the outrigger cylinder. Support the cylinder. Do not apply any lifting pressure.

4 Remove the fasteners securing the outrigger cylinder barrel-end pivot pin to the chassis.

5 Use a soft metal drift to remove the pivot pin.

WARNING Crushing hazard. The cylinder will fall if not properly supported when the pivot pin is removed from the machine.

5 Raise the cylinder to a vertical position.

6 Remove the fasteners securing the outrigger cylinder rod-end pivot pin to the machine.

7 Use a soft metal drift to remove the pivot pin. Remove the cylinder from the machine.

WARNING Crushing hazard. The cylinder will fall if not properly supported when the pivot pin is removed from the machine.

Downloaded from www.Manualslib.com manuals search engine

https://truckmanualshub.com/

This page intentionally left blank.

Downloaded from www.Manualslib.com manuals search engine

https://truckmanualshub.com/

Troubleshooting

Observe and Obey:

- ☑ Troubleshooting and repair procedures shall be completed by a person trained and qualified on the repair of this machine.
- ☑ Immediately tag and remove from service a damaged or malfunctioning machine.
- ☑ Repair any machine damage or malfunction before operating the machine.
- ☑ Unless otherwise specified, perform each repair procedure with the machine in the following configuration:
  - Machine parked on a firm, level surface
  - Boom in the stowed position
  - Key switch in the off position with the key removed
  - Wheels chocked

Before Troubleshooting:

- ☑ Read, understand and obey the safety rules and operating instructions in the appropriate operator's manual on your machine.
- ☑ Be sure that all necessary tools and test equipment are available and ready for use.
- ☑ Be aware of the following hazards and follow generally accepted safe workshop practices.

DANGER Crushing hazard. When testing or replacing any hydraulic component, always support the structure and secure it from movement.

WARNING Electrocution hazard. Contact with electrically charged circuits could result in death or serious injury. Remove all rings, watches and other jewelry.

WARNING Bodily injury hazard. Spraying hydraulic oil can penetrate and burn skin. Loosen hydraulic connections very slowly to allow the oil pressure to dissipate gradually. Do not allow oil to squirt or spray.

General Repair Process

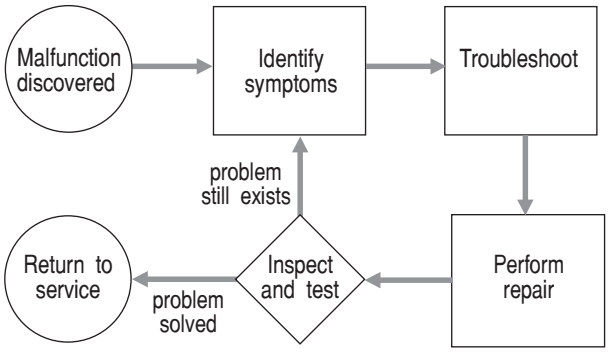

Downloaded from www.Manualslib.com manuals search engine

https://truckmanualshub.com/

1-1 Engine Fault Codes - GTH-1048 and GTH-1056

When an engine malfunction is detected by the engine Electronic Control Module (ECM), a fault code is recorded and the blink code light, located on the dashboard in the operator's compartment, will turn on.

Warning Lamp

The ECM for the John Deere 4045T engine is capable of detecting, storing and reacting to abnormal engine operating conditions or faults. The presence of a fault is reported to the operator through the amber colored Warning Stop Engine Blink Code (BC) light located on the dash. Depending upon the severity of the engine fault detected, the ECM may take steps to minimize engine damage by reducing power output. Faults are also stored in the ECM and can be accessed by service personnel at a later time using the BC light.

Engine Protection

When the engine is in operation and the ECM detects a warning condition, the BC light on the dash will begin to flash. A warning condition is an engine fault in which a critical monitored engine parameter exceeds its normal operating values. If the engine operating conditions are not improved or if the conditions become more extreme, the warning condition may become a shutdown condition. At this point, the BC light will no longer flash, but will remain brightly lit and the ECM may begin a sequence of power reduction. The operator is responsible for shutting down the machine to prevent further damage to the engine.

The ECM will not detect all engine problems, nor is the fault detection capability a substitute for regular engine maintenance. Normal machinery operating procedures should always be observed.

Fault Code Diagnostics

When the engine ECM detects an abnormal operating condition, the ECM generates a fault code that is stored in the ECM which may be recalled by service personnel at a later time even if the condition which caused the engine fault has ceased to exist. Multiple fault codes can be stored simultaneously. These codes can give insight into the problem area, but won't necessarily specify the underlying problem.

Access the Fault Codes

To access the fault codes, begin by turning the key switch to the off position. Then, press and hold the Blink Code Enable button. While activating the BCE button, turn the key switch to the on position, though do not activate the engine starter. Continue to activate the BCE button until the BC light begins to flash, approximately 7 seconds.

The BC light will begin to flash in a sequence which corresponds to the fault code stored the ECM memory. Once the service tech has noted all the codes, turn the key switch to the off position.

Active Codes vs Stored Codes

To aid the service tech over time, fault codes are reported as active codes and stored codes. Active fault codes indicate an engine condition or conditions which have not been corrected; stored fault codes are the history of fault codes stored in the ECM. Active fault codes are preceded by code 32; stored fault codes are preceded by code 33. If there are no engine faults being stored by the ECM, code 88 will also be displayed.

Downloaded from www.Manualslib.com manuals search engine

https://truckmanualshub.com/

How to Read the Fault Codes

The flashing BC light, when combined with short or long pauses between the flash, tells the service technician the specific fault coded detected by the ECM, if any. Code 32, for example, would appear as three quick flashes followed by a short pause of two seconds, then two more quick flashes followed by a long pause of four seconds. Code 33 would appear as three quick flashes followed by a short pause, then three more quick flashes followed by a long pause.

Example: If the ECM had no active faults to report, though had stored codes 18 and 62 in memory, the following flash sequence would be observed:

Three quick flashes followed by a short pause… two quick flashes followed by a long pause… eight quick flashes followed by a short pause… eight quick flashes followed by a long pause… three quick flashes followed by a short pause… three quick flashes followed by a long pause... one quick flash followed by a short pause… eight quick flashes followed by a long pause… six quick flashes followed by a short pause… two quick flashes followed by a long pause… the ECM would then repeat the previous sequence.

Code and Description	Code and Description
11 Analog throttle input high	63 Engine coolant temp high – moderately severe
12 Analog throttle input low	64 Engine oil pressure moderately low
18 Engine coolant temperature high	65 Engine oil pressure extremely low
19 Engine coolant temperature low	66 Manifold air temperature moderately high
21 Sensor supply voltage high	68 Fuel derate
22 Sensor supply voltage low	69 Engine coolant temperature high – most severe
23 Engine oil pressure input voltage high	71 Pump control valve closure too long
24 Engine oil pressure input voltage low	72 Pump control valve closure too short
25 Manifold air temperature input voltage high	73 Pump solenoid circuit open
26 Manifold air temperature input voltage low	74 Pump solenoid circuit severely shorted
28 ECM error	75 Pump control valve closure not detected
32 Signifies start of active fault codes	76 Pump solenoid circuit moderately shorted
33 Signifies start of previously active fault codes	77 Pump solenoid current high
37 Fuel temperature input voltage high	78 Security violation
38 Fuel temperature input voltage low	79 Internal ECM error
39 Crank position input noise/pattern error	81 Fuel temperature moderately high
42 Engine overspeed	82 Engine protection shutdown
54 ECM power down error	83 Auxiliary engine shutdown switch active
55 Can error	84 ECM power down error/external derate active
62 Engine coolant temperature high – least severe	88 Signifies that no fault codes are stored

Downloaded from www.Manualslib.com manuals search engine

https://truckmanualshub.com/

1-2
Hydraulic Pump

Symptom:
Laboring engine; pump is constantly trying to build pressure.

Check the Pump

1 Tag, disconnect and plug the smaller JIC hose at the top of the hydraulic pump.

WARNING Bodily injury hazard. Spraying hydraulic oil can penetrate and burn skin. Loosen hydraulic connections very slowly to allow the oil pressure to dissipate gradually. Do not allow oil to squirt or spray.

2 Install a hose onto the open port and tighten. Place open end of hose into 5 gallon container.

3 Start the engine and run for 1 minute.

4 Stop the engine. Measure the fluid.

⊙ Result: Fluid volume is one gallon or less. The pump is good. Proceed to step 5.

⊠ Result: Fluid volume is greater than one gallon. The pump is faulty. Replace the pump.

Check the Main Valve

5 Tag and disconnect the 1.5 inch main valve hose from the collector manifold at the top of the hydraulic tank. Drain the hose into a container.

6 Place open end of hose into 5 gallon container.

7 Start the engine.

⊙ Result: No fluid is draining from the hose. The main valve is good. Proceed to step 10.

⊠ Result: Fluid is draining from the hose. Inspect the main valve Y-plug. Proceed to the next step.

8 Stop the engine. Remove the Y-plug from the top of the main valve. Inspect for cracks, cuts or breaks in the o-ring or teflon ring.

⊙ Result: Cracks, cuts or breaks are not observed. The Y-plug is in good condition. Proceed to the next step.

⊠ Result: Cracks, cuts or breaks are observed. Replace the o-ring or teflon ring.

WARNING Bodily injury hazard. Spraying hydraulic oil can penetrate and burn skin. Loosen hydraulic connections very slowly to allow the oil pressure to dissipate gradually. Do not allow oil to squirt or spray.

9 Remove the manifold relief valve (schematic item AD) from the main valve manifold. Inspect for cracks, cuts or breaks in the seals.

⊙ Result: Cracks, cuts or breaks are not observed. Replace the relief valve.

⊠ Result: Cracks, cuts or breaks are observed. Replace the seals.

WARNING Bodily injury hazard. Spraying hydraulic oil can penetrate and burn skin. Loosen hydraulic connections very slowly to allow the oil pressure to dissipate gradually. Do not allow oil to squirt or spray.

Downloaded from www.Manualslib.com manuals search engine

https://truckmanualshub.com/

Check the Control Block

10 Install a 0 to 3500 psi / 0 to 250 bar pressure gauge into test port 2 at the side of the hydraulic tank.

Note: **GTH-636, GTH-644, GTH-842 and GTH-844:** There are four test ports at the hydraulic tank. Test port 1 is closest to the tank; test port 4 is farthest from the tank.

Note: **GTH-1048 and GTH-1056:** There are six test ports at the hydraulic tank. Test port 1 is closest to the tank; test port 6 is farthest from the tank.

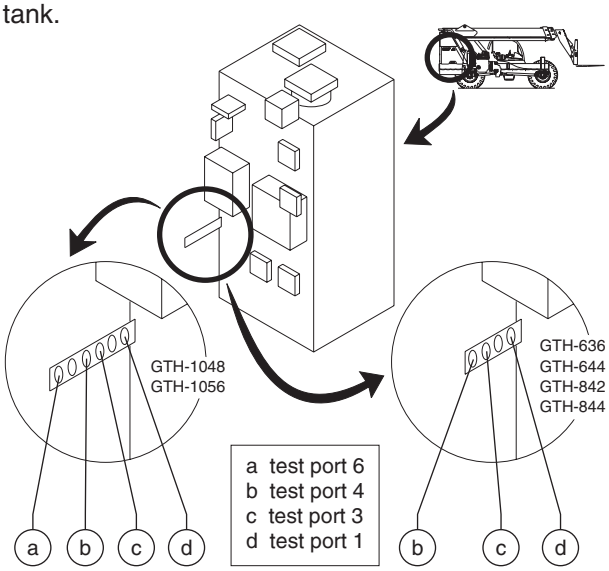

11 Check the steer pressure. Start the engine and allow the engine to idle.

12 Without operating any machine controls, observe the reading on the pressure gauge.

⊙ Result: The pressure gauge reads 2250 psi / 155 bar. The pressure setting is correct.

⊠ Result: The pressure gauge shows a fluctuating pressure reading. The steer relief valve (schematic item FC) is faulty. Replace the valve.

⊠ Result: The pressure gauge reads less than 1000 psi / 69 bar. The steer relief valve (schematic item FC) is faulty. Replace the valve.

Check the Pilot Pressure

13 Stop the engine.

14 **GTH-636, GTH-644, GTH-842 and GTH-844:** Install a 0 to 3500 psi / 0 to 250 bar pressure gauge into test port 3 at the side of the hydraulic tank.
GTH-1048 and GTH-1056: Install a 0 to 3500 psi / 0 to 250 bar pressure gauge into test port 5 at the side of the hydraulic tank.

15 Check the pilot pressure. Start the engine and allow the engine to idle.

⊙ Result:
GTH-636, GTH-644, GTH-842 and GTH-844: The pressure gauge reads 500 psi / 34.5 bar. The pressure setting is correct.
GTH-1048 and GTH-1056: The pressure gauge reads 400 psi / 27.6 bar. The pressure setting is correct.

⊠ Result: The pressure gauge shows a fluctuating pressure reading. Proceed to the next step.

⊠ Result: The pressure reading is 200 psi / 13.8 bar or lower OR the pressure reading is 1000 psi / 69 bar or higher. The pressure reducing/relief valve (schematic item FB) is faulty. Replace the valve.

16 Turn the engine off.

17 Tag, disconnect and plug the hydraulic hose from port C of the control block. Cap the fitting.

18 Start the engine and allow the engine to idle.

⊙ Result: The pressure gauge shows a fluctuating pressure reading. The pressure reducing/relief valve (schematic item FB) is faulty. Replace the valve.

⊠ Result: The pressure reading does not fluctuate. Troubleshoot the parking brake or the joystick circuits.

Downloaded from www.Manualslib.com manuals search engine

https://truckmanualshub.com/

1-3
Boom Functions

Joystick (4-way) Circuit

Symptom:
Slow or no boom functions

Check the Pilot Pressure

1 **GTH-636, GTH-644, GTH-842 and GTH-844:** Install a 0 to 3500 psi / 0 to 250 bar pressure gauge into test port 3 at the side of the hydraulic tank.

Note: There are four test ports at the hydraulic tank. Test port 1 is closest to the tank; test port 4 is farthest from the tank.

2 **GTH-1048 and GTH-1056:** Install a 0 to 3500 psi / 0 to 250 bar pressure gauge into test port 5 at the side of the hydraulic tank.

Note: There are six test ports at the hydraulic tank. Test port 1 is closest to the tank; test port 6 is farthest from the tank.

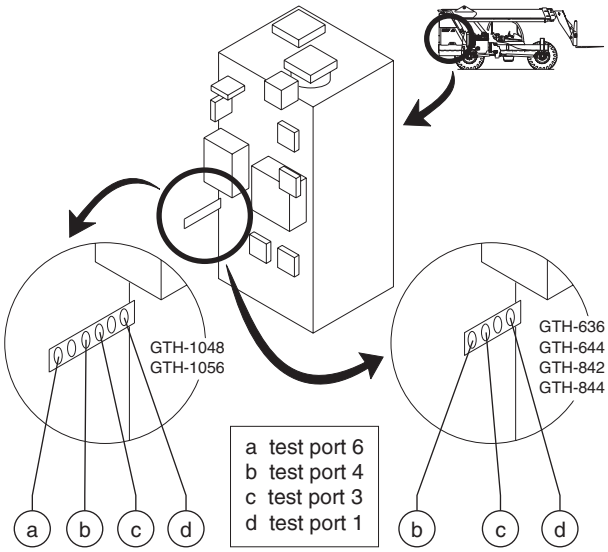

3 Check the pilot pressure. Start the engine and allow the engine to idle.

Result:
GTH-636, GTH-644, GTH-842 and GTH-844: The pressure gauge reads 500 psi / 34.5 bar. The pressure setting is correct. Proceed to step 4.
GTH-1048 and GTH-1056: The pressure gauge reads 400 psi / 27.6 bar. The pressure setting is correct. Proceed to step 4.

Result:
GTH-636, GTH-644, GTH-842 and GTH-844: The pressure gauge fails to read 500 psi / 34.5 bar. Adjust or replace the pressure reducing/relief valve (schematic item FB). Refer to Repair Procedure 7-18, *How to Set the Boom System Pilot Pressure.*
GTH-1048 and GTH-1056: The pressure gauge fails to read 400 psi / 27.6 bar. Adjust or replace the pressure reducing/relief valve (schematic item FB). Refer to Repair Procedure 7-18, *How to Set the Boom System Pilot Pressure.*

Result: The pressure reading is 200 psi / 13.8 bar or lower. The pressure reducing/relief valve (schematic item FB) is faulty. Replace the valve.

4 **GTH-636, GTH-1048 and GTH-1056:** Stop the engine. Proceed to step 5.
GTH-644, GTH-842 and GTH-844: Stop the engine. Proceed to step 13.

Downloaded from www.Manualslib.com manuals search engine

https://truckmanualshub.com/

Check the Controller Relief (drop block) Manifold

5 Turn the key switch to the on position. Do not start the engine.

6 Using a wrench, check for magnetism in the solenoid valve of the controller relief manifold. Touch a wrench to the end of the valve.

⊙ Result: The wrench sticks to the valve. The coil is good. Proceed to step 9.

⊠ Result: The wrench does not stick to the valve. Proceed to step 7.

Note: The controller relief manifold is secured to the hoses inside the frame rail next to the operator's compartment.

Note: A fast way to determine if a valve coil is functioning correctly is to touch a wrench to the end of the valve when the coil is activated. When energized, the valve will magnetize and the wrench will stick to the valve; turn the power off and the wrench will fall.

7 Using a multimeter, check for power at the valve coil.

⊙ Result: Power is present at the coil. Proceed to step 8.

⊠ Result: Power is not present at the coil. Repair the wire circuit to the coil.

8 Check for continuity in the ground wire circuit from the controller relief valve coil to ground.

⊙ Result: The ground circuit has continuity. Replace the valve coil.

⊠ Result: The ground circuit does not have continuity. Repair the ground wire circuit to the coil.

9 Tag and disconnect the two smaller hydraulic hoses at the controller relief manifold. Connect the hoses together and torque to specification. Refer to Section 2, *Specifications*.

Note: Do not remove the three larger hoses from the manifold.

10 Start the engine and allow the engine to idle. Test a boom function.

⊙ Result: The boom functions correctly. The controller relief valve (schematic item OA) is faulty. Replace the valve.

⊠ Result: The boom does not function correctly. The controller relief valve is good. Proceed to step 11.

11 Stop the engine.

12 Install the hoses, disconnected in step 9, into the controller relief manifold. Torque to specification. Refer to Section 2, *Specifications*.

Check the Joystick

13 Locate the hose installed into port P of the joystick. Tag the hose.

14 Tag, disconnect and plug all hydraulic hoses installed into the joystick except for the hose at port P of the joystick.

15 Start the engine and allow the engine to idle. Do not move the joystick.

⊙ Result: Oil does not flow from any port. The joystick is functioning correctly.

⊠ Result: Oil flows from one or more ports of the joystick. The joystick is faulty. Repair or replace the joystick.

Downloaded from www.Manualslib.com manuals search engine

https://truckmanualshub.com/

Check the Tilt Function

16 Stop the engine.

17 Turn the key switch to the on position. Do not start the engine.

18 Locate the control relay under the joystick. Check the relay for functionality.

Note: A fast way to determine if a relay is functioning correctly is to listen carefully when activating the relay. When activated, the relay will make a distinctive 'click' as the relay contacts switch internally.

19 Activate the fork level functions and, using a wrench, check for magnetism in the solenoid valves of both fork tilt manifolds (schematic items GA and GB). Touch a wrench to the end of the valve.

⊙ Result: The wrench sticks to the valve. The coil is good. Replace the valve(s).

⊠ Result: The wrench does not stick to the valve(s). Proceed to step 20.

Note: The fork tilt manifolds are the two manifolds on the hydraulic tank located closest to the bottom of the tank.

Note: A fast way to determine if a valve coil is functioning correctly is to touch a wrench to the end of the valve when the coil is activated. When energized, the valve will magnetize and the wrench will stick to the valve; turn the power off and the wrench will fall.

20 Using a multimeter, check for power at the valve coils.

⊙ Result: Power is present at the coils. Proceed to step 21.

⊠ Result: Power is not present at the coil(s). Repair the wire circuit to the coil(s).

21 Check for continuity in the ground wire circuit from the fork tilt valve coils to ground.

⊙ Result: The ground circuit has continuity. Replace the valve coil(s).

⊠ Result: The ground circuit does not have continuity. Repair the ground wire circuit to the coil(s).

Downloaded from www.Manualslib.com manuals search engine

https://truckmanualshub.com/

Lift Not Functional

1 Tag and disconnect the hydraulic hoses at the dual pilot check manifold. Cap the fittings on the manifold. Connect together both hoses from the CA side of the manifold AND connect together both hoses from the CB side of the manifold. Torque to specification. Refer to Section 2, *Specifications*.

WARNING Bodily injury hazard. Spraying hydraulic oil can penetrate and burn skin. Loosen hydraulic connections very slowly to allow the oil pressure to dissipate gradually. Do not allow oil to squirt or spray.

2 Start the engine and allow the engine to idle.

3 Activate the boom up function.

⊙ Result: The machine functions correctly. Replace the check valves of the dual pilot check valve manifold (schematic items CA and CB) OR replace the dual pilot check valve manifold.

⊠ Result: The machine does not function correctly. Proceed to step 4.

DANGER Crushing Hazard. The load on the forks could fall when lowering the boom due to bypassing the fork self-leveling function, resulting in death or serious injury and property damage. Do not allow anyone to stand anywhere near the area below or in front of the boom when performing this procedure.

4 Lower the boom to the stowed position. Stop the engine.

5 Replace the check valve at the barrel end of the fork level cylinder (schematic item RA) OR troubleshoot the dual pilot check circuit.

WARNING Bodily injury hazard. Spraying hydraulic oil can penetrate and burn skin. Loosen hydraulic connections very slowly to allow the oil pressure to dissipate gradually. Do not allow oil to squirt or spray.

Downloaded from www.Manualslib.com manuals search engine

https://truckmanualshub.com/

Fork Rotate Function

Symptom:
Fork rotates in one direction only (if equipped).

1 Turn the key switch to the on position. Start the engine.

2 Operate the manual over ride at both ends of the fork rotate valve.

⊙ Result: The machine functions correctly. Proceed to step 3.

⊠ Result: The machine does not function correctly. Remove air from the fork rotate circuit. Refer to Repair Procedure 1-6, *How to Replace the Fork Rotate Cylinder Hoses*.

3 Troubleshoot the fork rotate electrical circuit. While activating the fork rotate function in one direction, use a wrench to check for magnetism in the solenoid valve of the fork rotate manifold. Touch a wrench to the valve.

⊙ Result: The wrench sticks to the valve. The coil is good.

⊠ Result: The wrench does not stick to the valve. Repair or replace the wire circuit from the fork tilt switch to the fork tilt valve coil OR replace the fork tilt switch OR replace the valve coil.

Note: A fast way to determine if a valve coil is functioning correctly is to touch a wrench to the end of the valve when the coil is activated. When energized, the valve will magnetize and the wrench will stick to the valve; turn the power off and the wrench will fall.

4 Activate the fork rotate switch in the opposite direction from step 3 and use a wrench to check for magnetism in the solenoid valve of the fork rotate manifold. Touch a wrench to the valve.

⊙ Result: The wrench sticks to the valve. The coil is good. Replace the valve (schematic item LA).

⊠ Result: The wrench does not stick to the valve. Repair or replace the wire circuit from the fork tilt switch to the fork tilt valve coil OR replace the fork tilt switch OR replace the valve coil.

Downloaded from www.Manualslib.com manuals search engine

https://truckmanualshub.com/

Fork Level Function

Symptom A:
Forks self-level at slower rate than boom is descending

Check the Tilt Relief Valve

1 Start the engine and allow the engine to idle.

2 Level the forks.

3 Stop the engine.

4 Tag and disconnect the hydraulic hoses at the tilt limiter manifold. Cap the fittings on the manifold. Connect the hoses together and torque to specification. Refer to Section 2, *Specifications*.

WARNING Bodily injury hazard. Spraying hydraulic oil can penetrate and burn skin. Loosen hydraulic connections very slowly to allow the oil pressure to dissipate gradually. Do not allow oil to squirt or spray.

5 Start the engine and allow the engine to idle.

6 Activate the boom up and boom down functions.

⊙ Result: The machine functions correctly. Replace the relief valve of the tilt limiter manifold (schematic item BA).

⊠ Result: The machine does not function correctly. Troubleshoot the fork level cylinder manifold components (schematic items RA, RB and RC) OR check the cylinder for internal leakage.

Symptom B:
Forks self-level at a faster rate than the boom is descending.

1 Remove the load from the forks.

2 Start the engine and allow the engine to idle.

3 Level the forks.

4 Stop the engine.

5 Tag and disconnect the two hydraulic hoses of the boom from the tee fittings at ports C1 and C2 of the dual pilot check manifold. Cap the fittings.

WARNING Bodily injury hazard. Spraying hydraulic oil can penetrate and burn skin. Loosen hydraulic connections very slowly to allow the oil pressure to dissipate gradually. Do not allow oil to squirt or spray.

6 Tag and disconnect the hydraulic hoses from the fittings at ports V1 and V2 of the dual pilot check manifold. Cap the fittings.

WARNING Bodily injury hazard. Spraying hydraulic oil can penetrate and burn skin. Loosen hydraulic connections very slowly to allow the oil pressure to dissipate gradually. Do not allow oil to squirt or spray.

7 Connect the hydraulic hose of port C1 to the hydraulic hose of port V1. Torque to specification. Refer to Section 2, *Specifications*.

8 Connect the hydraulic hose of port C2 to the hydraulic hose of port V2. Torque to specification. Refer to Section 2, *Specifications*.

9 Start the engine and allow the engine to idle.

Downloaded from www.Manualslib.com manuals search engine

https://truckmanualshub.com/

10 Activate the boom up and boom down functions.

⊙ Result: The machine functions correctly. Replace the check valves of the dual pilot check manifold (schematic items CA and CB).

⊠ Result: The machine does not function correctly. Proceed to step 11.

11 Separate the hoses connected together in steps 7 and 8, and install them into the correct ports of the dual pilot check manifold. Torque to specification. Refer to Section 2, *Specifications*.

⚠WARNING Bodily injury hazard. Spraying hydraulic oil can penetrate and burn skin. Loosen hydraulic connections very slowly to allow the oil pressure to dissipate gradually. Do not allow oil to squirt or spray.

12 Start the engine and allow the engine to idle.

13 Lower the boom to the stowed position.

14 Stop the engine.

15 Tag and disconnect the lower supply hose to the lift cylinder at the exhaust side of the machine.

⚠WARNING Bodily injury hazard. Spraying hydraulic oil can penetrate and burn skin. Loosen hydraulic connections very slowly to allow the oil pressure to dissipate gradually. Do not allow oil to squirt or spray.

16 Start the engine and allow the engine to idle.

17 Activate the boom down function.

⊠ Result: Fluid is leaking from the open port of the cylinder. The cylinder has internal leakage. Replace the seals inside the cylinder.

Fork Level Hose Blowout

1 Remove the load from the forks.

2 Tag and disconnect the hydraulic hoses from the boom at ports C1 and C2 of the dual pilot check manifold. Plug the hoses.

3 Using a jumper hose, connect together ports C1 and C2 and torque to specification. Refer to Section 2, *Specifications*.

⚠WARNING Bodily injury hazard. Spraying hydraulic oil can penetrate and burn skin. Loosen hydraulic connections very slowly to allow the oil pressure to dissipate gradually. Do not allow oil to squirt or spray.

4 Start the engine and allow the engine to idle.

5 Activate the boom down function and lower the boom to the stowed position.

Note: Once the hoses are replaced, the circuit must be bled. Refer to Repair Procedure 1-3, *How to Bleed the Lift/Tilt Circuit*.

Downloaded from www.Manualslib.com manuals search engine

https://truckmanualshub.com/

1-4
Drive Functions

Symptom:
Machine won't drive.

If the back-up alarm operates:

- Troubleshoot ground wire connection on the transmission mount at the cab side of the machine.
- Troubleshoot clutch cut-off switch and switch wiring. Remove black wires from clutch cut-off pressure switch (under cab floor) and connect together.
- Troubleshoot transmission shift coils and wiring.

If the back-up alarm does not operate:

- Check for faulty 20A fuse at top left of fuse block.

If the sway function operates:

- Troubleshoot the parking brake relay and relay wiring OR parking brake pressure switch and wiring.
- Troubleshoot transmission controller and wiring.

If the sway function does not operate:

- Troubleshoot the boom limit switch and limit switch wiring. With boom in stowed position, look for 12V at yellow wire on the switch (to calibrate the boom limit switch, refer to Repair Procedure 1-1, *How to Adjust the Limit Switch*).

Symptom:
Back-up alarm doesn't work when transmission in reverse.

- Troubleshoot the back-up alarm and alarm wiring.

Downloaded from www.Manualslib.com manuals search engine

https://truckmanualshub.com/

1-5
Steer Functions

How to Troubleshoot the Steering

Check the Steer Orbitral

1 Tag, disconnect and plug the hoses at orbitral ports T, R and L. Do not cap the fittings.

WARNING Bodily injury hazard. Spraying hydraulic oil can penetrate and burn skin. Loosen hydraulic connections very slowly to allow the oil pressure to dissipate gradually. Do not allow oil to squirt or spray.

2 Install the hose from port P into port L and torque to specification. Refer to Section 2, *Specifications*.

3 Start the engine. Do not move the steering wheel.

Result: There is no flow from the open ports of the orbitral. The steer orbitral is functioning correctly.

Result: There is fluid flow from one or more of the ports of the orbitral. The steer orbitral is faulty and must be repaired or replaced.

4 Turn the machine off. Install the hoses onto the correct orbitral fitting and torque to specification. Refer to Section 2, *Specifications*.

Check the Steer Selector Valve

5 Start the engine.

Result: The wheels at one or both ends of the machine 'drift' after releasing the steering wheel.

6 Adjust the wheels so that all wheels are parallel with the length of the chassis.

7 Turn off the engine.

8 Working inside the operator's compartment, remove the fasteners securing the joystick inspection cover to the side console.

9 Remove the fasteners securing the steer selector to the side console.

10 Tag and disconnect the hoses from the steer selector valve. Cap the fittings on the valve.

WARNING Bodily injury hazard. Spraying hydraulic oil can penetrate and burn skin. Loosen hydraulic connections very slowly to allow the oil pressure to dissipate gradually. Do not allow oil to squirt or spray.

11 Connect together the hoses from port EXH and CYL 1, and torque to specification. Refer to Section 2, *Specifications*.

12 Connect together the hoses from port PSI and CYL 2, and torque to specification. Refer to Section 2, *Specifications*.

13 Start the engine.

Downloaded from www.Manualslib.com manuals search engine

https://truckmanualshub.com/

14 Activate the drive forward function.

⊙ Result: The wheels at one or both ends of the machine 'drift' and the machine will not drive in a straight line without steering correction. The steer selector valve is operating correctly.

⊠ Result: The wheels do not 'drift' and the machine drives in a straight line. The steer selector valve is faulty and must be repaired or replaced.

15 Turn off the engine.

16 Disconnect the steer selector valve hose from one another and install them into the correct ports of the steer selector valve, and torque to specification. Refer to Section 2, *Specifications*.

17 Install the steer selector into the side console. Install and securely tighten the fasteners.

18 Install the joystick inspection cover to the side console. Install and securely tighten the fasteners.

Check the Front Steer Cylinder

19 Start the engine.

20 Move the steer selector to two-wheel steer.

21 Turn the steering wheel to the right until the wheels turn fully to the right, then turn the machine off.

22 Tag, disconnect and plug the return hose at the cylinder. Do not cap the fitting.

23 Start the engine.

24 Turn the steering wheel to the right, then turn the machine off.

⊙ Result: Fluid does not flow from the open fitting on the steer cylinder. The cylinder is operating correctly.

⊠ Result: Fluid flows from the open fitting on the steer cylinder. The cylinder is faulty and must be repaired or replaced.

25 Install the hose, disconnected in step 22, onto the cylinder and torque to specification. Refer to Section 2, *Specifications*.

26 Start the engine.

27 Turn the steering wheel to the left until the wheels turn fully to the left, then turn the machine off.

28 Tag, disconnect and plug the return hose at the cylinder. Do not cap the fitting.

29 Start the engine.

30 Turn the steering wheel to the left, then turn the machine off.

⊙ Result: Fluid does not flow from the open fitting on the steer cylinder. The cylinder is operating correctly.

⊠ Result: Fluid flows from the open fitting on the steer cylinder. The cylinder is faulty and must be repaired or replaced.

31 Install the hose, disconnected in step 28, onto the cylinder and torque to specification. Refer to Section 2, *Specifications*.

Downloaded from www.Manualslib.com manuals search engine

https://truckmanualshub.com/

Check the Rear Steer Cylinder

32 Start the engine.

33 Move the steer selector to oblique steer.

34 Turn the steering wheel to the right until the wheels turn fully to the right, then turn the machine off.

35 Tag, disconnect and plug the return hose at the cylinder. Do not cap the fitting.

36 Start the engine.

37 Turn the steering wheel to the right, then turn the machine off.

⊙ Result: Fluid does not flow from the open fitting on the steer cylinder. The cylinder is operating correctly.

⊠ Result: Fluid flows from the open fitting on the steer cylinder. The cylinder is faulty and must be repaired or replaced.

38 Install the hose, disconnected in step 35, onto the cylinder and torque to specification. Refer to Section 2, *Specifications*.

39 Start the engine.

40 Turn the steering wheel to the left until the wheels turn fully to the left, then turn the machine off.

41 Tag, disconnect and plug the return hose at the cylinder. Do not cap the fitting.

42 Start the engine.

43 Turn the steering wheel to the left, then turn the machine off.

⊙ Result: Fluid does not flow from the open fitting on the steer cylinder. The cylinder is operating correctly.

⊠ Result: Fluid flows from the open fitting on the steer cylinder. The cylinder is faulty and must be repaired or replaced.

44 Install the hose, disconnected in step 41, onto the cylinder and torque to specification. Refer to Section 2, *Specifications*.

Downloaded from www.Manualslib.com manuals search engine

https://truckmanualshub.com/

1-6
Brake Functions

Service Brakes

Symptom:
Brakes dragging (not releasing)

1 Tee in a 0 to 1000 psi / 0 to 100 bar pressure gauge at port A of the brake actuator at the brake pedal assembly.

2 Start the engine and allow the engine to idle. Do not touch the brake pedal.

⊙ Result: The gauge indicates 0 psi / 0 bar. The actuator is good.

⊠ Result: The gauge indicates more than 0 psi / 0 bar. The actuator is faulty. Replace the brake actuator.

Symptom:
Brakes slow to apply OR apply too quickly

1 Tee in a 0 to 1000 psi / 0 to 100 bar pressure gauge at port A of the brake actuator at the brake pedal assembly.

2 Start the engine and allow the engine to idle.

3 Press down on the brake pedal.

⊙ Result: The gauge indicates 600 to 650 psi / 41.4 to 44.8 bar. The actuator is good.

⊠ Result: The gauge indicates less than 600 psi / 41.4 bar. The actuator is faulty. Replace the brake actuator.

⊠ Result: The gauge indicates more than 650 psi / 44.8 bar. The actuator is faulty. Replace the brake actuator.

Parking Brake

Symptom:
Parking brake does not hold OR does not release

1 Locate the parking brake manifold.

Note: The parking brake manifold is the outboard of the two manifolds located inside the frame rail next to the operator's compartment.

2 Tag, disconnect and plug the hydraulic hoses at ports 1 and 2 of the parking brake manifold. Cap the fittings.

⚠WARNING Bodily injury hazard. Spraying hydraulic oil can penetrate and burn skin. Loosen hydraulic connections very slowly to allow the oil pressure to dissipate gradually. Do not allow oil to squirt or spray.

3 Install a hose measuring 3 feet / 1 m into each port and tighten.

4 With the open ends of both hoses into a 5 gallon container, start the engine.

Downloaded from www.Manualslib.com manuals search engine

https://truckmanualshub.com/

Parking brake does not hold:

5 Activate the parking brake (parking brake on).

⊙ Result: Oil passes through port 2 and does not pass through port 1. The manifold is functioning correctly.

⊠ Result: Oil passes through port 1 and does not pass through port 2. The manifold is faulty. Replace the manifold (schematic item IA).

Parking brake does not release:

6 Deactivate the parking brake (parking brake off).

⊙ Result: Oil passes through port 1 and does not pass through port 2. The manifold is functioning correctly. The pilot pressure setting is too low. Calibrate the pilot pressure.

⊠ Result: Oil passes through port 2 and does not pass through port 1. The manifold is faulty. Replace the manifold (schematic item IA).

Note: Required maintenance procedures and additional axle information is available in the *Dana 212 Axle Maintenance and Repair Manual* (Dana part number MO212S20) OR the *Dana 213 Axle Maintenance and Repair Manual* (Dana part number 0243).

Dana 212 Axle Maintenance and Repair Manual (GTH-636, GTH-644, GTH-842 and GTH-844) Genie part number	97488
Dana 213 Axle Maintenance and Repair Manual (GTH-1048 and GTH-1056) Genie part number	115026

1-7 Sway Functions

Symptom:
When activating the sway function, the rear axle won't move.

Check the Boom Angle Limit Switch

NOTICE The GTH-636 is not equipped with a boom angle limit switch. To troubleshoot the sway function on a GTH-636, begin this procedure with step 7.

1 Remove all weight from the forks.

2 **GTH-1056:** Lower the boom to below 55°. Turn the machine off.
All other models: Lower the boom to below 60°. Turn the machine off.

3 Turn the key switch to the on position. Do not start the engine.

Downloaded from www.Manualslib.com manuals search engine

https://truckmanualshub.com/

4 Using a wrench, check for magnetism in the solenoid valve of the boom activated rear lock-up manifold. Touch a wrench to the end of the valve.

⊙ Result: The wrench sticks to the valve. The boom angle limit switch wiring is reversed OR the switch is faulty. Proceed to step 5.

⊠ Result: The wrench does not stick to the valve. The wiring is functioning correctly. Proceed to step 7.

Note: The boom activated rear lock-up manifold is mounted on the hydraulic tank and is located closest to the top of the tank at the cab side of the machine.

Note: A fast way to determine if a valve coil is functioning correctly is to touch a wrench to the end of the valve when the coil is activated. When energized, the valve will magnetize and the wrench will stick to the valve; turn the power off and the wrench will fall.

5 Confirm that the yellow wire of the limit switch wire harness is attached to the center terminal of the limit switch, and that the grey wire of the limit switch wire harness is attached to the terminal closest to the roller arm.

6 Using a multimeter, check for power at the terminal closest to the roller arm of the limit switch (grey wire).

⊙ Result: Power is not present at the terminal. The switch is functioning correctly. Repair or replace the grey wire of the limit switch wire harness from the limit switch to the boom activated rear lock-up valve coil.

⊠ Result: Power is present at the terminal. The limit switch is not calibrated correctly OR the limit switch is faulty. Calibrate the switch OR replace and calibrate the switch.

Check the Rear Lock-up Valve

7 Tag and disconnect the hydraulic hoses from ports 1 and 2 of the boom activated rear lock-up manifold. Connect the hoses together and torque to specification. Refer to Section 2, *Specifications*.

⚠WARNING Bodily injury hazard. Spraying hydraulic oil can penetrate and burn skin. Loosen hydraulic connections very slowly to allow the oil pressure to dissipate gradually. Do not allow oil to squirt or spray.

8 Start the engine and allow the engine to idle.

9 Activate the sway function.

⊙ Result: The machine functions correctly. Repair or replace the boom activated rear lock-up valve (schematic item DA).

⊠ Result: The machine does not function correctly. Proceed to step 10.

Downloaded from www.Manualslib.com manuals search engine

https://truckmanualshub.com/

10 Stop the engine.

11 Separate the hoses connected together in step 7, and install them into the correct ports of the boom activated rear lock-up manifold. Torque to specification. Refer to Section 2, *Specifications*.

WARNING Bodily injury hazard. Spraying hydraulic oil can penetrate and burn skin. Loosen hydraulic connections very slowly to allow the oil pressure to dissipate gradually. Do not allow oil to squirt or spray.

Check the Rear Lock-up Manifold

12 Tee in a 0 to 3500 psi / 0 to 250 bar pressure gauge at port P of the boom activated rear lock-up manifold. Torque to specification. Refer to Section 2, *Specifications*.

WARNING Bodily injury hazard. Spraying hydraulic oil can penetrate and burn skin. Loosen hydraulic connections very slowly to allow the oil pressure to dissipate gradually. Do not allow oil to squirt or spray.

13 Start the engine and allow the engine to idle.

Result:
GTH-644, GTH-842 and GTH-844 and GTH-1056: The pressure gauge reads 3000 psi / 207 bar. The pressure setting is correct. Proceed to step 14.
GTH-1048: The pressure gauge reads 3500 psi / 241 bar. The pressure setting is correct. Proceed to step 14.

Result: The pressure is low. There is blockage in the hoses. Troubleshoot the hoses until blockage is found.

14 Stop the engine.

15 Tee in a 0 to 3500 psi / 0 to 250 bar pressure gauge at port C1 of the boom activated rear lock-up manifold. Torque to specification. Refer to Section 2, *Specifications*.

WARNING Bodily injury hazard. Spraying hydraulic oil can penetrate and burn skin. Loosen hydraulic connections very slowly to allow the oil pressure to dissipate gradually. Do not allow oil to squirt or spray.

Downloaded from www.Manualslib.com manuals search engine

https://truckmanualshub.com/

16 Start the engine and allow the engine to idle.

⊙ Result: The pressure gauge is reads 500 psi / 34.5 bar. The pressure setting is correct. Proceed to step 17.

⊠ Result: The pressure is less than 500 psi / 34.5 bar. The rear lock-up relief valve (schematic item HH) is failing. Adjust the valve OR replace the valve.

⊠ Result: The pressure is greater than 500 psi / 34.5 bar. Replace the rear lock-up relief valve (schematic item HH).

17 Stop the engine.

18 Remove both pilot operated directional valves (schematic items HF and HG) from the rear lock-up manifold. Inspect the valves.

⚠WARNING Bodily injury hazard. Spraying hydraulic oil can penetrate and burn skin. Loosen hydraulic connections very slowly to allow the oil pressure to dissipate gradually. Do not allow oil to squirt or spray.

⊙ Result: Both valves do not have broken springs, or damaged seals. Install the valves. Proceed to step 19.

⊠ Result: The valve has a broken spring or a damaged seal. The valve is faulty. Replace the valve.

19 Remove all four check valves (schematic items HA, HB, HC and HD) from the rear lock-up manifold. Repair or replace the faulty valve(s).

⚠WARNING Bodily injury hazard. Spraying hydraulic oil can penetrate and burn skin. Loosen hydraulic connections very slowly to allow the oil pressure to dissipate gradually. Do not allow oil to squirt or spray.

Downloaded from www.Manualslib.com manuals search engine

https://truckmanualshub.com/

This page intentionally left blank.

Downloaded from www.Manualslib.com manuals search engine

https://truckmanualshub.com/

Schematics

Observe and Obey:

- ☑ Troubleshooting and repair procedures shall be completed by a person trained and qualified on the repair of this machine.
- ☑ Immediately tag and remove from service a damaged or malfunctioning machine.
- ☑ Repair any machine damage or malfunction before operating the machine.

Before Troubleshooting:

- ☑ Read, understand and obey the safety rules and operating instructions in the appropriate operator's manual on your machine.
- ☑ Be sure that all necessary tools and test equipment are available and ready for use.

About This Section

There are two groups of schematics in this section. An illustration legend precedes each group of drawings.

Electrical Schematics

WARNING Electrocution hazard. Contact with electrically charged circuits could result in death or serious injury. Remove all rings, watches and other jewelry.

Hydraulic Schematics

WARNING Bodily injury hazard. Spraying hydraulic oil can penetrate and burn skin. Loosen hydraulic connections very slowly to allow the oil pressure to dissipate gradually. Do not allow oil to squirt or spray.

General Repair Process

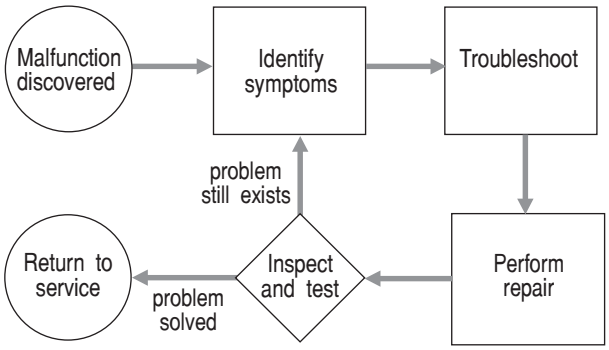

Downloaded from www.Manualslib.com manuals search engine

https://truckmanualshub.com/

Electrical Component and Limit Switch Legends

REV A

ABBREVIATION LEGEND	
Item	**Description**
B1	Battery
BN	Button
	BN3 = Cold start
	BN5 = Horn
	BN77 = Front axle differential lock
	BN99 = Pump destroke
	BN100 = Fork level
	BN101 = Blink code enable
CB2	Circuit breaker, system power, 40A
CR	Control relay
	CR1 = Engine start
	CR5 = Horn relay
	CR22 = Head light
	CR88 = Fuse block
	CR89 = Parking brake
	CR90 = Fork tilt
D1	Alternator
F	Fuse
	F18 = Power to blink code light
	F19 = Power to ECM
FB1	Flashing beacons (option)
G	Gauge
	G1 = Volt meter
	G2 = Engine oil pressure
	G3 = Engine coolant temperature
	G6 = Hour meter
	G9 = Transmission oil pressure
	G10 = Transmission temperature
	G11 = Fuel level
H	Horn or alarm
	H2 = Auto-style horn
	H3 = Back-up alarm

ABBREVIATION LEGEND	
Item	**Description**
KS3	Key switch
L	Light or LED
	L30 = Head lights
	L31 = Left rear turn/brake
	L32 = Right rear turn/brake
	L59 = Right front turn signal
	L60 = Left front turn signal
	L61 = Back-up
	L62 = Brake/tail light
	L63 = Low brake pressure
	L64 = Parking brake “On”
	L65 = Blink code
LS2	Boom limit switch
M	Motor
	M3 = Engine starter
	M4 = Fuel pump
	M9 = Heater fan
	M10 = Front wiper
	M11 = Circulation fan
Q	Solenoid
	Q7 = Fuel enrichment
	Q8 = Fuel shut-off
PS	Pressure switch
	PS4 = Clutch cut-off
	PS5 = Brake light
	PS6 = Parking brake
	PS7 = Service brake low pressure
S	Sensor
	S1 = Engine coolant temperature
	S2 = Engine oil pressure
	S11 = Transmission temperature
	S12 = Transmission pressure
	S13 = Fuel level

ABBREVIATION LEGEND	
Item	**Description**
SW	Switch
	SW23 = Transmission control
	SW24 = Parking brake
	SW34 = Sway control
	SW35 = Auxiliary control
	SW36 = Wiper
	SW37 = Turn switch
	SW38 = Heater
	SW39 = Outrigger - RF
	SW40 = Outrigger - LF
TS	Toggle switch
	TS18 = Head light
U	Electronic component
	U31 = Engine ECM
	U34 = Turn flasher
	U35 = 12V accessory plug
Y	Solenoid valve coil
	Y66 = Pump destroke
	Y67 = Parking brake
	Y68 = Front axle differential lock
	Y69 = Boom actuated lock-up
	Y70 = Sway left
	Y71 = Sway right
	Y72 = Fork level
	Y73 = Stabilizer right front down
	Y74 = Stabilizer right front up
	Y75 = Stabilizer left front down
	Y76 = Stabilizer left front up
	Y77 = Controller relief

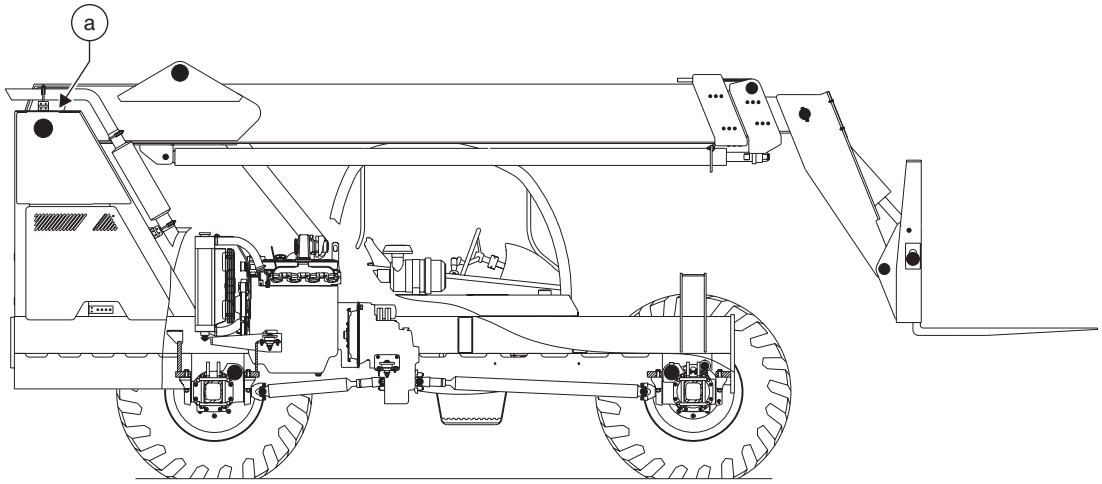

a boom limit switch (all models except GTH-636)
(hidden from view)
(located on boom pivot between boom and chassis)

Downloaded from www.Manualslib.com manuals search engine

https://truckmanualshub.com/

Electrical and Hydraulic Symbols Legend

REV B

Electrical Schematic Symbols

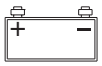
Battery

Button

Circuit breaker

Relay

Flashing beacon, LED or light

Gauge

10 Amp fuse

Boom up limit switch

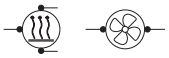
Motors

Pressure switch

Sensor

Switch

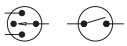
Toggle switch

Alternator

Flasher

12V DC accessory recepticle

Diode

Key switch

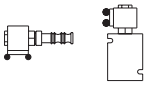
Solenoid valves

Horn or alarm

Hydraulic Schematic Symbols

2 position 4 way solenoid valve

2 position 3 way solenoid valve

Relief valve

Pilot operated check valve

Counterbalance vavle

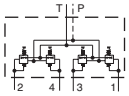

Joystick

Pressure switch

Accumulator

3 position 4 way solenoid valve with manual override

2 position 2 way solenoid valve

3 position 7 way steering valve

Pump

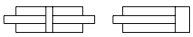
Hydraulic cylinder

Test ports

Adjustable orifice

Check valve

Downloaded from www.Manualslib.com manuals search engine

https://truckmanualshub.com/

Electrical Schematic -

GTH-636 with John Deere Power

Page 1 of 2

REV C

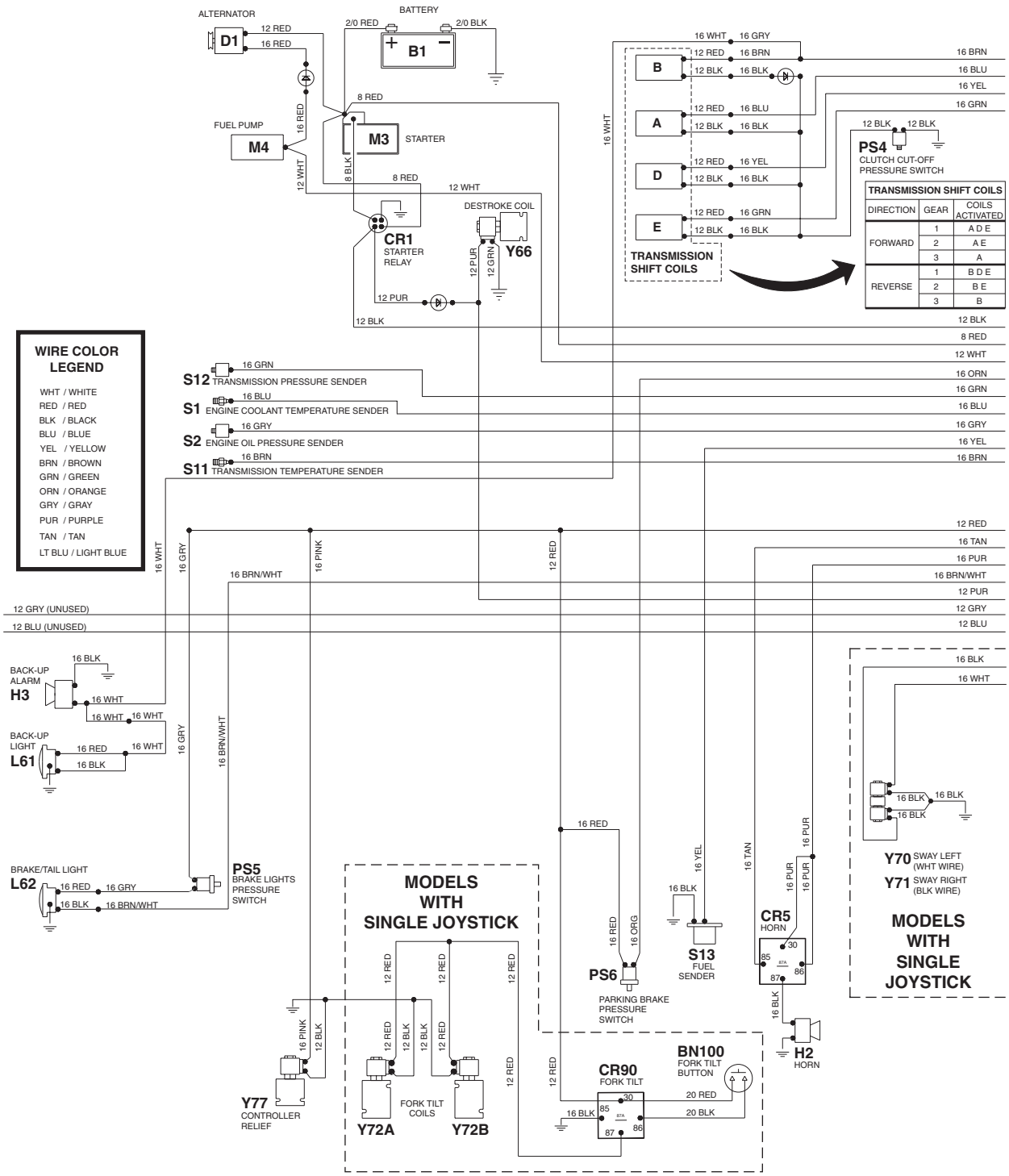

ES0447A

Downloaded from www.Manualslib.com manuals search engine

https://truckmanualshub.com/

REV C

Electrical Schematic -

GTH-636 with John Deere Power

Page 2 of 2

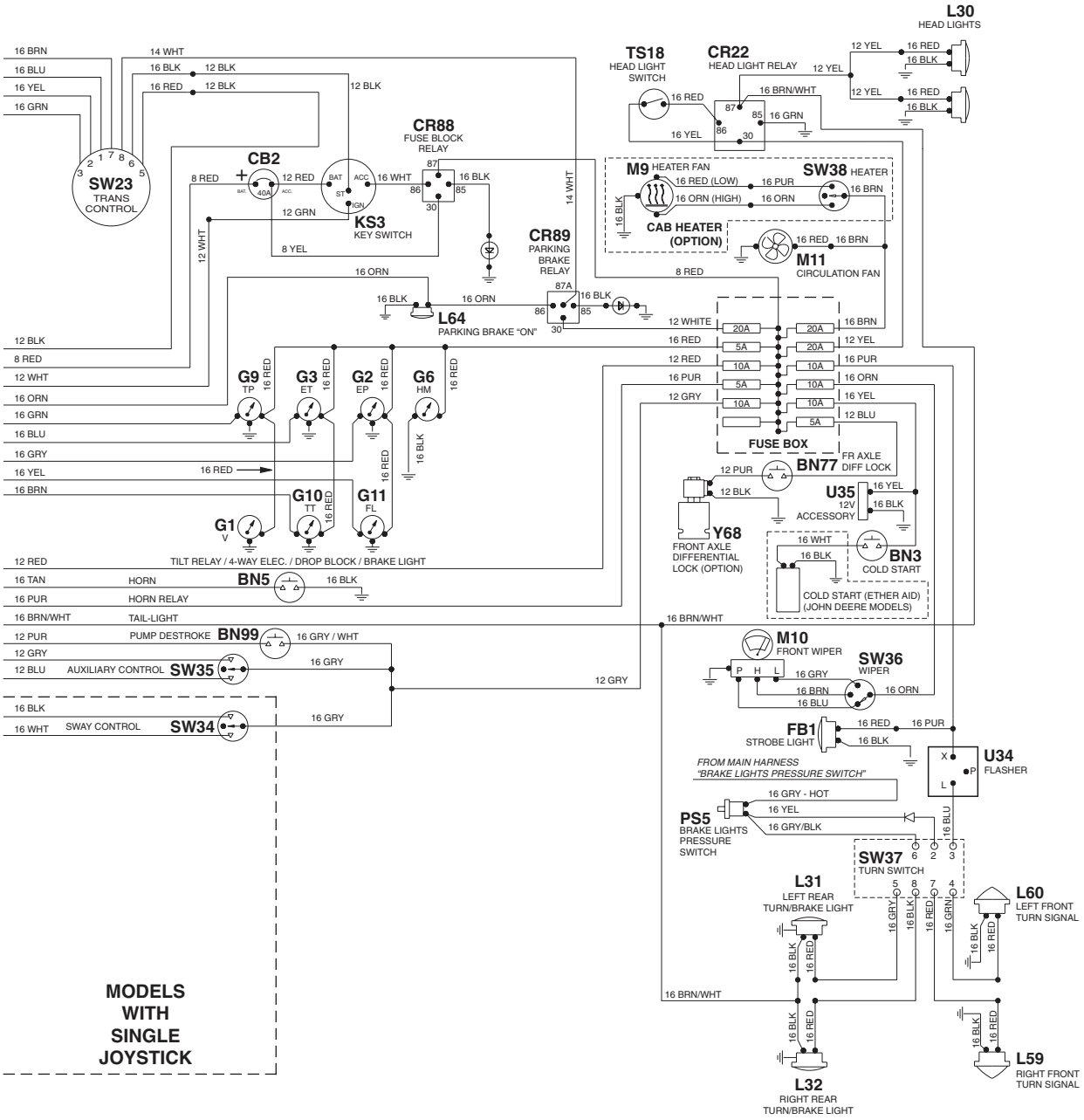

ES0447A

Downloaded from www.Manualslib.com manuals search engine

https://truckmanualshub.com/

Electrical Schematic -

GTH-636 with Perkins Power

Page 1 of 2

REV B

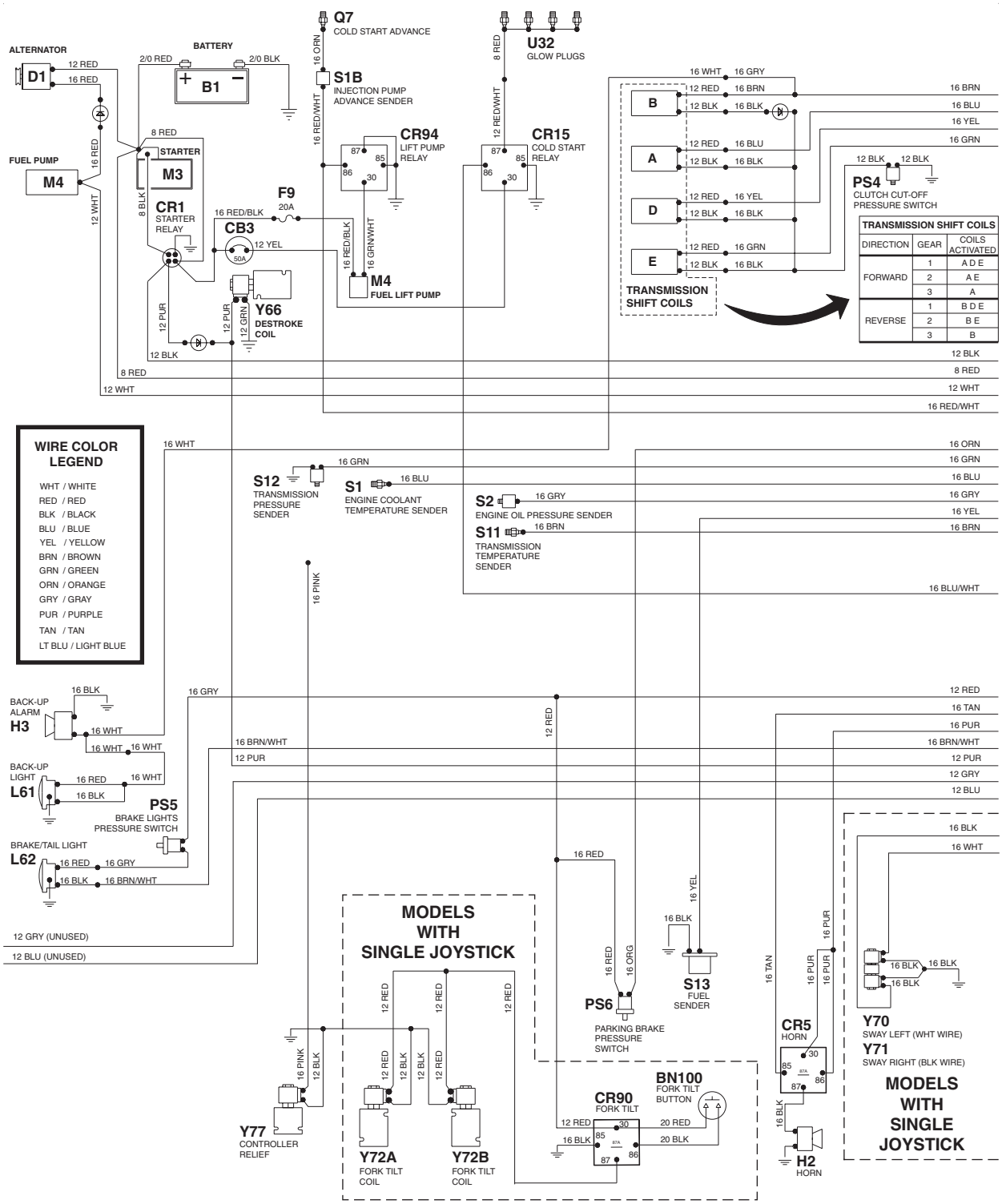

ES0445A

Downloaded from www.Manualslib.com manuals search engine

https://truckmanualshub.com/

REV B

Electrical Schematic -

GTH-636 with Perkins Power

Page 2 of 2

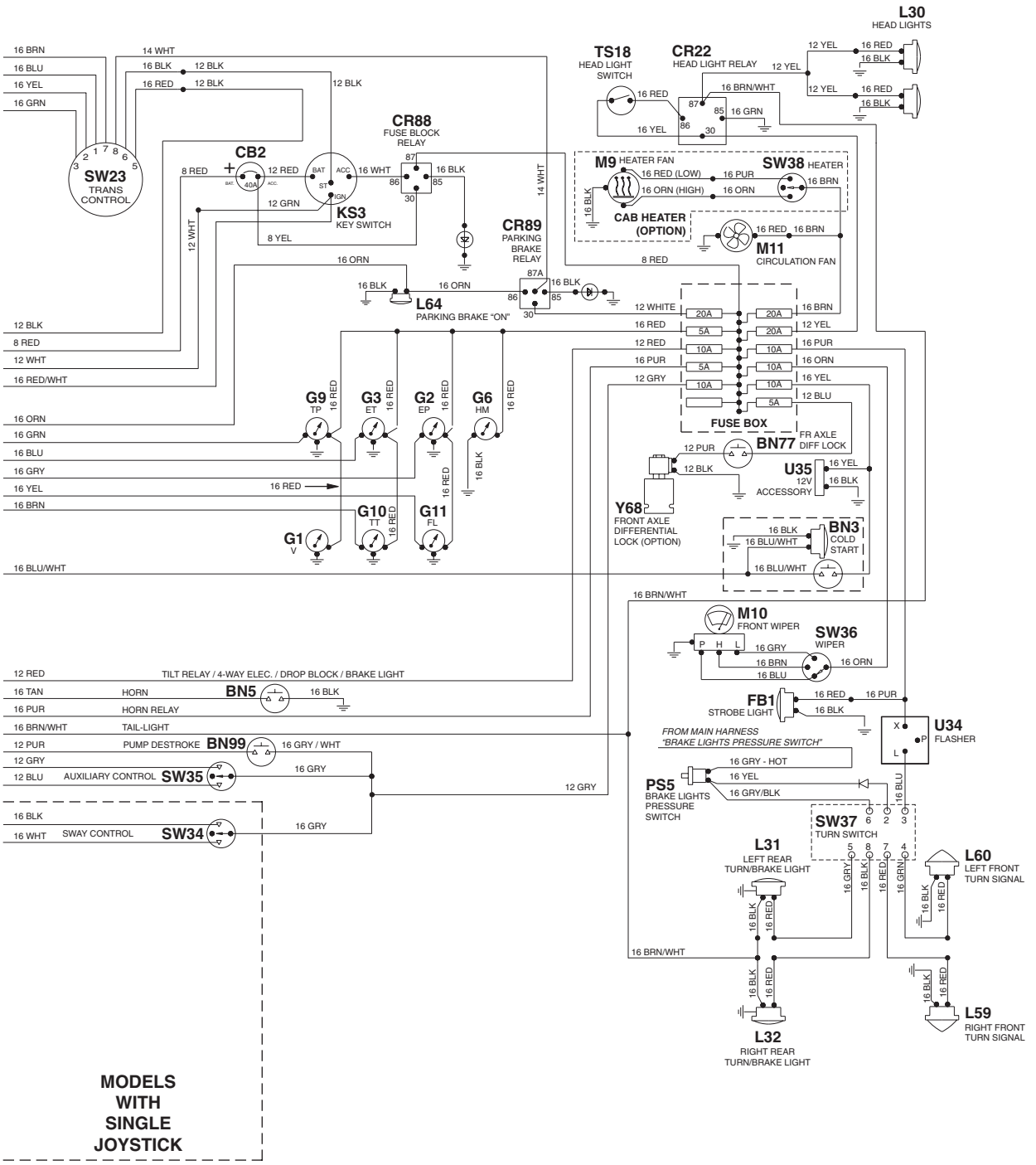

ES0445A

Downloaded from www.Manualslib.com manuals search engine

https://truckmanualshub.com/

Electrical Schematic -

GTH-644, GTH-842 and GTH-844 with John Deere Power REV C

Page 1 of 2

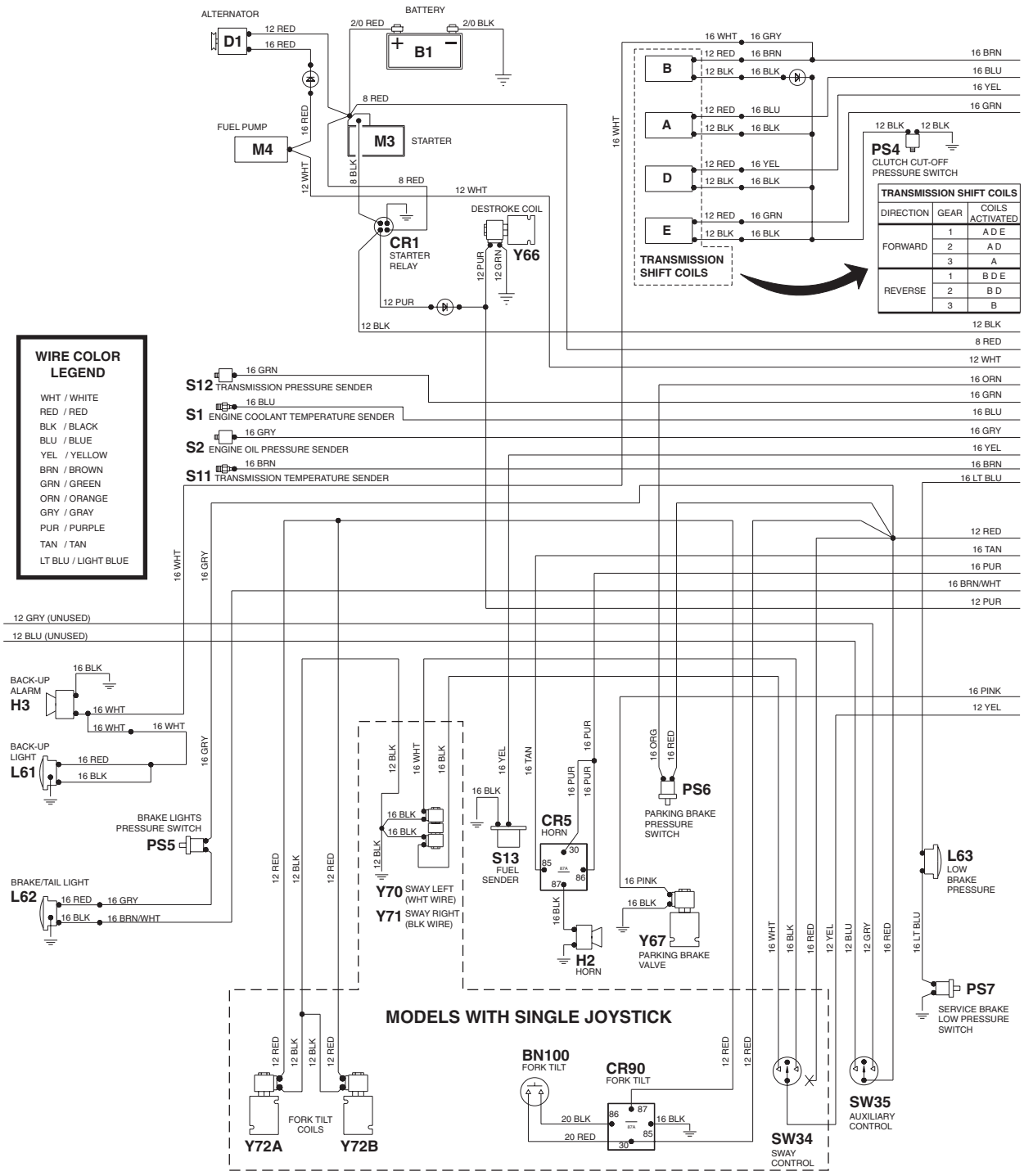

ES0446A

Downloaded from www.Manualslib.com manuals search engine

https://truckmanualshub.com/

REV C

Electrical Schematic -

GTH-644, GTH-842 and GTH-844 with John Deere Power

Page 2 of 2

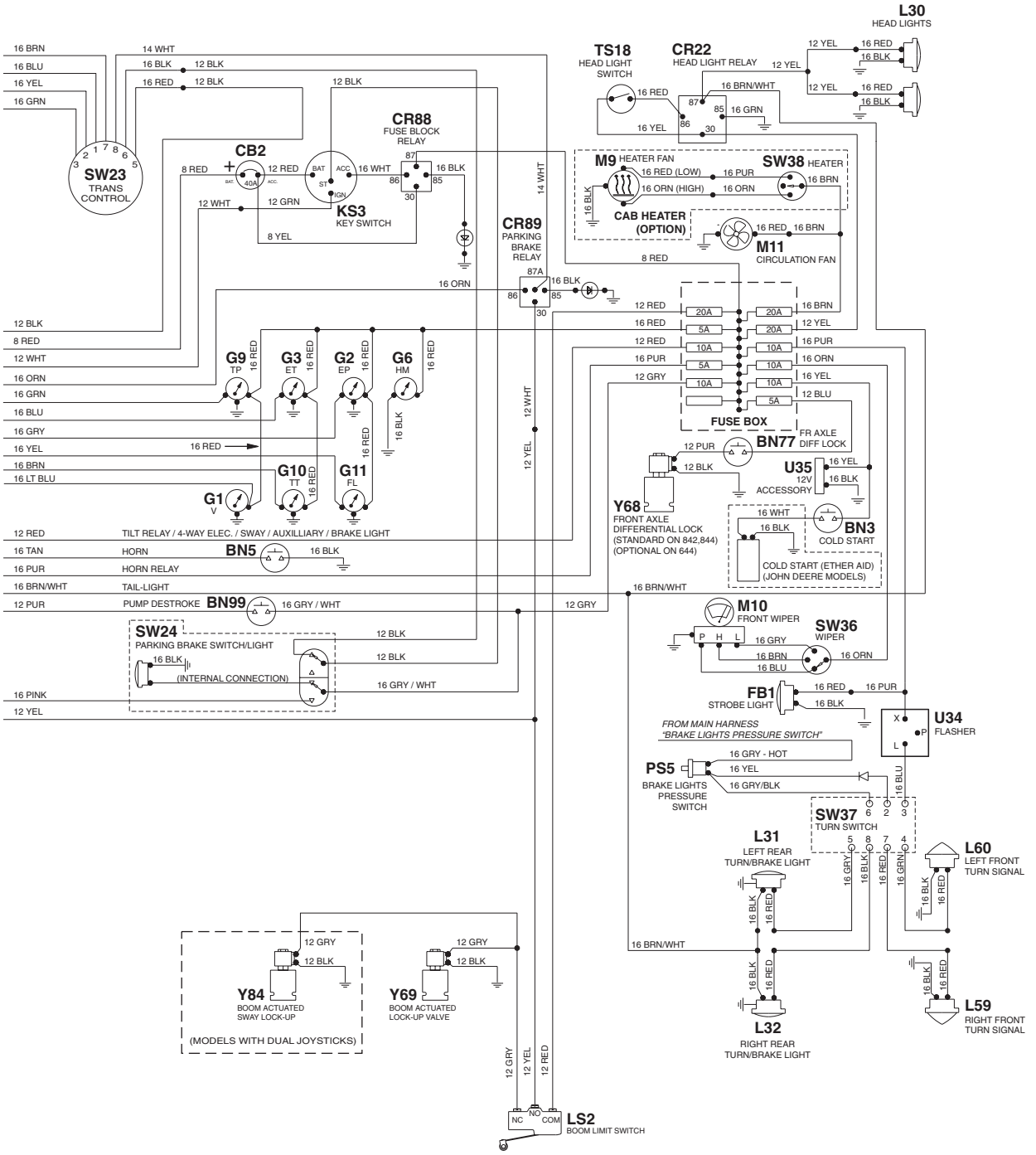

ES0446A

Downloaded from www.Manualslib.com manuals search engine

https://truckmanualshub.com/

Electrical Schematic -

GTH-644, GTH-842 and GTH-844 with Perkins Power REV B

Page 1 of 2

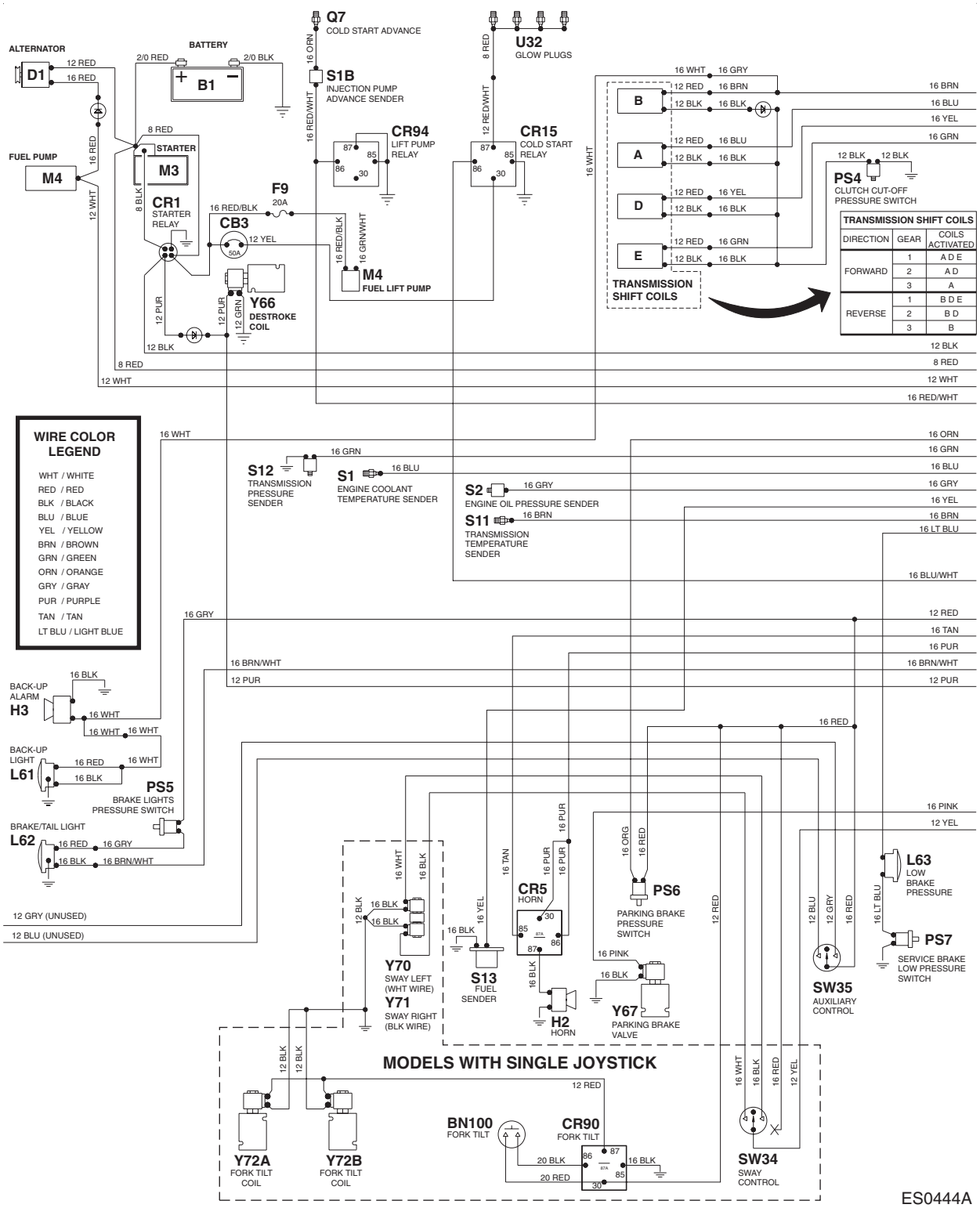

Downloaded from www.Manualslib.com manuals search engine

https://truckmanualshub.com/

REV B

Electrical Schematic -

GTH-644, GTH-842 and GTH-844 with Perkins Power

Page 2 of 2

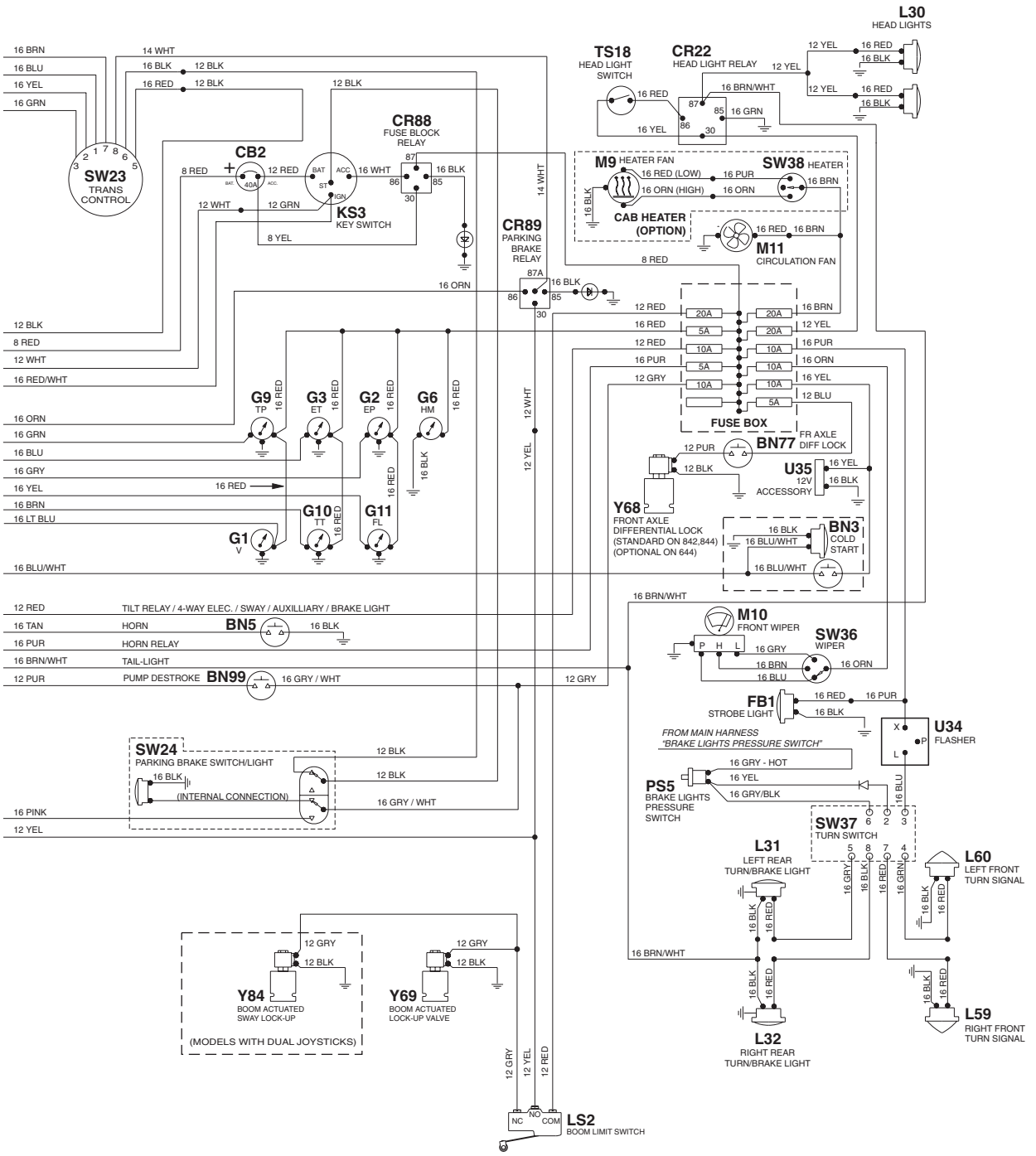

ES0444A

Downloaded from www.Manualslib.com manuals search engine

https://truckmanualshub.com/

Electrical Schematic -

GTH-644, GTH-842 and GTH-844 with Deutz Power REV B

Page 1 of 2

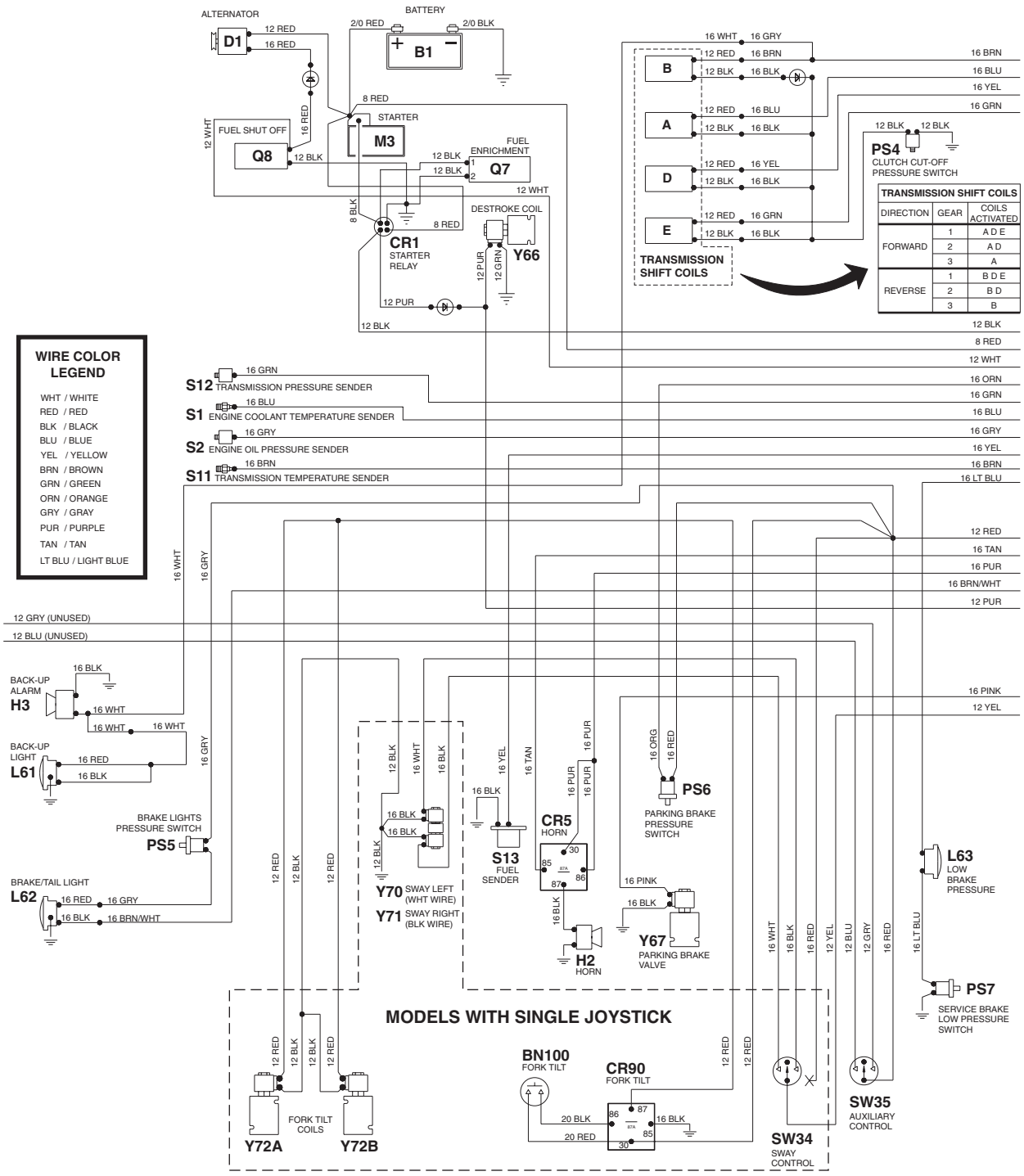

ES0448A

Downloaded from www.Manualslib.com manuals search engine

https://truckmanualshub.com/

REV B

Electrical Schematic -

GTH-644, GTH-842 and GTH-844 with Deutz Power

Page 2 of 2

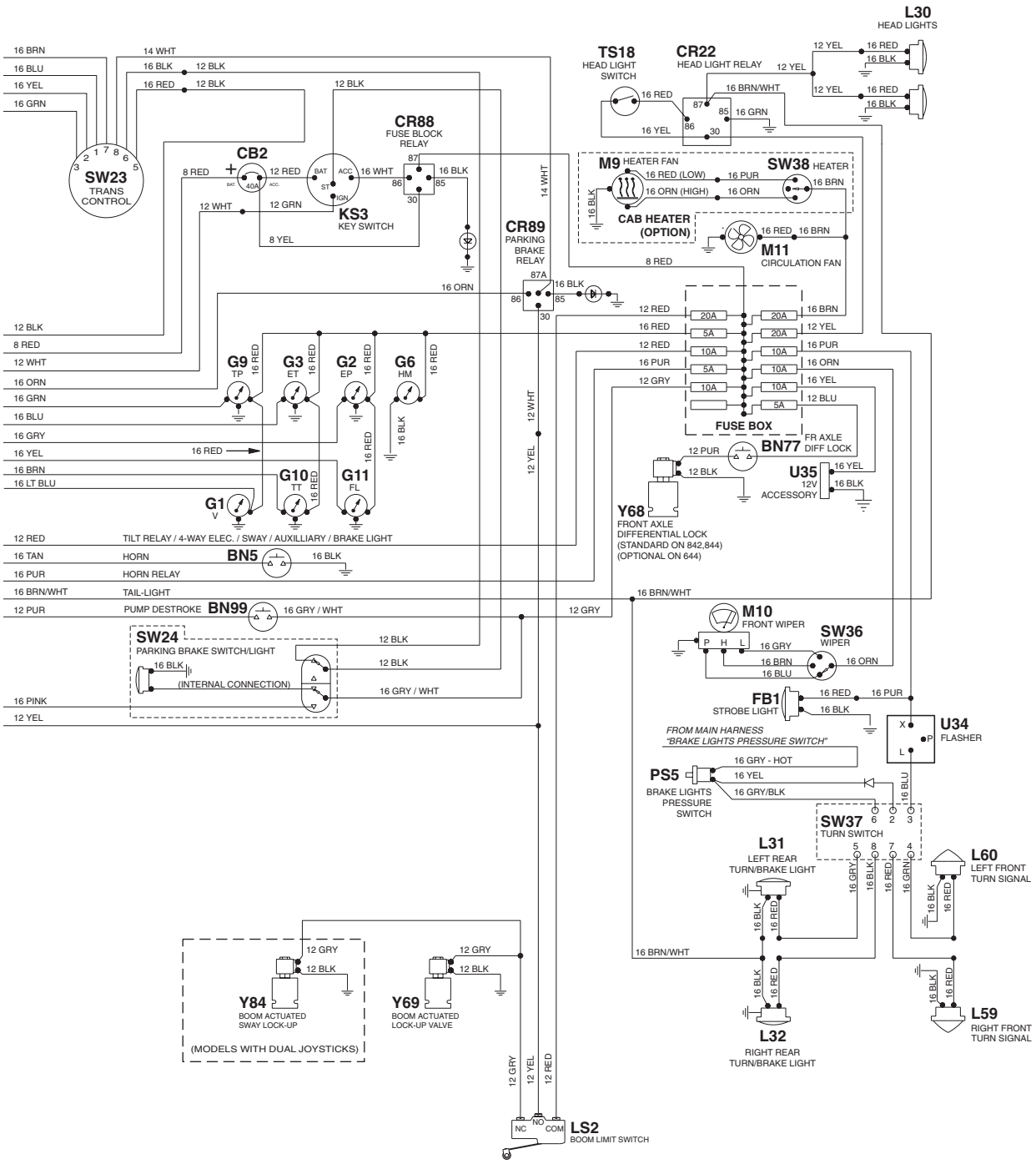

ES0448A

Downloaded from www.Manualslib.com manuals search engine

https://truckmanualshub.com/

Electrical Schematic -

GTH-1048 and GTH-1056 with John Deere Power REV C

Page 1 of 2

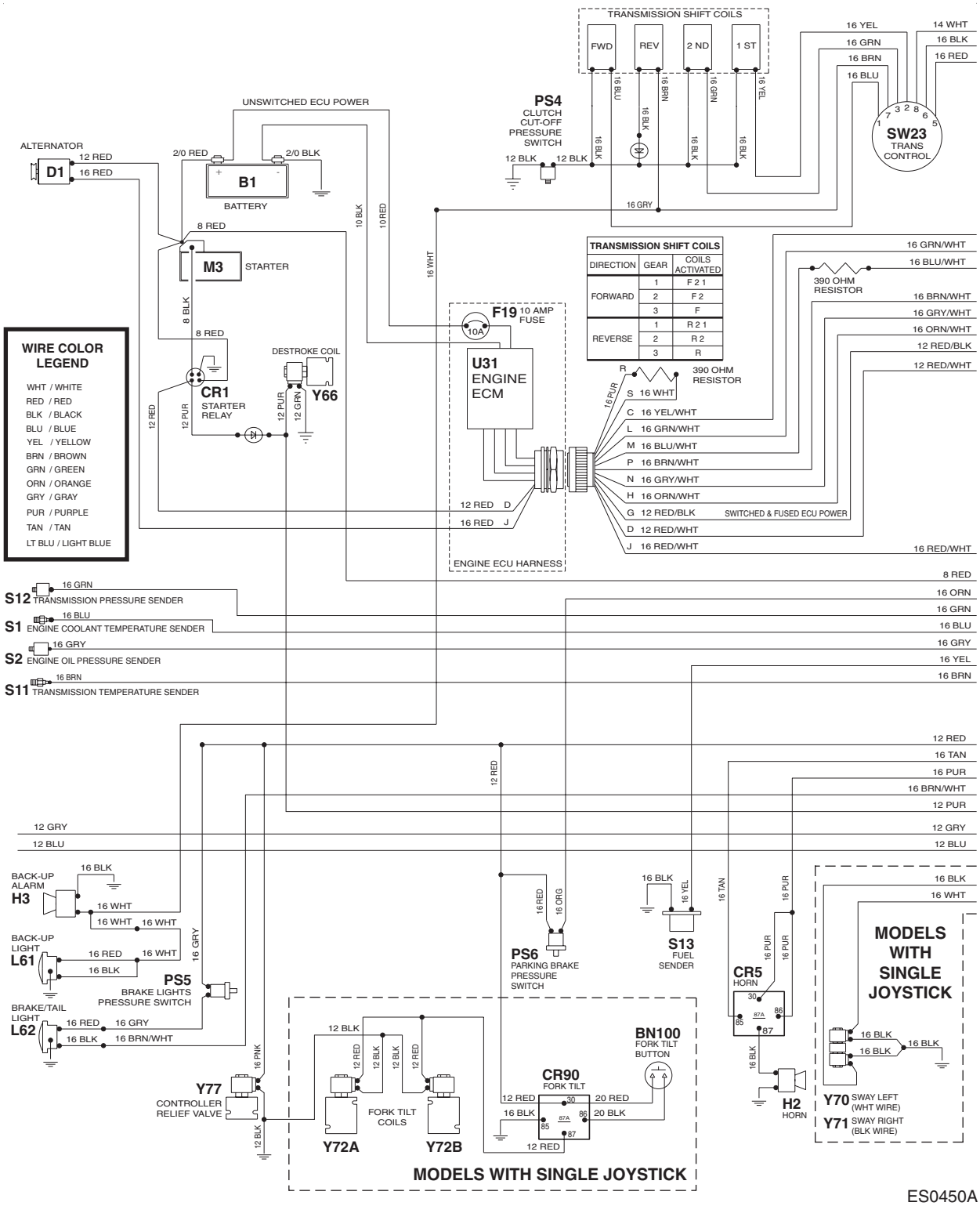

TRANSMISSION SHIFT COILS		
DIRECTION	GEAR	COILS ACTIVATED
FORWARD	1	F 2 1
	2	F 2
	3	F
REVERSE	1	R 2 1
	2	R 2
	3	R

ES0450A

Downloaded from www.Manualslib.com manuals search engine

https://truckmanualshub.com/

REV C

Electrical Schematic -

GTH-1048 and GTH-1056 with John Deere Power

Page 2 of 2

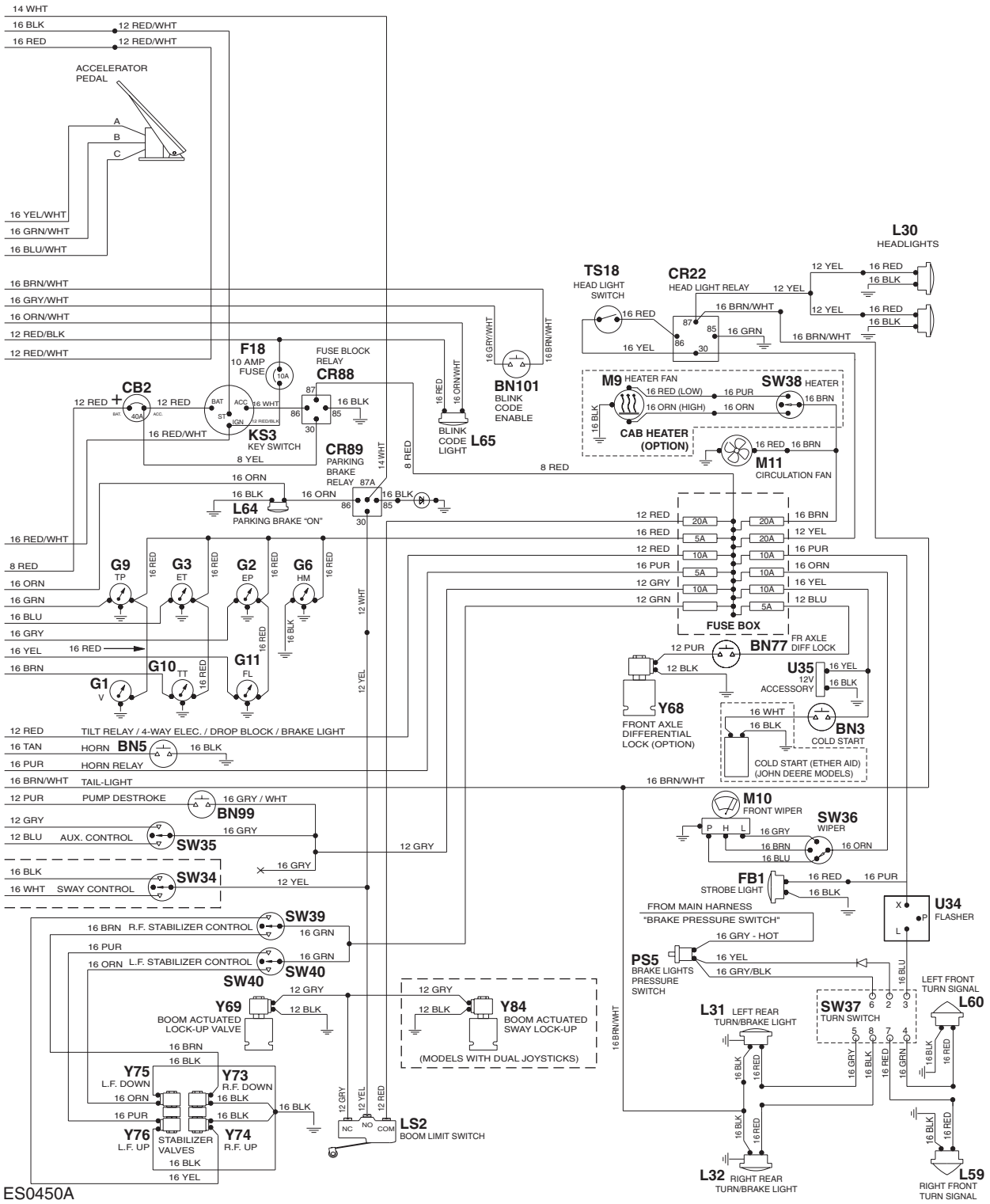

Downloaded from www.Manualslib.com manuals search engine

https://truckmanualshub.com/

Electrical Schematic -

GTH-1048 and GTH-1056 with Perkins Power REV B

Page 1 of 2

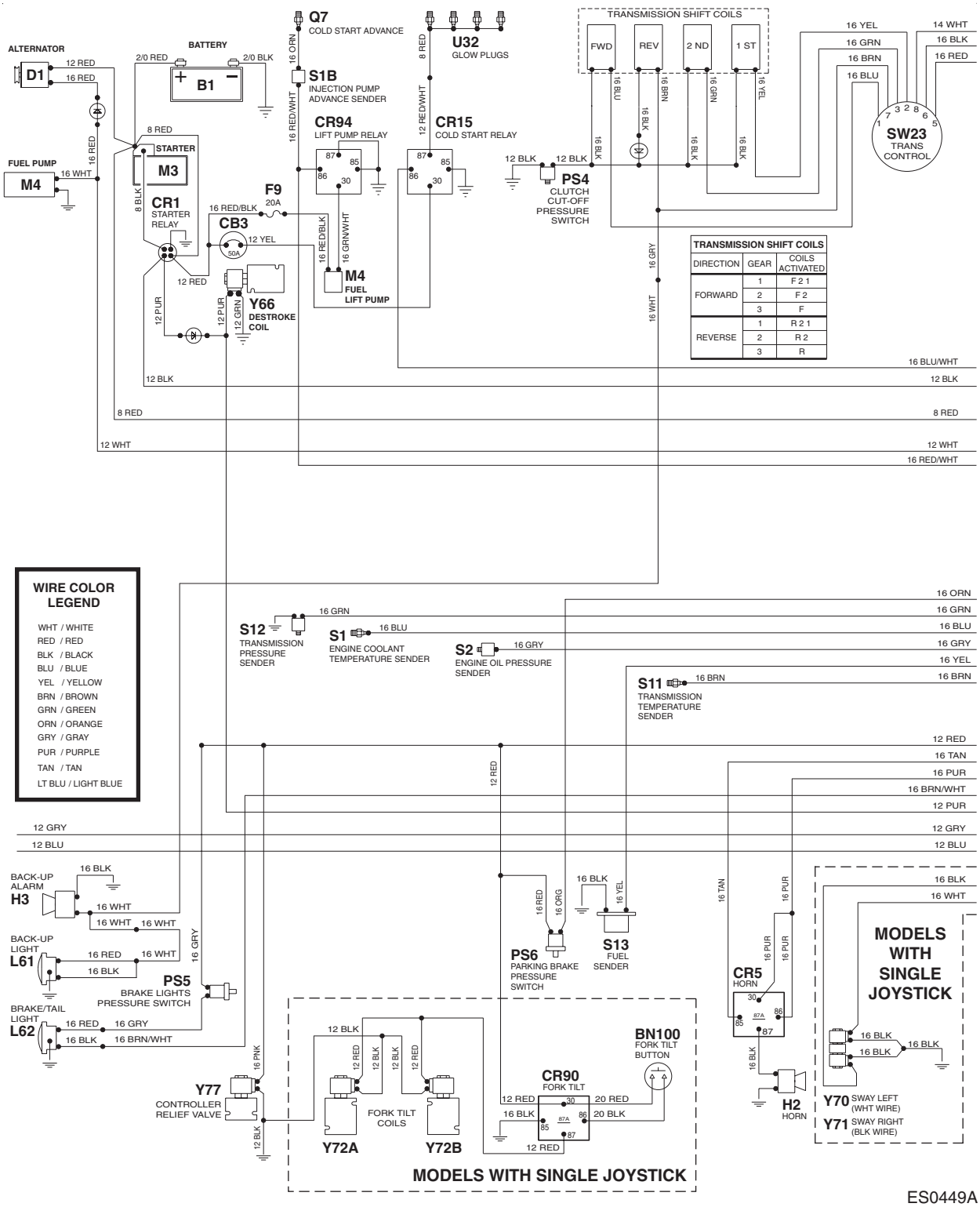

TRANSMISSION SHIFT COILS		
DIRECTION	GEAR	COILS ACTIVATED
FORWARD	1	F 2 1
	2	F 2
	3	F
REVERSE	1	R 2 1
	2	R 2
	3	R

ES0449A

Downloaded from www.Manualslib.com manuals search engine

https://truckmanualshub.com/

REV B

Electrical Schematic -

GTH-1048 and GTH-1056 with Perkins Power

Page 2 of 2

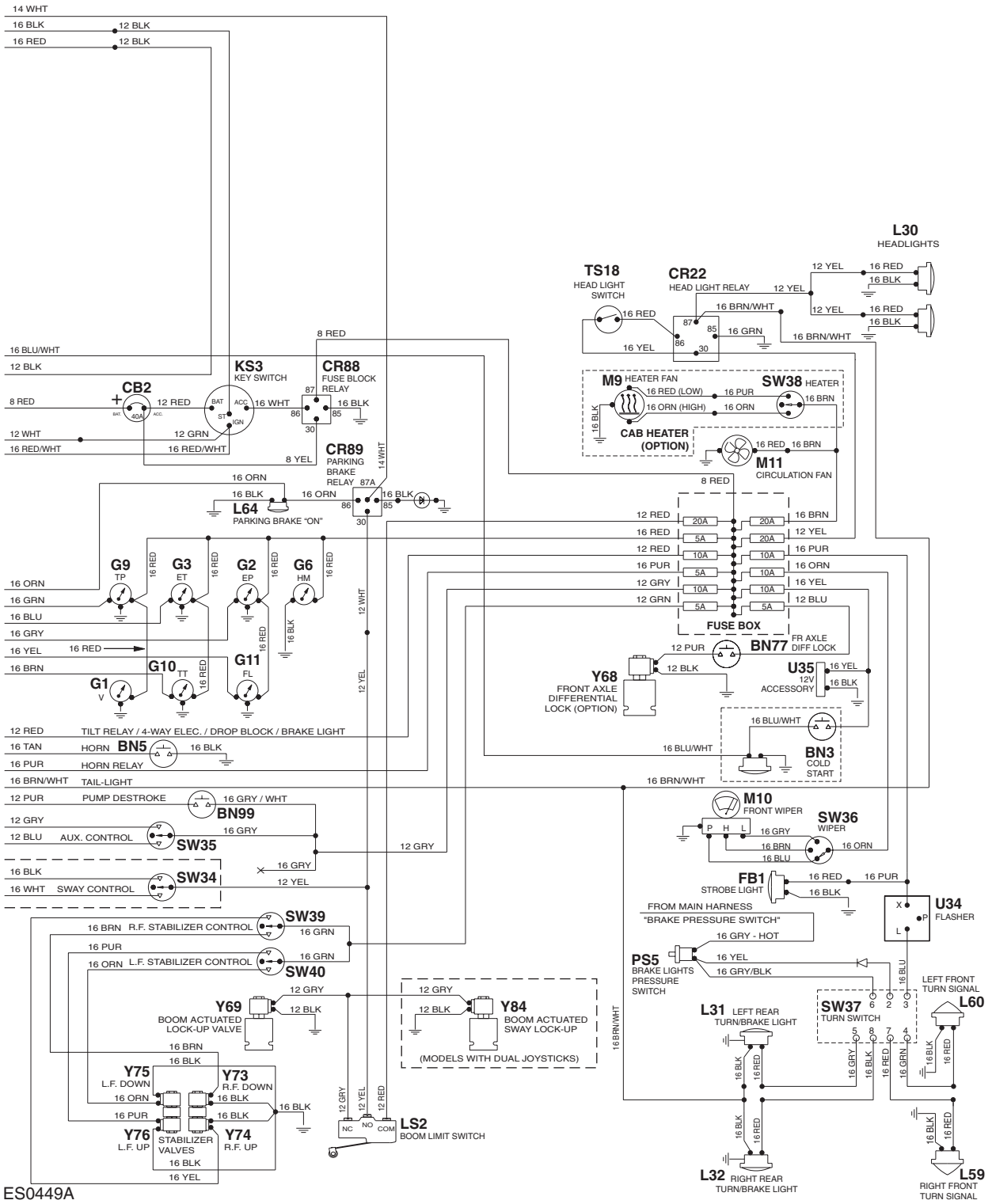

ES0449A

Downloaded from www.Manualslib.com manuals search engine

https://truckmanualshub.com/

Hydraulic Schematic -

GTH-636 with Single Joystick REV C

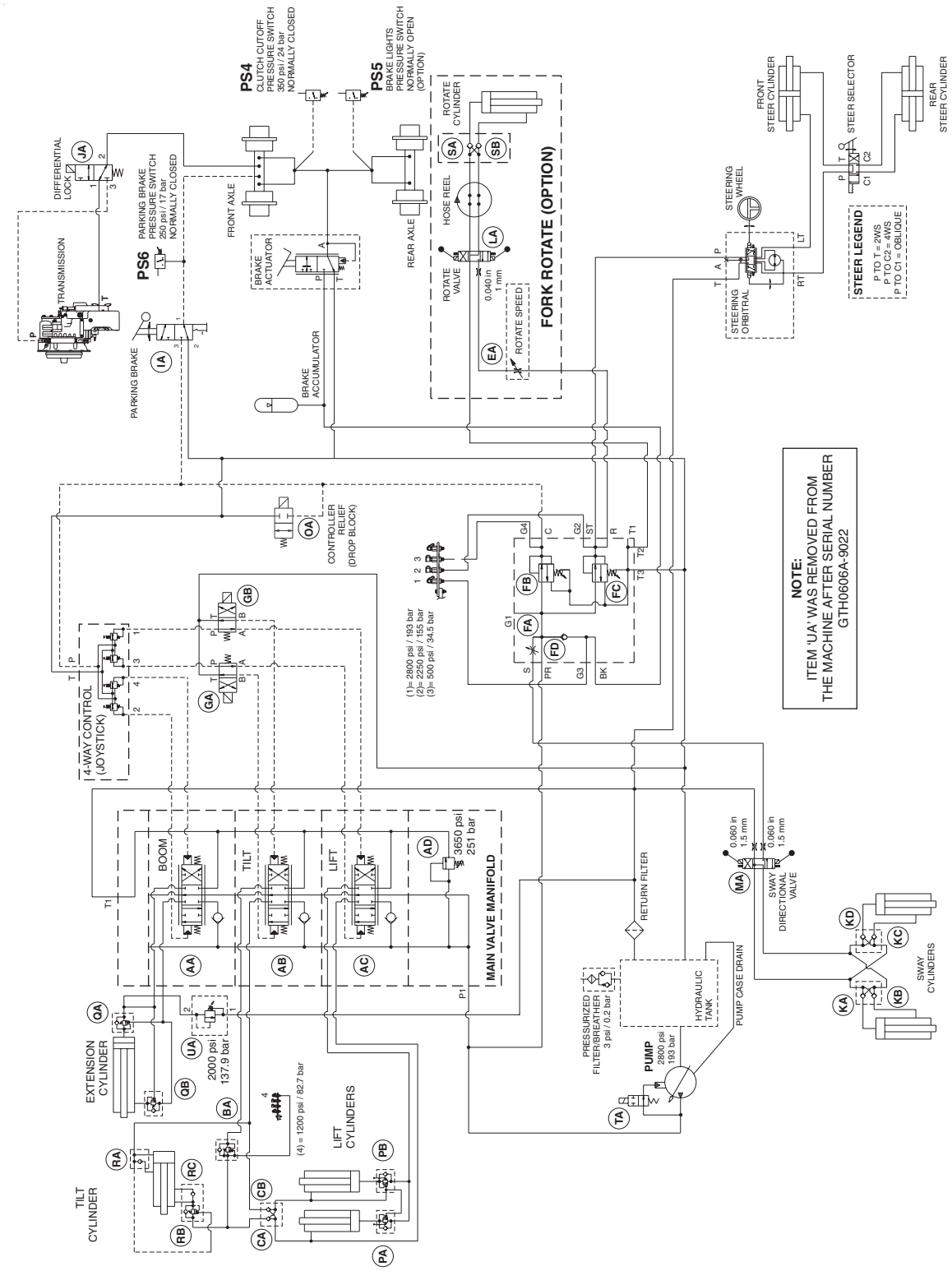

P1-1846

Downloaded from www.Manualslib.com manuals search engine

https://truckmanualshub.com/

REV A

Hydraulic Schematic -
GTH-636 with Dual Joysticks

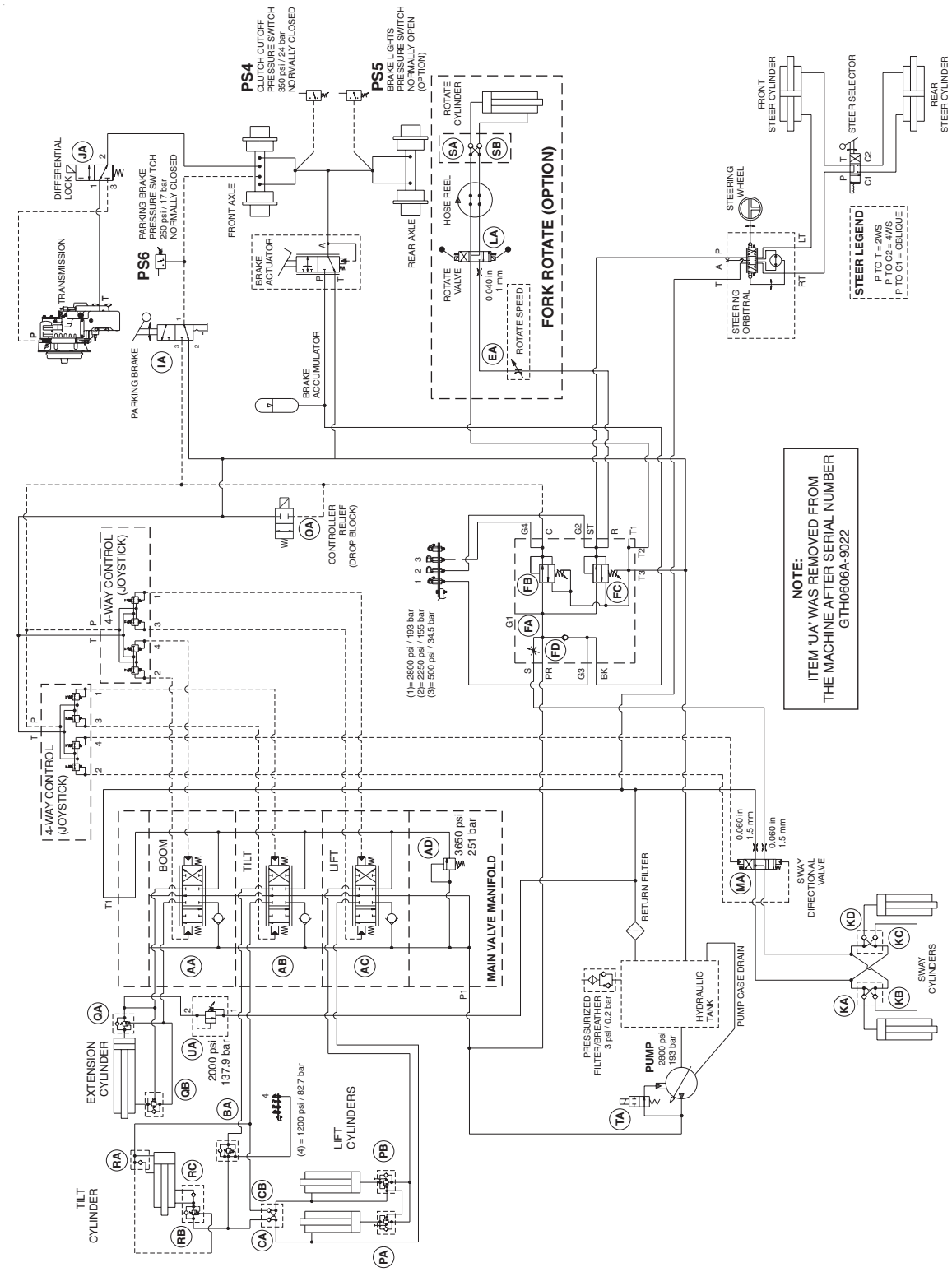

P1-1846

Downloaded from www.Manualslib.com manuals search engine

https://truckmanualshub.com/

Hydraulic Schematic -

GTH-644, GTH-842 and GTH-844 with Single Joystick REV B

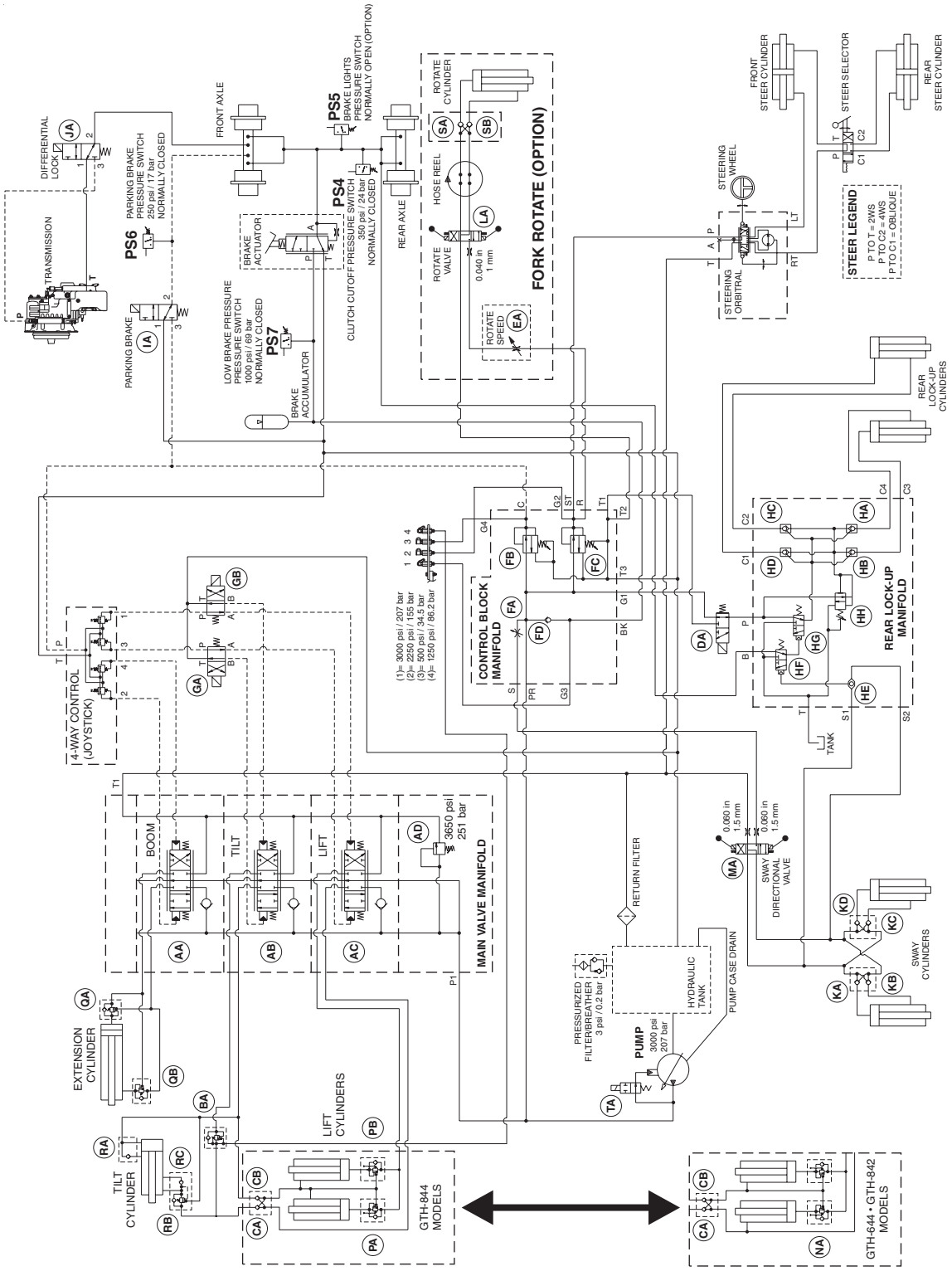

P1-1940
P1-1962
P1-1971

Downloaded from www.Manualslib.com manuals search engine

https://truckmanualshub.com/

REV A

Hydraulic Schematic -

GTH-644, GTH-842 and GTH-844 with Dual Joysticks

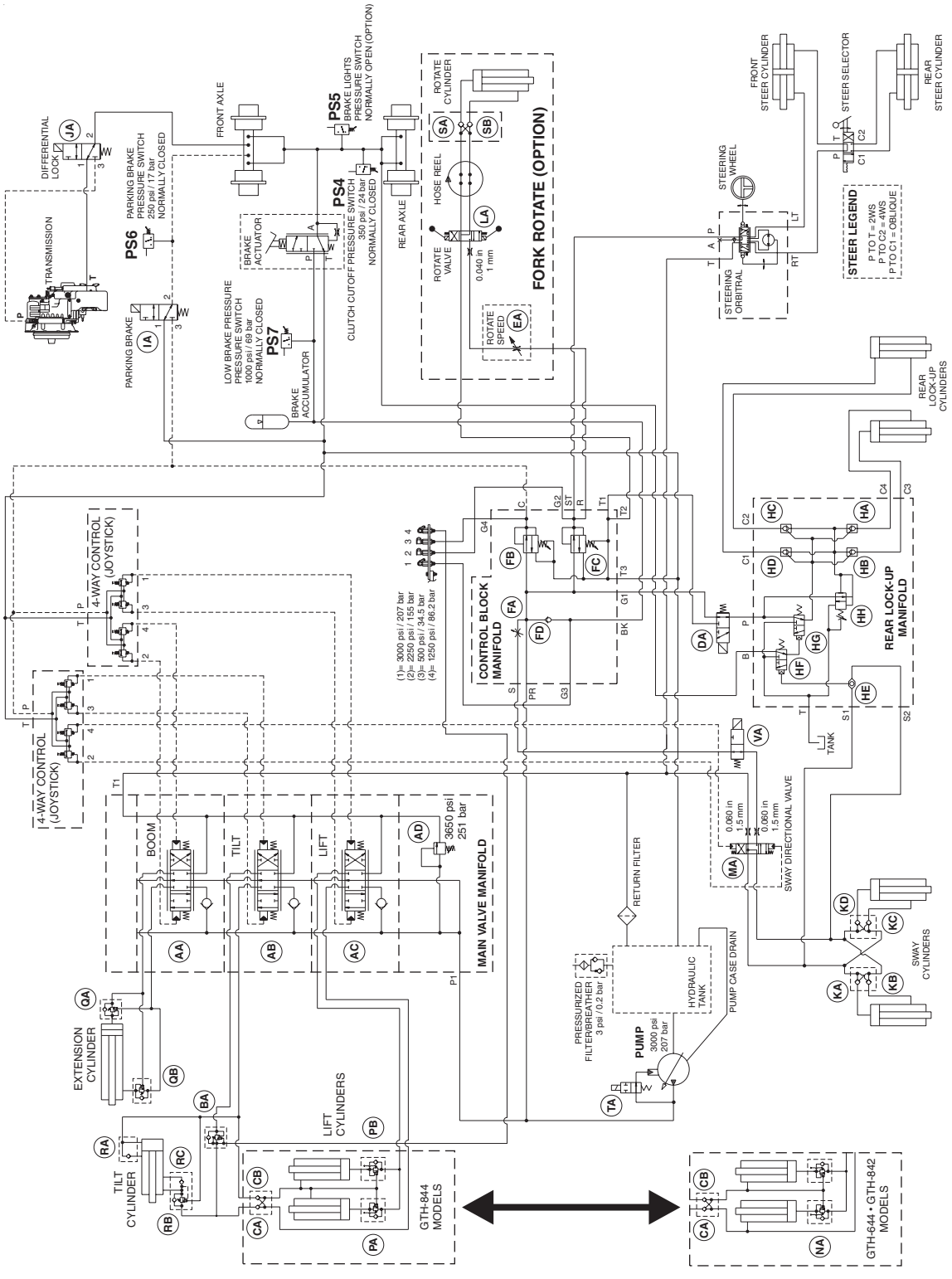

P1-1940
P1-1962
P1-1971

Downloaded from www.Manualslib.com manuals search engine

https://truckmanualshub.com/

Hydraulic Schematic -

GTH-1048 and GTH-1056 with Single Joystick REV C

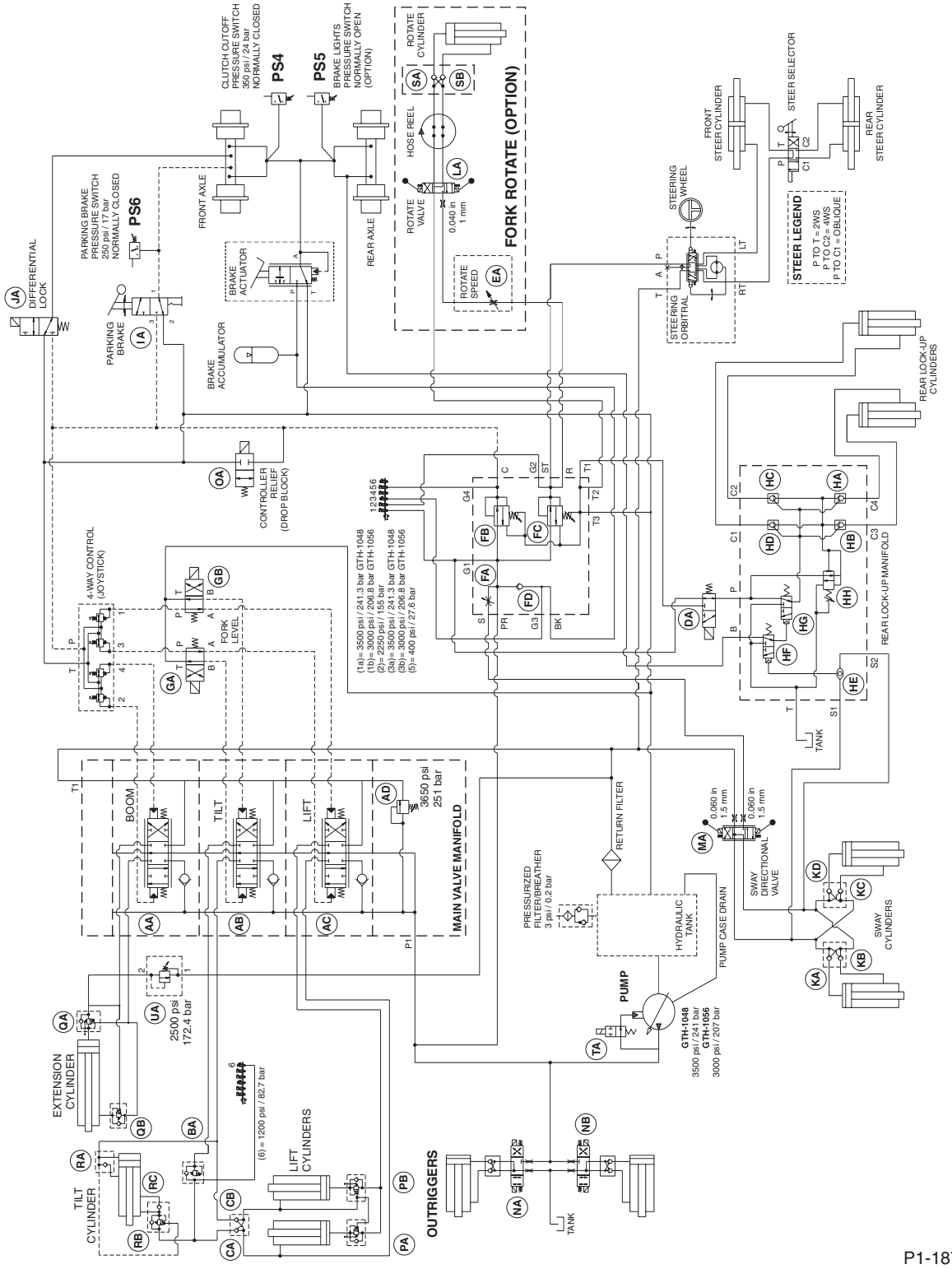

P1-1871

Downloaded from www.Manualslib.com manuals search engine

https://truckmanualshub.com/

REV A

Hydraulic Schematic -
GTH-1048 and GTH-1056 with Dual Joysticks

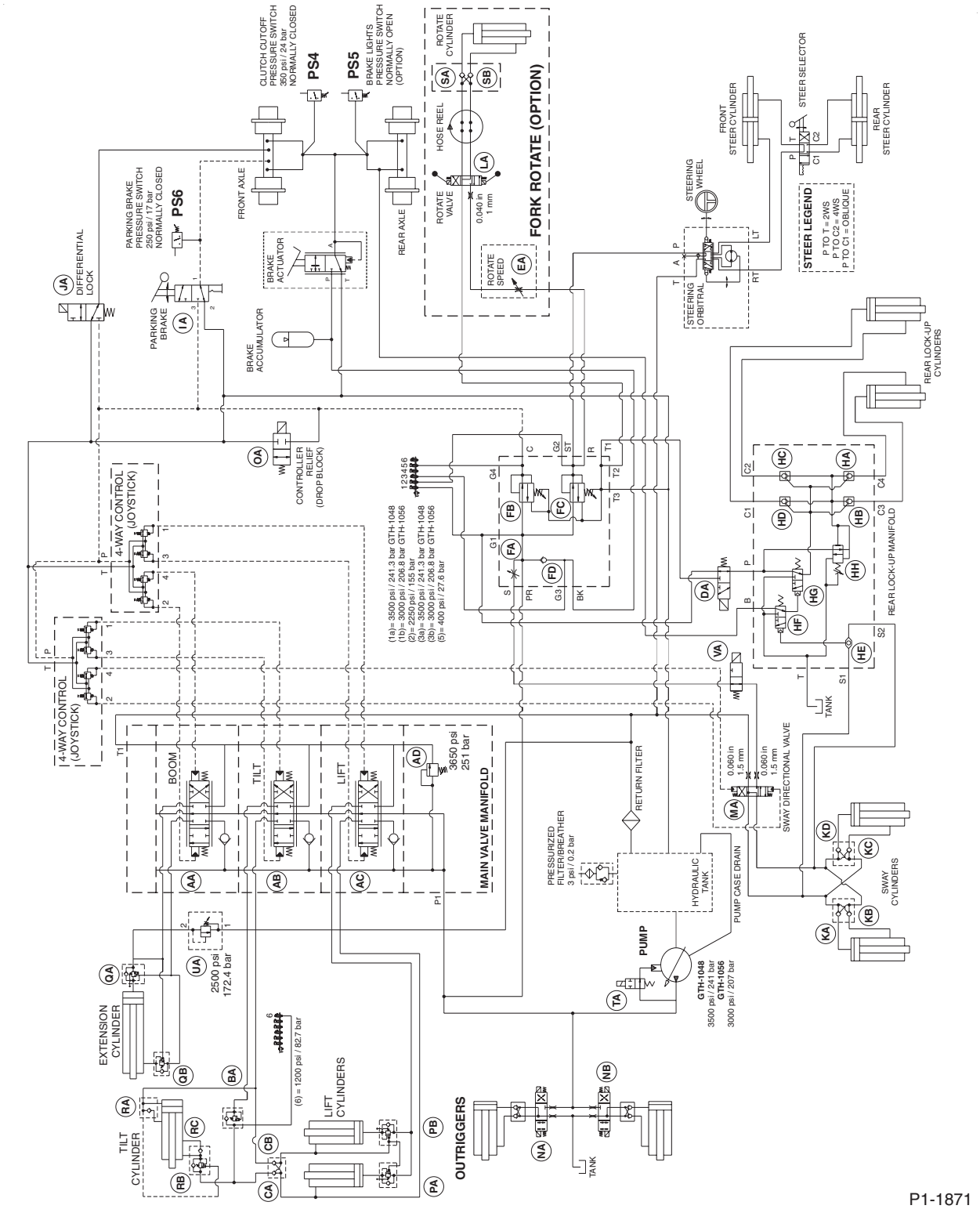

P1-1871

Downloaded from www.Manualslib.com manuals search engine

https://truckmanualshub.com/

This page intentionally left blank.

Downloaded from www.Manualslib.com manuals search engine

https://truckmanualshub.com/

California Proposition 65

Warning

The exhaust from this product contains chemicals known to the State of California to cause cancer, birth defects or other reproductive harm.

Distributed By:

Genie North America
Phone 425.881.1800
Toll Free USA and Canada 800.536.1800
Fax 425.883.3475

Genie Australia Pty Ltd.
Phone +61 7 3375 1660
Fax +61 7 3375 1002

Genie China
Phone +86 21 53852570
Fax +86 21 53852569

Genie Malaysia
Phone +65 98 480 775
Fax +65 67 533 544

Genie Japan
Phone +81 3 3453 6082
Fax +81 3 3453 6083

Genie Korea
Phone +82 25 587 267
Fax +82 25 583 910

Genie Brasil
Phone +55 11 41 665 755
Fax +55 11 41 665 754

Genie Holland
Phone +31 183 581 102
Fax +31 183 581 566

Genie Scandinavia
Phone +46 31 575100
Fax +46 31 579020

Genie France
Phone +33 (0)2 37 26 09 99
Fax +33 (0)2 37 26 09 98

Genie Iberica
Phone +34 93 579 5042
Fax +34 93 579 5059

Genie Germany
Phone 0800 180 9017
Phone +49 422 149 1818
Fax +49 422 149 1820

Genie U.K.
Phone +44 (0)1476 584333
Fax +44 (0)1476 584334

Genie Mexico City
Phone +52 55 5666 5242
Fax +52 55 5666 3241

Downloaded from www.Manualslib.com manuals search engine

https://truckmanualshub.com/

Service Manual

GTH-636 • GTH-842 • GTH-1048
GTH-644 • GTH-844 • GTH-1056

(GTH-636 from serial number GTH0606A-8418)
(GTH-644 from serial number GTH0606A-8418)
(GTH-644 from serial number GTH0606B-6271)
(GTH-842 from serial number GTH0806A-8418)
(GTH-842 from serial number GTH0806B-6958)
(GTH-844 from serial number GTH0806A-8418)
(GTH-844 from serial number GTH0806B-6956)
(GTH-1048 from serial number GTH1006A-8418 to GTH1007A-11442)
(GTH-1056 from serial number GTH1006A-8418 to GTH1007A-11442)

Part No. 97487

Rev D

Genie®
A TEREX COMPANY

Downloaded from www.Manualslib.com manuals search engine