WEAM006000

Operation & Maintenance Manual

WB93R-5

BACKHOE-LOADER

SERIAL NUMBER

WB93R-5 F50003 and up

ATTENTION

Unsafe use of this machine may cause serious injury or death. Operators and maintenance personnel must read this manual before operating or maintaining this machine.
This manual should be kept inside the cab for reference and periodically reviewed by all personnel who will come into contact with the machine.

KOMATSU

Utility

1.1 FOREWORD

- This manual has been produced by Komatsu Utility S.p.A. in order to supply their customers with all the necessary information on the machine and the safety regulations related to it, together with the use and maintenance instructions that enable the operator to exploit the capacity of the machine with optimal results and to keep the machine efficient over time.
- The operation manual, together with the spare parts catalogue, is an integral part of the machine and must accompany it, even when it is resold, until its final disposal.
- The manual must be handled with the greatest care and always kept on board the machine, so that it can be consulted at any moment; it must be placed in the appropriate compartment behind the seat, where also the ownership documents and the logbook are usually kept (see "3.5.9 TECHNICAL DOCUMENTATION").
- This manual must be given to the persons who have to use the machine and carry out the routine maintenance operations; they must read the contents carefully more than once, in such a way as to clearly understand what are the correct operating conditions and the dangerous conditions that must be avoided.§
  In case of loss or damage, request a new copy to Komatsu or your Komatsu Dealer.
- The illustrations contained in this manual may represent machine configurations available on request.
  The machines are constantly upgraded in order to increase their efficiency and reliability; this manual sums up all the information regarding the state of the art at the moment when the machine is launched on the market.
  Contact your Komatsu Dealer for updated information.
- Punctual periodic annotations regarding the maintenance operations that have been carried out are important to have a clear prospect of the situation and to know exactly what has been done and what has to be done after the next maintenance interval. Therefore, it is advisable to consult both the hour meter and the maintenance plan frequently.
- Komatsu Dealers have gathered a considerable amount of experience over years of work in close contact with the users.
  If more information is needed, do not hesitate to contact your Komatsu Dealer: he always knows how to get the best performance from the machine, he can recommend the equipment that is most suitable for specific needs and can provide the technical assistance necessary for any change that may be required to conform the machine to the safety standards and traffic rules.
  Komatsu Dealers also provide assistance for the supply of original Komatsu spare parts, which alone guarantee safety and interchangeability.
- The table included in this manual must be filled in with the machine data, which are the data that must always be indicated to the Dealer when requiring assistance and ordering spare parts.

⚠ CAUTION

- **The incorrect use of the machine and inappropriate maintenance operations may cause serious injury and even death.**
- **Operators and maintenance personnel must carefully read this manual before using the machine or performing maintenance operations.**
- **Some actions involved in the operation and maintenance of the machine may cause serious injury or even death, if they are not performed in compliance with the instructions given herein.**
- **The procedures and precautions described in this manual are valid for application to the machine only when it is used correctly.**
  If the machine is used for any purpose or in any way other than those described herein, the operator shall be responsible for his own safety and for the safety of any other person involved.

1.2 INFORMATION ON SAFETY

Many accidents are caused by insufficient knowledge of and failure to comply with the safety regulations prescribed for the maintenance operations that must be performed on the machine.
In order to avoid accidents, before starting work and before carrying out any maintenance operation, carefully read and be sure to understand all the information and warnings contained in this manual and given on the plates applied onto the machine.
To allow the operator to use the machine in total safety, precautions and safety plates are described in this manual and applied to the machine in order to supply information regarding situations that involve potential risks and the measures that may be adopted to avoid such situations.

Terminology used in the signs

The following terms are used in the signs to inform the user that there is a situation of potential danger that may cause injury or damage.
In this manual and in the plates applied to the machine the following terms are used to indicate potential dangers.

⚠ DANGER

- **Indicates a situation of imminent danger that, if not avoided, may cause serious injury and even death. The use of this term must be limited to situations of extreme danger.**

⚠ WARNING

- **Indicates a situation of potential danger that, if not avoided, may cause serious injury and even death.**

⚠ CAUTION

- **Indicates a situation of potential danger that, if not avoided, may cause moderate injury. This term can also be used as a warning in case of dangerous procedures.**

Other terms used in the signs

In addition to those indicated above, the following warning terms are used to recommend the precautions to be taken to protect the machine or to supply useful information.

IMPORTANT

- **This term is used to indicate precautions that must be taken in order to avoid actions that may reduce the life of the machine.**

NOTE

- This word is used to indicate a useful piece of information.

Komatsu cannot reasonably predict every circumstance that might involve a potential hazard during the operation or maintenance of the machine; for this reason, the safety messages included in this manual and applied onto the machine may not include all possible safety precautions.
If all the procedures and operations prescribed for this machine are kept to, you can be sure that the operator and the persons in the vicinity will work in total safety, with no risk of damaging the machine. In case of doubt regarding the safety measures necessary for some procedures, contact Komatsu or your local Dealer.

DANGER

- **Before starting any maintenance operation, position the machine on firm and level ground, engage the safety locks of the equipment and of the controls, stop the engine and apply the parking brake.**

DANGER

- **To make the information clearer, some illustrations in this manual represent the machine without safety guards. Do not use the machine without guards and do not start the engine when the hood is open, unless this is expressly prescribed for certain maintenance operations.**

WARNING

- **It is strictly forbidden to modify the setting of the hydraulic system safety valves; Komatsu cannot be held liable for any personal injury, or damage to property or the machine, if this has been tampered with by modifying the standard setting of the hydraulic system.**

WARNING

- **Before carrying out any electric welding operation, disconnect the battery and the alternator. (See "2.8.13 PRECAUTIONS CONCERNING THE BATTERY AND THE ALTERNATOR").**

WARNING

- **Install only authorized additional equipment (See "6.1 AUTHORIZED OPTIONAL EQUIPMENT").**

WARNING

- **The machine can travel on roads only if equipped with suitable lighting, signalling and safety devices and if this type of use is authorized by the logbook.**
  Before travelling on roads, make sure that the equipment with which the machine is provided is homologated and that the safety locks are correctly engaged.

DANGER

- **It is absolutely forbidden to manoeuvre the machine while standing on the ground.**
  Each operation must be carried out by the operator correctly seated in the driving position.

1.3 INTRODUCTION

1.3.1 INTENDED USES

The Komatsu BACKHOE LOADERS described in this manual have been designed and constructed to be used mainly with the following functions:

- LOADER
- EXCAVATOR

Through the installation of optional equipment, the machine can also be used for the following applications:

- HANDLING OF MATERIALS (4IN1 BUCKET - PALLET FORKS)
- SNOWPLOUGH (ANGLEDOZER BLADE - SNOWPLOUGH)
- DEMOLITION (HAND HAMMER - HAMMER ON THE BACKHOE)
- DITCH CLEANING AND DIGGING (SPECIAL BUCKETS)

1.3.2 IMPROPER OR UNAUTHORIZED USE

⚠ CAUTION

- **This paragraph describes some improper or unauthorized uses of the machine; since it is impossible to predict all possible improper uses, if the machine is going to be used for particular applications, contact your Komatsu Dealer before carrying out the work.**

IMPORTANT

- **The instructions regarding the authorized optional equipment are given in the relevant operation and maintenance manuals; if the equipment is supplied by Komatsu, these publications are enclosed to this manual.**
- **The instructions regarding the assembly of the authorized equipment, the controls requiring special arrangements on the machine and the hydraulic couplings necessary for the operation of the equipment are grouped in the final section of this manual.**

Komatsu BACKHOE LOADERS are constructed exclusively for the handling, excavation and treatment of inert materials; therefore, the following uses are absolutely forbidden:

- USE OF THE MACHINE BY MINORS OR INEXPERIENCED PERSONS.
- USE OF THE MACHINE FOR LIFTING PERSONS OR OBJECTS.
- TRANSPORTATION OF PERSONS even if they are in the operator’s cab.
- TRANSPORTATION OF CONTAINERS with fluids, flammable fluids, loose material, without the appropriate slinging equipment.
- TRANSPORTATION AND LIFTING (EVEN IF IN EXCEPTIONAL CASES) OF EQUIPMENT OR MATERIALS THAT PROTRUDE FROM THE BUCKET OR ARE NOT SECURED TO THE BUCKET BY MEANS OF ROPES OR CHAINS.
- USE OF THE BUCKET FOR DRIVING OR EXTRACTING PILES.
- USE OF THE MACHINE FOR TOWING DAMAGED VEHICLES ON ROADS.
- USE OF THE MACHINE FOR LIFTING DAMAGED VEHICLES.

1.3.3 MAIN CHARACTERISTICS

- Simple and easy operation.
- Servo-assisted steering with priority hydraulic system.
- 4-gear mechanical gearshift and transmission with hydraulic converter; reversal controlled by a lever positioned under the steering wheel.
- Loader control through a single servo lever ensuring also combined movements that can be modulated proportionally and continually.
- Backhoe controls through mechanical levers ensuring also combined movements that can be modulated proportionally and continually. On request, the backhoe can be controlled by means of two servo levers.
- Complete series of instruments visible from the two operating positions (loader or backhoe).
- Separate accelerator controls for the two operating positions.
- Foot brake control.
- Easy maintenance with simplified intervals.

1.3.4 RUNNING-IN

Every machine is scrupulously adjusted and tested before delivery.
A new machine, however, must be used carefully for the first 100 hours, in order to ensure proper running-in of the various components.
If the machine is subjected to an excessive work load at the beginning of its service life, its productivity and functionality will be untimely reduced.
Every new machine must be used carefully, paying special attention to the following indications:

- After the start, let the engine idle for 5 minutes, in such a way as to warm it up gradually before actual operation.
- Avoid operating the machine with the limit loads allowed or at high speed.
- Avoid abrupt starts or accelerations, useless sudden decelerations and abrupt reversals.
- After the first 250 hours of use, carry out the following operations, in addition to those to be performed every 250 hours:

1 - Change the hydraulic transmission oil and filter.
2 - Change the differential unit oil (front and rear axle).
3 - Change the final reduction gear oil (front and rear axle).
4 - Change the hydraulic circuit oil filter.

SYNTHETIC BIODEGRADABLE OIL TYPE HEES

On machines in which the synthetic biodegradable oil type HEES is used, the following operations are to be performed together with the standard maintenance operations.

- After the first 50 hours of operation, change the hydraulic circuit drain filter.
- After the first 500 hours of operation, change the hydraulic circuit oil.

IMPORTANT

- **When changing the oil filters (cartridges), check their innner part to make sure that there are no deposits. If abundant deposits are observed, find out what may have caused their accumulation before starting the machine.**
- **The number of operation hours is indicated by the hour meter.**

1.4 PRODUCT IDENTIFICATION

The Komatsu backhoe loader and its main components are identified by serial numbers stamped on the identification plates. The serial number and the identification numbers of the components are the only numbers that must be indicated to the Dealer when requiring assistance and ordering spare parts.

1.4.1 MACHINE IDENTIFICATION NUMBER (PIN)

The machine identification number "PIN" is stamped on the right side of the frame front.

1.4.2 MACHINE IDENTIFICATION PLATE AND PRODUCT IDENTIFICATION NUMBER (PIN) (alternatively for some markets)

The Komatsu BACKHOE LOADERS described in this manual are CE marked, in fact they are in full compliance with the EU harmonised standards. The Product Identification Number (PIN) is stamped on the lower part of the plate. The customer must be able to indicate the PIN at any time, that is why it must compulsorily be written in the following table. The plate with the CE marking is applied inside the cab, on the left vertical wall of the frame, at the height of the brake pedals.

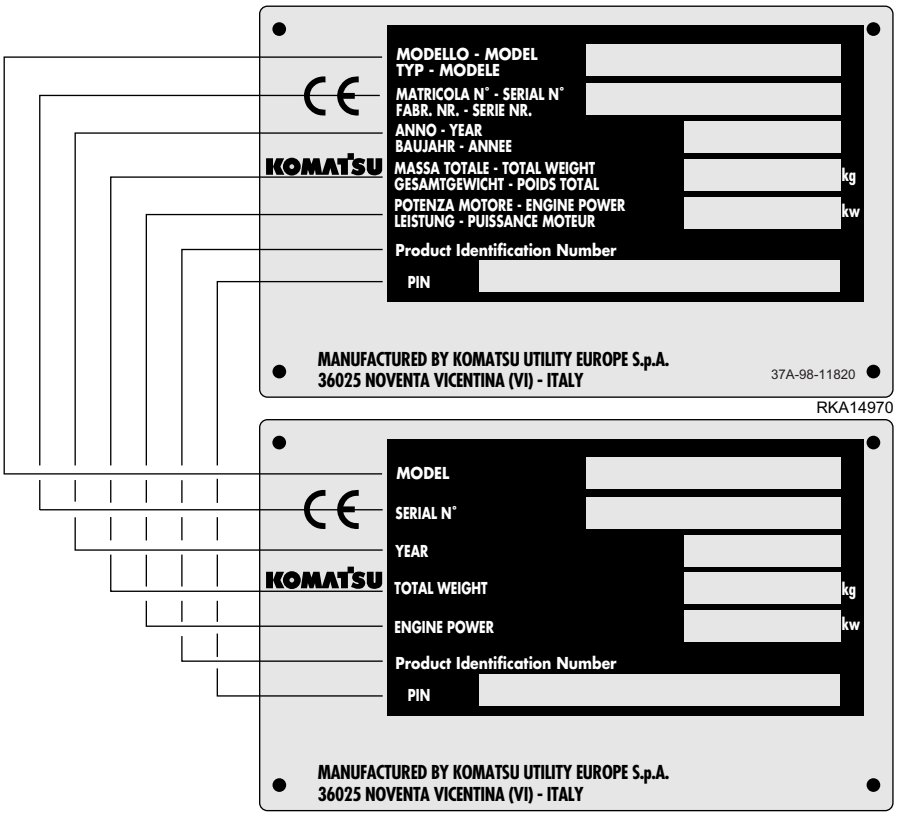

1.4.3 MACHINE IDENTIFICATION PLATE AND PRODUCT IDENTIFICATION NUMBER (PIN)

The Komatsu BACKHOE LOADERS described in this manual are CE marked, in fact they are in full compliance with the EU harmonised standards.
The Product Identification Number (PIN) is stamped on the lower part of the plate. The customer must be able to indicate the PIN at any time, that is why it must compulsorily be written in the following table. The plate with the CE marking is applied inside the cab, on the left vertical wall of the frame, at the height of the brake pedals.

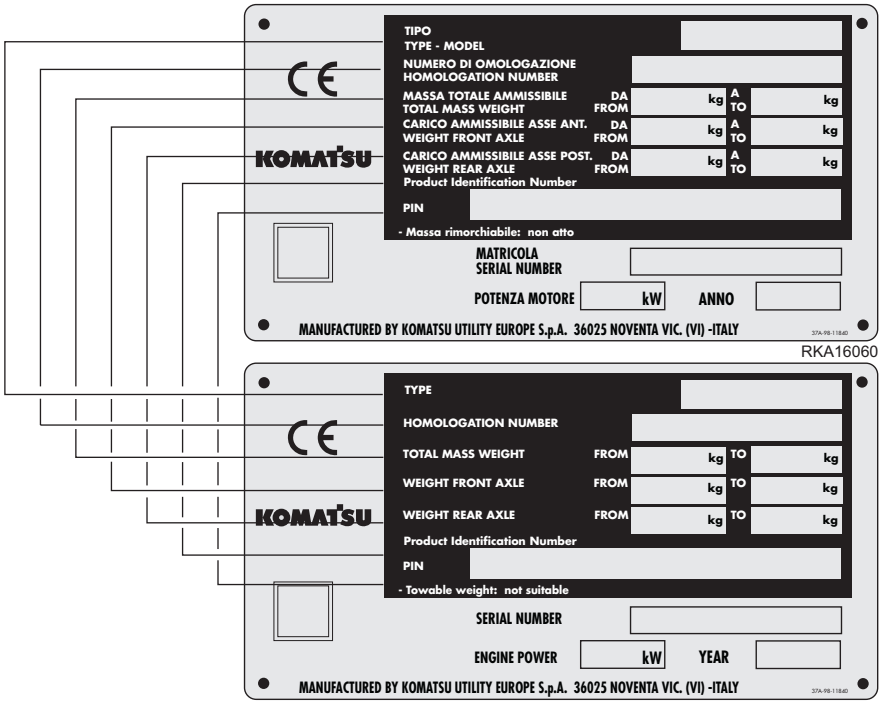

RKA16060

1.4.4 ENGINE SERIAL NUMBER AND EXHAUST GAS EMISSION PLATE

The identification plate (1) is fixed above the engine head and indicates the engine model, total displacement and serial number.
The identification plate (2) is fixed to the left side of the engine block, bears the Manufacturer's mark and contains the following data:

1 - Engine type

2 - Engine family

3 - Serial number

4 - EC Type Approval

5 - EPA

The serial number (3) is also stamped on the right side of the cylinder block, on the upper part of the oil cooling heat exchanger.

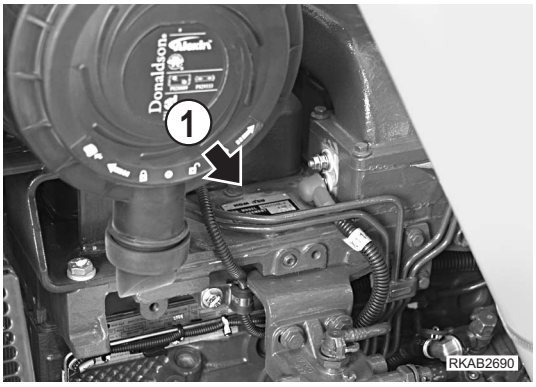

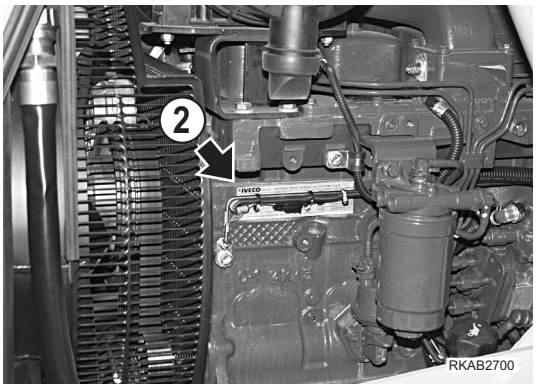

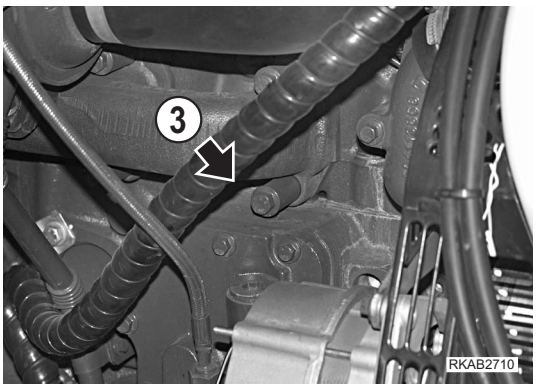

1.4.5 FRONT AXLE SERIAL NUMBER

The serial number of the front axle is stamped on the plate positioned on the right side of the axle body.

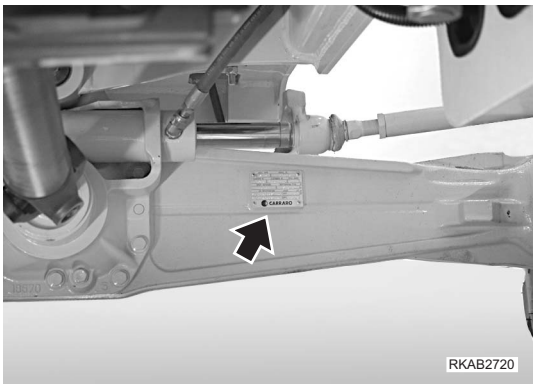

1.4.6 REAR AXLE SERIAL NUMBER

The serial number of the rear axle is stamped on the plate positioned on the right side of the axle body.

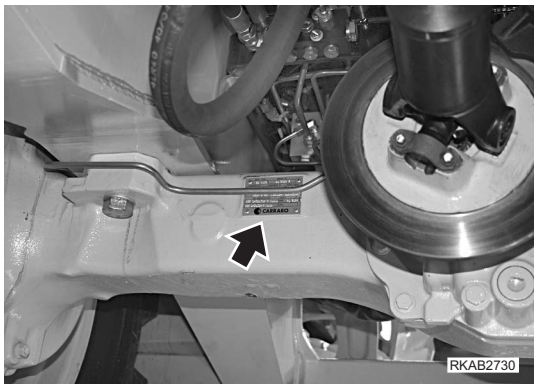

1.4.7 TRANSMISSION SERIAL NUMBER

The transmission serial number is stamped on the plate postioned on the right side of the transmission case.

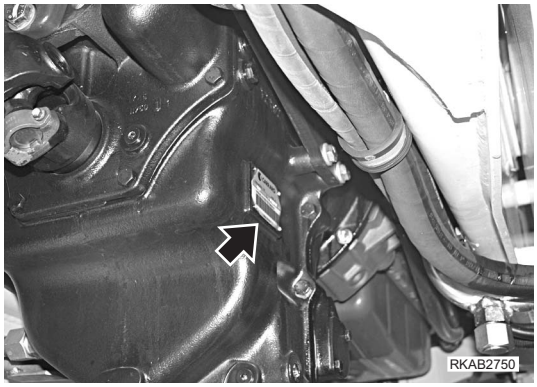

1.4.8 CAB SERIAL NUMBER

The cab serial number is stamped on the plate postioned on the left side of the rear wall.

1.4.9 SERIAL NUMBERS AND DEALER'S ADDRESS

Machine no. _____ Mod. _____

Product identification number (PIN) _____

Engine no. _____

Front axle no. _____

Rear axle no. _____

Transmission no. _____

Cab no. _____

Dealer:

_____

_____

_____

_____

Address: _____

_____

_____ Tel. _____

Contact person: _____

NOTES: _____

TABLE OF CONTENTS

FOREWORD

1.1 FOREWORD 1

1.2 INFORMATION ON SAFETY 2

1.3 INTRODUCTION 4

1.3.1 INTENDED USES 4
1.3.2 IMPROPER OR UNAUTHORIZED USE 4
1.3.3 MAIN CHARACTERISTICS 5
1.3.4 RUNNING-IN 5

1.4 PRODUCT IDENTIFICATION 6

1.4.1 MACHINE IDENTIFICATION NUMBER (PIN) 6
1.4.2 MACHINE IDENTIFICATION PLATE AND PRODUCT IDENTIFICATION NUMBER (PIN) (alternatively for some markets) 6
1.4.3 MACHINE IDENTIFICATION PLATE AND PRODUCT IDENTIFICATION NUMBER (PIN) 7
1.4.4 ENGINE SERIAL NUMBER AND EXHAUST GAS EMISSION PLATE 8
1.4.5 FRONT AXLE SERIAL NUMBER 8
1.4.6 REAR AXLE SERIAL NUMBER 9
1.4.7 TRANSMISSION SERIAL NUMBER 9
1.4.8 CAB SERIAL NUMBER 9
1.4.9 SERIAL NUMBERS AND DEALER’S ADDRESS 10

TABLE OF CONTENTS 11

SAFETY AND ACCIDENT PREVENTION

2.1 SAFETY, NOISE AND VIBRATION PLATES 20

2.1.1 POSITION OF THE SAFETY PLATES 20
2.1.2 PICTOGRAMS AND RELEVANT MEANINGS 22
2.1.3 POSITION OF THE NOISE PLATES ON MACHINES WITH CAB 28
2.1.4 VIBRATIONS TO WHICH THE OPERATOR IS SUBJECTED 29

2.2 GENERAL PRECAUTIONS 30

2.2.1 GENERAL SAFETY RULES 30
2.2.2 SAFETY DEVICES AND GUARDS 30
2.2.3 CLOTHING AND PERSONAL PROTECTION ITEMS 30
2.2.4 UNAUTHORIZED MODIFICATIONS 30
2.2.5 LEAVING THE OPERATOR’S SEAT 31
2.2.6 GETTING ON AND OFF THE MACHINE 32
2.2.7 CHECKING THE REAR-VIEW MIRRORS 32
2.2.8 PREVENTING FIRES DUE TO FUEL AND OIL 33
2.2.9 PREVENTING BURNS 33
2.2.10 PREVENTING DAMAGE DUE TO ASBESTOS POWDER 34
2.2.11 PREVENTING DAMAGE CAUSED BY THE WORK EQUIPMENT 34
2.2.12 FIRE EXTINGUISHERS AND FIRST AID KIT 35
2.2.13 PRECAUTIONS CONCERNING THE CAB STRUCTURE 35
2.2.14 PRECAUTIONS CONCERNING THE EQUIPMENT 35

2.3 PRECAUTIONS TO BE TAKEN BEFORE STARTING THE ENGINE 36

2.3.1 SAFETY ON THE WORK SITE 36
2.3.2 FIRE PREVENTION 36
2.3.3 PRECAUTIONS TO BE TAKEN FOR THE OPERATOR'S CAB 36
2.3.4 ROOM VENTILATION 37
2.3.5 CLEANING WINDOWS, MIRRORS AND LIGHTS - CHECKING THE WINDSHIELD WIPER BLADES AND THE BULBS 37

2.4 PRECAUTIONS TO BE TAKEN DURING WORK 38
2.4.1 WHEN STARTING THE ENGINE 38
2.4.2 RULES FOR TRAVELLING ON ROADS 38
2.4.3 HAND SIGNALS 39
2.4.4 CHECKS FOR TRAVELLING IN REVERSE 44
2.4.5 MOVING THE MACHINE 44
2.4.6 WORKING ON SLOPES 45
2.4.7 PREVENTING ELECTROCUTION 46
2.4.8 VISIBILITY 47
2.4.9 WORKING ON ICY OR SNOW-COVERED SURFACES 47
2.4.10 PREVENTING DAMAGE CAUSED BY THE WORK EQUIPMENT 47
2.4.11 WORKING ON LOOSE GROUND 47
2.4.12 PARKING THE MACHINE 48

2.5 TRANSPORTING THE MACHINE ON OTHER VEHICLES 49
2.5.1 LOADING AND UNLOADING THE MACHINE 49
2.5.2 TRANSPORT 49

2.6 BATTERY 50
2.6.1 PREVENTING RISKS THAT MAY BE DUE TO THE BATTERY 50
2.6.2 STARTING WITH BOOSTER CABLES 50

2.7 PRECAUTIONS FOR EMERGENCY RECOVERY 51

2.8 PRECAUTIONS TO BE TAKEN DURING MAINTENANCE 52
2.8.1 WARNING PLATES 52
2.8.2 TOOLS 52
2.8.3 PERSONNEL 53
2.8.4 EQUIPMENT 53
2.8.5 WORKING UNDER THE MACHINE 53
2.8.6 KEEPING THE MACHINE CLEAN 54
2.8.7 USE OF THE ENGINE DURING MAINTENANCE 54
2.8.8 PERIODICAL CHANGE OF THE SAFETY RELATED PARTS 54
2.8.9 STOP THE ENGINE BEFORE CARRYING OUT ANY MAINTENANCE OPERATION OR INSPECTION 55
2.8.10 RULES TO BE FOLLOWED DURING FUEL OR OIL TOPPING UP 56
2.8.11 CHECKING THE COOLANT LEVEL IN THE RADIATOR 56
2.8.12 USING LAMPS 56
2.8.13 PRECAUTIONS CONCERNING THE BATTERY AND THE ALTERNATOR 57
2.8.14 PRECAUTIONS CONCERNING THE STARTER 57
2.8.15 HANDLING HIGH-PRESSURE PIPES 58
2.8.16 PRECAUTIONS TO BE TAKEN WHEN WORKING ON HIGH- PRESSURE SYSTEMS 58
2.8.17 PRECAUTIONS FOR MAINTENANCE WORK INVOLVING HIGH TEMPERATURES AND PRESSURES 58
2.8.18 HYDRAULIC ACCUMULATOR 59
2.8.19 COOLING FAN AND FAN BELT 59
2.8.20 WASTE MATERIALS 59
2.8.21 PRECAUTIONS CONCERNING TECHNOPOLYMERS AND ELASTOMERS 60
2.8.22 PRECAUTIONS TO BE TAKEN WHEN INFLATING THE TYRES 60
2.8.23 PRECAUTIONS FOR THE INSTALLATION OF THE EXHAUST SYSTEM TAILPIPE 61
2.8.24 PRECAUTIONS TO BE TAKEN WHEN USING SYNTHETIC BIODEGRADABLE OIL TYPE «HEES» 61

DESCRIPTION AND USE OF THE MACHINE

3.1 SAFETY LOCKS 64
3.1.1 FRONT LOADER LOCKS 64
3.1.2 BACKHOE LOCKS 66

3.2 GENERAL VIEWS 68
3.2.1 FRONT GENERAL VIEW 68
3.2.2 BACKHOE GENERAL VIEW 69
3.2.3 CAB INSIDE GENERAL VIEW 70
3.2.3.1 CAB INSIDE GENERAL VIEW (mechanical backhoe controls) 70
3.2.3.2 CAB INSIDE GENERAL VIEW (backhoe servo controls) 71

3.3 INSTRUMENTS AND CONTROLS 72
3.3.1 FRONT INSTRUMENTS 72
3.3.2 SIDE INSTRUMENTS 76
3.3.3 PUSH BUTTONS ON THE FRONT LOADER CONTROL LEVER 84
3.3.4 PUSH BUTTON ON THE GEARSHIFT LEVER 85
3.3.5 CAB SWITCHES AND ELECTRIC ACCESSORIES 86
3.3.6 MACHINE CONTROLS 89
3.3.6.1 MACHINE CONTROLS (version with mechanically-controlled backhoe) 89
3.3.6.2 MACHINE CONTROLS (version with servo-assisted backhoe) 91
3.3.6.3 ADJUSTING THE CONTROLS 111

3.4 FUSES AND RELAYS 114
3.4.1 CENTRAL UNIT FUSES – RELAYS AND ENGINE LINE 114
3.4.1.1 FUSES 114
3.4.1.2 RELAYS 116
3.4.2 VENTILATION, HEATING AND AIR CONDITIONING FUSES AND RELAYS 117
3.4.2.1 FUSES 117
3.4.2.2 RELAYS 117

3.5 GUARDS, CAB AND DRIVER'S SEAT 118
3.5.1 ENGINE HOOD 118
3.5.2 CAB 119
3.5.3 VENTILATION AND HEATING 122
3.5.4 AIR CONDITIONER (if installed) 123
3.5.5 SEAT 125
3.5.5.1 SEAT (STANDARD) 125
3.5.5.2 SEAT (OPTIONAL) 126
3.5.6 SAFETY BELT 127
3.5.7 FIRE EXTINGUISHER 127
3.5.8 FIRST AID KIT 127
3.5.9 TECHNICAL DOCUMENTATION 127
3.5.10 STORAGE COMPARTMENT 128

3.6 USE OF THE MACHINE 129
3.6.1 CHECKS TO BE CARRIED OUT BEFORE STARTING THE ENGINE 129
3.6.1.1 VISUAL CHECKS 129
3.6.1.2 OPERATIONAL CHECKS 130
3.6.2 STARTING THE ENGINE 131
3.6.2.1 STARTING WITH WARM ENGINE OR IN TEMPERATE CLIMATES 131
3.6.2.2 STARTING WITH COLD ENGINE OR IN COLD CLIMATES 132
3.6.3 WARMING THE ENGINE 133
3.6.4 HEATING THE HYDRAULIC OIL 133
3.6.5 HOW TO MOVE THE MACHINE 134
3.6.5.1 DIFFERENTIAL LOCKING 135
3.6.5.2 ENGAGING THE FOUR-WHEEL DRIVE 135

3.6.5.3 WORKING ON SLOPES 136
3.6.5.4 MAXIMUM IMMERSION DEPTH 137

3.7 PARKING THE MACHINE 138
3.7.1 PARKING ON LEVEL GROUND 138
3.7.2 PARKING ON SLOPES 139

3.8 STOPPING THE ENGINE 140

3.9 TRANSPORTING THE MACHINE ON OTHER VEHICLES 141
3.9.1 LOADING AND UNLOADING THE MACHINE 141
3.9.2 TRANSPORT 142

3.10 PRECAUTIONS TO BE TAKEN IN THE COLD SEASON 143
3.10.1 FUEL AND LUBRICANTS 143
3.10.2 COOLANT 143
3.10.3 BATTERY 144
3.10.4 OTHER PRECAUTIONS 144
3.10.5 PRECAUTIONS TO BE TAKEN AT THE END OF WORK 144

3.11 PRECAUTIONS TO BE TAKEN AT THE END OF THE WINTER 145

3.12 USING THE MACHINE AS A LOADER 146
3.12.1 BUCKET POSITION INDICATOR 146
3.12.2 ORGANIZING THE WORK AREA 146
3.12.2.1 LOADING HEAPED AND LEVEL MATERIAL 147
3.12.2.2 LOADING OPERATIONS ON SLOPES 148
3.12.3 CHANGING THE STANDARD FRONT BUCKET 148

3.13 USING THE MACHINE AS AN EXCAVATOR 149
3.13.1 POSITIONING THE BUCKET ACCORDING TO THE WORK THAT MUST BE CARRIED OUT 149
3.13.2 POSITIONING THE MACHINE FOR DIGGING OPERATIONS 150
3.13.3 SLIDING THE BACKHOE UNIT SIDEWARDS 151
3.13.4 DIGGING METHOD 152
3.13.4.1 CHANGING THE BACKHOE BUCKET 153

3.14 LONG PERIODS OF INACTIVITY 154
3.14.1 PREPARING THE MACHINE FOR A LONG PERIOD OF INACTIVITY 154
3.14.2 PREPARING THE ENGINE FOR A LONG PERIOD OF INACTIVITY 156
3.14.3 MAINTENANCE DURING A PERIOD OF INACTIVITY 156
3.14.4 RESTARTING THE ENGINE 157
3.14.5 AFTER THE PERIOD OF INACTIVITY 157

3.15 TROUBLESHOOTING 158
3.15.1 HOW TO REMOVE THE MACHINE 158
3.15.2 AFTER THE FUEL HAS RUN OUT 158
3.15.3 IF THE BATTERY HAS RUN DOWN 159
3.15.3.1 STARTING WITH BOOSTER CABLES 160
3.15.4 OTHER TROUBLES 161
3.15.4.1 ELECTRICAL CIRCUIT 161
3.15.4.2 HYDRAULIC SYSTEM 161
3.15.4.3 BRAKING SYSTEM 162
3.15.4.4 CONVERTER 162
3.15.4.5 ENGINE 162

MAINTENANCE

4.1 GUIDE TO MAINTENANCE 166

4.2 MAINTENANCE NOTES 168

4.2.1 NOTES REGARDING THE ENGINE 168

4.2.1.1 ENGINE OIL 168

4.2.1.2 COOLANT 168

4.2.1.3 FUEL 169

4.2.2 NOTES REGARDING THE HYDRAULIC SYSTEM 169

4.2.3 NOTES REGARDING THE ELECTRIC SYSTEM 170

4.2.4 NOTES REGARDING LUBRICATION 170

4.2.5 PARTS SUBJECT TO WEAR THAT PERIODICALLY NEED CHANGING 171

4.3 FUEL, COOLANT AND LUBRICANTS 172

4.3.1 LUBRICATION WITH GREASE 173

4.3.2 HOMOLOGATED SYNTHETIC BIODEGRADABLE LUBRICANTS “HEES” 174

4.4 DRIVING TORQUES 175

4.4.1 STANDARD DRIVING TORQUES FOR SCREWS AND NUTS 175

4.4.2 SPECIFIC DRIVING TORQUES FOR SCREWS AND NUTS 176

4.4.3 STANDARD DRIVING TORQUES FOR HOSES WITH ORFS 176

4.5 LUBRICATION 177

4.5.1 LUBRICATION DIAGRAM 177

4.5.2 LUBRICATION DIAGRAM (4in1 bucket and pallet forks) 178

4.5.3 LUBRICATION DIAGRAM (front bucket quick couplings) 179

4.5.4 LUBRICATION DIAGRAM (offset device) 180

4.6 PERIODICAL CHANGE OF THE SAFETY RELATED COMPONENTS 181

4.6.1 SAFETY RELATED PARTS 182

4.6.1.1 FUEL SYSTEM 182

4.6.1.2 DELIVERY HYDRAULIC SYSTEM 183

4.6.1.3 FRONT LOADER HYDRAULIC SYSTEM 184

4.6.1.4 BACKHOE HYDRALIC SYSTEM 185

4.6.1.5 OPERATOR’S SAFETY 186

4.7 MAINTENANCE PLAN 187

4.8 MAINTENANCE PROCEDURES 189

4.8.1 WHEN REQUIRED 189

4.8.1.a CHECKING, CLEANING OR CHANGING THE ENGINE AIR FILTERS 189

4.8.1.b CHECKING AND CLEANING THE CAB AIR FILTER 190

4.8.1.c CHECKING AND CLEANING THE AIR RECIRCULATION FILTER (only for machines with air conditioner) 191

4.8.1.d CHECKING THE DETERGENT LEVEL IN THE WINDSHIELD WASHER RESERVOIR 191

4.8.1.e CHECKING THE WINDSHIELD WIPER BLADES 192

4.8.1.f LUBRICATING THE CAB DOOR HINGES 192

4.8.1.g FUSES AND RELAYS – CHECK AND CHANGE 192

4.8.1.h BLEEDING THE BRAKING CIRCUIT 193

4.8.1.i CHECKING AND ADJUSTING THE FRONT WHEEL TOE-IN 194

4.8.1.j CHECKING THE BRAKING EFFICIENCY 194

4.8.1.k CHECKING AND ADJUSTING THE PARKING BRAKE 195

4.8.1.l CHECKING AND ADJUSTING THE BRAKE PEDAL STROKE 196

4.8.1.m ADJUSTING THE AUTOMATIC RETURN-TO-DIG DEVICE OF THE FRONT BUCKET (if installed) 196

4.8.1.n CHECKING AND ADJUSTING THE STABILIZER SLACK 197

4.8.2 MAINTENANCE INTERVALS IN CASE OF USE OF THE DEMOLITION HAMMER 198

4.8.2.a CHANGING THE HYDRAULIC OIL FILTER 198

4.8.2.b CHANGING THE HYDRAULIC OIL 198
4.8.3 CHECKS TO BE CARRIED OUT BEFORE STARTING THE ENGINE 199
4.8.3.a VARIOUS CHECKS 199
4.8.3.b CHECKING THE COOLANT LEVEL 199
4.8.3.c CHECKING THE FUEL LEVEL 200
4.8.3.d CHECKING THE ENGINE OIL LEVEL 200
4.8.4 MAINTENANCE EVERY 10 HOURS OF OPERATION 201
4.8.4.a LUBRICATING THE JOINTS 201
4.8.5 MAINTENANCE AFTER THE FIRST 50 HOURS OF OPERATION (Only for machines in which synthetic biodegradable oil type HEES is used) 203
4.8.6 MAINTENANCE EVERY 50 HOURS OF OPERATION 203
4.8.6.a CHECKING THE HYDRAULIC OIL LEVEL 203
4.8.6.b CHECKING THE FLUID LEVEL IN THE RADIATOR 204
4.8.6.c CHECKING THE BRAKING SYSTEM OIL LEVEL 204
4.8.6.d LUBRICATING THE PROPELLER SHAFTS 205
4.8.6.e LUBRICATING THE FRONT AXLE JOINTS AND CENTRAL COUPLING 206
4.8.6.f CHECKING THE TYRE PRESSURE 206
4.8.6.g DRAINING THE WATER SEPARATOR 207
4.8.7 MAINTENANCE AFTER THE FIRST 250 HOURS OF OPERATION 208
4.8.8 MAINTENANCE EVERY 250 HOURS OF OPERATION 208
4.8.8.a CHECKING THE ALTERNATOR-FAN BELT 208
4.8.8.b CHECKING AND ADJUSTING THE A/C COMPRESSOR BELT TENSION (only for machines with air conditioner) 209
4.8.8.c CHECKING THE BATTERY ELECTROLYTE LEVEL 210
4.8.8.d CHECKING THE FRONT AXLE OIL LEVELS 211
4.8.8.e CHECKING THE REAR AXLE OIL LEVEL 211
4.8.8.f CHECKING THE HYDRAULIC TRANSMISSION OIL LEVEL 212
4.8.8.g CHECKING THE WHEEL NUT DRIVING TORQUE 212
4.8.9 MAINTENANCE AFTER THE FIRST 500 HOURS OF OPERATION (Only for machines in which synthetic biodegradable oil type HEES is used) 213
4.8.10 MAINTENANCE EVERY 500 HOURS OF OPERATION 213
4.8.10.a CHANGING THE ENGINE OIL 213
4.8.10.b CHANGING THE ENGINE OIL FILTER 214
4.8.10.c CHANGING THE HYDRAULIC SYSTEM OIL FILTER 214
4.8.10.d CHANGING THE FUEL FILTER 217
4.8.10.e DRAINING THE FUEL TANK 218
4.8.10.f DRAINING THE HYDRAULIC OIL TANK (only for machines in which synthetic biodegradable oil type HEES is used) 219
4.8.10.g CLEANING THE OUTSIDE OF THE RADIATOR 220
4.8.10.h CLEANING THE OUTSIDE OF THE A/C CONDENSER (only for machines with air conditioner) 221
4.8.11 MAINTENANCE EVERY 1000 HOURS OF OPERATION 222
4.8.11.a CHANGING THE FRONT AXLE OIL 222
4.8.11.b CHANGING THE REAR AXLE OIL 223
4.8.11.c CHANGING THE HYDRAULIC TRANSMISSION OIL 224
4.8.11.d CHANGING THE HYDRAULIC TRANSMISSION OIL FILTER 225
4.8.12 MAINTENANCE EVERY 2000 HOURS OF OPERATION 226
4.8.12.a CHANGING THE HYDRAULIC OIL AND CLEANING THE INTAKE FILTER 226
4.8.12.b CHANGING THE COOLANT 228
4.8.12.c CHANGING THE BRAKING SYSTEM OIL 229
4.8.12.d CHECKING THE ALTERNATOR AND THE STARTER 230
4.8.12.e CHANGING THE ALTERNATOR BELT 230
4.8.12.f CHECKING THE A/C COOLING GAS QUANTITY (only for machines with air conditioner) 230
4.8.13 MAINTENANCE EVERY 3000 HOURS OF OPERATION 231

4.8.13.a CHECKING THE ENGINE RETAINING SCREWS AND DAMPING ELEMENTS .. 231
4.8.13.b CHECKING AND ADJUSTING THE ENGINE VALVE CLEARANCE AND THE INJECTION TIMING ADVANCE ... 231
4.8.14 MAINTENANCE EVERY 4000 HOURS OF OPERATION ... 232
4.8.14.a CHANGING THE A/C DEWATERING FILTER (Only for machines with air conditioner) ... 232
4.8.14.b CHECKING THE OPERATING CONDITIONS OF THE A/C COMPRESSOR (Only for machines with air conditioner) ... 232
4.8.14.c CHANGING THE ENGINE THERMOSTATIC VALVE ... 232

TECHNICAL SPECIFICATIONS

5.1 TECHNICAL DATA ... 234
5.1.1 STANDARD OVERALL DIMENSIONS ... 234
5.1.1.1 OVERALL DIMENSIONS WITH STANDARD ARM ... 234
5.1.1.2 OVERALL DIMENSIONS WITH TELESCOPIC ARM ... 234
5.1.2 TECHNICAL CHARACTERISTICS ... 235
5.1.3 LIFTING CAPACITIES ... 237
5.1.3.1 SYMBOL TABLE ... 237
5.1.3.2 LIFTING CAPACITIES (STANDARD ARM) ... 238
5.1.3.3 LIFTING CAPACITIES (TELESCOPIC ARM) ... 239

AUTHORIZED OPTIONAL EQUIPMENT

6.1 AUTHORIZED OPTIONAL EQUIPMENT ... 242
6.1.1 PRECAUTIONS REGARDING SAFETY ... 242
6.1.2 PRECAUTIONS REGARDING THE INSTALLATION OF EQUIPMENT ... 243
6.1.3 CHARACTERISTICS OF THE OPTIONAL EQUIPMENT ... 244
6.2 FRONT EQUIPMENT QUICK COUPLING DEVICES ... 245
6.2.1 MANUAL QUICK COUPLING ... 245
6.2.2 HYDRAULIC QUICK COUPLING FOR STANDARD BUCKET ... 246
6.2.3 HYDRAULIC QUICK COUPLING FOR 4in1 BUCKET AND OPTIONAL EQUIPMENT WITH UNIDIRECTIONAL OIL FLOW ... 246
6.3 4in1 BUCKET ... 247
6.3.1 DESCRIPTION AND CONTROLS ... 247
6.3.2 SAFETY DEVICES ... 247
6.3.3 INSTALLING THE 4in1 BUCKET ... 248
6.3.4 USING THE 4in1 BUCKET ... 249
6.3.5 MAINTENANCE ... 249
6.4 PALLET FORKS ... 250
6.4.1 DESCRIPTION ... 250
6.4.2 SAFETY DEVICES ... 251
6.4.3 USING THE FORKS ... 251
6.4.3.1 PREPARING THE PALLET FORKS FOR USE ... 252
6.4.3.2 OVERTURNING THE FORKS FOR TRAVEL ON ROADS ... 252
6.4.4 REMOVING THE FORKS ... 253
6.4.5 INSTALLING THE FORKS ... 253
6.4.6 MAINTENANCE ... 253
6.5 BACKHOE TELESCOPIC ARM ... 254
6.5.1 DESCRIPTION AND CONTROL ... 254
6.5.1.1 CONTROL (version with mechanically-controlled backhoe) ... 254
6.5.1.2 CONTROL (version with servo-assisted backhoe) ... 254
6.5.2 SAFETY DEVICES ... 255
6.5.3 USING THE TELESCOPIC ARM ... 255
6.5.4 MAINTENANCE ... 256
6.5.4.1 ADJUSTING THE GUIDE SLACK ... 256

6.6 CONFIGURATION FOR THE INSTALLATION OF THE DEMOLITION HAMMER 258
6.6.1 DESCRIPTION AND CONTROL 258
6.6.1.1 CONTROL (version with mechanically-controlled backhoe) 258
6.6.1.2 CONTROL (version with servo-assisted backhoe) 258
6.6.2 USE OF THE DEMOLITION HAMMER AND RULES TO BE OBSERVED 259
6.6.3 INSTALLING AND REMOVING THE DEMOLITION HAMMER 263
6.6.3.1 INSTALLING THE HAMMER 263
6.6.3.2 REMOVING THE HAMMER 265
6.6.4 USING THE HAMMER 265
6.6.5 MAINTENANCE 265

6.7 APPLICATION OF THE OFFSET DEVICE 266
6.7.1 DESCRIPTION AND CONTROL 266
6.7.1.1 CONTROL (version with mechanically-controlled backhoe) 266
6.7.1.2 CONTROL (version with servo-assisted backhoe) 267
6.7.2 MAINTENANCE 267

6.8 CONFIGURATION FOR THE USE OF OPTIONAL EQUIPMENT WITH UNIDIRECTIONAL OIL FLOW 268
6.8.1 DESCRIPTION AND CONTROL 268
6.8.1.1 CONTROL (version with mechanically-controlled backhoe) 268
6.8.1.2 CONTROL (version with servo-assisted backhoe) 268
6.8.2 INSTALLING AND CONNECTING THE EQUIPMENT 269
6.8.3 MAINTENANCE 269

6.9 CONFIGURATION FOR THE USE OF THE CLAMSHELL BUCKET 270
6.9.1 DESCRIPTION AND CONTROL 270
6.9.1.1 CONTROL (version with mechanically-controlled backhoe) 270
6.9.1.2 CONTROL (version with servo-assisted backhoe) 271
6.9.2 INSTALLING THE CLAMSHELL BUCKET 272
6.9.3 USING THE CLAMSHELL BUCKET 273
6.9.4 MAINTENANCE 273

6.10 CONFIGURATION FOR THE USE OF THE HAND HYDRAULIC HAMMER 274
6.10.1 DESCRIPTION AND CONTROL 274
6.10.2 INSTALLING AND REMOVING THE HAND HAMMER 275
6.10.2.1 CONNECTING THE HAND HAMMER 275
6.10.2.2 REMOVING THE CONNECTIONS 276
6.10.3 USING THE HAMMER 276
6.10.4 MAINTENANCE 276

6.11 LOAD STABILIZER SYSTEM (LSS) (Optional) 277
6.11.1 LOAD STABILIZER SYSTEM (LSS) ACCUMULATOR 277

6.12 REAR EQUIPMENT MECHANICAL QUICK COUPLING DEVICE 278
6.12.1 EQUIPMENT COUPLING AND RELEASE PROCEDURE 279
6.12.2 MAINTENANCE 280

SAFETY AND ACCIDENT PREVENTION

2.1 SAFETY, NOISE AND VIBRATION PLATES

2.1.1 POSITION OF THE SAFETY PLATES

- The safety plates must always be legible and in good conditions; for this reason, if they are dirty with dust, oil or grease, it is necessary to clean them with a solution made of water and detergent. Do not use fuel, petrol or solvents.
- If the plates are damaged, ask for new ones to Komatsu or to your Komatsu Dealer.
- In case of replacement of a component provided with a safety plate, make sure that this plate is applied also on the new piece.
- The machine can be provided with other plates in addition to those indicated below; in any case, keep also to the instructions given in the additional plates.

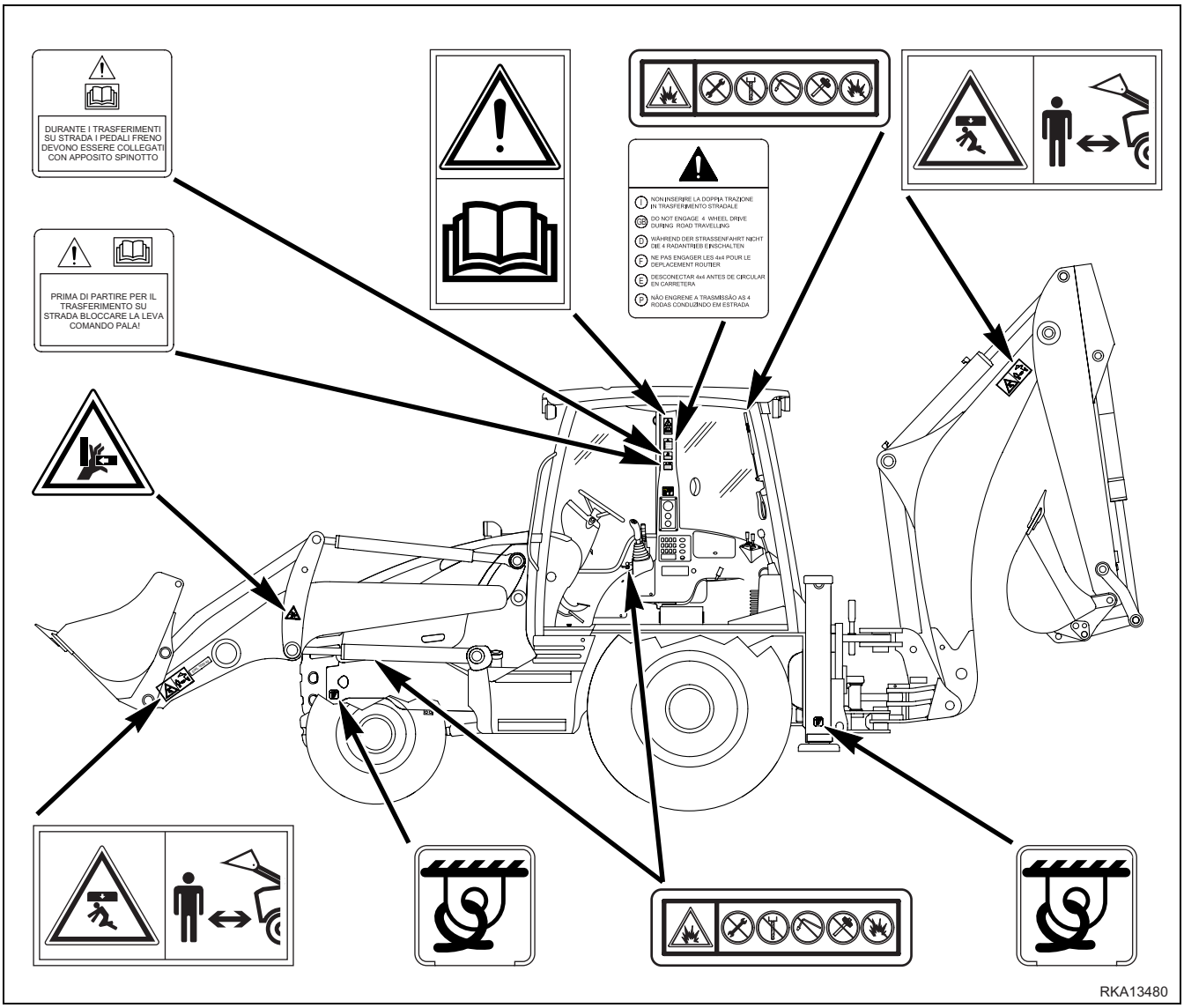

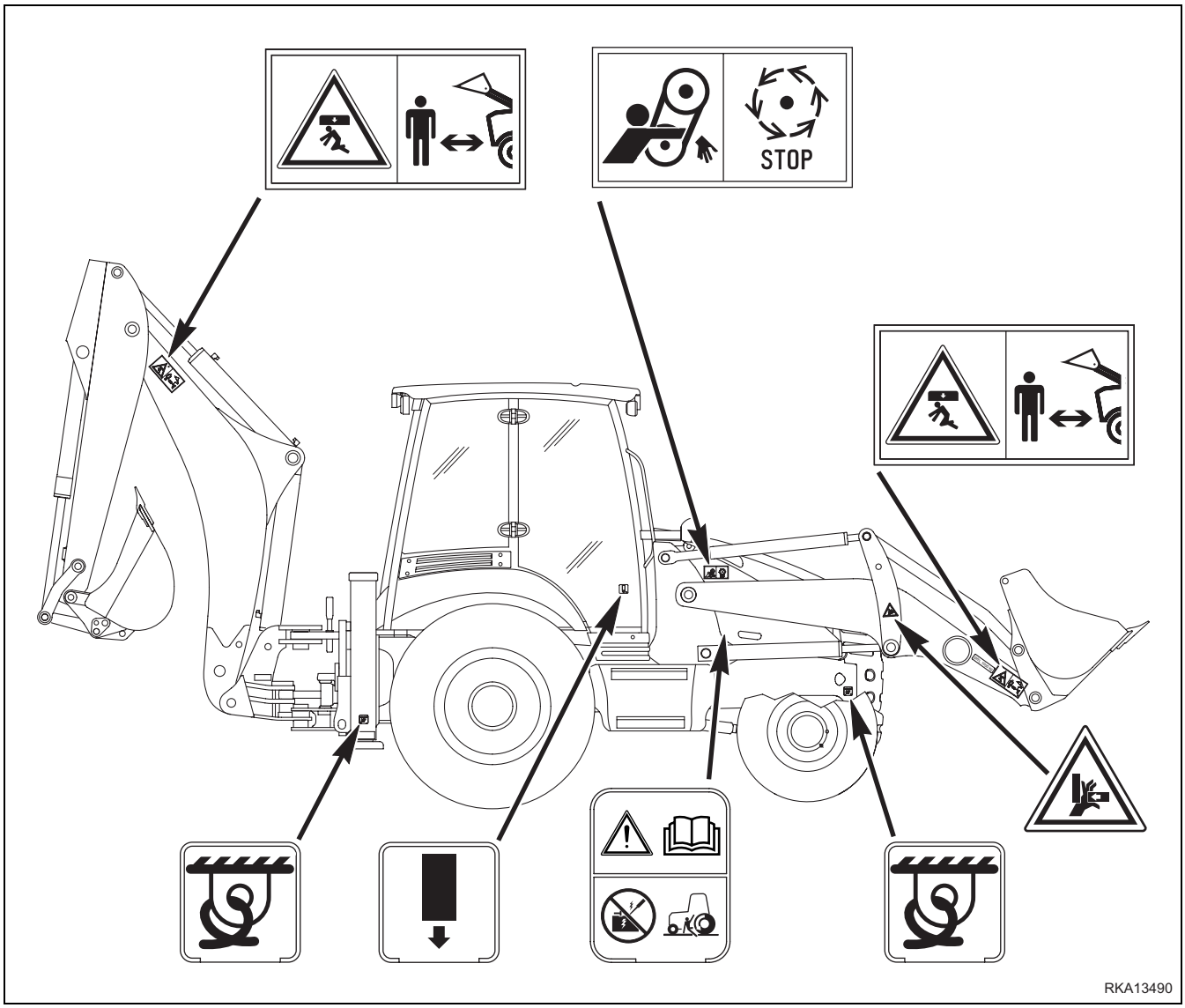
STOP
RKA13490

KOMATSU
42N-93-11310
42N-93-11320
RKAB4740

2.1.2 PICTOGRAMS AND RELEVANT MEANINGS

The warning and danger signs applied onto the machine are accompanied by or illustrated through pictograms. The personnel in charge with handling and maintenance operations must know the symbols contained in the pictograms perfectly; the symbols and the relevant meanings are explained in the following list.

WORK AREA

- Do not approach or stand in the equipment operating radius when the boom and the bucket are lifted.

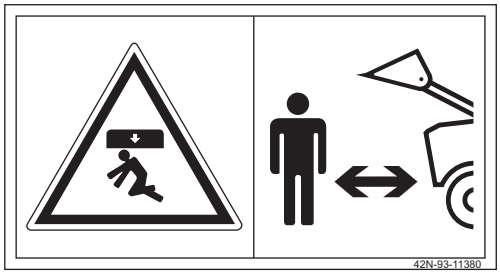

RKA14690

DO NOT OPEN THE ENGINE HOOD

- Do not open or remove the hood when the engine is running.

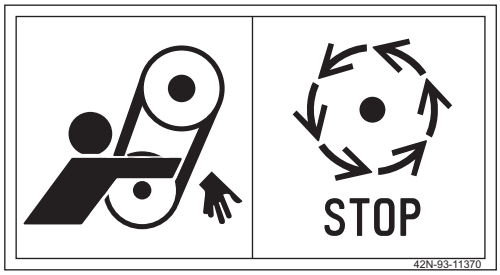

RKA14700

HYDRAULIC OIL TOPPING UP

- (Only for machines in which synthetic biodegradable oil type HEES is used)

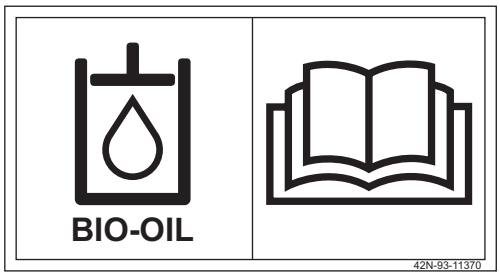

RKA14710

OVERTURNING THE FORKS

- When overturning the forks for use or storage, be very careful, since hands and feet may be seriously injured or even cut off.

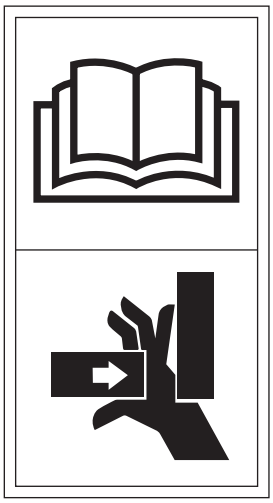

RKA14720

CONSULT THE MANUAL

- Carefully read the contents of the manual before using the machine or performing maintenance operations.

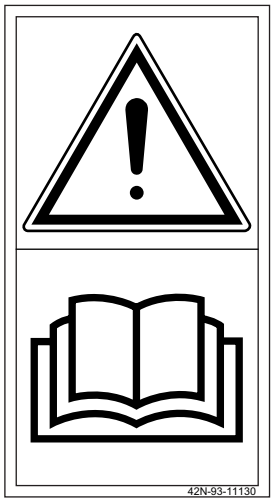

RKA14730

RISK OF CRUSHING

- Do not touch or stand near moving parts, since your hands may be crushed or cut off.

RKA14740

PRECAUTIONS TO BE TAKEN WHEN HANDLING THE GAS SHOCK ABSORBERS

- Do not remove the shock absorber.
- Do not bring the shock absorber near sparks or naked flames.
- Do not make holes in the shock absorber, do not weld or use oxyhydrogen flames.
- Do not hit the shock absorber.

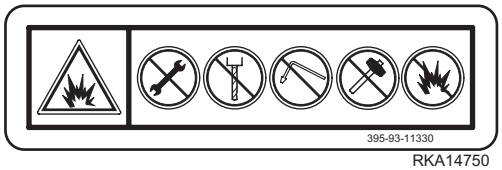

RKA14750

DO NOT START THE ENGINE WITH INCORRECT PROCEDURES

- Start the engine and operate the machine only while seated with fastened safety belt.
- Do not attempt to start the engine by causing a short-circuit with the terminals of the starter.
  This may cause serious injury and even death.

RKA14760

LOCK THE LOADER CONTROL

- When it is necessary to travel on roads, lock the loader control lever before starting.

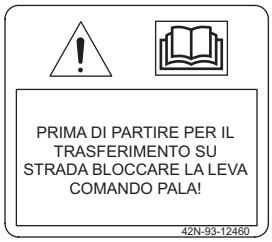

RKA14770

CONNECT THE BRAKE PEDALS

- When the machine travels on roads, the brake pedals must be connected with the apposite pin.

RKA14780

DO NOT ENGAGE THE 4WD

- When the machine travels on roads, do not engage the 4WD.

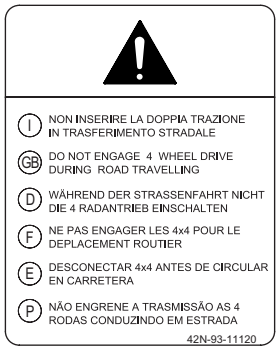

RKA14790

HYDRAULIC OIL TOPPING UP

RKA14800

HYDRAULIC OIL LEVEL

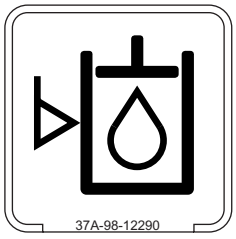

RKA14810

HYDRAULIC OIL FILTER

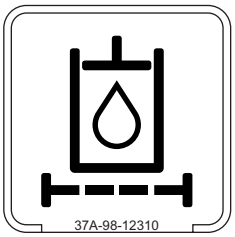

RKA14820

REFUELLING

RKA14830

FUEL FILTER

RKA14840

ENGINE LUBRICATING OIL FILTER

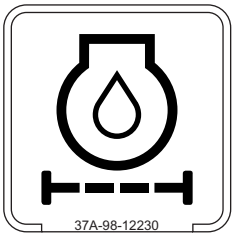

RKA14850

ENGINE AIR SUCTION FILTER

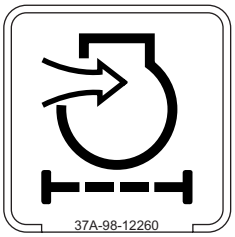

RKA14860

ENGINE COOLANT

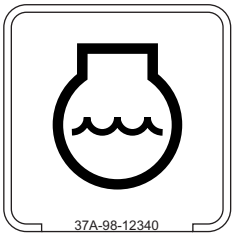

RKA14870

COOLANT PRESSURE

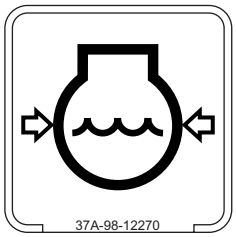

RKA14880

TRANSMISSION OIL LEVEL

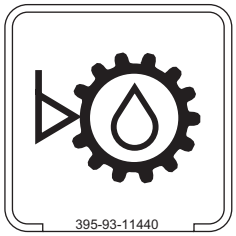

RKA14590

TRANSMISSION OIL FILTER

RKA14580

POWER OUTLET

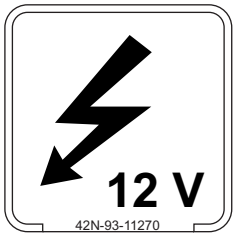

RKA14890

BOOM LOCK

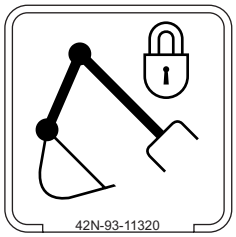

RKA14900

SWING LOCK

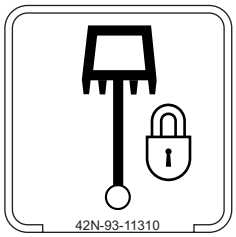

RKA14910

ANCHORAGE POINT

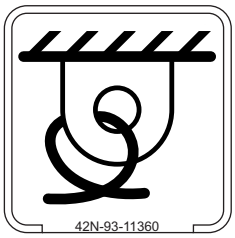

RKA14920

EMERGENCY EXIT

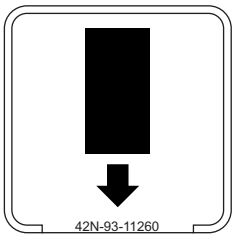

RKA14930

BRAKE OIL

RKA14940

DO NOT LIFT MORE THAN 1000 kg

RKA14950

2.1.3 POSITION OF THE NOISE PLATES ON MACHINES WITH CAB

- The noise plates must always be legible and in good conditions; for this reason, if they are dirty with dust, oil or grease, it is necessary to clean them with a solution made of water and detergent.
  Do not use fuel, petrol or solvents.
- If the plates are damaged, ask for new ones to Komatsu or to your Komatsu Dealer.
- In case of replacement of a component provided with a noise plate, make sure that this plate is applied also on the new piece.

NOISE OUTSIDE THE CAB

- This value indicates the noise level outside the machine and refers to the noise perceived by persons in the vicinity of the work area.

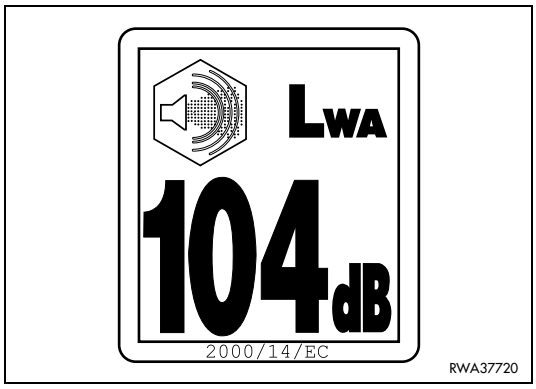

NOISE INSIDE THE CAB

- This value indicates the maximum noise level perceived by the operator's ears inside the cab when this is completely closed.

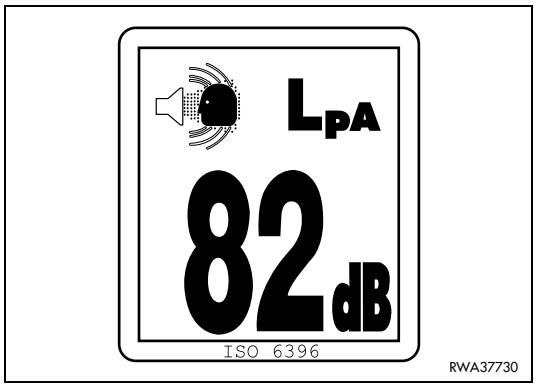

2.1.4 VIBRATIONS TO WHICH THE OPERATOR IS SUBJECTED

- According to the results of the tests carried out to determine the vibrations transmitted to the operator by the machine, the upper limbs are subjected to vibrations lower than 2.5 m/sq.sec., while the seated part of the body is subjected to vibrations lower than 0.5 m/sq.sec.

2.2 GENERAL PRECAUTIONS

2.2.1 GENERAL SAFETY RULES

- Only trained and authorized personnel can use the machine and perform maintenance operations.
- Follow all the safety rules, precautions and instructions when using the machine or performing maintenance operations.
- When working with other operators or when the work site is often occupied by other operators, make sure that everyone knows and understands all the signs described above and, in any case, that everyone works in such a way as to be able to see the machine and to be visible to the operator.

2.2.2 SAFETY DEVICES AND GUARDS

- Make sure that all the guards and covers are in the correct position. Have guards and covers changed or repaired if damaged. Do not use the machine without guards, nor remove the guards when the engine is running.
- Always use the proper safety devices to lock the machine when parking and remember to fasten the safety belt.
- For the safety devices, see "3.1 SAFETY LOCKS".
- For the safety belt, see "3.5.6 SAFETY BELT".
- Do not remove the safety devices and always keep them in good operating conditions.
- Any improper use of the safety devices may result in serious injury or even death.

2.2.3 CLOTHING AND PERSONAL PROTECTION ITEMS

- Do not wear large or loose clothes, rings and watches and do not approach the machine with loose long hair, since they can get entagled in the moving parts of the machine and cause serious personal injury or damage. Also avoid wearing clothes that are dirty with oil or fuel, since they catch fire very easily.
- Wear a hard hat, goggles, safety shoes, mask, gloves and headphones when operating the machine or performing maintenance operations.
- Always wear safety goggles, a hard hat and heavy gloves if your job involves scattering metal chips or minute materials; these precautions are particularly useful when driving the equipment connection pins with a hammer and when blowing compressed air into the air filter and the radiator to clean them. During these operations, make also sure that no one is standing or working near the machine without the necessary protection.
- When working for 8 hours with a noise level exceeding 90 dBA, it is necessary to use headphones or ear plugs and be particularly careful, especially towards the end of the work shift.

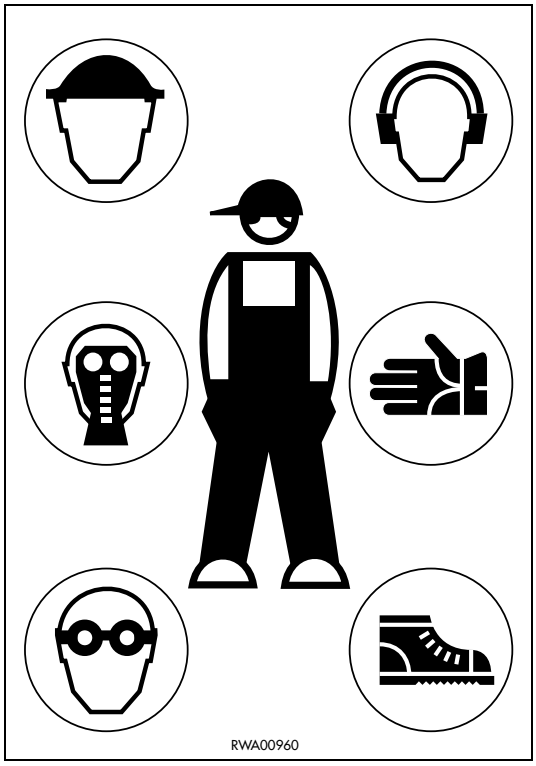

2.2.4 UNAUTHORIZED MODIFICATIONS

- Any modification made to the machine without the authorization of Komatsu can involve hazards.
- Before making a modification, consult your Komatsu Dealer. Komatsu declines any responsibility for injury or damage caused by unauthorized modifications.

2.2.5 LEAVING THE OPERATOR'S SEAT

- When leaving the operator's seat, even if for a short time, make sure that the machine is in a safe position. (See "2.4.12 PARKING THE MACHINE").
- Before leaving the operator's seat, carry out the following operations in the sequence indicated below:

1 - Lower the equipment to the ground.

2 - Press the servo control locking button (LED on).

NOTE

- On machines equipped with backhoe servo controls, all movements are inhibited when the button is in locking position (LED on).

3 - Engage the safety lock of the mechanical controls.

4 - Apply the parking brake.

5 - Shift the reversing gear lever to the neutral position.

6 - Stop the engine.

If you have to go so far away that you will not be able to see the machine, extract the ignition key.

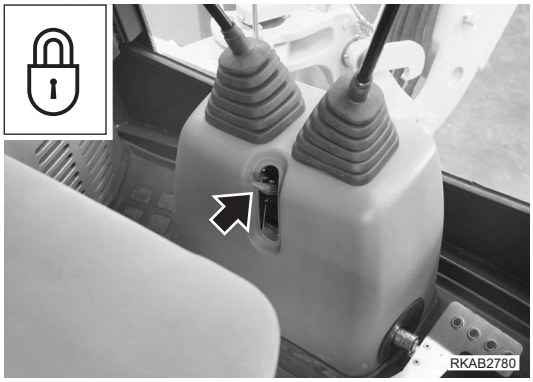

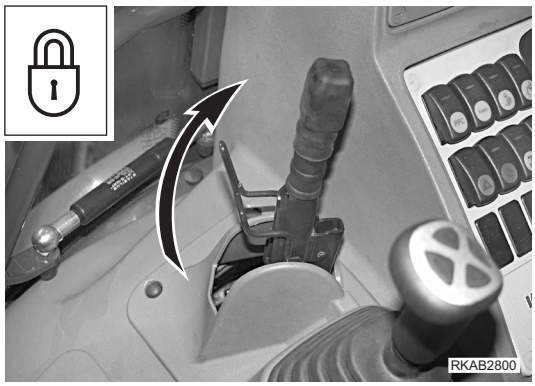

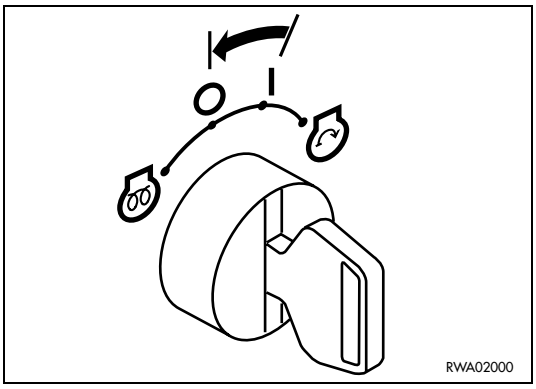

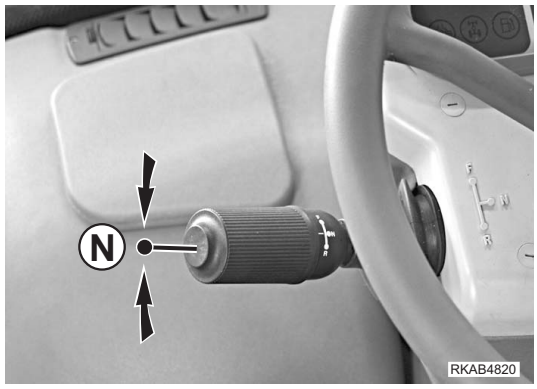

2.2.6 GETTING ON AND OFF THE MACHINE

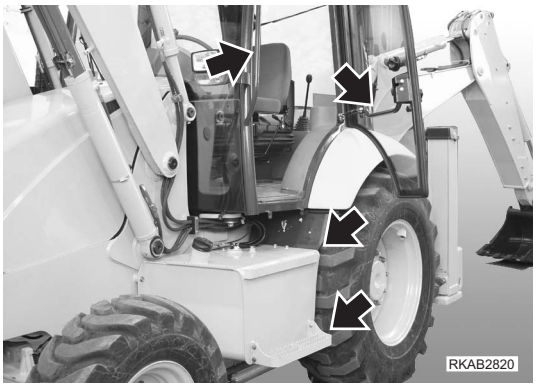

- Do not jump on or off the machine, both when it is at rest and when it is moving.
- Always use the handles and the safety ladders to get on or off the machine, and be very careful.
- Do not hold or rest on the steering wheel or the gearshift lever.
- Both when getting on and when getting off the machine, always maintain three points of contact (holding or resting points), in order to avoid losing your balance and falling down.
- Tighten the handle and ladder connection screws if they are loose and clean the handles and steps if they are dirty with oil or grease. Carefully clean the cab floor if it is dirty with oil, grease, mud or rubble.

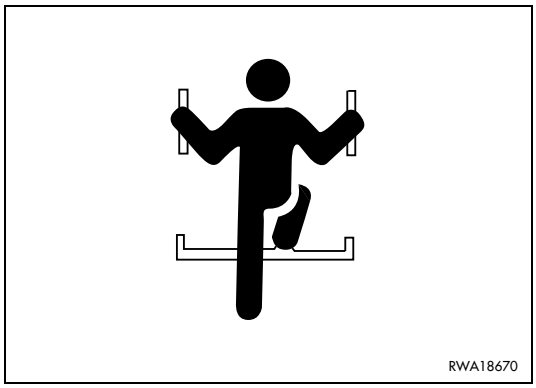

2.2.7 CHECKING THE REAR-VIEW MIRRORS

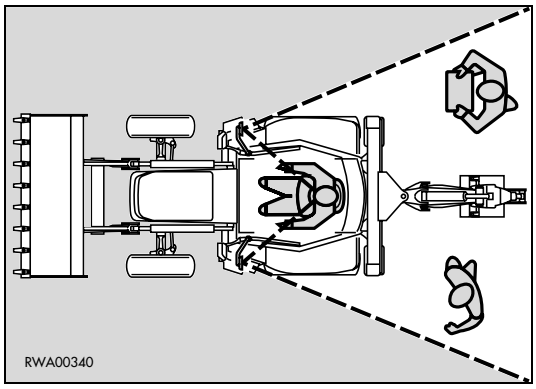

- Make sure that the rear-view mirrors are clean and correctly positioned; they must allow the operator to see the rear of the machine with no need to move the chest with respect to the normal work position.
- If the rear-view mirrors should move or break during work, stop the machine immediately and fasten or change them.
- Working without checking the area behind the machine is dangerous, since the machine may hit persons who are incautiously standing in the work area, fixed obstacles or manoeuvring vehicles.

2.2.8 PREVENTING FIRES DUE TO FUEL AND OIL

Fuel, oil and some types of antifreeze can be easily ignited if they get in contact with a flame. Fuel is flammable and therefore very dangerous.

- Keep any naked flame away from flammable fluids.
- Stop the engine and do not smoke when refuelling.
- Top up with fuel and oil only after stopping the engine and in well ventilated areas.
- Top up with fuel and oil in a well delimited area and do not allow unauthorized persons to approach.
- When refuelling, hold the fuel gun firmly and keep it constantly in contact with the filler until you have finished, in order to avoid sparks due to static electricity.
- After topping up, tighten the fuel and oil safety caps securely.
- Do not fill the tank completely, in order to leave room for the fuel to expand.
- If some fuel is inadvertently spilled, wipe it up immediately.

2.2.9 PREVENTING BURNS

- If the engine coolant, the engine oil and the hydraulic oil are hot, use heavy cloths and wear gloves, heavy clothing and safety goggles before carrying out any check or touching the hot parts.
- Before checking the coolant level, stop the engine and let the fluid cool down.
  If a check is necessary due to the overheating of the engine, loosen the radiator cap slowly, to release any residual pressure before removing it. The hot fluid that spurts out may cause serious burns.
- Before checking the engine oil and hydraulic circuit oil level, stop the engine and let the oil cool down. The hot oil that may be sprayed out of the tank may cause serious burns.

2.2.10 PREVENTING DAMAGE DUE TO ASBESTOS POWDER

- Asbestos powder can be hazardous to your health if it is inhaled.
- If you handle materials containing asbestos fibers, keep to the instructions given below:

1 - **Do not use compressed air, but only exhaust fans** to clean the machine, and make sure that the room in which you are working is properly ventilated.

2 - Use low-pressure water to abate dust when cleaning.

3 - If there is danger that there may be asbestos powder in the air, operate the machine with the wind to your back whenever possible.

4 - Even if the cab provides suitable protection, use an approved and homologated respirator.

5 - The powder gathered during the cleaning operations must be wet and put in a sealed and marked container, so that it can be safely disposed of according to the regulations in force.

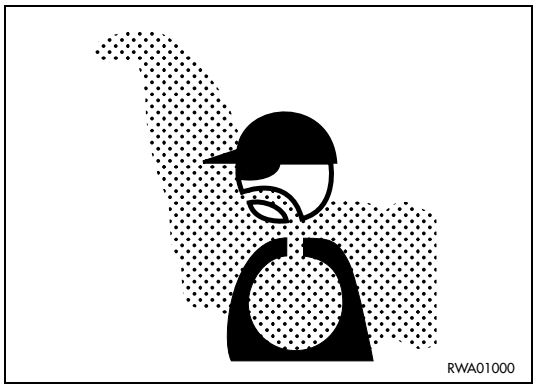

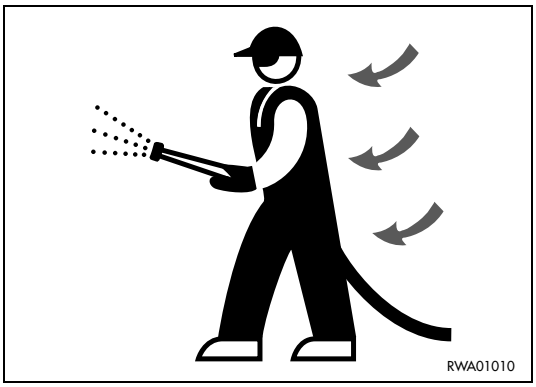

2.2.11 PREVENTING DAMAGE CAUSED BY THE WORK EQUIPMENT

- Do not stand within the operating radius of the work equipment, even when the operator is on board the machine and the engine is running.
- Do not stand or work under the arms or the articulations when the arms are lifted, if you are not sure that the safety locks have been duly engaged.
- Do not carry out any operation requiring the arms to be lifted, if you are not sure that the locks are correctly positioned and connected to the arms.

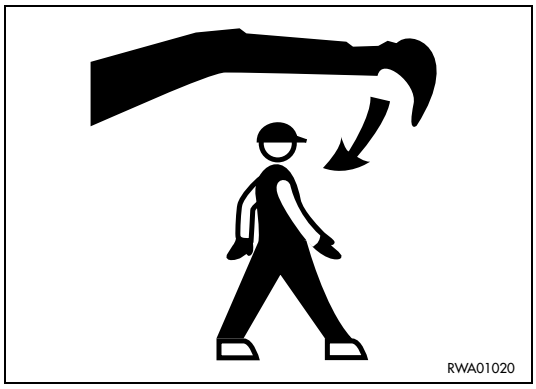

2.2.12 FIRE EXTINGUISHERS AND FIRST AID KIT

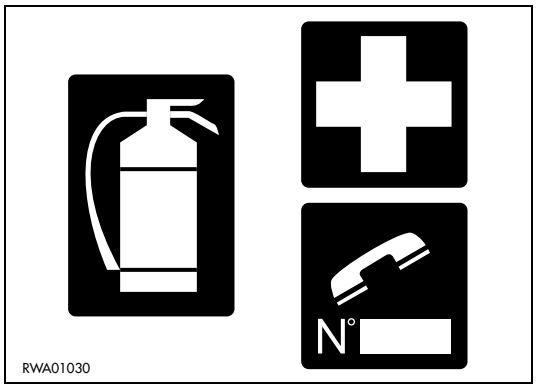

- Make sure that fire extinguishers have been provided and check their position.
- Periodically make sure that the fire extinguishers are loaded and that you know how to use them.
- Find out where the first aid kit has been located.
- Periodically make sure that the first aid kit contains the necessary disinfectants, bandages, medicines, etc.
- It is necessary to know what to do in case of fire.
- Make sure that you have the phone numbers of the persons or structures you may need to contact in case of an emergency at hand (both at the worksite and where maintenance operations are performed).

2.2.13 PRECAUTIONS CONCERNING THE CAB STRUCTURE

- If the cab is inadvertently hit or the machine overturns during work, the cab may be damaged with consequent reduction of its stiffness and of the safety that must be guaranteed to the operator (ROPS/FOPS).
  Contact Komatsu or your Komatsu Dealer to have the cab structure and resistance checked in case of impact or damage.

2.2.14 PRECAUTIONS CONCERNING THE EQUIPMENT

- When installing and using optional equipment, carefully read the relevant instruction manual and keep to the indications given therein.
- Do not use optional or special equipment without the authorization of Komatsu or a Komatsu Dealer.
  Installing and using any equipment not authorized by Komatsu may create safety problems and may have negative consequences on both the efficiency and life of the machine.
- Komatsu cannot be held liable for any injury, accident, product failure resulting from the installation and use of unauthorized equipment.

2.3 PRECAUTIONS TO BE TAKEN BEFORE STARTING THE ENGINE

2.3.1 SAFETY ON THE WORK SITE

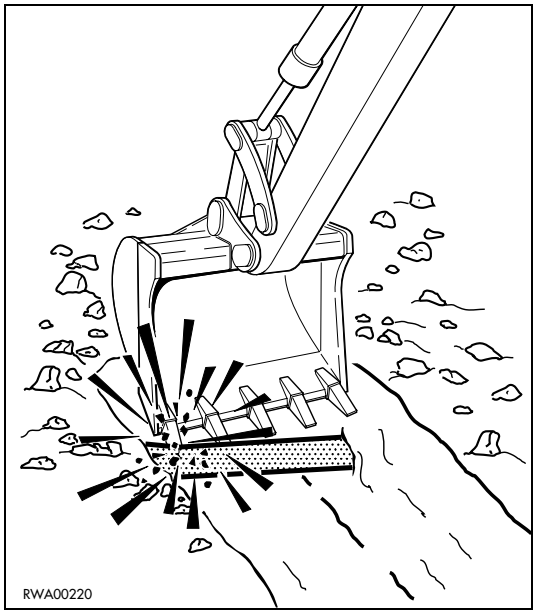

- Before starting the engine, thoroughly check the area for any unusual condition of the ground due to which work may be dangerous.
- Check the conditions of the ground at the work site and before starting the engine define the work plan and the best and safest operating procedure.
- Level the ground surface as much as possible before carrying out any operation.
- In case of work on the road, protect pedestrians and cars by designating a person for work site traffic duty and install fences around the work site.
- If water lines, gas lines, and telephone or high-voltage electrical lines are located under the work site, contact the relevant utility company in order to find out their exact position or to disconnect them until the end of the operations. Be careful not to sever or damage any of these lines.
- Check the water depth and the force and flow direction of the current before operating in water or on river banks.

2.3.2 FIRE PREVENTION

- Completely remove all wood chips, rubbish, paper and other flammable materials that may have accumulated inside the engine compartment, since they can cause fires.
- Check the fuel and hydraulic system pipes for leaks and if necessary repair them. Wipe up any excess oil, fuel or other flammable fluids.
- Make sure that fire extinguishers are available in the work area.

2.3.3 PRECAUTIONS TO BE TAKEN FOR THE OPERATOR'S CAB

- Do not leave objects or tools lying around in the operator's cab. They may prevent the use of the brakes and cause serious accidents.
- Keep the cab floor and the controls (steering wheel and levers) clean, by removing any trace of oil and grease and, as far as the floor is concerned, remove any excess dirt (earth, stones, etc.).
- Check the safety belt and change it if it is broken or damaged. Replace any component only with homologated parts available at Komatsu or its Dealers.
- Make always sure that the lock of the right door, which is considered the emergency door, is open.

2.3.4 ROOM VENTILATION

- Before starting the machine in confined or poorly ventilated places, provide for proper ventilation or connect the engine exhaust pipe to a suction duct. The engine exhaust gases can be deadly.

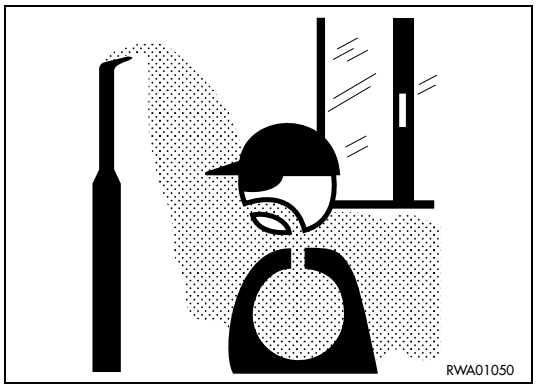

2.3.5 CLEANING WINDOWS, MIRRORS AND LIGHTS - CHECKING THE WINDSHIELD WIPER BLADES AND THE BULBS

- Remove any trace of dirt from the cab windows and the lights and clean the rear-view mirrors; this will ensure good visibility on the work area.
- Adjust the rear-view mirrors if they have moved, so that the operator seated in the driving position can clearly see the area behind the machine.
  If any window, light or mirror is damaged, change it.
- Make sure that the road lights, stop lights, direction indicators and work lights are properly working. If necessary, change the faulty bulbs with new ones, making sure that their power is correct.
- Check the conditions of the windshield wiper blades; the scraping wire must be smooth, with no indentations and attached to the rubber back of the blade.
  In case of doubt on the efficiency of the scraping wire, change the blades.

2.4 PRECAUTIONS TO BE TAKEN DURING WORK

2.4.1 WHEN STARTING THE ENGINE

- Before getting on the machine, walk around it and check for people and objects that might be in the way.
- Do not start the engine if warning plates have been attached to the steering wheel or the control levers.
- When starting the engine, sound the horn as an alert signal.
- Start the engine and operate the machine only while seated with fastened safety belt.
- Do not allow anyone to get on the machine or enter the cab.

2.4.2 RULES FOR TRAVELLING ON ROADS

- The machine is equipped with multifunction safety locks that must be used both for maintenance operations and road travel.
- When it is necessary to travel on roads, proceed as follows:

1 - Position the safety lock of the front loader so that the bucket is lifted from the ground, thus ensuring better visibility and the stability of the machine.
2 - Install the front bucket swing lock and secure it with the safety pins.
3 - Install the teeth protection casing on the front bucket.
4 - Lift the backhoe boom until engaging the safety coupling.
The arm and bucket must in any case be completely folded.
5 - The backhoe must be rotated and resting against the machine structure.
This is the only position homologated for road travel in Italy.
6 - For travelling with folded backhoe, the unit must be moved on its guide in such a way as to be positioned towards the road centre, against the lock and with the bucket facing the road side.
7 - Fasten the backhoe with the swing lock pin.
8 - Connect the safety chains to prevent the accidental lowering of the stabilizers.
9 - Engage the safety locks of the loader and backhoe control levers.
For further information on their position, see "3.1 SAFETY LOCKS".

- When it is necessary to travel on roads, the four-wheel drive must be disengaged and the brake pedals must be connected with the appropriate pin.
- When travelling on roads, keep to the rule of the road and operate the flashing light positioned on top of the cab.
- When travelling on roads, keep the work lights off.

IMPORTANT
- **In any case, keep to the traffic rules in force.**

2.4.3 HAND SIGNALS

WARNING

- **When it is necessary to position loads, make excavations or move the machine with a reduced field of vision, the operator must be helped by another person (signalman) who should stand on the ground and give signals to indicate the manoeuvres to be carried out according to the specific instructions provided for by the relevant regulations.**
- **No movement or operation may be carried out if the signals have not been clearly understood by the operator and the signalman.**
- **When additional instructions different from those defined by the hand signalling system are necessary, these must be agreed upon by the two operators before starting the job.**
- **Only one person must be entrusted with giving signals.**
- **The operator must make sure that the signalman is always within his field of vision and follow all his signals.**

The use of hand signals serves to direct the lifting, handling and positioning of the loads lifted by the work equipment. Hand signals can also be used during digging operations or when the machine travels, if the field of vision of the operator is reduced. The direction of movement of the hands and arms in relation to the machine must define the signal, independently of the position of the signalman. Hand signals must be given following the indications below.

1 - LIFT THE LOAD VERTICALLY
One forearm in vertical position and forefinger pointing upwards: turn the hand making small circles.

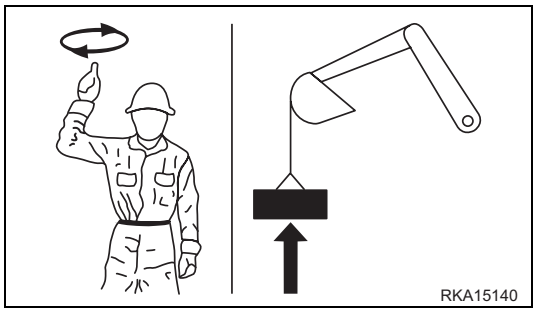

2 - LOWER THE LOAD VERTICALLY
One arm down and forefinger pointing downwards: turn the hand making small circles.

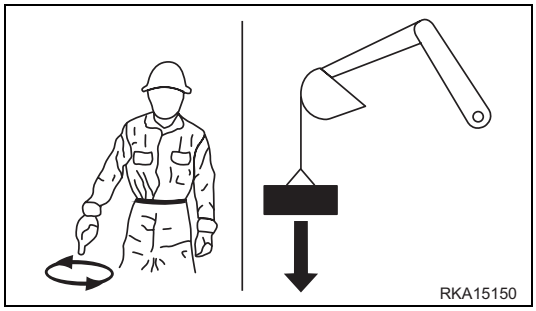

3 - MOVE THE LOAD AWAY IN HORIZONTAL DIRECTION
One arm outstretched and hand in vertical position with the palm facing towards the load to be moved away: move the hand in the direction of the movement to be carried out.

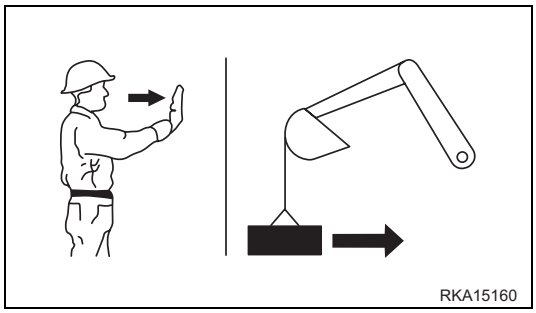

4 - BRING THE LOAD NEARER IN HORIZONTAL DIRECTION
One arm outstretched and hand in vertical position with the palm facing towards yourself: move the hand in the direction of the movement to be carried out.

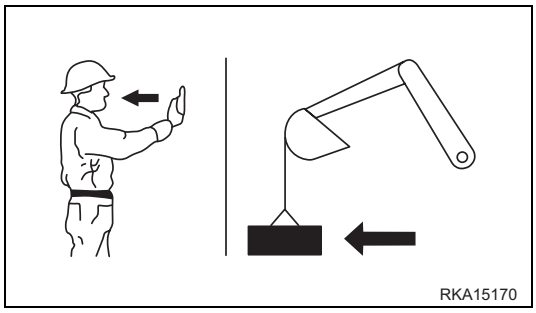

5 - LIFT THE BOOM
One arm laterally outstretched in horizontal position and clenched fingers: point the thumb upwards.

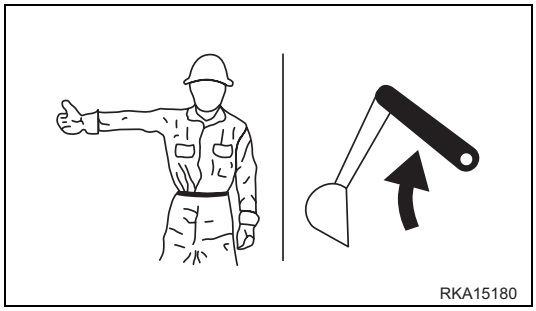

6 - LOWER THE BOOM
One arm laterally outstretched in horizontal position and clenched fingers: point the thumb downwards.

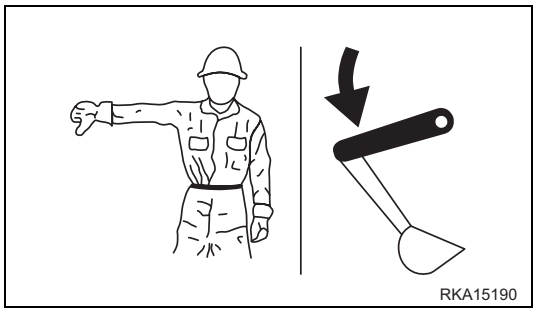

7 - SWING THE BOOM
One arm laterally outstretched in horizontal position: point the forefinger towards the desired swing direction.

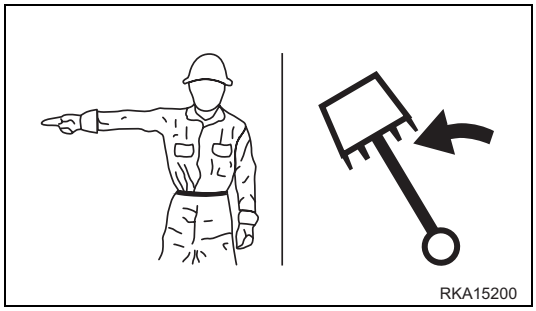

8 - SWING THE BOOM
One arm laterally outstretched in horizontal position: point the forefinger towards the desired swing direction.

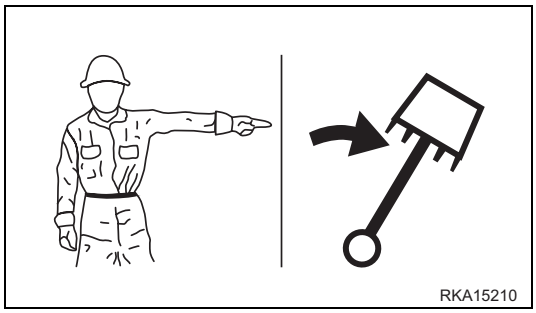

9 - FOLD THE ARM
With both fists clenched, point the thumbs inwards.

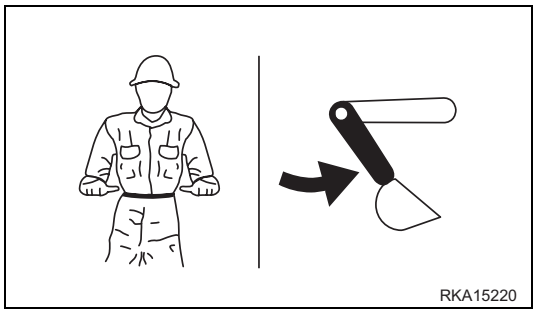

10 - EXTEND THE ARM
With both fists clenched, point the thumbs outwards.

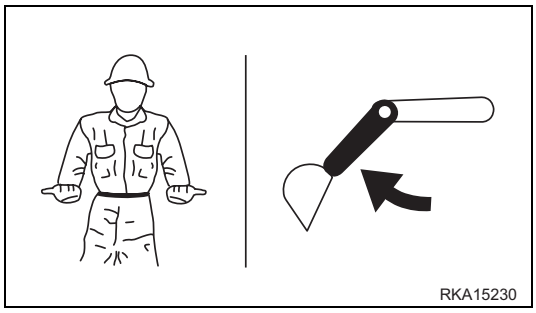

11 - FOLD THE BUCKET
Keep one hand still and closed. Rotate the other hand vertically with the forefinger pointing towards the closed hand.

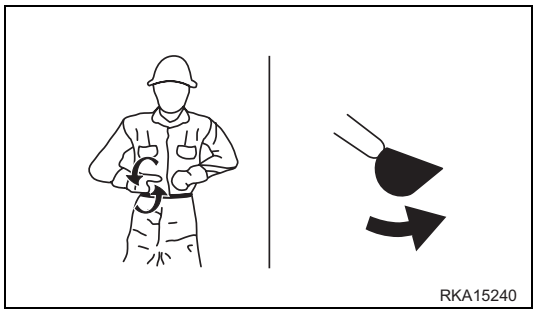

12 - OPEN THE BUCKET
Keep one hand still and open. Rotate the other hand vertically with the forefinger pointing towards the open hand.

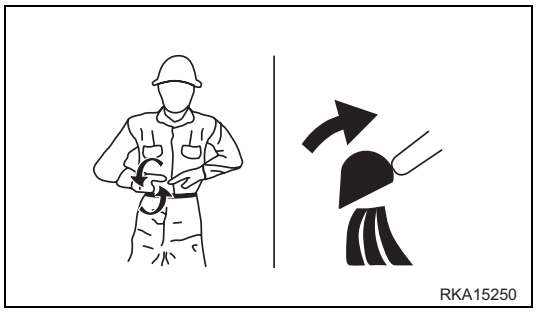

13 - TRAVEL WHILE STEERING
Lift the forearm corresponding to the inner steering side with clenched fist. Rotate the other fist vertically indicating the wheel's turning direction.

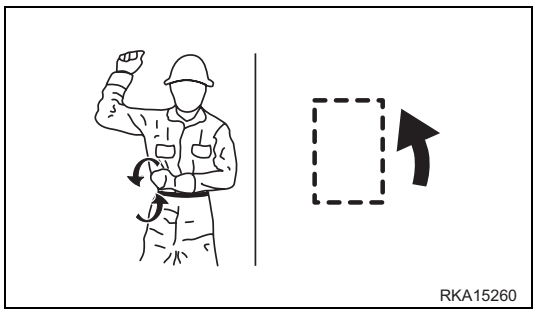

14 - TRAVEL WHILE STEERING
Lift the forearm corresponding to the inner steering side with clenched fist. Rotate the other fist vertically indicating the wheel's turning direction.

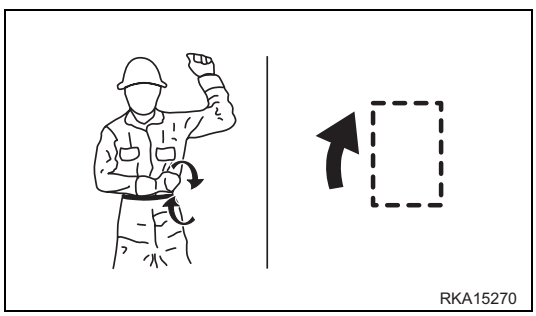

15 - TRAVEL STRAIGHT AHEAD
Rotate the fists vertically indicating the turning direction of the wheels.

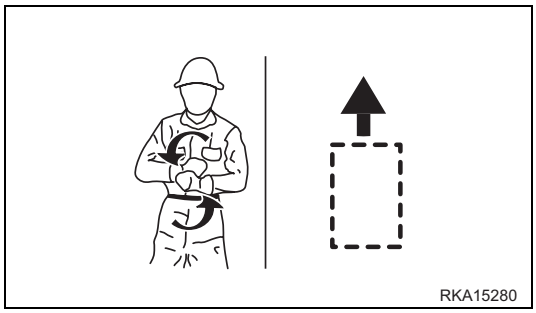

16 - TRAVEL STRAIGHT AHEAD
Rotate the fists vertically indicating the turning direction of the wheels.

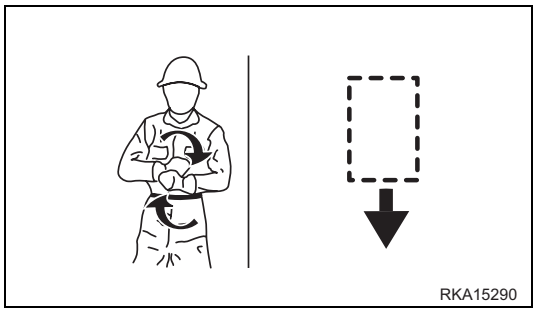

17 - DISTANCE TO BE COVERED
Hands raised and palms facing inwards: move the hands laterally indicating the distance to be covered.

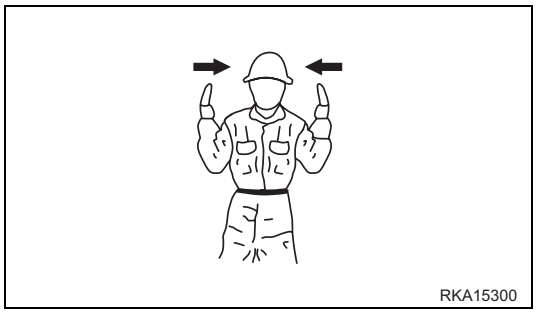

18 - CARRY OUT THE MOVEMENTS SLOWLY
One hand still in front of the hand that indicates the movement to be carried out. (The figure represents the “lift slowly” signal).

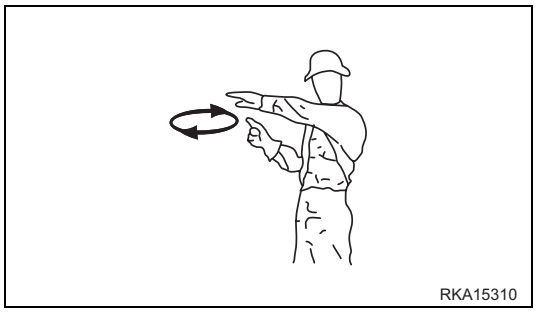

19 - STOP
One arm outstretched laterally, hand open and palm facing downwards: move the arm forwards and backwards.

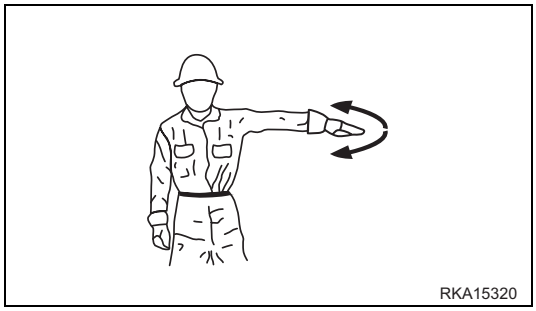

20 - EMERGENCY STOP
Both arms outstretched laterally in horizontal position, hands open and palms facing downwards: move both arms forwards and backwards.

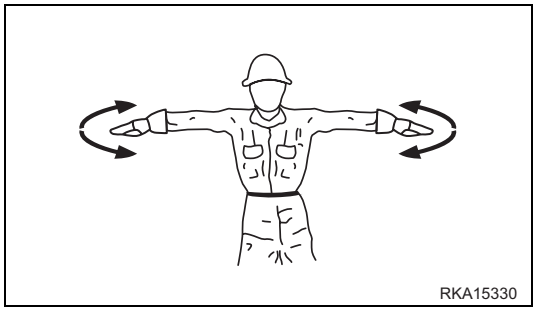

21 - STOP THE ENGINE
Pass thumb or forefinger across the throat.

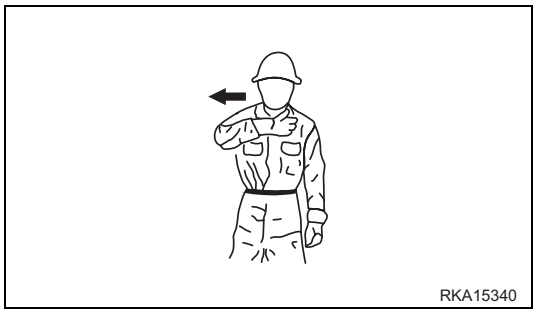

22 - RETRACT THE TELESCOPIC ARM
One forearm lifted forwards and clenched fingers: point the thumb in the direction of the movement to be carried out.

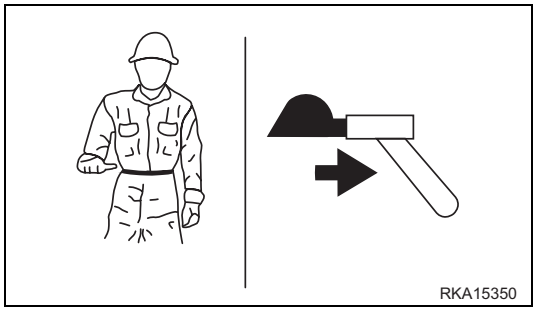

23 - EXTEND THE TELESCOPIC ARM
One forearm lifted forwards and clenched fingers: point the thumb in the direction of the movement to be carried out.

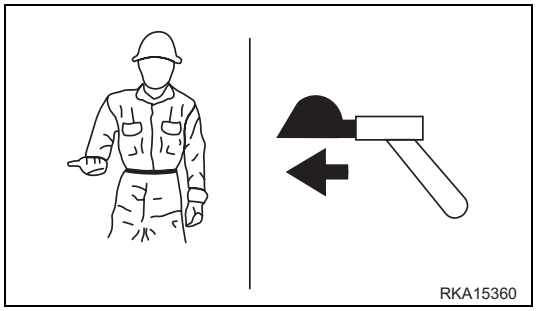

2.4.4 CHECKS FOR TRAVELLING IN REVERSE

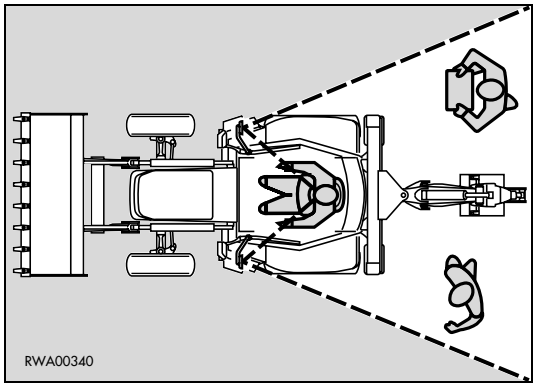

- When operating in areas that may be hazardous or where visibility is poor, designate a person to direct the movements of the machine and traffic on the work site.
- Before moving the machine, sound the horn to warn the persons standing or working in the area.
- There are blind spots behind the machine, which cannot be seen through the rear-view mirrors and where someone may be standing.
  Therefore, it is necessary to make sure that there is no one behind the machine before travelling in reverse.
  On request the machine can be equipped with an acoustic alarm (1) for travelling in reverse; before starting to travel in reverse, make sure that the acoustic alarm is functioning perfectly.
  See "3.3.6 pos. 1 - REVERSING GEAR LEVER".

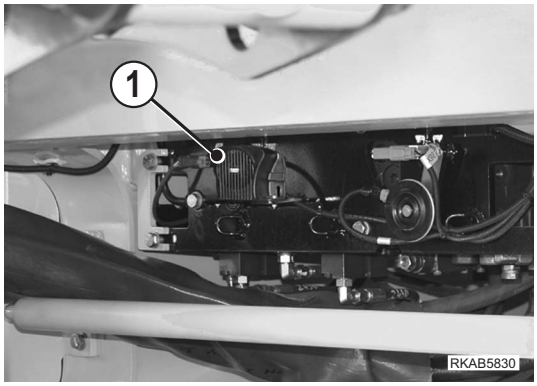

2.4.5 MOVING THE MACHINE

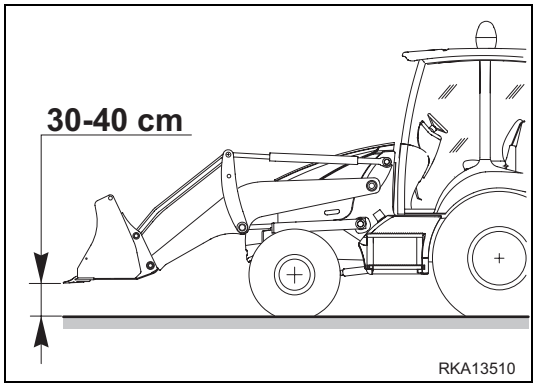

- When moving the machine, position the front bucket at about 30–40 cm from the ground; this position makes it possible to evaluate the space required for the movements more precisely and at the same time ensures the stability of the machine.
- If the front bucket control lever is to be used during travel, avoid moving it abruptly; sudden manoeuvres change the attitude of the machine and make driving difficult.
- When travelling on rough ground, keep the speed low and avoid sudden movements of the bucket arm.
- If the machine has to overrun an obstacle, keep the front equipment as close to the ground as possible and travel at low speed, in order not to overload the axles and tyres.

2.4.6 WORKING ON SLOPES

- Operations on slopes and on river or lake banks with damp ground may result in the tipping over or slipping of the machine.
- Do not work with the bucket downward with respect to the tractor.
- On hills, banks or slopes, keep the bucket very close to the ground (20–30 cm from the ground) and in case of emergency quickly lower it to the ground to help the machine stop.
  Do not change direction and avoid travelling obliquely when working on slopes. It is advisable to go down or up to a flat place to perform these operations.
- Do not travel on wet grass or thick layers of leaves: if the machine moves obliquely in these conditions, it may slip.
- Before working on a slope, always check the efficiency of the brakes, engage a low gear and the four-wheel drive.
- Do not travel down slopes in neutral; you may lose control of the machine and cause serious injuries and even death.
- Avoid disengaging the gearshift with the push button positioned on the loader control lever.
- When travelling down a slope, engage a low gear, so that the braking action of the engine is used to hold the machine, with no need to overload the brakes. Avoid disengaging the gearshift with the push button positioned on the gearshift control lever.
- When the fuel level indicator reaches the red reserve area during work on a slope, immediately provide for refuelling; due to the inclination of the machine, the engine may suck in air and suddenly stop, which represents a grave risk for the safety of the operator and of the persons standing before the machine.
- If the engine should stop all of a sudden, immediately lower the bucket to the ground, brake and apply the parking brake.

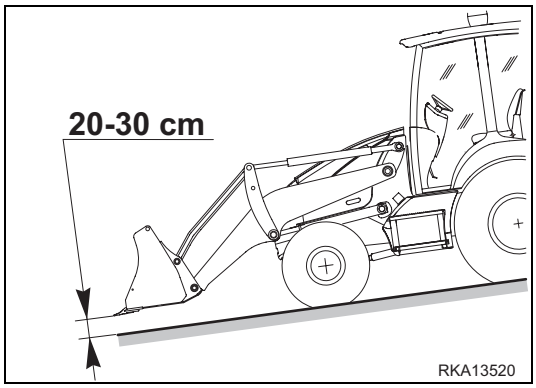

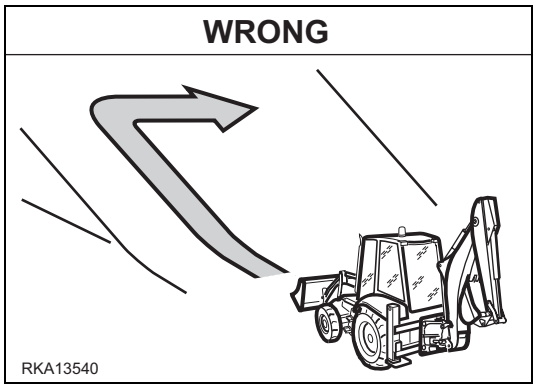

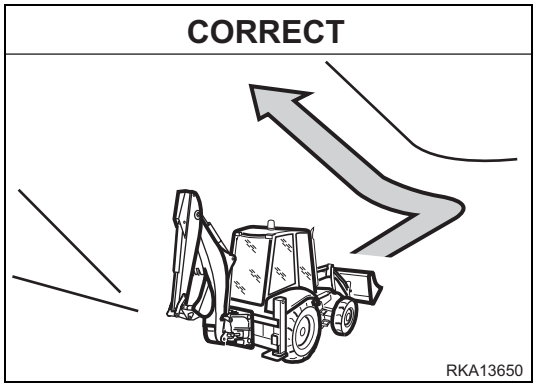

2.4.7 PREVENTING ELECTROCUTION

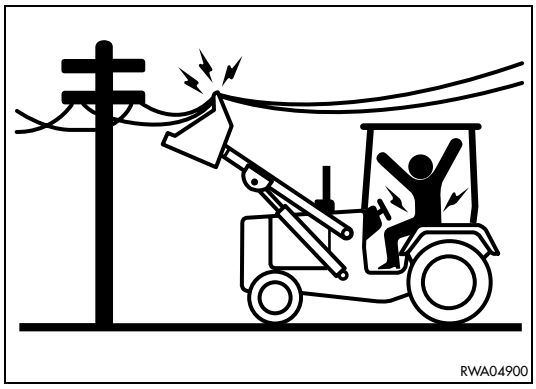

- Digging operations near overhead electric lines are extremely dangerous and they may also cause death due to electrocution; for this reason, when working near overhead electrical lines, always respect the minimum safety distances prescribed by the competent authorities and by the accident-prevention rules in force.
- As far as underground long-distance lines are concerned, the minimum distance depends on the covering of the ducts in which the cables are laid.
- The basic safety precautions to be taken to prevent this risk are the following:

1 - Wear shoes with thick rubber or leather soles.

2 - Request the aid of another person who can warn you if the machine gets too close to the electric line.

3 - Operate at low speed.

4 - Get acquainted with the behaviour rules to be followed in case of electrocution.

5 - Keep the phone number of the electric energy company and of the nearest hospital at hand.

- If the work equipment gets accidentally entangled in the cables, the operator must not leave the cab until the electricity company has insulated the line.
- When carrying out this kind of operations, warn everyone standing in the work area to maintain a safety distance from the machine and the work equipment.
- Ask the electricity company in advance what are the voltage of the cables and the minimum safety distance.

⚠ DANGER

- **The minimum distances from overhead lines can vary in the different countries, according to the climate and to the humidity percentage in the air.**
  Indicatively, the distances indicated in the table should be respected.

Cable voltage	Min. safety distance
1.0 kV (distribution line)	5 m
6.6 kV (2–3 insulators)	5.2 m
33 kV (min. 3 insulators)	5.5 m
66 kV (min. 6 insulators)	6 m
154 kV (min. 10 insulators)	8 m
275 kV (min. 19 insulators)	10 m

2.4.8 VISIBILITY

- Switch on the headlights or the work lights as soon as visibility decreases.
- If visibility decreases due to mist, smoke or heavy rain, stop the machine in a safe position and wait for the weather to improve until visibility becomes acceptable.

2.4.9 WORKING ON ICY OR SNOW-COVERED SURFACES

- If the ground is icy or covered with snow, the response of the machine to the movements of the steering wheel may not be precise.
  To reduce the risks connected with poor manoeuvrability, proceed as follows:

1 - Engage the four-wheel drive.

2 - Travel using the accelerator smoothly and gradually.

3 - Brake smoothly and only after having slowed down by using the engine deceleration as much as possible.

4 - Absolutely avoid any sudden braking, abrupt acceleration and sudden steering with short steering radius.

- If the machine is used to clear snow or as snowplough on roads (installing the specific optional equipment and even chains, if necessary), be careful to the road shoulders and to any object/obstacle buried in the snow (way-side posts, milestones, signs just above the asphalt, etc.).

2.4.10 PREVENTING DAMAGE CAUSED BY THE WORK EQUIPMENT

- When working in tunnels, galleries, under electric cables or other ducts (air, telephone lines) and wherever the height is limited, proceed with the greatest care to prevent the bucket or arms and the backhoe bucket from causing any damage.

2.4.11 WORKING ON LOOSE GROUND

- Avoid operating the machine too close to the edge of cliffs, overhangs and deep ditches.
  These areas may collapse, making the machine fall down or tip over and this could result in serious injury or even death.
  Remember that after heavy rain or earthquakes these dangerous conditions usually get worse.
- The earth laid near ditches is loose and can easily collapse due to the weight or vibrations of the machine.
  Be extremely careful: always close the cab doors and fasten the safety belt.

2.4.12 PARKING THE MACHINE

- Park the machine on firm and level ground. If this is not possible and it is necessary to park on a slope, position the machine with the front bucket directed downwards and carry out the following operations:

1 - While keeping the machine stopped with the brakes, apply the parking brake.
2 - Dump the front bucket to the unloading position and lower the arms until the teeth are driven into the ground.
3 - Carry out the same operations with the backhoe bucket.
4 - Stop the engine.
5 - Position wedges or safety blocks under the front and rear wheels.

- Always rest the work equipment on the ground; if it is necessary to park with lifted arms, make sure that the safety locks are engaged.
- Always engage the control lever safety locks.

NOTE

- The servo control locking button inhibits also the movements of the backhoe when this is equipped with servo controls.
- When leaving the machine, apply the parking brake, make sure that the cab windows are closed, remove the ignition key and finally lock the doors.
- If it is necessary to park on public roads, provide for signalling the presence of the machine according to the local regulations in force (signalling fires, fences, road works ahead, alternated direction and direction signs, etc.).

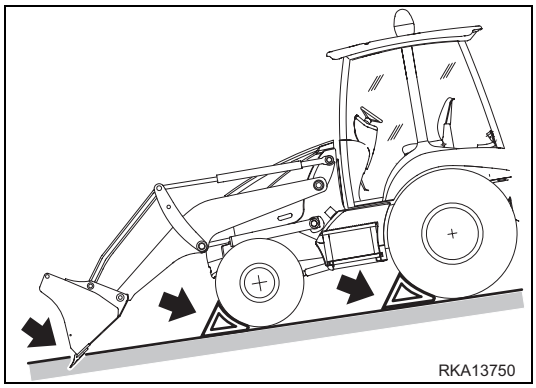

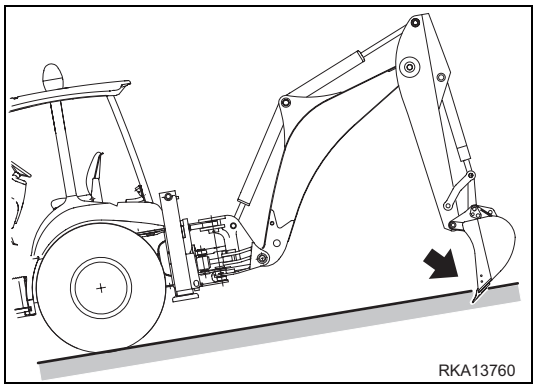

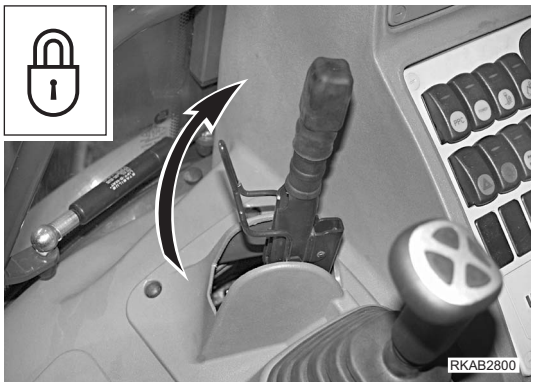

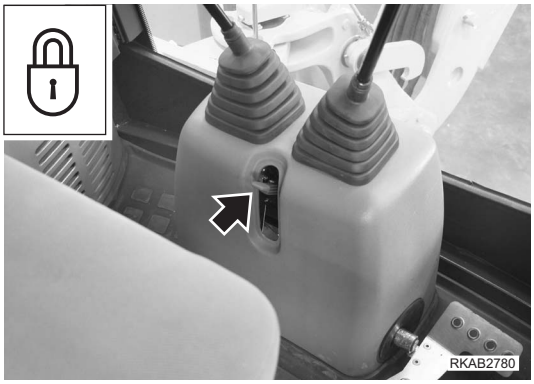

2.5 TRANSPORTING THE MACHINE ON OTHER VEHICLES

2.5.1 LOADING AND UNLOADING THE MACHINE

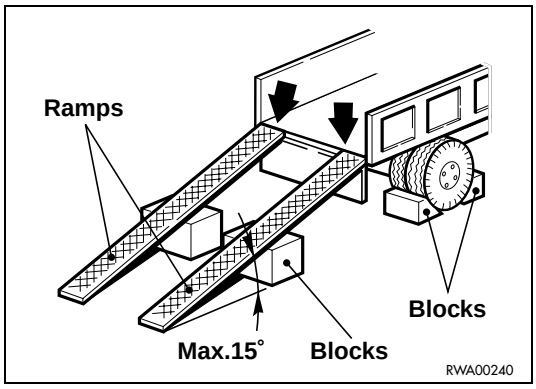

- Loading and unloading the machine on-off a motor vehicle always involves potential hazards. Proceed with extreme care.
- The loading and unloading of the machine on-off the means of transport must be carried out on a flat surface and at a safety distance from the edges of ditches or from the road side.
- If the vehicles used have not been appositely equipped, put support blocks under the ramps, in order to avoid any bending.
- Always lock the wheels of the transporting vehicle with wedges.
- Always use ramps that are sufficiently wide and can support the weight of the machine. The longitudinal axes of the ramps must be parallel to each other and perpendicular to the loading side board and their distance must be suitable for the tread of the machine.
- Make sure that the ramps are securely positioned and fastened to the loading board and that they have the same length.
- Position the ramps with a maximum inclination of 15°.
- Make sure that the ramp surface is clean and there is no trace of grease, oil, soil and ice; remove dirt from the wheels before starting to load the machine on the vehicle.
- The machine must be loaded on the vehicle with the bucket directed forwards, that is, in the direction of advancement of the vehicle.
- Do not correct the trajectory of the machine on the ramps. If necessary, get down the ramps and start the operation again.
- After loading the machine, block its wheels with wedges and secure it with tie-downs or chains that prevent even any sideward shift (see "3.9 TRANSPORTING THE MACHINE ON OTHER VEHICLES").

2.5.2 TRANSPORT

⚠ CAUTION

- **During transport, the machine must be secured to the vehicle, with closed doors and windows.**

- Define the route to be followed, taking in consideration the width, height and weight of the transport means and of the machine.
  Make sure that the dimensions of the machine are compatible with the road and any galleries, subways, bridges, electric and telephone lines, etc.
- Keep to the regulations in force regarding the permissible width, height, weight of the machine and the transport speed.

2.6 BATTERY

2.6.1 PREVENTING RISKS THAT MAY BE DUE TO THE BATTERY

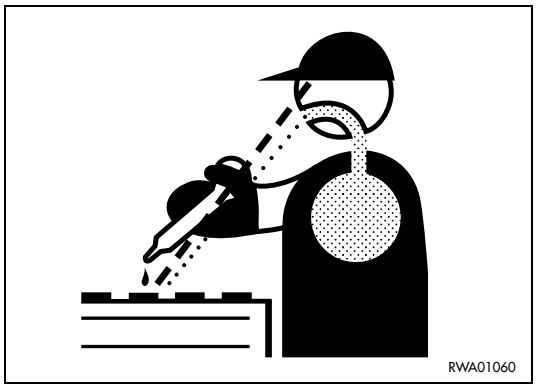

- Electrolytic batteries contain sulphuric acid, which can cause burns. It can also corrode clothing and make holes in it. In case of contact with battery acid, immediately wash the involved part with plenty of water.
- Battery acid may cause blindness if it comes in contact with the eyes.
  If acid accidentally gets into your eyes, wash them immediately with plenty of water and consult a doctor without delay.
- If you accidentally swallow battery acid, drink a large quantity of water or milk, beaten egg white or vegetable oil and in any case anti-acid substances like magnesia, bicarbonate, etc., call a doctor or a poison treatment centre immediately.
- Always wear safety goggles when working on batteries.
- Batteries produce hydrogen, which is highly explosive and can be easily ignited with small sparks or naked flames.
- Before working with batteries, stop the engine and remove the ignition key.
- Avoid short-circuiting the battery terminals through accidental contact with metal objects or tools or through the inversion of the terminals.
- Tighten the battery terminals securely. Loose terminals may generate sparks and even cause the explosion of the battery.

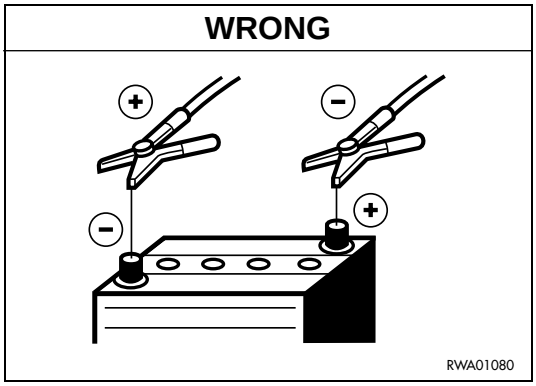

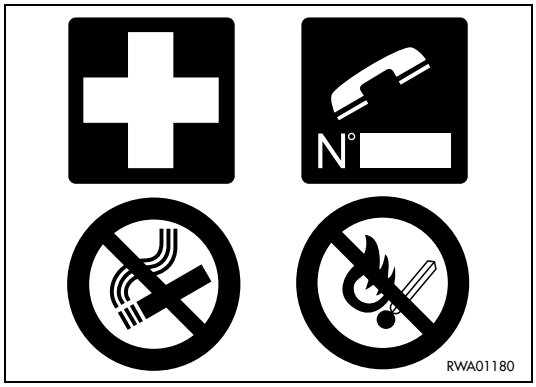

2.6.2 STARTING WITH BOOSTER CABLES

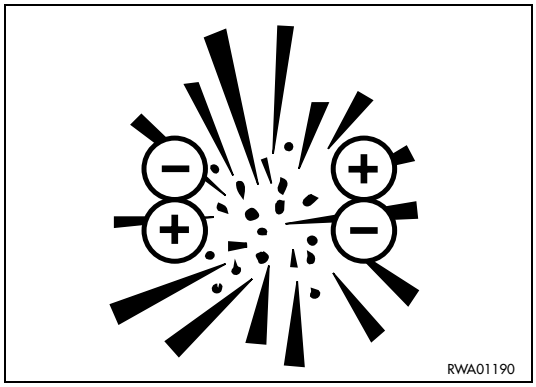

- When starting the machine with booster cables, always wear safety goggles.
- When starting the engine by means of another machine, avoid any contact between the two machines.
- Be sure to connect the positive cable (+) first and then the negative or earth cable (-) when connecting the booster cables. After the start, disconnect first the negative or earth (–) cable and then the positive cable (+).
- Connect the batteries in parallel: positive to positive and negative to negative.
- When connecting the earth cable to the frame of the machine to be started, operate as far as possible from the battery (see "3.15.3 IF THE BATTERY HAS RUN DOWN").
- Do not attempt to start the engine by causing a short-circuit with the terminals of the starter (see "2.8.14 PRECAUTIONS CONCERNING THE STARTER").

2.7 PRECAUTIONS FOR EMERGENCY RECOVERY

- The draw hooks must be used only for the first aid and not for towing the machine.
- Before moving the machine, make sure that the gearshift lever is in neutral and disengage the four-wheel drive.
- Incorrect manoeuvres may cause serious damage, injury and even death.
- To move the machine, use properly dimensioned steel cables; do not use worn cables or cables with broken strands (A), twisted cables (B), deformed cables (C).
- During the removal, no one should be allowed to get near the machines or the cable.
- Do not get astride the cable.
- Move the machine only as far as necessary to allow the required repairs to be carried out.
- Do not remove the machine in any way other than that indicated in paragraph "3.15.1 HOW TO REMOVE THE MACHINE".

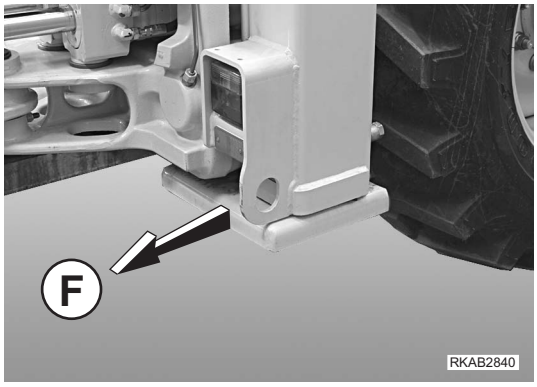

⚠ CAUTION

- **The maximum applicable force for each draw hook is F = 4854 kg.**
- **Use cables of the same length and pull continuously, without jerking movements.**
- **The drawing force must be parallel to the machine axis (advancement direction), in such a way as to avoid the application of sideward forces on the draw hooks.**

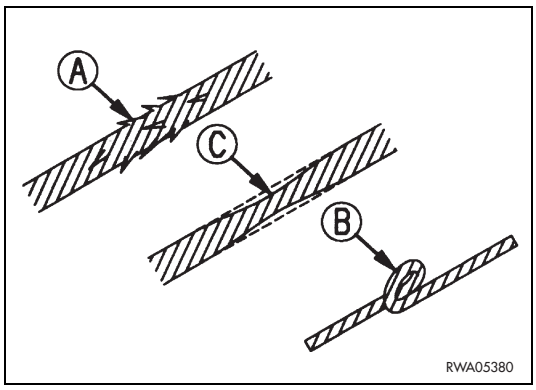

2.8 PRECAUTIONS TO BE TAKEN DURING MAINTENANCE

2.8.1 WARNING PLATES

- Before starting any maintenance operation, position the machine on firm and level ground, engage the safety locks of the equipment and of the controls, stop the engine and apply the parking brake.
- If anyone starts the engine and operates the control levers while the operator is servicing the machine, this may result in serious injury or even death.
- To avoid these risks, always attach warning plates to the steering wheel, to the control levers and to the ignition key before performing any maintenance operation; if necessary, attach additional warning tags also around the machine and in particular on the cab door handles.

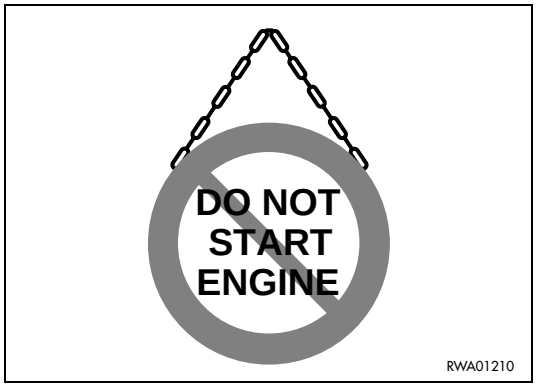

2.8.2 TOOLS

- Use only the tools supplied together with the machine and high-quality tools suitable for the tasks to be performed.
- Do not use worn, damaged, low-quality tools or tools that are not suitable for the tasks to be performed, in order to avoid any personal injury.
- After use clean the tools carefully and store them in the compartment situated in the right access platform.

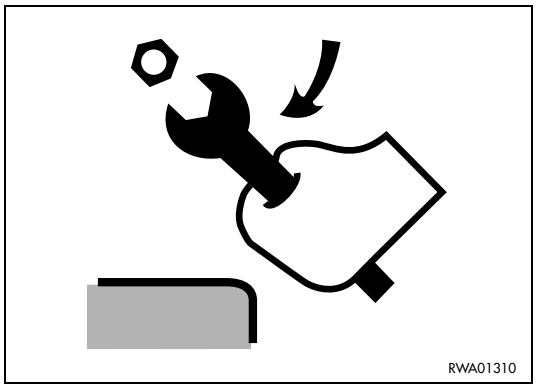

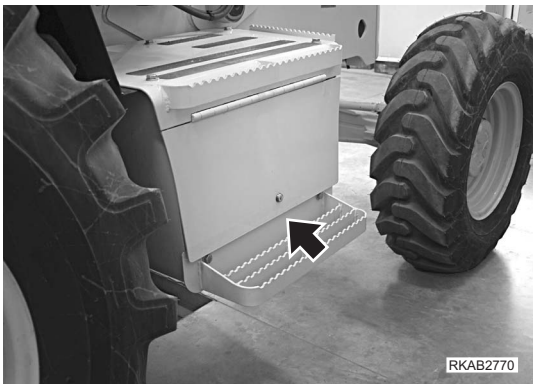

2.8.3 PERSONNEL

- Any maintenance operation must be carried out exclusively by authorized and duly trained personnel; specific and personal protection measures must be adopted when grinding, welding and when using sledges or heavy hammers.
- When assembling the equipment or cylinder connection pins, use wooden, plastic or in any case not excessively hard tools to check the centering of the holes.
  Do not use your fingers, since you run the risk of cutting them off.

2.8.4 EQUIPMENT

- The normal or special equipment that must be installed on the machine or that have been removed must be stored in a safe place and positioned in such a way as to prevent them from falling down.
  If they fall on someone, they may cause serious bodily harm.
- When assembling or removing any equipment, make sure that the ropes and the lifting hook are in good conditions and properly dimensioned for the load to be lifted.

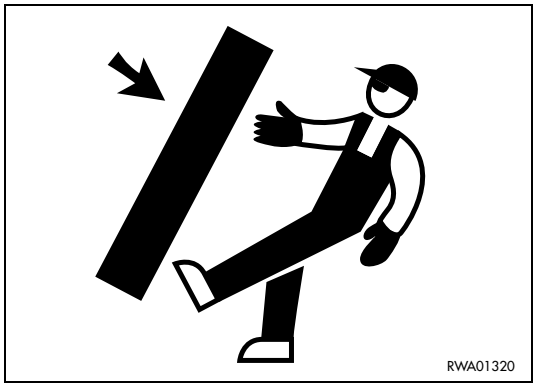

2.8.5 WORKING UNDER THE MACHINE

- Before performing service or repairs under the machine, always lower the work equipment to the ground or in any case lower it as much as possible.
- Always lock the tyres of the machine securely.
- Avoid working under the machine if it isn't properly supported.

2.8.6 KEEPING THE MACHINE CLEAN

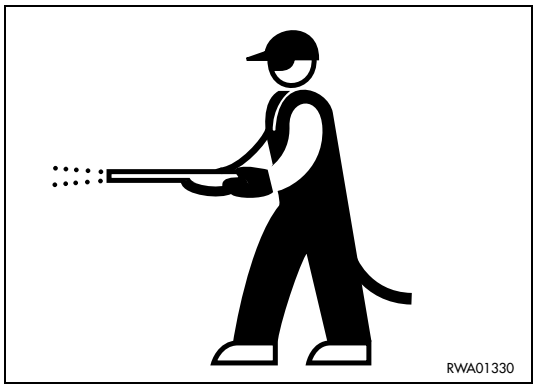

- Spilled oil or grease, scattered tools or broken pieces are dangerous, because they may cause someone to slip or trip. Always keep the machine and the worksite clean and tidy.
- To clean the machine, use a pressurized jet of warm water or steam and the specific detergents available on the market. Do not use diesel oil, oil or solvents, since the former leave an oily coat that favours the sticking of dust, while the latter (even if weak) damage the painted surfaces and therefore facilitate rusting.
- While cleaning the machine, keep the pressurized jet at a minimum distance of approx. 60 cm, in order to avoid damaging the warning plates and the pictograms.
  If the plates are damaged, request Komatsu or your Komatsu Dealer to send you spare plates and change them.
- Water into the electric system provokes the oxidation of the contacts and may hinder the start of the machine or even make it start suddenly and abruptly. For this reason, avoid using water or steam jets to clean sensors, connectors or the inside of the operator's cab.

2.8.7 USE OF THE ENGINE DURING MAINTENANCE

- During maintenance operations, run the engine only when indispensable. If the engine must be running (for example, when checking the functionality of the alternator), it is advisable that someone remains seated in the driving position, so that the engine can be stopped whenever necessary.
- During maintenance operations with running engine, neither move the control locking devices from the “lock” position, nor change the position of the gearshift lever.
  Service personnel must not move any control lever.
- When carrying out maintenance operations, do not touch the moving parts of the machine and avoid wearing large and loose clothes.

2.8.8 PERIODICAL CHANGE OF THE SAFETY RELATED PARTS

- Periodically change the following components, which are important for safety and fire prevention:
  Fuel system: fuel delivery and return pipes.
  Hydraulic system: main delivery pipes of the hydraulic pump.
  Hydraulic system: work circuit pipes from the distributor to the hydraulic cylinders.
  Safety belt.
- Even if they seem to be in good conditions, these components must be periodically changed with new ones.
  In fact, these components tend to deteriorate over time.
- If one of these parts is defective, change or repair it even if the prescribed change interval has not elapsed yet. (See "4.6 PERIODICAL CHANGE OF THE SAFETY RELATED COMPONENTS").

2.8.9 STOP THE ENGINE BEFORE CARRYING OUT ANY MAINTENANCE OPERATION OR INSPECTION

- Stop the machine only on firm and level ground and stop the engine before carrying out any maintenance operation or inspection.
- If it is necessary to have the engine running during maintenance, engage the safety LOCKS of the equipment control levers, apply the parking brake and carry out any maintenance operation with the help of another person; an operator must remain on board and the words to be used during the operation must be agreed upon.

NOTE

- The servo control locking button inhibits also the movements of the backhoe when this is equipped with servo controls.
- The maintenance personnel must be very careful not to touch any moving part of the engine.

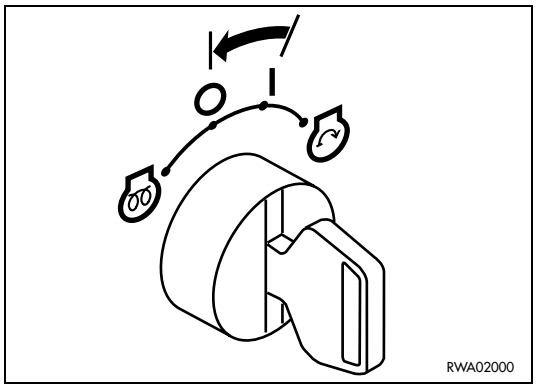

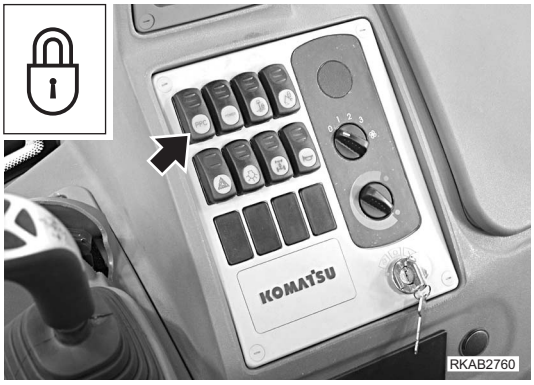

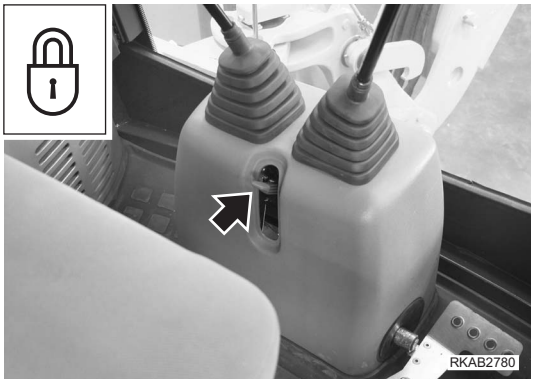

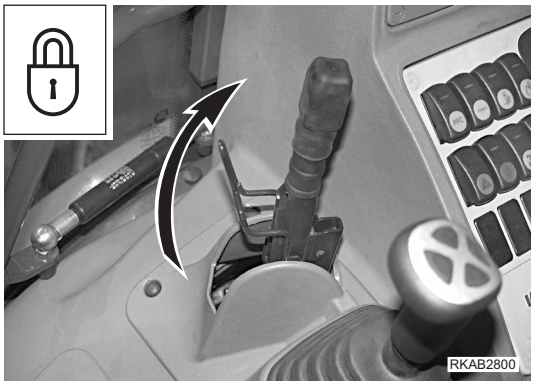

2.8.10 RULES TO BE FOLLOWED DURING FUEL OR OIL TOPPING UP

- Spilled fuel or oil make the ground slippery and may cause accidents; clean any dirty area carefully and without delay.
- Always tighten the fuel tank and hydraulic oil tank safety caps securely.
- Do not use fuel to clean any part of the machine that is dirty with oil or dust.
- Always top up the fuel and oil tanks in properly ventilated areas and refrain from smoking.
- When refuelling, hold the fuel gun firmly and keep it constantly in contact with the filler until you have finished, in order to avoid sparks due to static electricity.
- Do not fill the tank completely, in order to leave room for the fuel to expand.

2.8.11 CHECKING THE COOLANT LEVEL IN THE RADIATOR

- Let the engine and the radiator cool down before checking the coolant level in the radiator.
- If it is necessary to remove the cap with hot engine, wear suitable clothes and protection and loosen the cap slowly, in order to release the pressure gradually.

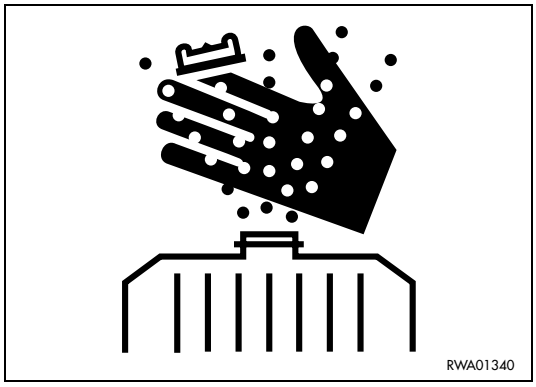

2.8.12 USING LAMPS

- When checking the fuel, oil, coolant or battery electrolyte levels, always use homologated explosion-proof lamps. Unsuitable lamps may cause fires or explosions.

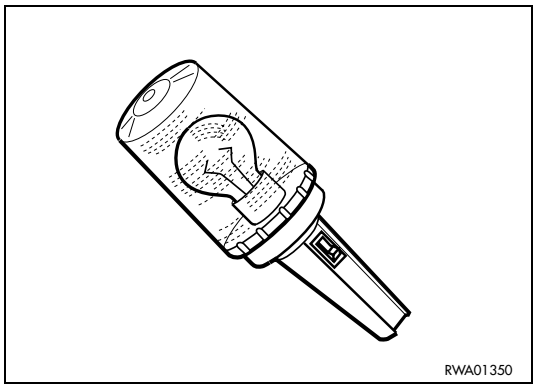

2.8.13 PRECAUTIONS CONCERNING THE BATTERY AND THE ALTERNATOR

- When repairing the electrical system, disconnect the battery in order to stop the flow of current.

IMPORTANT

- **Disconnect first the negative cable (-) and then the positive cable (+).**
  At the end of the operation, reconnect first the positive cable (+) and then the negative cable (-).

- If electrical welding operations are to be carried out on the machine, it is necessary to disconnect the battery and also the alternator.

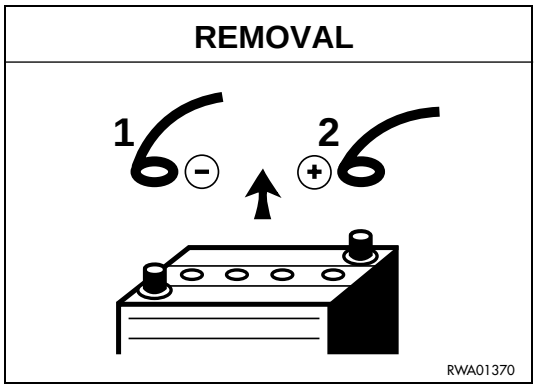

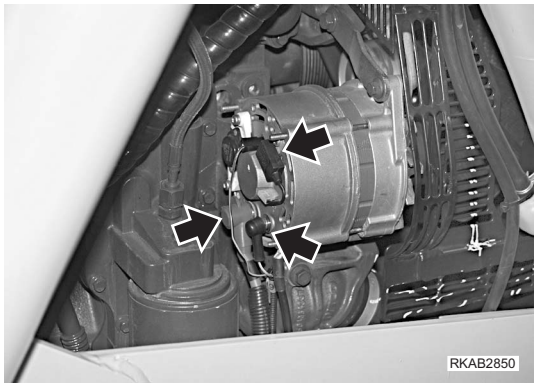

2.8.14 PRECAUTIONS CONCERNING THE STARTER

- Start the engine only when correctly seated in the driving position.
- Do not attempt to start the engine by causing a short-circuit with the terminals of the starter. This may cause fires, serious injury and even death in case of sudden or accidental movements of the machine.

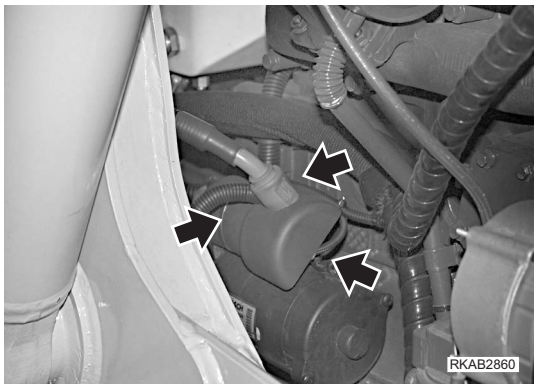

2.8.15 HANDLING HIGH-PRESSURE PIPES

- Do not bend high-pressure pipes or rub them with sharp or abrasive objects.
  Do not use any bent or cracked pipes or hoses that were previously rejected because of leaks or fastening defects, since they may burst during use.
- Always repair or replace any loose or faulty fuel or oil pipe. Any leakage of fuel or oil may cause fires.

2.8.16 PRECAUTIONS TO BE TAKEN WHEN WORKING ON HIGH- PRESSURE SYSTEMS

- Do not forget that the work equipment circuits are always under pressure; for this reason, when it is necessary to add or drain hydraulic oil, or to service or inspect the hydraulic circuit, it is advisable to lower the equipment to the ground and completely release the pressure and also the residual pressure present in the tank.
- For this reason, always wear goggles and thick gloves during the inspections and use a piece of cardboard or a sheet of plywood to check for oil leakages.Small leakages from pipes under pressure and the resulting jets are extremely dangerous, since they can perforate the skin and get in the blood circulation or injure the eyes.
- If you are struck by a jet of high-pressure oil or are injured, even if slightly, consult a doctor without delay.

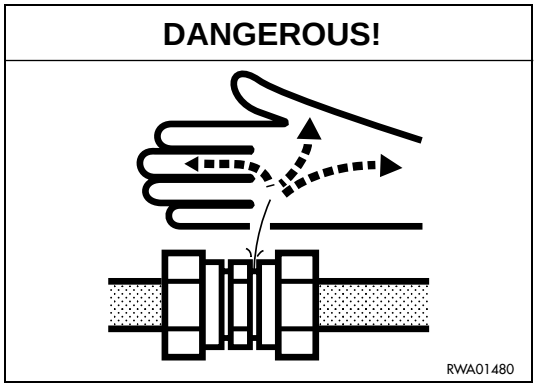

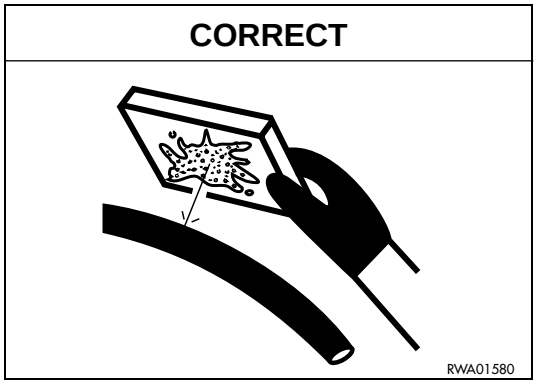

2.8.17 PRECAUTIONS FOR MAINTENANCE WORK INVOLVING HIGH TEMPERATURES AND PRESSURES

- When the machine is stopped at the end of operations, the engine coolant, the oil and all the components are hot and the hydraulic circuits are under pressure.
  In these conditions, if the coolant, the hydraulic oil or the engine oil are to be drained in order to change them or the filters, there are serious risks of injury and burns.
  Wait for the temperature to lower within the normal operating range (40–45) before carrying out the maintenance operations in accordance with the procedures indicated in the relevant sections of this manual.

2.8.18 HYDRAULIC ACCUMULATOR

The hydraulic accumulator contains pressurized nitrogen.
When carrying out any operation on the accumulator, proceed with the utmost care, in order to avoid explosions and consequently serious injury and even death.
For this reason, keep to the following instructions:

- do not remove the accumulator;
- do not use sparks or naked flames;
- do not make holes in the accumulator, do not weld or use oxyhydrogen flames;
- do not hit or press the accumulator;
- when disposing of the accumulator, take care to release the gas it contains. Have this operation carried out only by a Komatsu Dealer.

2.8.19 COOLING FAN AND FAN BELT

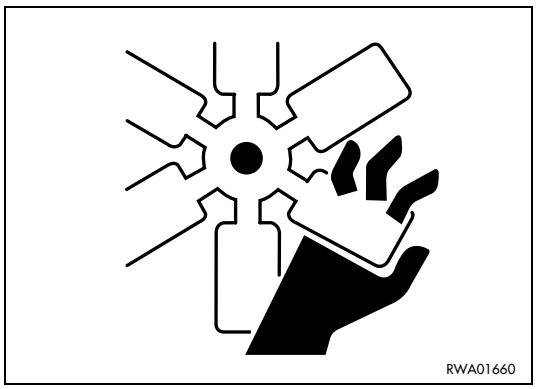

- Be careful to the revolving parts and do not allow anyone to get too close to these components, since clothes or parts of the body may get caught into them.
- If hands, clothes, or tools become entangled in the fan blades or the fan belt, they may be cut off, torn or seriously injured/damaged; for this reason, avoid touching any revolving part.

2.8.20 WASTE MATERIALS

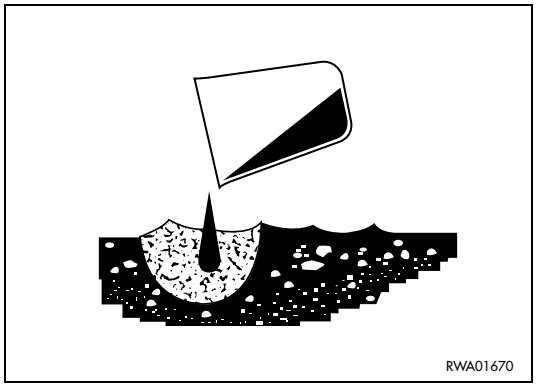

- Do not dispose of used oil in the sewer system, rivers, etc.
- Always put used oil in containers. Do not drain used oil directly on the ground.
- Keep to the laws and regulations in force when disposing of harmful substances such as oil, fuel, solvents, used filters, gaskets, electric wires and batteries.

⚠ WARNING

- **Oils, filters, coolant, gaskets, electric wires and batteries are considered special waste and must be collected and disposed of according to the regulations in force.**
- **The combustible material of some components may become extremely dangerous if it burns. For this reason, avoid any contact of burnt material with your skin or eyes and do not inhale the fumes produced.**

2.8.21 PRECAUTIONS CONCERNING TECHNOPOLYMERS AND ELASTOMERS

⚠ DANGER

- **Some components of the machine contain polymers and elastomers (Viton sealing rings, Teflon rings, piston seals made of fluoroelastomers, electric cable insulating materials, etc.).**
  At room temperature and up to approximately 200°C these materials can be handled without taking any precautions, since they are completely inert.
  However, if these materials are burnt, they release highly toxic gases.
  Once these materials have cooled down, they must be collected in tight bags, using heavy waterproof gloves; gloves and materials must be disposed of in a differentiated manner in compliance with the laws in force.
  The contaminated part of the machine must be washed with highly alkaline detergents and then with a solution made of detergent and water.

- Avoid burning seals, electric cables, sealing rings.
- Dispose of elastomeric and polymeric waste according to the regulations in force.
- Do not touch any burnt elastomeric or polymeric waste and in case of accidental burning avoid inhaling the toxic gases produced.
- In case of contact with the skin, immediately rinse with a solution made of water and an alkaline detergent for about 30 minutes and then contact a poisoning treatment center without delay.

2.8.22 PRECAUTIONS TO BE TAKEN WHEN INFLATING THE TYRES

- Always bear in mind that tyres can burst while being inflated, causing serious accidents.
- Before inflating the tyres, always check the wheel rims and the tyre sidewalls and tread for dents, cuts, broken plies or other defects.
- Have the tyres checked and serviced by specialized personnel.
- Inflate the tyres using a protection structure and a pneumatic inflating gun with extension complete with pressure gauge.
- Make sure that there is nobody in the vicinity before starting to inflate a tyre. Stand beside the tyre to inflate it.
- Do not exceed the inflation pressures prescribed for the single types of tyre and make sure that all the tyres have the same pressure.

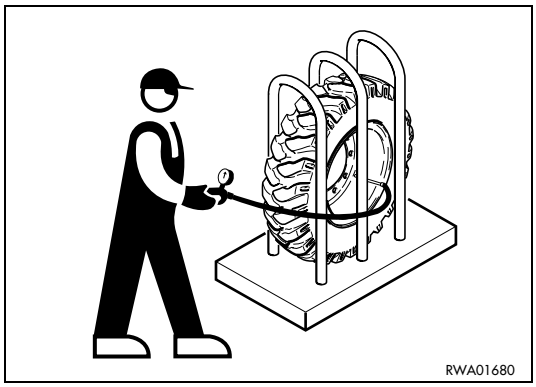

2.8.23 PRECAUTIONS FOR THE INSTALLATION OF THE EXHAUST SYSTEM TAILPIPE

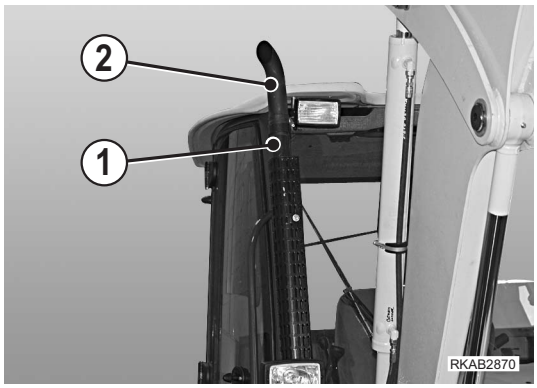

- When the machine is stopped at the end of work, the exhaust pipe (1) and the tailpipe (2) are very hot. In these conditions, if any maintenance operation has to be carried out, the operator runs the risk of being burned or injured.
  Carry out any maintenance operation only when these parts have cooled down and in any case always use thick gloves.
- Pay the utmost attention when installing the tailpipe (2) on the exhaust pipe (1), since the former must be positioned correctly with the outlet of the exhaust gases directed toward the front part of the machine and inclined 60° outwards.
  This position serves to prevent the exhaust gases from being directed towards the cab and therefore towards the operator.

2.8.24 PRECAUTIONS TO BE TAKEN WHEN USING SYNTHETIC BIODEGRADABLE OIL TYPE «HEES»

- It is not possible to mix the synthetic biodegradable oil type HEES with ordinary hydraulic oils, since when the temperature increases insoluble compounds are generated, which are deposited on the filters and clog them (the maximum concentration of ordinary oil must not exceed 1% of the total quantity of oil).
- Biodegradable oil can be used only in the hydraulic system; it cannot be used for the engine, the transmissions, the braking system, etc.
- Before introducing synthetic biodegradable oil in the hydraulic system, empty the system completely, disconnecting the cylinders and all the parts that may contain ordinary oil, and replace the drain filter with a new one.
  Start the engine and let it idle without using the work equipment, wait until the oil reaches a temperature of at least 40°C, then start moving the equipment, so that all the parts of the system are filled with oil. Stop the engine and check the oil level (see "4.8.6.a CHECKING THE HYDRAULIC OIL LEVEL").

THIS PAGE WAS INTENTIONALLY LEFT EMPTY

THE MACHINE AND ITS OPERATIONS

3.1 SAFETY LOCKS

⚠ DANGER

- **If it is necessary to carry out any maintenance operation or to stop the machine with lifted loader arm, always engage the mechanical safety retainer and lock the control lever.**
- **When travelling on roads, always engage the mechanical lock, lock the control lever in order to keep the front bucket in a stable position and use the front bucket swing lock and the teeth guard.**
- **When travelling on roads or when the backhoe is not going to be used, always connect the boom to the safety lock, fold the arm and the bucket completely and lock both the swing and the control lever.**
  On machines equipped with backhoe servo controls, the movements are inhibited by the servo control locking button (see "3.3.2 pos. 12 - SERVO CONTROL LOCKING BUTTON").
- **Non-compliance with these rules may cause serious damage in case of accidental lowering or rotation of the equipment.**

3.1.1 FRONT LOADER LOCKS

The loader arm is provided with two safety locks that have two distinct essential functions:

a) SAFETY LOCK (1) for the position of the arm when the machine is subjected to maintenance on the propeller unit and inspection of the hydraulic system equipment and of the auxiliary equipment housed in the engine compartment and in any case to the inspections and maintenance operations that must be carried out with lifted arm (A).

b) SAFETY LOCK (2) for the position of the arm when the machine is travelling on roads (B).

It is important to remember that in work conditions the safety lock (1) must be positioned against the arm (C) and secured in that position by means of the safety pin (3), while the safety lock (2) must be stored in the tool box positioned in the operator's cab, inside the right access platform.

IMPORTANT

- **The safety locks (1-2) must always adhere to the rods of the hydraulic cylinders, on whose eyes they are applied.**
- **The safety locks must be positioned definitively by bringing the contact surfaces against each other with a slow and continuous movement, in such a way as not to damage the cylinder head surfaces.**
- **When the safety locks are in their definitive position, secure them with the safety pins (3).**

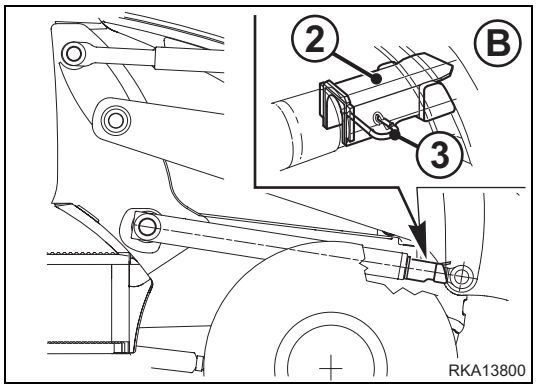

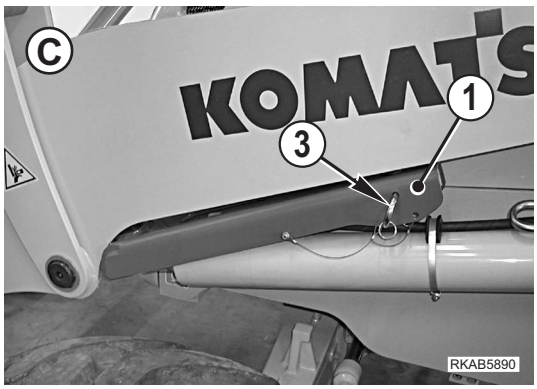

The other applications of the safety locks concern:

a) Installation of the front bucket swing lock (1).

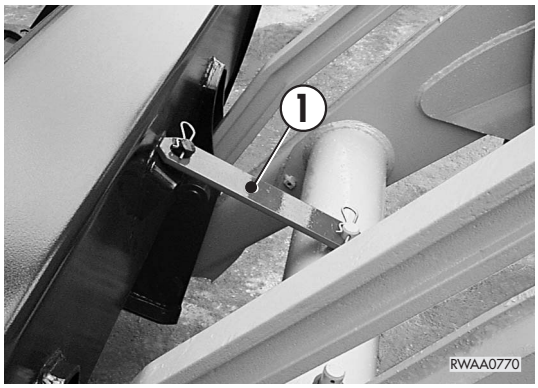

b) Locking position of the button inhibiting the front loader control (2) (LED on).

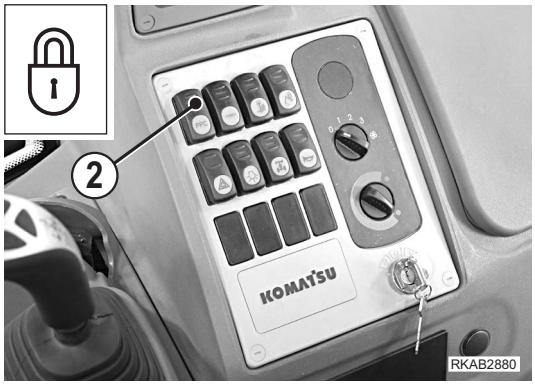

c) Installation of the teeth guard (3).

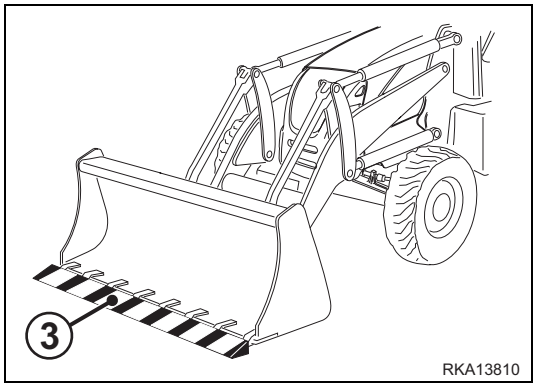

3.1.2 BACKHOE LOCKS

The backhoe is held completely lifted by a single coupling that does not allow the boom to be lowered.
The other safety device regards the swing, which is prevented, both in the central and in the folded position, by means of a pin.

To lock the boom, proceed as follows:

1 - Fold the bucket and arm completely.

2 - Press the button (1) (LED on) to raise the safety lock (3).

3 - Lift the boom completely and release the button (1) (LED off) to engage the safety lock to the boom.

4 - Rotate the boom and insert the swing lock pin (4).

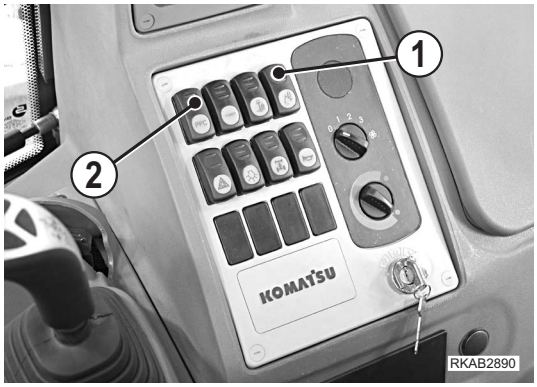

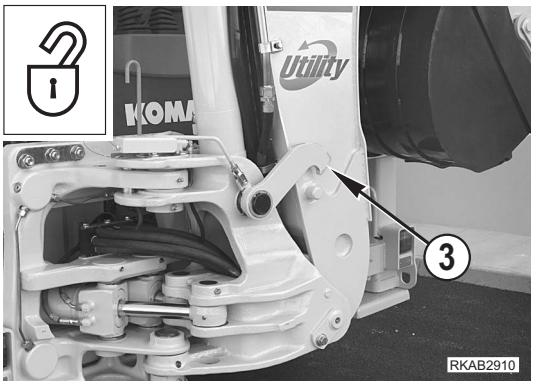

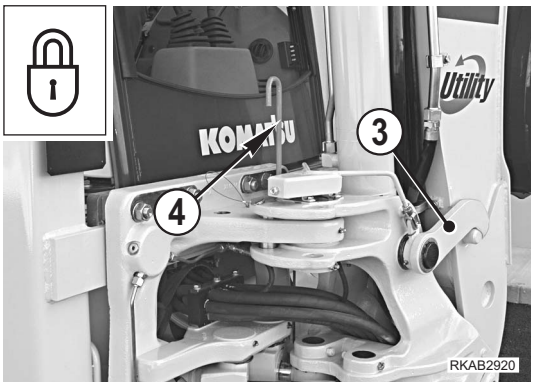

5 - Raise the stabilizers completely and couple the safety chains (5) to the stabilizers. The controls are inhibited by the servo control locking button (2) (LED on).

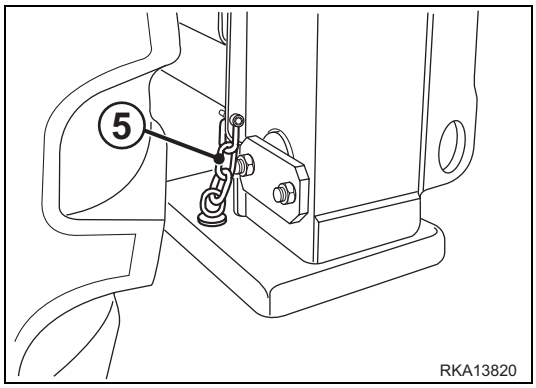

6 - Stop the engine and shift the levers (6) to settle the safety locks.

7 - Inhibit the movements of the backhoe control levers by shifting the lever (7) to the locking position.

NOTE

- On machines equipped with backhoe servo controls, the movements are inhibited by the servo control locking button (see "3.3.2 pos. 12 - SERVO CONTROL LOCKING BUTTON")

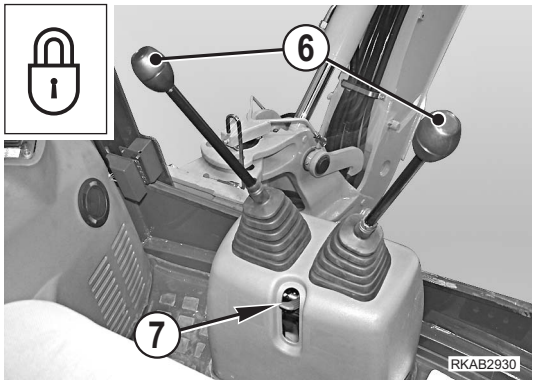

3.2 GENERAL VIEWS

3.2.1 FRONT GENERAL VIEW

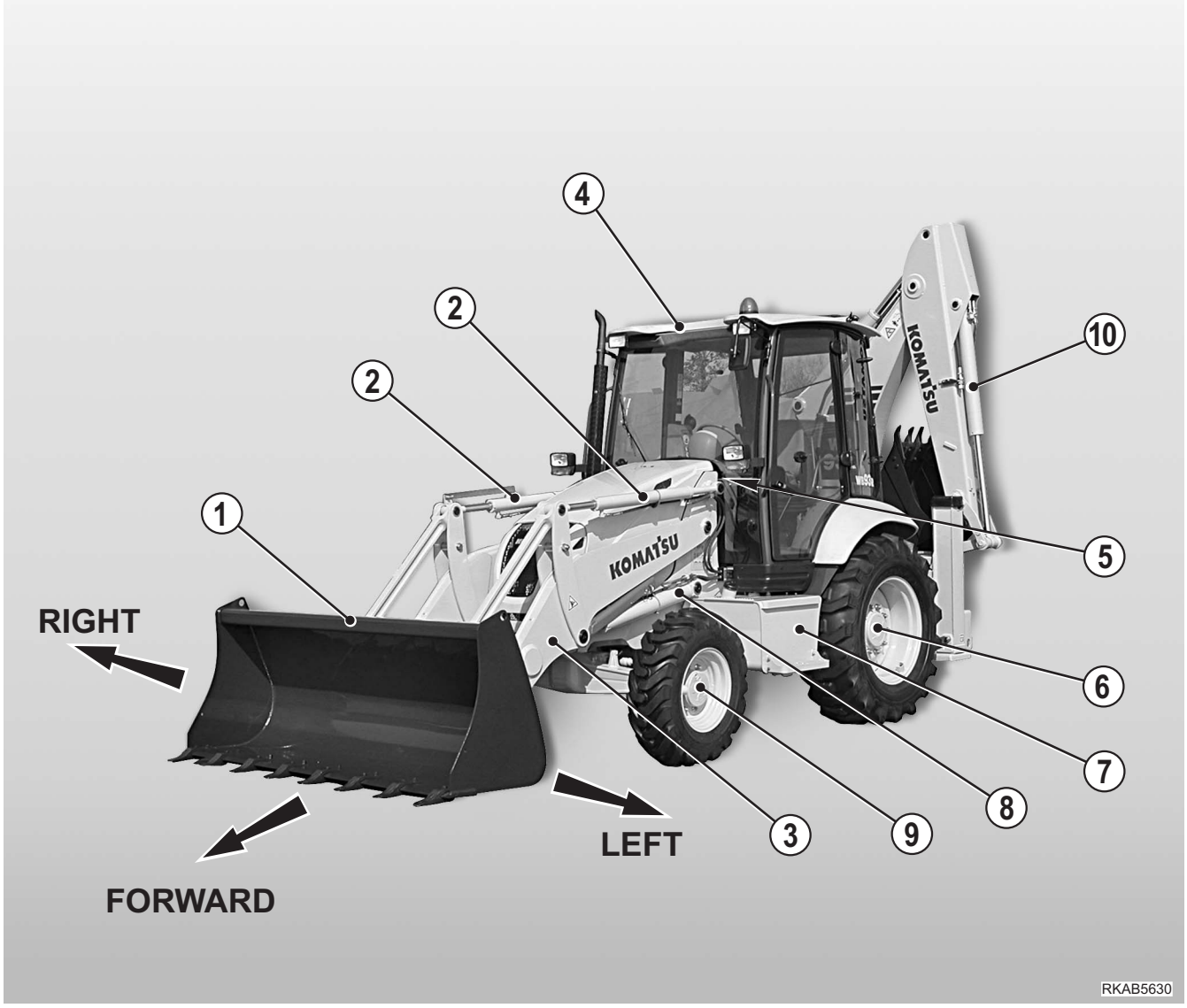

1 - Front bucket
2 - Bucket dumping cylinder
3 - Bucket lifting arm
4 - Cab
5 - Hydraulic oil tank
6 - Rear axle
7 - Fuel tank
8 - Lifting cylinder
9 - Front axle
10 - Backhoe bucket cylinder.

3.2.2 BACKHOE GENERAL VIEW

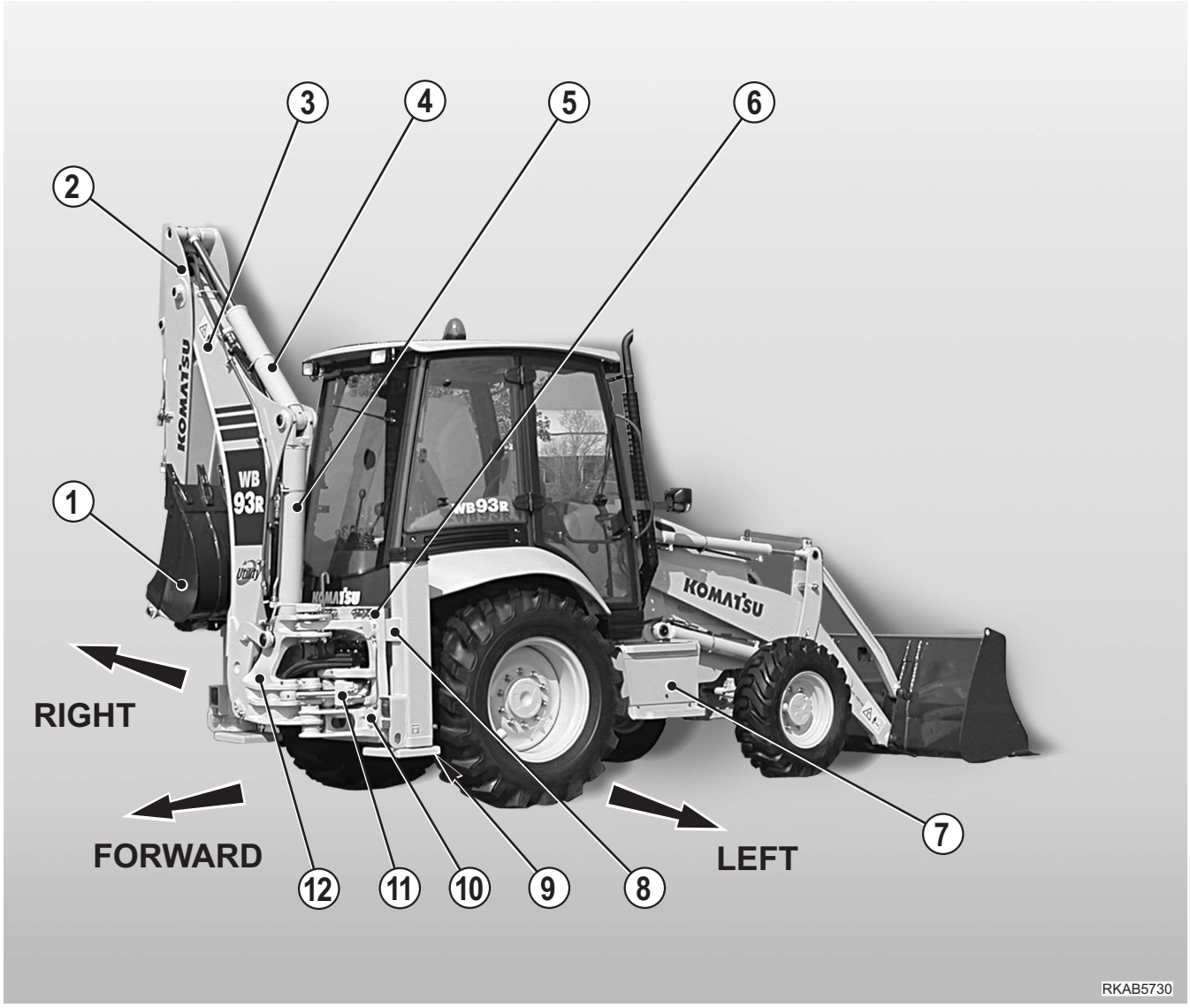

1 - Bucket
2 - Arm
3 - Boom
4 - Arm cylinder
5 - Boom cylinder
6 - Revolving support
7 - Right access platform and tool box
8 - Backhoe sliding guides
9 - Stabilizers
10 - Backhoe locking cylinders
11 - Boom swing cylinders
12 - Sliding plate

3.2.3 CAB INSIDE GENERAL VIEW

3.2.3.1 CAB INSIDE GENERAL VIEW (mechanical backhoe controls)

1 - Reversing gear lever
2 - Steering wheel
3 - Front dashboard
4 - Direction selector - dimmer switch
5 - Gearshift lever
6 - Steering wheel adjustment lock
7 - Accelerator pedal
8 - Brake pedals
9 - Side dashboard
10 - Front loader control lever
11 - Parking brake
12 - Hand accelerator
13 - Arm and swing control lever
Standard version “ISO pattern controls”)
- Boom and swing control lever
(On request “Komatsu pattern and X-pattern controls”)
14 - Boom and bucket control lever
(Standard version “ISO pattern controls”)
- Arm and bucket control lever
(On request “Komatsu pattern and X-pattern controls”)
15 - Right stabilizer control lever
16 - Left stabilizer control lever

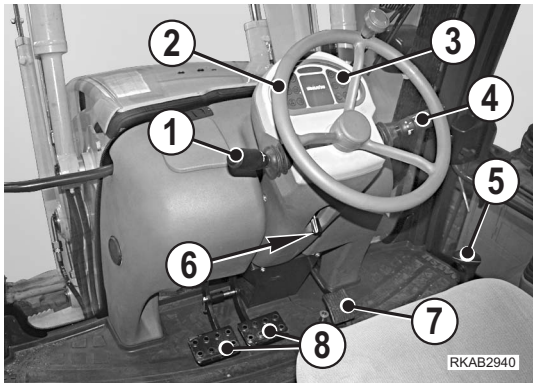

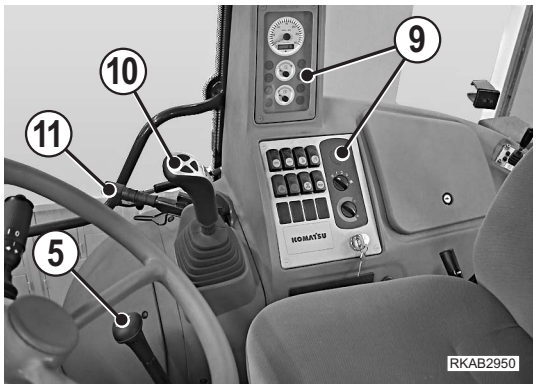

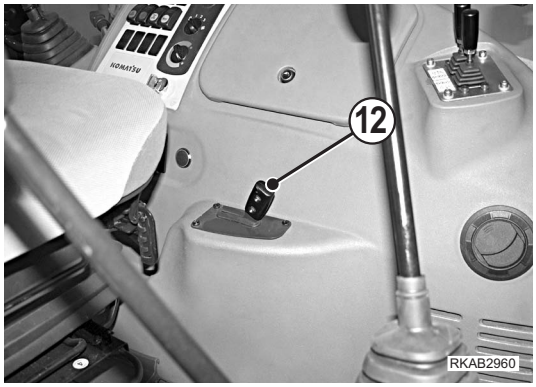

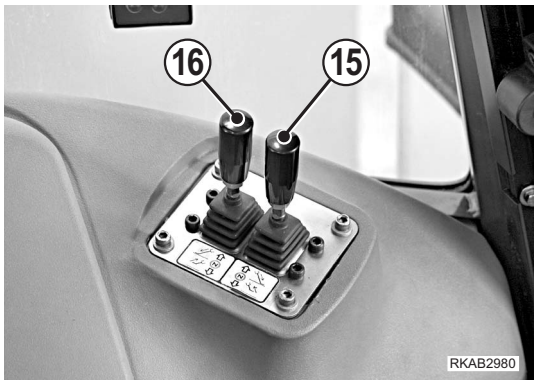

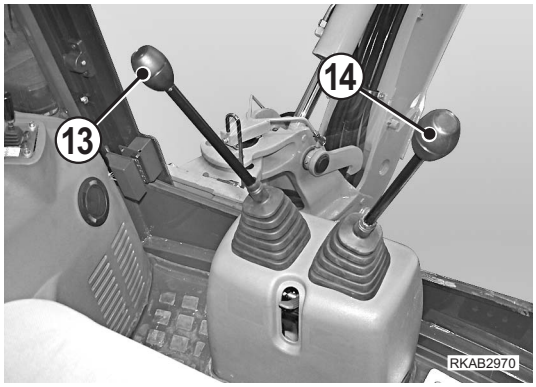

3.2.3.2 CAB INSIDE GENERAL VIEW (backhoe servo controls)

1 - Reversing gear lever
2 - Steering wheel
3 - Front dashboard
4 - Direction selector - dimmer switch
5 - Gearshift lever
6 - Steering wheel adjustment lock
7 - Accelerator pedal
8 - Brake pedals
9 - Side dashboard
10 - Front loader control lever
11 - Parking brake
12 - Hand accelerator
13 - Arm and swing control lever
(Standard version “ISO pattern controls”)
- Boom and swing control lever
(On request only with Pattern Change “Komatsu pattern controls”)
14 - Boom and bucket control lever
(Standard version “ISO pattern controls”)
- Arm and bucket control lever
(On request only with Pattern Change “Komatsu pattern controls”)
15 - Left stabilizer control lever
16 - Right stabilizer control lever

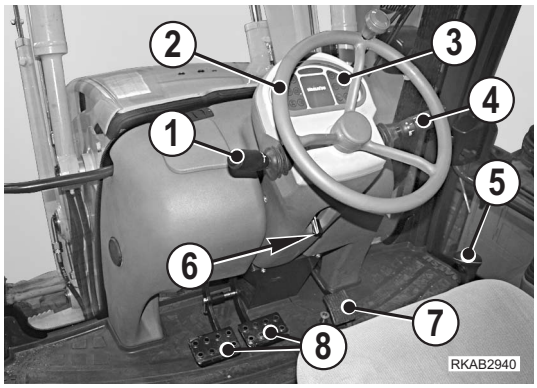

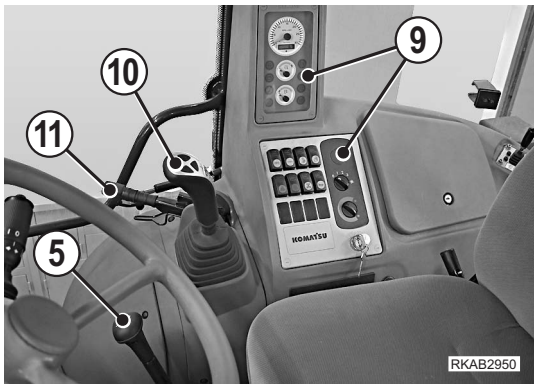

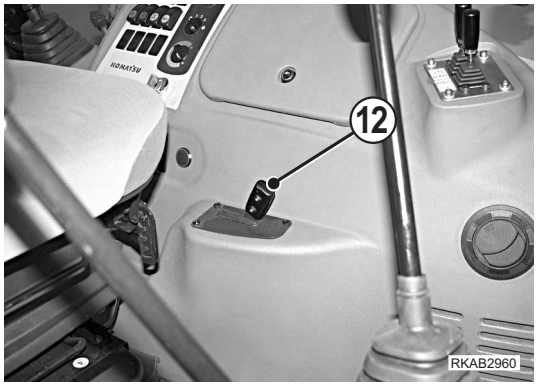

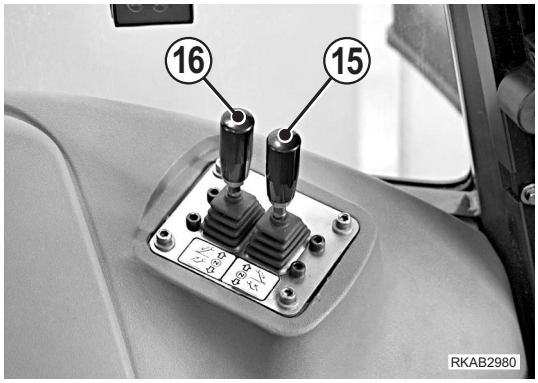

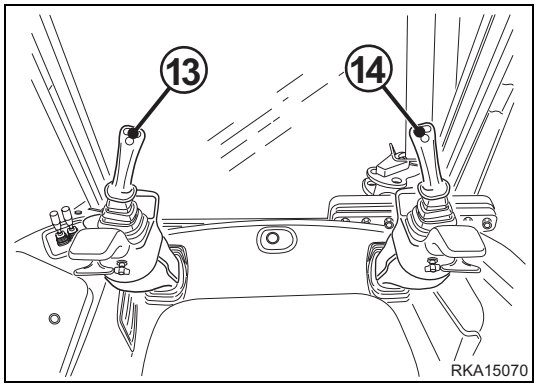

3.3 INSTRUMENTS AND CONTROLS

3.3.1 FRONT INSTRUMENTS

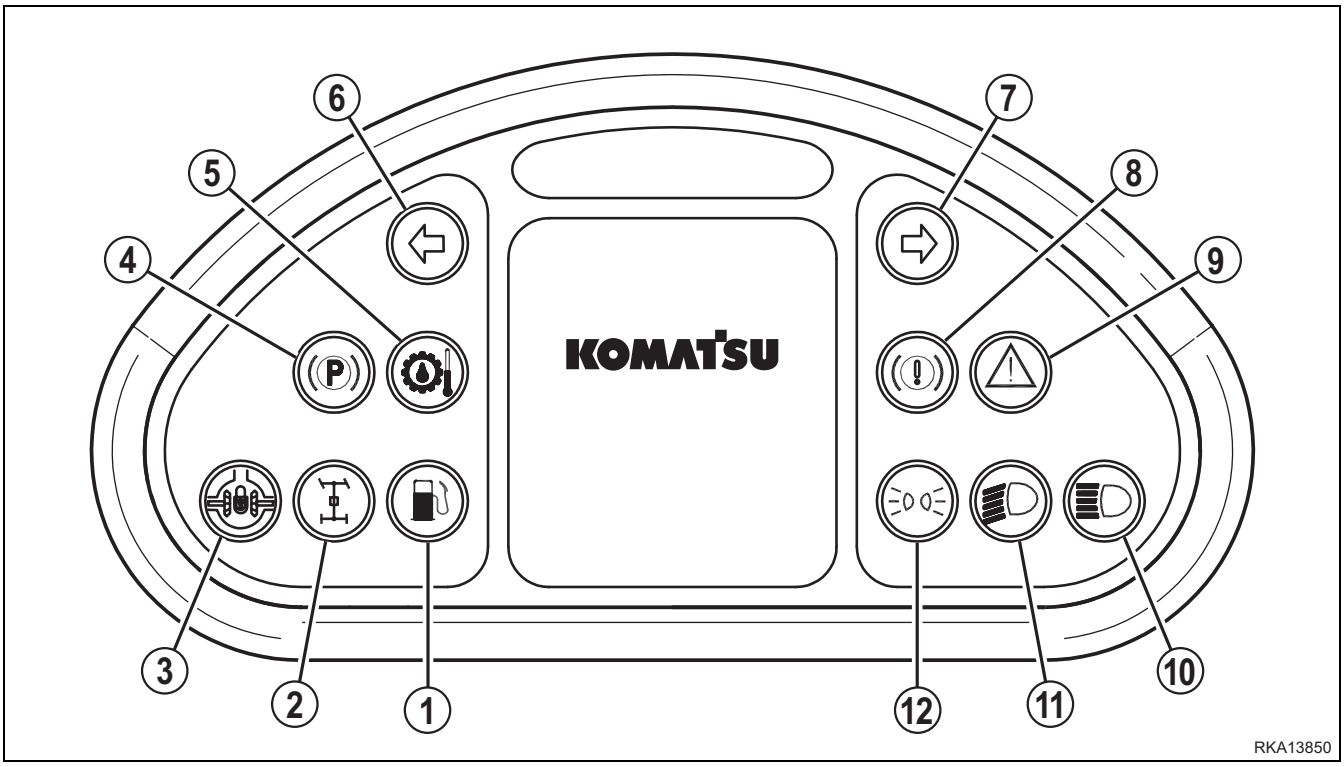

1 - Low fuel warning light
2 - Four-wheel drive warning light
3 - Differential locking warning light
4 - Parking brake warning light
5 - Transmission oil temperature warning light
6 - Left direction indicator warning light
7 - Right direction indicator warning light
8 - Low oil pressure or braking system failure warning light
9 - General alarm warning light
10 - High beam warning light
11 - Low beam warning light
12 - Parking lights and instrument lights warning light
13 - Direction selector, dimmer switch, horn, blinking, front windshield wiper/washer

1 - LOW FUEL WARNING LIGHT

It comes on when about 17 litres of fuel are left in the tank and therefore it is necessary to refuel as soon as possible.

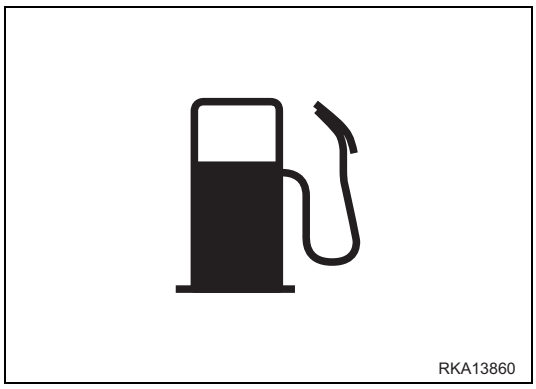

2 - FOUR-WHEEL DRIVE WARNING LIGHT

It comes on when the four-wheel drive is engaged.

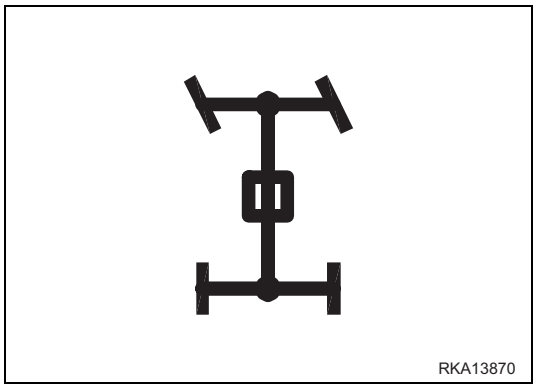

3 - DIFFERENTIAL LOCKING WARNING LIGHT

It comes on when the differential is locked by means of the push button positioned on the loader control lever (see "3.3.6 pos. 11 - DIFFERENTIAL LOCKING PUSH BUTTON").

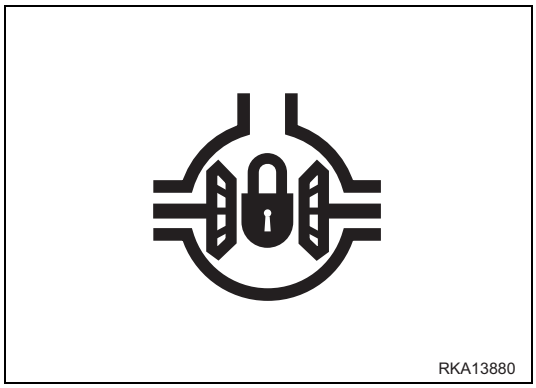

4 - PARKING BRAKE WARNING LIGHT

It comes on when the parking brake is applied.

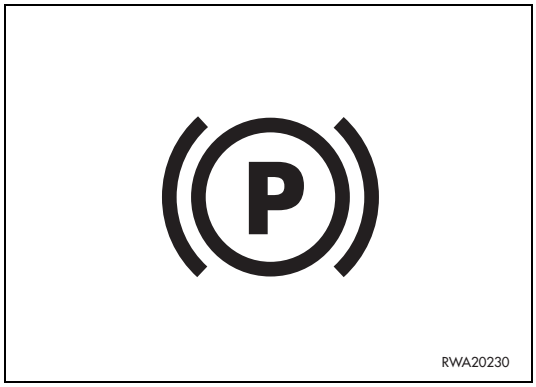

5 - TRANSMISSION OIL TEMPERATURE WARNING LIGHT

It comes on and activates the acoustic alarm when the transmission oil exceeds the maximum temperature allowed; when it comes on, immediately stop the machine, put it in neutral and let it cool down with the engine idling at approximately 1200 rpm until the warning light goes out. If this occurs repeatedly, have the machine inspected and if necessary repaired by an authorized repair shop.

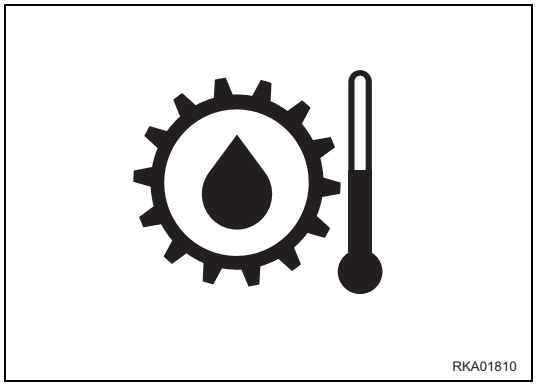

6 - LEFT DIRECTION INDICATOR WARNING LIGHT

It flashes on and off when the indicator (13) is operated to turn to the left, while it comes on at the same time as the warning light (7) when the hazard flashers are activated (see "3.3.2 pos. 16 - HAZARD FLASHERS").

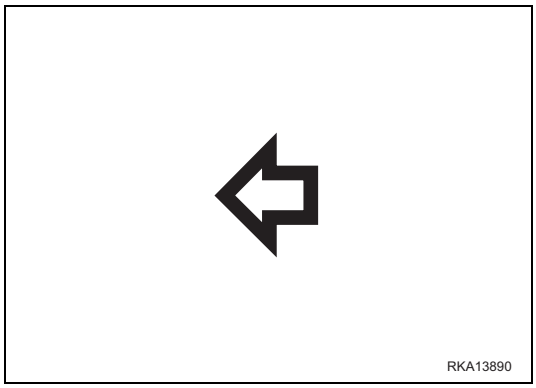

7 - RIGHT DIRECTION INDICATOR WARNING LIGHT

It flashes on and off when the indicator (13) is operated to turn to the right, while it comes on at the same time as the warning light (6) when the hazard flashers are activated (see "3.3.2 pos. 16 - HAZARD FLASHERS").

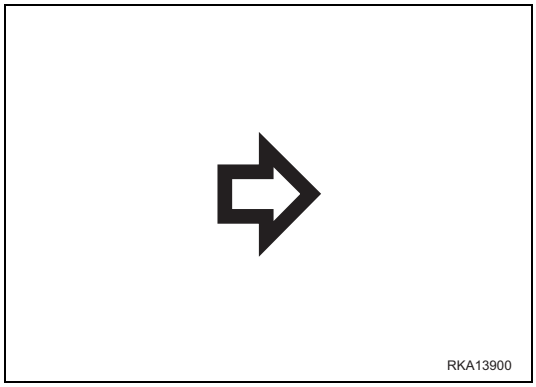

8 - LOW OIL PRESSURE OR BRAKING SYSTEM FAILURE WARNING LIGHT

It comes on to indicate that the brake oil pressure is low or that there is no oil in the reservoir due to leakages.

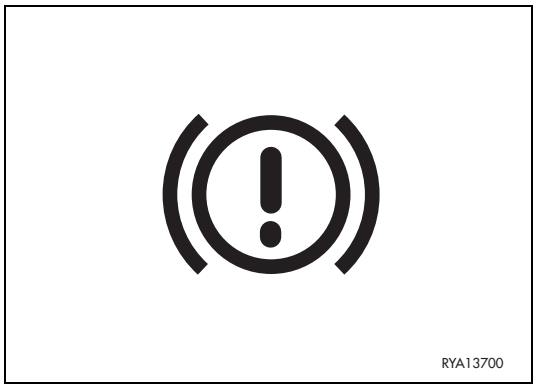

9 - GENERAL ALARM WARNING LIGHT

This warning light comes on:

a - for about 3 seconds, during the general warning light check that is performed every time the machine is started;

b - when the maximum temperature allowed for the engine coolant is exceeded;

c - when the engine oil pressure is low.

10 - HIGH BEAM WARNING LIGHT

It comes on when the high beam is operated through the dimmer switch - pos. (13).

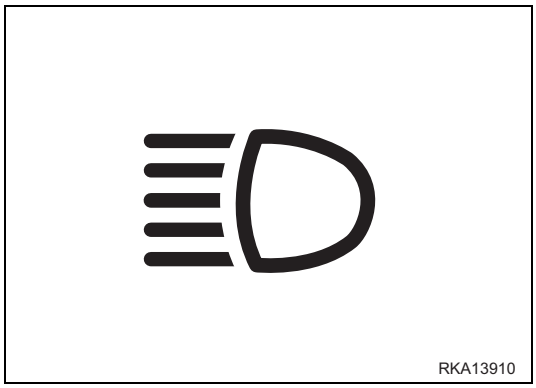

11 - LOW BEAM WARNING LIGHT

It comes on when the low beam is operated with two clicks of the switch (17) positioned on the side dashboard (see "3.3.2 pos. 17 - PARKING LIGHTS AND LOW BEAM SWITCH").

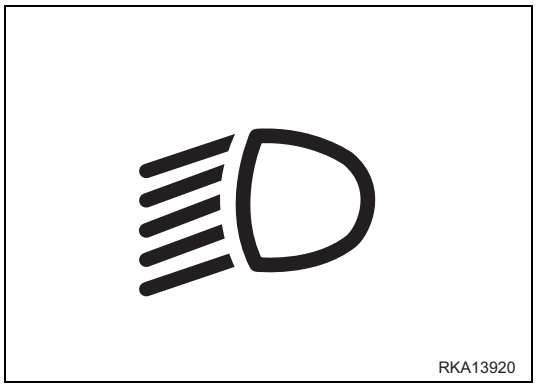

12 - PARKING LIGHTS AND INSTRUMENT LIGHTS WARNING LIGHT

It comes on when the parking lights are operated with one click of the switch (17) positioned on the side dashboard (see "3.3.2 pos. 17 - PARKING LIGHTS AND LOW BEAM SWITCH").

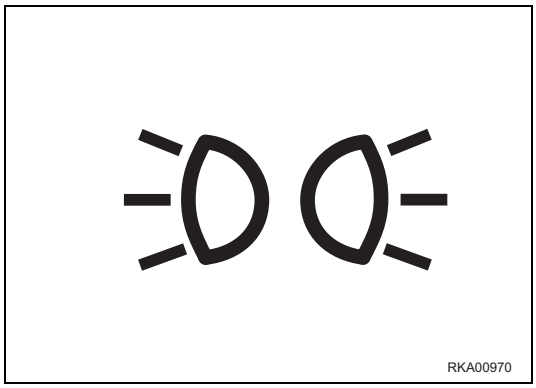

13 - DIRECTION SELECTOR, DIMMER SWITCH, HORN, BLINKING, FRONT WINDSHIELD WIPER/WASHER

This is a combined switch positioned under the steering wheel, on the right side, and controls the following functions:

A - Left direction indicator

B - Right direction indicator

C - Horn

D - Low beam/high beam switch-over

E - High beam blinking

F - Windshield wiper

G - Windshield washer

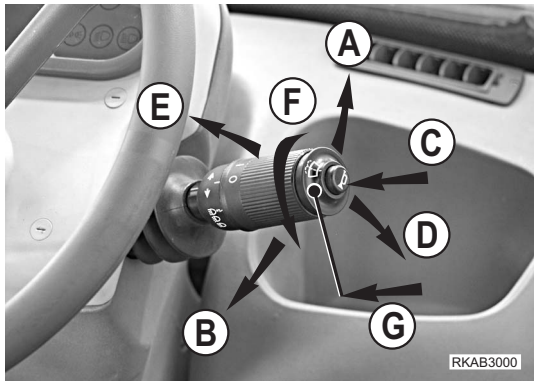

3.3.2 SIDE INSTRUMENTS

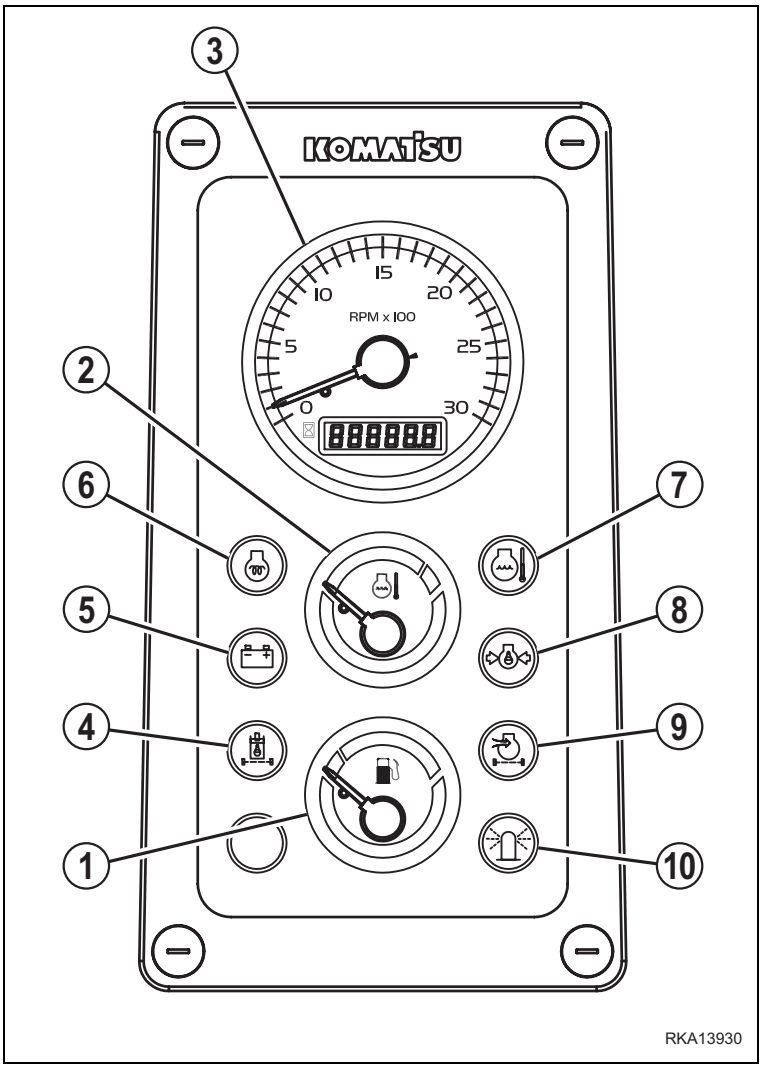

1 - Fuel level indicator
2 - Engine coolant temperature indicator
3 - Revolution counter - Hour meter
4 - Hydraulic oil filter clogging warning light
5 - Generator warning light
6 - Glow plug preheating warning light
7 - Engine coolant temperature warning light
8 - Engine oil pressure warning light
9 - Air filter clogging warning light
10 - Revolving light warning light
11 - Acoustic alarm
12 - Servo control locking button
13 - Backhoe speed control button
14 - Backhoe sliding lock switch
15 - Backhoe boom lock switch
16 - Hazard flashers
17 - Low beam and parking lights switch
18 - Four-wheel drive switch
19 - Rear horn
20 - Safety valve switch (if installed)
21 - Load stabilizer system switch (if provided)
22 - Optional equipment switch (if provided)
23 - Hydraulic hand hammer switch (if provided)
24 - Ignition switch
25 - Fan switch
26 - Air conditioner switch (if provided)

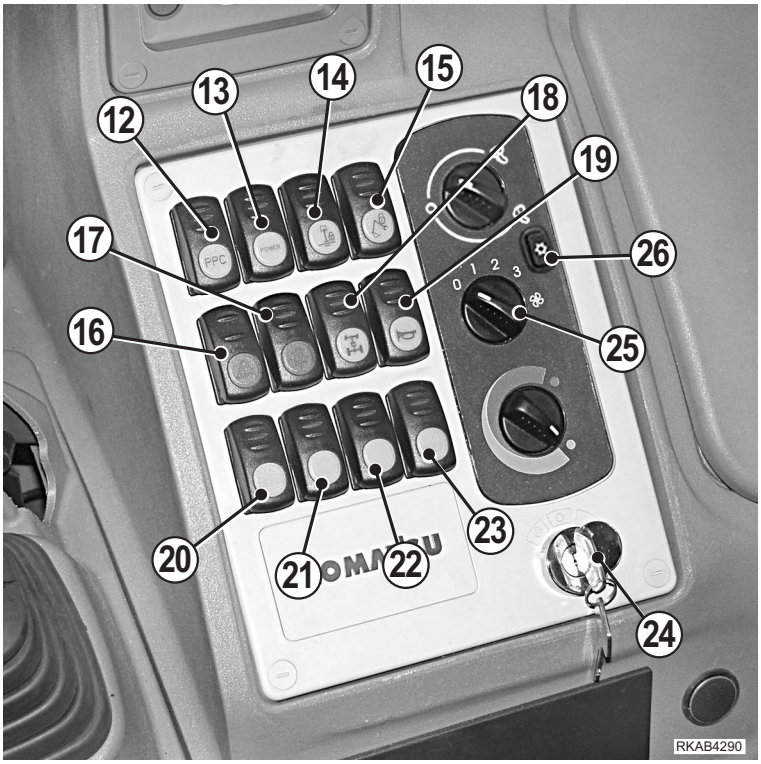

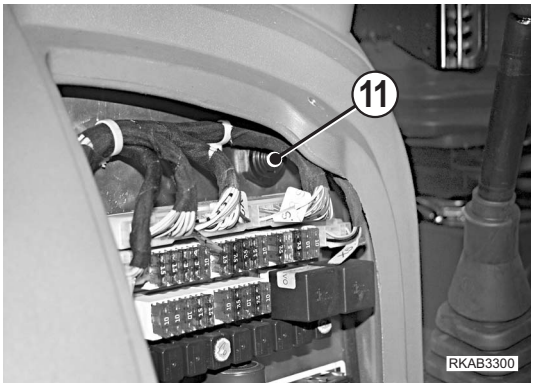

1 - FUEL LEVEL INDICATOR

It indicates the fuel level in the tank and functions only when the ignition key is in position «**I**».

IMPORTANT

- **If the indicator reaches the red low fuel area during work, stop the machine and provide for refuelling.**
- **The warning light (1) positioned on the front instrument panel signals when the fuel level is too low (see "3.3.1 pos. 1 - LOW FUEL WARNING LIGHT").**

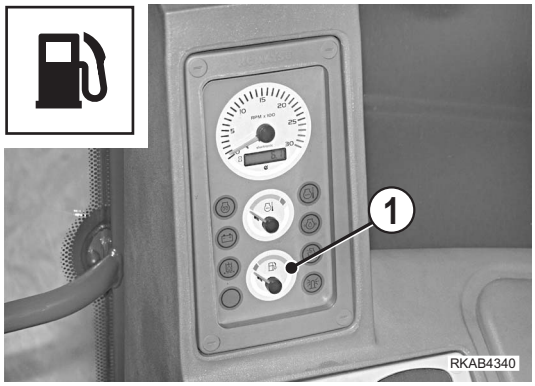

2 - ENGINE COOLANT TEMPERATURE INDICATOR

It indicates the engine coolant temperature, which normally must be included between 80°C and 85°C.
If the indicator reaches the red area, indicating that the temperature is too high, the acoustic alarm sends out a continuous signal, the warning light (7) comes on and the general alarm warning light flashes on and off (see "3.3.1 pos. 9 - GENERAL ALARM WARNING LIGHT").

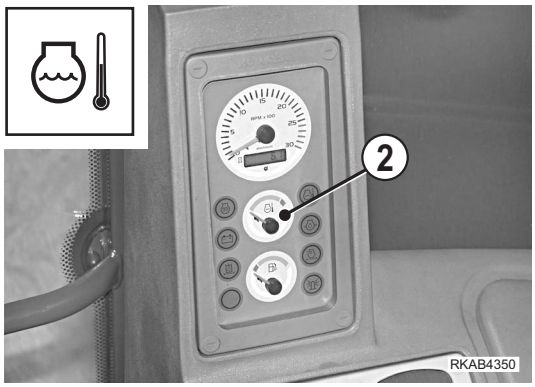

3 - REVOLUTION COUNTER - HOUR METER

This is a combined instrument that indicates the engine speed with a pointer, while the number of operating hours appears in the lower displays.
The count is continuous and the hour number is increased by one when the engine has worked for 1 hour, independently on the engine speed.
The hour counter keeps counting even if the machine isn't working or travelling.
The reading must be considered valid for the calculation of the maintenance intervals.

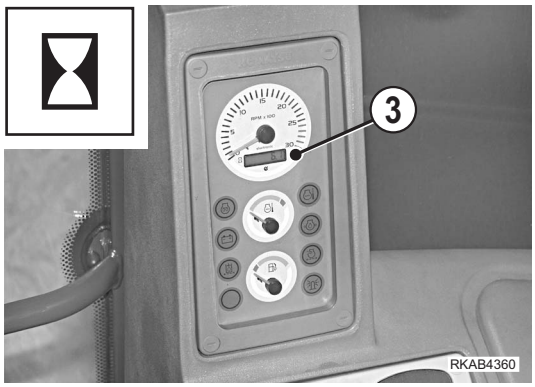

4 - HYDRAULIC OIL FILTER CLOGGING WARNING LIGHT

It comes on when the hydraulic oil filter is clogged and must be replaced (see "4.8.10.c CHANGING THE HYDRAULIC SYSTEM OIL FILTER").

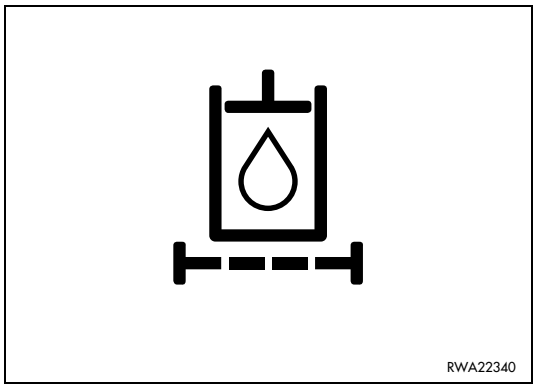

5 - GENERATOR WARNING LIGHT

This warning light comes on, together with the acoustic alarm, when the starting circuit is energized and goes out when the engine exceeds the idling rpm; if this warning light remains on even when the engine is running at the normal operating speed, this means that the alternator is not working and the battery is not charged correctly.

IMPORTANT

- **If the warning light remains off when the ignition key is turned to position «I», this means that the alternator is faulty or broken.**

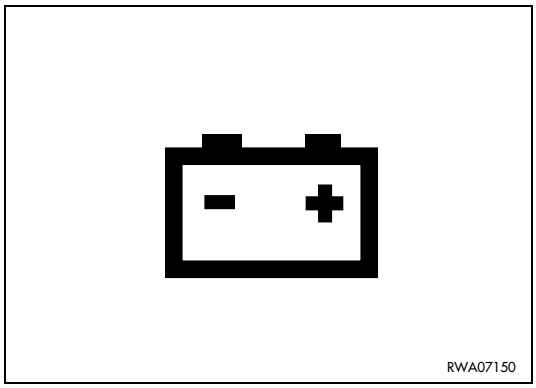

6 - GLOW PLUG PREHEATING WARNING LIGHT

It comes on when the ignition key is turned to position « » for the cold start of the engine (see "3.6.2.2 STARTING WITH COLD ENGINE OR IN COLD CLIMATES").

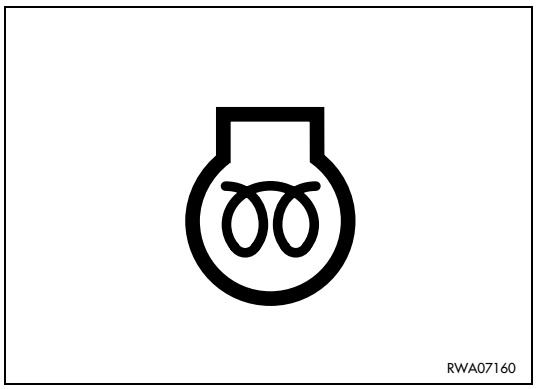

7 - ENGINE COOLANT TEMPERATURE WARNING LIGHT

This warning light comes on, together with the acoustic alarm, when the engine coolant exceeds the maximum temperature allowed; in this case, let the engine idle (approx. 1200 rpm) until it stops.
If this inconvenience occurs again, make sure that the radiator is clean.

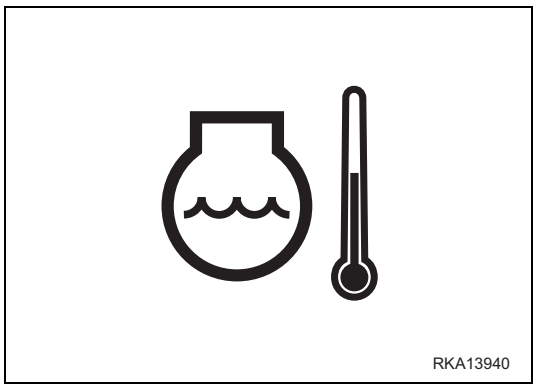

8 - ENGINE OIL PRESSURE WARNING LIGHT

This warning light comes on, together with the acoustic alarm, when the engine is not running and the starting circuit is operated and goes out as soon as the engine lubrication circuit is pressurized.
If it does not go out or comes on when the engine is running, stop the machine immediately and try to find the cause of the failure.

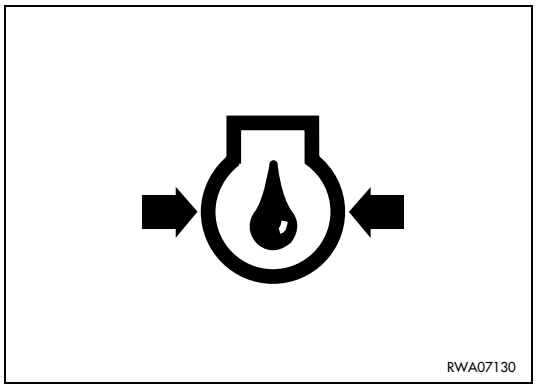

9 - AIR FILTER CLOGGING WARNING LIGHT

It comes one when the engine air filter needs cleaning (see "4.8.1.a CHECKING, CLEANING OR CHANGING THE ENGINE AIR FILTERS").

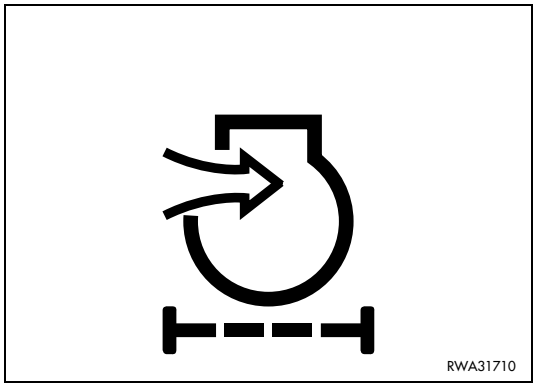

10 - REVOLVING LIGHT WARNING LIGHT

It comes on when the revolving light is operated by means of the switch positioned on the upper right side of the cab (see "3.3.5 pos. 2 - REVOLVING LIGHT SWITH").

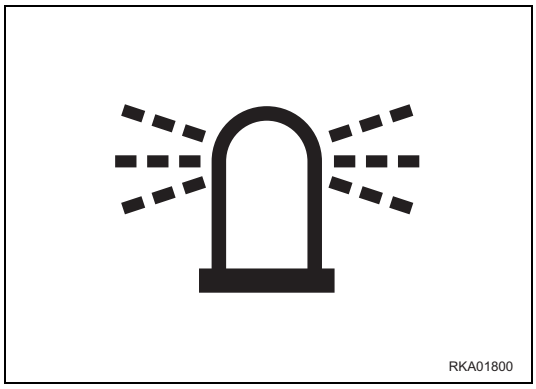

11 - ACOUSTIC ALARM

The acoustic alarm starts when the circuits are energized with the ignition key (turned to position «I») and stops automatically after the automatic check on the warning lights.
The sounding of the alarm when the machine is working signals the following anomalies:
• Insufficient engine oil pressure
• Overheating of the engine cooling circuit
• Overheating of the transmission oil
• Faulty alternator or worn belt
• Incorrect position of the seat while the machine is moving

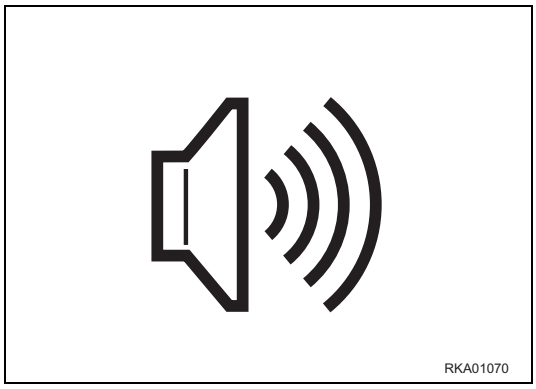

12 - SERVO CONTROL LOCKING BUTTON

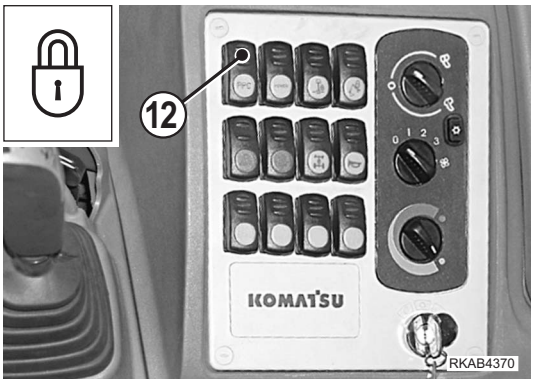

WARNING

- **When travelling on roads, always engage the servo control locking device.**

This button has the function to inhibit the servo controls and must be used when the machine travels on roads and as safety lock when leaving the driver's seat or parking the machine. To lock the servo controls, press the button (12) (LED on). Press the button again (LED off) to release the controls.

NOTE

- Whenever the machine is started, the controls are locked automatically (LED on); press the button (LED off) to use the controls.
- For safety reasons, the servo controls are locked automatically (LED on) when the seat is rotated by the operator to change driving position. The servo controls are automatically released (LED off) when the rotation has been completed and the seat is fixed in the correct driving position (front or rear).
- In the version with backhoe servo controls, this button serves to lock the backhoe controls, too.

13 - BACKHOE SPEED CONTROL BUTTON

This button allows the quantity of oil delivered by the hydraulic pump to be selected. Whenever restarted, the machine automatically selects the POWER mode (LED on), even if when it stopped the selected mode was ECONOMY. This position makes it possible to use the maximum oil delivery and is indispensable for a correct use of the backhoe. When the button is pressed (LED off), the ECONOMY operating mode is selected. To return to the POWER mode (LED on), press the button again. The machine passes automatically from POWER to ECONOMY mode when the forward or the reverse gear are engaged (reversing gear lever forward or backward). To return to the POWER mode, shift the lever back to the neutral position.

14 - BACKHOE SLIDING LOCK SWITCH

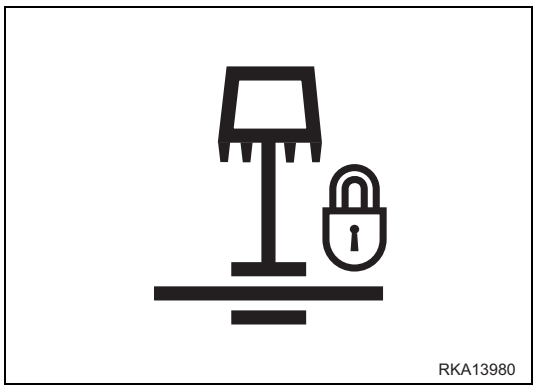

This switch has the function to release the backhoe unit from the sliding guides, in such a way as to make it possible to change the position of the backhoe with respect to the machine. The backhoe unit is generally fixed on the guides and the switch is not operated (LED off). When pressed, the switch comes on and releases the unit from the guides, thus allowing the backhoe to slide; once the desired position has been reached, press the switch again to fix the backhoe unit (LED off).

15 - BACKHOE BOOM LOCKING BUTTON

This is a button that automatically returns to position OFF and is used to couple the safety lock to the boom when the backhoe is not going to be used or when the machine travels on roads.
Press the button (LED on) to lift the safety lock; this is indispensable to position the boom correctly before the coupling operation.
Release the button (LED off) to lower the lock and couple it to the boom.
For the use of this button, see "3.6.1.1 pos. 8 - BACKHOE BOOM LOCKING BUTTON".

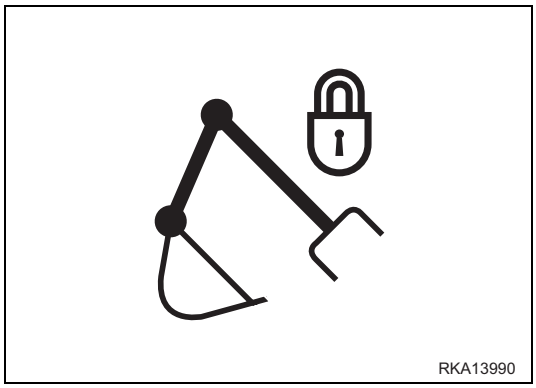

16 - HAZARD FLASHERS

This button operates both direction indicators at the same time and must be used whenever, while travelling on roads, the machine is temporarily parked/stopped on the roadway or in any case in anomalous position.

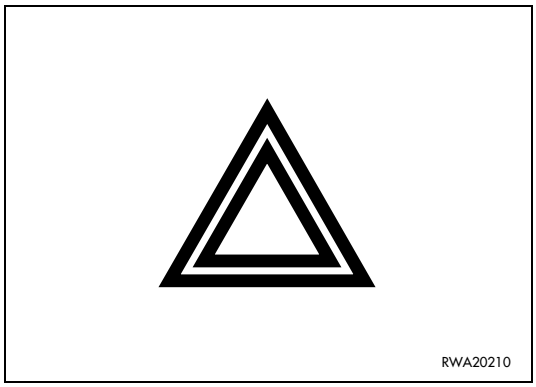

17 - PARKING LIGHTS AND LOW BEAM SWITCH

This is a two-position switch; with one click it switches on the parking lights and instruments, with two clicks it switches on the low beam. The parking lights can be switched on even with the machine at rest.

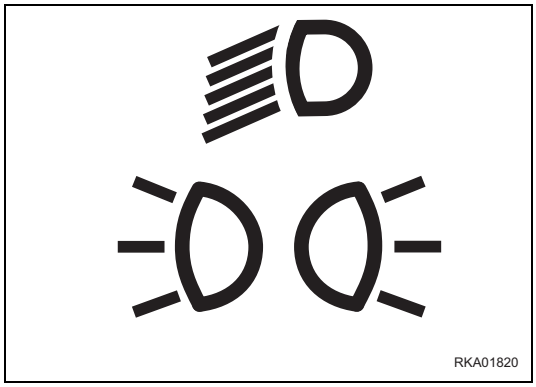

18 - FOUR-WHEEL DRIVE SWITCH

When pressed (LED on), this switch engages the four-wheel drive. When the switch is pressed, also the warning light pos. (2) on the front instrument panel comes on (see "3.3.1 pos. 2 - FOUR-WHEEL DRIVE WARNING LIGHT").
When pressed again (LED off), it disengages the four-wheel drive.

IMPORTANT

- **When travelling at high speed and on roads, disengage the four-wheel drive.**
- **The four-wheel drive is automatically engaged when the brake pedals are pressed, and only with the 4th gear engaged.**

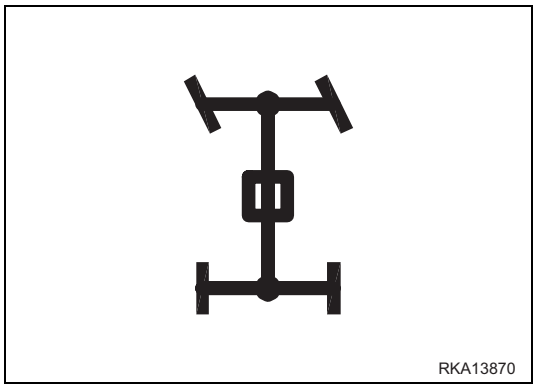

19 - REAR HORN

It serves to warn the persons in the surrounding area before starting work and in case of danger when working with the backhoe.

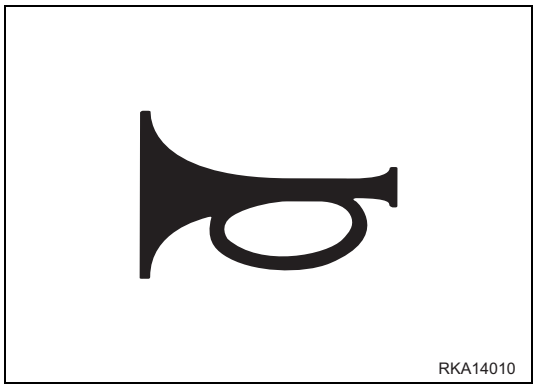

20 - ELECTRIC SAFETY VALVE SWITCH (if installed)

When pressed (LED on), this switch deactivates the safety valves installed on the front loader cylinders.
When pressed again (LED off), it reactivates the safety valves.

IMPORTANT

- **Always deactivate the electric safety valves when the load stabilizer system “LSS” is operated.**
  For further information regarding the “LSS”, see "6.11 LOAD STABILIZER SYSTEM (LSS) (Optional)".

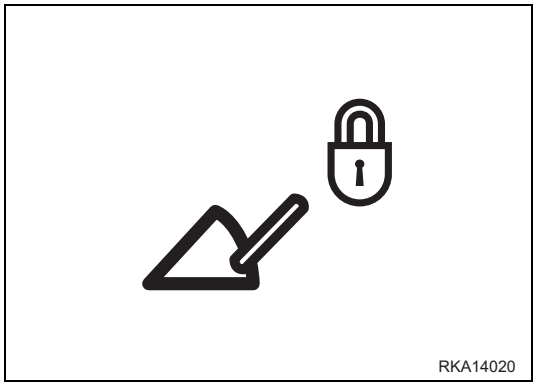

21 - LOAD STABILIZER SYSTEM SWITCH “LSS” (if provided)

Pressing the switch (LED on) enables the load stabilizer system LSS.
When the switch is in this position the battery can be recharged and the pressure is kept constant.
For further information on the LSS system, see "6.11 LOAD STABILIZER SYSTEM (LSS) (Optional)".
Press the switch again (LED off) to disable the load stabilizer system.

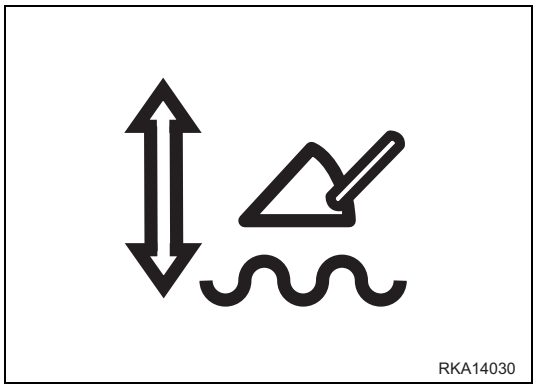

22 - OPTIONAL EQUIPMENT SWITCH (if provided)

23 - HYDRAULIC HAND HAMMER SWITCH (if provided)

When pressed (LED on), this switch enables the hydraulic circuit of the hand hammer. When pressed again (LED off), it disables the circuit.

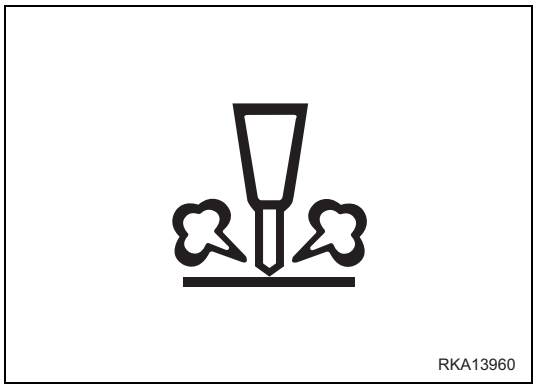

24 - IGNITION SWITCH

The ignition switch is a rotary key switch with four positions marked with the following symbols «⚷» - O (OFF) - «I» - «⚷» (START).
For further details on the use of this switch, see "3.6.2 STARTING THE ENGINE").

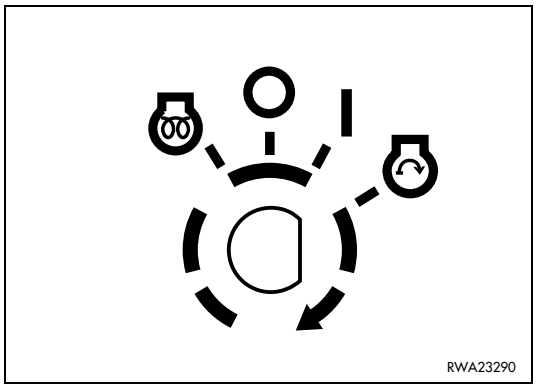

25 - FAN SWITCH

It is a three-speed switch and operates the fan motor.
Turn the switch clockwise to increase the fan speed.
If operated after opening the cock installed on the heater, it ensures the circulation of warm air and serves as heating switch (see "3.5.3 VENTILATION AND HEATING").
The temperature of the air delivered by the heater can be adjusted through the knob positioned under the switch. Turn the knob clockwise to increase the temperature and counterclockwise to reduce it.
If the machine is provided with air conditioning system, the same knob can be used to adjust the air flow and therefore the temperature inside the cab. For further information, see "3.5.4 AIR CONDITIONER (if installed)".

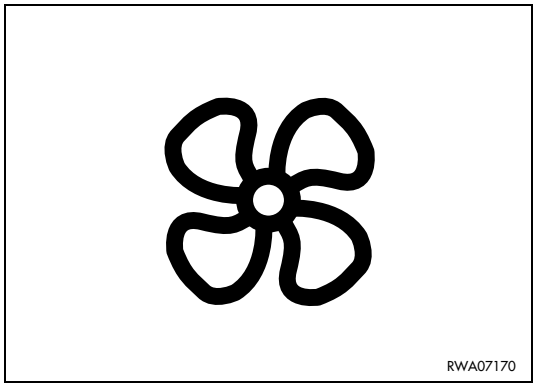

26 - AIR CONDITIONER SWITCH (if provided)

Press the switch (LED on) to start the compressor of the air conditioner.
For further information on the operation of the air conditioning system, see "3.5.4 AIR CONDITIONER (if installed)".
Press the switch again (LED off) to stop the air conditioner.

IMPORTANT

- **It is advisable to start the air conditioner only with low engine rpm and not during acceleration, to avoid damaging the system or breaking the compressor drive belt.**

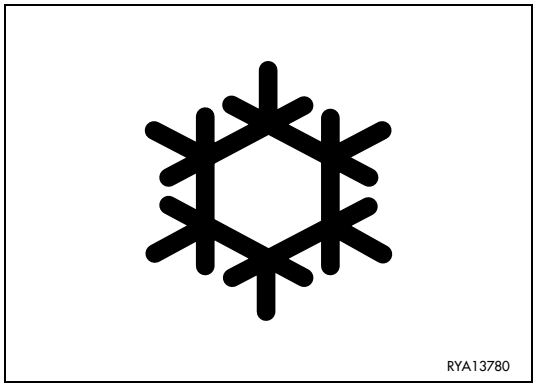

3.3.3 PUSH BUTTONS ON THE FRONT LOADER CONTROL LEVER

1 - Declutch push button
2 - Differential locking push button
3 - 4in1 bucket opening push button
4 - 4in1 bucket folding push button
5 - Front loader speed control push button

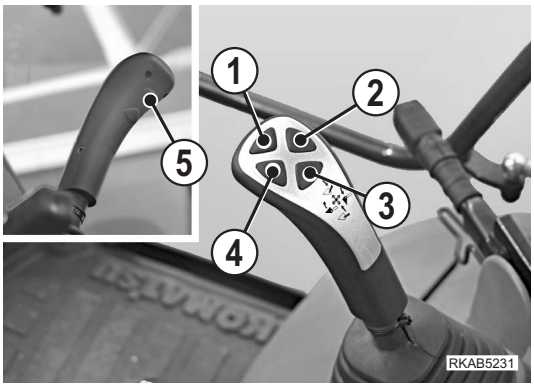

1 - DECLUTCH PUSH BUTTON

This push button is used to transform all the engine power into the hydraulic power necessary to lift the material. (See "3.3.6 pos. 10 - DECLUTCH PUSH BUTTON").

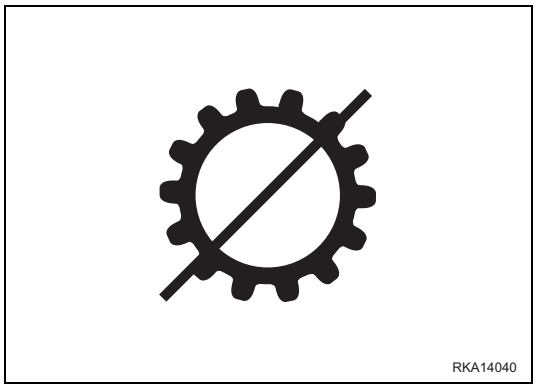

2 - DIFFERENTIAL LOCKING PUSH BUTTON

This push button must be used with low gears and reduced speed, only when it is necessary to make the rear driving wheels integral with each other in case of slipping (see "3.3.6 pos. 11 - DIFFERENTIAL LOCKING PUSH BUTTON").
The warning light (3) on the front instrument panel (see "3.3.1 pos. 3 - DIFFERENTIAL LOCKING WARNING LIGHT") indicates that the push button is in use.

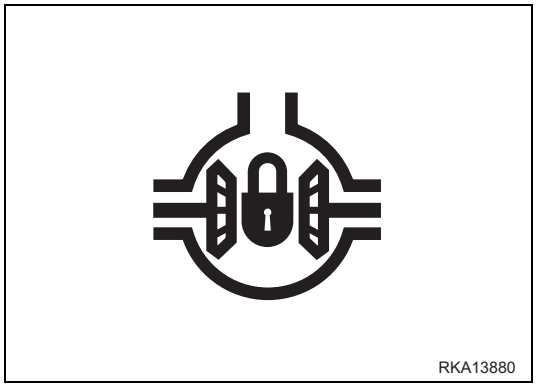

3 - 4IN1 BUCKET OPENING PUSH BUTTON

Press the push button to open the bucket; when the push button is released, the bucket stops. (See "3.3.6 pos. 12 - 4 IN1 BUCKET OPENING PUSH BUTTON").

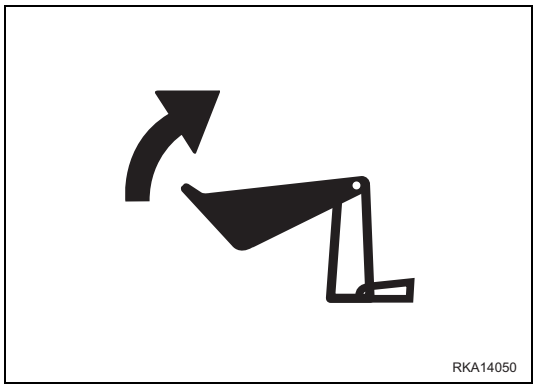

4 - 4IN1 BUCKET FOLDING PUSH BUTTON

Press the push button to fold the bucket; when the push button is released, the bucket stops. (See "3.3.6 pos. 13 - 4 IN1 BUCKET FOLDING PUSH BUTTON").

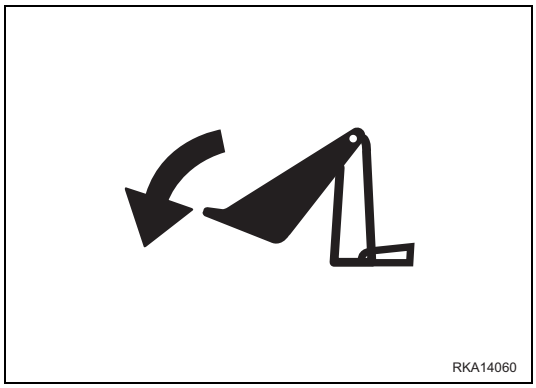

5 - FRONT LOADER SPEED CONTROL PUSH BUTTON

This button is used to increase the speed of the front loader movements.

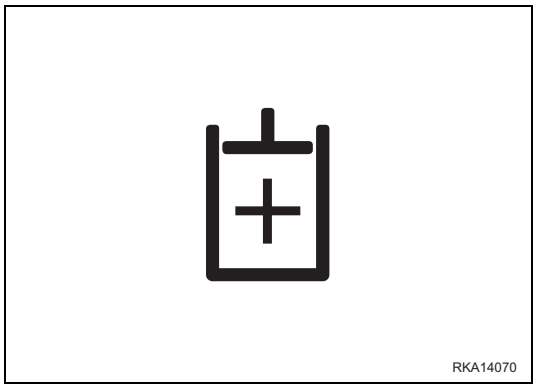

3.3.4 PUSH BUTTON ON THE GEARSHIFT LEVER

1 - DECLUTCH PUSH BUTTON

This push button is used to shift gears when the machine is travelling. (See "3.3.6 pos. 15 - DECLUTCH PUSH BUTTON").

3.3.5 CAB SWITCHES AND ELECTRIC ACCESSORIES

1 - FRONT WORK LIGHT SWITCH

This switch enables the front work lights installed on the cab.

IMPORTANT
- **When travelling on roads, switch off the work lights.**

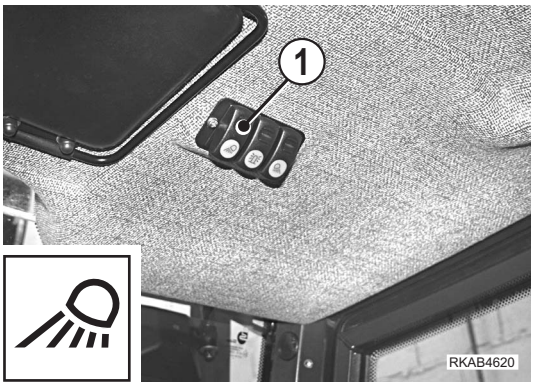

2 - REVOLVING LIGHT SWITH

This switch must be operated when it is necessary to travel on roads and after connecting the light to the outlet installed on the cab roof.

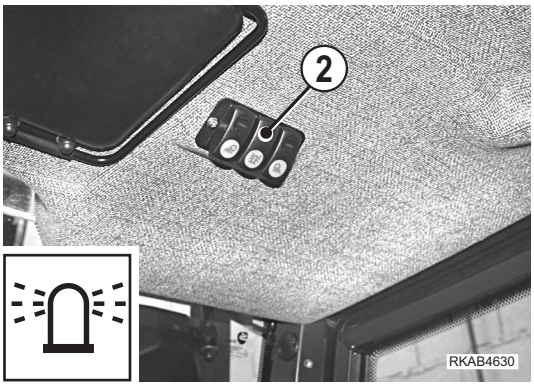

3 - REAR WORK LIGHT SWITCH

This switch enables the rear work lights installed on the cab.

IMPORTANT
- **When travelling on roads, switch off the work lights.**

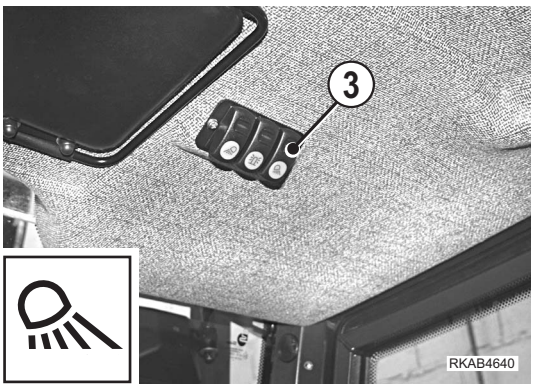

4 - REAR WINDSHIELD WIPER SWITCH

This switch operates the rear windshield wiper.

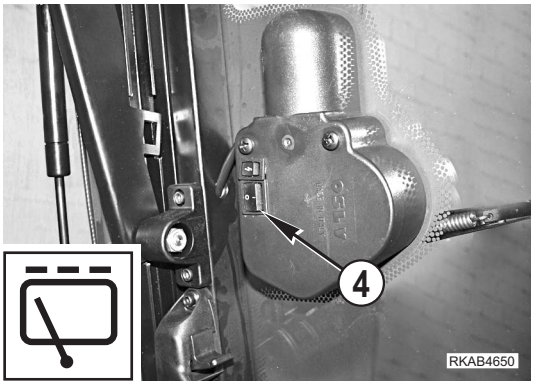

5 - REAR WINDSHIELD WASHER SWITCH

This switch, with automatic return to the OFF position, operates the rear windshield washer.

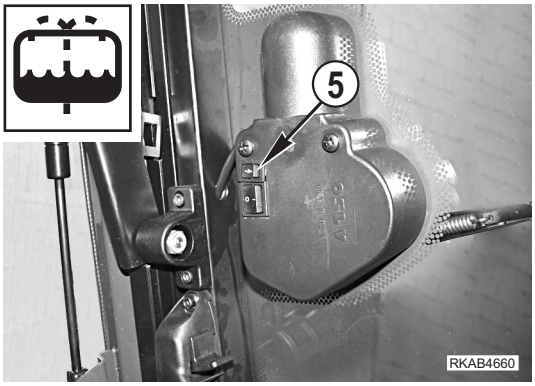

6 - OVERHEAD LAMP

The overhead lamp is used to check the instruments and the inside of the cab when visibility is scarce.

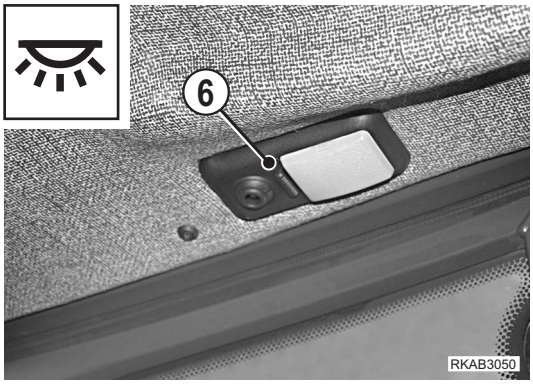

7 - POWER OUTLET

The 12V power outlet is in compliance with the ISO 4165-1979 standard.
It is used for the connection of the revolving light, of the inspection lamp when maintenance operations are to be carried out and visibility is scarce, and of the emergency light.
The outlet is powered with the revolving light switch. (See "3.3.2 pos. 13 - BACKHOE SPEED CONTROL BUTTON").

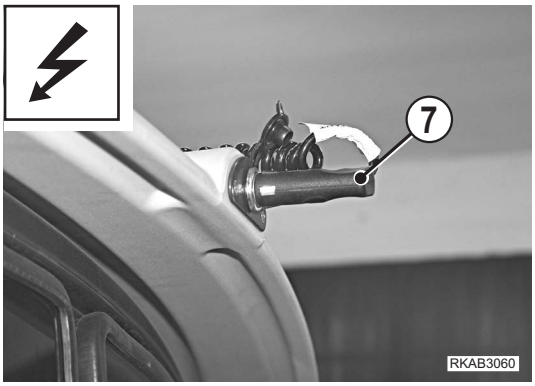

8 - CIGARETTE LIGHTER SOCKET

The socket (8) is positioned on the lower part of the side dashboard and is powered by a 12V supply. It is used for the cigarette lighter and is perfectly compatible with the cigarette lighters available on the market. It can also be used to recharge mobile phones. Before use, remove the protection cap.

9 - BATTERY DISCONNECTION SWITCH (if provided)

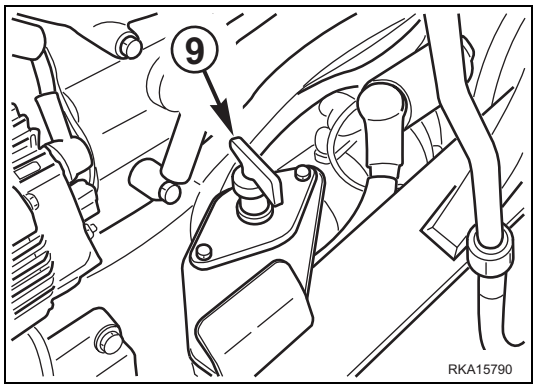

The battery disconnection switch (9) is positioned on the left side of the machine, inside the engine compartment, and can be reached by opening the engine hood (see "3.5.1 ENGINE HOOD").
It is possible to interrupt the passage of current from the battery to the electric system of the machine by turning the switch counterclockwise and releasing it. Always interrupt the passage of current before carrying out any operation on the battery or the electric system and before carrying out any welding operation on the machine.
To restore the electric contact, put back the switch and turn it clockwise.

10 - APERTURE FOR THE INSTALLATION OF A CAR RADIO (if provided)

If the machine is provided with an aperture for the installation of a car radio, remove the cover (10) and install the radio.

IMPORTANT

- **For use, keep to the instructions contained in the booklet supplied together with the radio.**

3.3.6 MACHINE CONTROLS

3.3.6.1 MACHINE CONTROLS (version with mechanically-controlled backhoe)

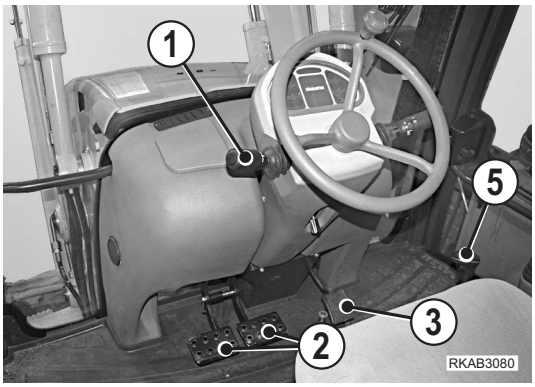

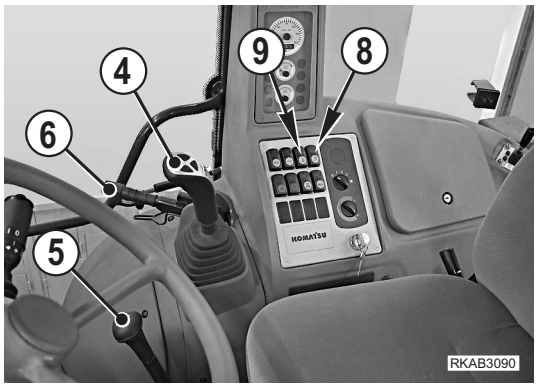

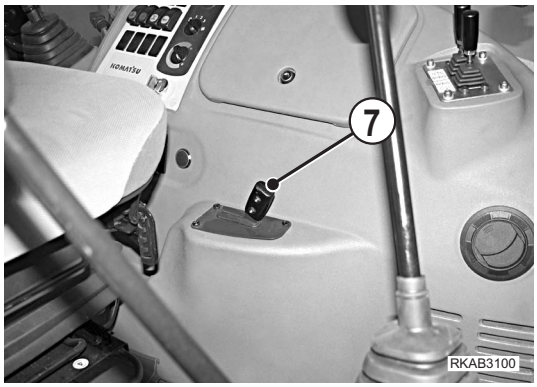

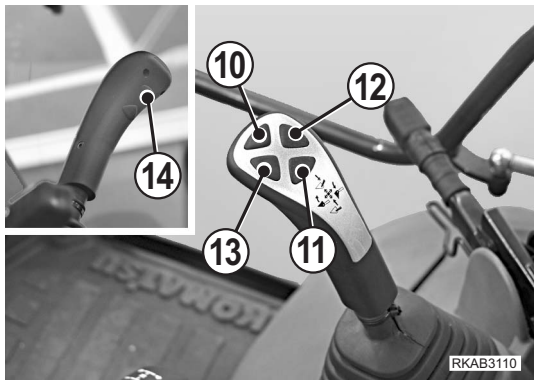

1 - Reversing gear lever
2 - Brake pedals
3 - Accelerator
4 - Front loader control lever
5 - Gearshift lever
6 - Parking brake
7 - Hand accelerator
8 - Backhoe boom locking button
9 - Backhoe sliding lock switch
10 - Declutch push button
11 - Differential locking push button
12 - 4in1 bucket opening push button
13 - 4in1 bucket folding push button
14 - Front loader speed control push button
15 - Declutch push button

16 - Left stabilizer control lever
17 - Right stabilizer control lever
18 - Left backhoe control lever
19 - Right backhoe control lever

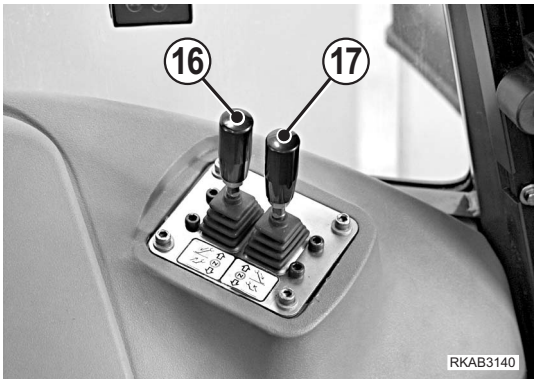

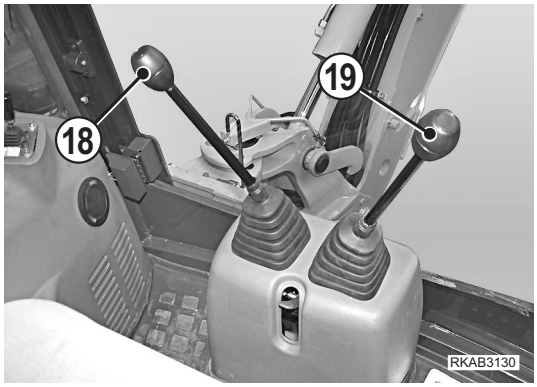

3.3.6.2 MACHINE CONTROLS (version with servo-assisted backhoe)

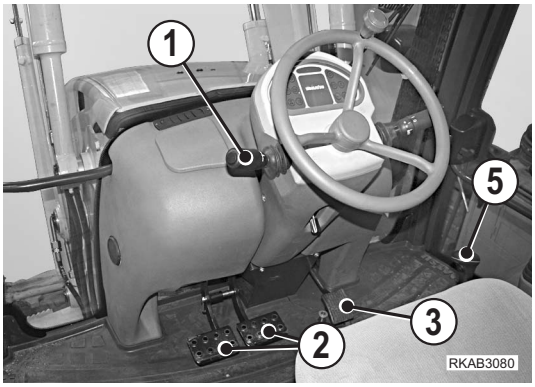

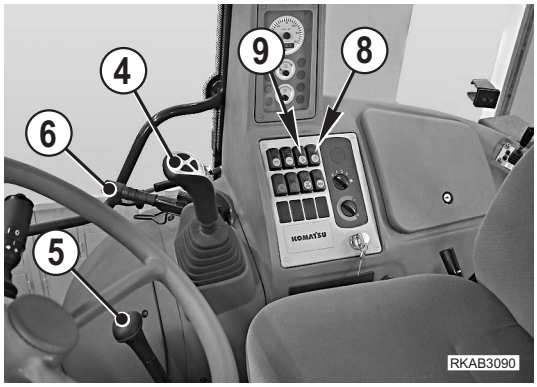

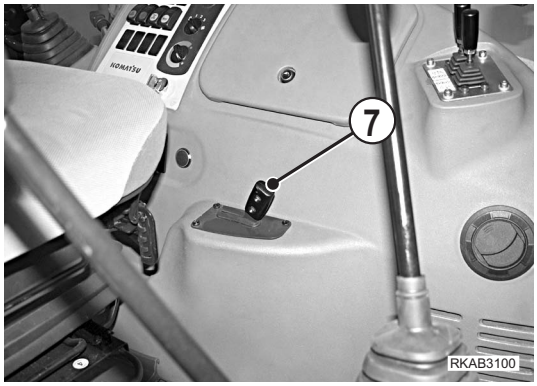

1 - Reversing gear lever
2 - Brake pedals
3 - Accelerator
4 - Front loader control lever
5 - Gearshift lever
6 - Parking brake
7 - Hand accelerator
8 - Backhoe boom locking button
9 - Backhoe sliding lock switch
10 - Declutch push button
11 - Differential locking push button
12 - 4in1 bucket opening push button
13 - 4in1 bucket folding push button
14 - Front loader speed control push button
15 - Declutch push button

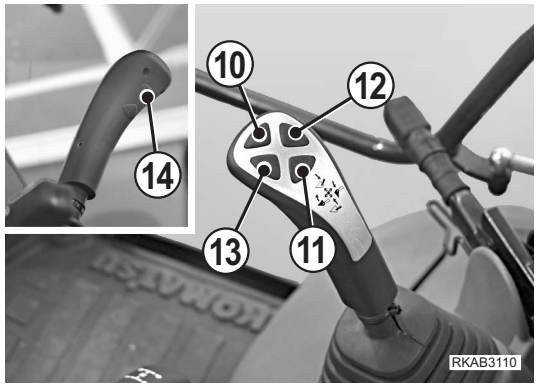

16 - Left stabilizer control switch
17 - Right stabilizer control switch
18 - Left backhoe control lever
19 - Right backhoe control lever
20 - Pattern change control lever (if provided and only for the version with servo-assisted backhoe)

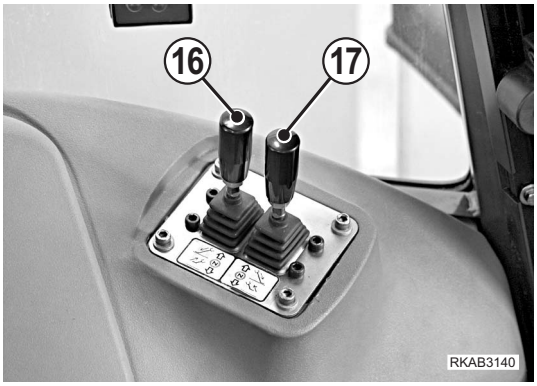

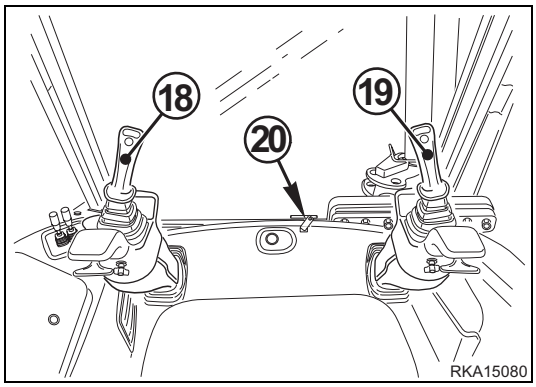

1 - REVERSING GEAR LEVER

WARNING

- **When it is necessary to park or leave the machine unattended, even if temporarily, shift the lever to position (N) and always apply the parking brake.**
- **The machine is equipped with an acoustic alarm that is activated if the operator, with the engine running, shifts the reversing gear lever (1) to position F or R with the seat rotated in any position different from the correct driving position.**
  This is a danger signal, since it is absolutely forbidden to move the machine while working with the backhoe equipment or in any case with the seat rotated by 180° with respect to the regular driving position.
  Remember that the operator is allowed to move the machine only when seated in the correct driving position, with locked seat and fastened safety belt.
- **Non-compliance with these rules may cause serious accidents.**

IMPORTANT

- **Operate the lever only when the engine is running at low speed.**
- **The engine can be started only with the lever in neutral position (N).**
- **If the operator deems it necessary, the machine may also be equipped with an acoustic alarm for movements in reverse.**
  This device can be installed on a special area in the rear part of the frame (see "2.4.4 CHECKS FOR TRAVELLING IN REVERSE"); before travelling in reverse, make sure that the acoustic alarm functions perfectly.
  To check the functionality of this acoustic alarm, proceed as follows:
  - start the machine (see "3.6.2 STARTING THE ENGINE");
  - press the brake pedals;
  - shift the reversing gear lever (1) to the reverse position R.
  If the alarm doesn't work, have the machine checked by your Komatsu Dealer.

By lifting this lever and rotating it on the vertical axis, it is possible to select:

F - the forward travel, if the lever is shifted FORWARD

R - the reverse, if the lever is shifted BACKWARD

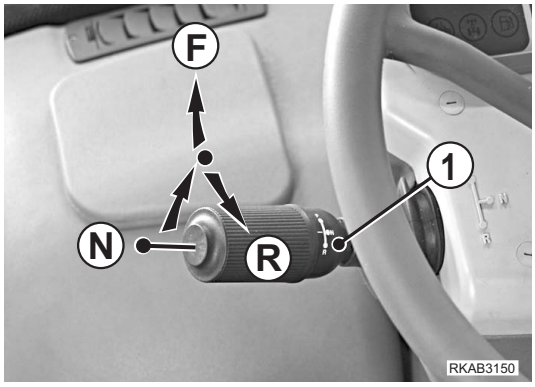

2 - BRAKE PEDALS

WARNING

- **The brake pedals must always be connected when the 3rd or 4th gear is engaged and when the machine travels on roads.**
- **Non-compliance with this rule may result in serious accidents.**

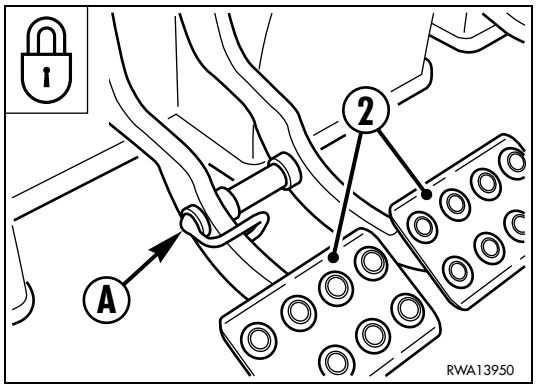

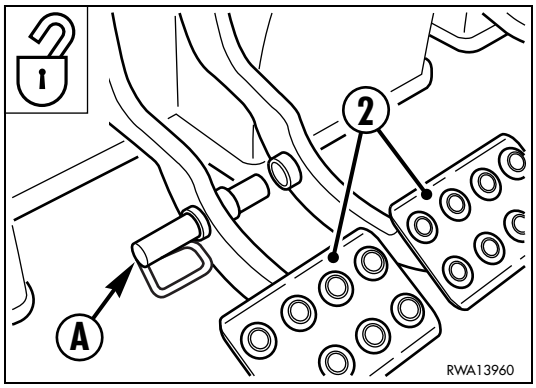

The machine is provided with two split brake pedals that make it possible to turn sharply in small work areas with many obstacles; with the right pedal it is possible to make sharp turns to the right, with the left pedal it is possible to make sharp turns to the left.
When the pedals (2) are used individually, reduce the speed and keep the bucket as low as possible. The pedals must always be connected with each other by means of the connection pin (A) when the high gears are engaged and when the machine travels on roads.

IMPORTANT

- **When the machine is running at high speed and only with the 4th gear engaged, the braking power is increased with the automatic engagement of the four-wheel drive.**

3 - ACCELERATOR

Use the accelerator with care, especially when the machine is under strain or is working in difficult conditions. Avoiding useless accelerations means reducing consumption and extending the service life of both the engine and the machine.

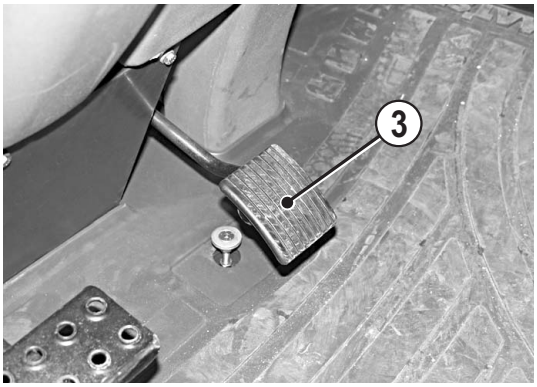

4 - FRONT LOADER CONTROL LEVER

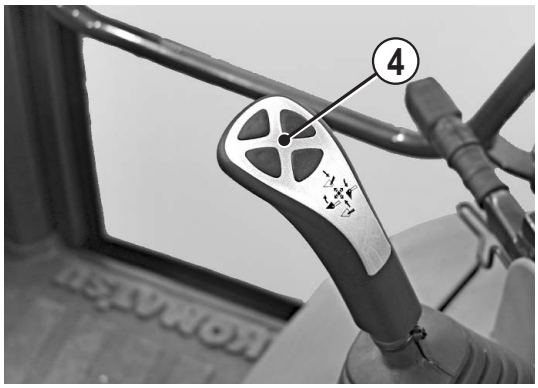

WARNING

- **Before carrying out any manoeuvre with this lever, the operator must be seated in the driving position, with fastened safety belt.**
- **If the loader control lever has to be used during travel, avoid any abrupt and quick movement that may affect the balance of the machine and make it difficult to drive.**
- **If it is necessary to leave the machine on a slope, take all the precautions aimed at preventing any uncontrolled movement of the machine itself. (See "3.7 PARKING THE MACHINE").**
- **Before leaving the operator's seat, lower the bucket to the ground and engage the safety lock before stopping the engine.**

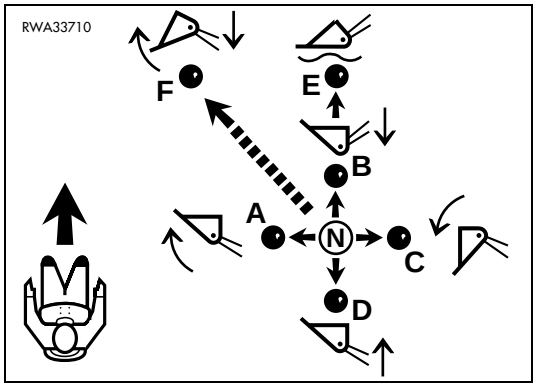

The front loader control lever (4) is positioned on the operator's right and controls the lifting and lowering of the arm and the folding and dumping of the bucket according to the orthogonal movements listed below.
If the machine is properly equipped, the shifting of the lever to position **E** (one click) sets the loader to a free, or floating position, that is, to a position in which it can automatically follow the undulation of the ground.
Shifting the lever (4) 45° towards the axis of the machine (**F**) activates the "Return-to-dig" device, which controls the lowering of the loader arm and at the same time folds the bucket in loading position.
As soon as the bucket touches the ground, the "Return-to-dig" device is disconnected and the machine returns to normal operating conditions.

N - Neutral

A - Bucket folding

B - Arm lowering

C - Bucket dumping

D - Arm lifting

Only with the appropriate equipment:

E - Free (floating) arm

F - Self-leveling (return-to-dig)

If the lever is shifted following an inclined direction with respect to the machine axes, simultaneous movements, proportional to the inclination angle, are obtained, since the two hydraulic distributors responsible for the single functions are operated at the same time.

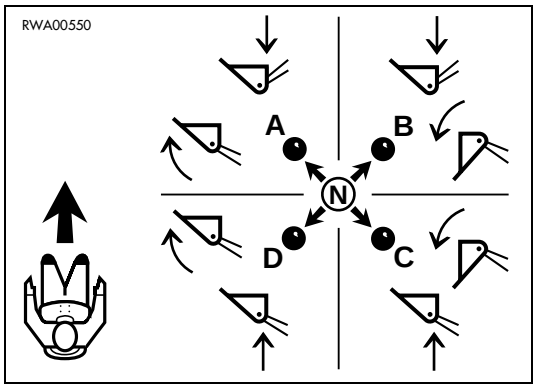

N - Neutral

A - Arm lowering - Bucket folding

B - Arm lowering - Bucket dumping

C - Arm lifting - Bucket dumping

D - Arm lifting - Bucket folding

IMPORTANT

- **All movements are inhibited when the safety button (A) is in locking position (LED on) (see "3.3.2 pos. 12 - SERVO CONTROL LOCKING BUTTON").**

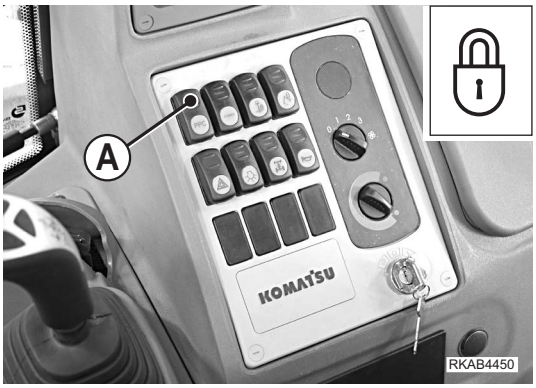

CAUTION

- **When the machine travels on roads, the servo control locking device must always be activated.**

5 - GEARSHIFT LEVER

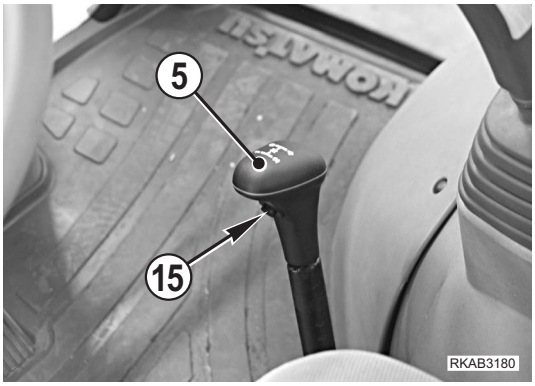

⚠ WARNING

- **Since no mechanical connection is provided between the gearbox and the engine, if the machine is parked on a slope it can move freely even with engaged gears; for this reason, always apply the parking brake, in order to avoid any damage.**
- **Engage the gears only with the engine running at low speed.**
- **Avoid shifting up when using the machine for heavy-duty applications.**
- **Always shift the lever to the neutral position (N) when parking or leaving the machine unattended, even if temporarily.**

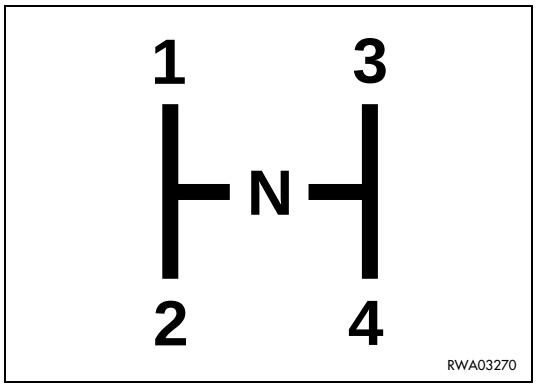

By means of the lever (5) it is possible to engage one of the four available gears, which are arranged according to the diagram.
The choice of the gear to be engaged is up to the operator; it is advisable to use the low gears for heavy-duty applications and to use the high gears for movements on flat surfaces or to travel at high speed.
This precaution serves to protect the converter unit from dangerous overheatings.

IMPORTANT

- **During normal travel, the gears can be shifted up or down with the declutch push button (15) pressed. (See "3.3.6 pos. 15 - DECLUTCH PUSH BUTTON").**
- **Before shifting down, decelerate by putting on the brakes.**

6 - PARKING BRAKE

CAUTION

- **The parking brake must be applied whenever it is necessary to leave the driving position, even if temporarily.**
- **The machine must be parked with the rear wheels firmly resting on a flat surface.**
  If one of the rear wheels is unstable or rests on a small obstacle, the machine may move.
- **Periodically check the brake efficiency.**
  Non-compliance with these rules may cause serious accidents or even death.
- **The parking brake must be released if the machine breaks down and it is necessary to remove it.**

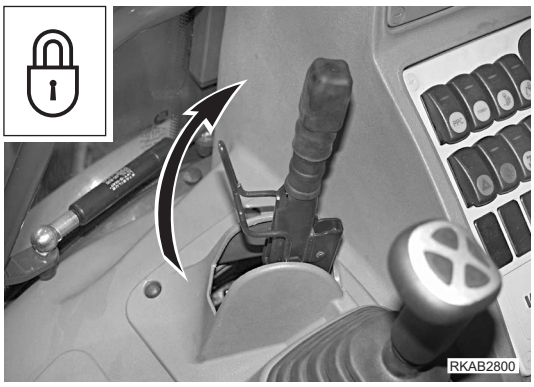

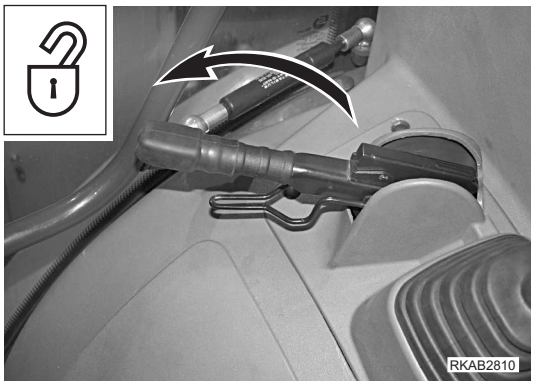

Braking is obtained by pulling the lever completely upwards, until the safety device is coupled; release is obtained by pressing the lower safety device while releasing the lever, which automatically returns downward.

CAUTION

- **The warning light 4 on the front instrument panel (see "3.3.1 pos. 4 - PARKING BRAKE WARNING LIGHT") signals that the parking brake is applied.**
- **In order to ensure safety, when the parking brake is applied the functions of the reversing gear lever are inhibited (see "3.3.6 pos. 1 - REVERSING GEAR LEVER").**

7 - HAND ACCELERATOR

WARNING

- **The use of the hand accelerator is allowed only under the conditions specified below; use in any other condition may cause serious accidents.**

The hand accelerator can be used only when the engine is warming up and successively only when it is necessary to work with the backhoe; it can also be used for certain maintenance operations.

Idling position: pull the lever completely backward.

Max. speed position: push the lever completely forward.

CAUTION

- **The maximum speed position corresponds to 1900–2000 rpm.**

For a correct use of the lever, keep to the indications given on the plate (C) applied inside the right dashboard.If possible, avoid using the machine with the lever completely pushed forward, since in this way consumption will be considerably increased and the life of both the engine and the machine shortened.
The plate (C) is characterized by two coloured areas, the green area **"A"** and the red area **"B"**, referring to different engine speeds:

- **Green area "A"**: this area indicates an engine speed of 1700 rpm, which is the value recommended to the operator.
- **Red area "B"**: this area indicates an engine speed up to 1900 ± 50 rpm, which is the maximum speed allowed for the use of the backhoe.
  The engine speed can be checked on the revolution counter positioned on the right dashboard. See "3.3.2 pos. 3 - REVOLUTION COUNTER - HOUR METER".

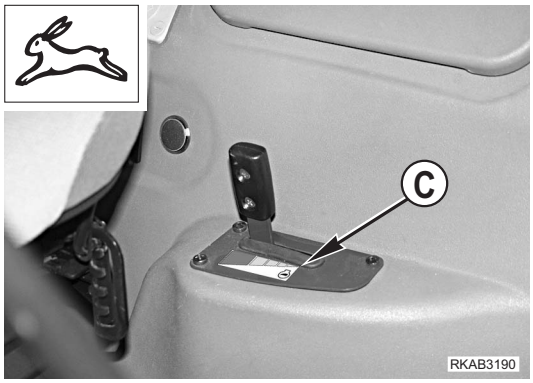

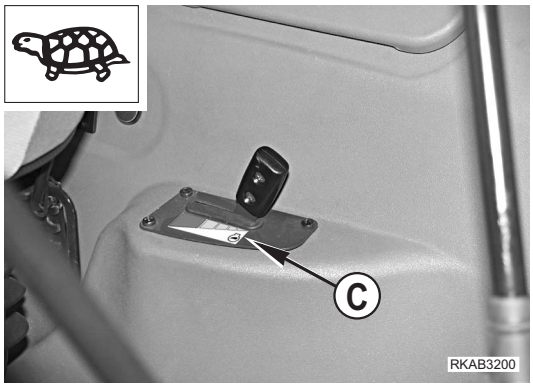

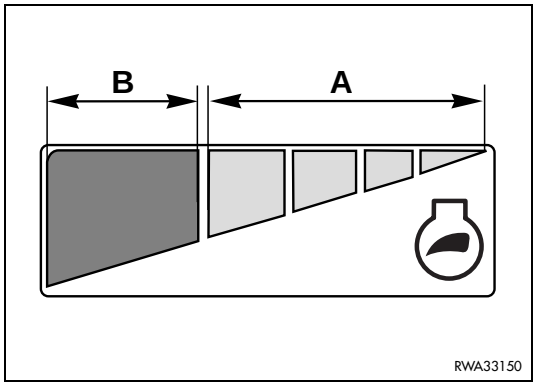

8 - BACKHOE BOOM LOCKING BUTTON

WARNING

- **Always engage the boom safety lock when the backhoe is not going to be used and when travelling on roads.**

This switch automatically returns to position OFF and is used to couple the boom to the safety lock (A).
When it is in rest position (LED off), the backhoe is free and can move without any interference with the lock.
The button is in this position even when the boom is connected to the safety lock.
To engage the safety lock, proceed as follows:
Fold the arm and the bucket. Press the button (8) (LED on) to raise the safety lock and keep it pressed. Lift the boom completely and release the button (LED off) to engage the safety lock to the boom.
Before moving the machine, make sure that the lock is properly positioned in its seat.

IMPORTANT

- **The button (8) loses its specific function when the safety button (B) is in locking position.**
  For further details, see "3.3.2 pos. 12 - SERVO CONTROL LOCKING BUTTON".

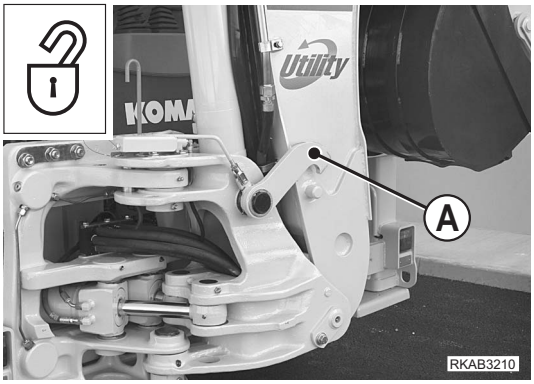

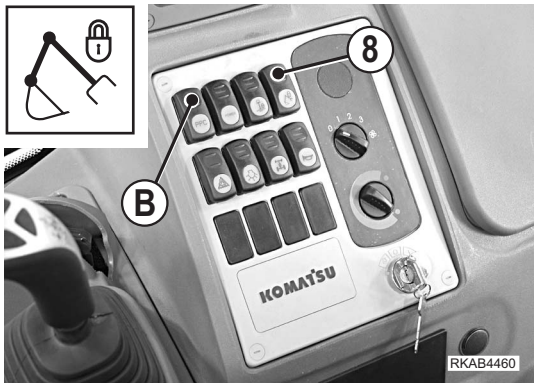

9 - BACKHOE SLIDING LOCK SWITCH

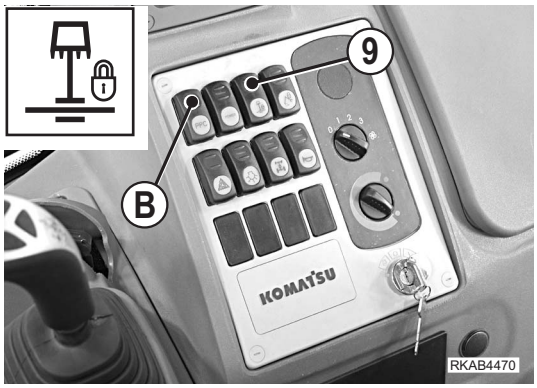

The switch (9) has the function to release the pressure necessary to lock the backhoe unit, so that the backhoe can slide on the guides.
With released switch (LED off) the backhoe unit is fixed on the guides.
With pressed switch (LED on) the backhoe unit is released and can slide on the guides.

IMPORTANT

- **The switch (9) loses its specific function when the safety button (B) is in locking position.**
  For further details, see "3.3.2 pos. 12 - SERVO CONTROL LOCKING BUTTON".

CAUTION

- **Before starting any operation, make sure that the backhoe is fixed on its guides.**

10 - DECLUTCH PUSH BUTTON

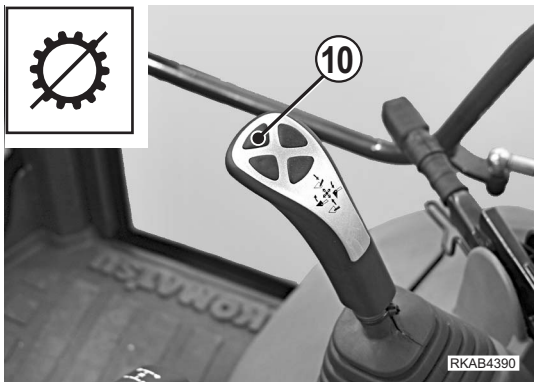

WARNING

- **Do not use this button for more than 15÷20 seconds.**
- **Do not use this button during travel on roads and especially when travelling downhill, since this function releases the clutch and sets the machine in neutral.**

The push button (10) is used when the machine is used as a loader; the declutch function serves to change all the engine power into the hydraulic power necessary to lift the material.

11 - DIFFERENTIAL LOCKING PUSH BUTTON

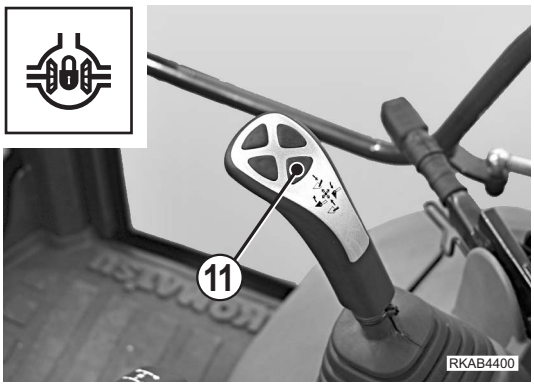

IMPORTANT

- **The locking of the differential is possible only with the 1st, 2nd or 3rd gear engaged, both forward and reverse. The locking of the differential in 4th gear is inhibited.**
- **Before locking the differential, lower the speed as much as possible, in order to reduce the impact loads on the axle.**

The locking of the differential must be used only when it is necessary to engage the rear driving wheels, in case of skidding or if the machine is stuck in sand or mud. The locking of the differential is obtained by simply pressing the button (11) and only with the gears engaged (1st, 2nd or 3rd). The locking is automatically released when the machine returns to two-wheel drive.
The warning light (3) on the front instrument panel (see "3.3.1 pos. 3 - DIFFERENTIAL LOCKING WARNING LIGHT") signals that the differential is locked.

12 - 4 IN1 BUCKET OPENING PUSH BUTTON

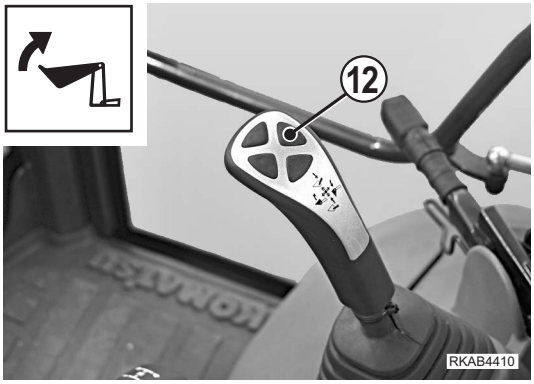

On machines equipped with 4in1 bucket, the distributor for the opening of the bucket is controlled via the push button (12) positioned on the loader control lever.
Press the button to open the bucket; when the button is released, the bucket stops.

NOTE

- This control is used also to lock the bucket on the equipment carrier when the machine is equipped with hydraulic quick coupling device.

13 - 4 IN1 BUCKET FOLDING PUSH BUTTON

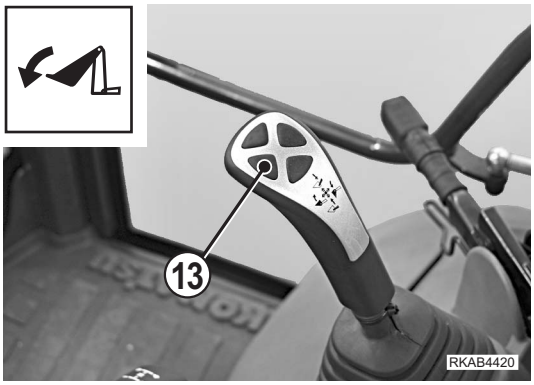

On machines equipped with 4in1 bucket, the distributor for the folding of the bucket is controlled via the push button (13) positioned on the loader control lever.
Press the button to fold the bucket; when the button is released, the bucket stops.

NOTE

- This control is used also to lock the bucket on the equipment carrier when the machine is equipped with hydraulic quick coupling device.

14 - FRONT LOADER SPEED CONTROL PUSH BUTTON

The push button (14) makes it possible to exploit the maximum quantity of oil delivered by the hydraulic pump for heavy-duty applications.
Press the push button to increase oil delivery; when the push button is released, the oil delivery returns to the standard operating values.
It is advisable to use the push button without interruption for no more than 5-6 seconds.

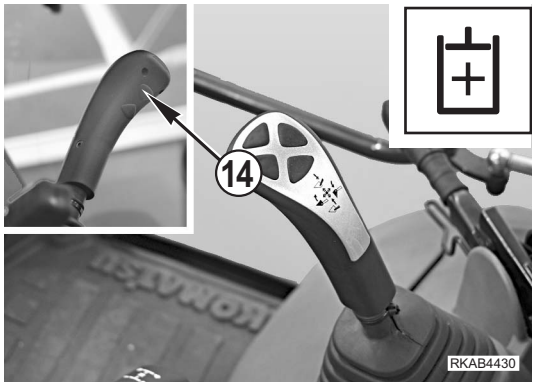

15 - DECLUTCH PUSH BUTTON

WARNING

- **Do not use this button for more than 15–20 seconds.**
- **Do not use this button during travel on roads and especially when travelling downhill, since this function releases the clutch and sets the machine in neutral.**

The push button (15) is used to shift gears when the machine is moving. (See "3.3.6 pos. 5 - GEARSHIFT LEVER").

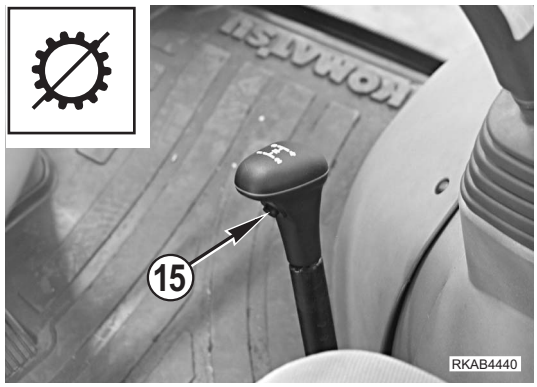

16/17 - STABILIZER CONTROL LEVERS

WARNING

- **Before moving the machine, make sure that the stabilizers are completely raised.**
- **When travelling on roads, raise the stabilizers and engage the safety locks and the servo control locking device.**

These levers are positioned to the operator's left and control the raising and lowering of the stabilizers, as indicated in the diagram.

IMPORTANT

- **All movements are inhibited when the safety button (A) is in locking position (LED on) (see "3.3.2 pos. 12 - SERVO CONTROL LOCKING BUTTON").**

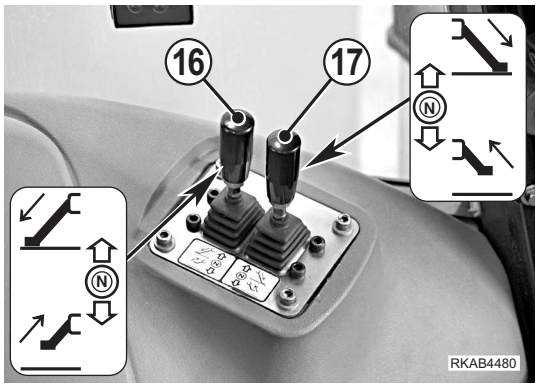

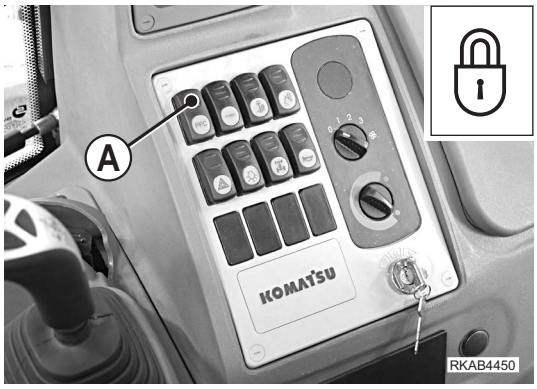

18/19 - BACKHOE CONTROL LEVERS
(version with mechanical controls)

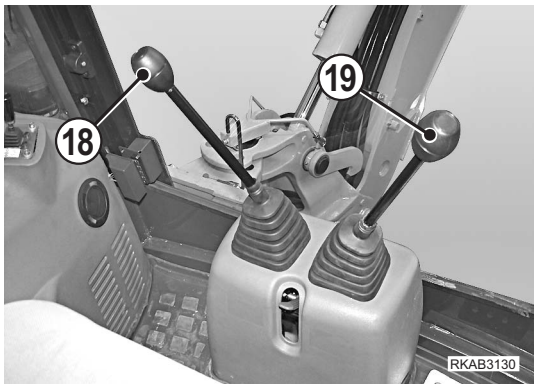

WARNING

- **Before carrying out any manoeuvre with these levers, the operator must be seated in working position, that is, with the seat rotated by 180° with respect to the driving position and with fastened safety belt; before any manoeuvre, take all the precautions specified in section "3.13 USING THE MACHINE AS AN EXCAVATOR".**
- **The machine is equipped with an acoustic alarm that is activated if the operator, with the engine running, shifts the reversing gear lever (1) to position F or R with the seat rotated in any position different from the correct driving position.**
  This is a danger signal, since it is absolutely forbidden to move the machine while working with the backhoe equipment or in any case with the seat rotated by 180° with respect to the regular driving position. Remember that the operator is allowed to move the machine only while seated in the correct driving position, with locked seat and fastened safety belt.
- **Before leaving the work position, lower the equipment to the ground and do not stop the engine if the safety lock is not engaged.**
- **When travelling on roads, always lock the levers by means of the safety lock.**

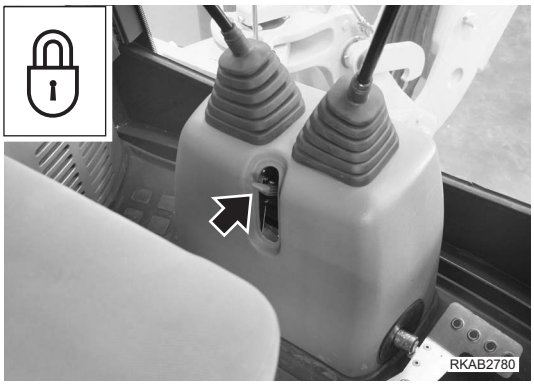

The backhoe control levers can be equipped with different boom, arm and bucket controls according to three different systems:

1 - ISO PATTERN CONTROLS (Standard)

2 - KOMATSU PATTERN CONTROLS (On request)

3 - X-PATTERN CONTROLS (On request)

No movement can be carried out when the safety lever is shifted upwards (see "3.1.2 BACKHOE LOCKS").
The following diagrams show the basic and combined manoeuvres that can be performed with these three systems.

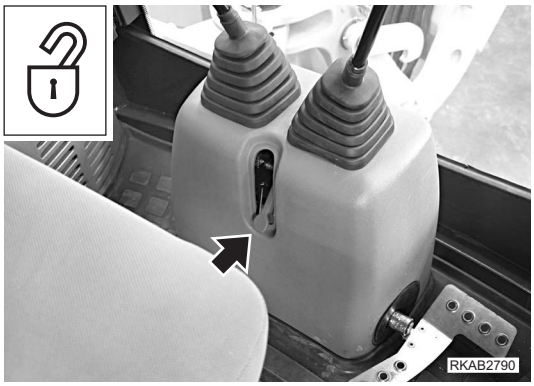

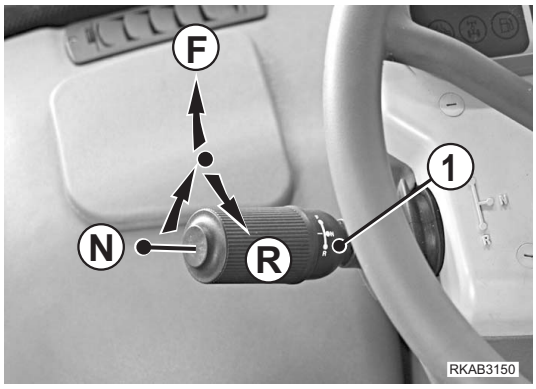

18/19 - BACKHOE CONTROL LEVERS
(version with servo controls)

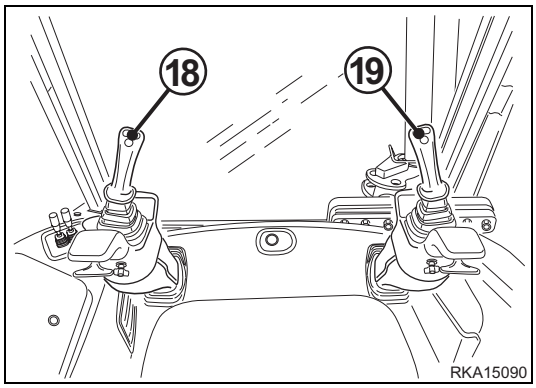

WARNING

- **Before carrying out any manoeuvre with these levers, the operator must be seated in working position, that is, with the seat rotated by 180° with respect to the driving position and with fastened safety belt; before any manoeuvre, take all the precautions specified in section "3.13 USING THE MACHINE AS AN EXCAVATOR".**
- **The machine is equipped with an acoustic alarm that is activated if the operator, with the engine running, moves the reversing gear lever (1) to position F or R with the seat rotated in any position different from the correct driving position.**
  This is a danger signal, since it is absolutely forbidden to move the machine while working with the backhoe equipment or in any case with the seat rotated by 180° with respect to the regular driving position. Remember that the operator is allowed to move the machine only while seated in the correct driving position, with locked seat and fastened safety belt.
- **Before leaving the driver's seat, lower the equipment to the ground, engage the safety device to lock the controls and raise both joysticks towards the rear of the machine.**
- **Before starting work, check the control pattern by carrying out short manoeuvres in order to make sure the all the movements corresponds to those shown on the plates.**
- **When travelling on roads, always engage the safety device (A) to lock the controls (LED on).**

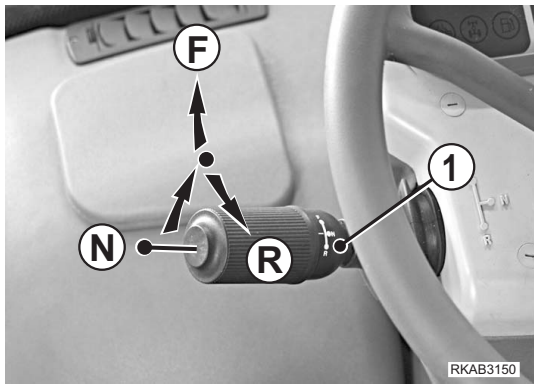

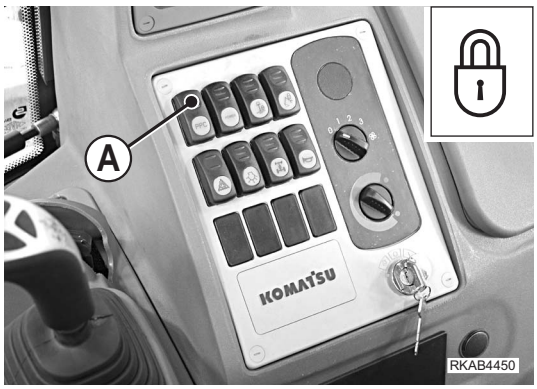

The machine equipped with backhoe servo controls is particularly useful, in fact less effort is required to shift the controls and this reduces the stress to which the operator is subjected, as well as the time required to carry out the various operations.

IMPORTANT

- **All movements are inhibited when the safety button (A) is in locking position (LED on) (see "3.3.2 pos. 12 - SERVO CONTROL LOCKING BUTTON").**

To use the levers correctly, proceed as follows:

1 - With the machine at rest and the engine off, seat correctly and rotate the seat by 180° with respect to the driving position.

2 - Adjust both joysticks until they reach the desired operating position (see "3.3.6.3 pos. 2 JOYSTICK LOCKING LEVERS (only for the version with servo-assisted backhoe)").
The position of the joysticks during work can be adjusted by means of the respective knobs positioned on the cab floor (see "3.3.6.3 pos. 4 JOYSTICK STROKE ADJUSTING KNOB (only for the version with servo-assisted backhoe)").

3 - Adjust the height of the arm supports (B) by means of the adjusting knobs, until finding the position that is most suitable to your physical structure (see "3.3.6.3 pos. 3 ARM SUPPORT ADJUSTING KNOB (only for the version with servo-assisted backhoe)").

4 - Once the correct operating position of both joysticks has been found, fasten the safety belt and start the machine (see "3.6.2 STARTING THE ENGINE").
Press the button (A) (LED off) to release the servo controls and start work.

5 - At the end of work lower the equipment to the ground and lock the controls again with button (A) (LED on).

6 - Before rotating the seat to the driving position, shift the joysticks in vertical position, paying attention to the safety distance from the rear window. If the end of stroke of the joysticks needs adjusting, use the screws positioned on the front part of the same (see "3.3.6.3 pos. 4 JOYSTICK STROKE ADJUSTING KNOB (only for the version with servo-assisted backhoe)").

The control lever (18) is positioned to the operator's left and controls the arm and the swing, while the control lever (19) positioned to the operator's right controls the boom and the bucket.
On request, the machine can be equipped with two different control patterns at the same time, more precisely:

1 - ISO PATTERN CONTROLS (Standard)

2 - KOMATSU PATTERN CONTROLS (Optional)

The choice of the control pattern is up to the operator; for the selection of the pattern desired, see paragraph " 20 - PATTERN CHANGE CONTROL LEVER (if provided and only for the version with servo-assisted backhoe)".
The patterns illustrated below show the basic manoeuvres and the combined manoeuvres that can be carried out with the two systems.

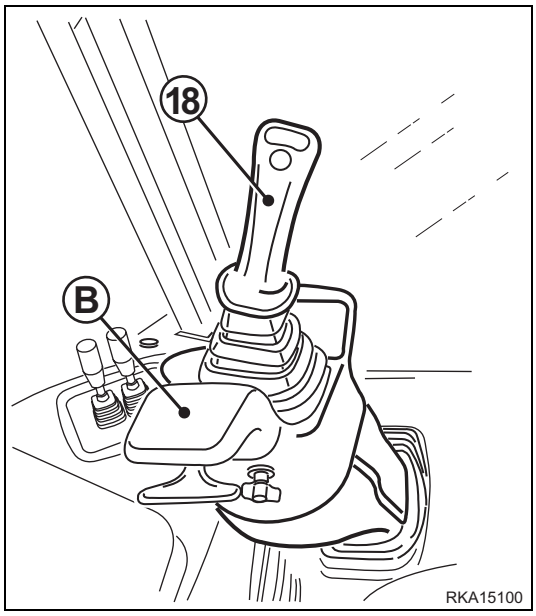

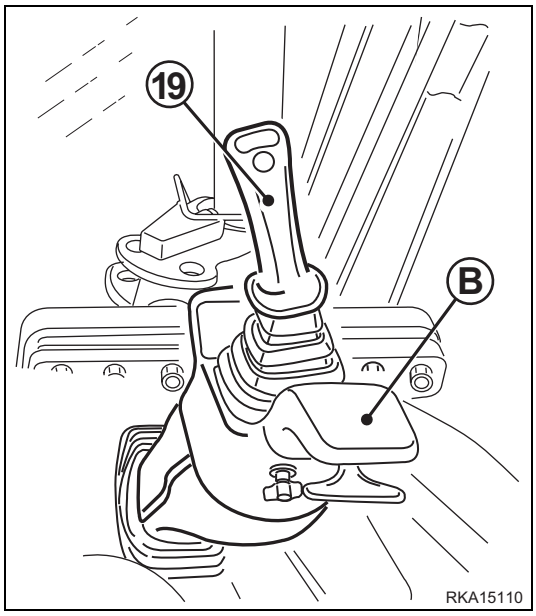

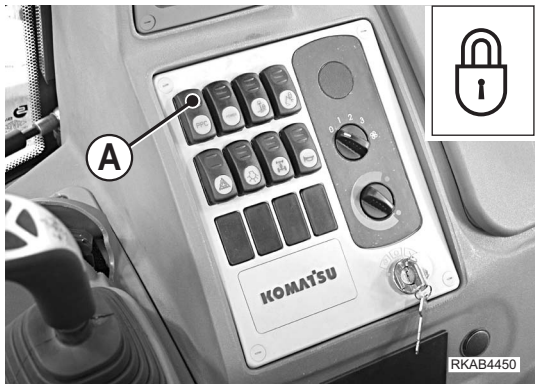

ISO PATTERN CONTROLS

LEVER 18 (BASIC MANOEUVRES)

N - Neutral

A - Boom swing to the left

B - Arm opening

C - Boom swing to the right

D - Arm folding

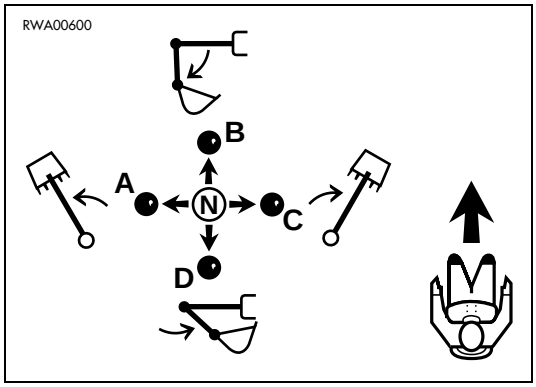

LEVER 19 (BASIC MANOEUVRES)

N - Neutral

A - Bucket folding

B - Boom lowering

C - Bucket opening

D - Boom lifting

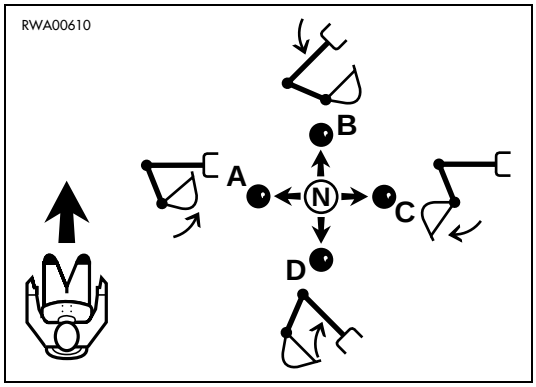

If the levers are shifted in directions that are inclined with respect to the machine axis, simultaneous movements proportional to the angle of inclination are obtained, since the two hydraulic distributors responsible for each single function are operated at the same time.

LEVER 18 (COMBINED MANOEUVRES)

N - Neutral

A - Arm opening - Boom swing to the left

B - Arm opening - Boom swing to the right

C - Arm folding - Boom swing to the right

D - Arm folding - Boom swing to the left

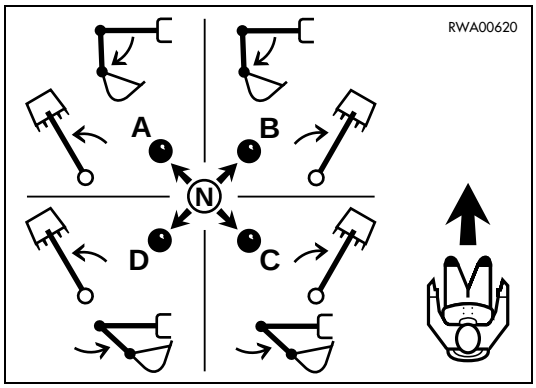

LEVER 19 (COMBINED MANOEUVRES)

N - Neutral

A - Boom lowering - Bucket folding

B - Boom lowering - Bucket opening

C - Boom lifting - Bucket opening

D - Boom lifting - Bucket folding

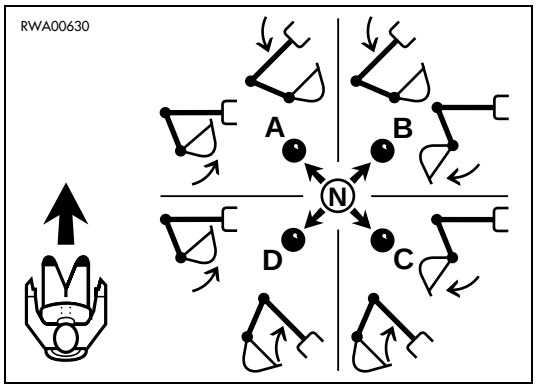

KOMATSU PATTERN CONTROLS

LEVER 18 (BASIC MANOEUVRES)

N - Neutral

A - Boom swing to the left

B - Boom lowering

C - Boom swing to the right

D - Boom lifting

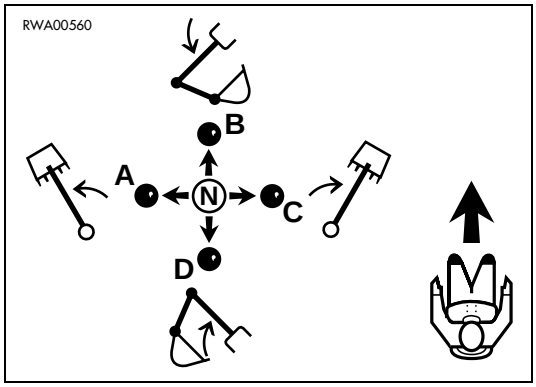

LEVER 19 (BASIC MANOEUVRES)

N - Neutral

A - Bucket folding

B - Arm opening

C - Bucket opening

D - Arm folding

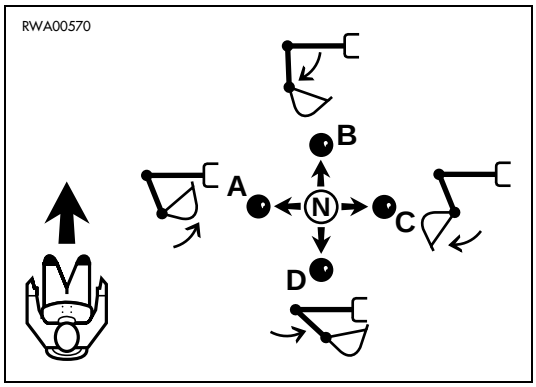

If the levers are shifted in directions that are inclined with respect to the machine axis, simultaneous movements proportional to the angle of inclination are obtained, since the two hydraulic distributors responsible for each single function are operated at the same time.

LEVER 18 (COMBINED MANOEUVRES)

N - Neutral

A - Boom lowering and swing to the left

B - Boom lowering and swing to the right

C - Boom lifting and swing to the right

D - Boom lifting and swing to the left

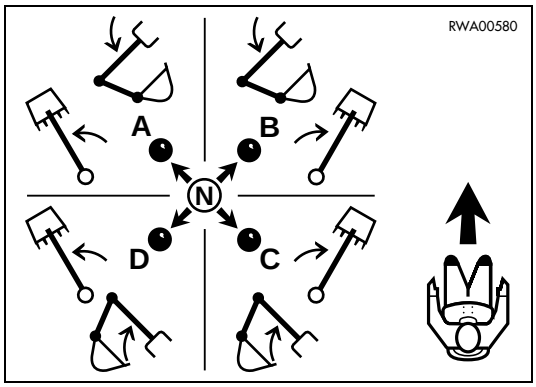

LEVER 19 (COMBINED MANOEUVRES)

N - Neutral

A - Arm opening - bucket folding

B - Arm opening - bucket opening

C - Arm folding - bucket opening

D - Arm folding - bucket folding

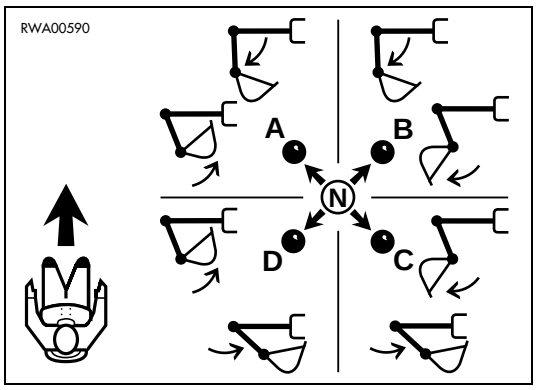

“X” - PATTERN CONTROLS (only for the version with mechanically-controlled backhoe)

LEVER 18 (BASIC MANOEUVRES)

N - Neutral

A - Boom swing to the left

B - Boom lowering

C - Boom swing to the right

D - Boom lifting

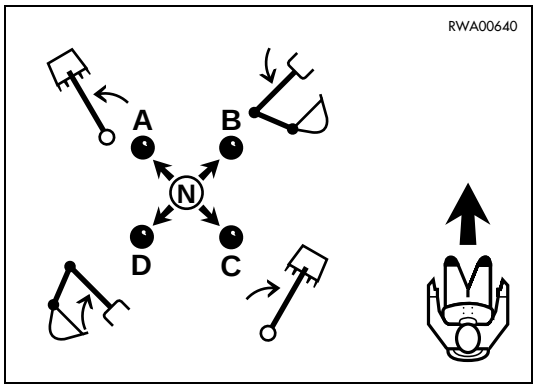

LEVER 19 (BASIC MANOEUVRES)

N - Neutral

A - Arm opening

B - Bucket opening

C - Arm folding

D - Bucket folding

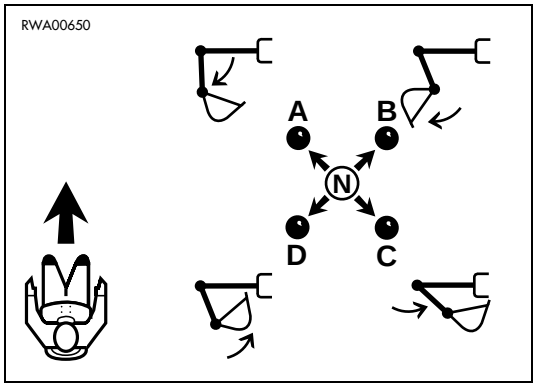

If the levers are shifted in directions that are inclined with respect to the machine axis, simultaneous movements proportional to the angle of inclination are obtained, since the two hydraulic distributors responsible for each single function are operated at the same time.

LEVER 18 (COMBINED MANOEUVRES)

N - Neutral

A - Boom lifting and swing to the left

B - Boom lowering and swing to the left

C - Boom lowering and swing to the right

D - Boom lifting and swing to the right

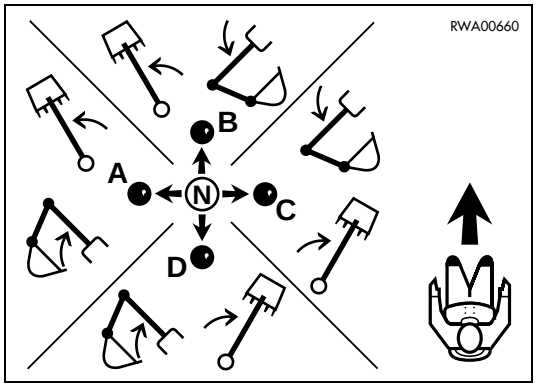

LEVER 19 (COMBINED MANOEUVRES)

N - Neutral

A - Arm opening - bucket folding

B - Arm opening - bucket opening

C - Arm folding - bucket opening

D - Arm folding - bucket folding

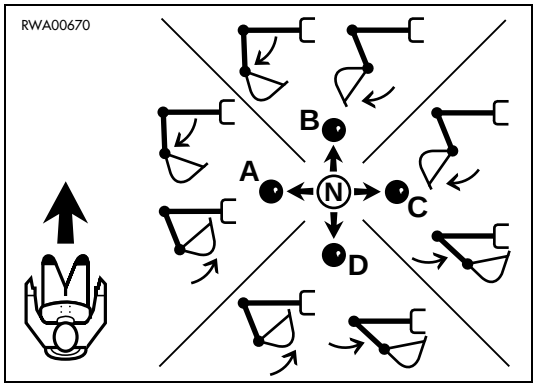

20 - PATTERN CHANGE CONTROL LEVER
(if provided and only for the version with servo-assisted backhoe)

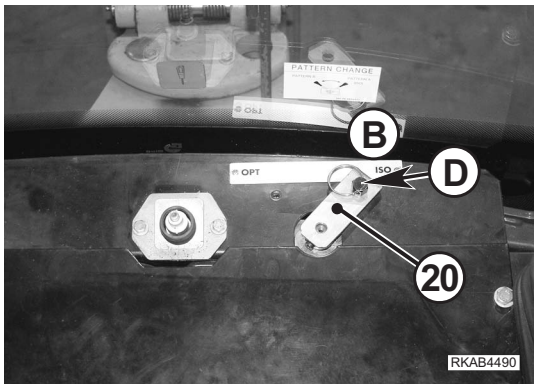

WARNING

- **Before using the pattern change control lever to modify the machine's operating pattern, lower the equipment to the ground and stop the engine.**
- **After changing the control operating pattern, carry out the first manoeuvres slowly and very carefully, in order to understand the new controls correctly and to avoid any damage or fatal injury that may be caused by incorrect movements.**
- **After changing the control operating pattern and before checking the movements of the machine, make sure that the area is clear of obstacles and that no one is standing in the range of movement of the machine.**

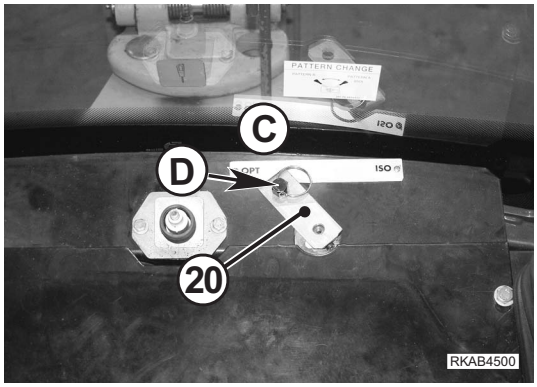

The pattern change control is positioned on the rear central part of the cab floor and allows the operator to choose the control pattern he prefers.
The pattern change control lever (20) has two positions:

- Pos. 1: ISO PATTERN control system
  Lever in position B.
- Pos. 2: OPTION PATTERN control system
  Lever in position C.

The control lever (20) is held in its position by means of a safety screw (D). When it is necessary to change the control pattern, raise the mat and loosen the safety screw (D) until releasing the lever (20) completely.
Select the desired control pattern by rotating the lever (20) horizontally and secure it in its position by means of the safety screw (D). Put back the mat.

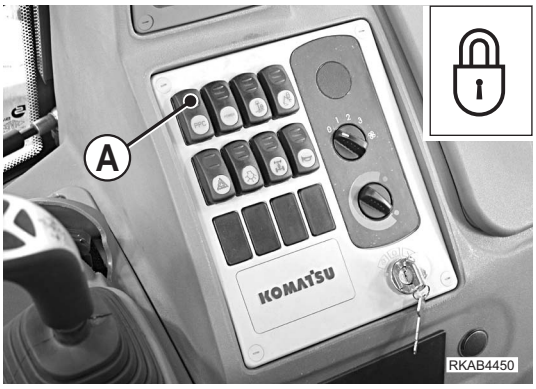

IMPORTANT

- **All movements of the boom and the equipment are inhibited when the safety button (A) is in locking position (LED on) (see "3.3.2 pos. 12 - SERVO CONTROL LOCKING BUTTON").**
- **Before moving the machine the operator must make sure that the control pattern selected with the lever (20) corresponds perfectly to the control pattern indicated on the front part of the respective joysticks. If necessary, turn the corresponding plates (E) by 180°.**

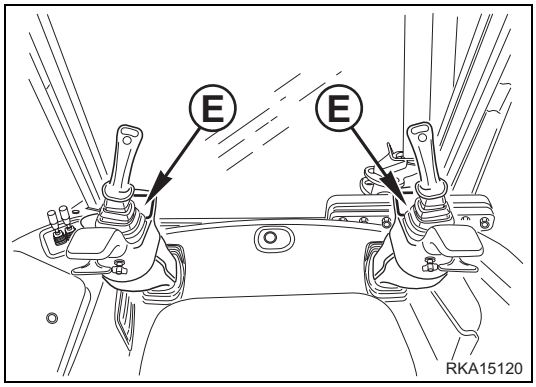

3.3.6.3 ADJUSTING THE CONTROLS

1 - Steering wheel adjusting lever
2 - Joystick locking levers
(only for the version with servo-assisted backhoe)
3 - Arm support adjusting knob
(only for the version with servo-assisted backhoe)
4 - Joystick end-of-stroke adjusting knob
(only for the version with servo-assisted backhoe)

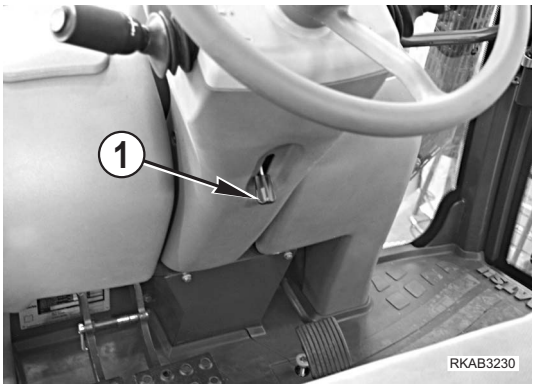

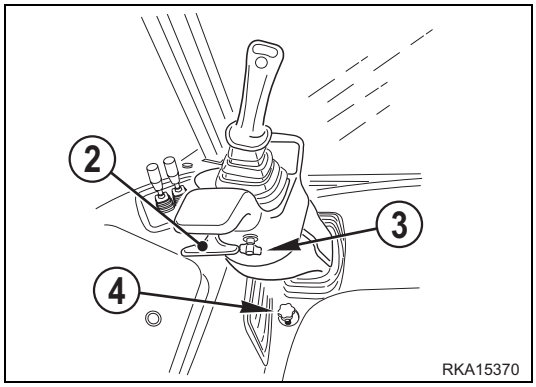

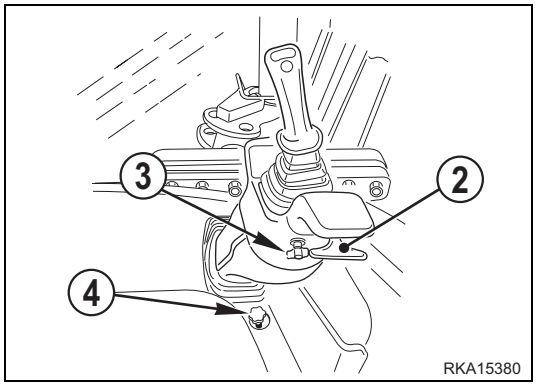

1 - STEERING WHEEL ADJUSTING LEVER

WARNING

- **The steering wheel can be adjusted only with engine off and the operator seated in the driving position.**
- **Before using the machine, make sure that both the steering wheel and the adjusting lever are locked. Non-compliance with these instructions may lead to serious accidents.**

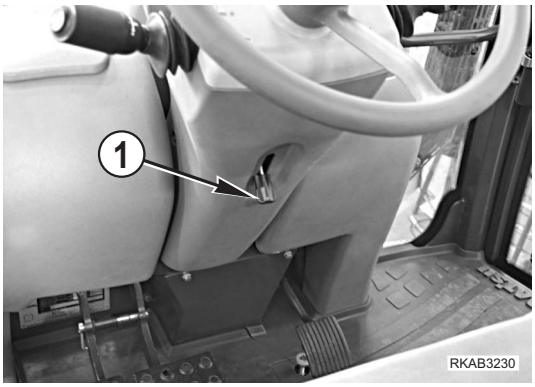

The lever (1) is positioned under the steering wheel and allows the latter to be adjusted according to the physical structure of the operator.
Different inclinations are possible and angular movements can be obtained after lifting the lever (1); once the desired position has been reached, release the lever.

2 JOYSTICK LOCKING LEVERS
(only for the version with servo-assisted backhoe)

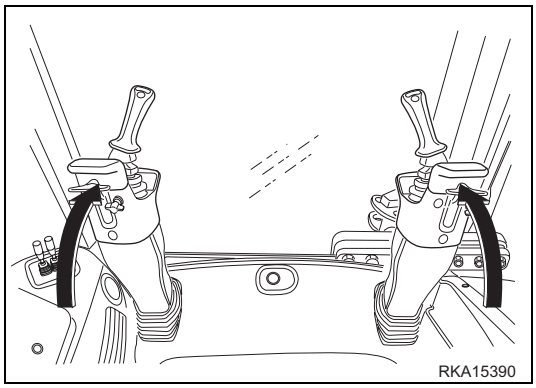

WARNING

- **Before operating the locking levers to adjust the position of the joysticks, lower the work equipment to the ground and stop the engine.**
- **Adjust the joysticks remaining seated in the driving position.**
- **Before rotating the joysticks, make sure that the safety button is in locking position (LED on) (see "3.3.2 pos. 12 - SERVO CONTROL LOCKING BUTTON").**

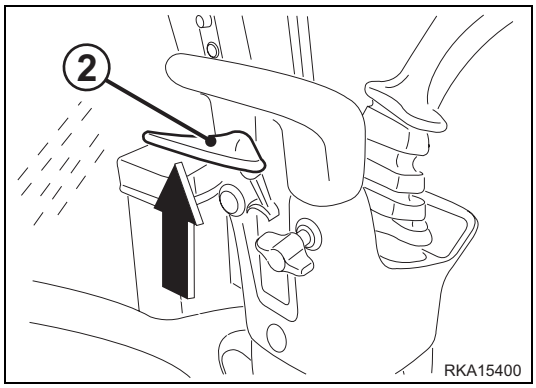

The levers (2) are positioned under the arm supports and allow the corresponding joysticks to be released. It is possible to turn both joysticks to the desired operating position by simply pressing the levers (2). Once the desired position has been reached, release the levers to lock the joysticks.

IMPORTANT

- **The joysticks must always be turned moderately, trying to accompany them until they reach the desired positions.**
- **At the end of digging operations with the backhoe, always shift both joysticks back to the vertical position.**

3 ARM SUPPORT ADJUSTING KNOB
(only for the version with servo-assisted backhoe)

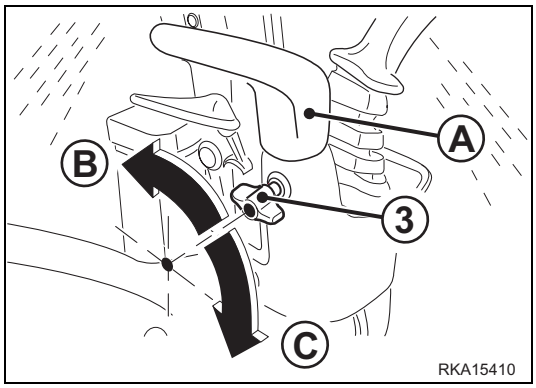

WARNING

- **The operator must adjust the arm supports while seated in the driving position, before starting work and with the machine completely still.**
- **Before carrying out this operation make sure that the servo control locking button is in locking position (LED on) (see "3.3.2 pos. 12 - SERVO CONTROL LOCKING BUTTON").**

These knobs allow the corresponding arm supports (A) to be positioned at the desired height.
To release and adjust the arm supports, turn both knobs (3) counterclockwise, as indicated by the arrow (B).
After the adjustment, turn the knobs (3) clockwise, until locking them as indicated by the arrow (C).

IMPORTANT

- **After carrying out the adjustment, make sure that the knobs (3) and the arm supports (A) are fixed.**

4 JOYSTICK STROKE ADJUSTING KNOB (only for the version with servo-assisted backhoe)

WARNING

- **The adjustment of the joystick stroke must be carried out before starting work and with the machine completely still.**
- **Before carrying out this operation make sure that the servo control locking button is in locking position (LED on) (see "3.3.2 pos. 12 - SERVO CONTROL LOCKING BUTTON").**

These knobs are positioned on the cab floor, on the front part of each joystick support. They serve to adjust the stroke of both joysticks in operating position.
For the adjustment, proceed as follows:

1 - After releasing the joysticks, lower them completely until reaching the end of stroke. If they are excessively inclined, reduce the stroke by turning the knobs (4) clockwise, as indicated by the arrow (A).
If, on the other hand, it is necessary to increase the stroke in order to obtain a more inclined position of the joysticks, turn the knobs (4) counterclockwise, as indicated by the arrow (B).

2 - After adjusting both joysticks, make sure that their position is within the desired values.

If an adjustment should be necessary, proceed as follows:It is also possible to adjust the stroke of the joysticks when they are not used and are in vertical position. Once they have been lifted, make sure that the safety distance between the joystick (C) and the rear window (D) is sufficient to avoid any contact (approximately 60 mm).
If an adjustment should be necessary, proceed as follows:

1 - To increase the distance between the joystick (C) and the rear window (D), loosen the stop nut (E) and turn the adjusting screw (F) clockwise.
To decrease the distance between the joystick and the rear window, turn the adjusting screw (F) counterclockwise.
Use a 17 mm hex wrench.

2 - Make sure that the distance complies with the safety limits and tighten the stop nut (E) thoroughly.

IMPORTANT

- **The joysticks must always be turned moderately, trying to accompany them until they reach the desired position.**
- **After adjusting the stroke of both joysticks, make sure that all fastening elements are correctly tightened.**

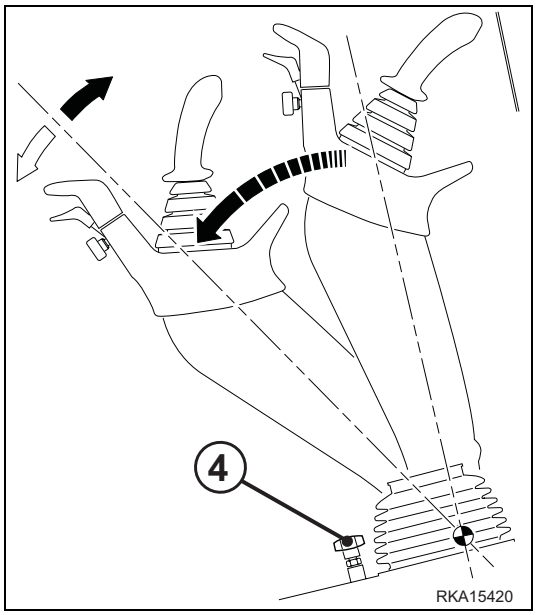

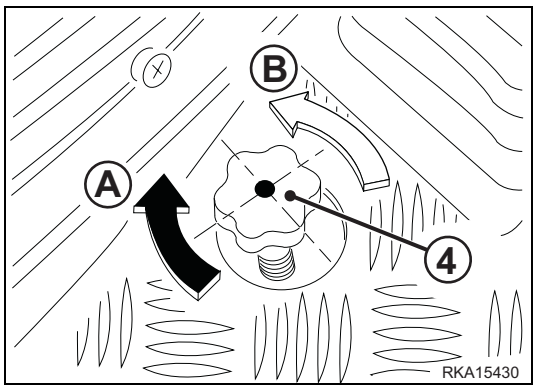

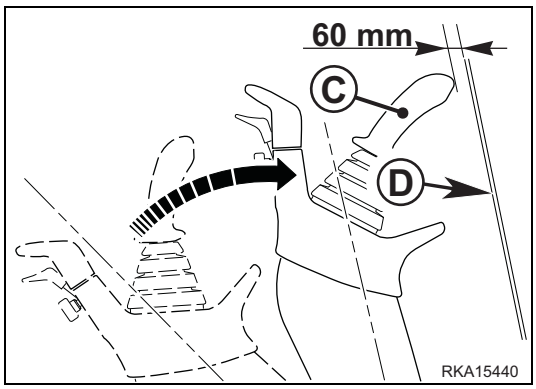

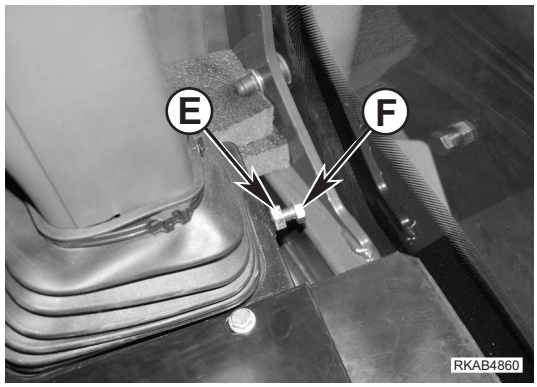

3.4 FUSES AND RELAYS

IMPORTANT

- **When changing a fuse, make sure that the ignition key is in position «O».**
- **If the fuses are oxidized, corroded or do not fit perfectly in their seat, replace them only with new fuses having the same capacity.**
- **If the engine does not run when the ignition switch is brought to pos. «⏲» START, check the engine start fuse and if necessary change it.**

3.4.1 CENTRAL UNIT FUSES – RELAYS AND ENGINE LINE

The fuses and relays are grouped on a single base positioned in the right body side of the cab. They can be reached by removing the cover (1).
The following tables indicate the characteristics and the functions of the single fuses and relays.

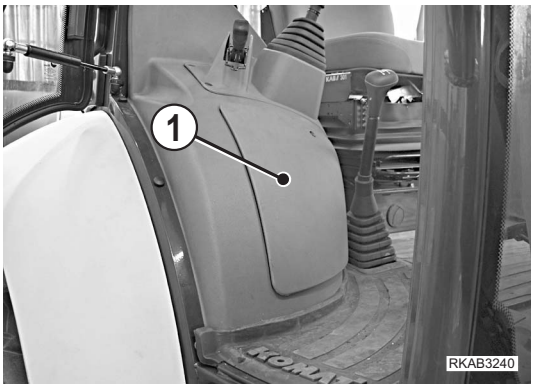

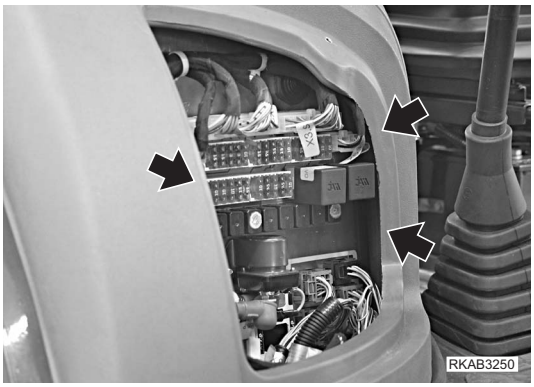

3.4.1.1 FUSES

POSITION	COLOUR	CAPACITY (A)	CIRCUIT INVOLVED
F1	Light blue	15	Central front work lights
F2	Light blue	15	Central rear work lights
F3	Violet	3	Front left and rear right parking light, parking light warning light, instrument backlighting
F4	Violet	3	Front right and rear left parking light, cigarette lighter light
F5	Red	10	Front horn
F6	Light blue	15	Lateral rear work lights
F7	Brown	7,5	Rear windshield wiper, rear horn
F8	Brown	7,5	Stop lights, stop light relay
F9	Light blue	15	Lateral front work lights
F10	Red	10	Front windshield wiper, windshield washer pump
F11	Brown	7,5	Boom locking solenoid valve, plate locking solenoid valve
F12	Orange	5	Buzzer power supply, general alarm power supply, instrument and front dashboard warning light power supply
F13	Red	10	Optional equipment power supply, differential locking solenoid valve, 4 WD solenoid valve

F14	Red	10	High beam relay, low beam relay, horn relay, safety valve solenoid valves
F15	Red	10	Engine stop solenoid, ancillary functions relay, air conditioner relay
F16	Red	10	Revolving light power supply
F17	Red	10	Hour counter memory, hazard warning light
F18	Red	10	Cigarette lighter power supply, overhead light
F19	Light blue	15	Left low beam, right low beam
F20	Light blue	15	Left high beam, right high beam
F21	Red	10	Return-to-dig sensor power supply, LSS solenoid valve, loader arm floating device solenoid valve, return-to-dig solenoid valve, direction indicator
F22	Brown	7,5	Servo control locking solenoid valve, EC power solenoid valve, PPC power supply
F23	Red	10	Steering unit
F24	Brown	7,5	Direction indicator power supply
F25	Red	10	Declutch relay, forward gear solenoid valve, reverse gear solenoid valve, reverse alarm
F27	-	175	General system fuse, ignition key, start relay, pre-heating consent, heating power supply

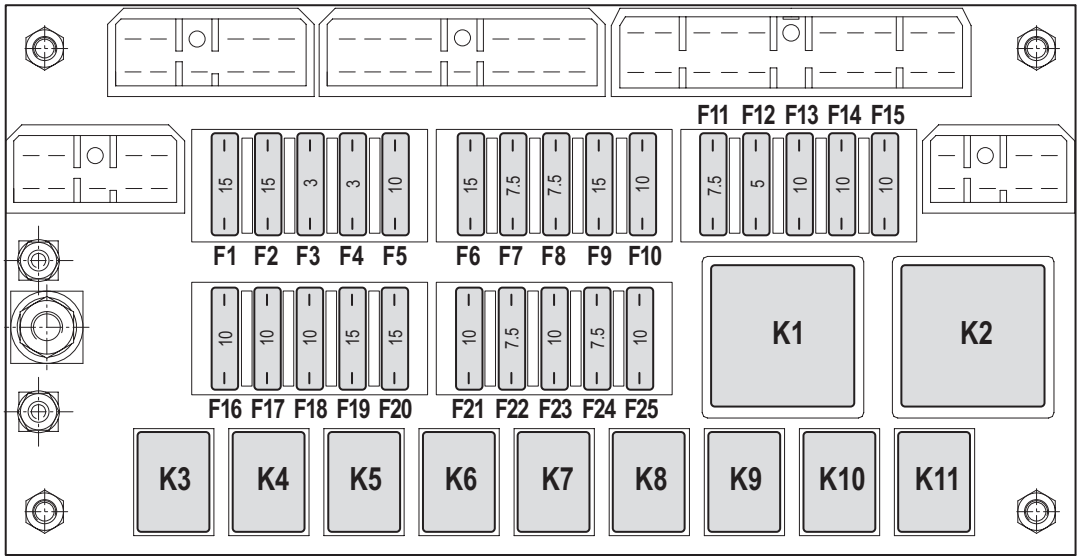

RKA14610

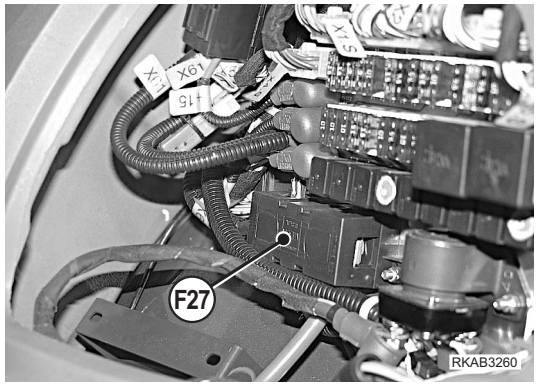

RKAB3260

3.4.1.2 RELAYS

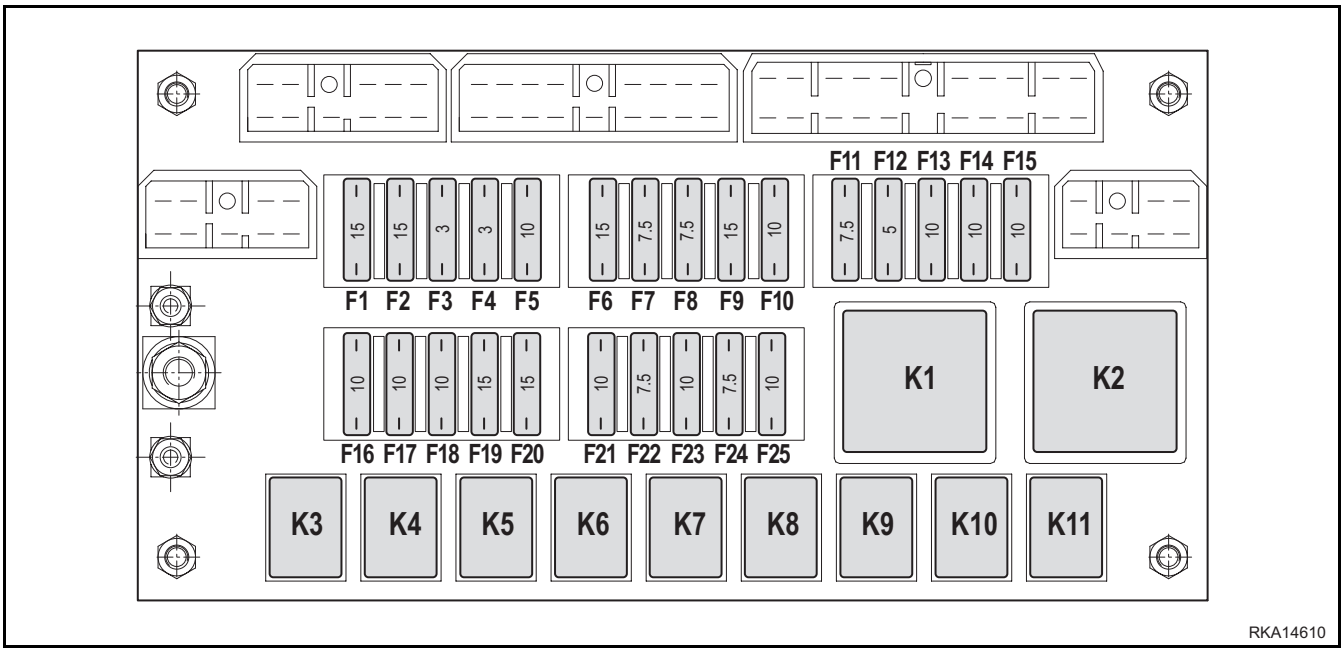

POSITION	DESCRIPTION
K1	Safety unit (against repeated start)
K2	Blinking
K3	Low beam relay
K4	High beam relay
K5	Front horn relay
K6	Return-to-dig relay
K7	Stop light relay
K8	Start enabling relay
K9	Forward gear relay
K10	Reverse relay
K11	Direction indicator power supply relay (declutch)
K12	Machine functions relay
K13	Start relay
K14	Glow plug preheating relay
K15	Multifunction unit

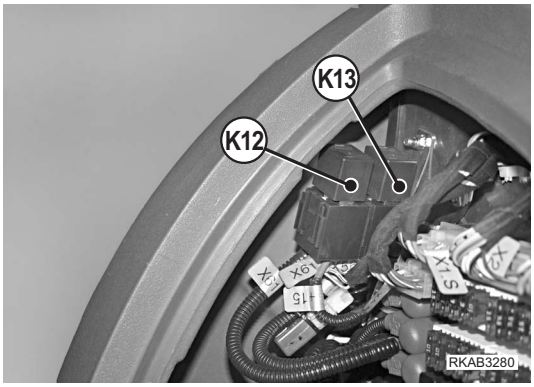

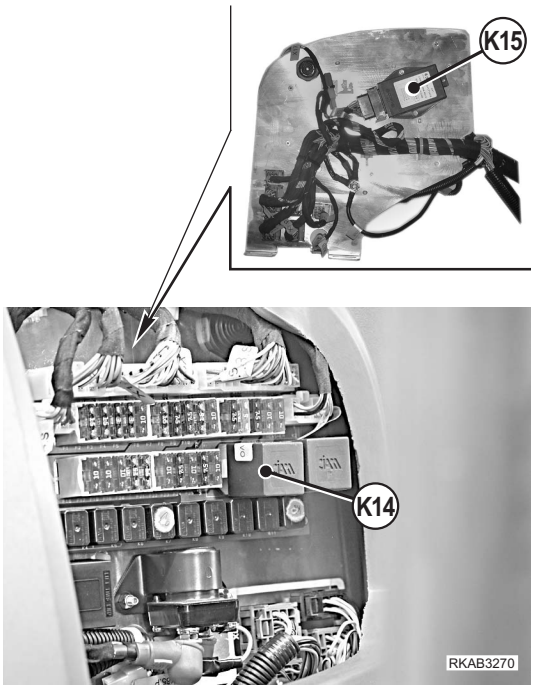

3.4.2 VENTILATION, HEATING AND AIR CONDITIONING FUSES AND RELAYS

The fuses and relays are grouped on a single base positioned under the storage compartment and can be reached after opening the door (1) and removing the container (2).
The following tables indicate the characteristics and the functions of the single fuses and relays.

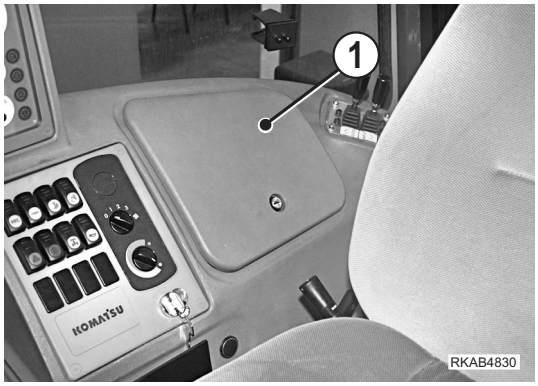

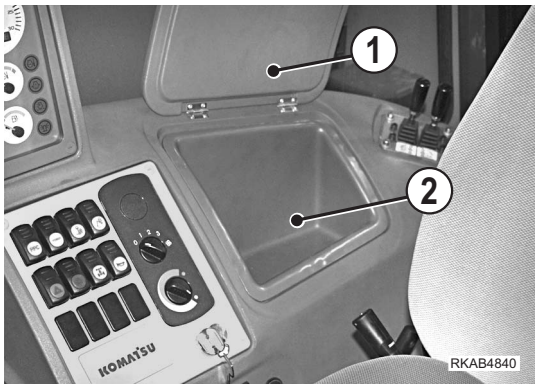

3.4.2.1 FUSES

POSITION	COLOUR	CAPACITY (A)	CIRCUIT INVOLVED
1	Yellow	20	1st and 2nd fan speed power supply
2	Orange	40	3rd fan speed power supply
3	Brown	7,5	Air conditioning compressor

3.4.2.2 RELAYS

POSITION	DESCRIPTION
4	3rd fan speed relay
5	General heating relay
6	Air conditioning compressor relay

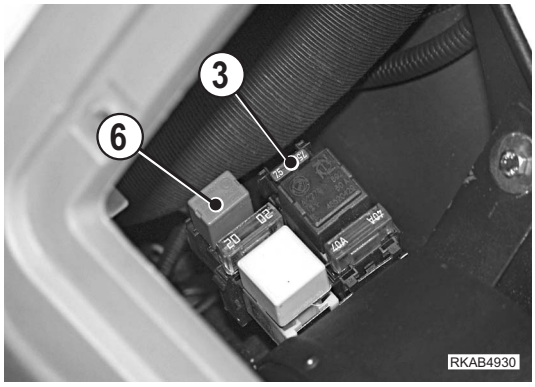

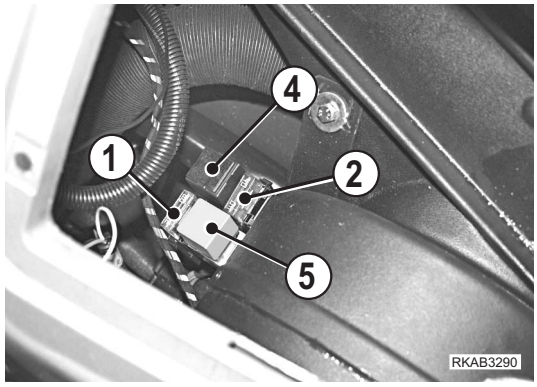

3.5 GUARDS, CAB AND DRIVER'S SEAT

3.5.1 ENGINE HOOD

⚠ WARNING

- **Do not open the engine hood when the engine is running.**
- **Do not use the machine without engine hood and do not start the engine when the hood is open, unless this is expressly prescribed for certain maintenance operations.**
- **Before opening the hood, lower the equipment to the ground and apply the parking brake.**
- **Before carrying out any maintenance operation inside the engine compartment, park the machine on firm and flat ground, lift the loader arm and engage the safety lock.**
- **Non-compliance with these rules may lead to serious accidents.**

After releasing the lock, press the push button (1), raise the hood (2) and open it completely.
To close the hood, lower it slowly and push it downwards until the lock snaps.
Lock the hood.

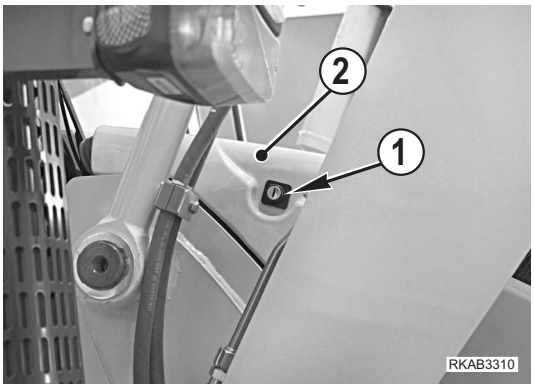

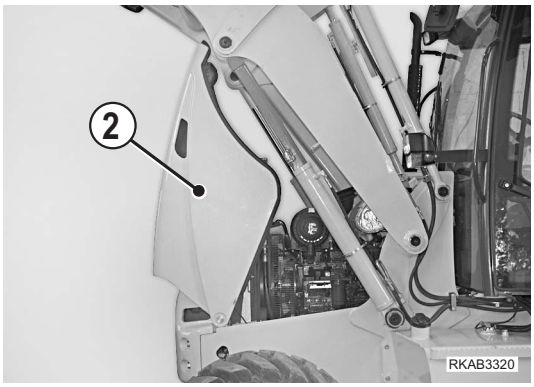

3.5.2 CAB

WARNING

- **The cab is ROPS-FOPS homologated; if it is subjected to an impact for any reason or if the machine overturns, immediately contact your Komatsu Dealer to have the cab replaced.**
- **The cab is equipped with two doors: the left door is the one to be used to get on and off the cab, while the right door is to be used as emergency exit.**
- **Before starting the machine, make sure that the right door (emergency door) is not locked.**

The cab's rear window can be opened completely; once opened, this window must be secured to the upper part of the cab, parallel to the roof.
The side windows can be opened partially or completely, even if the doors are completely closed. These solutions are particularly useful during the summer, since they ensure constant air circulation and therefore reduced stress for the operator.

The rear door (1) can be opened only after releasing the couplings (2), by pulling and lifting the window itself; once the window has been positioned, the couplings (2) must be fitted in the upper safety elements.

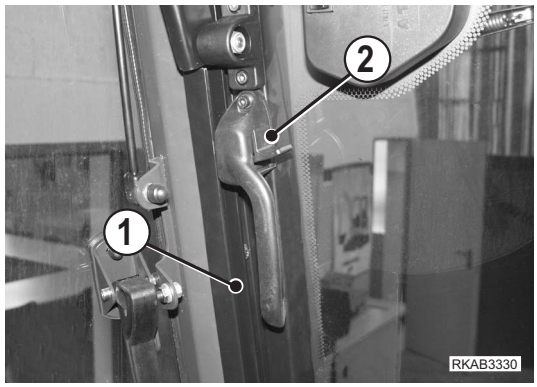

The rear side windows can be opened partially or completely. To open them partially, proceed as follows:

1 - Release the lever (3) from the lower coupling pin (4), following the direction indicated by the arrow shown in Figure (A).

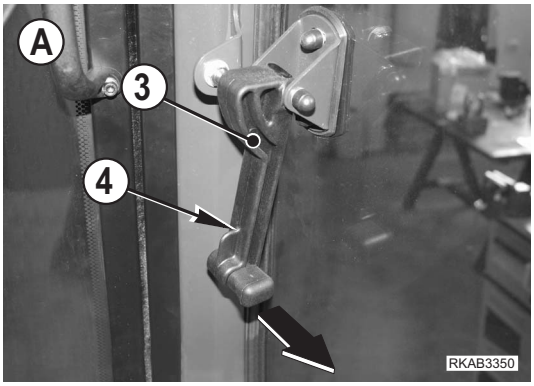

2 - Lift the lever (3) with a simple sliding movement and at the same time push the lever toward the outside of the cab. After lifting the lever (3), push its end downwards in order to engage it in the upper coupling pin (5), as shown in Figure (B).

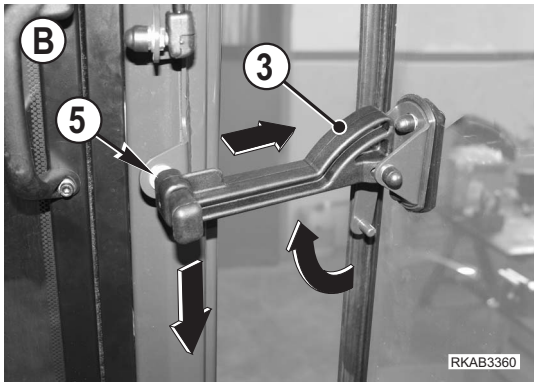

If it is necessary to open the rear side windows completely, proceed as follows:

1 - Release the lever (3) from the upper coupling pin (5) following the direction indicated by the arrow shown in Figure (C).

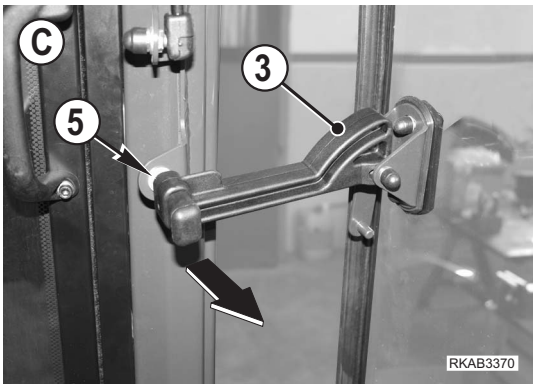

2 - With the window open, lower the lever (3) until engaging it in the lower coupling pin (4), as shown in Figure (D).

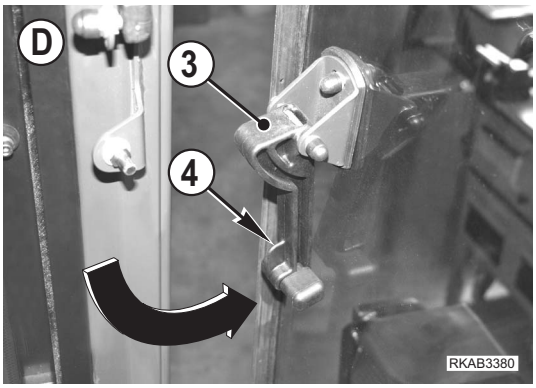

3 - Rotate the rear side windows towards the front of the machine, until engaging the coupling (6) in the rubber element (7), as shown in Figure (E).

To close the rear side windows, turn the knob (8) and release the rubber element (7) from the coupling (6). Close the side windows and couple the lever (3) to the lower pin (4), as indicated in the Figure (A).

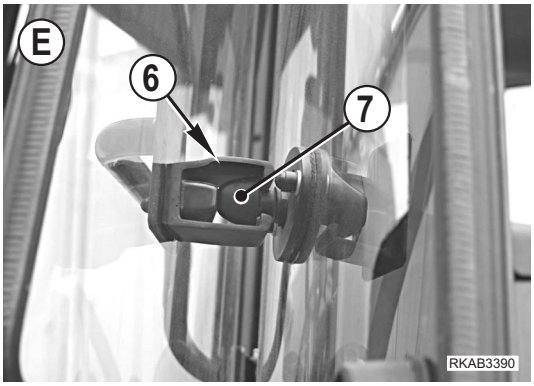

IMPORTANT

- **When the rear side windows are partially open or completely closed, they must always be locked by engaging the lever (3) with the lower (4) or upper (5) coupling pin.**
- **When the rear side windows are rotated towards the front of the machine in order to open them completely, make sure that they are perfectly fixed in the relevant rubber elements (7).**
- **Periodically lubricate the rubber elements (7) with specific greases, in order to facilitate the coupling operation.**

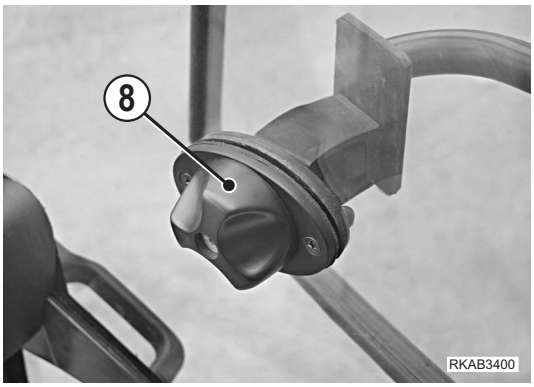

On request the cab access doors can be opened also partially; the partial opening is obtained by fitting the retainers (9) in the recesses (10) provided in the handle supports.

IMPORTANT

- **The doors must always be secured with the retainers (9) or closed.**

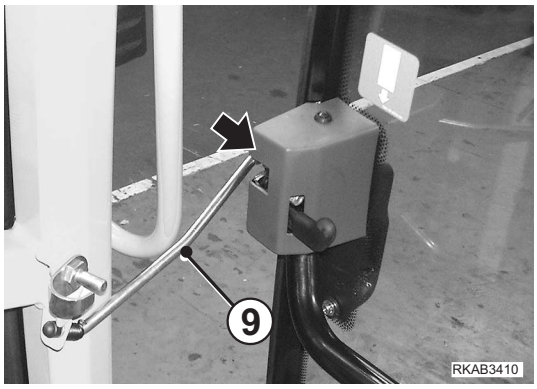

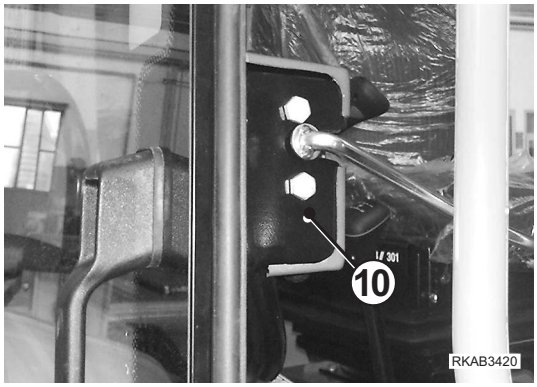

3.5.3 VENTILATION AND HEATING

The ventilation and heating of the cab serve to reduce the operator's stress both in summer and in winter; these functions also serve to eliminate condensate from the front window, thus ensuring visibility during both work and travel.
Ventilation and air change are achieved by means of a 3-speed fan, which is assembled on the outside of the machine, under the cab, and is operated with a selector (3).
The air suction is protected by a filter positioned on the right side of the cab, while air distribution is obtained through a series of adjustable vents with variable flow rate (1) for the side flows or through the vents (2) for the flows that serve to defrost and defog the front window.
A radiator having the function to heat the air conveyed into the cab is installed beside the fan; this is used in the cold season and receives the hot water necessary for the heat exchange directly from the engine cooling circuit.
The water supply flow is partialized or excluded by means of a cock operated by the knob (4). The intensity of the hot water flow can be increased by turning the knob (4) clockwise.

NOTE

- If the operator deems it necessary, the machine can be equipped with air conditioning system in addition to the ventilation and heating system. This is particularly useful in the hot season, when the temperatures are rather high.
  For further information on the use of the air conditioning system, see "3.5.4 AIR CONDITIONER (if installed)".

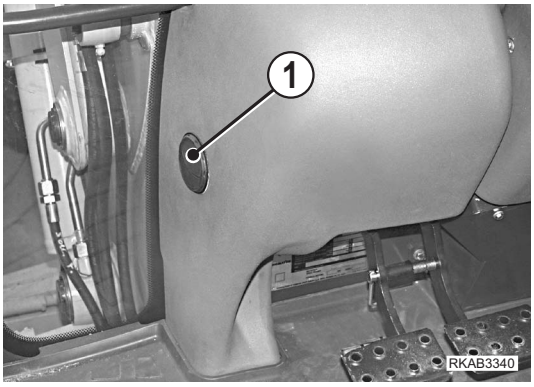

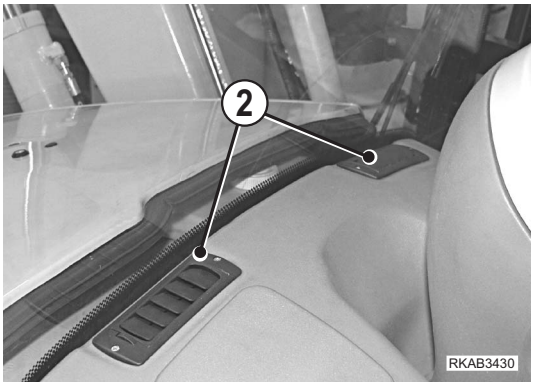

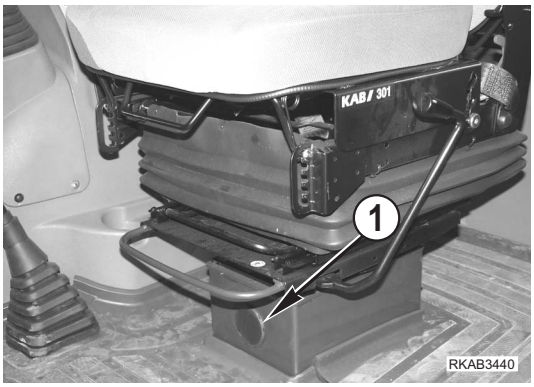

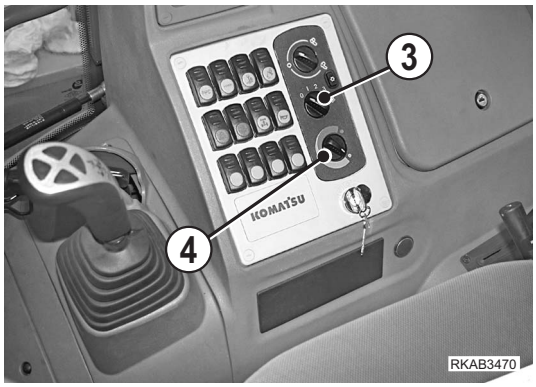

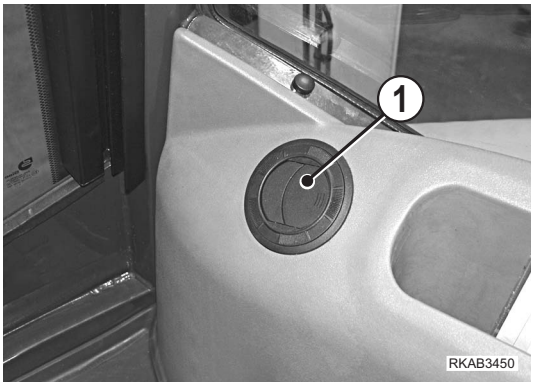

3.5.4 AIR CONDITIONER (if installed)

WARNING

- **The coolant used in the air conditioning system is very dangerous. If it is sprayed into the eyes or in case of contact with the skin, wash with plenty of water and consult a doctor without delay. Furthermore, to avoid any explosion, do not generate sparks and do not use naked flames near the air conditioner.**
- **The coolant contained in the air conditioning system is considered special waste and must be collected and disposed of according to the antipollution regulations in force.**
- **For specific maintenance operations to be performed on the air conditioning system, contact your Komatsu Dealer. Non-compliance with these instructions may cause serious damage and even death.**

The cab ventilation and cooling functions have the specific purpose to reduce the operator's stress when the outside temperature is particularly high.
Ventilation and air change are achieved by means of a 3-speed fan which is built in the air conditioning system and assembled on the outside of the machine, under the cab. The ventilation can be adjusted via the selector (2).
The ventilation and cooling system ensures air suction both from the outside and the inside of the cab.
Air suction from the outside is protected by means of a filter positioned on the right side of the cab, while air suction from the inside (recirculation) is protected by means of an internal filter (5) positioned on the right mudguard, under the storage compartment.
The internal air recirculation ensures quicker cooling and is very useful when working in areas where air pollution is considerable (tunnels, dusty places, small or badly ventilated rooms, etc.). Air recirculation is obtained by rotating the knob (4) completely clockwise.

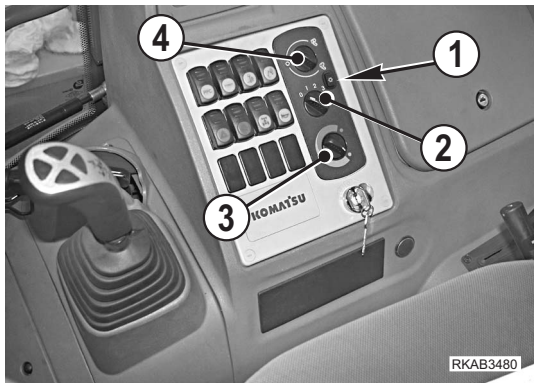

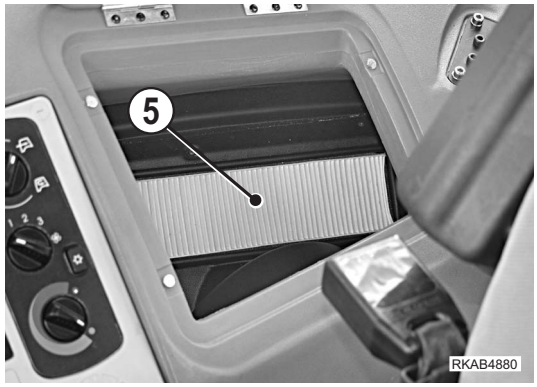

NOTE

- Do not use the air recirculation function too long in rainy or cold days, since this would increase the fogging of the inside of the windows.

Air distribution is obtained by means of a series of adjustable vents with variable flow rate (6) and (7), both for the air flow inside the cab and for the air flow with defogging function.

For air recirculation inside the cab distribution is obtained by means of an adjustable vent with variable flow rate (8).

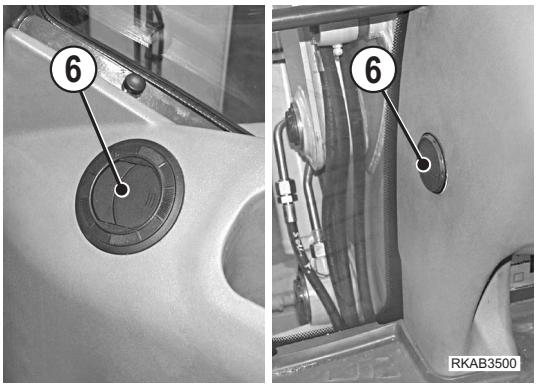

IMPORTANT

- **At the beginning of the summer and before using the air conditioner, clean the suction filters (see "4.8.1.b CHECKING AND CLEANING THE CAB AIR FILTER" and "4.8.1.c CHECKING AND CLEANING THE AIR RECIRCULATION FILTER (only for machines with air conditioner)").**
- **During the season clean the filters periodically, with time intervals to be fixed according to the environment in which the machine operates (min. every 5 days - max. every 15 days).**
- **Before operating the air conditioner, interrupt the circulation of hot water in the engine by rotating the valve (9) positioned in the engine compartment clockwise.**

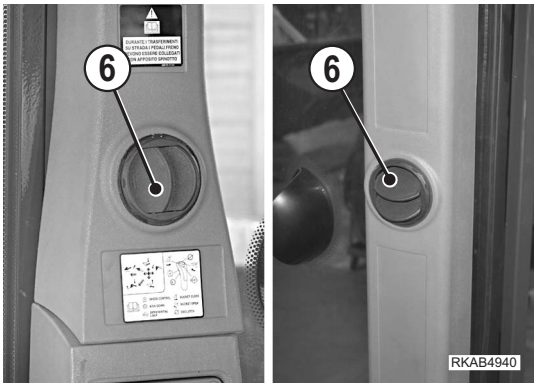

The air conditioner can be started by means of the switch (1) positioned on the side dashboard.
After starting the air conditioner (LED on), turn the knob (3) completely counterclockwise and adjust the ventilation flow by means of the selector (2).

IMPORTANT

- **It is advisable to start the air conditioner only with low engine rpm and not during acceleration, to avoid damaging the system and breaking the compressor drive belt.**

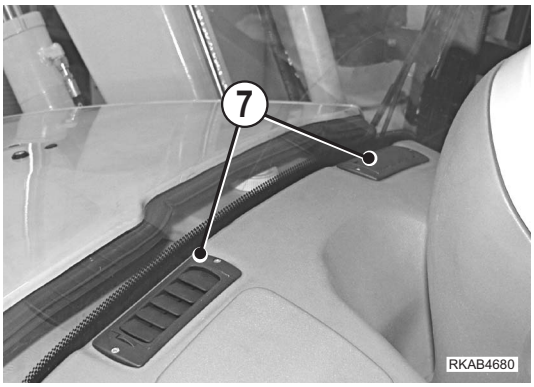

CAUTION

- **Even in the periods in which the air conditioner is not used, operate the compressor at low speed for approximately 3-5 minutes at least once a month. This operation ensures the lubrication of all the moving parts of the compressor.**

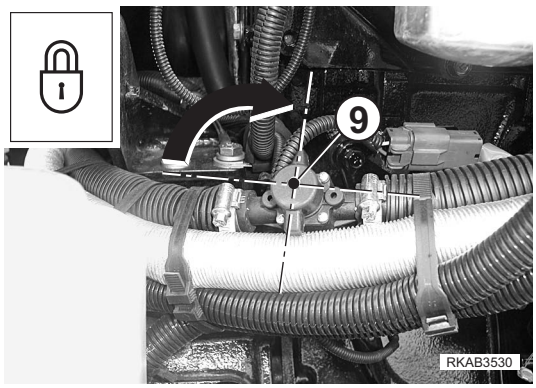

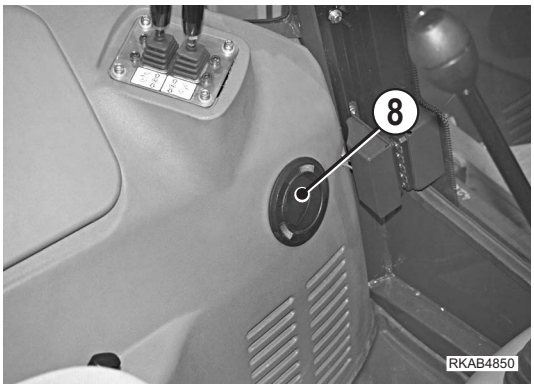

3.5.5 SEAT

3.5.5.1 SEAT (STANDARD)

The seat is really comfortable, in fact it features five different adjustment options:

a - longitudinal position;

b - back inclination;

c - degree of suspension, in order to dampen the inevitable vibrations and jumps as much as possible;

d - height and cushion inclination;

e - rotation for works with the backhoe.

The operator can choose the driving position that is most suitable for his physical structure and according to the angular adjustment of the steering wheel.

The longitudinal adjustment of the seat can be carried out by means of the lever (1), making the seat slide on the apposite guides; once the desired position has been found, release the lever and make small movements with the seat to make sure that the retainer pin is correctly engaged in its seat.

The back can be adjusted by operating the levers (2) and at the same time exerting pressure with the back; the back will automatically adapt to the physical structure of the operator.

The adjustment of the suspension is carried out with the snap lever (3) and can be controlled by observing the position of the indicator (4).
The operator must carry out this adjustment while seated; the right suspension degree is reached when the indicator is positioned in correspondence with the seat frame.
If the indicator protrudes from the frame, it is necessary to operate the lever (3) with the (+) mark on the grip towards the operator; if the indicator is positioned inward with respect to the frame, the lever (3) must be operated with the (–) mark on the grip towards the operator.

The seat cushion inclination and height can be adjusted by means of the lever (5); three height positions and five different inclination options are available.

The rotation of the seat for works with the backhoe is obtained by operating the release lever (6); the locking is automatically carried out every 180°.

⚠ CAUTION

- **The seat is equipped with a safety system that sends out an acoustic alarm if the reversing gear control lever is operated while the seat isn't in the correct frontal position.**

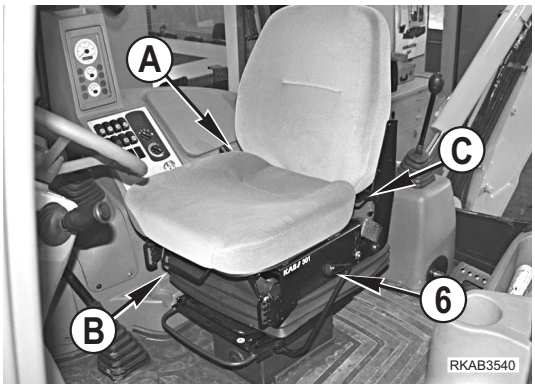

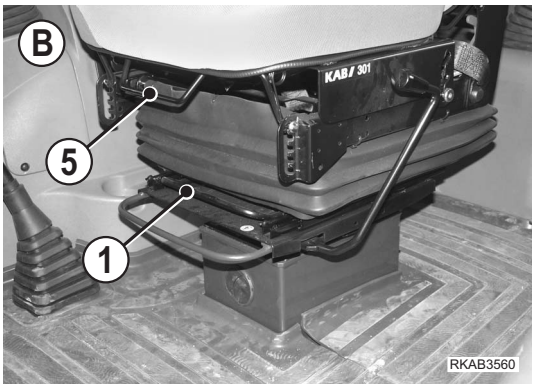

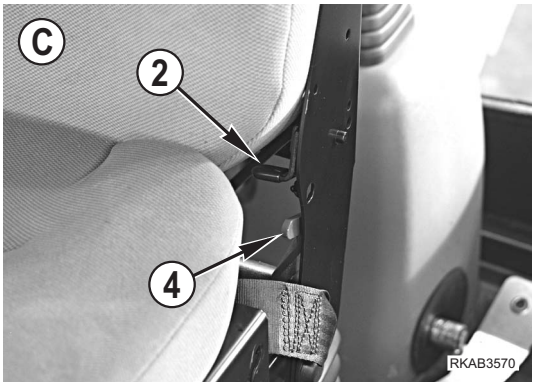

3.5.5.2 SEAT (OPTIONAL)

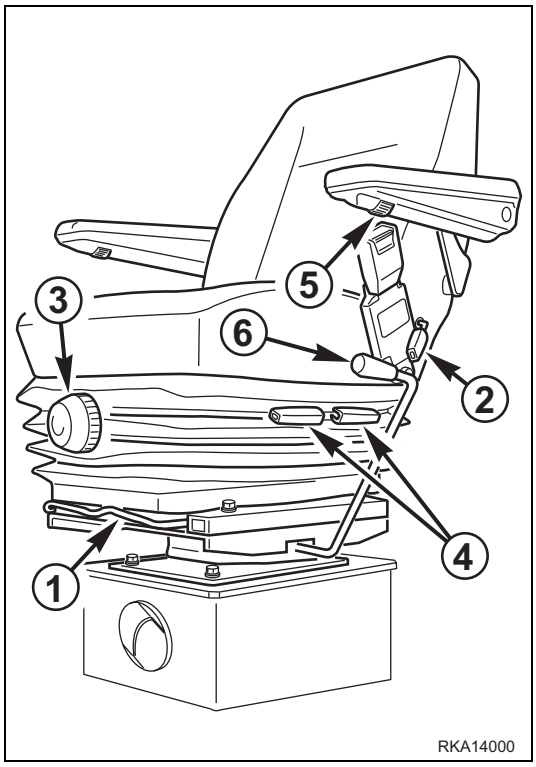

The seat is really comfortable, in fact it features six different adjustment options:

- longitudinal position;
- back inclination;
- degree of suspension, in order to cushion the inevitable vibrations and jumps as much as possible;
- height and cushion inclination;
- armrest position;
- rotation for works with the backhoe.

The operator can choose the driving position that is most suitable for his physical structure and according to the angular adjustment of the steering wheel.
The longitudinal adjustment of the seat can be carried out by means of the lever (1), making the seat slide on the apposite guides; once the desired position has been found, release the lever and make small movements with the seat to make sure that the retainer pin is correctly engaged in its seat.

The back can be adjusted by operating the levers (2) and at the same time exerting pressure with the back; the back will automatically adapt to the physical structure of the operator.
The degree of suspension can be adjusted by rotating the knob (3) and checking the graduated scale on the knob itself.
The ideal position is reached when the weight indicated on the scale corresponds to the operator's weight. In any case, the operator can choose the degree of suspension at his sole discretion.
Turn the knob (3) clockwise ( ) to obtain a more rigid suspension, or counterclockwise to obtain a softer suspension.
The inclination and the height of the cushion can be adjusted by means of the levers (4).
To facilitate access to the seat, both armrests can be rotated and positioned against the back.
The inclination of the armrests can be adjusted with the knobs (5) that are positioned under the armrests.
The rotation of the seat for works with the backhoe is obtained by operating the release lever (6); the locking is automatically carried out every 180°.

⚠ CAUTION

- **The seat is equipped with a safety system that sends out an acoustic alarm if the reversing gear control lever is operated while the seat isn't in the correct frontal position.**

3.5.6 SAFETY BELT

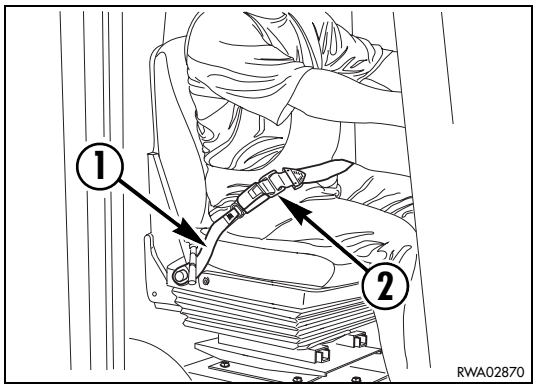

WARNING

- **Fasten the safety belt before starting the engine.**
- **The safety belt must be changed when it is frayed, damaged or worn and in any case every 4 years.**

The safety belt (1) is of the type with two coupling points and adjustable length (2); it must be well tightened and hold the operator's hips, while leaving the upper part of his body completely free.

3.5.7 FIRE EXTINGUISHER

CAUTION

- **The machine's owner must provide for positioning the fire extinguisher where prescribed.**
- **Periodically make sure that the fire extinguisher is full.**

If the operator fears that he may need a fire extinguisher (1) on the machine, he must position it on the appropriate hole provided on the left console.

3.5.8 FIRST AID KIT

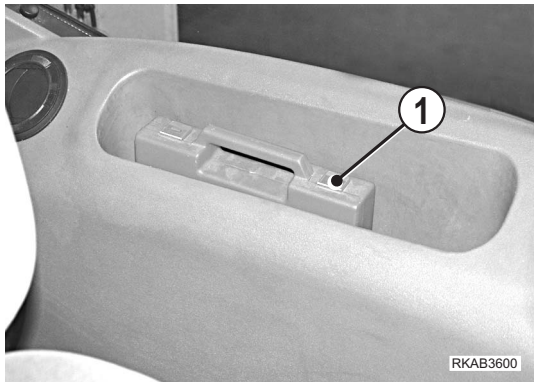

CAUTION

- **Periodically make sure that the first aid kit contains the necessary disinfectants, bandages, medicins, etc. and check their condition and expiry date.**

The first aid kit case (1) must be positioned inside the cab, and precisely in the compartment provided on the left body side, by the owner of the machine.

3.5.9 TECHNICAL DOCUMENTATION

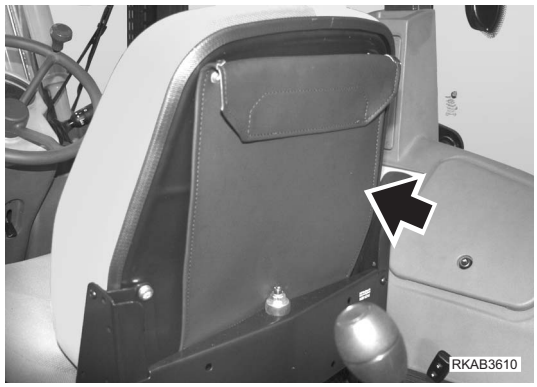

CAUTION

- **The operation manual and the spare parts catalogue are integral parts of the machine and must accompany it even in case of resale.**

The manual must be handled with care and always kept on the machine, so that it can be quickly consulted when necessary; keep the manual in the rear compartment of the seat, where the ownership documents and the logbook are usually stored.

3.5.10 STORAGE COMPARTMENT

A storage compartment (1) has been obtained on the inner side of the right mudguard and can be reached after opening the door (2).
The door is equipped with a lock (3).

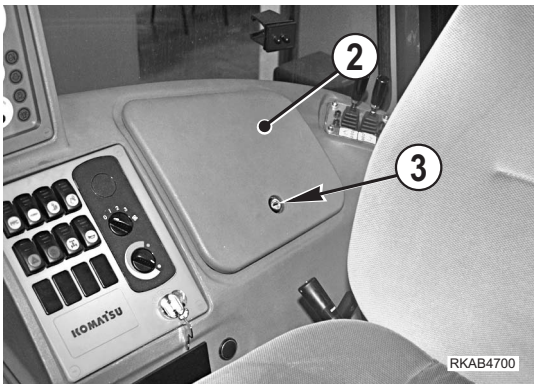

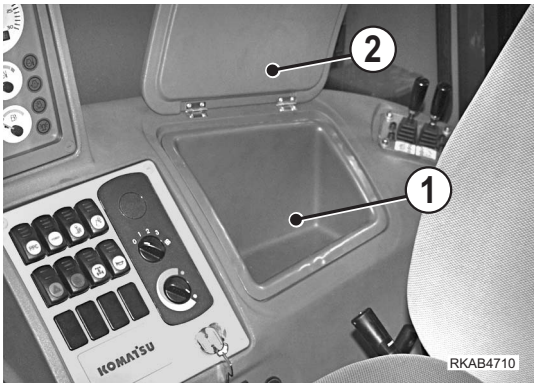

3.6 USE OF THE MACHINE

3.6.1 CHECKS TO BE CARRIED OUT BEFORE STARTING THE ENGINE

3.6.1.1 VISUAL CHECKS

WARNING

- **Dirt, oil and fuel in the engine compartment near hot parts may damage the machine and even cause fires.**
  Check frequently and eliminate any leakage; if leakages occur repeatedly, contact your Komatsu Dealer.

Before starting the engine, check around and under the machine to verify:

1 - if there are loose screws or nuts;

2 - if there are oil, fuel or coolant leakages;

3 - the wear of the work equipment;

4 - the fastening of the electrical connections;

5 - the fastening of the engine exhaust pipe and manifold;

6 - the conditions of the rims and the wear of the tyres;

7 - if the safety and warning plates are sufficiently clean;

8 - if the ladders and the handles for the access to the operator's seat are clean.

Any leak or anomaly must immediately be repaired/eliminated and any trace of oil or grease must be removed.
Further visual checks concern:

9 - the condition of the safety belt;

10 - the efficiency of the instruments and of the dashboard;

11 - the condition of the cab windows and the efficiency of lights, work lights and direction indicators.10 - the efficiency of the instruments and of the dashboard;

3.6.1.2 DAILY CHECKS

WARNING

- **Do not smoke while refuelling and adding oil and avoid using naked flames or non-homologated lighting means to check the fuel or oil level, in order not to cause fires.**
- **If some fuel, oil, or lubricant is spilled while filling the tanks, clean the dirty areas immediately.**

Before starting any operation, check the engine coolant, engine oil and hydraulic circuit oil levels and lubricate the articulations (see "4.8.4 MAINTENANCE EVERY 10 HOURS OF OPERATION").
At the end of work, provide for refuelling, in order to avoid the formation of condensate, always checking the fuel level on the indicator provided on the dashboard.

IMPORTANT

- **Avoid filling the tank completely, in order to leave room for the gas oil to expand.**
- **After filling the tank, put back the filler cap, making sure that the bleed hole is completely open.**
- **Check the engine oil level with the machine in horizontal position and the hydraulic circuit oil level with the front bucket resting on the ground and the backhoe in transport position.**

3.6.1.2 OPERATIONAL CHECKS

WARNING

- **All the checks must be carried out by the operator while seated, with fastened safety belt.**
- **When the machine is at rest after use or maintenance, some safety locks may not be engaged; when the operator gets into the cab, he must make sure that all the mechanical safety locks are engaged and that the equipment cannot move suddenly and create dangerous situations.**

The checks are intended to verify:

1 - if the safety locks of the front bucket and the backhoe control levers are engaged;

2 - the hand accelerator idling position;

3 - the reversing gear neutral position;

4 - if the gearshift lever is in neutral;

5 - if the parking brake is applied.

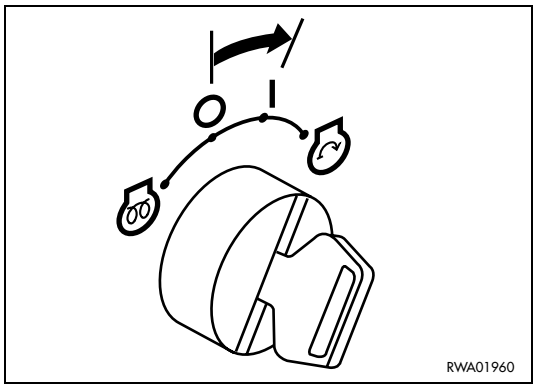

The following check is carried out by turning the ignition key to position «I» to apply voltage to the control panel and check the functionality of the acoustic alarm, the fuel level indicator and the engine oil pressure, generator, preheating, parking brake warning lights.

NOTE

- The acoustic alarm sounds and the warning lights remain on for approximately 3 seconds.

3.6.2 STARTING THE ENGINE

WARNING

- **Before starting the engine, carefully read the instructions and information regarding safety given in this manual and make sure that you know the controls.**
  From the moment in which the engine is started, the operator is directly responsible for any damage that may be caused by wrong manoeuvres and non-compliance with the safety regulations and the rule of the road.
- **Before starting the engine, disconnect all electric devices (heating, air conditioning, lights, work lights, etc.).**
- **Before starting the engine, make sure that there is no one within the range of movement of the machine and sound the horn.**
- **Before starting the engine, make sure that the gearshift and reversing gear levers are in neutral position. A safety device does not allow the machine to be started with engaged gears or selected travel direction. The machine is also equipped with an acoustic alarm that is activated when the operator, with the engine running, shifts the reversing gear lever from the neutral position with the seat rotated and not in the correct driving position.**

3.6.2.1 STARTING WITH WARM ENGINE OR IN TEMPERATE CLIMATES

1 - Press the accelerator pedal completely and turn the ignition key to position «⏻» (START).

2 - As soon as the engine starts, release the ignition key, which will automatically return to position «**I**» and reduce the speed to idling.

IMPORTANT

- **If the engine does not start within 15 seconds, release the key, which will automatically return to position «I» and wait 15 seconds before trying again.**

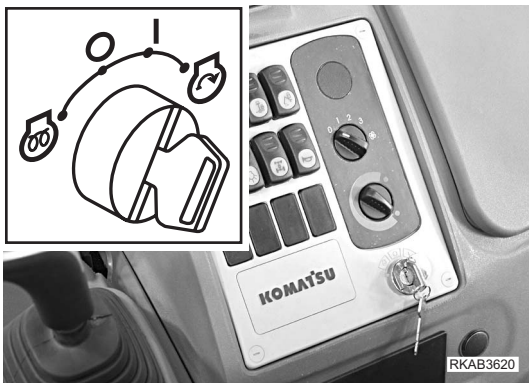

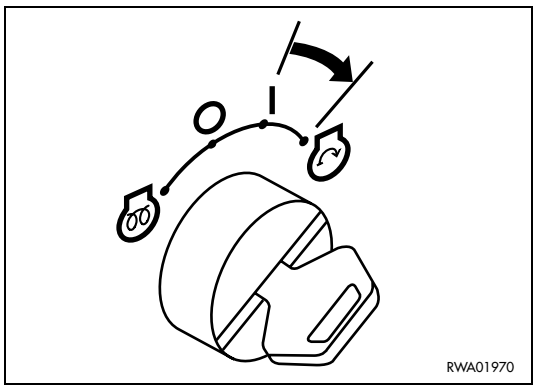

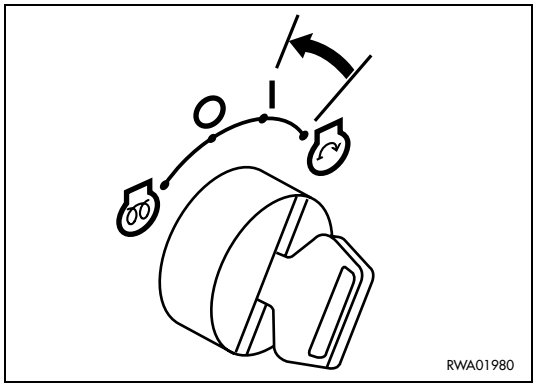

3.6.2.2 STARTING WITH COLD ENGINE OR IN COLD CLIMATES

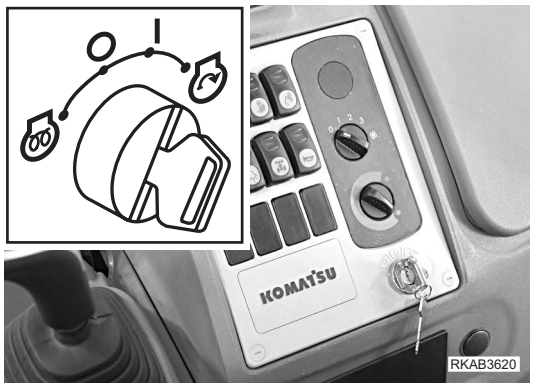

WARNING

- **Do not use any fluids or products that facilitate the cold starting of the engine, since these are ether-based and may cause explosions.**
- **Before starting the engine, disconnect all the electric devices (heating, air conditioning, lights, work lights, etc.).**
- **Perform the heating operation carefully. If the machine is not properly warmed up before operating the control levers, its response to the controls will be slow and this may cause unexpected accidents.**
- **If the battery electrolyte is frozen, do not charge the battery or start the engine with a different power source, since the battery may catch fire.**
  Before charging the battery or starting the engine with a different power source, make the electrolyte melt and make sure that it isn't frozen any more and that there are no leaks.

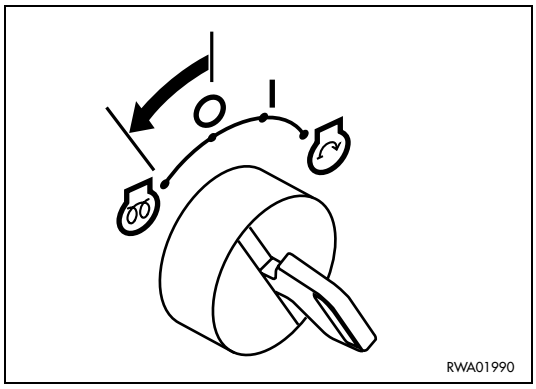

1 - Turn the key to the preheating position «» for maximum 15 seconds in the coldest weather.
The preheating time is determined according to the outside temperature and the ratio is approx. 1 second for each degree below 0°C.

2 - Press the accelerator pedal completely and turn the ignition key to position «» (START) for maximum 15 seconds.

3 - As soon as the engine starts, release the ignition key, which will automatically return to position «I» and reduce the speed to idling.

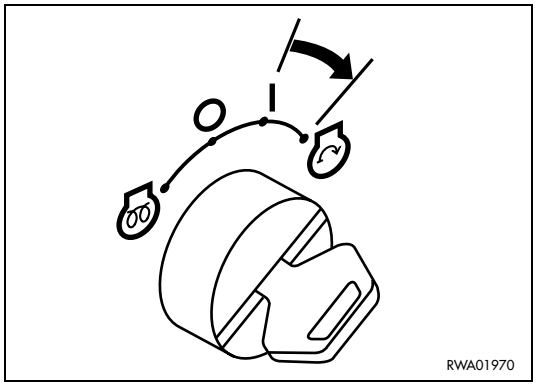

IMPORTANT

- **If the engine does not start at the first attempt, repeat the operations 1 and 2 after waiting for at least 30 seconds, in order not to overload the battery.**
- **For specific applications in cold climates, request the "COLD ARRANGEMENT" configuration to your Komatsu Dealer**

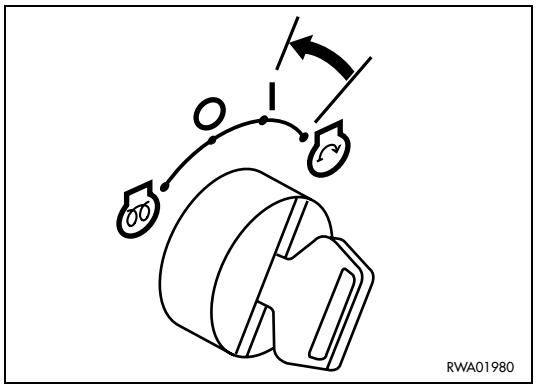

3.6.3 WARMING THE ENGINE

1 - After starting the engine, let it warm up before starting work.

2 - The ideal warming up of the engine is achieved with a constant speed of 1200 rpm, obtained with the hand accelerator (see "3.3.6 pos. 7 - HAND ACCELERATOR").

IMPORTANT

- **Do not accelerate completely or abruptly until the coolant temperature has reached at least 60°C, which can be checked through the indicator provided on the dashboard.**

3 - To reduce the time necessary to warm up the engine, accelerate now and then, up to maximum 1800 rpm.

4 - While warming up the engine, check the colour of the exhaust gas and be careful to anomalous noises or vibrations; any abnormal situation must be examined thoroughly and its cause must be immediately eliminated.

3.6.4 HEATING THE HYDRAULIC OIL

When warming up the engine, especially in the cold season, it is advisable to heat also the hydraulic system oil. For this purpose, when the coolant temperature has reached approximately 60°C, proceed as follows:

1 - Press the front loader release button (LED off) (see "3.3.2 pos. 12 - SERVO CONTROL LOCKING BUTTON").

2 - Lift and rotate the front bucket slowly and completely for several times.

3 - Lower the bucket to the ground and press the button again (LED on) to lock the control lever.

4 - Rotate the seat and release the backhoe control levers (see "3.1.2 BACKHOE LOCKS").

5 - Extend and retract the arm and the bucket completely for several times.

6 - Lock the levers again and rotate the seat to the driving position.

IMPORTANT

- **On machines equipped with backhoe servo controls, the movements of the levers are inhibited by the front loader locking button (see "3.3.2 pos. 12 - SERVO CONTROL LOCKING BUTTON").**

3.6.5 HOW TO MOVE THE MACHINE

WARNING

- **Before moving the machine, make sure that you know the control functions and all the relevant safety regulations perfectly.**
- **The operator must be seated in the driving position with fastened safety belt and must have checked the position of the rear-view mirrors.**
- **Before moving the machine, make sure that there is no one within the range of movement of the machine and that there are no obstacles in the surrounding area.**
- **Be extremely careful when engaging the reverse and make sure that there are no persons, other equipment or obstacles in the way.**
- **The brake pedals must be connected with the special pin provided for this purpose.**

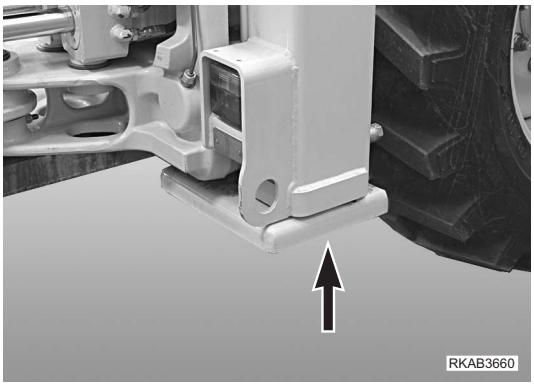

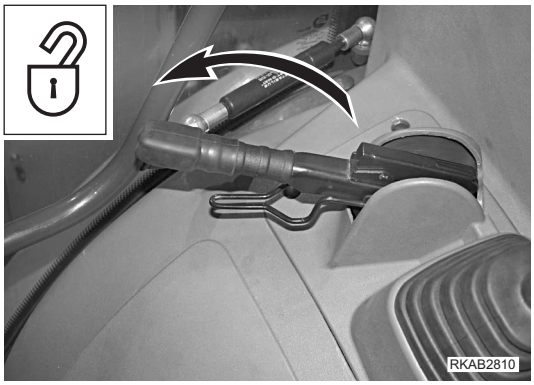

Before moving the machine, check the instruments, warm up the engine, heat the hydraulic oil, and make sure that the stabilizers have been raised and that both the front bucket and the backhoe are in transport position.
The control levers must be in the neutral position (N).
At this point, release the parking brake.

Proceed as follows:

1 - Select the travel direction, by shifting the control lever (1) forward (F) or backward (R).

2 - Select the gear by means of the gearshift lever (2).

3 - Accelerate gradually using the accelerator pedal.

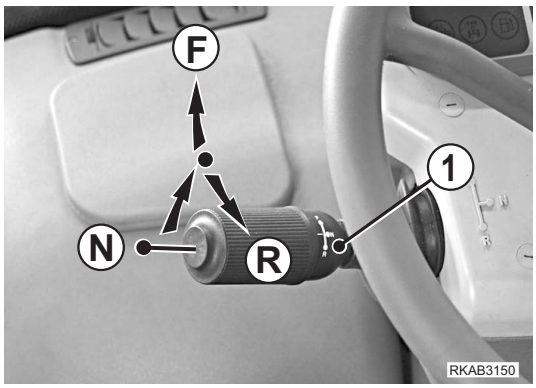

IMPORTANT

- **The travel direction must be selected with the engine at low rpm, in order to avoid abrupt accelerations.**
- **For the operation of the gearshift and its functions, see "3.3.6 pos. 5 - GEARSHIFT LEVER".**
- **To shift gears, it is necessary to operate the declutch button (see "3.3.6 pos. 10 - DECLUTCH PUSH BUTTON").**
- **If it is necessary to shift down, first reduce the engine rpm and then shift down.**
- **If it is necessary to reverse, slow down by putting on the brakes before operating the reversing gear lever.**

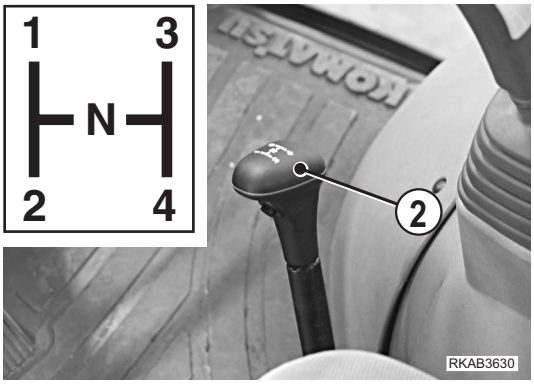

3.6.5.1 DIFFERENTIAL LOCKING

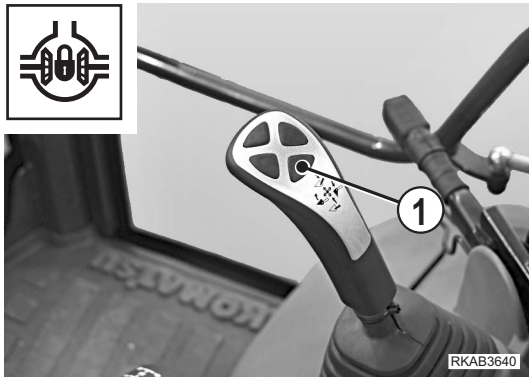

WARNING

- **This device can be used only with the 1st, 2nd or 3rd gear engaged, either forward or reverse.**
  The differential must be locked with the machine at rest or at very low speed.
- **The release of the differential takes place automatically when the axles transmit the same load as before, that is, when the two-wheel drive is engaged.**

This device is useful when the machine must work on muddy or loose ground or when the machine gets stuck in mud.
The differential can be locked by pressing the button (1) positioned on the front bucket control lever, with the rear wheels at rest.
In exceptional cases the locking of the differential can be performed even with the machine running straight at very low speed, that is, with the rear wheels turning at the same speed.

3.6.5.2 ENGAGING THE FOUR-WHEEL DRIVE

WARNING

- **The four-wheel drive must be engaged only with machine at rest or travelling at low speed.**
- **When travelling on roads or removing the machine, disengage the four-wheel drive.**

The four-wheel drive can be engaged and disengaged by means of the switch (1) positioned on the front dashboard.
It is normally used when the machine must move on muddy, icy, gravelly ground, on slopes and in any situation in which it is difficult to move the machine.
The four-wheel drive must be used even when the machine is provided with optional equipment to be employed as snowplough.

IMPORTANT

- **The four-wheel drive is automatically engaged when the machine brakes and only in 4th gear.**

3.6.5.3 WORKING ON SLOPES

⚠ WARNING

- **Before starting work on slopes, always check the functionality of the brakes and of the parking brake.**
- **Always engage the four-wheel drive.**
- **Avoid engaging the high gears.**
- **Do not move downhill with the gearshift in neutral, but keep always the low gears engaged.**
  NON-COMPLIANCE WITH THESE RULES MAY CAUSE YOU TO LOSE CONTROL OF THE MACHINE AND THIS MAY OVERTURN.
- **Avoid using the declutch push button.**

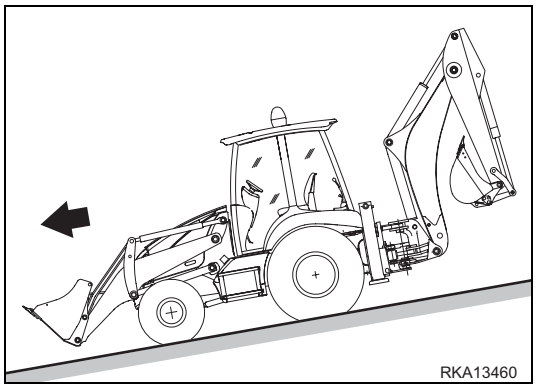

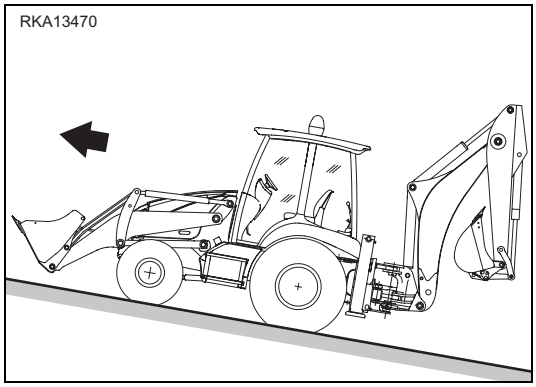

When working on slopes some precautions should be taken to avoid risks for the operator and anyone in the vicinity; the checks and operations to be carried out are the following:

1 - Always check the work area for snow, landslips, gravel, loose ground and anything that may suddenly modify the work conditions and the stability of the machine.

2 - When it is necessary to travel downhill, the front bucket must always be directed downward, in transport position.

3 - When loading or travelling uphill, the front bucket must always be directed upward.

4 - When moving the machine during work, always lower the front bucket.

5 - Carry out any lateral movement on a flat surface at the beginning or at the end of the slope; if this is not possible, move obliquely, keeping the machine axis as parallel to the slope directrix as possible.
Do not move too obliquely, or, even worse, with the machine axis rotated by 90° with respect to the slope directrix.

3.6.5.4 MAXIMUM IMMERSION DEPTH

WARNING

- **If it is necessary to work with the machine immersed in water or on river banks or sea shores, always check the water depth and the current flow.**
- **Make sure that the surface on which you are working is sufficiently firm.**

If it is necessary to work with the machine immersed in water, make sure that the maximum depth does not exceed 50 cm and in any case that the engine cooling fan does not touch the water, since it may get damaged or even break.

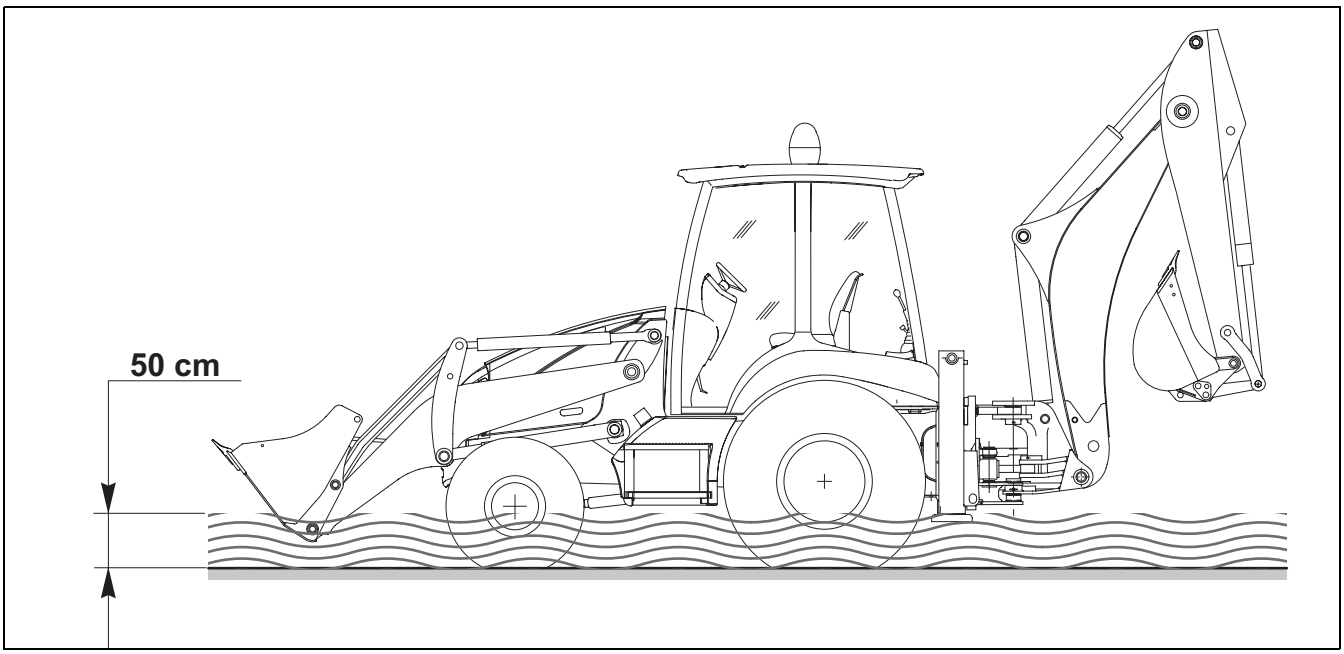

CAUTION

- **When working in water or on muddy ground, lubricate the articulations more frequently than usual.**
- **After work, remove any dirt or mud and lubricate the articulations.**

3.7 PARKING THE MACHINE

3.7.1 PARKING ON LEVEL GROUND

WARNING

- **Park the machine on firm and flat ground, in a sufficiently wide space, so that checks, daily lubrication and refuelling can be carried out without problems.**
- **Lower the front bucket to the ground and set the backhoe to the transport position or with the bucket resting on the ground.**
- **Keep to all the safety rules, in order to avoid any movement of the machine when the operator is absent.**
- **When leaving the machine, remove the ignition key, use the ladders and handles, lock the cab.**

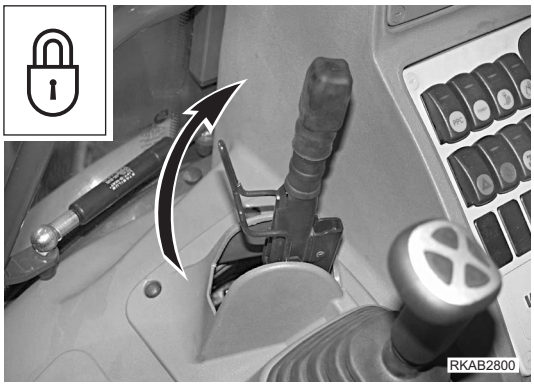

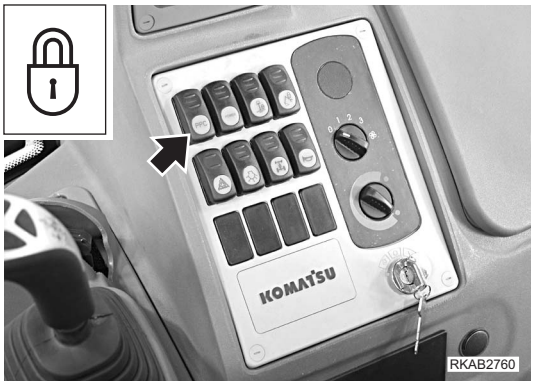

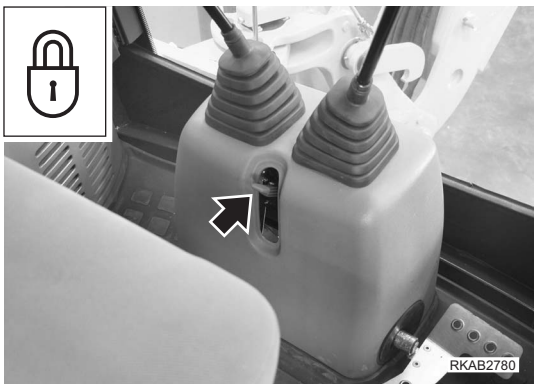

1 - Park the machine on firm and level ground, in a sufficiently wide space.

2 - Shift the reversing gear lever to position (N) and apply the parking brake.

3 - Rest the front bucket and the backhoe bucket onto the ground; if this is not possible because the space is insufficient, the backhoe must be folded in the transport position and secured with the appropriate lock.

4 - Press the servo control locking button (LED on).

5 - Engage the safety lock of the mechanical controls

NOTE

- On machines equipped with backhoe servo controls, all movements are inhibited when the servo control locking button is in locking position (LED on).

6 - Stop the engine, proceeding as described in "3.8 STOPPING THE ENGINE".

7 - Leave the driving position using the ladders and handles provided for this purpose.

8 - Refuel, taking the necessary precautions.

9 - Remove the ignition key and lock the cab.

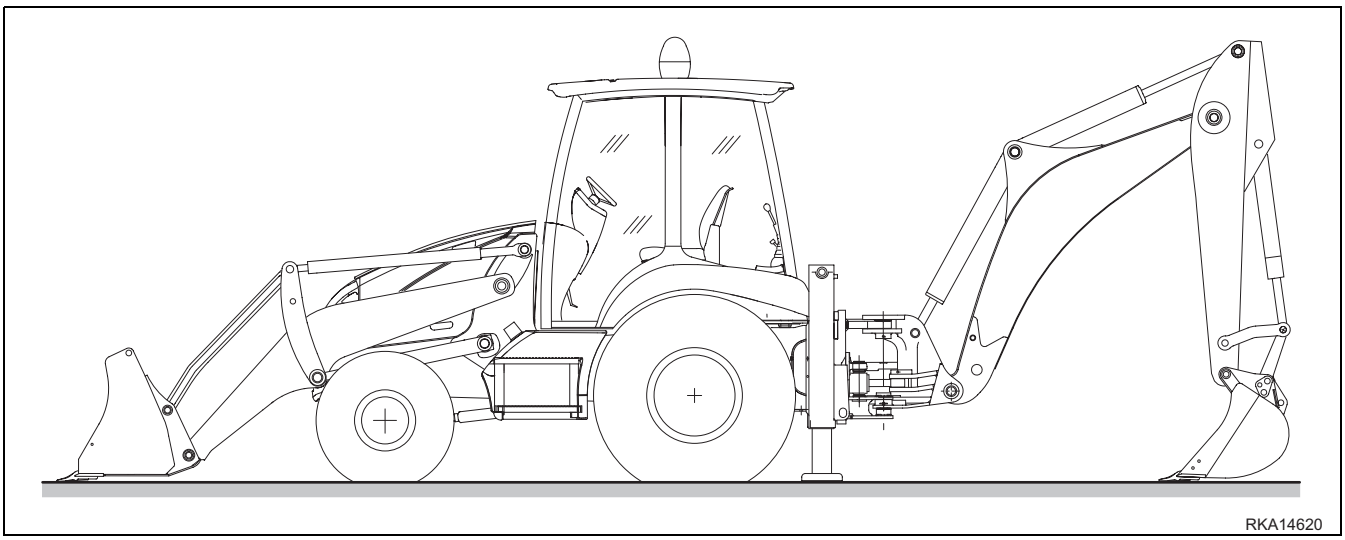

3.7.2 PARKING ON SLOPES

WARNING

- **Any movement of the machine when the operator is not on board may cause serious accidents and even death; to prevent this, carry out the operations described below.**
- **Park on slopes only when it is absolutely necessary.**
- **Park only with the front bucket directed downwards.**

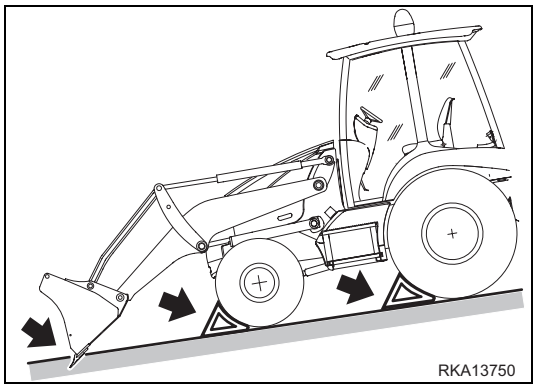

1 - Park the machine with the front bucket directed downwards and resting against an obstacle.
If this is not possible due to the absence of natural obstacles, rotate the bucket in dumping position and thrust the teeth into the ground.

2 - Shift the reversing gear lever to position (N) and apply the parking brake.

3 - Operate the backhoe controls until the bucket teeth are in digging position and thrust them into the ground.

4 - Press the servo control locking button (LED on).

5 - Engage the safety lock of the mechanical controls.

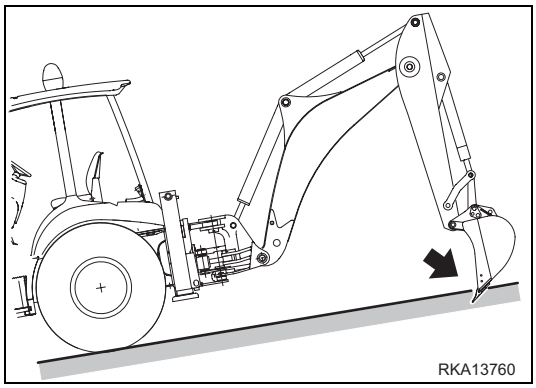

NOTE

- On machines equipped with backhoe servo controls, all movements are inhibited when the servo control locking button is in locking position (LED on).

6 - Stop the engine, proceeding as described in "3.8 STOPPING THE ENGINE".

7 - Leave the driving position using the ladders and handles provided for this purpose.

8 - Put wedges under the wheels.

9 - Refuel, taking the necessary precautions.

10 - Remove the ignition key and lock the cab.

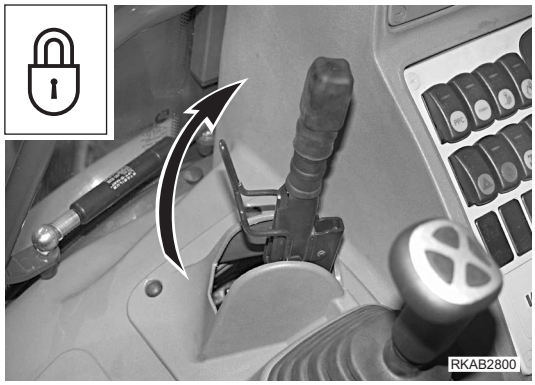

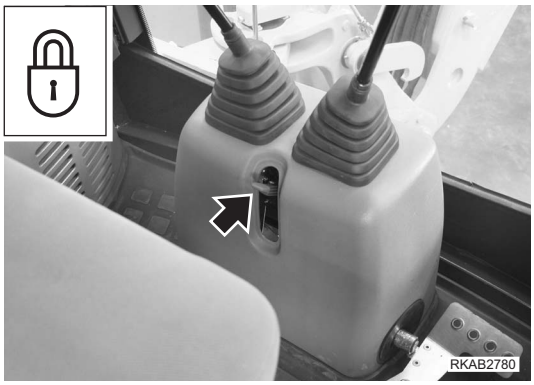

3.8 STOPPING THE ENGINE

IMPORTANT

- **The sudden stop of the engine while it is running shortens its life. Do not stop the engine suddenly, except in case of emergency.**
- **It is likewise recommended not to stop the engine suddenly if it has been running for a long period and is still hot; in this case, let the engine idle at a minimum speed of 1200–1300 rpm for about 5 minutes, in order to allow it to cool down gradually before stopping it.**

Before stopping the engine, proceed as follows:

1 - Rest the front loader and backhoe equipment onto the ground.

2 - Shift the levers to the neutral position and connect the safety devices.

3 - Shift the hand accelerator lever to the idling position.

4 - Shift the reversing gear lever to position (N) and apply the parking brake.

Stop the engine by turning the ignition key to position «O» (OFF).

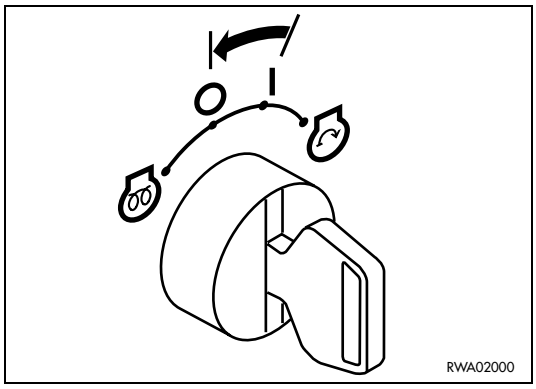

3.9 TRANSPORTING THE MACHINE ON OTHER VEHICLES

3.9.1 LOADING AND UNLOADING THE MACHINE

WARNING

- **The loading and unloading of the machine on-off the means of transport must be carried out on a flat surface and at a safety distance from the edges of ditches or from the roadside.**
- **Block the means of transport by positioning wedges before and behind each wheel.**
- **Make sure that the ramps are sufficiently strong; if necessary, reinforce them with blocks, in order to prevent any dangerous bending.**
- **Make sure that the ramps have the same length, are firmly anchored to the vehicle, are parallel to each other and perpendicular to the loading board; the distance between the ramps must be suitable for the wheel gauge of the machine.**
- **Position the ramps with a maximum inclination of 15°.**
- **Remove any trace of oil, grease or ice from the ramps and the loading board.**
- **Do not change direction when the machine is already on the ramps; if necessary, go down and find the correct direction.**

1 - The machine must get on the ramps with the front bucket (1) directed forward and lifted from the ground.

2 - After loading the machine on the truck, lower the front bucket to the ground, shift the gears into NEUTRAL and apply the parking brake.

3 - Lower the backhoe bucket (2) onto the vehicle, lower the stabilizers (3), lock the loader control and the backhoe control levers.

IMPORTANT

- **On machines equipped with backhoe servo controls, the movements of the levers are inhibited by the front loader locking button (see "3.3.2 pos. 12 - SERVO CONTROL LOCKING BUTTON").**

4 - Stop the engine and remove the ignition key.

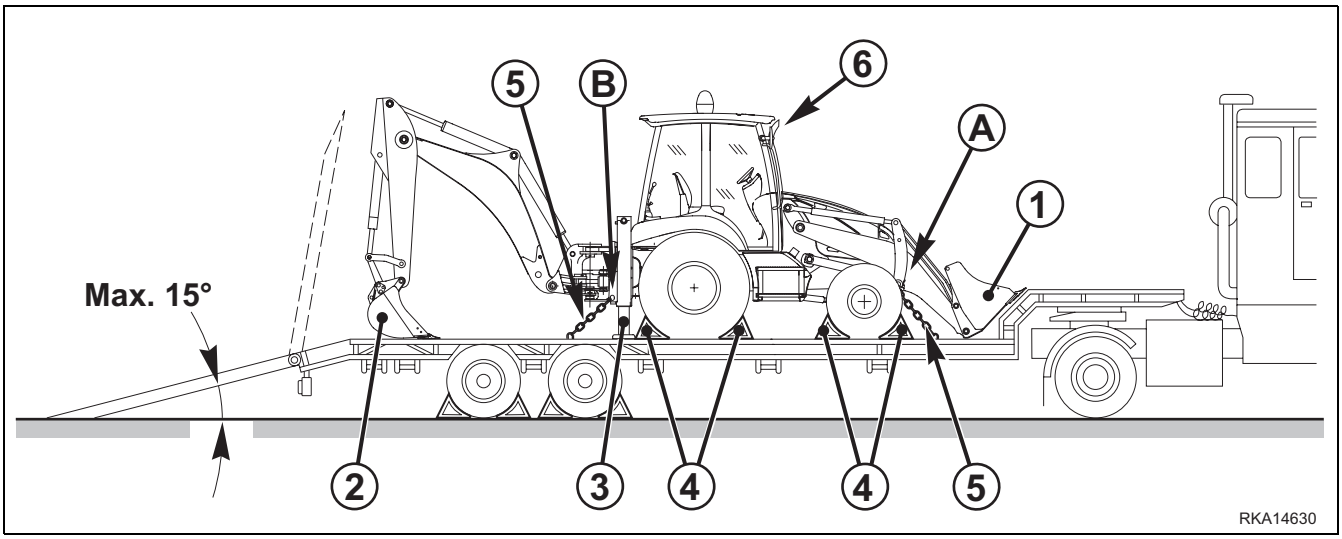

5 - Secure the machine in the correct position by putting wedges (4) before and behind each wheel.

6 - Fix the machine with tie-downs or chains (5) in the anchorage points (A - B) indicated by the pictograms (see "2.1.1 POSITION OF THE SAFETY PLATES").

7 - Protect the end of the exhaust pipe (6).

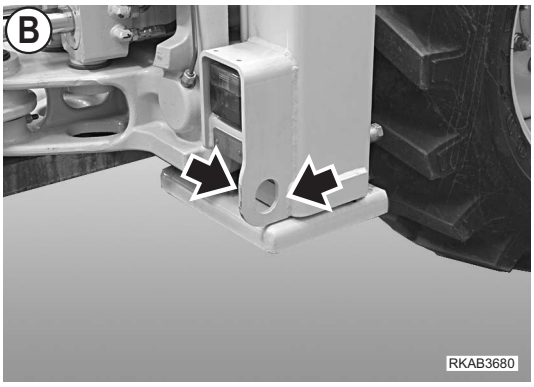

3.9.2 TRANSPORT

CAUTION

- **During transport, the machine must be secured to the vehicle with closed doors and windows.**

1 - Check the overall dimensions of the means of transport; the height, width and weight of the means of transport - machine included - must be compatible with the road and any tunnel, underpass, bridge, electric or telephone line that may be found on the way.

2 - Keep to the regulations in force regarding signals, speed limits, road traffic, authorizations, etc.

3.10 PRECAUTIONS TO BE TAKEN IN THE COLD SEASON

During the cold season or in areas where temperatures are particularly low, especially during the night, it is necessary to take some countermeasures meant to limit any damage deriving from low temperatures.

3.10.1 FUEL AND LUBRICANTS

1 - Change the fuel and use winter fuel type ASTM D975 N. 1.

2 - Change the engine oil with an oil with suitable viscosity.
For the relevant specifications, see "4.3 FUEL, COOLANT AND LUBRICANTS".

3.10.2 COOLANT

⚠ WARNING

- **The coolant containing antifreeze is flammable; do not smoke and do not use naked flames during the checks and when preparing the mixture.**

1 - Use only red permanent antifreeze suitable for aluminium radiators.
Pure red antifreeze must be diluted with water (50%) to ensure protection down to -36°C.

2 - Do not mix different brands of antifreeze.

3 - The use of red permanent antifreeze requires only the check of the level and the periodical change of the fluid. It is not necessary to wash the cooling circuit.

4 - In case of doubt regarding the applicable standards for the use of permanent antifreeze, contact your Komatsu Dealer, who will supply you with exhaustive and precise information.

3.10.3 BATTERY

⚠ WARNING

- **To avoid explosions due to the presence of gas, do not provoke sparks and do not use naked flames near the battery.**
- **The battery electrolyte is dangerous. If it comes in contact with the eyes or the skin, immediately rinse with plenty of water and consult a doctor without delay.**
- **To prevent the fluid from freezing, add distilled water in the morning, before starting work.**

1 - When the ambient temperature decreases, the battery capacity decreases accordingly and, if the battery charge is low, the electrolyte may freeze.
Keep the battery completely charged and insulate it to protect it from low temperatures, so that the machine can be started without problems the following day.

2 - Measure the specific weight of the fluid and check the battery charge percentage, making reference to the following table:

CHARGE PERCENTAGE	FLUID TEMPERATURE			
	20°C	0°C	-10°C	-20°C
100%	1.28	1.29	1.30	1.31
90%	1.26	1.27	1.28	1.29
80%	1.24	1.25	1.26	1.27
75%	1.23	1.24	1.25	1.26

3.10.4 OTHER PRECAUTIONS

1 - Before using the machine in normal operating conditions, carry out some slow forward and reverse movements, and operate all the bucket and backhoe cylinders slowly more than once.
These operations serve to warm up and fluidize the oil in the hydraulic circuit, the transmission, the axles and the brakes.

3.10.5 PRECAUTIONS TO BE TAKEN AT THE END OF WORK

1 - Remove mud and water completely from the machine body.
Park the machine on firm ground; if the machine must be parked near banks or ditches, park it on wooden boards in order to distribute the weight of the machine on a larger surface.

2 - Be careful to water drops forming on the hydraulic cylinder rods: these drops must be completely removed, since if they freeze the cylinder gaskets may be damaged.
After removing the water drops, protect the rods with oil.

3 - Drain the condensate that may have formed in the tank and in the water separator, to prevent the water from freezing during the night.

4 - Since the battery capacity may decrease considerably at low temperatures, after work cover the battery or remove it and store it at a suitable temperature.

3.11 PRECAUTIONS TO BE TAKEN AT THE END OF THE WINTER

1 - At the end of the cold season, change lubricants and fuel.

IMPORTANT

- **The use of permanent antifreeze requires only the check of the level and the periodical change of the fluid.**
  For the relevant specifications, see "4.3 FUEL, COOLANT AND LUBRICANTS"”.

2 - Make sure that the cooling fan belt is in good conditions.

3 - Make sure that the fins of the radiator and of the heat exchanger are clean.

4 - Check the radiator cap gasket and spring; in case of doubt regarding tightness and setting, change the cap.

3.12 USING THE MACHINE AS A LOADER

⚠ WARNING

- **Always fasten the safety belt.**
- **When the declutch push button is used, the machine keeps moving in neutral; to stop it, put on the brakes.**
- **The brake pedals can be used separately to reduce the steering radiuses; adopt this solution only if absolutely necessary, at low speed and with lowered bucket.**
- **Always warn the persons present in the worksite, even if they are authorized, by means of the horn.**

IMPORTANT

- **The basic illustrations shown are those necessary for a correct use and exploitment of the machine; the operator must get to know the controls, the described operating method, the use of the bucket position indicator and learn how to organize work in a free area, using low gears, while seated in the driving position.**

3.12.1 BUCKET POSITION INDICATOR

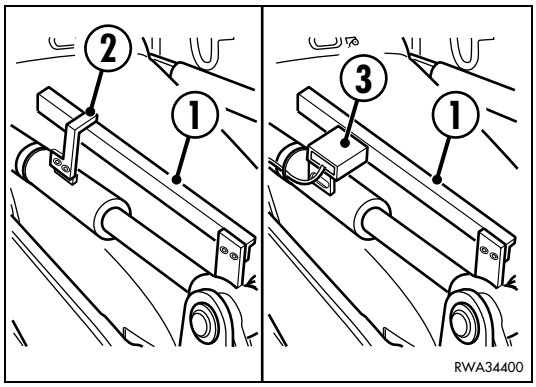

Thanks to this indicator, the operator always knows the position of the front bucket with respect to the ground; the horizontal position of the bucket, parallel to the ground, is determined by the return of the rod (1) to the reference level (2).
If the machine is provided with automatic RETURN-TO-DIG device, the horizontal, parallel position of the bucket with respect to the ground is determined by the sensor (3) located on the cylinder and is reached when the sensor does not detect the rod (1) any longer. In case of malfunction of the device, check and if necessary carry out the required adjustments.
To adjust the sensor, see "4.8.1.m ADJUSTING THE AUTOMATIC RETURN-TO-DIG DEVICE OF THE FRONT BUCKET (if installed)"

3.12.2 ORGANIZING THE WORK AREA

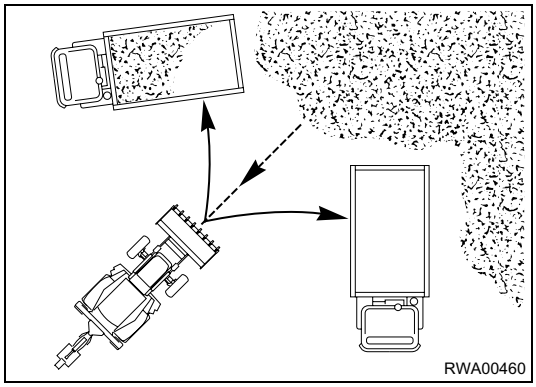

If after a first inspection the area results to be uneven, encumbered with big obstacles or characterized by considerable height differences, before starting work it is advisable to level the ground as much as possible, both for the loader and for the vehicles to be loaded.
These preliminary operations will make work quicker, ensure better results and at the same time reduce the operator's stress and the wear of the machine components; furthermore, the time necessary to load the trucks for the transport of the material will be considerably reduced.
The area to be cleared from obstacles requires the use of a truck positioned as indicated in the figure; for any other arrangement the movements of the loader must be reduced as much as possible.

3.12.2.1 LOADING HEAPED AND LEVEL MATERIAL

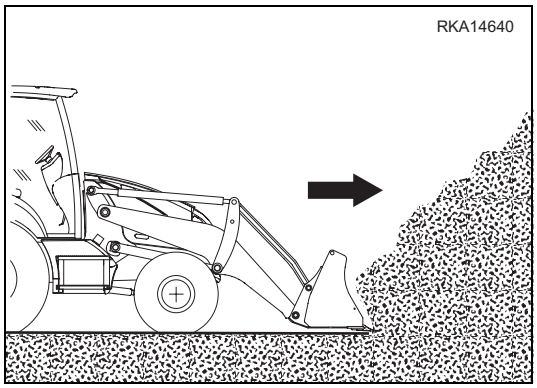

The efficiency of the bucket depends on how the operator starts loading; proceed as follows:

1 - Start moving and direct the bucket towards the heap base.

2 - While the upper material falls down filling the bucket, lift the arm gradually and at the same time fold the bucket completely.

3 - Reverse the motion of the machine and dump the bucket onto the truck. After unloading the material on the truck, use the “return-to-dig” device of the loader hydraulic system to accelerate the operations (if such device is provided).
Once the device has been connected, it lowers the arm completely and at the same time brings the bucket in perpendicular position with respect to the ground. This is particularly useful for the operator, since in this way the machine is ready for the successive loading phase. For the correct use of the “return-to-dig” device, see "3.3.6 pos. 4 - FRONT LOADER CONTROL LEVER".

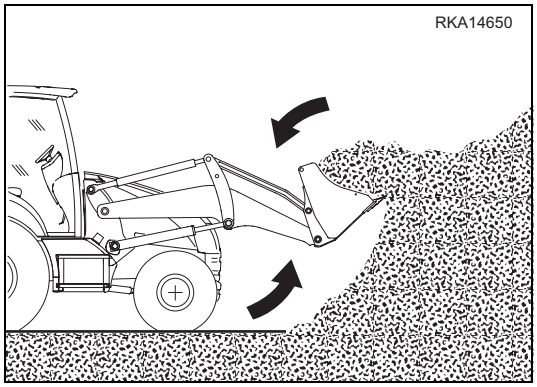

IMPORTANT

- **Start loading the truck from the cab side and, if the material is sufficiently homogeneous, dump from the maximum height in order to increase the compaction of the material and its distribution on the loading platform.**

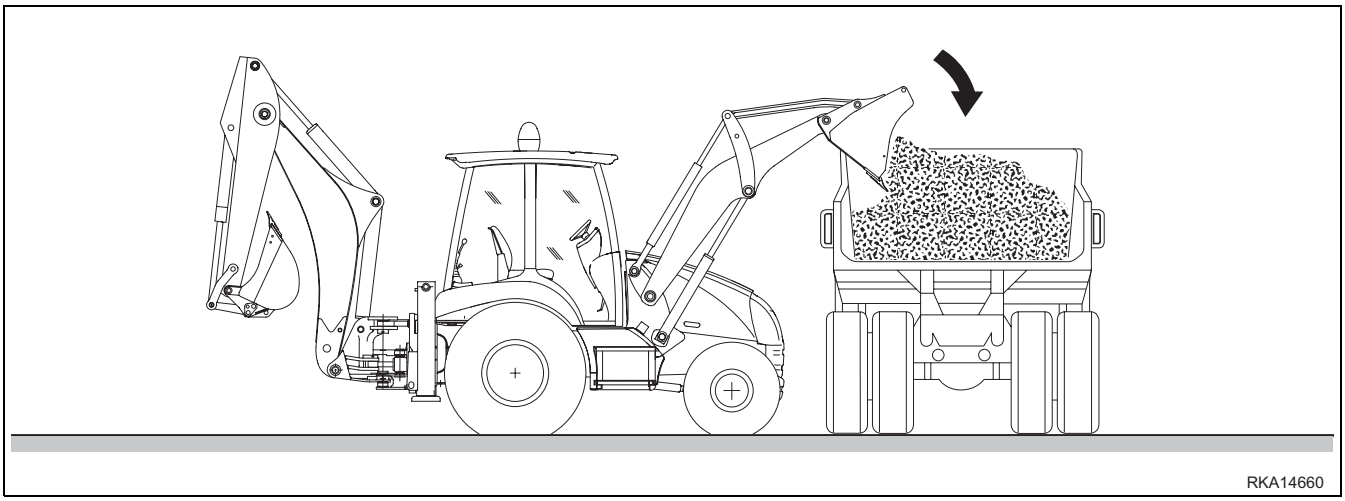

3.12.2.2 LOADING OPERATIONS ON SLOPES

WARNING

- **Travel uphill with the bucket directed forward; the same rule must be followed when loading.**
- **Travel downhill in reverse with the loader directed forward and lowered bucket.**
- **Move changing direction very slowly, with the bucket as low as possible.**
- **Avoid any transverse position with respect to the slope directrix.**
- **Sudden movements of the bucket and dangerous positions may cause the machine to overturn and lead to serious accidents and even death.**

3.12.3 CHANGING THE STANDARD FRONT BUCKET

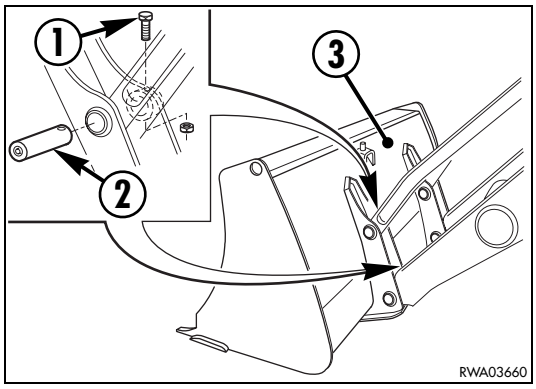

WARNING

- **When the coupling pins are removed or installed, chips may come off; always use gloves, goggles and helmet.**
- **The change of the equipment must be carried out by two persons, who must decide together the words and signals to be used during operations.**
- **Avoid using your fingers to align the holes, since the may be injured or even cut off.**
- **The described procedures are valid also for the coupling of the mechanical connections of the optional equipment.**

1 - Position the bucket on level ground.

2 - Remove the check bolts (1) and the coupling pins (2).

3 - Change the bucket (3), taking care to clean the pins and bushings perfectly and to grease the pins slightly before reinstalling them.

4 - Put back the check bolts and tighten them.

5 - Lubricate the pins (see "4.5.1 LUBRICATION DIAGRAM").

NOTE

- If the machine is equipped with front quick coupling, see "6.2 FRONT EQUIPMENT QUICK COUPLING DEVICES".

3.13 USING THE MACHINE AS AN EXCAVATOR

WARNING

- **The machine can be used as an excavator only after rotating the seat by 180° with respect to the correct driving position; for the specific procedure, see "3.13.2 POSITIONING THE MACHINE FOR DIGGING OPERATIONS". The machine is equipped with an acoustic alarm that is activated if the operator, with the engine running, shifts the reversing gear lever from the neutral position with the seat rotated and not in the correct driving position.**
  This is a danger signal, since it is absolutely forbidden to move the machine while working with the backhoe equipment or in any case with the seat rotated by 180° with respect to the regular driving position.
  Remember that the operator is allowed to move the machine only while seated in the correct driving position, with locked seat and fastened safety belt.
- **Always fasten the safety belt before starting any manoeuvre.**
- **Always lower the stabilizers before starting any digging operation.**
- **Before starting work, alert the persons in the vicinity by means of the horn integrated in the side dashboard or in the left backhoe control lever, if the machine is equipped with backhoe servo controls.**

3.13.1 POSITIONING THE BUCKET ACCORDING TO THE WORK THAT MUST BE CARRIED OUT

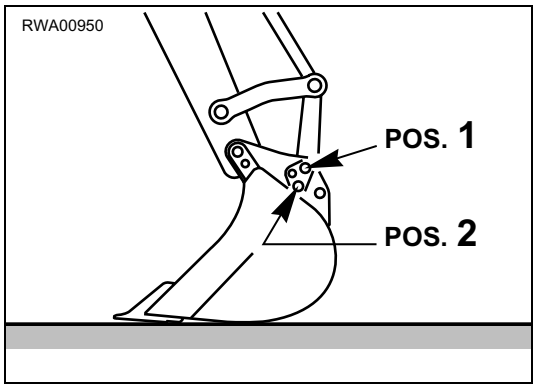

WARNING

- **When introducing the bucket connection pins in the couplings of the arm and of the thrusting arm, be careful to the metal chips that may come off and cause serious injury.**
- **Always wear safety goggles, thick gloves and helmet.**
- **Avoid using your fingers to align the holes, since they may be cut off in case of sudden or uncontrolled movements.**

BUCKET POSITIONS

Two position options are available for the bucket:

Pos. 1: suitable for normal digging operations, ensures more power to the bucketnna.

Pos. 2: suitable for operations on vertical walls, ensures the maximum swing and the maximum digging height on walls. In this position the tearing force is reduced.

3.13.2 POSITIONING THE MACHINE FOR DIGGING OPERATIONS

⚠ WARNING

- **Before moving the equipment, make sure that no one is standing in the work area.**
- **Before moving the equipment, make sure that the stabilizers are lowered.**
- **Before raising the stabilizers, fold the equipment completely or rest it onto the ground.**
- **Carry out all the possible movements and make sure that the control levers work properly.**
- **If visibility is not perfect or there are ducts or lines of any kind, work at reduced speed and ask the assistance of another operator.**

1 - Centre the machine with respect to the digging line.

IMPORTANT

- **If this is not possible, because it is necessary to dig along walls or banks, move the backhoe sideward (see "3.13.3 SLIDING THE BACKHOE UNIT SIDEWARDS").**

2 - Remove the boom anti-rotation pin, introduce it in the apposite hole and release the boom from the safety lock.

3 - Lower the front bucket (1) to the ground; force this movement until lifting the front wheels (2) in order to transfer the weight onto the bucket. Apply the parking brake.

4 - Rotate the seat by 180°, fasten the safety belt, accelerate up to 1500–1600 rpm and lower the stabilizers (3) until the rear wheels (4) are partially raised; this manoeuvre stabilizes the machine and avoids overloads on the rear tyres.

5 - Inhibit the front loader control and the stabilizer control (only for machines equipped with mechanical backhoe controls).

6 - Release the mechanical lock of the backhoe control levers and start work.

IMPORTANT

- **On machines equipped with backhoe servo controls, the movements of the levers can be enabled by releasing the servo control locking button (see "3.3.2 pos. 12 - SERVO CONTROL LOCKING BUTTON").**

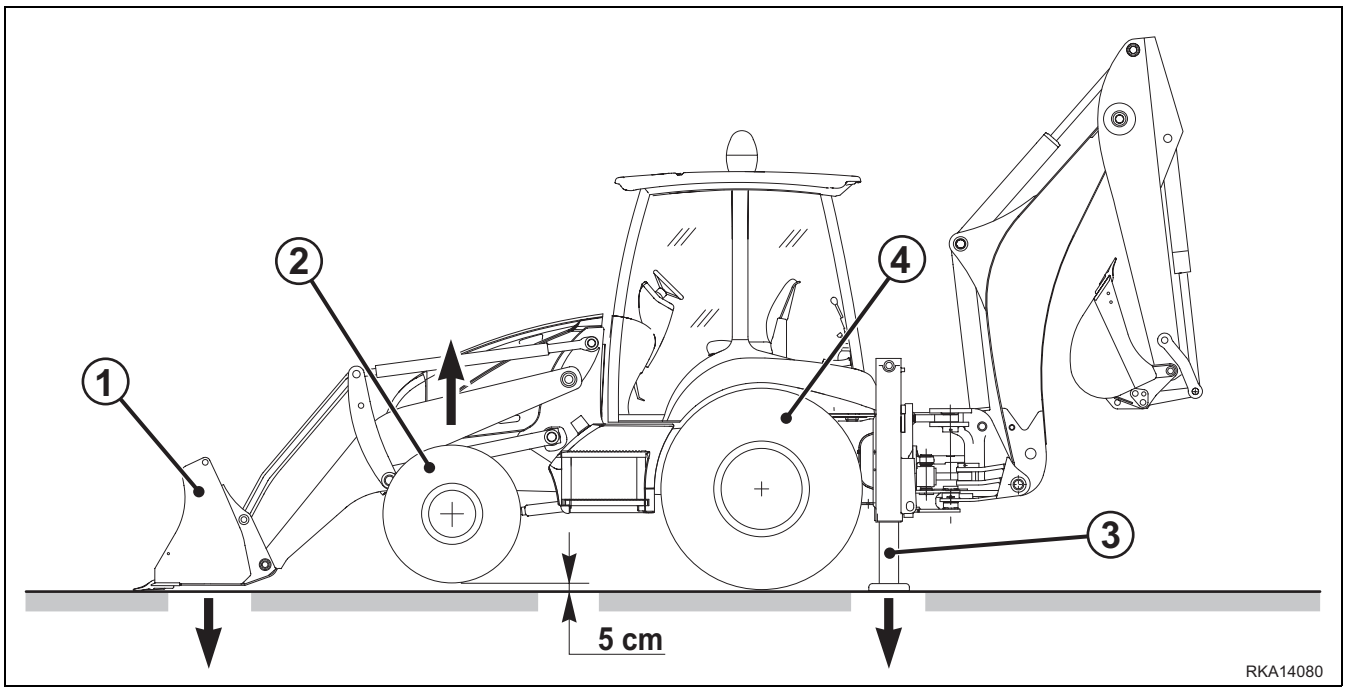

3.13.3 SLIDING THE BACKHOE UNIT SIDEWARDS

IMPORTANT

- **Before moving the backhoe unit, make sure that the sliding guides are clean and lubricated with grease.**

1 - Release the front loader control and the backhoe control levers.

2 - Lower the stabilizers (1) to avoid overloading the rear wheels and to prevent the machine from oscillating.

3 - Swing the boom (2) against the machine.

4 - Manoeuvre the bucket (3) and the arm (4) until the bucket teeth are perpendicular to the ground when arm and boom form an angle of approx. 90°; plant the bucket teeth onto the ground.

5 - Release the backhoe unit (see "3.3.6 pos. 9 - BACKHOE SLIDING LOCK SWITCH").

6 - Make the unit slide by manoeuvring the arm.

⚠ CAUTION

- **Carry out this manoeuvre by operating the arm opening/folding lever smoothly, in such a way as to maintain the sliding support in vertical position and therefore facilitate the sliding movement.**

7 - Lock the unit.

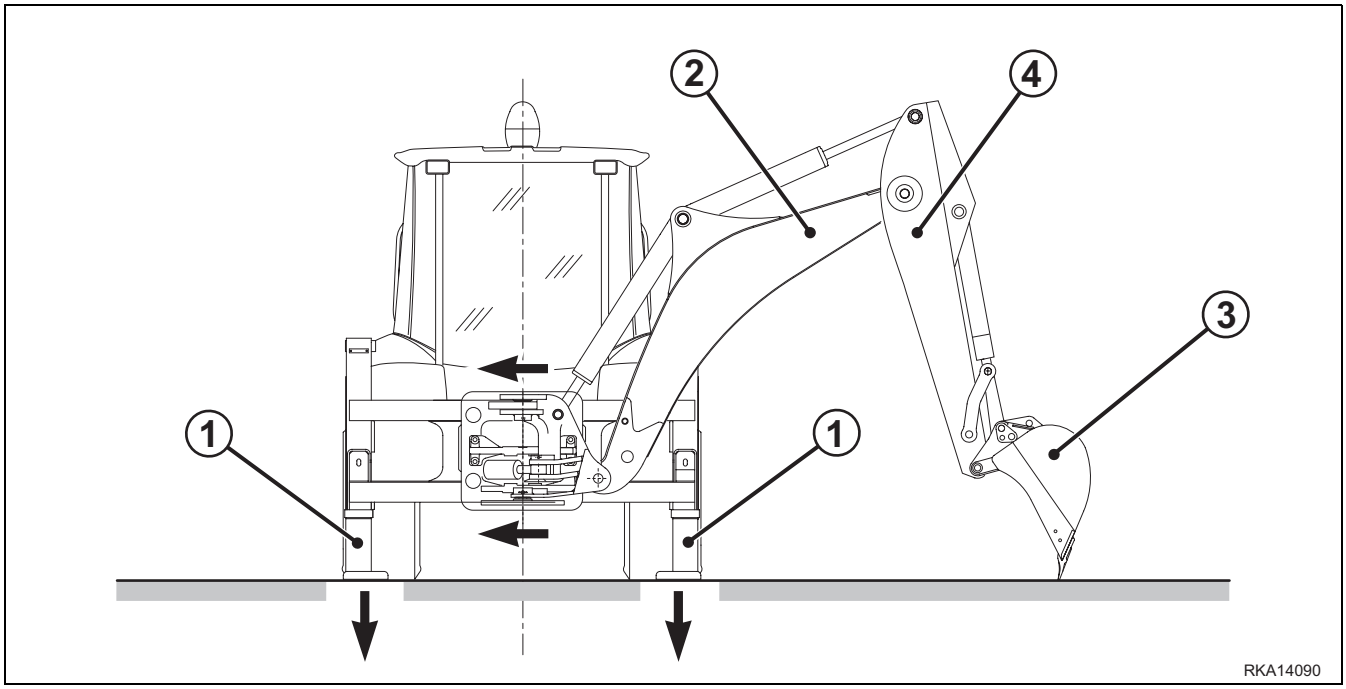

3.13.4 DIGGING METHOD

⚠ WARNING

- **The geometry of the rotation fulcrum of boom, arm and bucket make it possible to dig even beyond the stabilizer line, which makes the ground give way. Do not dig beyond the boom fulcrum line, since the ground may collapse and cause the machine to overturn.**

1 - At the beginning of work, keep the bucket at the correct penetration angle.

2 - Once the desired digging depth has been reached, position the bucket with its back parallel to bottom of the excavation and then start filling.

3 - During the collection phase, make bucket, boom and arm move simultaneously; combined movements facilitate the filling of the bucket and therefore increase productivity.

4 - The removal depth must be correct and suitable to the type of ground; excessive depth may lock the movements, overload the engine and the pump and slow down the digging operations.

5 - To dump on heaps, dump the bucket as soon as it gets near the dumping area; the inertia resulting from the movement will ensure the compaction of the material with no need to use the bucket for this purpose, which avoids impacts and vibrations that facilitate the wear of pins and bushings.

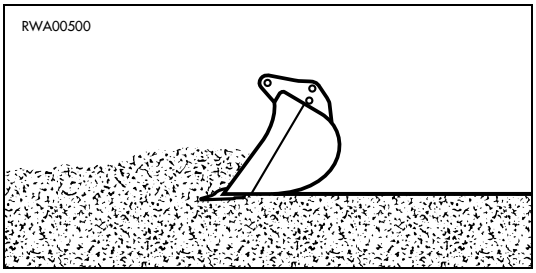

CORRECT
The bucket works with its flat surface parallel to the ground.

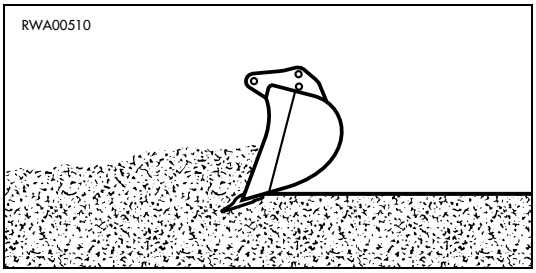

INCORRECT
The bucket is thrusted downwards slowing down the digging work.

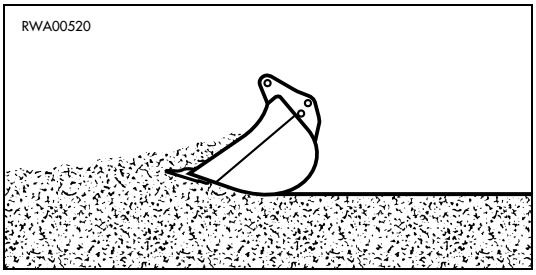

INCORRECT
The bucket is pushed upwards and therefore is not filled completely.

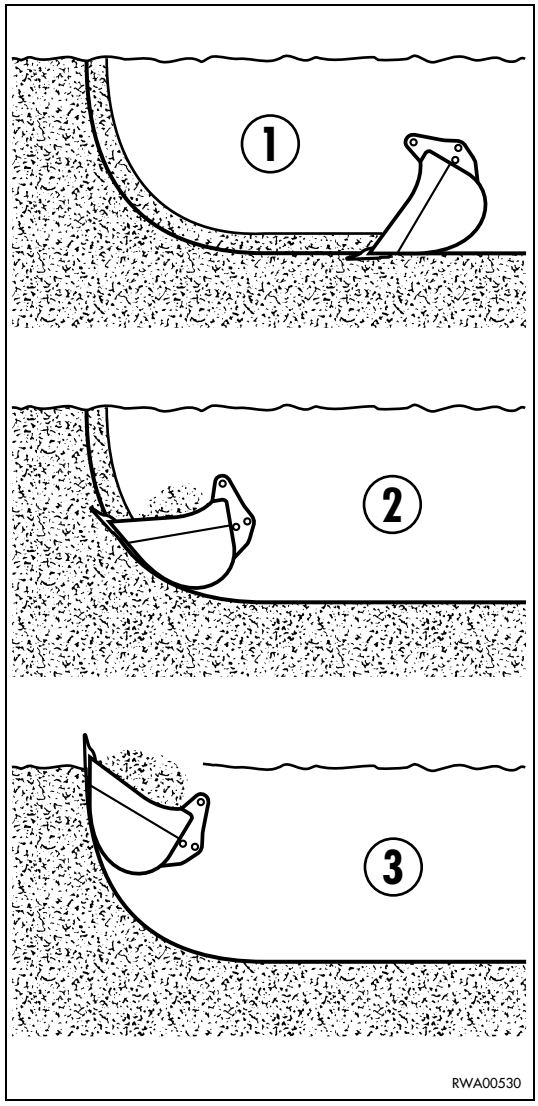

CORRECT DIGGING METHOD
(Sequence 1 - 2 - 3)

3.13.4.1 CHANGING THE BACKHOE BUCKET

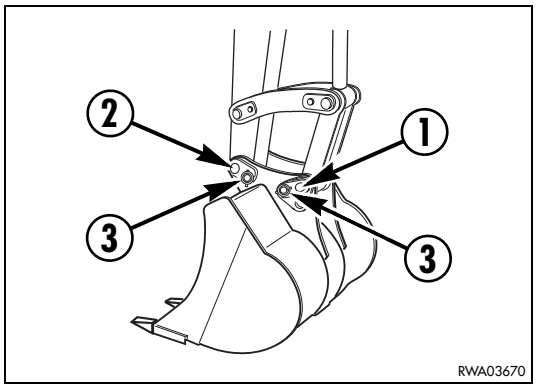

WARNING

- **When the coupling pins are removed or installed, chips may come off; always use gloves, goggles and helmet.**
- **The change of the equipment must be carried out by two persons, who must decide together the words and signals to be used during operations.**
- **Avoid using your fingers to align the holes, since the may be injured or even cut off.**
- **The described procedures are valid also for the coupling of the mechanical connections of the optional equipment.**

1 - Position the bucket on level ground, directing it so that the flat part of the bucket back rests on the ground.

2 - Remove first the tie-rod pin (1) and then the arm connection pin (2).

3 - Change the bucket, taking care to clean the pins and bushings perfectly and to grease the pins slightly before reinstalling them.

IMPORTANT

- **Install the arm connection pin first.**

4 - Put back the safety retainers (3) of the pins.

5 - Lubricate the pins by means of the special grease nipple (see "4.5.1 LUBRICATION DIAGRAM").

NOTE

- If the backhoe is equipped with quick coupling device, see "6.12 REAR EQUIPMENT MECHANICAL QUICK COUPLING DEVICE".

3.14 LONG PERIODS OF INACTIVITY

3.14.1 PREPARING THE MACHINE FOR A LONG PERIOD OF INACTIVITY

⚠ WARNING

- **When draining the fuel, do not smoke, nor use naked flames near the machine.**
  Place a container under the machine to gather the fuel and prevent it from spreading around.
  If some fuel should be spilled, clean the dirty area immediately.

IMPORTANT

- **To protect the cylinder rods when the machine is not used, position the work equipment as shown in the figure. (This serves to prevent the cylinder rods from rusting).**

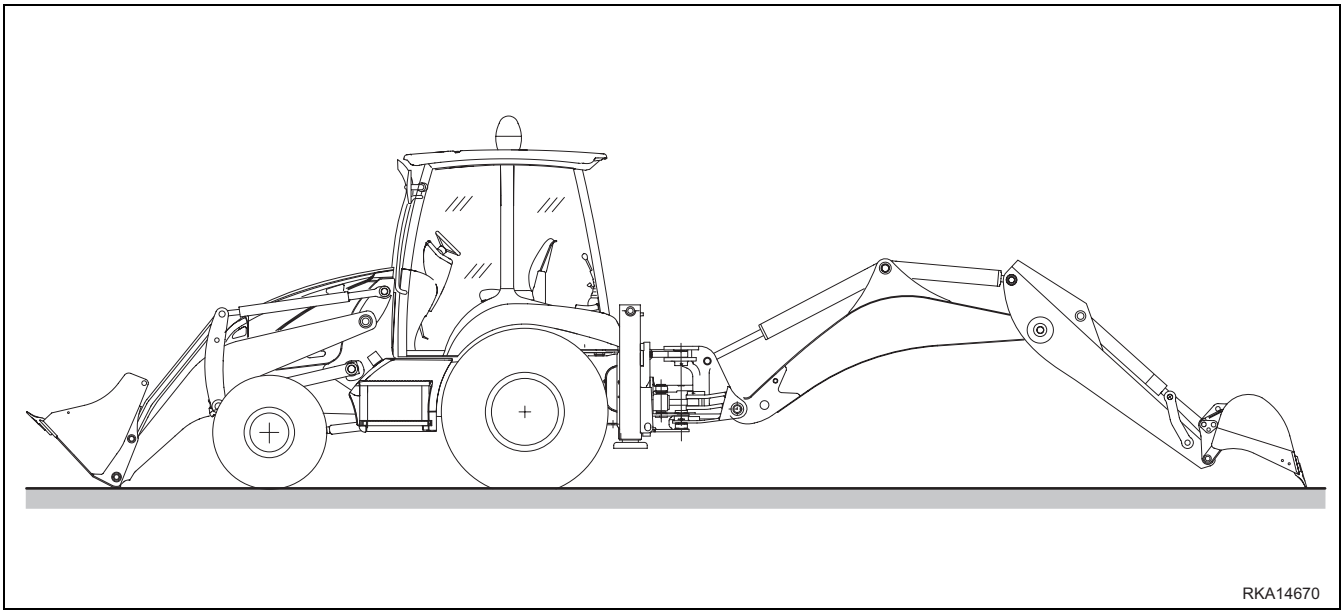

NOTE

- This preliminary operations must be carried out when the machine is going to remain unused for approximately 1 month; if the period of inactivity is expected to be longer, see also "3.14.2 PREPARING THE ENGINE FOR A LONG PERIOD OF INACTIVITY".

If the machine is going to remain unused for a long period, to keep its components in good conditions it is advisable to store it in a sheltered place and to take the following measures:

1 - Clean the inside and the outside of the machine completely and very carefully, retouching any scratch on the paintwork in order to avoid oxidation.

2 - Drain and change all the fluids of the hydraulic circuits and the lubricants (axles, reduction gears, converter), following the indications given in the maintenance instructions.

3 - Change all the filtering elements (air filter, engine oil filter, hydraulic circuit filters, fuel filter).

4 - To prevent the deformation of the tyre sidewalls, insert supports or blocks under the axles, to nullify the weight of the machine.

5 - Grease the exposed rods of the hydraulic cylinders and the equipment joints.

6 - Shift the machine controls to the neutral position and engage the safety locks.

7 - Seal the end of the exhaust pipe and the engine breather outlets.

8 - Refuel completely.

9 - Remove the battery, check the electrolyte level and make sure that the battery is charged.
Place the battery in a room with suitable temperature and recharge it periodically.

10 - Lock the cab doors, the filler cap and the engine hood.

11 - Seal the filler cap.

3.14.2 PREPARING THE ENGINE FOR A LONG PERIOD OF INACTIVITY

NOTE

- These operations must be carried out only if the engine is going to remain unused for more than 1 month.
- The first two operations must be carried out only on engines that have already run for more than 200 hours.

1 - Drain the oil from the oil pan and fill it with washing oil FIAT L35.
2 - Start the engine and let it idle for 15 minutes.
Stop the engine and drain the oil.
3 - Fill the oil pan to the MIN. level with SAE 30 oil or with oil corresponding to the MIL - 2160B – type 2 specifications.
4 - Empty the fuel filters, disconnect the fuel pump intake pipe and connect it to an outside tank filled with CBF (ISO 4113) oil.
5 - Start the engine and let it run at 800–1000 rpm for 15 minutes.
At this point, use a syringe to slowly spray 40 g of SAE30 oil or of an oil corresponding to the MIL - 2160B - type 2 specifications into the suction manifold (taking approximately 10 seconds).
6 - Stop the engine and drain the oil from the oil pan.

NOTE

- Recovered oil can be used again, for other two or three times, when preparing the engine for a long period of inactivity.

7 - Loosen the alternator, fan and coolant pump belts.
8 - Reconnect the fuel pump intake pipe to the fuel tank.
9 - Seal the exhaust pipe and all the intake and breather openings with adhesive tape and vynil bags.
10 - Position a sign with the clear writing “NO ENGINE OIL” on the steering wheel and on the engine.

IMPORTANT

- **These operations must be repeated every 6 months.**

3.14.3 MAINTENANCE DURING A PERIOD OF INACTIVITY

NOTE

- These operations must be carried out once a month.

1 - Recharge the battery and install it on the machine.
2 - Remove the seals from tank, exhaust pipe and breather outlets.
3 - Check the tyre pressure and remove the support blocks from under the machine.
4 - Start the engine and let it idle for 15 minutes.
5 - While warming the engine, remove the protection grease from the exposed rods of the hydraulic cylinders.
6 - Before moving the machine, make sure that the instruments, warning lights, lights, direction indicators, windshield wipers and stop lights function correctly.
7 - As soon as possible, warm the hydraulic cylinders by slowly lifting and extending all the equipment more than once.
8 - Travel for short distances at low speed, applying the brakes every now and then to allow the braking surfaces to settle down.

3.14.4 RESTARTING THE ENGINE

NOTE

- These operations must be carried out if the machine has been prepared for a period of inactivity longer than 1 month.

1 - Remove the seals from the exhaust pipe and the filler cap.
2 - Open the engine hood and the cab.
3 - Remove the seals from the intake and breather openings.
4 - Drain the oil contained in the injection pump.
5 - Fill the engine with the oil prescribed, suitable for the ambient temperature.
6 - Tighten the alternator, fan and coolant pump belts.
7 - Check all the fluid levels (coolant, windshield detergent, fuel, oil in the gearbox and axle hydraulic circuits).
8 - Check the battery charge and install it.
9 - Start the engine by proceeding as indicated in paragraph "3.6.2 STARTING THE ENGINE" and make sure that the engine oil pressure warning light goes out when the starter has run for approx. 5 seconds.
10 - After starting the engine, let it idle for 15 minutes.
11 - Warm up the hydraulic cylinders by slowly lifting and extending all the equipment more than once.

3.14.5 AFTER THE PERIOD OF INACTIVITY

Considering that different periods of inactivity can have different durations, the functions of the machine can be restored according to two different procedures:

1 - If the period of inactivity lasted for more than one month, follow the instructions given in paragraphs "3.14.4 RESTARTING THE ENGINE" and "3.14.3 MAINTENANCE DURING A PERIOD OF INACTIVITY".
2 - If the period of inactivity has lasted for less than one month, follow the indications given in paragraph "3.14.3 MAINTENANCE DURING A PERIOD OF INACTIVITY".

3.15 TROUBLESHOOTING

3.15.1 HOW TO REMOVE THE MACHINE

DANGER

- **The removal of the machine in case of failure always involves risks that may cause injuries to the persons responsible for this type of operation.**
- **When removing the machine, use a wire rope suitable for the weight of the machine to be removed.**

If the machine gets stuck in mud and cannot get out using only its motive power, or in case of breakdown, use a wire rope as shown in the figures on the right.

IMPORTANT

- **Before recovering the machine, shift the gear lever to neutral, disengage the four-wheel drive and release the parking brake.**

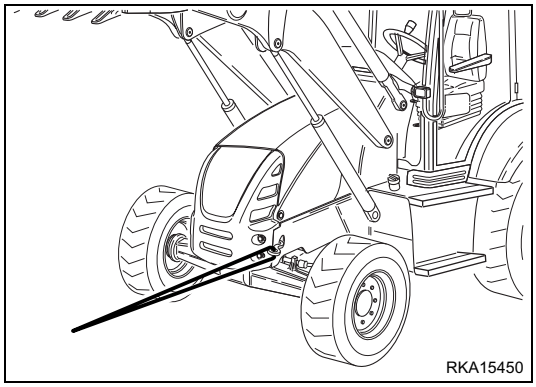

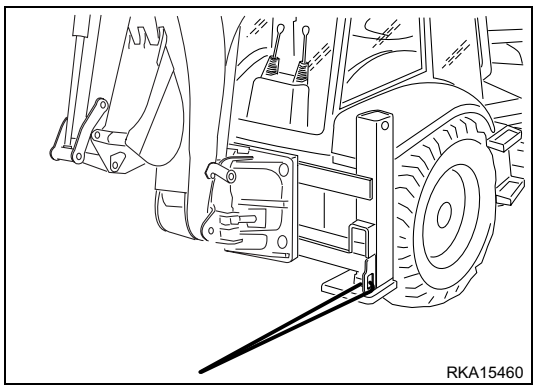

3.15.2 AFTER THE FUEL HAS RUN OUT

Before starting the engine, when the fuel has run out and therefore air has entered the fuel supply circuit, it is necessary to bleed the fuel supply circuit.
For the necessary operations, see "4.8.10 MAINTENANCE EVERY 500 HOURS OF OPERATION".

3.15.3 IF THE BATTERY HAS RUN DOWN

WARNING

- **When checking or carrying out any operation on the battery, stop the engine and make sure that the ignition key is in position «O».**
- **The battery produces hydrogen, which may explode. Do not use naked flames and do not smoke near the battery, and avoid producing sparks.**
- **The battery electrolyte is made of diluted sulphuric acid that may corrode clothes and even the skin; in case of contact with this fluid, immediately rinse the involved part with plenty of water.**
  If the acid gets into the eyes, immediately rinse with plenty of water and consult a doctor without delay.
- **When working on the battery, always wear goggles and gloves.**
- **When removing the battery, disconnect first the earth cable (-); when installing the battery, connect first the positive cable (+).**
- **If a tool makes contact with the positive terminal and the machine structure at the same time, this may generate sparks with consequent risk of explosion.**
- **Carefully tighten the connection terminals, since false contacts may generate sparks with consequent risk of explosion.**

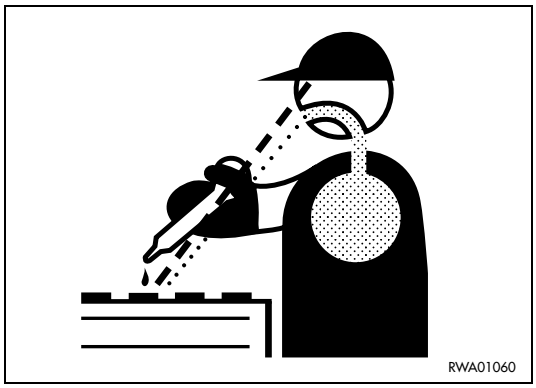

REMOVAL

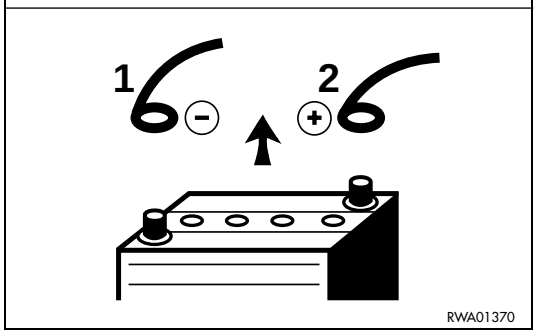

INSTALLATION

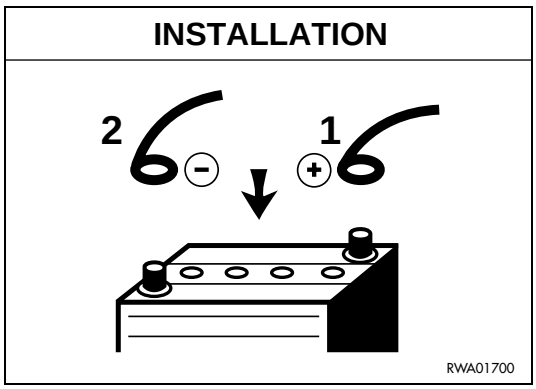

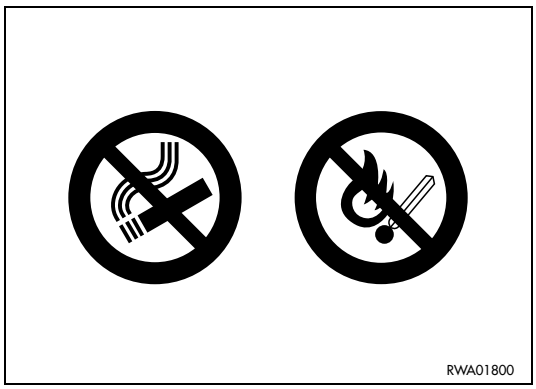

3.15.3.1 STARTING WITH BOOSTER CABLES

WARNING

- **When starting the engine with the aid of another machine, connect the batteries in parallel.**
- **When connecting the cables, avoid any contact between the positive cable (+) and the negative cable (–).**
- **When starting the engine with booster cables, always wear safety goggles.**
- **Take care to avoid any contact between the machine to be started and the machine used as starting aid, in order to avoid sparks and therefore the explosion of the hydrogen produced by the batteries.**
- **The explosion of the battery causes serious damage and injury.**
- **Take care not to invert the cables and connect the earth cable (-) last, as far from the battery as possible.**
- **Remove the cables with great care; prevent the cables disconnected from the battery from touching other parts of the machine, in order to avoid the explosion of the hydrogen.**

IMPORTANT

- **The cables and pliers must be suitable for the current load that must be transferred.**
- **The battery used as starting aid must have greater capacity or at least the same capacity as the battery of the machine to be started.**
- **Make sure that the cables and pliers are neither corroded, nor damaged.**
- **Make sure that the pliers hold the terminals firmly.**

CONNECTING THE CABLES AND STARTING THE ENGINE

1 - Make sure that the ignition key is in position «O».
2 - Connect the positive poles (+) of the two batteries with each other (A).
3 - Connect the cable of the negative terminal (-) of the charged battery to the earth block of the machine to be started (B).
4 - Start the engine of the machine that supplies current and increase its speed.
5 - Start the engine of the failed machine. (See "3.6.2 STARTING THE ENGINE").

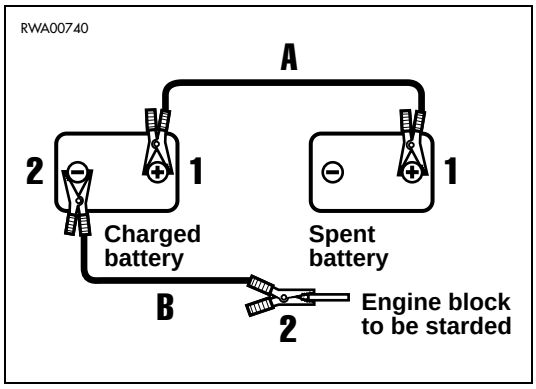

REMOVING THE CABLES

When the engine has started, remove the cables in the reverse order with respect to their connection.

1 - Disconnect the negative cable (-) from the earth block of the engine that has been started and then from the battery (B).
2 - Disconnect the positive cable (+) first from the battery used as starting aid and then from the discharged battery (A).

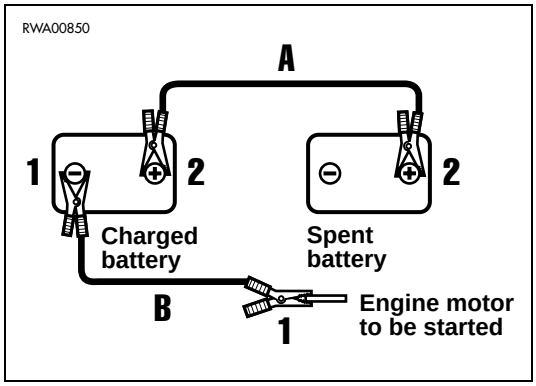

3.15.4 OTHER TROUBLES

(•) Always contact your Komatsu Dealer when you have to carry out this operation.

- If the anomaly or its cause is not included in the table below, contact your Komatsu Dealer for the necessary repair.

3.15.4.1 ELECTRICAL CIRCUIT

TROUBLE	CAUSE	REMEDY
Lights do not work satisfactorily even with engine running at high speed:	• Faulty cables. • Faulty fan belt tension.	(•) Check and repair any loose terminal and connection. • Adjust fan tension (see “EVERY 250 HOURS).
Lights come on intermittently with engine running:		
Alternator charge warning light does not go out with engine running and increasing speed:	• Faulty alternator. • Faulty cables.	(•) Change. (•) Check and repair.
Alternator emits an abnormal noise:	• Faulty alternator.	(•) Change.
Starter does not turn with key in START position:	• Faulty cables. • Battery charge insufficient. • Faulty engine start fuse.	(•) Check and repair. • Charge battery. • Change.
Starter pinion engages and then disengages:	• Battery charge insufficient.	• Charge battery.
Starter makes engine run slowly:	• Battery charge insufficient. • Faulty starter.	• Charge battery. (•) Change.
Starter disengages before engine has started:	• Faulty cables. • Battery charge insufficient.	(•) Check and repair. • Charge battery.
Engine oil pressure warning light does not come on when engine is stopped (ignition key in position «I»):	• Faulty bulb. • Faulty pressure sensor.	(•) Change. (•) Change.
Alternator charge warning light does not come on when engine is stopped (ignition key in position «I»):	• Faulty bulb. • Faulty cables.	(•) Change. (•) Check and repair.

3.15.4.2 HYDRAULIC SYSTEM

TROUBLE	CAUSE	REMEDY
Pump emits an abnormal noise:	• No oil in the tank. • Faulty pump. • Hydraulic oil unsuitable for the temperature.	• Top up. (•) Repair or change. • Change.
Equipment control levers do not return automatically to neutral position:	• Broken return spring or seized element.	(•) Change spring or distributor element.
Equipment moves only at low speed:	• Faulty pump. • Max. pressure valves out of rating, or not closed due to impurities. • Dirty drain filter.	(•) Repair or change. (•) Calibrate or change. • Change.

3.15.4.3 BRAKING SYSTEM

TROUBLE	CAUSE	REMEDY
Braking not regular for both wheels:	• Brake discs worn. • No oil in brake pump. • Air in braking circuit.	(•) Change. (•) Top up and bleed circuit. (•) Bleed circuit.
Braking not regular on one side only:	• Air in braking circuit. • Brake disc worn.	(•) Bleed circuit. (•) Change.

3.15.4.4 CONVERTER

TROUBLE	CAUSE	REMEDY
Low pressure in the clutch:	• Oil level too low. • Clutch pressure adjusting valve locked open. • Faulty delivery pump. • Clutch shaft or piston rings. • Leakages due to clutch piston pump locked open.	• Top up. (•) Clean element and seat. (•) Change. (•) Change rings. (•) Clean valve carefully.
Pump delivery insufficient:	• Oil level too low. • Suction filter clogged. • Faulty pump.	• Top up. • Clean filter. (•) Change.
Overheating:	• Damaged rings. • Faulty pump. • Oil level too low. • Dirty heat exchanger. • Damaged heat exchanger.	(•) Remove, disassemble and reassemble the unit. (•) Change. • Top up. • Clean. • Change.
Noisy converter:	• Faulty pump. • Damaged bearings.	(•) Change. (•) Remove and change.
Lack of power:	• Low engine rpm causes stall speed. • Defect as if due to overheating.	(•) Check and set up engine governor. • See remedies in case of overheating.

3.15.4.5 ENGINE

TROUBLE	CAUSE	REMEDY
Oil pressure warning light remains on even with engine at high speed:	• Oil level in oil pan too lo. • Oil filter clogged. • Oil unsuitable for the season.	• Top up. • Change filter. • Change.

TROUBLE	CAUSE	REMEDY
Steam comes out of radiator breather pipe:	• Fluid level low, fluid leakages. • Fan belt slackened. • Radiator fins damaged or closed. • Faulty thermostat. • Radiator cap loose or broken. Working at considerable altitude.	• Top up, repair. • Check belt tension. • Repair or clean. (•) Change. • Tighten cap or change unit.
Temperature indicator always on the right end of the scale:	• Faulty temperature indicator.	(•) Change.
Temperature indicator pointer always on the left end of the scale:	• Faulty thermostat. • Faulty indicator.	(•) Change. (•) Change.
Engine does not start:	• Run-down battery. • Battery terminals loose or corroded. • No fuel. • Type of fuel unsuitable for climate. • Air in fuel supply circuit. • Other causes.	(•) Charge or replace. (•) Tighten nuts or change terminals. • Refuel. (•) Change filter. Refuel with winter type. (•) Check pipes, connections, fuel and injection pumps. Bleed circuit. (•) Contact Dealer.
Engine stops:	• Fuel filters clogged. • Air in fuel supply circuit. • Other causes.	(•) Change. (•) Check pipes, connections, fuel and injection pumps. Bleed circuit. (•) Contact Dealer.
Engine overheats:	• Radiator clogged. • Insufficient tension of water pump and fan belts. • Low coolant. • Air filters clogged.	• Clean fins. (•) Check and adjust belt tension. • Top up. (•) Clean or change filters.
Engine power insufficient:	• Impurities or water in fuel supply circuit. • Fuel filter clogged. • Air filters clogged.	(•) Clean and refuel with new fuel. (•) Change. (•) Clean or change filters.
Exhaust gases white or light blue:	• Too much oil in oil pan. • Unsuitable fuel. • • Other causes	• Top up. • Change with fuel in compliance with standards. (•) Contact Dealer
Exhaust gases occasionally tend to be black:	• Air cleaner clogged. • Faulty injectors.	• Clean or change. (•) Change.
Combustion noise occasionally resembles a blow:	• Faulty injectors.	(•) Change.
Abnormal noises (during combustion or in mechanical parts):	• Fuel with low cetane rating. • Overheating. • Exhaust silencer inside damaged. • Excessive valve clearance.	• Change with fuel in compliance with standards. • See “defects of temperature indicator”. (•) Change. (•) Adjust valve clearance.

THIS PAGE WAS INTENTIONALLY LEFT EMPTY

MAINTENANCE

4.1 GUIDE TO MAINTENANCE

- Before opening the engine hood, engage the safety locks of both the front loader and the backhoe.
- If it is necessary to check the hydraulic oil level in the tank, set the machine in transport position (see "3.1 SAFETY LOCKS").
- Carry out any maintenance operation on firm and level ground, after applying the parking brake.
- Use Komatsu genuine oils and greases; choose oils suitable for the ambient temperature.
- Use clean oils and greases. Keep the oil and grease containers clean and prevent any foreign matter from getting into them.
- Always keep the machine clean: this makes it easier to locate any failed part.
  In particular, clean the grease nipples, the breathers and the areas near the openings for the level checks, to prevent any impurities from getting into/on them.
- Draining hot oil or coolant immediately after stopping the engine is hazardous. Wait for the engine to cool down until reaching a temperature of at least 40–50° C.
- When changing the oil or the filters, check for metal particles. If you find large quantities of metal particles, contact your Komatsu Dealer.
- Check and change the oil in a clean place and prevent any impurities from getting into the tank.
- Before carrying out any maintenance operation, hang warning plates on the ignition switch, the control levers and the cab doors, to prevent anyone from starting the engine.
- When performing maintenance operations, always take the precautions indicated on the safety plates applied to the machine.
- Instructions for arc welding:

1 - Turn the ignition key to position «O».
2 - Disconnect the battery (first the negative pole and then the positive pole).
3 - Disconnect the alternator.
4 - Do not apply more than 200V continuously.
5 - Connect the earth cable within 1 m from the point where the welding operation must be carried out.
6 - Avoid placing gaskets and bearings between the welding area and the earth cable.

- Do not use flammable fluids to clean any parts of the machine. Keep naked flames away from these fluids and avoid smoking.
- When O rings and gaskets are removed, clean the sealing surfaces thoroughly and replace the O rings and gaskets with new ones.
  Fit the O rings and gaskets correctly when reassembling.
- Avoid keeping loose objects or tools in your pockets: they may fall out and drop into the machine, especially when you open covers and work on the machine while bending over it.
- When washing the machine, do not direct the high-pressure water jet onto the radiator and the heat exchanger.
- When washing the machine, protect the electric system connectors and avoid wetting the ignition switch.
- Before starting work in mud, under the rain, on seashores or river banks, provide for lubrication where required. Wash the machine immediately after work to protect the components from rust. Lubricate the equipment joints more frequently than usual.
- When the worksite is particularly dusty, proceed as follows:

1 - Check the air filter for any clogging and clean it more frequently than usual.
2 - Clean the radiator and the heat exchanger frequently, to avoid any clogging of the fins.
3 - Change the diesel oil filter more frequently than usual.
4 - Clean the electrical components, especially the starter and the alternator, to avoid any accumulation of dust.

- Never mix oils of different brands.
  Do not top up with any oil different from those used in the machine. If necessary, drain the tanks and fill them with the oil of the new brand.

WARNING

- **Oils, filters, coolant, gaskets, electric wires and batteries are considered special waste and must be collected and disposed of according to the regulations in force.**
- **The combustible material of some components may become extremely dangerous if it burns. For this reason, avoid any contact of burnt material with your skin or eyes and do not inhale the fumes (see "2.8 PRECAUTIONS TO BE TAKEN DURING MAINTENANCE").**

4.2 MAINTENANCE NOTES

- Use only Komatsu genuine spare parts.
- Do not mix different types of oil.
- Unless specified otherwise, the oils and the coolant used by Komatsu to fill the tanks before the delivery of the machine are the following:

FLUID	SPECIFICATIONS
• Engine oil	SAE 15W-40 Specifications: API CI-4, ACEA E7
• Hydraulic system oil	SAE 10W-30 Specifications: API CF - CF2 - CD
• Biodegradable hydraulic system oil (Only for machines in which synthetic biodegradable oil type HEES not of plant origin is used)	SHELL NATURELLE HFX-32
• Hydraulic transmission oil	GM DEXRON® II D
• Front and rear axle oil	UTTO FLUID
• Braking system oil	GM DEXRON® II D
• Fuel	With ambient temperature over -10° C: ASTM D975 N. 2 diesel oil
	With ambient temperature under -10°C: ASTM D975 N. 1 diesel oil
• Radiator	Special permanent antifreeze, biodegradable, ethylene glycol based with corrosion inhibitor and with no silicates, borates, nitrates, phosphates and amines. Red antifreeze suitable for aluminium radiators, diluted with water (50%) to ensure protection down to -36°C.

GM DEXRON® II D (DEXRON® is a registered trademark of General Motors Corporation)

4.2.1 NOTES REGARDING THE ENGINE

4.2.1.1 ENGINE OIL

- The engine oil must be selected very carefully, since it lubricates the engine, which is the machine's heart; the main maintenance operations required for the engine oil are the following:

1 - daily check of the oil level;
2 - check of the degree of pollution of the oil;
3 - periodical change.

4.2.1.2 COOLANT

- The coolant serves to keep the engine at the correct temperature and therefore to ensure optimal operating conditions; check the coolant level in the expansion tank daily and top up when necessary.
- The coolant containing antifreeze is flammable; do not use naked flames near the coolant and do not smoke while topping up.

- Use only red permanent ethylene glycol based antifreeze, with corrosion inhibitors and antifoam products, suitable for aluminium radiators. If pure, dilute with water (50%).
- The use of permanent antifreeze requires only the check of the level and the periodical change of the fluid. It is not necessary to wash the cooling circuit.
- Use drinkable water and in any case soft water.
- Do not use corrosion inhibitors containing soluble oil, since they damage the rubber couplings.
- In case of doubt regarding the applicable standards for the use of antifreeze, contact your Komatsu Dealer, who will supply you with exhaustive and precise information.

4.2.1.3 FUEL

- Always use fuel suitable for the engine. Other fuels with different specifications may damage the engine or reduce its power.
- Always refuel at the end of work.
- When refuelling, make sure that there is no water on the fuel drum cover and take care not to draw condensate from the drum bottom.
- If fuel runs out, or if the fuel filter has been replaced, it is necessary to bleed the circuit.

4.2.2 NOTES REGARDING THE HYDRAULIC SYSTEM

- Be extremely careful when performing maintenance operations on the hydraulic system, since soon after work the oil is very hot.
  The circuit is pressurized not only during work, but also at the end of work.
- The maintenance operations required for the hydraulic system are the following:

1 - daily check of the oil level in the tank;
2 - periodical change of the oil filter;
3 - periodical change of the oil and cleaning of the intake filter.

- Always bleed the circuit after changing the oil filter or the oil.
- When a component is removed from the circuit, check the gaskets and O rings and change them if they are damaged.
- When a cylinder or a component of the hydraulic circuit is removed, after reassembly bleed the circuit by proceeding as follows:

1 - start the engine and let it idle;
2 - extend all the cylinders 4-5 times, stopping them at approx. 100 mm from the end of stroke;
3 - slowly make all the cylinders reach the end of stroke for 3-4 times.

4.2.3 NOTES REGARDING THE ELECTRIC SYSTEM

- If the cables are wet or their insulating material is damaged, the electric system leaks and this may result in malfunctions of the machine.
- The maintenance operations required for the electric system are the following:

1 - check of the alternator belt for damage or breakages;

2 - check of the battery electrolyte level.

- Do not remove or eliminate any electric component installed on the machine and do not install any electric component with characteristics different from those specified and approved by Komatsu.
- Keep the electric system dry.
- When working on seashores or river or lake banks, protect the jack plugs from corrosion.
- Do not connect any optional device to the fuses, ignition switch, battery, relays, etc.; for the installation of any optional equipment, contact your Komatsu Dealer.
- If any electric welding operation has to be carried out, disconnect the battery and the alternator.

4.2.4 NOTES REGARDING LUBRICATION

- Lubrication makes the operations carried out with the machine and work equipment smoother, while preventing wear and the noise that may be produced if the joints are dry.
- Lubrication is to be carried out with grease or oil.
- The maintenance operations required for the components that need lubricating are the following:

1 - check of the levels;

2 - oil change;

3 - injection of grease through the grease nipples;

4 - grease lubrication with a brush.

- Use only the specified lubricants, according to the ambient temperature.
- Always clean the grease nipples before injecting grease and remove any excess grease after lubrication; this cleaning operation must be performed with extreme care on the revolving parts.
- Check that the lubricant levels are correct, avoiding excessive or insufficient quantities.

4.2.5 PARTS SUBJECT TO WEAR THAT PERIODICALLY NEED CHANGING

The parts subject to wear such as filters, bucket teeth, etc. must be replaced according to the periodic maintenance intervals prescribed or when they reach the wear limit.
The timely change of these parts ensures an economic use of the machine.
Use only Komatsu genuine parts, which alone can guarantee excellent quality and interchangeability.

ITEM	CODE	DESCRIPTION	Q.ty	CHANGE INTERVAL
Hydraulic oil drain filter	42N-62-15470	Cartridge	1	EVERY 500 HOURS OF OPERATION
Engine oil filter	EA504074043	Cartridge	1	
Fuel filter	EA504073234	Cartridge	1	
Converter oil filter	CA0040952	Cartridge	1	EVERY 1000 HOURS OF OPERATION
Air filter	848101189	Main cartridge	1	WHEN REQUIRED
	848101190	Safety cartridge	1	WHEN REQUIRED
Front bucket	312204054	Tooth	AR	—
	801580085	Screw	AR	—
	801703012	Nut	AR	—
Backhoe bucket	312204054	Central tooth	AR	—
	801580085	Screw	AR	—
	801703012	Nut	AR	—
	312204052	Right tooth	1	—
	312204053	Left tooth	1	—
	801580085	Screw	AR	—
	801014184	Side screw	4	—
	801703012	Nut	AR	—

4.3 FUEL, COOLANT AND LUBRICANTS

TANK / RESERVOIR	FLUID	AMBIENT TEMPERATURE -30 -22 / -20 -4 / -10 14 / 0 32 / 10 50 / 20 68 / 30 86 / 40 104 / 50°C 122°F	CAPACITY (l)	
			1st filling	Change
Engine oil pan	OIL ACEA E5 ACEA E4	SAE 5W-30	13	13
	OIL API CI-4 ACEA E7	SAE 15W-40		
Hydraulic system	OIL API CD, CF, CF2	SAE 10W-30	98	40
Hydraulic system with biodegradable oil	see «4.3.1»		98	40
Front axle: Differential	OIL UTTO FLUID		7	7
Final reduction gear (ea)			0,75	0,75
Rear axle: Differential and final reduction gears			15	15
Hydraulic transmission	OIL GM DEXRON® II D (DEXRON® is a registered trademark of General Motors Corporation)		20	20
Braking system			0,8	0,8
Fuel tank	DIESEL OIL	★ ASTM D975 N. 2	150	—
Engine cooling system	PERMANENT COOLANT (★★)		15	—

★ **ASTM D975 N. 1**

★★ **Special red permanent antifreeze suitable for aluminium radiators. If pure, dilute with water (50%).**

4.3.1 LUBRICATION WITH GREASE

LUBRICATION POINTS	CONSISTENCY	TYPE
Joints, transmissions, fork guides, door hinges	NLGI 2	Lithium EP + MoS_2
Hydraulically-controlled sliding plate guides (if installed)	NLGI 1	Mineral oil + graphite + aluminium complex soap

IMPORTANT

- **When the diesel oil sulphur content is less than 0,5%, change the engine oil according to the periodic maintenance intervals indicated in the operation and maintenance manual. If the diesel oil sulphur content exceeds 0.5%, change the engine oil according to the following table:**

Sulphur content	Engine oil change interval
from 0.5 to 1.0%	1/2 of regular interval
over 1.0%	1/4 of regular interval

- Use engine oil with API CI-4 o ACEA E7, E5, E4 classification, to ensure the correct and constnat operation of the engine.
- Use Komatsu genuine products whose characteristics have been specifically formulated and approved for use in the engine, in the work equipment hydraulic circuit, in the transmission, in the axles and in the brakes.

First filling quantity: total quantity of oil, including the oil for the components and pipes.

Oil change quantity: quantity of oil necessary to fill the system or unit during the normal inspection and maintenance operations.

ASTM: American Society of Testing and Materials
SAE: Society of Automotive Engineers
API: American Petroleum Institute
UTTO: Universal Tractor Transmission Oil
NLGI: National Lubricant Grease Institute

4.3.2 HOMOLOGATED SYNTHETIC BIODEGRADABLE LUBRICANTS “HEES”

Komatsu machines can be filled with synthetic biodegradable hydraulic oil type HEES not of plant origin and therefore the use of the oils indicated in the following table is authorized and recommended: .

SUPPLIER	SYNTHETIC BIODEGRADABLE OIL “HEES”
KOMATSU	BO 46 G4 (KES 07.872)
AGIP	—
ARAL	—
AVIA	—
BP	—
CONDAT	CONDAT D 46 K
ELF	—
ESSO	—
FINA	BIOHYDRAN SE 46
FUCHS	—
KENDALL	—
KUWAIT PETROLEUM K8	—
MOBIL	EAL SYNDRAULIC
MOBIL (USA)	—
PAKELO	—
PANOLIN	HLP SYNTH 46
SHELL	NATURELLE HFX-32
TAMOIL	—
TEXACO	—
TOTAL	HYDROBIO 46
VALVOLINE	—

⚠ CAUTION

- **It is not possible to mix the synthetic biodegradable oil type HEES with ordinary hydraulic oils, since when the temperature increases insoluble compounds are generated, which are deposited on the filters and clog them (the maximum concentration of ordinary oil must not exceed 1% of the total quantity of oil).**
- **Biodegradable oil can be used only in the hydraulic system; it cannot be used for the engine, the transmission, the braking system, etc.**
- **Before introducing biodegradable oil in the hydraulic system, empty the system completely, disconnecting the cylinders and all the parts that may contain conventional oil, and replace the drain filter with a new one.**
- **Start the engine and let it idle without using the work equipment, wait until the oil reaches a temperature of at least 40°C, then start moving the equipment, so that all the parts of the system are filled with oil.**
- **Stop the engine and check the oil level (see "4.8.6.a CHECKING THE HYDRAULIC OIL LEVEL").**

4.4 DRIVING TORQUES

4.4.1 STANDARD DRIVING TORQUES FOR SCREWS AND NUTS

⚠ CAUTION

- **If screws, nuts or other parts are not tightened with the required torque, they may become loose or damage the components with which they cooperate, and this may cause machine failures or operation problems. Always pay the utmost attention when carrying out tightening operations.**

If not specified otherwise, tighten screws and nuts with the torque indicated in the table.
If it is necessary to replace a screw or a nut, always use Komatsu original spare parts of the same size as those to be replaced.

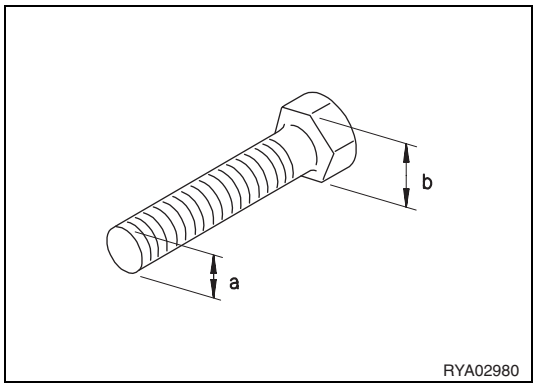

★ Nm (Newton metre): 1 Nm = 0.102 Kgm

Thread diameter (a) (mm)	Pitch (mm)	Wrench size (b) (mm)	8.8		10.9	
			kgm	Nm	kgm	Nm
6	1	10	0.96 ± 0.1	9.5 ± 1	1.3 ± 0.15	13.5 ± 1.5
8	1.25	13	2.3 ± 0.2	23 ± 2	3.2 ± 0.3	32.2 ± 3.5
10	1.5	17	4.6 ± 0.5	45 ± 4.9	6.5 ± 0.6	63 ± 6.5
12	1.75	19	7.8 ± 0.8	77 ± 8	11 ± 1	108 ± 11
14	2	22	12.5 ± 1	122 ± 13	17.5 ± 2	172 ± 18
16	2	24	19.5 ± 2	191 ± 21	27 ± 3	268 ± 29
18	2.5	27	27 ± 3	262 ± 28	37 ± 4	366 ± 36
20	2.5	30	38 ± 4	372 ± 40	53 ± 6	524 ± 57
22	2.5	32	52 ± 6	511 ± 57	73 ± 8	719 ± 80
24	3	36	66 ± 7	644 ± 70	92 ± 10	905 ± 98
27	3	41	96 ± 10	945 ± 100	135 ± 15	1329 ± 140
30	3.5	46	131 ± 14	1287 ± 140	184 ± 20	1810 ± 190
33	3.5	50	177 ± 20	1740 ± 200	250 ± 27	2455 ± 270
36	4	55	230 ± 25	2250 ± 250	320 ± 35	3150 ± 350
39	4	60	295 ± 33	2900 ± 330	410 ± 45	4050 ± 450

IMPORTANT

- **This driving torque table is not valid for screws or nuts that must fasten parts made of nylon or similar materials onto washers or components made of nylon or nonferrous metals or requiring specific driving torques.**

4.4.2 SPECIFIC DRIVING TORQUES FOR SCREWS AND NUTS

★ Nm (Newton metre): 1 Nm = 0,102 Kgm

ITEM	DESCRIPTION	kgm	Nm
Cab	Front support screws	20.4 ± 1	200 ± 9.8
	Rear support screws	20.4 ± 1	200 ± 9.8
Wheels	Front	28.5 ± 1	280 ± 9.8
	Rear	51 ± 1	500 ± 9.8
Front bucket	Teeth	16 ± 1	157 ± 9.8
Backhoe bucket	Central teeth	16 ± 1	157 ± 9.8
	Side teeth	16 ± 1	157 ± 9.8
Engine and transmission	Front support central screw	20 ± 1	196 ± 9.8
	Rear support central screw	20 ± 1	196 ± 9.8

4.4.3 STANDARD DRIVING TORQUES FOR HOSES WITH ORFS

If not specified otherwise, tighten hose nuts with the torque indicated in the table.
If it is necessary to replace a hose, always use Komatsu original spare parts of the same size as those to be replaced.

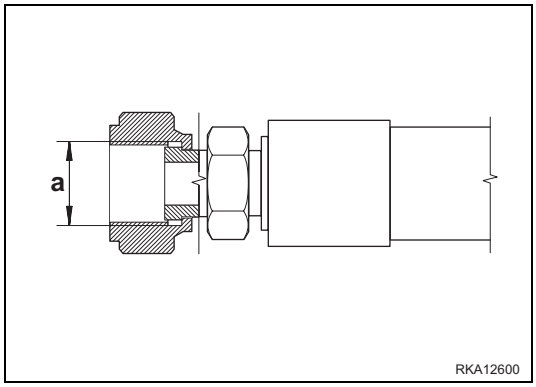

★ Nm (Newton metre): 1 Nm = 0,102 Kgm

Thread diameter (mm) (a)	Wrench size (mm)	DRIVING TORQUE	
		kgm	Nm
.9/16” - 18	17	2.3 - 2.5	23 - 25
11/16” - 16	22	3.4 - 3.9	33 - 38
13/16” - 16	24	5.2 - 5.8	51 - 57
1” - 14	30	8.2 - 9.2	80 - 90
1.3/16” - 12	36	12.2 - 13.3	120 - 130
1.7/16” - 12	41	15.3 - 17.3	150 - 170
1.11/16” - 12	50	18.4 - 20.4	180 - 200
2” - 12	57	20.4 - 24.4	200 - 240

4.5 LUBRICATION

4.5.1 LUBRICATION DIAGRAM

IMPORTANT

- **For the lubrication of specific components, see "4.7 MAINTENANCE PLAN".**
- **The type of lubricant to be used is indicated in the lubricant chart (see "4.3 FUEL, COOLANT AND LUBRICANTS").**

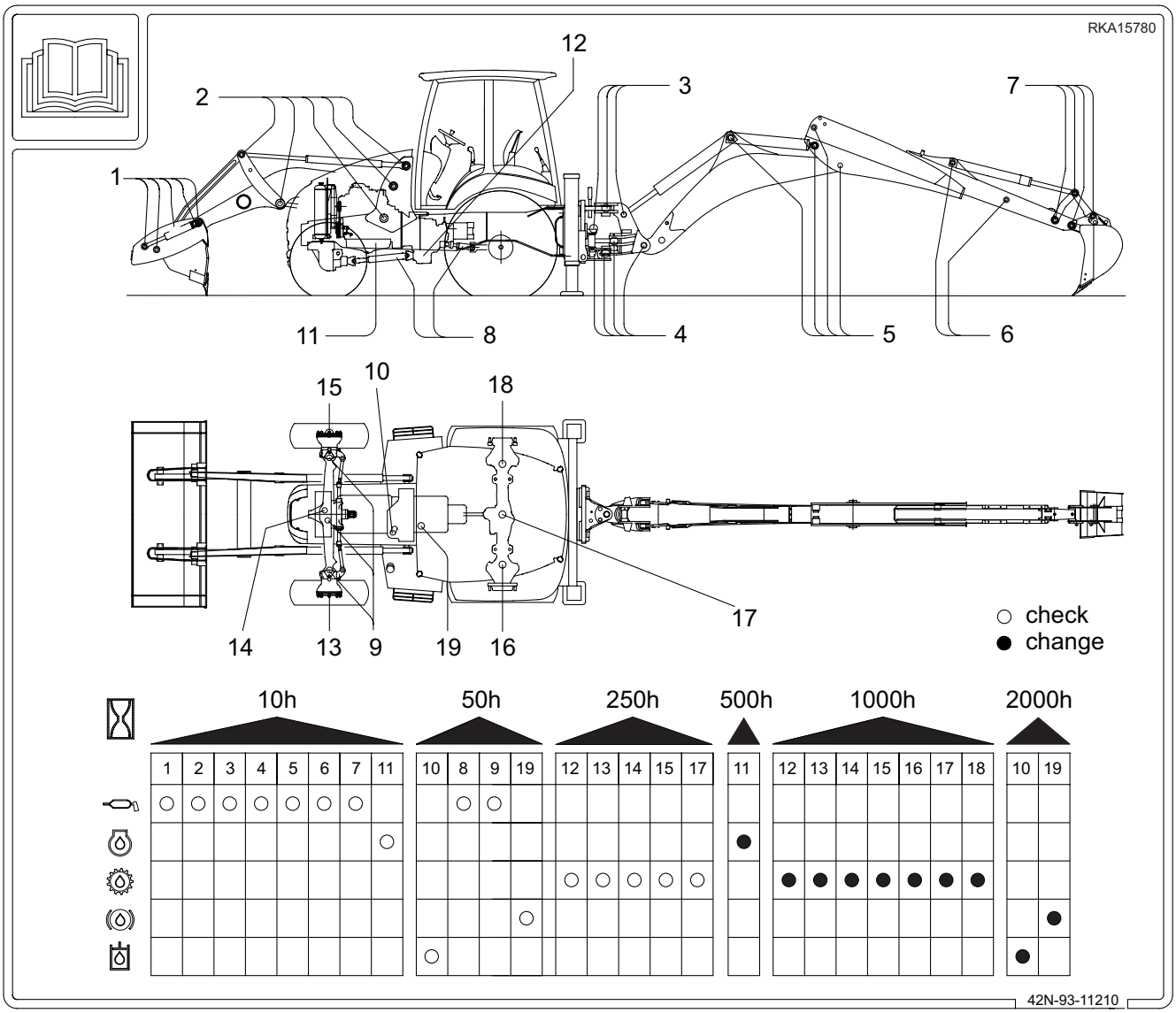

Engine oil

Hydraulic oil

Transmission oil

Grease

Brake oil

4.5.2 LUBRICATION DIAGRAM (4in1 bucket and pallet forks)

IMPORTANT

- **For the other greasing points, see "4.5.1 LUBRICATION DIAGRAM".**
- **The points indicated are symmetrical and must be lubricated every 10 hours of operation.**
- **The fork sliding bars and the safety pins must be lubricated with grease only to protect them from oxidation.**
- **The fork joints (A) must be lubricated only if the forks are used.**

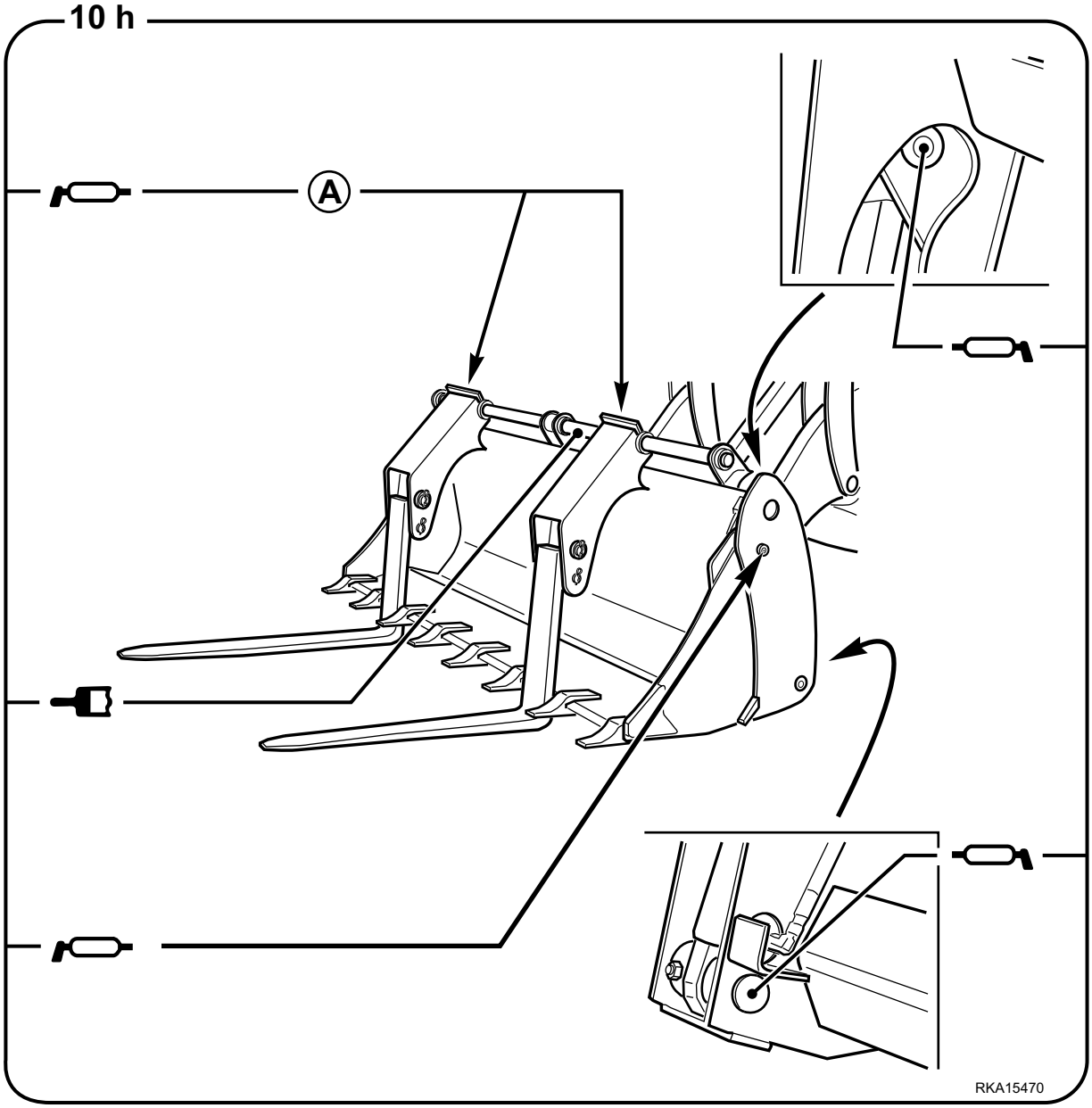

Grease **Grease**

4.5.3 LUBRICATION DIAGRAM (front bucket quick couplings)

IMPORTANT

- **For the other greasing points, see "4.5.1 LUBRICATION DIAGRAM".**
- **The points indicated are symmetrical and must be lubricated every 10 hours of operation.**

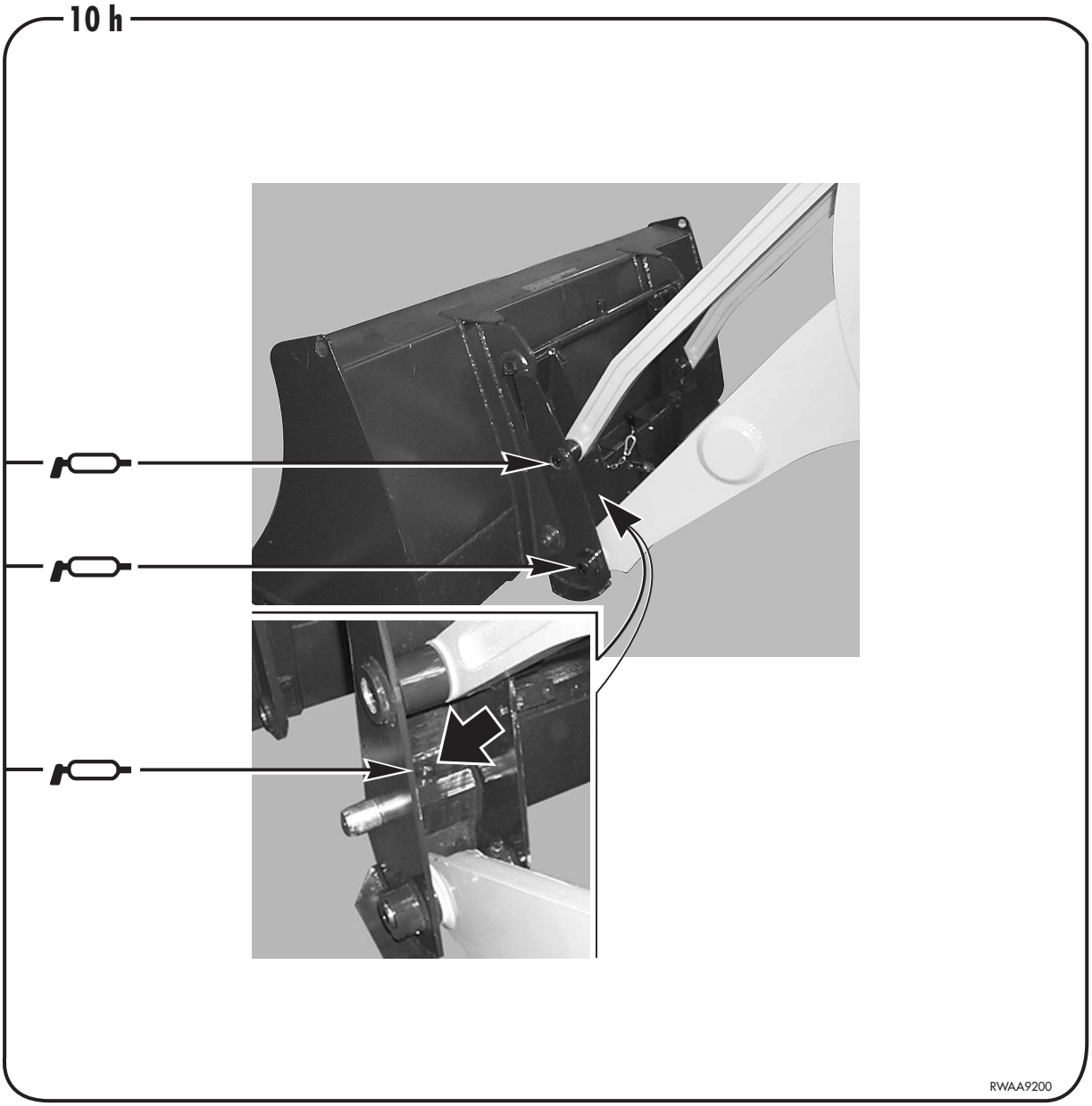

Grease

4.5.4 LUBRICATION DIAGRAM (offset device)

IMPORTANT

- **For the other greasing points, see "4.5.1 LUBRICATION DIAGRAM".**

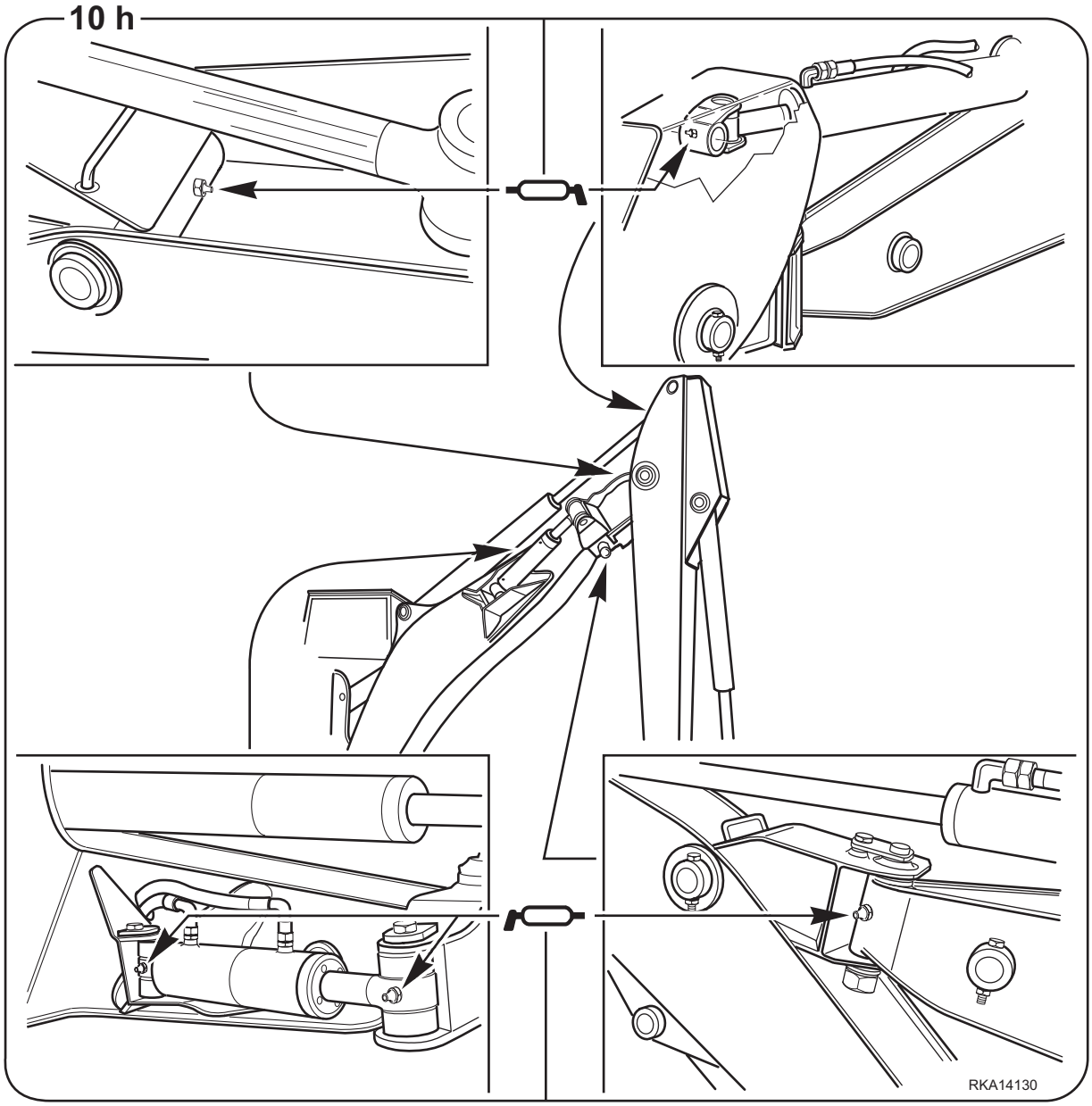

Grease

4.6 PERIODICAL CHANGE OF THE SAFETY RELATED COMPONENTS

To ensure safety at any moment while driving and using the machine, the operator must carry out all the routine maintenance operations prescribed. Furthermore, the operator must periodically change the components indicated in the table in the following page, which are especially related to safety and fire-prevention rules. These components are subject to wear and since it is particularly difficult to evaluate their conditions through simple routine maintenance, after a certain time interval it is advisable to change them independently of their state, in order to keep them efficient over time. Repair or replace these components immediately in case of failures or anomalies, even if the time interval prescribed for their change has not elapsed yet.

If the pipe clamps show signs of deterioration, like deformations or cracks, change them together with the pipes.

In addition to the periodical change of the components listed in the following page, the inspections described here below are to be carried out on the hydraulic pipes. In case of anomalies, carry out the necessary adjustments and changes, or adopt any other measure required.

Type of check	**Items to be checked**
Before starting the engine	Leakages from joints, hydraulic pipes or fuel pipes
Periodically (monthly)	Leakages from joints, hydraulic pipes or fuel pipes. Damaged hydraulic or fuel pipes (cracks, wear and tear)
Periodically (yearly)	Leakages from joints, hydraulic pipes or fuel pipes. Deteriorated, twisted, damaged hydraulic or fuel pipes (cracks, wear and tear) or pipes in contact with other parts of the machine

4.6.1 SAFETY RELATED PARTS

NOTE

- For the quantities and codes of the safety related components to be changed, see the spare parts catalogue.
- When changing pipes, always change O rings, gaskets and analogous components.

4.6.1.1 FUEL SYSTEM

No.	Safety related components that periodically need changing	Q.ty	Change interval
1	Fuel pipe (Fuel tank – Fuel pump)	1	Every 2 years or 4000 hours, whichever occurs first.
2	Fuel pipe (Injection pump – Fuel tank)	1	

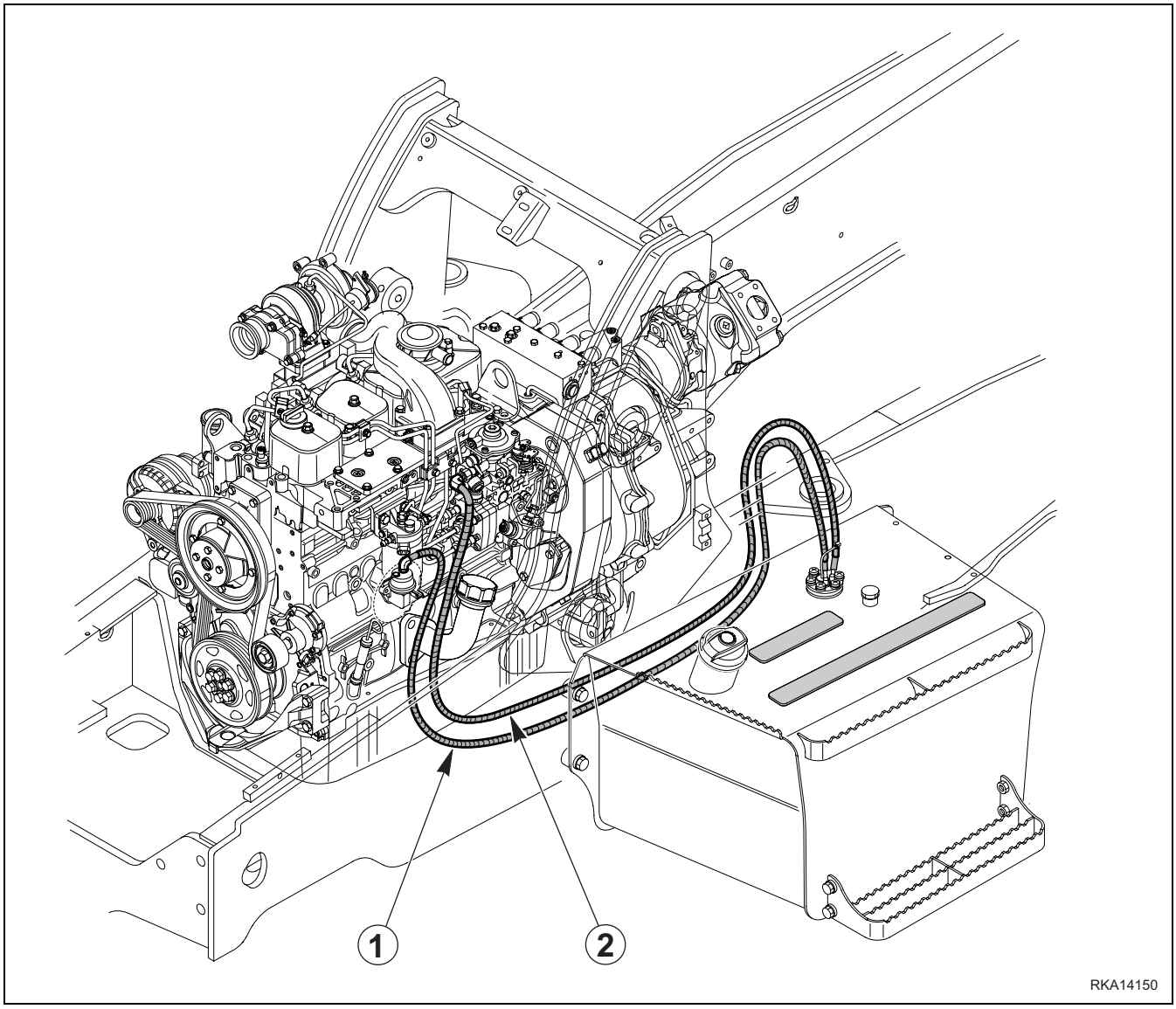

4.6.1.2 DELIVERY HYDRAULIC SYSTEM

No.	Safety related components that periodically need changing	Q.ty	Change interval
1	Hydraulic pipe (Hydraulic pump – distributor)	1	Every 2 years or 4000 hours, whichever occurs first.

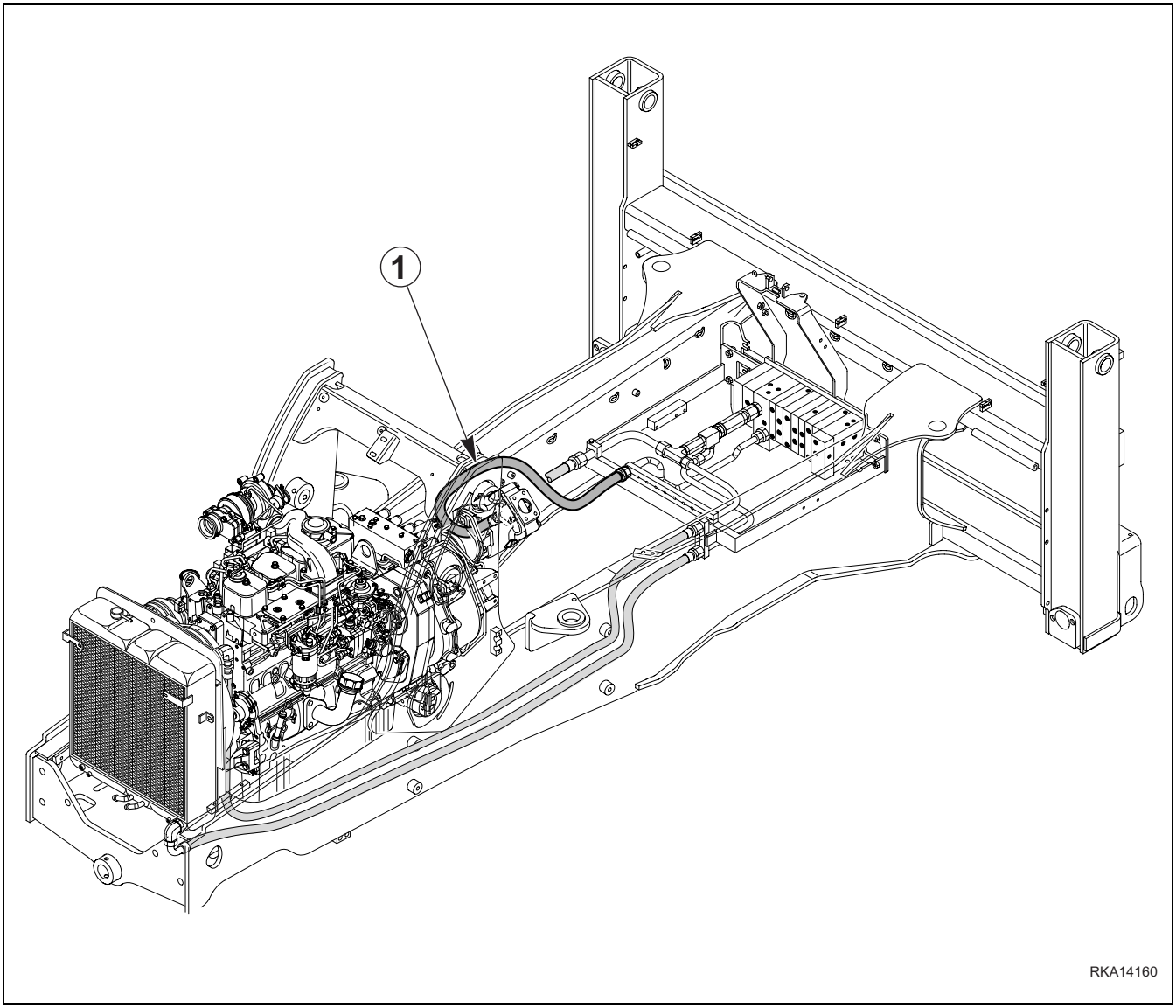

4.6.1.3 FRONT LOADER HYDRAULIC SYSTEM

No.	Safety related components that periodically need changing	Q.ty	Change interval
2	Hydraulic pipes (Cylinders – loader arm)	4	Every 2 years or 4000 hours, whichever occurs firs
3	Hydraulic pipes (Cylinders – loader bucket)	4	
4	Hydraulic pipes (Cylinders – 4in1 bucket)	4	

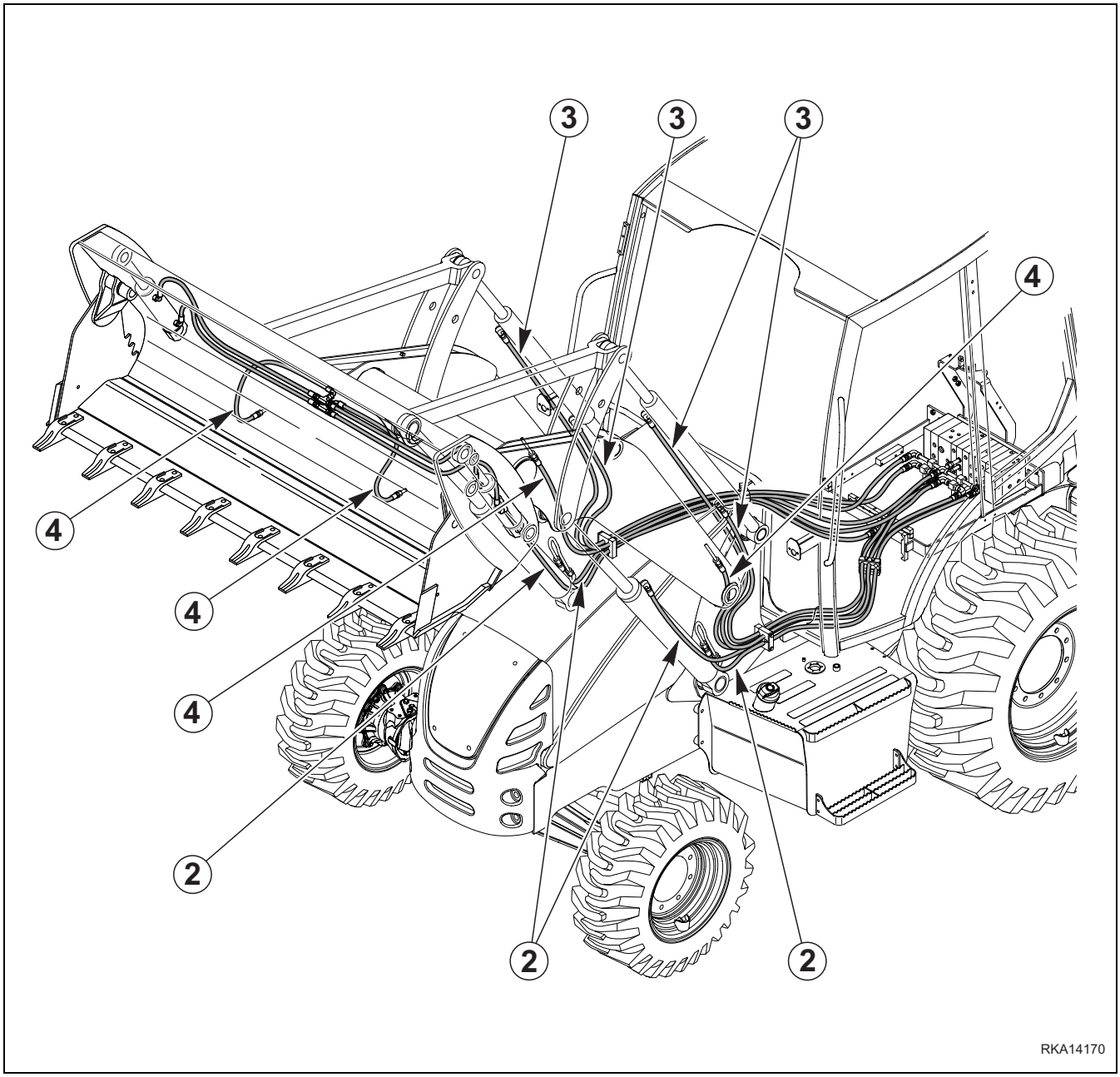

4.6.1.4 BACKHOE HYDRALIC SYSTEM

No.	Safety related components that periodically need changing	Q.ty	Change interval
5	Hydraulic pipes (Cylinder – backhoe boom)	2	Every 2 years or 4000 hours, whichever occurs firs
6	Hydraulic pipes (Cylinder – backhoe arm)	2	
7	Hydraulic pipes (cylinder – backhoe bucket)	4	

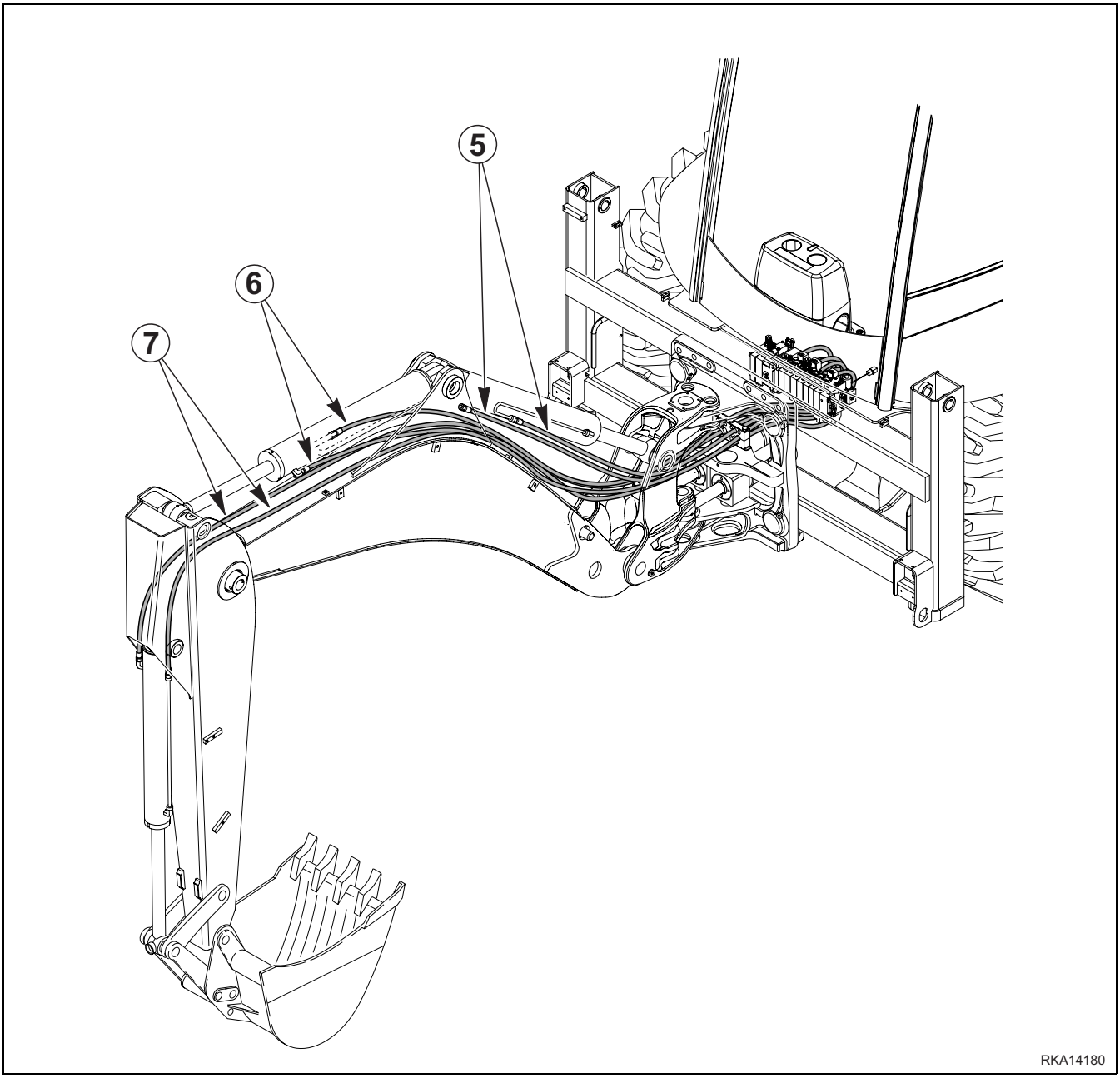

4.6.1.5 OPERATOR'S SAFETY

No.	Safety related components that periodically need changing	Q.ty	Change interval
1	Safety belt	1	Every 4 years

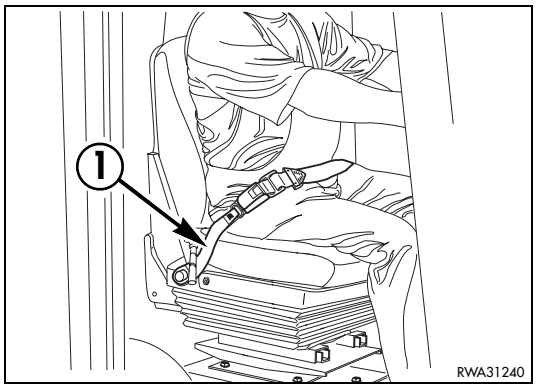

4.7 MAINTENANCE PLAN

WHEN REQUIRED

a. CHECKING, CLEANING OR CHANGING THE ENGINE AIR FILTERS 189
b. CHECKING AND CLEANING THE CAB AIR FILTER 190
c. CHECKING AND CLEANING THE AIR RECIRCULATION FILTER (only for machines with air conditioner) 191
d. CHECKING THE DETERGENT LEVEL IN THE WINDSHIELD WASHER RESERVOIR 191
e. CHECKING THE WINDSHIELD WIPER BLADES 192
f. LUBRICATING THE CAB DOOR HINGES 192
g. FUSES AND RELAYS – CHECK AND CHANGE 192
h. BLEEDING THE BRAKING CIRCUIT 193
i. CHECKING AND ADJUSTING THE FRONT WHEEL TOE-IN 194
j. CHECKING THE BRAKING EFFICIENCY 194
k. CHECKING AND ADJUSTING THE PARKING BRAKE 195
l. CHECKING AND ADJUSTING THE BRAKE PEDAL STROKE 196
m. ADJUSTING THE AUTOMATIC RETURN-TO-DIG DEVICE OF THE FRONT BUCKET (if installed) 196
n. CHECKING AND ADJUSTING THE STABILIZER SLACK 197

MAINTENANCE INTERVALS IN CASE OF USE OF THE DEMOLITION HAMMER

a. CHANGING THE HYDRAULIC OIL FILTER 198
b. CHANGING THE HYDRAULIC OIL 198

CHECKS TO BE CARRIED OUT BEFORE STARTING THE ENGINE

a. VARIOUS CHECKS 199
b. CHECKING THE COOLANT LEVEL 199
c. CHECKING THE FUEL LEVEL 200
d. CHECKING THE ENGINE OIL LEVEL 200

MAINTENANCE EVERY 10 HOURS OF OPERATION

a. LUBRICATING THE JOINTS 201

MAINTENANCE AFTER THE FIRST 50 HOURS OF OPERATION

(Only for machines in which synthetic biodegradable oil type HEES is used) (Operations to be carried out together with those prescribed at point “4.8.6 MAINTENANCE EVERY 50 HOURS OF OPERATION”)

a. CHANGING THE HYDRAULIC SYSTEM OIL FILTER 214

MAINTENANCE EVERY 50 HOURS OF OPERATION

a. CHECKING THE HYDRAULIC OIL LEVEL 203
b. CHECKING THE FLUID LEVEL IN THE RADIATOR 204
c. CHECKING THE BRAKING SYSTEM OIL LEVEL 204
d. LUBRICATING THE PROPELLER SHAFTS 205
e. LUBRICATING THE FRONT AXLE JOINTS AND CENTRAL COUPLING 206
f. CHECKING THE TYRE PRESSURE 206
g. DRAINING THE WATER SEPARATOR 207

MAINTENANCE AFTER THE FIRST 250 HOURS OF OPERATION

(Operations to be carried out together with those prescribed at point "4.8.8 MAINTENANCE EVERY 250 HOURS OF OPERATION")

a. CHANGING THE FRONT AXLE OIL 222
b. CHANGING THE REAR AXLE OIL 223
c. CHANGING THE HYDRAULIC TRANSMISSION OIL 224
d. CHANGING THE HYDRAULIC TRANSMISSION OIL FILTER 225
e. CHANGING THE HYDRAULIC SYSTEM OIL FILTER 214

MAINTENANCE EVERY 250 HOURS OF OPERATION

a. CHECKING THE ALTERNATOR-FAN BELT 208
b. CHECKING AND ADJUSTING THE A/C COMPRESSOR BELT TENSION (only for machines with air conditioner) 209
c. CHECKING THE BATTERY ELECTROLYTE LEVEL 210
d. CHECKING THE FRONT AXLE OIL LEVELS 211
e. CHECKING THE REAR AXLE OIL LEVEL 211
f. CHECKING THE HYDRAULIC TRANSMISSION OIL LEVEL 212
g. CHECKING THE WHEEL NUT DRIVING TORQUE 212

MAINTENANCE AFTER THE FIRST 500 HOURS OF OPERATION

(Only for machines in which synthetic biodegradable oil type HEES is used)

(Operations to be carried out together with those prescribed at point “4.8.10 MAINTENANCE EVERY 500 HOURS OF OPERATION”)

a. CHANGING THE HYDRAULIC OIL AND CLEANING THE INTAKE FILTER 226

MAINTENANCE EVERY 500 HOURS OF OPERATION

a. CHANGING THE ENGINE OIL 213
b. CHANGING THE ENGINE OIL FILTER 214
c. CHANGING THE HYDRAULIC SYSTEM OIL FILTER 214
d. CHANGING THE FUEL FILTER 217
e. DRAINING THE FUEL TANK 218
f. DRAINING THE HYDRAULIC OIL TANK (only for machines in which synthetic biodegradable oil type HEES is used) 219
g. CLEANING THE OUTSIDE OF THE RADIATOR 220
h. CLEANING THE OUTSIDE OF THE A/C CONDENSER (only for machines with air conditioner) 221

MAINTENANCE EVERY 1000 HOURS OF OPERATION

a. CHANGING THE FRONT AXLE OIL 222
b. CHANGING THE REAR AXLE OIL 223
c. CHANGING THE HYDRAULIC TRANSMISSION OIL 224
d. CHANGING THE HYDRAULIC TRANSMISSION OIL FILTER 225

MAINTENANCE EVERY 2000 HOURS OF OPERATION

a. CHANGING THE HYDRAULIC OIL AND CLEANING THE INTAKE FILTER 226
b. CHANGING THE COOLANT 228
c. CHANGING THE BRAKING SYSTEM OIL 229
d. CHECKING THE ALTERNATOR AND THE STARTER 230
e. CHANGING THE ALTERNATOR BELT 230
f. CHECKING THE A/C COOLING GAS QUANTITY (only for machines with air conditioner) 230

MAINTENANCE EVERY 3000 HOURS OF OPERATION

a. CHECKING THE ENGINE RETAINING SCREWS AND DAMPING ELEMENTS 231
b. CHECKING AND ADJUSTING THE ENGINE VALVE CLEARANCE AND THE INJECTION TIMING ADVANCE 231

MAINTENANCE EVERY 4000 HOURS OF OPERATION

a. CHANGING THE A/C DEWATERING FILTER (Only for machines with air conditioner) 232
b. CHECKING THE OPERATING CONDITIONS OF THE A/C COMPRESSOR (Only for machines with air conditioner). 232
c. CHANGING THE ENGINE THERMOSTATIC VALVE 232

4.8 MAINTENANCE PROCEDURES

4.8.1 WHEN REQUIRED

4.8.1.a CHECKING, CLEANING OR CHANGING THE ENGINE AIR FILTERS

⚠ WARNING

- **Remove the air filter only after stopping the engine and do not start the engine if the air filter is open.**
- **Wear safety goggles during the cleaning operations.**

IMPORTANT

- **The air filtering system consists of a primary filtering element with considerable capacity and of a secondary cartridge that ensures additional safety protection.**
  The primary element can be cleaned with compressed air, while the safety cartridge can only be changed.
- **The filter must be cleaned when the clogging warning light (A) positioned on the side dashboard comes on or flashes.**

To reach the air filter lift the loader arm, engage the mechanical safety lock and open the engine hood (see "3.5.1 ENGINE HOOD").

To clean the primary element, proceed as follows:

1 - Release the safety retainer (1), moving it toward the outside.

2 - Turn the cover (2) counterclockwise by approximately 12.5°.

3 - Lift the cover (2) and extract the filtering element (3).

4 - Slightly strike the filtering element (3) on the palm of your hand, in such a way as to remove the dust, and blow compressed air on the inner surface, keeping the air jet at a distance of approximately 15 cm and taking care to prevent the pressure from exceeding 4-5 bars.

5 - After the cleaning operations, inspect the filtering surface for damage by introducing a lamp into the cartridge and carefully check the gaskets of the front seals.
If the cartridge is damaged, replace it.

6 - Carefully clean the inside of the filter housing (4), taking care to prevent foreign bodies from getting into the suction duct.

7 - Put back the filtering element (3), making sure that it fits perfectly in its seat.

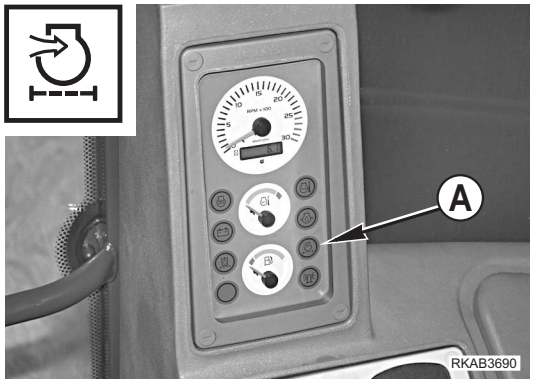

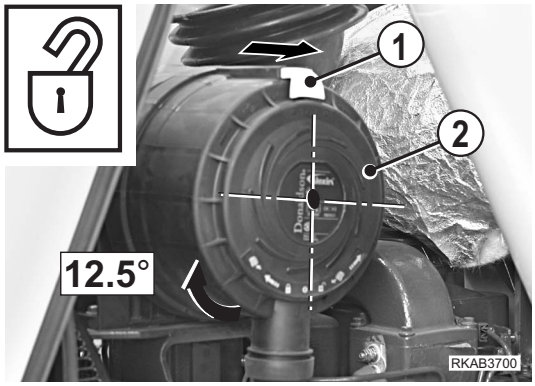

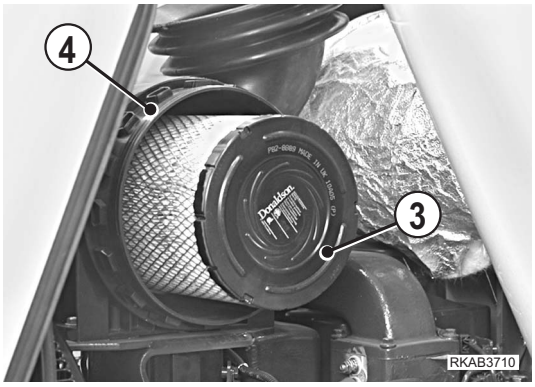

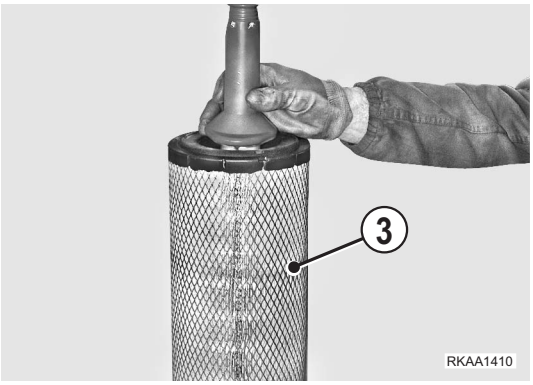

8 - Put back the cover (2), turning it clockwise by approximately 12.5°. Make sure that the cover (2) is perfectly locked and make sure that the ejector (5) is positioned vertically on the lower part.

9 - Once the whole has been assembled, push the safety retainer (1) toward the inside.

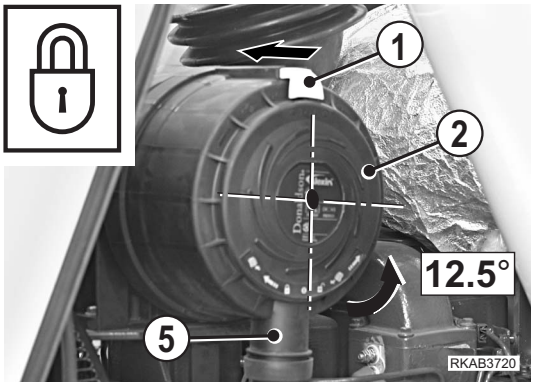

IMPORTANT

- **If the clogging warning light comes on after the starting of the engine, it is necessary to change the primary filtering element and the safety cartridge.**
- **Change the primary filtering element after 6 cleaning operations or after one year. Every time the primary filtering element is replaced, the safety cartridge must be replaced, too.**

To change the safety cartridge (6), after removing the primary element (3), proceed as follows:

1 - Remove the safety cartridge (6) and replace it with a new one.

2 - Once the safety cartridge (6) has been installed inside the filter housing (4), make sure that it fits perfectly in its seat.

3 - Reassemble the whole as described above, making sure that all the filter components are perfectly secured.

4 - Push the safety lock (1) towards the inside.

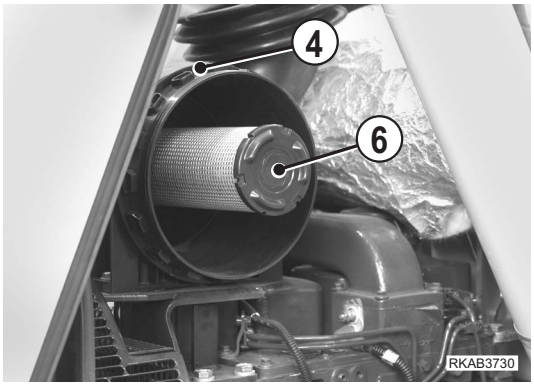

4.8.1.b CHECKING AND CLEANING THE CAB AIR FILTER

⚠ WARNING

- **Wear safety goggles during the cleaning operations.**

The air suction for the ventilation of the cab is protected by a filter positioned on the right side of the cab.
This filter blocks all the impurities contained in the air and must be cleaned whenever a decrease in air circulation is observed.
The filter can be reached from the outside of the cab. To clean the filtering element, proceed as follows:

1 - Remove the screws (1), remove the outer guard (2) and extract the filtering element (3).

2 - Hit the element slightly on the palm of your hand to eliminate the dust and blow compressed air on its surfaces, keeping the jet at a distance of about 15 cm and making sure that the pressure does not exceed 4÷5 bars.

3 - Carefully clean the filter housing, taking care to prevent any foreign body from getting into the suction duct, and reassemble the unit.

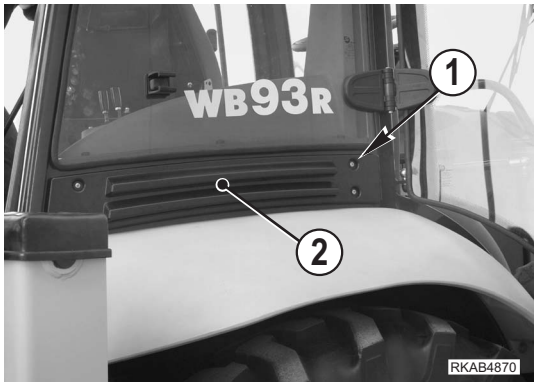

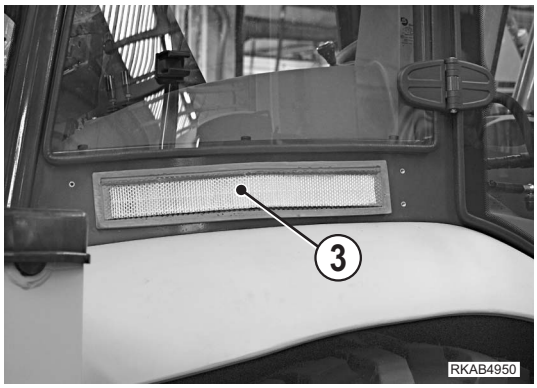

IMPORTANT

- **If the filtering element is excessively clogged or damaged, change it with a new one.**

4.8.1.c CHECKING AND CLEANING THE AIR RECIRCULATION FILTER (only for machines with air conditioner)

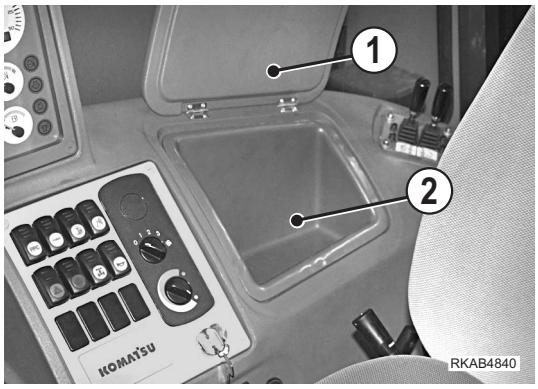

WARNING

- **Wear safety goggles during the cleaning operations.**

If the machine is provided with air conditioning system, in addition to the external filter there is also an internal filter (3) for internal air recirculation. This is a filter that holds the impurities present in the air and it must be cleaned whenever a decrease in air circulation is observed. The filter can be reached from the inside of the cab and to clean the filtering element it is necessary to proceed as follows:

1 - Open the door (1) of the storage compartment, remove the container (2) and extract the filtering element (3).

2 - Hit the element slightly on the palm of your hand to eliminate the dust and blow compressed air on its surfaces, keeping the jet at a distance of about 15 cm and making sure that the pressure does not exceed 4÷5 bars.

3 - Carefully clean the filter housing, taking care to prevent any foreign matter from getting into the suction duct.

4 - Put back the filtering element (3), the container of the storage compartment (2) and close the door (1).

IMPORTANT

- **If the filtering element is excessively clogged or damaged, change it with a new one.**

4.8.1.d CHECKING THE DETERGENT LEVEL IN THE WINDSHIELD WASHER RESERVOIR

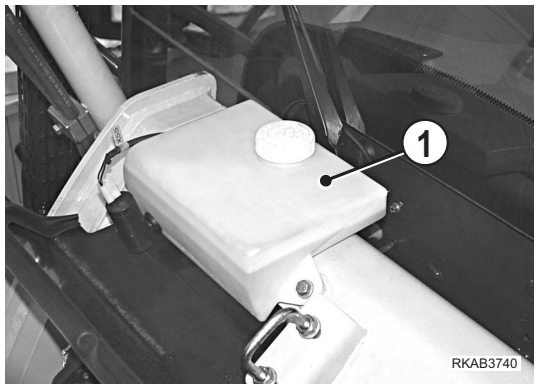

The reservoir (1) is positioned inside the engine compartment and contains detergent for the front and rear windshields; make sure that the reservoir is always filled with detergent. If necessary, add non-flammable detergent of the type used for cars.
While topping up, be careful to prevent dust from getting into the reservoir.

IMPORTANT

- **To fill the reservoir, use only non-flammable detergent of the type used for cars.**
- **Do not use the antifreezes used in engine cooling systems.**

Quantity of detergent to be mixed with water

Proportions vary according to the ambient temperature. Before topping up, it is advisable to dilute the detergent with water according to the quantities indicated in the following table.

Area, season	Proportions	Freezing temperature
Normal	Detergent 1/3 Water 2/3	-4 °C
Cold area - winter	Detergent 1/2 Water 1/2	-6 °C
Very cold area - winter	Undiluted detergent	-16 °C

4.8.1.e CHECKING THE WINDSHIELD WIPER BLADES

The windshield wiper blades should be checked once the windshield wipers have stopped working, by verifying the conditions of the windshield.
If any lines are left on the windshield after washing and wiping it, this means that the scraping wire has deteriorated and therefore it is necessary to change the blades.

IMPORTANT

- **To ensure optimal operation of the windshield wiper, it is advisable to change the blades at least once a year. Change the blades more frequently if the machine works in difficult environmental conditions. Always keep the windows clean, removing any residue of dirt, grease or other substances, since these may prevent the regular operation of the windshield wiper.**

4.8.1.f LUBRICATING THE CAB DOOR HINGES

The cab door hinges should be lubricated when a squealing noise is heard on opening or closing the cab door or when signs of oxidation are found on the shoulder washers or on the pivots.
The lubrication procedure consists in injecting grease into the nipples provided on the hinge axes.
For further information on the grease to use, see "4.3 FUEL, COOLANT AND LUBRICANTS".

⚠ CAUTION

- **Inject grease until all the residual old grease has come out.**
- **After lubrication, remove all the grease that has come out and clean the area.**

4.8.1.g FUSES AND RELAYS – CHECK AND CHANGE

IMPORTANT

- **When changing a fuse, make sure that the ignition key is in position «O».**
- **If the fuses are oxidized, corroded or do not fit perfectly in their seat, replace them only with new fuses having the same capacity.**
- **If the engine does not turn when the ignition key is brought to position «⏲» START, check the engine start fuse and if necessary change it.**

CENTRAL UNIT FUSES – RELAYS AND ENGINE LINE

The fuses and relays are grouped on a single base positioned in the right body side of the cab. They can be reached by removing the cover (1).
For information on the capacity and characteristics of the fuses and relays to be replaced, see "3.4.1 CENTRAL UNIT FUSES – RELAYS AND ENGINE LINE".

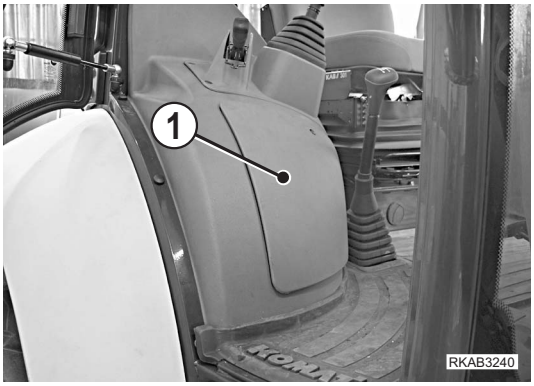

VENTILATION, HEATING AND AIR CONDITIONING FUSES AND RELAYS

The fuses and relays are grouped on a single base positioned under the storage compartment and can be reached after opening the door (2) and removing the container (3).
For information on the capacity and characteristics of the fuses and relays to be replaced, see "3.4.1 CENTRAL UNIT FUSES – RELAYS AND ENGINE LINE"..

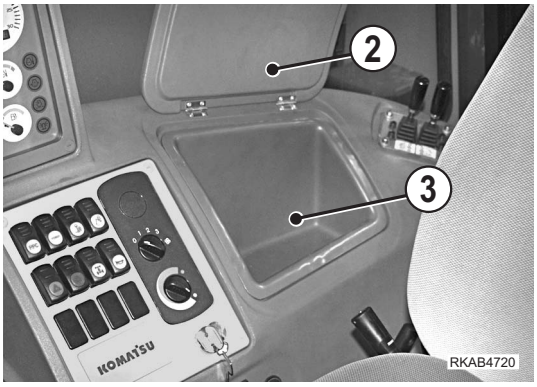

4.8.1.h BLEEDING THE BRAKING CIRCUIT

⚠ WARNING

- **Oil spilled on the floor may cause the floor to become slippery; immediately clean any dirty area.**
- **The braking system must be bled with the machine positioned on level ground, the loader arm completely lowered, the backhoe boom in transport position and the parking brake applied.**
- **Oils, filters, the coolant and the battery are considered special waste and must be collected and disposed of according to the regulations in force.**

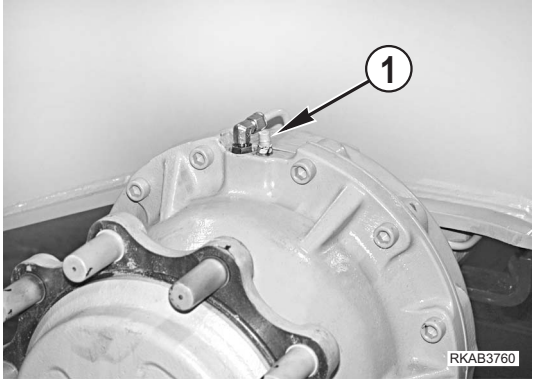

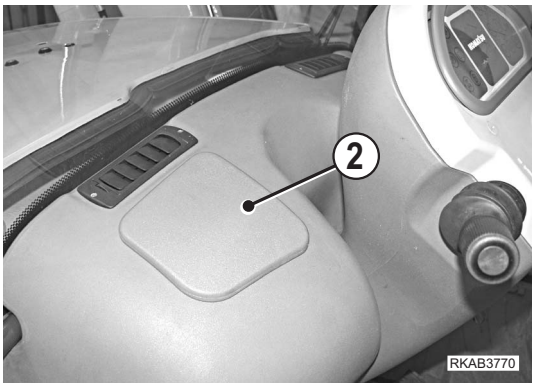

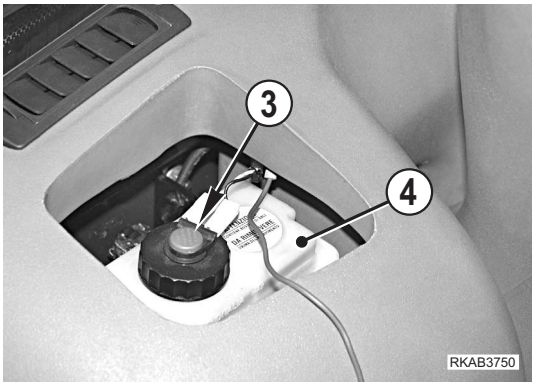

This operation is important, since it ensures the braking efficiency and power of the machine.
Proceed as follows:

1 - Disconnect the brake pedals, so that they are independent of each other.
2 - Apply a small pipe for the collection of the oil to the drain screws (1).
3 - Remove the front guard (2) and the cap (3) from the reservoir (4).
4 - Make sure that the oil in the braking system reaches the maximum level.
5 - Press the left brake pedal thoroughly and, keeping it pressed, loosen the drain screw (1) of the corresponding brake until the pedal reaches the end of stroke.
Use a 13 mm wrench.
6 - While keeping the pedal completely pressed, tighten the drain screw (1).
7 - Release the brake pedal, wait a few seconds and repeat the operations described above until no air bubbles can be noticed in the oil that flows out of the drain screw (1).
8 - Carry out the same operations for the right pedal.
9 - After bleeding the circuit, start the machine and check the braking efficiency; if necessary, bleed the circuit again.
10 - Put back the front guard (2).

IMPORTANT

- **When bleeding the system, apply a small pipe to the screws (1), in order to collect the oil.**
- **The bleeding procedure must be carried out for both braking units, disconnecting the pedals from each other.**
- **Frequently check the oil level in the braking system and top up whenever the oil is near the minimum level.**
- **To top up, use only new oil of the prescribed type.**

4.8.1.i CHECKING AND ADJUSTING THE FRONT WHEEL TOE-IN

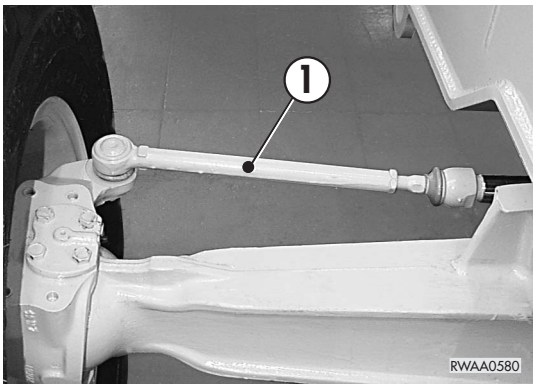

This check must be carried out according to time intervals fixed by the operator, since any anomaly regarding the wheel toe-in is due to impacts or vibrations that depend on the type of surface on which the machine works.
Another reason that should lead the operator to perform this check is the excessive wear of the front tyres.
The machine has been designed with a toe-in equal to 0 mm.
Every adjustment must restore this value and must be carried out on the coupling bars (1) after loosening the nuts (2) that lock them.
(Use 27 and 19 mm wrenches).
During this check and the relevant adjustment, it is advisable to check also the conditions of the articulated heads (3); if a considerable slack is observed, change them immediately.

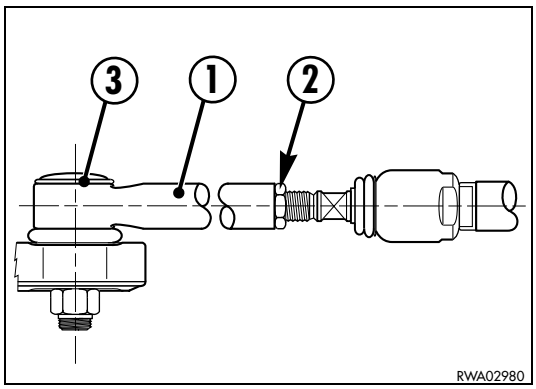

4.8.1.j CHECKING THE BRAKING EFFICIENCY

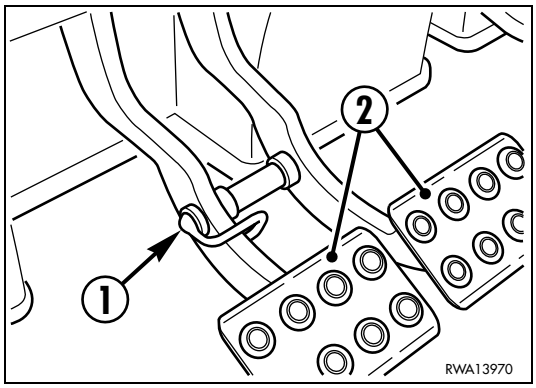

IMPORTANT

- **During running-in, check the braking efficiency after the first 100 hours of operation.**
- **Perform this check on firm, level ground, with no people or obstacles around.**

This check must be carried out after setting the work equipment in the travel or transport position and engaging all the safety locks.

1 - Connect the brake pedals (2) with the pin (1).
2 - Release the parking brake and start the engine (see "3.6.2 STARTING THE ENGINE".).
3 - Engage the 2nd speed and the forward gear.
4 - Accelerate until reaching the maximum speed.
5 - Press the brake pedals. The machine must brake smoothly, on a straight line, and the tension of the pedals must be constant.
Otherwise, contact your Komatsu Dealer.

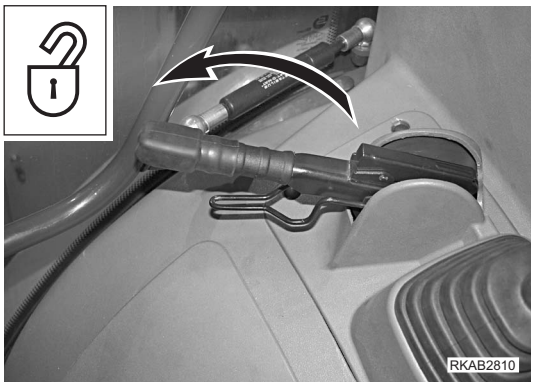

4.8.1.k CHECKING AND ADJUSTING THE PARKING BRAKE

IMPORTANT

- **During running-in, check the efficiency of the parking brake after the first 100 hours of operation.**

CHECK

Check conditions

- Tyre pressure in accordance with the prescribed values.
- Road surface dry, compact, with a gradient of approx. 20% (11°20').
- Machine in operating conditions without load.

1 - Start the engine (see "3.6.2 STARTING THE ENGINE".).

2 - Align the machine in travel position on a straight road section and proceed up the slope with 20% gradient.

3 - Stop the machine with the service brake, shift the reversing gear lever (1) to the neutral position (N) and stop the engine.

4 - Apply the parking brake (lock position), release the service brake slowly and make sure that the machine does not move.

ADJUSTMENT

1 - With the engine off, release the brake lever and rotate the lever end (2) by giving it 2 or 3 counterclockwise turns.

2 - Start the engine, apply the parking brake and check again.

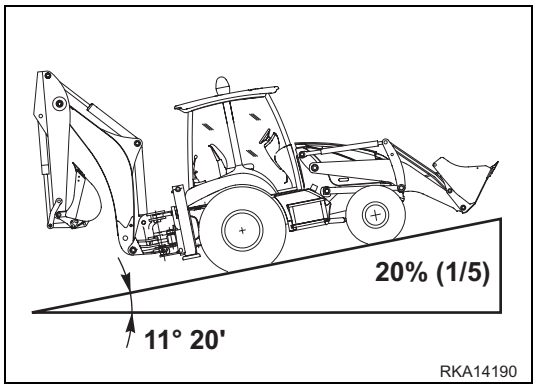

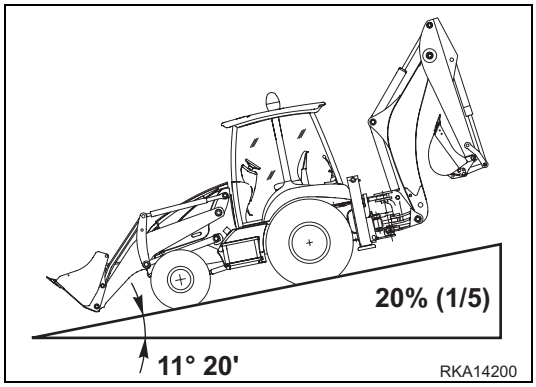

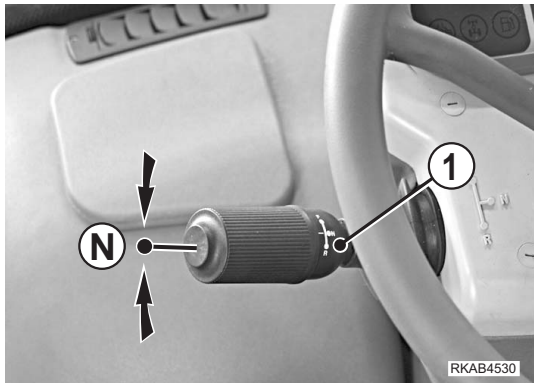

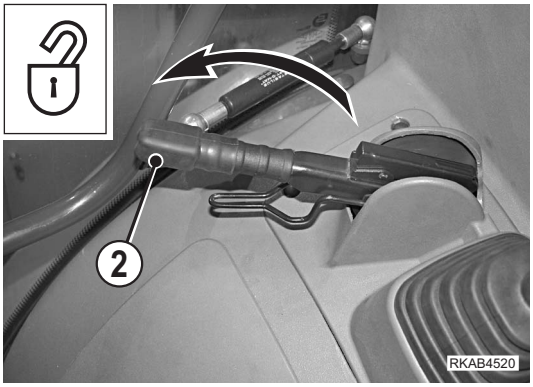

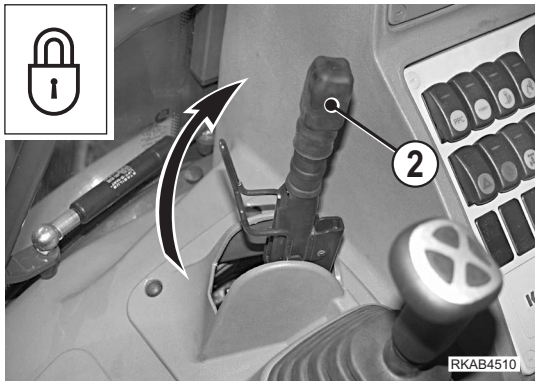

4.8.1.l CHECKING AND ADJUSTING THE BRAKE PEDAL STROKE

This check must be carried out when operating on the braking unit in order to eliminate any trouble.
To check and adjust the brake pedal stroke, proceed as follows:

1 - Insert the connection pin (1) in order to couple the pedals.

2 - By acting on the end-of-stroke rubber pads (2), position the pedals in correspondence with measure “A” - 313 mm; lock the pads in this position.
(Use a 13 mm wrench).

3 - Lower the pedals to measure “A”-303 mm and adjust the brake pump rods (3) until they touch the brake pump pistons; lock them in this position.
(Use a 22 mm wrench).

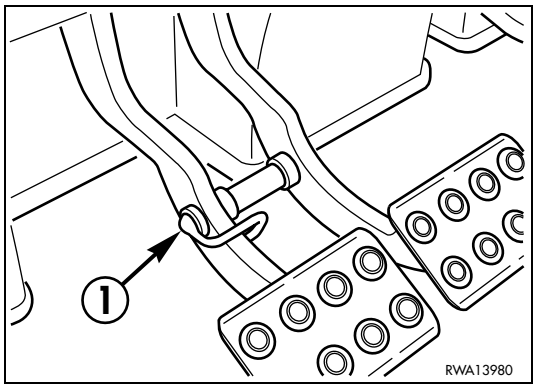

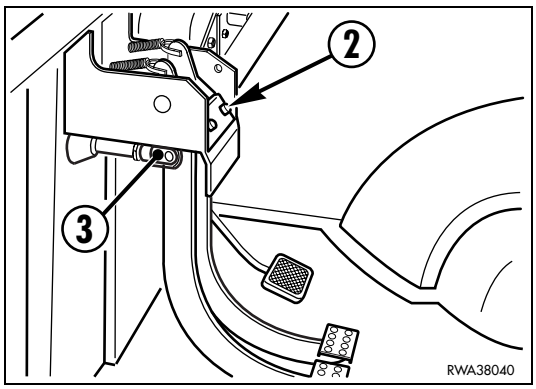

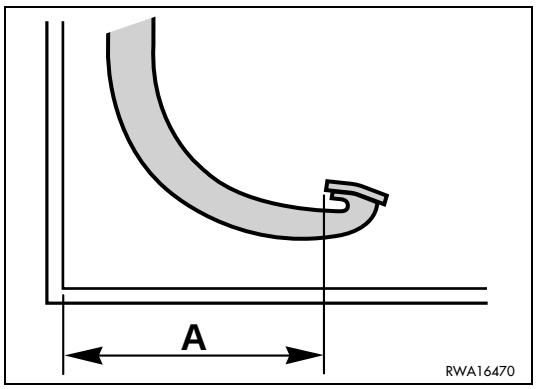

4.8.1.m ADJUSTING THE AUTOMATIC RETURN-TO-DIG DEVICE OF THE FRONT BUCKET (if installed)

The device for the automatic return of the front bucket to the digging position automatically brings the front bucket to the loading position when it is lowered to the ground.
The sensor is positioned on the right dumping cylinder and determines the horizontal position of the bucket, parallel to the ground, after the bucket dumping control has reached the end of stroke and the electromagnet of the distributor rod has been activated (see "3.3.6 pos. 4 - FRONT LOADER CONTROL LEVER").
The sensor must be positioned at a distance of 2-4 mm (0.078-0.157 inches) from the sliding rod.

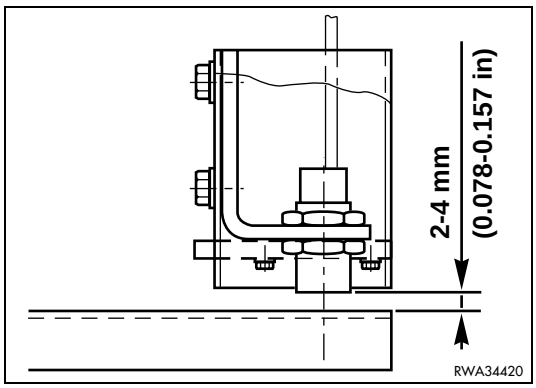

4.8.1.n CHECKING AND ADJUSTING THE STABILIZER SLACK

WARNING

- **When leaving the operator's seat for the adjustment of the guides, remove the ignition key.**

1 - Position the machine on level ground, raise the stabilizers completely, engage all the safety locks and stop the engine.

2 - Push and pull each stabilizer manually and make sure that the slack between the mobile rod (1) and the adjusting element (2) is included between 0.5 and 1.0 mm.
If the slack exceeds the values indicated, loosen the screws (3), remove the adjusting plate (4) and remove one or more washers (5) from both the adjusting points, according to the needs.
Once they have been removed, the washers (5) must be positioned again between the adjusting plate (4) and the screws (3).
During the adjustment, check the condition of the adjusting element (2) and change it immediately if it is excessively worn.
After reassembling the washers (5), plate (4) and fastening screws (3) in this order, check if the slack is within the prescribed values.

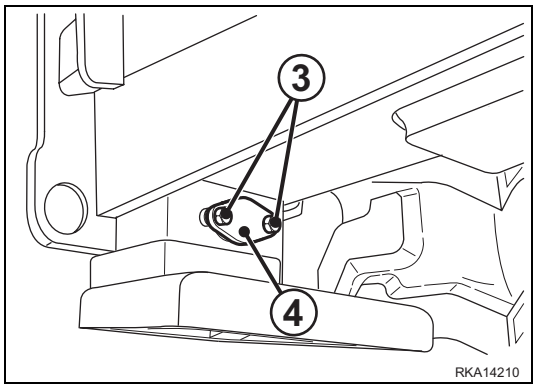

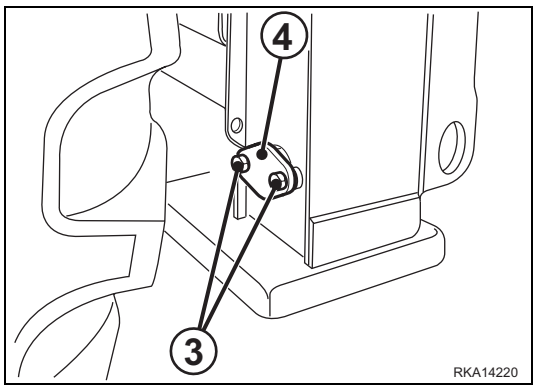

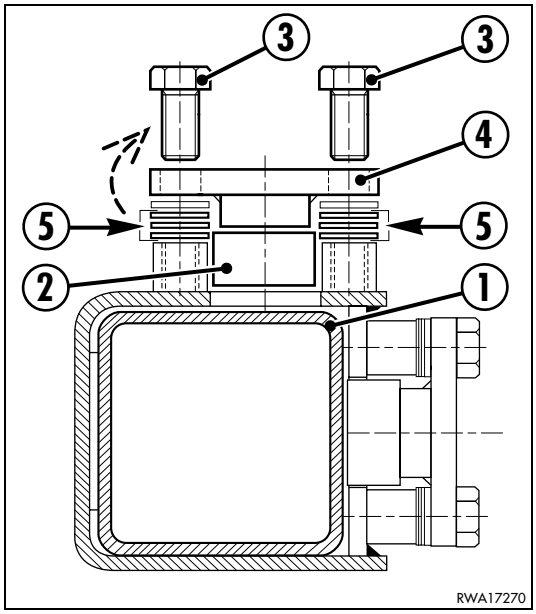

4.8.2 MAINTENANCE INTERVALS IN CASE OF USE OF THE DEMOLITION HAMMER

In machines equipped with demolition hammer hydraulic oil deteriorates more rapidly than in machines used for simple digging operations.
When using the demolition hammer, always keep to the following maintenance plan.

4.8.2.a CHANGING THE HYDRAULIC OIL FILTER

In new machines, change the filter after the first 100÷150 hours of operation and for the successive changes keep to the indications given in the table on the right.
If the machine contains synthetic biodegradable oil type HEES, the filter must be changed after the first 50 hours of operation.

4.8.2.b CHANGING THE HYDRAULIC OIL

Change the hydraulic oil in the tank according to the intervals indicated in the table on the right.
On machines containing synthetic biodegradable oil type HEES, change the oil after the first 500 hours of operation and for the successive changes keep to the indications given in the table on the right.

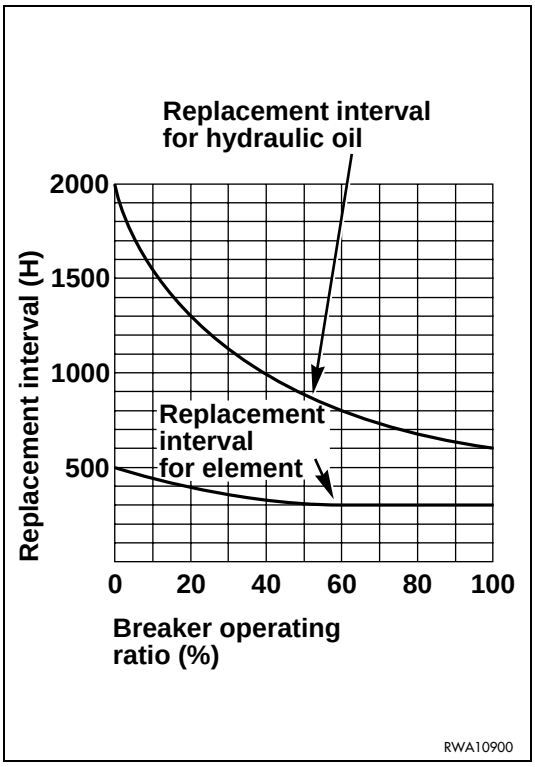

4.8.3 CHECKS TO BE CARRIED OUT BEFORE STARTING THE ENGINE

4.8.3.a VARIOUS CHECKS

WARNING

- **Dirt, oil and fuel in the engine compartment near hot parts may damage the machine and even cause fires.**
  Check frequently and eliminate any leakage; if leakages occur repeatedly, contact your Komatsu Dealer.

Before starting the engine, proceed as follows:

1. Check for loose screws or nuts.
2. Check for oil, fuel or coolant leakages.
3. Check for unusual wear, deformation or cracks.
4. Check the condition of the rims and the condition and wear of the tyres.
5. Make sure that instruments, lights, work lights and direction indicators work correctly.

The other general checks concern safety:

6. Check the soundness of the safety belt.
7. Check the soundness and legibility of the warning plates.
8. Make sure that the ladders and handles used to reach the driver's seat and the inside of the cab are clean.

4.8.3.b CHECKING THE COOLANT LEVEL

WARNING

- **Do not remove the radiator cap; the coolant level must be checked with cold engine, through the expansion tank.**

The coolant level must be checked on the expansion tank (1), when the engine is cold, and must be included between the MIN. and MAX. reference marks.
Check the level through the hole positioned on the right side of the engine hood: the coolant level must exceed the MIN. reference mark.
If the level is near the MIN. mark, fill the tank with coolant, and if the level decreases considerably and constantly, check the radiator-engine seals and the radiator body for leaks and check the fluid level in the radiator (see "4.8.6.b CHECKING THE FLUID LEVEL IN THE RADIATOR").
The expansion tank (1) can be reached after opening the engine hood (see "3.5.1 ENGINE HOOD").

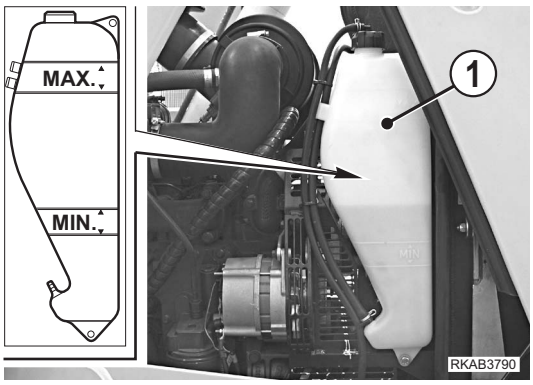

4.8.3.c CHECKING THE FUEL LEVEL

WARNING

- **When refuelling, avoid spilling fuel, since this may cause a fire hazard. If fuel is spilled, wipe it up immediately.**
- **Fuel is flammable; do not use naked flames and do not smoke when refuelling.**
- **Hold the fuel gun constantly in contact with the filler.**

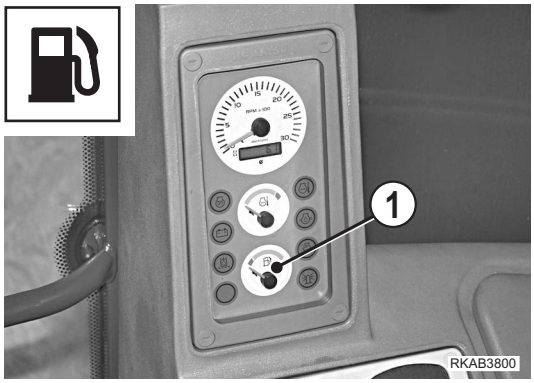

To check the fuel level, use the fuel gauge positioned on the side dashboard (1). Do not fill the tank completely, but leave enough room for the fuel to expand.

IMPORTANT

- **It is advisable to refuel after work, in order to avoid the formation of condensate.**
- **Refuel also when the low fuel warning light on the front dashboard comes on.**
- **After refuelling, screw the filler cap (2) thoroughly and lock it.**

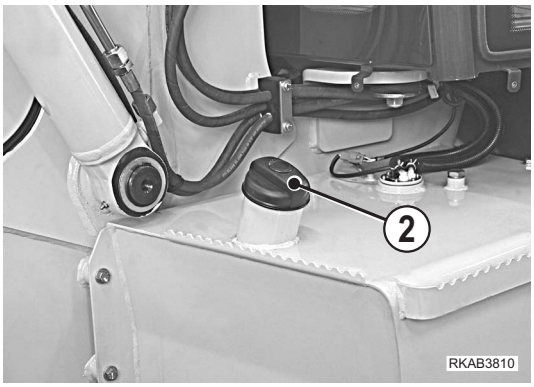

4.8.3.d CHECKING THE ENGINE OIL LEVEL

WARNING

- **Soon after the machine has been stopped the engine is very hot and may cause burns; let the engine cool down before carrying out any check.**

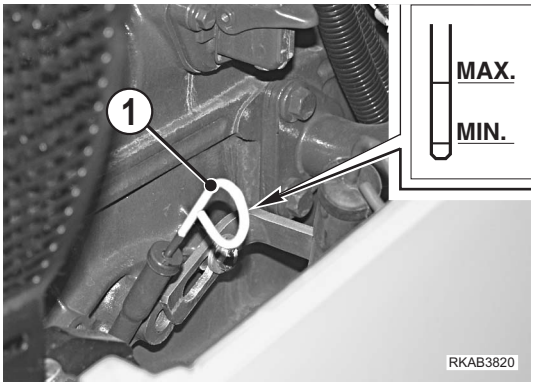

The dipstick (1) can be reached after opening the engine hood. See "3.5.1 ENGINE HOOD".
The oil level must be checked with cold engine and the machine parked on level ground.
The oil level must be checked on the graduated dipstick (1) and must be included between the MIN. and MAX. marks; if the level is near the MIN. mark, top up with oil suitable for the ambient temperature, as indicated in the lubricant chart.
(See "4.3 FUEL, COOLANT AND LUBRICANTS").

IMPORTANT

- **If it is necessary to check the oil level during or soon after work, stop the engine and wait 15 minutes before carrying out the check.**

4.8.4 MAINTENANCE EVERY 10 HOURS OF OPERATION

4.8.4.a LUBRICATING THE JOINTS

IMPORTANT

- **Clean the grease nipples before applying the grease pump.**
- **After lubrication, remove all the contaminated grease that may have spread out of the nipples.**
- **If the machine is used in difficult conditions, lubricate the joints more frequently than usual.**

This maintenance operation must be carried out with the front bucket resting on the ground and the backhoe equipment completely extended and resting on the ground, too, as indicated in the figure.
Lubricate the joints using a syringe and the prescribed type of grease (see "4.3 FUEL, COOLANT AND LUBRICANTS" and "4.5.1 LUBRICATION DIAGRAM").

IMPORTANT

- **As a general rule, it is important to consider that each cylinder is provided with two grease nipples positioned on the couplings and that each pin serving as fulcrum point for a movement is provided with at least one grease nipple.**

POINTS TO BE LUBRICATED ON THE FRONT LOADER

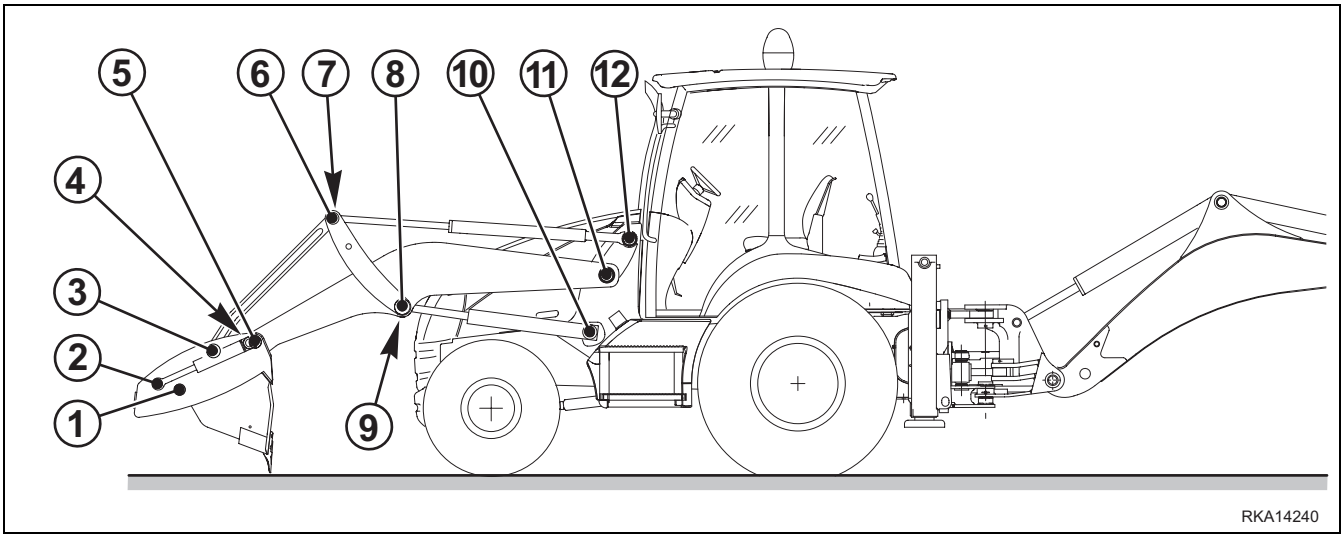

1 - 4in1 bucket opening fulcrum pin	(2 points)
2 - 4in1 bucket opening cylinder head pin	(2 points)
3 - Tie rod-bucket coupling pin	(2 points)
4 - 4in1 bucket opening cylinder base pin	(2 points)
5 - Bucket fulcrum pin	(2 points)
6 - Tie rod-lever coupling pin - leva	(2 points)
7 - Bucket cylinder head pin	(2 points)
8 - Lever fulcrum pin	(2 points)
9 - Lifting cylinder head pin	(2 points)
10 - Lifting cylinder base pin	(2 points)
11 - Arm fulcrum pin	(2 points)
12 - Bucket cylinder base pin	(2 points)

POINTS TO BE LUBRICATED ON THE BACKHOE

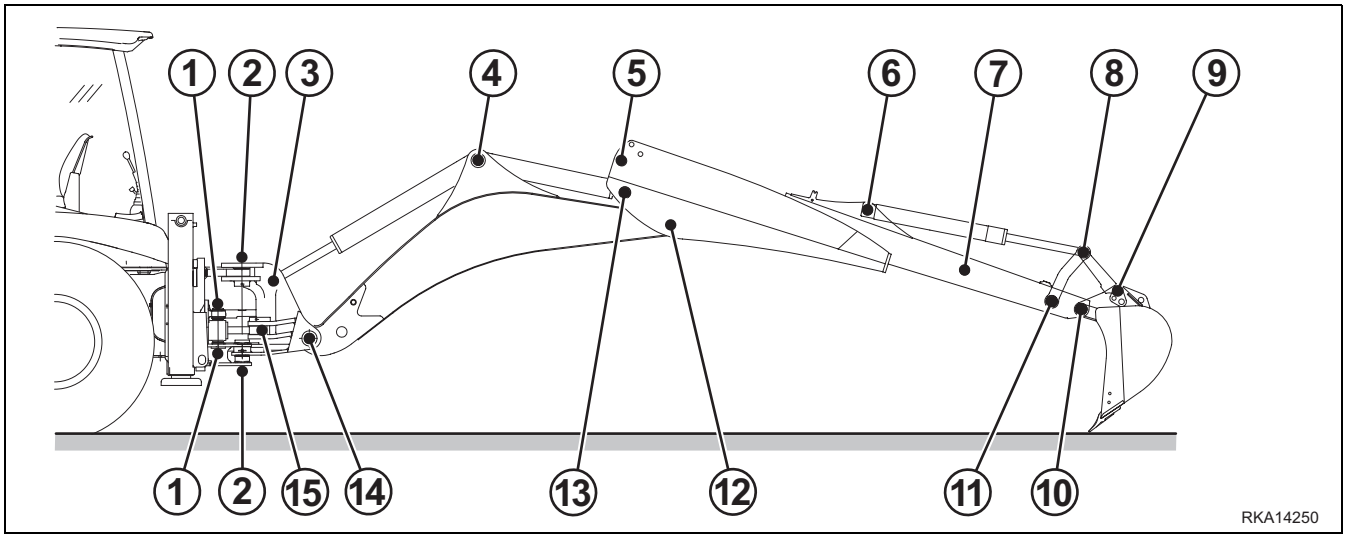

1 - Boom swing cylinder base pin	(4 points)
2 - Boom swing fulcrum pin	(2 points)
3 - Lifting cylinder head and boom locking lever fulcrum pin	(3 points)
4 - Lifting cylinder base and arm pin	(3 points)
5 - Telescopic arm extension cylinder base pin	(1 point)
6 - Bucket cylinder base pin	(1 point)
7 - Telescopic arm extension cylinder head pin	(1 point)
8 - Bucket cylinder head and lever-tie rod coupling pin	(3 points)
9 - Tie rod-bucket coupling pin	(2 points)
10 - Bucket fulcrum pin	(1 point)
11 - Lever fulcrum pin	(1 point)
12 - Arm fulcrum pin	(1 point)
13 - Arm cylinder head pin	(1 point)
14 - Boom fulcrum pin	(2 points)
15 - Boom swing cylinder head pin	(2 points)

4.8.5 MAINTENANCE AFTER THE FIRST 50 HOURS OF OPERATION (Only for machines in which synthetic biodegradable oil type HEES is used)

The following maintenance operation must be carried out after the first 50 hours, together with the maintenance operations to be carried out “EVERY 50 HOURS”.

a - CHANGE THE HYDRAULIC OIL DRAIN FILTER

For further details, see section "4.8.10 MAINTENANCE EVERY 500 HOURS OF OPERATION".

4.8.6 MAINTENANCE EVERY 50 HOURS OF OPERATION

4.8.6.a CHECKING THE HYDRAULIC OIL LEVEL

⚠ WARNING

- **The oil level must be checked with cold oil and the machine positioned on level ground and in lubricating position.**
- **If it is necessary to top up, stop the engine and eliminate the residual pressure from the equipment circuits (by moving the controls more than once) and from the tank (by slowly loosening the filler cap (2)).**

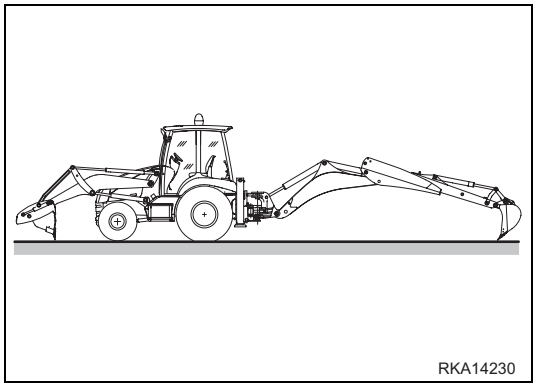

The oil level must be visible through the window (1) provided on the tank and must be included between the MIN. and MAX. marks.
If the level is near the MIN. reference mark, open the engine hood (see "3.5.1 ENGINE HOOD") and top up through the filler (2) using the prescribed type of hydraulic oil (see "4.3 FUEL, COOLANT AND LUBRICANTS").
Put back the filler cap (2) and close the engine hood.

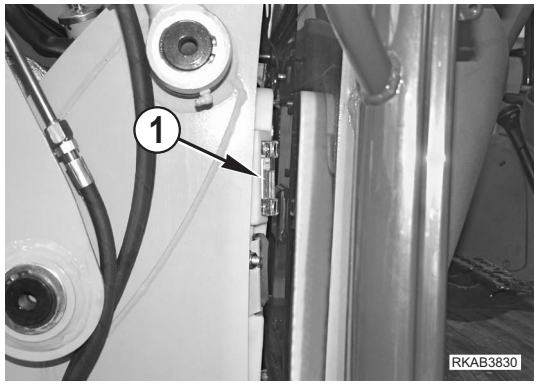

IMPORTANT

- **Do not exceed the MAX. reference mark. This would damage the hydraulic circuit and cause the oil to overflow.**
- **If you notice a constant, unusual decrease in the oil level, contact your Komatsu Dealer.**

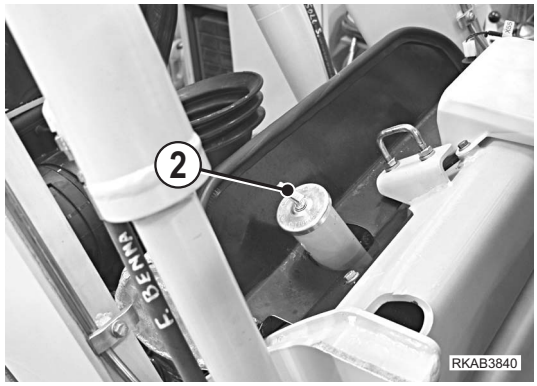

4.8.6.b CHECKING THE FLUID LEVEL IN THE RADIATOR

⚠ WARNING

- **Carry out this check with the machine parked on level ground and loader arm lifted with engaged safety lock.**
- **Do not remove the radiator cap when the fluid is hot, since the fluid may be sprayed out of the radiator and cause burns.**
- **Loosen the cap slowly to release the pressure before removing it..**

The radiator cap can be reached after opening the engine hood (see "3.5.1 ENGINE HOOD").
Remove the cap (1) and make sure that the fluid level is very near the filling hole.

IMPORTANT

- **If the fluid level in the radiator is low and the expansion tank is filled with coolant, check for tightness and make sure that there are no air leakages from the pipe that connects the radiator to the expansion tank.**
  If the problem persists, contact your Komatsu Dealer.

4.8.6.c CHECKING THE BRAKING SYSTEM OIL LEVEL

This operation must be carried out when the warning light (1) on the front instrument panel comes on (see "3.3.1 pos. 8 - LOW OIL PRESSURE OR BRAKING SYSTEM FAILURE WARNING LIGHT").

The brake fluid reservoir (2) can be reached after removing the front guard (3).
This is a visual check and, if necessary, the reservoir must be topped up with the prescribed fluid until reaching the MAX. mark (see "4.3 FUEL, COOLANT AND LUBRICANTS").

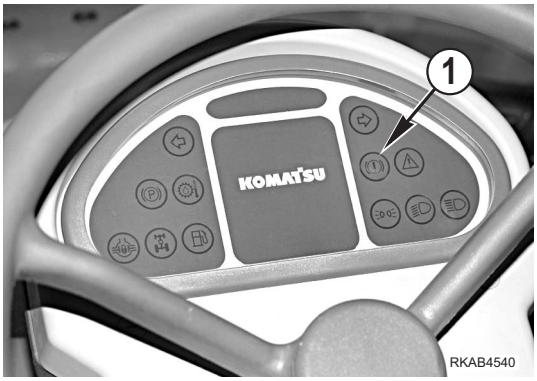

IMPORTANT

- **Use new oil only.**
- **If constant and considerable leakages are observed, it is advisable to contact a Komatsu Dealer to have the system checked and the necessary repairs carried out.**

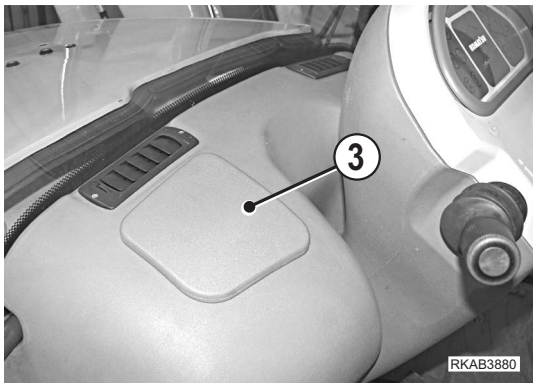

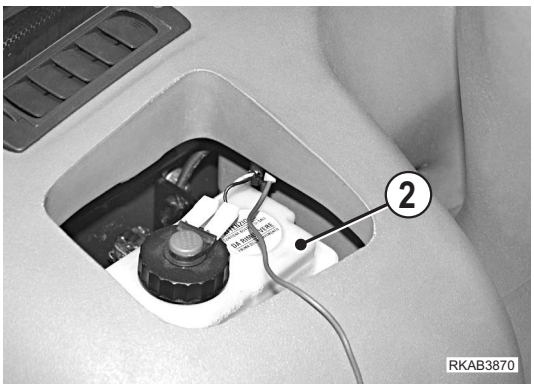

4.8.6.d LUBRICATING THE PROPELLER SHAFTS

WARNING

- **Carry out this operation with the machine parked on a level surface, the work equipment resting on the ground and the engine off.**

The propeller shafts must be lubricated after thoroughly cleaning the grease nipples, by applying the grease pump filled with the prescribed grease.
(See "4.3 FUEL, COOLANT AND LUBRICANTS" and "4.5.1 LUBRICATION DIAGRAM").
Once the lubrication procedure has been carried out, make sure that all the points have been lubricated and remove the used grease that may have spread out of the joints.

IMPORTANT

- **If the machine is used in difficult conditions, carry out this operation more frequently than usual.**

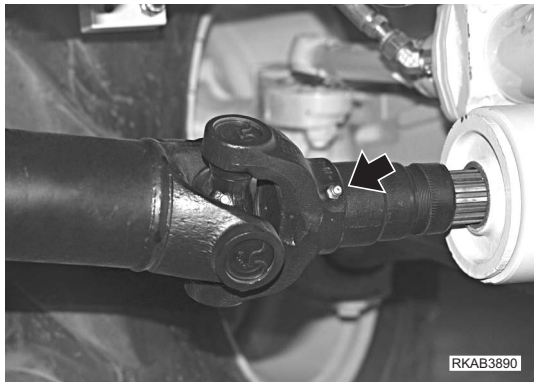

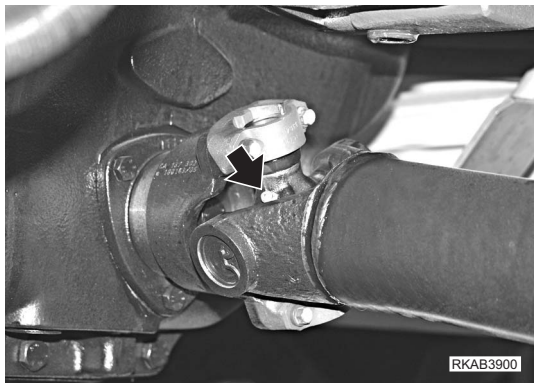

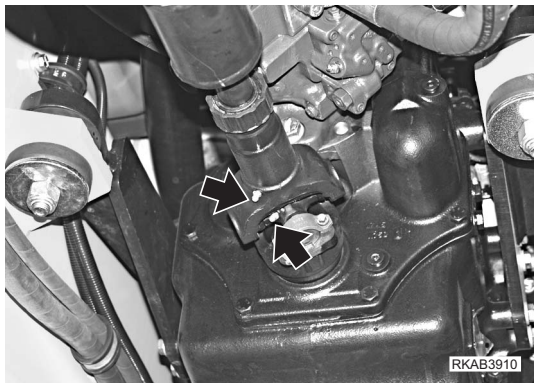

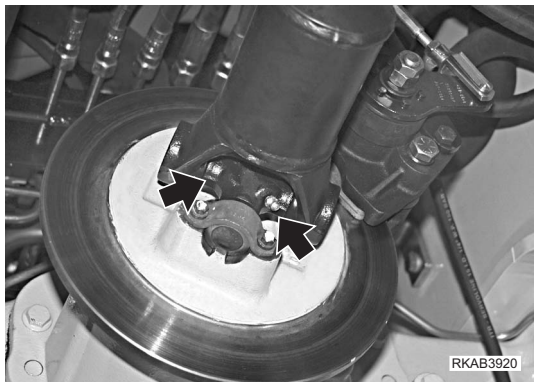

4.8.6.e LUBRICATING THE FRONT AXLE JOINTS AND CENTRAL COUPLING

The lubrication points (1) of the wheel joints are indicated in the figure and it is important to remember that they are located in symmetrical positions, while the central coupling is lubricated by means of a grease nipple (2) positioned on the frame.
The lubrication must be carried out after thoroughly cleaning the grease nipples, by applying the grease pump filled with the prescribed grease.
(See "4.3 FUEL, COOLANT AND LUBRICANTS" and "4.5.1 LUBRICATION DIAGRAM").
Once the lubrication procedure has been carried out, remove the contaminated grease that may have spread out of the joints and of the central coupling.

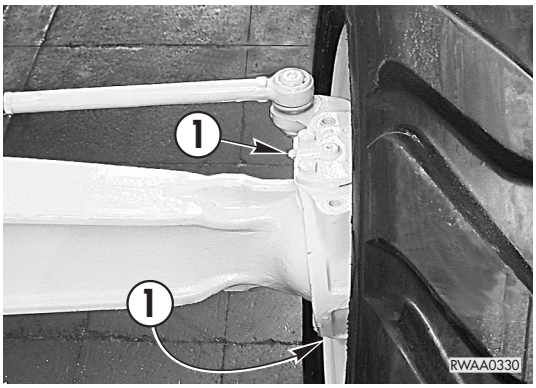

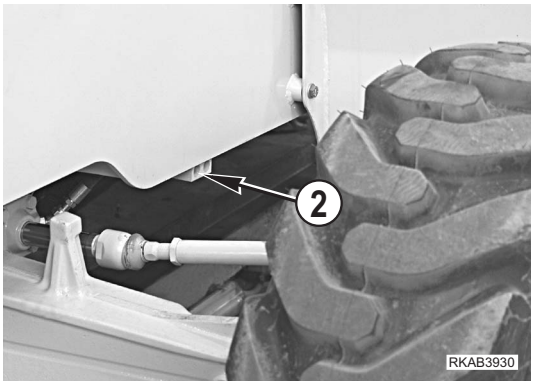

4.8.6.f CHECKING THE TYRE PRESSURE

WARNING

- **Inflate the tyres only after positioning them in a protection cage.**
- **Stand beside the tyre to inflate it.**
- **Do not exceed the pressure values indicated in the technical data sheet (see "5.1 TECHNICAL DATA").**

This check is indispensable to preserve the tyres, keep them efficient over time and make them last longer.
Pressure must be as prescribed in the specifications.
(See "5.1 TECHNICAL DATA").
While checking the tyre pressure, check also the conditions of the tread and sidewalls.

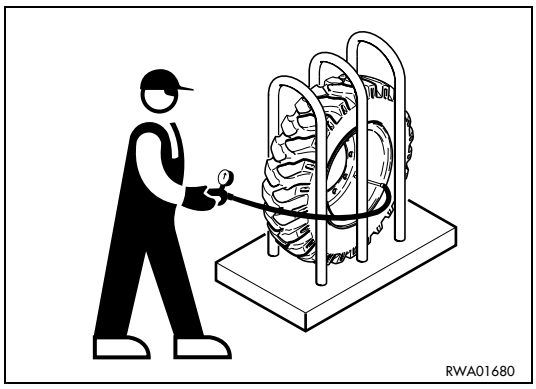

4.8.6.g DRAINING THE WATER SEPARATOR

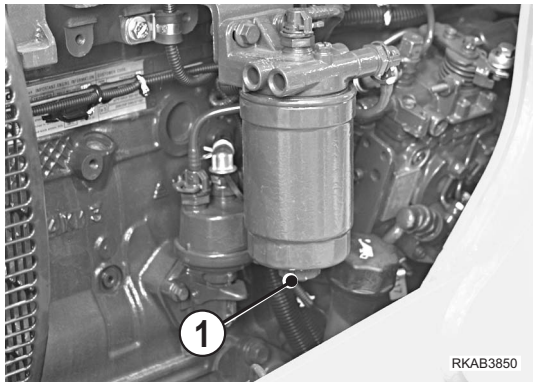

WARNING

- **Fuel is flammable; do not use naked flames and do not smoke while draining the water separator.**
- **If some fuel is spilled, wipe it up immediately.**

This operation serves to drain the condensate and must be carried out with full tank, in order to prevent air from entering the fuel circuit.
The condensate must be drained at the end of work, before the engine has completely cooled down, in order to prevent it from freezing if the temperature drops considerably.
The water separator can be reached after removing the engine hood (see "3.5.1 ENGINE HOOD").
Drain the condensate by loosening the plug (1), waiting until only clear diesel oil flows out.

4.8.7 MAINTENANCE AFTER THE FIRST 250 HOURS OF OPERATION

The following maintenance operations must be carried out after the first 250 hours, together with the maintenance operations to be carried out “EVERY 250 HOURS”.

a - CHANGE THE FRONT AXLE OIL

b - CHANGE THE REAR AXLE OIL

c - CHANGE THE HYDRAULIC TRANSMISSION OIL

d - CHANGE THE HYDRAULIC TRANSMISSION OIL FILTER

e - CHANGE THE HYDRAULIC OIL DRAIN FILTER

For further details, see sections "4.8.10 MAINTENANCE EVERY 500 HOURS OF OPERATION" and "4.8.11 MAINTENANCE EVERY 1000 HOURS OF OPERATION".

For checks and adjustments, contact your Komatsu Dealer.

4.8.8 MAINTENANCE EVERY 250 HOURS OF OPERATION

Carry out the following operations together with those to be performed every 50 HOURS.

4.8.8.a CHECKING THE ALTERNATOR-FAN BELT

⚠ WARNING

- **Carry out this checking and maintenance operation only with cold engine.**

The belt (1) can be reached after opening the engine hood (see "3.5.1 ENGINE HOOD") and after removing the fan guard (2).
This check is visual, must be carried out with cold engine and consists in inspecting the belt for cuts, fraying, cracks.
If you find any of these defects, have the belt changed by a Komatsu Dealer.

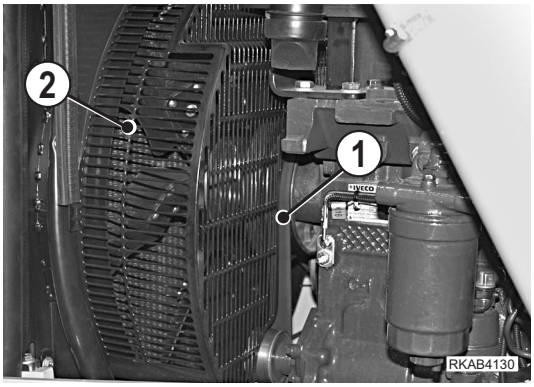

4.8.8.b CHECKING AND ADJUSTING THE A/C COMPRESSOR BELT TENSION (only for machines with air conditioner)

WARNING

- **The coolant used in the air conditioning system is very dangerous. If it is sprayed into the eyes or in case of contact with the skin, it may cause blindness or frostbite. To avoid any explosion, do not generate sparks and do not use naked flames near the air conditioner.**
- **The adjustment of the belt tension is a mechanical operation and must be carried out without working on the air conditioning system**
- **Carry out this check with cold engine.**

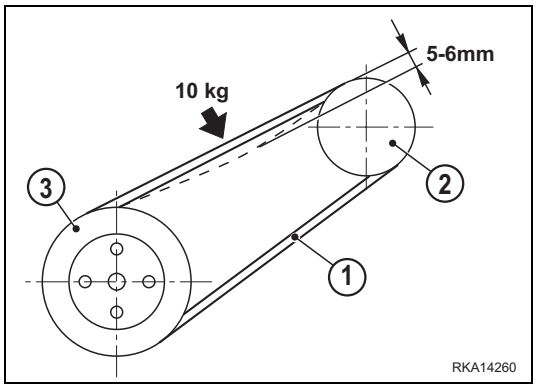

The compressor belt can be reached after opening the engine hood (see "3.5.1 ENGINE HOOD").
The check is manual and consists in exerting pressure on the belt (1) at the centre of the section between the compressor (2) and the pulley (3).
If the pressure exerted is approximately 10 kg, the resulting deflection must be approx. 5-6 mm.
When the belt is new, the resulting deflection must be approx. 4 mm.
If the resulting deflection exceeds the values indicated, proceed as follows:

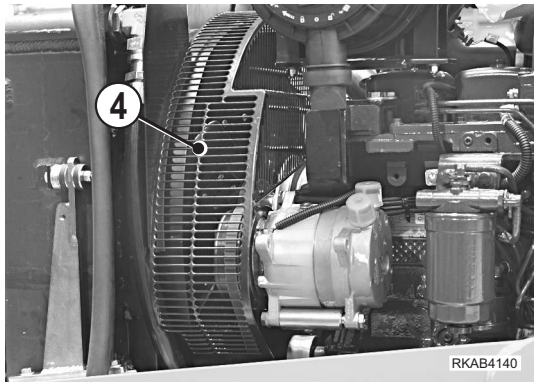

1 - Remove the belt guard (4).
2 - Loosen the screw (5) that fastens the cam (6).
3 - Loosen the screw (7) that fastens the compressor (2).
4 - Loosen the nut (8) and tighten the screw (9) to achieve the correct tension.
5 - Secure the belt in this position using the screws (7) and the nut (8).

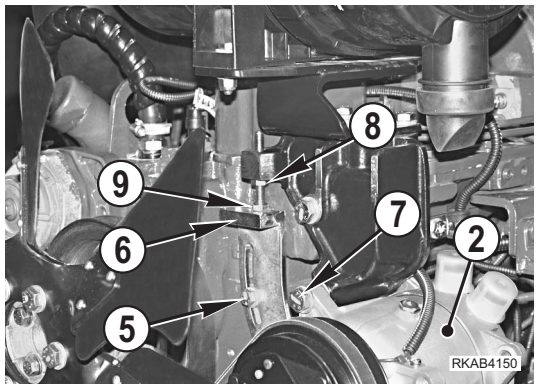

IMPORTANT

- **If the belt is worn or in case of doubt on its conditions, change it and check the tension again after a few hours of operation.**
- **It is advisable to start the air conditioner only with low engine rpm and not during acceleration, to avoid damaging the system or breaking the compressor drive belt.**

4.8.8.c CHECKING THE BATTERY ELECTROLYTE LEVEL

⚠ WARNING

- **Carry out this check with the machine parked on level ground.**
- **Check the level only after stopping the engine and if necessary add distilled water only before starting work.**
- **Always wear safety goggles and waterproof gloves.**
- **To prevent gas explosions, do not use naked flames, do not smoke and avoid producing sparks due to short circuits.**
- **The battery electrolyte is dangerous; in case of contact with the eyes or skin, rinse with plenty of water and consult a doctor without delay.**

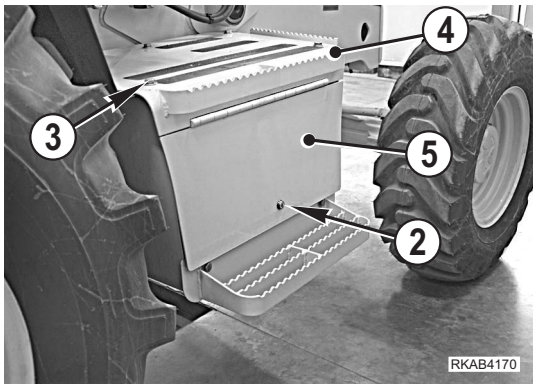

To reach the battery (1), release the lock (2), loosen the screws (3) and remove the upper cover (4).
Use a 17 mm hex wrench.
The electrolyte level in each cell must be about 6 mm above the plate edge; if necessary, remove the cell caps and top up using exclusively distilled water.
If, on the contrary, the level is low because some fluid has been spilled, add electrolyte with concentration suitable for the ambient temperature (see "3.10.3 BATTERY").

NOTE

- When adding distilled water or electrolyte, do not exceed the level indicated. This would shorten the service life of the battery and may cause the electrolyte to overflow.

Put back the upper cover (4) and lock the door (5).

IMPORTANT

- **It is advisable to add distilled water before starting work, in order to prevent if from freezing.**
- **Before putting back the cell caps, make sure that the breather holes are not clogged.**
- **Make sure that the terminals and connection cables are not oxidized; if necessary, clean them and cover them with anti-oxidation grease.**

4.8.8.d CHECKING THE FRONT AXLE OIL LEVELS

WARNING

- **Carry out this check with the machine parked on a level surface and the work equipment resting on the ground.**

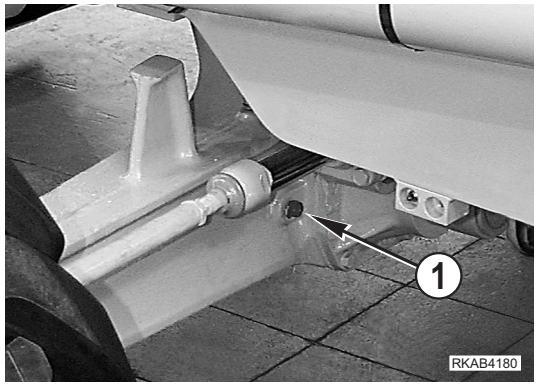

DIFFERENTIAL

This check is visual and serves to verify if the lubricant reaches the hole (1); if necessary, top up using the prescribed oil (see "4.3 FUEL, COOLANT AND LUBRICANTS").
The level hole (1) must be used also as filling hole.
Use a 17 mm wrench.

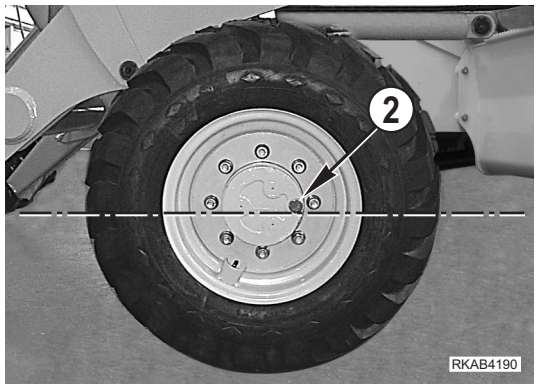

FINAL REDUCTION GEARS

This check must be carried out on each reduction gear positioned with its plug on the horizontal axis.
If necessary, move the machine slightly until reaching the specified position, which is indispensable for an accurate check. This a visual check and serves to verify if the lubricant reaches the hole (2); if necessary, top up using the prescribed oil (see "4.3 FUEL, COOLANT AND LUBRICANTS"). Use a 17 mm wrench.

4.8.8.e CHECKING THE REAR AXLE OIL LEVEL

WARNING

- **Carry out this check with the machine parked on a level surface and the work equipment resting on the ground.**

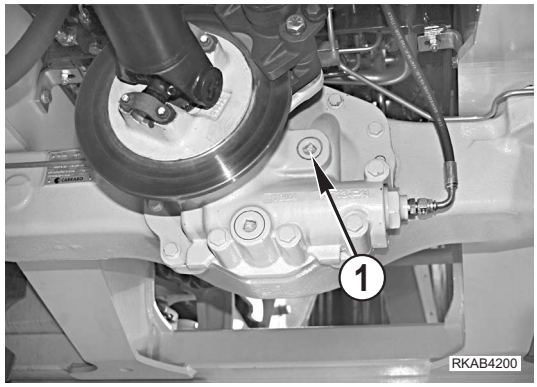

This check is visual and serves to verify if the lubricant reaches the hole (1); if necessary, top up using the prescribed oil (see "4.3 FUEL, COOLANT AND LUBRICANTS").
The level hole (1) must be used also as filling hole (use a 1/2” square wrench).

IMPORTANT

- **Only the plug (1) is needed to check the level, since the oil contained in the rear axle lubricates both the differential unit and the final reduction gears.**

4.8.8.f CHECKING THE HYDRAULIC TRANSMISSION OIL LEVEL

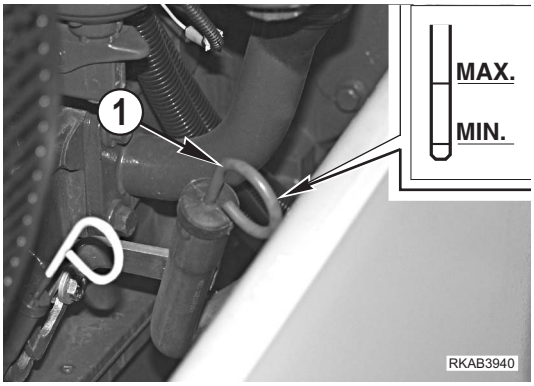

WARNING

- **Check the oil with the machine parked on level ground and lifted loader arm with engaged safety lock.**
- **The level must be checked with running engine and transmission oil at operating temperature; be very careful, in order to avoid burns.**
- **Let all the work equipment safety locks engaged, apply the parking brake and do not move the gearshift lever.**

The dipstick (1) can be reached after opening the engine hood. See "3.5.1 ENGINE HOOD".
The oil level must be checked with the engine idling and the oil at running temperature.
The oil must always reach the maximum level or be very near it.
Top up through the opening used for the dipstick (1), using the prescribed oil (see "4.3 FUEL, COOLANT AND LUBRICANTS").

4.8.8.g CHECKING THE WHEEL NUT DRIVING TORQUE

This check serves to restore the correct driving torque of the wheels on the hubs.
The driving torque must be checked by means of a torque wrench (1) set according to the values indicated in paragraph "4.4.2 SPECIFIC DRIVING TORQUES FOR SCREWS AND NUTS".
(Use a 27 mm wrench for the front wheels).
(Use a 32 mm wrench for the rear wheels).

IMPORTANT

- **Do not increase the specified driving torque and keep it within the prescribed ranges.**
- **Avoid lubricating the thread when the driving torque must be checked.**

4.8.9 MAINTENANCE AFTER THE FIRST 500 HOURS OF OPERATION (Only for machines in which synthetic biodegradable oil type HEES is used)

The following maintenance operation must be carried out after the first 500 hours, together with the maintenance operations to be carried out “EVERY 500 HOURS”.

a - CHANGE THE HYDRAULIC OIL AND CLEAN THE INTAKE FILTER

For further details, see section "4.8.12 MAINTENANCE EVERY 2000 HOURS OF OPERATION".

4.8.10 MAINTENANCE EVERY 500 HOURS OF OPERATION

Carry out these operations together with those to be performed every 50 HOURS and every 250 HOURS.

4.8.10.a CHANGING THE ENGINE OIL

⚠ WARNING

- **Change the oil with the machine parked on level ground and lifted loader arm with engaged safety lock.**
- **Soon after the machine has been stopped the engine oil is very hot and may cause burns; let the engine cool down until it reaches a temperature of 40÷45°C before draining the oil.**
- **The oil that may be spilled during the oil change will make the ground slippery, therefore use anti-slip shoes and immediately remove any trace of oil from the floor.**
- **Oils, filters, the coolant and the battery are considered special waste and must be collected and disposed of according to the regulations in force.**

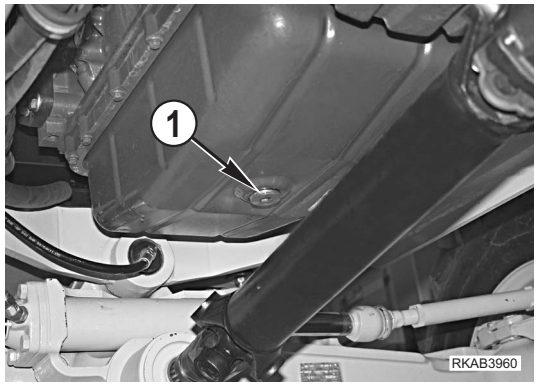

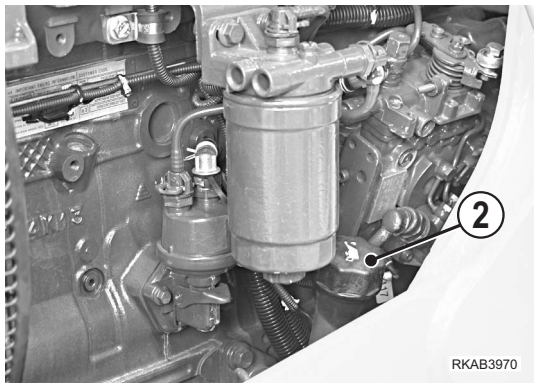

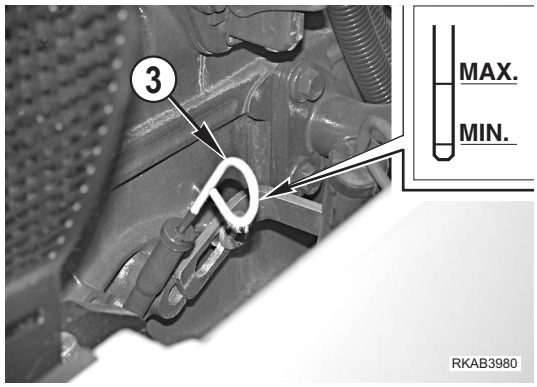

When changing the engine oil, change also the filter (see "4.8.10.b CHANGING THE ENGINE OIL FILTER").
Proceed as follows::

1 - Open the engine hood (see "3.5.1 ENGINE HOOD").

2 - Remove the drain plug (1) of the oil pan, gathering the used oil that flows out into a container with suitable capacity. Use a 19 mm wrench.
While the oil flows out, remove the filler cap (2), so that the oil can flow out freely.

3 - Change the filter (see "4.8.10.b CHANGING THE ENGINE OIL FILTER").

4 - Tighten the plug (1) onto the pan and add the prescribed quantity of new oil, using the dipstick (3) to make sure that the oil reaches the MAX. level.

5 - Put back the filler cap (2), start the engine, let it run for 5 minutes and then stop it.
Check the level again and top up if necessary.

6 - Close the engine hood.

Use oil suitable for the ambient temperature. (See "4.3 FUEL, COOLANT AND LUBRICANTS").

4.8.10.b CHANGING THE ENGINE OIL FILTER

WARNING

- **Soon after the machine has been stopped the engine oil is very hot and may cause burns; let the engine cool down until it reaches a temperature of 40÷45°C before draining the oil.**
- **The oil that may be spilled during the oil change will make the ground slippery, therefore use anti-slip shoes and immediately remove any trace of oil from the floor.**
- **Oils, filters, the coolant and the battery are considered special waste and must be collected and disposed of according to the regulations in force.**

This operation must be carried out whenever the oil is changed.
Proceed as follows:

1 - Unscrew and remove the old filter (1) using the special wrench provided.

2 - Clean the contact surface between the seal and the filter support (2).

3 - Fill the new filter with engine oil, lubricate the seal and screw thoroughly until the filter rests against the seal.

4 - Give another half turn by hand.

Start the engine, make sure that there are no leakages and that the low oil pressure warning light goes out.

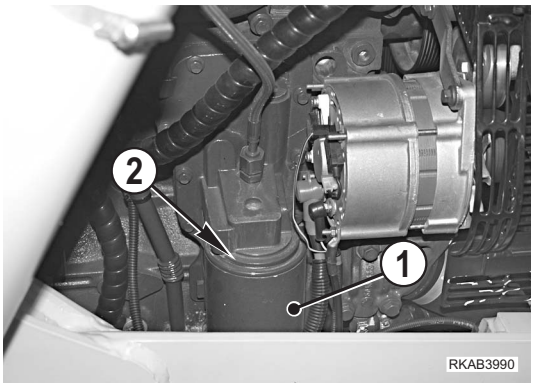

IMPORTANT

- **Do not use the wrench to lock the filter, in order to avoid damaging the filter itself and causing oil leakages.**

4.8.10.c CHANGING THE HYDRAULIC SYSTEM OIL FILTER

WARNING

- **Soon after the machine has been stopped the hydraulic oil is very hot; let it cool down until it reaches a temperature of 40÷45°C before changing it.**
- **The hydraulic system is under pressure; slowly loosen the filler cap to release any residual pressure.**
- **Oils, filters, the coolant and the battery are considered special waste and must be collected and disposed of according to the regulations in force.**

CAUTION

- **On new machines change the hydraulic oil filter cartridge after the first 250 hours of operation and successively every 500 hours.**
- **On machines containing synthetic biodegradable oil type HEES , this must be changed for the first time after the first 50 hours of operation and successively every 500 hours.**

The filter is positioned on the hydraulic system drain outlet and it holds the metal particles that come off the various components due to their wear.
It is positioned on the right side of the machine, under the battery compartment, and can be reached after opening the door (1). To change the filter, proceed as follows:

1 - Release the lock and open the door (1).
2 - Loosen the screws (2) and remove the access step (3).
3 - Open the engine hood (see "3.5.1 ENGINE HOOD") and slowly loosen the filler cap (4) to release any residual pressure.
4 - Remove the cap (5) and gather the oil that flows out (approx. 1/2 litre). Use a 19 mm socket wrench.
5 - Remove the filter housing (6) and collect the residual oil from the inside (approx. 1 litre).
Use a 42 mm socket wrench.
6 - Remove the cartridge (7) and carefully clean the housing.
7 - Clean the contact surface between the seal and the filter support.
8 - Install a new cartridge in the filter housing and reassemble the whole, making sure that the seal is in perfect conditions and correctly housed in its seat.
9 - Put back the cap (5), the access step (3) and lock the door (1).
10 - Tighten the filler cap (4) and close the engine hood.

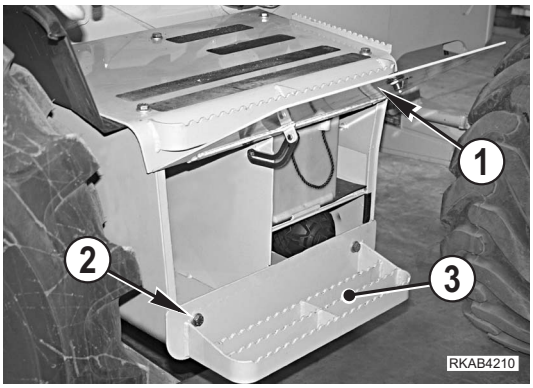

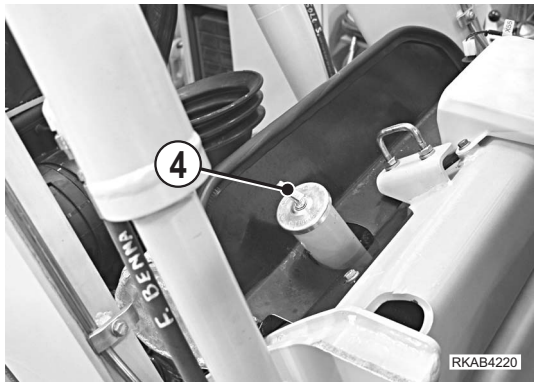

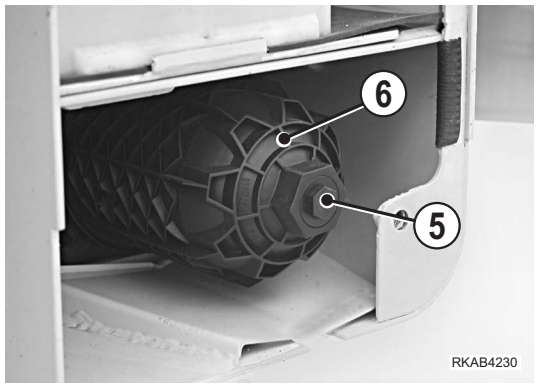

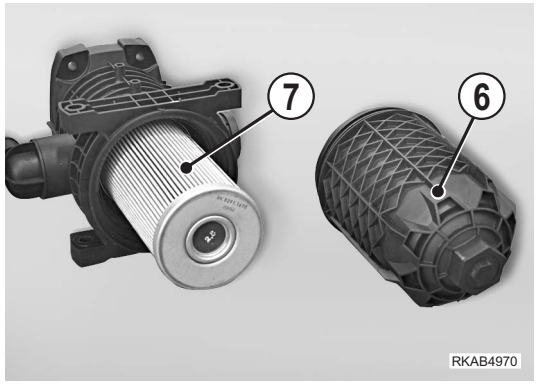

IMPORTANT

- **In machines equipped with demolition hammer hydraulic oil deteriorates more rapidly than in machines used for simple digging operations.**
  On new machines, change the filter after the first 100-150 hours of operation and for the successive changes keep to the indications given in the table on the right.

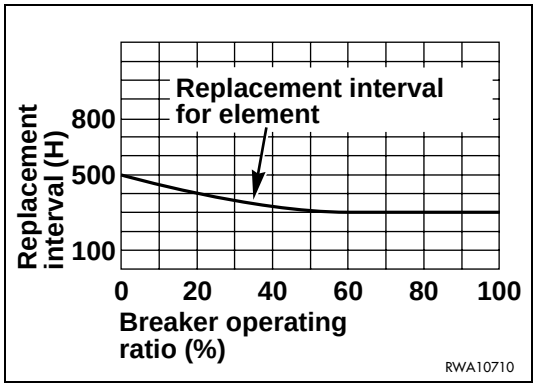

4.8.10.d CHANGING THE FUEL FILTER

WARNING

- **Change the filtering element after work, when the engine has cooled down to 40÷45°C.**
- **During these operations some fuel may be spilled; clean the dirty areas immediately, in order to prevent any risk of slipping or fire.**
- **Oils, filters, the coolant and the battery are considered special waste and must be collected and disposed of according to the regulations in force.**

The fuel filter and the fuel pump can be reached after opening the engine hood (see "3.5.1 ENGINE HOOD").

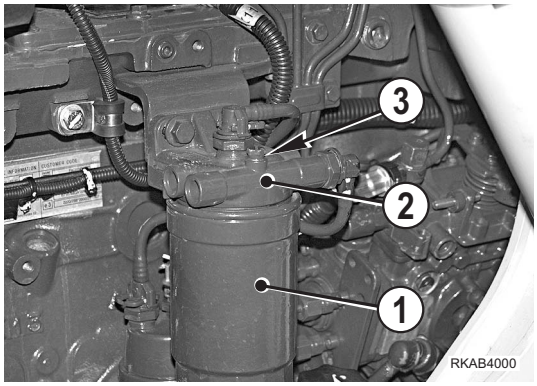

FUEL FILTER

1 - Clean the external surfaces of the unit and then unscrew the old filter (1) using the special wrench provided, then discard the filter.

2 - Clean the inside of the filter housing head (2).

3 - Fill the new filter with clean diesel oil, lubricate the seal and screw thoroughly until the filter rests against the seal.

4 - Give another half turn by hand.

5 - Bleed the fuel circuit.

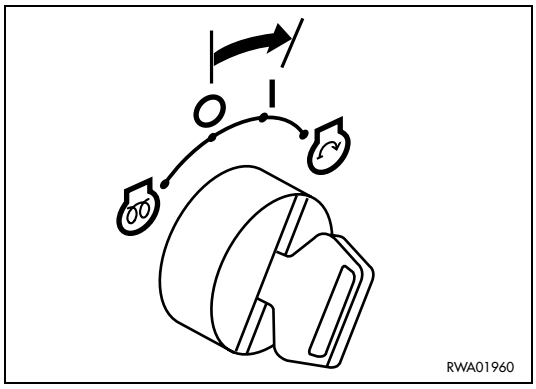

BLEEDING THE CIRCUIT

After refuelling, proceed as follows:

1 - Turn the ignition key to position «**I**».

2 - Loosen the bleeder screw (3) on the filter housing head (2).

3 - Operate the fuel pump (4) and keep it running until no more air can be observed in the fuel that flows out of the filter head (2).
Tighten the bleeder valve (3).

4 - Start the engine.

IMPORTANT

- **If no fuel flows when the fuel pump lever is operated, give the crankshaft 1 turn.**
- **Do not let the starter run for more than 15 seconds. Wait at least 15 seconds before starting the engine again.**
- **If the engine starts regularly and then stops or functions irregularly, check if there is air in the circuit; in this case, check the tightness of the fuel filter, the water separator and the fuel pump.**
- **When all the fuel in the tank has run out, bleed the circuit by proceeding as described above.**

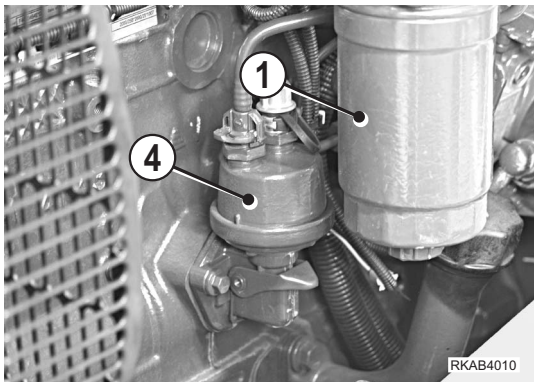

4.8.10.e DRAINING THE FUEL TANK

WARNING

- **When draining the fuel tank, avoid spilling fuel, since this may cause fires.**
- **If some fuel is accidentally spilled, clean the dirty area immediately, in order to prevent it from getting slippery and to avoid fires.**
- **Do not smoke and do not use naked flames when carrying out this operation.**
- **Wear waterproof gloves and safety goggles, as fuel may be sprayed out.**
- **Oils, filters, the coolant and the battery are considered special waste and must be collected and disposed of according to the regulations in force.**

CAUTION

- **This operation must be carried out when the fuel level on the indicator is above the reserve mark. Its purpose is to let out any impurity and condensate that may have accumulated in the fuel tank, without letting air into the engine fuel supply lines.**

1 - To let the condensate flow out, loosen the drain plug (1) and wait until no more water is present in the fuel that flows out.

IMPORTANT

- **The tank must be drained before starting the engine, at temperatures over 0°C; when the temperature is below 0°C, the tank must be drained at the end of work or in any case with the machine at a temperature of 40–45°C, in order to prevent the condensate from freezing when the temperature drops, thereby making the draining operation impossible.**
- **The condensate and the impurities that may have accumulated inside the tank must be eliminated before refuelling.**

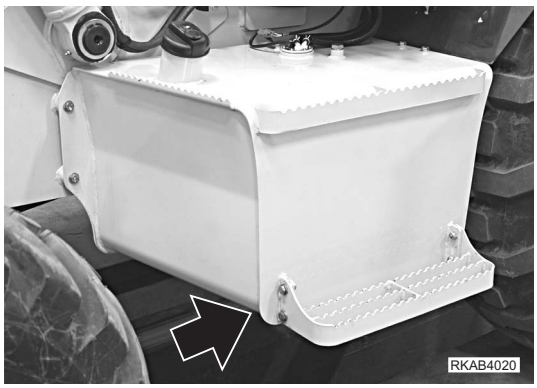

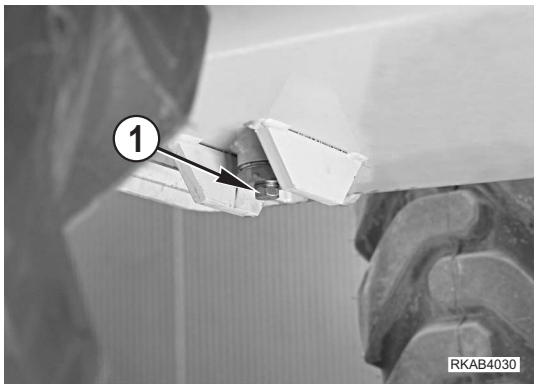

4.8.10.f DRAINING THE HYDRAULIC OIL TANK (only for machines in which synthetic biodegradable oil type HEES is used)

WARNING

- **After stopping the engine, with the machine in the correct position for the performance of maintenance operations, eliminate the residual pressure from the equipment (by moving the controls more than once) and from the tank (by slowly loosening the filler cap).**
- **Let the oil cool down until it reaches 40÷45°C before carrying out this maintenance operation.**
- **If any oil has been spilled, wipe it up immediately, in order to prevent the surface from getting slippery.**
- **Oils, filters, the coolant and the battery are considered special waste and must be collected and disposed of according to the regulations in force.**

This operation serves to let the condensate accumulated on the tank bottom flow out of the tank itself; for this purpose, carry out the following operations in the given sequence:

1 - Open the engine hood (see "3.5.1 ENGINE HOOD") and loosen the filler cap (1) to release any residual pressure from the tank.

2 - Remove the drain plug (2) until all the condensate has flown out of the tank. Use a 27 mm wrench.

3 - Put back the filler cap (1) and close the engine hood.

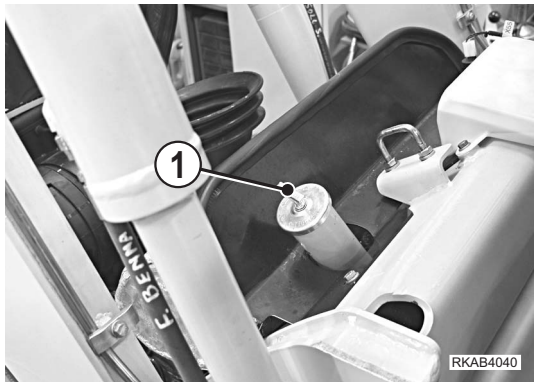

IMPORTANT

- **Condensate should be drained before starting the engine, at temperatures above 0°C. When the temperature is below 0°C, the draining procedure should be carried out at the end of work or in any case with the machine at operating temperature (40-45°C), to prevent the condensate from freezing, thereby making the draining operation impossible.**

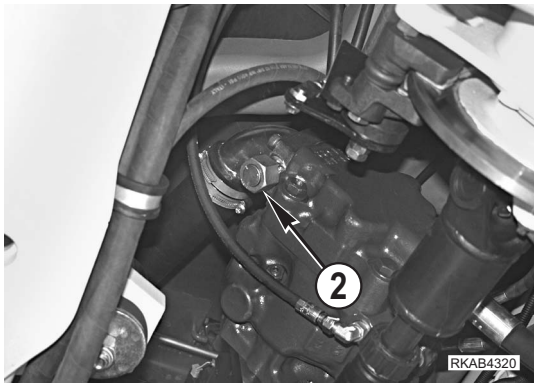

4.8.10.g CLEANING THE OUTSIDE OF THE RADIATOR

WARNING

- **If compressed air, steam or water are directed against a person, they may cause injuries. Always wear an eye shield and safety shoes.**

To clean the outside of the radiator it is first necessary to loosen the screws (2) and remove the guard (1) positioned on the front of the engine hood. Use a 17 mm hex wrench.
The cleaning must be carried out using a compressed air jet and, if necessary, with a low pressure water or steam washing cycle; the specific detergents available on the market can certainly be used, provided that the instructions given on the package are followed and that the washed parts are carefully dried.
After washing, put back the front guard (1).

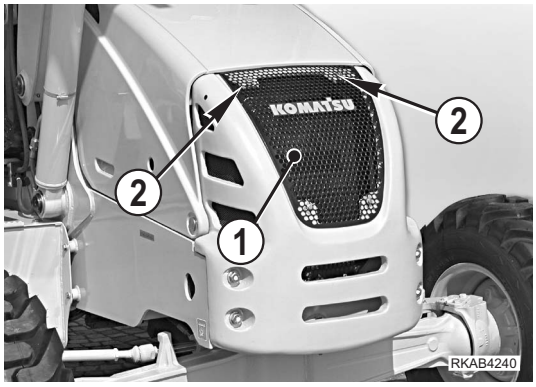

IMPORTANT

- **Do not use products containing even a slight quantity of oily substances, since these facilitate the adhesion of dust, which affects the heat exchange adversely.**
- **Clean the outside of the radiator whenever the radiator is dirtied, even if accidentally, with oil, diesel oil, greasy or oily substances.**
- **If the machine is used in dusty places, clean the radiator and the heat exchanger more frequently, in order to prevent the fins from clogging.**

4.8.10.h CLEANING THE OUTSIDE OF THE A/C CONDENSER (only for machines with air conditioner)

WARNING

- **If compressed air, steam or water are directed against a person, they may cause injuries. Always wear an eye shield and safety shoes.**

The condenser (1) must be cleaned at the same at as the radiator (see "4.8.10.g CLEANING THE OUTSIDE OF THE RADIATOR"). The condenser (1) must be cleaned with a jet of compressed air and, if necessary, with a low-pressure water or steam washing cycle; the specific products available on the market can certainly be used, provided that the instructions given on the package are followed and that the washed parts are carefully dried.

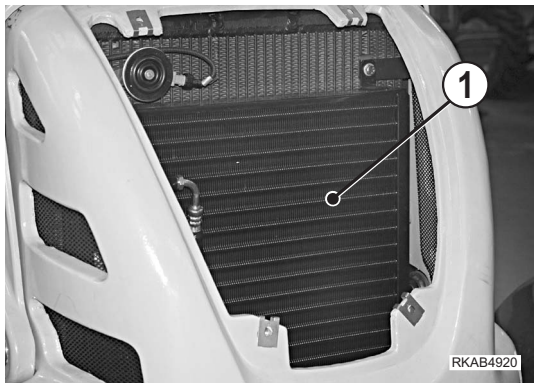

IMPORTANT

- **Do not use products containing even a slight quantity of oily substances, since these facilitate the adhesion of dust, which affects the heat exchange adversely.**
- **Carry out this operation whenever the condenser is dirtied, even if accidentally, with oil, diesel oil, greasy or oily substances.**
  To clean the radiator, rotate the condenser (1) on the lower pins.
- **If the machine is used in dusty places, clean the condenser more frequently, in order to prevent the fins from clogging.**

4.8.11 MAINTENANCE EVERY 1000 HOURS OF OPERATION

Carry out these operations together with those to be performed every 50, 250, 500 HOURS.

4.8.11.a CHANGING THE FRONT AXLE OIL

WARNING

- **Change the oil with the machine parked on a level surface and the work equipment resting on the ground.**
- **Oils, filters, the coolant and the battery are considered special waste and must be collected and disposed of according to the regulations in force.**

CAUTION

- **On new machines change the front axle oil after the first 250 hours of operation and successively every 1000 hours.**

This operation must be carried out with the machine positioned on level ground and at operating temperature, so that the oil becomes fluid and can easily be drained, which facilitates the elimination of any suspended solid particles.

DIFFERENTIAL

1 - Remove the drain plug (2) and let the used oil flow out completely, gathering it into a container with suitable capacity. While the oil flows out, remove the plug (1).
Use a 17 mm wrench.

2 - Once the oil has been drained, put back the drain plug (2) and add oil of the prescribed type through the hole (1), until reaching the level corresponding to the lower edge of the hole itself.

3 - Put back the plug (1).

FINAL REDUCTION GEARS

1 - Move the machine until the plug (3) is in low position on the vertical axis.

2 - Remove the plug (3) and let the used oil flow out, gathering it into a container with suitable capacity.
Use a 17 mm wrench.

3 - Once the oil has been drained, move the machine until the plug (3), which serves also as level indicator, is positioned on the horizontal axis.

4 - Add oil of the prescribed type until reaching the lower edge of the hole itself.

5 - Put back the plug (3).

Carry out some forward and backward movements, stop the machine and check the levels again. Always use oil of the prescribed type. (See "4.3 FUEL, COOLANT AND LUBRICANTS").

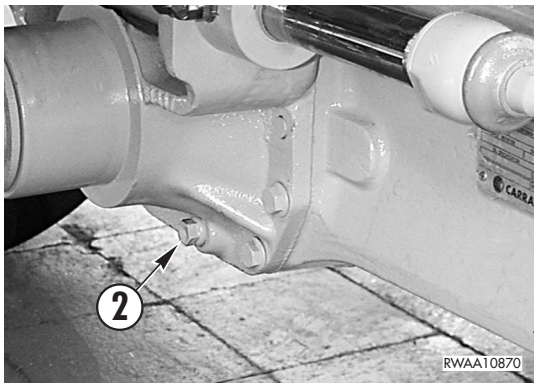

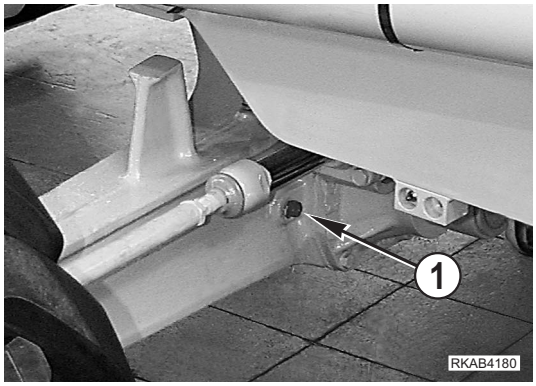

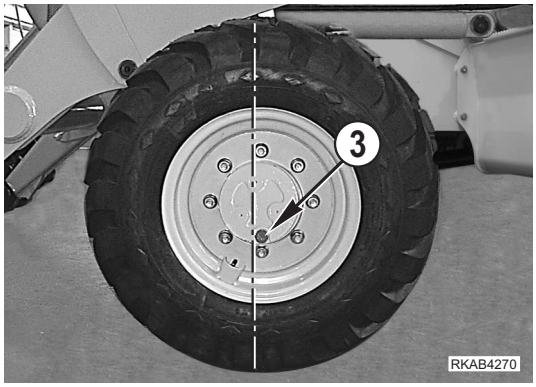

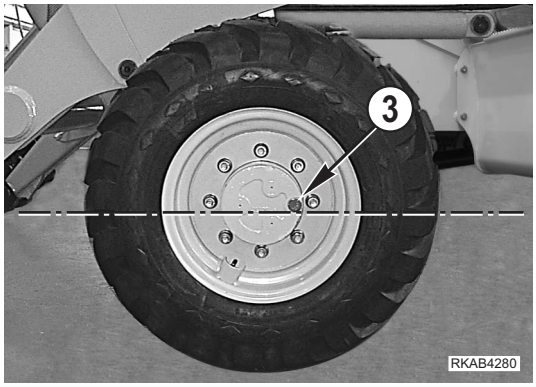

4.8.11.b CHANGING THE REAR AXLE OIL

WARNING

- **Change the oil with the machine parked on a level surface and the work equipment resting on the ground.**
- **Oils, filters, the coolant and the battery are considered special waste and must be collected and disposed of according to the regulations in force.**

CAUTION

- **On new machines change the rear axle oil after the first 250 hours of operation and successively every 1000 hours.**

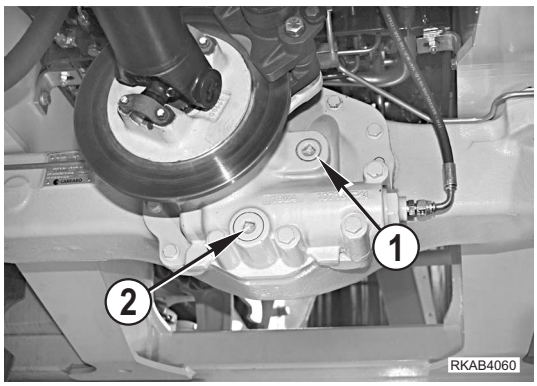

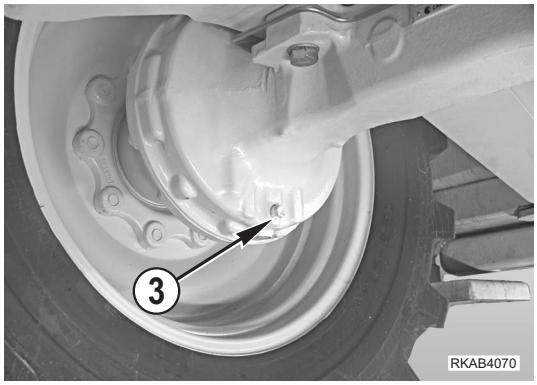

This operation must be carried out with the machine positioned on level ground and at operating temperature, so that the oil becomes fluid and can easily be drained, which facilitates the elimination of any suspended solid particles. Carry out the following operations in the given order:

1 - Remove the drain plug (2) of the central body and let the used oil flow out completely, gathering it into a container with suitable capacity. While the oil flows out, remove the level plug (1). Use a 1/2” square wrench.

2 - Remove the plug (3) of each reduction gear and gather the used oil into a container with suitable capacity.
Use a 17 mm wrench.

3 - Once the oil has been drained, put back the drain plug (2), the plug (3) and add oil of the prescribed type through the hole (1), until reaching the level corresponding to the lower edge of the hole itself.

IMPORTANT

- **This operation serves to fill both axle shafts, since the oil contained in the rear axle lubricates both the differential unit and the final reduction gears.**
  Before checking the level for the last time and putting back the plug, wait a few minutes in order to allow the oil to be evenly distributed.

4 - Put back the plug (1).

Carry out some forward and backward movements, stop the machine and check the levels again.
Always use oil of the prescribed type (see "4.3 FUEL, COOLANT AND LUBRICANTS").

4.8.11.c CHANGING THE HYDRAULIC TRANSMISSION OIL

WARNING

- **Change the oil with the machine parked on level ground and lifted loader arm with engaged safety lock.**
- **The hydraulic transmission oil must be drained at operating temperature, which is very high, and may cause severe burns; wear insulating gloves, goggles and safety shoes.**
- **Immediately clean any area dirty with oil.**
- **Oils, filters, the coolant and the battery are considered special waste and must be collected and disposed of according to the regulations in force.**

CAUTION

- **On new machines change the hydraulic transmission oil after the first 250 hours of operation and successively every 1000 hours.**

When changing the transmission oil, change also the filter (see "4.8.11.d CHANGING THE HYDRAULIC TRANSMISSION OIL FILTER").
Proceed as follows:

1 - With the machine at operating temperature, stop the engine, open the engine hood (see "3.5.1 ENGINE HOOD" and extract the dipstick (2).

2 - Remove the drain plug (1) and let the oil flow into a container with suitable capacity.
Use a 1/2” square wrench.

3 - Remove the filter (3) and change it (see "4.8.11.d CHANGING THE HYDRAULIC TRANSMISSION OIL FILTER"), paying the utmost attention.

4 - Put back the plug (1) and add oil until reaching the MIN. level on the dipstick (2).

5 - Start the engine and let it idle to fill the converter and the internal circuits.

6 - While the engine is idling, add oil until reaching the MIN. level again.

7 - When the oil reaches a temperature of approximately 50°C, add oil until reaching the MAX. mark.
See "4.3 FUEL, COOLANT AND LUBRICANTS".

8 - Close the engine hood.

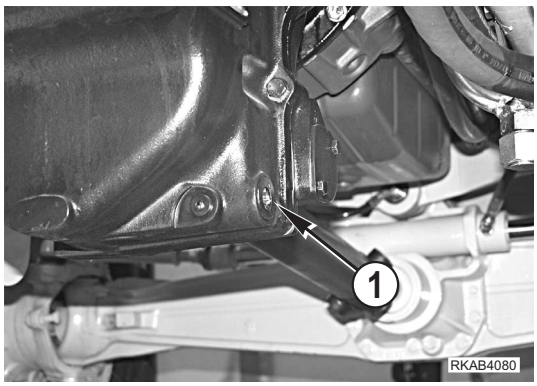

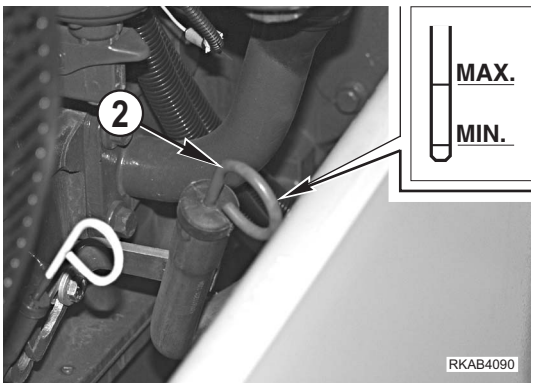

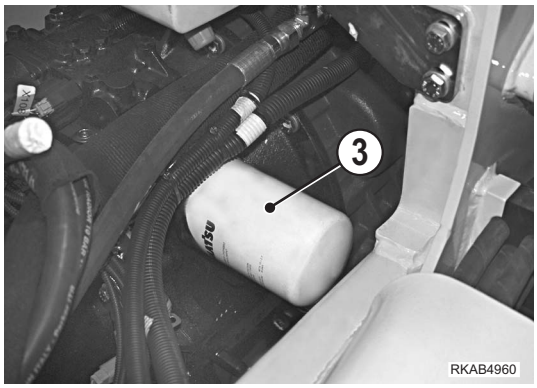

4.8.11.d CHANGING THE HYDRAULIC TRANSMISSION OIL FILTER

WARNING

- **Soon after the machine has been stopped the transmission unit is very hot and may cause burns; let the machine cool down before changing the filter.**
- **The oil that may be spilled during the filter change will cause the floor to become slippery; use anti-slip shoes and immediately remove any trace of oil from the floor and the transmission unit.**
- **Oils, filters, the coolant and the battery are considered special waste and must be collected and disposed of according to the regulations in force.**

CAUTION

- **On new machines change the hydraulic transmission filter after the first 250 hours of operation and successively every 1000 hours.**

Carry out this operation whenever the transmission oil is changed.
Proceed as follows:

1 - Raise the front mat and remove the cover (1).
Use a 13 mm wrench.

2 - Unscrew and remove the old filter (2) by means of the special wrench provided.

3 - Clean the contact surface between the seal and the filter support (3).

4 - Lubricate the seal, fit it in its seat and screw the new filter thoroughly until it touches the seal.

5 - Give another half turn by hand.

6 - Start the engine and let it idle until the oil warms up and reaches the operating temperature.

7 - Top up until reaching the MAX. mark on the dipstick (4) (see "4.8.8.f CHECKING THE HYDRAULIC TRANSMISSION OIL LEVEL").
Always use oil of the prescribed type (see "4.3 FUEL, COOLANT AND LUBRICANTS").

8 - Put back the cover (1).

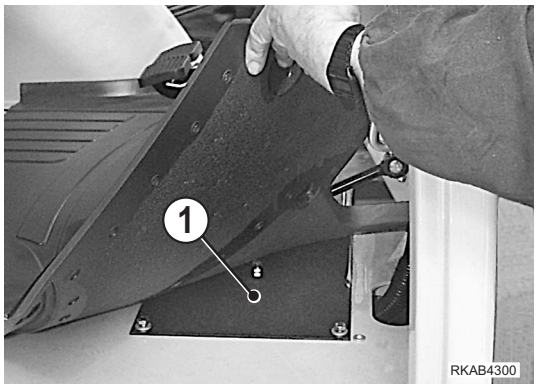

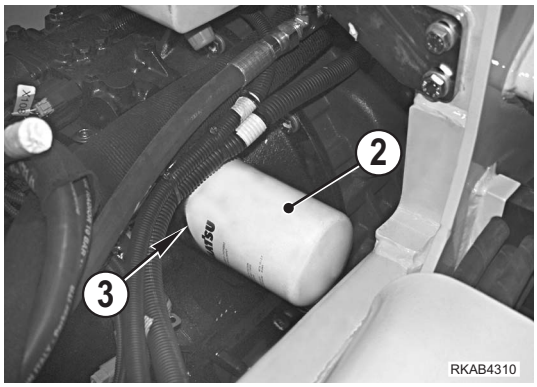

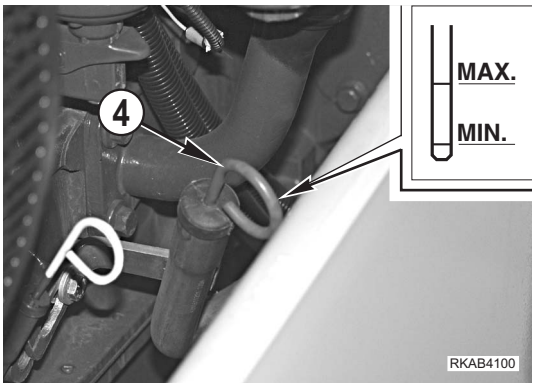

4.8.12 MAINTENANCE EVERY 2000 HOURS OF OPERATION

Carry out these operations together with those to be performed every 50, 250, 500 and 1000 HOURS.

4.8.12.a CHANGING THE HYDRAULIC OIL AND CLEANING THE INTAKE FILTER

CAUTION

- **On machines containing synthetic biodegradable hydraulic oil type HEES, this must be changed after the first 500 hours of operation and successively every 2000 hours, and in any case at least once a year.**

WARNING

- **After stopping the engine, with the machine in the correct position for the performance of maintenance operations, eliminate the residual pressure from the equipment (by moving the controls more than once) and from the tank (by slowly loosening the filler cap).**
- **Let the oil cool down until it reaches 40÷45°C before carrying out this maintenance operation.**
- **If any oil has been spilled, wipe it up immediately, in order to prevent the surface from getting slippery.**
- **Oils, filters, the coolant and the battery are considered special waste and must be collected and disposed of according to the regulations in force.**

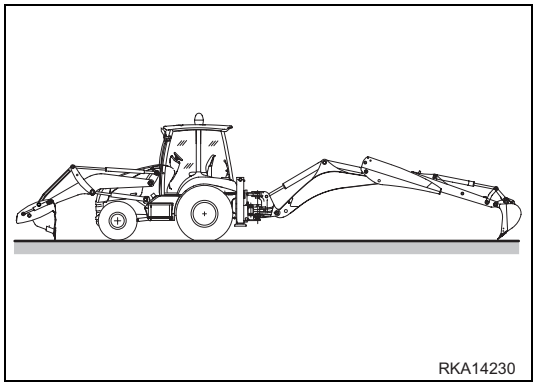

1 - Open the engine hood (see "3.5.1 ENGINE HOOD") and slowly loosen the filler cap (1) to release any residual pressure from the tank, then remove it.

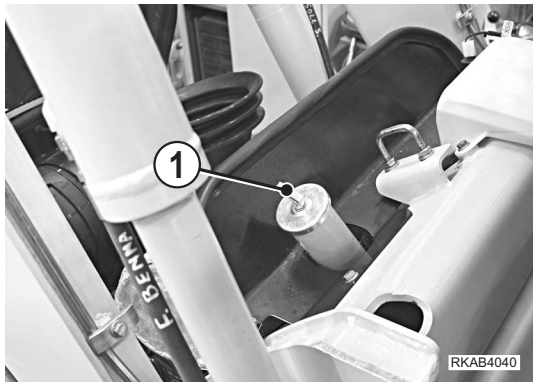

2 - Remove the drain plug (2) and let the oil flow out, gathering it into a container with suitable capacity.
Use a 41 mm wrench.

3 - Remove the plug (3) positioned on the hydraulic pump intake flange and let the oil flow out, gathering it into a container with suitable capacity.
Use a 27 mm wrench.

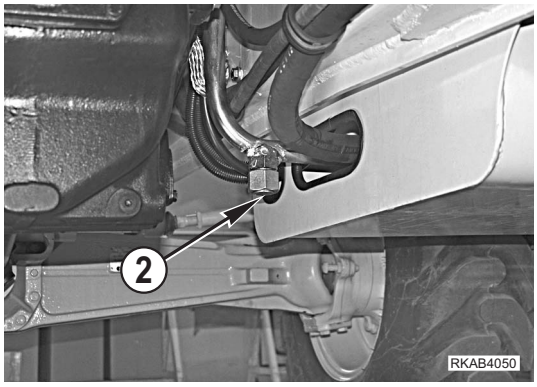

4 - Loosen the clamps and disconnect the intake coupling (4).

5 - Loosen and remove the screws (5) and remove the flange (6) complete with gasket (7) and filter (8).

6 - Clean the filter (8) using light solvents (kerosene, diesel oil, etc.); dry the filter with low-pressure compressed air (max. 3 bars).

IMPORTANT

- **Carefully check the filtering element grid and if it is not in perfect conditions, change it.**

7 - Position the gasket (7) and put back the flange (6) complete with filter (8).

8 - Connect the intake coupling (4) and secure it with the clamps.

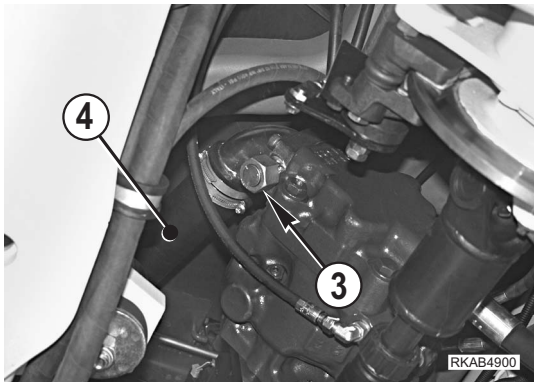

9 - Change the drain filter (see "4.8.10.c CHANGING THE HYDRAULIC SYSTEM OIL FILTER").

10 - Put back the drain plugs (2) and (3) and fill the oil tank with the prescribed oil until reaching the correct level.

11 - Raise the front mat and remove the cover (9).
Use a 13 mm wrench.

12 - Loosen the bleeder plug (10) positioned on the hydraulic pump, until no air bubbles can be observed in the oil that flows out (use a 19 mm hex wrench). Tighten the bleeder plug (10) and put back the cover (9).

13 - Put back the filler cap (1), start the engine and operate the machine making each piston move several times in order to bleed the system.
Stop the machine in maintenance position, check the oil level again and top up if necessary.
Always use oil of the prescribed type (see "4.3 FUEL, COOLANT AND LUBRICANTS").

14 - Close the engine hood.

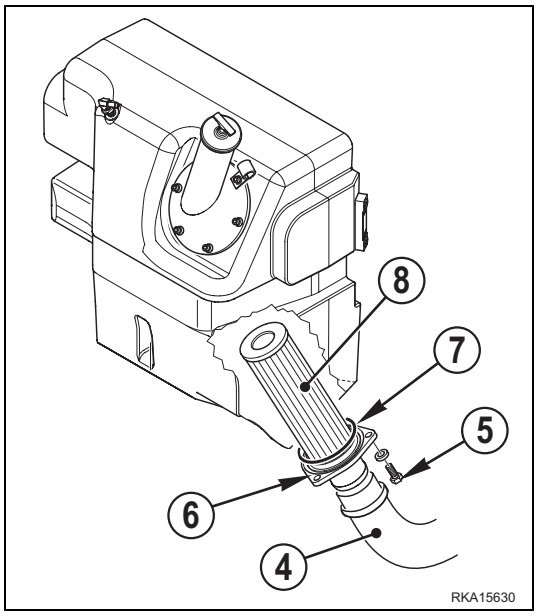

IMPORTANT

- **Do not start the engine with empty tank, since this would certainly damage the pump.**
- **In machines equipped with demolition hammer hydraulic oil deteriorates more rapidly than in machines used for simple digging operations.**
  Perform the oil change according to the indications given in the table below.

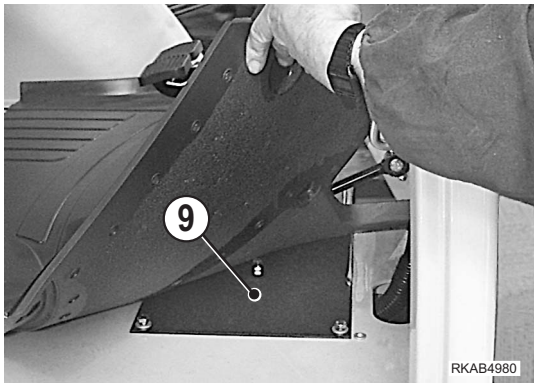

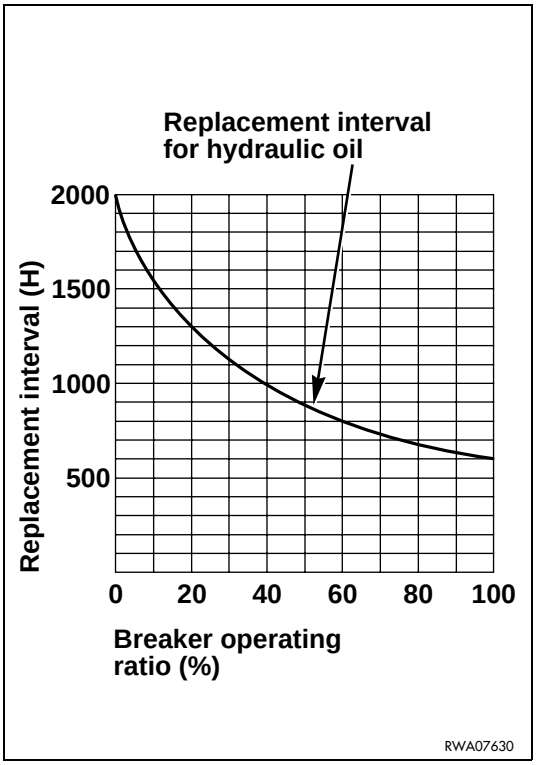

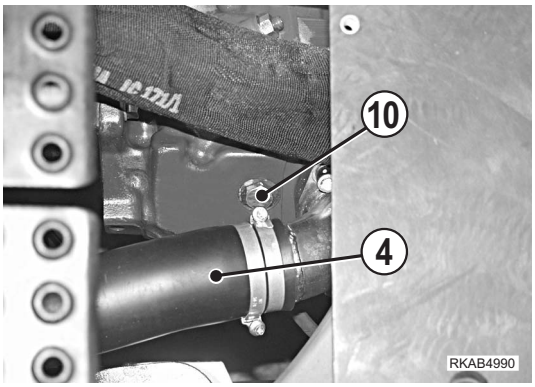

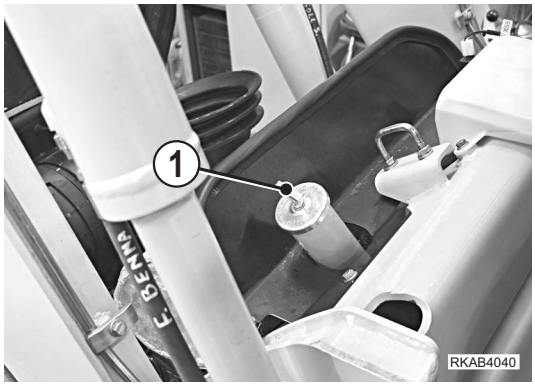

4.8.12.b CHANGING THE COOLANT

CAUTION

- **Change the coolant every 2000 hours of operation or every 2 years, whichever occurs first.**

WARNING

- **Soon after the machine has been stopped the coolant is very hot and under pressure and it may cause serious burns; let the engine cool down until it reaches approximately 40÷45°C before changing the coolant.**
- **Slowly loosen the radiator cap, in order to release any residual pressure.**
- **Oils, filters, the coolant and the battery are considered special waste and must be collected and disposed of according to the regulations in force.**

IMPORTANT

- **The change of the permanent coolant does not require any washing cycle to descale the circuit.**

1 - Open the engine hood (see "3.5.1 ENGINE HOOD").

2 - Loosen and remove the upper cap (1) of the radiator.

3 - Open the drain cock (2) of the radiator and let the fluid flow out, gathering it into a container with suitable capacity.
Drain the expansion tank (3) while the fluid flows out.

4 - Close the drain cock (2) and fill the radiator with new fluid (see "4.3 FUEL, COOLANT AND LUBRICANTS").

5 - Start the engine and let it run at accelerated idle speed for a few minutes; check the level again and top up before putting back the upper cap (1).

6 - Fill the expansion tank (3) until reaching the maximum level.

7 - Close the engine hood.

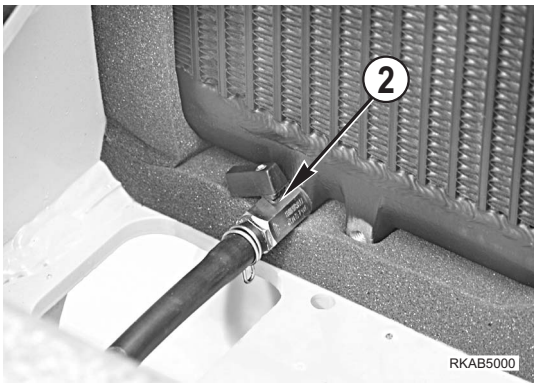

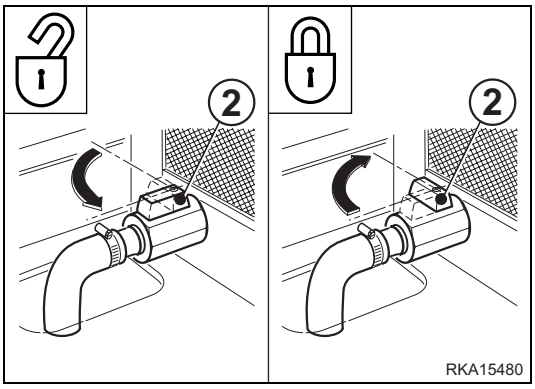

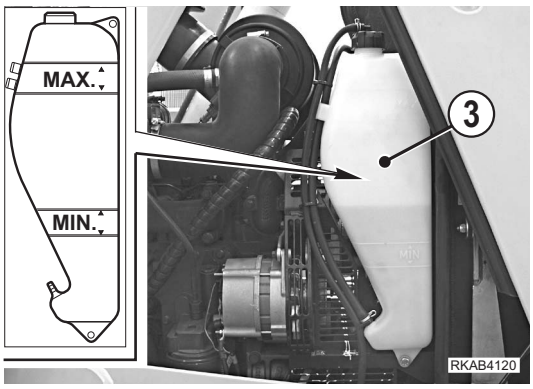

4.8.12.c CHANGING THE BRAKING SYSTEM OIL

WARNING

- **Oil spilled on the floor may cause the floor to become slippery; immediately clean any dirty area.**
- **Oils, filters, the coolant and the battery are considered special waste and must be collected and disposed of according to the regulations in force.**

Before changing the braking system oil, it is advisable to brake a few times in order to warm up and fluidize the oil and therefore facilitate draining. The oil change and the bleeding of the braking system must be carried out with the machine positioned on level ground and parking brake applied.
Drain the oil and wash the system, proceeding as follows:

1 - Apply a small pipe for the collection of the oil to the drain screws (1) and loosen them. Use a 13 mm wrench.

2 - Remove the front guard (2) and the cap (3).

3 - Operate the brake pedals (connected with each other) until the oil contained in the reservoir (3) runs out.

4 - Fill the reservoir (3) with new oil and keep pressing the pedal; repeat this operation more than once until the used oil (about 0.8 l) has been changed completely; bleed to release the residual air (see "4.8.1.h BLEEDING THE BRAKING CIRCUIT").
For details on the oil to be used, see "4.3 FUEL, COOLANT AND LUBRICANTS".

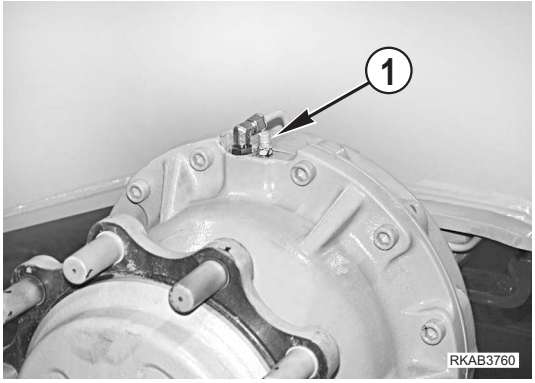

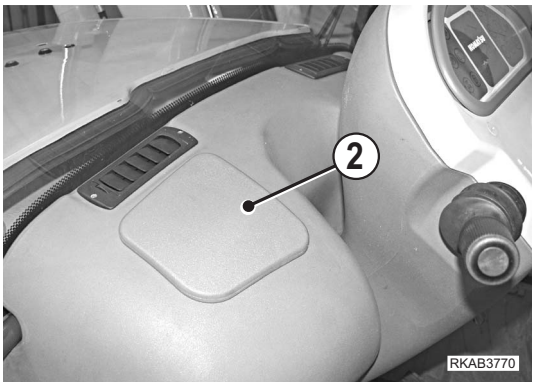

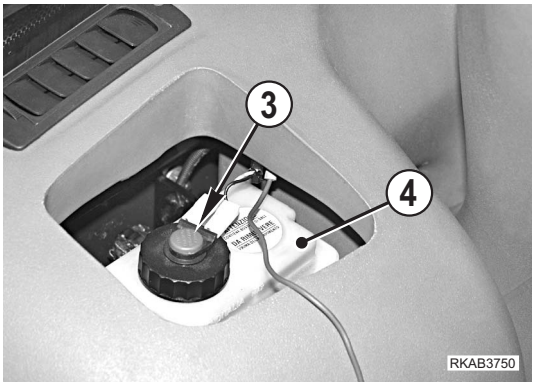

4.8.12.d CHECKING THE ALTERNATOR AND THE STARTER

This procedure must be carried out by qualified personnel. Have this operation performed by your Komatsu Dealer.

4.8.12.e CHANGING THE ALTERNATOR BELT

This procedure must be carried out by qualified personnel. Have this operation performed by your Komatsu Dealer.

4.8.12.f CHECKING THE A/C COOLING GAS QUANTITY (only for machines with air conditioner)

⚠ WARNING

- **The coolant used in the air conditioning system is very dangerous. If it is sprayed into the eyes or in case of contact with the skin, it may cause blindness or frostbite. To avoid any explosion, do not generate sparks and do not use naked flames near the air conditioner.**
- **Oils, filters, the coolant and the battery are considered special waste and must be collected and disposed of according to the regulations in force.**
- **Maintenance on the air conditioning system must be carried out exclusively by specialized personnel.**

Specific equipment is required to check the coolant; have this maintenance operation carried out only by specialized personnel and for this purpose contact your Komatsu Dealer.

4.8.13 MAINTENANCE EVERY 3000 HOURS OF OPERATION

Carry out these operations together with those to be performed every 50, 250, 500 and 1000 HOURS.

4.8.13.a CHECKING THE ENGINE RETAINING SCREWS AND DAMPING ELEMENTS

This procedure must be carried out by qualified personnel. Have this operation performed by your Komatsu Dealer.

4.8.13.b CHECKING AND ADJUSTING THE ENGINE VALVE CLEARANCE AND THE INJECTION TIMING ADVANCE

Since these checks and adjustment operations require the use of special tools, have these operations carried out by qualified personnel supplied by your Komatsu Dealer.

4.8.14 MAINTENANCE EVERY 4000 HOURS OF OPERATION

Carry out these operations together with those to be performed every 50, 250, 500, 1000 and 2000 HOURS.

4.8.14.a CHANGING THE A/C DEWATERING FILTER (Only for machines with air conditioner)

⚠ WARNING

- **The coolant used in the air conditioning system is very dangerous. If it is sprayed into the eyes or in case of contact with the skin, it may cause blindness or frostbite.**
  To avoid any explosion, do not generate sparks and do not use naked flames near the air conditioner.
- **Oils, filters, the coolant and the battery are considered special waste and must be collected and disposed of according to the regulations in force.**
- **Have the dewatering filter changed only by specialized personnel and for this purpose contact your Komatsu Dealer.**

The filter (1) must be changed every 4000 hours of operation or every 2 years, whichever occurs first.
The filter must also be changed whenever operations involving the opening of the air conditioning system are performed.

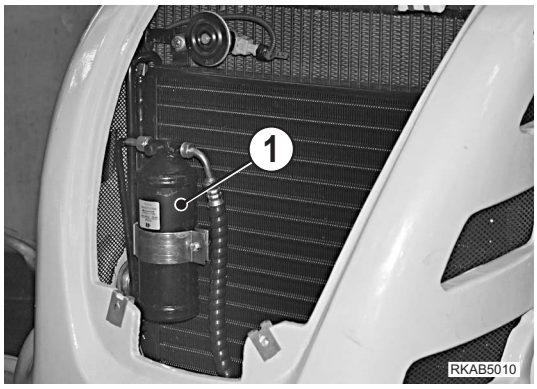

4.8.14.b CHECKING THE OPERATING CONDITIONS OF THE A/C COMPRESSOR (Only for machines with air conditioner)

Specific equipment is required to check the operating conditions of the compressor (1); have the compressor checked only by specialized personnel and for this purpose contact your Komatsu Dealer.

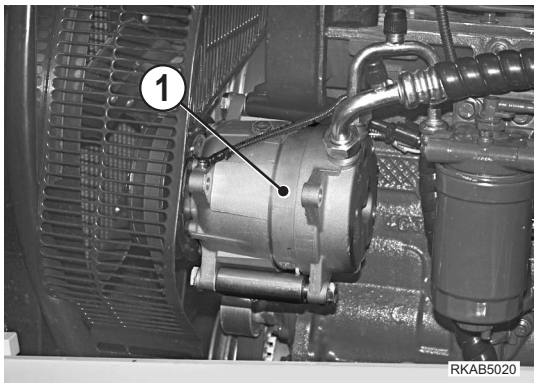

4.8.14.c CHANGING THE ENGINE THERMOSTATIC VALVE

This procedure must be carried out by qualified personnel. Have this operation performed by your Komatsu Dealer.

TECHNICAL SPECIFICATIONS

5.1 TECHNICAL DATA

5.1.1 STANDARD OVERALL DIMENSIONS

5.1.1.1 OVERALL DIMENSIONS WITH STANDARD ARM

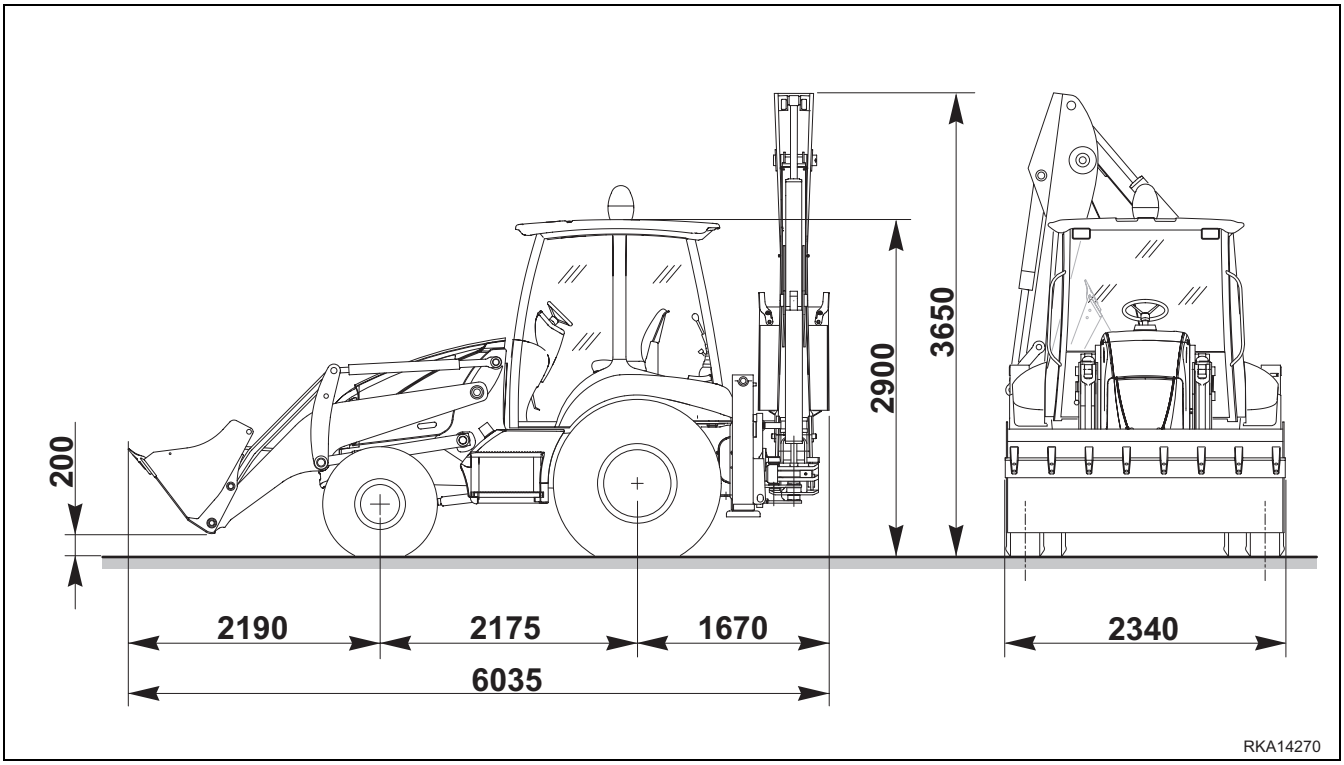

5.1.1.2 OVERALL DIMENSIONS WITH TELESCOPIC ARM

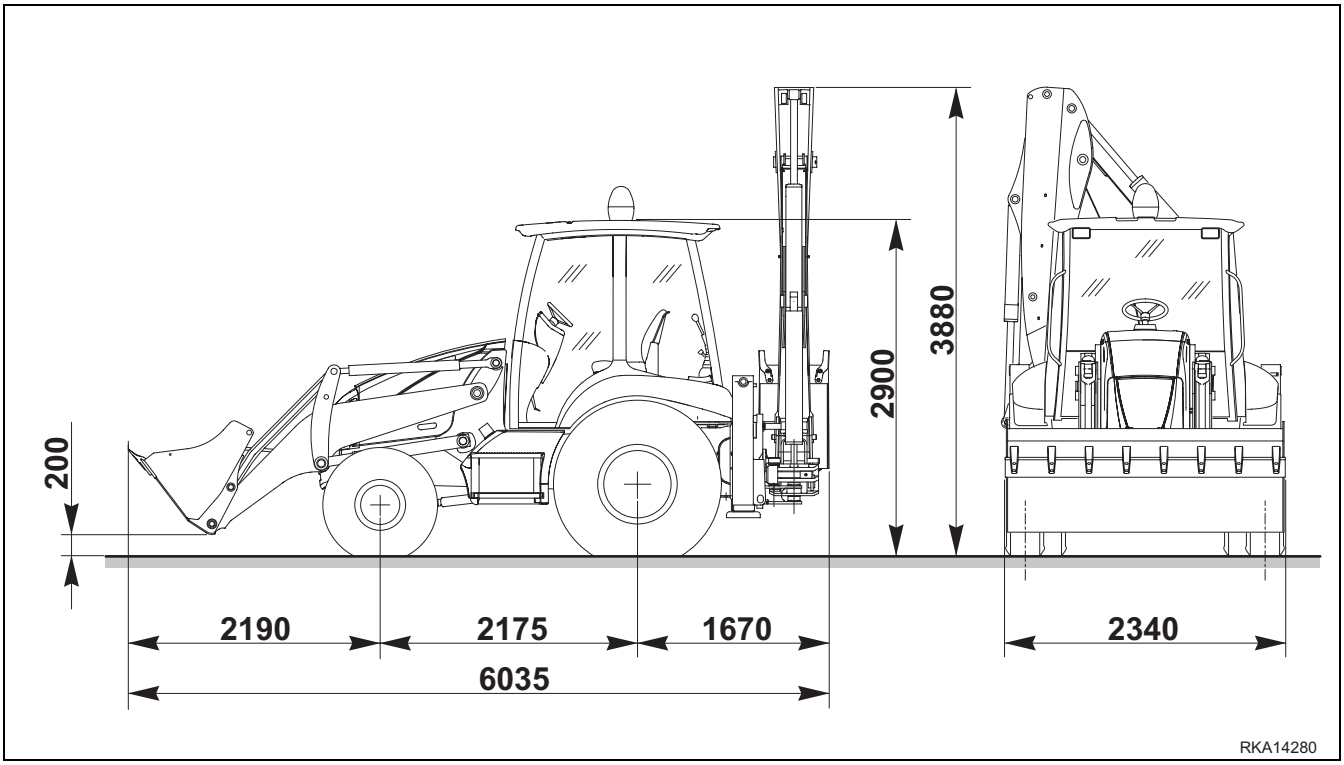

5.1.2 TECHNICAL CHARACTERISTICS

TOTAL WEIGHT

Minimum total weight	kg	7300
Maximum total weight	kg	8350

STANDARD BUCKET CAPACITY

Front bucket capacity (SAE)	m^3	1.03
Backhoe bucket capacity (SAE)	m^3	0.19

TURBOCHARGED ENGINE

Komatsu diesel engine model		S4D104E-3
Maximum power (2200 rpm EEC 80/1269)	kW	74
Maximum torque (1400±100 rpm EEC 80/1269)	Nm	398

ELECTRICAL SYSTEM

Alternator		12V
Electrical output		95 A
Grounding		negative
Battery		160 - 12V
Starter	kW	3.0

TRAVEL SPEED

(calculated with 16.9-30 tyres and engine at 2200 rpm)

	FORWARD				REVERSE			
GEARS	**1st**	**2nd**	**3rd**	**4th**	**R1**	**R2**	**R3**	**R4***
km/h	6	10	23	40	6	10	23	40

* The machines destined to the Italian and German markets are not homologated with 4th reverse gear.

FRONT TYRES

	SIZE		MAKE	INFLATION PRESSURE
Recommended	12.5/80-R18	PR10	Good Year	bar 3.10
	12.5-20 MPT	PR10	Good Year	bar 2.70
	365/70-R18	SPT9	Dunlop	bar 3.75
	320/80-R18	IT530 (134A8)	Good Year	bar 3.20

REAR TYRES

	SIZE		MAKE	INFLATION PRESSURE
Recommended	16.9-28	PR10	Good Year, Mitas, Ecomega	bar 2.20
	16.9-28	PR12	Mitas, Ecomega	bar 2.60
	16.9R28TL	(151A8)	Michelin	bar 3.10
	16.9-30	PR10	-	bar 2.20
	440/80-R28	IT530 (156A8)	Good Year	bar 3.20

5.1.3 LIFTING CAPACITIES

IMPORTANT

- **According to the harmonized standard EN474-5 (§ 4.1.7.5), the machine cannot lift weights exceeding 1000 kg, unless it is provided with appropriate equipment.**
- **Carry out lifting operations only with the machine positioned on firm and flat ground.**

5.1.3.1 SYMBOL TABLE

A - Standard arm length L= 1900 mm

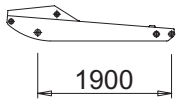

B - Telescopic arm completely retracted

C - Telescopic arm completely extended

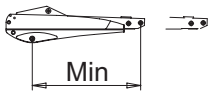

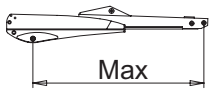

D - Standard operating weight

E - Standard backhoe bucket width and weight (W= 600 mm / 160 kg)

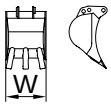

F - Operating hydraulic pressure

G - Lowered stabilizers

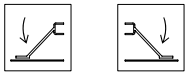

P - Lifting capacity

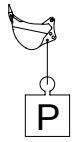

Z - Distance of the lifting point from the ground

X - Distance between the boom swing axis and the bucket lifting point

5.1.3.2 LIFTING CAPACITIES (STANDARD ARM)

RKA14290

D

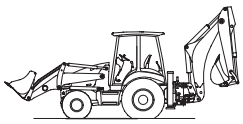

= 7460 Kg

> 1000 Kg

E

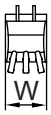

W= 600 mm

= 160 Kg

F

24.5 MPa
(245 Bar)

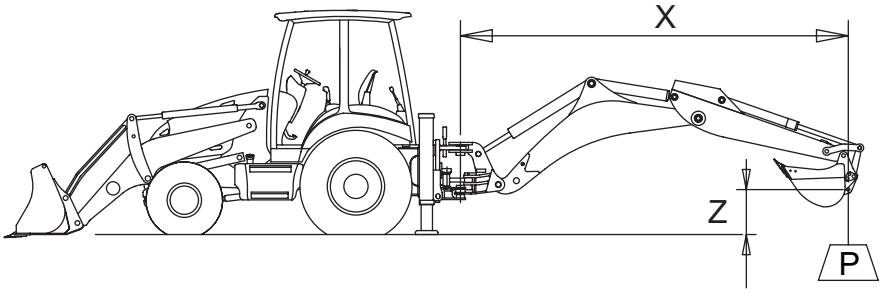

G

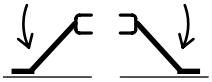

	Z \ X	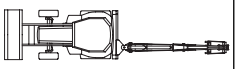 3 m	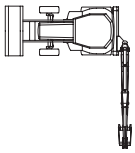 3 m	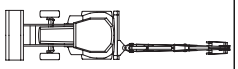 Max	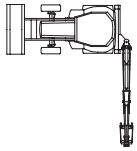 Max
A 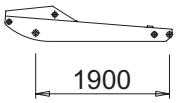 1900	2 m	990	990	990	725
	1 m	990	990	990	700
	0	990	990	990	680
	-1 m	990	990	990	650
B 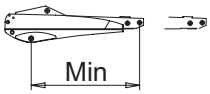 Min	2 m	990	990	990	550
	1 m	990	990	990	530
	0	990	990	990	500
	-1 m	990	990	990	475
C 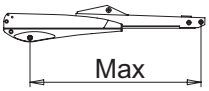 Max	2 m	990	990	875	375
	1 m	990	990	850	360
	0	990	990	825	340
	-1 m	990	990	800	320

5.1.3.3 LIFTING CAPACITIES (TELESCOPIC ARM)

THIS PAGE WAS INTENTIONALLY LEFT EMPTY

AUTHORISED OPTIONAL EQUIPMENT

6.1 AUTHORIZED OPTIONAL EQUIPMENT

⚠ CAUTION

- **Komatsu machines can be provided with optional equipment in addition to the standard equipment; if optional equipment is installed and used, carefully read the relevant operation manual and keep to the instructions given therein.**
- **Use only optional or special equipment recommended and approved by Komatsu and in compliance with the requirements indicated in the table. (See "6.1.2 PRECAUTIONS REGARDING THE INSTALLATION OF EQUIPMENT").**
- **Komatsu cannot be held liable for any injury, accident or product failure resulting from the installation and use of unauthorized equipment.**

6.1.1 PRECAUTIONS REGARDING SAFETY

The installation of optional accessories and equipment other than those authorized by Komatsu shortens the life of the machine and may also cause safety problems.
It is advisable to contact a Komatsu Dealer before installing any accessory that is not mentioned in this operation and maintenance manual.
In case of failure to comply with these instructions, Komatsu declines any responsibility for accidents or damage.

⚠ WARNING

- **When removing or installing any equipment, take the following precautions and be careful to ensure that operations are carried out in total safety.**
- **Carry out installation and removal on a firm and flat surface.**
- **When the operations are carried out by two or more operators, decide the communication signals in advance and respect them during work.**
- **Use a crane to handle objects weighing more than 25 kg.**
- **Always support any heavy part before removing it. When lifting heavy parts, be always careful to the position of the centre of gravity of the object being handled.**
- **It is dangerous to carry out any operation with suspended loads. Always position the load on a suitable support and make sure that it is stable.**
- **When installing or removing any equipment, make sure that it is stable and cannot fall down.**
- **Never stand under loads being lifted by a crane.**
  Take care to choose a safe position, where you do not run any risk in case the load should fall down.

IMPORTANT
- **Specialized personnel is required to operate cranes. Do not allow unskilled personnel to use cranes.**

For further details regarding installation and removal operations, contact your Komatsu Dealer.

6.1.2 PRECAUTIONS REGARDING THE INSTALLATION OF EQUIPMENT

⚠ WARNING

- **The installation of long work equipment reduces the stability of the machine.**
  If it is necessary to travel up or down a slope, proceed very carefully, since the machine may lose its balance and overturn.
- **When work equipment with overall dimensions exceeding those of the standard equipment is installed, be particularly careful, since more space is necessary for the movements of the equipment and of the machine.**

6.1.3 CHARACTERISTICS OF THE OPTIONAL EQUIPMENT

(Specific weight of the material handled = 1.8 tons/cu.m)

LOADER

EQUIPMENT	MAX. WEIGHT (kg)	MAX. DIMENSIONS		MAX. ISO CAPACITY (m^3)	MAX. OPERATING PRESSURE (bar)	MAX. FLOW RATE (l/min.)
		Width (mm)	Height (mm)			
Front bucket	450	2320	940	1.1	—	—
Front 4 in1 bucket	750	2340	1015	1.0	200	75
Forks on front bucket	190	●	●	□	—	—
Pallet forks	320	1800	800	■	—	—

BACKHOE

Backhoe bucket	200	930	—	0.305	—	—
Ditch-cleaning bucket	220	1600	—	0.250	—	—
Trapezoidal bucket	190	2100	900	0.300	—	—
Hydraulic hammer	400	—	—	—	160	80
Drill	360	800 ★	2000 ▲	—	200	120
Clamshell bucket	350	650	1800	0.200	200	120

● Fork length 1140 mm

□ Lifting capacity 2000 Kg.
(The loads that can be handled are also limited according to the capacity stamped on the forks, see "6.4 PALLET FORKS").

■ Lifting capacity 2500 Kg.
(The loads that can be handled are also limited according to the capacity stamped on the forks, see "6.4 PALLET FORKS").

★ Measure referred to the equipment diameter

▲ Measure referred to the equipment length

6.2 FRONT EQUIPMENT QUICK COUPLING DEVICES

WARNING

- **The coupling and uncoupling operations must be performed on a firm and level surface.**
- **The method described is valid for all the front equipment whose operation does not require the use of pressurized oil.**
- **Before starting work, make sure that the coupling pins are completely engaged in the seats provided on the equipment.**
- **Avoid using your fingers to align the holes, since they may be cut off in case of sudden or uncontrolled movements.**

6.2.1 MANUAL QUICK COUPLING

1 - Turn the lever (1) clockwise (release position) to withdraw the coupling pins completely.

2 - Start the machine and position the equipment carrier (2) perpendicular to the equipment to be installed.

3 - Using the bucket control lever (3), position the fixed rod (4) of the equipment carrier under the upper seats (5) on the bucket (6).

4 - Lift the arm (7) and engage the fixed rod (4) in the upper seats (5): lift the bucket slightly.

5 - Turn the lever (1) completely counterclockwise to engage the coupling pins, then fix the bucket (6) on the equipment carrier (2).

6 - Lock the lever (1) wit the safety hook (8).

7 - Lubricate the unit (see "4.5.3 LUBRICATION DIAGRAM (front bucket quick couplings)").

NOTE

- Before moving the machine, make sure that the coupling pins are perfectly engaged in the seats on the bucket.

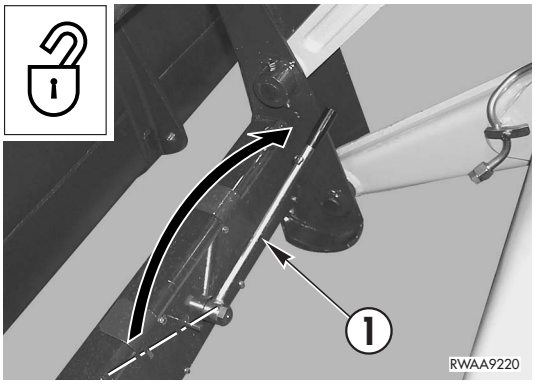

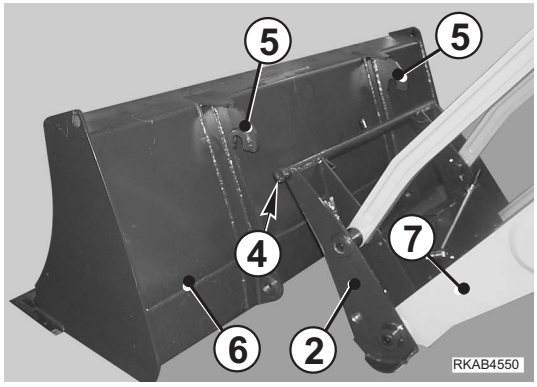

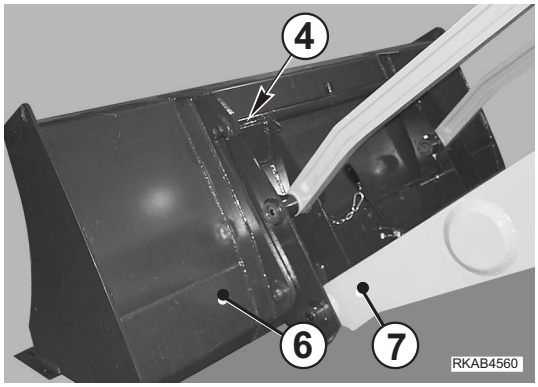

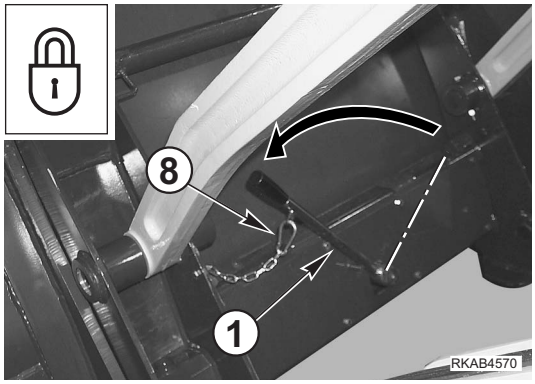

6.2.2 HYDRAULIC QUICK COUPLING FOR STANDARD BUCKET

The operations to be performed are those described in the previous paragraph (see “6.2.1 MANUAL QUICK COUPLING”), except for the backward movement and the engagement of the coupling pins, which are obtained by means of the push buttons (9) and (10) located on the lever (3).
(See "3.3.6 pos. 12 - 4 IN1 BUCKET OPENING PUSH BUTTON" and pos. 13 - 4 IN1 BUCKET FOLDING PUSH BUTTON").

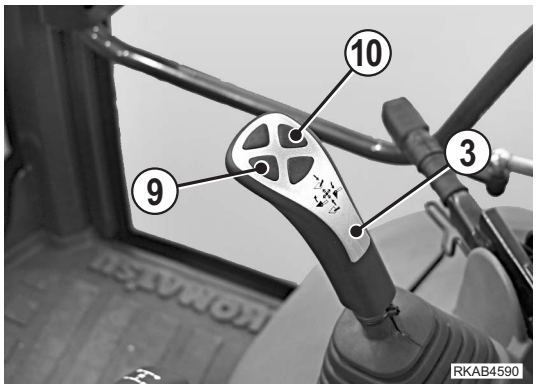

6.2.3 HYDRAULIC QUICK COUPLING FOR 4in1 BUCKET AND OPTIONAL EQUIPMENT WITH UNIDIRECTIONAL OIL FLOW

⚠ WARNING

- **Before carrying out any operation on the hydraulic circuit, stop the engine and eliminate the residual pressure by proceeding as follows:**
  1 - Turn the ignition key to position «I».
  2 - Press the servo control locking button and make sure that the LED is off (release position) (see "3.3.2 pos. 12 - SERVO CONTROL LOCKING BUTTON").
  3 - Operate the loader arm control lever and the 4in1 bucket opening and folding buttons more than once.
  4 - Turn the ignition key to position «O».
- **If any oil has been spilled, wipe it up immediately, in order to prevent the surface from getting slippery.**

The 4 in1 bucket and the hydraulic equipment that can be installed on the machine must be provided with quick coupling devices.
In this case, the backward movement and the engagement of the coupling pins are obtained by connecting the quick couplings (11-12) of the 4in1 bucket (or other equipment) delivery and drain pipes to the quick coupling unit, with the engine at rest.

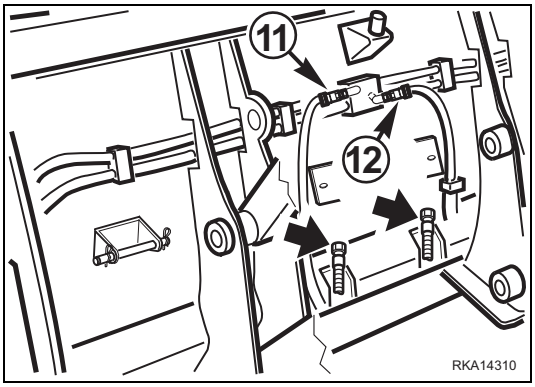

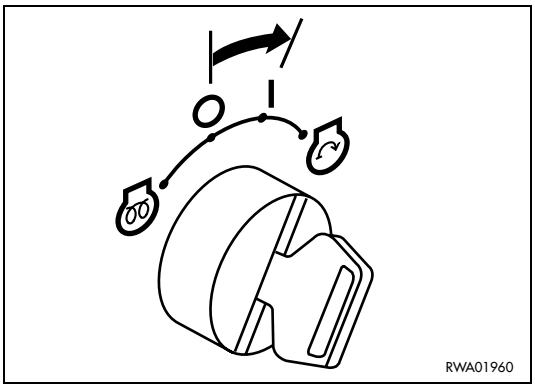

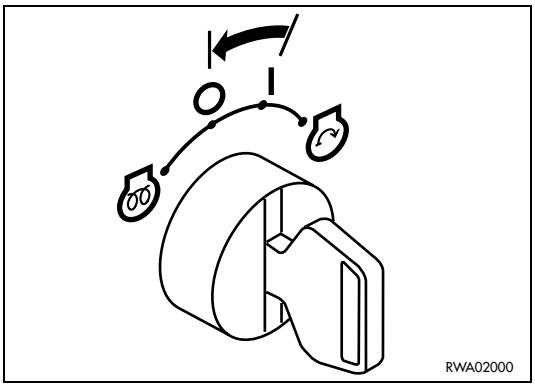

6.3 4in1 BUCKET

IMPORTANT

- **(For the characteristics, see table "6.1.3 CHARACTERISTICS OF THE OPTIONAL EQUIPMENT").**

6.3.1 DESCRIPTION AND CONTROLS

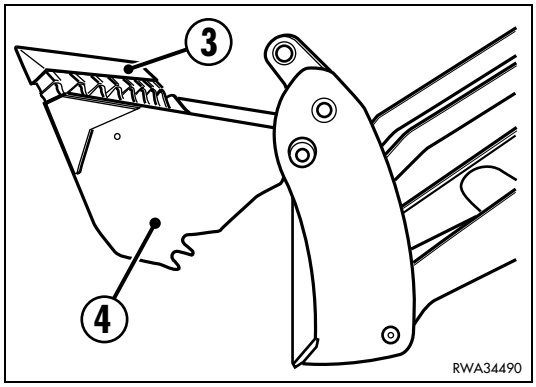

The 4in1 bucket can be used for several applications and eliminates the need to use specific equipment.
Compared to the standard bucket, it comprises a mobile jaw (4) that can be opened to unload the material with no need to swing the bucket itself. The opening is obtained by means of two hydraulic cylinders (1) controlled by an additional distributor.
The opening and folding of the bucket are controlled via two push buttons (5) and (6) positioned on the loader control lever (7), which also maintains all its normal functions (see "3.3.6 pos. 4 - FRONT LOADER CONTROL LEVER").

6.3.2 SAFETY DEVICES

The 4in1 bucket is provided with teeth guard (3).
If the bucket is equipped with pallet forks, the safety pins (2) fix the forks in overturned position in case of transfer or travel on roads (see "6.4 PALLET FORKS").
For the other safety locks, see "3.1.1 FRONT LOADER LOCKS".

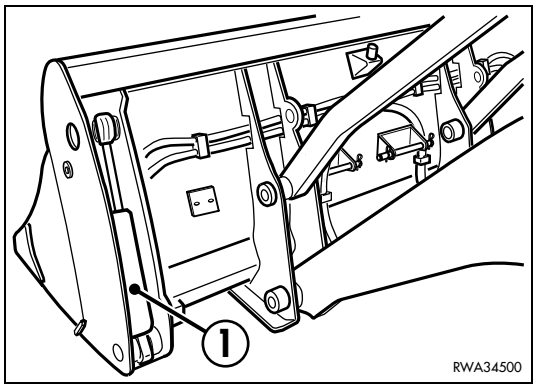

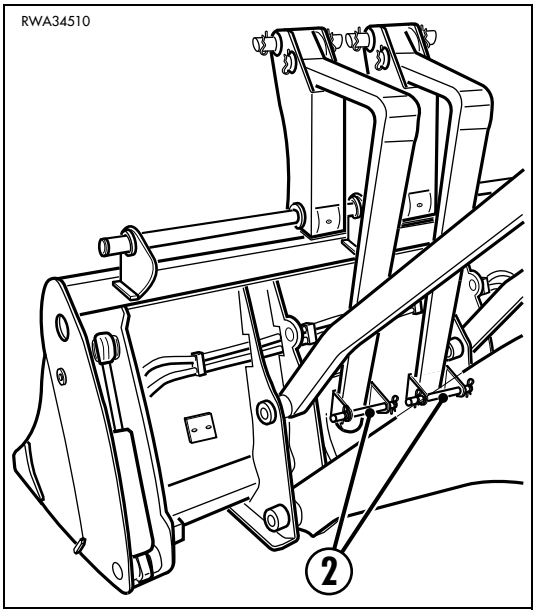

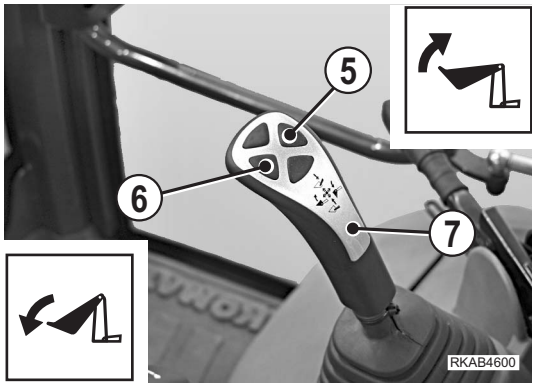

6.3.3 INSTALLING THE 4in1 BUCKET

WARNING

- **When the coupling pins are removed or installed, chips may come off; always use gloves, goggles and helmet.**
- **The change of the equipment must be carried out by two operators, who must decide together the words and signals to use during work.**
- **If any oil has been spilled, wipe it up immediately, in order to prevent the surface from getting slippery.**
- **Avoid using your fingers to align the holes, since the may be injured or even cut off.**

To install the 4in1 bucket it is necessary to engage the mechanical constraints of the loader as described in "3.12.3 CHANGING THE STANDARD FRONT BUCKET" and to carry out the hydraulic connections using the pipes provided.

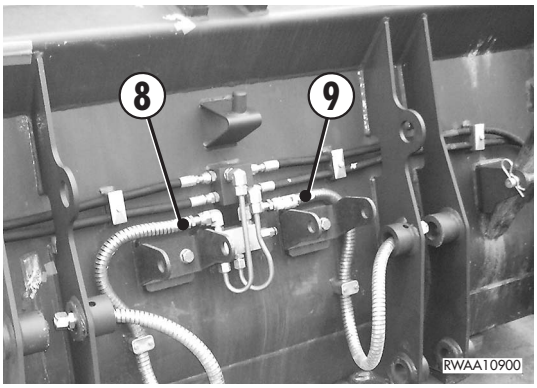

CAUTION

- **After mechanically connecting the bucket to the loader arm, stop the engine, apply the parking brake and eliminate the residual pressure from the hydraulic circuits by proceeding as follows:**
  - **1 - Turn the ignition key to position «I».**
  - **2 - Press the servo control locking button and make sure that the LED is off (release position) (see "3.3.2 pos. 12 - SERVO CONTROL LOCKING BUTTON").**
  - **3 - Operate the loader arm control lever and the 4in1 bucket opening and folding buttons more than once.**
  - **4 - Turn the ignition key to position «O»).**
- **When connecting the pipes, take care to prevent any impurities from getting into them.**

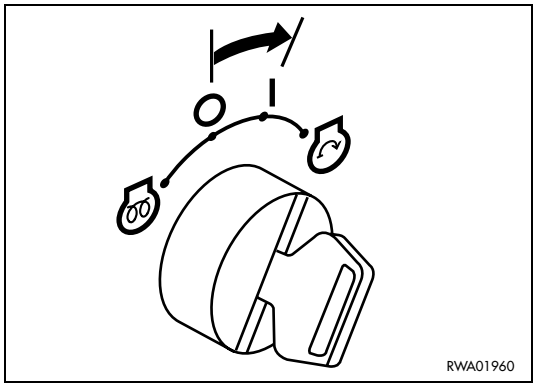

Proceed as follows:

1 - Loosen the protection plugs and remove them from the rigid pipes provided on the machine.

2 - Loosen and remove the protection plugs from the flexible pipes (8) and (9) of the bucket.

3 - Carry out the connections as indicated in the figure.

4 - Start the machine, lift the bucket a few centimeters from the ground and open and fold it completely more than once using the buttons positioned on the control lever, in order to check the efficiency and tightness of the system.

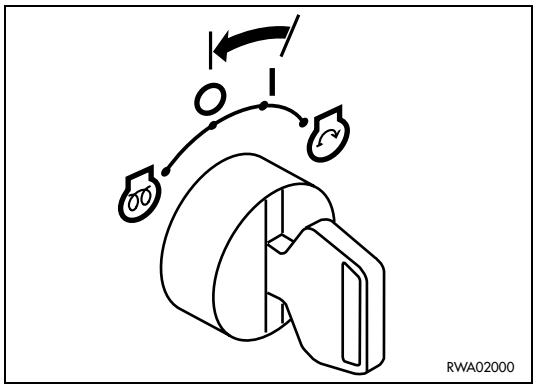

WARNING

- **Wear thick gloves and safety goggles during this check.**
- **To check the system for leaks, use a piece of cardboard or a wooden board.**

5 - Lower the bucket to the ground, stop the machine, lubricate the joints (See "4.5.2 LUBRICATION DIAGRAM (4in1 bucket and pallet forks)") and check the hydraulic oil level (see "4.8.6.a CHECKING THE HYDRAULIC OIL LEVEL").

IMPORTANT

- **Before starting work make sure that the bucket position indicator is correctly set (see "3.12.1 BUCKET POSITION INDICATOR").**

6.3.4 USING THE 4in1 BUCKET

The 4in1 bucket can be used for the following applications:

1 - Loading (dumping the bucket as described in "3.12.2.1 LOADING HEAPED AND LEVEL MATERIAL").

2 - Unloading on high surfaces by opening the bucket instead of overturning it (vertical unloading).

3 - Handling logs, branches, etc. with the grapple function (opening and closing), by using the teeth provided on the mobile jaw (4) to grasp them.

4 - Flushing and levelling (with open bucket)..

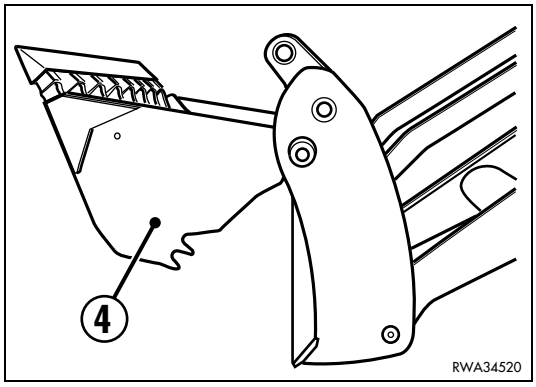

IMPORTANT

- **To flush the ground, open the bucket and move the machine forward working with the fixed part of the bucket.**
- **To level the ground, open the bucket and move the machine backward working with the mobile part of the bucket.**

The operator can check the opening of the bucket at any moment, by means of the indicator (10).

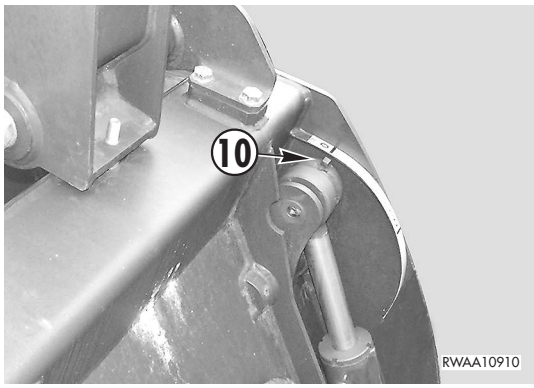

6.3.5 MAINTENANCE

The 4in1 bucket does not require special maintenance operations in addition to those required for the standard bucket, except for the lubrication, as described at point "4.5.2 LUBRICATION DIAGRAM (4in1 bucket and pallet forks)".

6.4 PALLET FORKS

IMPORTANT

- **(For the characteristics, see table "6.1.3 CHARACTERISTICS OF THE OPTIONAL EQUIPMENT").**

DANGER

- **Before lifting the load, make sure that the position of its centre (G) complies with the distances indicated in the figure below. Furthermore, the load must always be centered with respect to the forks. Non-compliance with these rules may cause serious damage and even death.**
- **Before handling any load, verify the capacity of the forks. The allowed load is generally stamped on the forks.**

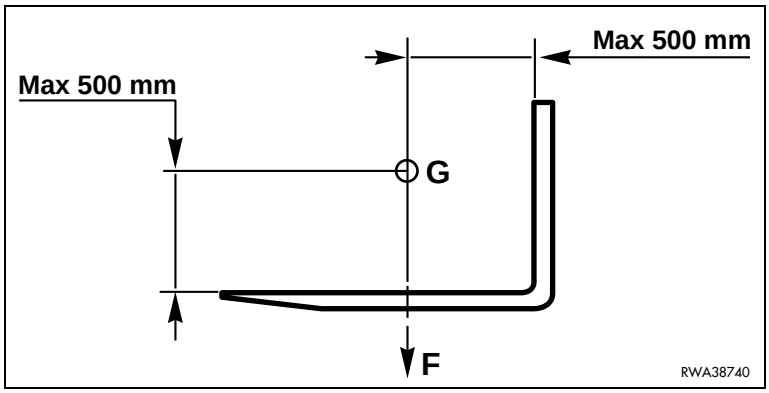

6.4.1 DESCRIPTION

They are usually applied to the 4in1 bucket and when they are not used they must be overturned towards the back of the machine and secured with the safety pins provided.
The pallet forks (1) make it possible to use the machine as a normal lift truck and the controls to lift and oscillate them are the same used to control the standard bucket (see "3.3.6 pos. 4 - FRONT LOADER CONTROL LEVER"). The distance between the pallet forks can be varied to adapt them to the load to be handled; to do this, make them slide on the coupling bar (2).

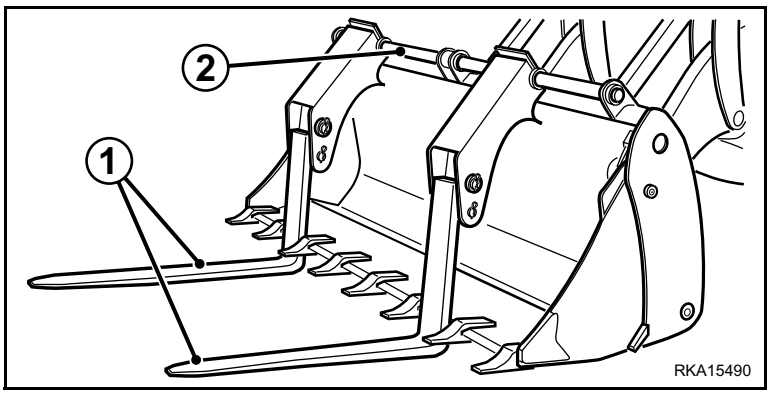

6.4.2 SAFETY DEVICES

Two safety pins (3) are provided to keep the forks in overturned position when the machine travels on roads.

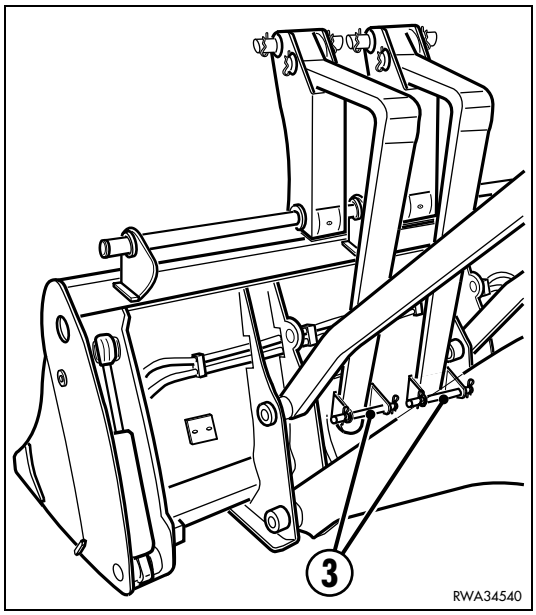

6.4.3 USING THE FORKS

WARNING

- **Before working with the forks, the operator must evaluate the increased dimensions of the machine and learn how to use the fork controls.**
- **The forks protrude beyond the bucket outline and therefore it is necessary to be very careful when manoeuvring the machine, especially in reduced spaces.**
- **After forking the material, before lifting the load, move the forks in such a way as to lift their prongs and therefore prevent the load from slipping.**

DANGER

- **When the forks are overturned for use or storage, be careful to the grasping points, since hands and feet may be injured and even cut off.**
  If possible, this operation should be carried out by two persons.
- **Use the lifting, oscillation and shifting controls slowly and smoothly, in order to avoid vibrations that may cause the load to move.**
- **Maintain the greatest possible distance between the forks.**
- **The forks must always rest on the blade and be positioned between two teeth, in order to prevent them from slipping laterally.**

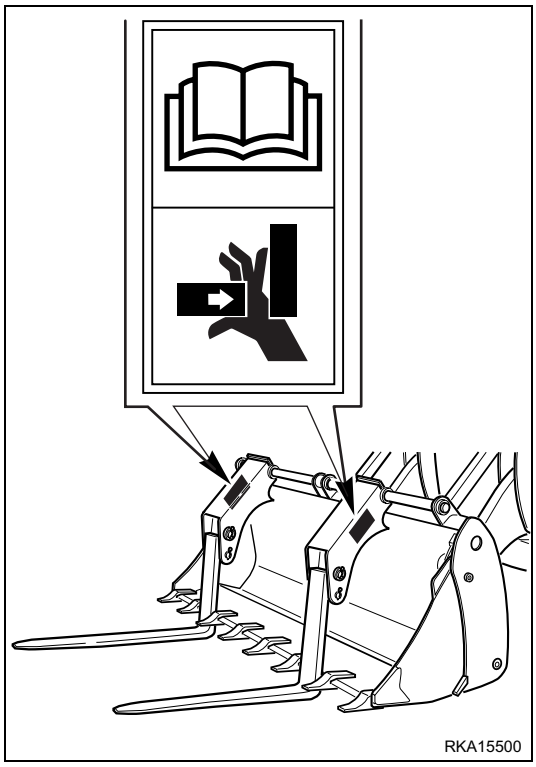

6.4.3.1 PREPARING THE PALLET FORKS FOR USE

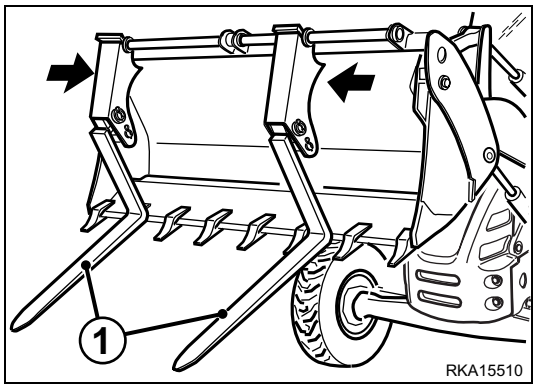

1 - Overturn the forks toward the front part of the machine.

2 - Lift the bucket and operate the control lever in such a way as to swing it forward until releasing the forks from the bucket teeth.

3 - Move the forks (1) sidewards to widen or narrow the distance between them according to the width of the load to be handled.

4 - Fold the bucket and manoeuvre the lifting arm until the forks are in horizontal position.

5 - Lubricate the fork rotation pins (see "4.5.2 LUBRICATION DIAGRAM (4in1 bucket and pallet forks)").

6.4.3.2 OVERTURNING THE FORKS FOR TRAVEL ON ROADS

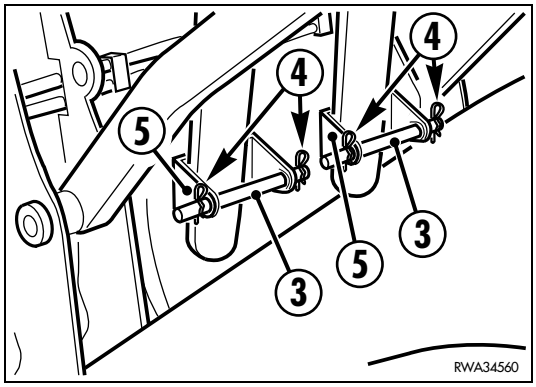

1 - Remove the safety pins (4) and the pins (3).

2 - Make the forks slide towards the centre of the bucket, overturn them and insert them in the supports (5).

3 - Put back the pins (3) and the safety pins (4).

4 - Make sure that when they are overturned in rest position the forks are firmly secured inside their respective supports (5).
If any slack should be observed between the forks and the safety pin (3), immediately carry out the necessary adjustment.

The correct adjusting procedure is as follows:

- Release the stop nut (10) and loosen the adjusting screw (11) until taking up the slack between the fork and the safety pin (3).
  Use a 22 mm hex wrench.
- After the adjustment, tighten the stop nut (10) thoroughly.
  If the adjusting screw (11) should be excessively worn, do not hesitate to replace it.

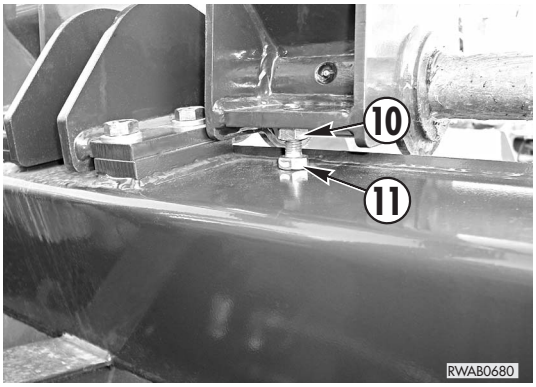

⚠ CAUTION

- **The check and adjustment of the forks must be carried out on both sides, with the forks at rest. Do not hesitate to adjust the forks as soon as the presence of a slack is noticed. Non-compliance with these instructions may lead to dangerous situations for the operator and cause serious damage to the machine.**
- **Before carrying out any movement with the machine, make sure that the safety pins (4) are correctly inserted.**

6.4.4 REMOVING THE FORKS

WARNING

- **Pay the utmost attention when removing the forks, the supports and the bar, in order not to crush or even cut off your hands or feet.**

1 - Manoeuvre the lifting arm and swing the bucket until resting the forks (1) on the ground in horizontal position.

2 - Remove the safety pins (6) and the pins (7).

If also the supports (8) must be removed:

3 - Loosen and remove the screws (9) that fasten the slide bar (2).

4 - Hold one of the supports (8) and withdraw the slide bar (2); repeat the same operation for the other support.

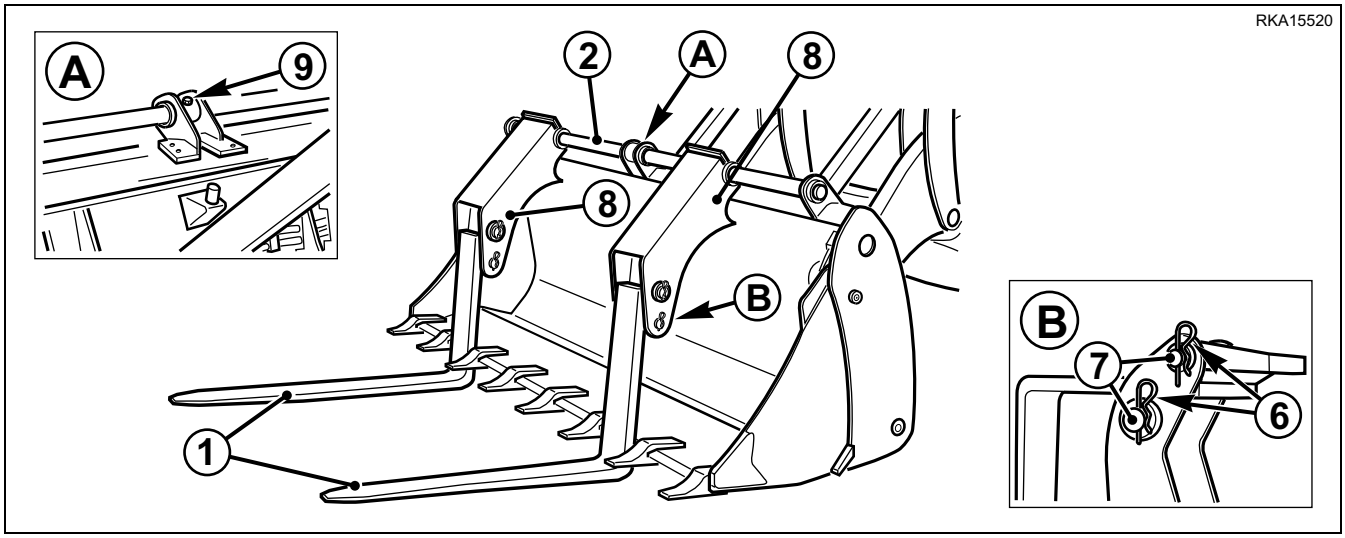

6.4.5 INSTALLING THE FORKS

To install the pallet forks, repeat the procedure described for the removal in the reverse order, taking the same precautions.

6.4.6 MAINTENANCE

No specific maintenance operation is required for this device, except for the occasional greasing of the slide bar and of the fork fulcrum pin (see "4.5.2 LUBRICATION DIAGRAM (4in1 bucket and pallet forks)").

6.5 BACKHOE TELESCOPIC ARM

6.5.1 DESCRIPTION AND CONTROL

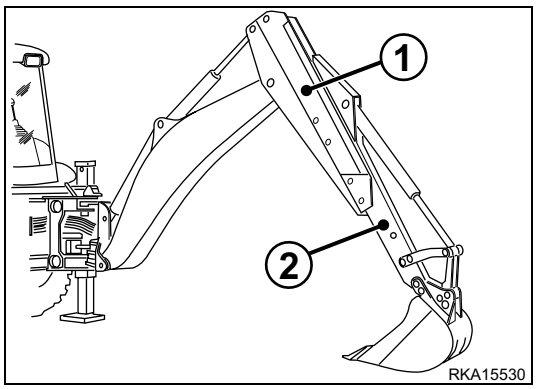

The telescopic arm makes it possible to work with the equipment installed at a variable distance that is greater than that allowed by the standard arm.
When the telescopic arm is completely extended, the breakout force at the bucket pin is reduced and only lighter loads can be lifted; therefore, suitable buckets must be used (see "6.1 AUTHORIZED OPTIONAL EQUIPMENT").
This structure features an external hollow arm (1) inside which the arm (2) that supports the equipment slides on adjustable “V”-shaped guides.
The sliding of the arm is achieved by means of a double-acting cylinder controlled by an additional distributor.

6.5.1.1 CONTROL (version with mechanically-controlled backhoe)

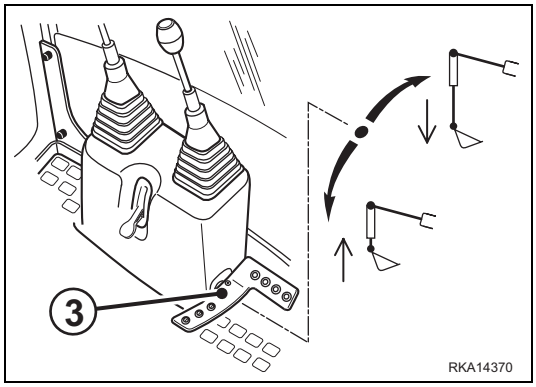

The distributor that manages the telescopic movement is controlled by means of a pedal (3) positioned on the right side of the backhoe control lever unit; the movements of the levers described in "3.3.6.1 pos. 18/19 - BACKHOE CONTROL LEVERS (version with mechanical controls)" remain unchanged.
The movements of the telescopic arm are as follows:

1 - Extension of the arm, obtained by pressing the pedal (3) with the toe.

2 - Retraction of the arm, obtained by pressing the pedal (3) with the heel.

6.5.1.2 CONTROL (version with servo-assisted backhoe)

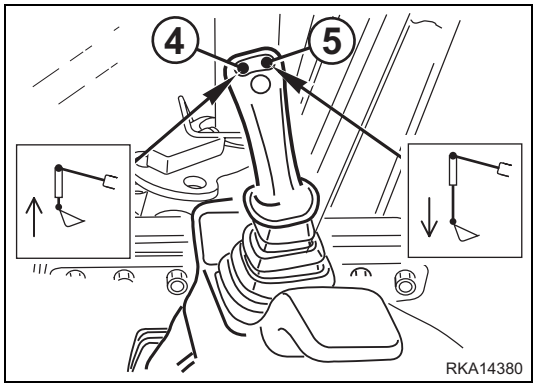

In the version with servo controls, the movement of the telescopic arm is achieved via the buttons (4) and (5) positioned on the right joystick lever.
The movements of the main equipment remain unchanged; see "3.3.6.1 pos. 18/19 - BACKHOE CONTROL LEVERS (version with servo controls)".

The movements of the telescopic arm are as follows:

1 - Retraction of the arm, obtained by pressing the push button (4); the arm stops when the button is released.

2 - Extension of the arm, obtained by pressing the push button (5); the arm stops when the button is released.

IMPORTANT

- **The telescopic arm controls are inhibited when the safety button (A) is in locking position (see "3.3.2 pos. 12 - SERVO CONTROL LOCKING BUTTON").**

6.5.2 SAFETY DEVICES

The telescopic arm is equipped with a safety element (6) that locks the sliding arm (2) when it is completely retracted and prevents any accidental extension of the same.
The safety element (6), held in its seat by the retainer (7), must be inserted and prevent the extension of the arm as shown in Fig. A in the following situations:

1 - when it is necessary to travel on roads or in any case when the machine must cover considerable distances;

2 - when the backhoe is not used.

In operating conditions, the safety element (6) must be positioned as shown in Fig. B.

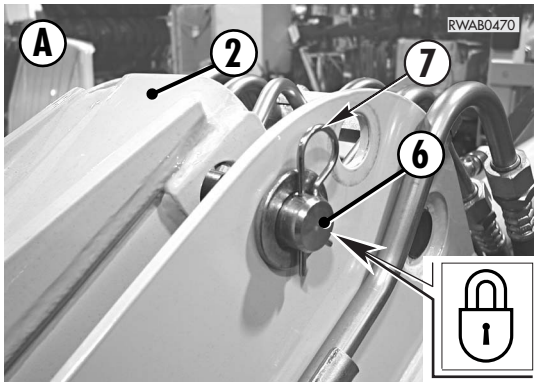

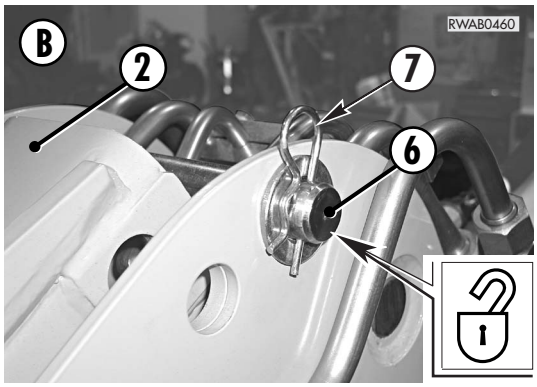

6.5.3 USING THE TELESCOPIC ARM

⚠ WARNING

- **Before releasing and extending the arm, make sure that the stabilizers rest on firm ground.**
- **If possible, work with the backhoe centered on the guides and unload the material as near the machine as possible.**
- **If it is necessary to work with misaligned backhoe or with the backhoe completely shifted on the guides, operate slowly when swinging the arm to unload the material on the misaligned side, since in these conditions the machine may lose stability.**
- **Do not use the arm retracting cylinder to increase the bucket tearing force when digging.**

For other possible applications, see "3.13 USING THE MACHINE AS AN EXCAVATOR".

6.5.4 MAINTENANCE

The telescopic arm requires two maintenance operations:

1 - Lubrication of the joints (see "4.5.1 LUBRICATION DIAGRAM").

2 - Adjustment of the slide guide (8) slack, which must be carried out occasionally, when impacts or vibrations are noticed during work..

6.5.4.1 ADJUSTING THE GUIDE SLACK

WARNING

- **When leaving the operator's seat during the adjustment of the guides, remove the ignition key.**
- **Adjust the screws and guides one by one.**
- **Do not place tools in the space between the safety locks and the arm.**

1 - Position the machine on flat ground and lower the stabilizers.

2 - Lift the boom, fold the bucket completely and extend the telescopic part (7) completely.

3 - Fold the arm until the slide guides (8) are perpendicular to the ground and in any case positioned so that the extending part is completely free and does not overload the guides.

4 - Stop the engine.

5 - Check the side on which the adjusting dowels (9) of the guides protrude more. Adjust by working on this side only.

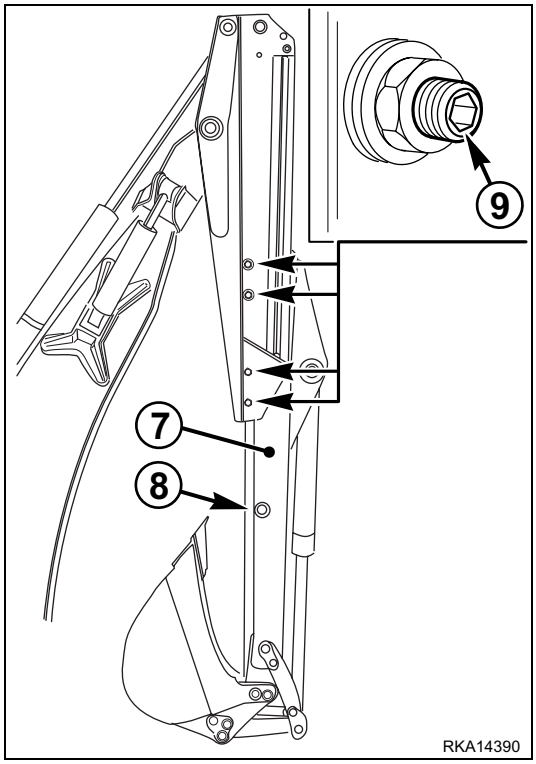

CAUTION

- **If the adjusting dowels (9) protrude to the same extent on the two sides, the operation described at point 6 can be carried out either on the right or on the left side.**

6 - Loosen the four lock nuts (10) and tighten the adjusting dowels (9) thoroughly, until taking up the slack completely. (Use a 27 mm wrench and a 8 mm hex wrench).

7 - Starting from the central positions, loosen the adjusting dowels (9) by 270° (3/4 turn) and lock them with the lock nuts (10).

8 - Start the machine, extend and retract the telescopic arm more than once to make sure that it slides correctly.

CAUTION

- **The wear limit allowed for the rubber blocks is represented by the minimum engagement of the adjusting dowels (9) in the lock nuts; the rubber blocks must be replaced when the heads of the dowels (9) are 5 mm back with respect to the lock nuts (10).**
- **When taking up the slack, avoid excessive pressures, in order to prevent the guides from seizing.**

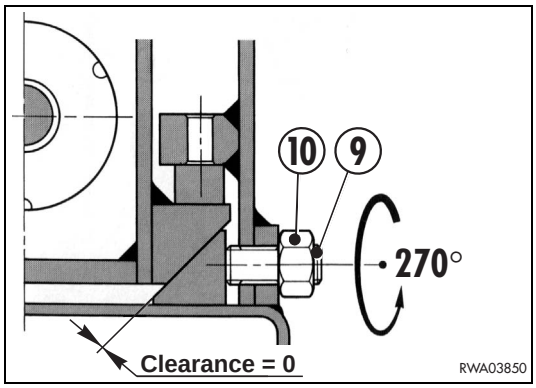

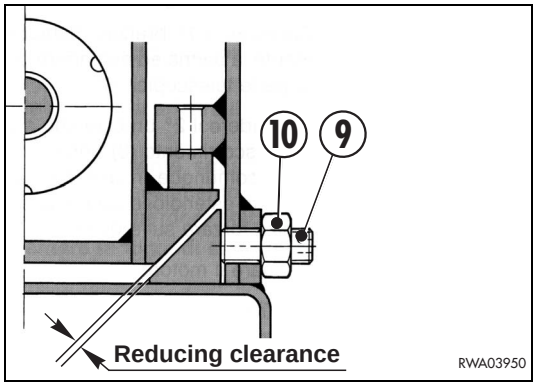

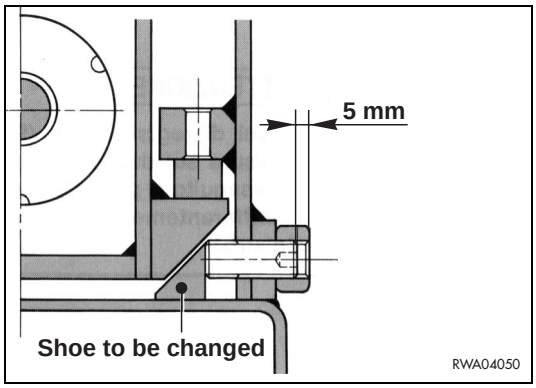

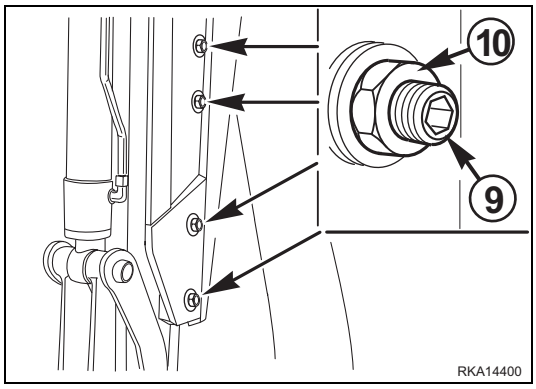

6.6 CONFIGURATION FOR THE INSTALLATION OF THE DEMOLITION HAMMER

WARNING

- **The demolition hammer is very noisy, therefore always wear headphones when using it.**

IMPORTANT
- **For the characteristics, see table "6.1.3 CHARACTERISTICS OF THE OPTIONAL EQUIPMENT".**

6.6.1 DESCRIPTION AND CONTROL

The machine can be configured in such a way as to allow the installation of a demolition hammer on the backhoe; this hammer is operated by means of an additional distributor.

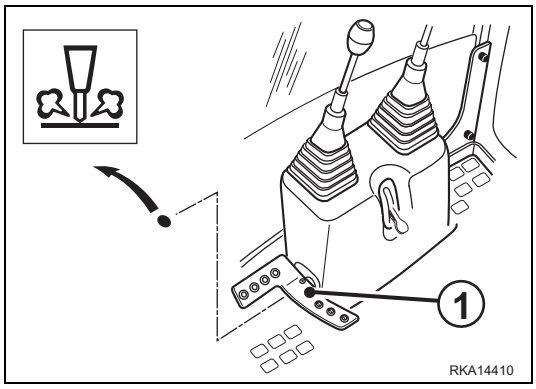

6.6.1.1 CONTROL (version with mechanically-controlled backhoe)

The distributor is controlled by means of a pedal (1) positioned on the left side of the backhoe control lever unit.
The movements of the levers described at point "3.3.6.1 pos. 18/19 - BACKHOE CONTROL LEVERS (version with mechanical controls)" remain unchanged.
The hammer is operated by pressing the pedal (1) with the toe, since in this way pressurized oil is conveyed into the circuit; when the pedal is released, the oil flow is interrupted and therefore the hammer stops.

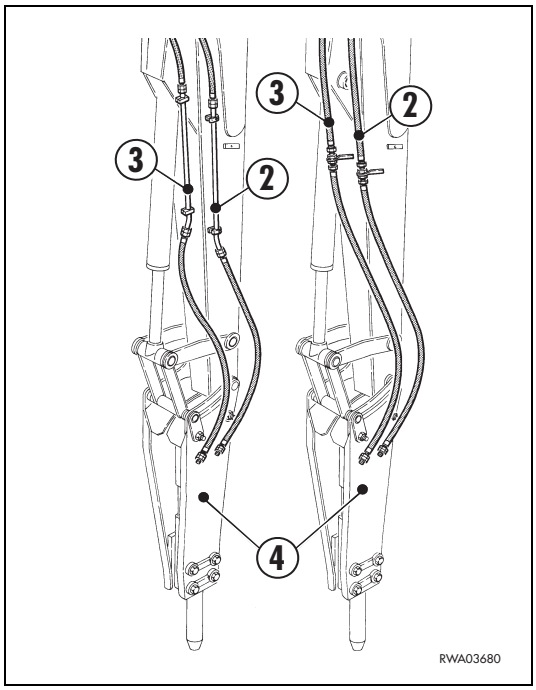

6.6.1.2 CONTROL (version with servo-assisted backhoe)

In the version with servo controls, the hammer is operated via the small pedal (5) positioned on the cab floor.
The movements of the levers described at point "3.3.6.1 pos. 18/19 - BACKHOE CONTROL LEVERS (version with servo controls)" remain unchanged.
The hammer is operated by pressing the foot-operated button (5), since in this way pressurized oil is conveyed into the circuit; when the foot-operated button (5) is released, the oil flow is interrupted and therefore the hammer stops.

IMPORTANT
- **The demolition arm control is inhibited when the safety button is in locking position (see "3.3.2 pos. 12 - SERVO CONTROL LOCKING BUTTON").**

This configuration includes also the fixed installation of rigid or flexible pipes, more precisely a delivery (2) and a drain (3) pipe that convey/discharge the oil necessary for the operation of the hammer and reach the proximity of the hammer connection (4).

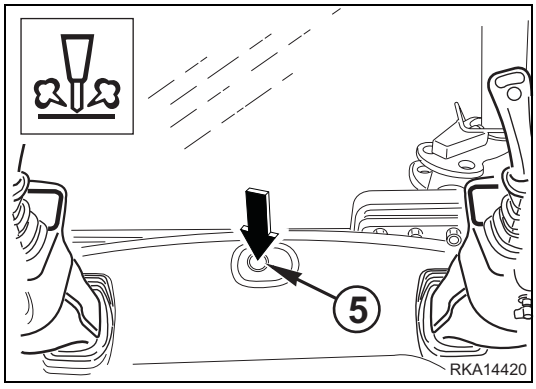

6.6.2 USE OF THE DEMOLITION HAMMER AND RULES TO BE OBSERVED

The choice of the suitable tool is a very important factor when maximum productivity is required of the demolition hammer.
The shape and size of the tool must be defined according to the nature of the material to be broken and to the type of work to be carried out.
The hammer is used for the demolition of floors, concrete structures, walls, small rocky surfaces, open excavations, asphalt, etc.
With the application of special tools it can also be used as asphalt-cutter or compactor.

FOR A CORRECT USE OF THE HAMMER, IT IS NECESSARY TO:

1 - Make sure that the position of the hammer with respect to the material to be broken is as perpendicular as possible and that the arm thrust is sufficient, so that all the power of the hammer can be exploited.

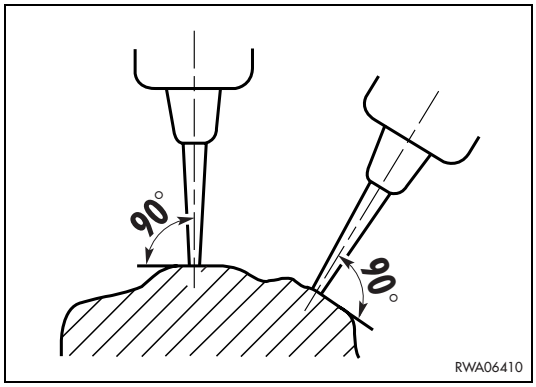

2 - Keep the pressure of the excavator on the hammer constant as the bit penetrates the material.
Always follow the hammer while it penetrates and operate the excavator arms in order to obtain a pressure sufficient to keep the undercarriage raised approximately 5 cm from the ground.
Do not raise the rear wheels more than necessary.

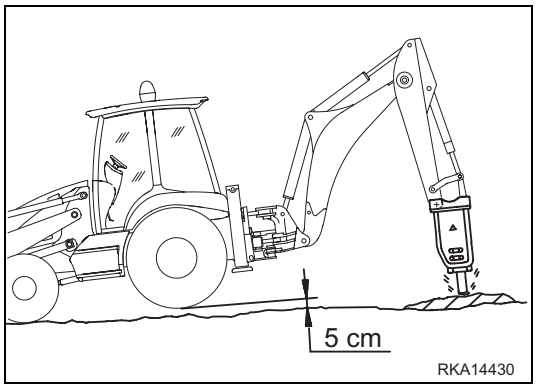

3 - When working on very hard materials, it is important to avoid hitting the same point for more than 30 seconds.
Hit the same point just for a few seconds and change position very frequently, in such a way as to facilitate the breaking of the material.

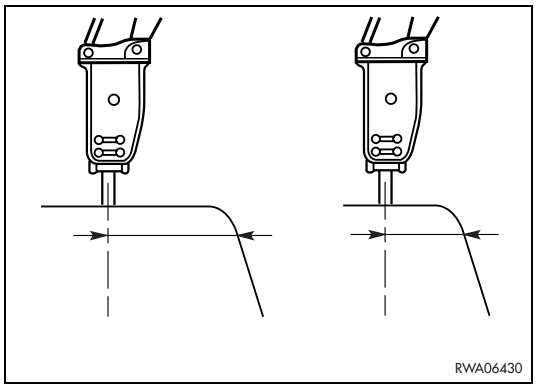

4 - To facilitate the sliding of the tool on its seat, check the thrust direction and always correct the hitting position of the hammer by means of the bucket and arm control.

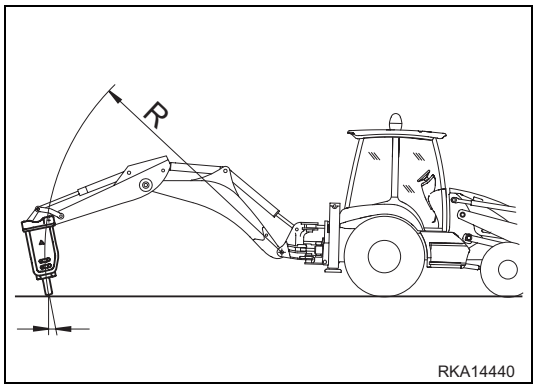

5 - Always make sure that the arm thrust is optimal, in order to avoid harmful and useless strokes.

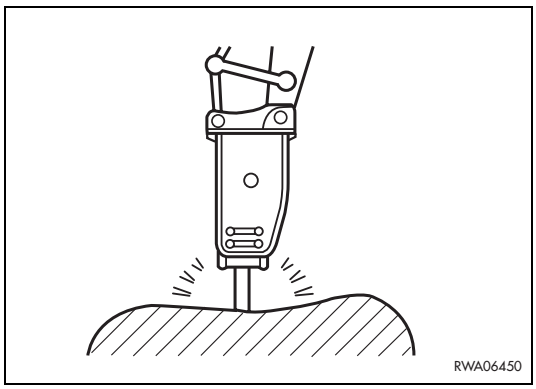

IMPORTANT

- **During work, do not use the demolition hammer with the bucket cylinder at the end of stroke, but always leave a minimum space of 5 cm.**

ALWAYS AVOID THE FOLLOWING INCORRECT USES:

1 - Gathering or moving stones with the demolition hammer.

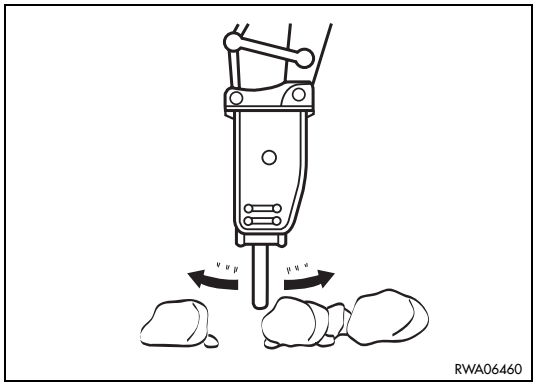

2 - Rotating the upper structure while using the hammer.

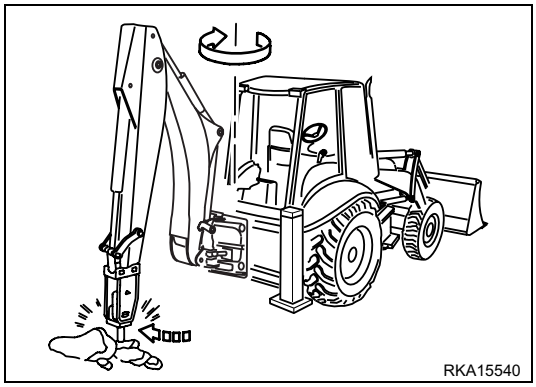

3 - Moving the tool while it is hitting the material to be broken.

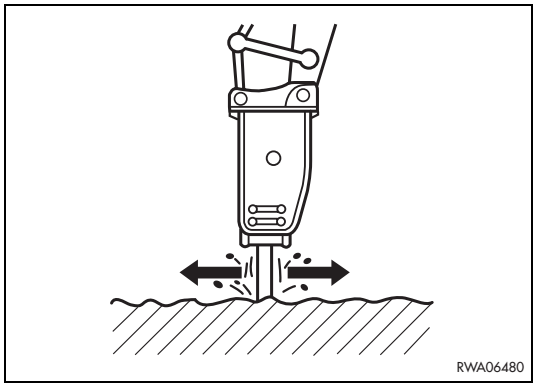

4 - Working with the hammer in horizontal position or even with greater inclination.

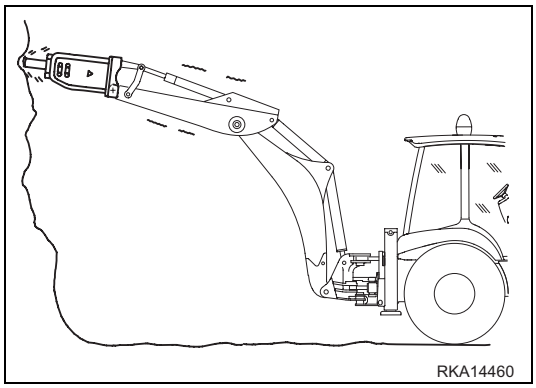

5 - Levering with the tool after driving it into the material to be broken.

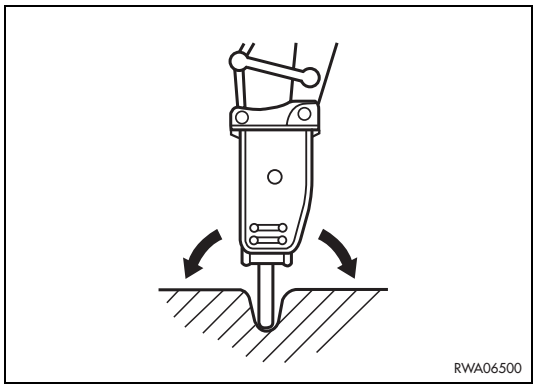

6 - Hitting the ground with the hammer bit.

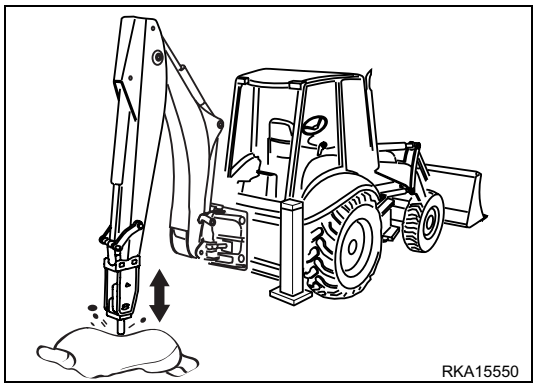

7 - Lifting the machine by levering on the hammer bit with the bucket cylinder completely extended.

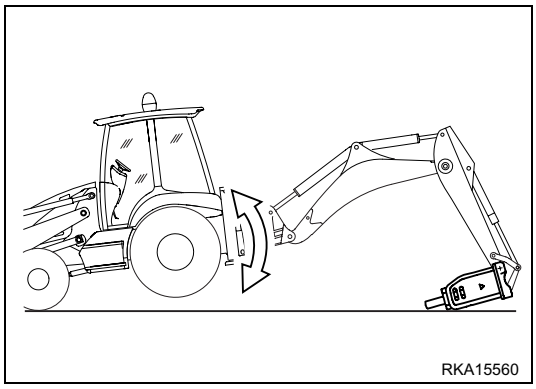

6.6.3 INSTALLING AND REMOVING THE DEMOLITION HAMMER

6.6.3.1 INSTALLING THE HAMMER

WARNING

- **The machine must be parked on a level surface, with the front equipment resting on the ground.**
- **For the installation, the hammer must be positioned horizontally, with the bit directed towards the machine.**
- **When the coupling pins are removed or installed, chips may come off; always use gloves, goggles and helmet.**
- **The change of the equipment must be carried out by two operators, who must decide together the words and signals to be used during work.**
- **Avoid using your fingers to align the holes, since they may be injured or even cut off.**
- **Before carrying out any operation on the hydraulic circuit, eliminate the residual pressure from the equipment circuits by moving the controls more than once and from the tank by slowly loosening the filler cap.**
- **If any oil has been spilled, wipe it up immediately, in order to prevent the surface from getting slippery.**

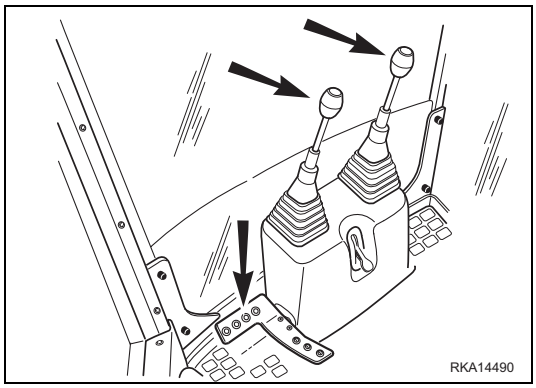

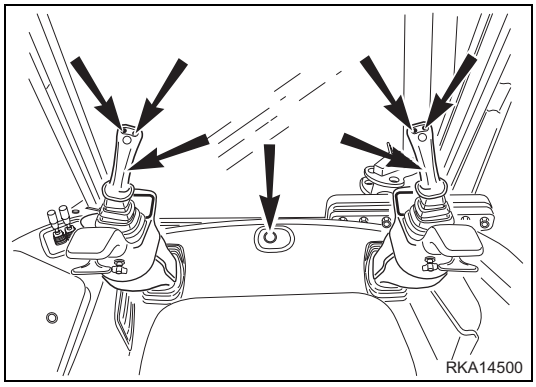

For the installation of the demolition hammer it is necessary to connect the mechanical constraints of the backhoe bucket as described in "3.13.4.1 CHANGING THE BACKHOE BUCKET" and to carry out the hydraulic connections using the pipes provided.
After connecting the mechanical constraints, carry out the hydraulic connections by proceeding as follows

1 - Stop the engine and move the hydraulic controls in all directions, in order to completely release the residual pressure present in the circuits of the machine.

2 - Press the hammer control pedal to release the pressure present in the hammer delivery pipe.

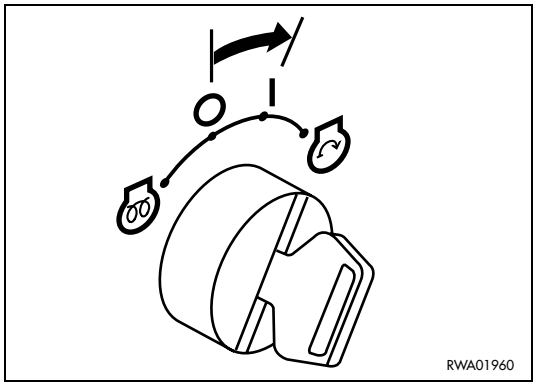

IMPORTANT

- **If the machine is equipped with backhoe servo controls, to eliminate the residual pressure proceed as follows:**
  - **1 - With the engine at rest, turn the ignition key to position «I».**
  - **2 - Press the servo control locking button and make sure that the LED is off (release position) (see "3.3.2 pos. 12 - SERVO CONTROL LOCKING BUTTON").**
  - **3 - Shift the backhoe control levers more than once and press the hammer control pedal.**
  - **4 - Turn the ignition key to position «O».**

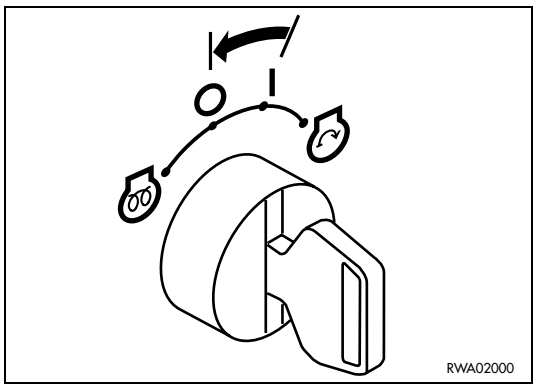

3 - Remove the plugs of the machine pipes and of the hammer flexible pipes.
Use 32, 36, 38 and 41 mm hex wrenches.

4 - Connect the right pipe to the coupling (1) and the left pipe to the coupling (2), making sure that the sizes of the pipe fittings are as required.

CAUTION

- **When connecting the pipes, take care to prevent any impurities from getting into them.**

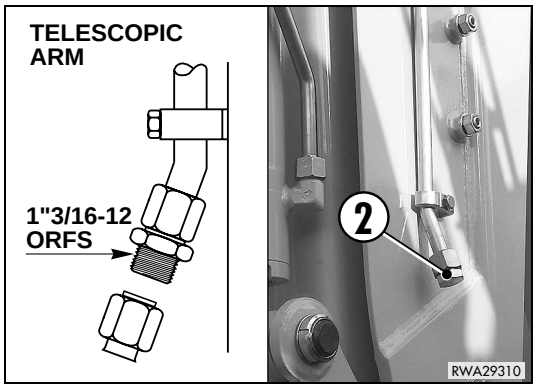

5 - Start the machine and raise the demolition hammer positioning it vertically.

6 - Stop the machine again and lubricate the joints (see "4.5.1 LUBRICATION DIAGRAM") and the hammer (see the specific operation and maintenance manual).

7 - Before starting work, check the tightness of the circuit.

WARNING

- **Wear thick gloves and safety goggles during this check.**
- **To check the system for leaks, use a piece of cardboard or a wooden board.**

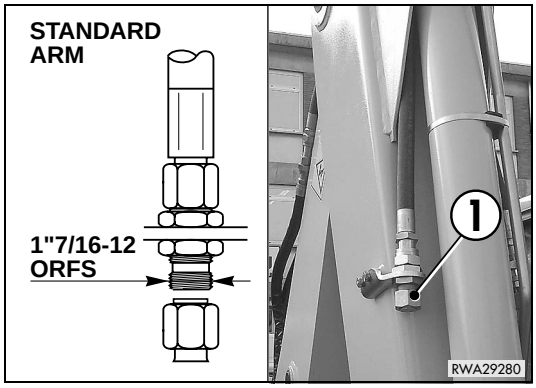

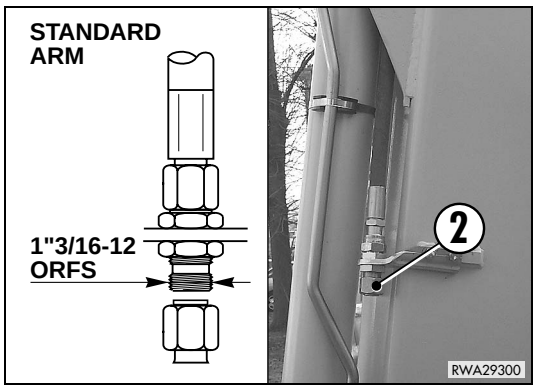

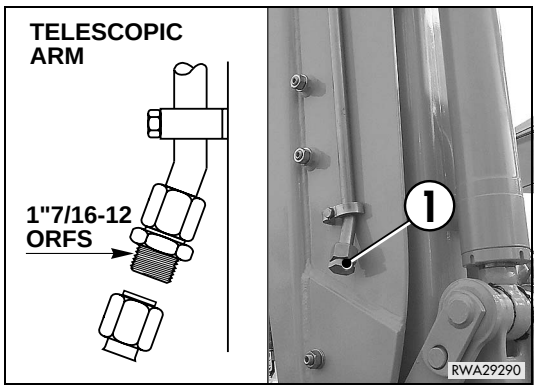

6.6.3.2 REMOVING THE HAMMER

To remove the hammer, proceed as follows:

1 - Stop the engine and move the hydraulic controls in all directions, in order to completely release the residual pressure present in the circuits of the machine.

2 - Press the hammer control pedal to release the pressure present in the hammer delivery pipe.

IMPORTANT

- **If the machine is equipped with backhoe servo controls, to release the residual pressure from the circuits, follow the procedure indicated in the previous paragraph "6.6.3.1 INSTALLING THE HAMMER".**

3 - Disconnect the hammer delivery and return pipes.
Use 32, 36, 38 and 41 mm hex wrenches.

4 - Fit the pipe sealing plugs complete with the relevant gaskets.

⚠ WARNING

- **Make sure that the plugs are properly tightened and that there are no leakages; if the circuit is inadvertently pressurized, small leakages can be turned into thin jets that may perforate the skin or injure the eyes.**
- **Always wear thick gloves and safety goggles to carry out this check.**
- **To check the system for leaks, use a piece of cardboard or a wooden board.**

5 - Disconnect the hammer from the mechanical constraints, as described in "3.13.4.1 CHANGING THE BACKHOE BUCKET".

6.6.4 USING THE HAMMER

See the specific manual.

OPERATIONS WITH HAND HYDRAULIC HAMMER AND COMPACTING TOOLS

⚠ CAUTION

- **If the machine is provided with telescopic arm, this must be kept only folded.**

6.6.5 MAINTENANCE

The hydraulic system does not require any maintenance operation and inspection other than those prescribed for the machine.
Regarding the maintenance operations required for the hammer, see the specific operation manual.

6.7 APPLICATION OF THE OFFSET DEVICE

WARNING

- **When it is necessary to move the machine or travel on roads, the offset device must be positioned centrally with respect to the boom axis.**
- **To carry out digging operations on vertical walls, the fulcrum pin (1) of the revolving support (2) must be perfectly vertical; be very careful to the position of this component when digging near walls and posts, wells and underground lines.**
- **When digging near walls, take care not to weaken foundations and cause collapses.**
- **When working beyond the outline of the machine, make sure that the ground on which the stabilizers and wheels rest is solid and the area is sufficiently far from ridges, banks, coasts: remember that in these conditions the specific pressure on the ground always increases.**
  Reduce the loads and work at low speed, in order to ensure the stability of the machine.

6.7.1 DESCRIPTION AND CONTROL

The offset device is an integral part of the boom (3) and makes it possible to carry out digging operations beyond the machine outline.
If the offset device is in neutral position, the boom can be used as a standard boom; if it is necessary to dig beyond the machine outline, the backhoe must be translated and the offset device must be operated to reproduce the parallelism between the arm (4) and the axis of the machine.

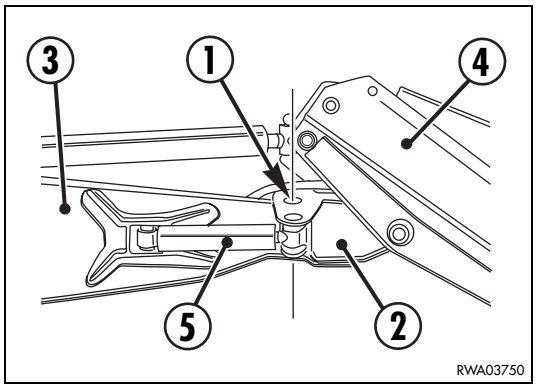

6.7.1.1 CONTROL (version with mechanically-controlled backhoe)

The operation of the cylinder (5) that rotates the support (2) to which the arm (4) is mechanically constrained is obtained by means of an additional distributor controlled through a pedal (6) installed on the left side of the backhoe control lever unit.
The movements of the levers described at point "3.3.6.1 pos. 18/19 - BACKHOE CONTROL LEVERS (version with mechanical controls)" remain unchanged.
The movements of the arm are as follows:

1 - Swing to the right, obtained by pressing the pedal (6) with the toe.
2 - Swing to the left, obtained by pressing the pedal (6) with the heel.

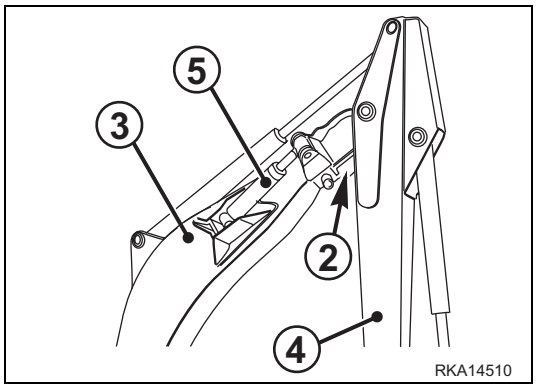

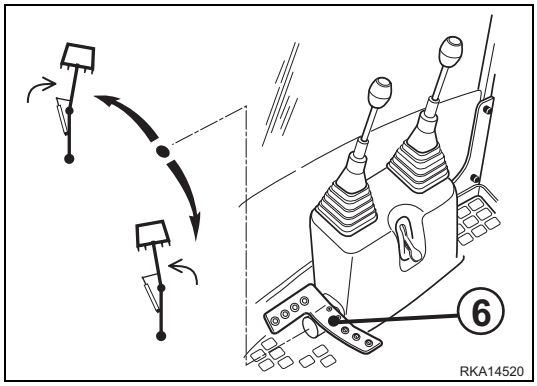

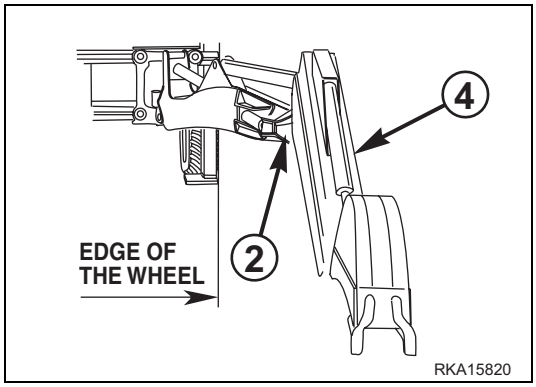

6.7.1.2 CONTROL (version with servo-assisted backhoe)

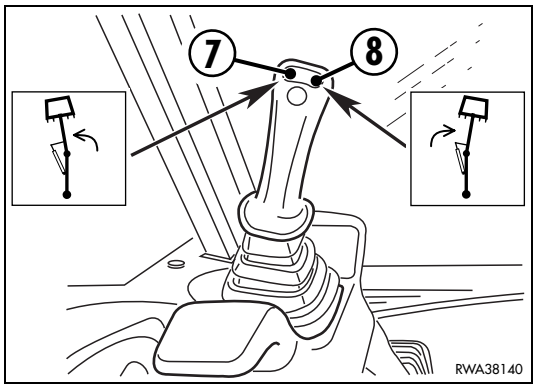

In the version with servo controls, the movement of the equipment with offset boom is achieved via the buttons (7) and (8) positioned on the left joystick lever.
The movements of the levers described in "3.3.6.1 pos. 18/19 - BACKHOE CONTROL LEVERS (version with servo controls)" remain unchanged.
The movements of the arm are as follows:

1 - Swing to the left, obtained by pressing the push button (7); when the button is released the arm stops.

2 - Swing to the right, obtained by pressing the push button (8); when the button is released the arm stops.

IMPORTANT

- **The offset boom controls are inhibited when the safety button is in locking position (see "3.3.2 pos. 12 - SERVO CONTROL LOCKING BUTTON").**

6.7.2 MAINTENANCE

The offset device does not require any special maintenance operation, except for greasing (see "4.5.4 LUBRICATION DIAGRAM (offset device)").

6.8 CONFIGURATION FOR THE USE OF OPTIONAL EQUIPMENT WITH UNIDIRECTIONAL OIL FLOW

WARNING

- **Some equipment that can be installed instead of the standard bucket make the machine unsuitable for travelling on roads. Before travelling on roads, always make sure that the machine is homologated for travelling with the equipment with which it is provided.**
- **The installation and removal of the equipment that is not homologated for travelling on roads must be carried out at the worksite or in any case in delimited spaces with no traffic.**

6.8.1 DESCRIPTION AND CONTROL

The machine can be equipped with an independent hydraulic circuit to be used for the operation of optional equipment that may be installed on the backhoe instead of the standard bucket.

6.8.1.1 CONTROL (version with mechanically-controlled backhoe)

The circuit is piloted by an additional hydraulic distributor that is operated by means of a pedal (1) installed on the left side of the backhoe control lever unit.
The additional circuit is operated as follows:

1 - When the pedal (1) is pressed with the toe, oil is delivered to the right side of the circuit and discharged from the left side of the same.

2 - When the pedal (1) is pressed with the heel, oil is delivered to the left side of the circuit and discharged from the right side of the same.

The movements of the levers described at point "3.3.6.1 pos. 18/19 - BACKHOE CONTROL LEVERS (version with mechanical controls)" remain unchanged, except for the bucket control, which is used for positioning the optional equipment.
This configuration includes also the fixed installation of the delivery and discharge pipes that convey/discharge the oil necessary for the operation of the equipment and reach the proximity of the equipment connection.

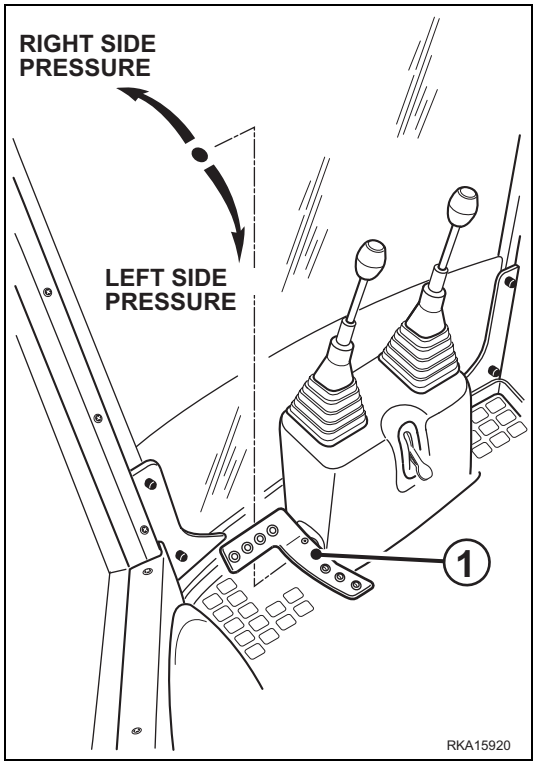

6.8.1.2 CONTROL (version with servo-assisted backhoe)

In the version with servo controls, the additional circuit is operated via the buttons (2) and (3) positioned on the left joystick lever. The movements of the levers described in "3.3.6.1 pos. 18/19 - BACKHOE CONTROL LEVERS (version with servo controls)" remain unchanged.
The additional circuit is operated as follows:

1 - When the push button (2) is pressed, oil is delivered to the right side of the circuit and discharged from the left side of the same.

2 - When the push button (3) is pressed, oil is delivered to the left side of the circuit and discharged from the right side of the same.

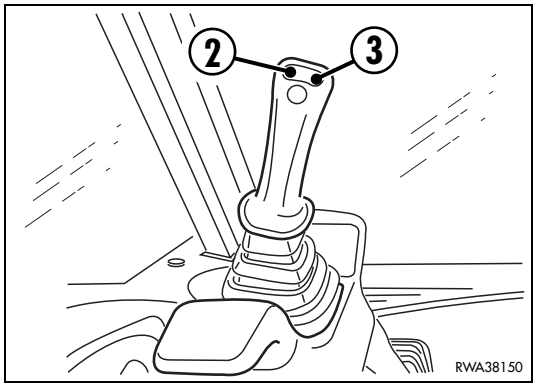

IMPORTANT

- **All movements of the boom, the arm and the equipment are inhibited when the safety button is in locking position (see "3.3.2 pos. 12 - SERVO CONTROL LOCKING BUTTON").**

6.8.2 INSTALLING AND CONNECTING THE EQUIPMENT

The equipment must be installed following the procedure indicated in paragraph "3.13.4.1 CHANGING THE BACKHOE BUCKET". Connect the delivery and return pipes by proceeding as follows:

1 - After connecting the equipment, stop the engine and shift the hydraulic controls in all directions, in order to release the residual pressure from the machine circuits.

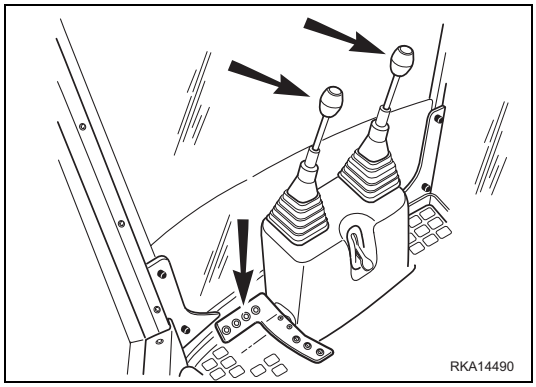

IMPORTANT

- **If the machine is equipped with backhoe servo controls, to eliminate the residual pressure proceed as follows:**
  - **1 - With the engine at rest, turn the ignition key to position «I».**
  - **2 - Press the servo control locking button and make sure that the LED is off (release position) (see "3.3.2 pos. 12 - SERVO CONTROL LOCKING BUTTON").**
  - **3 - Shift the backhoe control levers more than once and press the equipment controls.**
  - **4 - Turn the ignition key to position «O».**

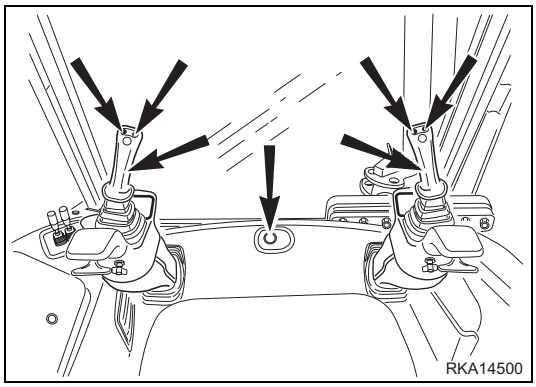

CAUTION

- **During the successive steps, take care to prevent any impurities from getting into the circuit.**
- **If any oil has been spilled, wipe it up immediately, in order to prevent the surface from getting slippery.**

2 - Remove the plugs of the two pipes and of the installed equipment.

3 - Connect the delivery and return pipes.

4 - Start the machine and carry out several manoeuvres with the pedal (1) or with the buttons (2-3) used to control the equipment, in order to verify the tightness of the circuits.

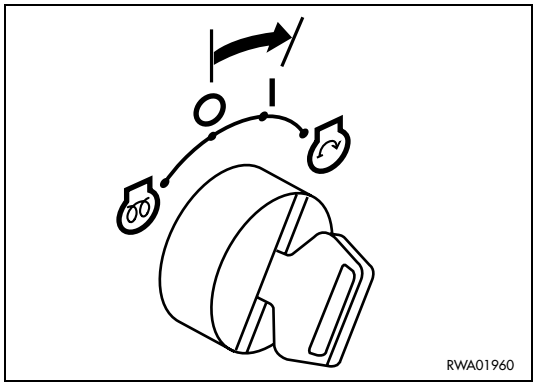

WARNING

- **Wear thick gloves and safety goggles during this check.**
- **To check the system for leaks, use a piece of cardboard or a wooden board.**

5 - Stop the machine and if necessary fasten the longer pipes in order to avoid vibrations and therefore critical conditions for the coupling connections.

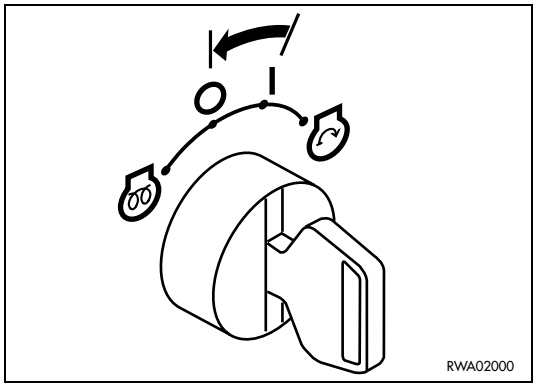

6.8.3 MAINTENANCE

The hydraulic system does not require any maintenance operation and inspection other than those prescribed for the machine. Regarding the maintenance operations required for the equipment, see the specific operation manuals.

6.9 CONFIGURATION FOR THE USE OF THE CLAMSHELL BUCKET

6.9.1 DESCRIPTION AND CONTROL

WARNING

- **Machines equipped with the revolving clamshell bucket cannot travel on roads.**
- **The installation of the clamshell bucket must be carried out at the worksite; if the machine must travel on roads, remove the bucket.**
- **The bucket can swing on the arm coupling; during use, take in consideration the increase in size due to the swinging.**

The machine can be configured in such a way as to allow the application of a revolving clamshell bucket to the backhoe, instead of the standard bucket.
For the swing of the clamshell bucket, this configuration includes the installation of an independent hydraulic circuit controlled by an additional distributor, while for its opening and folding it is possible to use the circuit used for the opening and folding of the standard bucket, excluding the control cylinder (see "6.9.2 INSTALLING THE CLAMSHELL BUCKET").

6.9.1.1 CONTROL (version with mechanically-controlled backhoe)

The additional distributor that manages the swing of the clamshell bucket is controlled by means of a pedal (1) positioned on the left side of the backhoe control lever unit.
The other controls for the movements of the backhoe (boom, arm and boom swing) remain unchanged (see "3.3.6.1 pos. 18/19 - BACKHOE CONTROL LEVERS (version with mechanical controls)").
The swing movements are the following:

1 - Clockwise swing, obtained by pressing the pedal (1) with the toes.

2 - Counterclockwise swing, obtained by pressing the pedal (1) with the heel.

This configuration includes also the fixed installation of the delivery and discharge pipe that convey/discharge the oil necessary for the bucket swing and reach the proximity of the bucket connection.

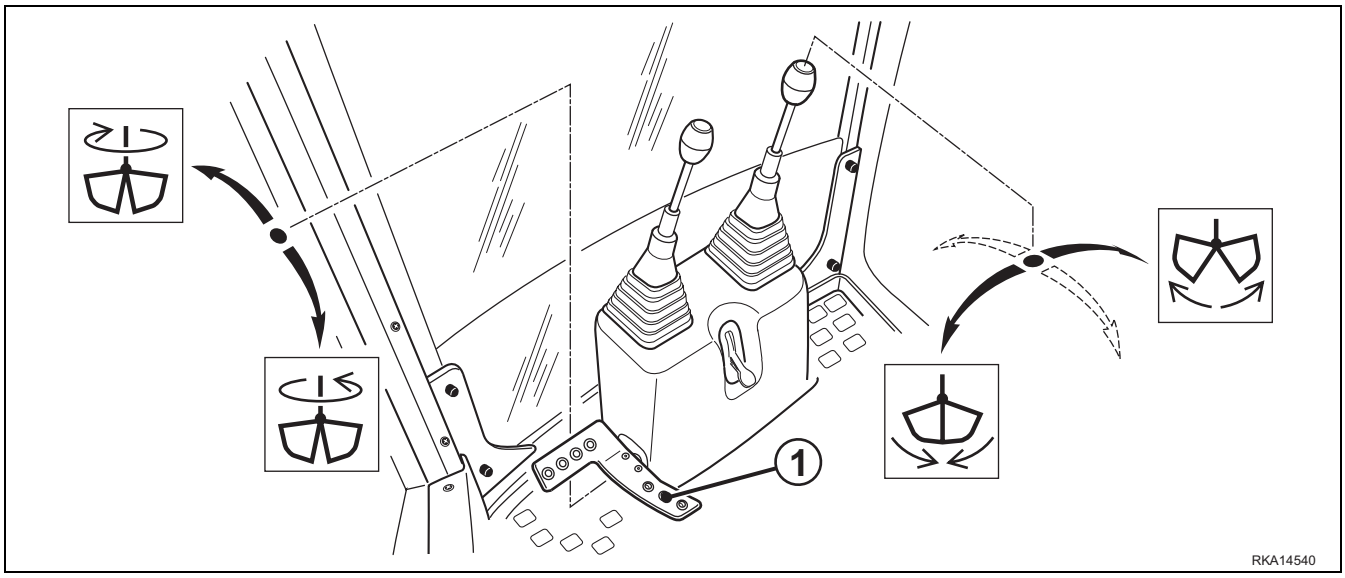

6.9.1.2 CONTROL (version with servo-assisted backhoe)

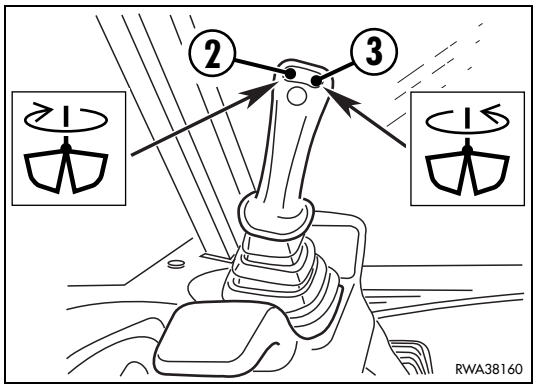

In the version with servo controls, the rotary movements of the clamshell bucket are achieved via the buttons (2) and (3) positioned on the left joystick lever.
The movements of the main equipment (boom, arm and boom swing) remain unchanged.
The circuit used for opening and folding the standard bucket is used also for opening and closing the clamshell bucket, excluding the control cylinder.
See "3.3.6.1 pos. 18/19 - BACKHOE CONTROL LEVERS (version with servo controls)" and "6.9.2 INSTALLING THE CLAMSHELL BUCKET".
The swing movements are the following:

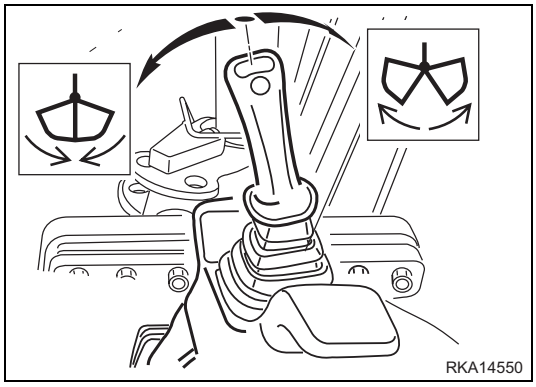

1 - Clockwise swing, obtained by pressing the push button (2).
2 - Counterclockwise swing, obtained by pressing the push button (3).

IMPORTANT

- **The clamshell bucket controls are inhibited when the safety button is in locking position (see "3.3.2 pos. 12 - SERVO CONTROL LOCKING BUTTON").**

6.9.2 INSTALLING THE CLAMSHELL BUCKET

WARNING

- **The machine must be parked on a level surface, with the front equipment resting on the ground.**
- **When the coupling pins are removed or installed, chips may come off; always use gloves, goggles and helmet.**
- **The change of the equipment must be carried out by two operators, who must decide together the words and signals to be used during work.**
- **Avoid using your fingers to align the holes, since they may be injured or even cut off.**
- **Completely release the residual pressure that may be present in the pipes.**

To install the revolving clamshell bucket, proceed as follows:

1 - Remove the standard bucket from the backhoe (see "3.13.4.1 CHANGING THE BACKHOE BUCKET").

2 - Retract the bucket control piston completely.

3 - Connect the clamshell bucket to the arm.

4 - Stop the machine and move the controls in all directions to release the residual pressure.

IMPORTANT

- **If the machine is equipped with backhoe servo controls, to eliminate the residual pressure proceed as follows:**
  - **1 - With the engine at rest, turn the ignition key to position «I».**
  - **2 - Press the servo control locking button and make sure that the LED is off (release position) (see "3.3.2 pos. 12 - SERVO CONTROL LOCKING BUTTON").**
  - **3 - Shift the backhoe control levers more than once and press the clamshell bucket swing buttons.**
  - **4 - Turn the ignition key to position «O».**

5 - Mechanically lock the standard bucket thrust lever, in such a way as to lock the piston at the end of stroke.

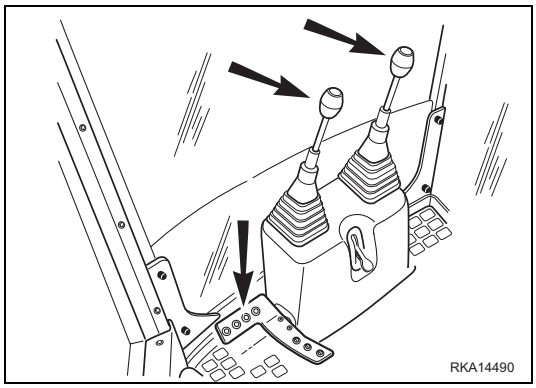

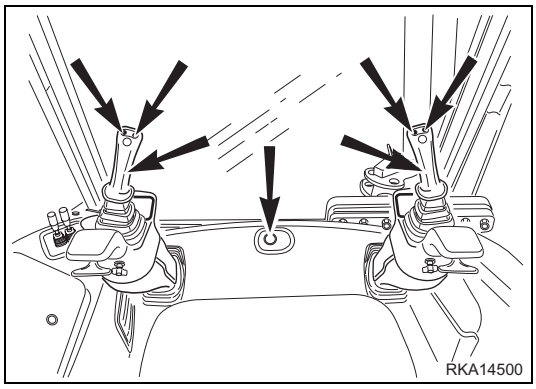

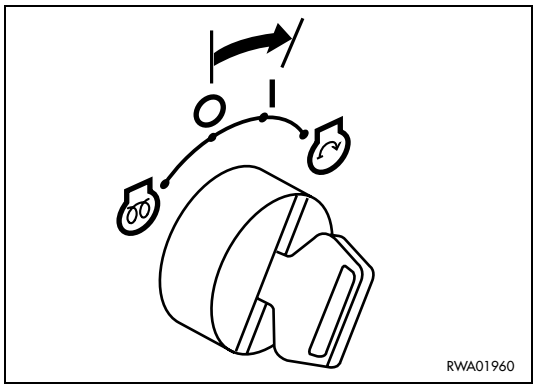

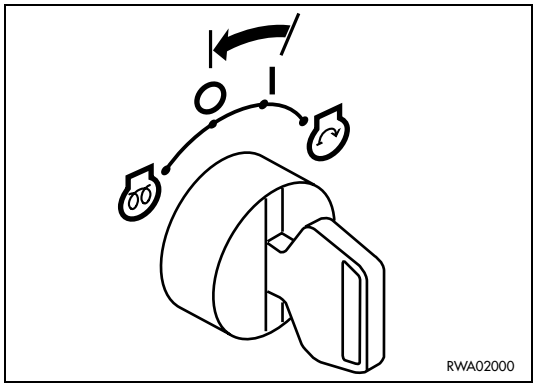

CAUTION

- **During the following steps, take care to prevent any impurities from getting into the pipes and the cylinder.**
- **If any oil has been spilled, wipe it up immediately, in order to prevent the surface from getting slippery.**

FOR STANDARD ARM (FIG. A)

6 - Disconnect the pipes (2-3) that operate the piston from the bucket cylinder (1) and seal the cylinder couplings (4).

FOR TELESCOPIC ARM (FIG. B)

6 - Disconnect the pipes (2-3) that operate the piston from the bucket cylinder (1) and seal the cylinder couplings (4).

7 - Connect the pipes disconnected from the cylinder to the couplings for the opening and folding of the clamshell bucket.

8 - Remove the plugs from the rigid pipes of the system and connect the pipes.

9 - Start the machine and lift the clamshell bucket a few centrimetres from the ground.

10 - Open, fold and swing the bucket several times, in order to check the tightness of the system.

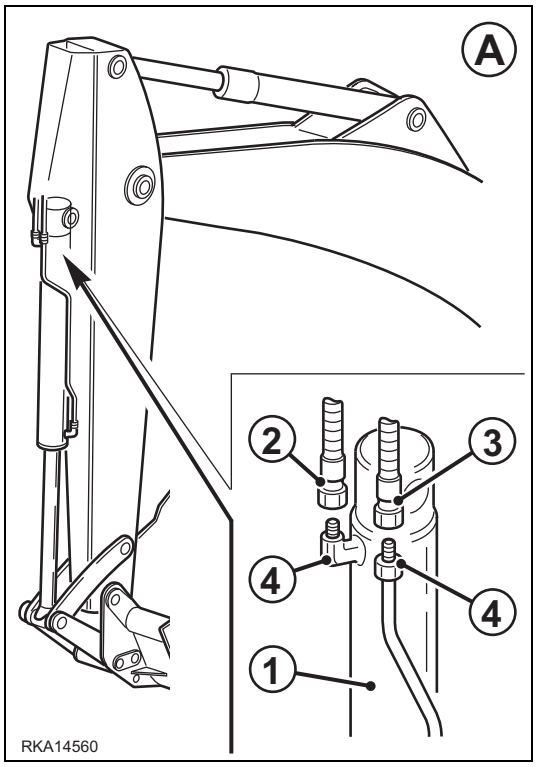

WARNING

- **Wear thick gloves and safety goggles during this check.**
- **To check the system for leaks, use a piece of cardboard or a wooden board.**

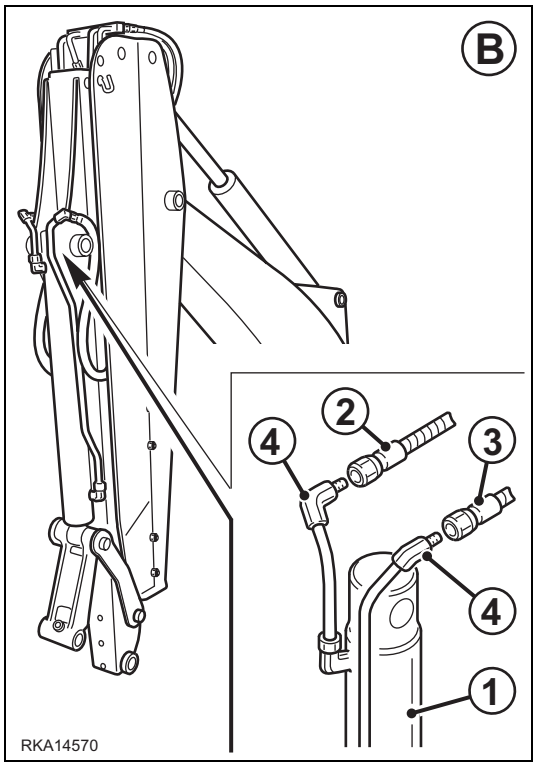

6.9.3 USING THE CLAMSHELL BUCKET

Consult the specific operation manual.

6.9.4 MAINTENANCE

The hydraulic system does not require any maintenance operation and inspection other than those prescribed for the machine.
Regarding the maintenance operations required for the clamshell bucket, see the specific operation manual.

6.10 CONFIGURATION FOR THE USE OF THE HAND HYDRAULIC HAMMER

WARNING

- **The hand hydraulic hammer is very noisy; always wear headphones when using it.**
- **The hand hydraulic hammer transmits intense vibrations that may cause psychical and physical stress to the operator; be extremely careful especially at the end of work and have short rests when you feel that you are losing sensibility in the upper limbs.**

6.10.1 DESCRIPTION AND CONTROL

The machine can be provided with delivery (1) and return (2) couplings for the use of a hand hydraulic hammer; the connection to the machine is made up by two flexible pipes (3).
The hammer circuit is separated from the normal circuits of the machine by means of a solenoid valve controlled by a push button positioned on the side dashboard.
The operation of the push button (4), which includes a connection warning light, energizes the solenoid valve that permits the flow of the oil necessary for the operation of the hammer; if the push button (4) is pressed a second time, the solenoid valve is deenergized and the oil flow is interrupted.
For operation, the hammer is provided with a specific control. (See the specific operation manual).

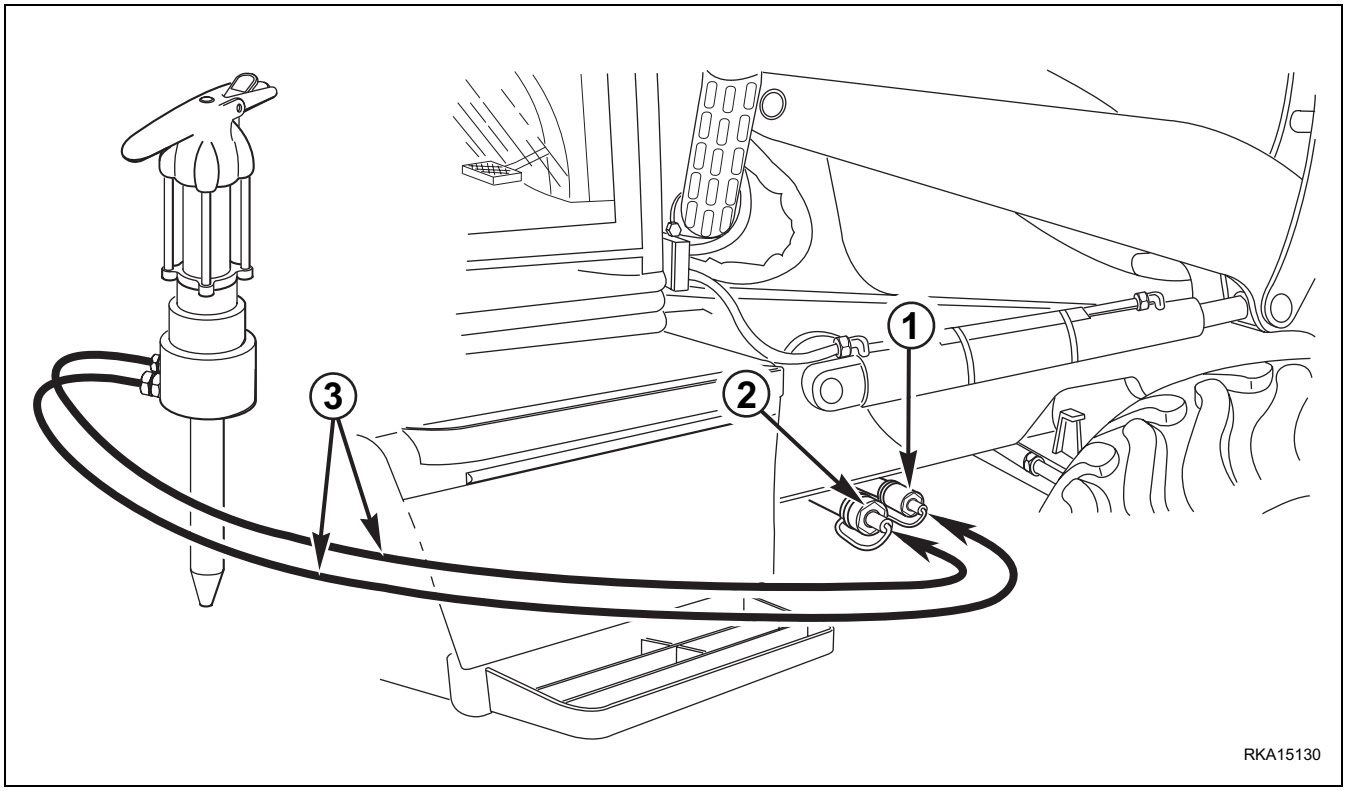

6.10.2 INSTALLING AND REMOVING THE HAND HAMMER

WARNING

- **The connection and removal of the hammer must be carried out with the machine parked on a level surface and the equipment resting on the ground, parking brake applied and control safety locks engaged.**
- **Completely release any residual pressure from the pipes before connecting or disconnecting the hammer.**
- **If any oil has been spilled, wipe it up immediately, in order to prevent the surface from getting slippery.**

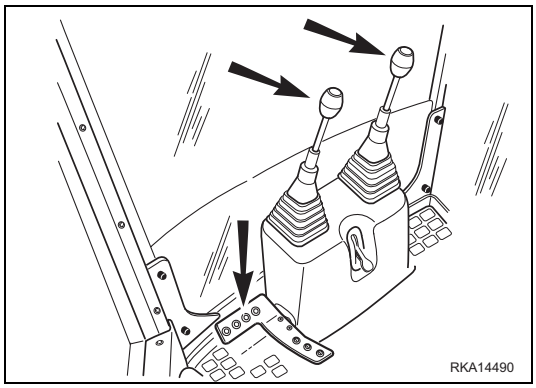

6.10.2.1CONNECTING THE HAND HAMMER

To connect the hammer, proceed as follows:

1 - Stop the engine and move the hydraulic controls in all directions, in order to completely release the residual pressure present in the circuits of the machine.

2 - Turn the ignition key to position «**I**» and press the hammer control push button (4) to release the residual pressure from the hammer delivery pipe.

3 - Turn the ignition key to position «**O**».

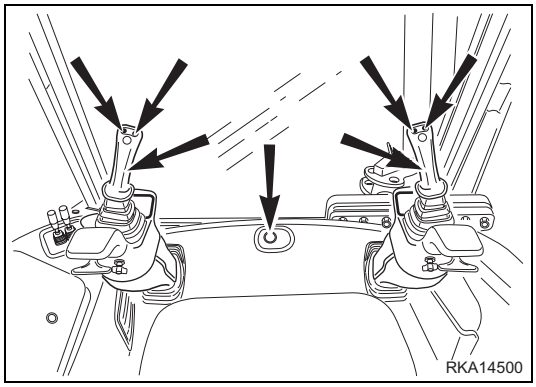

IMPORTANT

- **If the machine is equipped with backhoe servo controls, to eliminate the residual pressure proceed as follows:**
  - **1 - With the engine at rest, turn the ignition key to position «I».**
  - **2 - Press the servo control locking button and make sure that the LED is off (release position) (see "3.3.2 pos. 12 - SERVO CONTROL LOCKING BUTTON").**
  - **3 - Move the backhoe control levers more than once and press the hammer control button (4) to release the residual pressure from the hammer delivery pipe.**
  - **4 - Turn the ignition key to position «O».**

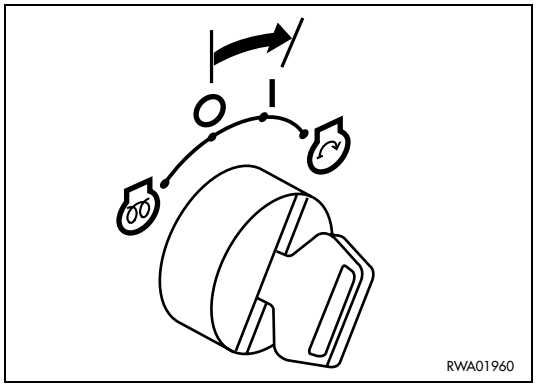

4 - Make sure that the couplings are perfectly clean and connect the hammer.

5 - Start the engine and press the push button (4) to enable the hammer circuit.

6 - Increase the engine speed to the rpm indicated in the technical data by means of the hand accelerator and then start working.

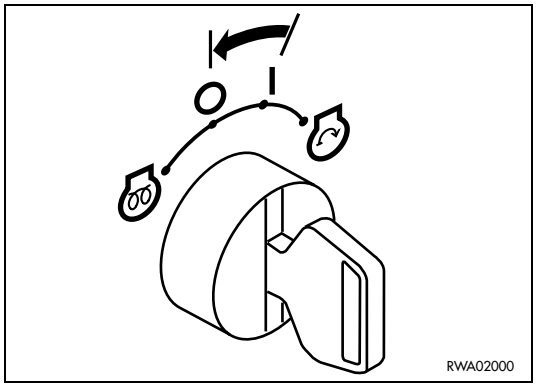

6.10.2.2REMOVING THE CONNECTIONS

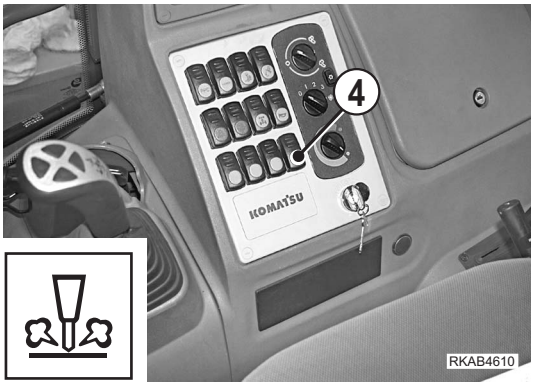

At the end of work, proceed as follows:

1 - Press the push button (4) to disconnect the circuit, reduce the engine rpm and stop the engine.

2 - Move the hydraulic controls more than once in all directions, in order to release any residual pressure from the circuits of the machine.

3 - Turn the ignition key to position «**I**» and press the hammer control push button (4) to release the residual pressure from the hammer delivery pipe; after releasing the pressure, press the push button (4) again to disconnect the circuit.

4 - Turn the ignition key to position «**O**».

IMPORTANT

- **If the machine is equipped with backhoe servo controls, to release the residual pressure from the circuits follow the procedure indicated in the previous paragraph "6.10.2.1 CONNECTING THE HAND HAMMER"".**

5 - Disconnect the hammer.

CAUTION

- **If quick couplings are not provided, place sealing plugs with the relevant gaskets on the couplings of the machine and of the hammer.**

WARNING

- **Make sure that the plugs are properly tightened and that there are no leakages; if the circuit is inadvertently pressurized, small leakages can be turned into thin jets that may perforate the skin or injure the eyes.**
- **Always wear thick gloves and safety goggles to carry out this check.**
- **To check the system for leaks, use a piece of cardboard or a wooden board.**

6.10.3 USING THE HAMMER

Consult the specific manual.

6.10.4 MAINTENANCE

The hydraulic system does not require any maintenance operation and inspection other than those prescribed for the machine.
Regarding the maintenance operations required for the hammer, see the specific operation manual.

6.11 LOAD STABILIZER SYSTEM (LSS) (Optional)

CAUTION

- **Never operate the load stabilizer system while using the backhoe.**

The load stabilizer system (LSS) improves the performance of the machine during travel, regardless of the type of terrain and of the bucket load. It reduces the oscillations while travelling and while carrying loads, at the same time increasing productivity and the operator's comfort. It also reduces to a minimum the impact forces to which the machine may be subjected. When the load stabilizer system is in operation, the loader pressure in low position is limited to that supplied by the weight of the arm and the bucket. The bucket weight is hydraulically cushioned when the machine is moving. To activate the load stabilizer system (LSS), press the switch positioned on the side instrument panel (see "3.3.2 pos. 21 - LOAD STABILIZER SYSTEM SWITCH "LSS" (if provided)").

IMPORTANT

- **If the machine is equipped with safety valves (see "3.3.2 pos. 20 - ELECTRIC SAFETY VALVE SWITCH (if installed)") on the front loader, make sure that they are disconnected.**

When the operation of the system is not required any longer, move the switch back to the neutral position (LED off).

6.11.1 LOAD STABILIZER SYSTEM (LSS) ACCUMULATOR

CAUTION

- **If it is necessary to repair or change the accumulator of the load stabilizer system, contact your Komatsu Dealer. Failure to comply with this instruction may cause serious injury and even death.**

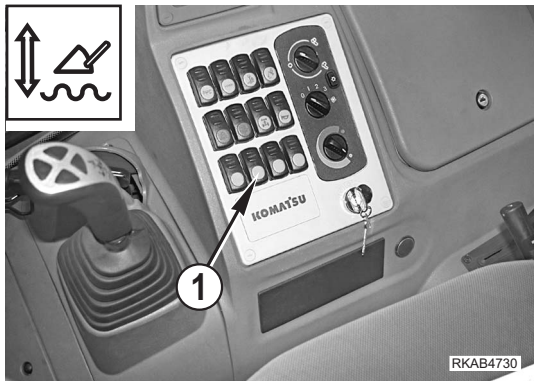

PRESSURIZING THE LOAD STABILIZER SYSTEM (LSS)

1 - Every time you start the machine or after pauses lasting more than 30 minutes, press the upper part of the switch (16) and at the same time lift the loader to the end of stroke, thus reaching the maximum pressure in the system; in this condition, release the switch (16).

IMPORTANT

- **This operation pressurizes the LSS system and therefore ensures optimal performance.**
- **The release of the switch (16) and its automatic return to the neutral position interrupt the pressurization of the system, but don't connect the system.**

2 - To connect the system, lower the loader and press the lower part of the switch (16), which remains in this position and comes on to confirm that the system is activated.

3 - The system can be disconnected by moving the switch (16) to the neutral position (warning light off).

6.12 REAR EQUIPMENT MECHANICAL QUICK COUPLING DEVICE

WARNING

- **The work equipment coupling and uncoupling operatic must be carried out on a firm and level surface.**
- **The method described is valid for any rear equipm whose operation does not require the use of pressuriz oil.**
- **Before starting work, make sure that the coupling pins completely engaged in the equipment seats.**

The mechanical quick coupling device (1) of the rear equipm has been developed by Komatsu to facilitate the coupling and copuling of the various pieces of equipment.
It is a practical and user-friendly device and therefore it consic ably reduces the time required to change the equipment.
The quick coupling device (1) also allows various type of equ ment to be easily connected to the machine, for example: spe buckets, drills, hydraulic hammers or other equipment, provic that it is authorized by Komatsu.
If necessary, the bucket can be attached to the quick coupling even in reversed position, as shown in Fig. A.
For the assembly or disassembly of the quick coupling device on/from the backhoe arm, keep to the indications given in pa graph "3.13.4.1 CHANGING THE BACKHOE BUCKET".
The quick coupling device (1) features (like for a simple digg bucket) two different positions for the coupling to the backh which can be selected according to the operation to be perform and to the equipment to be used:

- **Pos.1:** Normal digging position
- **Pos.2:** Indicated for operations on vertical walls, ensures maximum swing and the maximum digging height along wall

IMPORTANT

- **The slot (C) serves for the insertion of the release lever a must always be positioned on the outside of the machi as shown in Fig. B.**
  For any further information, see "6.12.1 EQUIPMENT CC PLING AND RELEASE PROCEDURE".

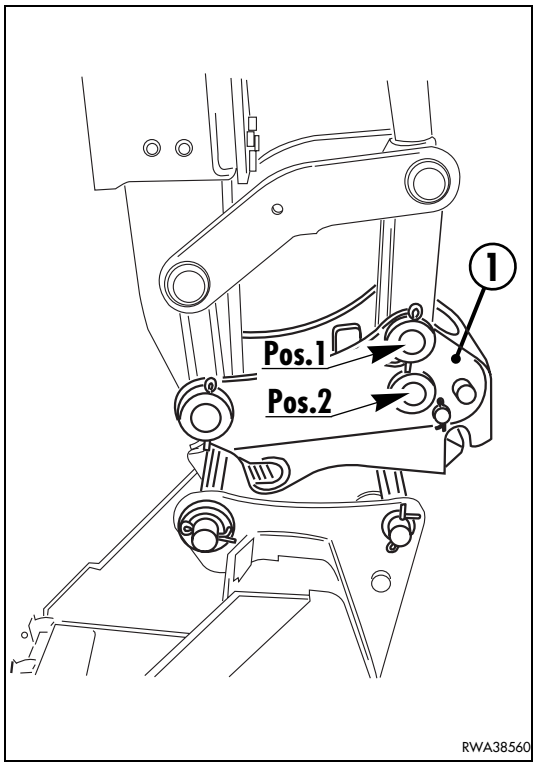

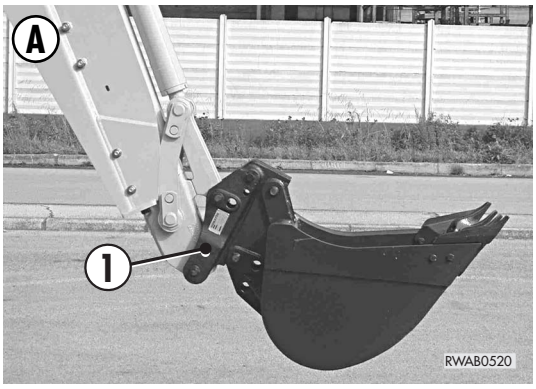

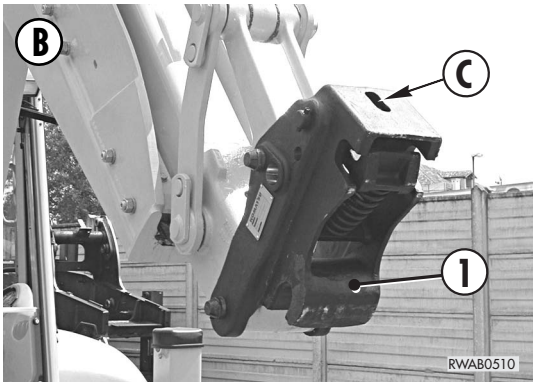

6.12.1 EQUIPMENT COUPLING AND RELEASE PROCEDURE

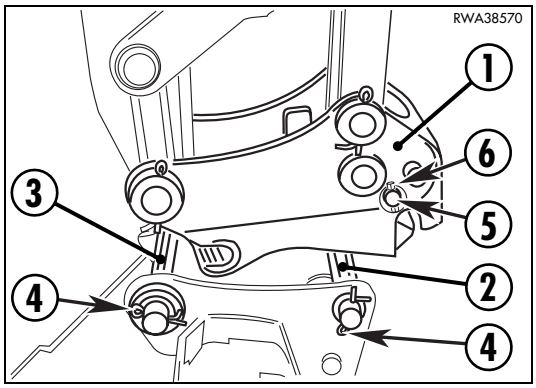

WARNING

- **When the coupling pins are removed or installed, chips may come off; always use gloves, goggles and helmet.**
- **The change of the equipment must be carried out by two operators, who must decide together the words and signals to be used during work.**
- **Avoid using your fingers to align the holes, since the may be injured or even cut off.**

The following description illustrates by way of example the coupling and release procedure of a standard digging bucket. After installing the quick coupling device (1) on the backhoe arm, proceed as indicated below.

- **Coupling procedure:**

1- Position the bucket on the ground, taking care to choose a level surface and directing the bucket so that its flat part rests on the ground.

2 - Insert the pins (2) and (3), in this order, in the apposite coupling holes in the bucket. Lock the pins (2) and (3) with the relevant safety retainers (4).
Clean the pins (2), (3) and the bushings carefully before inserting them in the bucket and, if necessary, grease them slightly.

3 - Remove the safety pin (5) with the relevant retainer (6) from the quick coupling (1).

4 - Move the arm near the bucket and with a simple folding movement engage the front pin (2) with the quick coupling (1).

5 - Slightly lift the bucket, making sure that it is perfectly coupled with the pin (2).

6 - Engage the coupling pin (3) with the quick coupling (1), using the bucket folding hydraulic movement. Once the bucket has been coupled, make sure that it is perfectly engaged and insert the safety pin (5) in the apposite hole in the quick coupling (1). Fit the retainer (6) in its place.

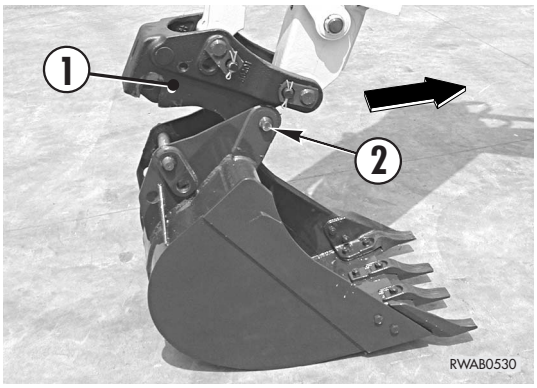

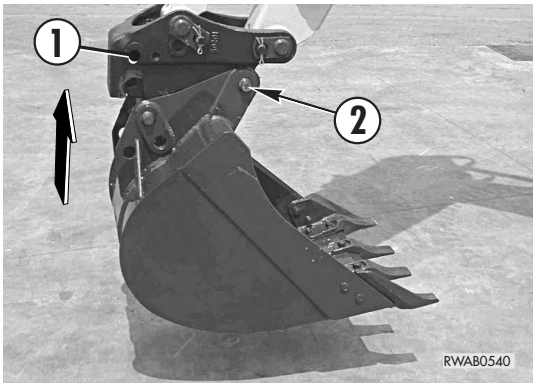

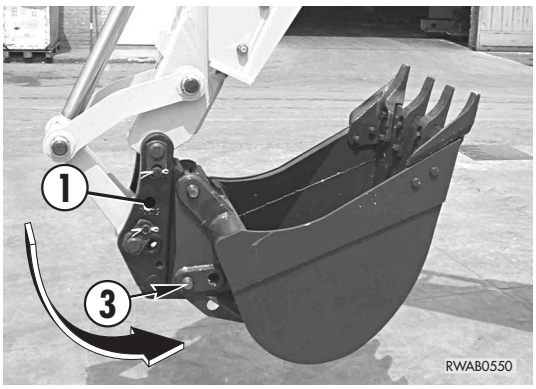

IMPORTANT

- **The engagement of the bucket in the quick coupling must always take place first with the pin (2) and successively with the pin (3).**

CAUTION

- **Before starting work the operator must make sure that the bucket is correctly connected to the quick coupling.**

- **Release procedure:**

1 - Remove the safety pin (5) after removing the relevant retainer (6).

2 - Slightly lift the bucket from the ground and insert the release lever (9) in the apposite hole in the quick coupling (1).

3 - Exert a downward pressure with the release lever (9), until the coupling pin (3) disengages from its seat.

4 - Rest the bucket onto the ground and disengage the coupling pin (2) from the bucket, using the bucket control levers.

5 - Insert the safety pin (5) with the relevant retainer (6) in the quick coupling (1).

6 - Store the release lever (9) in the apposite space inside the cab.

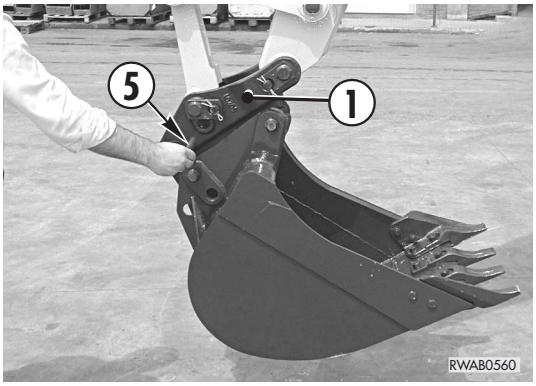

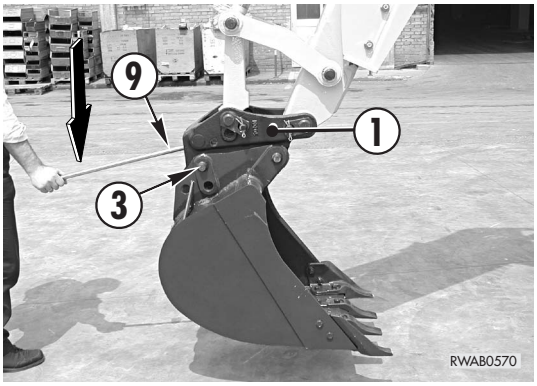

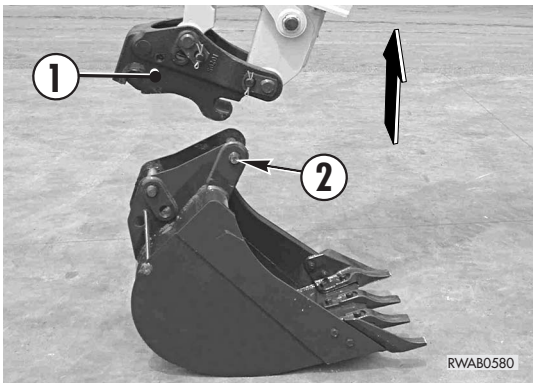

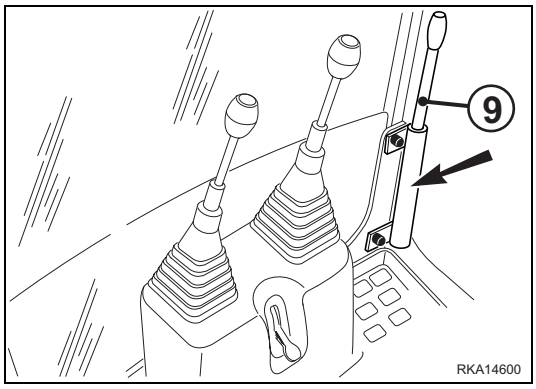

WARNING

- **Be particularly careful when releasing the equipment from the quick coupling (1).**
  Before definitively releasing the equipment from the quick coupling (1), make sure that the former is positioned in such a way as to constitute no danger for the operator.
  Non-compliance with these rules may lead to serious accidents.

6.12.2 MAINTENANCE

For the various maintenance operations and for the checks to be carried out on the equipment quick coupling device, see the specific manual provided.

© 2005 KOMATSU UTILITY EUROPE S.p.A.
All Rights Reserved
Printed in Europe