https://truckmanualshub.com/

Supplementary Parts Catalogue
Supplementary Parts Catalogue
Supplementary Parts Catalogue
Supplementary Parts Catalogue
475 DI TOTAL

Supplementary Parts Catalogue

475 DI Total

Mahindra

https://truckmanualshub.com/

FOREWORD

We are pleased to present the Supplementary Parts Catalogue for the New Mahindra **"475 DI Total" Tractor.**

This Supplementary Parts Catalogue contains exclusive (uncommon to 475 DI Sarpanch Model) parts used on the above model, for other common parts of 475 DI Sarpanch refer the Regular Parts Catalogue (Part No - 0000MDIPC01).

Some of the parts which are uncommon to 475 DI Sarpanch , but are used on other Mahindra Tractor Models have also been included in this parts catalogue. These parts can be indentified as 'R' Suffix to reference number. The Models on which these parts are used is mentioned in "Used On" column

Symbol "‡" given in the Part Number column denotes, Part is not serviced seperately. Also the remark is given below each page.

Symbol "*" written against Reference Number denotes, Part is Not Illustrated.

In Exploded views, Exclusive / Uncommon Parts are highlighted and the Regular Part are indicated in light shade for ease of understanding.

We hope this Parts Catalogue will serve useful to you. For any further help or query contact at the below mentioned address.

Team Product Support
Customer Care Department
Mahindra & Mahindra Ltd.,
Farm Equipment Sector,
Akurli Road,
Kandivli (E)
Mumbai - 400 101

Parts Number - 475TOTSPC01
August'09

https://truckmanualshub.com/

https://truckmanualshub.com/

INDEX

Description	Page No
Engine	4 - 5
Sleeve Piston & Connecting Rod	4 - 5
Valve Train And Crankshaft Assembly	6 - 7
Fuel Injection System	6 - 7
Clucth Housing & Connections	8 - 9
Drive Shaft Assembly	8 - 9
Transmission Housing	10 - 11
Secondary Shaft Assembly	12 - 13
Primary Shaft & Bevel Gear Assembly	14 - 15
Reverse Gear Assembly	16 - 17
Differential Case Assembly	18 - 19
Differential Lock Assembly	20 - 21
Main PTO Assembly	22 - 23
Final Drive Housing	24 - 25
Rear Axle Assembly	26 - 27
Rail Housing Cover Assembly	28 - 29
Rail Assembly	30 - 31
Carraro Brake Assembly	32 - 33
Hydraulic Housing Assembly	34 - 35
Hydraulic Rockshat & Cylinder Assembly	36 - 37
Internal Linkage Assembly	38 - 39
Hydraulic Qudrant Assembly	40 - 41
Top Link Bracket Assembly	42 - 43
Control Valve Assembly	44 - 45
Hydraulic Suction & Pressure Pipe	46 - 47
Three Point Linkages	48 - 49
Front Axle & Support	50 - 51
Seat	52 - 53
Rim & Disc	52 - 53
Fender Assembly	56 - 57
Foot Plate	54 - 55
Battery Mounting	56 - 57
Brake Pedal & Linkages	56 - 57
Product Graphics	58 - 59
Electricals	58 - 59

https://truckmanualshub.com/

Sleeve Piston & Connecting Rod

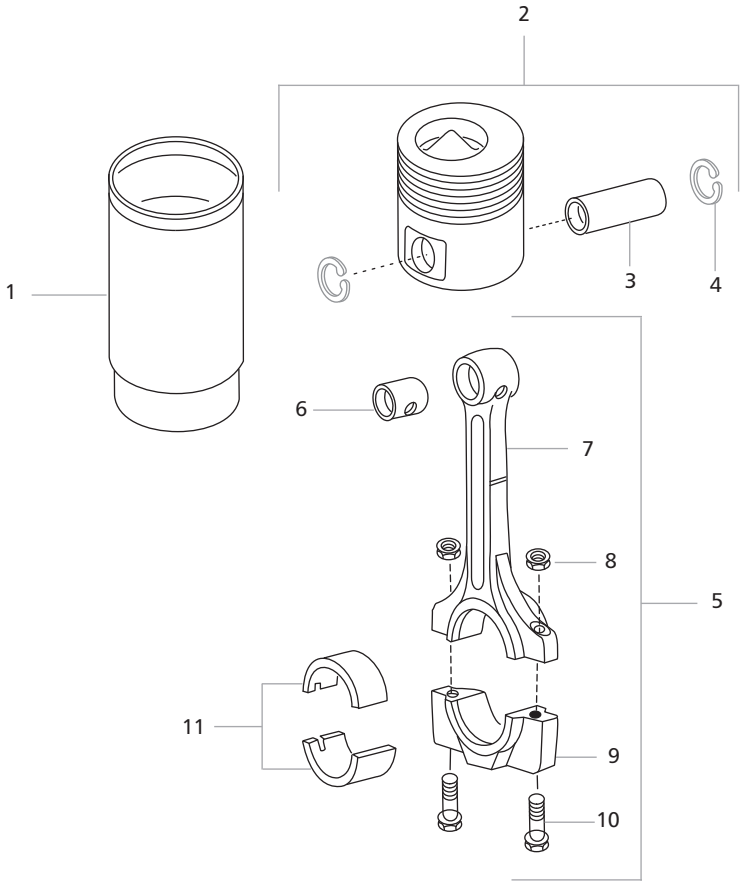

https://truckmanualshub.com/

Part No	Ref.	Description of Part	Qty/ Tractor	Used On
		ENGINE - 1900 R.P.M is same as Used on 475 MKM/DLX		
		Sarpanch & Bhoomiputra Model		
ENG475SFCSPDG	*	ENGINE 4 Cyl - 1900 RPM (Grey Painted)	1	
		KIT FOR REPAIRS		
005554136R91	*	CRANKCASE Major Assembly (Grey Painted)	1	
005554137R91	*	KIT Major Engine Repair	1	
005554138R91	*	KIT Minor Engine Repair	1	

Sleeve Piston & Connecting Rod

005557311R1	1 'R'	SLEEVE Cylinder LS	4	
005557784R91	2 'R'	PISTON with Pin	4	
005550812R1	3 'R'	PIN Piston	4	
005555844R1	4 'R'	CIRCLIP Piston Pin	8	
006005115H91	5 'R'	ROD Connecting Assembly	4	
005557315R1	6 'R'	BUSH Connecting Rod	4	
‡	7 'R'	ROD Connecting	4	
005557317R1	8 'R'	NUT Connecting Rod	8	
‡	9 'R'	CAP Connecting Rod	4	
005557316R1	10 'R'	BOLT Connecting Rod	8	
005554089R91	11 'R'	BEARING Connecting Rod Set - Std	4	
005554240R91	11 'R'	BEARING Connecting Rod Set - U/S 0.25 mm	4	
005554241R91	11 'R'	BEARING Connecting Rod Set - U/S 0.38 mm	4	
005554242R91	11 'R'	BEARING Connecting Rod Set - U/S 0.5 mm	4	
005554243R91	11 'R'	BEARING Connecting Rod Set - U/S 0.76 mm	4	

'*' Part Not Illustrated
'‡' Part Not Serviced Seperately
'R' Regular Part Used

https://truckmanualshub.com/

Valve Train And Crankshaft Assembly

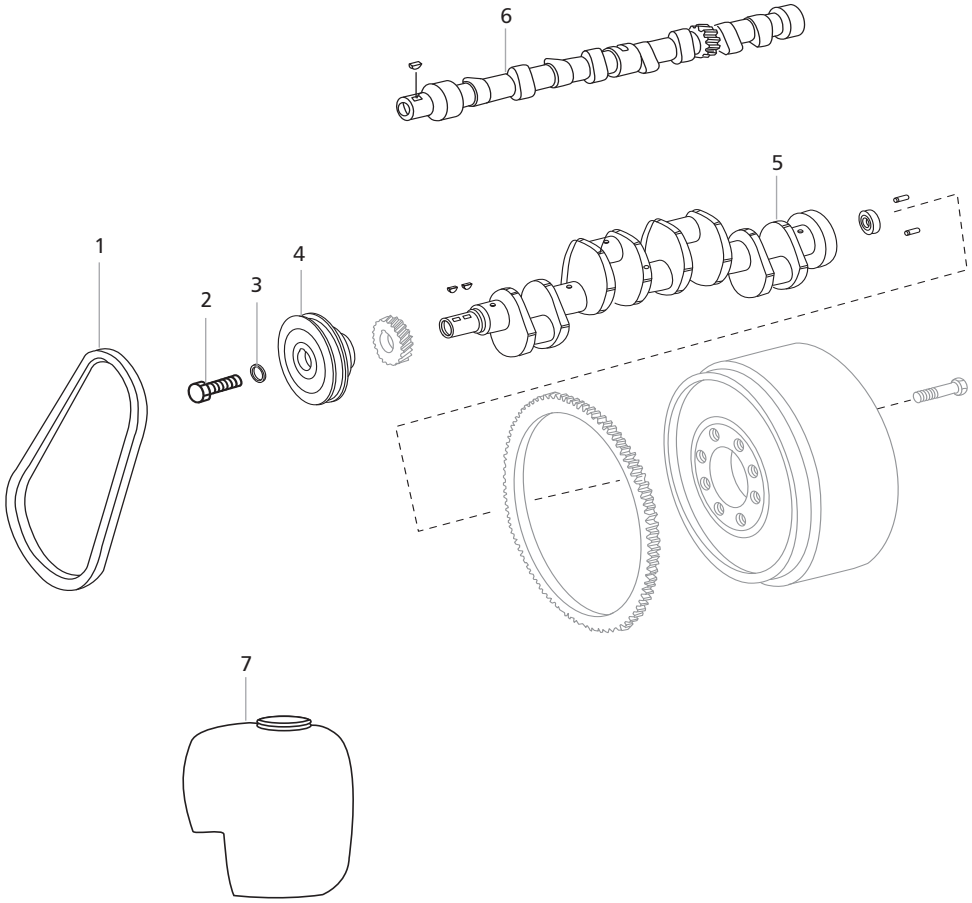

Fuel Injection System

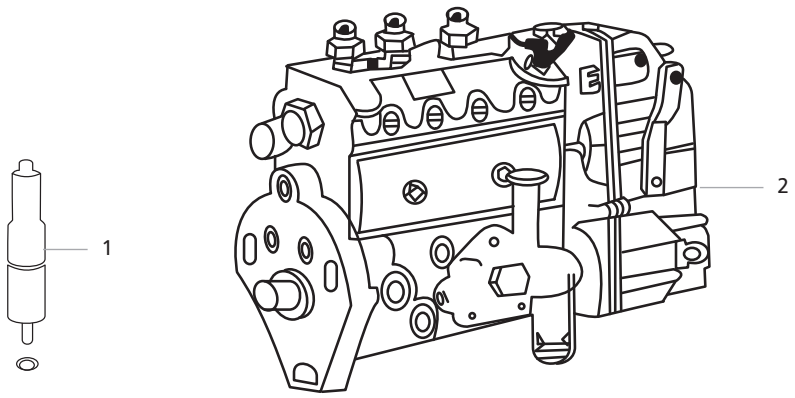

https://truckmanualshub.com/

Valve Train And Crankshaft Assembly

Part No	Ref.	Description of Part	Qty/ Tractor	Used On
006001726A1	1 'R'	BELT Fan Drive	1	
006000260B1	2 'R'	BOLT Pulley Mounting	1	
006000259B1	3 'R'	SPACER Crankshaft	1	
006001723A1	4 'R'	PULLEY Main Drive	1	
006000135R1	5	CRANKSHAFT with Dowel Pin	1	
006000171R1	6	CAMSHAFT	1	
006002260C91	7 'A'	BOTTLE Recovery Assy.	1	
006009846D1	*	CAP Recovery Bottle	1	

Fuel Injection System

006006124B91	1	INJECTOR	4	
O.E Part	2' $'	PUMP Fuel Injection	1	

'*' Part Not Illustrated
'A' Arjun Part Used
'R' Regular Part Used
'$' O.E Part - To be procured from OEM Dealer

https://truckmanualshub.com/

Clucth Housing & Connections

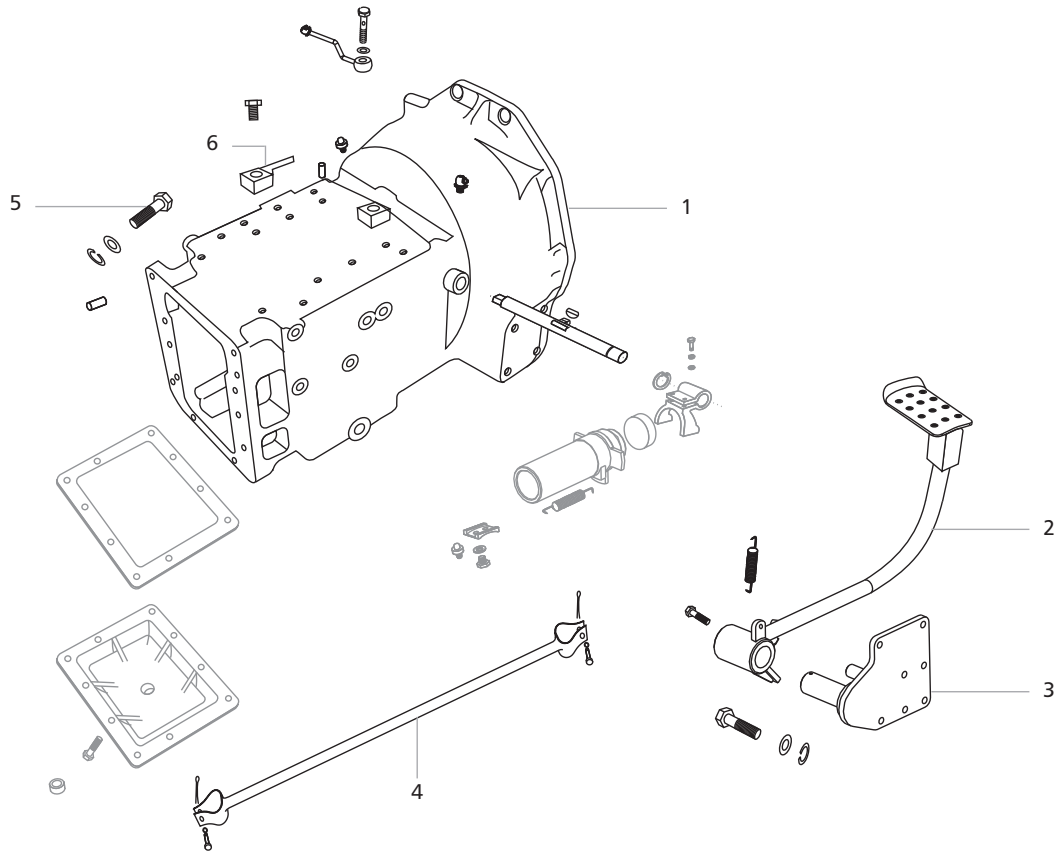

Drive Shaft Assembly

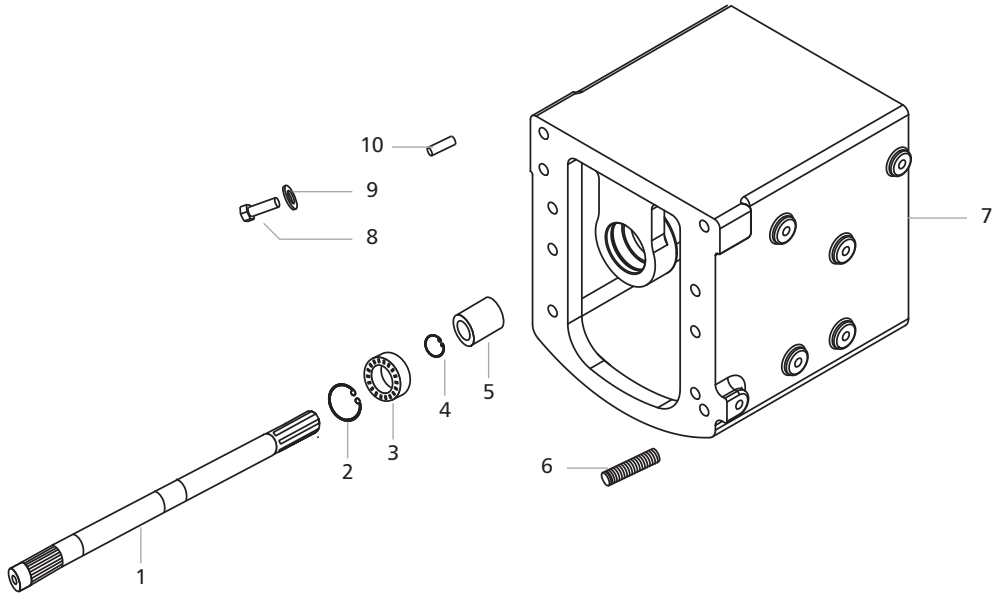

https://truckmanualshub.com/

Clucth Housing & Connections

Part No	Ref.	Description of Part	Qty/ Tractor	Used On
005558519R3	1	HOUSING Clutch	1	
007605237B91	2	PEDAL Clutch Cpte	1	
006506318C91	3 'R'	BRACKET Clutch Pedal Mounting	1	295 & 595 MKM
005556804R1	4 'R'	LINK Connecting Cpte	1	595 DI OIB
000340340R1	5 'R'	BOLT Clutch Housing to Adaptor	8	All Regular Models
006501497C1	6 'R'	LEVER Clutch Shaft	1	595 DI OIB

Drive Shaft Assembly

006506658B2	1	SHAFT Drive - Front	1	
006500225C1	2	CIRCLIP Internal	1	
007200842B1	3 'R'	BEARING Sealed both Side	1	All Regular Models
006506945B1	4	CIRCLIP Internal	1	
006506659B1	5	COUPLING Drive Shaft	1	
007605494B1	6	STUD Transmission Case	16	
006506607B1	7	ADAPTOR Transmission Case to Clutch Housing	1	
000020305E05	8 'R'	BOLT M14	10	All Regular Models
001082017R3	9	WASHER Spring Lock	10	
000020269E05	10 'R'	PIN Dowel	2	All Regular Models

'*' Part Not Illustrated
'R' Regular Part Used

https://truckmanualshub.com/

Transmission Housing

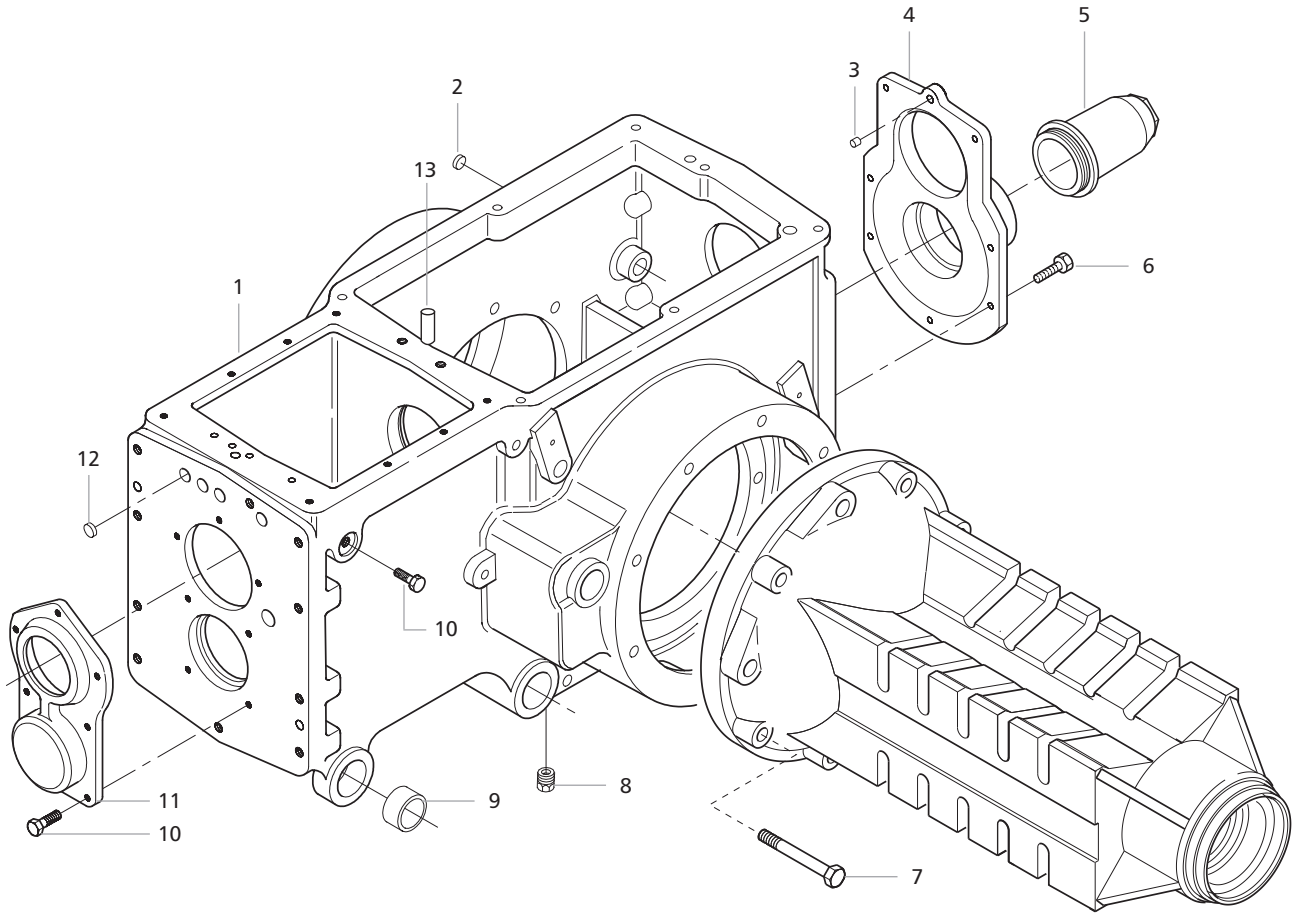

https://truckmanualshub.com/

Transmission Housing

Part No	Ref.	Description of Part	Qty/ Tractor	Used On
006509000B1	1	HOUSING (Case) Transmission - Carraro	1	
006508050B1	2	PLUG	1	
006508043B1	3	PIN Dowel Rear PTO Cover	2	
006508042B1	4	COVER Rear - PTO Retaining	1	
006508044B1	5	COVER Protective - PTO	1	
006508045B1	6	BOLT M10 Rear PTO Cover	7	
006508040B1	7	BOLT M12 Trumpet (Carrier) Mounting	16	
006508046B1	8	PLUG Drain M22	1	
006508047B1	9	BUSH for Brake Shaft	2	
006508049B1	10	BOLT M8 Front Cover	9	
006508048B1	11	COVER Front - Primary & Secondary Shaft Retaining	1	
006508051B1	12	PLUG - Rail Retaining	4	
006508601B1	13	PIN Dowel	1	

https://truckmanualshub.com/

Secondary Shaft Assembly

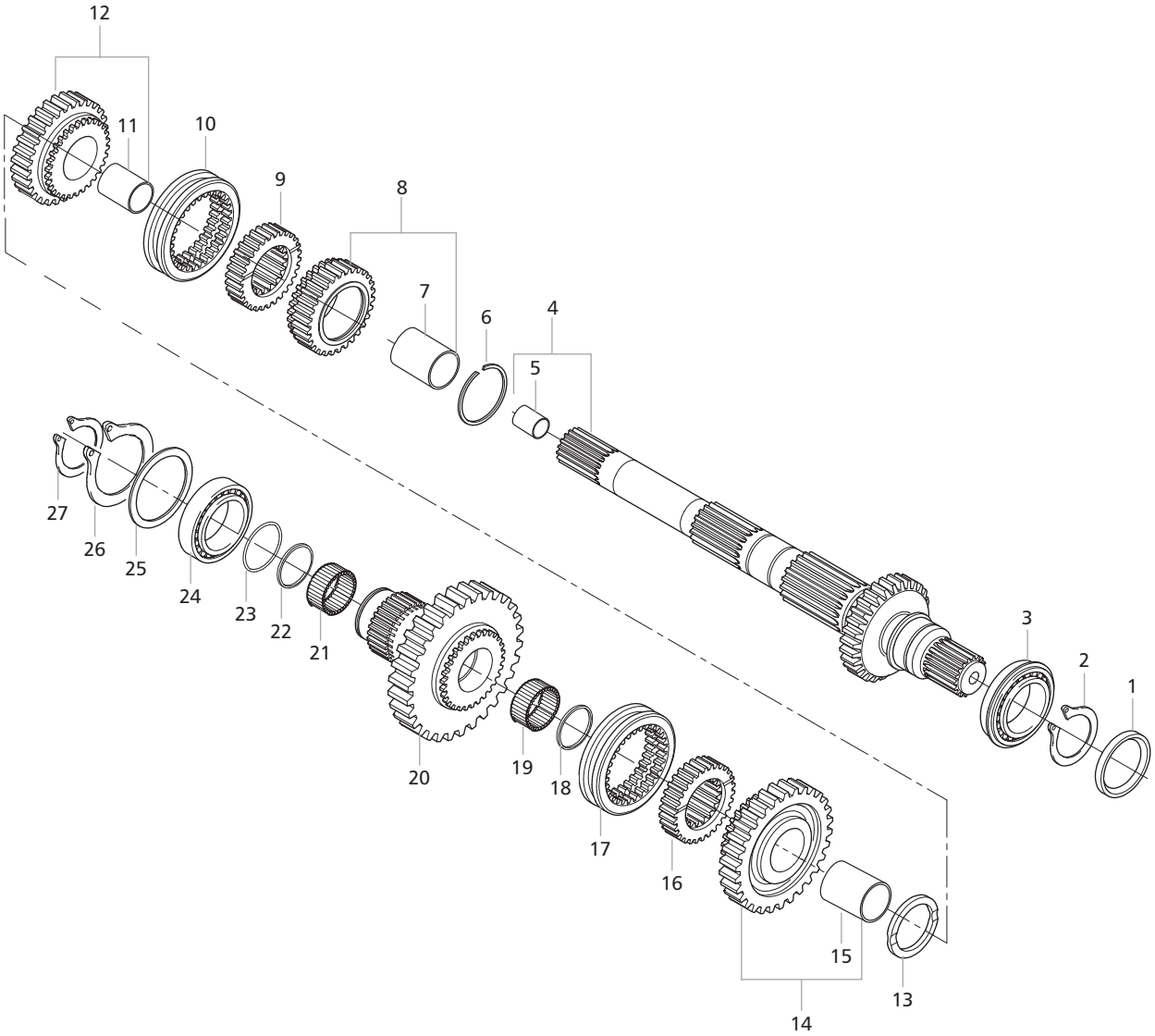

https://truckmanualshub.com/

Secondary Shaft Assembly

Part No	Ref.	Description of Part	Qty/ Tractor	Used On
006508052B1	1	Seal Secondary Shaft	1	
006508053B1	2	RING Snap (Circlip)	1	
006509003B1	3	BEARING Front - Secondary Shaft	1	
006509004B1	4	SHAFT Secondary (Counter Shaft)	1	
006508070B1	5	BUSH Secondary Shaft	1	
006508069B1	6	RING Snap	1	
006508068B1	7	BUSH 1st Speed Driving Gear	1	
006508067B1	8	GEAR Driving 1st Speed	1	
006508066B1	9	GEAR (Hub) for Coupling 1st-2nd Speed Gear	1	
006508065B1	10	SLEEVE Coupling 1st, 2nd, 3rd & 4th	2	
006508056B1	11	BUSH 2nd Speed Driving Gear	1	
006508055B1	12	GEAR Driving 2nd Speed	1	
006508084B1	13	WASHER (Spacer) 2nd & 3rd Speed Driving Gear	1	
006508087B1	14	GEAR Driving 3rd Speed	1	
006508070B1	15	BUSH 3rd Speed Driving Gear	1	
006508089B1	16	GEAR (Hub) for Coupling 3rd-4th Speed Gear	1	
006508065B1	17	SLEEVE Coupling 1st, 2nd, 3rd & 4th	2	
006509022B1	18	SPACER	1	
006508093B1	19	BEARING Needle	2	
006508094B1	20	GEAR Cluster Driving 4th & Hi Low	1	
006508093B1	21	BEARING Needle for Cluster Gear	2	
006509022B1	22	SPACER	1	
006508096B1	23	RING Lock	1	
006508072B1	24	BEARING for Cluster Gear	1	
006508074B1	25	SHIM 0.10 mm	A/R	
006508076B1	25	SHIM 0.30 mm	A/R	
006508078B1	25	SHIM 0.50 mm	A/R	
006508081B1	26	RING Snap (Circlip) - Bigger 85 mm Dia	1	
006508082B1	27	RING Snap (Circlip) - Smaller	1	

https://truckmanualshub.com/

Primary Shaft & Bevel Gear Assembly

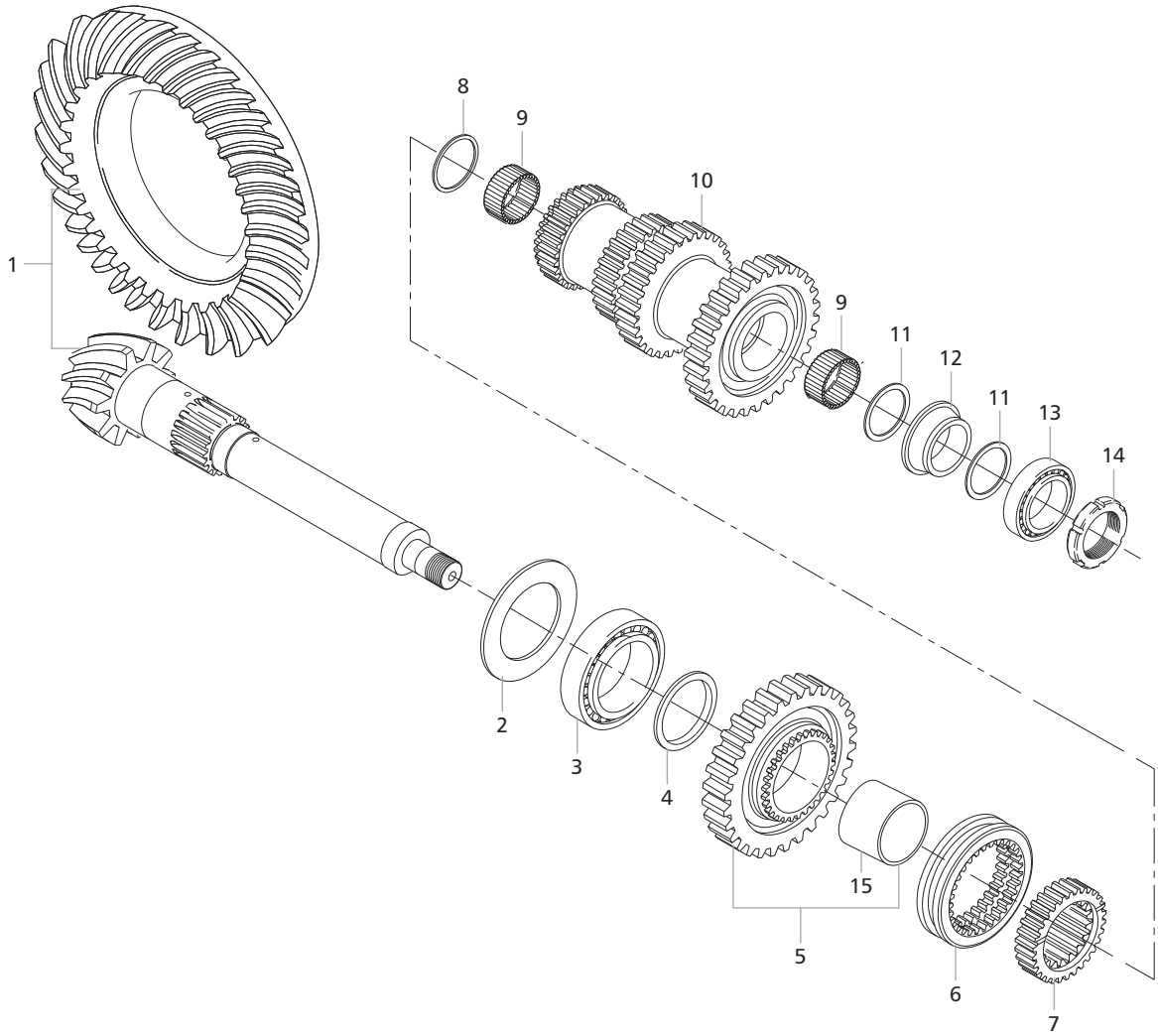

https://truckmanualshub.com/

Primary Shaft & Bevel Gear Assembly

Part No	Ref.	Description of Part	Qty/ Tractor	Used On
006508097B1	1	SET of Two (Bevel Gear & Primary Shaft)	1	
006508098B1	2	SHIM 2.5 mm	A/R	
006508099B1	2	SHIM 2.6 mm	A/R	
006508100B1	2	SHIM 2.7 mm	A/R	
006508101B1	2	SHIM 2.8 mm	A/R	
006508102B1	2	SHIM 2.9 mm	A/R	
006508103B1	2	SHIM 3.0 mm	A/R	
006508104B1	2	SHIM 3.1 mm	A/R	
006508105B1	2	SHIM 3.2 mm	A/R	
006508106B1	2	SHIM 3.3 mm	A/R	
006508107B1	2	SHIM 3.4 mm	A/R	
006508108B1	2	SHIM 3.5 mm	A/R	
006508109B1	3	BEARING Rear Primary Shaft	1	
006508110B1	4	SPACER for Bearing & Gear Driven 4th & Low Speed	1	
006508111B1	5	GEAR Driven 4th & Low Speed	1	
006508112B1	6	SLEEVE Coupling Low & Hi Speed Gear	1	
006508113B1	7	GEAR (Hub) for Coupling Low & Hi Speed Gear	1	
006508115B1	8	WASHER	1	
006508118B1	9	BEARING Needle	2	
006508120B1	10	GEAR Cluster Driven 1st, 2nd, 3rd & 4th - Hi Speed	1	
006508122B1	11	SHIM 0.10 mm - Front Primary Shaft	A/R	
006508124B1	11	SHIM 0.25 mm - Front Primary Shaft	A/R	
006508127B1	11	SHIM 0.30 mm - Front Primary Shaft	A/R	
006508129B1	11	SHIM 0.50 mm - Front Primary Shaft	A/R	
006508131B1	12	SPACER Conical	1	
006508133B1	13	BEARING Front - Primary Shaft	1	
006508135B1	14	NUT Lock Ring	1	
006508136B1	15	BUSH 4th Low Speed Driven Gear	1	

https://truckmanualshub.com/

Reverse Gear Assembly

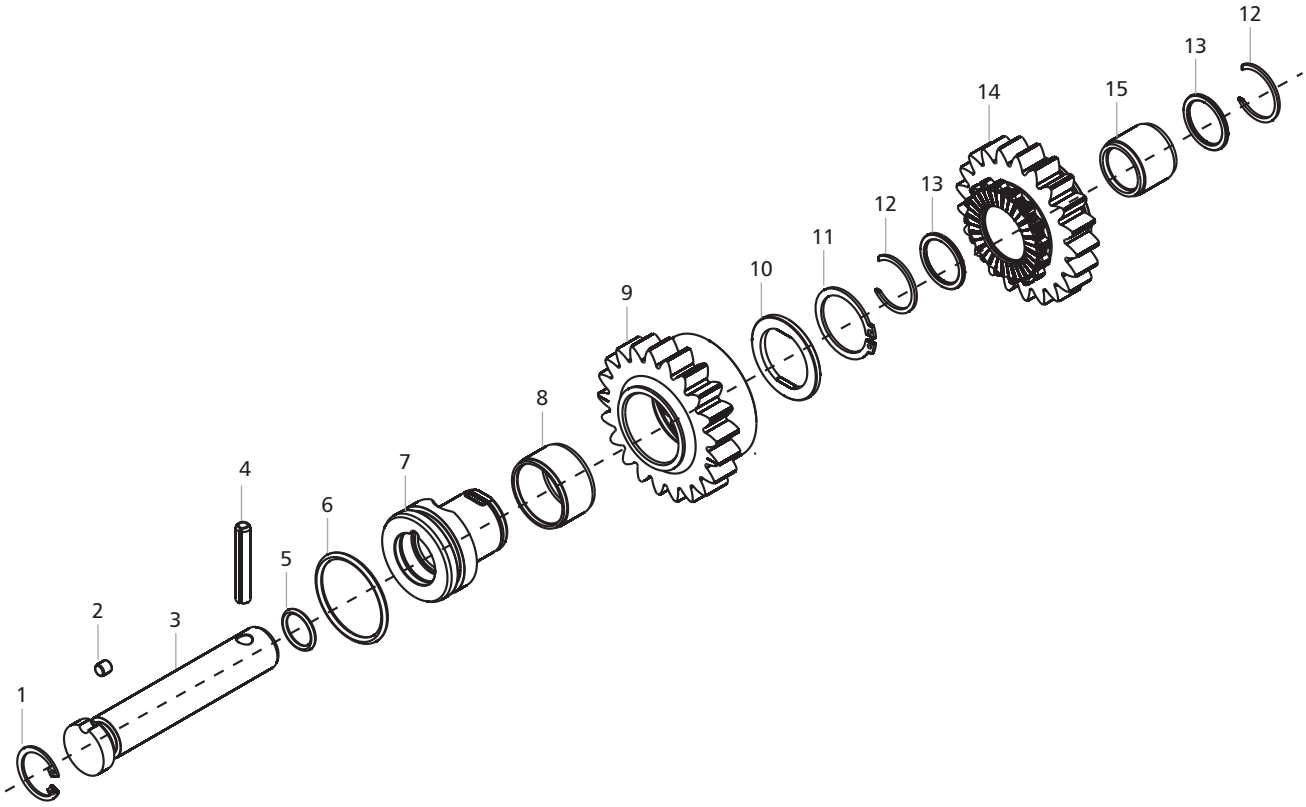

https://truckmanualshub.com/

Reverse Gear Assembly

Part No	Ref.	Description of Part	Qty/ Tractor	Used On
006508157B1	1	RING Elastic	1	
006508159B1	2	ROLLER	1	
006508160B1	3	SHAFT Reverse Idler	1	
006508161B1	4	PIN Roll	1	
006508162B1	5	O' RING for Reverse Idler Shaft	1	
006508164B1	6	O' RING for Reverse Idler Bush	1	
006508166B1	7	BUSH	1	
006508167B1	8	BEARING Needle	1	
006508169B1	9	GEAR	1	
006508170B1	10	SPACER	1	
006508171B1	11	SNAP RING	1	
006508172B1	12	RING Elastic	2	
006508174B1	13	SPACER	2	
006508178B1	14	GEAR	1	
006508176B1	15	BEARING Needle	1	

https://truckmanualshub.com/

Differential Case Assembly

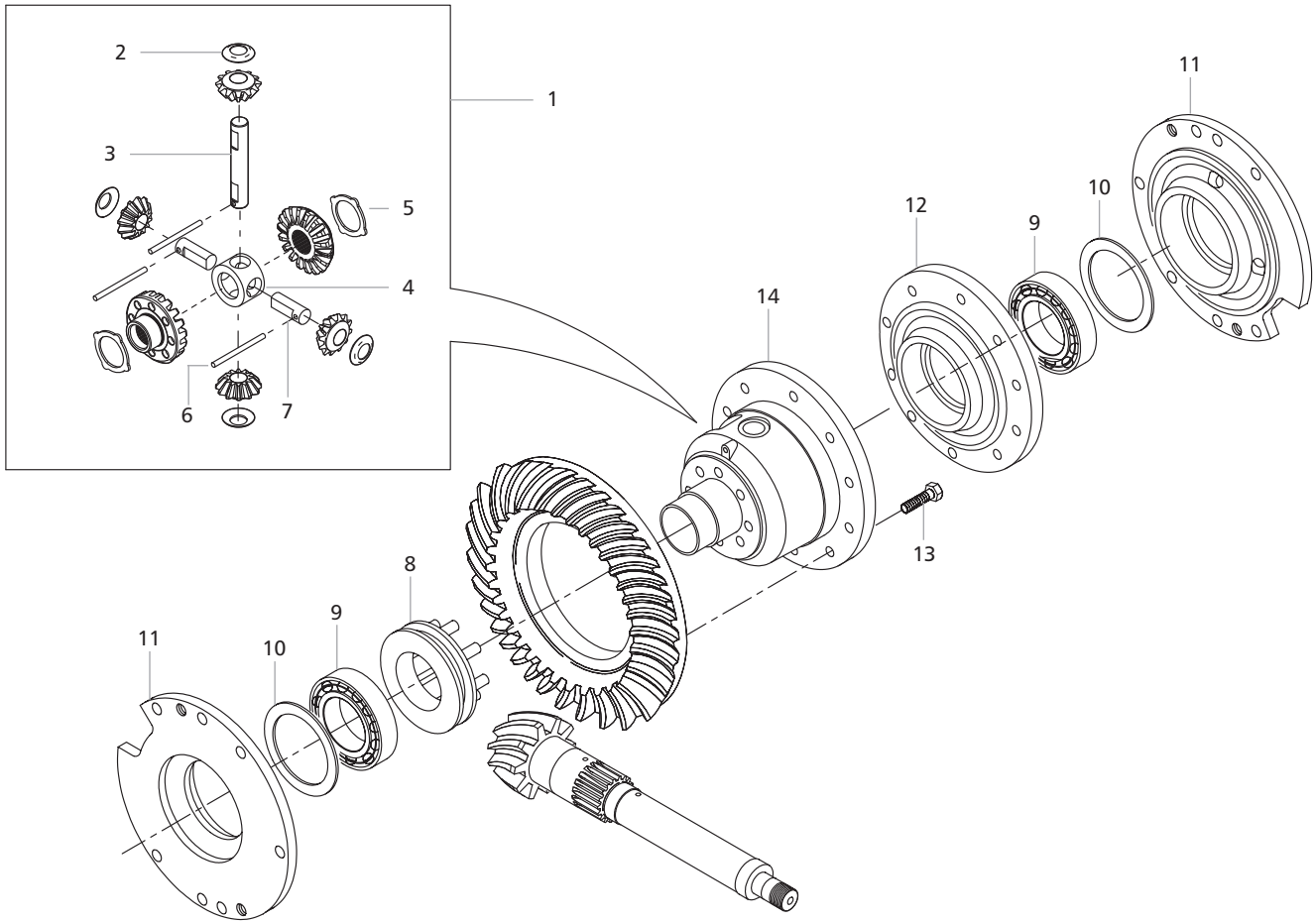

https://truckmanualshub.com/

Differential Case Assembly

Part No	Ref.	Description of Part	Qty/ Tractor	Used On
006508185B1	1	KIT DIFFERENTIAL Gears	1	
006508187B1	2	WASHER for Differential Pinion Gears	4	
006508189B1	3	SHAFT Pinion - Long	1	
006508191B1	4	SPIDER	1	
006509005B1	5	WASHER for Differential Bevel Gear	2	
006508194B1	6	PIN Roll	3	
006508196B1	7	SHAFT Pinion - Short	2	
006508197B1	8	SLEEVE Differential Lock	1	
006508199B1	9	BEARING Differential Case	2	
006508201B1	10	SHIM 0.05 mm	A/R	
006508202B1	10	SHIM 0.10 mm	A/R	
006508204B1	10	SHIM 0.30 mm	A/R	
006508205B1	10	SHIM 0.50 mm	A/R	
006508207B1	11	FLANGE Differential Case Mounting	2	
006509008B1	12	COVER Differential Housing	1	
006508209B1	13	BOLT M10 Differential Case Mounting	10	
006509007B1	14	HOUSING Differential - LH	1	

https://truckmanualshub.com/

Differential Lock Assembly

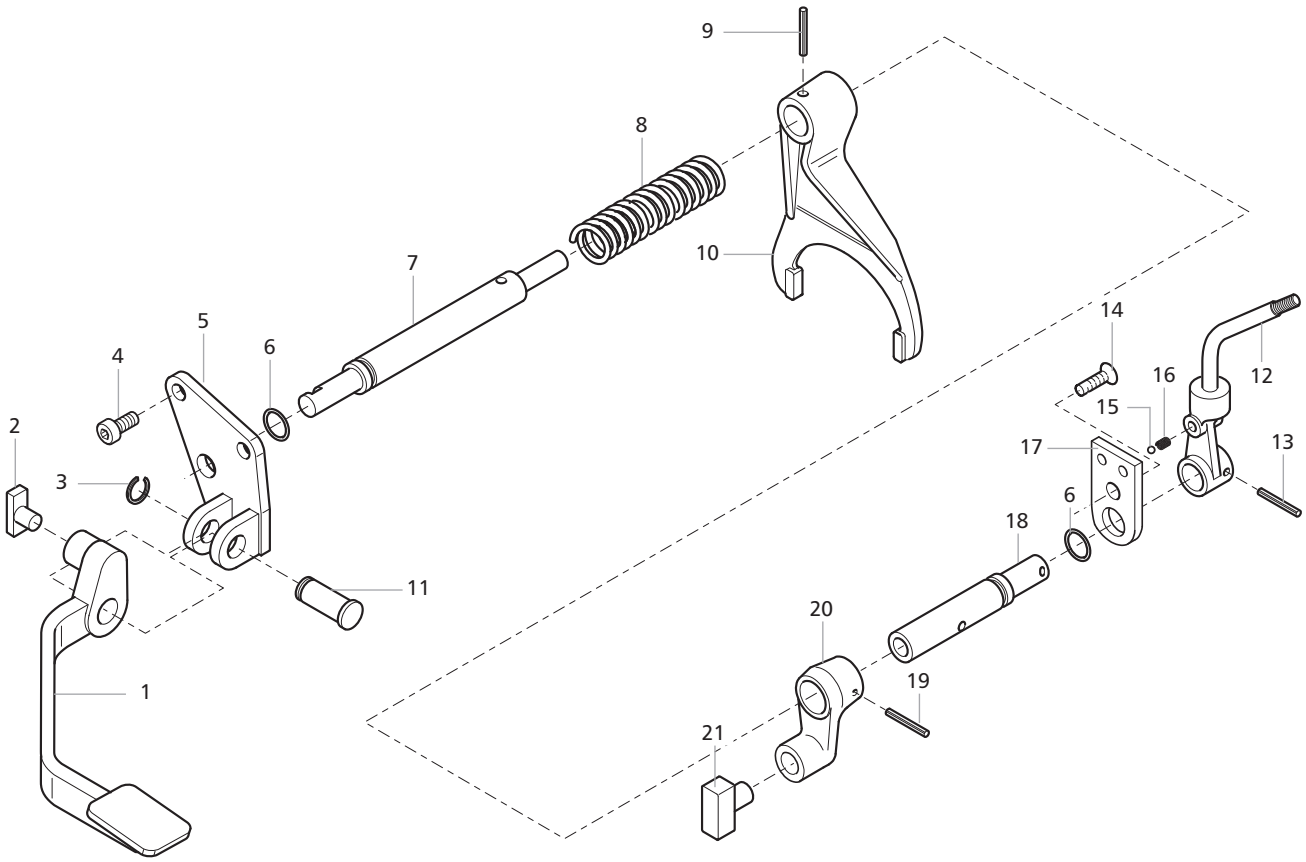

https://truckmanualshub.com/

Differential Lock Assembly

Part No	Ref.	Description of Part	Qty/ Tractor	Used On
006508958B1	1	PEDAL Differential Lock	1	
006508215B1	2	PAD Sliding Shoe	1	
006508227B1	3	RING Elastic	1	
006508226B1	4	BOLT Allen M10	2	
006509006B1	5	SUPPORT Diff. Lock Pedal	1	
006508229B1	6	'O' RING	2	
006508228B1	7	SHAFT Differential Lock	1	
006508230B1	8	SPRING Diff. Lock Shaft	1	
006508231B1	9	PIN Roll	1	
006508232B1	10	FORK Differential Lock	1	
006508225B2	11	PIN Diff. Lock Pedal Mtg.	1	
006508233B1	12	LEVER PTO Control - Outer	1	
006508234B1	13	PIN Roll	1	
006508235B1	14	BOLT M8	1	
006508236B1	15	BALL Steel	1	
006508237B1	16	SPRING	1	
006508238B1	17	PLATE Retaining	1	
006508239B1	18	PIN Control PTO	1	
006508243B1	19	PIN Roll	1	
006508245B1	20	SHIFTER PTO Lever	1	
006508247B1	21	PAD PTO Shifter	1	

https://truckmanualshub.com/

Main PTO Assembly

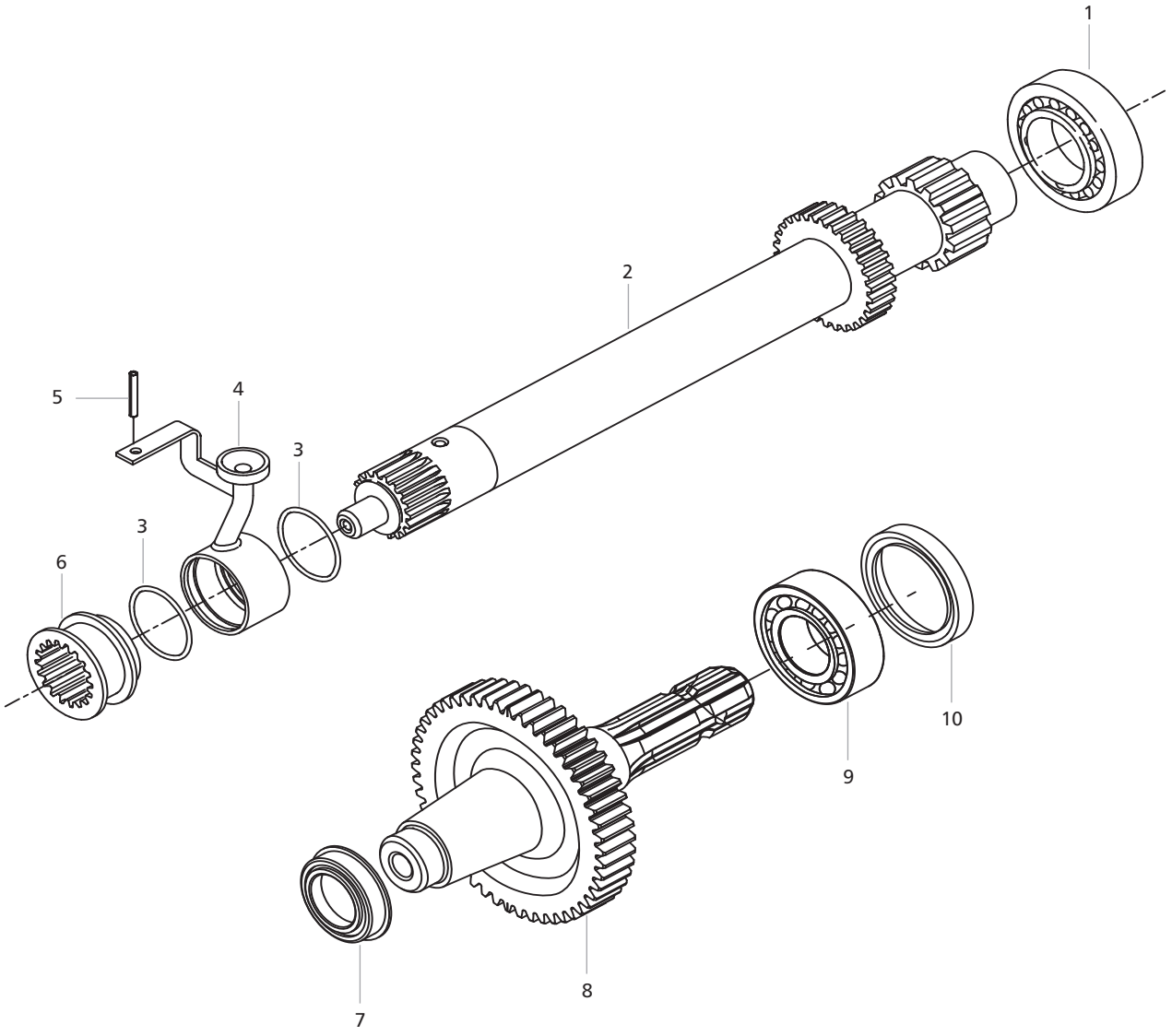

https://truckmanualshub.com/

Main PTO Assembly

Part No	Ref.	Description of Part	Qty/ Tractor	Used On
006508240B1	1	BEARING PTO Shaft Driving	1	
006508241B1	2	SHAFT PTO Driving	1	
006508242B1	3	RING Seal for Lubricating Sleeve	2	
006508244B1	4	SLEEVE Lubricating PTO Shaft	1	
006508248B1	5	PIN Roll	1	
006508249B1	6	SLEEVE Coupling PTO	1	
006508250B1	7	BEARING Front PTO Main Shaft	1	
006508251B1	8	SHAFT PTO - Main	1	
006508252B1	9	BEARING Rear PTO Main Shaft	1	
006508253B1	10	SEAL Oil PTO Main Shaft	1	

https://truckmanualshub.com/

Final Drive Housing

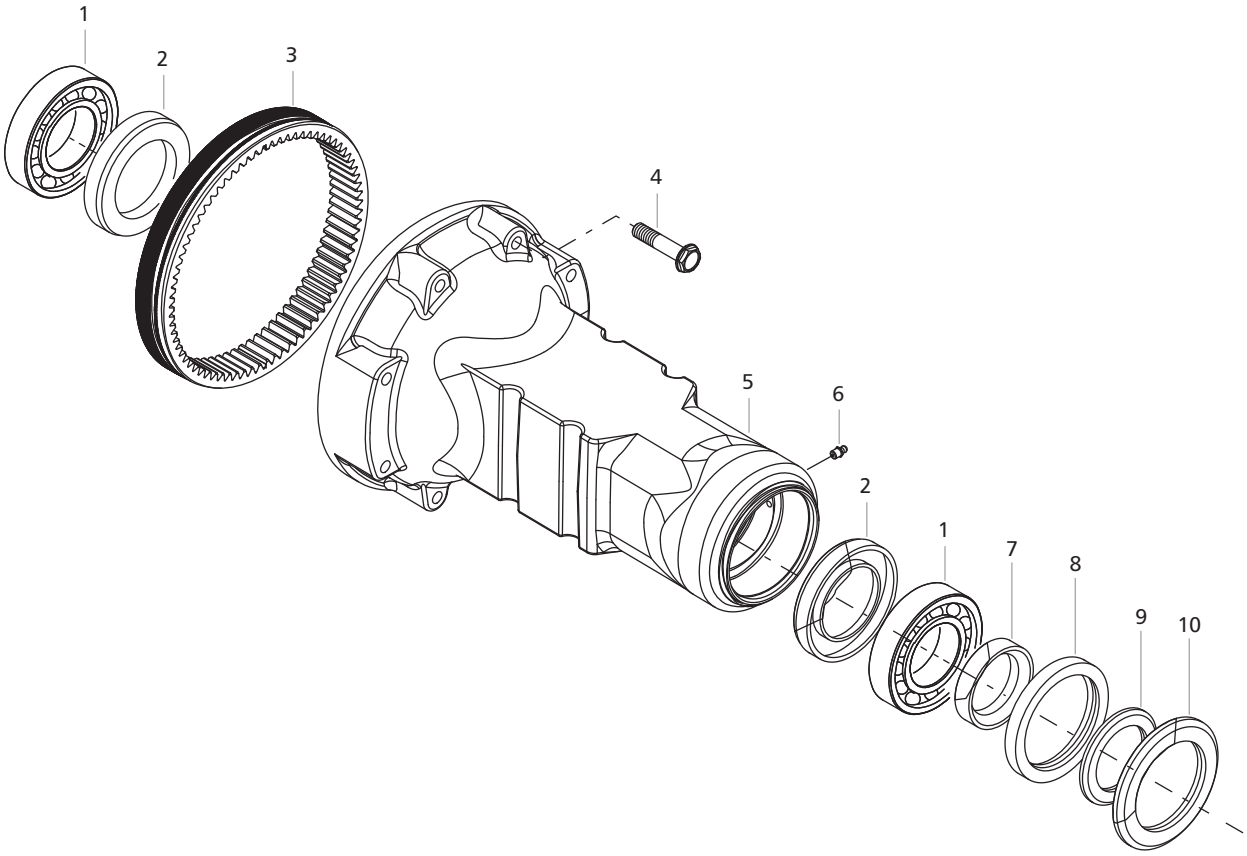

https://truckmanualshub.com/

Part No	Ref.	Description of Part	Qty/ Tractor	Used On
006508254B1	1	BEARING Rear Axle	4	
006508255B1	2	SEAL Rear Axle	4	
006508040B1	4	BOLT Hex Headed Rear Axle Carrier Mounting	16	
006508961B1	5	CARRIER Rear Axle Comprising of	2	
006508186B1	3	↳ Gear Ring	2	
006508257B1	6	NIPPLE Grease	2	
006509076B1	7	SEAL Bushing	2	
006508258B1	8	SEAL	2	
006509078B1	9	SEAL	2	
006509080B1	10	COVER Outer Seal Retaining	2	

https://truckmanualshub.com/

Rear Axle Assembly

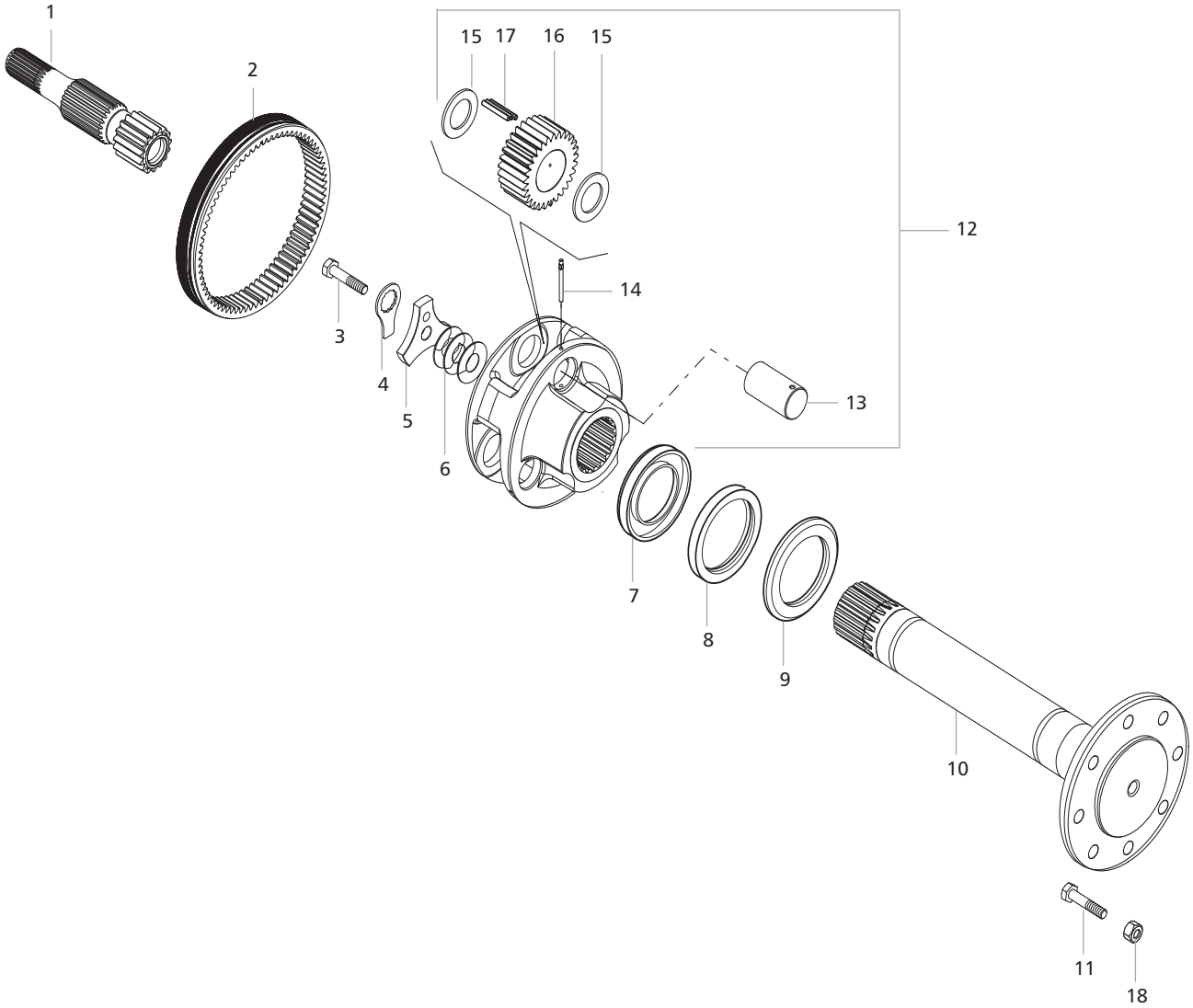

https://truckmanualshub.com/

Part No	Ref.	Description of Part	Qty/ Tractor	Used On
006508188B1	1	HALF SHAFT With Gear - LH	1	
006508190B1	1	HALF SHAFT With Gear - RH	1	
006508186B1	2	GEAR Ring	2	
006508212B1	3	BOLT M18	2	
006508210B1	4	WASHER Screw Stopper	2	
006508213B1	5	PLATE Lock Rear Axle Retaining	2	
006508214B1	6	SHIM 0.1 mm	A/R	
006508216B1	6	SHIM 0.3 mm	A/R	
006508217B1	6	SHIM 0.5 mm	A/R	
006508219B1	7	SEAL Oil	2	
006508220B1	8	COVER Dust	2	
006508221B1	9	SEAL Oil	2	
006508959B1	10	AXLE Rear	2	
006508222B2	11	BOLT Rear Wheel Mounting	16	
006508218B1	12	KIT Planetary Carrier	2	
006508203B1	13	PIN Epic Gear	6	
006508200B1	14	PIN Roll	6	
006508192B1	15	WASHER Thrust	12	
006508198B1	16	GEAR Epic	6	
006508195B1	17	BEARING Needle	15	
007605956B1	18	NUT Collar Rear Wheel Mounting	16	

https://truckmanualshub.com/

Rail Housing Cover Assembly

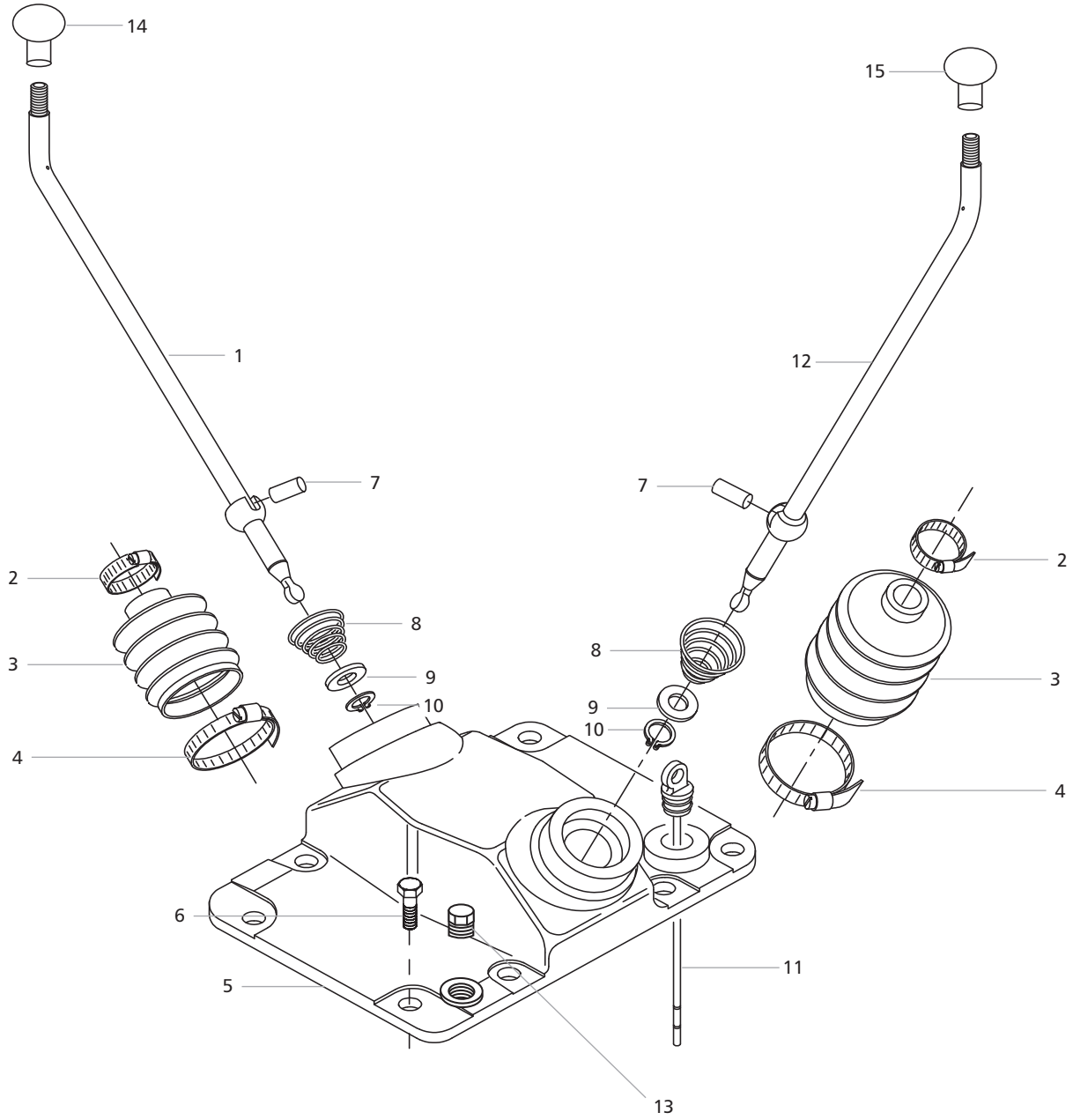

https://truckmanualshub.com/

Rail Housing Cover Assembly

Part No	Ref.	Description of Part	Qty/ Tractor	Used On
006508156B1	1	LEVER Main Gear Shifting	1	
006508158B1	2	CLIP Hose (STRAP) - Small	2	
006508163B1	3	BOOT Rubber Shifting Lever	2	
006508165B1	4	CLIP Hose (STRAP) - Big	2	
006508168B1	5	COVER Rail Housing	1	
006508173B1	6	BOLT M8 Cover Mounting	9	
006508175B1	7	PIN Shift Lever	2	
006508177B1	8	SPRING Shift Lever	2	
006508179B1	9	WASHER Shift Lever	2	
006508180B1	10	CIRCLIP Shift Lever	2	
006508181B1	11	DIPSTICK Transmission	1	
006508182B1	12	LEVER Hi-Low Gear Shifting	1	
006508183B1	13	PLUG	1	
007605975B91	14	KNOB Main Gear Shifting Lever	1	
007605974B91	15	KNOB Hi Low Gear Shifting Lever	1	
006509082B1	*	NUT Hex. Headed Gear Shifter Knob	2	

'*' Part Not Illustrated

https://truckmanualshub.com/

Rail Assembly

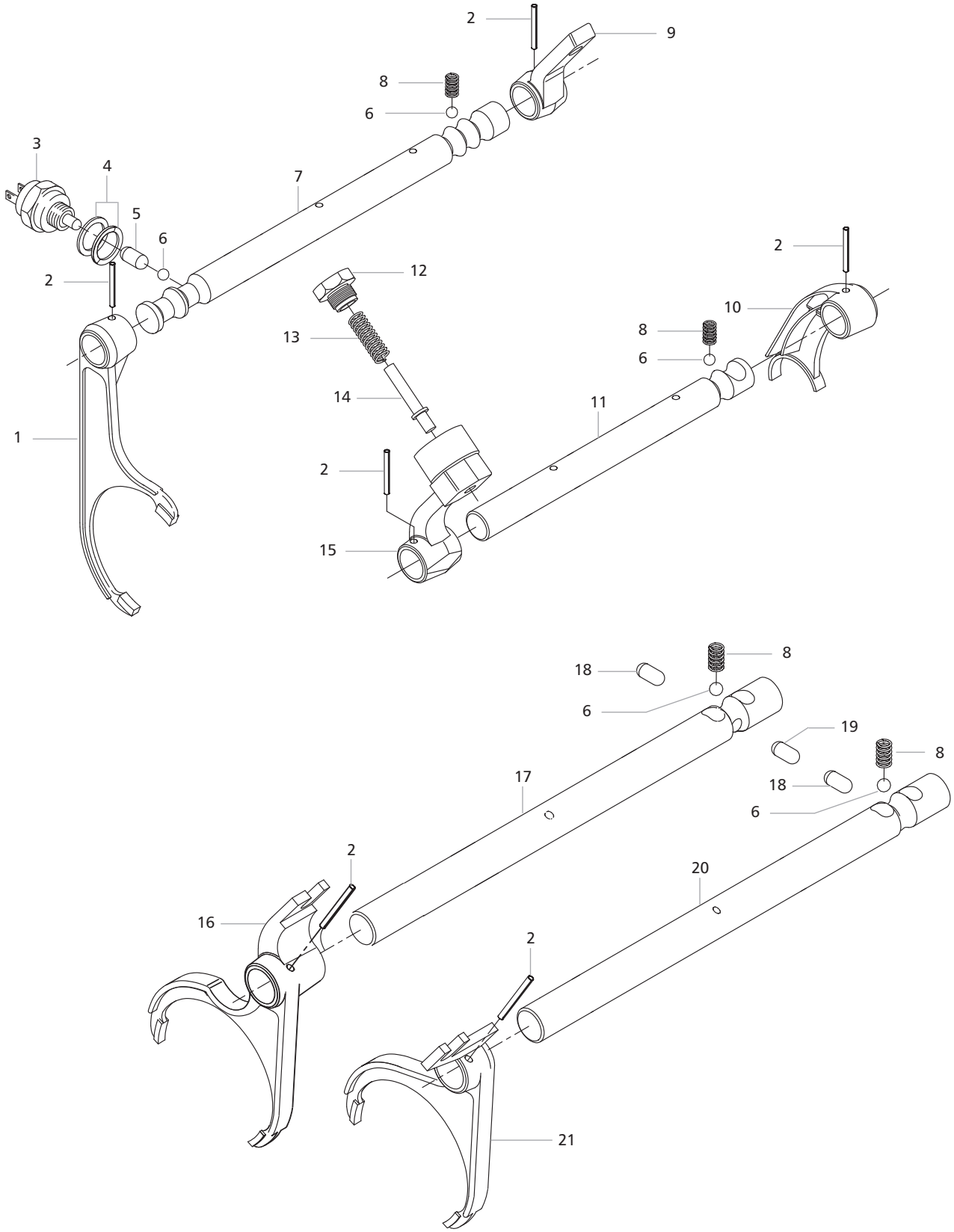

https://truckmanualshub.com/

Rail Assembly

Part No	Ref.	Description of Part	Qty/ Tractor	Used On
006508125B1	1	FORK Hi Low Gear	1	
006508123B1	2	PIN Roll	6	
006508121B1	3	SWITCH Safety Neutral	1	
006508119B1	4	WASHER Safety Neutral Switch	2	
006508117B1	5	PIN Safety Neutral Switch	1	
006508130B1	6	BALL Poppet	4	
006508132B1	7	RAIL Hi Low	1	
006508128B1	8	SPRING Poppet	4	
006508134B1	9	SECTION Shifter Hi Low Gear	1	
006509001B1	10	FORK Reverse Gear	1	
006509002B1	11	RAIL Reverse	1	
006508114B1	12	SCREW M20 Reverse Section Shifter	1	
006508116B1	13	SPRING Reverse Section Shifter	1	
006508126B1	14	PIN Reverse Section Shifter	1	
006508140B1	15	SECTION Shifter Reverse	1	
006508153B1	16	FORK 3rd & 4th Gear	1	
006508151B1	17	RAIL 3rd & 4th Gear	1	
006508154B1	18	PIN Grub	2	
006508155B1	19	PIN Grub	1	
006508141B1	20	RAIL 1st & 2nd Gear	1	
006508143B1	21	FORK 1st & 2nd Gear	1	

https://truckmanualshub.com/

Carraro Brake Assembly

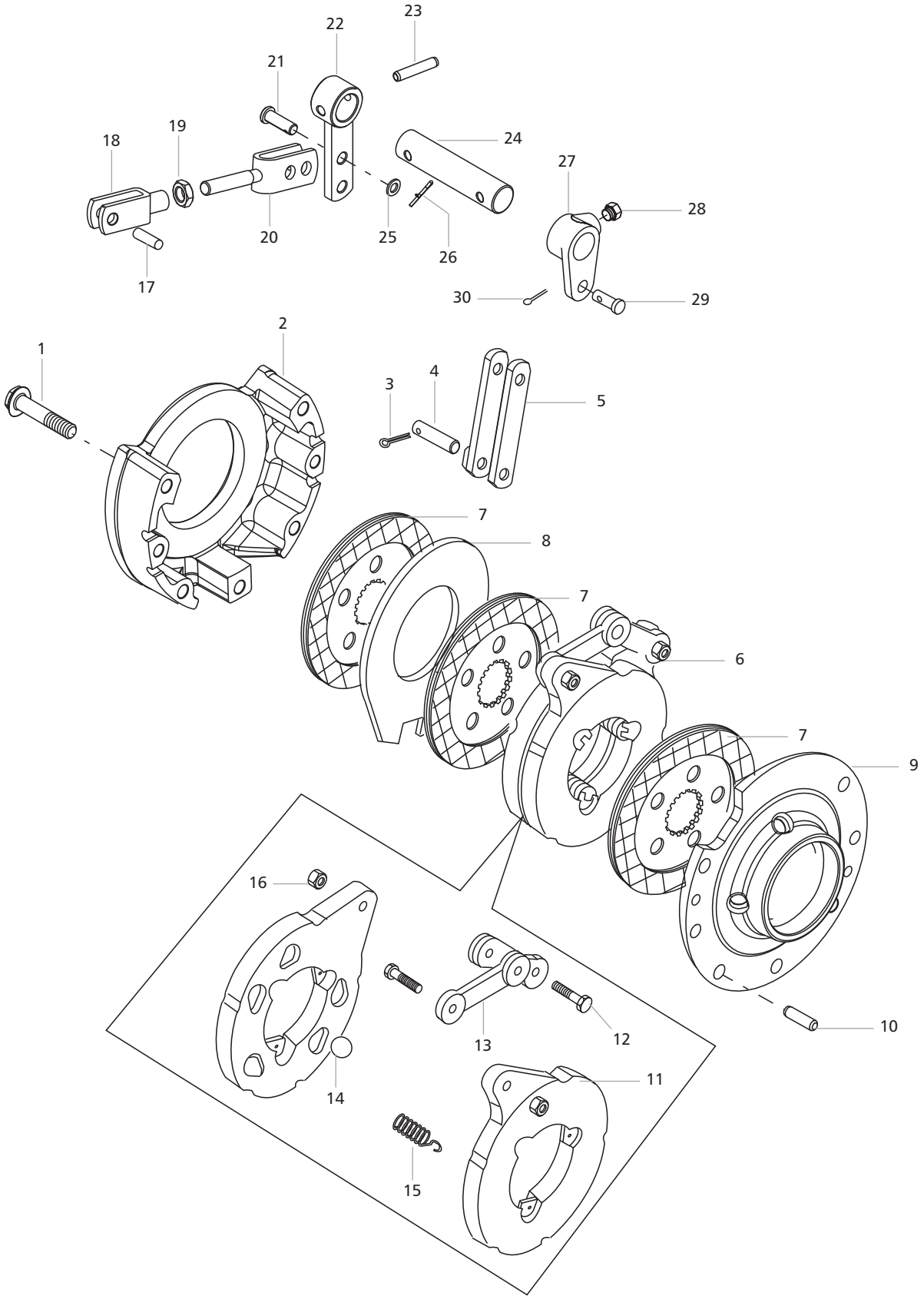

https://truckmanualshub.com/

Carraro Brake Assembly

Part No	Ref.	Description of Part	Qty/ Tractor	Used On
006508057B1	1	BOLT Brake Housing Mounting	10	
006508058B1	2	Housing Brake	2	
006508079B1	3	PIN Cotter	2	
006508083B1	4	PIN Dowel	4	
006508080B1	5	LINKAGE Brake Control	4	
006508061B1	6	DISC Assembly Actuating	2	
006508060B1	7	LINER Friction	6	
006500764C1	8	PLATE Steel	2	
006508207B1	9	FLANGE Differential Cage Mounting	2	
006508059B1	10	PIN Dowel	2	
‡	11	DISC Actuating	4	
006508090B1	12	BOLT	4	
006508091B1	13	ROD Tie	4	
006508085B1	14	BALL Steel	10	
006508086B1	15	SPRING Actuating Disc	6	
006508088B1	16	NUT Actuating Disc	4	
006509096B1	17	PIN	2	
006509100B1	18	FORK	2	
006509095B1	19	NUT Hex Headed	2	
006509097B1	20	ROD Pull	2	
006509098B1	21	PIN	2	
006509094B1	22	Lever Brake Actuating - Outer	2	
006509102B1	23	PIN Roll	2	
006509101B1	24	SHAFT Brake Actuating	2	
006509104B1	25	WASHER	2	
006509103B1	26	PIN Cotter	2	
006509092B1	27	LEVER Brake Actuating RH - Inner	1	
006509093B1	27	LEVER Brake Actuating LH - Inner	1	
006509099B1	28	BOLT Brake Lever	2	
006509105B1	29	PIN	2	
006509106B1	30	PIN Cotter	2	

https://truckmanualshub.com/

Hydraulic Housing Assembly

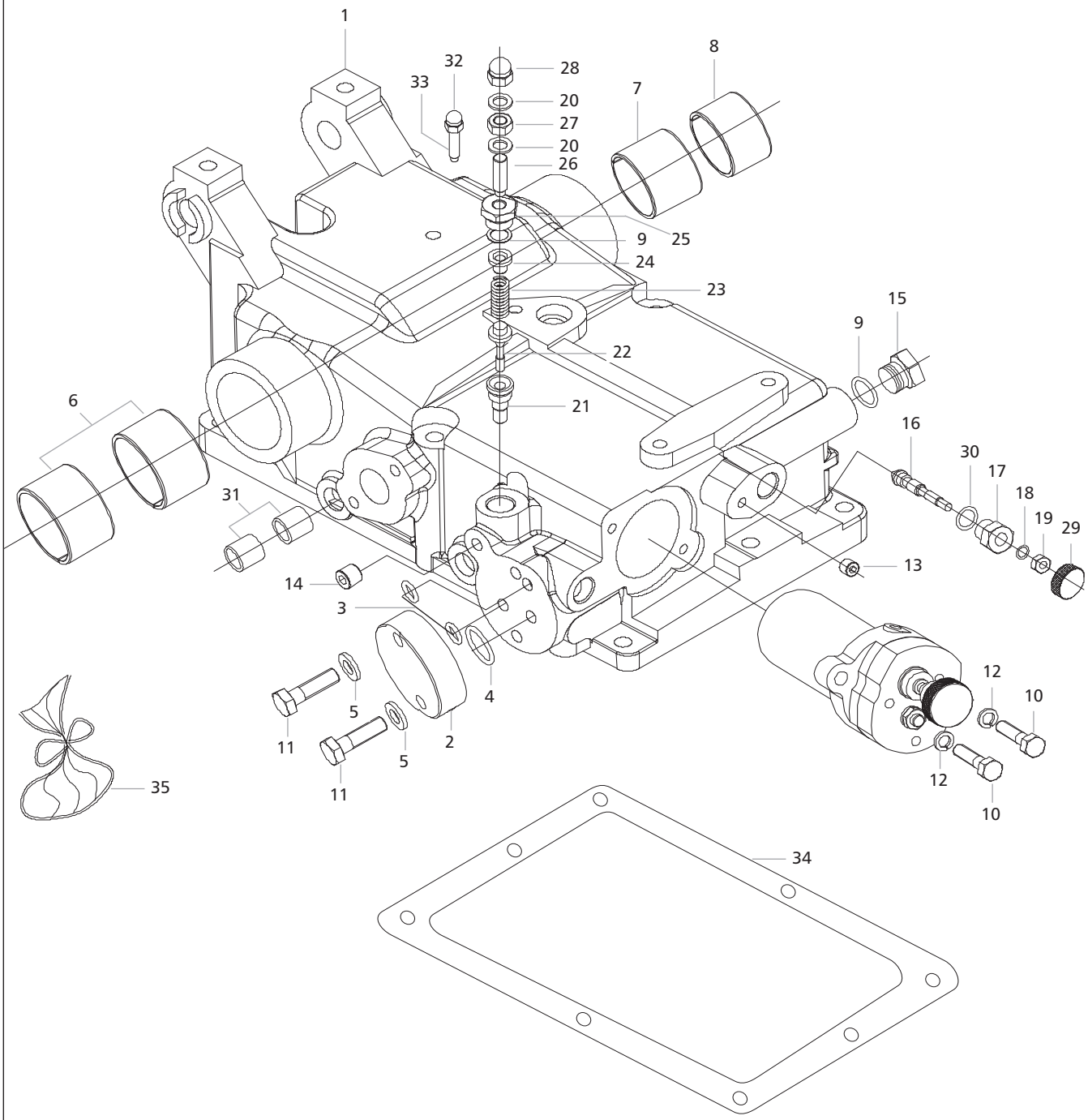

https://truckmanualshub.com/

Hydraulic Housing Assembly

Part No	Ref.	Description of Part	Qty/ Tractor	Used On
007203926B91	*	HYDRAULIC Lift Assembly	1	
007204504B1	1	HOUSING Hydraulic With Bush	1	
007204182D1	2	FLANGE Closing	1	
007204335D1	3	O Ring	2	
007204336D1	4	O Ring	1	
007204333D1	5	WASHER	2	
007204186D1	6	BUSH	2	
007204187D1	7	BUSH	1	
007204188D1	8	BUSH	1	
007204565B1	9	WASHER Copper	2	
007204332D1	10	BOLT Hex Headed	2	
007204334D1	11	BOLT Hex Headed M10	2	
007204331D1	12	WASHER Lock	2	
‡	13	BUSH	-	
‡	14	BUSH	-	
007204456B1	15	PLUG M18	1	
007204515B1	16	PRE-SELECTOR	1	
007204513B1	17	PLUG	1	
007204545B1	18	O' RING	1	
007204527B1	19	NUT Lock	1	
007204564B1	20	WASHER Copper	2	
007204461B1	21	SEAT Valve	1	
007204510B1	22	PIN Valve	1	
007204458B1	23	SPRING	1	
007204459B1	24	SPRING Slide	1	
007204512B1	25	SCREW Plug	1	
007204460B1	26	SCREW	1	
007204552B1	27	NUT Lock	1	
007204560B1	28	NUT Dom	1	
007204517B1	29	KNOB	1	
007204509B1	30	O'RING	1	
007204185B1	31	BUSH	2	
006503363D1	32	BREATHER	1	
006508780B2	33	ADAPTOR	1	
006508727B1	34	GASKET Transmission to Hydraulic Housing	1	
007203079D1	*	BOLT M10 Flange Hex. Headed Long	3	
007203080D1	*	STUD M10 Hydraulic Mounting	1	
005554365R1	* 'R'	NUT M10	1	All Regular Models
005555988R1	* 'R'	WASHER Spring Lock	1	All Regular Models
000020314E05	*	BOLT M10 Flange Hex. Headed	3	
000020313E05	*	BOLT M10 Hex. Headed	1	
000078113R2	*	CLIP Cable	2	
000016182P04	*	PIN Dowel Hydraulic Mounting	1	
		Kit For Service		
007204505B1	35	SEAL Kit Rock Shaft	1	

'*' Part Not Illustrated
'‡' Part Not Serviced Seperately

https://truckmanualshub.com/

Hydraulic Rockshat & Cylinder Assembly

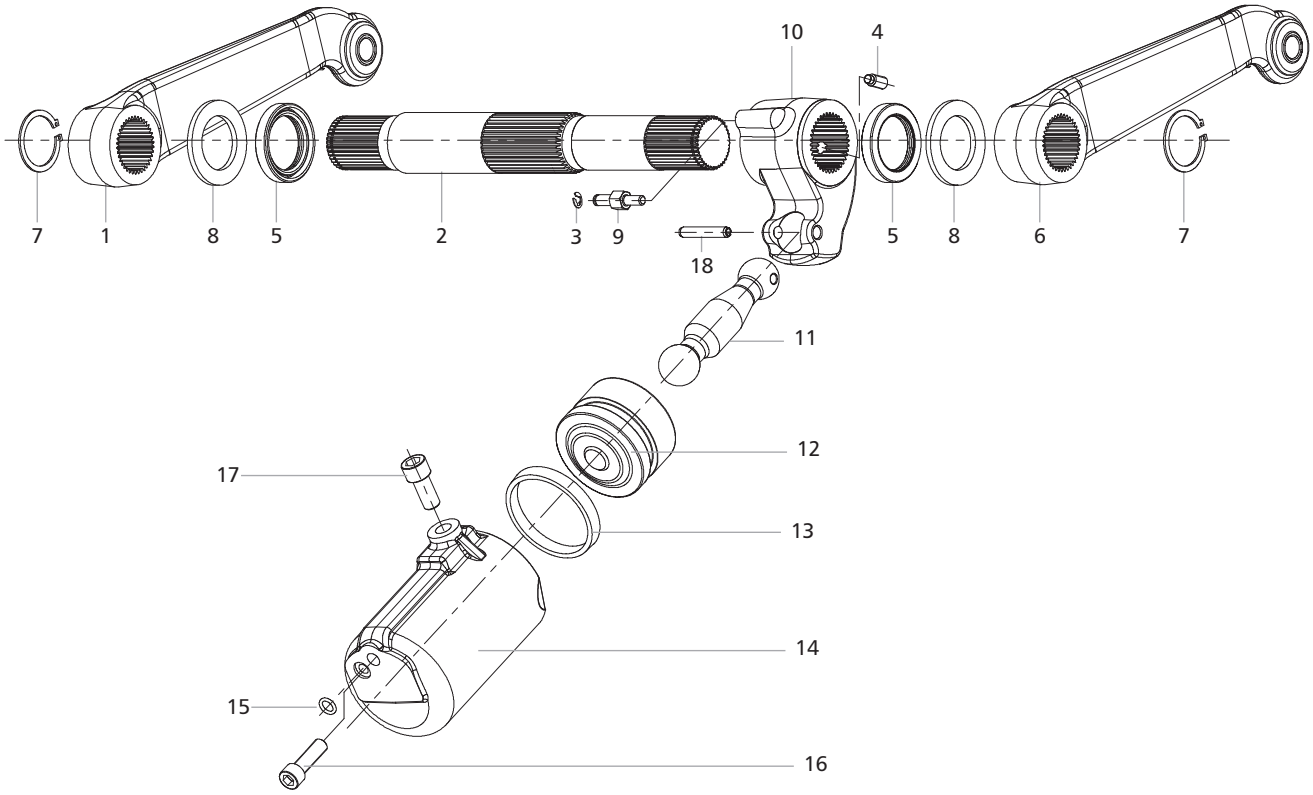

https://truckmanualshub.com/

Hydraulic Rockshat & Cylinder Assembly

Part No	Ref.	Description of Part	Qty/ Tractor	Used On
007204199D1	1	ARM Lift Assembly - LH	1	
007204200D1	2	ROCKSHAFT Hydraulic Lift Assembly	1	
007204201D1	3	CIRCLIP Radial	1	
007204202D1	4	SCREW Grub M10	1	
007204203D1	5	SEAL Shaft	2	
007204204D1	6	ARM Lift Assembly - RH	1	
007204205D1	7	CIRCLIP External	2	
007204206D1	8	PAD Arm	2	
007204208D1	9	PIN Crank	1	
007204209D1	10	CRANK	1	
007204210D1	11	LINK	1	
007204211D1	12	PISTON Assembly Hydraulic	1	
007204212D1	13	SEAL Piston Hydraulic	1	
007204213D1	14	CYLINDER Hydraulic	1	
007204335D1	15	O'RING	1	
007204215D1	16	BOLT Allen M12	1	
007204216D1	17	BOLT AllenM14	1	
007204217D1	18	DOWEL Sleeve	1	

https://truckmanualshub.com/

Internal Linkage Assembly

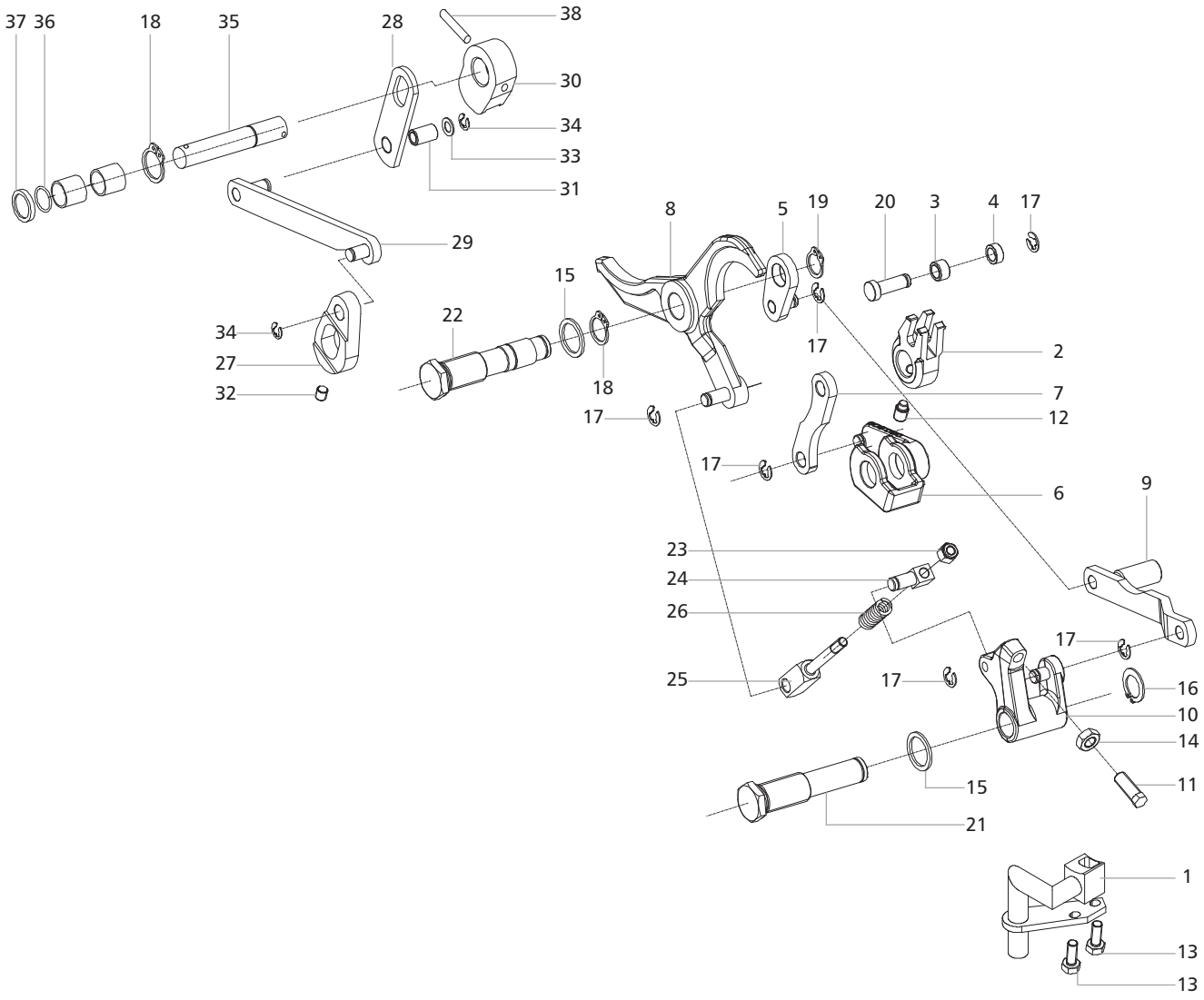

https://truckmanualshub.com/

Internal Linkage Assembly

Part No	Ref.	Description of Part	Qty/ Tractor	Used On
007204538B1	1	TUBE Assembly	1	
007204237D1	2	LINK	1	
007204238D1	3	ROLLER	1	
007204239D1	4	ROLLER	1	
007204240D1	5	LEVER Position Control	1	
007204241D1	6	CAM	1	
007204242D1	7	LINK	1	
007204243D1	8	COMPENSATOR	1	
007204244D1	9	ROD Tie	1	
007204245D1	10	LEVER	1	
007204246D1	11	SCREW	1	
007204247D1	12	SCREW Grub M8	1	
007204248D1	13	BOLT Hex Head M6	2	
007204552B1	14	NUT Lock	1	
007204565B1	15	WASHER Copper	2	
007204251D1	16	CIRCLIP	1	
007204201D1	17	CIRCLIP	6	
007204253D1	18	CIRCLIP	1	
007204254D1	19	CIRCLIP	1	
007204255D1	20	PIN	1	
007204256D1	21	PIN M18	1	
007204257D1	22	PIN	1	
007204258D1	23	NUT Nylock M6	1	
007204259D1	24	PIN	1	
007204260D1	25	PIN	1	
007204261D1	26	SPRING	1	
007204262D1	27	LINK	1	
007204263D1	28	LINK	1	
007204264D1	29	PLATE	1	
007204265D1	30	CAM	1	
007204266D1	31	ROLLER	1	
007204267D1	32	SCREW Grub	1	
007204268D1	33	WASHER	1	
007204233D1	34	CIRCLIP	2	
007204270D1	35	PIN	1	
007204341D1	36	O' RING	1	
007204272D1	37	RING	1	
007204291D1	38	DOWEL Sleeve	1	

https://truckmanualshub.com/

Hydraulic Qudrant Assembly

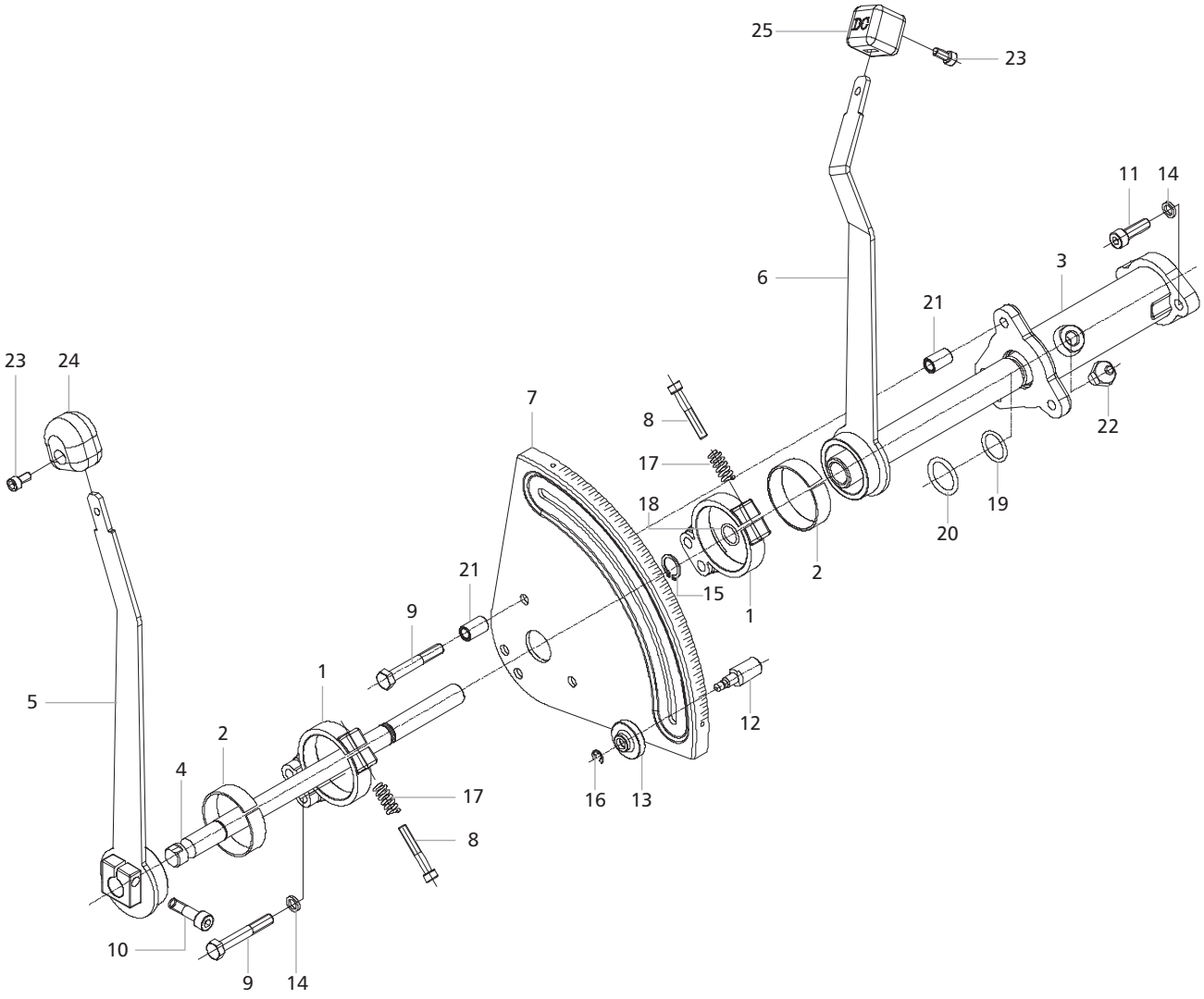

https://truckmanualshub.com/

Hydraulic Qudrant Assembly

Part No	Ref.	Description of Part	Qty/ Tractor	Used On
007204274D1	1	CLUTCH Hub	2	
007204275D1	2	CLUTCH	2	
007204276D1	3	SUPPORT	1	
007204533B1	4	SHAFT	1	
007204535B1	5	LEVER Position Control	1	
007204537B1	6	LEVER Draft Control	1	
007204487B1	7	PLATE Control	1	
007204280D1	8	BOLT Allen M6	2	
007204281D1	9	BOLT Hex Headed	4	
007204282D1	10	BOLT Allen M8	1	
007204283D1	11	SCREW M8	2	
007204474B1	12	SCREW	1	
007204475B1	13	NUT Knurled	1	
007204331D1	14	WASHER Lock	4	
007204253D1	15	CIRCLIP	1	
007204549B1	16	CIRCLIP	1	
007204286D1	17	SPRING	2	
007204335D1	18	O'RING	1	
007204343D1	19	O'RING	1	
007204344D1	20	O'RING	1	
007204473B1	21	SPACER	4	
007204290D1	22	NIPPLE Grease	1	
‡	23	BOLT Allen	2	
005556901R1	24 'R'	KNOB Position Control	1	All Regular Models
005556899R1	25 'R'	KNOB Draft Control	1	All Regular Models

'‡' Part Not Serviced Seperately
'R' Regular Part Used

https://truckmanualshub.com/

Top Link Bracket Assembly

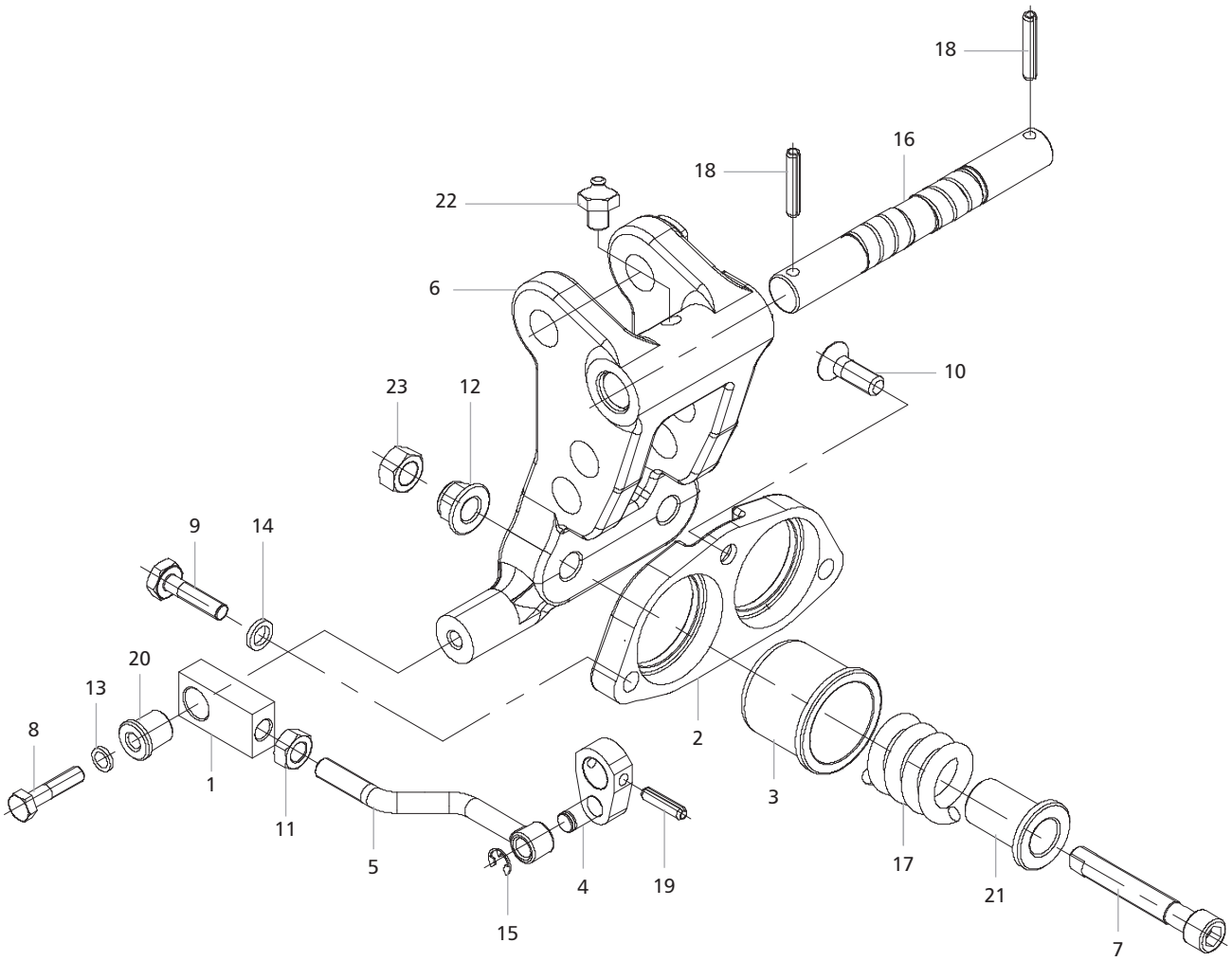

https://truckmanualshub.com/

Top Link Bracket Assembly

Part No	Ref.	Description of Part	Qty/ Tractor	Used On
007204218D1	1	PLATE	1	
007204219D1	2	FLANGE	1	
007204220D1	3	COVER Spring	1	
007204221D1	4	PLATE	1	
007204225D1	5	ROD Tie	1	
007204224D1	6	SUPPORT Top Link	1	
007204223D1	7	SCREW Special	1	
007204332D1	8	BOLT Hex Headed	1	
007204334D1	9	BOLT Hex Headed M10	2	
007204639D1	10	SCREW M10	1	
007204228D1	11	NUT Hex M10	1	
007204229D1	12	NUT M12	2	
007204331D1	13	WASHER Lock	1	
007204296D1	14	WASHER Spring	2	
007204233D1	15	CIRCLIP	1	
007204234D1	16	PIN	1	
007204235D1	17	SPRING	2	
007204291D1	18	DOWEL Sleeve	2	
007204292D1	19	DOWEL Sleeve	1	
007204293D1	20	BUSH	1	
007204222D1	21	BUSH Spring Guide	2	
007204290D1	22	NIPPLE Grease	1	
007204542B1	23	NUT Special M12	2	

https://truckmanualshub.com/

Control Valve Assembly

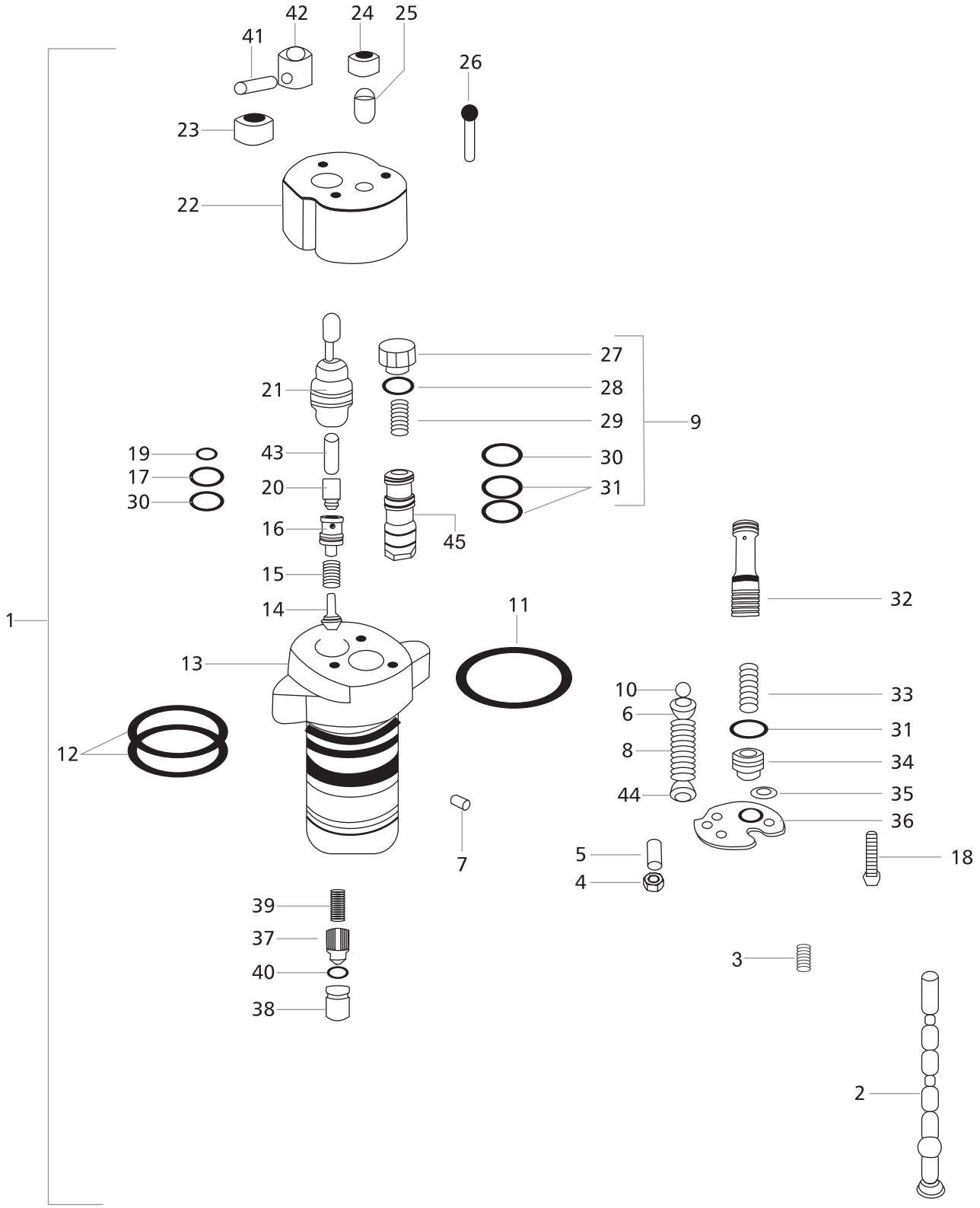

https://truckmanualshub.com/

Control Valve Assembly

Part No	Ref.	Description of Part	Qty/ Tractor	Used On
007204444B91	1	VALVE Control Assembly	1	
‡	2	SPOOL	1	
007204400B1	3	SPRING	1	
007204401B1	4	NUT M8	1	
007204402B1	5	DOWEL M8	1	
007204403B1	6	SPACER	1	
007204405B1	7	SCREW	1	
007204406B1	8	SPRING	1	
007204408B1	9	VALVE with Rings	1	
007204409B1	10	BALL	1	
007204410B1	11	O-RING	1	
007204411B1	12	O-RING	2	
‡	13	HOUSING	1	
007204412B1	14	VALVE	1	
007204413B1	15	SPRING	1	
007204414B1	16	SEAT Valve	1	
007204415B1	17	O-RING	1	
007204416B1	18	SCREW M6	1	
007204417B1	19	O-RING	1	
007204418B1	20	VALVE	1	
007204419B1	21	LEVER	1	
007204420B1	22	COVER	1	
007204421B1	23	GASKET	1	
007204422B1	24	NUT M8	1	
007204423B1	25	DOWEL M8	1	
007204424B1	26	SCREW M6	1	
007204425B1	27	PLUG	1	
007204426B1	28	O-RING	1	
007204427B1	29	SPRING	1	
007204428B1	30	O-RING	2	
007204429B1	31	O-RING	3	
‡	32	VALVE	1	
007204430B1	33	SPRING	1	
007204431B1	34	PLUG	1	
007204432B1	35	SPACER	1	
007204433B1	36	PLATE	1	
007204434B1	37	VALVE	1	
007204435B1	38	SEAT Valve	1	
007204436B1	39	SPRING	1	
007204437B1	40	SPRING	1	
007204438B1	41	PIN Elastic	1	
007204439B1	42	KNOB	1	
007204440B1	43	PIN	1	
007204441B1	44	SPACER	1	
‡	45	VALVE		
		Kit For Service		
007204454B91	*	CONTROL Valve Seal Kit	1	

'‡' Part Not Serviced Seperately

https://truckmanualshub.com/

Hydraulic Suction & Pressure Pipe

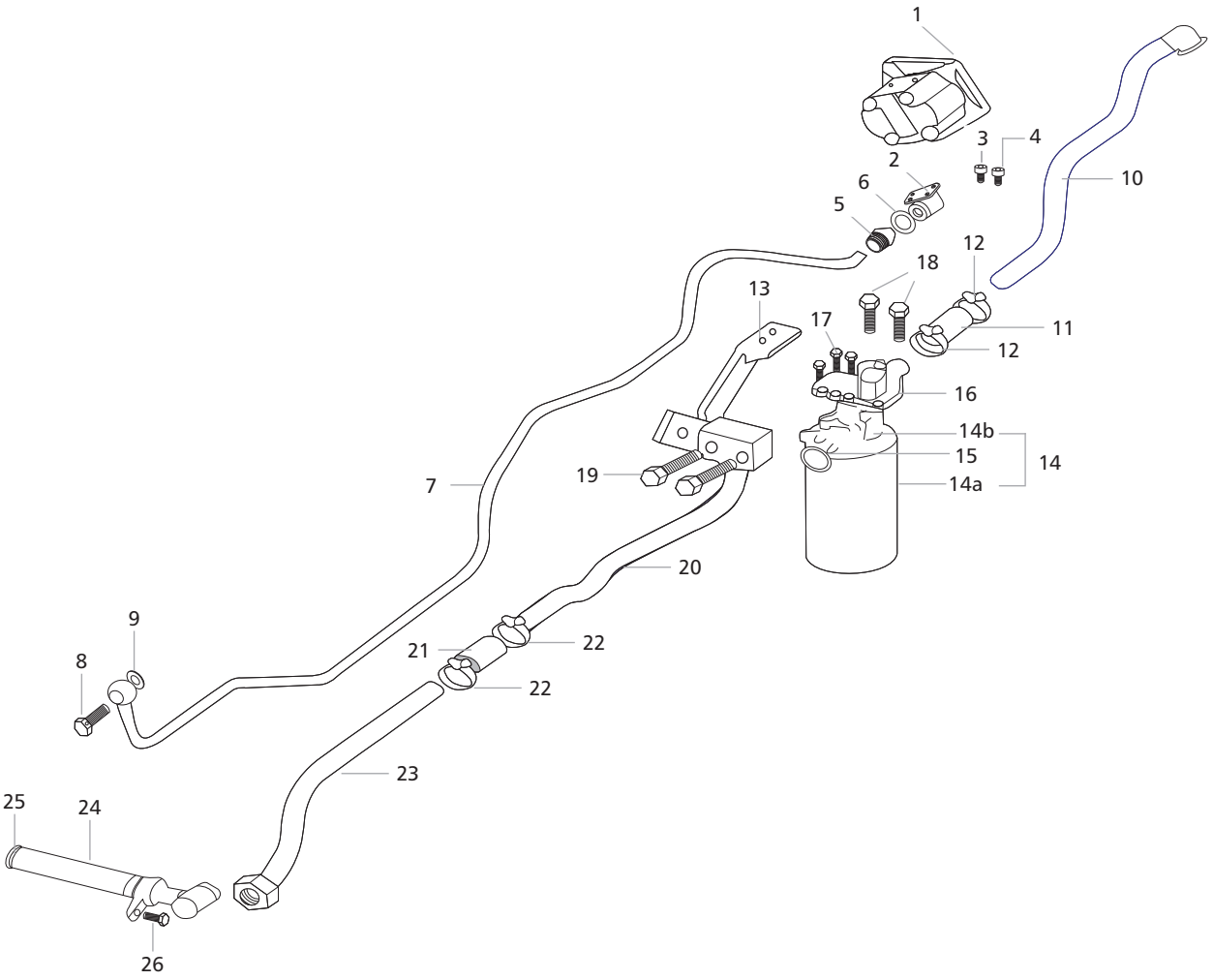

https://truckmanualshub.com/

Hydraulic Suction & Pressure Pipe

Part No	Ref.	Description of Part	Qty/ Tractor	Used On
007202501B91	1	HYDRAULIC PUMP 12 CC MICO	1	
007201268A1	2	MANIFOLD PRESSURE HYDRAULIC PUMP	1	
001082252R1	3	SCREW ALLEN CAP	2	
001082253R1	4	SCREW ALLEN CAP	2	
007202840D1	5	CONNCETOR 1/2" BSP X M24 FOR PRESS PIPE	1	
000704337R1	6	WASHER 1/2" DOWTY	1	
007604680B11	7	PRESSURE PIPE 475DI TOTAL	1	
006000570H1	8	BANJO BOLT	1	
005552905R1	9	COPPER WASHER	2	
007605526B11	10	SUCTION PIPE CPTE. 1 - PUMP TO FILTER	1	
000051191D01	11	HOSE SUCTION	1	
000051193D01	12	HOSE CLIP (SUCTION FILTER)	2	
007604723B11	13	BRACKET SUCTION FILTER MOUNTING	1	
000013231P04	14	SUCTION FILTER Comprising of	1	
000013427P04	14a	→ CANNISTER FOR FILTER	1	
007201394E1	14b	→ FILTER HEAD RETURN	1	
007202179D1	15	→ “O” RING SUCTION FILTER	2	
007604679B11	16	ADAPTOR FOR SUCTION PIPE 2 - 475 TOTAL	1	
000020309E05	17	BOLT FLANGED HEX. HEAD M8 x 1.25 x 25	4	
000020256E05	18	BOLT M8 x 1.25 x 55 HEX	2	
000020258E05	19	BOLT M8 x 1.25 x 65 HEX	2	
007605525B11	20	SUCTION PIPE CPTE. FILTER TO TRANSCASE - 1	1	
000051191D01	21	HOSE SUCTION	1	
000051193D01	22	HOSE CLIP (SUCTION FILTER)	2	
007605523B91	23	SUCTION PIPE CPTE. FILTER TO TRANSCASE - 2	1	
007204134B11	24	SUCTION STRAINER	1	
007204047B1	25	“O” RING FOR SUCTION STRAINER 475 DI TOTAL	1	
007535365D1	26	BOLT M12x1.75x25	1	

https://truckmanualshub.com/

Three Point Linkages

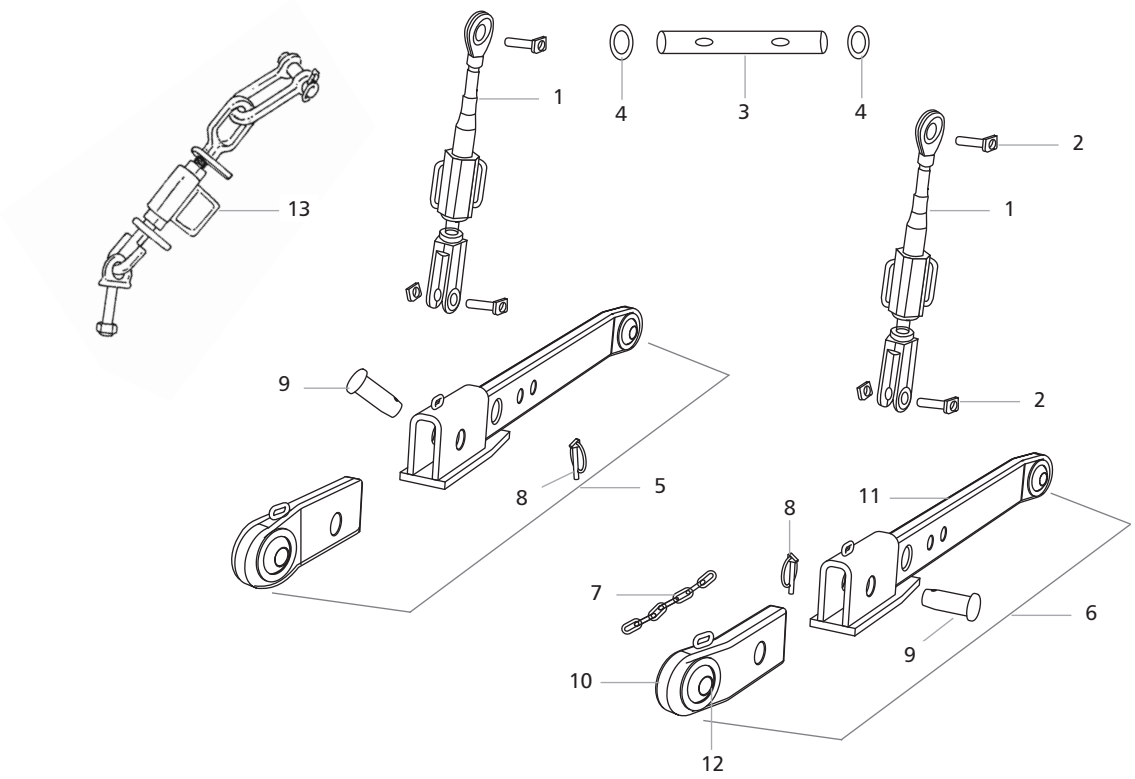

https://truckmanualshub.com/

Part No	Ref.	Description of Part	Qty/ Tractor	Used On
007203703B91	1	LIFT Rod Cpte (Turn Buckle Type)	2	
007603085D1	*	PIN Top Link CAT-2	1	
007603232D1	2	PIN Lift Rod Upper End	2	
007604663B11	*	BRACKET Check Chain - LH	1	
007604664B11	*	BRACKET Check Chain - RH	1	
007604654B1	3	PIN Lower link Mtg	1	
007605880B1	4	WASHER Lower Link Mountng Pin	2	
008002185B11	5	LINK Lower - RH	1	
008002184B11	6	LINK Lower - LH	1	
007603190C1	7	► CHAIN Lower Link	1	
007900405C1	8	► LYNCH Pin Assy.	1	
007604542B1	9	► PIN Std Headed	1	
007604536B11	10	► LOWER Link Hitch Side Assy.	1	
‡	11	► HITCH	1	
000704194R2	12	BUSH Lower Link	2	
005556386R91	13	CHECK Chain Assembly - longer	2	

https://truckmanualshub.com/

Front Axle & Support

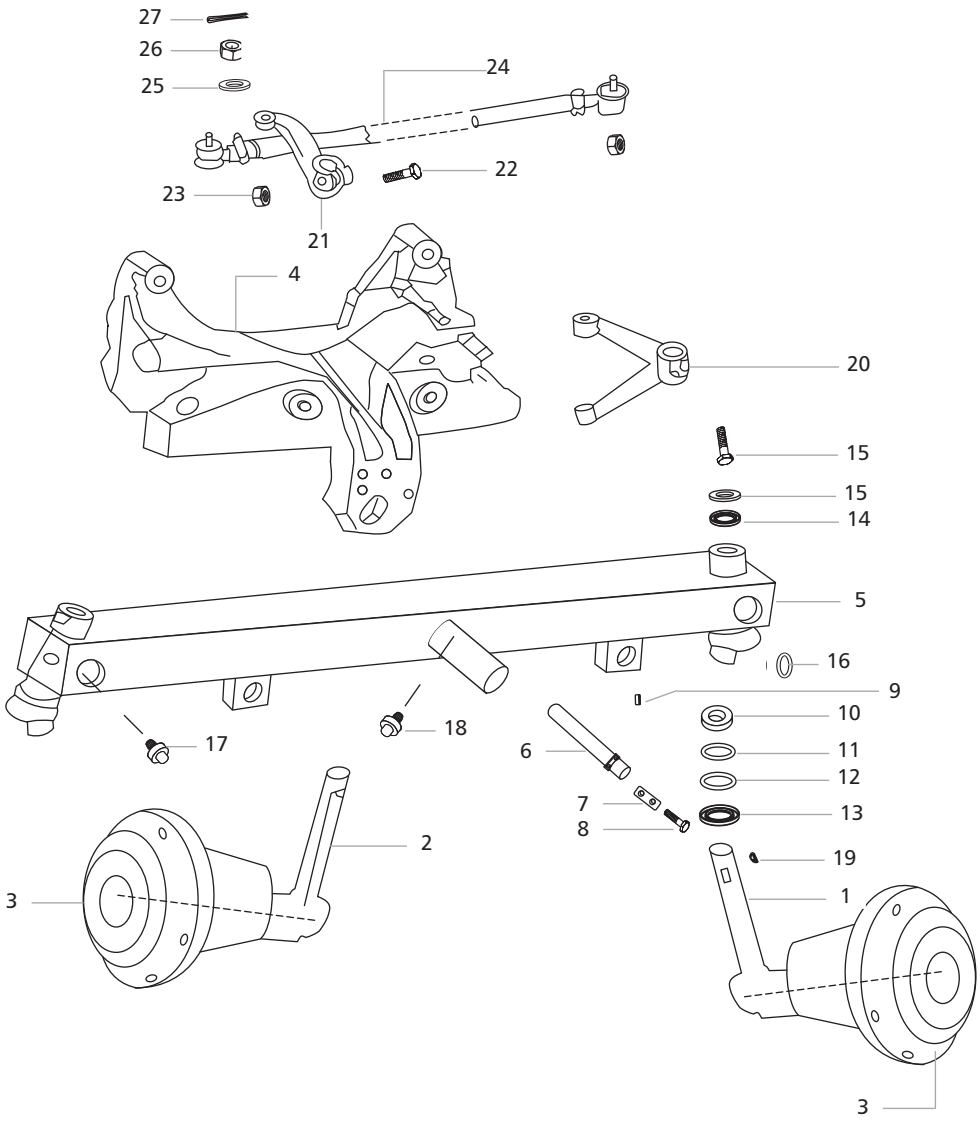

https://truckmanualshub.com/

Part No	Ref.	Description of Part	Qty/ Tractor	Used On
008000496B91	*	FRONT Axle Sub Assembly - Wetland	1	475 DI Models
005557089R93	1 'R'	Knuckle Cpte. Steering - LH	1	475 DI Models
005557090R93	2 'R'	Knuckle Cpte. Steering - RH	1	475,575,595 MKM, DLX
005555556R2	3 'R'	HUB Front Wheel	2	---------"--------
008000462B1	4 'R'	SUPPORT Front Axle	1	475 DLX
005558522R96	5	Axle Front Cpte	1	
005557719R91	6 'R'	PIN Pivot Front Axle Cpte	1	295,475,575 & 595 MKM & DLX
005556442R1	7 'R'	PLATE Lock Pivot Pin	1	All Regular Model
001081607R1	8 'R'	BOLT	2	---------"--------
003070930R2	9 'R'	CLIP Cable	1	---------"--------
001231413R91	10'R'	BEARING Thrust Steering Bearing	2	---------"--------
005557092R1	11 'R'	SHIM Steering Knuckle Pivot Pin	A/R	---------"--------
005557092R2	12 'R'	SHIM Steering Knuckle Pivot Pin	A/R	---------"--------
005557019R91	13 'R'	SEAL Oil Bottom	2	295, 475, 575, 595 MKM, DLX
007600876R91	14 'R'	SEAL Oil Top	2	---------"--------
005557093R1	15 'R'	WASHER Felt	2	---------"--------
007600002B1	16	SEAL Oil Pivot Pin	2	
000109461	17 'R'	NIPPLE Grease	2	295, 475, 575, 595 MKM, DLX
000109462	18 'R'	NIPPLE Grease	1	---------"--------
000114745	19 'R'	KEY Woodruff	2	---------"--------
005557088R1	20 'R'	ARM Steering Knuckle - LH	1	All Regular Model
005557087R1	21 'R'	ARM Steering Knuckle - RH	1	---------"--------
000271565	22 'R'	BOLT	2	---------"--------
000102639	23 'R'	NUT	2	---------"--------
001127912R92	24	ROD Tie	1	
000120396	25 'R'	WASHER Plain	2	---------"--------
000933471R1	26 'R'	NUT Slotted Hex Head	2	---------"--------
000103374	27 'R'	PIN Cotter	2	---------"--------

https://truckmanualshub.com/

Seat

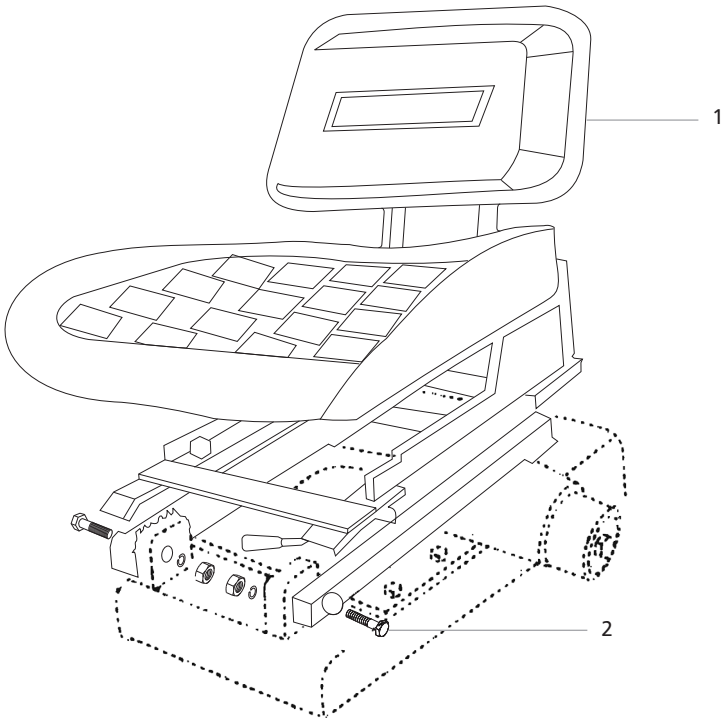

Rim & Disc

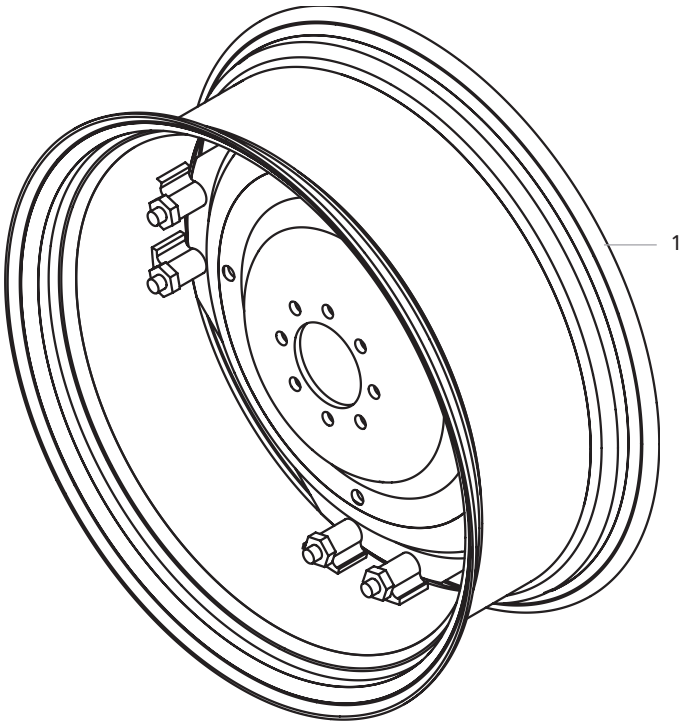

https://truckmanualshub.com/

Seat

Part No	Ref.	Description of Part	Qty/ Tractor	Used On
007900704B91	1	SEAT Cpte.	1	
006505997C1	2	SCREW Hex Flanged Head for Seat mtg	3	

Rim & Disc

007605658B91	1	RIM & DISC Cpte. Rear Wheel - Red (136 x 28)	2	

https://truckmanualshub.com/

Fender Assembly

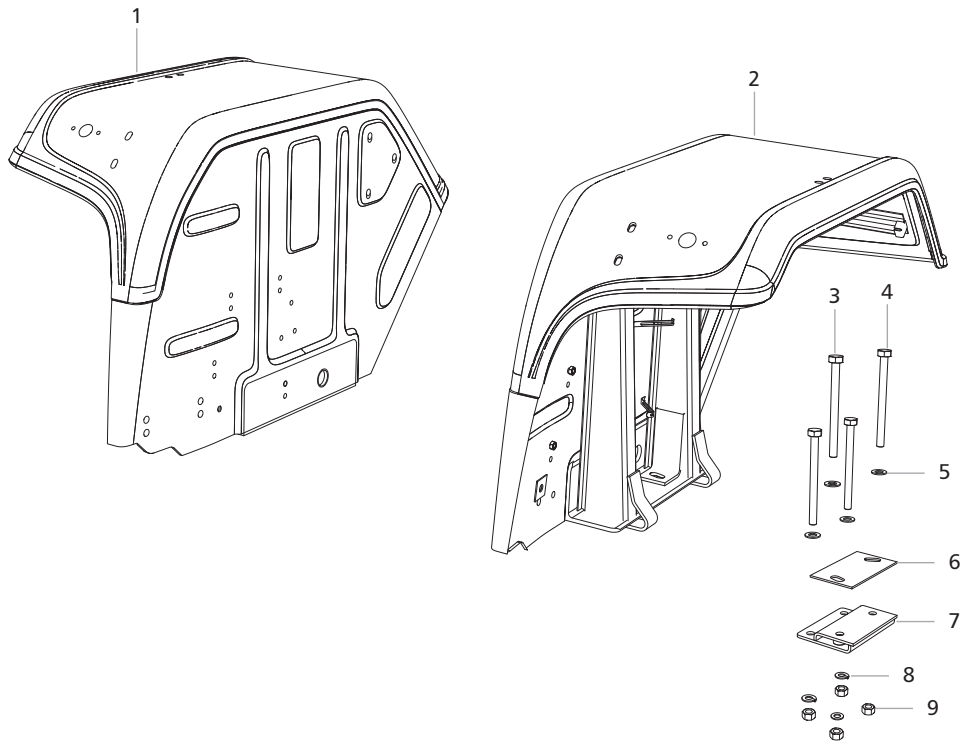

Foot Plate

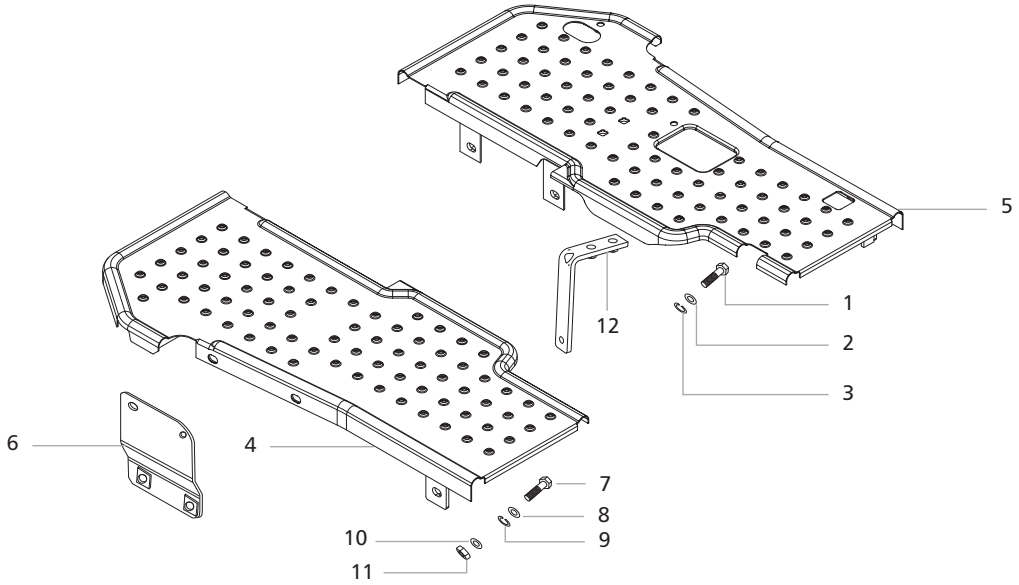

https://truckmanualshub.com/

Fender Assembly

Part No	Ref.	Description of Part	Qty/ Tractor	Used On
007531723B91	1	FENDER Assembly - RH	1	
007531722B91	2	FENDER Assembly - LH	1	
007900182D1	3	BOLT M16 Hex. Headed	4	
007600479C1	4	BOLT M16 Hex. Headed	4	
000050684D99	5 'R'	WASHER Plain	4	All Regular Model
007539572B1	6	INSULATOR Fender Base	2	
007539913B11	7	SPACER for Fender Assembly	2	
007539912B1	*	SPACER Bottom Fender Mounting	2	
001082015R2	8 'R'	WASHER Spring Lock	4	All Regular Model
000012653D04	9	NUT M16 Hex. Headed	8	
006000139F1	*	WASHER Plain	4	

Foot Plate

000016468P04	1	BOLT Rear Floor Pannel Mtg	2	
000022079RD	2'R'	WASHER Plain	2	All Regular Model
000022273RD	3'R'	WASHER Spring Lock	2	All Regular Model
007539273B91	4	FOOT PLATE Assembly - LH	1	
007539274B91	5	FOOT PLATE Assembly - RH	1	
007538733B91	6	FOOT STEP Extension Assembly	1	
000060684M01	7 'R'	SCREW Hex Foot Plate to Fender	2	All Regular Model
000020739E05	8	WASHER Plain	2	
000934309R1	9 'R'	WASHER Spring Lock	2	All Regular Model
001121799R1	10 'R'	WASHER Plain Nut Side	2	All Regular Model
005553017R1	11'R'	NUT M8	2	All Regular Model
007538935B91	12	BRACKET Mounting Rear Middle Floor	2	

'*' Part Not Illustrated
'R' Regular Part Used

https://truckmanualshub.com/

Battery Mounting

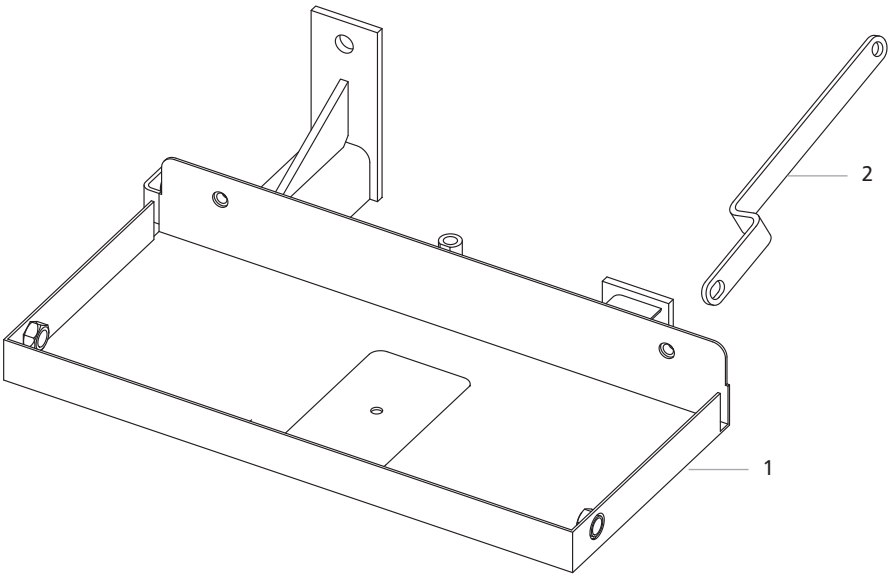

Brake Pedal & Linkages

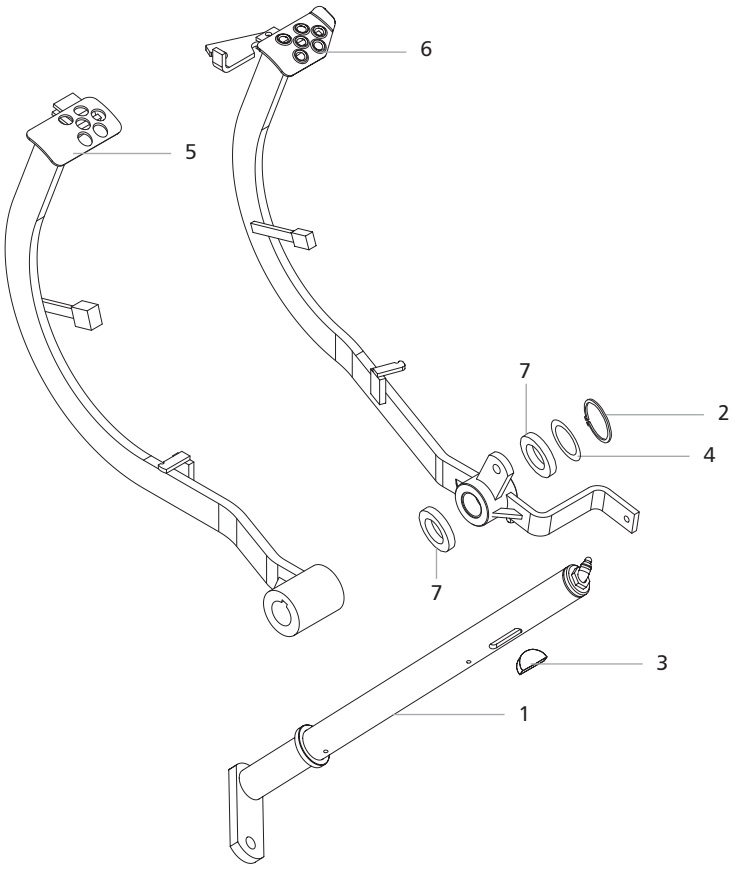

https://truckmanualshub.com/

Battery Mounting

Part No	Ref.	Description of Part	Qty/ Tractor	Used On
007537420B91	1	TRAY Battery Mounting	1	
007539678B1	2	BRACE Battery Tray	1	

Brake Pedal & Linkages

007604649B91	1	SHAFT Brake Pedal	1	
005552625R1	2 'R'	CIRCLIP Brake Pedal Shaft	1	All Regular Model
007604653B1	3	KEY Brake Pedal Shaft	1	
006507372B1	4	WASHER Brake Pedal Shaft	4	
007604674B91	5	PEDAL Brake Cpte - LH	1	
007604675B91	6	PEDAL Brake Cpte - RH	1	
007606347B1	7	OIL SEAl	2	

'R' Regular Part Used

https://truckmanualshub.com/

Product Graphics

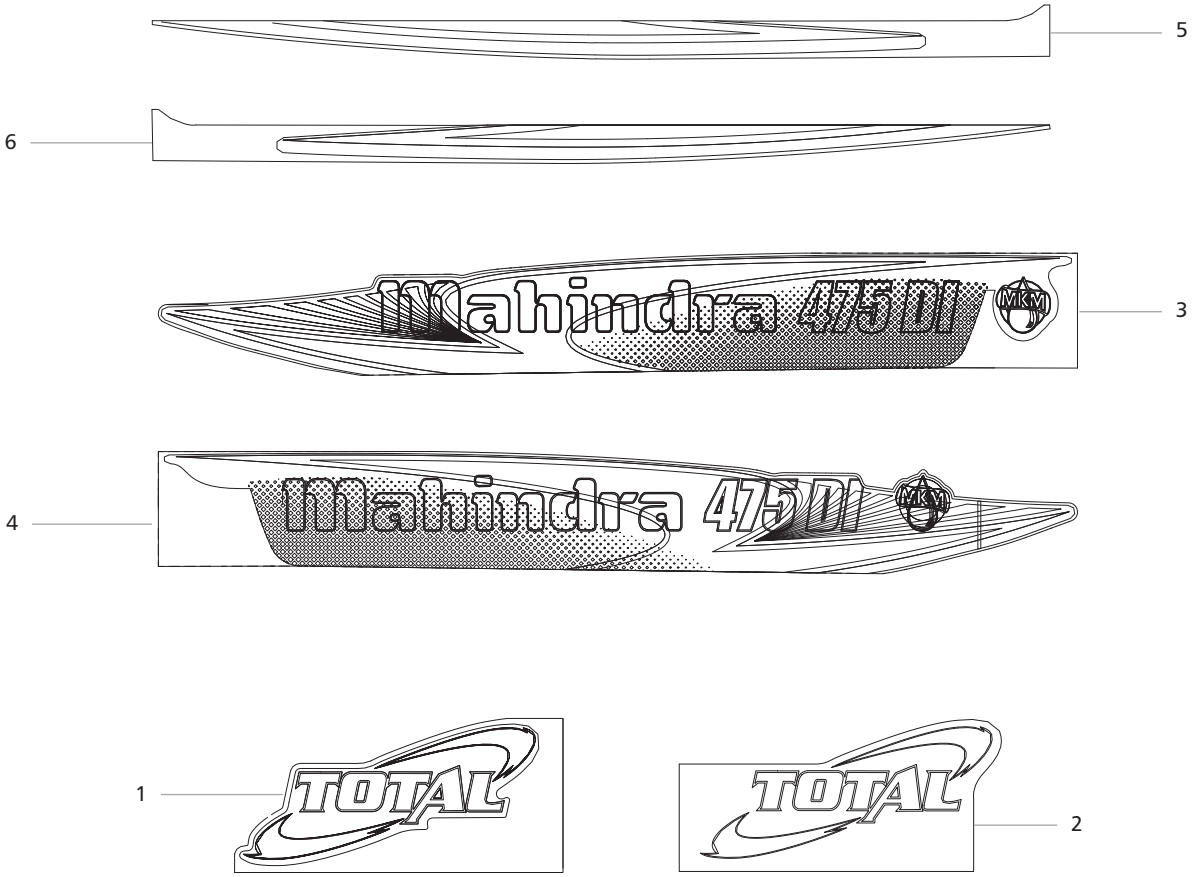

Electricals

https://truckmanualshub.com/

Part No	Ref.	Description of Part	Qty/ Tractor	Used On
007605960B1	1	STICKER Upper 475 DI Total - LH	1	
007605961B1	2	STICKER Upper 475 DI Total - RH	1	
007605962B1	3	GRAPHICS Product Lower 475 DI Total - LH	1	
007605963B1	4	GRAPHICS Product Lower 475 DI Total - RH	1	
007605953B1	5	STICKER Lower 475 DI Total - LH	1	
007605954B1	6	STICKER Lower 475 DI Total - RH	1	

Electricals

007700896B91	*	WIRING Harness Main	1	
007700897B91	*	WIRING Harness Platform	1	
007700411A1	* 'R'	CABLE Battery Positive (+ve)	1	295 MKM & DLX

'R' Regular Part Used
'*' Part Not Illustrated