https://truckmanualshub.com/

Kubota

U.S.A. : **KUBOTA TRACTOR CORPORATION**
1000 Kubota Drive, Grapevine, TX 76051
Telephone : 888-4KUBOTA

Canada : **KUBOTA CANADA LTD.**
5900 14th Avenue, Markham, Ontario, L3S 4K4, Canada
Telephone : (905)294-7477

France : **KUBOTA EUROPE S.A.S**
19-25, Rue Jules Vercruysse, Z.I. BP88, 95101 Argenteuil Cedex, France
Telephone : (33)1-3426-3434

Italy : **KUBOTA EUROPE S.A.S Italy Branch**
Via Grandi, 29 20068 Peschiera Borrome (MI) Italy
Telephone : (39)02-51650377

Germany : **KUBOTA (DEUTSCHLAND) GmbH**
Senefelder Str. 3-5 63110 Rodgau /Nieder-Roden, Germany
Telephone : (49)6106-873-0

U.K. : **KUBOTA (U.K.) LTD.**
Dormer Road, Thame, Oxfordshire, OX9 3UN, U.K.
Telephone : (44)1844-214500

Spain : **KUBOTA ESPAÑA S.A.**
Avenida Recomba No.5, Poligno Industrial la Laguna, Leganes, 28914 (Madrid) Spain
Telephone : (34)91-508-6442

Australia : **KUBOTA TRACTOR AUSTRALIA PTY LTD.**
25-29 Permas Way, Truganina, VIC 3029, Australia
Telephone : (61)-3-9394-4400

Malaysia : **SIME KUBOTA SDN. BHD.**
No.3 Jalan Sepadu 25/123 Taman Perindustrian Axis,
Seksyen 25, 40400 Shah Alam, Selangor Darul Ehsan Malaysia
Telephone : (60)3-736-1388

Philippines : **KUBOTA PHILIPPINES, INC.**
232 Quirino Highway, Baesa, Quezon City 1106, Philippines
Telephone : (63)2-422-3500

Taiwan : **SHIN TAIWAN AGRICULTURAL MACHINERY CO., LTD.**
16, Fengping 2nd Rd, Taliao Shiang Kaohsiung 83107, Taiwan R.O.C.
Telephone : (886)7-702-2333

Indonesia : **PT KUBOTA MACHINERY INDONESIA**
Tower A at EightyEight@Kasablanka Lantai 16
Jalan Raya Casablanka Kav. 88, Jakarta 12870 Indonesia
Telephone : (62)-21-29568-720

Thailand : **SIAM KUBOTA CORPORATION CO., LTD.**
101/19-24 Moo 20, Navanakorn Industrial Estate, Tambon Khlongnueng, Amphur Khlongluang,
Pathumthani 12120, THAILAND
Telephone : (66)2-909-0300

Korea : **KUBOTA KOREA CO., LTD.**
41-27, Jayumuyeok-gil, Baeksan-myeon, Gimje-si, Jeollabuk-do, Korea
Telephone : (82)-63-544-5822

India : **KUBOTA AGRICULTURAL MACHINERY INDIA PVT. LTD.**
No.15, Medavakkam Road, Sholinganallur, Chennai-600119, T.N., India
Telephone : (91)44-6104-1500

Vietnam : **KUBOTA VIETNAM CO., LTD.**
Lot B-3A2-CN, My Phuoc 3 Industrial Park, Ben Cat District, Binh Duong Province, Vietnam
Telephone : (84)-650-3577-507

KUBOTA Corporation

AV. C. 3-3. -. K

Code No. K2892-7121-3

BX23S.LA340.BT603

OPERATOR'S MANUAL

KUBOTA TRACTOR

MODELS BX23S
LA340
BT603

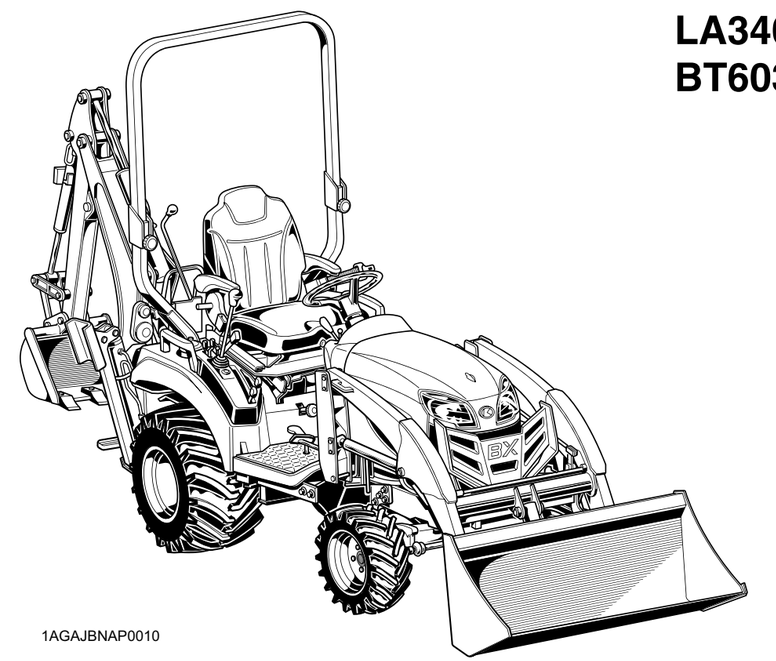

1AGAJBNAP0010

READ AND SAVE THIS MANUAL

Kubota

PRINTED IN U.S.A.

© KUBOTA Corporation 2016

https://truckmanualshub.com/

ABBREVIATION LIST

Abbreviations	Definitions
2WD	2-Wheel Drive
4WD	4-Wheel Drive
API	American Petroleum Institute
ASABE	American Society of Agricultural and Biological Engineers, USA
ASTM	American Society of Testing and Materials, USA
DIN	Deutsches Institut für Normung, GERMANY
DT	Dual Traction [4WD]
fpm	Feet Per Minute
Hi-Lo	High Speed-Low Speed
HST	Hydrostatic Transmission
m/s	Meters Per Second
PTO	Power Take Off
RH/LH	Right-hand and left-hand sides are determined by facing in the direction of forward travel
ROPS	Roll-Over Protective Structures
rpm	Revolutions Per Minute
r/s	Revolutions Per Second
SAE	Society of Automotive Engineers, USA
SMV	Slow Moving Vehicle

California Proposition 65

⚠ WARNING ⚠

Engine exhaust, some of its constituents, certain vehicle components and fluids, contain or emit chemicals known to the State of California to cause cancer and birth defects or other reproductive harm.

IMPORTANT

The engine in this machine is not equipped by the manufacturer with a standard spark arrester. It is a violation of California Public Resource Code Section 4442 to use or operate this engine on or near any forest-covered, brush-covered land, or grass- covered land unless the exhaust system is equipped with a working spark arrester meeting state laws. Other states or federal areas may have similar laws.

Canadian Electromagnetic Compatibility (EMC):
This machine complies with Industry Canada ICES-002.

https://truckmanualshub.com/

UNIVERSAL SYMBOLS

As a guide to the operation of your tractor, various universal symbols have been utilized on the instruments and controls. The symbols are shown below with an indication of their meaning.

- Safety Alert Symbol
- Read Operator's Manual
- Hour meter/Elapsed Operating Hours
- Diesel Fuel
- Fuel-Level
- Empty
- Full
- Engine-Run
- Diesel Preheat/Glow Plugs (Low Temperature Start Aid)
- Starter Control
- Engine-Stop
- Engine Oil-Pressure
- Engine Coolant-Temperature
- Battery Charging Condition
- Electrical Power-accessories
- Hazard Warning Lights
- Turn Signal
- Headlight
- Master Lighting Switch
- Engine Speed Control
- Slow
- Fast
- Brake
- Parking Brake
- 4-Wheel Drive-Off
- 4-Wheel Drive-On
- Speed set-On
- Speed set-Off
- Differential Lock
- Hydraulic Control-Lowered Position
- Hydraulic Control-Raised Position
- 3-Point Lowering Speed Control
- Remote Cylinder-Retract
- Remote Cylinder-Extend
- Mid-PTO
- Mid-Rear-PTO
- Rear-PTO
- Power Take-Off Clutch Control-Off Position
- Power Take-Off Clutch Control-On Position
- Tilt Steering Lever
- Loader Lock Lever Lock Position
- Loader Lock Lever Unlock Position

https://truckmanualshub.com/

FOREWORD

You are now the proud owner of a KUBOTA Tractor. This tractor is a product of KUBOTA's quality engineering and manufacturing. It is made of the excellent materials and under rigid quality control systems. It will give you long, satisfactory service. To obtain the best use of your tractor, please read this manual carefully. It will help you become familiar with the operation of the tractor and contains many helpful hints about tractor maintenance. It is KUBOTA's policy to utilize, as quick as possible, every advance in our research. The immediate use of new techniques in the manufacturing of products may cause some small parts of this manual to become outdated. KUBOTA distributors and dealers will have the most up-to-date information. Please do not hesitate to consult them.

SAFETY FIRST

This symbol, the industry's "Safety Alert Symbol", is used throughout this manual and on labels on the machine itself to warn of the possibility of personal injury. Read these instructions carefully. It is essential that you read the instructions and safety regulations before you attempt to assemble or use this unit.

DANGER : Indicates an imminently hazardous situation which, if not avoided, will result in death or serious injury.

WARNING : Indicates a potentially hazardous situation which, if not avoided, could result in death or serious injury.

CAUTION : Indicates a potentially hazardous situation which, if not avoided, could result in minor or moderate injury.

IMPORTANT : Indicates that equipment or property damage could result if instructions are not followed.

NOTE : Gives helpful information.

https://truckmanualshub.com/

CONTENTS

SAFE OPERATION **7**

SERVICING OF TRACTOR, LOADER, AND BACKHOE **25**
DEALER SERVICE 25
1. Warranty of the tractor 26
2. Scrapping the tractor and its procedure 26

SPECIFICATIONS OF THE TRACTOR **27**
SPECIFICATION TABLE OF THE TRACTOR 27
TRAVELING SPEEDS TABLE 29

SPECIFICATIONS OF THE LOADER **30**
LOADER SPECIFICATIONS TABLE 30
BUCKET SPECIFICATIONS TABLE 30
DIMENSIONAL SPECIFICATIONS OF THE LOADER 31
OPERATIONAL SPECIFICATIONS OF THE LOADER 32
LOADER TERMINOLOGY 34

SPECIFICATIONS OF THE BACKHOE **35**
BACKHOE SPECIFICATIONS 35
1. Dimensions of the backhoe 35
2. Specifications table of the backhoe 37
3. Lift capacity of the backhoe (per SAE J31) 38
BACKHOE TERMINOLOGY 39

IMPLEMENT LIMITATIONS **40**
IMPLEMENT LIMITATION TABLES 40

INSTRUMENT PANEL AND CONTROLS **44**
INSTRUMENT PANEL, SWITCHES, AND HAND CONTROLS 44
1. Key switch 45
2. Tilt lever 45
3. Head light switch 45
4. Hazard light switch 45
5. Turn signal light switch 45
6. Hood open lever 46
FOOT CONTROLS AND HAND CONTROLS 47
1. Operator's seat 48
2. Seat belt 48
3. Brake pedal and parking brake lock pedal 48
3.1 How to use the parking brake 48
4. Range gear shift lever (Hi-Lo) 49
5. Front wheel drive lever 49
6. Hand accelerator lever 50
7. Speed control pedal 50
8. Speed set device 50
8.1 How to use the speed set device 51
9. Loader control lever 51
ACCESSORY 51
1. 12 V electric outlet 51
2. Glove box 52

PRE-OPERATION CHECK OF THE TRACTOR **53**
DAILY CHECK ITEMS BEFORE OPERATION OF THE TRACTOR 53

PRE-OPERATION CHECK OF THE LOADER **54**

https://truckmanualshub.com/

LUBRICATION BEFORE OPERATING THE LOADER 54
CHECKING THE TRANSMISSION FLUID 54
WEIGHT OF THE IMPLEMENTS AS THE REAR BALLAST 54
1. Liquid ballast in the rear tires 54
CHECK OF THE TIRE INFLATION BEFORE OPERATING THE LOADER 54
PERFORMING THE TEST OPERATION OF THE LOADER 55
REMOVING AIR FROM THE HYDRAULIC SYSTEM 55

PRE-OPERATION CHECK OF THE BACKHOE 56

CHECKING OF THE BACKHOE BEFORE OPERATION 56
PRE-OPERATING INSTRUCTION OF THE BACKHOE 56
1. Check of the operator's seat before operating the backhoe 56
2. Check of the ballast before operating the backhoe 56
3. Check of the tire inflation before operating the backhoe 56

OPERATING THE ENGINE 57

STARTING THE ENGINE 57
1. Cold weather starting of the engine 60
2. Block heater (option) 60
STOPPING THE ENGINE 60
WARMING UP OF THE ENGINE 60
1. Warm-up of the engine and transmission oil in the low temperature range 60
JUMP STARTING THE ENGINE 60

OPERATING THE TRACTOR 62

OPERATION OF NEW TRACTOR 62
PRECAUTIONS FOR GETTING ON AND OFF THE TRACTOR 62
OPERATION OF THE FOLDABLE ROPS 62
1. Folding the ROPS 62
2. Raising the ROPS to upright position 63
3. Adjusting the foldable ROPS 64
STARTING THE TRACTOR 65
STOPPING THE TRACTOR 68
CHECK DURING DRIVING 69
1. Cases to stop the engine immediately 69
2. Check items during driving 69
2.1 Easy Checker™ 69
2.2 Fuel gauge 70
2.3 Coolant temperature gauge 70
2.4 Dealing with the overheated coolant temperature 70
2.5 Hour meter 71
2.6 Tachometer 71
PARKING THE TRACTOR 71
TECHNIQUES FOR OPERATING THE TRACTOR 72
1. Differential lock 72
2. Installing the slow-moving-vehicle (SMV) emblem to operate the tractor on a road 73
3. Precautions for operating the tractor on a slopes and rough terrain 73
4. Precautions for transporting the tractor safely 73
5. Directions for use of the power steering 74
REVERSING THE OPERATOR'S SEAT 74

PTO (POWER TAKE-OFF) 77

PTO OPERATION 77
1. PTO select lever 77
2. PTO clutch lever 77
3. PTO shaft cover and PTO shaft cap 78
4. Using the stationary PTO 78
5. PTO drive shaft 79
5.1 Adjusting the length of PTO drive shaft 79

https://truckmanualshub.com/

3-POINT HITCH AND DRAWBAR 80
OVERVIEW OF 3-POINT HITCH AND DRAWBAR 80
3-POINT HITCH 81
1. Precautions for attaching and detaching the implements to the 3-point hitch 81
2. Adjusting the lifting rod (right) 81
3. Adjusting the top link 81
4. Adjusting the check chains 81
HITCH 81
1. How to use the 3-point hitch 83
HYDRAULIC UNIT 84
3-POINT HITCH CONTROL SYSTEM 84
1. Hydraulic control 84
2. Lowering speed of 3-point hitch 84
AUXILIARY HYDRAULICS 85
1. Connecting hoses for the backhoe 85
2. Disconnecting hoses for the mower 86
MOWER LIFT LINKAGE SYSTEM 86
1. Cutting height control dial 86
2. Hydraulic control unit use reference chart 88
TIRES, WHEELS, AND BALLAST 89
TIRES 89
1. Inflation pressure of tires 89
2. Dual tires 89
WHEEL TREAD 89
1. Front wheels 90
2. Rear wheels 90
BALLAST 91
1. Front ballast 91
2. Rear ballast 91
OPERATING THE LOADER 93
PRECAUTIONS FOR OPERATING THE LOADER 93
TECHNIQUES FOR OPERATING THE LOADER AND THE TRACTOR 93
1. Filling the bucket 93
2. Precautions for lifting the load 94
3. Precautions for carrying the load 94
4. Dumping and lowering the bucket 95
5. Precautions for operating the loader with float control 95
6. Loading from a bank 96
7. Peeling and scraping the ground 97
8. Loading low trucks or spreaders from a pile 97
9. Backfilling 98
10. Precautions for handling large heavy objects 99
VALVE LOCK 99
BUCKET LEVEL INDICATOR (IF EQUIPPED) 99
HOW TO USE THE QUICK COUPLER 100
FRONT REMOTE HYDRAULIC CONTROL SYSTEM (IF EQUIPPED) 100
1. Installing the front remote hydraulic control system 100
2. Operating the control lever 100
3. How to use the remote control coupler 101
FRONT GUARD (OPTION FOR THE QUICK ATTACH COUPLER) 102
1. How to use the front guard (if equipped) 102
USING THE ATTACHMENTS (IF EQUIPPED) 103
1. Attaching the attachments (if equipped) 103
2. Detaching the attachments (if equipped) 105
3. Performing the maintenance of the attachments (if equipped) 105

https://truckmanualshub.com/

4. Attachments (option for the quick attach coupler) ... 105
4.1 Quick bucket (option for the quick attach coupler) ... 105
4.2 Snow blade (option for the quick attach coupler) ... 105
4.3 Pallet fork (option for the quick attach coupler) ... 106
4.3.1 Assembling the pallet fork (option for the quick attach coupler) ... 106
DISMOUNTING THE LOADER ... 106

OPERATING THE BACKHOE ... 108

ENGINE SPEED WHEN OPERATING THE BACKHOE ... 108
CONTROLS OF THE BACKHOE ... 108
1. Boom and swing lever ... 108
2. Boom and swing lock lever ... 109
3. Dipperstick and bucket lever ... 109
4. Stabilizer control levers ... 109
PLACING THE STABILIZER ... 109
1. Placing the stabilizer on an unusually steep slope ... 110
GENERAL BACKHOE OPERATION ... 110
1. Digging with operating the dipperstick ... 110
2. Dealing with the spoil pile ... 111
3. Digging straight wall or cemetery ... 111
4. Stabilizer pads (standard) ... 111
TRANSPORTING OF THE BACKHOE ... 111
1. Precautions for driving to the job-site ... 112
2. Precautions of the trailer transporting ... 112

MAINTENANCE OF THE TRACTOR ... 113

SERVICE INTERVALS ... 113
LUBRICANTS, FUEL, AND COOLANT TABLE ... 115
1. Lubricants, fuel, and coolant for North American market ... 115
2. Lubricants, fuel, and coolant for other than North American market ... 116
3. Biodiesel fuel (BDF) ... 117

PERIODIC SERVICE OF THE TRACTOR ... 119

HOW TO OPEN THE FRONT GUARD AND THE HOOD ... 119
DAILY CHECK OF THE TRACTOR ... 119
1. Walk around inspection ... 119
2. Checking the fuel gauge and refueling ... 119
3. Checking the engine oil level ... 120
4. Checking the transmission fluid level ... 120
5. Checking the coolant level ... 121
6. Cleaning the panel and the radiator screen ... 121
7. Checking the brake pedal ... 122
8. Checking the gauges, the meters, and the Easy Checker™ ... 122
9. Checking the head light, hazard light, and so on ... 122
10. Checking the seat belt and the ROPS ... 122
11. Checking and cleaning the electrical wiring and the battery cables ... 122
12. Checking the movable parts ... 123
SERVICE OF THE TRACTOR EVERY 50 HOURS ... 123
1. Lubricate fittings with grease ... 123
2. Checking the engine start system ... 123
3. Checking the OPC (operator presence control) system ... 124
4. Checking the wheel bolt torque ... 124
5. Cleaning the lock lever shaft ... 125
SERVICE OF THE TRACTOR EVERY 100 HOURS ... 125
1. Checking of the battery ... 125
1.1 Battery charging ... 126
1.2 Dealing with the battery when storing the tractor for a long period ... 126
2. Cleaning the air cleaner element ... 126
3. Checking the fuel filter ... 127

https://truckmanualshub.com/

4. Adjusting the fan belt tension 128
5. Adjusting the HST neutral spring for speed control pedal 128
6. Adjusting the brake pedal 128
SERVICE OF THE TRACTOR EVERY 200 HOURS 129
1. Replacing the engine oil filter 129
2. Changing the engine oil 129
3. Replacing the transmission oil filter 130
4. Checking the toe-in 130
4.1 Adjusting the toe-in 131
SERVICE OF THE TRACTOR EVERY 400 HOURS 131
1. Adjusting the front axle pivot 131
2. Changing the transmission fluid 131
3. Cleaning the transmission strainer 132
4. Changing the front axle case oil 132
5. Replacing the fuel filter element 133
SERVICE OF THE TRACTOR EVERY 800 HOURS 133
1. Adjusting the engine valve clearance 133
SERVICE OF THE TRACTOR EVERY 1000 HOURS OR 1 YEAR 133
1. Replacing of the air cleaner element 133
SERVICE OF THE TRACTOR EVERY 1500 HOURS 133
1. Checking the injection pressure of the fuel injection nozzle 133
SERVICE OF THE TRACTOR EVERY 2000 HOURS OR 2 YEAR 133
1. Flushing the cooling system and changing the coolant 133
2. Antifreeze 134
SERVICE OF THE TRACTOR EVERY 3000 HOURS 135
1. Checking the injection pump 135
SERVICE OF THE TRACTOR EVERY 1 YEAR 135
1. Checking the radiator hoses and the hose clamps 135
2. Checking the power steering line 135
3. Checking the fuel lines 135
4. Checking the intake air line 136
5. Checking the engine breather hose 136
SERVICE OF THE TRACTOR EVERY 4 YEAR 136
1. Replacing the radiator hose (water pipes) 136
2. Replacing the power steering hose 137
3. Replacing the fuel hose 137
4. Replacing the engine breather hose 137
5. Replacing the intake air line 137
SERVICE OF THE TRACTOR AS REQUIRED 137
1. Bleeding the fuel system 137
2. Replacing the fuse 137
3. Replacing the light bulb 138

MAINTENANCE OF THE LOADER 139

DAILY CHECKING THE LOADER 139
SERVICE OF THE LOADER EVERY 10 HOURS 139
1. Lubricating the loader 139
SERVICE OF THE LOADER EVERY 20 HOURS TO 30 HOURS 140
1. Re-tightening of hardware of the loader 140
SERVICE OF THE LOADER EVERY 50 HOURS 140
1. Checking the torque of bolt and nut of the main frame 140

MAINTENANCE OF THE BACKHOE 141

CHECKING THE BACKHOE DAILY 141
SERVICE OF THE BACKHOE EVERY 10 HOURS 141
1. Lubricating the backhoe 141
SERVICE OF THE BACKHOE EVERY 50 HOURS 142
1. Checking the bolt torque of the sub frame 142

https://truckmanualshub.com/

SERVICE OF THE BUCKET 142
1. Changing the backhoe bucket 142
2. Service of the bucket teeth 143
GENERAL TORQUE SPECIFICATION 144
STORAGE OF THE TRACTOR 146
STORING THE TRACTOR 146
REMOVING THE TRACTOR FROM STORAGE 146
REMOVING THE LOADER 147
HOW TO REMOVE THE LOADER 147
STORING THE LOADER 150
REINSTALLING THE LOADER 151
HOW TO REINSTALL THE LOADER 151
ADJUSTING THE HEIGHT OF THE LIFTING STAND 156
REMOVING THE BACKHOE 161
HOW TO REMOVE THE BACKHOE 161
STORING THE BACKHOE 163
REINSTALLING THE BACKHOE 164
HOW TO REMOVE THE BACKHOE 164
TROUBLESHOOTING 167
ENGINE TROUBLESHOOTING 167
OPTIONS 168
OPTION ITEMS 168
INDEX 169

SAFE OPERATION

PRECAUTIONS OF THE TRACTOR

Careful operation is your best insurance against an accident.
Read and understand this manual carefully before operating the tractor.
All operators, no matter how much they have experience, should read this and other related manuals before operating the tractor or any implement attached to it. It is the owner's obligation to instruct all operators in safe operation.

1. Precautions before operating the tractor

Know your equipment and its limitations.
Read this entire manual before starting and operating the tractor.

1.1 General precautions

- Pay special attention to the safety labels on the tractor.
- Do not operate the tractor or any implement attached to the tractor while under the influence of alcohol, medication, controlled substances, or while you are fatigued.
- Carefully check the vicinity of the tractor before operating it or any implement attached to it. Do not allow any bystander around or near the tractor during operating it.
- Before allowing other people to use your tractor, explain them how to operate it and have them read this manual before operating it.
- Never wear loose, torn, or bulky clothing around the tractor. Loose, torn, or bulky clothing may catch on moving parts or controls, leading to the risk of an accident. Use additional safety items: hard hat, safety boots or shoes, eye and hearing protection, gloves, and so on, as appropriate or required.
- Do not allow passengers to ride on any part of the tractor at anytime. The operator must remain in the operator's seat during operating the tractor.
- Check the brakes, clutch, linkage pins, and other mechanical parts for improper adjustment and wear. Replace worn or damaged parts promptly. Check the tightness of all nuts and bolts regularly.
  For further details, see 4. Checking the wheel bolt torque on page 124.
- Keep your tractor clean. Buildups of dirt, grease, and trash may contribute to fires and lead to personal injury.
- Use only implements meeting the specifications listed under IMPLEMENT LIMITATION TABLES on page 40, or implements approved by KUBOTA.
- Use proper weights on the front or rear of the tractor to reduce the risk of upsets. When using the front loader, put an implement or ballast on the 3-point hitch to improve stability. Follow the safe operating procedures specified in *the implement or attachment manual*.
- Do not modify the tractor. Unauthorized modification may affect the function of the tractor, which may result in personal injury.

1.2 Precautions for CAB and ROPS

KUBOTA recommends the use of a CAB or roll-over-protective-structures (ROPS), and seat belt in almost all applications. Combination of a CAB or ROPS and seat belt will reduce the risk of serious injury or death if the tractor should be upset.

- Check for overhead clearance which may interfere with a CAB or ROPS.
- Set the parking brake and stop the engine. Remove any obstructions which may prevent raising or folding the ROPS. Do not allow any bystander. Always perform functions of CAB or ROPS from a stable position at the rear of the tractor. Hold the top of the ROPS securely when raising or folding it. Make sure that all pins are installed and locked.
- If the CAB or ROPS is loosened or removed for any reason, make sure that all parts are reinstalled correctly before operating the tractor.
- Never modify or repair any structural member of a CAB or ROPS because welding, bending, drilling, grinding, or cutting it may weaken the structure.
- If any structural member of the CAB or ROPS is damaged, replace the entire structure at your local KUBOTA Dealer.
- If the tractor is equipped with a foldable ROPS, you may fold down it temporarily only when absolutely necessary to fold down it for areas with constraints on height.
  There is no protection of operator provided by the ROPS in the folded position. For operator safety, you should place the ROPS in the upright and locked position and fasten the seat belt for all other operations.
- Always use the seat belt if the tractor is equipped with a CAB or ROPS.
  Do not use the seat belt if a foldable ROPS is down or there is no ROPS. Check the seat belt regularly and replace if frayed or damaged.

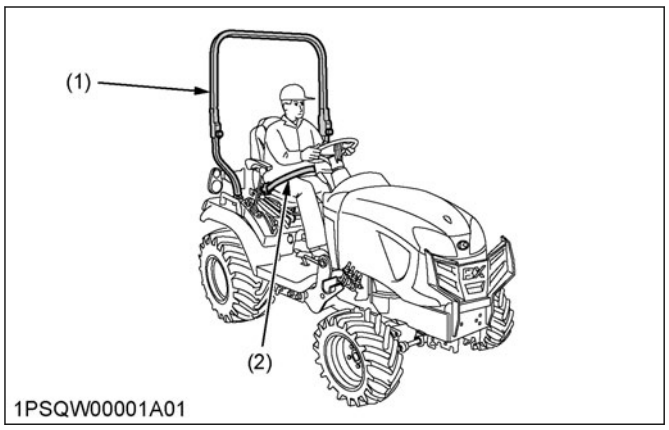

(1) ROPS *(2) Seat belt*

2. Precautions for operating the tractor

Operator safety is a priority. Safe operation, specifically with respect to overturning hazards, entails understanding the equipment and environmental conditions at the time of use. Some prohibited uses which can affect overturning hazards include traveling and turning with implements and loads carried too high, and so on.
This manual sets forth some of the obvious risks, but the list of risks is not exhaustive, and the list of risks cannot be exhaustive. It is the operator's responsibility to be alert for any equipment or environmental condition that could compromise safe operation.

2.1 Precautions for starting to operate the tractor

- Always sit in the operator's seat when starting the engine or operating the levers or controls. Adjust the operator's seat referring to 1. Operator's seat on page 48. Never start the engine while you are standing on the ground.
- Before starting the engine, make sure that all levers including auxiliary control levers are in their **neutral** positions, that the parking brake is engaged, and that the power take-off (PTO) is disengaged or **off**. Fasten the seat belt if the tractor is equipped with a CAB, a fixed ROPS, or a foldable ROPS in the upright and locked position.
- Do not start the engine by shorting across starter terminals or bypassing the safety start switch. The tractor may start in gear and move if normal starting circuitry is bypassed.
- Do not operate or idle the engine in a non-ventilated area. Carbon monoxide gas is colorless, odorless, and deadly.
- Check that the operator-presence-control-system (OPC) are functioning correctly before each time you use the tractor. Test safety systems. See 2. Checking the engine start system on page 123 and 3. Checking the OPC (operator presence control) system on page 124.
  Do not operate unless they are functioning correctly.

2.2 Precautions for working the tractor

- Pull only from the hitch. Never hitch to the axle housing or any other point except the hitch. Hitching to the axle housing or any other point except the hitch will increase the risk of serious personal injury or death due to a tractor upset.

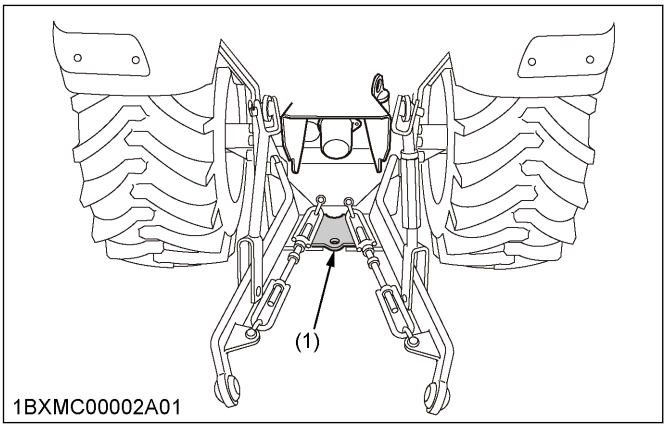

(1) Hitch

- Keep all shields and guards in place. Replace any shield or guard that are missing or damaged.
- Avoid sudden starts. To avoid upsets, slow down when turning, on uneven ground, and before stopping.
- The tractor cannot turn with the differential locked. Do not turn with the differential locked as it could be dangerous.
- Do not operate the tractor near ditches, holes, embankments, or other ground surface features which may collapse under the weight of the tractor. The risk of tractor upset is even higher when the ground is loose or wet. Tall grass can hide obstacles, so walk the area first to be sure.
- Watch where you are going at all times. Watch for and avoid obstacles. Be alert at row ends, near trees, and other obstructions.
- When working in groups, always let the others know what you are going to perform before you perform it.
- Never try to get on or off a moving tractor.
- Always sit in the operator's seat when you are operating levers or controls.
- Do not stand between the tractor and the implement or trailed vehicle unless parking brake is applied.
- Do not operate or tow the tractor at speeds exceeding specific travel speed.

2.3 Safety for children

Tragedy can occur if the operator is not alert to the presence of children. Children generally are attracted to machines and their work.

- Never assume that children will remain where you last saw them.
- Keep children out of the work area and under the watchful eye of another responsible adult.
- Be alert and shut the tractor down if children enter the work area.
- Never carry children on the tractor. There is no safe place for them to ride. They may fall off and be run over or interfere with your control of the tractor.
- Never allow children to operate the tractor even under adult supervision.
- Never allow children to play on the tractor or on the implement.
- Use extra caution when the tractor is backing up. Before the tractor starts to move, look down and behind to make sure that the working area is clear.

2.4 Precautions for operating the tractor on slopes

Slopes are a major factor related to loss-of-control and tip-over accidents, which can result in severe injury or death.

All slopes require extra caution.

- To avoid upsets of the tractor, always back it up steep slopes. If you cannot back the tractor up on the slope or if you feel uneasy to back it up on the slope, do not operate the tractor on the slope. Stay off the slopes which is too steep for safe operation.
- Driving forward out of a ditch, mired condition, or up a steep slope increases the risk of the tractor to be upset backward. Always back the tractor out of a ditch, mired condition, or steep slope. The 4-wheel drive models require extra caution because their increased traction can give the operator false confidence in the ability of the tractor to climb the slopes.
- Keep all movement of the tractor on slopes slow and gradual. Do not change the speed or direction of the tractor suddenly. Do not apply brake suddenly. Do not move the steering wheel suddenly.
- Avoid changing the gears speed when the tractor is climbing or going down a slope. Changing the gears to **neutral** on a slope could cause loss of control.
- You should pay special attention to the weight and location of implements and loads because they will affect the stability of the tractor.
- To improve stability of the tractor on slope, follow recommendations for proper ballasting as shown in BALLAST on page 91
- When driving down a slope, make sure that 4-wheel drive is engaged to increase traction if equipped.

2.5 Precautions for driving the tractor on the road

- Check the front wheel engagement. The braking characteristics are different between 2-wheel drive and 4-wheel drive. Know the difference and use carefully.
- Always slow the tractor down before turning. Turning at high speed may tip the tractor over.
- Make sure that the slow-moving-vehicle (SMV) sign is clean and visible. Use the hazard lights and turn signals as required.
- On public roads, use the SMV emblem and hazard lights, if required by local traffic and safety regulations.

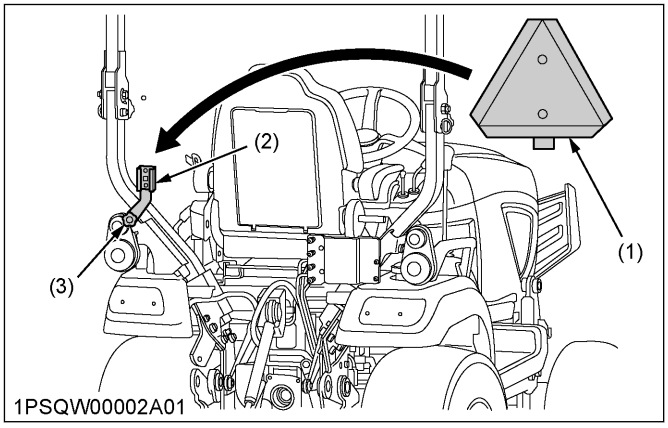

(1) SMV emblem
(2) Bracket
(3) Knob nut

- Check all local traffic and safety regulations.
- Turn the headlights **on**. Dim the headlights when meeting another vehicle.
- Drive at speeds that allow you to maintain the control at all times.
- Do not apply the differential lock while traveling at road speeds. The tractor may run out of control.
- Avoid sudden motions of the steering wheel because they can lead to a dangerous loss of stability. The risk is especially great when the tractor is traveling at road speeds.
- Keep the ROPS in the **up** position and wear the seat belt when driving the tractor on the road. Otherwise, you will not be protected in the event of a tractor roll-over.
- Do not operate an implement while the tractor is on the road. Lock the 3-point hitch in the raised position.
- When towing other equipment, use a safety chain and place an SMV emblem on the equipment as well.

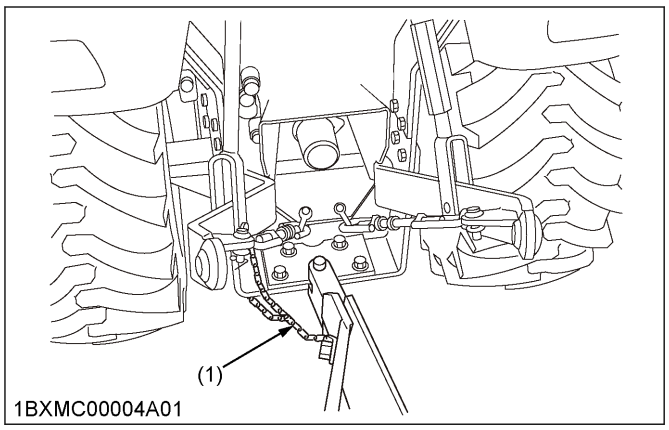

(1) Safety chain

- Set the implement-lowering-speed-knob in the **lock** position to hold the implement in the raised position.

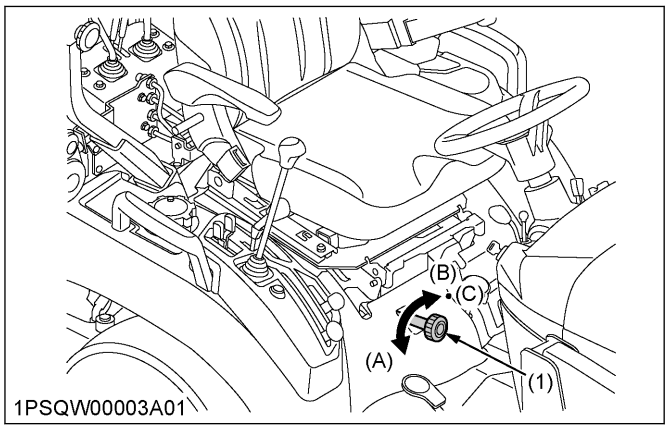

(1) 3-point hitch lowering speed knob
(A) Fast
(B) Slow
(C) Lock

3. Precautions for parking the tractor

- Disengage the PTO, lower all implements to the ground, place all control levers in their **neutral** positions, set the parking brake, stop the engine, remove the key from the ignition, and lock the cab door if equipped. Leaving the transmission in gear with the engine stopped will not prevent the tractor from rolling.

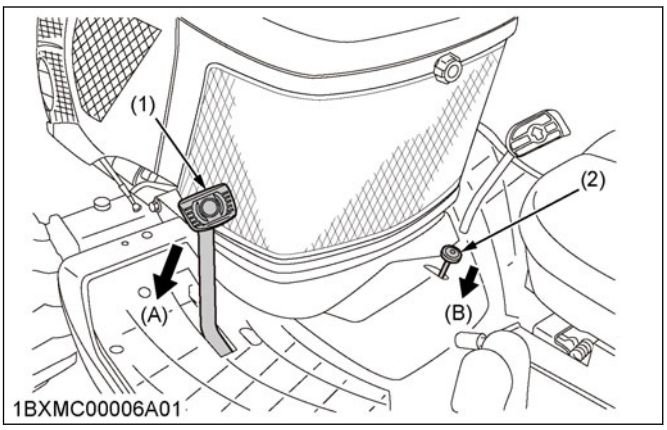

(1) Brake pedal
(2) Parking brake pedal
(A) Depress
(B) Push down parking brake pedal while depressing brake pedal

- Make sure that the tractor has come to a complete stop before dismounting from the tractor.
- Avoid parking on steep slopes. If it is at all possible, park on a firm and level surface. If it is not at all possible to park on a firm and level surface, park across a slope and chock the wheels.
  Failure to comply with the preceding warning may allow the tractor to move and could cause injury or death.

4. Precautions for operating the PTO

- Wait until all moving components have completely stopped before getting off the tractor, connecting, disconnecting, adjusting, cleaning, or servicing any PTO driven equipment.
- Keep the PTO-shaft-cover in place at all times. Replace the PTO-shaft-cap when the shaft is not in use.

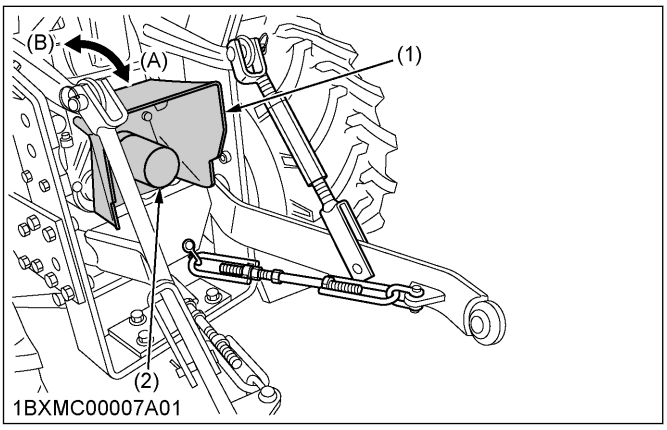

(1) PTO shaft cover
(2) PTO shaft cap
(A) Normal position
(B) Raised position

- Before installing or using the PTO-driven-equipment, read *the manufacturer's manual* and review the safety labels attached to the equipment.
- When operating the stationary PTO-driven-equipment, always apply the parking brake of tractor and place the chocks behind and in front of

the rear wheels. Stay clear of all rotating parts. Never step over rotating parts.

5. Precautions for using 3-point hitch

- Use the 3-point hitch only with equipment designed for 3-point hitch usage.
- When using an implement mounted to the 3-point hitch, be sure to install the proper counterbalance-weight on the front of the tractor.
- When transporting the loads on the road, set the implement-lowering-speed-knob in the **lock** position to hold the implement in the raised position.

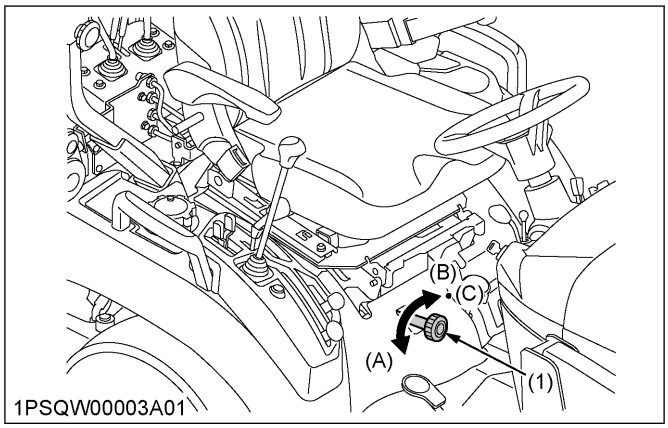

(1) 3-point hitch lowering speed knob
(A) Fast
(B) Slow
(C) Lock

- To avoid injury from separation, do not extend the lift rod beyond the groove on the threaded rod.

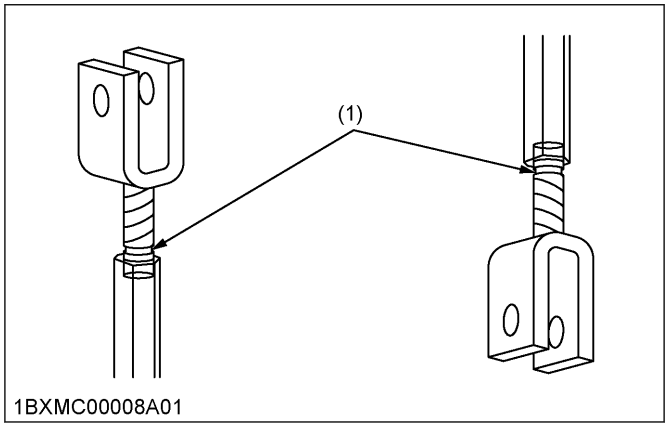

(1) Groove

6. Precautions for servicing the tractor

Before servicing the tractor, follow the following procedure.

1. park the tractor on a firm, flat, and level surface.
2. Set the parking brake.
3. Lower all implements to the ground.
4. Place the gear-shift-lever in the **neutral** position.
5. Stop the engine.
6. Remove the starter key.

- Allow the tractor time to cool off before working on or near the engine, muffler, radiator, and so on.
- Do not remove the radiator cap while coolant is hot. When coolant is cool, slowly rotate the radiator cap to the first stop and allow sufficient time for excess pressure to escape before removing the radiator cap completely. If the tractor equips a coolant-recovery-tank, add coolant or water to the coolant-recovery-tank. Do not add coolant to the radiator. See 5. Checking the coolant level on page 121.
- Always stop the engine before refueling. Avoid spills and overfilling.
- Do not smoke when working around the battery or when the tractor is refueling. Keep all sparks and flames away from the battery and fuel tank. The battery presents an explosive hazard, because it gives off hydrogen and oxygen especially when you are recharging it.
- Before jump starting a dead battery, read and follow all of the instructions. See JUMP STARTING THE ENGINE on page 60.
- Keep first-aid-kit and fire extinguisher handy at all times.
- Disconnect the ground cable of battery before working on or near electric components.
- To avoid the possibility of battery explosion, do not use or charge the refillable type battery if the fluid level is below the lower (lower limit level) mark. Check the fluid level regularly and add distilled water as required so that the fluid level is between the upper and lower levels.
- To avoid sparks from an accidental short circuit, always disconnect the ground cable (-) of battery first and reconnect it last.

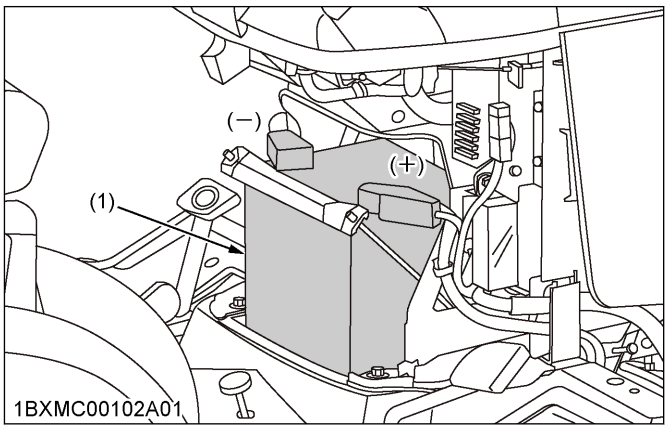

(1) Battery

- Do not mount a tire on a rim. A qualified person should mount a tire on a rim with the proper equipment.
- Always maintain the correct tire pressure. Do not inflate the tires above the recommended pressure shown in 1. Inflation pressure of tires on page 89.

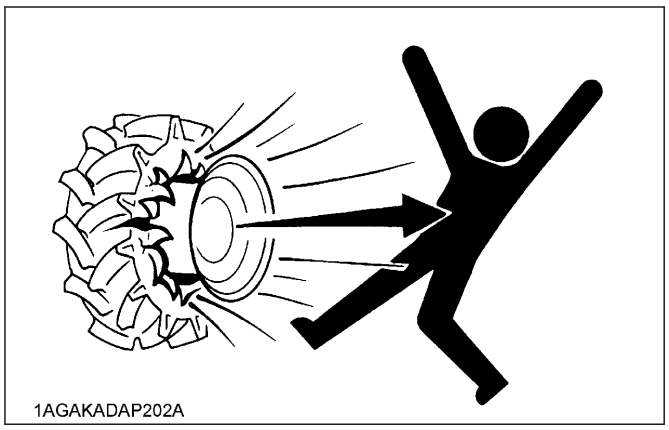

- Securely support the tractor when either changing wheels or adjusting the width of wheel tread.
- Make sure that the wheel bolts have been tightened to the specified torque. See WHEEL TREAD on page 89.
- Do not work under any hydraulically supported devices. They can settle, suddenly leak down, or be accidentally lowered. If it is necessary to work under the tractor or any machine elements for servicing or adjustment, securely support them with stands or suitable blocking beforehand.
- Escaping hydraulic fluid under pressure obtains sufficient force to penetrate skin, so escaping hydraulic fluid under pressure can cause serious personal injury. Before disconnecting the hydraulic lines, be sure to release all residual pressure. Before applying pressure to the hydraulic system, make sure that all connections are tight and that all lines, pipes, and hoses are free of damage.

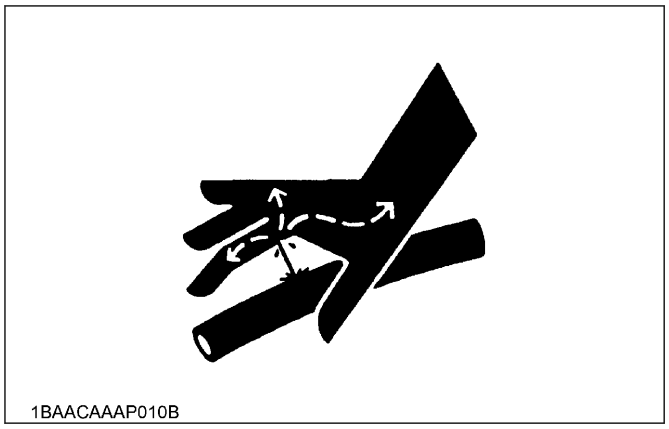

- Hydraulic fluid escaping from pinholes may be invisible. Do not use hands to search for suspected leaks. Use a piece of cardboard or wood to search for suspected leaks. You should use safety goggles or other eye protection. If injured by escaping fluid, see a medical doctor at once. Hydraulic fluid will produce gangrene or severe allergic reaction.

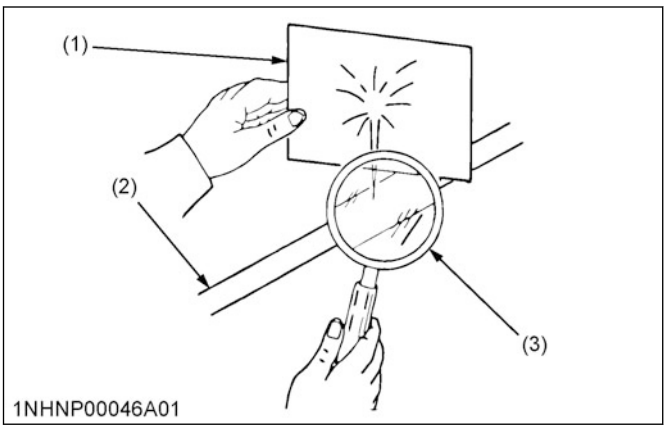

(1) Cardboard
(2) Hydraulic line
(3) Magnifying glass

- Waste products such as used oil, fuel, hydraulic fluid, and batteries, can harm the environment, people, pets, and wildlife. Please dispose properly. See your local recycling center or KUBOTA Dealer to learn how to recycle or get rid of waste products.

PRECAUTIONS OF THE LOADER

You can avoid most accidents of the loader equipment by simple safety precautions.
Safety precautions of the loader, if you follow at all times, will help you operate your loader safely.

1. Precautions before operating the loader

- Read and understand all instructions and precautions in both the tractor and the loader operator's manuals before using the loader.
  Lack of knowledge can lead to accidents.
- It is the owner's responsibility to make sure that anyone who will operate the loader reads this manual first and becomes familiar with the safe operation of the loader.
- For your safety, KUBOTA strongly recommend using a ROPS (roll-overprotective-structures) with a seat belt in almost all applications. If your tractor equips a foldable ROPS, fold it down only when absolutely necessary and raise it up and lock it again as soon as possible. Do not wear the seat belt when a foldable ROPS is down or a fixed ROPS is removed. If you get any questions, consult your local KUBOTA dealer.
  Always use the seat belt when the tractor is equipped with a ROPS. Never use the seat belt when the tractor is not equipped with a ROPS.
- Visually check for hydraulic leaks and broken, missing, or malfunctioning parts.
  Perform necessary repairs before operating the loader.

- Replace damaged or illegible safety labels. See 2. Safety labels of the loader on page 20 for required labels.
- When the front loader is mounted on the tractor, enter and exit the operator's seat only from left side of the tractor.
- Engage the loader-control-valve-lock to prevent accidental actuation when the implement is not in use or during transport. Do not utilize the loader-control-valve-lock for maintenance or repair of the machine.
- Assemble, remove, and reinstall the loader only as directed in this manual. Otherwise, serious personal injury or death may result.
- Follow the following precautions when attaching the implements.
  - Make sure that both handles of the boom LH and RH contact the ear plates at the points (A) and are all the way down.
  - Make sure that both lock pins of the boom LH and RH protrude through the pin slots.
  - KUBOTA recommends the use of KUBOTA attachments on KUBOTA loaders. Non-KUBOTA attachments, if used, must comply with ISO 24410, first edition 2005-04-15.
  - Use of a non-KUBOTA attachment that does not comply with ISO 24410 or the improper positioning of handle(s) or non-protrusion of pin(s) may result in detachment of the attachment or deformation, causing loss of performance, personal injury, or death.

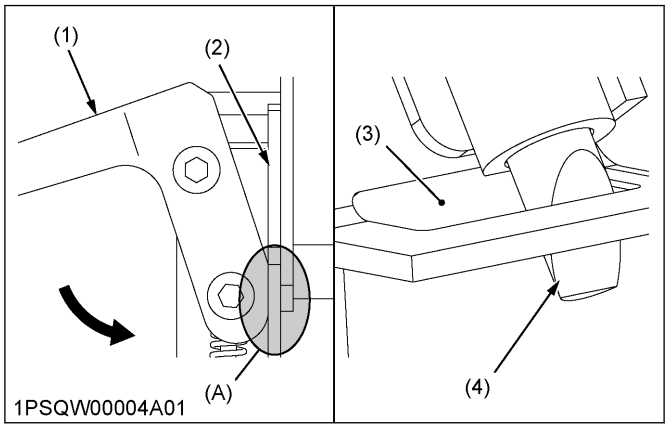

(1) Handle
(2) Ear plate
(3) Pin slot
(4) Lock pin
(A) Points where the handle contacts the ear plate.

2. Precautions for operating the loader

- Operate the loader only when properly seated at the controls. Do not operate the loader from the ground.
- Move and turn the tractor at low speeds.
- Never allow anyone to get under the bucket of the loader or reach through the boom when the bucket is raised.
- Keep children, others, and livestock away when operating the loader and the tractor.
- Do not walk or work under a raised bucket of the loader or attachment unless it is securely blocked and held in position.
- For the stability of the tractor and operator's safety, add rear ballast to the 3-point hitch and to the rear wheels when using the loader.
- To increase stability of the application, adjust the rear wheels to the widest setting that is suitable for your application.
- Exercise extra caution when operating the loader with a raised bucket or attachment.
- Do not lift or carry any person on the loader, in the bucket, or other attachment.
- Avoid loose fill, rocks, and holes. Loose fill, rocks, and holes can be dangerous for operation or movement of the loader.
- Avoid overhead wires and obstacles when the loader is raised. Contacting the electric lines can cause electrocution.
- Gradually stop the loader boom when lowering or lifting.
- Use caution when handling loose or shiftable loads.
- When using the loaders for handling large, heavy, or shiftable objects, using proper handling attachments with them is recommended.
- Handling large, heavy objects can be extremely dangerous due to the following reasons:
  - Danger of rolling the tractor over
  - Danger of upending the tractor
  - Danger of the object rolling or sliding down the boom of the loader onto the operator
- If you must handle the large, heavy objects, protect yourself by the following preventive measures:
  - Never lift the load higher than necessary to clear the ground.
  - Add the rear ballast to the tractor to compensate for the load, or use the rear implement.
  - Never lift large objects with the equipment that may permit the large objects to roll back onto the operator.
  - Move slowly and carefully, avoiding rough terrain.
- Never lift or pull a load from any point on the loader or any attachments with a chain, rope, or cable. Otherwise, rollover or serious damage to the loader may occur.
- Be extra careful when operating the tractor on a slope. Always operate the tractor up and down, and never across the slope.
  Do not operate the tractor on steep slopes or unstable surfaces.

- When operating another implement on a hillside, be sure to remove the loader to reduce the risk of rollover.
- Carry the boom of the loader at a low position during transport. Be able to see over the bucket.
- Allow for the length of the loader when turning it.

3. Precautions after operating the loader

- When loader work is complete and parking or storing, follow the following procedures before leaving the operator's seat of the tractor.
  1. Choose flat, hard ground.
  2. Lower the boom of the loader to the ground.
  3. Stop the engine.
  4. Set the brakes.
  5. Remove the starter key.
- Make sure that the detached loader is on stands and on a hard, level surface.
- Before disconnecting the hydraulic lines, relieve all hydraulic pressure by moving the controls.
- Do not remove the loader from the tractor without an approved bucket attached.

4. Precautions for servicing the loader

- Always wear the safety goggles when servicing or repairing the machine.
- Do not modify the loader. Unauthorized modification may affect the function of the loader, which may result in personal injury.
- Do not use the loader as a work platform or a jack to support the tractor for servicing or maintenance.
  Securely support the tractor or any machine elements with stands or suitable blocking before working underneath.
  For your safety, do not work under any hydraulically supported devices. Hydraulically supported devices can settle, suddenly leak down, or be accidentally lowered.
- Escaping the hydraulic oil under pressure can obtain sufficient force to penetrate the skin, causing serious personal injury. Do not use hands to search for suspected leaks. If injured by escaping fluid, obtain medical treatment immediately.
- Do not tamper with the setting of the relief valve. The relief valve is pre-set at the factory. Changing the setting of the relief valve can cause overloading of the loader and tractor which may result in serious personal injury.
- When servicing or replacing the pins in cylinder ends, bucket, and so on, always use a brass drift and hammer. Otherwise injury from flying metal fragments could result.

PRECAUTIONS OF THE BACKHOE

Most accidents of the backhoe equipment can be avoided by simple safety precautions.
Safety precautions of the backhoe, if you follow at all times, will help you operate your backhoe safely.

1. Precautions before operating the backhoe

- Read and understand all precautions in this manual before service or operation. Allow only trained personnel to operate or service the backhoe.
- It is the owner’s responsibility to make sure that anyone who will operate the backhoe reads this manual first and becomes familiar with the safe-operation of the backhoe.
- For safe operation of the backhoe, check the mounting-bolts for tightness and check that the mount levers are in the **right** position before operation the backhoe.
- Never operate the tractor with the backhoe attached and the loader removed.
- Check for buried material such as electrical lines, telephone lines, gas lines, and water lines. When in doubt about buried material, contact local utility companies for their buried location prior to operating the backhoe.
- Replace any safety decal that becomes damaged, lost, or illegible. Also renew all decals when repainting.

2. Precautions for operating the backhoe

- Do not allow anyone other than the operator on the unit of the backhoe while in operation or transport.
- Keep all person and animals away from swing area of backhoe.
- Pay attention to the backhoe when operating it on slopes to avoid tipping-over of the machine. Travel at a speed compatible with safe operation, especially when operating the machine on uneven terrain, crossing ditches, or while turning.
- Operate the backhoe from the backhoe operator's seat only.
- When using the backhoe on slopes, one stabilizer may be lower than the other. Pay extreme attention to the backhoe during excavation because the risk of tipping-over of the machine will increase.
- To reduce the risk of tipping-over of the machine on a slope, place the spoil to the high side of the excavation.
- Do not dig under the stabilizer or the tractor, especially in soft or sandy condition. Take extra precaution in wet or thawing ground.

The machine can become unstable in wet or thawing conditions and these conditions may collapse under the weight of the machine and may cause tipping-over of the machine.

- Never operate the machine or any equipment while under the influence of alcohol or other drugs, or while fatigued.
- When leaving the machine unattended, be sure to lower the backhoe to the ground. Set the parking brake, then shut the engine off and remove the key.

3. Precautions of the backhoe while driving the tractor on the road

- Raise and center the boom, close the dipperstick, curl the bucket, and lock the boom before transporting the machine.
- Check the local codes or regulations that may apply to tractor, loader, and backhoe operation on public streets or highways, before transporting or traveling of the machine. Use the slow-moving-vehicle (SMV) emblem and warning flashers as required.

4. Precautions for servicing the backhoe

- Before disconnecting the hydraulic lines, relieve all hydraulic pressure by moving the controls.
- Always use personal protection device such as safety goggles and ear protection when servicing or repairing the machine.
- Lower the backhoe to the ground and shut the engine off before servicing of the backhoe.
- When servicing or repairing pins in cylinder ends, bucket, and so on, always use a brass drift and hammer. Failure to service or repair pins using a brass drift and hammer could result in injury from flying metal fragments.
- To avoid serious personal injury, keep clear of working area of the backhoe.
- When servicing or checking the backhoe underneath, do not get under the machine while it is being held with only the bucket, backhoe, or stabilizers. Securely support the machine with jack stands.
- For your safety, do not work under any hydraulically supported machine elements. Hydraulically supported machine elements can settle, suddenly leak down, or be accidentally lowered.
- Escaping hydraulic fluid under pressure can obtain sufficient force to penetrate the skin, which cause serious personal injury.
  Before applying pressure to the hydraulic system, be sure that all connections are tight and that all lines, the pipes and the hoses are not damaged.
  Hydraulic fluid escaping from a very small hole can be almost invisible. Do not use hands to search for suspected leaks. Use a piece of cardboard or wood.
  If injured by escaping fluid, see a doctor at once. Serious infection or allergic reaction will develop if proper medical treatment is not administered immediately.
- Do not tamper with any setting of the pressure of the control valve and the relief valve of the backhoe. The pressure of the relief valve is preset at the factory. Changing the setting of the pressure of the relief valve can cause overloading of the backhoe and the tractor, and serious personal injury or death may result.
- Do not modify the backhoe for any reason. Modifying the backhoe can cause an unstable condition of combination of the tractor, the loader, and the backhoe, and serious personal injury or death may result.

SAFETY LABELS

1. Safety labels of the tractor

(1) Part No. K2871-6548-1

1AGAJBMAP0460

(2) Part No. K1272-6585-2
Diesel fuel only
No fire

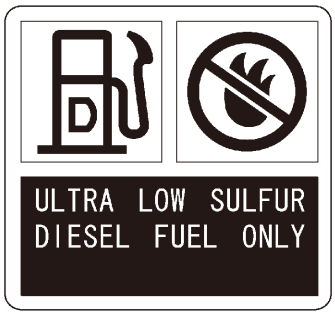

1BDAHAOAP002A

(3) Part No. K2591-6557-2

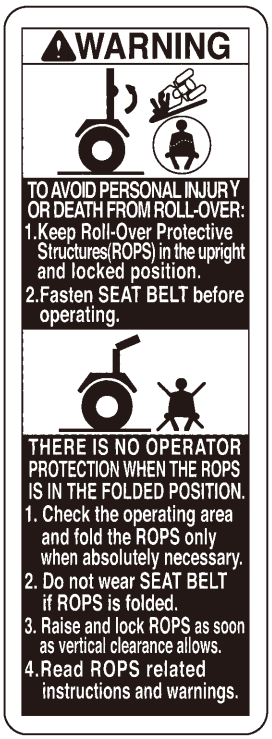

1HNAAACAP0690

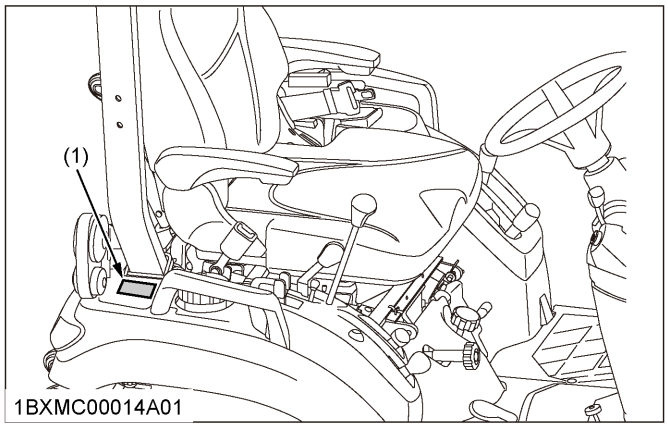

1BXMC00014A01

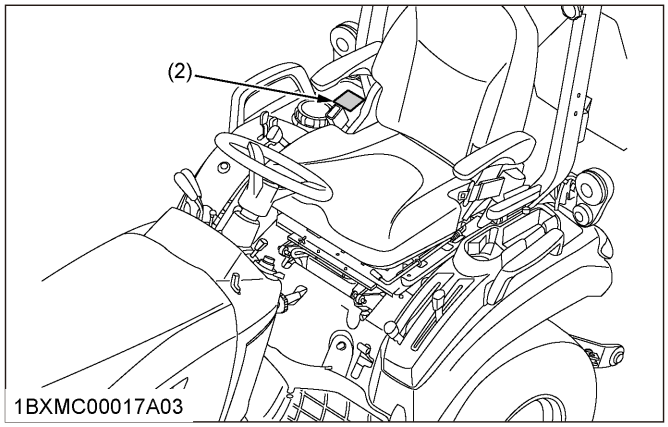

1BXMC00017A03

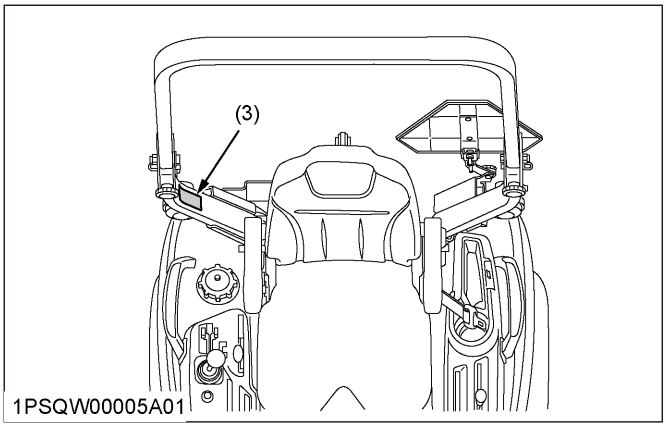

1PSQW00005A01

1PSQW00006A01

(1) Part No. K2581-6554-1

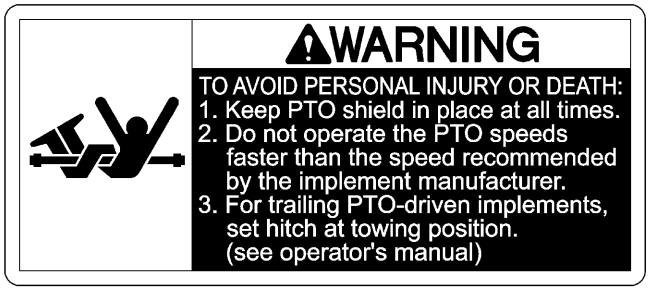

1AGAJBMAP0470

(2) Part No. K2581-6555-1

1AGAJBMAP0480

(3) Part No. K2871-6556-1

1AGAJBMAP0490

(4) Part No. K2871-6552-2

1AGAJBMAP0500

(5) Part No. K2651-6568-1

1AYAACAAP1000

(6) Part No. K2871-6558-1

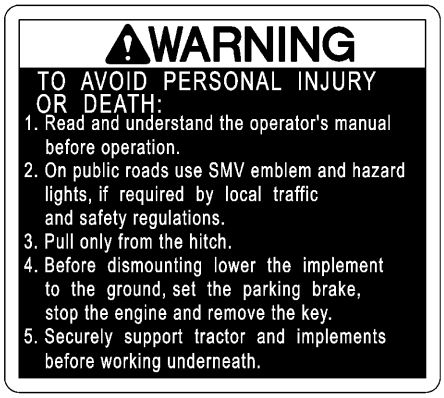

1AGAJBMAP0530

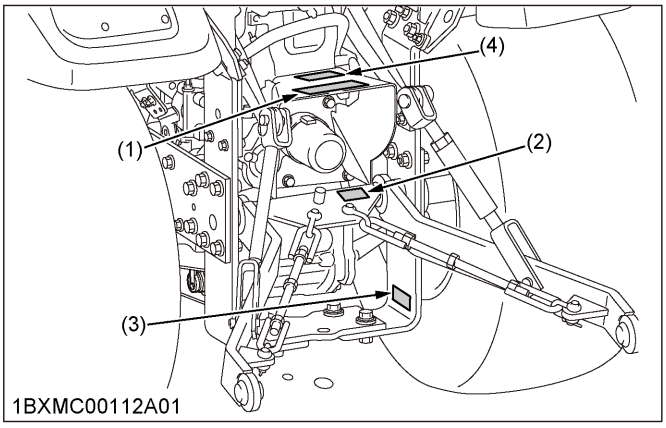

1BXMC00112A01

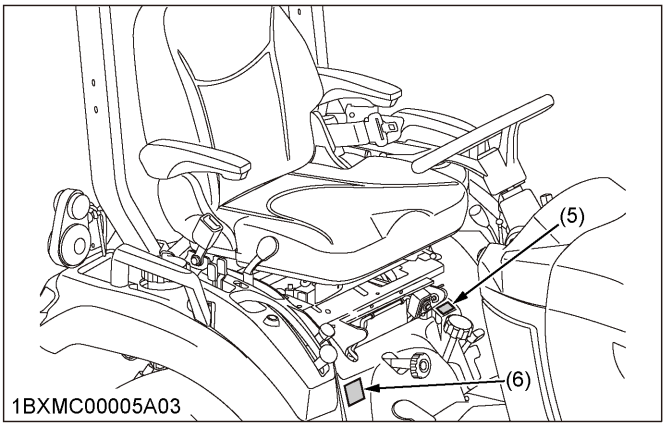

1BXMC00005A03

(1) Part No. K2871-6541-1

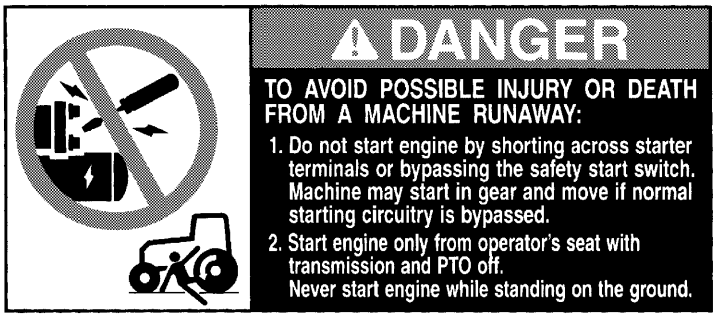

1AGAJAXAP048E

(2) Part No. K2581-6547-1
Stay clear of engine fan and fanbelt.

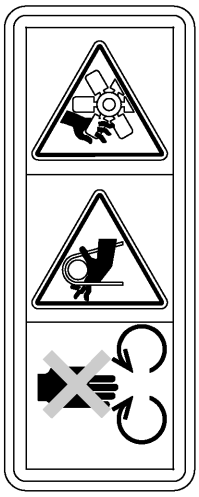

1AGAJAXAP049E

(3) Part No. K2581-6543-1
Stay clear of engine fan and fanbelt.

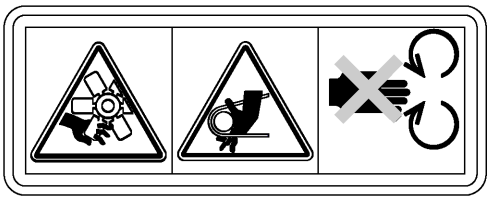

1AGAJAXAP052E

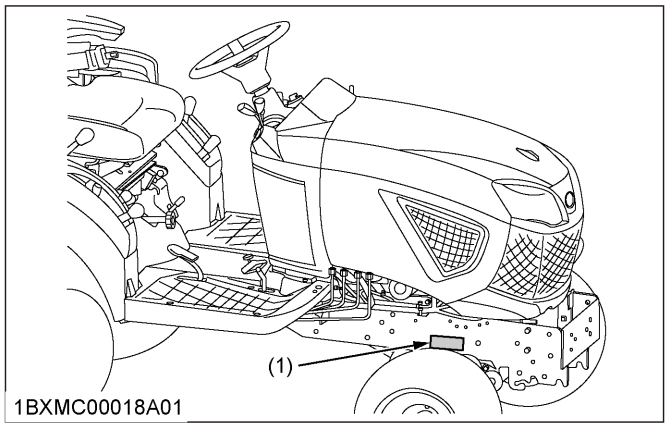

1BXMC00018A01

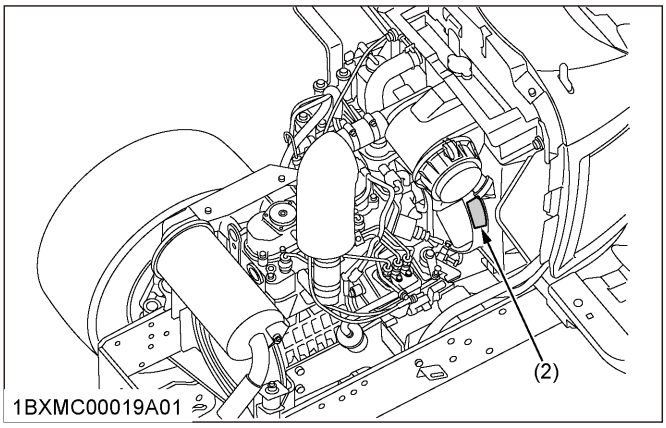

1BXMC00019A01

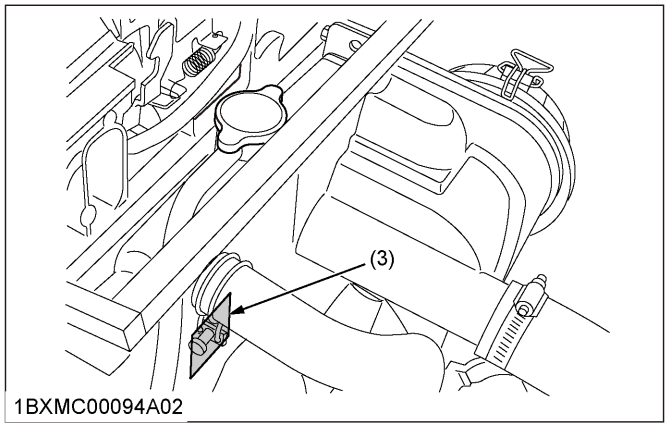

1BXMC00094A02

1PSQW00007A01

(1) Part No. K7591-6114-2

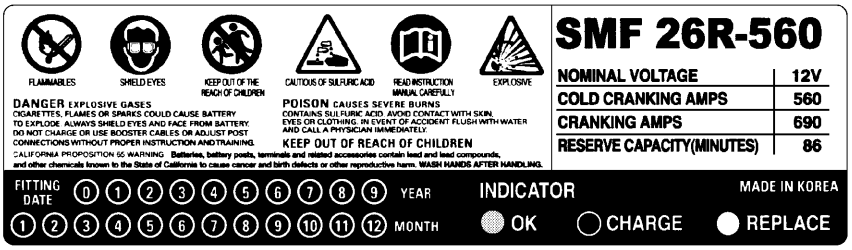

1AYAACQAP256A

(2) Part No. K2871-6564-1

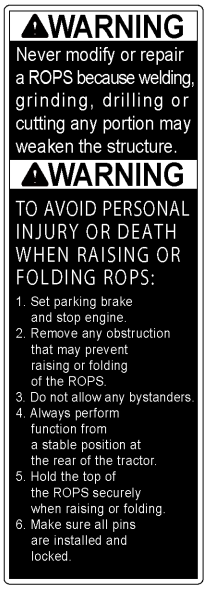

1AGAJBMAP0560

(3) Part No. K2871-6542-1
Do not touch hot surface like muffler, etc.

1AGAJBMAP0520

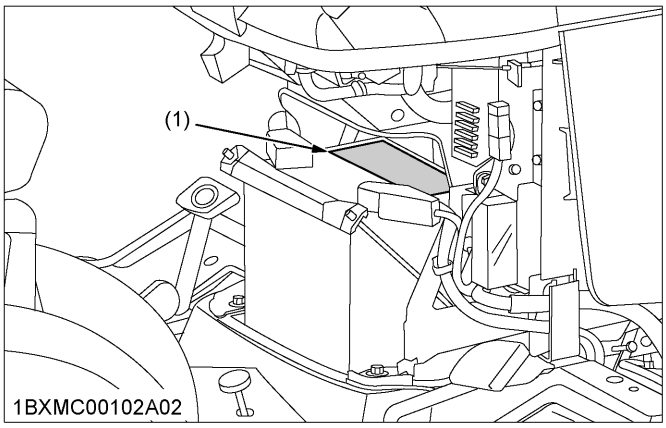

1BXMC00102A02

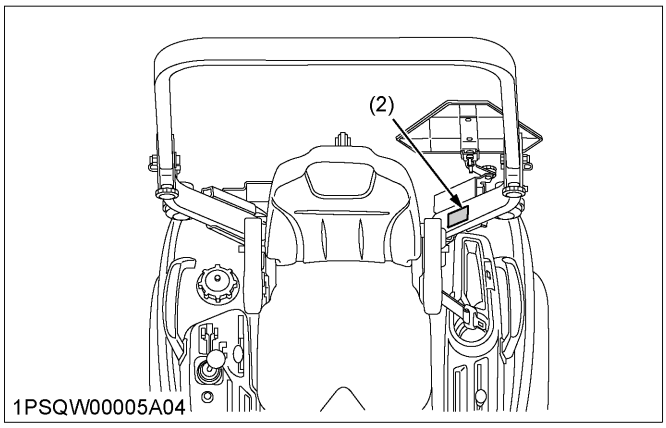

1PSQW00005A04

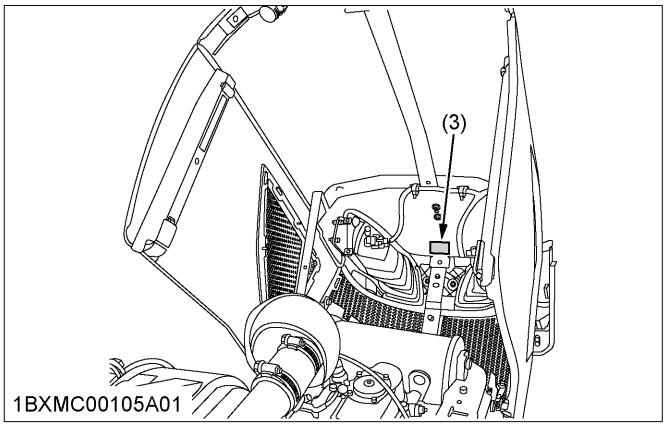

1BXMC00105A01

1PSQW00008A01

2. Safety labels of the loader

(1) Part No. 7J061-5645-1

WARNING

TO AVOID PERSONAL INJURY :

1. Observe safety precautions in loader and tractor Operator's Manual.
2. Operate the loader from tractor seat only.
3. Keep children, others and livestock away when operating loader and tractor.
4. Avoid holes, loose ground, and rocks which may cause tractor / loader to tip.
5. Make sure approved bucket is attached before removing loader from tractor.
6. When parking or storing, choose flat and hard ground. Lower the bucket to the ground, set brakes and remove key before leaving tractor.
7. Before disconnecting hydraulic lines, relieve all hydraulic pressure.

1AIABAHAP019G

(2) Part No. 7J246-5641-1

DANGER

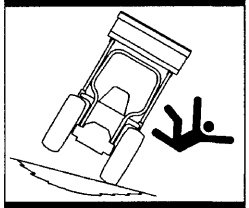

TO AVOID SERIOUS INJURY OR DEATH CAUSED BY ROLLOVERS :

1. ROPS and a fastened seat belt are strongly recommended in almost all applications. Foldable ROPS should be in upright and locked position if equipped.
2. Adjust rear wheels to the widest setting that is suitable for the work.
3. Add recommended wheel ballast and rear weight for stability.
4. DO NOT drive on steep slopes or unstable surfaces.
5. Carry loader arms at low position during transport. Move and turn tractor at slow speeds.

1AIABAHAP017A

(3) Part No. 7J246-5643-1

DANGER

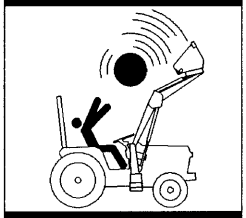

TO AVOID SERIOUS INJURY OR DEATH CAUSED BY FALLING LOADS :

1. Load on raised bucket or fork can fall or roll back onto operator causing serious injury or death.
2. Use approved clamping and / or guard attachments for handling large, loose or shiftable loads such as bales, posts, sheets of plywood etc.
3. Carry loads as low as possible.

1AIABAHAP016A

(4) Part No. 7J246-5642-1

DANGER

TO AVOID SERIOUS INJURY OR DEATH CAUSED BY CONTACT WITH ELECTRIC LINES:

• Check overhead clearance.

1AIABAHAP018A

(5) Part No. 7J246-5644-2

WARNING

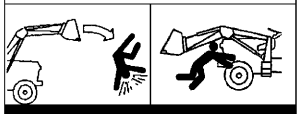

TO AVOID INJURY FROM FALLS OR BEING CRUSHED :

1. DO NOT stand or work under raised loader or bucket.
2. DO NOT use loader as jack for servicing.
3. DO NOT use loader as a work platform.
4. NEVER connect chain, cable or rope to loader bucket while operating loader.

1AIABAHAP020A

(6) Part No. 7J061-5649-1

WARNING

TO AVOID INJURY FROM CRUSHING :

1. Do not utilize the valve lock for machine maintenance or repair.
2. The valve lock is to prevent accidental actuation when implement is not in use or during transport.

1AIABACAP084A

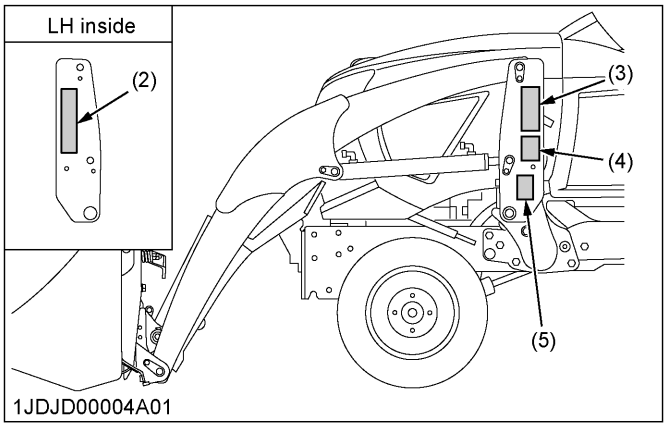

1JDJD00004A01

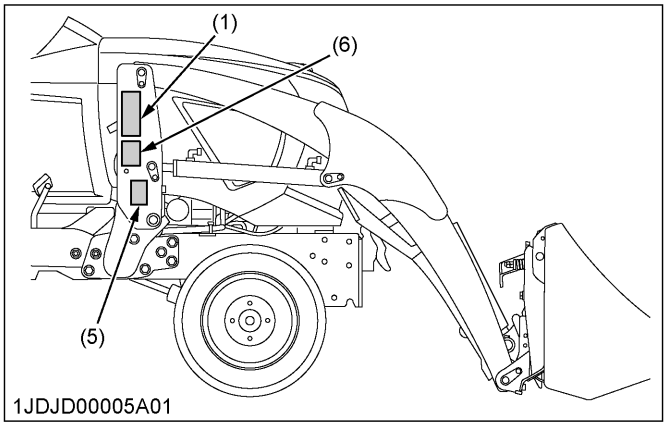

1JDJD00005A01

1JDJD00002A01

(1) Part No. 7J626-3648-3

⚠ DANGER

TO AVOID PERSONAL INJURY OR DEATH

1.Make sure both handles (LH,RH) Ⓐ contact the ear plates Ⓑ at the points and are all the way down.

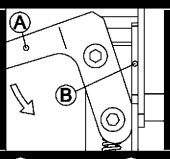

2.Make sure both lock pins (LH,RH) Ⓒ protrude through the pin slots Ⓓ.

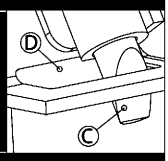

Ⓐ:HANDLE Ⓑ:EAR PLATE Ⓒ:LOCK PIN Ⓓ:PIN SLOT

Kubota recommends the use of Kubota attachments on Kubota loaders. Non-Kubota attachments,if used, must comply with ISO 24410,first edition 2005-04-15.

Use of a non-Kubota attachments that does not comply with ISO 24410 or the improper positioning of handle(s) or non-protrusion of pin(s) may result in detachment of the attachment or deformation, causing loss of performance, personal injury or death.

For information, contact your Kubota Dealer

1AIABELAP044A

(2) Part No. 7J048-3923-6

⚠ DANGER

PALLET FORK RATED CAPACITY

LA403, LA504, LA534	: 600 LBS.
LA434	: 390 LBS.
LA344, LA340	: 240 LBS.

TO AVOID PERSONAL INJURY OR DEATH CAUSED BY ROLLOVER

- **Do not exceed rated load listed above.**
- **Use rear implement and tire ballast recommended in loader operator's manual.**
- **Operate tractor slowly taking special care when turning.**

1AIABELAP0380

(3) Part No. 7J246-5643-1

⚠ DANGER

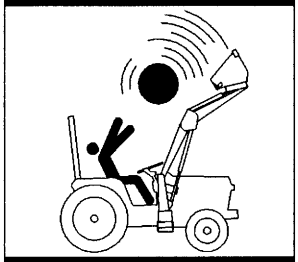

TO AVOID SERIOUS INJURY OR DEATH CAUSED BY FALLING LOADS :

1. Load on raised bucket or fork can fall or roll back onto operator causing serious injury or death.
2. Use approved clamping and / or guard attachments for handling large, loose or shiftable loads such as bales, posts, sheets of plywood etc.
3. Carry loads as low as possible.

1AIABACAP075A

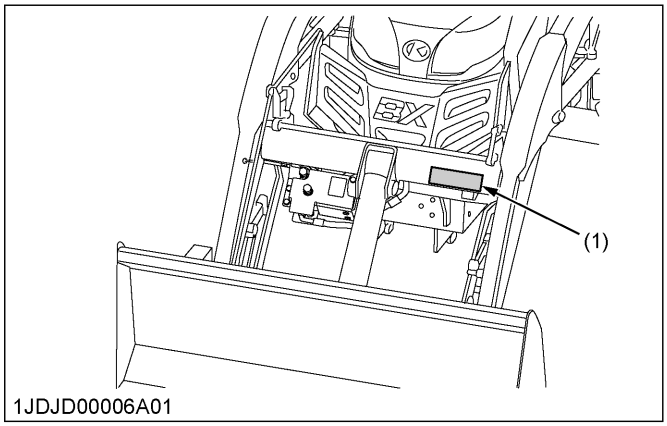

1JDJD00006A01

[BX2415 Pallet Fork]

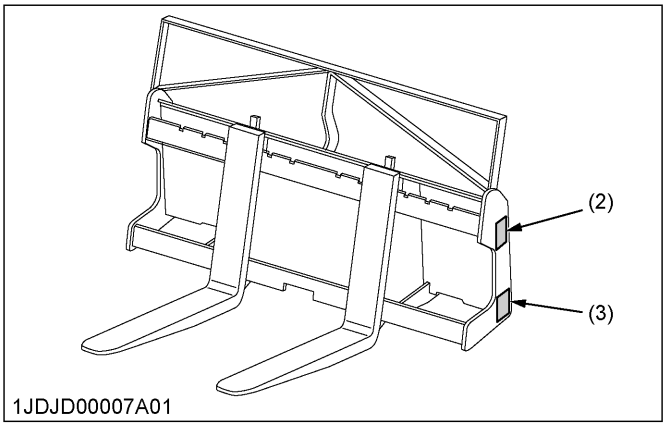

1JDJD00007A01

1JDJD00003A01

3. Safety labels of the backhoe

(1) Part No. 75597-7528-1

1HNAAACAP008E

(2) Part No. 75595-7517-2

1HNAAACAP011E

(3) Part No. 75595-7524-2

1HNAAACAP012E

(4) Part No. 7K501-7529-1

1AJABAEAP028A

(5) Part No. 75597-7517-3

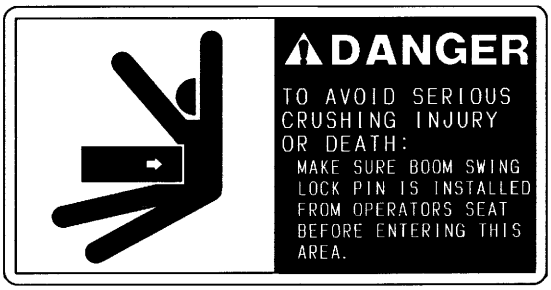

1HNAAACAP010E

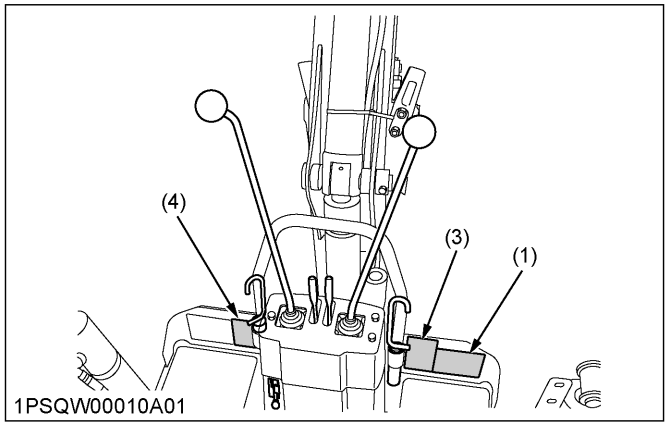

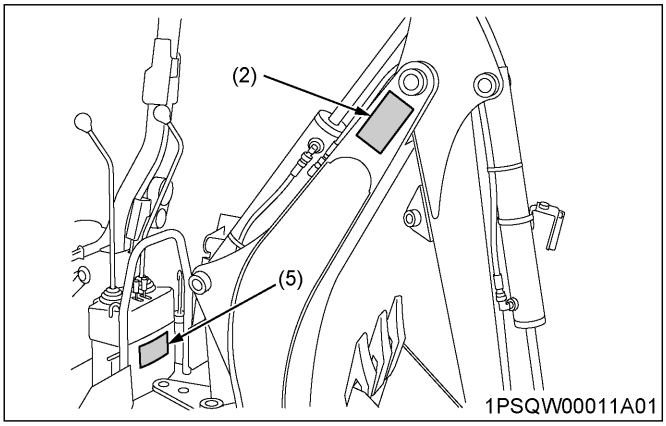

1PSQW00009A01

[BX6316 MECHANICAL THUMB] (Option for BT603)

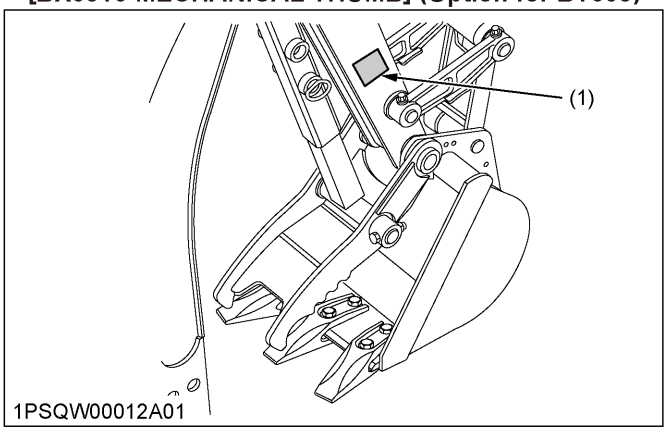

(1) Part No. 7K523-8452-1 (Both sides)

1AGAJBJAP034E

1PSQW00013A01

4. Care for safety labels

- Keep the safety labels clean and free from obstructing material.
- Clean the safety labels with soap and water, and dry the safety labels with a soft cloth.
- Replace damaged or missing safety labels with new safety labels from your local KUBOTA Dealer.
- If a component with safety label(s) attached is replaced with new component, make sure that new safety label(s) is (are) attached in the same location(s) as the replaced component.
- Attach new safety labels by applying on a clean, dry surface and pressing any bubbles to outside edge.

https://truckmanualshub.com/

SERVICING OF TRACTOR, LOADER, AND BACKHOE

DEALER SERVICE

Your dealer is knowledgeable of your new tractor, loader, and backhoe and desires to help you get the most value from them.
After reading this manual thoroughly, you will find that you can perform some of the regular maintenance yourself.
However, when your tractor, loader, and backhoe need parts or major service, be sure to see your KUBOTA Dealer.
For service, contact the KUBOTA Dealership from which you purchased your tractor or your local KUBOTA Dealer. When in need of parts, be prepared to give the your dealer the serial number of the tractor, the engine, the loader, and the backhoe. Locate the serial numbers now and record them in the space provided.

- Concerning the tractor and loader, the reference to left hand and right hand used in this manual refers to the position when you are standing at the rear of the unit and facing forward.
- Concerning the backhoe, the reference to left hand and right hand used in this manual refers to the position when you are seating at the operator's seat at the backhoe position and facing rearward of the tractor.

	Type	Serial No.
Tractor	BX23S	
ROPS		
Engine	D902	
Loader	LA340 and LA340S	
Backhoe	BT603	
Date of Purchase		
Name of Dealer		
(To be filled in by purchaser)		

Tractor

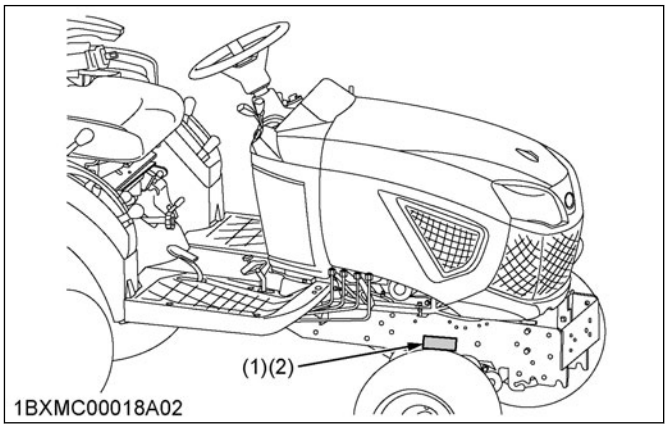

(1) Tractor identification plate (2) Tractor serial number

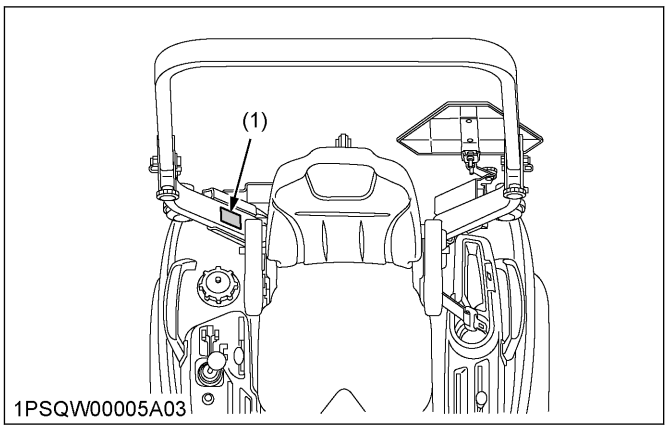

(3) ROPS identification plate (ROPS serial No.)

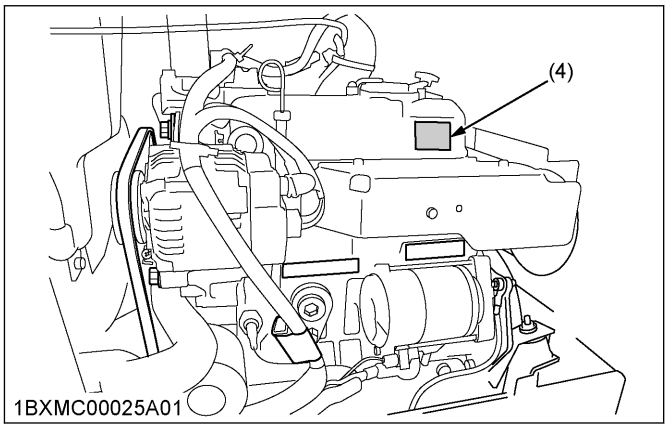

(4) Engine serial number

https://truckmanualshub.com/

Loader

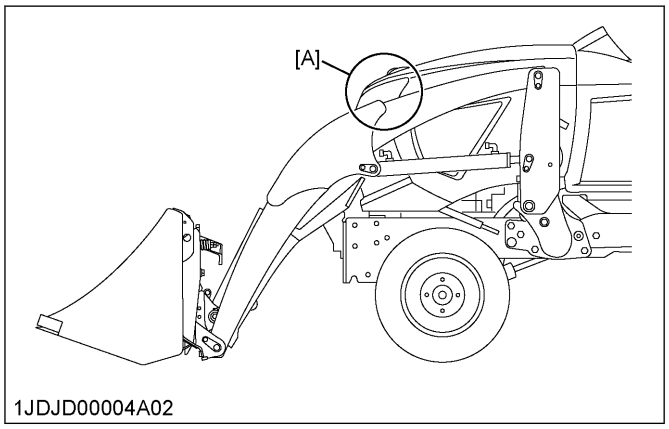

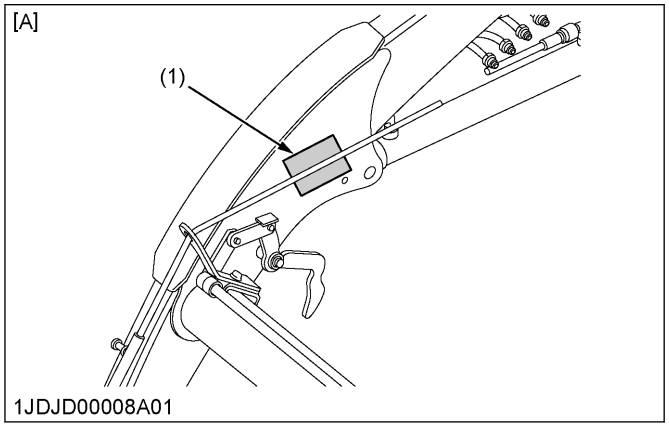

(1) Loader serial number *[A] Boom RH inside*

NOTE :

- **The loader serial number label (5) is attached to the inside of the boom.**

Backhoe

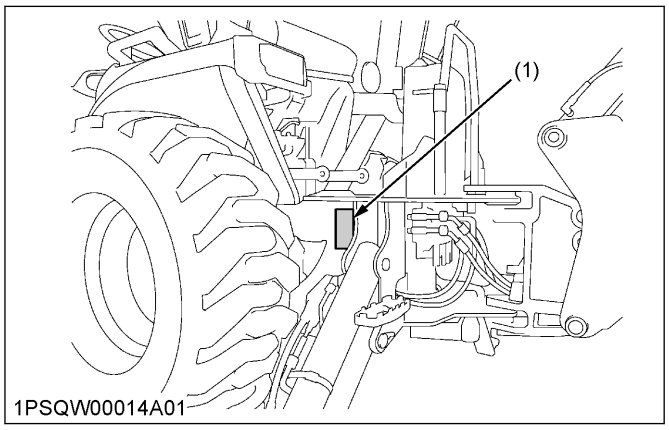

(1) Backhoe serial number

1. Warranty of the tractor

This tractor is warranted under the KUBOTA Limited Express Warranty, a copy of which may be obtained from your selling dealer.
No warranty shall, however, apply if the tractor has not been used according to the instruction given in the operator's manual even if it is within the warranty period.

2. Scrapping the tractor and its procedure

To put the tractor out of service, correctly follow the local rules and regulations of the country or territory where you scrap it.
If you question the tractor, consult your local KUBOTA Dealer.

https://truckmanualshub.com/

SPECIFICATIONS OF THE TRACTOR

SPECIFICATION TABLE OF THE TRACTOR

Model			BX23S
PTO power*1			13.2 kW (17.7 HP)
Engine	Maker		KUBOTA
	Model		D902
	Type		Liquid-cooled, 4-cycle diesel
	Number of cylinders		3
	Bore and stroke		72 mm x 73.6 mm (2.83 in. x 2.90 in.)
	Total displacement		898 cm^3 (54.8 cu. in.)
	Engine gross power*2		17.1 kW (23.0 HP)
	Rated revolution		3200 rpm
	Low idling revolution		1350 rpm to 1550 rpm
	Maximum torque		56.1 N·m (41.4 lbf·ft)
	Battery		12 V, CCA: 560 A, RC: 86 min
	Fuel		Diesel fuel No.2 [above -10 ℃ (14 ℉)] Diesel fuel No.1 [below -10 ℃ (14 ℉)]
Capacities	Fuel tank		25 L (6.6 U.S.gals.)
	Engine crankcase (with filter)		3.3 L (3.4 U.S.qts.)
	Engine coolant		3.1 L (3.3 U.S.qts.)
	Recovery tank		0.4 L (0.4 U.S.qts.)
	Transmission case		11.3 L (2.98 U.S.gals.)
Dimensions	Overall length (without 3P)		2210 mm (87.0 in.) w / Front guard
	Overall length (with 3P)		2515 mm (99.0 in.) w / Front guard
	Overall width		1145 mm (45.1 in.)
	Overall height	(with ROPS)	2190 mm (86.2 in.)
			Top of seat 1255 mm (49.4 in.)
	Wheel base		1400 mm (55.1 in.)

(Continued)

https://truckmanualshub.com/

SPECIFICATIONS OF THE TRACTOR

Model			BX23S
Dimensions	Min. ground clearance		148 mm (5.83 in.)
	Tread	Front	930 mm (36.6 in.)
		Rear	820 mm (32.2 in.)
Weight (with ROPS)			725 kg (1600 lbs.)
Clutch			N / A
Traveling system	Tire	Front	18 x 8.50-10 (Turf, Bar, Ind.)
		Rear	26 x 12.00-12 (Turf, Bar, Ind.)
	Steering		Hydrostatic type power steering
	Transmission		Main: Hydrostatic transmission, High-Low gear shift (2 forward, 2 reverse)
	Brake		Wet disk type
	Min. turning radius		2.3 m (7.5 feet)
Hydraulic unit	Hydraulic control system		Directional control, auto-return lever system
	Pump capacity		23.5 L/min. (6.2 gals/min.)
	System pressure		12.3 MPa to 12.8 MPa (126 kgf/cm^2 to 130 kgf/cm^2) [1790 psi to 1850 psi]
	Three point hitch		SAE Category 1 (Optional)
	Three point hitch Max. lift force*3	At lift points	5390 N (1210 lbs.)
		24in. behind lift points	3040 N (680 lbs.)
	Remote control valve coupler (rear: Option)	System	2 valves
		Coupler	ISO 7241-1 series A
	Remote control valve coupler (front: Option)	System	2 valves
		Coupler (fitting)	ISO 7241-1 series B
PTO	Rear PTO		SAE 1-3/8, 6 splines
		Revolution	STD (2500 rpm)
	Mid PTO		USA No.5 (KUBOTA 10-tooth) involute spline
		Revolution	STD (2500 rpm)

The company reserves the right to change the specifications without notice.

*1 Manufacturer's estimate

*2 SAE J1995

*3 See and check IMPLEMENT LIMITATION TABLES on page 40.

https://truckmanualshub.com/

TRAVELING SPEEDS TABLE

Model		BX23S	
Tire size (Rear)		26X12.00-12	
Speed control pedal	Range gear shift lever	(At rated engine rpm)	
Forward	Low	0 km/h to 6.5 km/h	0 mph to 4.0 mph
	High	0 km/h to 13.5 km/h	0 mph to 8.4 mph
Reverse	Low	0 km/h to 5.0 km/h	0 mph to 3.1 mph
	High	0 km/h to 10.5 km/h	0 mph to 6.5 mph

The company reserves the right to change the specifications without notice.

https://truckmanualshub.com/

SPECIFICATIONS OF THE LOADER

LOADER SPECIFICATIONS TABLE

Loader model		LA340 and LA340S
Tractor model		BX23S
Boom cylinder	Bore	40 mm (1.57 in.)
	Stroke	326 mm (12.8 in.)
Bucket cylinder	Bore	65 mm (2.56 in.)
	Stroke	196 mm (7.7 in.)
Control valve		One detent float position, single bucket dump, power beyond circuit
Rated flow		14 L/m (3.7 GPM)
Maximum pressure		12.8 MPa (130 kg/cm^2) [1850 psi]
Net weight (approximate)		*1217 kg (478 lbs.)

*1 Include the quick bucket 48 in.

BUCKET SPECIFICATIONS TABLE

Loader model		LA340	LA340S
Model		Square 48 in.	
Type		Rigid	Quick hitch
Width		1219 mm (48.0 in.)	
Depth		491 mm (19.3 in.)	470 mm (18.5 in.)
Height (M)		465 mm (18.3 in.)	523 mm (20.6 in.)
Length (N)		538 mm (21.2 in.)	586 mm (23.1 in.)
Capacity	Struck	0.14 m^3 (4.9 cu.ft.)	0.13 m^3 (4.6 cu.ft.)
	Heaped	0.17 m^3 (6.0 cu.ft.)	
Weight		60 kg (132 lbs.)	56 kg (123 lbs.)

https://truckmanualshub.com/

DIMENSIONAL SPECIFICATIONS OF THE LOADER

	Loader model	LA340	LA340S
	Tractor model	BX23S	
A	Max. lift height (to bucket pivot pin)	1804 mm (71.0 in.)	
B	Max. lift height under level bucket	1662 mm (65.4 in.)	1664 mm (65.5 in.)
C	Clearance with bucket dumped	1323 mm (52.1 in.)	1288 mm (50.7 in.)
D	Reach at max. lift height (dumping reach)	646 mm (25.4 in.)	677 mm (26.5 in.)
E	Max. dump angle	45 deg.	
F	Reach with bucket on ground	1392 mm (54.8 in.)	1438 mm (56.6 in.)
G	Bucket roll-back angle	29 deg.	
H	Digging depth	125 mm (4.9 in.)	122 mm (4.8 in.)
J	Overall height in carrying position	990 mm (39.0 in.)	

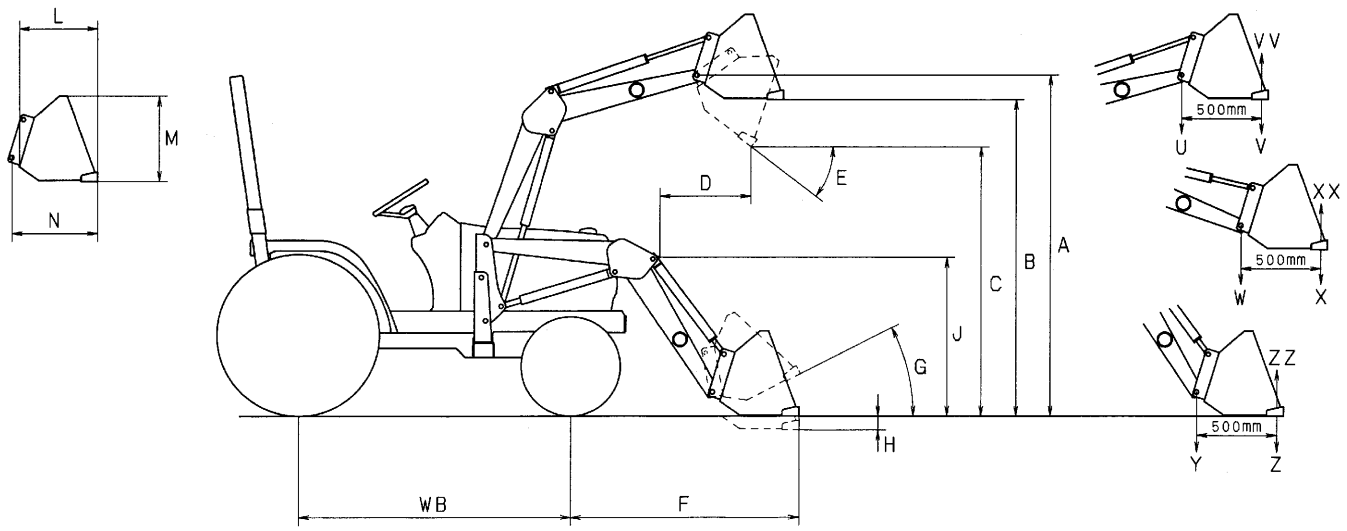

1JDJD00009A01

https://truckmanualshub.com/

OPERATIONAL SPECIFICATIONS OF THE LOADER

	Loader model	LA340	LA340S
	Tractor model	BX23S	
U	Lift capacity (bucket pivot pin, max. height)	335 kg (739 lbs.)	278 kg (613 lbs.)
V	Lift capacity (500 mm forward, max. height)	231 kg (509 lbs.)	192 kg (423 lbs.)
W	Lift capacity (bucket pivot pin, 1500 mm height)	372 kg (820 lbs.)	317 kg (699 lbs.)
X	Lift capacity (500 mm forward, 1500 mm height)	268 kg (591 lbs.)	229 kg (505 lbs.)
Y	Breakout force (bucket pivot pin)	6258 N (1407 lbs.)	5719 N (1286 lbs.)
Z	Breakout force (500 mm forward)	4389 N (987 lbs.)	4008 N (901 lbs.)
VV	Bucket roll-back force at max. height	4731 N (1064 lbs.)	4431 N (996 lbs.)
XX	Bucket roll-back force at 1500 mm height	5557 N (1249 lbs.)	5264 N (1183 lbs.)
ZZ	Bucket roll-back force at ground level	5456 N (1227 lbs.)	5195 N (1168 lbs.)
	Raising time	3.3 sec.	
	Lowering time	2.5 sec.	
	Bucket dumping time	2.7 sec.	
	Bucket rollback time	2.3 sec.	

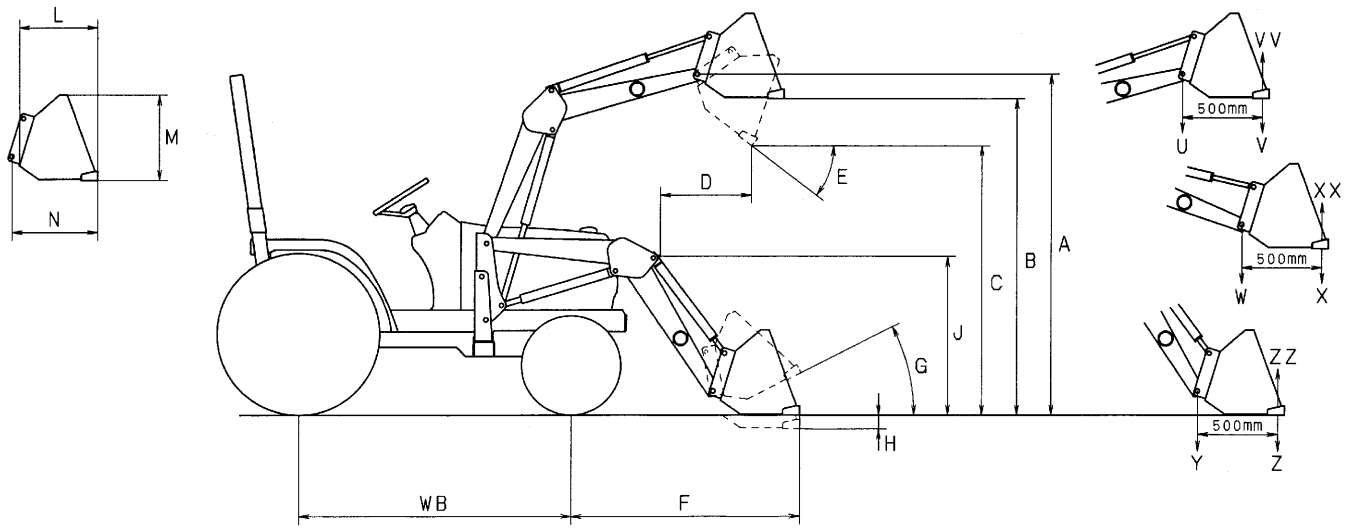

1JDJD00009A01

https://truckmanualshub.com/

LA340

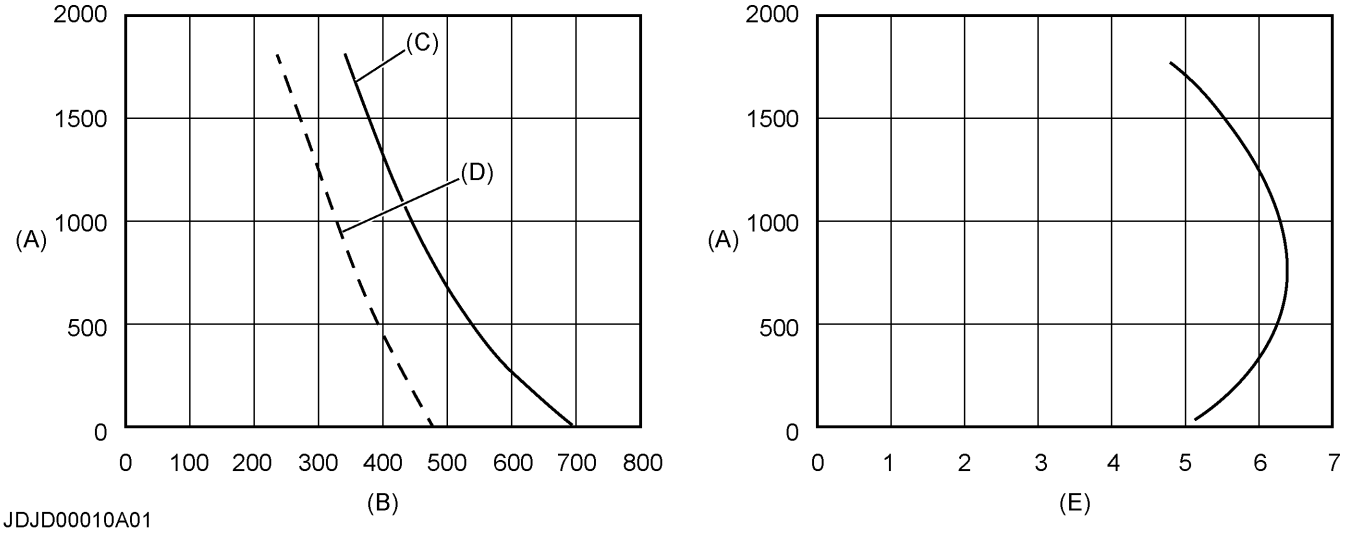

LA340S

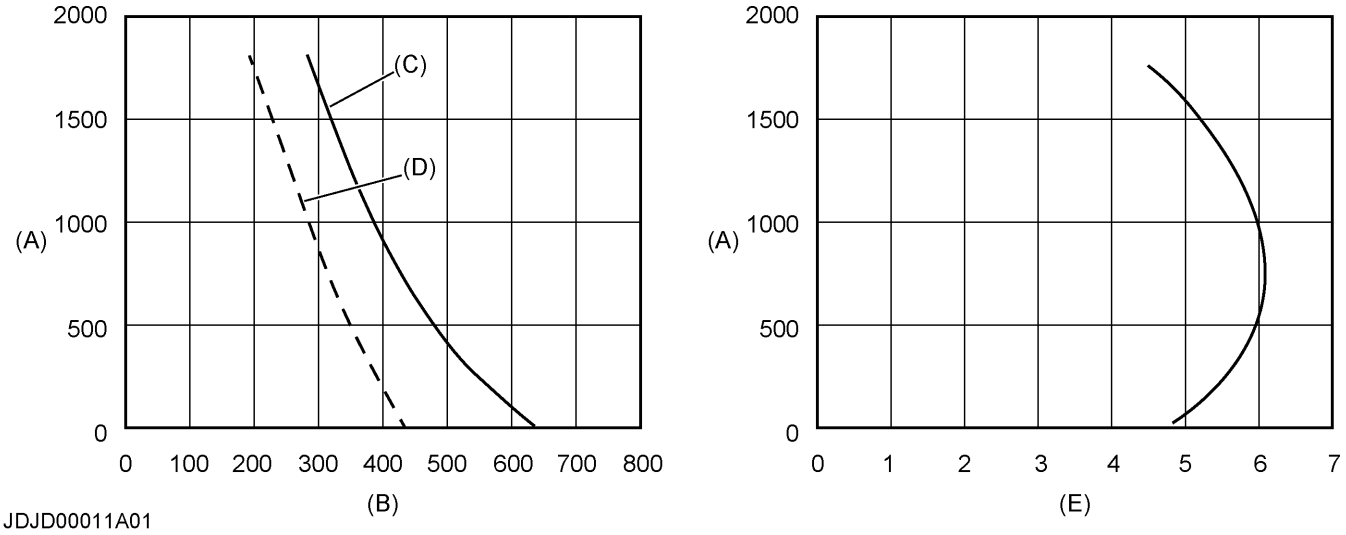

(A) Height (mm)
(B) Lift capacity (kg)
(C) At pivot pin
(D) 500 mm forward of pivot pin
(E) Rollback force (kn)

https://truckmanualshub.com/

LOADER TERMINOLOGY

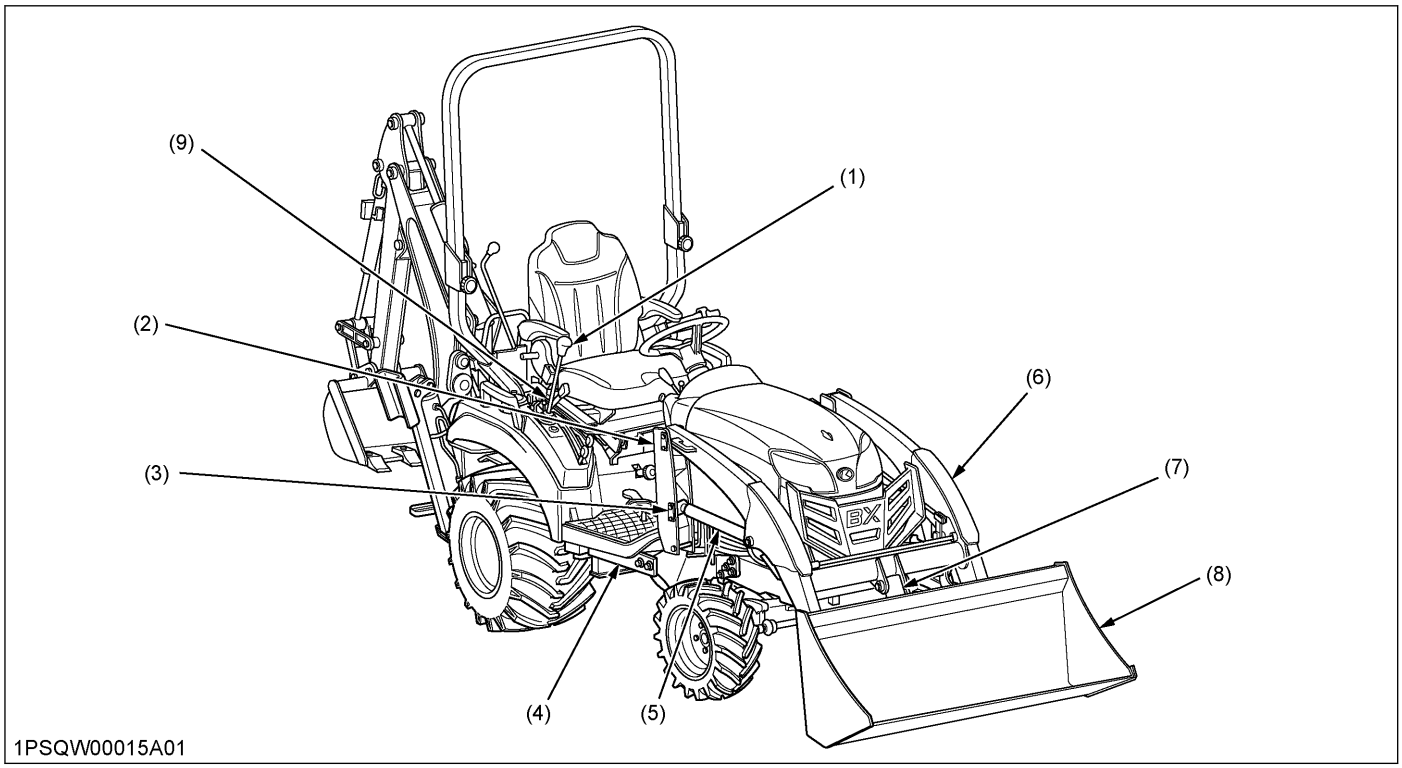

(1) Loader control lever
(2) Side frame
(3) Mounting hook
(4) Main frame
(5) Boom cylinder
(6) Boom
(7) Bucket cylinder
(8) Bucket
(9) Lock lever

https://truckmanualshub.com/

SPECIFICATIONS OF THE BACKHOE

BACKHOE SPECIFICATIONS

1. Dimensions of the backhoe

Model		BT603
(A)	Transport height	1719 mm (67.7 in.)
(B)	Stabilizer spread-transport	1296 mm (51.0 in.)
(C)	Ground clearance	240 mm (9.4 in.)
(E)	Overall width	1128 mm (44.4 in.)
(F)	Maximum digging depth	1889 mm (74.4 in.)
(G)	Digging depth, 2 ft. flat bottom	1842 mm (72.5 in.)
(H)	Digging depth, 8 ft. flat bottom	1059 mm (41.7 in.)
(J)	Operating height, fully raised	2539 mm (100 in.)
(K)	Loading height	1533 mm (60.4 in.)
(L)	Loading reach	1016 mm (40.0 in.)
(M)	Reach from swing pivot	2612 mm (102.8 in.)
(N)	Swing pivot to rear axle center line	726 mm (28.6 in.)
(P)	Bucket rotation	180 deg.
(R)	Stabilizer spread-operating	1862 mm (73.3 in.)
(A3)	Angle of departure per SAE J1234	20.1 deg.
(U)	Leveling angle	11 deg.
	Swing arc	140 deg.

NOTE :

- **The specifications are taken with KUBOTA BX23S tractor. (Tire size: Front 18X8.5-10, Rear 26X12.00-12)**

https://truckmanualshub.com/

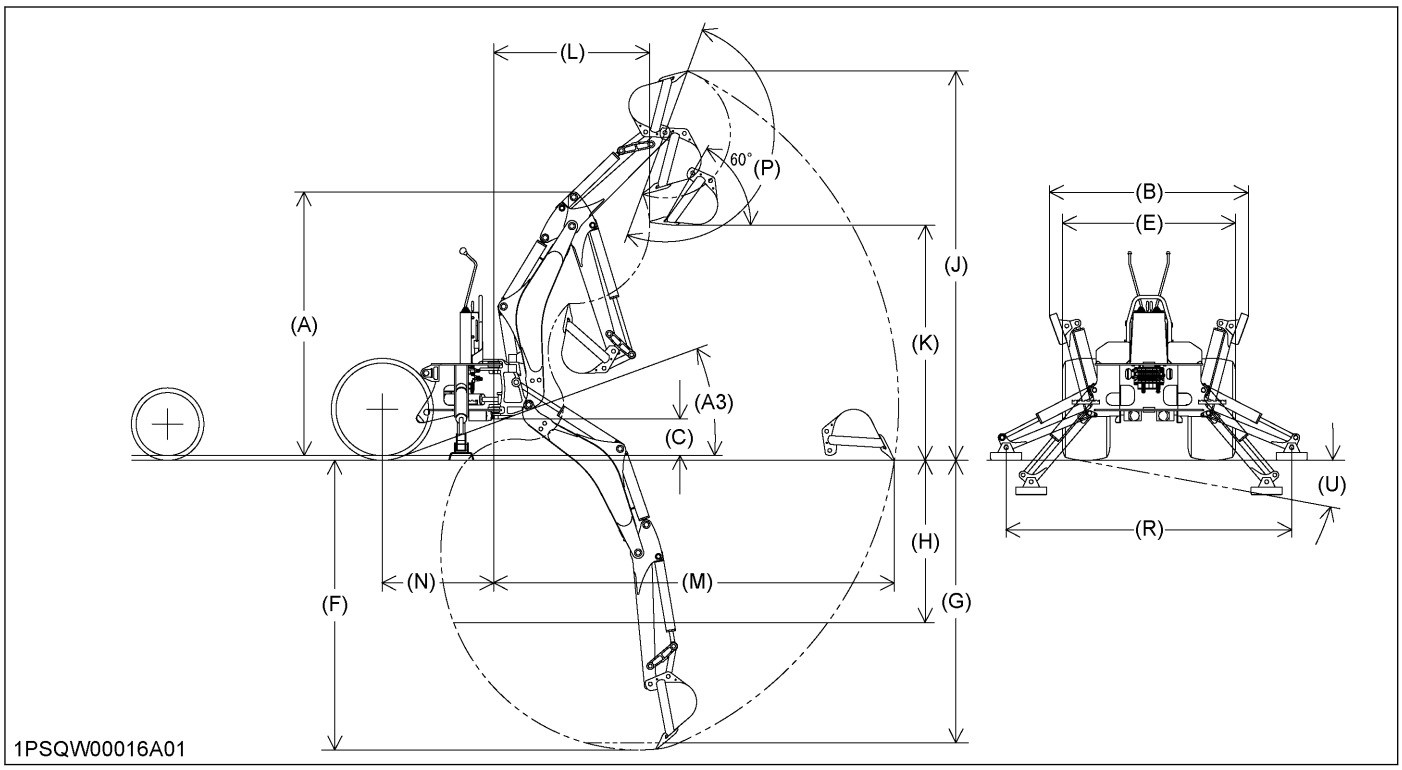

https://truckmanualshub.com/

2. Specifications table of the backhoe

Digging force (Per SAE J49)

With bucket cylinder	8610 N (1936 lbs.)
With dipperstick cylinder	5209 N (1171 lbs.)

Cycle Time (seconds)

Boom cylinder, extend	4.5 sec.
Boom cylinder, retract	3.7 sec.
Swing cylinder, from 90 degrees to center	1.5 sec.
Dipperstick cylinder, extend	4.1 sec.
Dipperstick cylinder, retract	3.4 sec.
Bucket cylinder, extend	3.1 sec.
Bucket cylinder, retract	2.4 sec.
Stabilizer cylinder, max. height to ground	2.9 sec.
Stabilizer cylinder, ground to max. height	2.3 sec.

Hydraulic cylinders

	Boom	Dipperstick	Bucket	Stabilizer	Swing
Rod diameter	3.0 cm (1.18 in.)	2.5 cm (0.98 in.)	2.5 cm (0.98 in.)	2.5 cm (0.98 in.)	3.0 cm (1.18 in.)
Cylinder bore	6.5 cm (2.56 in.)	6.0 cm (2.36 in.)	5.0 cm (1.97 in.)	6.0 cm (2.36 in.)	6.0 cm (2.36 in.)

Bucket Sizes

	Width	SAE truck capacity	SAE heaped capacity	Number of teeth	Weight
Trenching 8 in.	20.3 cm (8 in.)	0.009 m^3 (0.317 cu.ft.)	0.011 m^3 (0.388 cu.ft.)	2	10 kg (22 lbs)
Trenching 12 in.	30.5 cm (12 in.)	0.014 m^3 (0.494 cu.ft.)	0.020 m^3 (0.706 cu.ft.)	3	13 kg (29 lbs)
Trenching 16 in.	40.6 cm (16 in.)	0.020 m^3 (0.706 cu.ft.)	0.029 m^3 (1.024 cu.ft.)	3	16 kg (35 lbs)

https://truckmanualshub.com/

3. Lift capacity of the backhoe (per SAE J31)

The lift capacities shown are 87% of maximum lift force, according to SAE definition.

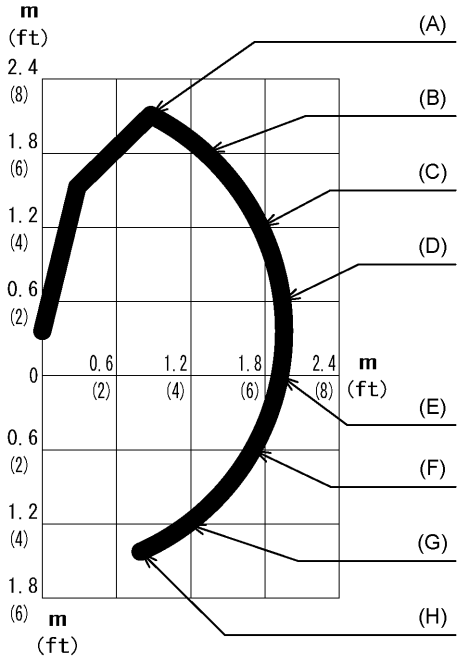

[A]

1PSQW00017A01

[A] Rated lift capacity (over end)-kg (lbs)
(A) 192 kg (423 lbs)
(B) 212 kg (467 lbs)
(C) 215 kg (474 lbs)
(D) 209 kg (461 lbs)
(E) 203 kg (448 lbs)
(F) 201 kg (443 lbs)
(G) 214 kg (472 lbs)
(H) 262 kg (578 lbs)

https://truckmanualshub.com/

BACKHOE TERMINOLOGY

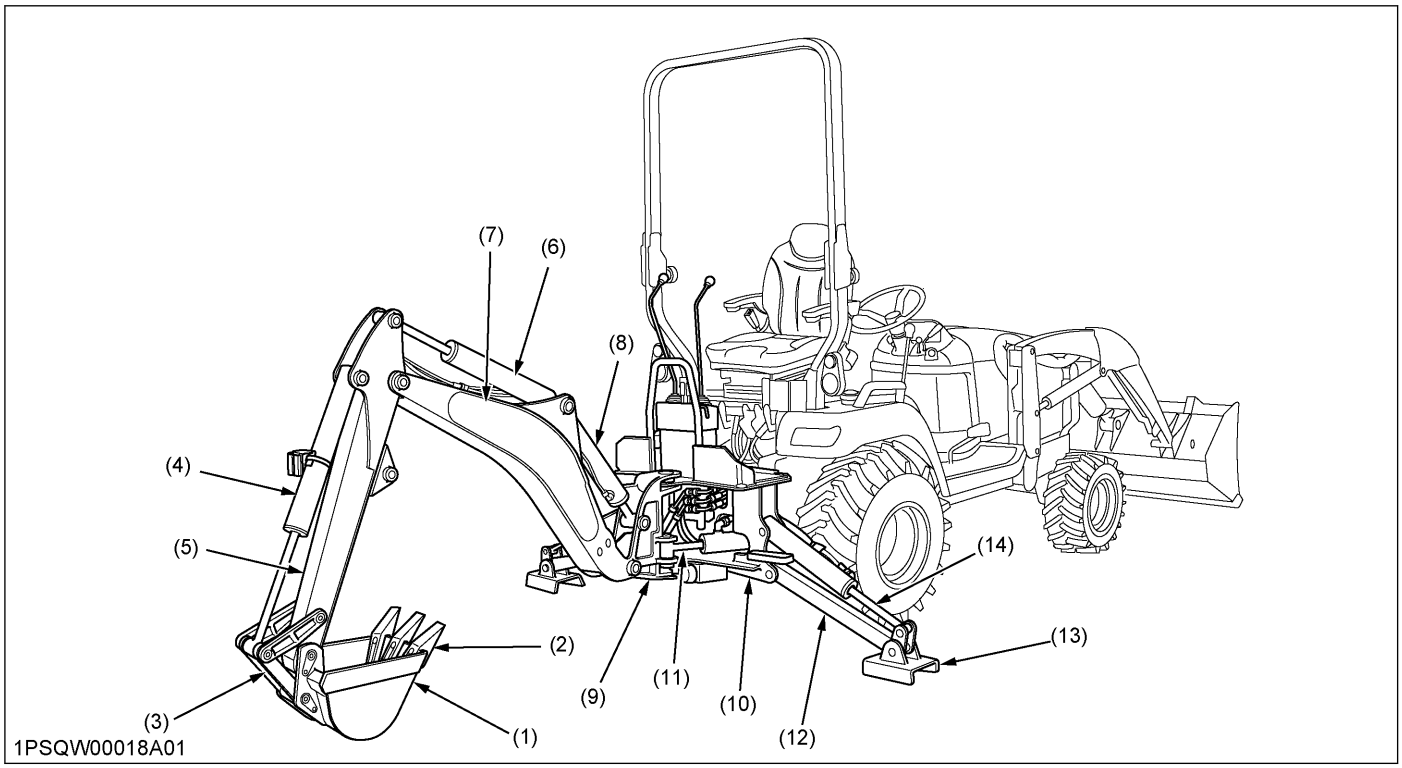

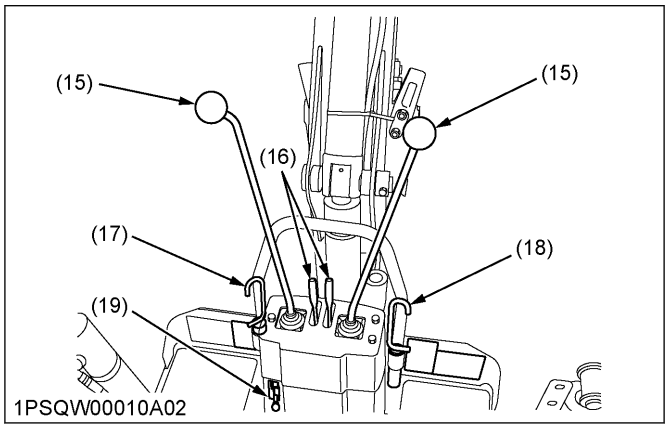

(1) Backhoe bucket
(2) Bucket teeth
(3) Bucket link
(4) Bucket cylinder
(5) Dipperstick
(6) Dipperstick cylinder
(7) Boom
(8) Boom cylinder
(9) Swing frame
(10) Main frame
(11) Swing cylinder
(12) Stabilizer
(13) Stabilizer pad
(14) Stabilizer cylinder
(15) Joystick control
(16) Stabilizer control
(17) Swing lock pin
(18) Boom lock pin
(19) Boom and swing lock lever

https://truckmanualshub.com/

IMPLEMENT LIMITATIONS

IMPLEMENT LIMITATION TABLES

IMPORTANT :
The KUBOTA Tractor has been thoroughly tested for proper performance with implements sold or approved by KUBOTA. Do not use the following implements:
- **Implements which are not sold or approved by KUBOTA**
- **Implements which exceed the maximum specifications listed in the following table**
- **Implements which are otherwise unfit for use with the KUBOTA Tractor**

These implements may result in malfunctions or failures of the tractor, damage to other property, and injury to the operator or others.

NOTE :
Any malfunctions or failures of the tractor resulting from use with improper implements are not covered by the warranty.

Model		BX23S
Tread (max. width)	Front	930 mm (36.6 in.)
	Rear	820 mm (32.2 in.)
Lower link end max. lifting weight W_0		550 kg (1210 lbs.)
Actual figures	Implement weight W_1 and / or size	As in *"Implement weight list"*
	Max. hitch load W_2	250 kg (550 lbs.)
	Trailer loading weight W_3 (Max. capacity)	800 kg (1765 lbs.)
	Total weight W_4	1100 kg (2425 lbs.)

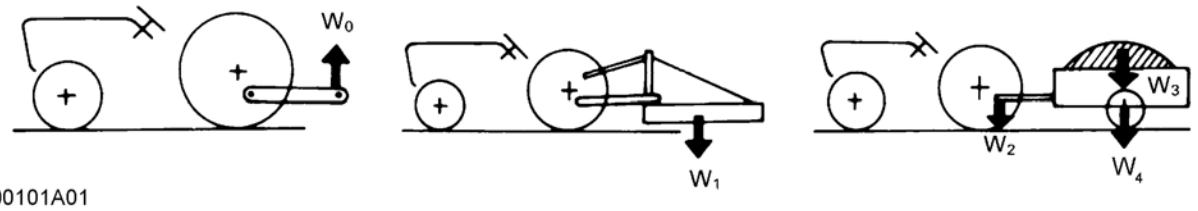

Lower link end max. lifting weight W_0
The max. allowable load which can be put on the lower link end
Implement weight W_1
The implement's weight which can be put on the lower link
Max. hitch load W_2
The max. loading weight for hitching
Trailer loading weight W_3
The max. loading weight for trailer (without trailer's weight)
Total weight W_4
The max. loading weight for trailer with trailer's weight

NOTE :
- **Implement size may vary depending on soil operating conditions.**
- **Strictly follow the instructions outlined in the operator's manual of the mounted or trailed machinery or trailer, and do not operate the combination tractor-machine or tractor-trailer unless all instructions have been followed.**

https://truckmanualshub.com/

- **When you use the forestry application, there are following hazards:**
  - **toppling trees, primarily in case a rear-mounted-tree-grab-crane is mounted at the rear of the tractor**
  - **penetrating objects in the operator's enclosure, primarily in case a winch is mounted at the rear of the tractor**

  To deal with these hazards and other related hazards, the tractor requires optional equipments such as OPS (operator-protective-structure), FOPS (falling-object-protective-structure), and so on. These optional equipments, however, are not available for this tractor. Without optional equipments such as OPS and FOPS, the use of the tractor is limited to tractor-specific-applications like transport and stationary work.

https://truckmanualshub.com/

Implement weight list

Implement		Remarks	BX23S
Backhoe*1		Max. digging depth	1840 mm (6 ft)
		Max. weight	w/o bucket 266 kg (586 lbs.)
Front-end loader*2		Max. lifting capacity (Bucket pivot pin, max. height)*3	335 kg (739 lbs.)
		Max. width	122 cm (48 in.)
		Sub frame	Necessary
Mower	Mid-mount	Max. cutting width	152 cm (60 in.)
		Max. weight	134 kg (295 lbs.)
	Rotary-Cutter (1 Blade)	Max. cutting width	122 cm (48 in.)
		Max. weight	181 kg (400 lbs.)
	Rear-mount (2 or 3 Blade)	Max. cutting width	152 cm (60 in.)
		Max. weight	262 kg (577 lbs.)
	Flail-mower	Max. cutting width	107 cm (42 in.)
	Sickle bar	Max. cutting width	122 cm (48 in.)
Rotary tiller		Max. tilling width	127 cm (50 in.)
		Max. weight	197 kg (435 lbs.)
Bottom plow		Max. size	14 x 1 in.
Disc plow		Max. size	22 x 1 in.
Cultivator		Max. size	122 cm (48 in.) 1 Row
Disc harrow		Max. harrowing width	122 cm (48 in.)
		Max. weight	249 kg (549 lbs.)
Sprayer		Max. tank capacity	150 L (40 U.S.gals.)
Front blade		Max. cutting width	152 cm (60 in.)
		Sub frame	Necessary
Rear blade		Max. cutting width	152 cm (60 in.)
		Max. weight	112 kg (248 lbs.)

(Continued)

https://truckmanualshub.com/

Implement	Remarks	BX23S
Box blade	Max. cutting width	152 cm (60 in.)
	Max. weight	170 kg (375 lbs.)
Snow blower (Front)	Max. working width	127 cm (50 in.)
	Max. weight	160 kg (353 lbs.)
	Sub frame	Necessary
Post hole digger	Digging depth	114 cm (45 in.)
Rotary broom	Cleaning width	119 cm (47 in.)
Trailer	Max. load capacity	800 kg*4 (1765 lbs.)
	Max. weight	1100 kg (2425 lbs.)

NOTE :

- **Implement size may vary depending on soil operating conditions.**

*1 KUBOTA provides BT603 backhoe for BX23S.
No other backhoe installed by 3-point hitch is permitted for BX23S.

*2 KUBOTA provides LA340 and LA340S Front-end Loader for BX23S.

*3 The value contains the weight of KUBOTA standard bucket.

*4 Reduce speed and trailer loads when operating in slippery conditions or when operating on slopes and using front wheel drive.

https://truckmanualshub.com/

INSTRUMENT PANEL AND CONTROLS

INSTRUMENT PANEL, SWITCHES, AND HAND CONTROLS

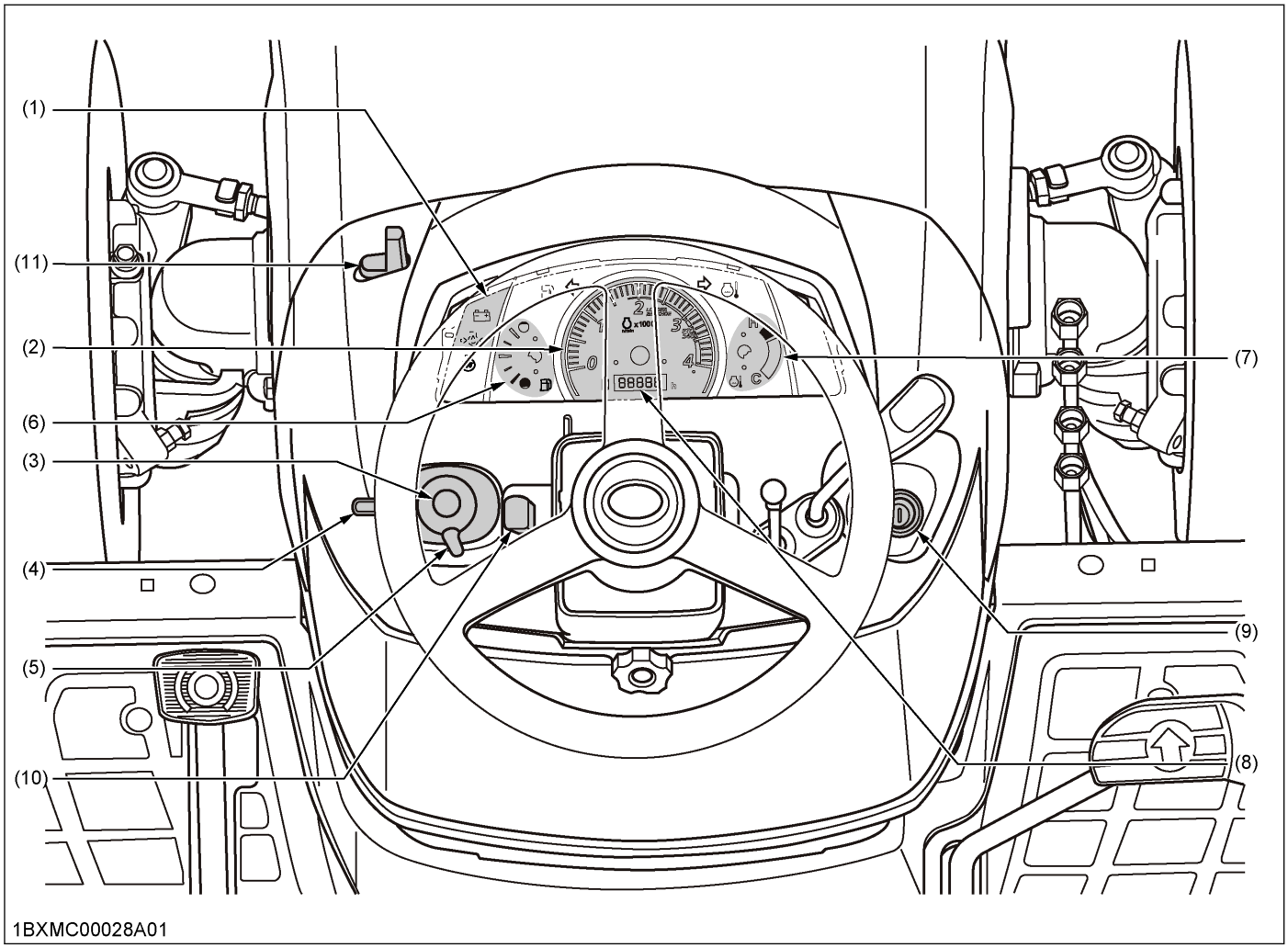

(1) Easy Checker™…69
(2) Tachometer…71
(3) Hazard light switch…45
(4) Turn signal light switch…45
(5) Head light switch…45
(6) Fuel gauge…70
(7) Coolant temperature gauge…70
(8) Hour meter…71
(9) Key switch…45
(10) Tilt lever…45
(11) Hood open lever…46

https://truckmanualshub.com/

1. Key switch

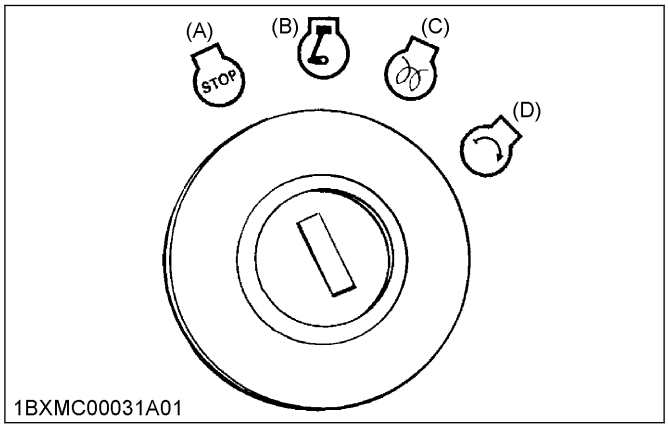

(A) Off *(C) Preheat*
(B) On *(D) Start*

2. Tilt lever

The tilt lever is the lever to adjust the steering wheel to proper position.

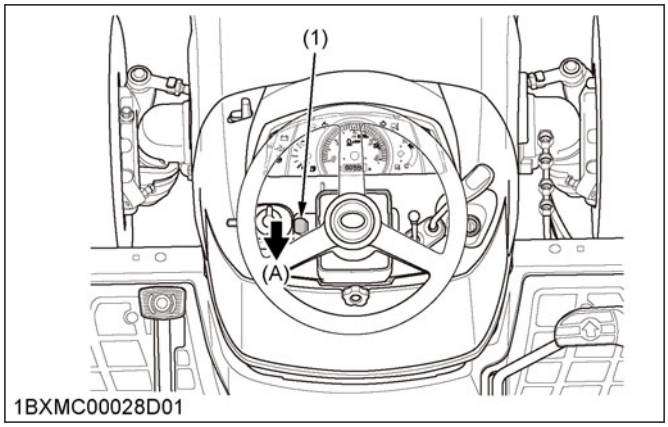

(1) Tilt lever *(A) Pull*

3. Head light switch

To turn on the head lights, turn the head-light-switch clockwise. To turn off the head lights, turn the head-light-switch counterclockwise.

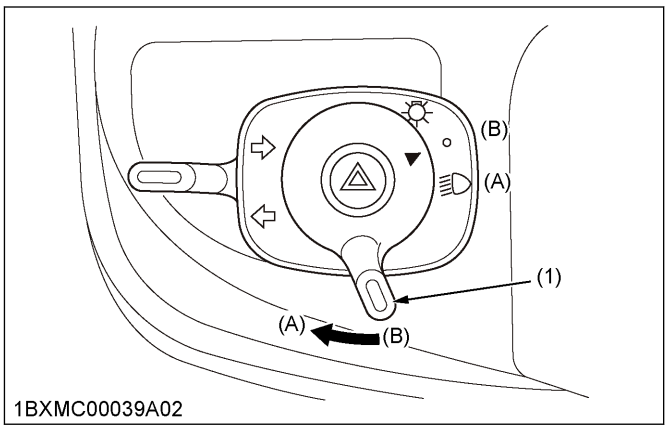

(1) Head light switch *(B) Off*
(A) On

4. Hazard light switch

1. When pressing the hazard-light-switch, the hazard lights flash along with the indicator on the instrument panel.
2. When pressing the hazard-light-switch again, the hazard lights turn off.

NOTE :

- **The hazard-light-switch is operative when the key switch is only on position.**

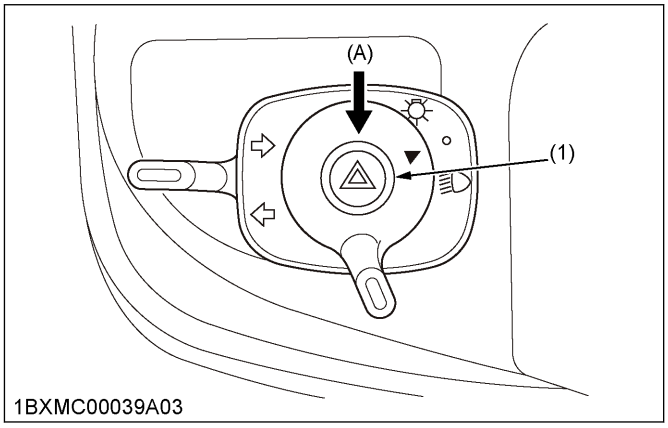

(1) Hazard light switch *(A) Push on-off*

5. Turn signal light switch

To indicate a right turn, turn the turn-signal-light-switch clockwise.
To indicate a left turn, turn the turn-signal-light-switch counterclockwise.
When the left or right turn signal is activated in combination with the hazard lights, the indicated turning light will flash and the other light will stay on.

NOTE :

- **Be sure to return the turn-signal-light-switch to center position after turning.**

https://truckmanualshub.com/

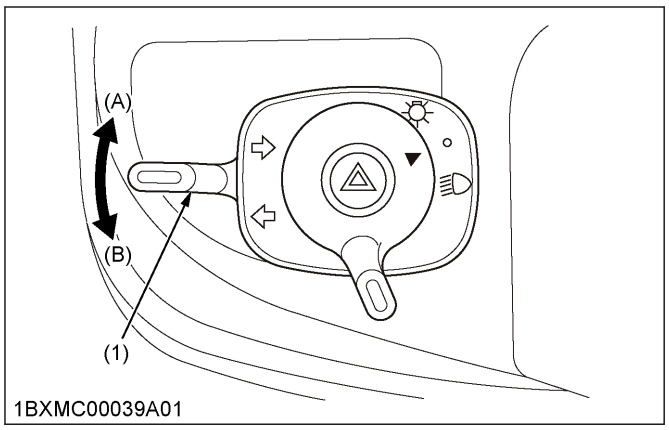

(1) Turn signal light switch *(B) Left turn*
(A) Right turn

6. Hood open lever

The hood-open-lever is the lever to open the hood.

WARNING

To avoid serious injury or death from contact with moving parts:

- **Never open the hood or engine side cover while the engine is running.**
- **Do not touch the muffler or the exhaust pipes while they are hot.**
  Touching the hot muffler or exhaust pipes could cause severe burns.

1. Pull the front guard forward.
2. Pull the hood-open-lever to release the latch to open the hood, and open the hood.

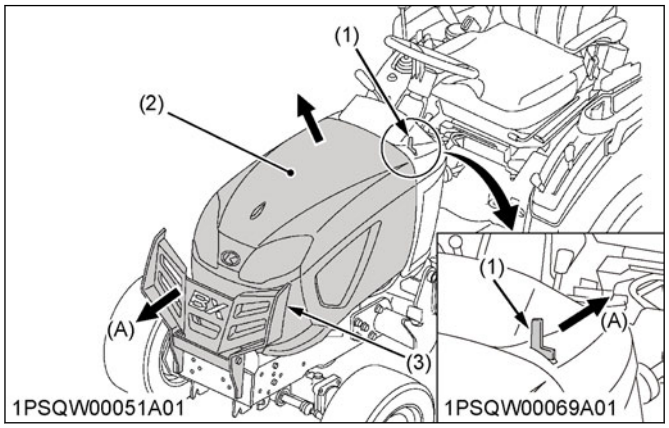

(1) Hood open lever *(3) Front guard*
(2) Hood *(A) Pull*

https://truckmanualshub.com/

FOOT CONTROLS AND HAND CONTROLS

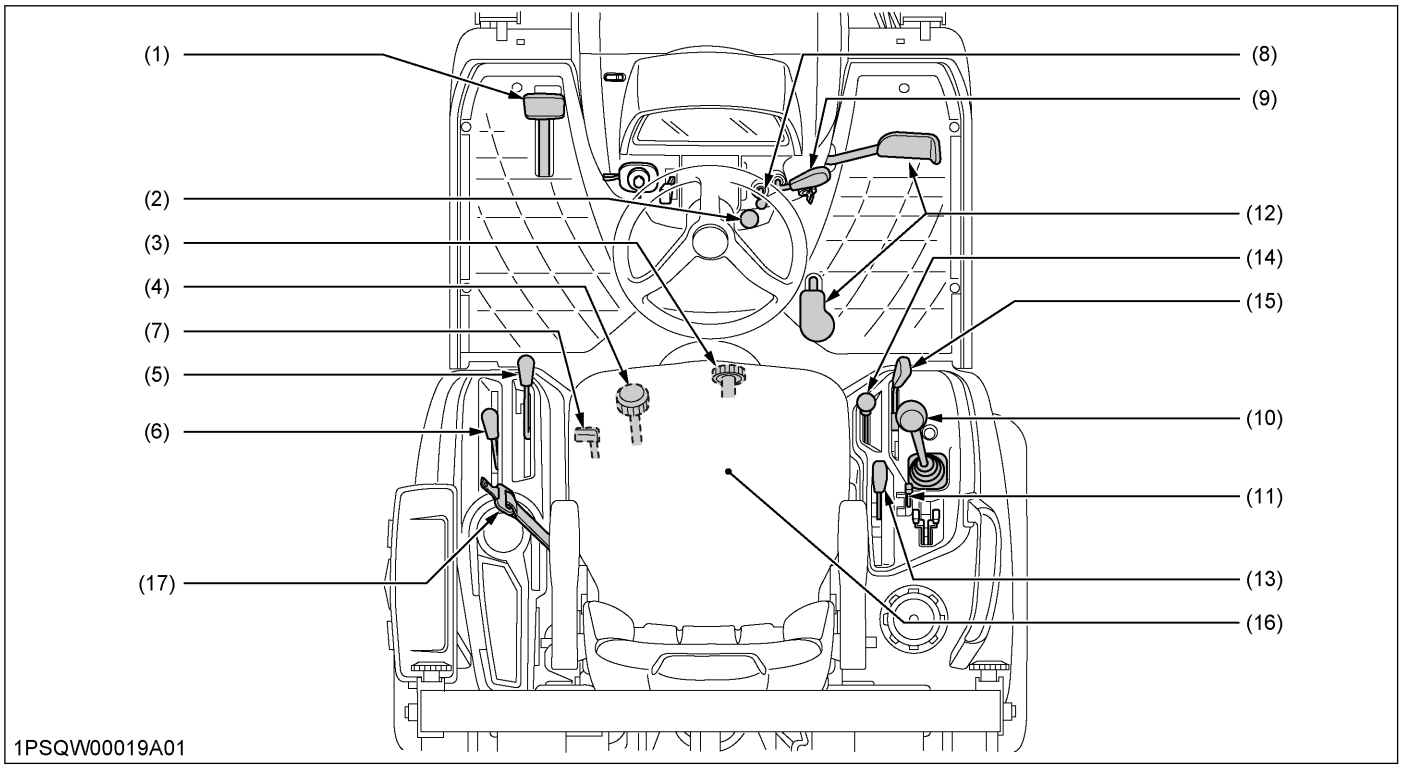

(1) Brake pedal…48, 48
(2) Parking brake lock pedal…48, 48
(3) 3-point hitch lowering speed knob…84
(4) Cutting height control dial…86
(5) PTO clutch lever…77
(6) PTO select lever…77
(7) Differential lock pedal…72
(8) Speed set rod…50, 51
(9) Hand accelerator lever…50
(10) Loader control lever…93, 95
(11) Lock lever…99
(12) Speed control pedal…50
(13) Hydraulic control lever…84
(14) Front wheel drive lever…49
(15) Range gear shift lever (Hi-Lo)…49
(16) Operator's seat…48
(17) Seat belt…48

https://truckmanualshub.com/

1. Operator's seat

WARNING

To avoid personal injury or death:

- **Adjustment to the operator's seat only while the tractor is stopped.**
- **Make sure that the operator's seat is completely secured after each adjustment.**
- **Do not allow any person other than the operator to ride on the tractor.**

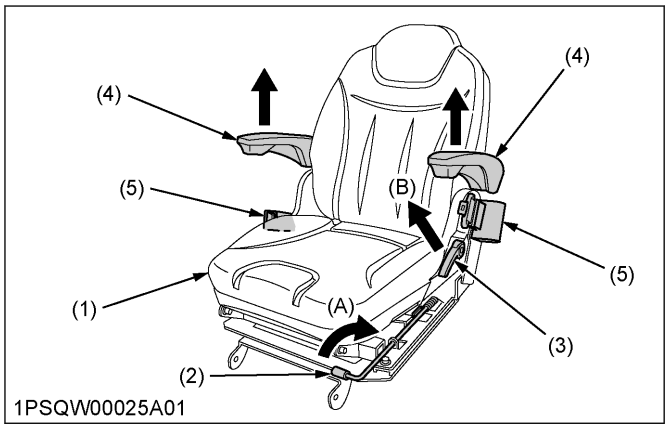

(1) Seat
(2) Position adjust lever
(3) Backrest tilt adjust lever
(4) Arm rest
(5) Seat belt
(A) Pull up
(B) Pull

Travel adjustment

Pull up the position-adjust-lever and slide the seat backward or forward, as required. The seat will lock in position when the position-adjust-lever is released.

Tilt adjustment [BX2380D, BX2680D]

Pull the backrest-tilt-adjust-lever and tilt the backrest to the desired position.

IMPORTANT :

- **After adjusting the operator's seat, be sure to check that the seat is properly locked.**
- **Be sure the operator's seat is out of contact with the top link.**
- **See REVERSING THE OPERATOR'S SEAT on page 74 when using the operator's seat in the backhoe position.**

2. Seat belt

WARNING

To avoid serious injury or death:

- **Always use the seat belt when the ROPS is installed.**
- **Do not use the seat belt if the tractor is not equipped with ROPS.**

Adjust the seat belt for proper fit and connect it to the buckle. The seat belt is auto-locking retractable type.

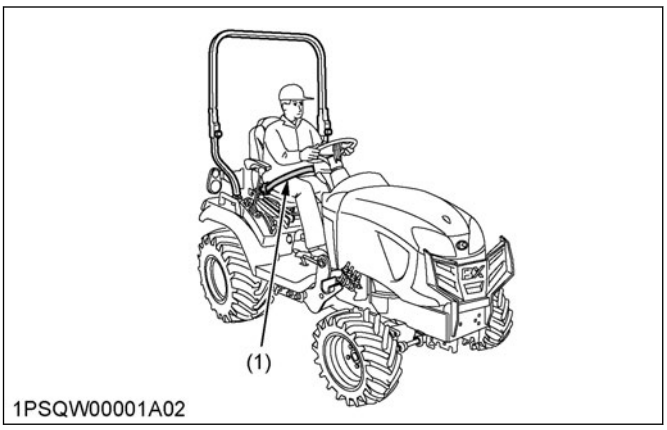

(1) Seat belt

3. Brake pedal and parking brake lock pedal

WARNING

To avoid serious injury or death:

- **Do not brake suddenly.**
  An accident may occur as a result of a heavy towed load shifting forward or loss of control.
- **To avoid skidding and loss of steering control when driving on icy, wet, or loose surfaces, make sure that the tractor is correctly ballasted, operated at reduced speed, and operated with the front-wheel-drive engaged if equipped.**
- **The braking characteristics are different between 2-wheel drive and 4-wheel drive. Know the difference between 2-wheel drive and 4-wheel drive and use them carefully.**
- **Engage 4-wheel drive for 4-wheel braking when traveling down a slope.**

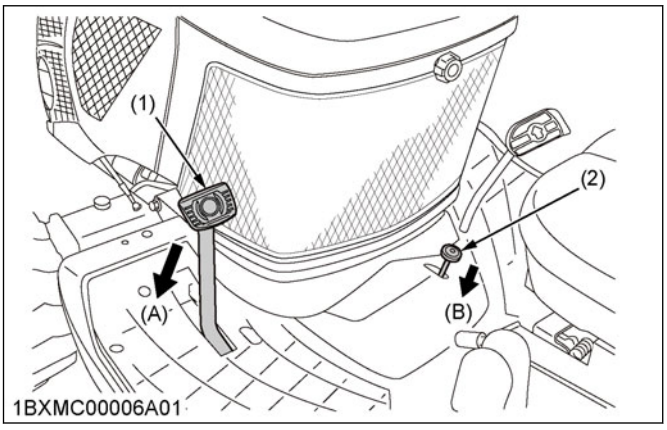

(1) Brake pedal
(2) Parking brake lock pedal
(A) Depress
(B) Push down parking brake lock pedal while depressing brake pedal

3.1 How to use the parking brake

NOTE :

- **It is recommended that the operator practice engaging and disengaging the parking brake on**

https://truckmanualshub.com/

a flat surface without the engine running before operating the tractor for the first time.

To set the parking brake

1. Depress the brake pedal.
2. Latch the brake pedal on pushing and holding the parking-brake-lock-pedal.
3. Release the brake pedal.

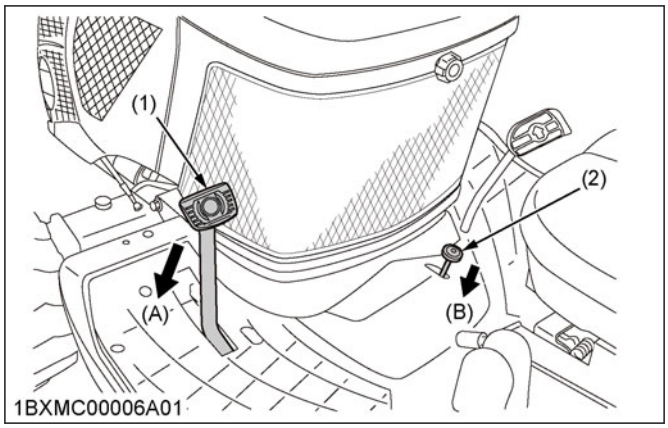

(1) Brake pedal
(2) Parking brake lock pedal
(A) Depress
(B) Push down the parking brake lock pedal while depressing the brake pedal

To release the parking brake

Depress the brake pedal again.

4. Range gear shift lever (Hi-Lo)

You can shift the range-gear-shift-lever only when tractor is completely stopped.

WARNING

To avoid serious injury or death:

- **Make sure that the range-gear-shift-lever is fully engaged into the high position or the low position before climbing or descending a slope.**

IMPORTANT :

Do not force the range-gear-shift-lever.

- **If it is difficult to shift the range-gear-shift-lever into the neutral "N" position, you should attempt the following procedure.**
  1. **Depress the brake pedal firmly for several seconds.**
  2. **Without reducing the force to depress the brake pedal, shift the range-gear-shift-lever.**
- **If it is difficult to shift the range-gear-shift-lever into the low position or the high position from the neutral "N" position, you should attempt the following procedure.**
  1. **Slightly depress the speed-control-pedal to rotate the gears inside of transmission.**
  2. **Release the speed-control-pedal to the neutral "N" position.**
  3. **Shift the range-gear-shift-lever.**
- **To avoid damage of transmission, stop the tractor before shifting the range-gear-shift-lever between ranges.**

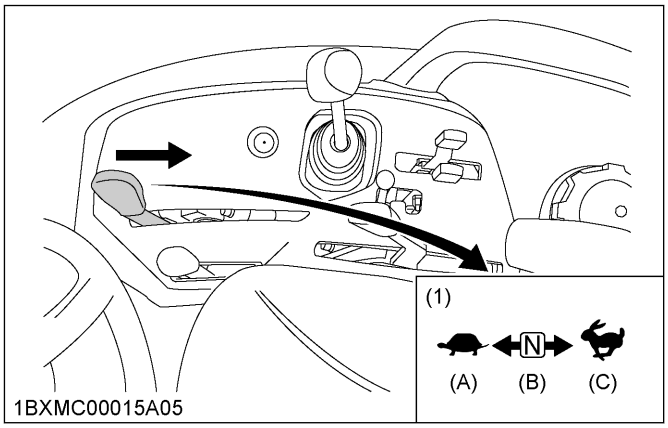

(1) Range gear shift lever (Hi-Lo)
(A) Low
(B) Neutral position
(C) High

5. Front wheel drive lever

Use the front-wheel-drive-lever to engage the front wheels with the tractor stopped.

WARNING

To avoid serious injury or death:

- **Do not engage the front-wheel-drive when traveling at road speed.**
- **When driving on icy, wet, or loose surfaces, make sure that the tractor is correctly ballasted to avoid skidding and loss of steering control. Operate the tractor at reduced speed and engage the front-wheel-drive.**
- **An accident may occur if the tractor is suddenly braked, such as by heavy towed loads shifting forward or loss of control.**
- **The braking characteristics are different between 2-wheel drive and 4-wheel drive. Know the difference and use them carefully.**

Shift the front-wheel-drive-lever to the **on** position to engage the front-wheel-drive.

https://truckmanualshub.com/

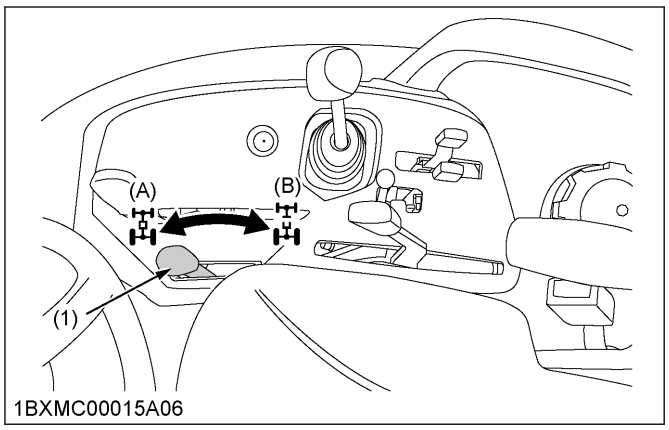

(1) Front wheel drive lever (B) Off
(A) On

IMPORTANT :
- **To avoid damage of transmission, when the front-wheel-drive-lever is not smoothly shifted, slightly depress forward or rearward on the speed-control-pedal.**
- **Tires will wear quickly if the front-wheel-drive is engaged on paved roads.**

Front wheel drive is effective for the following jobs:
- When greater pulling force is needed, such as working in a wet field, when pulling a trailer, or when working with a front-end-loader
- When working in sandy soil
- When working on a hard soil where a rotary tiller might push the tractor forward
- Additional braking at reduced speed

6. Hand accelerator lever

Pulling the hand-accelerator-lever back (the position) increases the engine speed, and pushing it forward (the position) decreases engine speed.

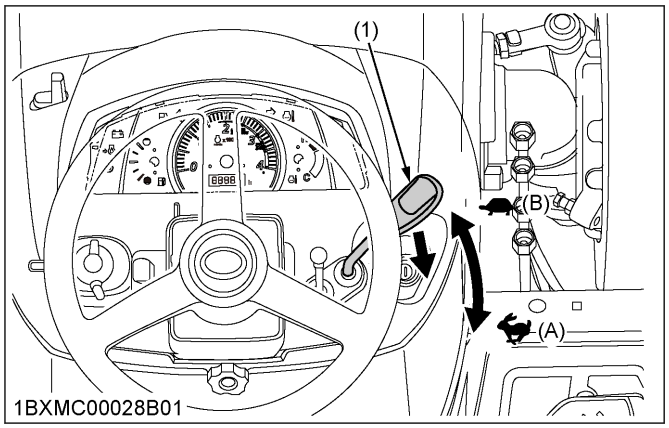

(1) Hand accelerator lever (B) Decrease
(A) Increase

7. Speed control pedal

WARNING

To avoid serious injury or death:
- **Do not operate the tractor if it moves on level ground with your foot off the speed-control-pedal.**

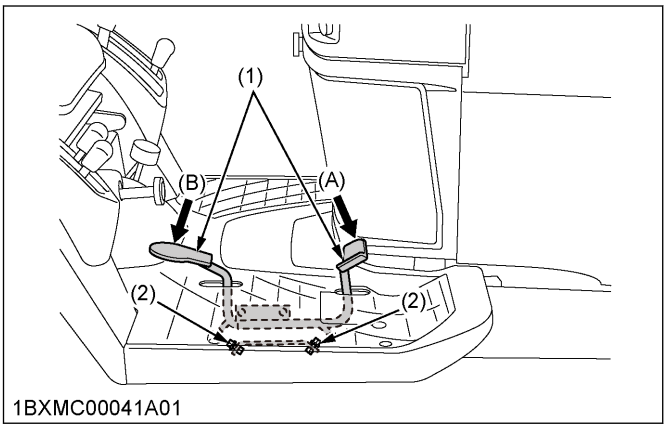

(1) Speed control pedal (A) Forward
(2) Stopper bolts (B) Reverse

IMPORTANT :
- **To prevent serious damage to the HST, do not adjust the stopper bolts.**

Forward pedal	Depress the forward pedal with the toe of your right foot to move forward.
Reverse pedal	Depress the reverse pedal with the heel of your right foot to move backward.

NOTE :
- **When you stand up from the seat with the speed-control-pedal stepped on, the engine will stop regardless of whether the machine is moving or not. Engine stopping is because that the tractor is equipped with the operator-presence-control-system (OPC).**

8. Speed set device

The speed-set-device is designed for tractor-operating-efficiency and operator's comfort. This device will provide a constant forward operating speed by mechanically holding the speed-control-pedal at a selected position.

https://truckmanualshub.com/

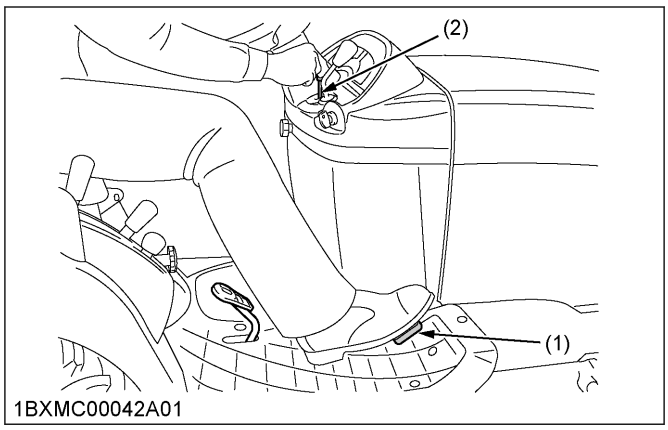

(1) Speed control pedal *(2) Stopper bolts*

8.1 How to use the speed set device

To engage the speed set device

1. Accelerate speed to desired level using the speed-control-pedal.
2. Push and hold the speed-set-rod downward to **on** position.
3. Release the speed-control-pedal.
4. Release the speed-set-rod.
   Desired speed will be maintained.

To disengage the speed set device

1. Depress the brake pedal.

IMPORTANT :

- **To prevent the damage of the speed-set-device, do not depress the reverse pedal when the speed-set-device is engaged.**

NOTE :

- **If you step on the speed-control-pedal on the forward acceleration side, the speed-set-device will disengage.**
- **The speed-set-device will not operate in reverse.**

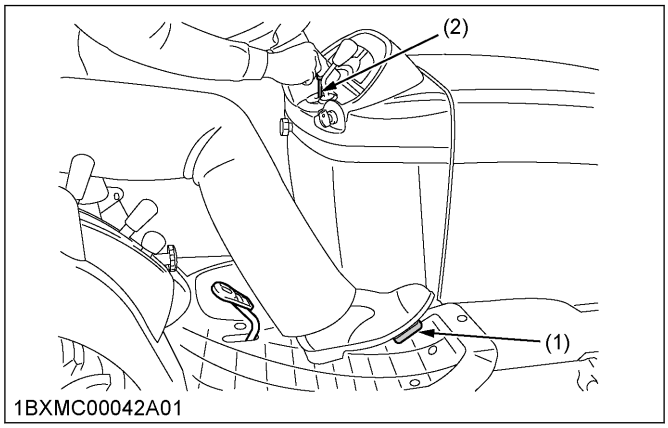

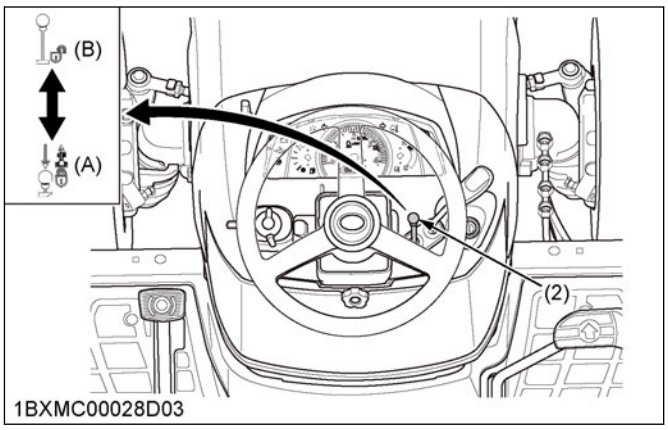

(1) Speed control pedal *(A) On*
(2) Speed set rod *(B) Off*

9. Loader control lever

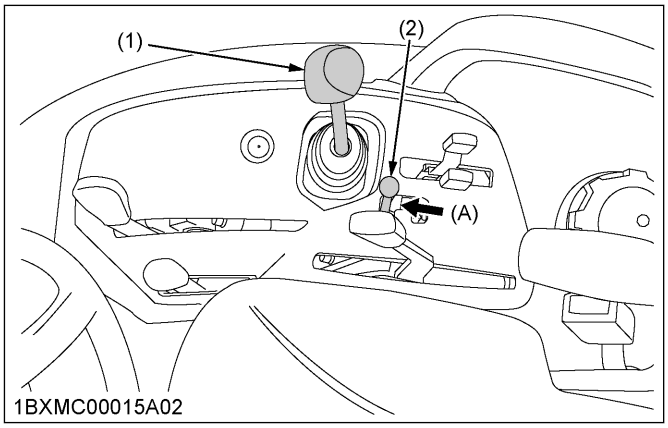

(1) Loader control lever *(D) Roll back*
(A) Down and dump *(E) Down and roll back*
(B) Dump *(F) Down*
(C) UP and dump *(G) Float*

ACCESSORY

1. 12 V electric outlet

You may use the 12 V electric outlet to connect an auxiliary light or other devices.

IMPORTANT :

- **Do not use as a cigarette lighter.**
- **Do not use when wet.**

NOTE :

- **Do not connect a light or other device that draws more than 120 watts to 12 V electric outlet. The battery may discharge very rapidly or the 12 V electric outlet may fail.**

https://truckmanualshub.com/

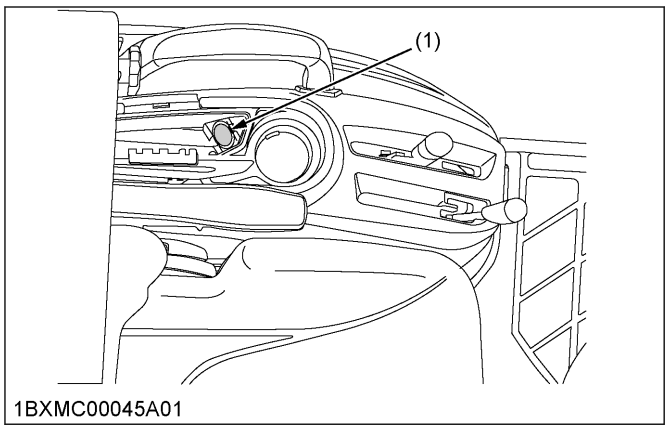

(1) 12V electric outlet

2. Glove box

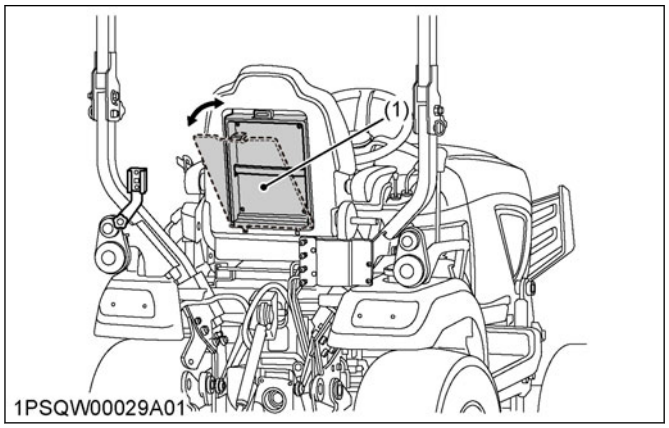

(1) Glove box

https://truckmanualshub.com/

PRE-OPERATION CHECK OF THE TRACTOR

DAILY CHECK ITEMS BEFORE OPERATION OF THE TRACTOR

To prevent trouble from occurring, it is important to know the condition of the tractor well.

WARNING

To avoid serious injury or death:

- **Be sure to check and service the tractor on a level surface with the engine shut off, the parking brake on, and the implement lowered to the ground.**

Check the condition of the tractor before starting it.

Check items

- Walk-around inspection
- Checking the engine-oil-level
- Checking the transmission-oi-level
- Checking the coolant level
- Cleaning the grill and the radiator screen
- Checking the air-cleaner-evaluator-valve when using the tractor in a dusty place
- Checking the brake pedal
- Checking the indicators, gauges, and meter
- Checking the lights
- Checking the wire harness
- Checking the seat belt and ROPS
- Checking the movable parts
- Refuel
  See 2. Checking the fuel gauge and refueling on page 119.
- Care for safety labels
  See 4. Care for safety labels on page 24.

https://truckmanualshub.com/

PRE-OPERATION CHECK OF THE LOADER

LUBRICATION BEFORE OPERATING THE LOADER

Lubricate all grease fittings with SAE multipurpose grease, including the control arm.

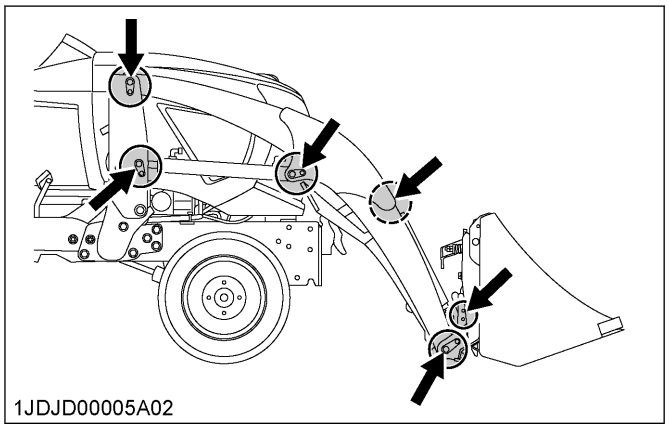

CHECKING THE TRANSMISSION FLUID

IMPORTANT :

- **To check the tractor transmission fluid level, lower the bucket to the ground and lower the 3-point hitch.**

1. Check the transmission fluid level of the tractor.
2. Add the transmission fluid if necessary.
   Refer to the *tractor operator's manual* for instructions and proper transmission fluid.
3. Repeat check of the transmission fluid after purging air from the loader system.
4. Then, add the transmission fluid if necessary.

WEIGHT OF THE IMPLEMENTS AS THE REAR BALLAST

WARNING

To avoid personal injury or death:

- **For tractor stability and operator's safety, add the rear ballast to the rear of the tractor in the form of 3-point counter weight and the rear wheel ballast. The amount of the rear ballast will depend on the application.**

Implement as Counter Weight	
Backhoe	Approx. 266 kg (586 lbs.)
Box Blade	Approx. 190 kg (420 lbs.)
Rear Blade	
Rotary Tiller	
Ballast Box	

1. Liquid ballast in the rear tires

See 2. Rear ballast on page 91 .

Liquid weight per tire (75 percent filled)

Tire sizes	26x12.00-12
Slush free at -10 ℃ (14 ℉) Solid at -30 ℃ (-22 ℉) [Approx. 1 kg (2 lbs.) $CaCl_2$ per 4 L (1 gal) of water]	45 kg (99 lbs.)
Slush free at -24 ℃ (-11 ℉) Solid at -47 ℃ (-52 ℉) [Approx. 1.5 kg (3.5 lbs.) $CaCl_2$ per 4 L (1 gal) of water]	50 kg (110 lbs.)
Slush free at -47 ℃ (-52 ℉) Solid at -52 ℃ (-62 ℉) [Approx. 2.25 kg (5 lbs.) $CaCl_2$ per 4 L (1 gal) of water]	56 kg (123 lbs.)

CHECK OF THE TIRE INFLATION BEFORE OPERATING THE LOADER

Make sure that the tractor tires are properly inflated.
See 1. Inflation pressure of tires on page 89.

https://truckmanualshub.com/

	Tire sizes	Inflation Pressure
Rear	26x12.00-12 Turf	100 kPa (1.0 kgf/cm^2) [14 psi]
	26x12.00-12 Bar	120 kPa (1.2 kgf/cm^2) [17 psi]
	26x12.00-12 Ind.	120 kPa (1.2 kgf/cm^2) [17 psi]
Front	18x8.50-10 Turf	120 kPa (1.2 kgf/cm^2) [17 psi]
	18x8.50-10 Bar	150 kPa (1.5 kgf/cm^2) [22 psi]
	18x8.50-10 Ind.	150 kPa (1.5 kgf/cm^2) [22 psi]

PERFORMING THE TEST OPERATION OF THE LOADER

WARNING

To avoid personal injury or death:

- **Keep engine speed at low idle during the test operation of the loader.**
- **Escaping the hydraulic fluid under pressure can obtain sufficient force to penetrate skin, causing serious personal injury.**
  Before disconnecting lines, be sure to relieve all pressure by moving the controls.
- **Before applying pressure to the loader system, be sure that all connections are tight and that lines, tubes, and hoses are not damaged.**
- **Hydraulic fluid escaping from a very small hole can be almost invisible. Use a piece of cardboard or wood, rather than hands to search for suspected leaks.**
- **If injured by escaping fluid, see a doctor at once. Serious infection or allergic reaction may develop if proper medical treatment is not administered immediately.**
- **Do not move the loader-control-lever into the float position when the bucket is off the ground.**

To start the test operation, follow the following procedure.

1. Slightly move the control lever from the “**N**” position.
2. Slowly raise the boom of the loader just enough for the bucket to clear the ground when fully dumped.
3. Slowly operate the loader through the dump and roll back cycles.

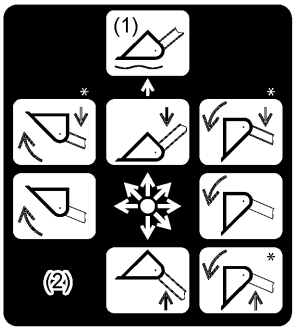

1JDJD00013A02

(A) Float *(B) Blank*

NOTE :

- **When the lever is at each corner position marked by asterisk “*”, cylinders of the boom and bucket work at the same time. However, the blank position (raise and roll back) is not recommended for scooping because of insufficient lift force.**

IMPORTANT :

- **If the boom or bucket of the loader does not work in the directions indicated on the label, follow the following procedure.**
  1. **Lower the bucket to the ground.**
  2. **Stop the engine.**
  3. **Relieve all hydraulic pressure.**
  4. **Recheck and correct all hydraulic connections.**

REMOVING AIR FROM THE HYDRAULIC SYSTEM

1. Repeat operations of raising and lowering the boom and the bucket until all the air is removed from the hydraulic system and the hydraulic system responds properly.

   IMPORTANT :

   - **Do not move the control lever into the float position when the bucket is off the ground.**

https://truckmanualshub.com/

PRE-OPERATION CHECK OF THE BACKHOE

CHECKING OF THE BACKHOE BEFORE OPERATION

WARNING

To avoid serious injury or death:

- **Read the "Safe operation" in this manual.**
- **Read the warning and caution labels located on the backhoe.**
- **Make sure that the swing-lock-pin is set before entering or exiting the operator area of the backhoe.**

See PRECAUTIONS OF THE BACKHOE on page 14 and 3. Safety labels of the backhoe on page 22.
Prior to starting the engine, check the backhoe according to CHECKING THE BACKHOE DAILY on page 141 before operation.

PRE-OPERATING INSTRUCTION OF THE BACKHOE

1. Check of the operator's seat before operating the backhoe

You can use the operator's seat for the BX23S tractor to operate the loader and backhoe. See 1. Operator's seat on page 48 for the detail to turn the operator's seat around for backhoe operation.

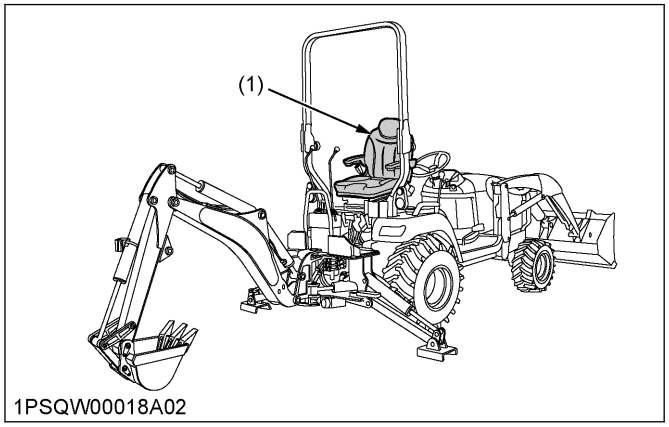

(1) Operator's seat (backhoe position)

2. Check of the ballast before operating the backhoe

WARNING

To avoid serious injury or death:

- **Never remove the loader to ensure the stability of the tractor at all times.**

IMPORTANT :

- **Do not add the liquid ballast or any other weights to the front tires.**
- **While the BT603 backhoe is installed on the tractor, the liquid ballast in the rear tires should be removed.**

3. Check of the tire inflation before operating the backhoe

Make sure that the tractor tires are properly inflated.
See 1. Inflation pressure of tires on page 89.

	Tire sizes	Inflation Pressure
Rear	26x12.00-12 Turf	100 kPa (1.0 kgf/cm^2) [14 psi]
	26x12.00-12 Bar	120 kPa (1.2 kgf/cm^2) [17 psi]
	26x12.00-12 Ind.	120 kPa (1.2 kgf/cm^2) [17 psi]
Front	18x8.50-10 Turf	120 kPa (1.2 kgf/cm^2) [17 psi]
	18x8.50-10 Bar	150 kPa (1.5 kgf/cm^2) [22 psi]
	18x8.50-10 Ind.	150 kPa (1.5 kgf/cm^2) [22 psi]

https://truckmanualshub.com/

OPERATING THE ENGINE

WARNING

To avoid serious injury or death:

- **Read and understand *"Safe operation"* in this manual.**
- **Read and understand the safety labels located on the tractor.**
- **To avoid the danger of exhaust-fume-poisoning, do not operate the engine in a closed building without proper ventilation.**
- **Never start the engine while standing on ground. Start the engine only from the operator's seat.**
- **Follow the rule to set all shift levers to the neutral positions and to place the PTO lever in the off position before starting the engine.**

See 2. Precautions for operating the tractor on page 8, 3. Precautions for parking the tractor on page 10, and 6. Precautions for servicing the tractor on page 11.

IMPORTANT :

- **Do not use starting fluid or ether.**
- **To protect the battery and the starter, make sure that the starter is not continuously turned for more than 30 seconds.**

STARTING THE ENGINE

IMPORTANT :

- **Because of safety devices, the engine will not start except when the speed-control-pedal is in the neutral position and the PTO-clutch-lever is in the off position respectively.**

1. Make sure that the parking brake is set.
   If the parking brake is not set, see *"To set the parking brake"* in 3.1 How to use the parking brake on page 48.

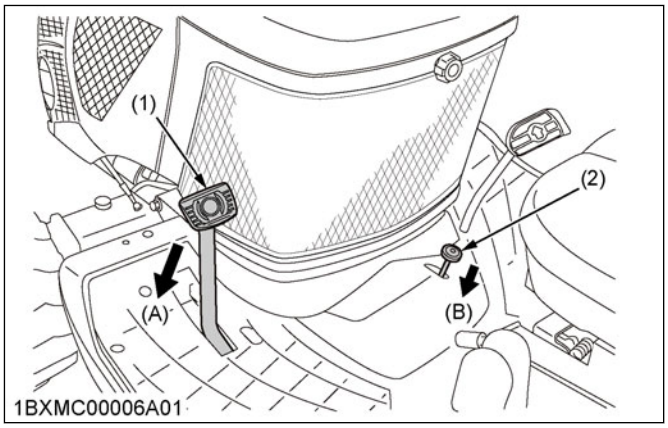

(1) Brake pedal
(2) Parking brake lock pedal
(A) Depress
(B) Push down parking brake lock pedal while depressing brake pedal

NOTE :

- **It is recommended that the operator practices engaging and disengaging the parking brake on a flat surface without the engine running before operating the tractor for the first time.**

2. Place the PTO-clutch-lever in the **off** position.

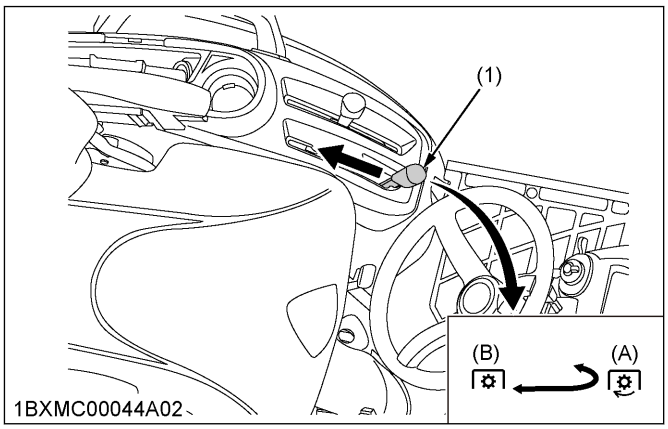

(1) PTO clutch lever
(A) On
(B) Off

https://truckmanualshub.com/

3. Place the speed-set-rod in the **off** position.

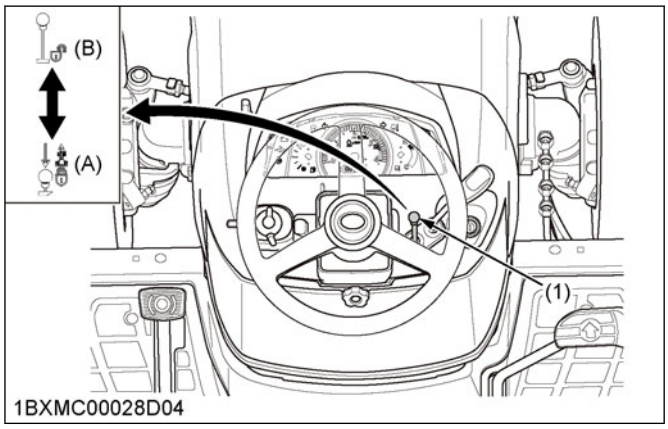

(1) Speed set rod (B) Off
(A) On

4. Place the speed-control-pedal in the **neutral** position.

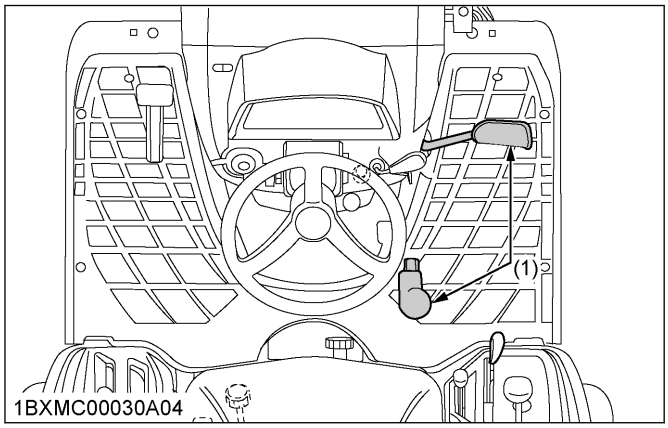

(1) Speed control pedal

NOTE :

- **The speed-control-pedal automatically returns to the neutral position when the operator's foot is released from the speed-control-pedal.**

5. Place the range-gear-shift-lever (Hi-Lo) in the **neutral** "**N**" position.

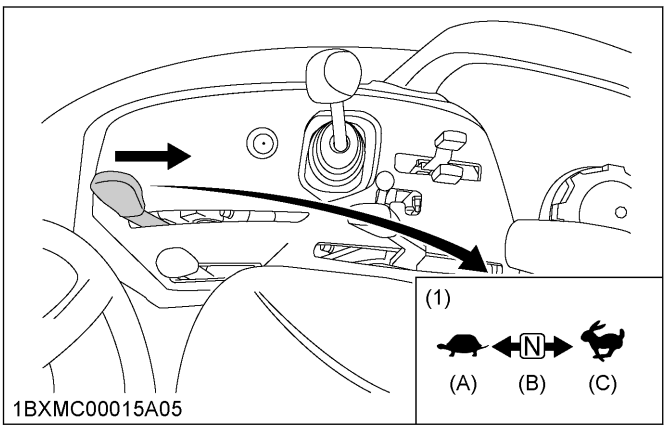

(1) Range gear shift lever (Hi-Lo) (B) Neutral
(C) High
(A) Low

6. Lock the loader-control-lever in the **lock** position if equipped.

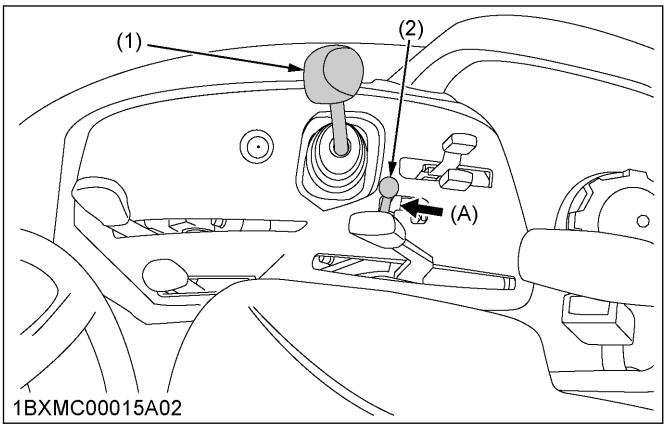

(1) Loader control lever (A) Lock
(2) Lock lever

7. Move the hydraulic-control-lever forward (the **lowered (down)** position) to lower the implement.

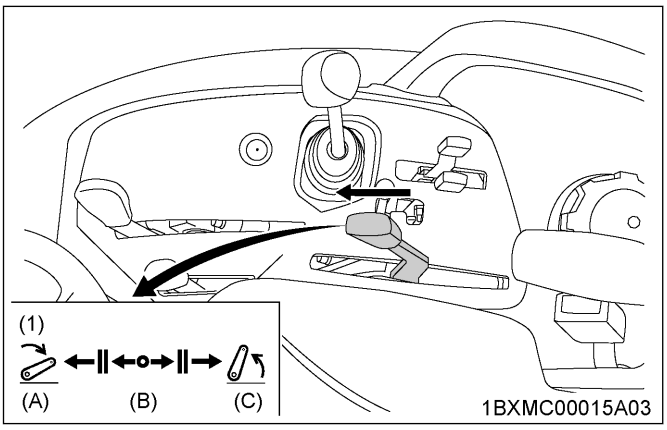

(1) Hydraulic control lever (N) Neutral position
(A) Raised
(B) Lowered

Check that the implement is down at the lowest position after moving the hydraulic-control-lever forward.

https://truckmanualshub.com/

8. Set the hand-accelerator-lever to about 1/2 way.

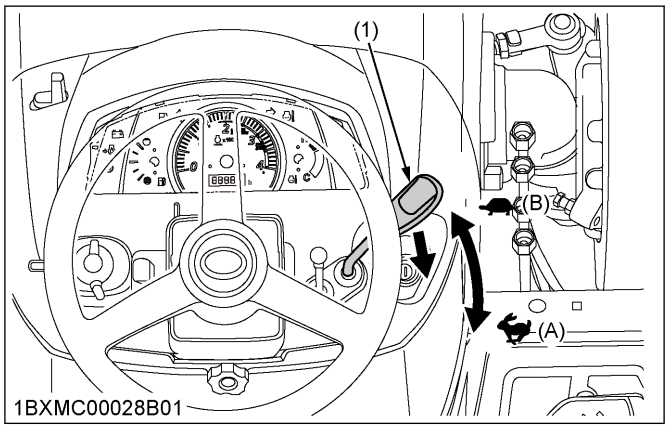

(1) Hand accelerator lever *(B) Decrease*
(A) Increase

9. Insert the starter key into the key switch and turn the starter key to the **on** position.

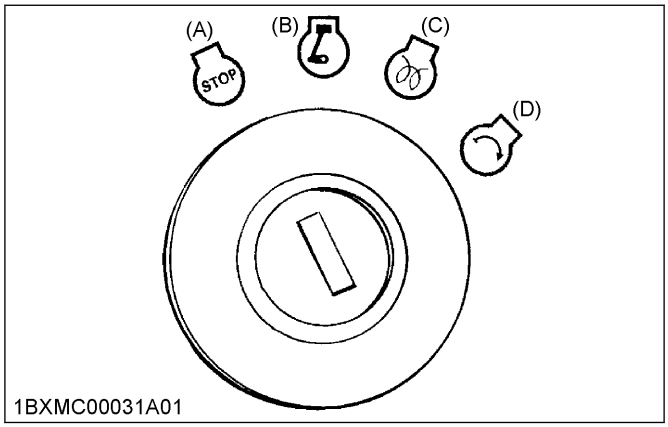

(A) Off *(D) Start*
(B) On
(C) Preheat

10. Check the indicator lamps on Easy Checker™.

IMPORTANT :
- **Daily checks with the Easy Checker™ only are not sufficient. Never fail to conduct daily checks carefully by referring to 8. Checking the gauges, the meters, and the Easy Checker™ on page 122.**

When the starter key is turned to the **on** position, the coolant-temperature-indicator-lamp and the low-fuel-indicator-lamp only should come on and the needles of the fuel gauge, the coolant-temperature-gauge, and the tachometer move up and return.
See 2.1 Easy Checker™ on page 69.

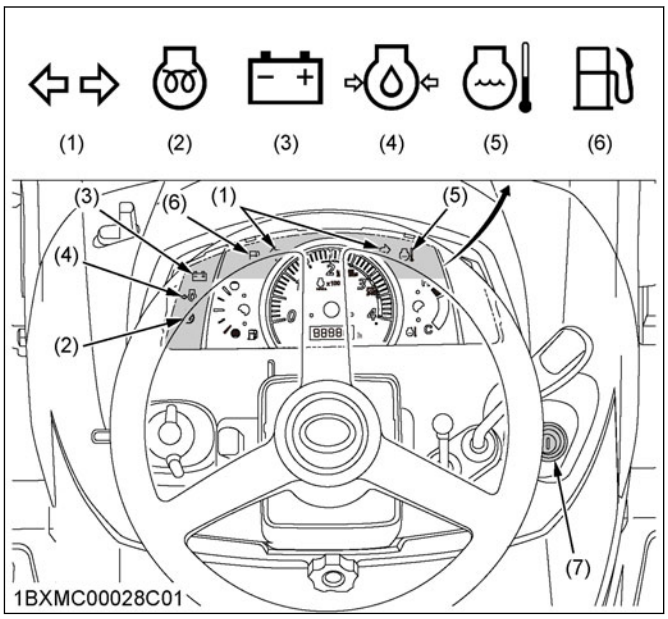

(1) Turn signal/hazard light indicator
(2) Preheat
(3) Electrical charge
(4) Engine oil pressure
(5) Coolant temperature indicator
(6) Low fuel indicator
(7) Key switch

11. Turn the starter key to the **preheat** position and hold it as follows.
For the appropriate preheating time, refer to the following table.

Temperature	Preheating time
Over 0 ℃ (32 ℉)	2 sec. to 3 sec.
-5 ℃ to 0 ℃ (23 ℉ to 32 ℉)	5 sec.
-15 ℃ to -5 ℃ (5 ℉ to 23 ℉)	10 sec.

NOTE :
- **The preheat-indicator-lamp on the Easy Checker™ comes on while the engine is being preheated.**

12. Turn the starter key to the **start** position and release it when the engine starts.
In cold weather, if the engine fails to start after 10 seconds, turn off the starter key for 30 seconds. Then repeat steps 11. and steps 12. See 1. Cold weather starting of the engine on page 60.

IMPORTANT :
- **Because of safety devices, the engine will not start except when the speed-control-pedal is in the neutral position and the PTO-clutch-lever is in the off position respectively.**

13. Check to see that all the indicator lamps on the Easy Checker™ are **off**.

https://truckmanualshub.com/

1. Cold weather starting of the engine

When the ambient temperature is as follows and the engine is very cold, you may fail to start the engine.

Ambient temperature	below -5 ℃ (23 ℉)

To protect the battery and the starter, make sure not to turn the starter continuously for more than following seconds.

Continuous turning limit of the starter	30 seconds

2. Block heater (option)

A block heater is available as an option from your dealer.
The block heater will assist you in starting your tractor when the ambient temperature is as follows.

Ambient temperature	below -15 ℃ (5 ℉)

STOPPING THE ENGINE

1. After slowing the engine to idle, turn the starter key to the **stop** position.
2. Remove the starter key.

   NOTE :
   - **If the starter key does not stop the engine, consult your local KUBOTA Dealer.**

WARMING UP OF THE ENGINE

WARNING

To avoid serious injury or death:
- **Be sure to set the parking brake during warm-up of the engine.**
- **Be sure to set all shift levers to the neutral positions and to place the PTO-clutch-lever in the off position during warm-up of the engine.**

For five minutes after the engine start-up, allow the engine to warm up without applying any load. Allowing the engine to warm up is to allow oil to reach every engine-part.
If the load should be applied to the engine without preceding warm-up period, trouble such as seizure, breakage, or premature wear may develop.

1. Warm-up of the engine and transmission oil in the low temperature range

IMPORTANT :
- **Do not operate the tractor under full load condition until it is sufficiently warmed up.**

Hydraulic oil serves as transmission fluid. In cold weather, the hydraulic oil may be cold with increased viscosity. The hydraulic oil with increased viscosity can cause delayed oil circulation or abnormally low hydraulic pressure for some time after engine start-up. Delayed oil circulation or abnormally low hydraulic pressure in turn can result in premature wear in the hydraulic system or malfunctions such as resistance in the speed-control-pedal and difficulty engaging the range-gear-shift-lever. To prevent the premature wear in the hydraulic system or malfunctions of controls, check the following instructions.
Warm up the engine at about 50% of rated rpm according to the following table.

Ambient temperature	Warm-up time requirement
Above 0 ℃ (32 ℉)	At least 5 minutes
-10 ℃ to 0 ℃ (14 ℉ to 32 ℉)	5 minutes to 10 minutes
-20 ℃ to -10 ℃ (-4 ℉ to 14 ℉)	10 minutes to 15 minutes
Below -20 ℃ (-4 ℉)	More than 15 minutes

JUMP STARTING THE ENGINE

Follow the instructions of jump starting of the engine to safely start the engine.

WARNING

To avoid serious injury or death:
- **Battery gases can explode. Keep cigarettes, sparks, and flames away from battery.**
- **If the tractor battery is frozen, do not jump start the engine.**
- **Do not connect other end of negative (-) jumper cable to negative (-) terminal of the tractor battery.**
- **When taking the dead battery, putting the battery, and fixing the battery, do not allow the positive (+) terminal of the battery to touch other parts.**
- **To prevent short circuit, before connecting jumper cables, make sure to remove the metal-battery-holder.**

IMPORTANT :
- **The tractor equips a 12 volt negative (-) ground starting system.**

https://truckmanualshub.com/

- **Use only the same voltage for jump starting.**
- **Use of a higher voltage source on the electrical system of tractor could result in severe damage to the electrical system of tractor.**
  Use only matching voltage source when jump starting in a low battery condition or a dead battery condition.
- **Since the metal-battery-holder can crack, do not tighten it too much.**

Connect cables in numerical order.
Disconnect in reverse order after use.

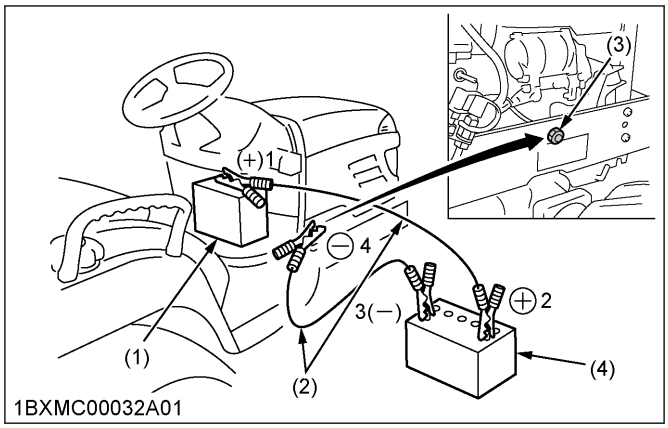

(1) Dead battery
(2) Jumper cables
(3) Engine block or frame
(4) Helper battery

1. Bring the helper vehicle with a battery of the same voltage as the disabled tractor within easy cable reach.

   IMPORTANT :
   - **The helper vehicle must not touch the disabled tractor.**

2. Engage the parking brakes of both vehicles and put the shift levers in the **neutral** position. Shut both engines off.
3. Put on safety goggles and rubber gloves.
4. Take the dead battery out and put it on the step of the tractor.
5. Make sure that the vent caps are securely in place if equipped.
6. Attach the red clamp to the positive (red, (+) or pos.) terminal of the dead battery, and clamp the other end of the same cable to the positive (red, (+) or pos.) terminal of the helper battery.
7. Clamp the other cable to the negative (black, (-) or neg.) terminal of the helper battery.
8. Clamp the other end of the cable, which is clamped to the negative terminal of the helper battery, to the engine block or frame of the disabled tractor as far from the dead battery as possible.
9. Start the helper vehicle and let its engine run for a few moments. Start the disabled tractor.
10. Disconnect the jumper cables in the exact reverse order of attachment.
    See steps in order of step 8., step 7., and step 6.
11. Put the battery back and fix it.

https://truckmanualshub.com/

OPERATING THE TRACTOR

OPERATION OF NEW TRACTOR

How a new tractor is used and maintained determines the life of the tractor.
A new tractor just off the factory production line has been, of course, tested, but the various parts are not accustomed to each other. So you should take care of the tractor. You should operate the tractor as follows for the first 50 hours until the various parts become broken-in.

- Operate the tractor at a slower speed
- Avoid excessive work or operation of the tractor

The manner which the tractor is used during the breaking-in period greatly affects the life of your tractor. Therefore, to obtain the maximum performance and the longest life of the tractor, it is very important to properly break-in your tractor. In using a new tractor, follow the following precautions.
Do not operate the tractor at full speed for the first 50 hours.

- Do not start the tractor quickly. Do not apply the brakes suddenly.
- In winter, operate the tractor after fully warming up the engine.
- Do not run the engine at speeds faster than necessary.
- On rough roads, slow down to suitable speeds.
  Do not operate the tractor at fast speed.

The preceding precautions are not limited only to new tractors, but to all tractors. But you should especially follow the preceding precautions in the case of new tractors.

Changing the lubricating oil for new tractors
The lubricating oil is especially important in the case of a new tractor. If the various parts are not broken-in and are not accustomed to each other, small metal grit may develop during the operation of the tractor. Small metal grit may wear out or damage the parts. Therefore, you should take care of the lubricating oil to change a little earlier than would ordinarily be required.
For further details of change interval hours, see SERVICE INTERVALS on page 113.

PRECAUTIONS FOR GETTING ON AND OFF THE TRACTOR

- Never try to get on or off a moving tractor or to jump off the tractor to exit.
- Face the tractor when getting into or out of the tractor. Do not use the controls as hand-holds to prevent inadvertent machine movements.
- Always keep steps and floor clean to avoid slippery conditions.

OPERATION OF THE FOLDABLE ROPS

WARNING
To avoid serious injury or death:

- **When raising or folding the ROPS, apply the parking brake, stop the engine, and remove the starter key.**
  Always raise or fold the ROPS from a stable position at the rear of the tractor.
- **Fold the ROPS down only when absolutely necessary and fold it up and lock it again as soon as possible.**
- **Before proceeding to fold ROPS, check for any possible interference with installed implements and attachments. If interference occurs, contact your KUBOTA dealer.**

1. Folding the ROPS

NOTE :

- **Take care not to bump the ROPS against the rod of backhoe cylinder when folding the ROPS.**

1. Loosen the holding knob bolts.

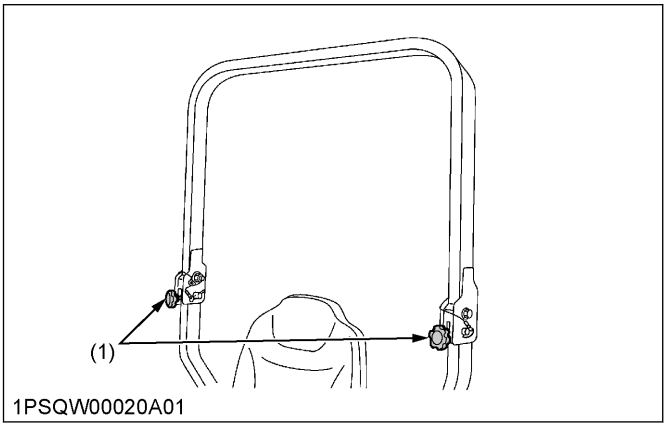

(1) Holding knob bolts

https://truckmanualshub.com/

2. Remove both set pins.

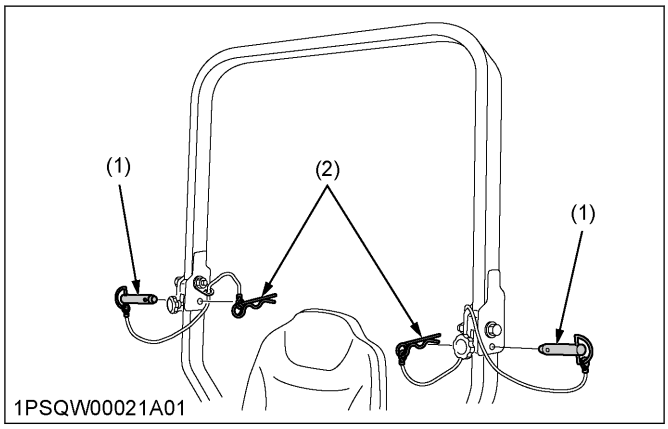

(1) Set pins *(2) Snap pins*

3. Fold the ROPS.

CAUTION
To avoid personal injury:
- **Hold the ROPS tightly with both hands and fold the ROPS slowly and carefully.**

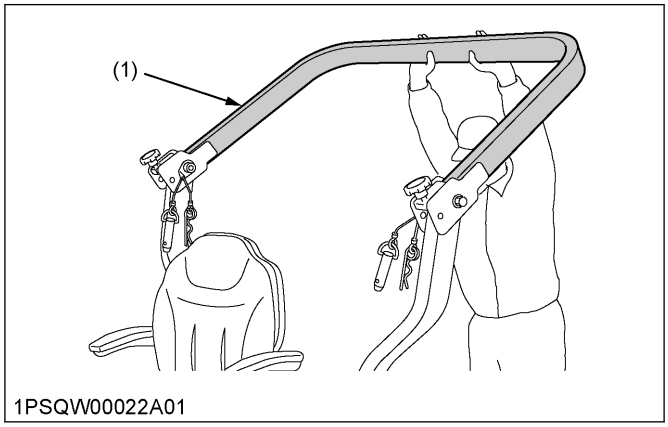

(1) ROPS

4. Align set pin holes and insert both set pins. Secure set pin holes and set pins with the snap pins.

CAUTION
To avoid personal injury:
- **Make sure that both set pins are properly installed and secured with the snap pins.**

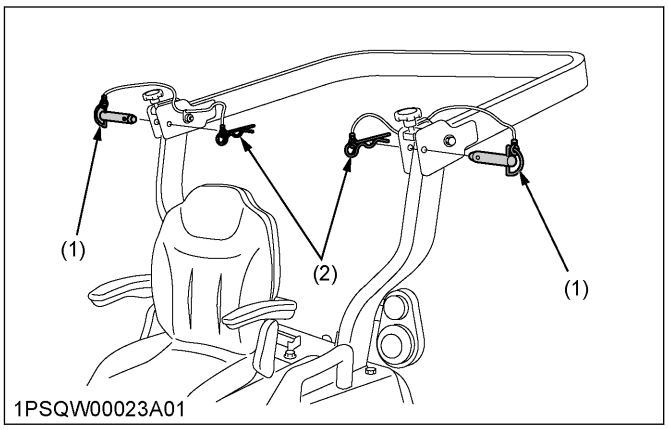

(1) Set pins *(2) Snap pins*

2. Raising the ROPS to upright position

1. Remove both snap pins and set pins.

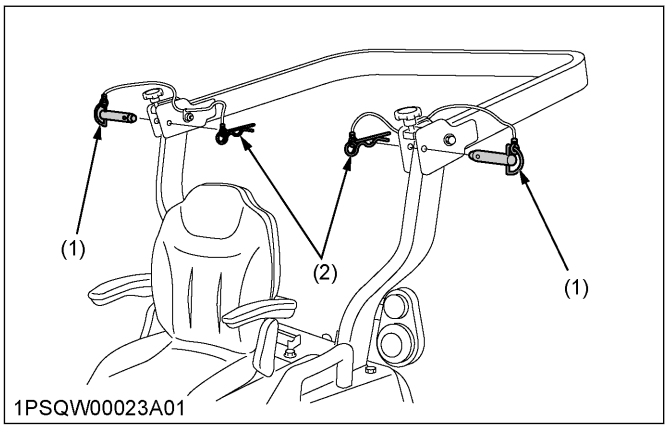

(1) Set pins *(2) Snap pins*

2. Raise the ROPS to the upright position.

CAUTION
To avoid personal injury:
- **Hold the ROPS tightly with both hands and raise the ROPS slowly and carefully.**

https://truckmanualshub.com/

3. Align the set-pin-holes and insert both set pins. Secure the set pins with the snap pins.

CAUTION

To avoid personal injury:

- **Make sure that both set pins are properly installed as soon as the ROPS is in the upright position and secured with the snap pins.**

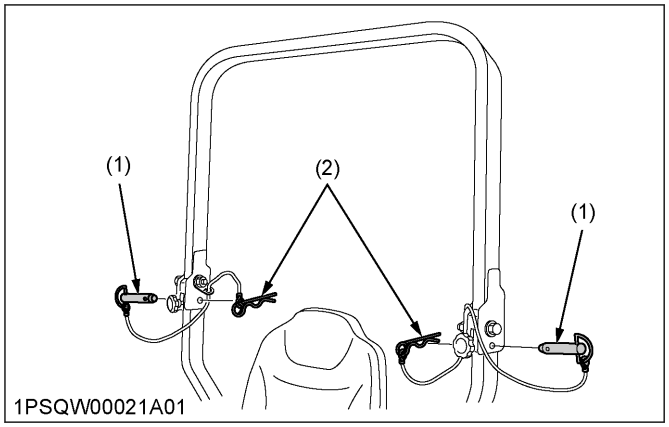

(1) Set pins *(2) Snap pins*

4. Tighten the holding-knob-bolts.

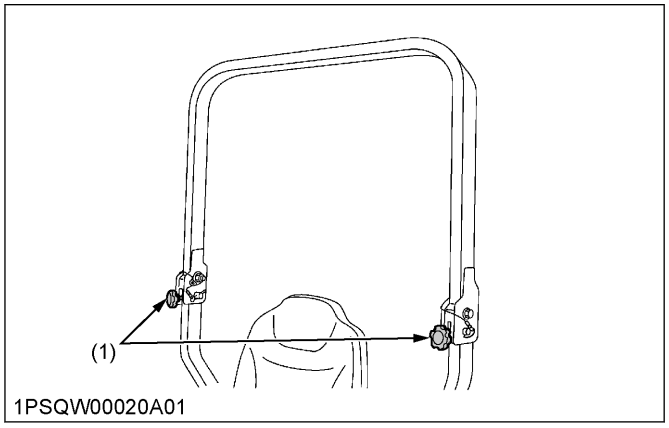

(1) Holding knob bolts

3. Adjusting the foldable ROPS

1. Adjust free fall of the ROPS upper frame regularly.
2. If you feel less friction in folding the ROPS, tighten the nut until you feel the right friction in the movement.

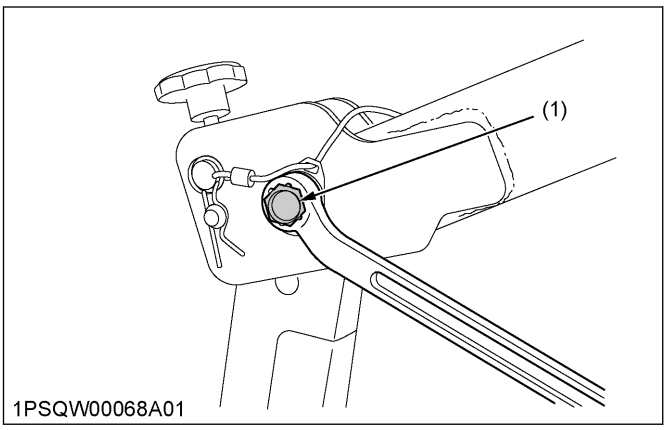

(1) Nut

https://truckmanualshub.com/

STARTING THE TRACTOR

1. Adjust the operator's position and engage the seat belt.
   See 1. Operator's seat on page 48 and 2. Seat belt on page 48.

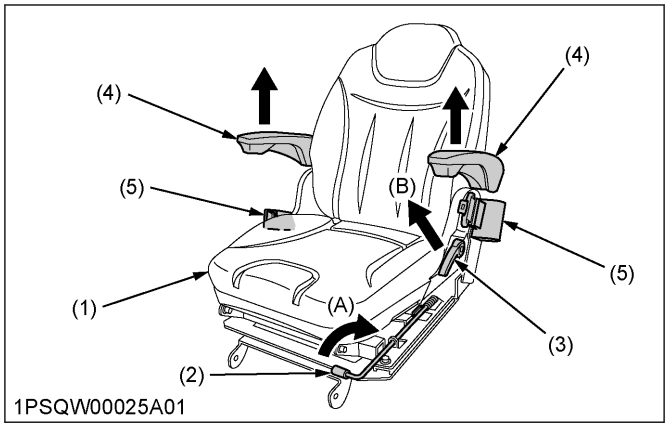

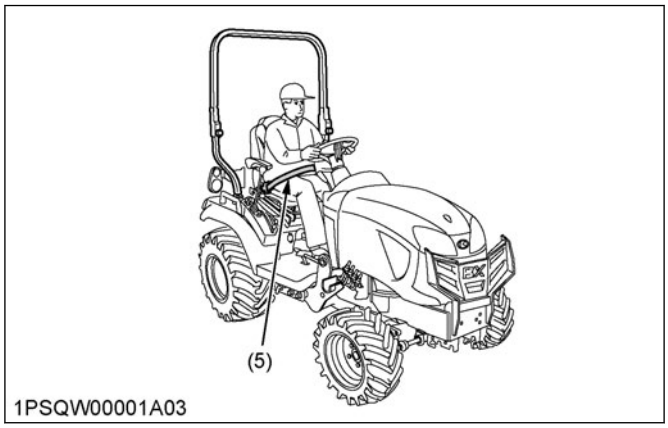

(1) Seat
(2) Position adjust lever
(3) Backrest tilt adjust lever
(4) Arm rest
(5) Seat belt
(A) Pull up
(B) Pull
(C) Tractor driving position
(D) Backhoe position

NOTE :

- **Adjust the operator's seat and suspension to ensure that the controls are comfortably at hand for the operator, ensuring that the operator maintains a good posture.**

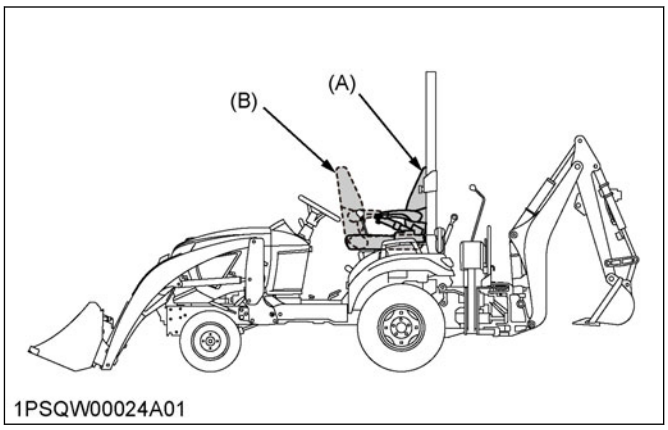

(A) Tractor driving position *(B) Backhoe position*

- **The turning direction of the operator's seat is one-way. Make sure that the operator's seat is rotated to the proper direction.**
- **For more details, see REVERSING THE OPERATOR'S SEAT on page 74.**

2. Adjust the steering wheel to proper position.

CAUTION

To avoid personal injury:

- **Do not adjust the steering wheel while the tractor is in motion.**

Pull the tilt lever to adjust the steering wheel.

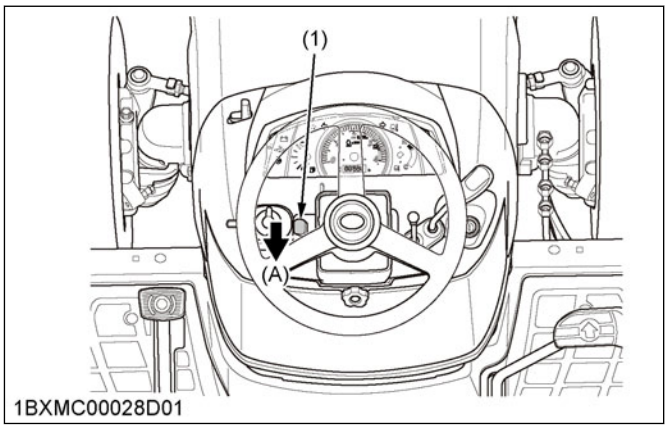

(1) Tilt lever *(A) Pull*

https://truckmanualshub.com/

3. Select positions of the light switches.
   See 3. Head light switch on page 45, 4. Hazard light switch on page 45, and 5. Turn signal light switch on page 45.

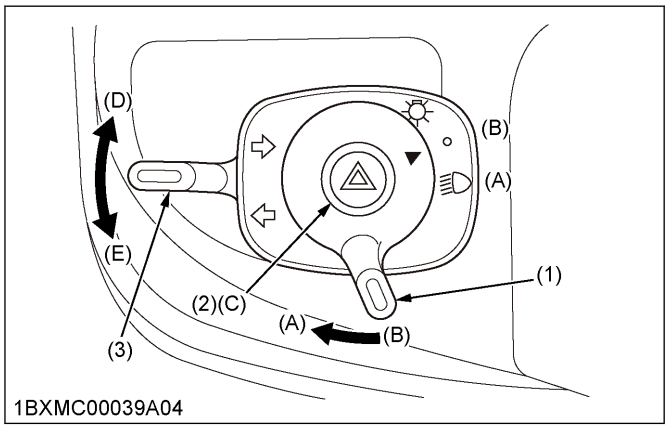

(1) Head light switch
(2) Hazard light switch
(3) Turn signal light switch
(A) On (head light)
(B) Off (head light)
(C) Push on-off (hazard light)
(D) Right turn
(E) Left turn

4. Check the brake pedal.
   a. Depress the brake pedal.
   b. Depress the parking brake lock pedal.
   c. Release the brake pedal.
   Make sure to latch the brake pedal with the parking brake lock pedal. Use both right and left feet for the procedure.
   See 3. Brake pedal and parking brake lock pedal on page 48 and *"To set the parking brake"* in 3.1 How to use the parking brake on page 48.

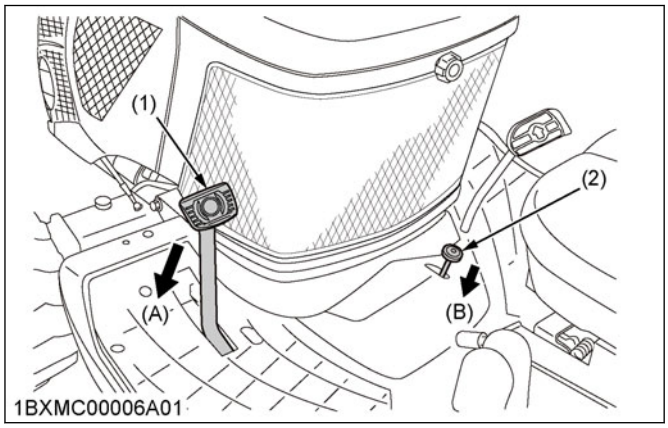

(1) Brake pedal
(2) Parking brake lock pedal
(A) Depress
(B) Push down parking brake lock pedal while depressing brake pedal

5. Start the engine.
   See STARTING THE ENGINE on page 57.

WARNING

To avoid serious injury or death:

- **Read and understand *"Safe operation"* in this manual.**
- **Read and understand the safety labels located on the tractor.**
- **To avoid the danger of exhaust-fume-poisoning, do not operate the engine in a closed building without proper ventilation.**
- **Never start the engine while standing on ground. Start the engine only from the operator's seat.**
- **Follow the rule to set all shift levers to the neutral positions and to place the PTO lever in the off position before starting the engine.**

See 2. Precautions for operating the tractor on page 8, 3. Precautions for parking the tractor on page 10, and 6. Precautions for servicing the tractor on page 11.

6. Raise the Implement.
   Move the hydraulic control lever rearward (the **raised (up)** position).
   See 1. Hydraulic control on page 84.

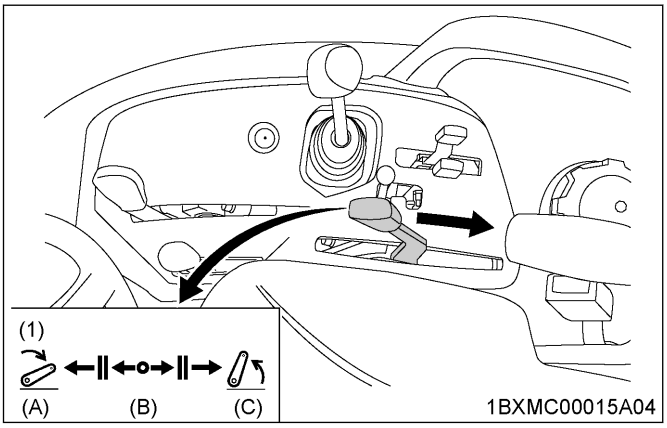

(1) Hydraulic control lever
(A) Lowered
(B) Neutral position
(C) Raised

https://truckmanualshub.com/

7. Select the travel speed.
   See 4. Range gear shift lever (Hi-Lo) on page 49 and 5. Front wheel drive lever on page 49.

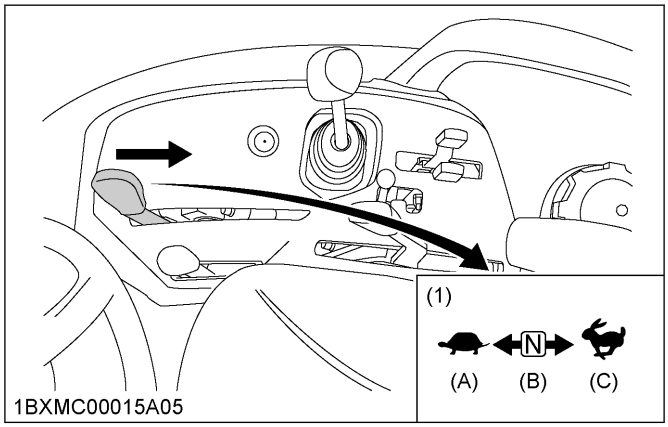

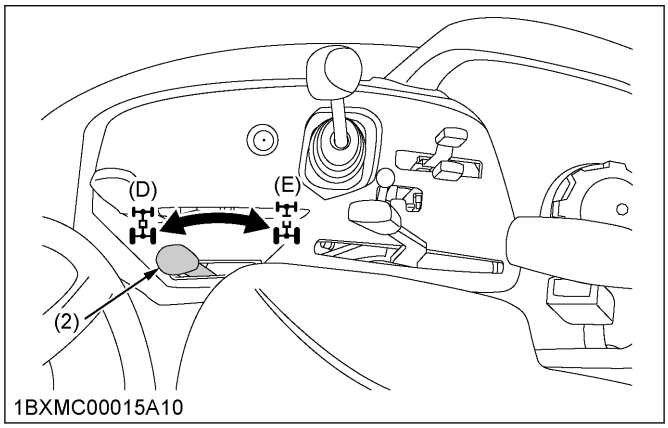

(1) Range gear shift lever (Hi-Lo)
(2) Front wheel drive lever
(A) High
(B) Neutral position
(C) Low
(D) On
(E) Off

8. Accelerate the engine.
   See 6. Hand accelerator lever on page 50.

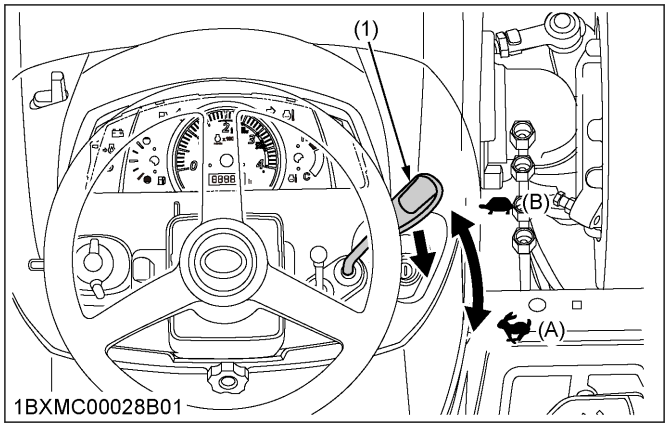

(1) Hand accelerator lever
(A) Increase
(B) Decrease

9. Unlock the parking brake.
   See *"To release the parking brake"* in 3.1 How to use the parking brake on page 48.

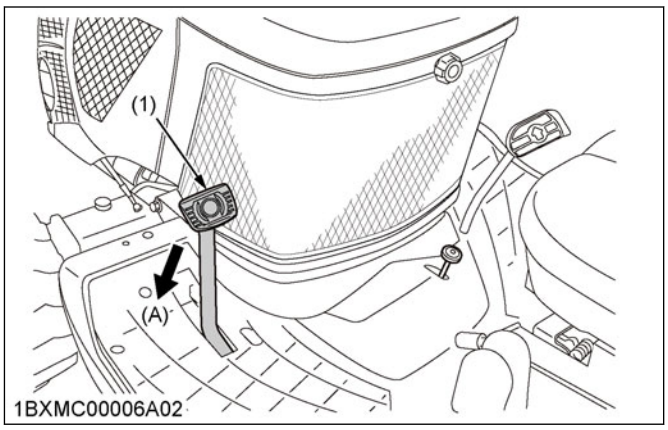

(1) Brake pedal
(A) Depress

https://truckmanualshub.com/

10. Depress the speed control pedal.
    See 7. Speed control pedal on page 50, 8. Speed set device on page 50, and 8.1 How to use the speed set device on page 51.

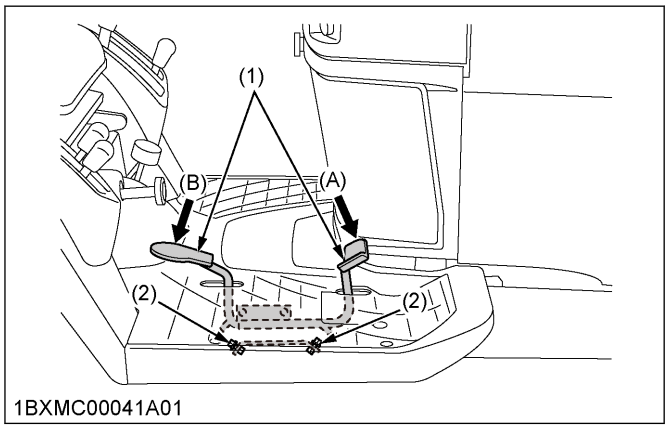

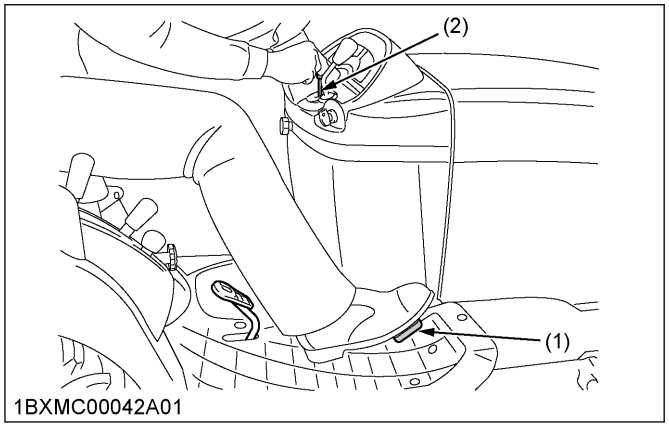

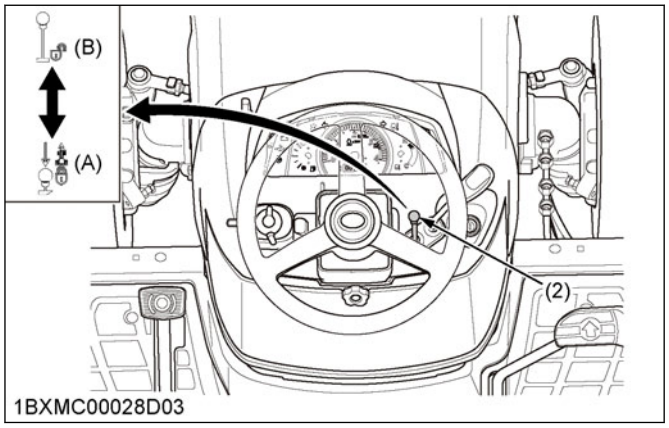

(1) Speed control pedal
(2) Stopper bolts
(3) Speed set rod
(A) Forward
(B) Reverse
(C) On
(D) Off

STOPPING THE TRACTOR

1. Slow the engine down.
2. Depress the brake pedal.
3. After the tractor has stopped, disengage the PTO clutch.

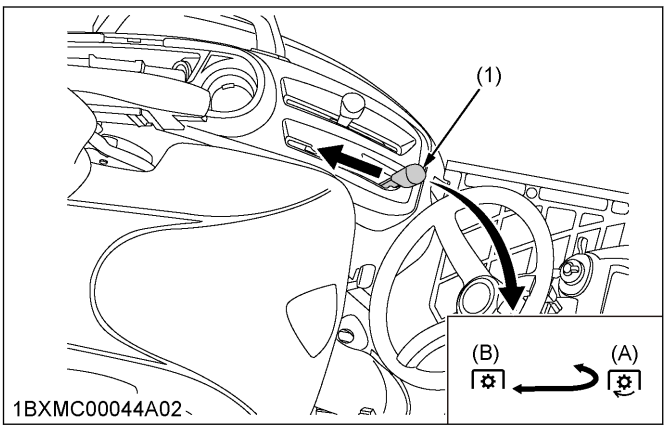

(1) PTO clutch lever
(A) On (engage)
(B) Off (disengage)

4. Lower the implement to the ground.

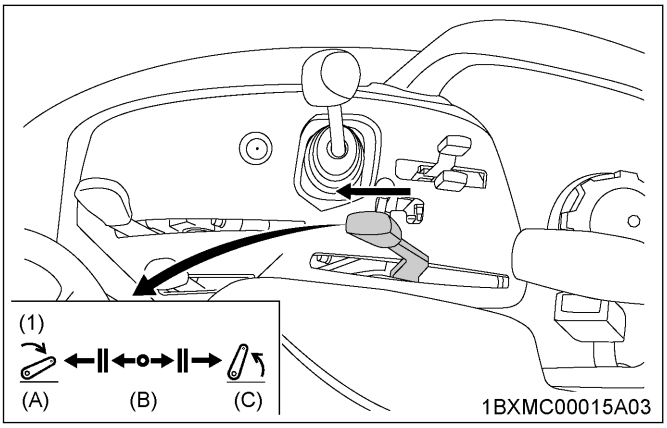

(1) Hydraulic control lever
(A) Lowered
(B) Neutral position
(C) Raised

5. Shift the range-gear-shift-lever to the **neutral**"**N**" position.

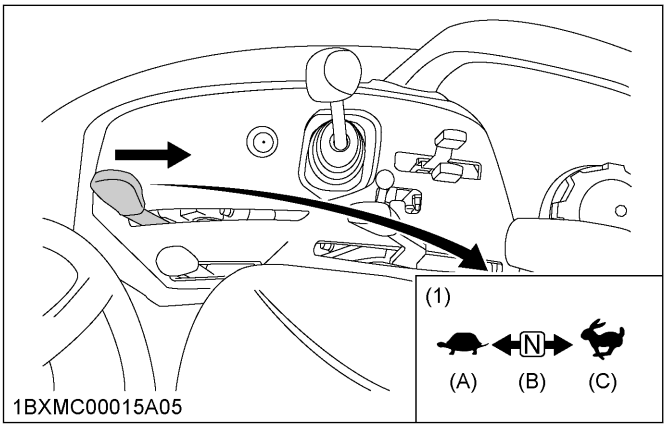

(1) Range gear shift lever (Hi-Lo)
(A) Low
(B) Neutral position
(C) High

https://truckmanualshub.com/

6. Set the parking brake.
   See *"To set the parking brake"* in 3.1 How to use the parking brake on page 48.

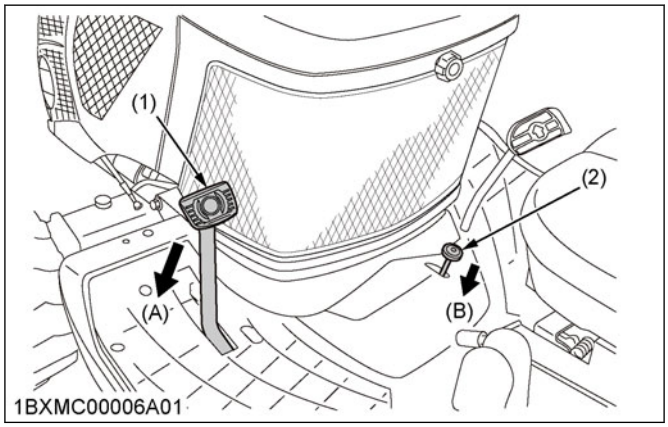

(1) *Brake pedal*
(2) *Parking brake lock pedal*
(A) *Depress*
(B) *Push down the parking brake lock pedal while depressing the brake pedal*

CHECK DURING DRIVING

1. Cases to stop the engine immediately

Immediately stop the engine if:
- The engine suddenly slows down or accelerates.
- Unusual noises suddenly are heard.
- Exhaust fumes suddenly become very dark.

2. Check items during driving

While driving the tractor, check the following items to see that all the parts are functioning normally.

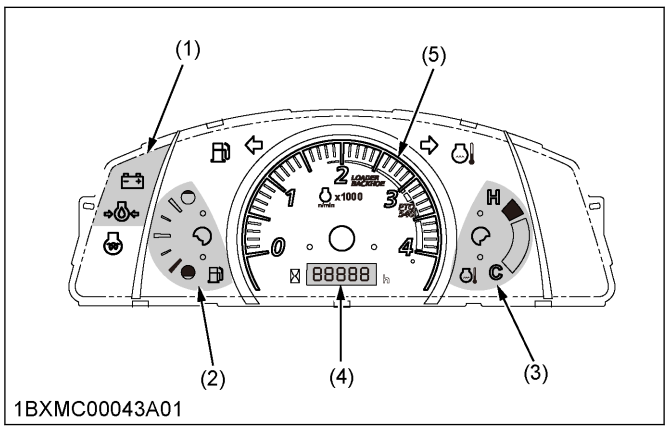

(1) *Easy Checker™*
(2) *Fuel gauge*
(3) *Coolant temperature gauge*
(4) *Hour meter*
(5) *Tachometer*

- **Easy Checker™**
  See 2.1 Easy Checker™ on page 69.
- **Fuel gauge**
  See 2.2 Fuel gauge on page 70.
- **Coolant temperature gauge**
  See 2.3 Coolant temperature gauge on page 70.
- **Hour meter**
  See 2.5 Hour meter on page 71.
- **Tachometer**
  See 2.6 Tachometer on page 71.

2.1 Easy Checker™

If trouble should occur at any location while the engine is running, the warning-indicator-lamp in the Easy Checker™ corresponding to that location comes on.
If the warning-indicator-lamps in the Easy Checker™ come on during operation of the tractor, immediately stop the engine, and find the cause as the following table.
Never operate the tractor while the warning-indicator-lamp in the Easy Checker™ is **on**.

NOTE :
- **For checking and servicing of your tractor, consult your local KUBOTA Dealer for instructions.**

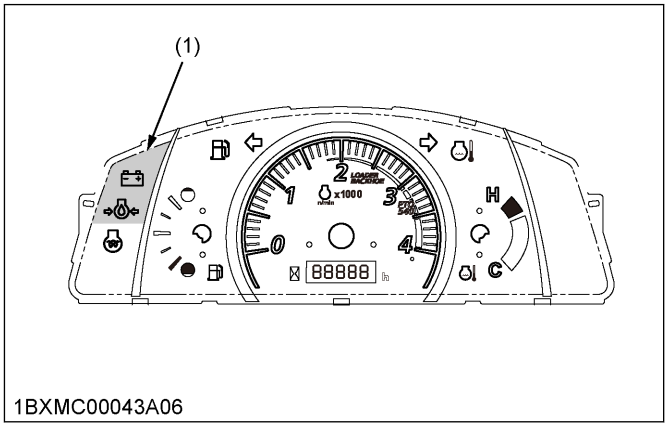

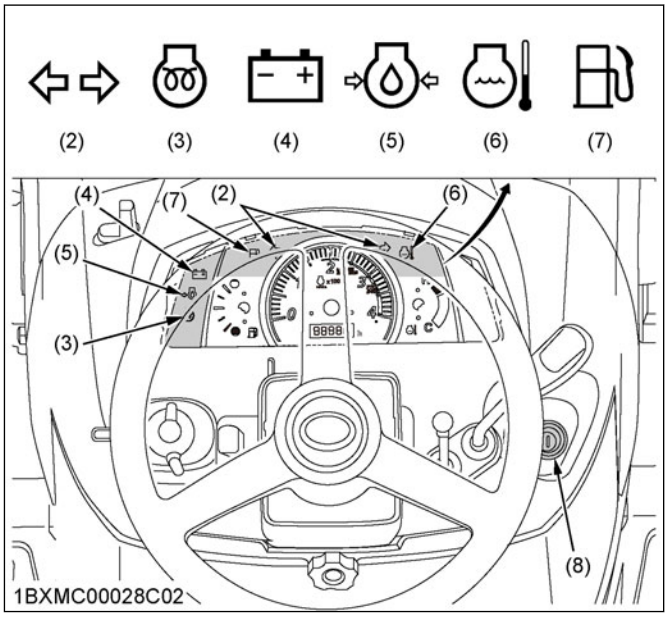

(1) *Easy Checker™*
(2) *Turn signal/hazard light indicator*
(3) *Preheat*
(4) *Electrical charge*
(5) *Engine oil pressure*
(6) *Coolant temperature indicator*
(7) *Low fuel indicator*
(8) *Key switch*

https://truckmanualshub.com/

Warning-indicator-lamps in Easy Checker™

Electrical charge	If the alternator is not charging the battery, the electrical charge indicator in the Easy Checker™ will come on. If this warning lamp should come on during operation of the tractor, check the electrical charging system or consult your local KUBOTA Dealer.
Engine oil pressure	If the oil pressure in the engine goes below the prescribed level, the engine oil pressure indicator in the Easy Checker™ will come on. If this warning lamp should come on during operation of the tractor, and this warning lamp does not go off when the engine is accelerated to more than 1000 rpm, check level of engine oil. See 3. Checking the engine oil level on page 120.

2.2 Fuel gauge

The fuel gauge is for the check if the gauge is working. When the key switch is the **on** position, the fuel gauge indicates the fuel level.
When the fuel is close to empty level as shown in the following figure, the low-fuel-indicator-lamp in the Easy Checker™ comes on.

Low fuel indicator comes on.	remaining amount 6 L

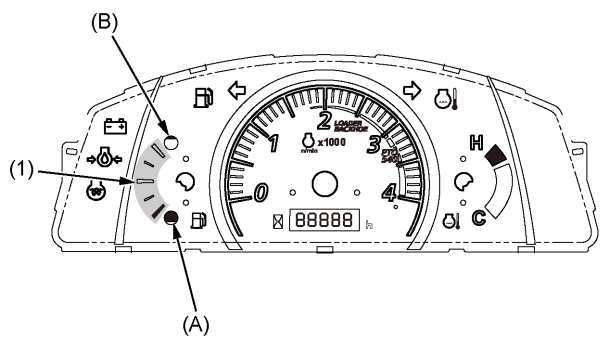

1BXMC00043A02

(1) Fuel gauge *(B) Full*
(A) Empty

Be careful not to empty the fuel tank. Otherwise air may enter the fuel system.
If air should enter the fuel system, you should bleed it. See 1. Bleeding the fuel system on page 137.

NOTE :

- **In case the fuel gauge system becomes disconnected, the needle will return to the most bottom position. If the needle of the fuel gauge returns to the most bottom position, consult your local KUBOTA Dealer.**
  Once you turn OFF the key switch and when the fuel gauge system gets back to normal, the needle points normal position again.

2.3 Coolant temperature gauge

WARNING

To avoid serious injury or death:

- **Do not remove radiator cap until coolant temperature is well below its boiling point. Then loosen cap slightly to the stop to relieve any pressure before removing cap completely.**

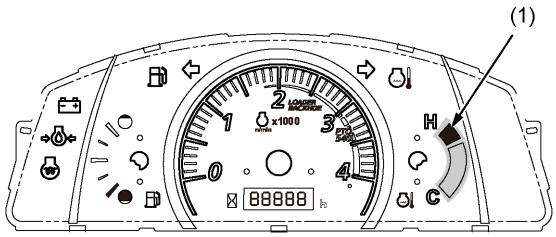

1BXMC00043A03

(1) Coolant temperature gauge

NOTE :

- **In case the coolant-temperature-gauge system becomes short, the needle will return to the most bottom position. If the needle of the coolant-temperature-gauge returns to the most bottom position, consult your KUBOTA Dealer.**
  Once you turn OFF and when the coolant-temperature-gauge system gets back to normal, the needle points normal position again.

2.4 Dealing with the overheated coolant temperature

When the coolant temperature is nearly or more than the boiling point, this temperature is what is called *"overheating"*.

Overheat indication

1. When the coolant temperature stays at 123 ℃ (253.4 ℉), the coolant-temperature-indicator-lamp in the Easy Checker™ comes on.

Reference

Red zone range	123 ℃ to 130 ℃ (254 ℉ to 266 ℉)

2. When the coolant temperature stays below 118 ℃ (244.4 ℉), the coolant-temperature-indicator-lamp turns off.

https://truckmanualshub.com/

If the coolant-temperature-indicator-lamp in the Easy Checker™ comes on, take the following actions.

1. Stop operating the tractor in a safe place and keep the engine unloaded idling. Do not stop the engine suddenly.
   a. Place the PTO-clutch-lever in the **off (disengage)** position.
   b. Move the tractor to the level surface, and apply the parking brake.
   c. Place the hand-accelerator-lever in the engine idle position, and operate the engine for about five minutes.
2. Keep yourself well away from the tractor for the following minutes or while the steam blows out.

Keeping yourself away from the tractor	further 10 minutes

3. Check the cooling system after it has sufficient time to cool down.
   Check that there is no danger such as burn. Get rid of the causes of overheating according to ENGINE TROUBLESHOOTING on page 167.
   Check the following items:
   - Shortage or leakage of the coolant
   - Foreign matter on the radiator net
     dust and dirt between the radiator fins
   - Looseness of fan belt
   - Blockage in the radiator tube
     See 1. Checking the radiator hoses and the hose clamps on page 135

2.5 Hour meter

The hour meter indicates in five digits the hours the tractor has been used as the following table.

Tractor operated hours	The step that the display operates
From 0.0 Hr to 9999.9 Hr	every 0.1 Hr step
10000 Hr to 99999 Hr	every 1 Hr step
After 99999 Hr	99999 Hr stays on

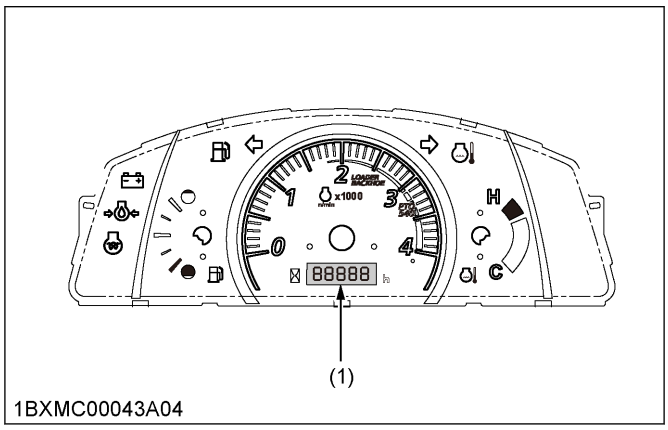

(1) Hour meter

2.6 Tachometer

When the key switch is the **on** position and the engine is **ON**, the tachometer indicates the engine revolution per minute.

NOTE :

- **When the key is turned on, the tachometer should indicate as follows for just a moment.**

Indication of the tachometer	4000 rpm

Recommended Engine Speed

Implement	Recommended engine speed
PTO 540	Use within yellow range
Loader	Use within orange range

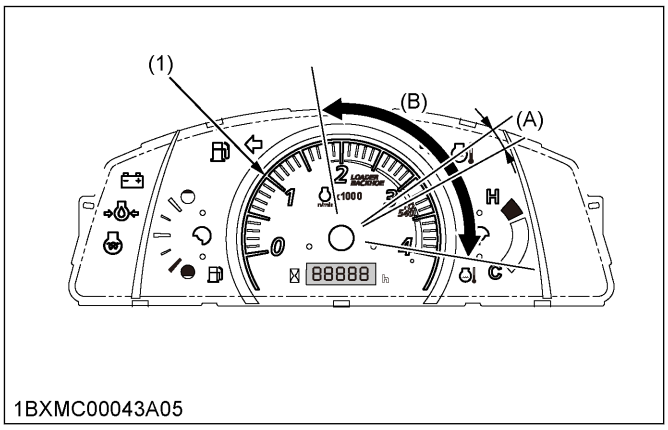

(1) Tachometer
(B) Orange range
(A) Yellow range

PARKING THE TRACTOR

When parking the tractor, be sure to set the parking brake.

WARNING

To avoid serious injury or death:
Before getting off the tractor

- **Always set the parking brake and lower all implements to the ground.**
  Leaving the transmission in gear with the engine stopped will not prevent the tractor from accidental rolling.
- **Stop the engine and remove the key.**

Before getting off the tractor, follow the following procedure

1. Disengage the PTO.
   See 2. PTO clutch lever on page 77.

https://truckmanualshub.com/

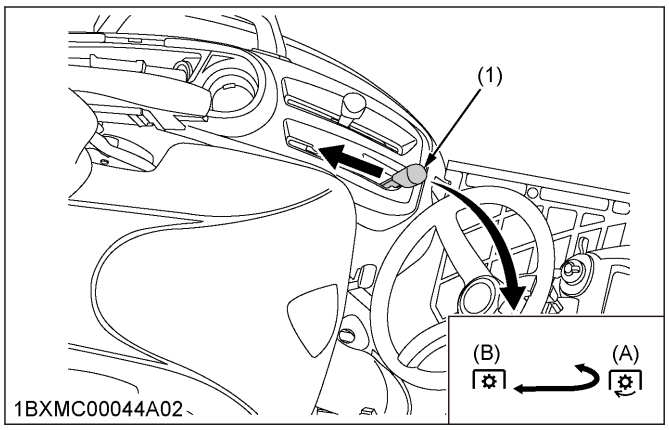

(1) PTO clutch lever
(A) On (engage)
(B) Off (disengage)

2. Lower all implements to the ground.
   See 1. Hydraulic control on page 84.

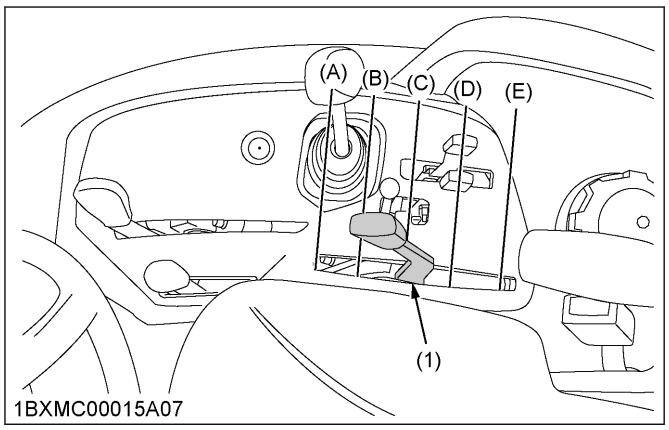

(1) Hydraulic control lever
(A) Down
(B) Slow down
(C) Neutral
(D) Slow up
(E) Up

3. Place all control levers in their **neutral** positions.
4. Set the parking brake.
   See *"To set the parking brake"* in 3.1 How to use the parking brake on page 48.

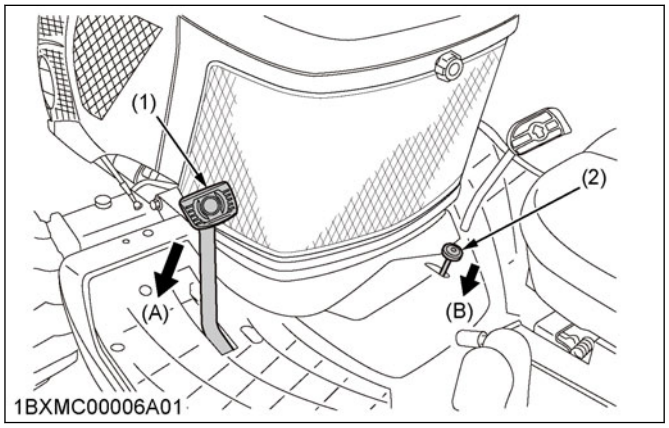

(1) Brake pedal
(2) Parking brake lock pedal
(A) Depress
(B) Push down parking brake lock pedal while depressing brake pedal

5. Stop the engine.
   See STOPPING THE ENGINE on page 60.
6. Remove the starter key.
7. If it is necessary to park the tractor on an incline, be sure to chock the wheels to prevent accidental rolling of the tractor.

TECHNIQUES FOR OPERATING THE TRACTOR

1. Differential lock

WARNING

To avoid serious injury or death due to loss of steering control:

- **Do not operate the tractor at high speed with differential lock engaged.**
- **Do not turn with the differential lock engaged.**
- **Be sure to release the differential lock before turning the machine in field conditions.**

If one of the rear wheels should slip, depress the differential-lock-pedal. Both wheels will then turn together, which reduce slippage of the rear wheels.
The differential lock is maintained only while the differential-lock-pedal is depressed.

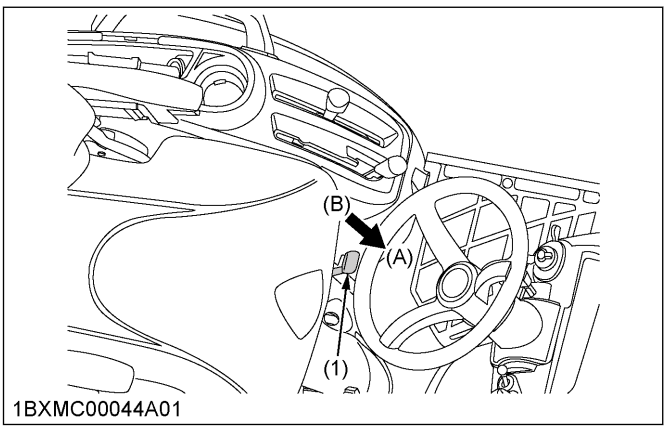

(1) Differential lock pedal
(A) Press to engage
(B) Release to disengage

IMPORTANT :

- **When using the differential lock, always slow the engine down.**
- **To prevent damage to power train, do not engage the differential lock when one wheel is spinning and the other is completely stopped.**
- **If the differential lock cannot be released in the preceding manner, alternately press the speed-control-pedal forward and backward slightly.**

https://truckmanualshub.com/

2. Installing the slow-moving-vehicle (SMV) emblem to operate the tractor on a road

WARNING

To avoid serious injury or death:

- **When traveling on road with 3-point hitch mounted implement attached, be sure to have sufficient front weight on the tractor to maintain steering ability.**

Be sure that the SMV emblem and the warning lamps are clean and visible. If towed or rear-mounted equipment obstructs these safety devices, install the SMV emblem and the warning lamps on the equipment.

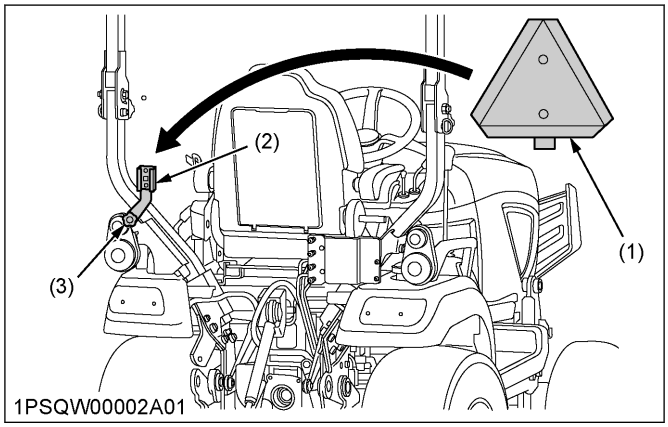

(1) SMV emblem
(2) Bracket
(3) Knob nut

1. Loosen the knob nut.
2. Turn the bracket vertically.
3. Fasten the knob nut.
4. Set the SMV emblem.

Consult your local KUBOTA Dealer for further details.

3. Precautions for operating the tractor on a slopes and rough terrain

WARNING

To avoid serious injury or death:

- **Always back the tractor up when the tractor is going up to a steep slope. Driving forward could cause the tractor to tip over backward. Stay off hills and slopes too steep for safe operation of the tractor.**
- **Avoid changing gears when the tractor is climbing or descending a slope.**
- **If operating the tractor on a slope, never disengage the shift levers to neutral. Disengage the shift levers to neutral could cause loss of control.**
- **Do not drive the tractor close to the edges of ditches or banks which may collapse under the weight of the tractor, especially when the ground is loose or wet.**
- Slow down for slopes, rough ground, and sharp turns, especially when transporting heavy, rear mounted equipment.
- Before descending a slope, shift to a gear low enough to control speed without using brakes.

4. Precautions for transporting the tractor safely

WARNING

To avoid serious injury or death:

- **When transporting, carry the tractor on a truck. Pay attention to the following points when transporting the tractor.**
  - **Make sure that the ramps used for loading are sufficient capacity and securely connected to the tractor to support safely throughout the loading and unloading process.**
  - **Stop the engine, lower all implements, apply the parking brake, and place chocks against the front and rear tires.**
  - **Secure the portions of the tractor which are shown in the figures by using adequate straps or chains.**
  - **Adequate straps or chains should take into account the weight of the unit, anticipated loads or forces, required factors of safety, and any other pertinent information.**
  - **Always comply with federal and/or local regulations for securement and transport**

https://truckmanualshub.com/

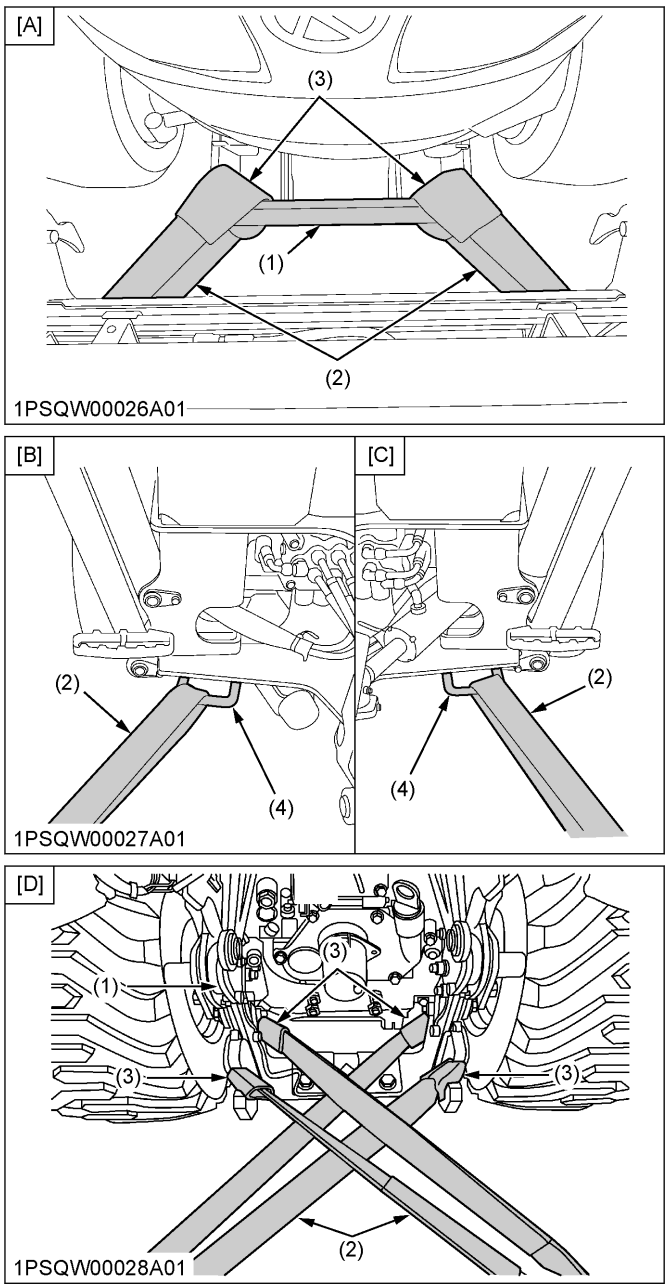

[A]	*Front side*	*(1)*	*Tractor frame*
[B]	*RH*	*(2)*	*Heavy-duty strap*
[C]	*LH*	*(3)*	*Cloth*
[D]	*Rear side (without the back-hoe)*	*(4)*	*Tie-down stay (under the backhoe)*

5. Directions for use of the power steering

- The power steering is activated only while the engine is running. While the engine is stopped, the tractor functions in the same manner as tractors without power steering.
- Turning the steering wheel all the way to the stop activates the relief valve. Do not hold the steering wheel in the stop for a long period of time.
- Avoid turning the steering wheel while the tractor is stopped, or tires may wear out sooner.
- The power-steering-mechanism makes the steering easier. Be careful when driving on a road at high speeds.

REVERSING THE OPERATOR'S SEAT

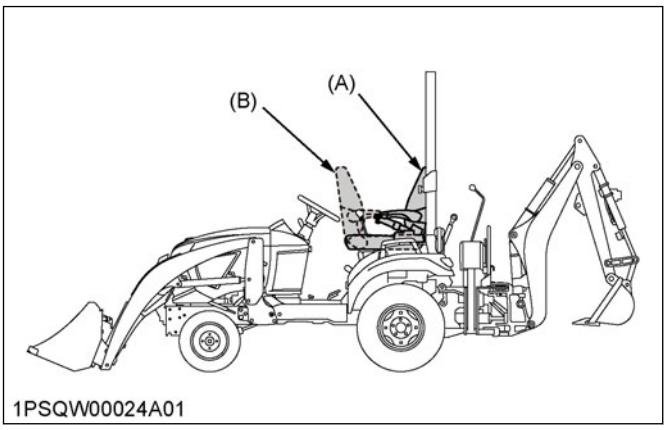

(A) Tractor driving position *(B) Backhoe position*

The operator's seat is reversible for the backhoe operation.

Follow the following procedure to turn the operator's seat around.

1. Loosen the knob nut behind the ROPS and move the bracket left as shown in the illustration.

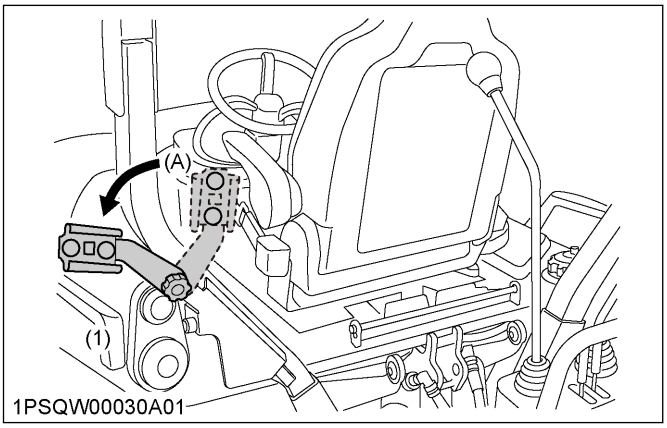

(1) Bracket *(A) Left*

2. Pull the seat-lock-lever up as shown in the illustration to release the lock of the operator's seat.

https://truckmanualshub.com/

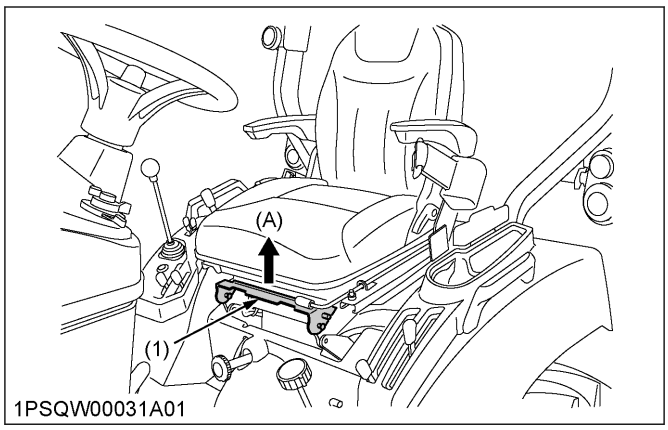

(1) Seat lock lever *(2) Release*

3. Raise the operator's seat until the seat pin comes in to the detent notch (see illustration).

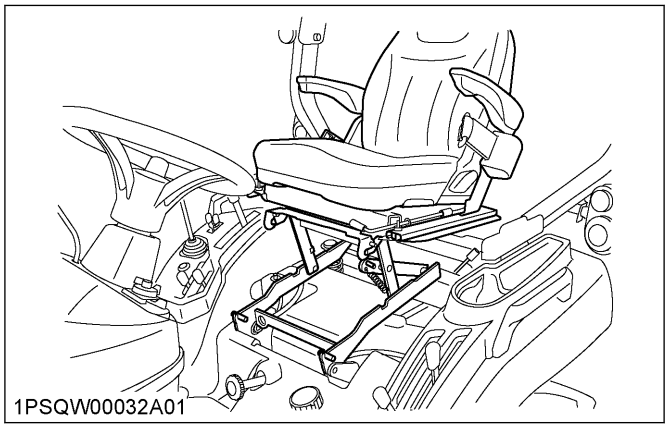

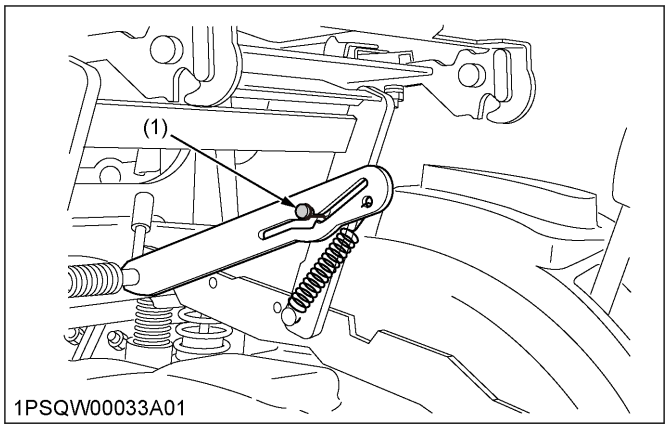

(1) Seat pin

4. Turn the operator's seat around rearward.

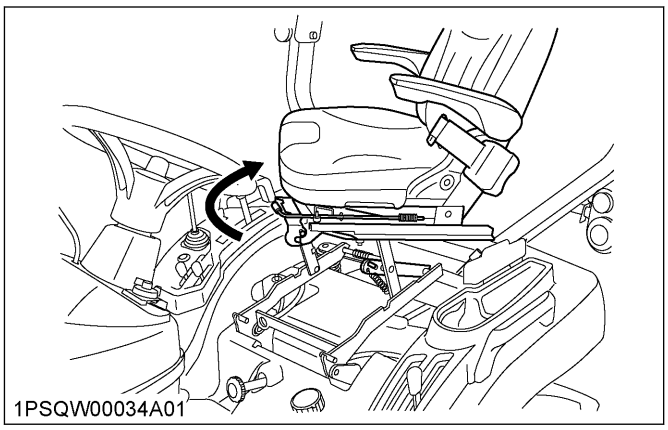

IMPORTANT :
- **Grip the arms of the operator's seat and swivel the operator's seat.**

NOTE :
- **Make sure to turn the operator's seat for the indicated direction in the preceding figure.**

5. Push the operator's seat backward, then the seat pin will come out from detent notch.
   Push the operator's seat down until the seat-lock-lever is locked at the backhoe position.

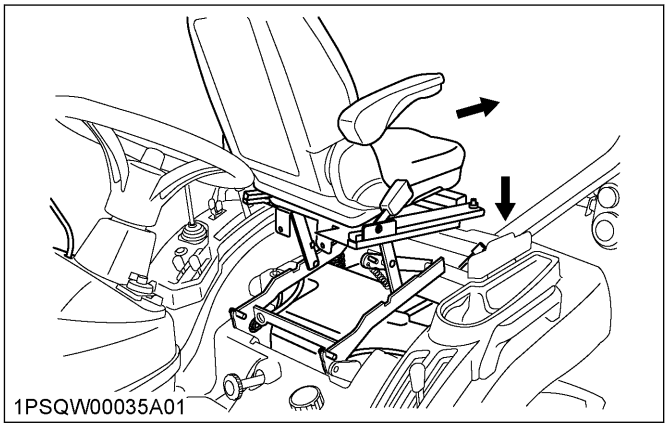

NOTE :
- **If the seat pin does not come out from the detent notch, apply grease in the notch.**

6. After reversing the operator's seat, be sure to check to see that the operator's seat is properly locked.

IMPORTANT :
- **Turn the operator's seat at the detent position to avoid damage of seat-locking-mechanism and hitting to the range-gear-shift-lever.**
- **See 1. Operator's seat on page 48 when using the operator's seat in the tractor-driving-position.**

7. For the tractor-driving-position, pull the seat-lock-lever up, and follow the reverse of the preceding procedure .

https://truckmanualshub.com/

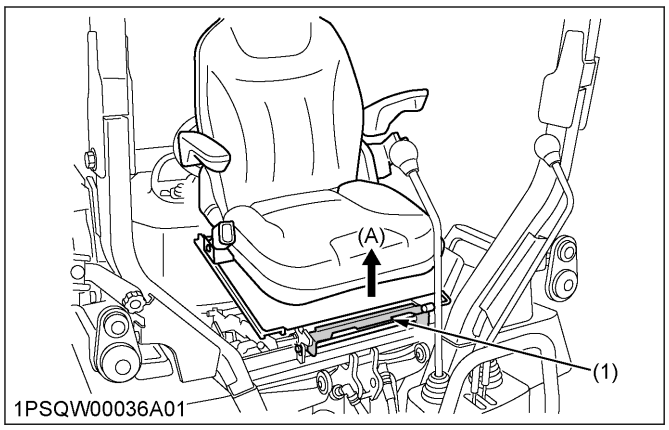

(1) Seat lock lever *(A) Release*

https://truckmanualshub.com/

PTO (POWER TAKE-OFF)

PTO OPERATION

WARNING

To avoid serious injury or death:

- **Before operation of PTO, be sure to select the position of the PTO-select-lever (mid , mid/rear , rear).**
- **Disengage PTO, stop the engine, and allow all rotating components to come to a complete stop before connecting, disconnecting, adjusting, or cleaning any PTO driven equipment.**

1. PTO select lever

IMPORTANT :

- **To avoid shock when loading to the PTO, reduce the engine accelerator from full to half speed by pushing up on the engine accelerator when engaging the PTO. Then open the accelerator to the full speed.**
- **To avoid damage of transmission, when the PTO-select-lever is not smoothly shifted, slightly shift the PTO-clutch-lever.**

The tractor has a 540 rpm rear PTO speed and a 2500 rpm mid PTO speed.

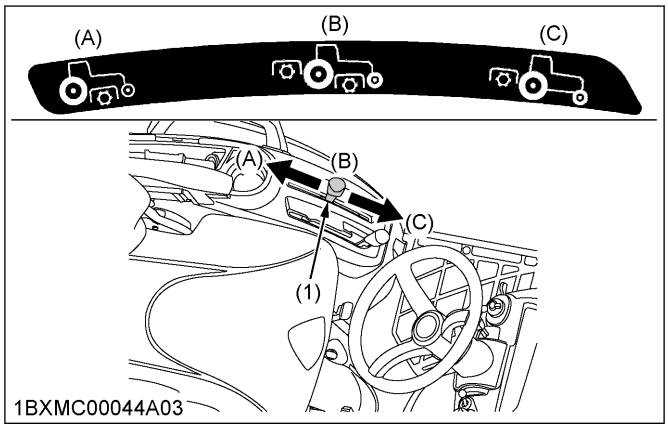

(1) PTO select lever
(A) Mid PTO position
(B) Mid-Rear-PTO position
(C) Rear-PTO position

Mid PTO

To use the mid PTO, shift the PTO-select-lever to the **mid PTO** position and the PTO-clutch-lever to the **on** position. The mid PTO is available for KUBOTA approved implements.

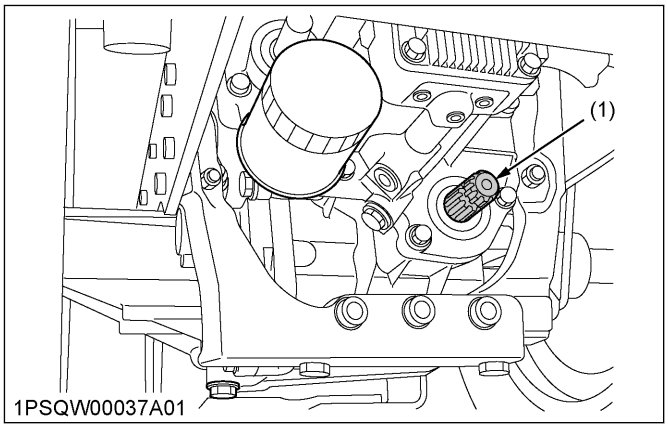

(1) Mid PTO

Mid-Rear PTO

To use the mid PTO and the rear PTO at the same time, shift the PTO-select-lever to the **mid-rear PTO** position and the PTO-clutch-lever to the **on** position.

Rear PTO

To use the rear PTO, shift the PTO-select-lever to the **rear PTO** position and the PTO-clutch-lever to the **on** position.

2. PTO clutch lever

The PTO-clutch-lever engages or disengages the PTO clutch which gives the PTO independent control.

IMPORTANT :

- **To avoid shock when loading to the PTO, reduce the engine accelerator from full to half speed by pushing up on the engine accelerator when engaging the PTO. Then open the accelerator to the full speed.**
- **When you engage the PTO clutch, shift the PTO-clutch-lever slowly to avoid damage to the PTO clutch and implement. Do not keep the PTO-clutch-lever half way.**

Shift the PTO-clutch-lever to the **on** position to engage the PTO clutch. Shift the PTO-clutch-lever to the **off** position to disengage the PTO clutch.

https://truckmanualshub.com/

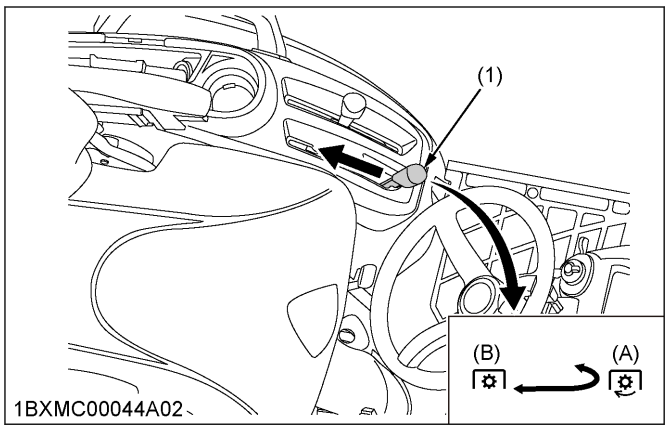

(1) PTO clutch lever *(B) Off (disengage)*
(A) On (engage)

NOTE :

- **The tractor engine will not start if the PTO-clutch-lever is in the engaged ON position.**
- **When you stand up from the seat with the PTO-clutch-lever at the engaged ON position, the engine will stop regardless of the position of the PTO select lever. This is because that the tractor is equipped with operator-presence-control-system (OPC).**

3. PTO shaft cover and PTO shaft cap

WARNING

To avoid serious injury or death:

- **Before connecting or disconnecting a drive shaft to PTO shaft, be sure that the engine is off and raise up the PTO-shaft-cover.**
  Afterward be sure to return the PTO-shaft-cover to the normal position.

IMPORTANT :

- **The universal joint of the PTO-drive-shaft is technically limited in its moving angle. Refer to *the PTO Drive Shaft Instructions* for proper use.**

Keep the PTO-shaft-cover in place at all times. Keep the PTO-shaft-cap when the PTO is not in use.

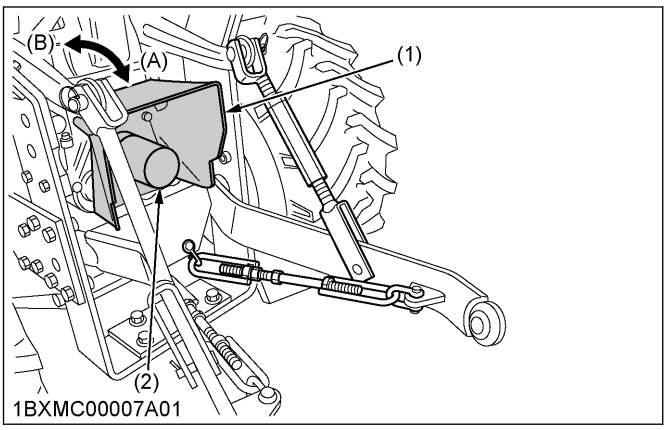

(1) PTO shaft cover *(A) Normal position*
(2) PTO shaft cap *(B) Raised position*

4. Using the stationary PTO

To park the tractor and use the PTO system for chipper or pump, for example, start the PTO system in the following steps.

1. Apply the parking brake and place blocks at the tires.
2. Make sure that all shift levers are in their **neutral** position, and start the engine.
3. Set the PTO-clutch-lever to the **on (engage)** position.
4. Set the engine speed appropriately to provide recommend rear PTO speed.
5. Unlock the seat-lock-lever.
6. Stand up and raise the operator's seat.

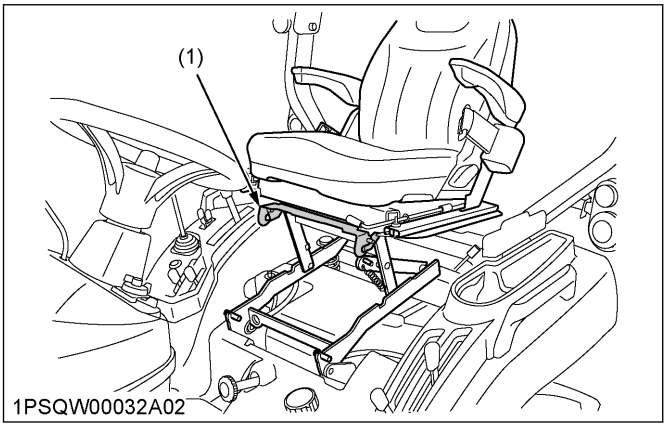

(1) Seat lock lever

7. Turn the operator's seat around rearward and lock the operator's seat at the backhoe position.
   See REVERSING THE OPERATOR'S SEAT on page 74.

https://truckmanualshub.com/

5. PTO drive shaft

The PTO-drive-shafts are designed for specific machines and power requirement.

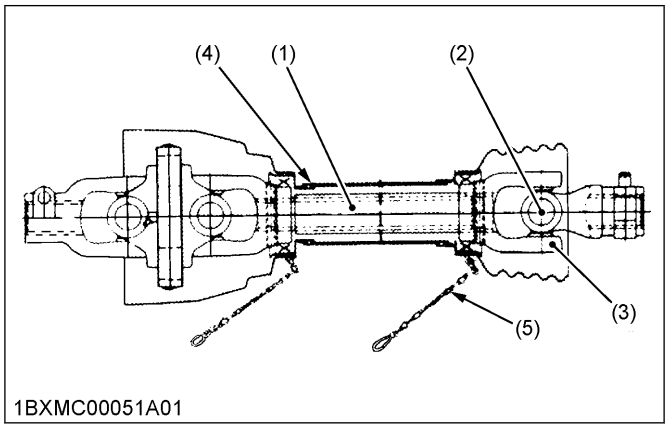

(1) Inner and outer sliding profile tubes
(2) Journal cross assy
(3) Fitting yoke
(4) Safety guard (in, out)
(5) Chain

- When using a PTO-drive-shaft, read *the operator's manual of the implement* before operating the implement.
- If it is necessary for using the PTO-drive-shaft, adjust the length of it.
  See 5.1 Adjusting the length of PTO drive shaft on page 79.
- Make sure that the PTO-drive-shaft is securely connected at both ends before operating it.

5.1 Adjusting the length of PTO drive shaft

To adjust the length of the PTO-drive-shaft, refer to the following instructions.

1. To adjust the inner-and-outer-guard-tubes, hold the half shafts next to each other in the shortest working position, and mark the half shafts in the shortest working position of the inner-and-outer-guard-tubes.
2. Shorten the inner-and-outer-guard-tubes to the marked position equally.
3. Shorten the inner-and-outer-sliding-profile-tubes by the same length as the inner-and-outer-guard-tubes.
4. Round all sharp edges off, remove burrs, and grease sliding profiles.

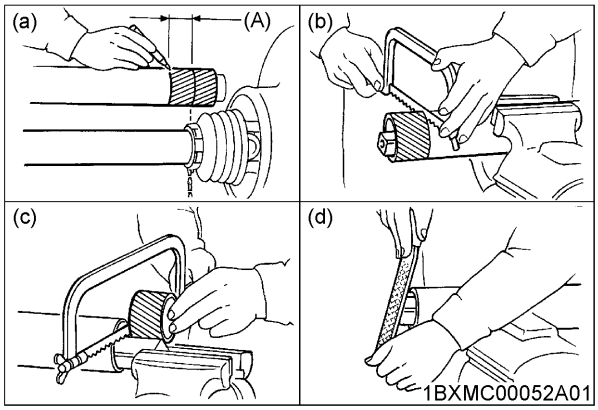

(a) Reference image for step 1.
(b) Reference image for step 2.
(c) Reference image for step 3.
(d) Reference image for step 4.
(A) 40 mm (1.57 in.)

https://truckmanualshub.com/

3-POINT HITCH AND DRAWBAR

OVERVIEW OF 3-POINT HITCH AND DRAWBAR

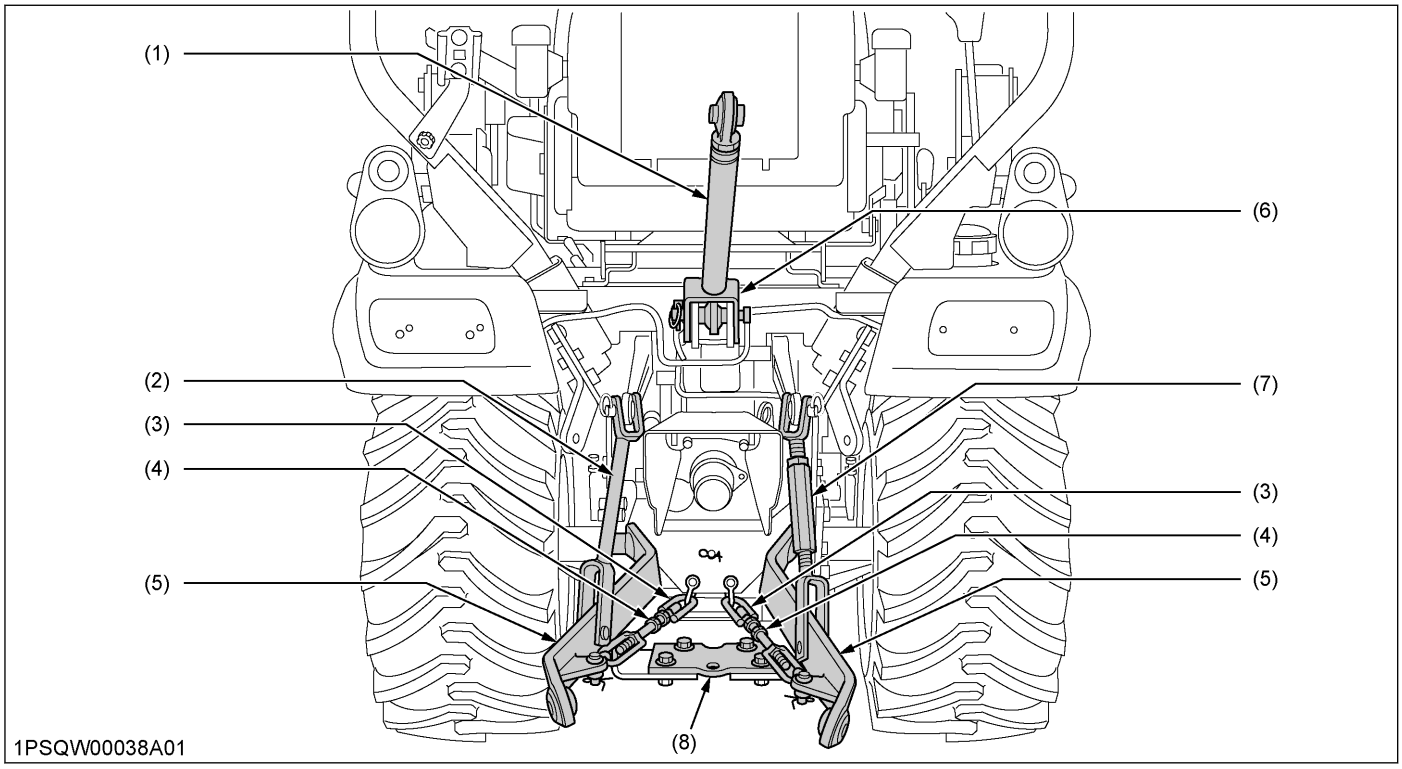

(1) Top link
(2) Lifting rod (left)
(3) Check chains
(4) Turnbuckle
(5) Lower link
(6) Top link holder
(7) Lifting rod (right)
(8) Hitch
(9) Holder plate

Use the holder plate to hold the lower link higher while mowing with mid-mount mower only over uneven terrain.

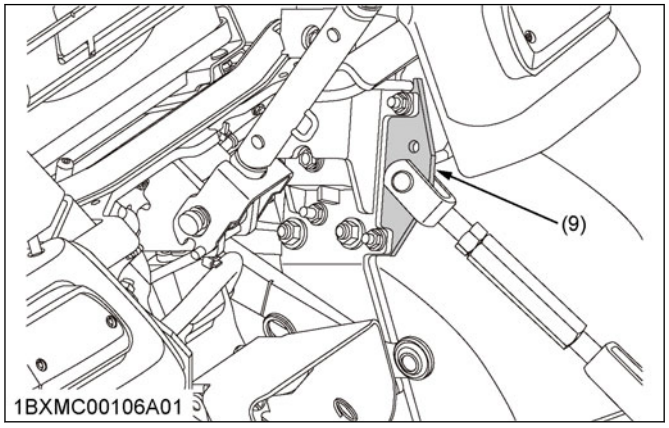

(9) Holder plate

https://truckmanualshub.com/

3-POINT HITCH

1. Precautions for attaching and detaching the implements to the 3-point hitch

WARNING

To avoid serious injury or death:

- **Be sure to stop the engine and remove the starter key.**
- **Do not stand between the tractor and the implement unless the parking brake is applied.**
- **Before attaching or detaching the implement to the 3-point-hitch, locate the tractor and the implement on a firm, flat, and level surface.**
- **Whenever an implement or other attachment is connected to the tractor by the 3-point-hitch, slowly move the 3-point-hitch through the full range of operation and check for interference, binding, or PTO separation before operating the machine.**

2. Adjusting the lifting rod (right)

WARNING

To avoid serious injury or death:

- **Do not extend the lifting rod beyond the groove on the thread rod.**

1. Level a 3-point-mounted implement from side to side by turning the adjusting turnbuckle to shorten or lengthen the adjustable lifting rod with the implement on the ground.
2. After adjustment, tighten the lock nut securely. Do not extend the lifting rod beyond the groove on the threaded rod when extending it.

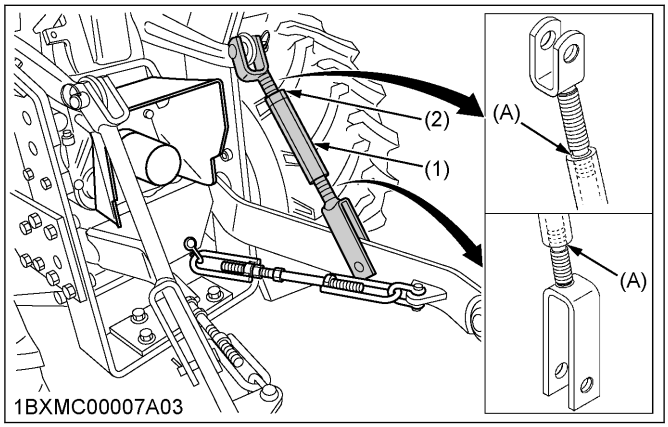

(1) Adjusting turnbuckle *(A) Groove*
(2) Lock nut

3. Adjusting the top link

The proper length of the top link varies according to the type of implement being used.

NOTE :

- **When not using the top link, shorten it to the shortest length and fix it to the top-link-holder.**

1. Adjust the angle of the implement to the desired position by shortening or lengthening the top link.

4. Adjusting the check chains

1. Make sure that the check chains are installed as the following figure.
2. Adjust the turnbuckle to control horizontal sway of the implement.
3. After adjustment, retighten the lock nut.

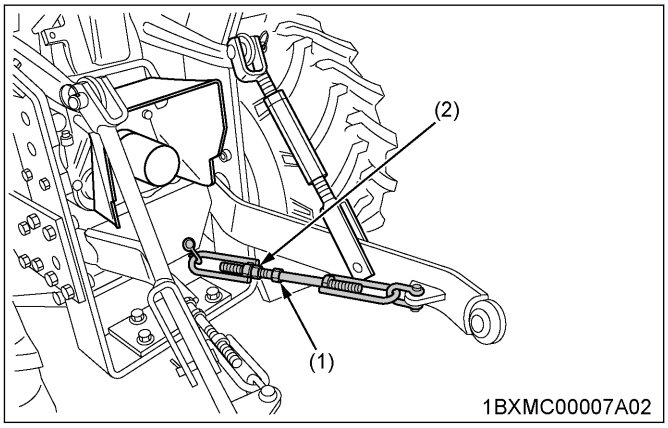

(1) Turnbuckle *(2) Lock nut*

HITCH

WARNING

To avoid serious injury or death:

- **Never pull from the top link, the rear axle, or any point above the hitch. If you pull from the top link, the rear axle, or any point above the hitch, the tractor can tip over rearward causing personal injury or death.**

https://truckmanualshub.com/

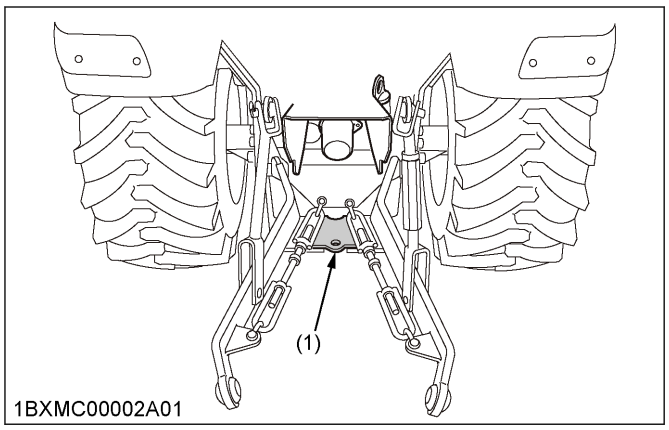

(1) Hitch

https://truckmanualshub.com/

1. How to use the 3-point hitch

When installing the backhoe, remove the 3-point hitch.

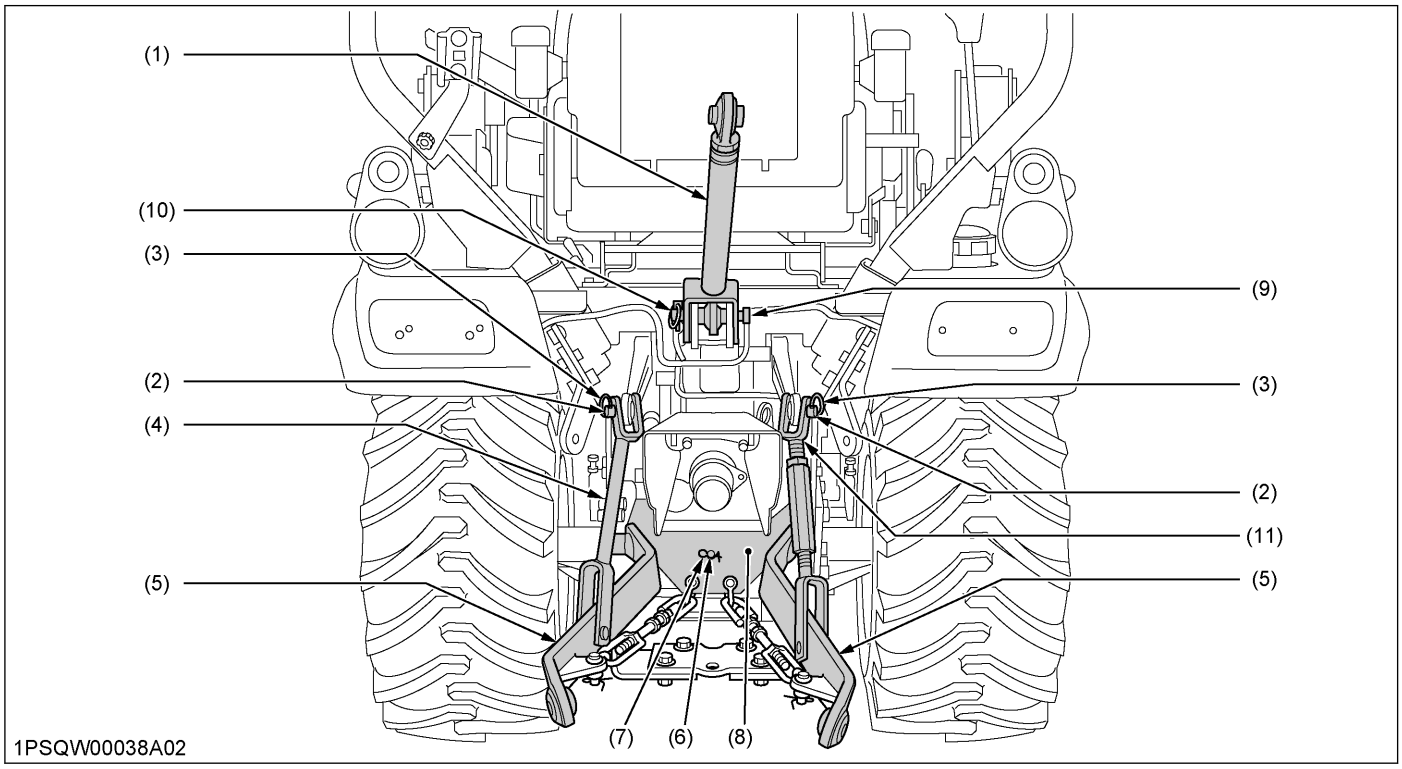

(1) Top link
(2) Clevis pin
(3) Snap ring
(4) Lifting rod (left)
(5) Lower link
(6) Stopper pin
(7) Snap pin
(8) Check chain plate
(9) Top link pin
(10) Lynch pin
(11) Lifting rod (right)

Removing the 3-point hitch

1. Remove the lynch pin and the top link pin. Then remove the top link.
2. Remove the snap ring and the clevis pin. Then remove the left and right lifting rod.
3. Remove the snap pin and the stopper pin. Then remove the check chain plate and lower links.

Installing the 3-point hitch

1. Follow the reverse of the procedure of *“Removing the 3-point hitch”*.

https://truckmanualshub.com/

HYDRAULIC UNIT

3-POINT HITCH CONTROL SYSTEM

WARNING

To avoid serious injury or death:

- **Before using the 3-point hitch controls, make sure that no person or object is in the area of the implement or 3-point hitch.**
- **Do not stand on or near the implement or between the implement and tractor when operating the 3-point hitch controls.**

1. Hydraulic control

IMPORTANT :

- **Do not operate until the engine is warmed up. If operation is attempted when the engine is still cold, the hydraulic system may be damaged.**
- **If noises are heard when implement is lifting after the hydraulic control lever has been activated, the hydraulic mechanism is not adjusted properly.**
  If you do not correct the hydraulic control unit, it will be damaged.
  Contact your KUBOTA Dealer for adjustment.

Operating the hydraulic control lever actuates the hydraulic lift arm, which controls the elevation of the 3-point-hitch-mounted implement.
To lower the implement, move the hydraulic control lever forward (the position). To raise the implement, move the hydraulic control lever rearward (the position).
In the **slow down** position and the **slow up** position of the hydraulic control lever in contact with the inner stopper, you can control the valve with ease in the following increments at the lower link end.

Increments at the lower link end	approximately 6.4 mm (0.25 in.)

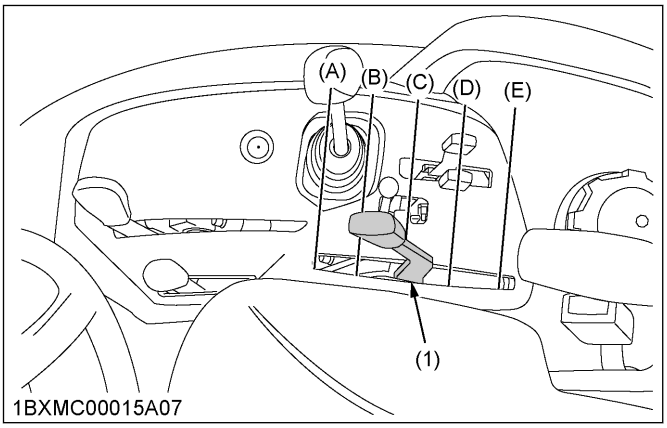

(1) Hydraulic control lever
(A) Down
(B) Slow down
(C) Neutral
(D) Slow up
(E) Up

IMPORTANT :

- **If the 3-point-hitch can not be raised by setting the hydraulic control lever to the up (raised) position after long term storage or when changing the transmission oil, follow the following air bleeding procedures.**
  1. **Stop the engine.**
  2. **Set the hydraulic control lever to the down (lowered) position and start the engine.**
  3. **Operate the engine at low idle speed for the following seconds to bleed air from the system.**

Operating the engine at low idle speed	at least 30 seconds

2. Lowering speed of 3-point hitch

The lowering speed of the 3-point hitch can be controlled or locked in similar fashion to a water faucet.

WARNING

To avoid serious injury or death:

- **Fast lowering speed may cause damage or injury. Lowering speed of implement should be adjusted to two or more seconds.**

Turn toward the **fast** to increase, the **slow** to reduce, and the **lock** firmly to the stop for lock.

https://truckmanualshub.com/

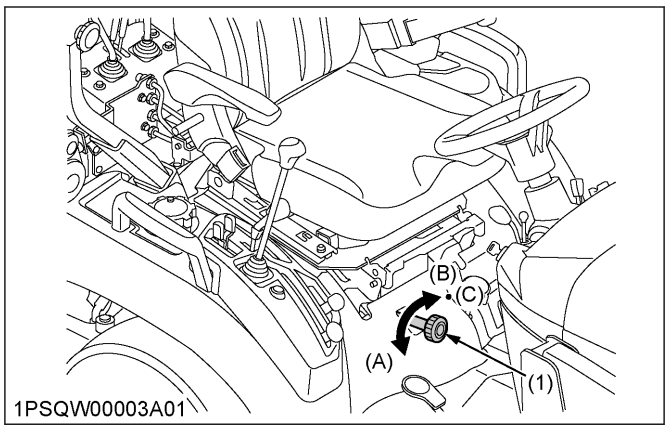

(1) 3-point hitch lowering speed knob
(A) Fast
(B) Slow
(C) Lock

AUXILIARY HYDRAULICS

On the tractor, hydraulic outlet is provided.

WARNING

To avoid serious injury or death:

- **Escaping the hydraulic fluid under pressure can obtain sufficient force to penetrate skin, which cause serious personal injury.**
  Before disconnecting the lines, be sure to relieve all pressure.
- **Before applying the pressure to the hydraulic system, be sure that all connections are tight, and that the lines, tubes, and hoses of the hydraulic system are not damaged.**
- **Hydraulic fluid escaping from a very small hole can be almost invisible. Use a piece of cardboard or wood, rather than hands to search for suspected leaks.**
- **If someone gets injured by escaping hydraulic fluid, see a doctor at once. Serious infection or allergic reaction will develop if proper medical treatment is not administered immediately.**

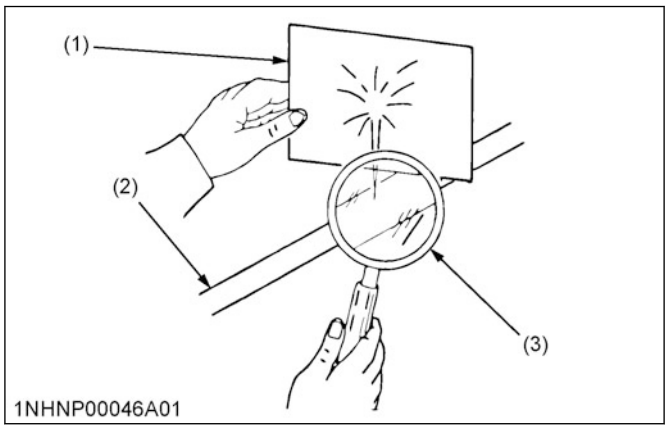

(1) Cardboard
(2) Hydraulic line
(3) Magnifying glass

1. Connecting hoses for the backhoe

IMPORTANT :

- **For the hydraulic outlet, be sure to use the power-beyond-type of the control valve with the relief valve and third line which the hydraulic fluid pass through to return to the tank for the operation of the hydraulic block.**

You can use the hoses with the **BT603** Backhoe.

When mounting the backhoe, follow the following procedure.

1. Disconnect the coupler.

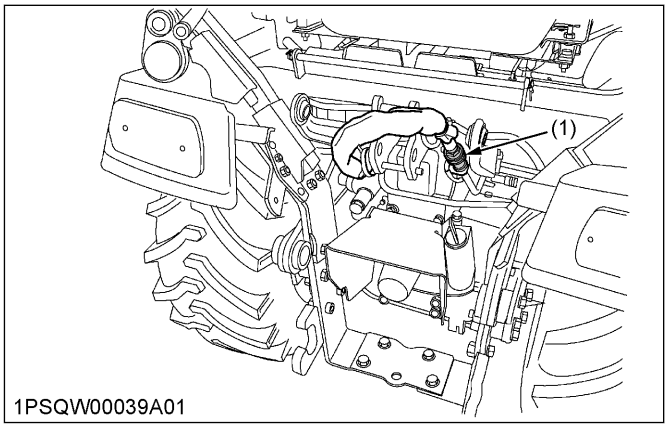

(1) Coupler

2. Route the inlet hose, the outlet hose, and the power-beyond-hose of the implement as shown in the following illustration.

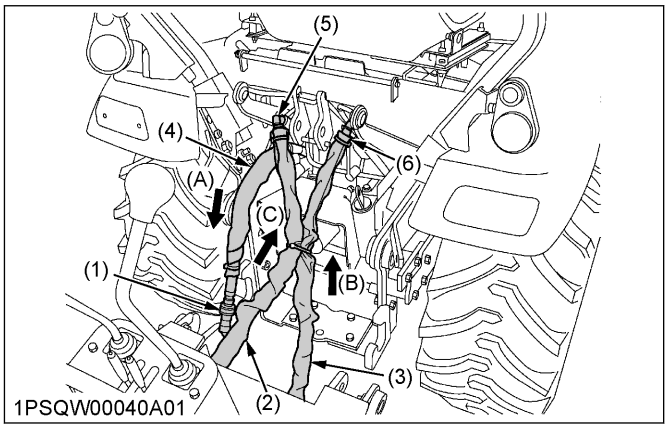

(1) Inlet hose (backhoe)
(2) Outlet hose (backhoe)
(3) Power beyond hose (backhoe)
(4) Outlet hose (tractor)
(5) Return pipe (tractor)
(6) Power beyond pipe (tractor)
(A) To Backhoe (outlet)
(B) From Backhoe (inlet)
(C) Return to tank

Max. flow of the outlet hose (tractor)	14 L/min (3.7 U.S.gals./min)

https://truckmanualshub.com/

2. Disconnecting hoses for the mower

WARNING

To avoid serious injury or death:

- **Escaping the hydraulic fluid under pressure can obtain sufficient force to penetrate skin, which cause serious personal injury.**
  Before disconnecting the lines, be sure to relieve all pressure.
- **Before applying the pressure to the hydraulic system, be sure that all connections are tight, and that the lines, tubes, and hoses of the hydraulic system are not damaged.**
- **Hydraulic fluid escaping from a very small hole can be almost invisible. Use a piece of cardboard or wood, rather than hands to search for suspected leaks.**
- **If someone gets injured by escaping hydraulic fluid, see a doctor at once. Serious infection or allergic reaction will develop if proper medical treatment is not administered immediately.**

Do not attach nor operate the mower with the backhoe still in place.

When installing the mower, remove the backhoe from the tractor with the following procedure.

1. Shut the engine off and set the parking brake.
2. Tilt the operator's seat forward.
3. Remove the hydraulic pressure by moving the controls.
4. Disconnect the inlet hose, the outlet hose, and the power-beyond-hose of the backhoe.

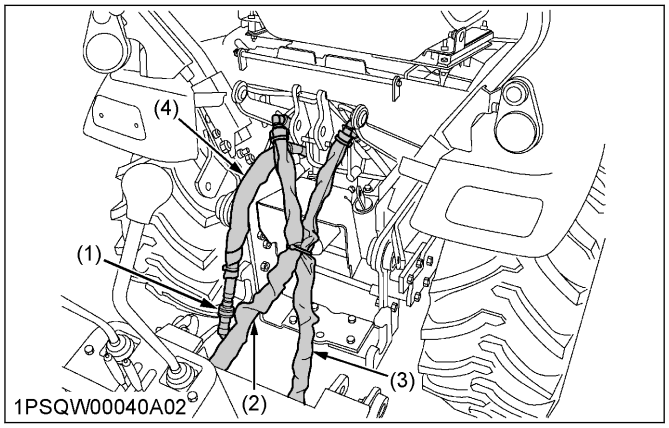

(1) Inlet hose (backhoe)
(2) Outlet hose (backhoe)
(3) Power beyond hose (backhoe)
(4) Outlet hose (tractor)

5. Place the protective cap on the coupler of the inlet hose of the backhoe, the coupler of the outlet hose, and the power beyond hose.
6. Connect the outlet hose of the tractor to the coupler of power beyond pipe of the tractor.

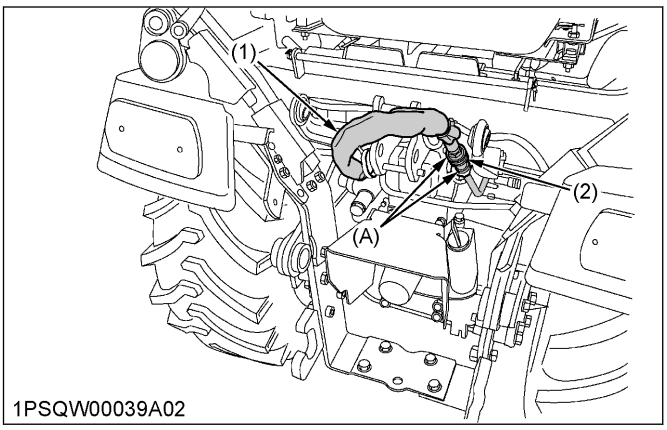

(1) Outlet hose (tractor)
(2) Power beyond pipe (tractor)
(A) To be connected

7. Place the protective cap on the fitting of the pipe which the hydraulic fluid pass through to return to the tractor.

NOTE :

- **When getting ready to use the backhoe after finishing mowing, connect the hoses of the tractor and backhoe in the reverse order.**

MOWER LIFT LINKAGE SYSTEM

1. Cutting height control dial

When mounting the Mid-mount mower, turn the cutting-height-control-dial to the desired height.
For further details, refer to the following the operator's manuals of rotary mower.

- *RCK60B-23BX*
- *RCK54-23BX*
- *RCK60D-26BX*
- *RCK54D-26BX*

https://truckmanualshub.com/

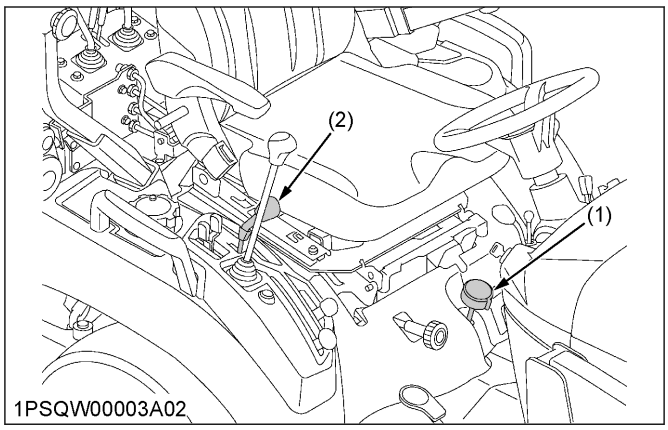

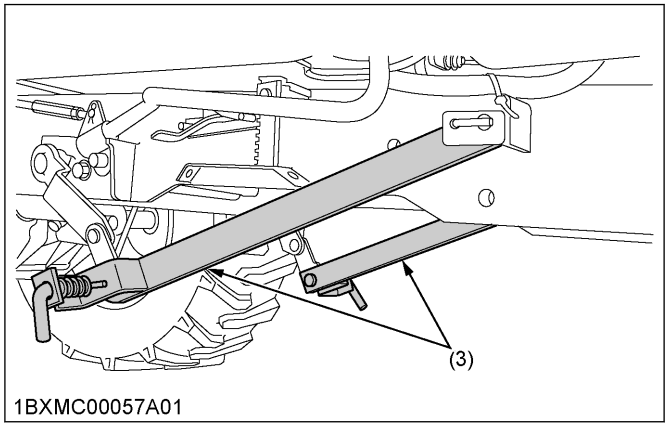

(1) Cutting height control dial
(2) Hydraulic control lever
(3) Mower rear link

IMPORTANT :

When operating the tractor without Mid-mount mower, follow the following procedure.

1. **Move the hydraulic lever rearward (the position) to raise the mower rear links to the highest position.**
2. **Set the cutting-height-control-dial to the top position.**

If you do not follow this procedure, damage of the mower rear link can result.

https://truckmanualshub.com/

2. Hydraulic control unit use reference chart

In order to use the hydraulics properly, the operator must know the following chart. Though this information may not be applicable to all types of implements and soil conditions, it is useful for general conditions.

Implement	1AGAIAZAP122A **Soil condition**	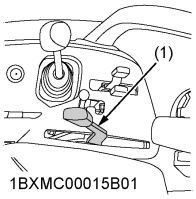 1BXMC00015B01 *(1) Hydraulic control lever*	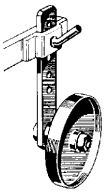 1AGAIAZAP070A **Gauge wheel**	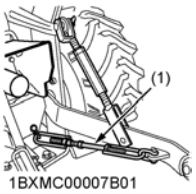 1BXMC00007B01 *(1) Check chains*
Moldboard plow	Light soil, medium soil, heavy soil	Hydraulic control	YES/NO	Loose Adjust the check chains so that the implement can move 5 cm to 6 cm (2.0 in. to 2.4 in.) laterally. The check chains should be tight enough to prevent excessive implement movement when implement is in raised position.
Disc plow	-			
Harrower (spike type, springtooth type, and disc type)				
Sub-soiler				
Weeder, ridger			YES	Tighten
Earthmove, digger scraper, and manure fork rear carrier			YES/NO For implements with gauge wheels, set the hydraulic control lever to the **lowered (down)** position all way.	
Mower (mid-and rear-mount type), hayrake, and tedder				

https://truckmanualshub.com/

TIRES, WHEELS, AND BALLAST

TIRES

WARNING

To avoid serious injury or death:

- **Do not attempt to mount a tire on a rim. Only a qualified person with the proper equipment should mount a tire on a rim.**
- **Always maintain the correct tire pressure.**
  Do not inflate the tires above the recommended pressure shown in the *"Inflation pressure"* section.

See 1. Inflation pressure of tires on page 89.

IMPORTANT :

- **Do not use tires other than those approved by KUBOTA.**
- **When you intend to mount different size of tires from equipped ones, consult your dealer about front drive gear ratio for details.**
  Excessive wear of tires may occur due to improper gear ratio.

1. Inflation pressure of tires

Though the tire pressure is factory-set to the prescribed level, it naturally drops slowly in the course of time. Thus, check it everyday and inflate as necessary.

	Tire sizes	Inflation Pressure
Rear	26x12.00-12 Turf	100 kPa (1.0 kgf/cm^2) [14 psi]
	26x12.00-12 Bar	120 kPa (1.2 kgf/cm^2) [17 psi]
	26x12.00-12 Ind.	120 kPa (1.2 kgf/cm^2) [17 psi]
Front	18x8.50-10 Turf	120 kPa (1.2 kgf/cm^2) [17 psi]
	18x8.50-10 Bar	150 kPa (1.5 kgf/cm^2) [22 psi]
	18x8.50-10 Ind.	150 kPa (1.5 kgf/cm^2) [22 psi]

NOTE :

- **Maintain the maximum pressure in front tires, if using a front loader or when equipped with a full load of front weight.**

2. Dual tires

You can not use the dual tires.
Dual tires are not approved.

WHEEL TREAD

WARNING

To avoid serious injury or death:

- **Support the tractor securely on stands before removing a wheel.**
- **Never operate the tractor with a loose rim, wheel, or axle.**

IMPORTANT :

- **When re-fitting or adjusting a wheel, follow the procedure.**
  1. **tighten the bolts to the torques as shown in the following table.**

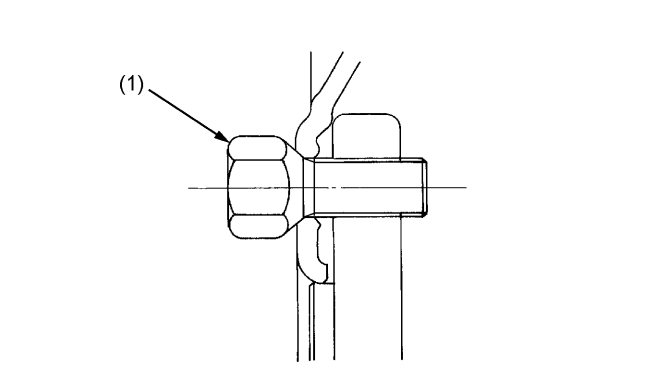

1BXMC00063A01

(1) Bolt

	Tightening torques
Front	149.2 N·m to 179.0 N·m (15.2 kgf·m to 18.3 kgf·m) [110 lbf·ft to 132 lbf·ft]
Rear	108.5 N·m to 130.2 N·m (11.1 kgf·m to 13.3 kgf·m) [80 lbf·ft to 96 lbf·ft]

  2. **Then recheck as the following table.**
     See SERVICE INTERVALS on page 113.

https://truckmanualshub.com/

Timing to re-check the bolts	After driving the tractor 200 m (200 yards), after 1 day (8 hours), and thereafter every 50 hours

NOTE :
- **Use the tapered bolts for wheels with beveled or tapered holes.**

1. Front wheels

IMPORTANT :
- **Do not turn the front discs to obtain wider tread.**
- **Always attach tires as shown in the figures in the following table.**
  If you not attach the front wheel as illustrated in the table, transmission parts may be damaged.

You can not adjust width of the front tread.

Tire	18x8.50-10 Turf, Bar, and Ind.
Tread	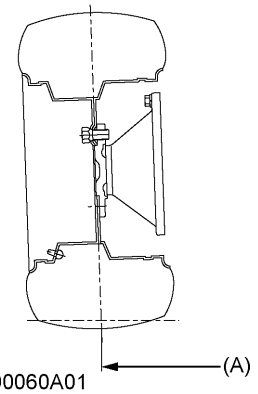 1BXMC00060A01 *(A) 910 mm (35.8 in.)*

How to jack up the front axle

WARNING

To avoid serious injury or death:
- **Before jacking up the tractor, park it on a firm and level ground and chock the rear wheels.**
- **Fix the front axle to keep it from pivoting.**
- **Select jacks that withstand the machine weight and set them up as shown in the following figure.**

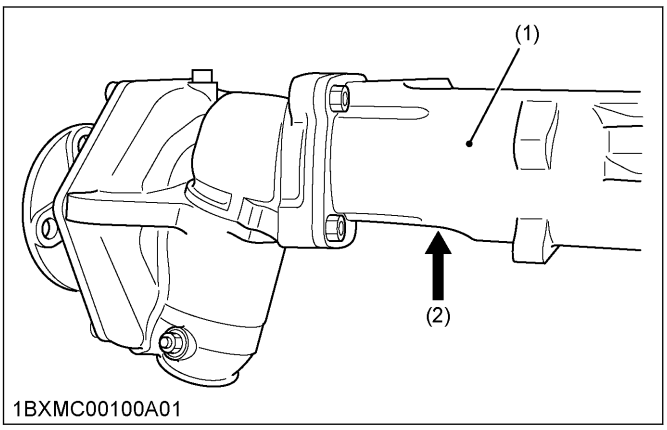

1BXMC00100A01

(1) Front axle case *(2) Jack points*

2. Rear wheels

IMPORTANT :
- **Do not the turn rear discs to obtain wider tread.**
- **Always attach tires as shown in the figures in the following table.**
  If you not attach the rear wheel as illustrated in the table, transmission parts may be damaged.

You can not adjust width of the rear tread.

Tire	26x12.00-12 Turf, Bar, and Ind.
Tread	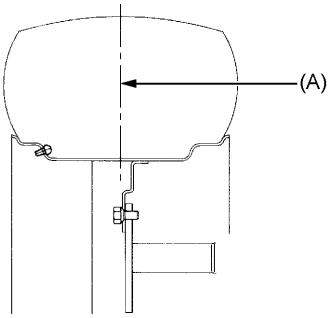 1BXMC00061A01 *(A) 820 mm (32.2 in.)*

How to jack up rear part of the tractor

WARNING

To avoid serious injury or death:
- **Before jacking up the tractor, park it on a firm and level ground and chock the front wheels.**
- **Fix the front axle to keep it from pivoting.**
- **Select jacks that withstand the machine weight and set them up as shown in the following figure.**

https://truckmanualshub.com/

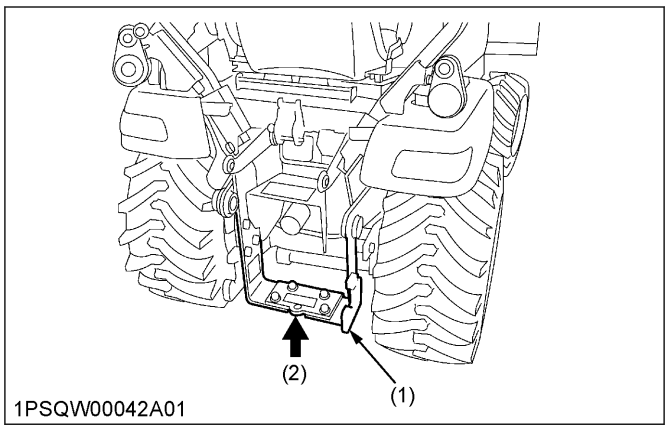

(1) Frame *(2) Jack point*

BALLAST

WARNING

To avoid serious injury or death:

- **You will need the additional ballast for transporting the heavy implements. When the implement is raised, drive slowly over rough ground, regardless of how much ballast is used.**
- **Do not fill the front wheels with liquid to maintain steering control.**

NOTE :

- **The ballast is not required when doing the normal operations with the BX23S tractor, the LA340 loader, and the BT603 backhoe connected in factory settings.**

1. Front ballast

IMPORTANT :

- **Do not overload tires.**
- **Add no more weight than indicated in the following table.**

Maximum weight	125 kg (275 bs.)

Add weights if needed to improve traction or for stability. Heavy pulling and heavy rear mounted implements tend to lift front wheels. Add enough ballast to maintain steering control and prevent tip over.
Remove weight when no longer needed.

2. Rear ballast

Add weight to rear wheels if needed to improve traction or for stability. The amount of rear ballast should be matched to job and the ballast should be removed when it is not needed.

When the loader is attached on the tractor and the backhoe is not attached on it, you should install the rear wheel weight (option) to the tractor.

Liquid ballast in rear tires

You should add the weight to the tractor in the form of liquid ballast.

Water and calcium chloride solution provides safe economical ballast. Using the liquid ballast properly will prevent tires, tubes, or rims from damaging. The addition of calcium chloride is recommended to prevent the water from freezing. The addition of calcium chloride for weighting the wheels has the full approval of the tire companies. See your tire dealer for this service.

Liquid weight per tire (75 percent filled)

Tire sizes	26x12.00-12
Slush free at -10 ℃ (14 ℉) Solid at -30 ℃ (-22 ℉) [Approx. 1 kg (2 lbs.) $CaCl_2$ per 4 L (1 gal) of water]	45 kg (99 lbs.)
Slush free at -24 ℃ (-11 ℉) Solid at -47 ℃ (-52 ℉) [Approx. 1.5 kg (3.5 lbs.) $CaCl_2$ per 4 L (1 gal) of water]	50 kg (110 lbs.)
Slush free at -47 ℃ (-52 ℉) Solid at -52 ℃ (-62 ℉) [Approx. 2.25 kg (5 lbs.) $CaCl_2$ per 4 L (1 gal) of water]	56 kg (123 lbs.)

IMPORTANT :

- **Do not fill tires with water or solution more than the correct percentage of full capacity as shown in the following table to the level of valve stem at the 12 o'clock position.**

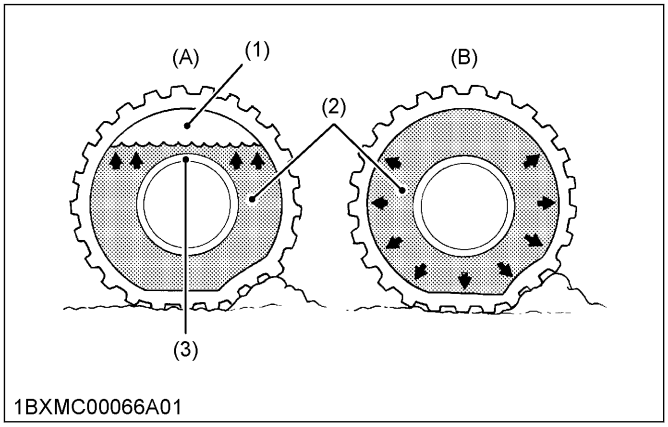

(1) Air *(A) Correct*
(2) Water *(B) Incorrect*
(3) Valve stem

	Correct	Incorrect
Amount of water	75% of full capacity of tire	100% of full capacity of tire
Characteristic	Air compresses like a cushion	Water can not be compressed

https://truckmanualshub.com/

- **To avoid damage of the transmission, do not use the rear wheel weights and liquid ballast at the same time.**
- **Do not add liquid ballast or any other weights to the front tires.**
- **While BT603 backhoe is installed on the tractor, remove liquid ballast from the rear tires.**

NOTE :
- **When mounting a heavy implement, a liquid in the tire may not be required.**

Rear wheel weight (option)
You can install the rear wheel weight to the 3-point hitch. Consult your local KUBOTA dealer to use.

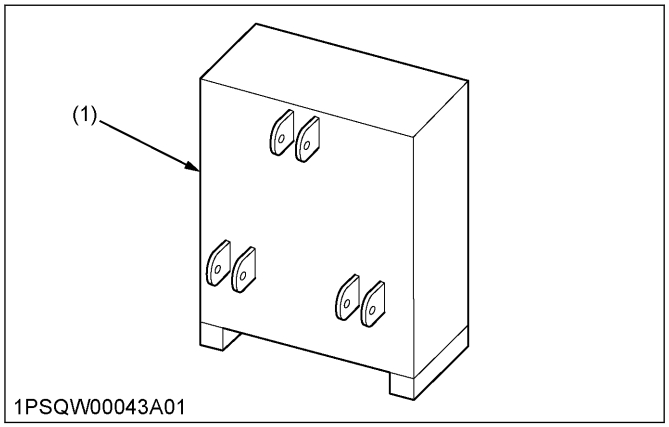

(1) Rear wheel weight

NOTE :
- **Besides the rear wheel weight, a 3-point kit is required for installing the weight.**

https://truckmanualshub.com/

OPERATING THE LOADER

PRECAUTIONS FOR OPERATING THE LOADER

WARNING

To reduce the possibility of roll over:

- **It is not recommended that the loader is attached when operating another implement on a hillside.**

IMPORTANT :

- **When operating the loader in rough terrain, remove the mower to avoid damage to the mower.**

You should operate the loader with engine speed of the tractor depending on the machine and the operator's level of experience. Excessive speeds are dangerous, and may cause spillage of the bucket and unnecessary strain on the tractor and the loader.
When operating the loader in temperature shown in the following table, run the tractor engine as the following engine speed until the oil temperature exceeds the value in the following table.

Temperature	below -1 ℃ (30 ℉)
Engine speed	below 1200 rpm
Oil temperature	-1 ℃ (30 ℉)

TECHNIQUES FOR OPERATING THE LOADER AND THE TRACTOR

1. Filling the bucket

The rollback and lifting of the bucket will increase efficiency because a level bucket throughout the lifting cycle resists lifting of the bucket and increases effort of breakaway from the pile.

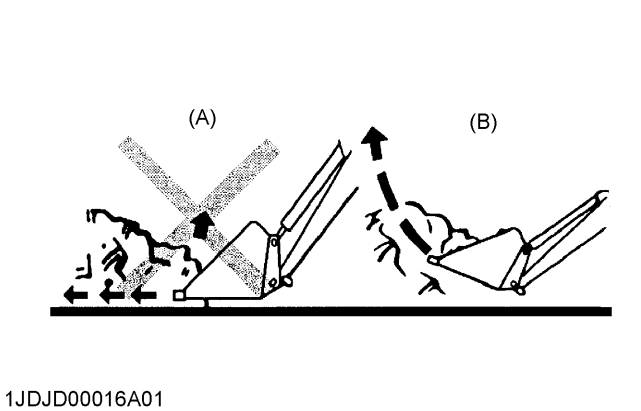

1JDJD00016A01

(A) Incorrect *(B) Correct*

1. Approach and enter the pile with a level bucket.

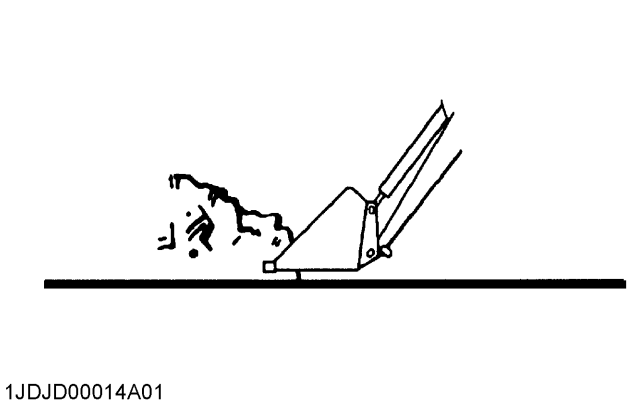

1JDJD00014A01

https://truckmanualshub.com/

2. Ease the loader-control-lever toward you and then toward left to rollback and lift the bucket.

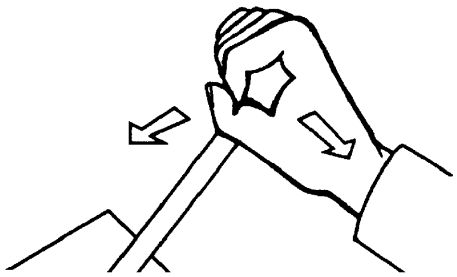

1JDJD00015A01

NOTE :

- **Do not be concerned if the bucket is not completely filled during each pass. Maximum productivity is determined by the amount of material loaded in a given period of time. Two or more attempts to fill the bucket on each pass may take more time.**

2. Precautions for lifting the load

WARNING

To avoid personal injury or death:

- **Do not lift the loads of the bucket in excess of the loader capacity.**
- **Before raising the bucket to full height, make sure that the tractor is on level ground. If the tractor is not on level ground, the tractor may tip over, even if it is not moving.**

When lifting the load, keep the bucket positioned to avoid spillage.

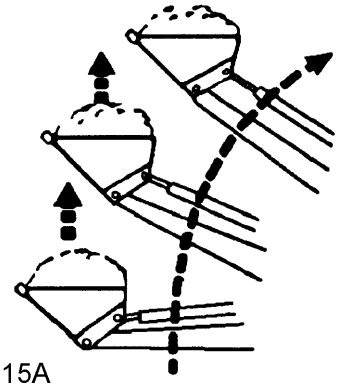

1AIABACAP015A

3. Precautions for carrying the load

WARNING

To avoid personal injury or death:

- **Be extra careful when working on inclines.**
- **When operating on a slope, always operate the loader up and down the slope, never across the slope.**

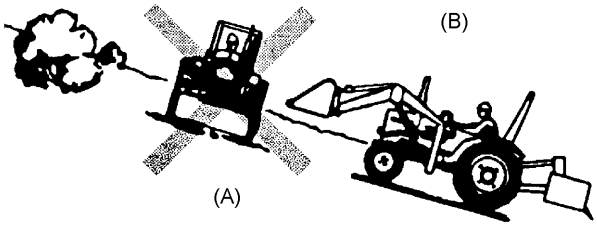

1JDJD00018A01

(A) Incorrect *(B) Correct*

- Position the bucket just below the level of the tractor hood for maximum stability and visibility, whether the bucket is loaded or empty.

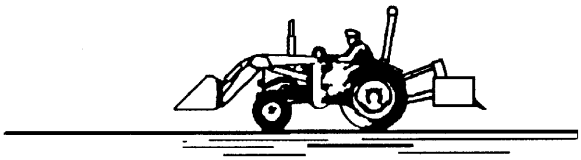

1JDJD00017A01

- Use extreme care when operating the loader on a slope. Keep the bucket as low as possible. Keeping the bucket low keeps the bucket and the tractor center of gravity low and will provide maximum stability of the tractor.
- When transporting a load, keep the bucket as low as possible to avoid tipping, in case a wheel drops in a rut.

https://truckmanualshub.com/

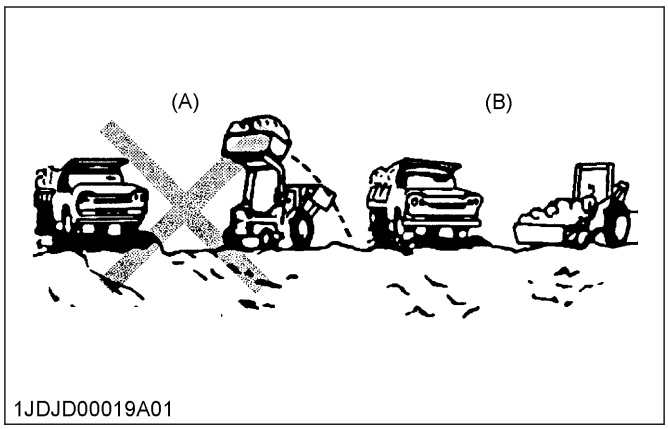

(A) Incorrect *(B) Correct*

4. Dumping and lowering the bucket

Dumping the bucket

1. Lift the bucket just high enough to clear the side of the vehicle.
2. Move the tractor in as close to the side of the vehicle as possible.
3. Then dump the bucket.

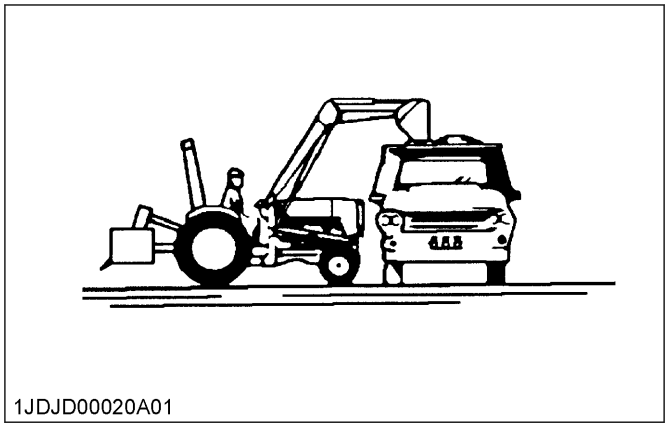

Lowering the bucket

1. After dumping the bucket, back away from the vehicle while lowering and rolling back the bucket.

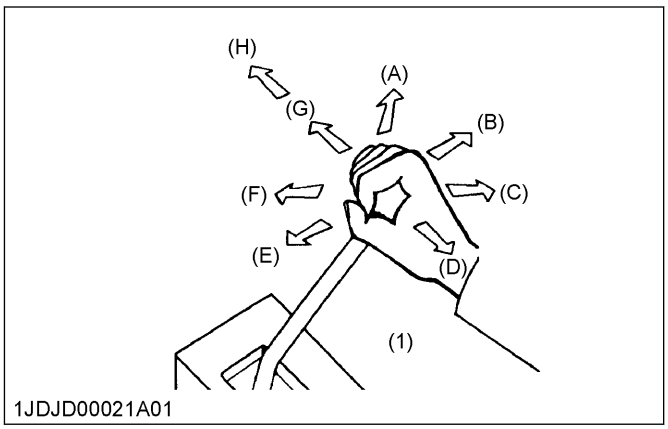

(1) Loader control lever
(A) Down and dump
(B) Dump
(C) UP and dump
(D) Up
(E) Roll back
(F) Down and roll back
(G) Down
(H) Float

5. Precautions for operating the loader with float control

- During operation of the loader on hard surface, keep the bucket level and put the lift control in the **float** position to permit the bucket to float on the working surface. If hydraulic down pressure is exerted on the bucket, the bucket will wear faster than normal.

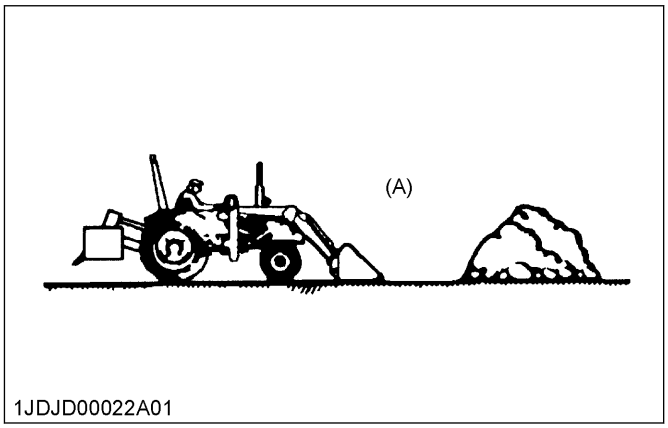

(A) Float

- The **float** position will also avoid mixing of surface material with stockpile material. The **float** position will reduce the chance of surface gouging while removing snow or other material, or when working with a blade.

https://truckmanualshub.com/

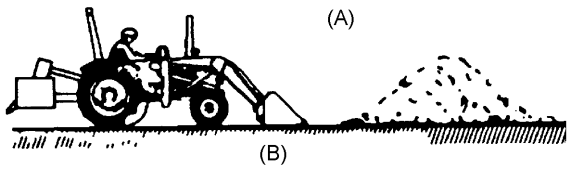

1JDJD00023A01

(A) Float *(B) Surface material*

6. Loading from a bank

WARNING

To avoid personal injury or death:

- **Be extra careful when working on inclines.**
- **When operating on a slope, always operate the loader up and down the slope, never across the slope.**

- Choose a forward gear that provides a safe ground speed and power for loading.

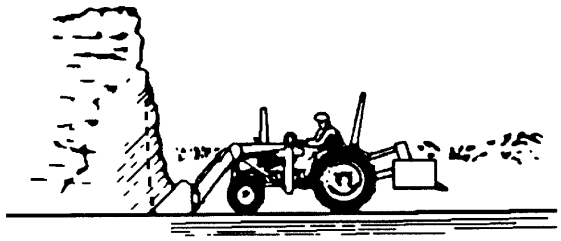

1JDJD00024A01

NOTE :

- **Loader lift and break-away capacity diminish as loading height is increased.**

- Side cutting is a good technique for cutting down a big pile. Wheel width should not exceed the bucket width for the side cutting procedure.

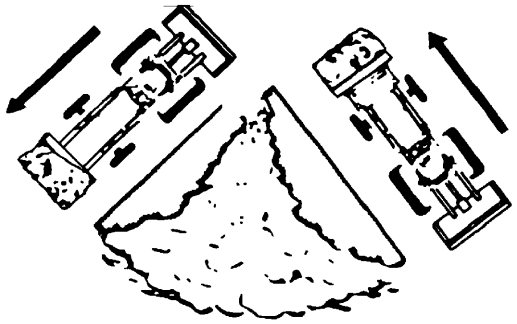

1JDJD00025A01

- If the pile sides are too high and liable to cause cave-in, use the loader to break down the sides until a slot can be cut over the top.

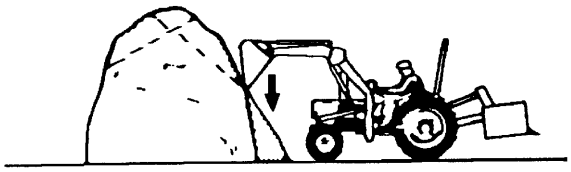

1JDJD00026A01

- Another method for large dirt piles is to build a ramp to approach the pile.

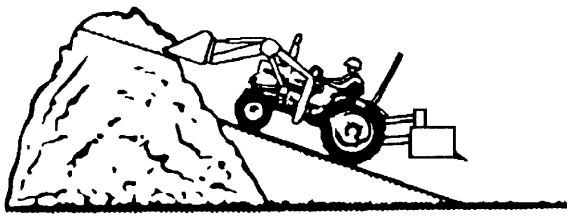

1JDJD00027A01

- It is important to keep the bucket level when approaching a bank or pile. This will help avoid gouging the work area.

https://truckmanualshub.com/

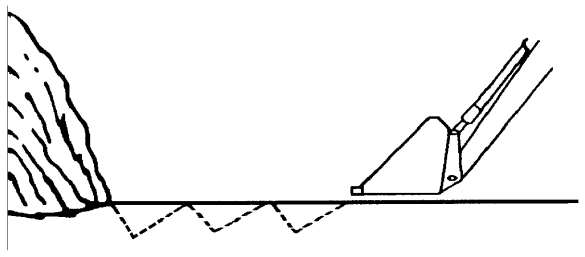

1JDJD00028A01

7. Peeling and scraping the ground

1. Produce a short cut and break-out cleanly.
   a. Use a slight bucket down angle.
   b. Travel forward.
   c. Hold the lift control forward to start the cut.

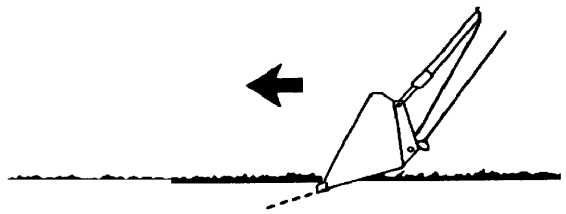

1JDJD00029A01

2. With the bucket level, start a cut at the following notch.

Notch	Approximately 2 in. deep

   Hold the depth by feathering the bucket control to adjust the cutting edge up or down. When the front tires enter the notch, adjust the boom cylinder to maintain proper depth.

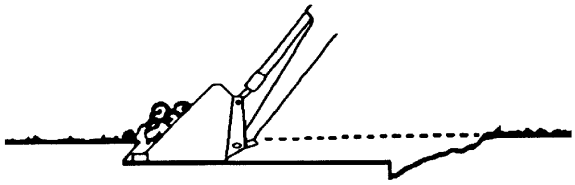

1JDJD00030A01

3. Procude additional passes until the desired depth is reached.
   During each pass, use only the bucket control while at working depth. Using only the bucket control will allow you to concentrate on controlling the bucket angle to maintain a precise cut.

1JDJD00031A01

8. Loading low trucks or spreaders from a pile

- For faster loading, minimize the angle of turn and length of run between pile and spreader.

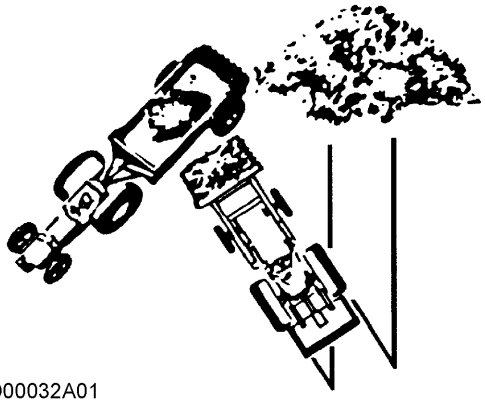

1JDJD00032A01

- Back grade occasionally with a loaded bucket to keep the work surface free of ruts and holes. Also, hold the lift control forward.
  The full weight of the bucket is scraping the ground. Use the heel of the bucket.

https://truckmanualshub.com/

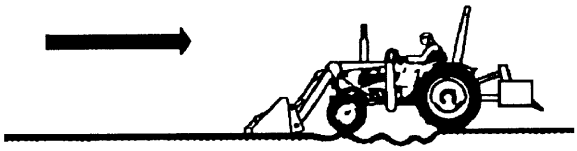

1JDJD00033A01

9. Backfilling

- Approach the pile with the bucket flat.
  Poor operating methods will move less dirt and make it more difficult to hold a level grade.

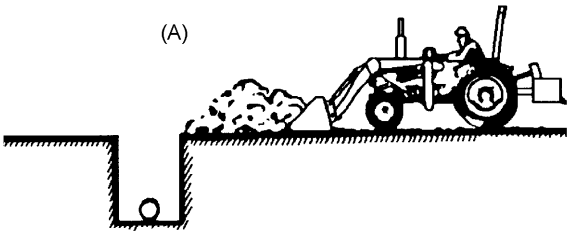

1JDJD00034A01

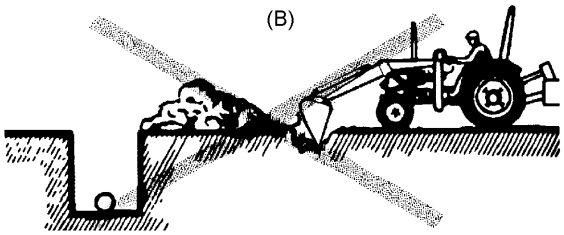

1JDJD00035A01

(A) Correct *(B) Incorrect*

IMPORTANT :

- **Do not use the bucket in the dumped position for bulldozing the pile. As shown in the preceding method, approaching the pile with the bucket flat will impose severe shock loads on the dump-linkage, the bucket cylinders, and the tractor.**

- Leave dirt in the bucket because dumping on each pass wastes time.

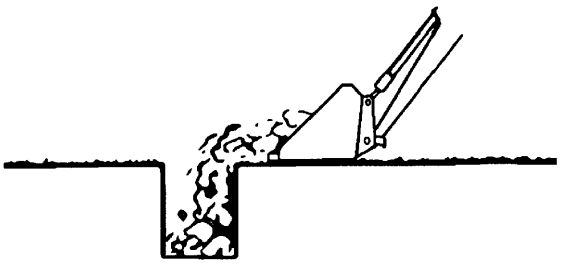

1JDJD00036A01

- Operate at right angles to the ditch. Take as big a bite of the soil pile as the tractor can handle.

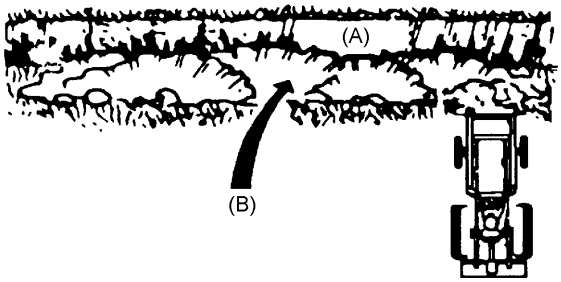

1JDJD00037A01

(A) Ditch *(B) Soil pile*

- Leave dirt which drifts over the side of the bucket for final cleanup.

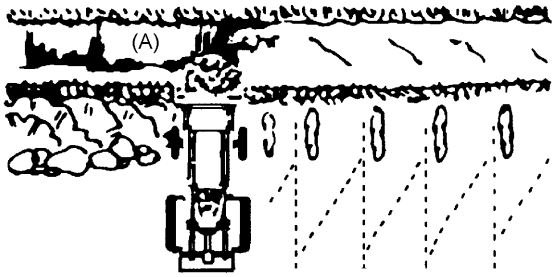

1JDJD00038A01

(A) Ditch

- Pile dirt on the high side for easier backfilling on a slope.

https://truckmanualshub.com/

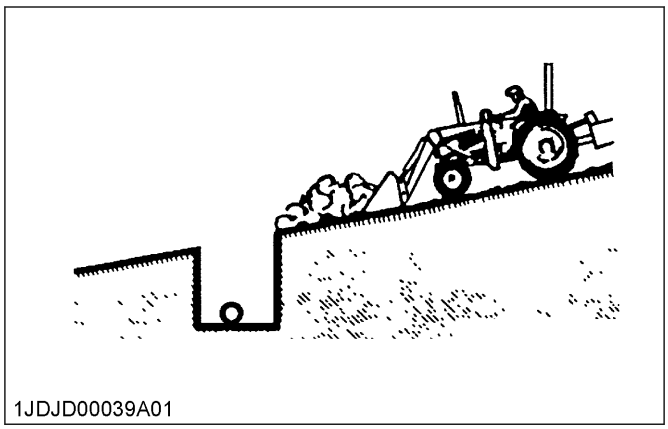

10. Precautions for handling large heavy objects

DANGER

To avoid personal injury or death:

- **Handling large, heavy objects can be dangerous due to the following reasons.**
  - **Danger of rolling the tractor over**
  - **Danger of upending the tractor**
  - **Danger of the object rolling or sliding down the loader boom onto the operator**
- **If you must handle large, heavy objects, protect yourself by the following methods.**
  - **Not lifting the load higher than necessary to clear the ground when the tractor is moving**
  - **Adding the rear ballast to the tractor to compensate for the load**
  - **Not lifting large objects with equipment which does not equip an anti-rollback device**
  - **Moving the machine slowly and carefully**
  - **Avoiding rough terrain**
  - **Keeping the transport distance as short as possible and carry the load as low as possible during transport**
  - **Confirming that the loader and the bucket are at proper height and have stopped moving before transport**

VALVE LOCK

The control valve is equipped with a feature of the valve lock.

WARNING

To avoid personal injury or death from crushing:

- **Do not utilize the valve lock for machine maintenance or repair.**
- **The valve lock is to prevent accidental actuation when implement is not in use or during transport.**

The control valve is locked in the **lock** position.
The lock is not intended and will not prevent a leak down of the implement during the period of storage.

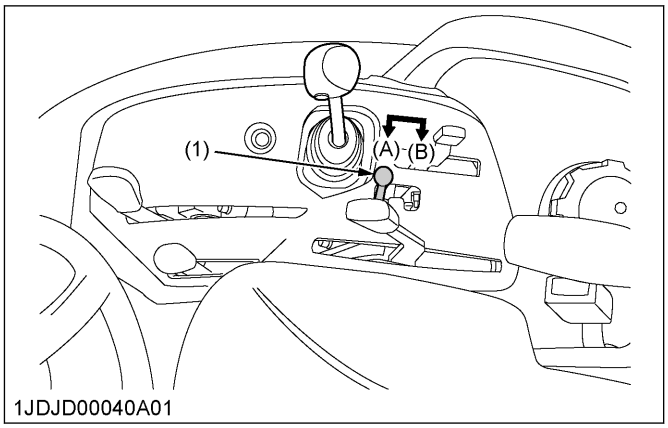

(1) Lock lever
(A) Lock
(B) Unlock

BUCKET LEVEL INDICATOR (IF EQUIPPED)

Depending on the front attachment, loosen the lock bolt of the indicator rod and readjust the length of the indicator rod.

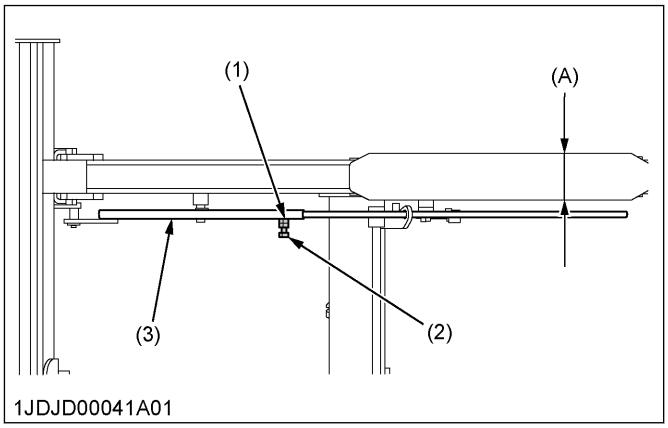

(1) M8 nut
(2) M8 bolt
(3) Indicator rod
(A) Parallel

IMPORTANT :

- **Fix the engine-indicator-rod in parallel with the boom, so that the end of the engine-indicator-rod does not hit the hood when opening and closing the hood.**

https://truckmanualshub.com/

HOW TO USE THE QUICK COUPLER

IMPORTANT :
- **Be sure to relieve all pressure before connecting or disconnecting lines.**

The quick-coupler-system is designed to easily connect and disconnect the hydraulic hoses simultaneously without oil leak when attaching and detaching the loader.

Connecting the quick coupler

IMPORTANT :
- **Before connecting each hose, make sure to carefully clean the mating surfaces of the fixed part, mating surfaces of the mobile part, and the reference pins.**

1. Connect the quick coupler and lower the lever until it stops.
2. Turn the safety-lock-button clockwise.

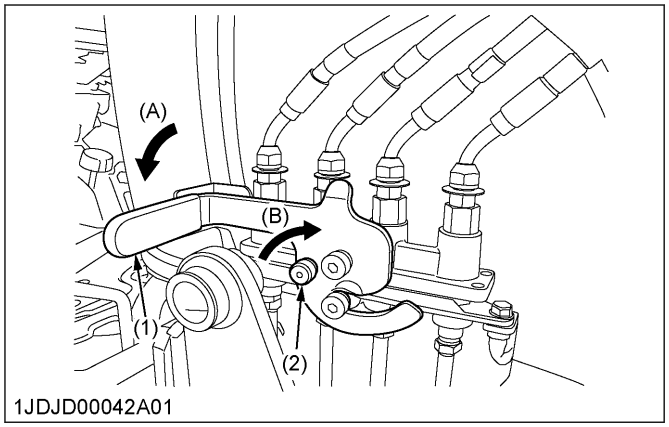

(1) Lever *(A) Lower*
(2) Safety lock button (red) *(B) Clockwise*

Disconnecting the quick coupler
1. Turn the safety-lock-button counterclockwise to unlock it.
2. Raise the lever until it stops.

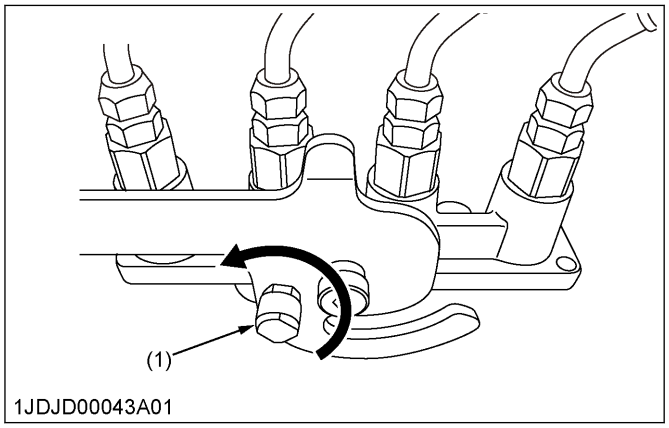

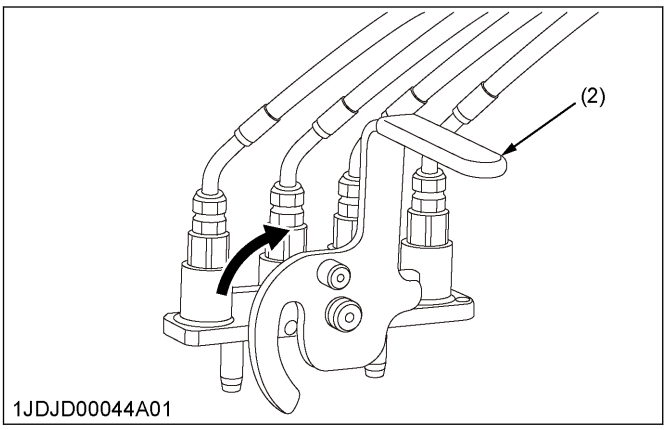

(1) Safety lock button *(2) Lever*

IMPORTANT :
- **Lubricate periodically all the moving components.**

FRONT REMOTE HYDRAULIC CONTROL SYSTEM (IF EQUIPPED)

You can use the front-remote-hydraulic-control-system for a front mounted hydraulic implement.
The front-remote-hydraulic-control-system provides hydraulic oil to the front outlet directly.

1. Installing the front remote hydraulic control system

1. Mount the loader and connect the wire harness of the front-remote-hydraulic-control-system.

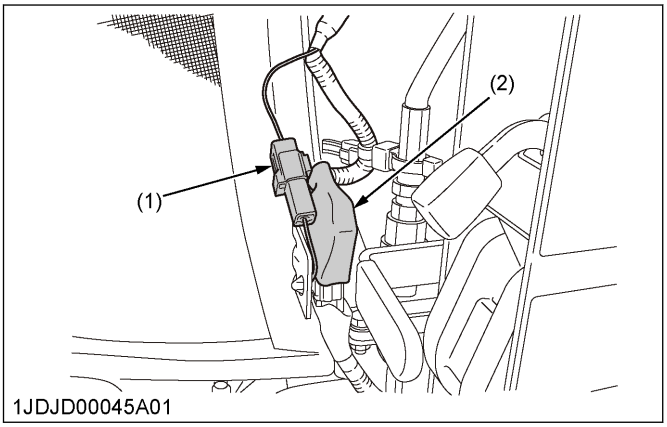

(1) Main harness line *(2) Cap connecting*

2. Operating the control lever

WARNING
To avoid personal injury or death:
- **Valve lock does not lock out the switch-operated third-function hydraulics, which are**

https://truckmanualshub.com/

active when the key switch and the front hydraulic valve main switch are on.

1. Turn the front-hydraulic-valve-main-switch **on**.
   a. Push the front-hydraulic-valve-main-switch to engage the front-hydraulic-valve.
   The light on the front-hydraulic-valve-main-switch will illuminate to indicate that the front-hydraulic-valve is **on** and to enable the activation switch and operation of the lever.
2. Turn the activation switch **on** or **off**.
   - When operating the lever to left side with pressing the activation switch, hydraulic oil will come out of port 1 and return through port 2 as long as operating the lever to left side with pressing the activation switch.
   - When operating lever to right side with pressing the activation switch, hydraulic oil will come out of port 2 and return through port 1 as long as operating lever to right side with pressing the activation switch.
3. Turn the front-hydraulic-valve-main-switch **off**.
   a. Push the front-hydraulic-valve-main-switch again to disengage the front hydraulic valve.
   The light of the front-hydraulic-valve-main-switch will turn off.

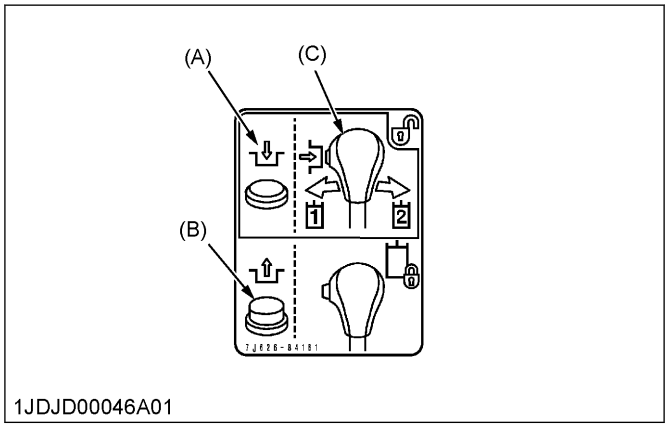

1JDJD00046A01

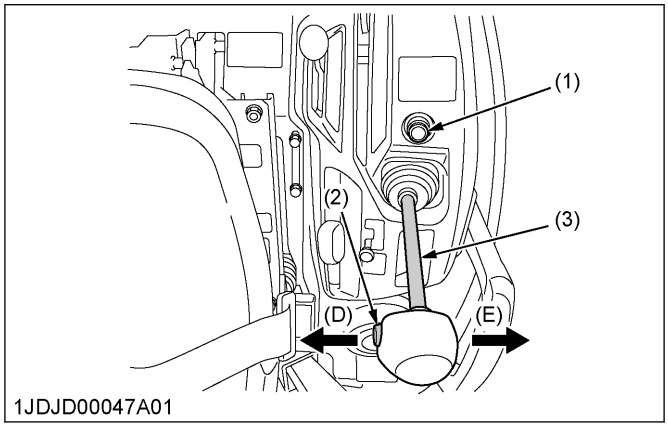

1JDJD00047A01

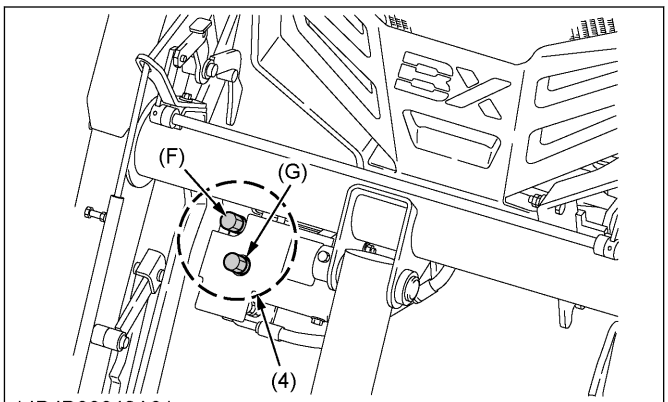

1JDJD00048A01

(1) Front hydraulic valve main switch
(2) Activation switch
(3) Operating lever
(4) Front hydraulic outlet
(A) Front hydraulic valve main switch is on
(B) Front hydraulic valve main switch is off
(C) Activation switch is on
(D) Left side
(E) Right side
(F) Port 1
(G) Port 2

IMPORTANT :
- **While a front mounted hydraulic attachment is used, make sure that the hydraulic hose is routed out of contact with the left and right bucket links. Keep the hose from running over within the circled zone in the following figure.**

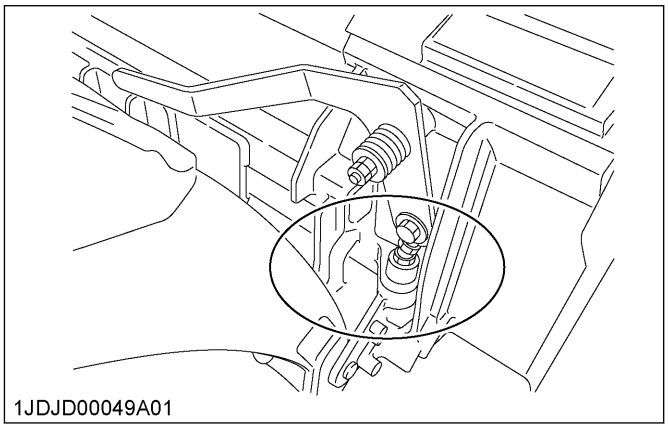
1JDJD00049A01

3. How to use the remote control coupler

WARNING

To avoid personal injury or death:
- **Stop the engine and relieve the pressure before connecting or disconnecting the lines of remote-control-coupler.**
- **Do not use your hands to check for leaks.**

Relieving the hydraulic pressure

1. Move the key switch to the **on** position.

   NOTE :
   - **Do not start the engine.**

https://truckmanualshub.com/

2. Push the front-hydraulic-valve-main-switch onto **on**.
3. Press the activation switch and move the loader lever to left and right several times.
4. Push the front hydraulic valve main switch onto **off**.
5. Turn the key switch to the **off** position.

Connecting
1. Clean both couplers of the implement and tractor.
2. Remove the dust plugs.
3. Insert the remote-control-coupler of the implement to the hydraulic coupler of the tractor.
4. Pull the remote-control-coupler of the implement slightly to make sure that both couplers of the implement and tractor are firmly connected.

NOTE :
- **Your local KUBOTA dealer can supply parts to adapt couplers to hydraulic hoses.**

Disconnecting
1. Lower the implement first to the ground to release hydraulic pressure in the hoses.
2. Clean both couplers of the implement and tractor.
3. Press the activation switch and move the loader lever to left and right several times to relieve hydraulic pressure.
4. Pull the hose straight from the hydraulic coupler to release it.
5. Clean oil and dust from the hydraulic coupler, and then replace the dust plugs.

FRONT GUARD (OPTION FOR THE QUICK ATTACH COUPLER)

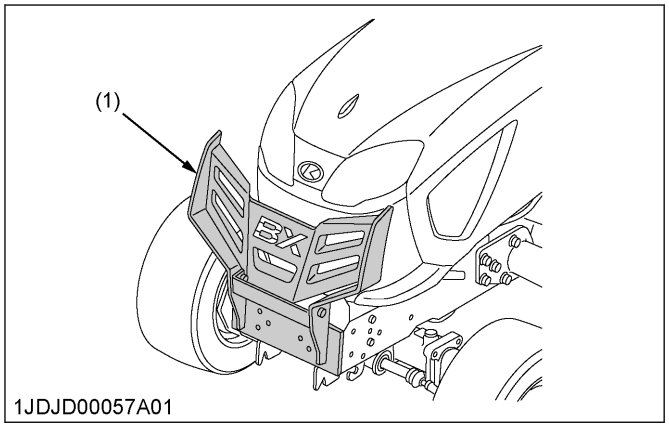

(1) Front guard

1. How to use the front guard (if equipped)

Attaching the front guard
1. Attach the front guard in position on the tractor.

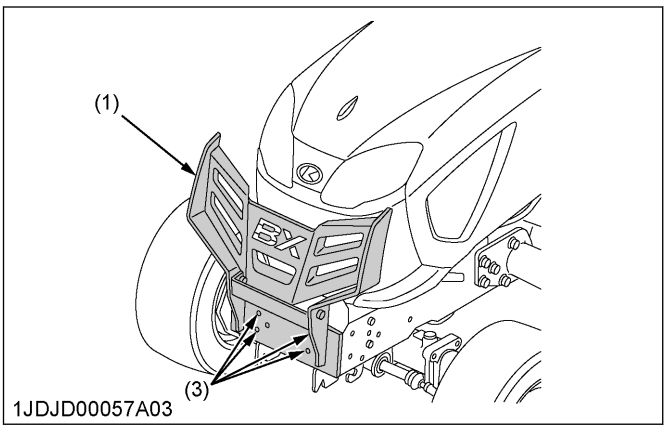

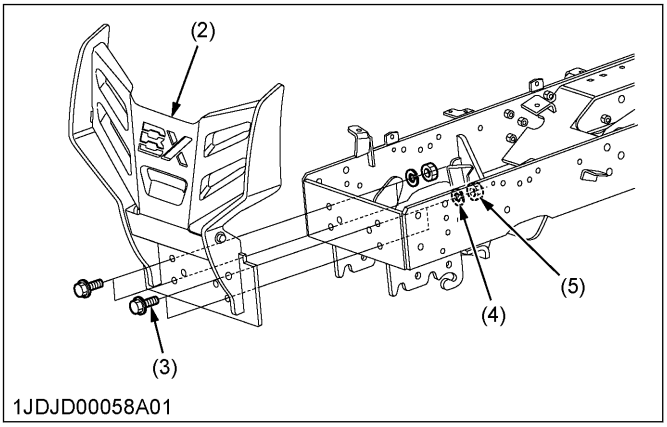

(1) Front guard
(2) Front guard plate
(3) 4-M12 x 35 flange bolt
(4) 4-M12 spring washer (nut side)
(5) 4-M12 nut

IMPORTANT :
- **Before moving the tractor or the front loader, make sure that the front guard is tightly fastened.**

Opening the upper front guard
1. Lower the boom to the ground with the bucket in level position.

   IMPORTANT :
   - **Lower the front loader to the ground before opening the upper front guard.**
   - **Do not raise the boom while the upper front guard is open.**
2. Hold the handle part and pull the front guard forward.

https://truckmanualshub.com/

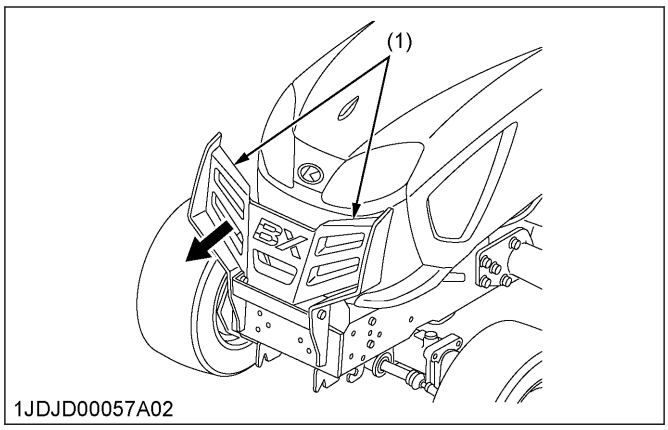

(1) Handle part

USING THE ATTACHMENTS (IF EQUIPPED)

1. Attaching the attachments (if equipped)

DANGER

To avoid personal injury or death:

- **Use of a non-KUBOTA attachment that does not comply with ISO24410 or the improper positioning of handle(s) or non-protrusion of pin(s) may result in detachment of the attachment or deformation, causing loss of performance, personal injury, or death.**

NOTE :

- **Locate the attachments on a flat, firm surface when attaching and detaching them from the quick-attach-coupler.**

The quick-attach-coupler is designed to be used with KUBOTA attachments. To use non-KUBOTA attachments, it must comply with ISO 24410, first edition 2005-04-15. The quick-attach-coupler allows the operator to change the attachments easily without the use of tools.

1. To mount an attachment, pull the quick-attach-coupler-handles to the unlatched position to release the latching pins.
   Move the quick-attach-coupler-handles all the way up to make sure that the latching pins are fully retracted.
2. Position the tractor squarely in front of the attachment and tilt the quick-attach-coupler forward with the bucket cylinder.

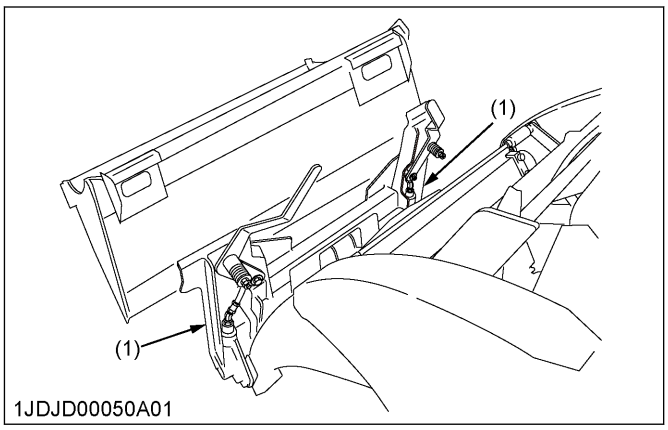

(1) Quick attach coupler

3. Ease the quick-attach-coupler-mounting-plate into the saddle of the attachment.
4. Roll the quick-attach-coupler back using the bucket cylinder and raise the boom slightly.
   The back of the attachment should rest against the front of the quick-attach-coupler-mounting-plate, and the loader should support the weight of attachment.

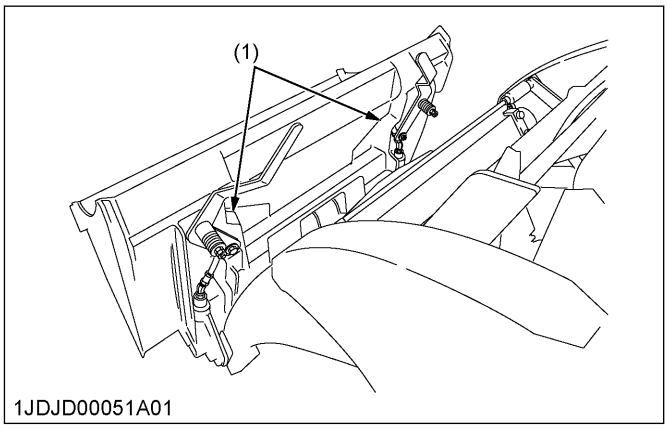

(1) Quick attach coupler

CAUTION

To avoid personal injury or machine damage:

- **Raise the boom only enough to latch the attachment.**
  The attachment could swing off the quick-attach-coupler.

5. When the attachment is properly seated in the saddle and against the front of the quick-attach-coupler-mounting-plate, turn off the engine and set the parking brake.

https://truckmanualshub.com/

6. Push the quick-attach-coupler-handles to the fully latched position.

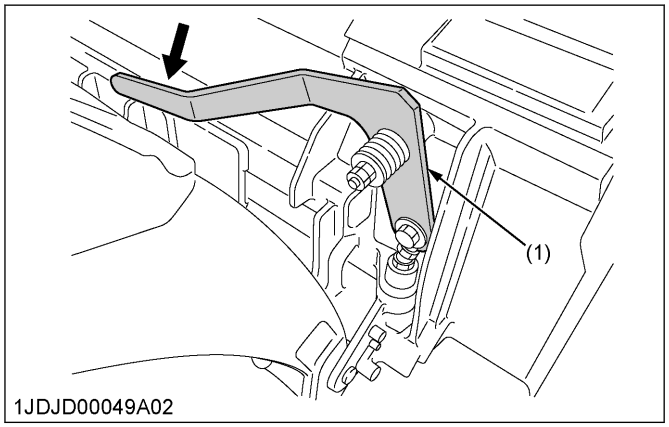

(1) Quick attach coupler handle

7. Make sure that both latching pins are completely engaged in the base of the attachment.

DANGER

To avoid personal injury or death:

- **The following engagement points are critical.**
  - **The lock pins of the quick-attach-coupler have to protrude into and through the pin slots of the attachment on both sides.**
  - **The lock pins must be in good condition and without visible signs of wear or damage.**
  - **The operator must align the quick-attach-coupler of the loader with the attachment to allow the lock pins to go through the pin slots.**
  - **Push down both quick-attach-coupler-handles until they contact the ear plates near the points where the pin bolt goes through the handle.**
- **Do not operate the tractor or attachment unless all of the preceding conditions are met.**

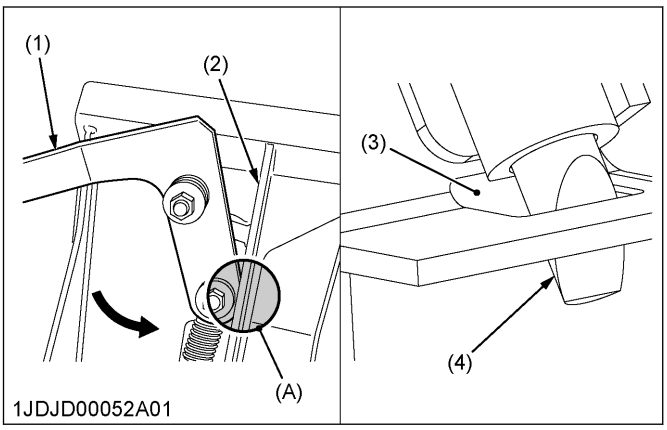

(1) Handle
(2) Ear plate
(3) Pin slot
(4) Lock pin
(A) Points where the quick attach coupler handle contacts the ear plate

8. When pushing the quick-attach-coupler-handles into the **locked** position, visually make sure that the latch pins rotate completely and are located underneath the stop of the quick-attach-coupler.

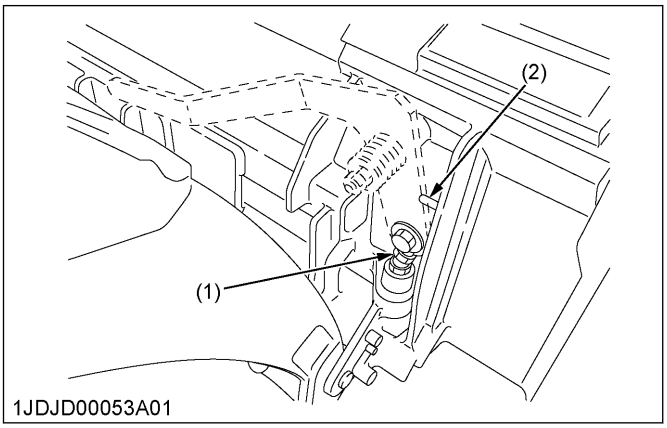

(1) Latch pins
(2) Quick attach coupler stopper

9. When attaching different attachments, visually inspect for broken or damaged latch pins. If broken or damaged latch pins are found, replace before using.
   Use of broken latch pins may result in detachment or deformation of the attachment, causing loss of performance, personal injury, or death.

You are now ready to use the attached attachment.

Attach and detach all compatible attachments using the same method.

WARNING

To avoid personal injury, death, or machine damage:

- **Never operate or transport the attachments which are not attached properly.**
- **Always replace damaged hardware immediately.**

https://truckmanualshub.com/

2. Detaching the attachments (if equipped)

Detach the attachments in the reverse procedure of attaching the attachments.

1. Lower the attachment to ground level with the attachment slightly in the rolled back position.
2. Stop the engine and set the parking brake.
3. Pull the quick-attach-coupler-handles to the **unlatched** position to release the latching pins.
4. While sitting in the operator's seat of the tractor, start the engine and slowly move the loader-control-lever to the **dump** position until the attachment is pushed away slightly from the quick-attach-coupler.
5. Lower the boom of the loader so that the quick-attach-coupler-mounting-plate clears the attachment saddle.
6. Back away from the attachment slowly.
7. If an attachment is not going to be attached to the quick-attach-coupler immediately, push the quick-attach-coupler-handles to the **locked** position to prevent damage to the handle assembly.

3. Performing the maintenance of the attachments (if equipped)

Attachments are secured to the quick-attach-coupler with an over-center-latching-system. It is important that parts of the attachments are kept clean, lubricated, and free from debris.

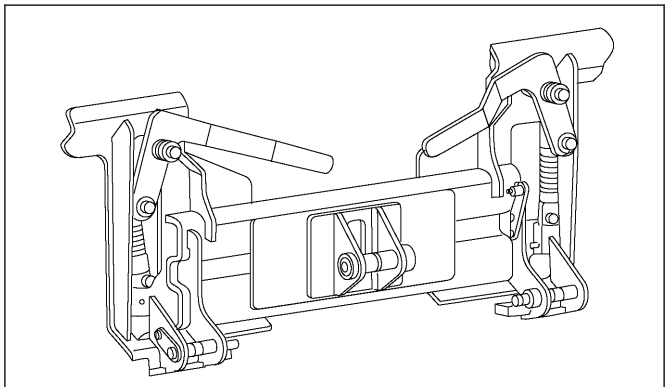

1JDJD00054A01

- Keep the latching pins and latching handles free from debris.
- Lubricate the latching pins weekly with grease.
- Keep the latching handles tight. If the handles become loose, tighten the hex nut slightly to remove any play from the handles.
- Clean the saddle, the top of the attachment, and the latching-pin-slots of any dirt and debris before mounting an attachment to the quick-attach-coupler.

4. Attachments (option for the quick attach coupler)

4.1 Quick bucket (option for the quick attach coupler)

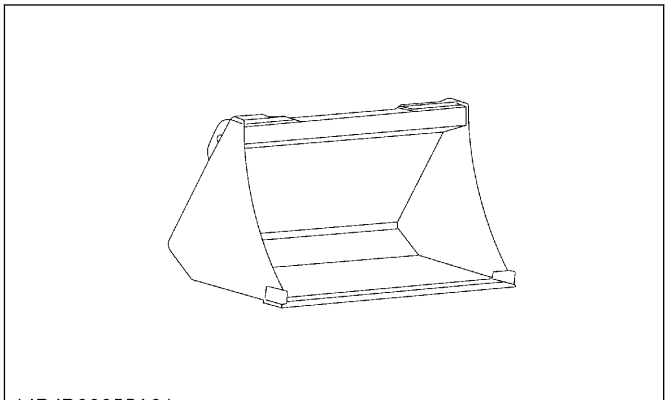

1JDJD00055A01

	Square 48 in.
Width	1219 mm (48.0 in.)
Struck capacity	0.13 m^3 (4.36 ft^3)

4.2 Snow blade (option for the quick attach coupler)

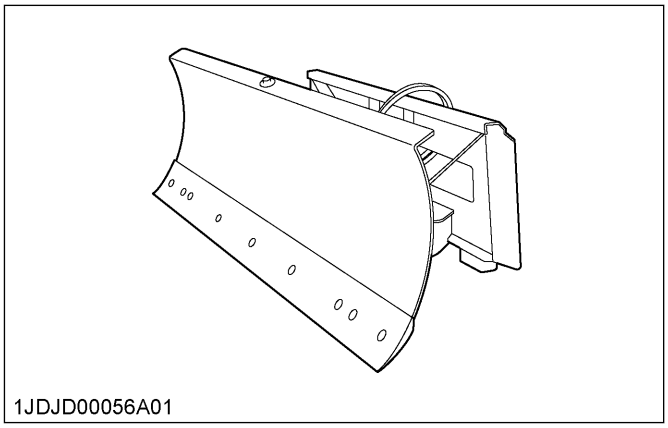

1JDJD00056A01

	Straight blade with HYD / angulation	Straight blade with manual angulation
Width	1524 mm (60.0 in.)	

https://truckmanualshub.com/

4.3 Pallet fork (option for the quick attach coupler)

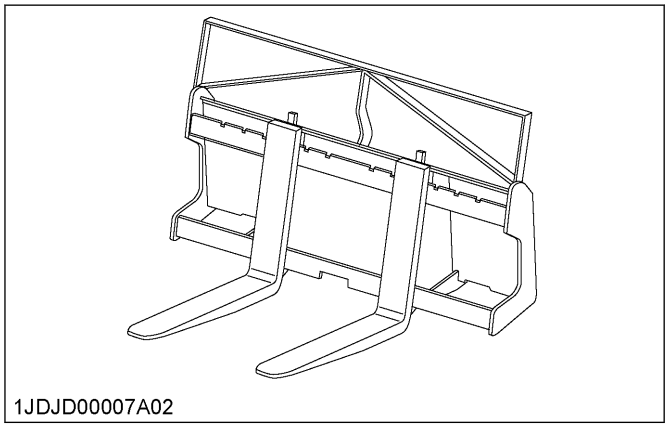

Loader model	LA340 and LA340S
Rated capacity at the center of the forks	109 kg (240 lbs)

4.3.1 Assembling the pallet fork (option for the quick attach coupler)

1. Install the pallet fork to the middle of the frame.
   Fit the lower hook of the pallet fork to the center notch of the frame.

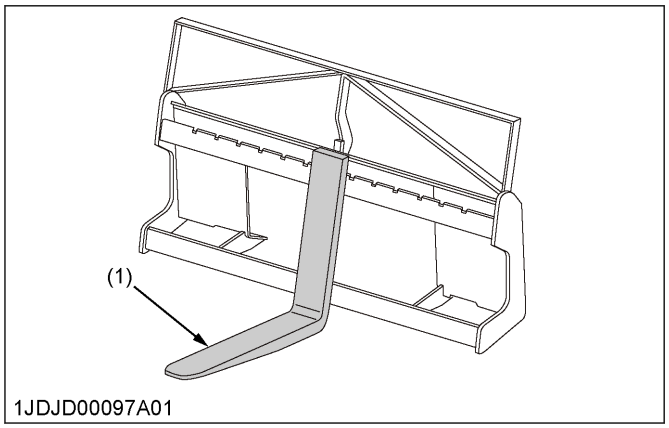

(1) Fork

2. Slide the fork to the desired position.

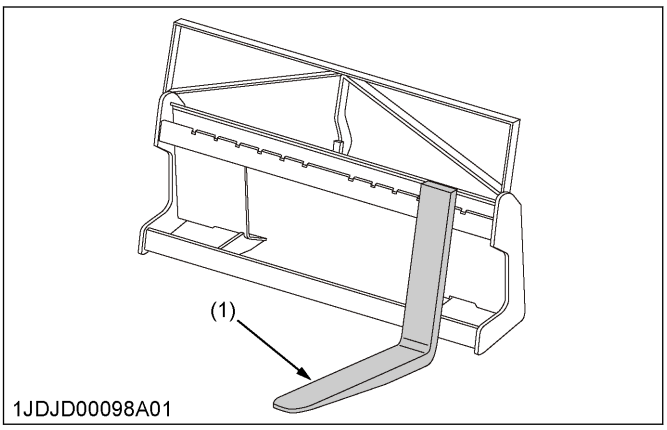

(1) Fork

3. Push the lock lever and slide the fork slightly until the lock pin engages with one of the notches to lock the folk.

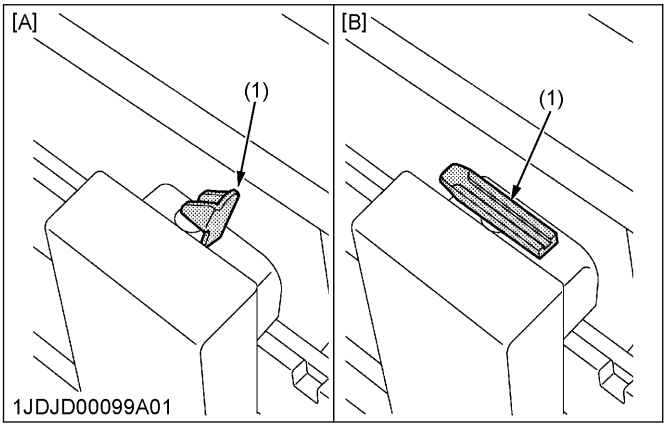

[A] Unlock
[B] Lock
(1) Lock lever

4. Install the other fork using the same procedures.

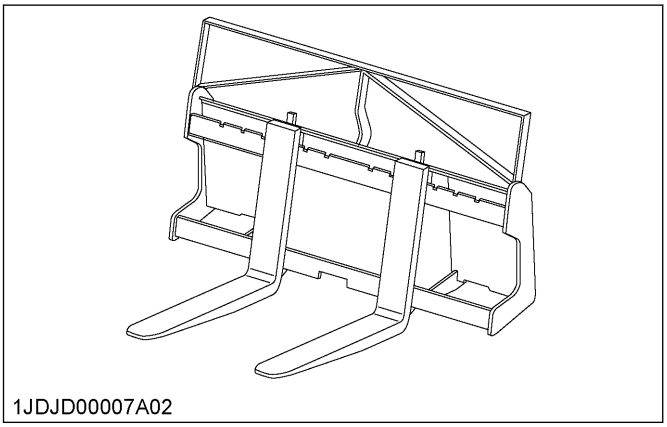

DISMOUNTING THE LOADER

WARNING

To avoid personal injury, death, or machine damage:

https://truckmanualshub.com/

- **Remove the loader from the tractor only when an approved bucket of the loader is attached to the tractor.**

1. Dismount the loader following the instructions provided in HOW TO REMOVE THE LOADER on page 147.

https://truckmanualshub.com/

OPERATING THE BACKHOE

ENGINE SPEED WHEN OPERATING THE BACKHOE

WARNING

To avoid serious injury or death:

- **Use care when operating the backhoe on slopes to avoid tip over. Travel at speed compatible with safe operation, especially when operating the backhoe in uneven terrain, crossing ditches, or while turning.**

- You can operate this backhoe at any engine speed in the following rated rpm. The backhoe is most efficient at rated engine speed.

Engine speed	about 75% of rated rpm to factory rated rpm

However, in special digging condition, for optimal fuel economy, or in residential neighborhood where noise may be a consideration, the engine speed can be lowered to about 75% of rated rpm.

- When operating the backhoe in the air temperature below the following temperature, run the tractor engine below about 50% of rated rpm until the oil temperature exceeds the following temperature.

Temperature	0 ℃ (32 ℉)

CONTROLS OF THE BACKHOE

You can control the backhoe using the two-lever-joystick-system.

WARNING

To avoid serious injury or death:

- **For all excavation work, operate the backhoe from the operator's seat of the backhoe only.**
- **Do not tamper with any backhoe-control-valve-relief-pressure-setting.**
  The relief valve is preset at the factory. Changing the setting of the relief valve can cause overloading of the backhoe and the tractor and serious personal injury may result.
- **Put the boom-and-swing-lock-lever into the lock position when the backhoe is not in use or during transport.**

The left lever controls the boom and swing circuits, and the right lever controls the dipperstick and bucket circuits. The further the levers are moved from **neutral**, the faster the component will move. Learn the feature of the controls for smooth and precise component movement.

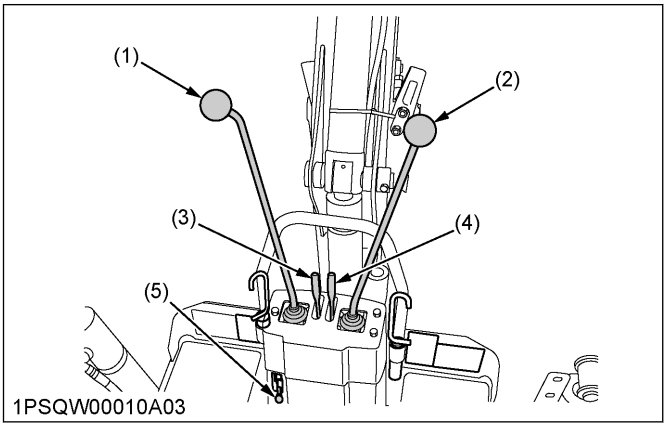

(1) Boom and swing lever
(2) Dipperstick and bucket lever
(3) Stabilizer control lever, left
(4) Stabilizer control lever, right
(5) Boom and swing lock lever

1. Boom and swing lever

- Pushing the boom-and-swing-lever forward will lower the boom.
- Pulling the boom-and-swing-lever back will raise the boom.
- Moving the boom-and-swing-lever to the left will swing the bucket to the left.
- Moving the boom-and-swing-lever to the right will swing the bucket to the right.

By moving the boom-and-swing-lever out of the **plus** "**+**" position and into an "**X**" relationship, it is possible to raise or lower the boom and swing the bucket at the same time.

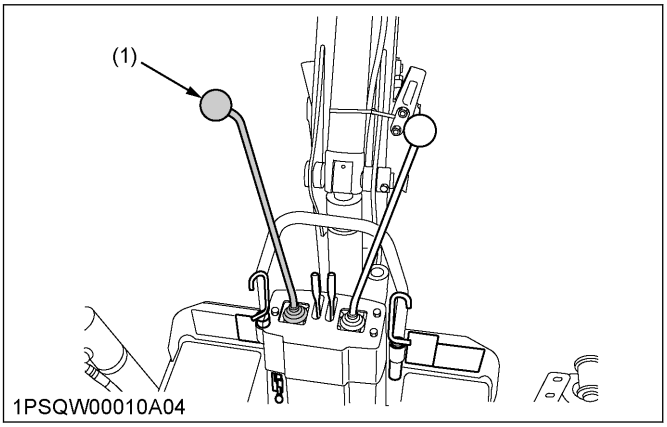

(1) Boom and swing lever

https://truckmanualshub.com/

2. Boom and swing lock lever

WARNING

To avoid serious injury or death:

- **Do not utilize the boom-and-swing-lock-lever for maintenance or repair of the machine.**
- **The boom-and-swing-lock-lever can prevent accidental actuation when the implement is not in use or when getting on and off from the backhoe.**

- To lock the boom-and-swing-lever, move down the boom-and-swing-lock-lever.
- To unlock the boom-and-swing-lever, move up the boom-and-swing-lock-lever.

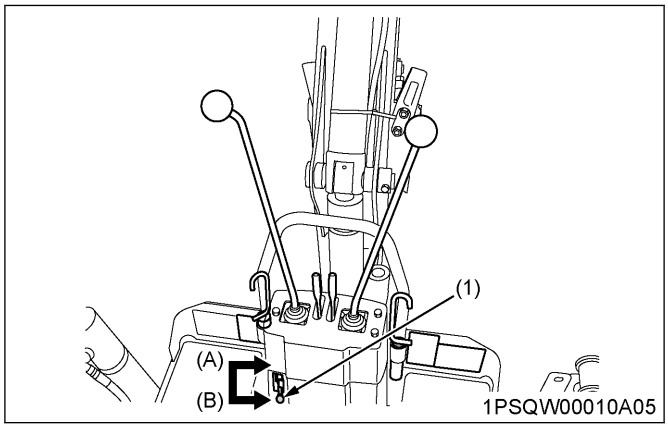

(1) Boom and swing lock lever (B) Lock
(A) Unlock

3. Dipperstick and bucket lever

- Pushing the bucket lever forward will crowd the dipperstick and the bucket out.
- Pulling the bucket lever back will crowd the dipperstick and the bucket in.
- Moving the bucket lever to the left will curl the bucket to fill it.
- Moving the bucket lever to the right lever movement will dump the bucket.
- Moving the bucket lever into an “**X**” relationship will crowd dipperstick and the bucket in and fill the bucket, or crowd them out and dump the bucket.

With experience, the combination of both joystick levers will allow lift, swing, crowd out, and spoil dumping, all in one smooth movement, or lowering, swing, crowd in, and bucket filling with reverse movement.

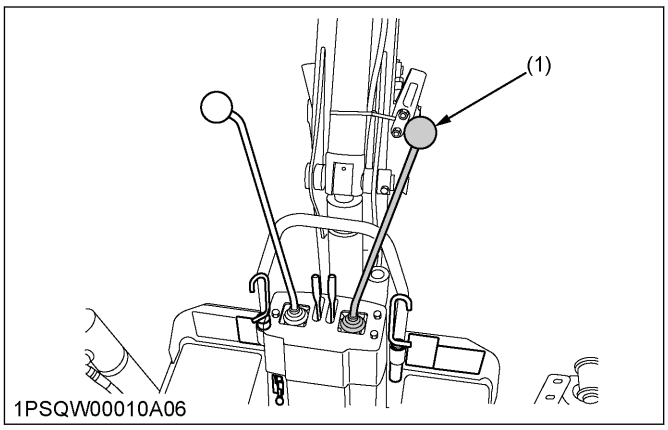

(1) Dipperstick and bucket lever

4. Stabilizer control levers

The stabilizers are the only controls that may be operated from out of the operator's seat of the backhoe over then only for the purpose of mounting the backhoe to the tractor or dismounting the backhoe from the tractor.

Be sure to stay well clear of stabilizers, arms, and pads during installation or removal process. Staying well clear of stabilizers, arms, and pads is necessary because the mounting step moves up and down in conjunction with the cylinder of the stabilizer.

- Moving the stabilizer-control-levers downward will lower the stabilizers.
- Moving the stabilizer-control-levers upward will raise the stabilizers.

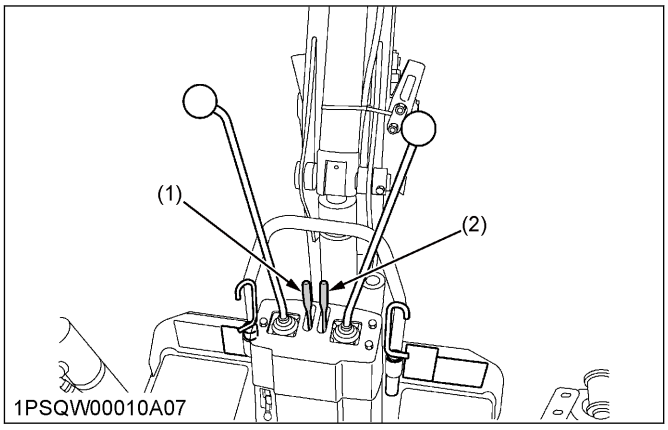

(1) Stabilizer control lever (left) (2) Stabilizer control lever (right)

PLACING THE STABILIZER

WARNING

To avoid serious injury or death:

- **When working on slopes, one stabilizer may be lower than the other.**
- **When digging on a hillside, always dump the bucket on the uphill side of excavation.**

https://truckmanualshub.com/

- **To reduce the risk of overturn on a slope, place the spoil to the high side of the excavation.**

1. Lower the stabilizers and remove the weight of the backhoe from the rear wheels. However, one or both rear tires should remain in light contact with the ground.
   When you place the stabilizers on an unusually steep slope, see 1. Placing the stabilizer on an unusually steep slope on page 110.
   Preceding step will give the backhoe the widest possible stance and the lowest center of gravity.

   NOTE :
   - **Raising the rear wheels too high will reduce digging depth and exert undue stress on the frame components of the backhoe.**

2. Lower the bucket of the loader to give the backhoe unit a tri-pod stance.
   With the bucket of the loader in ground contact, bounce of the front tire will not be a factor in overall control.
3. When possible, lower the cutting edge of the bucket of the loader vertically into the ground surface.
   Lowering the cutting edge of the bucket of the loader will assist the stabilizers, not allowing the unit to shift, while excavating.
   However, on a slope, you should use the bottom of the bucket and only the side that contacts the uneven terrain. Too much loader-down-pressure, on a slope, will restrict the unit from being correctly leveled and will place an undue twist through the bucket of the loader and lift arms.

1. Placing the stabilizer on an unusually steep slope

Following procedure is recommended when a wall, tree line, or other obstruction prevents placing the backhoe spoil on the high side of the excavation.

1. Cut a level surface with the loader and pile the spoil on the downhill side.
2. Back drag and pack the spoil which will support the stabilizer on the low side.

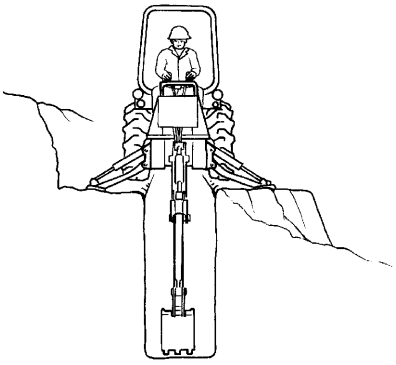

1PSQW00044A01

GENERAL BACKHOE OPERATION

WARNING

To avoid serious injury or death:
- **Do not dig under the stabilizer or tractor, especially in soft or sandy condition.**
  Take extra precaution in wet or thawing ground. Wet or thawing ground can become unstable very quickly and may collapse under the weight of the machine and may tip over.
- **Use care for buried material such as electrical, telephone, gas, and water lines. When in doubt, contact local utility companies for their buried location.**

IMPORTANT :
- **Do not use the tractor to pull out tree stumps with the boom dipper extended and the bucket in its crowded position.**

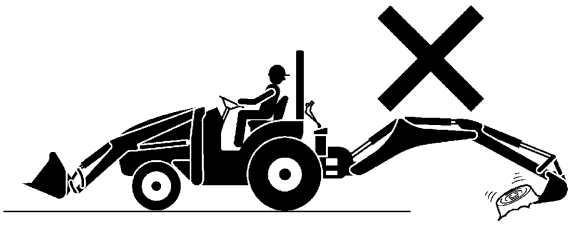

1PSQW00045A01

1. Digging with operating the dipperstick

1. Lower the bucket to the ground.
2. The same as with bucket digging, curl until the teeth of the bucket are flat on the ground.

https://truckmanualshub.com/

3. Using only the crowd cylinder, retract the dipperstick, dragging the bucket through the trench until it is approximately half full.
4. Start to curl the bucket in while continuing to crowd until the bucket is completely full.
5. Raise and swing the boom and dump the bucket in the spoil area on the high side of the trench or excavation.

2. Dealing with the spoil pile

WARNING

To avoid serious injury or death:

- **Do not place the spoil close to the edge of the excavation where its weight could cause a cave-in.**

Carefully preplan the location for the spoil which will be removed from the excavation. The location will vary depending on the excavation being dug.

1. Approach the pile with the bucket of the backhoe full and ready to empty.
2. Instead of dumping on top, lower the full bucket into the top of the pile.
3. Start dumping and crowding out at the same time.

Because the bucket opens and dumps, the bottom of the bucket will push the top of the pile off and behind its location, safely away from the excavation.

3. Digging straight wall or cemetery

1. Strip the top soil off the ground, within the confines of the straight hole or grave to be dug.
2. Clean out as much material, within the confines of the straight hole or grave, as possible with normal digging methods.
3. Finish the far wall by crowding out while forcing the bucket down with the boom.
4. Curl the bucket out to keep the bottom of the bucket vertical while cutting from top to down.

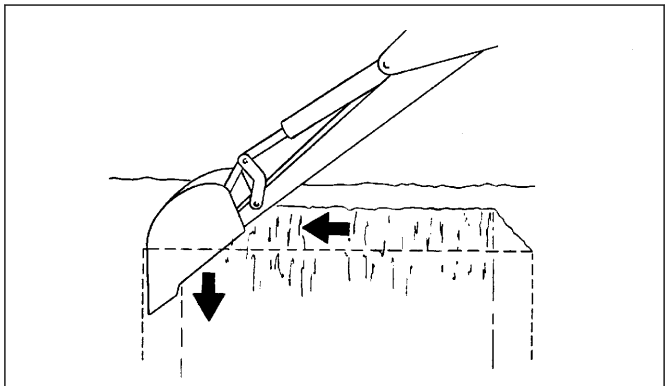

1PSQW00046A01

5. To finish the near wall, raise the boom while crowding in.

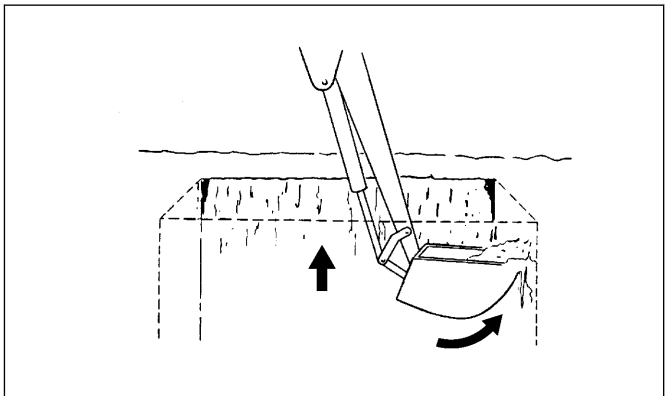

1PSQW00047A01

The bucket will have to be curled in to keep the cutting edge horizontal with the wall during the up cut.

6. When finishing straight wall, or digging graves, in sandy soil, use a platform under the rear tires and stabilizers.
   The platform distributes the load of the backhoe over a large area and lessens the possibility of a cave-in.

4. Stabilizer pads (standard)

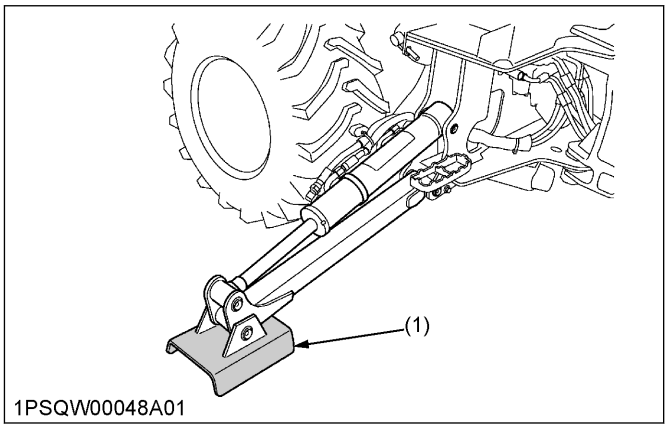

1PSQW00048A01

(1) Stabilizer pads

IMPORTANT :

- **Always lower the stabilizers slightly when changing from one position to another to avoid soil splash.**

TRANSPORTING OF THE BACKHOE

WARNING

To avoid serious injury or death:

- **Before transporting the machine, raise and center the boom, close the dipperstick, curl the bucket, engage the boom and swing locks and**

https://truckmanualshub.com/

put the boom and swing lock lever into lock position.

- **Always securely fasten the tractor, the loader, and the backhoe, with chains and chain binders, to the transport vehicle. Determine and note the height of the load of the backhoe, for underpass clearance, before transporting it.**

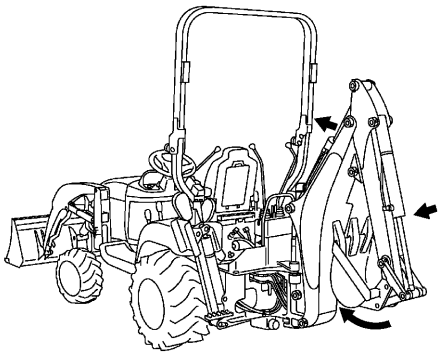

1. Precautions for driving to the job-site

- When driving or transporting the backhoe from one job-site to another, or when using the loader such as stockpiling and backfilling, always engage the locks of the boom and swing.

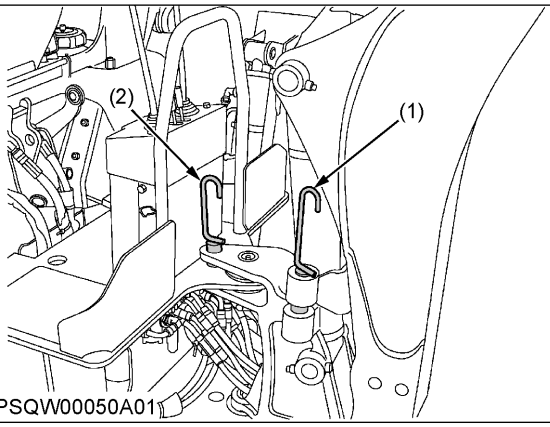

(1) Boom lock pin (2) Swing lock pin

- Put the boom-and-swing-lock-lever into the **lock** position.

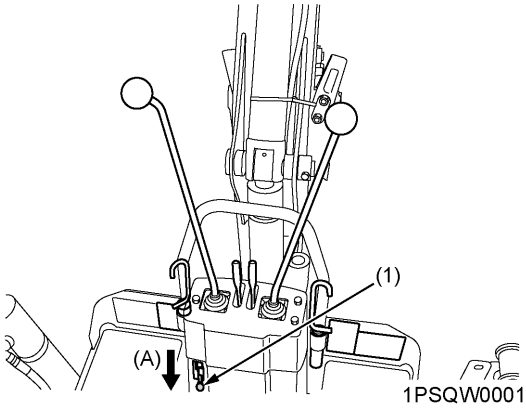

(1) Boom and swing lock lever (A) Lock

2. Precautions of the trailer transporting

- When loading or off-loading the machine on or from the trailer and the truck, use strong, secure ramps long enough to provide a low angle to the transport vehicle.
- After loading the machine, follow the following procedure.
  1. Release the lock of the boom.
  2. Lower the bucket of the backhoe to the bed of the transport vehicle.
  3. Lower the bucket of the loader.
  4. Set the parking brake of the tractor.
  5. Shut the engine off.
  6. Remove the key.
- Check the hood for proper securement, and remove the slow-moving-vehicle (SMV) sign from holder when driving to transport to avoid damage. Reinstall the SMV sign after transport.
- Check the local codes or regulations which may apply to the tractor, the loader, and the backhoe operation on public streets or highways, before transporting them or traveling. Use the SMV emblem and warning flashers as required.

https://truckmanualshub.com/

MAINTENANCE OF THE TRACTOR

SERVICE INTERVALS

No.	Items		Indication on hour meter														Since then	Ref. page		
			50	100	150	200	250	300	350	400	450	500	550	600	650	700				
1	Engine oil	Change	◎			○				○				○			every 200 Hr	129	*1	
2	Engine oil filter	Replace	◎			○				○				○			every 200 Hr	129	*1	
3	Transmission oil filter	Replace	◎			○				○				○			every 200 Hr	130	*1	
4	Engine start system	Check	○	○	○	○	○	○	○	○	○	○	○	○	○	○	every 50 Hr	123		
5	OPC system	Check	○	○	○	○	○	○	○	○	○	○	○	○	○	○	every 50 Hr	124		
6	Greasing	-	○	○	○	○	○	○	○	○	○	○	○	○	○	○	every 50 Hr	123		
7	Wheel bolt torque	Check	○	○	○	○	○	○	○	○	○	○	○	○	○	○	every 50 Hr	124		
8	Lock lever	Clean	○	○	○	○	○	○	○	○	○	○	○	○	○	○	every 50 Hr	125		
9	Battery condition	Check		○		○		○		○		○		○		○	every 100 Hr	125	*B	
10	Air cleaner element	Clean		○		○		○		○		○		○		○	every 100 Hr	126	*2	@
		Replace															every 1000 Hr or 1 year	133	*3	
11	Fuel filter element	Check		○		○		○		○		○		○		○	every 100 Hr	127		@
		Replace								○							every 400 Hr	133	*K	
12	Fan belt	Adjust		○		○		○		○		○		○		○	every 100 Hr	128		
13	HST neutral spring	Adjust		○		○		○		○		○		○		○	every 100 Hr	128	*K	
14	Brake pedal	Adjust		○		○		○		○		○		○		○	every 100 Hr	128		
15	Toe-in	Adjust				○				○				○			every 200 Hr	131		
16	Transmission fluid	Change								○							every 400 Hr	131		
17	Transmission strainer	Clean								○							every 400 Hr	132		
18	Front axle case oil	Change								○							every 400 Hr	132		
19	Front axle pivot	Adjust								○							every 400 Hr	131		
20	Engine valve clearance	Adjust															every 800 Hr	133	*K	
21	Injection pressure of the fuel injection nozzle	Check															every 1500 Hr	133	*K	@
22	Injection pump	Check															every 3000 Hr	135	*K	@
23	Cooling system	Flush															every 2000 Hr or 2 years	133	*4	
24	Coolant	Change															every 2000 Hr or 2 years	133	*4	
25	Radiator hose and clamp	Check															every 1 year	135	*R	
		Replace															every 4 years	136	*K	
26	Power steering oil line	Check															every 1 year	135	*R	
		Replace															every 4 years	137	*K	
27	Fuel line	Check															every 1 year	135	*R	@
		Replace															every 4 years	137	*K	
28	Intake air line	Check															every 1 year	136	*R	@
		Replace															every 4 years	137	*K	

(Continued)

https://truckmanualshub.com/

No.	Items		Indication on hour meter														Since then	Ref. page		
			50	100	150	200	250	300	350	400	450	500	550	600	650	700				
29	Engine breather hose	Check															every 1 year	136	*R *K	
		Replace															every 4 years	137	*K	
30	Fuel system	Bleed															Service as required	137		
31	Fuse	Replace																137		
32	Light bulb	Replace																138		

IMPORTANT :

- **You must perform the jobs indicated by ◎ after the first 50 hours of operation.**
- **The items which is @ marked are registered as the emission-related-critical-parts by KUBOTA in the U.S.EPA nonroad emission regulation. As the engine owner, you are responsible for the performance of the required maintenance on the engine according to the preceding instruction.**
  Please see Warranty Statement in detail.

*1 The initial 50 hours should not be a replacement (changing) cycle.
*B When the battery is used for less than 100 hours per year, check the battery condition by reading the indicator annually.
*2 You should clean the air cleaner more often in dusty conditions than in normal conditions.
*3 Every 1,000 hours or every 1 year whichever comes faster.
*K Consult your local KUBOTA Dealer for this service.
*4 Every 2,000 hours or every 2 years whichever comes faster.
*R Replace if any deterioration (crack, hardening, scar, or deformation) or damage occurred.

https://truckmanualshub.com/

LUBRICANTS, FUEL, AND COOLANT TABLE

No.	Locations	Capacities	Grade	
1	Fuel	25 L (6.6 U.S.gals.)	No. 2-D diesel fuel No. 1-D diesel fuel if temperature is below -10 ℃ (14 ℉)	
2	Coolant with recovery tank	3.1 L (3.3 U.S.qts.)	Fresh clean soft water with anti-freeze	
3	Engine crankcase	3.3 L*1 (3.3 U.S.qts.)	• **Engine oil** API Service Classification CF or higher	
			Above 25 ℃ (77 ℉)	SAE30, SAE10W-30 or 15W-40
			0 ℃ to 25 ℃ (32 ℉ to 77 ℉)	SAE20, SAE10W-30, or 15W-40
			Below 0 ℃ (32 ℉)	SAE10W, SAE10W-30, or 15W-40
4	Transmission case	11.3 L (2.99 U.S.gals.)	• KUBOTA SUPER UDT-2 fluid*2	
5	Front axle case	3.6 L (3.8 U.S.qts.)	• KUBOTA SUPER UDT-2 fluid *2 or SAE 80-SAE90 gear oil	
6	**Greasing**	**Number of greasing points**	**Capacity**	**Type of grease**
	Battery terminal	2	Moderate amount	Multipurpose EP2 Grease (NLGI Grade No.2)
	Speed control pedal	1	Until grease overflow	
	Hood lock	1	Moderate amount	
	Hood guide	1	Moderate amount	

IMPORTANT :
- **To prevent serious damage to hydraulic systems, use only KUBOTA genuine fluid or its equivalent.**

*1 Oil amount when the oil level is at the upper level of the oil level gauge.

*2 The product name of KUBOTA genuine UDT fluid may be different from that in the operator's manual depending on countries or territories. Consult your local KUBOTA Dealer for further detail.

1. Lubricants, fuel, and coolant for North American market

Fuel

- Cetane number of 45 is minimum. Cetane number greater than 50 is preferred, especially for the following temperatures or the following elevations.

Temperatures	Below -20 ℃ (-4 ℉)
Elevations	Above 1500 m (5000 ft)

- Diesel fuels specified to EN 590 or ASTM D975 are recommended.
- No.2-D is a distillate fuel of lower volatility for engines in industrial and heavy mobile service (SAE J313 JUN87).

Engine oil

- Oil used in the engine should have an American Petroleum Institute (API) service classification and proper SAE engine oil according to the ambient temperatures as shown in LUBRICANTS, FUEL, AND COOLANT TABLE on page 115.
- Refer to the following table for the suitable API classification engine oil according to the engine type with internal EGR, external EGR, or non-EGR, and the fuel.

Fuel used	Engine oil classification (API classification)	
	Oil class of engines except external EGR	**Oil class of engines with external EGR**
Ultra low sulfur fuel [<0.0015% (15 ppm)]	CF, CF-4, CG-4, CH-4, or CI-4	CF or CI-4 You cannot use the class CF-4, CG-4, nor CH-4 engine oils on ERG-type-engines.

EGR
Exhaust gas re-circulation

- The CJ-4 engine oil is intended for DPF (diesel-particulate-filter) type engines, and cannot be used on this tractor.

https://truckmanualshub.com/

	except external EGR	with external EGR
Model	BX23S	-

Transmission oil

- **KUBOTA Super UDT-2**
  For an enhanced ownership experience, we highly recommend Super UDT-2 to be used instead of standard hydraulic/transmission fluid.
  Super UDT-2 is a proprietary KUBOTA formulation that delivers superior performance and protection in all operating conditions.
  Regular UDT is also permitted for use in this machine.
- Indicated capacities of water and oil are manufacturer's estimate.

2. Lubricants, fuel, and coolant for other than North American market

Fuel

- Cetane number of 45 is minimum. Cetane number greater than 50 is preferred, especially for the following temperatures or the following elevations.

Temperatures	Below -20 ℃ (-4 ℉)
Elevations	Above 1500 m (5000 ft)

- If diesel fuel with sulfur content greater than the following percentage, reduce the service interval for engine oil and filter by 50%.

Percentage of sulfur content diesel fuel	0.5% (5000 ppm)

- Never use diesel fuel with sulfur content greater than the following percentage for EXTERNAL-EGR-type engine.

Percentage of sulfur content diesel fuel	0.5% (5000 ppm)

- Do not use diesel fuel with sulfur content greater than the following percentage.

Percentage of sulfur content diesel fuel	1.0% (10000 ppm)

- Diesel fuels specified to EN 590 or ASTM D975 are recommended.
- No.2-D is a distillate fuel of lower volatility for engines in industrial and heavy mobile service (SAE J313 JUN87).

Engine oil

- Oil used in the engine should have an American Petroleum Institute (API) service classification and proper SAE engine oil according to the ambient temperatures as shown in LUBRICANTS, FUEL, AND COOLANT TABLE on page 115.
- With the emission control now in effect, the CF-4 and CG-4 lubricating oils have been developed for use of a low-sulfur fuel on the engines of the on-road vehicle. When an engine of off-road vehicle runs on a high-sulfur fuel, it is advisable to employ the CF or better lubricating oil with a high total-base-number (TBN). Minimum of the TBN is 10.
- Refer to the following table for the suitable API classification engine oil according to the engine type with internal EGR, external EGR, or non-EGR, and the fuel (low-sulfur or high-sulfur fuel).

Fuel used	Engine oil classification (API classification)	
	Oil class of engines except external EGR	Oil class of engines with external EGR
High sulfur fuel [0.05% (500 ppm)]	CF If the lubricating oil of CF-4, CG-4, CH-4, or CI-4 is used with a high-sulfur fuel, change the lubricating oil at shorter intervals (approximately half).	-
Low sulfur fuel [<0.05% (500 ppm)] or ultra low sulfur fuel [<0.0015% (15 ppm)]	CF, CF-4, CG-4, CH-4, or CI-4	CF or CI-4 You cannot use the class CF-4, CG-4, nor CH-4 engine oils on ERG-type-engines.

EGR
Exhaust gas re-circulation

- The CJ-4 engine oil is intended for DPF (diesel-particulate-filter) type engines, and cannot be used on this tractor.

	Except external EGR	With external EGR
Model	BX23S	-

Transmission oil

- **The oil used to lubricate the transmission is also used as hydraulic fluid. To make sure of proper operation of the hydraulic system and to complete lubrication of the transmission, it is important that a multi-grade transmission fluid is used in the transmission system. We recommend the use of KUBOTA UDT or SUPER UDT fluid for optimum protection and performance. Consult your local KUBOTA Dealer for further detail.**
  Do not mix different brands of the transmission oils together.
- Indicated capacities of water and oil are manufacturer's estimate.

https://truckmanualshub.com/

3. Biodiesel fuel (BDF)

B0-B20 biodiesel fuels (BDF)

You can use mixed diesel fuels containing 20% or less biodiesel under the following conditions.

IMPORTANT :

- **Concentrations greater than B5 (5%) are not approved for common rail engines and engines with aftertreatment device. Using concentrations greater than B5 (5%) can cause damage and reduce engine life.**
- **Refuel and use the fuel with caution in order to avoid contact with the fuel and spillage that could create a potential environmental or fire hazard. Wear appropriate protective equipment when refueling.**

Applicable BDF

- You can use blended diesel fuels containing 6% through 20% BDF (B6-B20) which comply with American society for testing and materials (ASTM) D7467 standard, as revised, without adversely affecting the performance and durability of the engine and the components of the fuel system.
- Any mineral-oil-diesel-fuel, if used, must conform to ASTM D975 (or the European EN590) Standard, as revised.
  B100 fuel used to generate biodiesel-blended-fuels must meet ASTM D6751 (or EN14214) Standard, as revised.
  The final blended fuel B20 must conform to ASTM D7467 standard, as revised.
  Straight-vegetable-oil is not allowed in any blended fuel.
- Allowable blended fuel is mineral-oil-diesel-fuel blended with B100 (for example 100% BDF).
  The blended fuel ratio shall be less than 20% B100 and 80% or more diesel fuel.
  Purchase the B100 source used for biodiesel blends from an accredited BQ-9000 marketer or producer.
  You can find more information about qualified marketer(s) and producer(s) at *http://www.bq-9000.org* .

Product warranty, emission, and other precautions

- The engine-emission-control-system was certified according to current regulations based on the use of non-BDF. When using BDF, the owner is advised to check applicable local and federal emission regulations, and comply with all of them.
- BDF may cause restricted or clogged fuel filters during cold weather conditions, resulting in the engine not operating properly.
- BDF encourages the growth of microorganisms which may cause degradation of the fuel. degradation of the fuel may cause corrosion of the fuel line or reduce the fuel filter flow earlier than expected.
- BDF inherently absorbs moisture which may cause degradation of the fuel earlier than expected. To avoid absorbing moisture of BDF, drain the water separator and the fuel-filter-port often.
- Do not use biodiesel whose concentrations higher than 20% (for example, greater than B20).
  Higher concentrated biodiesel will affect engine performance and fuel consumption, and degradation of the fuel system components may occur.
- Do not readjust the engine-fuel-control-system because readjusting it will violate the emission-control-levels for which the equipment was approved.
- Compared with soybean-based and rapeseed-based feedstock, palm-oil-based feedstock has a thicker consistency (for example, higher viscosity) at lower temperatures.
  Consequently, palm-oil-based feedstock may reduce performance of the fuel filter, particularly during cold weather conditions.
- The KUBOTA warranty, as specified in the Owner's Warranty Information Guide, only covers flaws in product materials and workmanship. Accordingly, The KUBOTA warranty do not cover any problems that may arise due to the use of poor quality fuels that fail to meet the preceding requirements, whether biodiesel or mineral-oil-based.

Routine using

- Avoid spilling BDF onto painted surfaces because this may damage the finish. If the fuel is spilled, immediately wipe clean and flush with soapy water to avoid permanent damage.
- When using BDF, you are advised to maintain a full tank of the fuel, especially overnight and during short term storage, to reduce condensation within the tank. Be sure to tighten the fuel cap after refueling to prevent moisture build up within the tank. Water in the biodiesel mixture will damage the fuel filters and may damage the engine components.

Maintenance Requirements when using BDF B0 through B5

Follow the oil-change-intervals recommended by referring to the SERVICE INTERVALS on page 113. Extended oil-change-intervals may result in premature wear or engine damage.

Maintenance Requirements when using BDF B6 through B20

The maintenance interval for fuel related parts changes.

See the following table for the new maintenance interval.

https://truckmanualshub.com/

Items		Interval	Remarks
Fuel filter	Check	Every 50 hr	
	Replace	Every 200 hr	Consult your local KUBOTA dealer for replacing the fuel filter.
Fuel hose	Check	Every 6 months	Replace if any deterioration (crack, hardening, scar, or deformation) or damage occurred.
	Replace	Every 2 years	Consult your local KUBOTA dealer for replacing the fuel hose.

Long term storage for B5

- BDF easily deteriorates due to oxygen, water, heat, and foreign substances. Do not store B5 longer than three months.
- When using B5 fuel and storing the machine longer than three months, drain the fuel from the tanks and replace with light-mineral-oil-diesel-fuel.
  Subsequently, run the engine at least the following minutes to remove all of the biodiesel from the fuel lines.

Running the engine	30 minutes

Long term storage for B6 through B20

- BDF easily deteriorates due to oxygen, water, heat, and foreign substances. Do not store B6 through B20 longer than one month.
- When using B6 through B20 fuel and storing the machine longer than one months, drain the fuel from the tanks and replace with light-mineral-oil-diesel-fuel. Subsequently, run the engine at least the following minutes to remove all of the biodiesel from the fuel lines.

Running the engine	30 minutes

https://truckmanualshub.com/

PERIODIC SERVICE OF THE TRACTOR

WARNING

To avoid serious injury or death:

- **Do not work under any hydraulically supported devices. Working under any hydraulically supported devices can settle, suddenly leak down, or be accidentally lowered.**
- **If necessary to work under the tractor or any machine elements for servicing or adjustment, securely support the tractor or any machine elements with stands or suitable blocking beforehand.**

HOW TO OPEN THE FRONT GUARD AND THE HOOD

WARNING

To avoid serious injury or death from contact with moving parts:

- **Never open the hood or engine side cover while the engine is running.**
- **Do not touch the muffler or the exhaust pipes while they are hot.**
  Touching the hot muffler or exhaust pipes could cause severe burns.

1. Pull the front guard forward.
2. Pull the hood-open-lever to release the latch to open the hood, and open the hood.

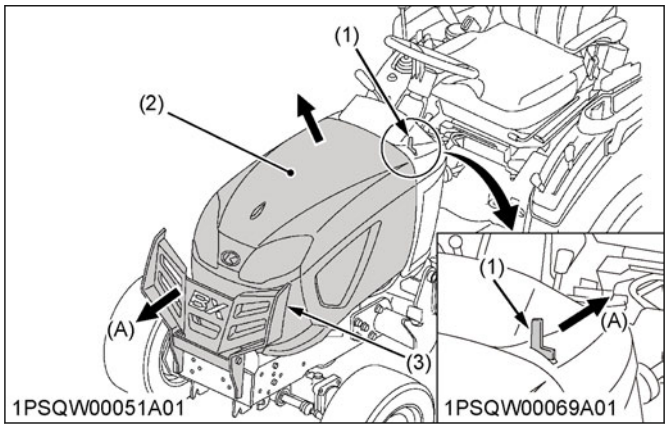

(1) Hood open lever
(2) Hood
(3) Front guard
(A) Pull

DAILY CHECK OF THE TRACTOR

WARNING

To avoid serious injury or death:
Take the following precautions when checking the tractor.

- **Park the machine on firm and level ground.**
- **Set the parking brake.**
- **Lower the implement to the ground.**
- **Release all residual pressure of the hydraulic system.**
- **Stop the engine and remove the key.**

For your own safety and maximum service life of the machine, daily inspect the machine thoroughly before operating it or starting the engine.

1. Walk around inspection

Before checking the tractor, inspect surroundings of it. Look around and under the tractor for such items as loose bolts, trash build-up, oil or coolant leaks, or broken or worn parts.

2. Checking the fuel gauge and refueling

WARNING

To avoid serious injury or death:

- **Do not smoke while refueling.**
- **Be sure to stop the engine and remove the key before refueling.**

To avoid allergic skin reaction:

- **Wash hands immediately after contact with diesel fuel.**

IMPORTANT :

- **Do not permit dirt, trash, or water to get into the fuel system.**
- **Be careful not to empty the fuel tank, otherwise air will enter the fuel system, necessitating bleeding before next starting the engine.**
- **Be careful not to spill the fuel during refueling. If you should spill, wipe it off at once, or it may cause a fire.**
- **To prevent water condensation and water accumulation in the fuel tank, fill the tank before parking overnight.**

https://truckmanualshub.com/

Using fuel

Temperature	fuel
Above -10 ℃ (14 ℉)	Grade No.2-Diesel fuel
Below -10 ℃ (14 ℉)	Grade No.1-Diesel fuel

1. Turn the key switch to the **on** position and check the amount of fuel by the fuel gauge.
2. Fill the fuel tank with fuel when the fuel gauge shows as follows.

Amount of fuel for refueling	1/4 or less in the fuel tank
Fuel tank capacity	25 L (6.6 U.S.gals.)

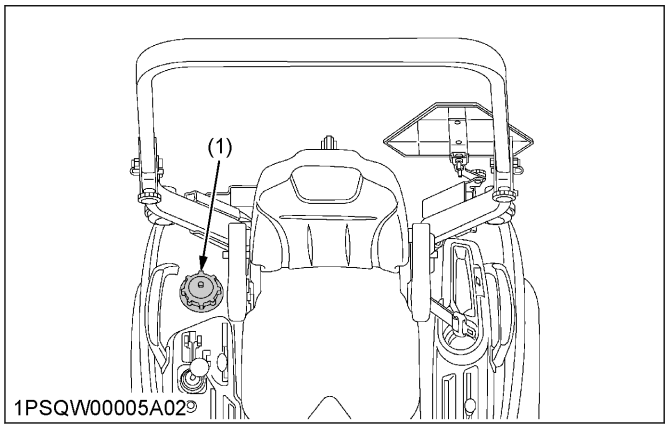

(1) Fuel tank cap

3. Checking the engine oil level

WARNING

To avoid serious injury or death:

- **Be sure to stop the engine before checking the engine oil level.**

IMPORTANT :

- **When using an engine oil of different maker or viscosity from the previous one, remove all of the old oil and oil filter. Never mix two different types of oil.**
- **If the engine oil level is low, do not run the engine.**
- **When using the BT603 Backhoe and checking oil level, locate the tractor, the loader, and the backhoe on a flat surface and set the loader and the backhoe as illustrated as follows.**

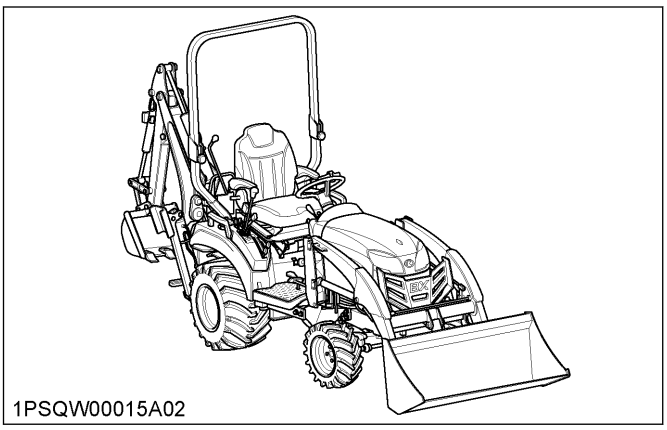

1. Park the machine on a firm, flat, and level surface.
2. Check the engine oil before starting the engine, or, after five minutes or more when the engine has been stopped.
3. To check the engine oil level, draw out the dipstick, wipe it clean, replace it, and draw it out again.
4. Check to see that the engine oil level lies between the two notches.
5. If the engine oil level is too low, add new oil to the prescribed level at the oil inlet.
   See LUBRICANTS, FUEL, AND COOLANT TABLE on page 115.

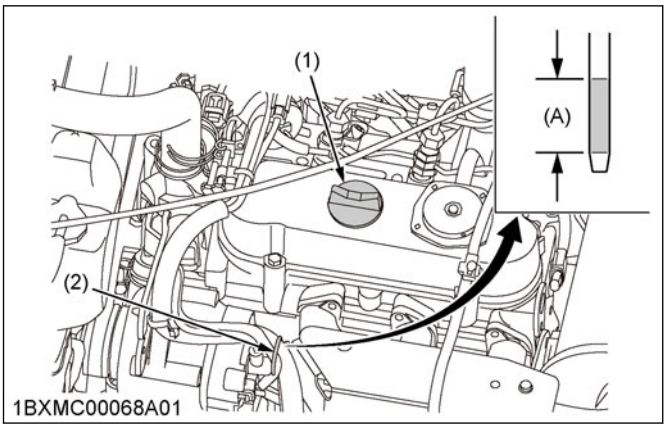

(1) Oil inlet
(2) Dipstick
(A) Engine oil level is acceptable within this range

4. Checking the transmission fluid level

WARNING

To avoid serious injury or death:

- **Park the tractor on a firm, flat, and level surface, lower the implement to the ground, and shut off the engine.**

IMPORTANT :

- **If the transmission fluid level is low, do not run the engine.**

https://truckmanualshub.com/

1. To check the transmission fluid level, check the dipstick as the following procedure.
   a. Draw out the dipstick.
   b. Wipe the dipstick clean.
   c. Replace the dipstick.
   d. Draw the dipstick out again.
2. Check to see that the transmission fluid level lies between the two notches.
3. If the transmission fluid level is too low, add new fluid to the prescribed level at the oil inlet.
   See LUBRICANTS, FUEL, AND COOLANT TABLE on page 115.

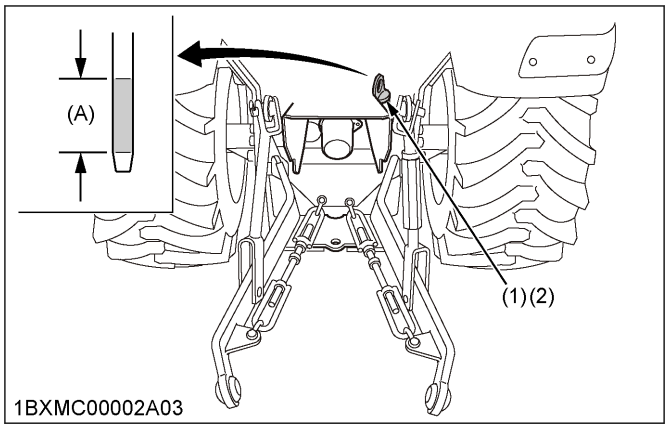

(1) Oil inlet
(2) Dipstick
(A) Transmission fluid level is acceptable within this range

5. Checking the coolant level

WARNING

To avoid serious injury or death:

- **Be sure to stop the engine and remove the starter key before checking coolant level.**
- **Do not remove the radiator cap while the coolant is hot. When the coolant is cool, slowly rotate the radiator cap to the first stop and allow sufficient time for excess pressure to escape before removing the radiator cap completely.**

IMPORTANT :

- **If the radiator cap has to be removed, follow the preceding warning and securely retighten the radiator cap.**
- **Use clean, fresh, soft water and anti-freeze to fill the recovery tank.**
- **If water should leak, consult your local KUBOTA Dealer.**

1. Check to see that the coolant level is between the "**H**" and "**L**" marks of the recovery tank.
2. When the coolant level drops due to evaporation, add soft water only. In case of leakage, add antifreeze and soft water in the specified mixing ratio up to the "**H**" level.
   See 1. Flushing the cooling system and changing the coolant on page 133.

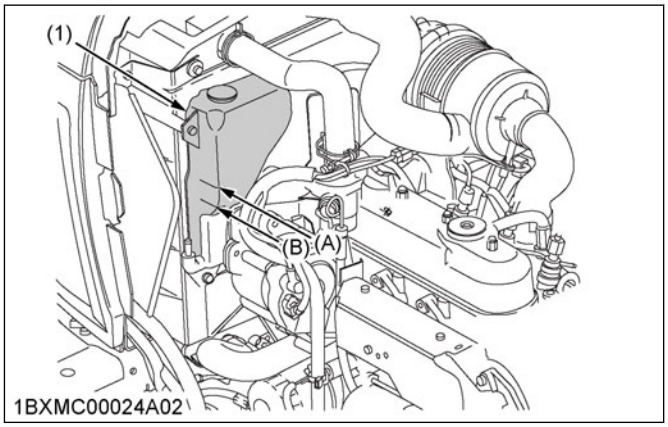

(1) Recovery tank
*(A) "**H**"*
*(B) "**L**"*

6. Cleaning the panel and the radiator screen

WARNING

To avoid serious injury or death:

- **Be sure to stop the engine and remove the starter key before removing the screen.**
- **Before checking or cleaning the panel, wait long enough until it cools down.**

IMPORTANT :

- **The panel and the radiator screen must be clean from debris to prevent the engine from overheating and to allow good air intake for the air cleaner.**
- **Be sure to reinstall the panel on the pillar completely to prevent the invasion of dust.**
- **Be sure to stop the engine to avoid personal injury and to allow good air intake for air cleaner.**

1. Make sure that the panel and the radiator screen are clean from debris.

https://truckmanualshub.com/

2. Detach the radiator screen, and then remove all the foreign material.

   NOTE :
   - **If the dust or chaff is accumulated in the battery compartment, open the panel and clean completely.**

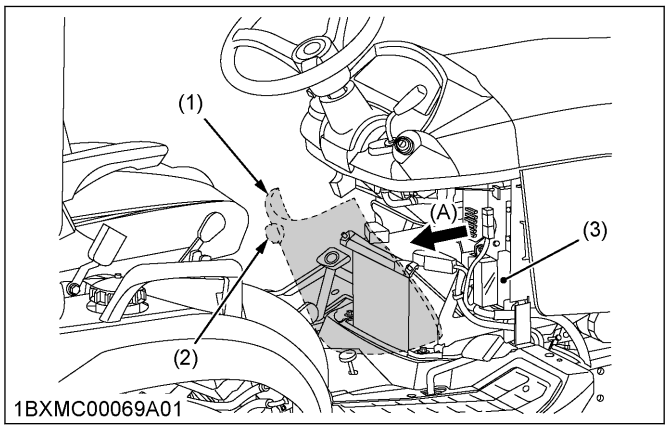

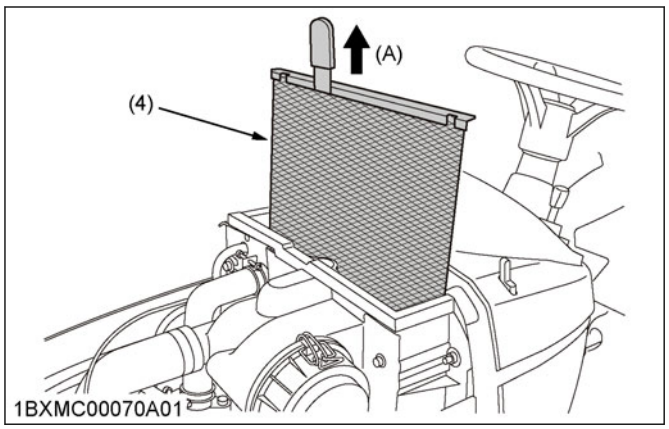

(1) Panel
(2) Knob
(3) Center pillar
(4) Radiator screen
(A) Detach

7. Checking the brake pedal

1. Inspect the brake pedal for free travel, and smooth operation.
2. Adjust the brake pedal if incorrect measurement is found.
   See 6. Adjusting the brake pedal on page 128.

8. Checking the gauges, the meters, and the Easy Checker™

1. Inspect the instrument panel for the broken gauge(s), the meter(s), and the Easy Checker™ lamps.
2. Replace the gauge(s), the meter(s), or the Easy Checker™ if they are broken.

9. Checking the head light, hazard light, and so on

1. Inspect the lights for broken bulbs and lenses.
2. Replace the lights if they are broken.

10. Checking the seat belt and the ROPS

1. Always check condition of the seat belt and the ROPS attaching hardware before operating the tractor.
2. Replace the seat belt or the ROPS if it is damaged.

11. Checking and cleaning the electrical wiring and the battery cables

⚠ WARNING

To avoid serious injury or death:
- **A loosened terminal or connector, or damaged wire may affect the performance of the electrical components or cause short circuits. Leakage of electricity could result in a fire hazard, a dead battery, or damage to the electrical components.**
- **Replace the damaged wires or connections promptly.**
- **If a fuse blows soon after replacement, do not use the capacity larger than recommended or bypass the fuse system.**
- **Many wiring connections are protected by waterproof plugs. Plug and unplug these connections carefully and make sure that they are sealed correctly after assembly.**
- **Accumulation of dust, chaff, and deposits of spilled fuel around the battery, electrical wiring, engine, or exhaust system may cause fire hazards.**
  Clean around the battery, electrical wiring, engine or exhaust system before starting to work.
- **To avoid premature electrical malfunctions, do not apply high pressure water directly to the battery, the wiring, the connectors, the electrical components, or the instrument panel.**

Inspect the following check items regularly
- Check the wiring for chafed or cracked insulation.
- Check the wiring harness clamps. Replace them if necessary.
- Check the connectors and the terminals for looseness, contamination, or overheated or discolored connections.
- Check the instrument panel for correct operation of the switches and the gauges.

https://truckmanualshub.com/

Consult your KUBOTA Dealer regarding maintenance, diagnosis, and repair.

12. Checking the movable parts

1. If any of the movable parts, such as levers and pedals, is not smoothly moved because of rust or sticky material, remove the rust or the sticky material, and apply oil or grease on the relevant spot.
   Do not force the movable parts into motion. Otherwise, the machine may get damaged.

SERVICE OF THE TRACTOR EVERY 50 HOURS

1. Lubricate fittings with grease

Apply a small amount of multipurpose grease to the following points every 50 hours.
If you operated the machine in extremely wet and muddy conditions, lubricate grease fittings more often.
Apply grease between rod and hole.

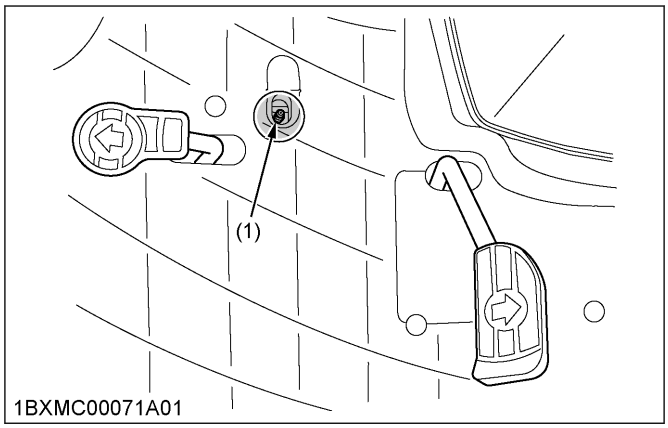

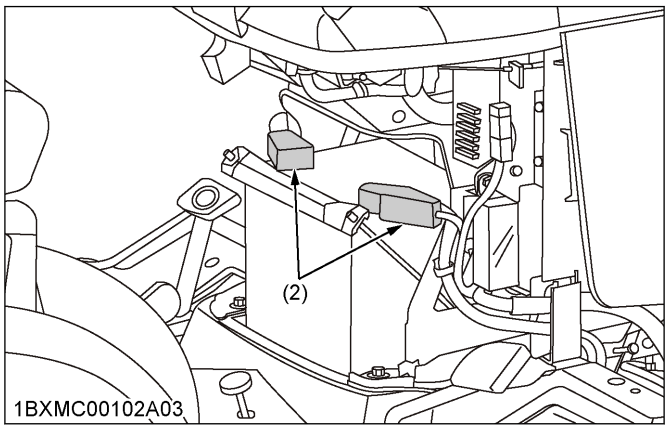

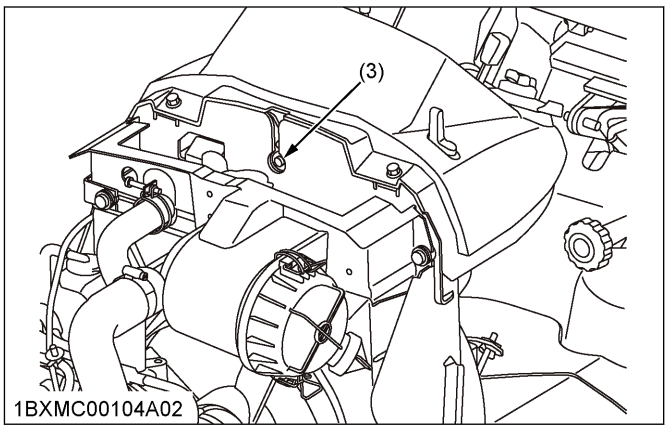

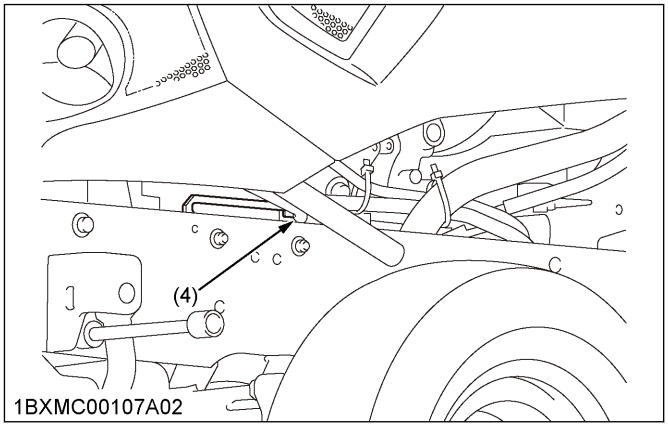

(1) Grease fitting for the speed control pedal
(2) Battery terminals
(3) Hood lock
(4) Hood guide

Apply grease between stays.

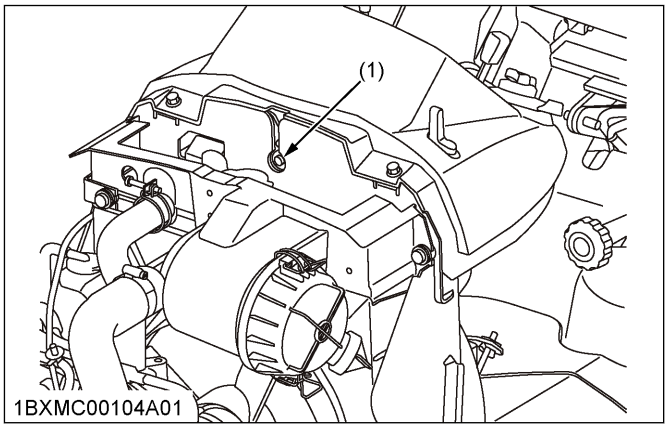

(1) Hood lock

2. Checking the engine start system

⚠ WARNING

To avoid serious injury or death:

- **Do not allow anyone near the tractor while testing.**
- **If the tractor does not pass the test, do not operate the tractor.**

https://truckmanualshub.com/

Preparation before testing
1. **Sit on the operator's seat.**
2. **Set the parking brake and stop the engine.**
3. **Shift the range-gear-shift-lever to the neutral "N" position.**
4. **Check whether the speed-control-pedal is in the neutral position.**
5. **Shift the PTO-clutch-lever to the off position.**

Test of switch for the speed control pedal
1. Make sure that the range-gear-shift-lever is set in the **neutral** "**N**" position.
2. Depress the speed-control-pedal.
3. Turn the key to the **start** position.

The engine must not crank. If the engine cranks, consult your local KUBOTA Dealer.

Test of switch for the PTO clutch lever
1. Make sure that the range-gear-shift-lever is set in the **neutral** "**N**" position.
2. Make sure that the speed-control-pedal is set in the **neutral** position.
3. **Shift the PTO-clutch-lever to the on position.**
4. Turn the key to the **start** position.

The engine must not crank. If the engine cranks, consult your local KUBOTA Dealer.

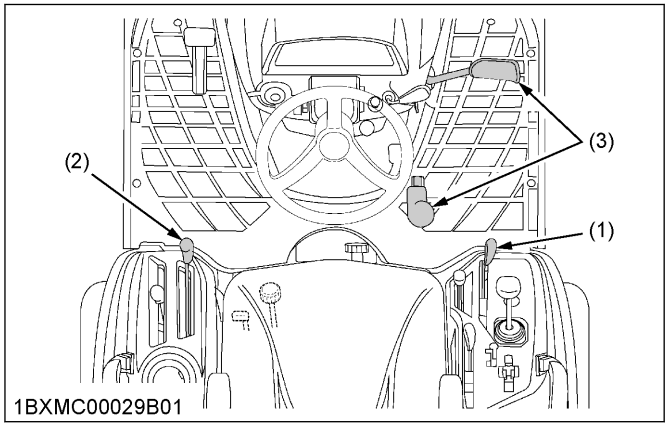

(1) Range gear shift lever (Hi-Lo)
(2) TO clutch lever
(3) Speed control pedal

3. Checking the OPC (operator presence control) system

WARNING

To avoid serious injury or death:
- **Do not allow anyone near the tractor while testing.**
- **If the tractor does not pass the test, do not operate the tractor.**

Preparation before testing
1. **Sit on the operator's seat.**
2. **Set the parking brake and stop the engine.**
3. **Shift the range-gear-shift-lever to the neutral"N" position.**
4. **Check whether the speed-control-pedal is in the neutral position.**
5. **Shift the PTO-clutch-lever to the off position.**

Test of switches for the operator's seat and the speed control pedal
1. Start the engine.
2. Depress the speed-control-pedal.
3. Stand up.
   Do not get off the machine.

The engine must shut off after approximately one second. If it does not stop, consult your local KUBOTA Dealer.

Test of switches for the operator's seat and the PTO clutch lever
1. Start the engine.
2. Engage the PTO-clutch-lever.
3. Stand up.
   Do not get off the machine.

The engine must shut off after approximately one second. If it does not stop, consult your local KUBOTA Dealer.

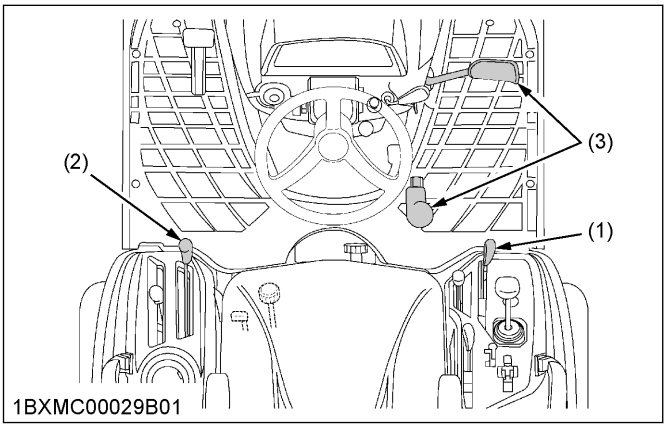

(1) Range gear shift lever (Hi-Lo)
(2) TO clutch lever
(3) Speed control pedal

4. Checking the wheel bolt torque

WARNING

To avoid serious injury or death:
- **Never operate the tractor with a loose rim, wheel, or axle.**
- **Any time bolts are loosened, retighten to the specified torque.**
- **Check all bolts frequently and keep them tight.**

1. Check the wheel bolts regularly especially when new.

https://truckmanualshub.com/

2. If they are loose, tighten them as follows.

Front

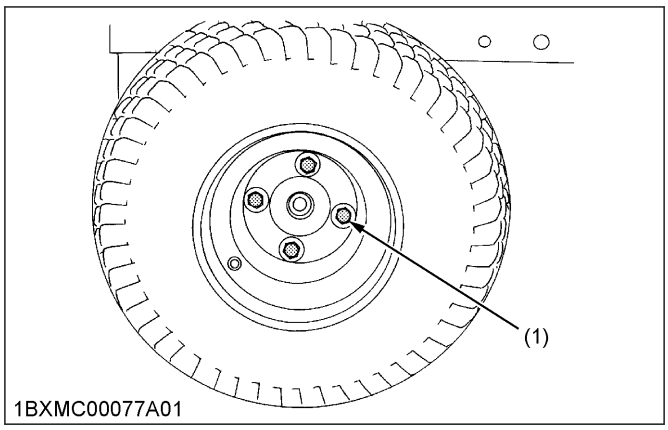

Rear

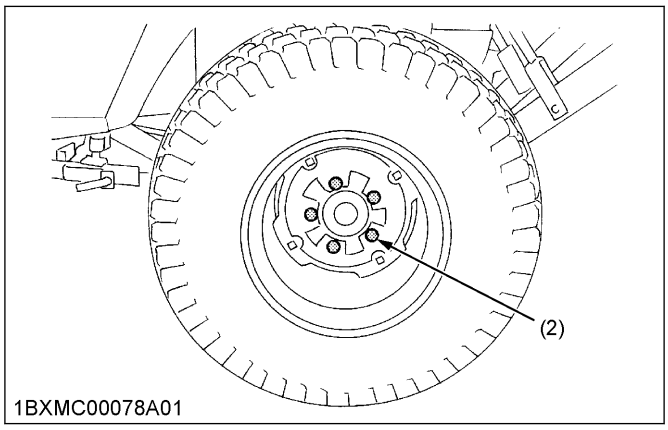

(1) 149.2 N·m to 179.0 N·m (15.2 kgf·m to 18.3 kgf·m) (110 lbf·ft to 132 lbf·ft)
(2) 108.5 N·m to 130.2 N·m (11.1 kgf·m to 13.3 kgf·m) (80 lbf·ft to 96 lbf·ft)

5. Cleaning the lock lever shaft

1. Before you use the lock lever, clean the lever-movable-area (1).

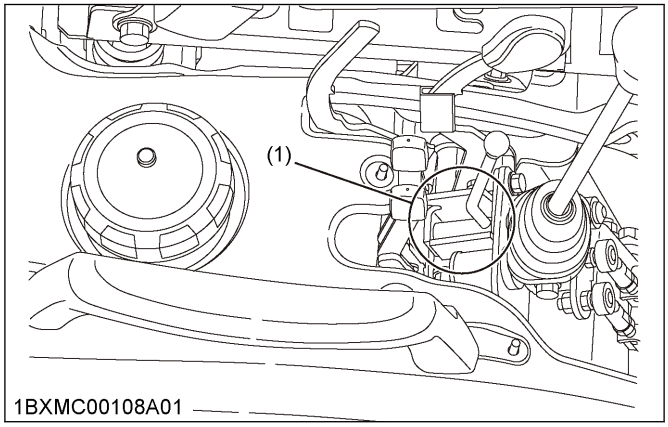

(1) Lever movable area

SERVICE OF THE TRACTOR EVERY 100 HOURS

1. Checking of the battery

DANGER

To avoid the possibility of battery explosion:
For the refillable-type-battery, follow the instructions as follows.

- **Do not use or charge the refillable-type-battery if the fluid level is below the lower-limit-level-mark. Otherwise, the battery component parts may prematurely deteriorate, which may shorten the service life of the battery or cause an explosion.**
- **Check the fluid level regularly and add distilled water as required so that the fluid level is between the upper level and the lower level.**

WARNING

To avoid serious injury or death:

- **Never remove the battery cap while the engine is running.**
- **Keep electrolyte away from eyes, hands, and clothes. If you are spattered with electrolyte, wash it away completely with water immediately and get medical attention.**
- **Keep open sparks and flames away from the battery at all times. Hydrogen gas mixed with oxygen becomes very explosive.**
- **Wear eye protection and rubber gloves when working around battery.**
- **Tighten the battery holder firmly when you re-assemble the battery.**
- **Make sure to put a clamp to the positive cable of the battery.**

IMPORTANT :

- **The factory-installed battery is of non-refillable type. If the battery is weak, charge the battery or replace it with new one.**
- **Mishandling the battery shortens the service life and adds to maintenance costs.**
  The original battery is maintenance free, but needs some servicing.
  If the battery is weak, the engine will be difficult to start and the lights will be dim. It is important to check the battery periodically.
- **When exchanging an old battery for a new one, use the battery of equal specification in the following table.**

https://truckmanualshub.com/

Battery type	526RMF
Volts	12 V
Reserve capacity	86 min
Cold cranking amps	560
Normal charging rate	8.6 A

For non-accessible maintenance-free type batteries
Maintenance-free, non-accessible batteries are designed to eliminate the need to add water. Yet the volume of electrolyte above plates may eventually become depleted due to abnormal conditions such as high heat or improper regulator setting. Use a voltmeter to check the state of charge. See the following table to determine if charging is necessary.

Battery voltage	Reference state of charge
12.6	100% (Full charge)
12.4	75%
12.2	50%
12.0	25%
11.8	0%

1.1 Battery charging

WARNING
To avoid serious injury or death:
- **When the battery is being activated, hydrogen and oxygen gases in the battery are extremely explosive. Keep open sparks and flames away from the battery at all times, especially when charging the battery.**
- **When disconnecting the cable from the battery, start with the negative terminal first. When connecting the cable to the battery, start with the positive terminal first.**
- **To prevent short circuit, before charging, make sure to remove the metal-battery-holder.**
- **Never check the battery charge by placing a metal object across the posts.**
  Use a voltmeter or hydrometer.

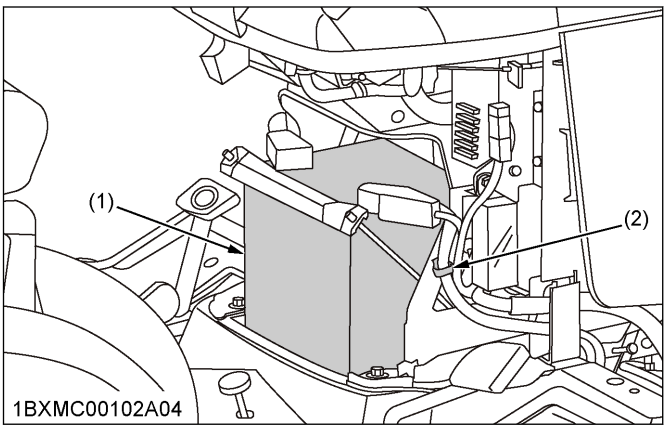

(1) Battery *(2) Clamp*

IMPORTANT :
- **Since the metal-battery-holder can crack, do not tighten it too much.**
- To slow charge the battery, connect the battery positive terminal to the charger positive terminal and the negative to the negative, then charge as follows.

Charging the battery	For at least 1 hour at 6.5 amperes

- A boost charge is only for emergencies. It will partially charge the battery at a high rate and in a short time. When using a boost-charged battery, it is necessary to recharge the battery as early as possible.
  Failure to recharge the battery will shorten the service life of battery.
- When the specific gravity of electrolyte is shown in the following table, the charging is completed.

Specific gravity of electrolyte	Between 1.27 and 1.29

1.2 Dealing with the battery when storing the tractor for a long period

1. Remove the battery from the tractor.
2. Adjust the electrolyte to the proper level.
3. Store the battery in a dry place out of direct sunlight.

The battery self-discharges while it is stored.
Recharge the battery once every three months in hot seasons and once every six months in cold seasons.

2. Cleaning the air cleaner element

WARNING
To avoid serious injury or death:
- **Be sure to stop the engine and remove the key before cleaning the air cleaner element.**

https://truckmanualshub.com/

IMPORTANT :
- **The air cleaner uses a dry element. Never apply oil to the air cleaner.**
- **Do not run the engine with filter element removed.**
- **Align the arrow marks when reinstalling the cover. If the cover is improperly fitted, dust passes by the baffle and directly adheres to the air-cleaner-element.**

NOTE :
- **Check to see if the evacuator valve is blocked with dust.**

1. Remove the air-cleaner-cover and air-cleaner-element.
   a. Undo the hook.
   b. Turn the air-cleaner-cover clockwise and detach it.
2. Clean the air-cleaner-element.
   When dry dust adheres to the air-cleaner-element, blow compressed air from the inside, turning the air-cleaner-element. Pressure of compressed air must be the value shown in the following table.

Pressure of compressed air	Below 205 kPa (2.1 kgf/cm^2, 30 psi)

3. When carbon or oil adheres to the air-cleaner-element, follow the following procedure.
   a. Soak the air-cleaner-element in detergent for the following minutes.

Soaking the air cleaner element in detergent	15 minutes

   b. Then wash it several times in water.
   c. Rinse the air-cleaner-element with clean water.
   d. Dry the air-cleaner-element naturally.
   e. After the air-cleaner-element is fully dried, inspect inside of it with a light and check if it is damaged or not.
   Refer to the instructions on the label attached to the case.
4. Replace the air-cleaner-element as the following table.

Replacing the air cleaner element	Every 1000 hours or every 1 year whichever comes faster

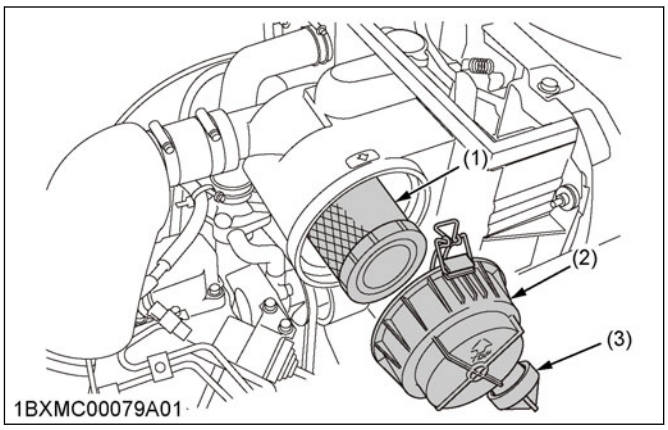

(1) Air cleaner element
(2) Air cleaner cover
(3) Evacuator valve

Evacuator valve
Open the evacuator valve once a week under ordinary conditions or daily when used in a dusty place to get rid of large particles of dust and dirt.

3. Checking the fuel filter

WARNING
To avoid serious injury or death:
- **Stop the engine and remove the key before checking the fuel lines and the fuel filter.**
- **Check the fuel lines periodically. The fuel lines are subject to wear and aging. Fuel may leak out onto the running engine, causing a fire.**

IMPORTANT :
- **When the fuel line is disconnected for maintenance or repair, plug both ends of the fuel line with a clean plug of suitable size to prevent dust and dirt from entering. Take particular care of the fuel filter in order to avoid dust and dirt getting into the fuel system. Entrance of dust and dirt causes malfunction of the fuel pump.**

The fuel line is the rubber product and ages regardless of service period.

1. Inspect the fuel filter.
2. After inspection of the fuel filter, if the fuel line and clamps are found damaged or deteriorated, replace them.

https://truckmanualshub.com/

3. Check the fuel filter. If the fuel filter is clogged by debris or contaminated by water, replace it.

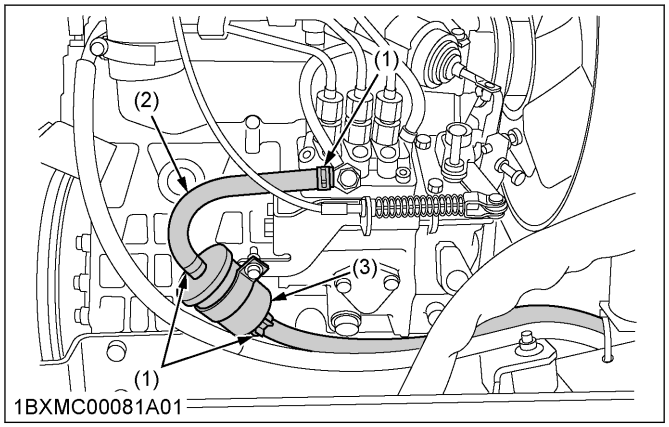

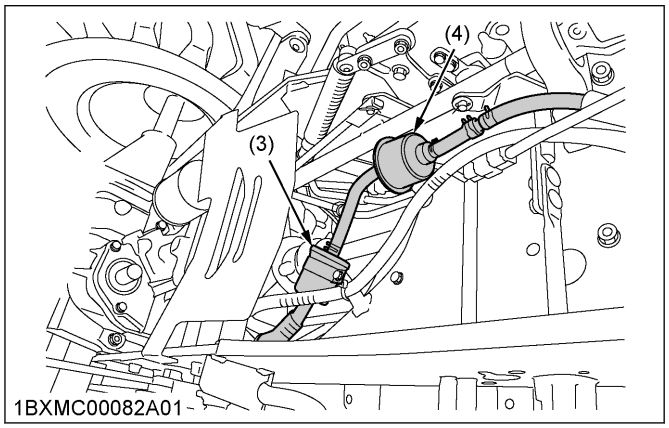

(1) Pipe clamps
(2) Fuel line
(3) Fuel filter
(4) Fuel pump

NOTE :

- **If the fuel line is removed, be sure to properly bleed the fuel system.**
  See 1. Bleeding the fuel system on page 137.

4. Adjusting the fan belt tension

WARNING

To avoid serious injury or death:

- **Be sure to stop the engine and remove the key before checking the fan belt tension.**

Fan belt tension (deflection)	7 mm to 9 mm (0.28 in. to 0.35 in.) when the belt is pressed in the middle of the span.

1. Stop the engine and remove the key.
2. Apply moderate thumb pressure to belt between pulleys.
3. If tension is incorrect, loosen the alternator mounting bolts and, using a lever placed between the alternator and the engine block, pull the alternator out until the deflection of the belt falls within acceptable limits.
4. Replace fan belt if it is damaged.

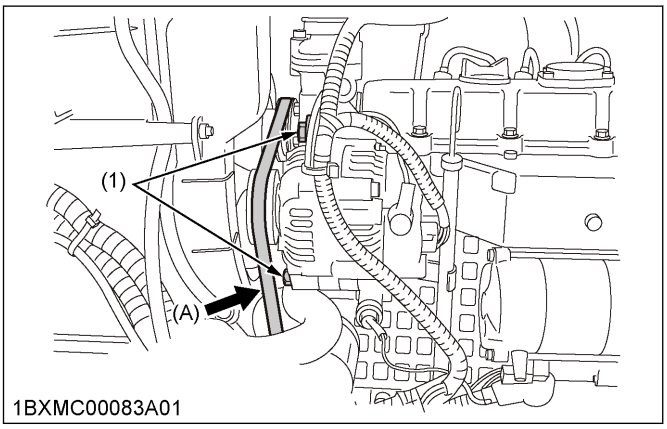

(1) Bolt
(A) Check the belt tension

5. Adjusting the HST neutral spring for speed control pedal

WARNING

To avoid serious injury or death:

- **Do not operate if the tractor moves on level ground with foot off the speed-control-pedal.**
- **If the tractor moves on level ground with foot off the speed-control-pedal, or, if the pedal is too slow in returning to the neutral position when removing the foot from the pedal, consult your local KUBOTA dealer.**

The HST-neutral-spring located under the front right side of the fender can adjust returning speed of the speed-control-pedal.

- Consult your local KUBOTA Dealer for service.

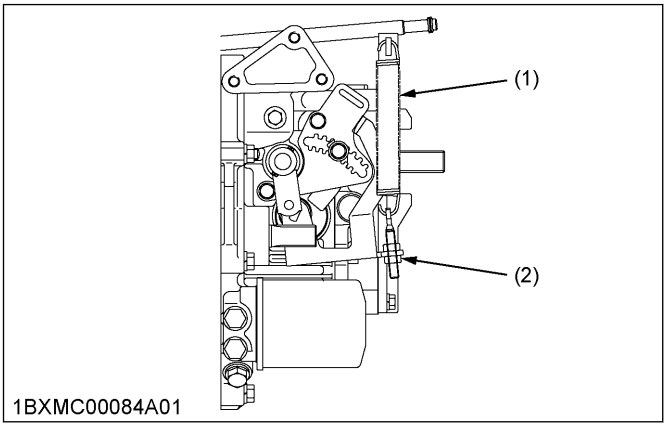

(1) HST neutral spring
(2) Adjusting nut

6. Adjusting the brake pedal

WARNING

To avoid serious injury or death:

https://truckmanualshub.com/

- **Stop the engine, remove the key, lower the implement to the ground, and chock the wheels before checking the brake pedal.**
- **Even if free travel of the brake pedal is within the limitation, adjust the brake pedal.**
- **If you are not able to adjust, consult your local KUBOTA dealer.**

1. Release the parking brake.
2. Loosen the lock nut and turn the turnbuckle to adjust the rod length so that free travel of the brake pedal is the length shown in the following table.

Free travel of the brake pedal	10 mm (0.4 in.)

3. Extend the turnbuckle one additional turn.
4. Retighten the lock nut.
5. Depress the brake pedal several times and make sure that free travel of the brake pedal is the length shown in the following table.

Free travel of the brake pedal	25 mm to 35 mm (1.0 in. to 1.4 in.)

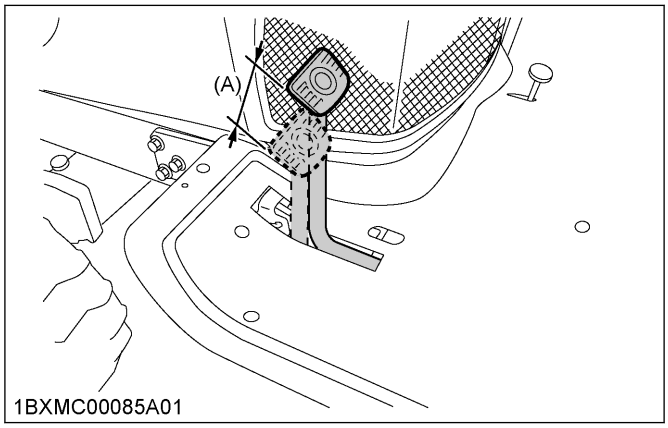

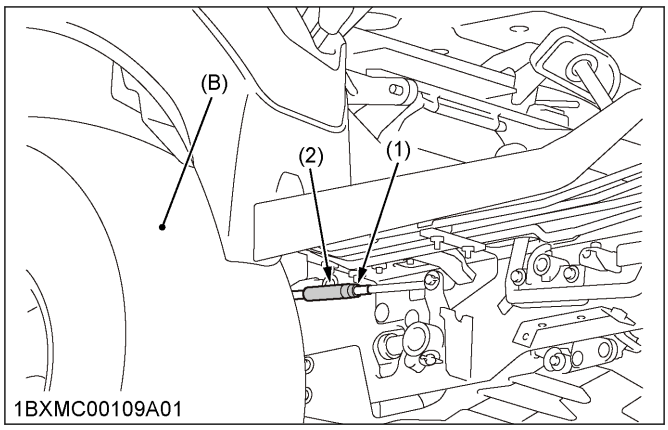

(1) Lock nut
(2) Turnbuckle
(A) Free travel
(B) Right rear tire

SERVICE OF THE TRACTOR EVERY 200 HOURS

1. Replacing the engine oil filter

WARNING

To avoid serious injury or death:

- **Be sure to stop the engine before replacing the oil filter cartridge.**
- **Oil can be hot and can burn. Allow the engine to cool down sufficiently.**

IMPORTANT :

- **To prevent serious damage to the engine, use only a KUBOTA genuine filter.**

1. Remove the oil filter.
2. Put a film of the clean engine oil on the rubber seal of the new filter.
3. Tighten the filter quickly until it contacts the mounting surface.
4. Tighten filter by hand an additional 1/2 turn only.
5. After the new filter has been replaced, the engine oil normally decreases a little. Make sure that the engine oil does not leak through the seal and be sure to check the oil level on the dipstick.
6. Fill the engine with the engine oil up to the prescribed level.
7. Properly dispose of the used engine oil.

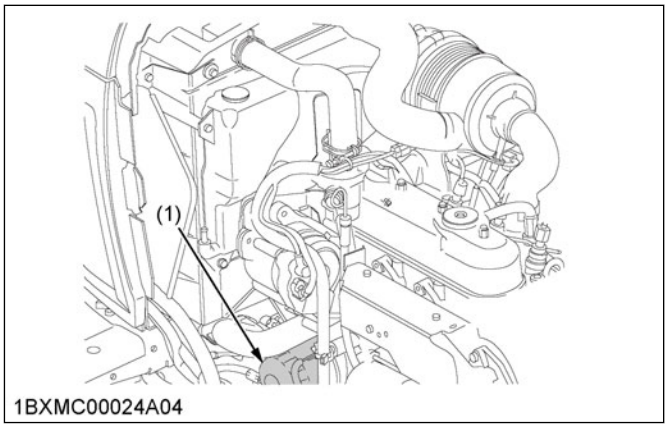

(1) Engine oil filter

2. Changing the engine oil

WARNING

To avoid serious injury or death:

- **Be sure to stop the engine and remove the key before changing the oil.**
- **Oil can be hot and can burn. Allow the engine to cool down sufficiently.**

https://truckmanualshub.com/

Oil capacity with filter	3.1 L (3.3 U.S.qts.)

1. To drain the used engine oil, remove the drain plug at the bottom of the engine, and drain the engine oil completely into the oil pan.
2. After draining of the used engine oil, reinstall the drain plug.
3. Fill the engine with the new engine oil up to the upper notch on the dipstick.
   See LUBRICANTS, FUEL, AND COOLANT TABLE on page 115.
4. Properly dispose of the used engine oil.

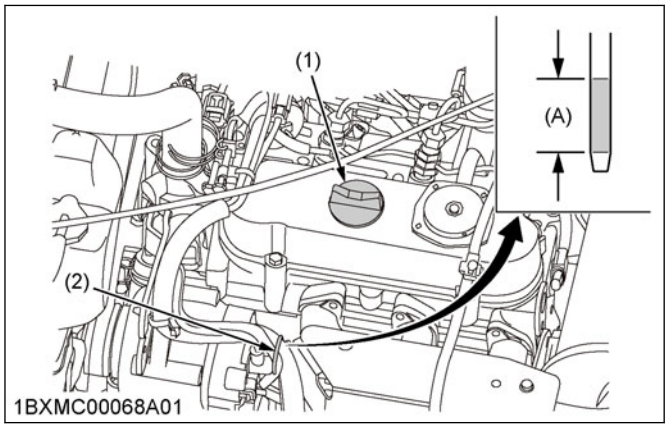

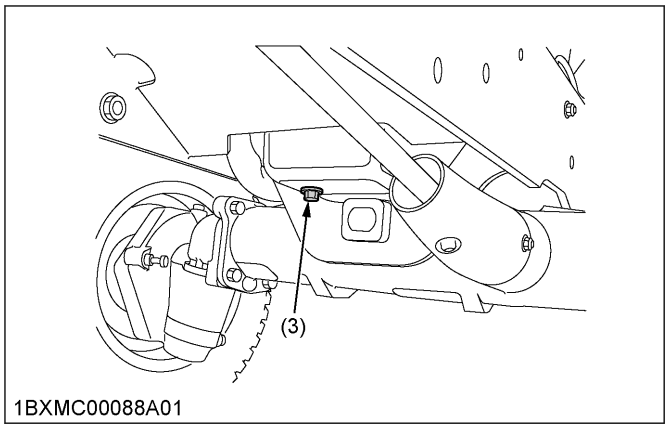

(1) Oil inlet
(2) Dipstick
(3) Drain plug
(A) Oil level is acceptable within this range

3. Replacing the transmission oil filter

WARNING

To avoid serious injury or death:

- **Be sure to stop the engine before changing the transmission oil filter cartridge.**
- **Oil can be hot and can burn. Allow the engine to cool down sufficiently.**

IMPORTANT :

- **To prevent serious damage to the hydraulic system, use only a KUBOTA genuine filter.**

1. Remove the transmission oil filter.
2. Put a film of clean transmission oil on rubber seal of new transmission oil filter.
3. Tighten the transmission oil filter quickly until it contacts the mounting surface.
4. Tighten the transmission oil filter by hand an additional 1/2 turn only.
5. After the new transmission oil filter has been replaced, the transmission fluid level will decrease a little. Make sure that the transmission fluid does not leak through the seal, and check the fluid level.
   Check the dipstick and refill with oil to prescribed level.
6. Properly dispose of used oil.

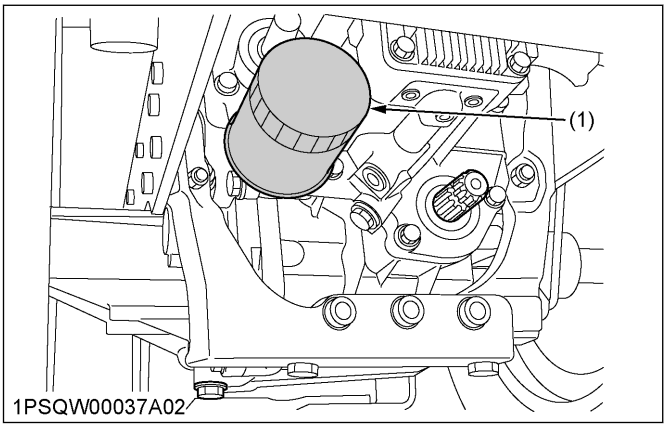

(1) Filter

4. Checking the toe-in

WARNING

To avoid serious injury or death:

- **Park the tractor on a firm, flat, and level place.**
- **Lower the implement to the ground, and apply the parking brake.**
- **Stop the engine and remove the key.**

1. Turn the steering wheel so that the front wheels are in the straight ahead position.
2. Measure the distance between the tire beads at front of the tires, and at the hub heights.
3. Measure the distance between the tire beads at rear of the tires, and at the hub heights.

https://truckmanualshub.com/

4. Front distance should be the length as shown in the following table. If front distance is not proper length, adjust the length of the tie rod.
   To adjust the tie rod, see 4.1 Adjusting the toe-in on page 131.

Front distance	0 mm to 5 mm (0 in. to 0.2 in.) less than rear distance

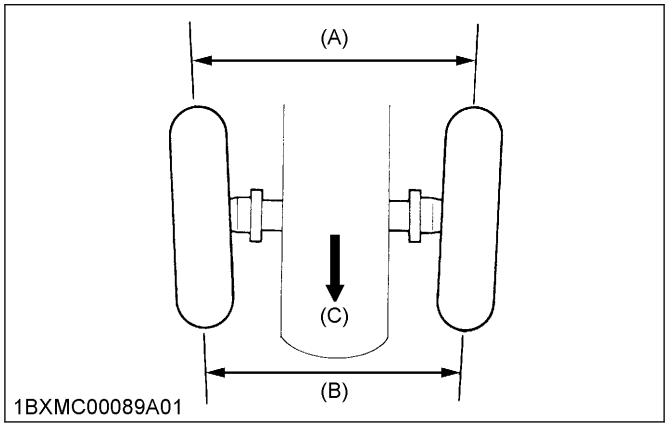

(A) Wheel-to-wheel distance at rear
(B) Wheel-to-wheel distance at front
(C) Front

4.1 Adjusting the toe-in

1. Loosen the lock nut and turn the tie rod to adjust the rod length until the proper toe-in measurement is obtained.

Front distance	0 mm to 5 mm (0 in. to 0.2 in.) less than rear distance

2. Retighten the lock nut.

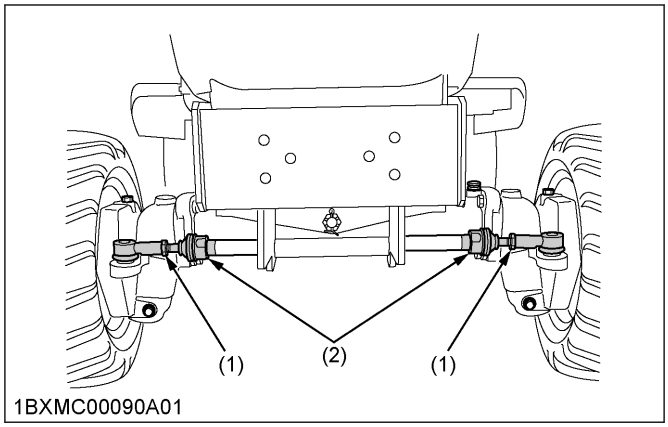

(1) Lock nuts
(2) Tie rod

SERVICE OF THE TRACTOR EVERY 400 HOURS

1. Adjusting the front axle pivot

WARNING

To avoid serious injury or death:

- **Be sure to stop the engine and remove the key before adjusting the front axle pivot.**

If the front axle pivot pin adjustment is not correct, front wheel vibration can occur causing vibration in the steering wheel.

1. Remove the split pin and tighten the adjusting nut.

Tightening torque	20 N·m (2.0 kgf·m) (15 lbf·ft)

2. Make sure that one of the nut slots aligns with the split pin hole.
3. Tighten the nut slightly if necessary when aligning the nut slots with the split pin hole.
4. Replace the split pin.

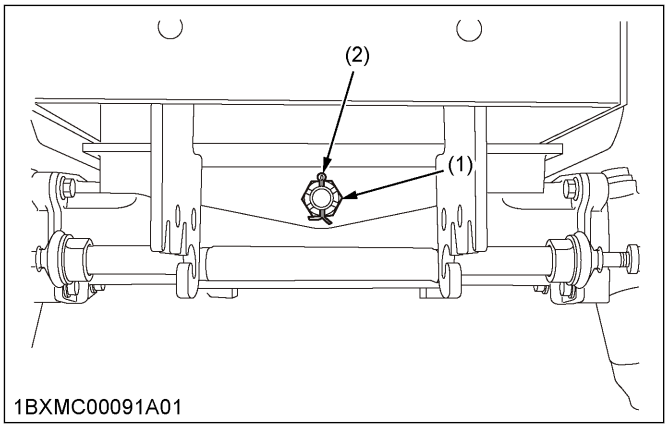

(1) Adjusting nut
(2) Split pin

2. Changing the transmission fluid

WARNING

To avoid serious injury or death:

- **Oil can be hot and can burn. Allow the engine to cool down sufficiently.**

Transmission fluid	KUBOTA SUPER UDT
Transmission fluid capacity	11.6 L (3.1 U.S.gals.)

1. To drain the used transmission fluid, remove the drain plug at the bottom of the transmission case and drain the transmission fluid completely into the oil pan.

https://truckmanualshub.com/

2. After draining the transmission fluid, reinstall the drain plug.
3. Clean the transmission strainer.
4. Fill with new transmission fluid up to the upper notch on the dipstick.
   See LUBRICANTS, FUEL, AND COOLANT TABLE on page 115 and 4. Checking the transmission fluid level on page 120.
5. After running the engine for a few minutes, stop it and check the transmission fluid level again.
6. If the transmission fluid level is lower than the prescribed level shown in the following figure, add it to the prescribed level.
7. Properly dispose of used transmission fluid.

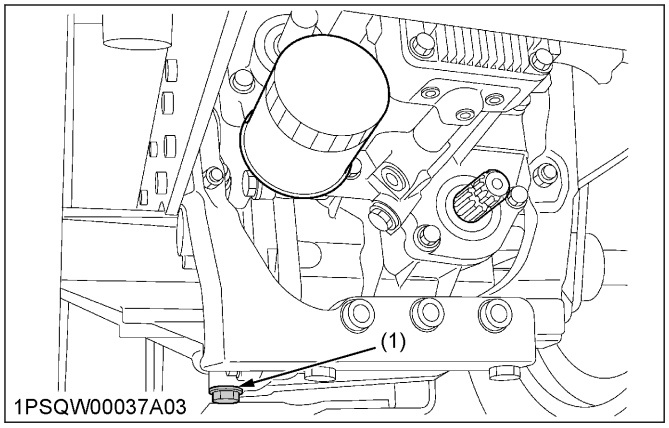

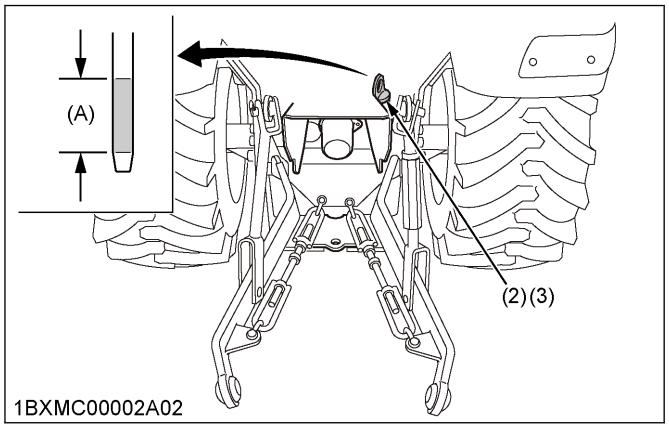

(1) Drain plug
(2) Oil inlet
(3) Dipstick
(A) Transmission fluid level is acceptable within this range

IMPORTANT :

- **Do not operate the tractor immediately after changing the transmission fluid.**
  Run the engine at medium speed for a few minutes to prevent damage to the transmission.

3. Cleaning the transmission strainer

1. When changing the transmission fluid, disassemble and rinse the transmission strainer with nonflammable solvent to completely clean off filings.
   When reassembling the transmission strainer, be careful not to damage the parts.

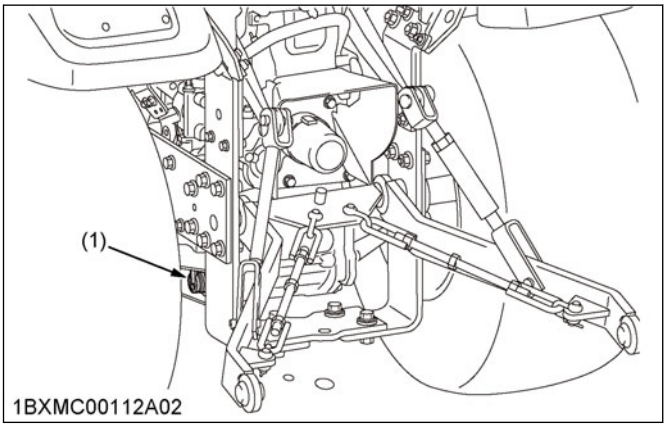

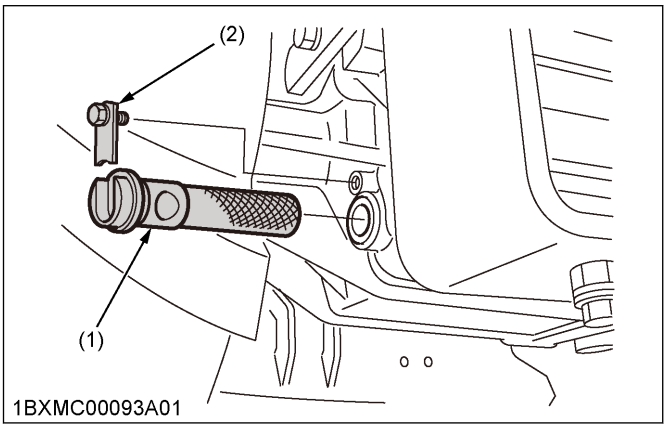

(1) Transmission strainer *(2) Filter plate*

NOTE :

- **Since the fine filings in the oil can damage the precision component parts of the hydraulic system, the end of the suction line is provided with an oil strainer.**

4. Changing the front axle case oil

WARNING

To avoid serious injury or death:

- **Be sure to stop the engine and remove the key before changing the front axle case oil.**

Oil capacity	3.6 L (3.8 U.S.qts.)

1. Park the tractor on a firm, flat, and level place.
2. To drain the used front-axle-case-oil, remove the right and left drain plugs and oil gauge at the front axle case.
3. Drain the front-axle-case-oil completely into the oil pan.
4. After draining the front-axle-case-oil, reinstall the drain plugs.
5. Remove the right and left breather plugs.

https://truckmanualshub.com/

6. Fill with new front-axle-case-oil up to the upper notch on the dipstick.
   See LUBRICANTS, FUEL, AND COOLANT TABLE on page 115.

   IMPORTANT :
   - **After the following minutes, check the front-axle-case-oil level again. If the front-axle-case-oil level is lower than the prescribed level shown in the following figure, add the front-axle-case-oil to prescribed level.**

Checking the front axle case oil level	10 minutes after filling with new front axle case oil

7. After filling with front-axle-case-oil, reinstall the oil gauge and breather plugs.

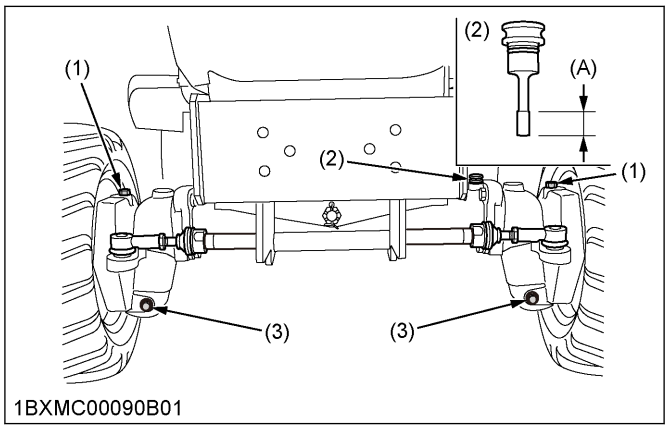

(1) Breather plug
(2) Oil gauge with dipstick
(3) Drain plug
(A) Front axle case oil level is acceptable within this range

5. Replacing the fuel filter element

- Consult your local KUBOTA Dealer for replacing the fuel filter element.

SERVICE OF THE TRACTOR EVERY 800 HOURS

1. Adjusting the engine valve clearance

- Consult your local KUBOTA Dealer for adjusting the engine valve clearance.

SERVICE OF THE TRACTOR EVERY 1000 HOURS OR 1 YEAR

1. Replacing of the air cleaner element

Replace the air cleaner element every 1000 hours or every 1 year whichever comes faster.
See 2. Cleaning the air cleaner element on page 126.

SERVICE OF THE TRACTOR EVERY 1500 HOURS

1. Checking the injection pressure of the fuel injection nozzle

- Consult your local KUBOTA Dealer for checking the injection pressure of the fuel injection nozzle.

SERVICE OF THE TRACTOR EVERY 2000 HOURS OR 2 YEAR

1. Flushing the cooling system and changing the coolant

WARNING

To avoid serious injury or death:
- **Do not remove the radiator cap while the coolant is hot. When the coolant is cool, slowly rotate the radiator cap to the first stop and allow sufficient time for excess pressure to escape before removing the radiator cap completely.**

IMPORTANT :
- **Do not start the engine without coolant.**
- **Use clean, fresh soft water and the anti-freeze to fill the radiator and the recovery tank.**
- **When mixing the anti-freeze with water, the anti-freeze mixing ratio is the following percentage.**

Anti-freeze mixing ratio with water	50%

- **Securely tighten the radiator cap. If the radiator cap is loose or improperly fitted, water may leak out and the engine could overheat.**

Be sure to flush the cooling system and to change the coolant once every 2000 hours or every two years whichever comes faster.

Coolant capacity (with recovery tank)	3.1 L (3.3 U.S.qts.)

1. Stop the engine and let it cool down.
2. To drain the coolant, open the radiator-drain-plug or the engine-drain-plug and remove the radiator cap. The radiator cap must be removed to completely drain the coolant.
3. After all coolant is drained, close the drain plug.
4. Fill the radiator with clean soft water and the cooling-system-cleaner.
5. Follow directions of the instruction of cooling-system-cleaner.
6. After flushing the radiator, fill it with clean soft water and the anti-freeze until the coolant level is just below the radiator cap.
7. Install the radiator cap securely.

https://truckmanualshub.com/

8. Fill the recovery tank with coolant up to the "**H**" mark on the recovery tank.
9. Start and operate the engine for few minutes.
10. Stop the engine and let it cool.
11. Check the coolant level of the recovery tank and add the coolant if necessary.

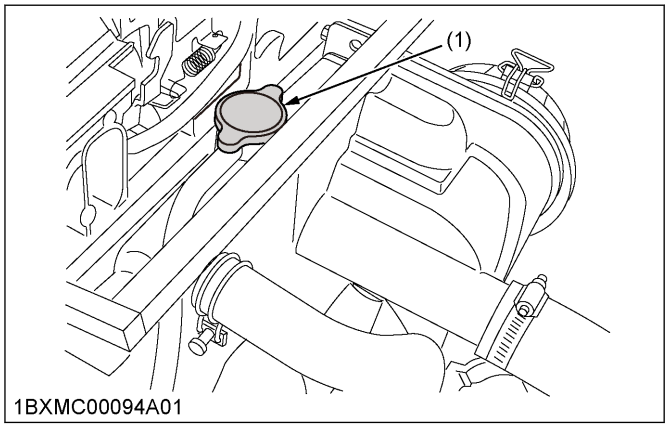

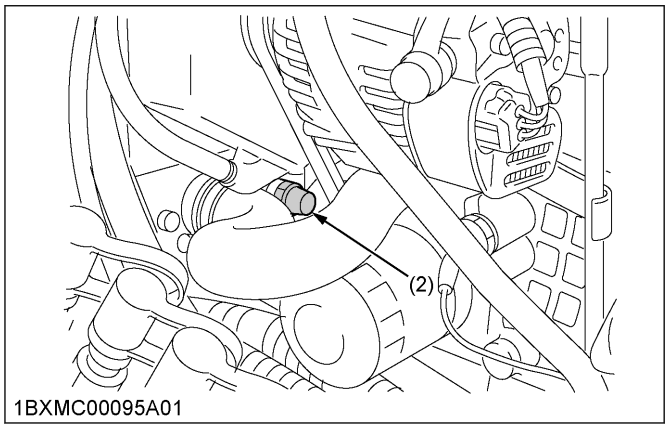

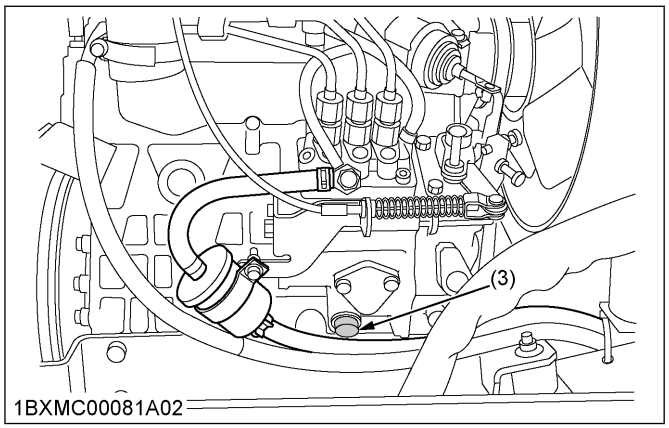

(1) Radiator cap
(2) Radiator drain plug
(3) Engine drain plug

2. Antifreeze

WARNING
To avoid serious injury or death:

- **When using the antifreeze, put on some protection such as rubber gloves. The antifreeze contains poison.**
- **If someone drank antifreeze, seek immediate medical help. Do not make a person throw up unless told to throw up by poison-control-center or a health care professional. Use standard first aid and CPR for signs of shock or cardiac arrest. Call your local poison control center or your local emergency number for further assistance.**
- **When the antifreeze comes in contact with the skin or clothing, wash it off immediately.**
- **Do not mix different types of the antifreeze. The mixture can produce chemical reaction causing harmful substances.**
- **The antifreeze is extremely flammable and explosive under certain conditions. Keep fire and children away from the antifreeze.**
- **When draining fluids from the engine, place some container underneath the engine body.**
- **Do not pour waste onto the ground, down a drain, or into any water source.**
- **Also, follow the relevant environmental protection regulations when disposing of the antifreeze.**

Always use a 50/50 mix of long-life coolant and clean soft water in KUBOTA engines.
Consult your local KUBOTA Dealer concerning coolant for extreme conditions.

NOTE :
- **The following data represent industry standards that necessitate a minimum glycol content in the concentrated antifreeze.**

- Long-life coolant (hereafter LLC) comes in several types. Use ethylene glycol (EG) type for this engine.
- Before using LLC-mixed cooling water, fill the radiator with fresh water and empty it again.
  Repeat this procedure two times or three times to clean up the inside.
- Mixing the LLC

Premix	50% LLC with 50% clean soft water.

  When mixing, stir it up well, and then fill into the radiator.
- Adding the LLC
  – Add only water if the mixture reduces in amount by evaporation.
  – If there is a mixture leak, add the LLC of the same manufacturer and type in the same mixture percentage.
    - Never add any long-life coolant of different manufacturer. Different brands may have

https://truckmanualshub.com/

different additive components, and the engine may fail to perform as specified.

- When the LLC is mixed, do not use any radiator cleaning agent. The LLC contains anticorrosive agent. If mixed with the cleaning agent, sludge may build up, adversely affecting the engine parts.
- KUBOTA's genuine long-life coolant has a service life of two years. Be sure to change the coolant as follows.

Changing the coolant	every 2000 hours or every 2 years whichever comes faster

- The procedure for the mixing of water and the antifreeze differs according to the make of the antifreeze and the ambient temperature. Refer to SAE J1034 standard, more specifically also to SAE J814c.

Antifreeze	Freezing point		Boiling Point*1	
50Vol%	-37 ℃	-34 ℉	108 ℃	226 ℉

*1 At 1.013 x 10^5 Pa (760 mmHg) atmospheric pressure. A higher boiling point is obtained by using a radiator pressure cap which permits the development of pressure within the cooling system.

SERVICE OF THE TRACTOR EVERY 3000 HOURS

1. Checking the injection pump

- Consult your local KUBOTA Dealer for checking the injection pump.

SERVICE OF THE TRACTOR EVERY 1 YEAR

1. Checking the radiator hoses and the hose clamps

WARNING

To avoid serious injury or death:

- **Be sure to stop the engine and remove the key before checking the radiator hose and the hose clamps.**

1. If the hose clamps are loose or water leaks, tighten them securely.
2. Replace the radiator hoses and tighten the hose clamps securely if you checked and found that the radiator hoses are swollen, hardened, or cracked.
3. Properly dispose of used coolant.

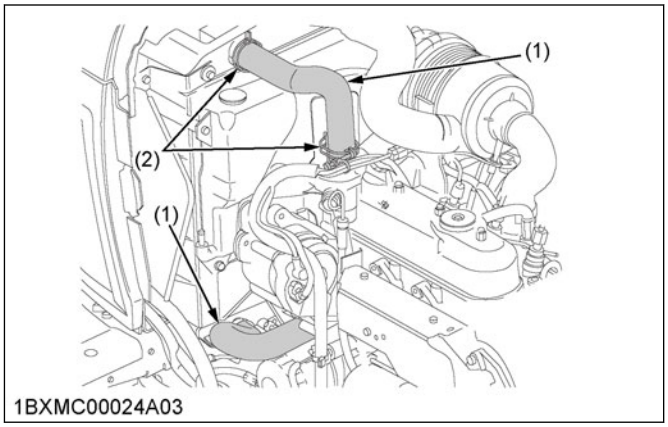

(1) Radiator hoses (2 pcs) (2) Hose clamps (4 pcs)

2. Checking the power steering line

WARNING

To avoid serious injury or death:

- **Be sure to stop the engine and remove the key before checking the power steering line.**

1. Check to see that all power steering lines are tight and not damaged.
2. If the power steering pressure hoses are found to be worn or damaged, replace or repair them at once.

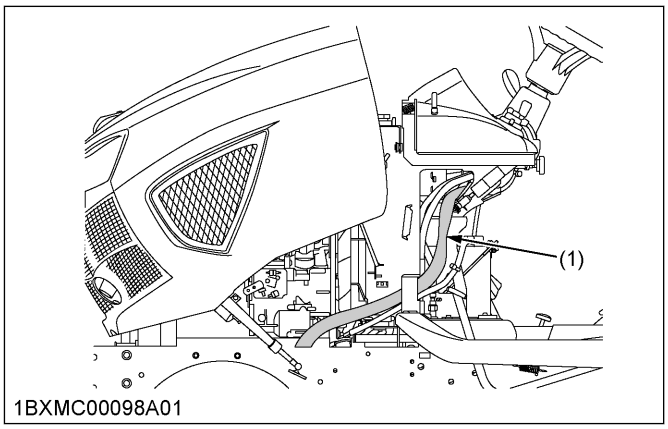

(1) Power steering pressure hose

3. Checking the fuel lines

WARNING

To avoid serious injury or death:

- **Stop the engine and remove the key before checking the fuel lines and fuel filter.**
- **Check the fuel lines periodically. The fuel lines are subject to wear and aging. Fuel may leak out onto the running engine, causing a fire.**

https://truckmanualshub.com/

IMPORTANT :

- **When the fuel line is disconnected for maintenance or repair, plug both ends of the fuel line with a clean plug of suitable size to prevent dust and dirt from entering. You must take particular care of the fuel lines in order to avoid dust and dirt getting into the fuel system. Entrance of dust and dirt causes malfunction of the fuel pump.**

The fuel line is made of rubber and ages regardless of service period.

1. Inspect the fuel lines.
2. After inspection, if the fuel lines and clamps are found damaged or deteriorated, replace them.
3. Check the fuel filter. If the fuel filter is clogged by debris or contaminated by water, replace it.

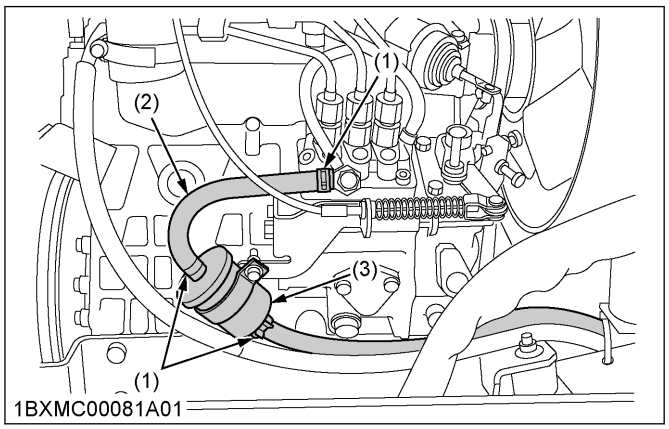

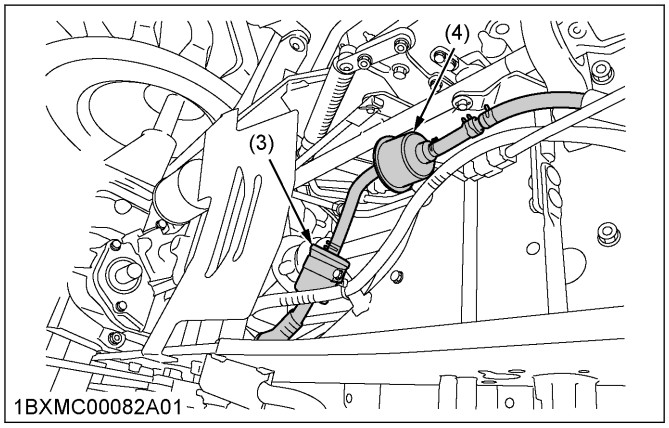

(1) Pipe clamps
(2) Fuel line
(3) Fuel filter
(4) Fuel pump

NOTE :

- **If the fuel line is removed, be sure to properly bleed the fuel system.**
  See 1. Bleeding the fuel system on page 137.

4. Checking the intake air line

WARNING

To avoid serious injury or death:

- **Stop the engine and remove the key before checking the intake air line.**

1. Check to see that the hose and the hose clamps are tight and not damaged.
2. If the hose and the clamps are found worn or damaged, replace or repair them at once.

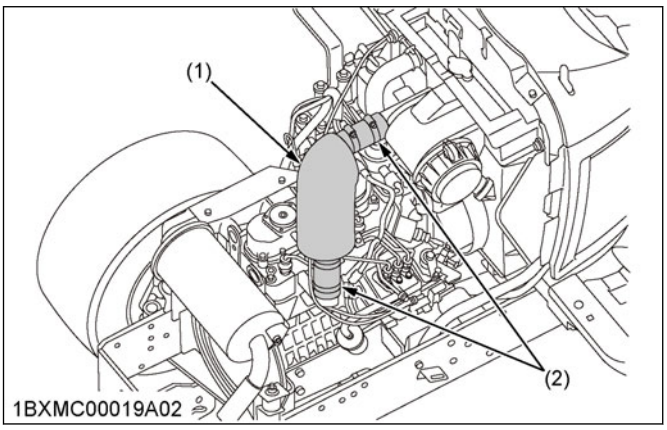

(1) Hose
(2) Hose clamps

5. Checking the engine breather hose

- Consult your local KUBOTA Dealer for checking the engine breather hose.

SERVICE OF THE TRACTOR EVERY 4 YEAR

1. Replacing the radiator hose (water pipes)

See 1. Checking the radiator hoses and the hose clamps on page 135.

https://truckmanualshub.com/

1. Replace the radiator hoses and tighten the hose clamps securely.

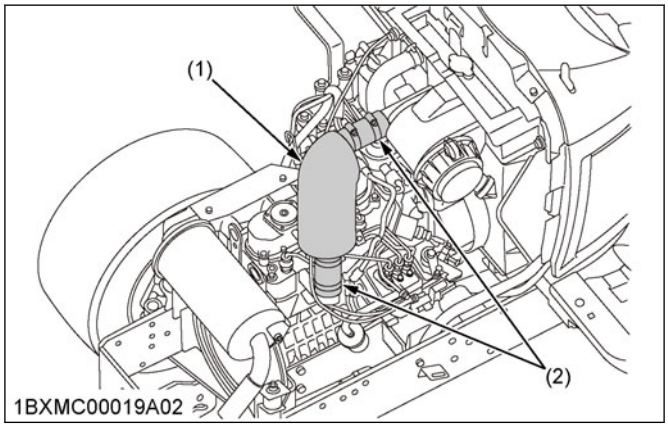

(1) Hose *(2) Hose clamp*

2. Replacing the power steering hose

- Consult your local KUBOTA Dealer for replacing the power steering hose.

3. Replacing the fuel hose

- Consult your local KUBOTA Dealer for replacing the fuel hose.

4. Replacing the engine breather hose

- Consult your local KUBOTA Dealer for replacing the engine breather hose.

5. Replacing the intake air line

- Consult your local KUBOTA Dealer for replacing the intake-air-line.

SERVICE OF THE TRACTOR AS REQUIRED

1. Bleeding the fuel system

Air must be removed:
- When the fuel filter or lines are removed
- When the tank is completely empty
- After the tractor has not been used for a long period of time

Bleeding procedure is as follows

1. Fill the fuel tank with fuel.

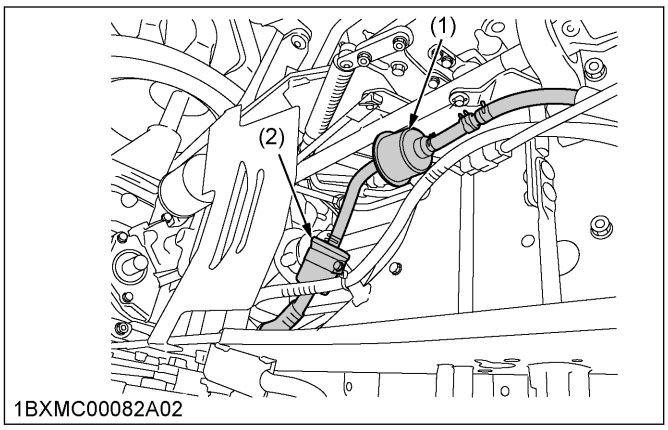

(1) Fuel pump *(2) Fuel filter*

2. Turn the key switch to the **on** position for the following seconds.
   Turning the key to **on** for the following seconds allows fuel pump to work and pump air out of the fuel system.

Tunring the key to **on**	About 30 seconds

3. Start the engine and run it for the following seconds, and then stop it.

Running the engine	About 30 seconds

2. Replacing the fuse

The electrical system of the tractor is protected from potential damage by fuses.
A blown fuse indicates that there is an overload or short somewhere in the electrical system.

1. If any of the fuses should blow, replace with a new fuse with the same capacity.

IMPORTANT :

- **Before replacing a blown fuse, determine why the fuse blew and perform any necessary repairs. Failure to follow the repairing procedure may result in serious damage to the electrical system of the tractor. Refer to the ENGINE TROUBLESHOOTING on page 167 of this manual or your local KUBOTA Dealer for specific information dealing with electrical problems.**

https://truckmanualshub.com/

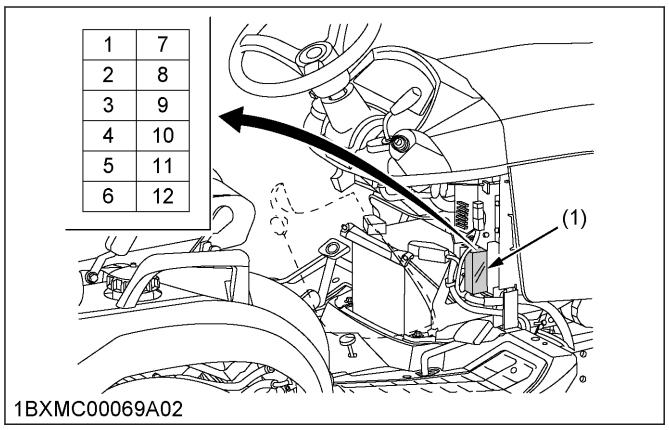

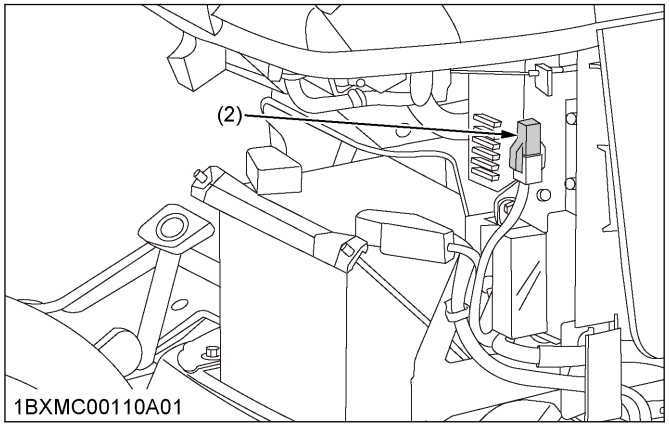

(1) Fuse box *(2) Slow blow fuse*

Protected circuit

[Fuse box]

FUSE no.	Capacity (A)	Protected circuit
1	-	-
2	-	-
3	10	Option (3rd -function)
4	10	OPC
5	15	DC outlet
6	5	Fuel pump
7	-	-
8	5	Glow indicator
9	5	Meter
10	15	Stop solenoid
11	20	Lamp
12	20	Option (work light)

Slow blow fuse

Capacity	Protected circuit
50 A	Check circuit against wrong battery connection

3. Replacing the light bulb

Light	Capacity
Head light	37.5 W×2
Tail light	12.8 W×2
Hazard light	23 W×2

Head light

1. Take the light bulb out of the body of the light and replace with a new one.

Other lights

1. Detach the lens and replace the light bulb.

https://truckmanualshub.com/

MAINTENANCE OF THE LOADER

CAUTION

To avoid personal injury:

- **Be sure to check and service the tractor on a flat surface with the bucket on the ground, engine shut off, the starter key removed, and the parking brake on.**

DAILY CHECKING THE LOADER

WARNING

To avoid personal injury or death:

- **When removing the engine-side-covers, be careful not to touch hot loader cylinders. Allow all surfaces to cool before performing maintenance.**
- **Before servicing the loader or the tractor, be sure to place the boom of the loader in contact with the ground. When raising the boom of the loader during service or maintenance, support the boom as shown in the figure.**

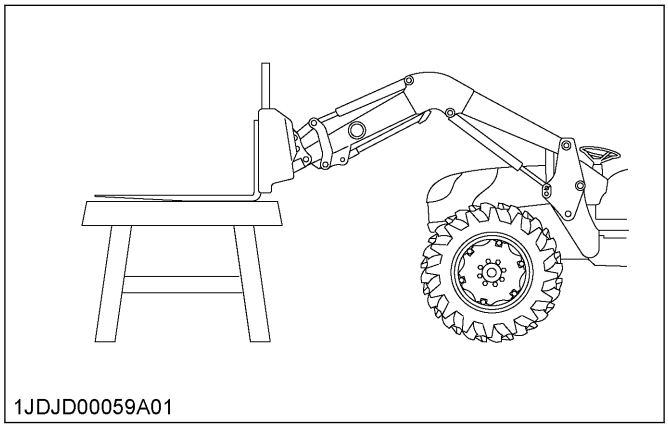

1. Check all hardware of the loader daily before operation.
   Tighten the hardware of the loader to torque values as specified in the GENERAL TORQUE SPECIFICATION on page 144.
2. With the engine off and the bucket on the ground, inspect all hoses for cuts or wear. Check for signs of leaks and make sure all fittings are tight.

WARNING

To avoid personal injury or death:

- **Escaping the hydraulic fluid under pressure can obtain sufficient force to penetrate skin, causing serious personal injury.**
  Before disconnecting lines, be sure to relieve all pressure.
- **Before applying pressure to the loader system, be sure that all connections are tight and that lines, tubes, and hoses are not damaged.**
- **Fluid escaping from a very small hole can be almost invisible. Use a piece of cardboard or wood, rather than your hands, to search for suspected leaks.**
- **If you are injured by escaping fluid, see a doctor at once. Serious infection or allergic reaction will develop if proper medical treatment is not administered immediately.**

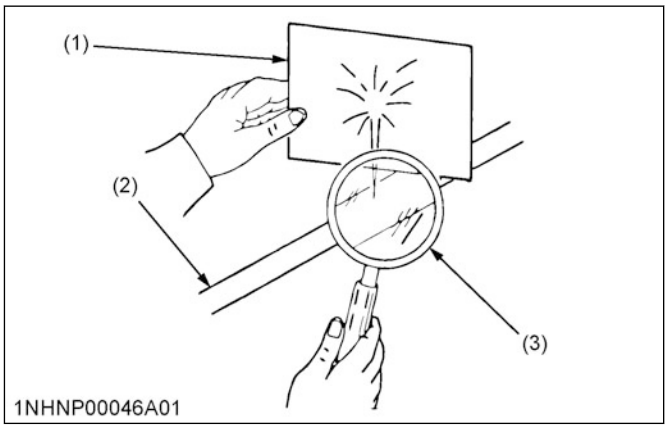

(1) Hydraulic line
(2) Cardboard
(3) Magnifying glass

SERVICE OF THE LOADER EVERY 10 HOURS

1. Lubricating the loader

KUBOTA recommends the high quality grease designated as the extreme pressure and containing the Molybdenum disulfide. Recommended grease may specify “**Moly EP**” on its label.

https://truckmanualshub.com/

1. Lubricate all grease fittings every 10 hours of operation. Also, lubricate the joints of the control-lever-linkage every 10 hours.

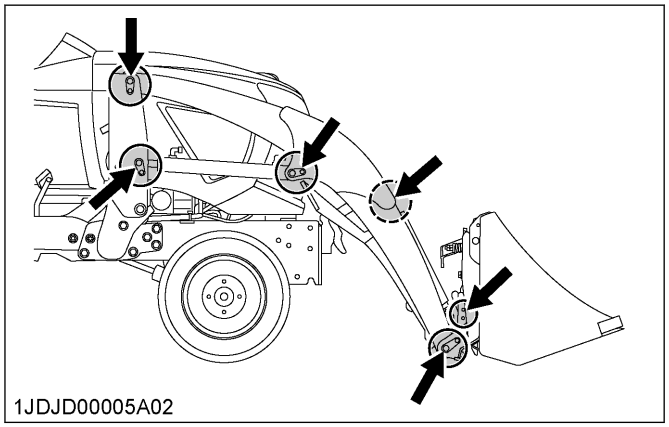

2. Daily before operation, check the hydraulic-fluid-level of the tractor. If the hydraulic-fluid-level is low, add the hydraulic fluid as described in the *tractor operator's manual*. Also change the filter element and the hydraulic fluid as recommended in the *tractor operator's manual*.

SERVICE OF THE LOADER EVERY 20 HOURS TO 30 HOURS

1. Re-tightening of hardware of the loader

After 20 hours to 30 hours of initial loader operation, re-tighten all mounting bolts and nuts to the required torque value as follows.

Tightening torque table

Location	Bolt or nut	Required Torque
Main frame	M14 bolts or nuts	147 N·m (15.0 kgf·m) [108 lbf·ft]

NOTE :

- **Before finally tightening all mounting hardware of the loader, start the engine and apply down pressure to the bucket until the loader raises the front wheels slightly. Make sure that you can rotate the mounting pins easily, and then tighten all bolts and nuts.**

SERVICE OF THE LOADER EVERY 50 HOURS

1. Checking the torque of bolt and nut of the main frame

WARNING

To avoid personal injury or death:

- **Never operate the front loader with a loose main frame.**
- **Any time bolts and nuts are loosened, retighten to specified torque.**
- **Check all bolts and nuts frequently and keep them tight.**
- **Check the bolts and nuts of the main frame regularly especially when they are new. If the bolts and nuts of the main frame are loose, tighten them as follows.**

1. Check to see if the torque of bolt and nut of the main frame is as follows.

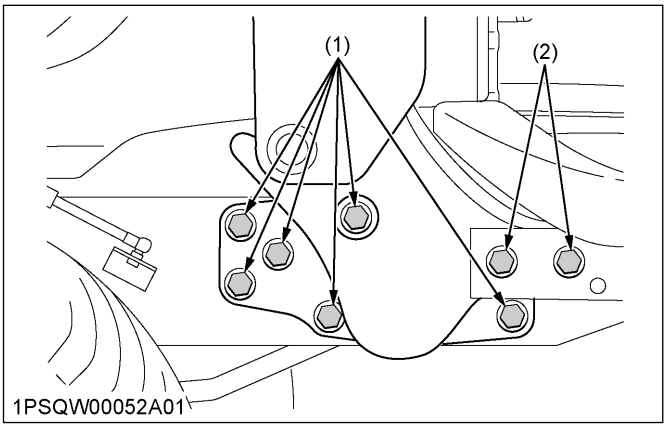

(1) Bolt and nut of the main frame *(2) Bolt and nut of the main frame*

Bolt and nut of the main frame (1)	Tightening torque	147 N·m (15.0 kgf·m) [108 lbf·ft]
Bolt and nut of the main frame (2)		203 N·m (20.7 kgf·m) [150 lbf·ft]

https://truckmanualshub.com/

MAINTENANCE OF THE BACKHOE

CHECKING THE BACKHOE DAILY

WARNING

To avoid serious injury or death:

- **Never repair, service, or adjust any kind when the hydraulic system is under pressure, when the engine is running, or when any cylinder of the backhoe is under load.**
- **Escaping hydraulic fluid under pressure can obtain sufficient force to penetrate skin, causing serious personal injury.**
  Before disconnecting lines, be sure to relieve all pressure.
- **Before applying pressure to the system, be sure all connections are tight and that lines, tubes, and hoses are not damaged.**
- **Fluid escaping from a very small hole can be almost invisible. Use a piece of cardboard or wood, rather than hands, to search for suspected leaks.**
- **If injured by escaping fluid, see a doctor at once. Serious infection or allergic reaction will develop if proper medical treatment is not administered immediately.**

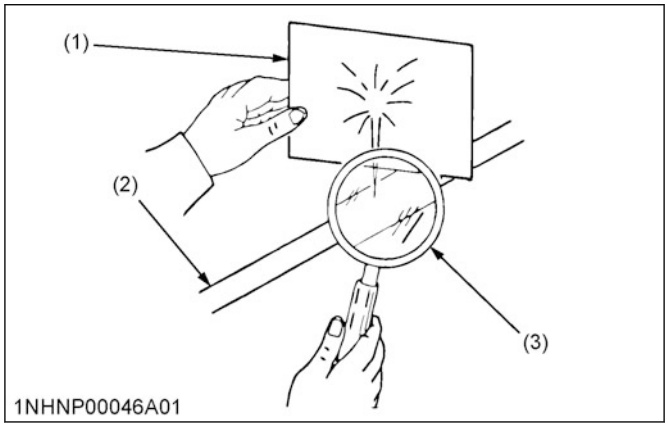

(1) Hydraulic line *(3) Magnifying glass*
(2) Cardboard

The backhoe is run by the tractor hydraulic system.

- Daily before operation, check the hydraulic level of the tractor. If the hydraulic level of the tractor is low, replenish the oil as described in 4. Checking the transmission fluid level on page 120. Also check the filter screen and change the hydraulic fluid as recommended in 3. Replacing the transmission oil filter on page 130 and 2. Changing the transmission fluid on page 131.

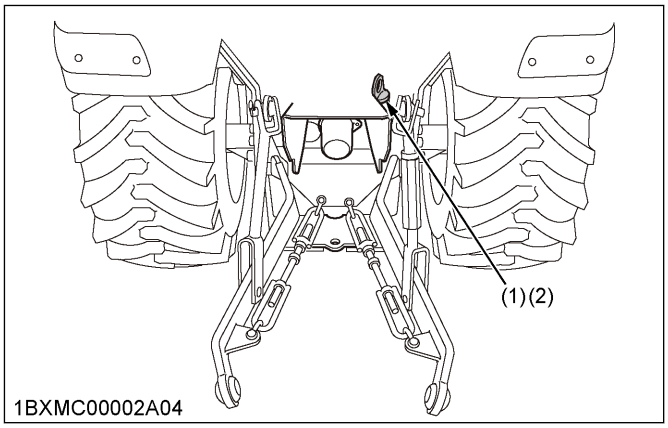

(1) Oil port *(2) Dipstick*

- Check all hardware of the backhoe before daily operation. Tighten the hardware of the backhoe to torque values as specified in the GENERAL TORQUE SPECIFICATION on page 144.
- With the engine off and the bucket on the ground, inspect all hoses for cuts or wear. Check for signs of leaks and make sure all fittings are tight.
- For safe operation, check that the mounting pin is inserted into the hole of the main frame and the slide bar before operation.

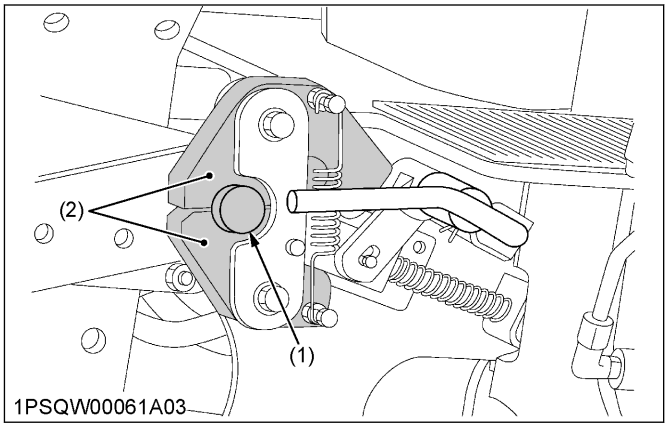

(1) Mounting pin *(2) Support hooks*

SERVICE OF THE BACKHOE EVERY 10 HOURS

1. Lubricating the backhoe

KUBOTA recommends the high quality grease designated as the extreme pressure and containing the Molybdenum disulfide. Recommended grease may specify “**Moly EP**” on its label.

https://truckmanualshub.com/

1. Lubricate all grease fittings every 10 hours of operation.

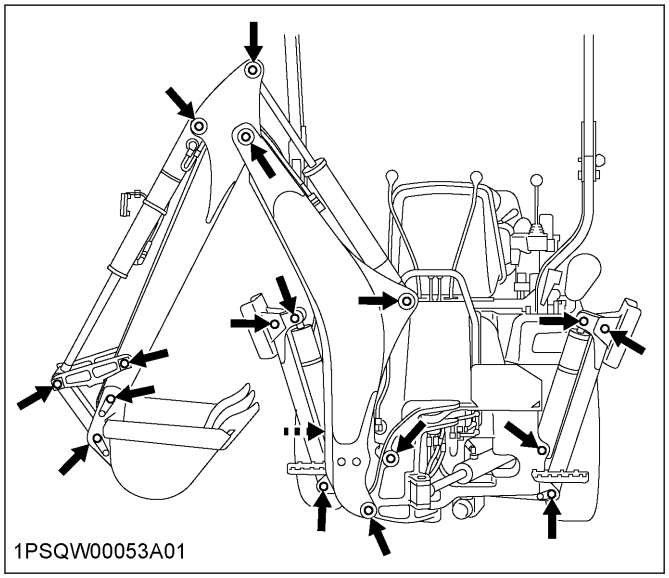

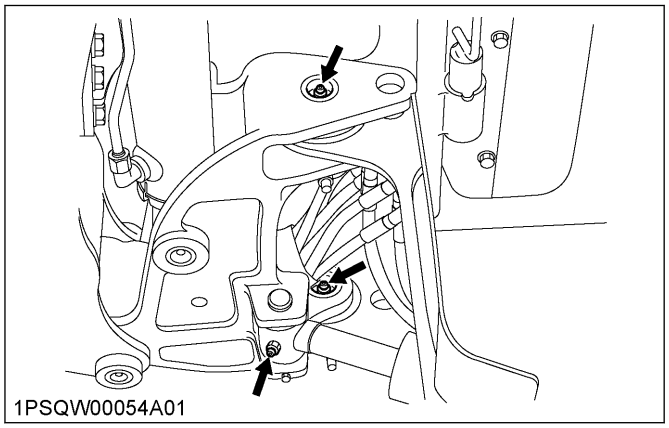

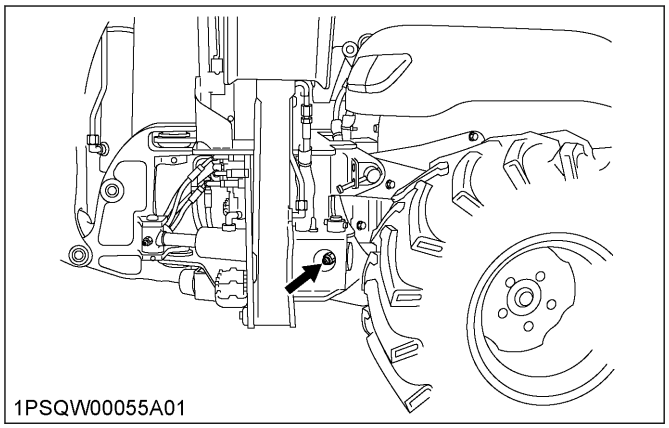

SERVICE OF THE BACKHOE EVERY 50 HOURS

1. Checking the bolt torque of the sub frame

WARNING

To avoid serious injury or death:

- **Never operate the backhoe and front loader with a loose sub frame.**
- **Any time the bolts and nuts are loosened, retighten to specified torque.**
- **Check all bolts and nuts frequently and keep them tight.**

1. Check the bolts and nuts of the sub frame regularly, especially when the sub frame is new.

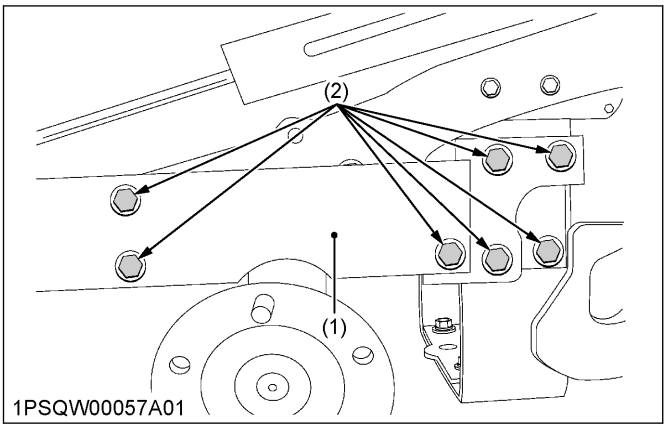

(1) Sub frame *(2) Bolts*

2. If the bolts and nuts of the sub frame are loose, tighten them as follows.

Tightening torque	147 N·m (15.0 kgf·m) [108 lbf·ft]

SERVICE OF THE BUCKET

WARNING

To avoid serious injury or death:

- **When servicing or repairing the pins in cylinder ends, bucket, and so on, always use a brass drift and a hammer. Failure to using a brass drift and a hammer could result in injury from flying metal fragments.**

1. Changing the backhoe bucket

Changing the backhoe bucket becomes necessary as the type of job to be accomplished changes. In most operations of the backhoe, changing the backhoe bucket is a common occurrence.

By using the following instructions, changing the backhoe bucket will be quick and easy. Always select a smooth level area to change buckets.

1. Place the backhoe bucket to be installed on its bottom near the dipperstick of the backhoe, and place the backhoe bucket to be removed.
2. Position the backhoe bucket to be removed, hydraulically, into this **natural** position, just touching the ground.

https://truckmanualshub.com/

2. Service of the bucket teeth

The bucket teeth are locked with bolts on the bucket. Even though the bucket teeth are heat-treated and hard, they will eventually need replacement. As the bucket teeth becomes worn, the resistance of digging will increase. When the bucket teeth are worn, install new bucket teeth using new bolts.
You may remove and store the bucket teeth when work of drainage is required. Drainage type of work may not require the bucket teeth to trench.

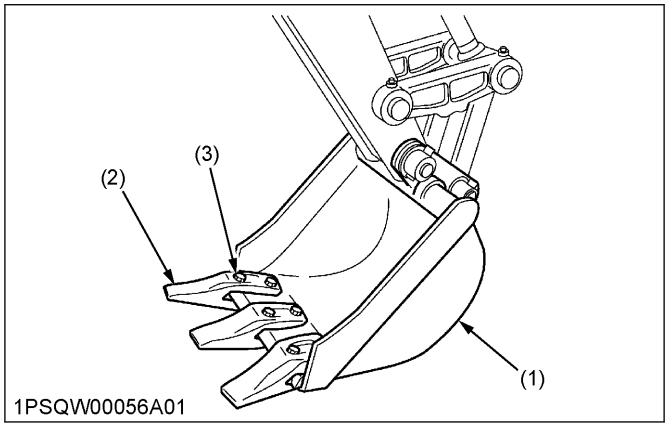

(1) Bucket
(2) Bucket teeth
(3) Bolt

https://truckmanualshub.com/

GENERAL TORQUE SPECIFICATION

American standard cap screws with UNC or UNF threads

SAE grade No.	GR5 or GR8
1/4	7.2 lbf·ft to 8.6 lbf·ft 9.8 to 11.7 N·m 1.0 kgf·m to 1.2 kgf·m
5/16	14 lbf·ft to 17 lbf·ft 19 to 23.1 N·m 1.9 kgf·m to 2.4 kgf·m
3/8	25 lbf·ft to 30 lbf·ft 33.9 to 40.7 N·m 3.5 kgf·m to 4.2 kgf·m
1/4	7.2 lbf·ft to 8.6 lbf·ft 9.8 to 11.7 N·m 1.0 kgf·m to 1.2 kgf·m
1/2	65 lbf·ft to 78 lbf·ft 88.1 to 105.8 N·m 9.0 kgf·m to 10.8 kgf·m
9/16	90 lbf·ft to 108 lbf·ft 122 to 146.4 N·m 12.4 kgf·m to 14.9 kgf·m
5/8	130 lbf·ft to 156 lbf·ft 176.3 to 211.5 N·m 18.0 kgf·m to 21.6 kgf·m

Metric cap screws

Property class	8.8 Approx. SAE GR5 8.8
M6	7.2 lbf·ft to 8.3 lbf·ft 9.8 to 11.2 N·m 1.0 kgf·m to 1.1 kgf·m
M8	17.4 lbf·ft to 20.2 lbf·ft 23.6 to 27.4 N·m 2.4 kgf·m to 2.8 kgf·m
M10	35.5 lbf·ft to 41.2 lbf·ft 48.1 to 55.8 N·m 4.9 kgf·m to 5.7 kgf·m
M12	57.2 lbf·ft to 66.5 lbf·ft 77.5 to 90.1 N·m 7.9 kgf·m to 9.2 kgf·m
M14	91.2 lbf·ft to 108 lbf·ft 124 to 147 N·m 12.6 kgf·m to 15.0 kgf·m
M16	145 lbf·ft to 166 lbf·ft 196 to 225 N·m 20.0 kgf·m to 23.0 kgf·m

https://truckmanualshub.com/

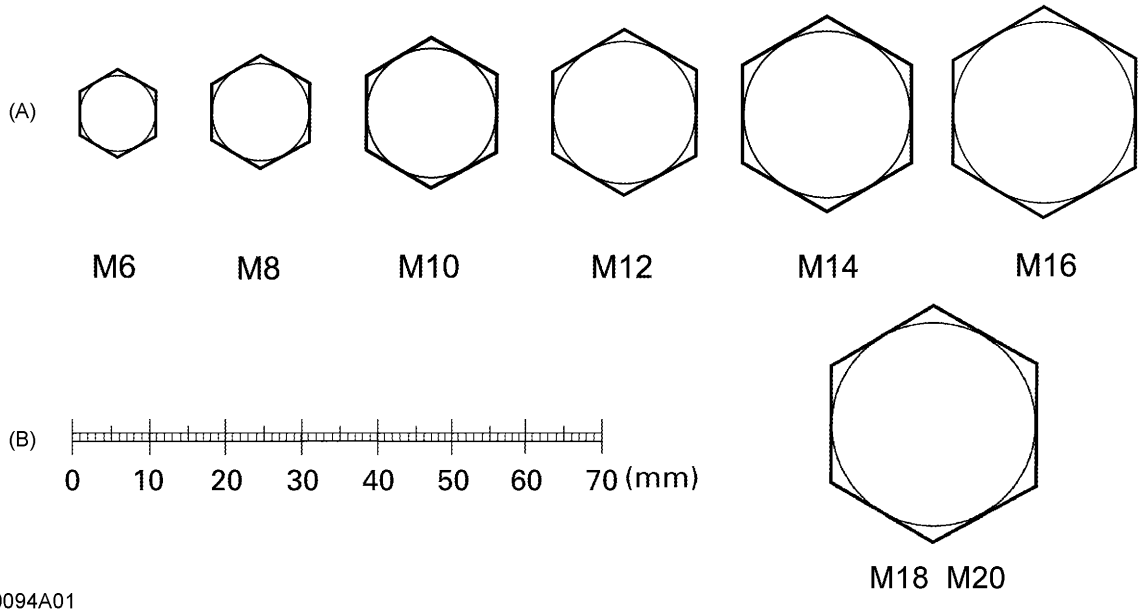

1JDJD00094A01

(A) Top of bolt *(B) Length*

https://truckmanualshub.com/

STORAGE OF THE TRACTOR

WARNING

To avoid serious injury or death:

- **Do not clean the tractor while the engine is running.**
- **To avoid the danger of exhaust fume poisoning, do not operate the engine in a closed building without proper ventilation.**
- **When storing the tractor, remove the key from the key switch to avoid unauthorized persons from operating the tractor and getting injured.**

STORING THE TRACTOR

IMPORTANT :

- **When washing the tractor, be sure to stop the engine. Allow sufficient time for the engine to cool before washing the tractor.**
- **Cover the tractor after the muffler and the engine have cooled down.**

If you intend to store your tractor for an extended period of time, follow the procedures outlined as follows. These procedures will insure that the tractor is ready to operate with minimum preparation when it is removed from storage.

1. Check the bolts and nuts for looseness, and tighten them if necessary.
2. Apply grease to the areas of the tractor where bare metal will rust and to pivot areas.
3. Detach the weights from the tractor body.
4. Inflate the tires to a pressure a little higher than usual.
5. Change the engine oil and run the engine to circulate oil throughout the engine block and internal moving parts for about five minutes.
6. With all implements lowered to the ground, coat any exposed hydraulic-cylinder-piston-rods with grease.
7. Remove the battery from the tractor. Store the battery following the battery-storage-procedures.
   See 1.2 Dealing with the battery when storing the tractor for a long period on page 126.
8. Keep the tractor in a dry place, where the tractor is sheltered from the elements. Cover the tractor.
9. Store the tractor indoors in a dry area that is protected from sunlight and excessive heat. If the tractor must be stored outdoors, cover it with a waterproof tarpaulin.
   Jack the tractor up and place blocks under the front and rear axles so that all four tires are off the ground. Keep the tires out of direct sunlight and extreme heat.

REMOVING THE TRACTOR FROM STORAGE

1. Check air pressure of the tires and inflate the tires if they are low.
2. Jack the tractor up and remove the support blocks from under the front and rear axles.
3. Before installing the battery, be sure that it is fully charged.
4. Install the battery.
5. Check the fan belt tension.
6. Check all fluid levels:
   - engine oil
   - transmission/ hydraulic oil
   - engine coolant
   - any attached implements
7. Start the engine. Check all gauges. If all gauges are functioning properly and reading normal, move the tractor outside. Once outside, park the tractor and let the engine idle for at least five minutes.
8. Shut the engine off and walk around tractor and make a visual inspection looking for evidence of oil or water leaks.
9. With the engine fully warmed up, release the parking brake and test the brakes for proper adjustment as you move forward. Adjust the brakes if it is necessary for the brakes to be adjusted.

https://truckmanualshub.com/

REMOVING THE LOADER

HOW TO REMOVE THE LOADER

WARNING

To avoid personal injury or death:

- **Make sure that an approved bucket is attached before removing the loader from the tractor.**
- **For removing the loader, choose flat and hard ground, preferably concrete.**
- **If the ground surface is soft, place suitable planks on the ground for the bucket and the stand.**
- **When starting the engine or using the loader-control-lever, always sit in the operator's seat.**
- **Make sure that the bucket and the stand are at ground level.**

1. Set the engine speed to the following speed, and then raise the boom until the bucket pin is the height of the boom fulcrum pin.

Engine speed	1800 rpm

2. Dump the bucket fully.

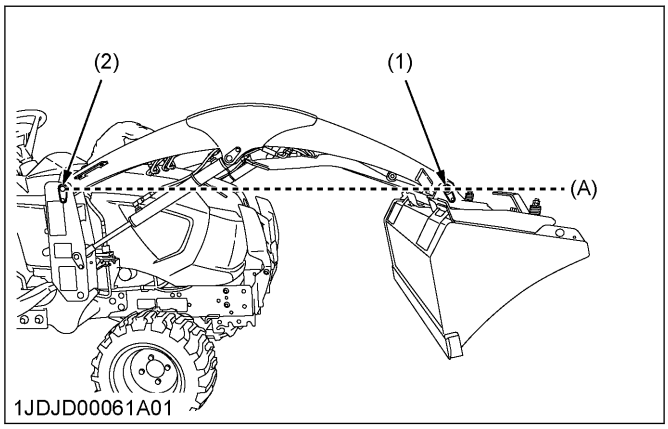

(1) Bucket pin
(2) Boom fulcrum pin
(A) Same height

3. Slide the stand lever downward direction completely, and release the stand from the stand hook.

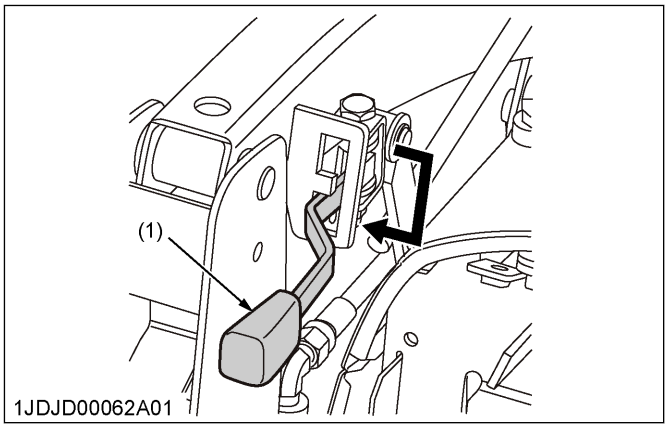

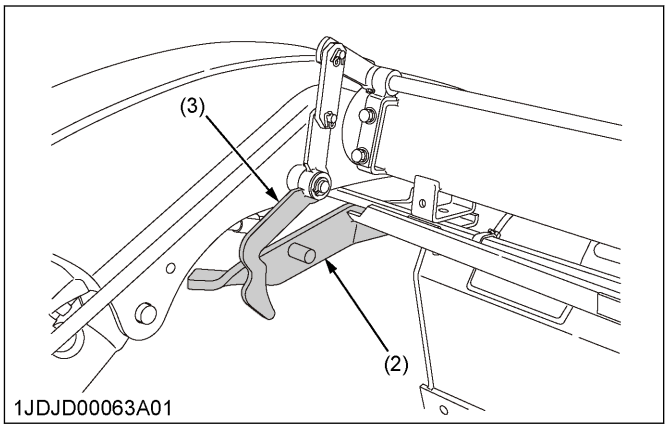

(1) Stand lever
(2) Stand
(3) Stand hook

4. Get the bucket rolled back until its bottom is positioned the following angle with respect to the ground surface.

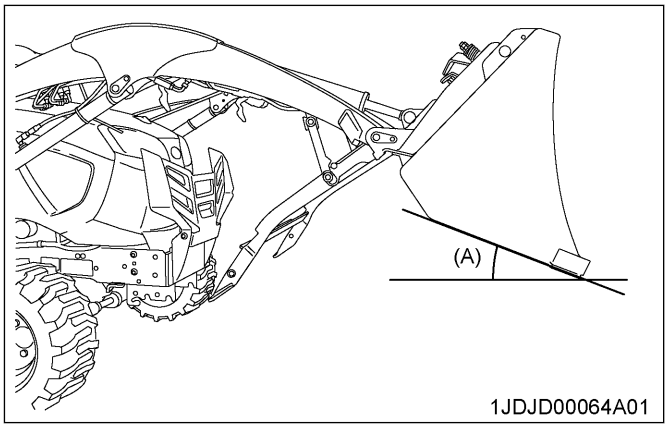

(A) Angle between ground surface and bucket bottom

Angle between ground surface and bucket bottom (A)	About 20 degrees

https://truckmanualshub.com/

5. Lower the boom and raise the front wheels slightly.

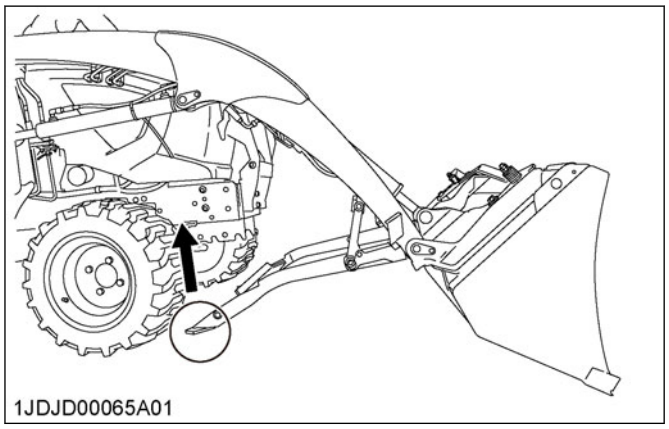

IMPORTANT :
- **When raising the front wheels, the stands are not to be grounded.**

6. Slide the mounting levers of both sides to the upward direction as shown in the following figure.

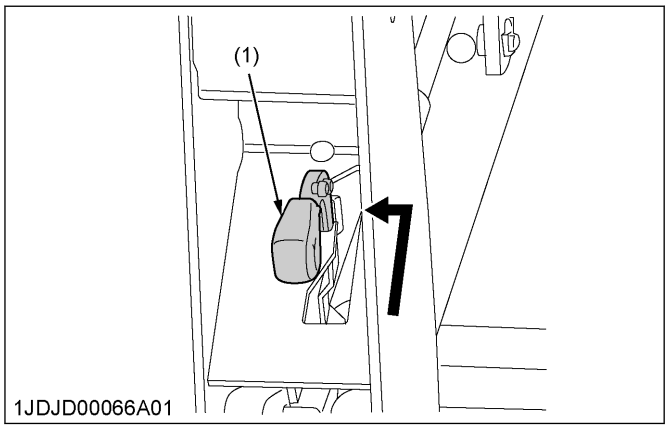

(1) Mounting lever

7. Slowly move the loader-control-lever to the **rollback** position to raise the side frames of the loader up and out of the receivers of the main frames as shown in the following figure.

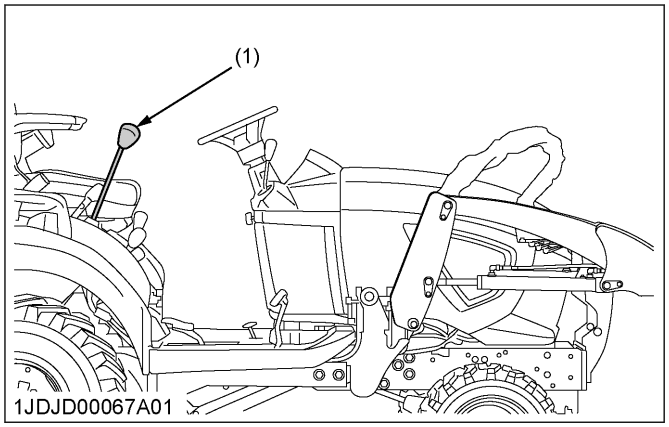

(1) Loader control lever

8. Down the mounting levers of both sides as shown in the following figure.

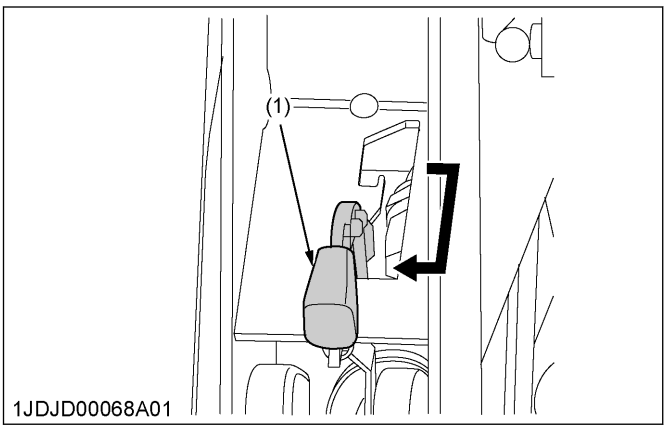

(1) Mounting lever

9. Back the tractor so that the quick coupler is positioned at the back of side frame as shown in the following figure.

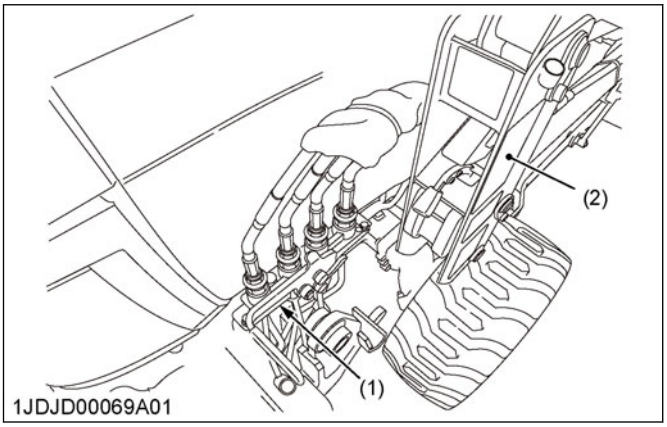

(1) Quick coupler *(2) Side frame*

10. Stop the engine, and slowly release all hydraulic pressure by moving the loader-control-lever in all directions.

https://truckmanualshub.com/

11. When the third-function-kit is mounted, remove the connector. Connect the caps to the connectors of mobile side and tractor side.

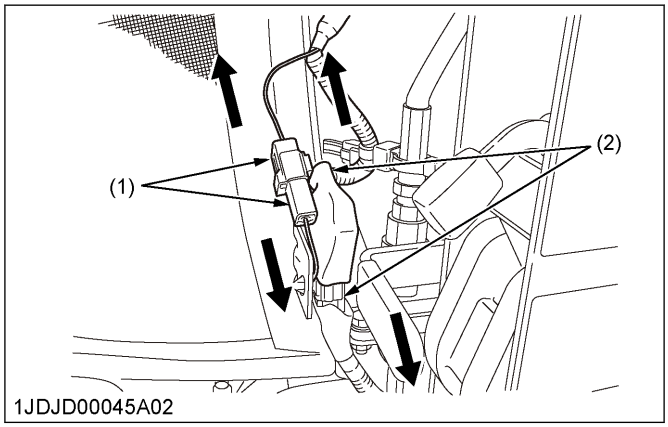

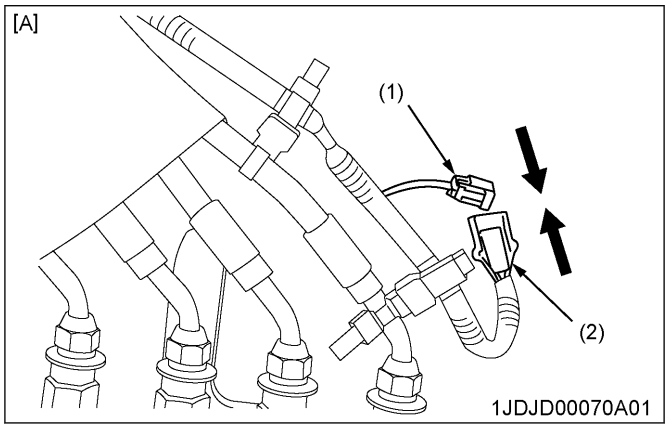

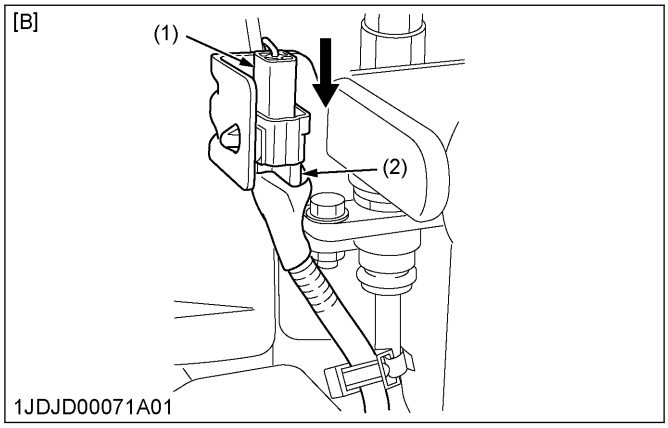

(1) Cap
(2) Connector
[A] Mobile side
[B] Tractor side

12. Unfasten the seat belt, turn the safety-lock-button counterclockwise to unlock it, and then raise the lever until it stops.

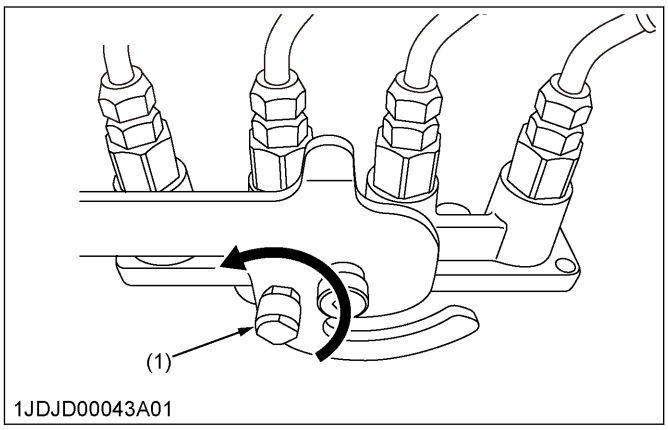

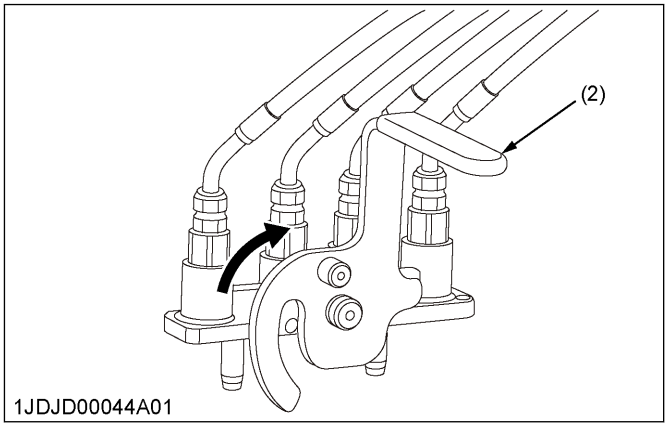

(1) Safety lock button (red)
(2) Lever

13. Put the mobile part on the coupler stay (1). Put the mobile part on the coupler stay (2) for cab model .

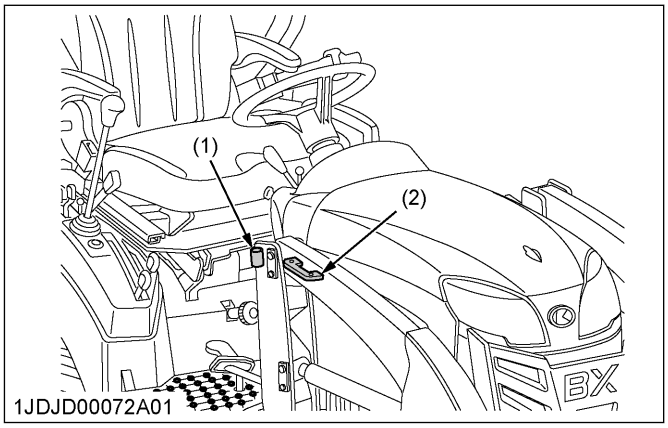

(1) Coupler stay
(2) Coupler stay for cab model

https://truckmanualshub.com/

14. Place the protective caps and plugs on the ends of the quick coupler.

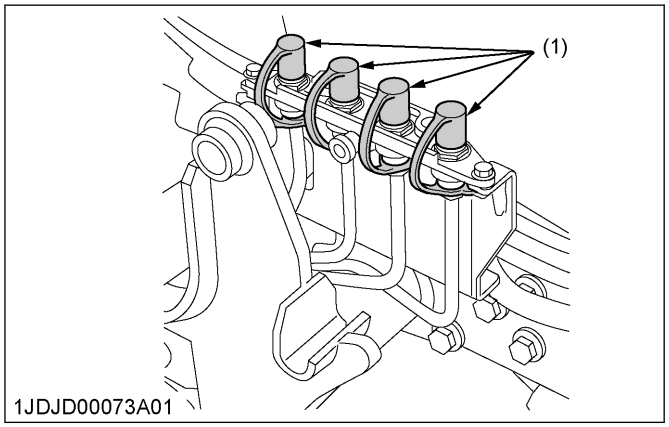

(1) Protective caps

15. Wear the seat belt and slowly back the tractor away from the loader.

STORING THE LOADER

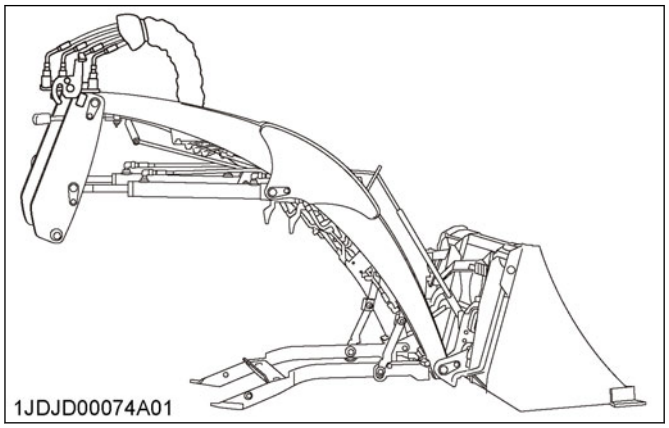

1. Store the loader in a clean, dry place.
2. Make sure that the loader is properly supported.
3. Check the hydraulic hoses and connections. Repair or replace the hydraulic hoses if necessary
4. Repair or replace any worn, damaged, or missing parts.
5. Lubricate the loader as described 1. Lubricating the loader on page 139.
6. Apply a coat of grease to all exposed cylinder rods to prevent rust.
7. Repaint worn or scratched parts.

https://truckmanualshub.com/

REINSTALLING THE LOADER

HOW TO REINSTALL THE LOADER

WARNING

To avoid personal injury or death:

- **When starting the engine and operating the loader-control-valve, always sit in the operator's seat.**

1. Slowly drive the tractor between the side frames of the loader until the rear portion of both side frames touches the main frames as shown in the following figures.

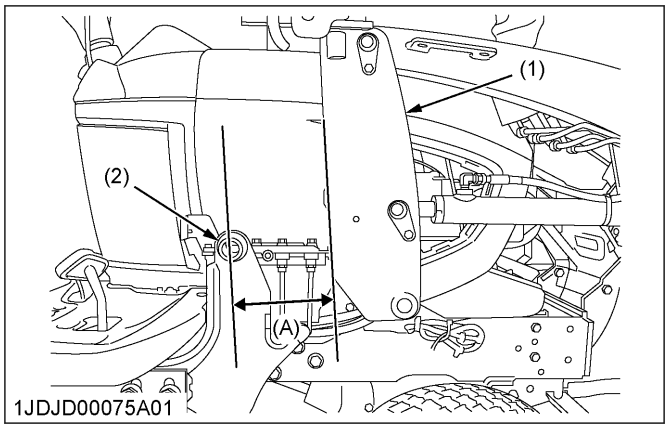

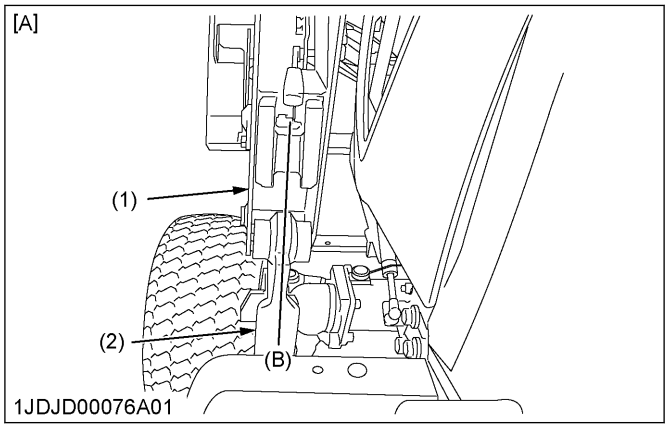

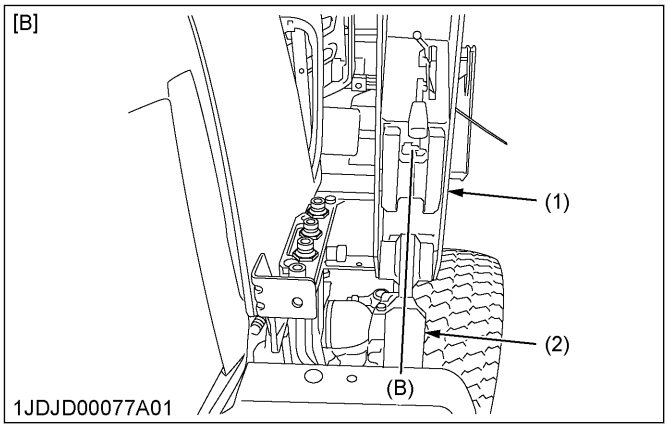

(1) Side frame
(2) Main frame
[A] LH
[B] RH
(A) 150 mm to 200 mm
(B) Center of side frames

2. Stop the engine and unfasten the seat belt.
3. Remove the protective cap.

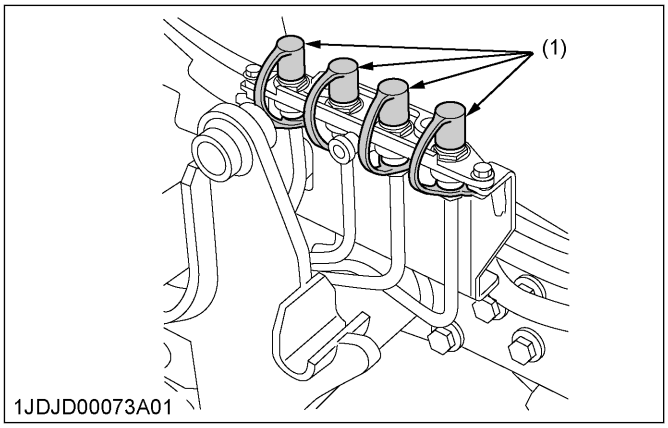

(1) Protective caps

https://truckmanualshub.com/

4. Connect the quick coupler and lower the lever until it stops, and then turn the safety-lock-button clockwise.

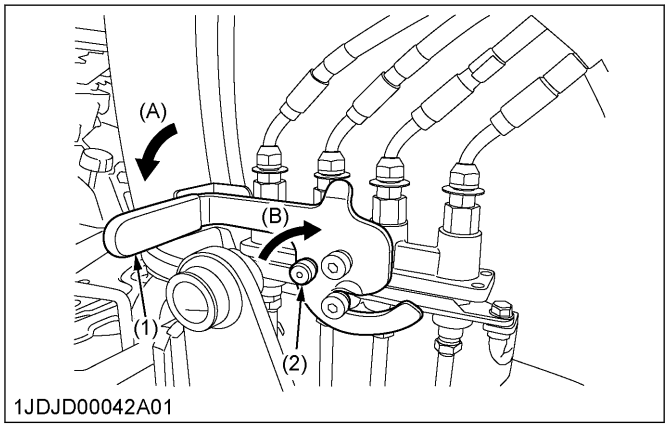

(1) Lever
(2) Safety lock button
(A) Lower
(B) Clockwise

IMPORTANT :

- **Get the quick coupler locked, and move up and down the lever to make sure that the quick coupler is tightly locked.**

5. When mounting the third-function-kit, remove the caps from the connectors of mobile side and tractor side. Connect the connectors and the caps as shown in the follow figures.

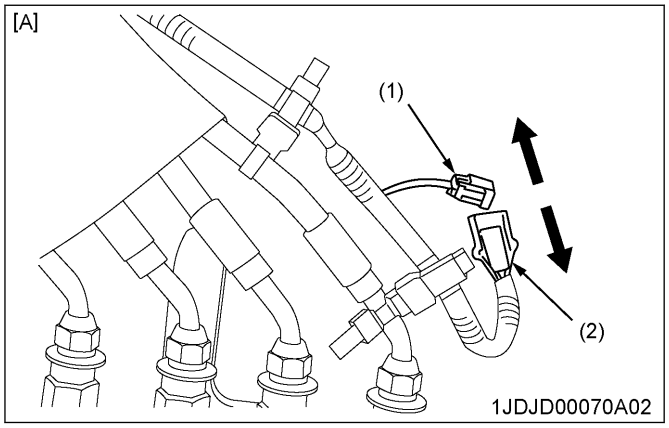

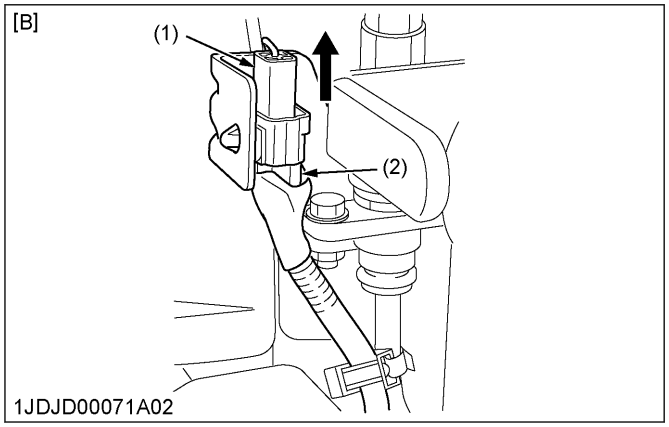

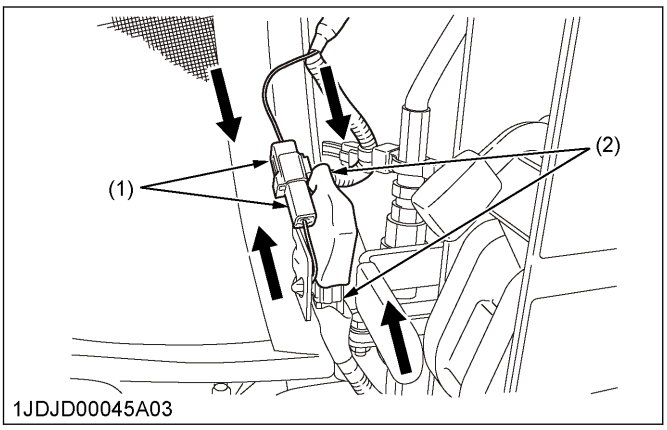

(1) Cap
(2) Connector
[A] Mobile side
[B] Tractor side

6. Make sure that the mounting levers of both sides are at their **low** position as shown in the follow figures.

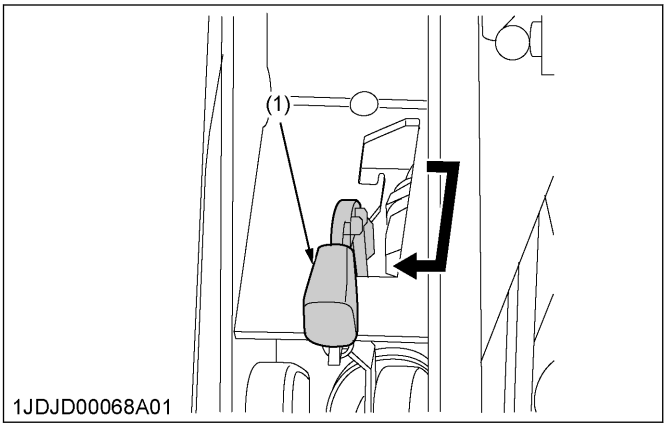

(1) Mounting lever

7. Fasten the seat belt. Start the engine and run at the following speed.

Engine speed	1800 rpm

https://truckmanualshub.com/

8. Slowly move the loader-control-lever to the **up** position (boom raise direction) until left and right guide bosses of side frames (1) touches the main frames.

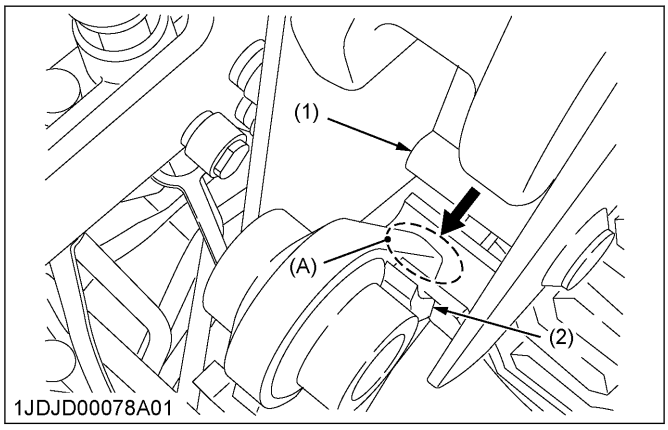

(1) Guide boss of side frame
(2) Main frame
(A) Touch

IMPORTANT :

- **Do not attempt to install the side frames onto the main frames with the boom cylinders fully retracted.**
  Be sure to expose the boom-cylinder-rods at least the following length before installing the loader.

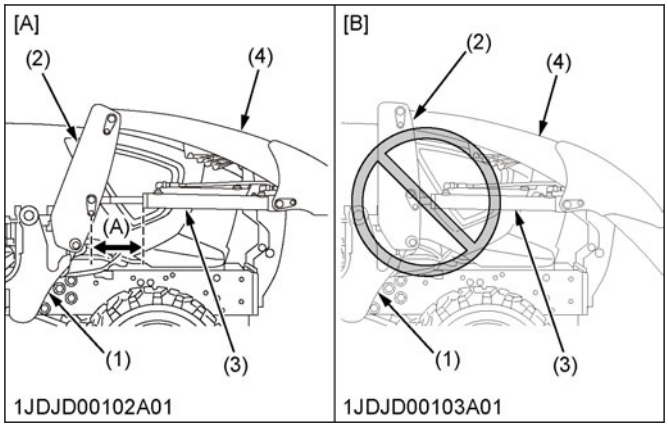

[A] Good
[B] No good
(1) Main frame
(2) Side frame
(3) Boom cylinder
(4) Boom
(A) 203 mm (8.0 in.) or more

9. Slowly move the loader-control-lever to the **dump** position to lower the side frames into the main frames, and engage the left and right bosses of the side frames to the bosses of the main frames, as shown in the following figure (encircled (B)).

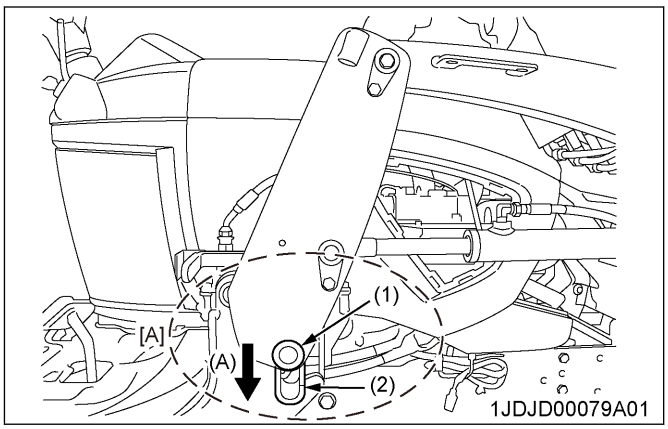

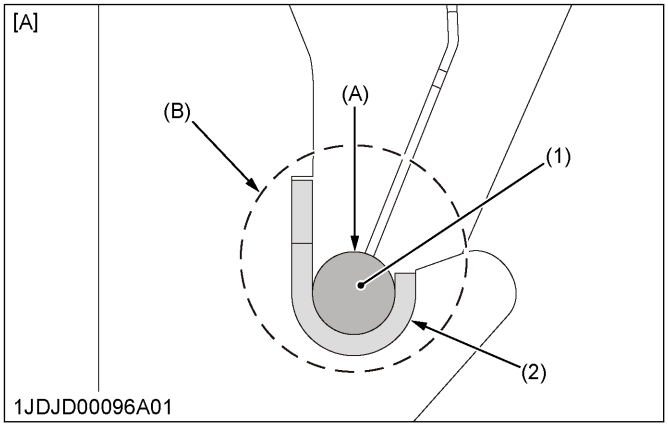

(1) Guide boss of side frame
(2) Boss of main frame
[A] Engaging bosses
(A) Engage
(B) To be securely engaged

IMPORTANT :

- **Make sure that the guide bosses of the side frames are engaged by the bosses of the main frames. Otherwise the loader in use may drop off the main frames, thereby damaging the tractor itself.**

https://truckmanualshub.com/

10. Make sure that the left and right bosses of the side frames are engaged by the bosses of the main frames. Then slowly move the loader-control-lever to the **dump** position until the bucket tilts down the following degrees to the ground.

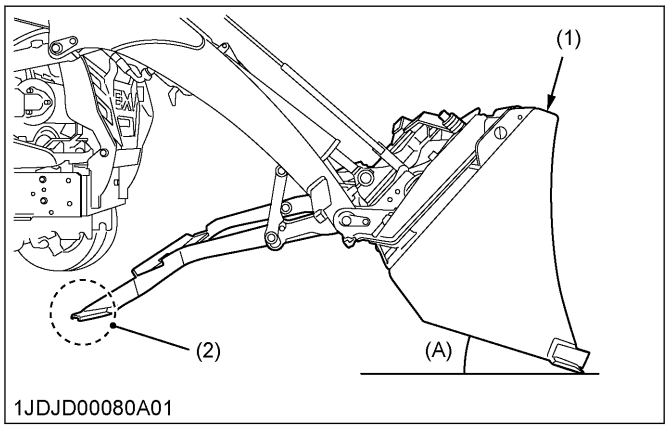

(1) Bucket
(2) Tip of the stand
(A) Angle between bucket bottom and ground

Angle between bucket bottom and ground (A)	20 degrees or so

IMPORTANT :
- **Make sure that the tips of the stands are off the ground.**

11. Slowly move the loader-control-lever to the **down** position to lift the front wheels slightly with the loader until the mount hooks are completely mounted on the main frame as shown in the following figure.

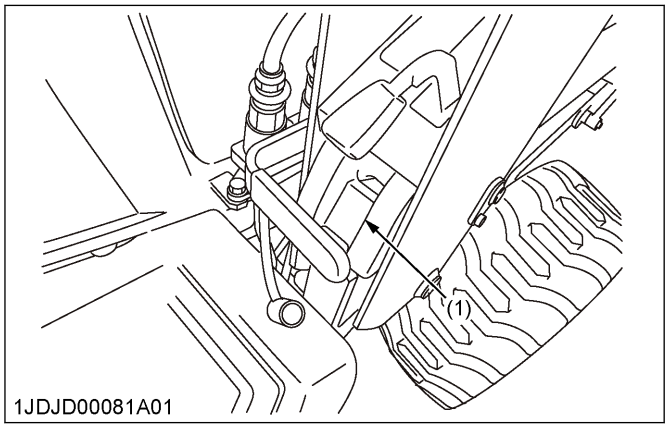

(1) Mount hook

IMPORTANT :
- **Make sure that the hooks at both sides are properly mounted on the main frame.**

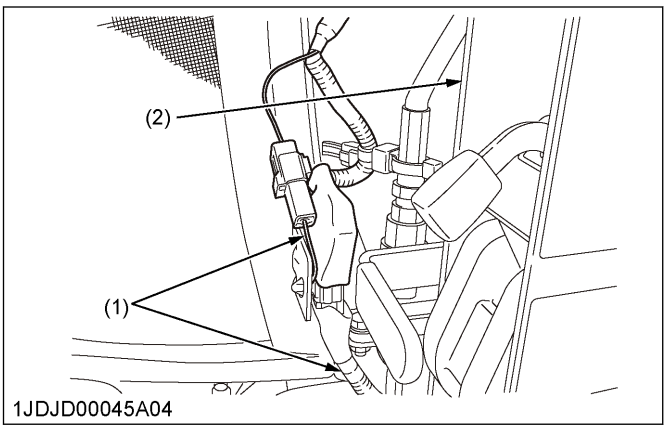

(1) Wire harness
(2) Side frame

- **Make sure not to pinch the wire harness in the side frame when mounting the third-function-kit.**

12. Slowly move the loader-control-lever to the **up** position until the cutting edge of the bucket comes up slightly off the ground. Then make sure that the right and left mounting levers can not be activated.
Do not use the machine if the cutting edge of the bucket is off the ground but the mount hooks are unlocked.

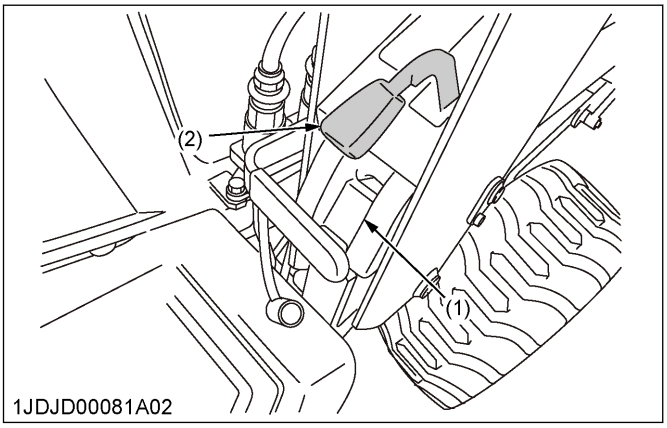

(1) Mount hook
(2) Mounting lever

https://truckmanualshub.com/

13. Raise the boom until the bucket-fulcrum-pin comes up to the height of the boom-fulcrum-pin.

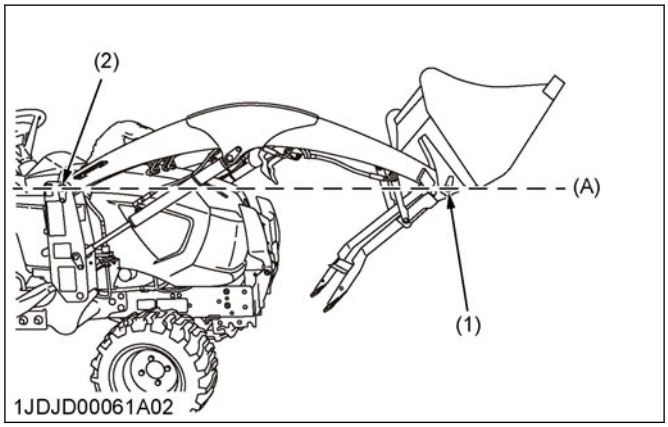

(1) Bucket fulcrum pin *(A) Same height*
(2) Boom fulcrum pin

14. Make sure that the stand lever is at its **low** position as shown in the following figure.

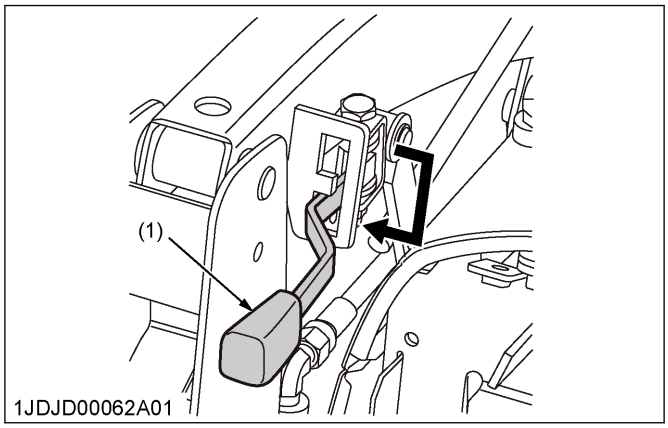

(1) Stand lever

15. Slowly dump the bucket until the stand touches the boom.

IMPORTANT :
- **Do not fold up the stand while the boom is around its highest position. Otherwise the stand links may get under an excessive load.**

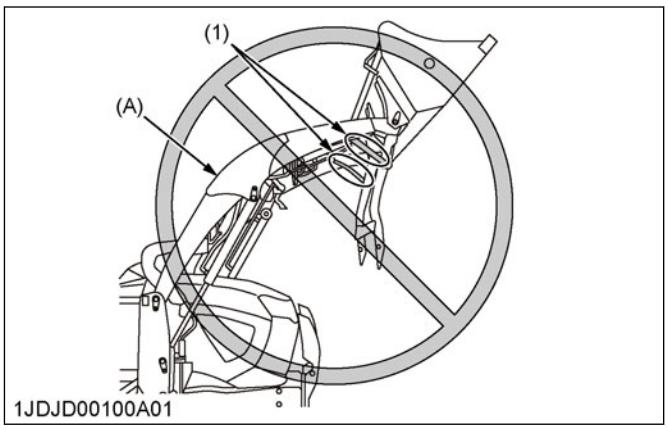

(1) Stand links *(A) Boom highest position*

16. Slide the stand lever upward direction, and then slide the stand lever left side completely as shown in the following figure.

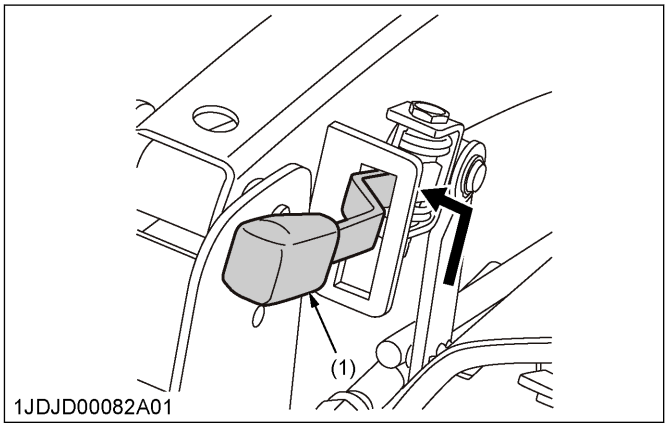

(1) Stand lever

IMPORTANT :
- **Do not force the stand lever if it gets twisted halfway and fails to stow away the stand. In such case, lower the stand lever and move the bucket to the full scoop position. Then go back to step 13. and take its following steps.**

17. Hold the stand by stand hook.

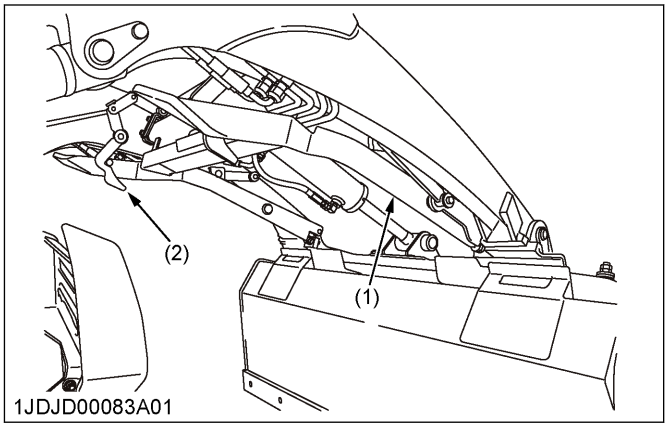

(1) Stand *(2) Stand hook*

https://truckmanualshub.com/

ADJUSTING THE HEIGHT OF THE LIFTING STAND

If the stand does not get hooked and fold up successfully, readjust the height of lifting stand.

1. Raise the boom until the bucket-fulcrum-pin comes up to the height of the boom-fulcrum-pin.
2. Roll back the bucket to maximum.

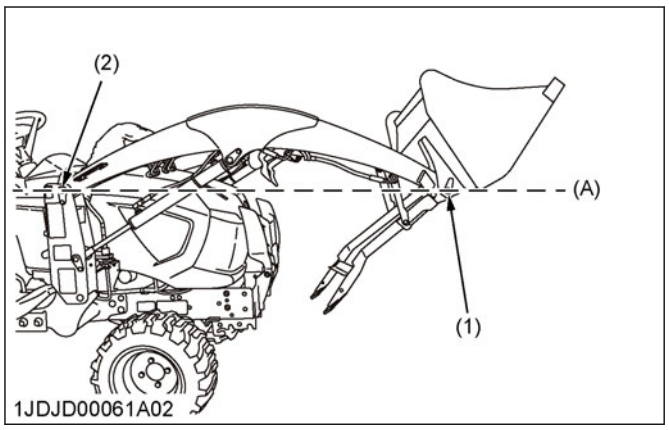

(1) Bucket fulcrum pin
(2) Boom fulcrum pin
(A) Same height

3. Stop the engine.
4. Make sure that the stand lever is at its low position as shown in the following figure.

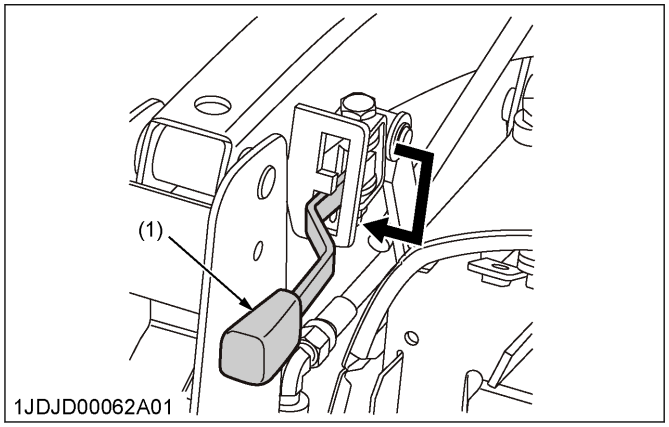

(1) Stand lever

5. Apply the adjusting bolts in the parts box to both the right and left stand adjusting blocks as shown in the following figure.

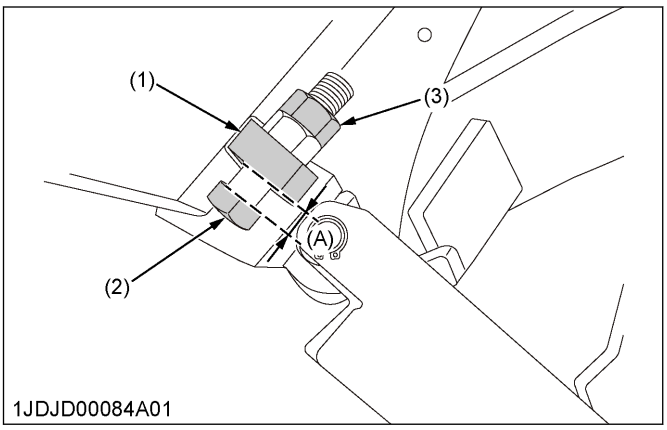

(1) 2-Adjusting block
(2) 2-M16 Adjusting bolt
(3) 2-M16 Lock nut
(A) About 13 mm

IMPORTANT :

- **Be sure to apply the adjusting bolts all the way to prevent the damage of the stand.**

NOTE :

- **There is no need to tighten up the lock nuts.**

https://truckmanualshub.com/

6. Move the loader-control-lever to the **dump** position, and check to see if the stands are folded as specified.

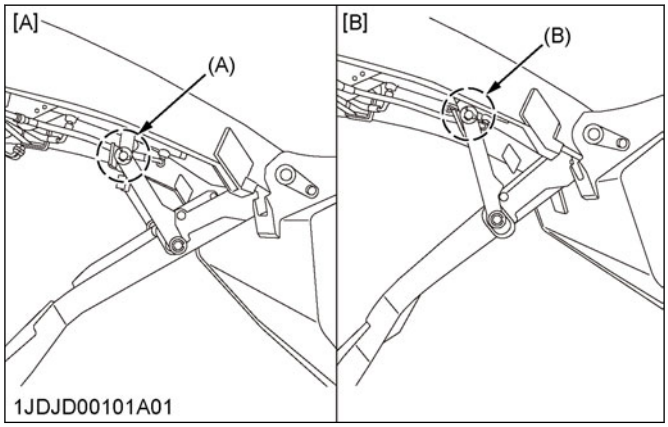

[A] Good
[B] No good
(A) Encircled part gets folded backward into position
(B) Encircled part gets stretched forward into position

IMPORTANT :
- **Keep the engine off and move the bucket to the dump position.**

NOTE :
- **If either of the links gets stuck in the wrong position, move the bucket back to the full roll back position and extend the adjusting bolt at the wrong side by the following length.**

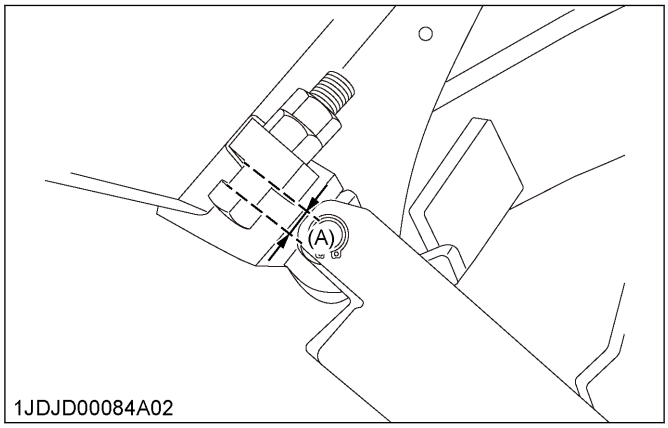

(A) Extend by 1 mm to 2 mm

7. Fasten the seat belt, and start the engine.
8. Move the loader-control-lever to the **dump** position until the hydraulic pressure gets relieved.
9. Lower the boom to put the bucket on the ground and stop the engine.

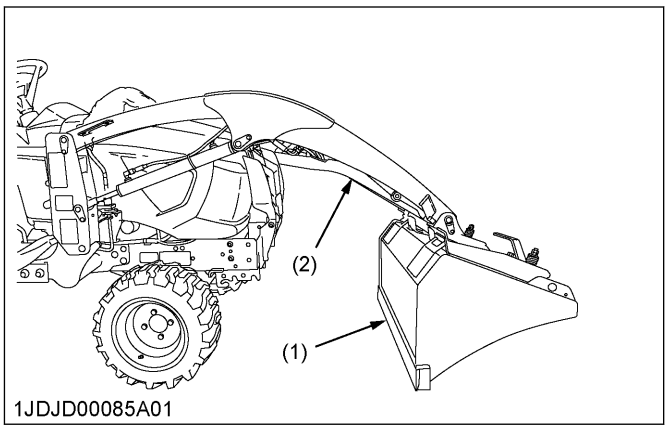

(1) Bucket
(2) Stand

10. Lift the stand on the right side of the loader up to the position by hand shown in the following figure.

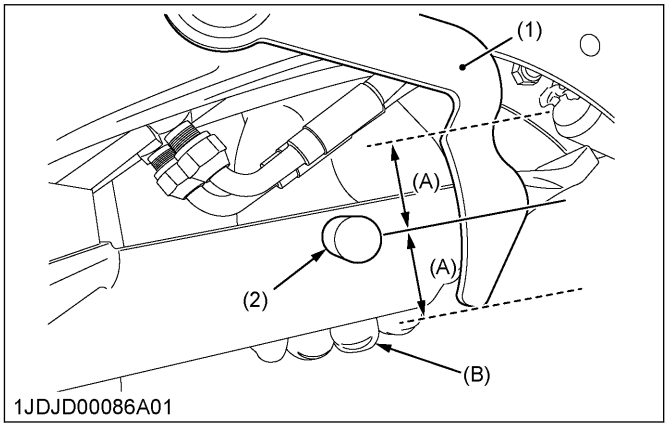

(1) Stand hook
(2) Stand pin
(A) Almost the same length
(B) Hold up by hand

11. Reposition the adjusting bolt until it touches the stand.

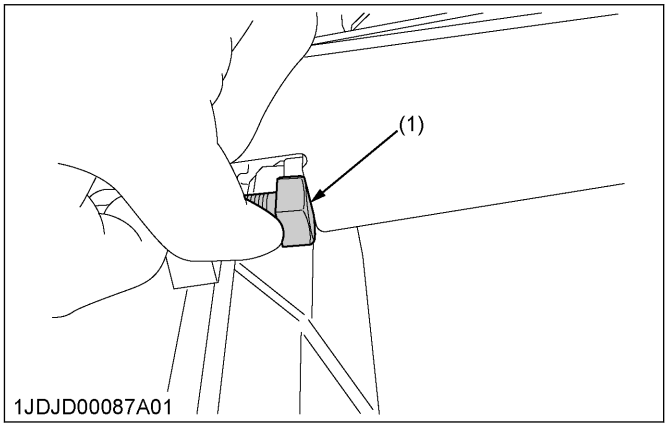

(1) Adjusting bolt

NOTE :
- **The position of the adjusting bolt is provisional and may be roughly set for now.**

12. Adjust the adjusting bolt in the same way as for the stand on the left side of the loader.

https://truckmanualshub.com/

13. Position the stand lever as shown in the figure.

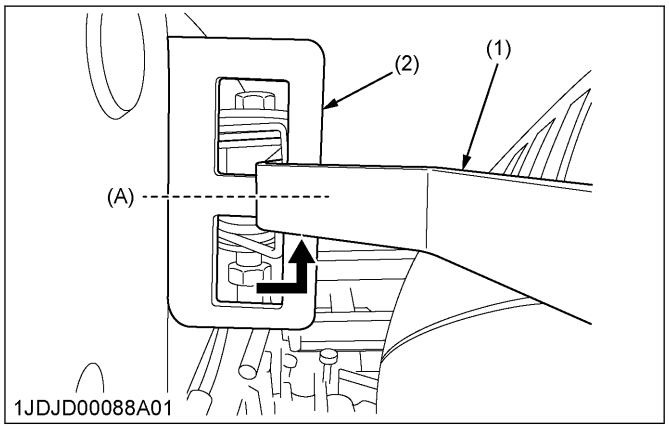

(1) Stand lever
(2) Lever guide
(A) Center

14. Turn the adjusting bolt on the right side of the loader to set the stand pin as shown as follows.

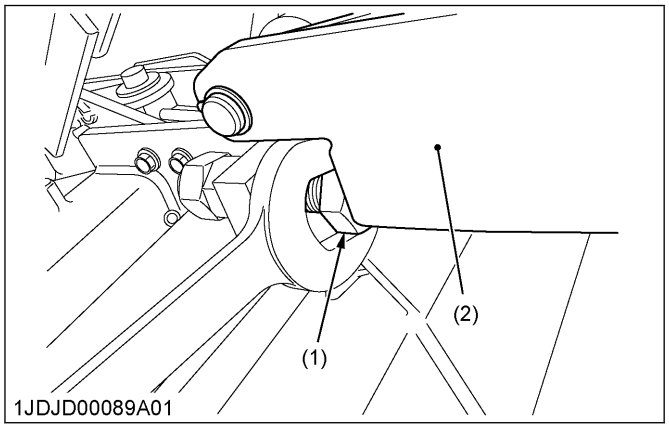

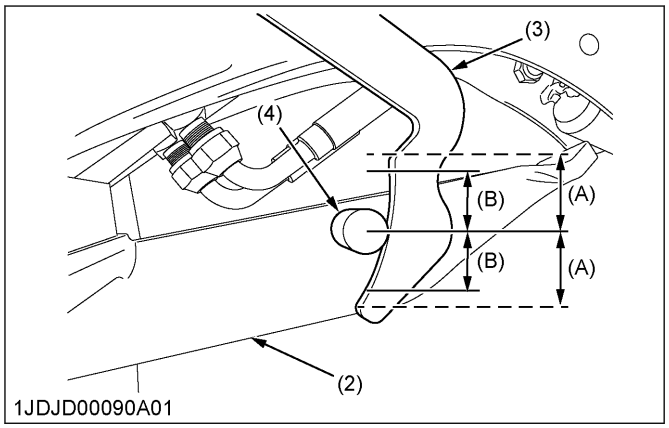

(1) Adjusting bolt
(2) Stand
(3) Stand hook
(4) Stand pin
(A) Almost the same length
(B) Adjusting range

Adjusting range (B)	± 15 mm

IMPORTANT :

- **Be careful not to allow the stands to go beyond their adjustable range. Otherwise the stands may get damaged.**

15. Lock the stand pin using the lock nut.
16. Turn the adjusting bolt and lock the stand pin on the left side of the loader in the same way as for the right side.
17. Look at the right and left stands to make sure that the heads of the adjusting bolts are pressed upon the stands.

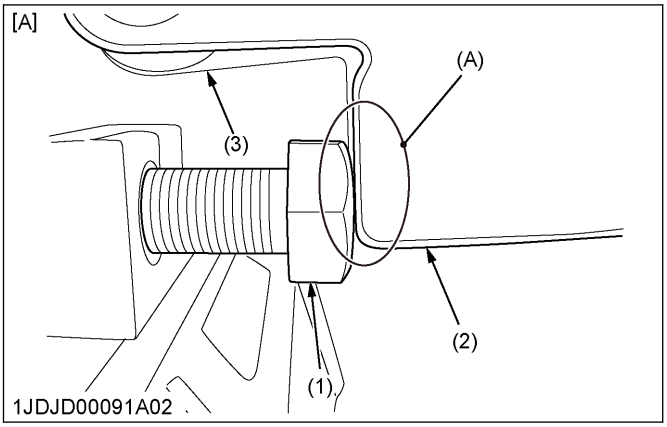

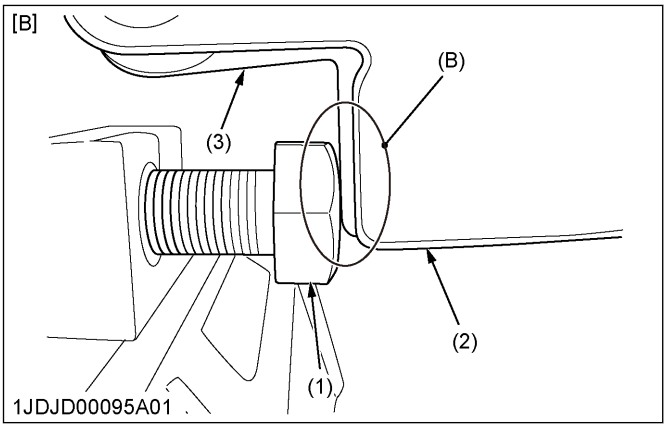

(1) Adjusting bolt
(2) Stand
(3) Link 3
[A] Good
[B] No good
(A) Pressed
(B) Not pressed

IMPORTANT :

- **Double-check that the heads of the adjusting bolts are pressed upon the stands. Otherwise the stands may get damaged in storing them away.**

https://truckmanualshub.com/

18. Be sure that the stands run parallel with the loader pipe.

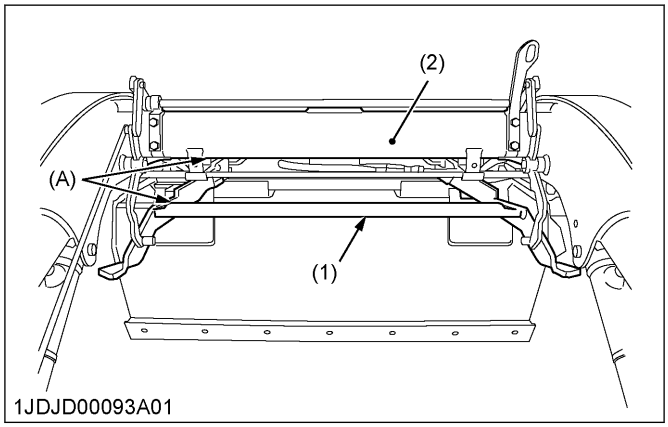

(1) Stand *(A) Parallel*
(2) Loader pipe

19. Slide the stand lever in the upward direction and make sure that the stand gets locked.

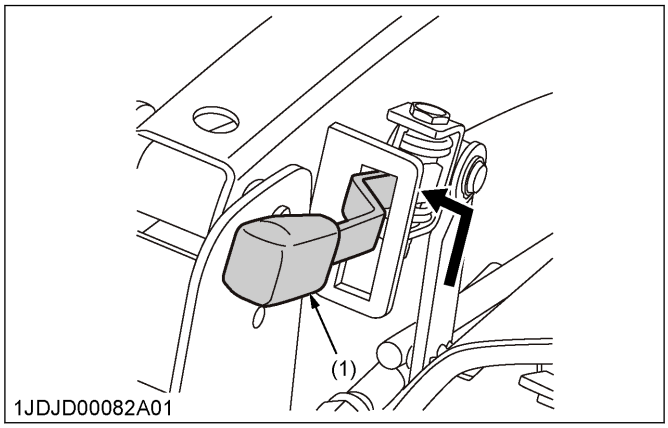

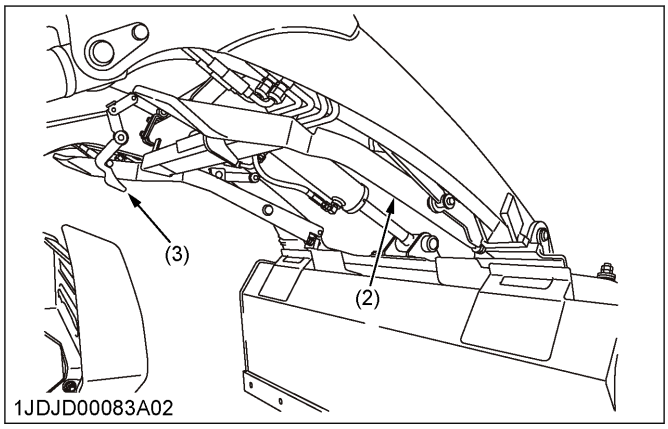

(1) Stand lever *(3) Stand hook*
(2) Stand

20. Set the stand lever to the low position.

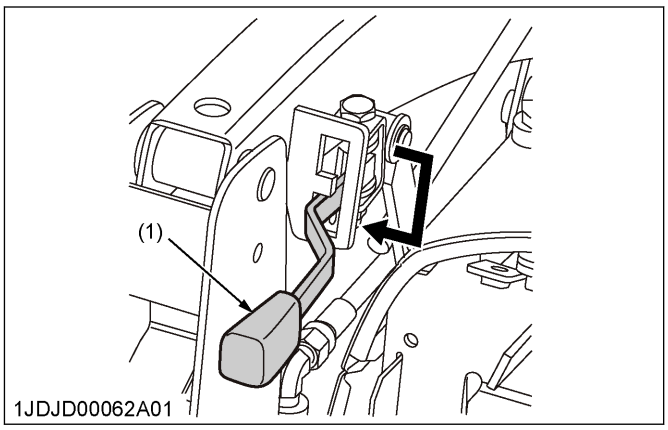

(1) Stand lever

21. Fasten the seat belt.
22. Get the engine started, roll back the bucket and move up the boom, both to maximum.
23. Stop the engine.
24. Move the loader-control-lever to the **dump** position until the bucket comes to a complete stop.
25. Make sure that the stands are folded as specified.
26. Fasten the seat belt.
27. Get the engine started and raise the engine speed up to the following speed.

Engine speed	1800 rpm

28. Slowly dump the bucket until the stand touches the boom.
29. Slide the stand lever upward direction, and then slide the stand lever left side completely as shown in the following figure.

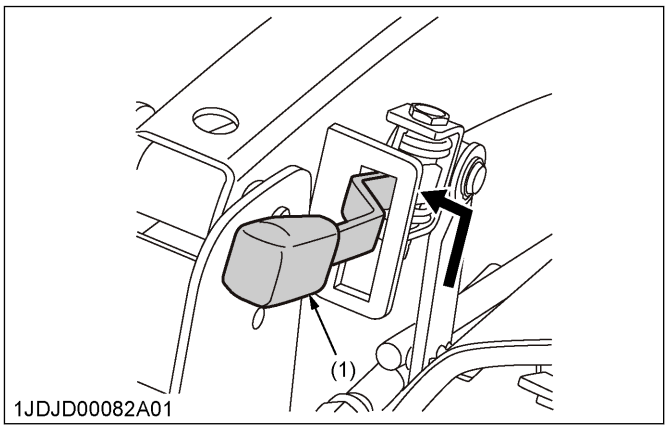

(1) Stand lever

https://truckmanualshub.com/

30. Hold the stand by stand hook.

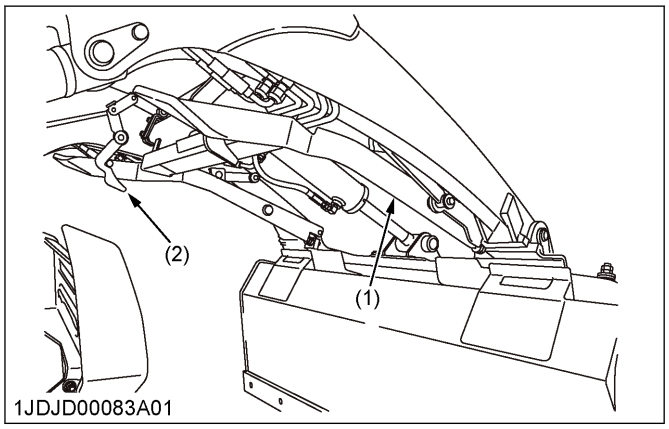

(1) Stand *(2) Stand hook*

31. Make sure that the stand lever is at its upside position.
32. Move the loader-control-lever to the **dump** position until the hydraulic pressure gets relieved.
33. Look at the right and left side of the stands to make sure that the heads of the adjusting bolts are not pressed upon the stand.

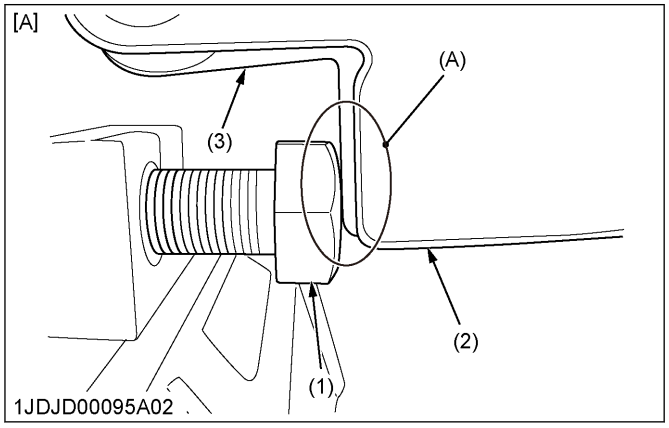

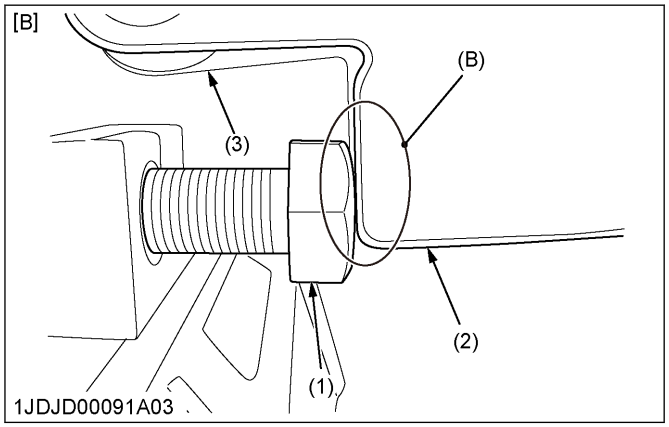

(1) Adjusting bolt
(2) Stand
(3) Link 3
[A] Good
[B] No good
(A) Not pressed
(B) Pressed

NOTE :

- **There is no problem with the link 3 in contact with the bolt, as shown in the preceding figure.**

https://truckmanualshub.com/

REMOVING THE BACKHOE

HOW TO REMOVE THE BACKHOE

WARNING

To avoid serious injury or death:

- **Before starting the engine, always sit in the operator's seat of the tractor.**
- **Before getting off the tractor, make sure that the PTO lever is off and the range-gear-shift-lever is in the neutral position. Then set the parking brake.**
- **Keep hands, feet, and body from between the tractor and the backhoe. Never allow any part of body under the machine.**
- **Before leaving the operator's seat of the backhoe, fully lower the boom to the ground.**
- **Before removing the backhoe, set the swing-lock-pin.**

IMPORTANT :

- **Before removing the backhoe, set the engine speed as follows.**

Engine speed	Approximately 1800 rpm

- **For removing the backhoe, locate the tractor, the loader, and the backhoe on a flat level and hard surface, preferably concrete.**
  If the surface is soft, place a board on the ground for the bucket and stabilizers.

1. Set the swing-lock-pin to prevent the pivoting of the boom before removing the backhoe.

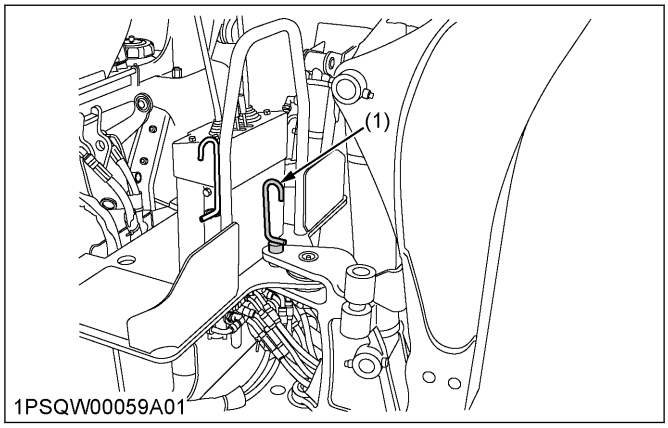

(1) Swing lock pin

2. Stand beside the rear tire, fold the boom and dipper completely, and dump the bucket to approximately 60 degrees.
3. Keep the stabilizer pads at height of the following value.

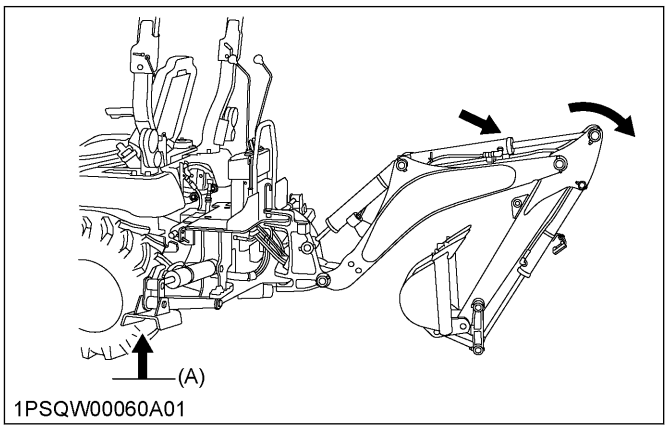

(A) Height of stabilizer pads

Height of stabilizer pads	About 381 mm (15.0 in.)

https://truckmanualshub.com/

4. Lower the boom, and raise the rear wheels slightly off the ground.
   While the mounting levers are pulled, the mounting pins of the main frame may turn in both directions.
   When the mounting pins come to the **release** position, push the levers in the holding hole to release the mounting pins.

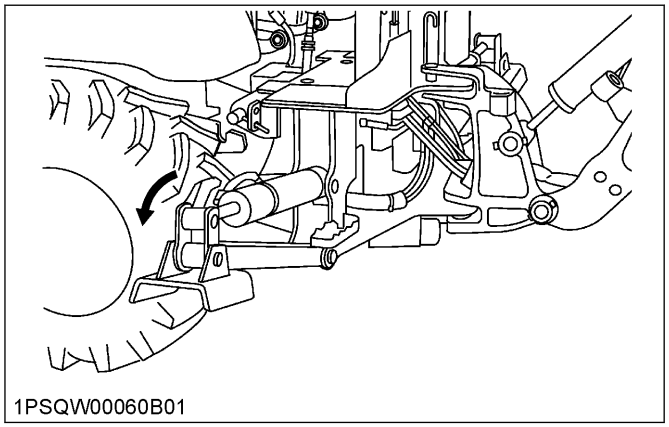

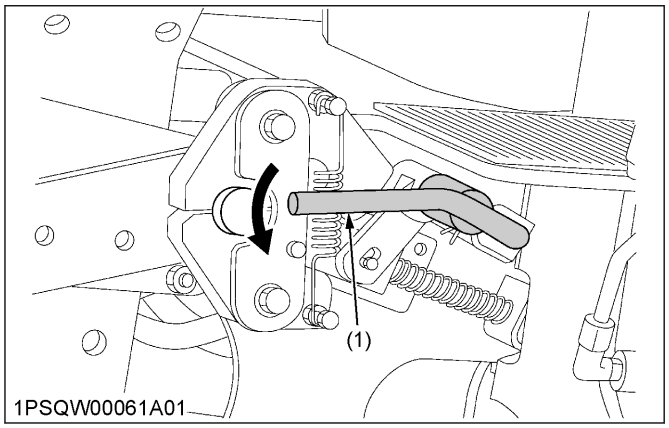

(1) Mounting lever

5. Slowly raise the boom to disengage the backhoe from the tractor.

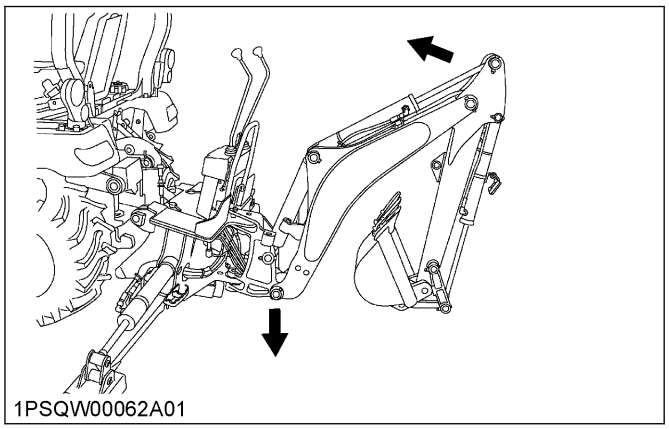

6. Raise the backhoe by operating the stabilizers to the lowering direction until the mount bars hit to the guide stopper on the support hooks.

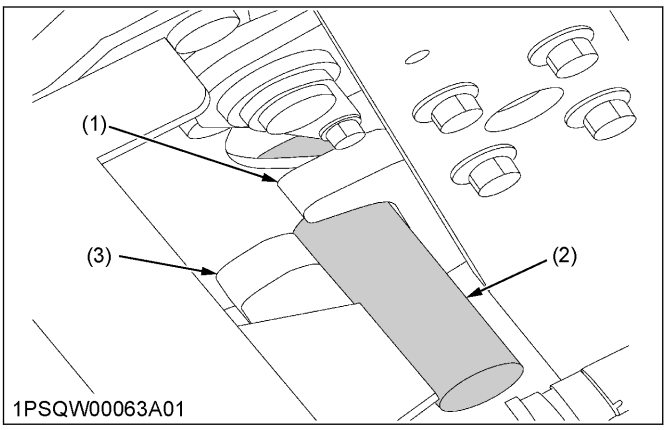

(1) Guide stopper *(3) Support hook*
(2) Mount bar

7. Move the tractor forward from the backhoe to the following value.

Distance between the tractor and the backhoe	About 203 mm (8.0 in.)

IMPORTANT :
- **Be careful not to damage or break the hoses when moving the tractor.**

8. Lower the main frame and the swing frame onto the ground by operating the boom and the stabilizer-control-levers.

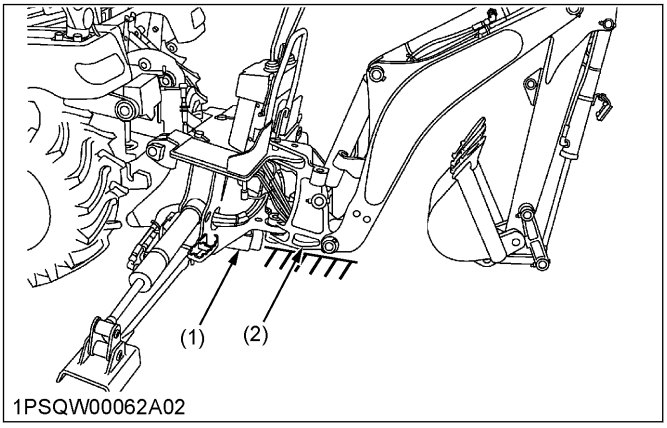

(1) Main frame *(2) Swing frame*

9. Shut off the engine and set the parking brake.
10. Slowly release all hydraulic pressure by moving the hydraulic control levers of the backhoe in all directions.

https://truckmanualshub.com/

11. Disconnect the hydraulic hoses in the following manner.
    a. Disconnect the inlet hose, the outlet hose, and the power-beyond-hose from the tractor.
    b. Connect the outlet hose of the tractor to the coupler of the power-beyond-pipe.

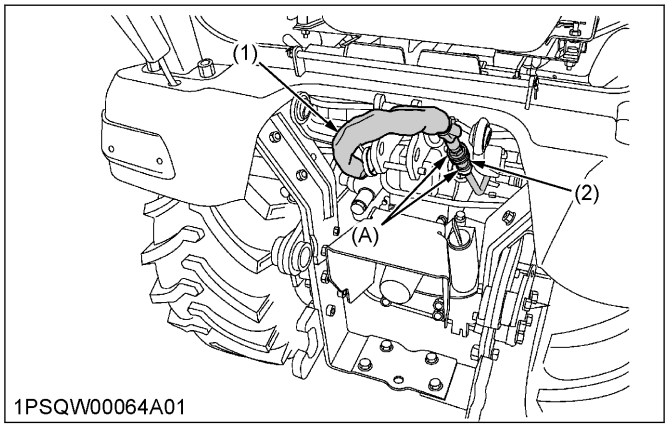

(1) Outlet hose (tractor) *(A) To be connected*
(2) Power beyond pipe (tractor)

    c. Cap the other couplers.
12. Restart the engine.
13. Then drive the tractor and loader slowly away from the backhoe.
14. Shut the engine off, and remove the key from the tractor. Set the parking brake.

IMPORTANT :
- **The entire 3-point hitch can now be reinstalled on the tractor for use with other rear mount implements.**
- **Be sure that there is sufficient ballast in the rear tires and an implement is attached to the 3-point hitch before using the loader with the backhoe removed.**

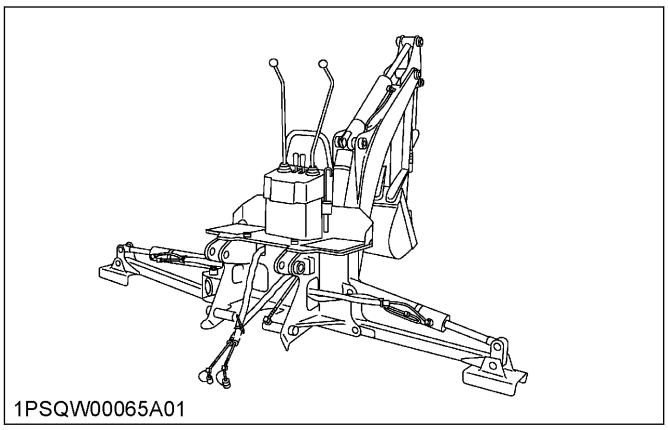

STORING THE BACKHOE

IMPORTANT :
- **When storing the backhoe, install the dust caps onto the hydraulic fittings of the backhoe to prevent contamination.**

1. Store the backhoe in a dry place.
2. Apply a coat of grease to all exposed rods of the cylinder to prevent rusting.
3. If you store the backhoe outside, cover the backhoe with suitable weather cover.
   Weather cover will keep moisture, dirt, and other airborne debris from getting into the system.
4. Repair or replace any worn, damaged or missing parts.

https://truckmanualshub.com/

REINSTALLING THE BACKHOE

HOW TO REMOVE THE BACKHOE

WARNING

To avoid serious injury or death:

- **When starting the engine, always sit in the operator's seat.**
- **When getting off the tractor, make sure that the PTO lever is off and the range-gear-shift-lever is in the neutral position. Set the parking brake.**
- **Keep hands, feet, and body from between the tractor and the backhoe. Never allow any part of body under the machine.**
- **Make sure that the PTO of the tractor is disengaged.**

IMPORTANT :

- **Before reinstalling the backhoe, set the engine speed to low-idle.**

1. Remove the 3-point hitch and / or drawbar (if equipped).
2. Detach the mower if attached in position.
3. Make sure that the swing-lock-pin is installed.
4. Slowly back the tractor and the loader, centering to the main frame of the backhoe.
5. Stop the tractor keeping at the following distance from the backhoe.

Distance between the tractor and the backhoe	254 mm to 304 mm (10.0 in. to 12.0 in.)

6. Shut the engine off and set the parking brake.
7. Connect the inlet hose, outlet hose, and the power-beyond-hose of the backhoe to the outlet hose, the power-beyond-pipe and the return pipe of the tractor.

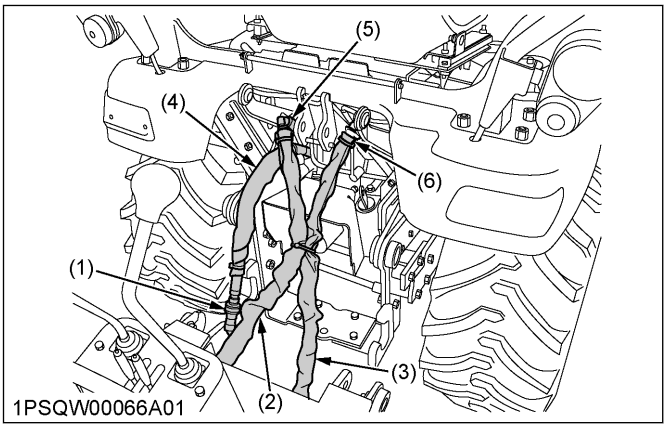

(1) Inlet hose (backhoe)
(2) Outlet hose (backhoe)
(3) Power beyond hose (backhoe)
(4) Outlet hose (tractor)
(5) Return pipe (tractor)
(6) Power beyond pipe (tractor)

IMPORTANT :

- **Make sure that both hoses are firmly connected before starting the engine.**

8. Pull the mounting levers for left and right mounting pins of the main frame of the backhoe to release mounting pins.

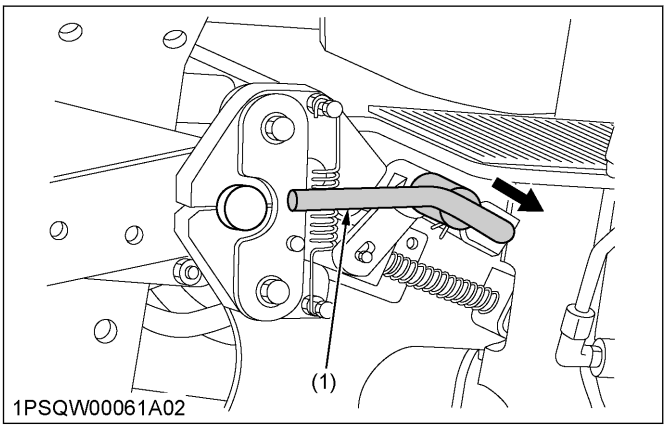

(1) Mounting lever

9. Restart the engine.

WARNING

To avoid serious injury or death:

- **Do not move the joystick-control-lever to the swing position.**

https://truckmanualshub.com/

10. Stand beside the rear tire. Move the boom to fully raising position and raise the backhoe by operating the stabilizers until the mount bar on the main frame of the backhoe is slightly higher than the support hooks on the main frame of the tractor.

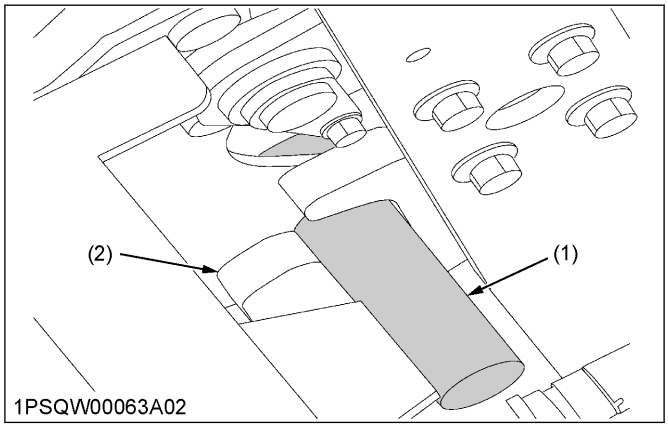

(1) Mount bar *(2) Support hook*

NOTE :
- **If the support hooks are not parallel to the mount bars, adjust them with the stabilizers.**

11. Move the tractor backward until the support hooks on the main frame of the tractor are just beneath the mount bars on the main frame of the backhoe.

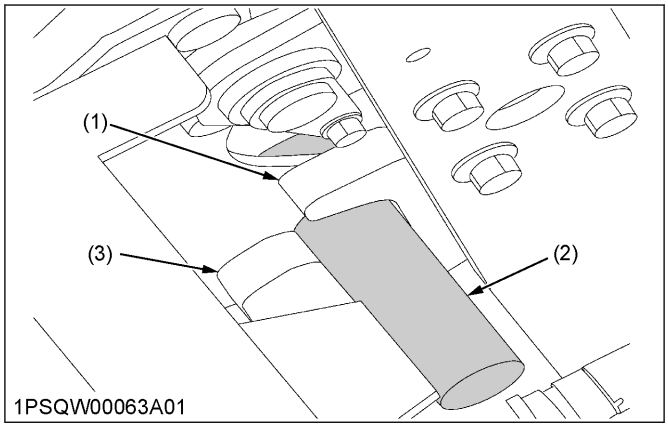

(1) Guide stop *(3) Support hook*
(2) Mount bar

12. Lower the mount bars onto the support hooks by operating the stabilizer and the boom-control-levers.
13. Lower the boom slowly and interlock the mounting pins with the support hooks.

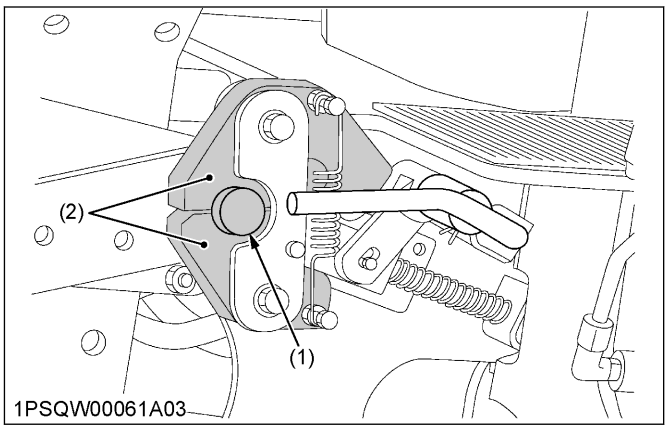

(1) Mounting pin *(2) Support hooks*

14. Continue to slowly lower the boom so that the rear wheels are slightly off the ground.

WARNING
To avoid serious injury or death:
- **Make sure that the left and right mounting pins are in holding position.**
- **When mounting, check the gap between the mounting bar and the link. If there is a gap, push the link in.**

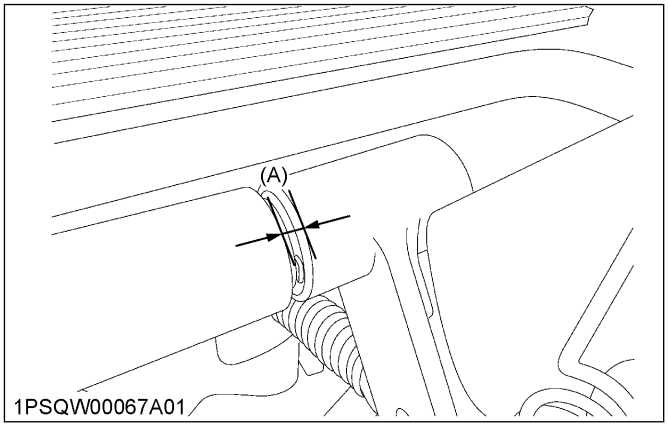

(A) Gap

The lock pins will click.

15. Operate the boom or the stabilizers to maximum lift height, and insert the lock pin of the boom.

IMPORTANT :
- **If the slide bar of the mounting pins is inserted to the upper hole, the mounting pin comes off and the backhoe might come off. Therefore, please make sure to insert the slide bar to the lower hole.**

NOTE :
- **Move the tractor, the loader, the backhoe to a vacant area and cycle all backhoe functions. Cycling all backhoe functions will check their operation and flow oil back through the system, filtering it, and refilling each circuit. Check the**

https://truckmanualshub.com/

hydraulic oil level before putting the backhoe into full operation.
See LUBRICANTS, FUEL, AND COOLANT TABLE on page 115 for oil type and correct level.

https://truckmanualshub.com/

TROUBLESHOOTING

ENGINE TROUBLESHOOTING

If something is wrong with the engine, refer to the following table for the cause of the trouble and its corrective measure.

Trouble		Cause	Countermeasure
Engine is difficult to start or will not start.		• No fuel flow.	• Check the fuel tank and the fuel filter. Replace the filter if necessary.
		• Air or water is in the fuel system.	• Check to see if the fuel line coupler bolt and nut are tight. • Bleed the fuel system. See 1. Bleeding the fuel system on page 137. • Remove water from the system and replace the fuel filter.
		• In winter, oil viscosity increases, and engine revolution is slow.	• Use oils of different viscosity, depending on ambient temperatures. • Use engine block heater (option).
		• Battery becomes weak and the engine does not turn over quick enough.	• Clean battery cables and terminals. • Charge the battery. • In cold weather, always remove the battery from the engine, charge and store the battery indoors. Install the battery on the tractor only when the tractor is going to be used.
Insufficient engine power.		• Insufficient or dirty fuel.	• Check the fuel system.
		• The air cleaner is clogged.	• Clean or replace the air cleaner element.
Engine stops suddenly.		• Insufficient fuel.	• Refuel. • Bleed the fuel system if necessary.
Exhaust fumes are colored.	Black	• Fuel quality is poor.	• Change the fuel and the fuel filter.
		• Too much oil.	• Check the proper amount of oil.
		• The air cleaner is clogged.	• Clean or replace the air cleaner element.
	Blue white	• The inside of exhaust muffler is damp from fuel.	• Heat the muffler by applying load to the engine.
		• Injection nozzle trouble.	• Check the injection nozzle.
		• Fuel quality is poor.	• Change the fuel and fuel filter.
Engine overheats.		• Engine overloaded.	• Shift to lower gear or reduce load.
		• Low coolant level.	• Fill cooling system to the correct level. Check the radiator and the hoses for loose connections or leaks.
		• Loose or damaged fan belt.	• Adjust or replace the fan belt.
		• Dirty radiator core or grille screens.	• Remove all trash.
		• Coolant flow route corroded.	• Flush the cooling system.

If you have any questions, consult your local KUBOTA Dealer.

https://truckmanualshub.com/

OPTIONS

OPTION ITEMS

Consult your local KUBOTA Dealer for further details of the following options.

- 18 x 8.5-10 Turf Tire
- 26 x 12.0-12 Turf Tire
- Engine block heater
  For facilitating starting and reducing warm up period in cold weather.
- Rear work light
  For high visibility for night work
- Rear wheel weight
- Sunshade for ROPS
- Tool box

https://truckmanualshub.com/

INDEX

Symbols

12 V electric outlet....51
3-point hitch
lowering speed....84
overview....80
precautions for attaching and detaching the implements....81
removing and installing....83
3-point hitch control system....84

A

adjusting the height of the lifting stand
loader....156
air cleaner element
cleaning....126
replacing....133
antifreeze....134
attachment (option for quick attach coupler)
attaching....103
detaching....105
front guard....102
maintenance....105
pallet fork....106
quick bucket....105
snow blade....105
auxiliary hydraulics....85

B

backfilling....98
backhoe
checking before operation....56
Backhoe terminology....39
ballast....91
check before operating the backhoe....56
battery
charging....126
checking....125
dealing when storing the tractor for a long period....126
battery cables
checking and cleaning....122
BDF (biodiesel fuel)....117
biodiesel fuel (BDF)....117
block heater (option)....60
bolt torque of the sub frame
checking....142
Boom and swing lever....108
boom and swing lock lever....109
brake pedal....48
adjusting....128
checking....122
bucket
changing....142
filling....93
service....142
bucket level indicator....99
bucket lever....109
bucket teeth
servicing....143

C

check chains
adjusting....81
check items during driving....69
control lever
operating....100
controls of the backhoe....108
coolant
changing....133
checking the level....121
North American market....115,116
coolant table....115
coolant temperature gauge....70
cooling system
flushing....133
cutting height control dial....86

D

daily check
tractor....119
daily check items
before operation of the tractor....53
daily checking
backhoe....141
loader....139
dealer service....25
differential lock....72
digging straight wall or cemetery....111
digging with operating the dipperstick....110
dimensional specifications
loader....31
dimensions
backhoe....35
dipperstick....109
dismounting the loader....106
drawbar
overview....80
dual tire....89
dumping the bucket....95

E

Easy Checker (TM)....69
checking....122
electrical wiring
checking and cleaning....122

https://truckmanualshub.com/

engine
cases to stop immediately....69
jump starting....60
starting....57
starting in the cold weather....60
stopping....60
warming up....60
warming up in the low temperature range....60
engine breather hose
checking....136
replacing....137
engine oil
changing....129
checking the level....120
engine oil filter
replacing....129
Engine speed
operating backhoe....108
engine start system
checking....123
engine valve clearance
adjusting....133

F

fan belt
adjusting tension....128
foldable ROPS
operation....62
foot controls....47
front axle case oil
changing....132
front axle pivot
adjusting....131
front ballast....91
front guard
opening....119
front guard (option for quick attach coupler)
attaching....102
front remote hydraulic control system....100
installing....100
front wheel drive lever....49
front wheels....90
fuel
North American market....115,116
fuel filter
checking....127
fuel filter element
replacing....133
fuel gauge....70
checking....119
fuel hose
replacing....137
fuel injection nozzle
checking the injection pressure....133
fuel line
checking....135
fuel system
bleeding....137
fuel table....115
fuse
replacing....137

G

gauges
checking....122
general backhoe operation....110
General torque specification....144
glove box....52

H

hand accelerator lever....50
hand controls....44,47
hardware of the loader
re-tightening....140
hazard light
checking....122
hazard light switch....45
head light
checking....122
head light switch....45
hitch....81
hood
opening....119
hood open lever....46
hose clamp
checking....135
hoses for the backhoe
connecting....85
hoses for the mower
disconnecting....86
hour meter....71
HST neutral spring
adjusting for speed control pedal....128
hydraulic control....84
hydraulic control unit use reference char....88
hydraulic system
removing air....55

I

implement limitation table....40
coolant temperature
overheating....70
injection pump
checking....135
instrument panel....44
intake air line
checking....136
replacing....137

K

key switch....45

https://truckmanualshub.com/

L

lift capacity
backhoe....38
lifting rod (right)
adjusting....81
light bulb
replacing....138
liquid ballast
rear tire....54
loader control lever....51
loading from a bank....96
loading low trucks from a pile....97
loading or spreaders from a pile....97
lock lever shaft
cleaning....125
lowering the bucket....95
lubricants
North American market....115,116
lubricants table....115
lubricate fittings with grease....123
lubricating the backhoe....141
lubricating the loader....139
lubrication
before operating the loader....54

M

main frame
checking torque of bolt and nut....140
meters
checking....122
movable parts
checking....123

O

OPC system
checking....124
operation of new tractor....62
operational specifications
loader....32
operator's seat....48
check before operating the backhoe....56
reversing....74
option
block heater....60
option items....168

P

pallet fork (option for the quick attach coupler)
assembling....106
panel
cleaning....121
parking brake
setting and releasing....48
parking brake lock pedal....48
parking the tractor....71
peeling the ground....97
power steering
directions for use....74
power steering hose
replacing....137
power steering line
checking....135
precaution
after operating the loader....14
backhoe while driving the tractor on the road....15
before operating the backhoe....14
before operating the loader....12
CAB and ROPS....7
carrying the load....94
driving the tractor on the road....9
driving to the job-site....112
general....7
getting on and off tractor....62
handling large heavy objects....99
lifting the load....94
operating the backhoe....14
operating the PTO....10
operating the tractor on a slopes and rough terrain....73
operating the tractor on slopes....9
parking the tractor....10
safety for children....9
servicing the backhoe....15
servicing the loader....14
servicing the tractor....11
starting to operate the tractor....8
tractor....7
trailer transporting....112
transporting the tractor safely....73
using 3-point hitch....11
working the tractor....8
precautions
backhoe....14
before operating the tractor....7
loader....12
operating the loader....13,93
operating the loader with float control....95
operating the tractor....8
procedure of scrapping the tractor....26
PTO
operation....77
PTO clutch lever....77
PTO drive shaft....79
adjusting the length....79
PTO select lever....77
PTO shaft cap....78
PTO shaft cover....78

Q

quick coupler
connecting and disconnecting....100

https://truckmanualshub.com/

R

radiator hose
checking....135
radiator hose (water pipe)
replacing....136
radiator screen
cleaning....121
range gear shift lever (Hi-Lo).... 49
rear ballast.... 91
rear wheels....90
refueling....119
reinstalling
backhoe....164
loader.... 151
remote control coupler
connecting and disconnecting....101
removing
backhoe....161
loader.... 147
tractor from storage....146
ROPS
checking.... 122

S

safety label
backhoe....22
loader.... 20
tractor.... 16
safety labels
care.... 24
scraping the ground.... 97
scrapping the tractor.... 26
seat belt....48
checking.... 122
service intervals....113
slow-moving-vehicle (SMV) emblem
installing.... 73
SMV (slow-moving-vehicle) emblem
installing.... 73
specification table
tractor....27
specifications table
backhoe....37
bucket....30
loader.... 30
speed control pedal....50
speed set device.... 50
engaging and disengaging....51
spoil pile
dealing.... 111
stabilizer
placing....109
placing on an unusually steep slope.... 110
stabilizer control levers....109
stabilizer pads
standard....111
starting the tractor.... 65
stationary PTO.... 78
stopping the tractor.... 68
storing
backhoe....163
tractor....146
storing the loader.... 150
switches.... 44

T

tachometer.... 71
terminology
loader.... 34
test operation.... 55
the foldable ROPS
adjusting....64
folding....62
raising to upright position.... 63
the transmission fluid
checking....54
tilt lever....45
tire inflation
check before operating the backhoe....56
check before operating the loader....54
tires.... 89
inflation pressure....89
toe-in
adjusting....131
checking....130
top link
adjusting....81
transmission fluid
changing....131
checking the level....120
transmission oil
in the low temperature range.... 60
transmission oil filter
replacing....130
transmission strainer
cleaning....132
transporting of the backhoe.... 111
traveling speeds table.... 29
troubleshooting
engine.... 167
turn signal light switch....45

V

valve lock.... 99

W

walk around inspection....119
warranty of the tractor.... 26
water pipe (radiator hose)
replacing....136
weight
rear ballast.... 54

https://truckmanualshub.com/

wheel bolt torque
checking.....124
wheel tread.....89

https://truckmanualshub.com/

KUBOTA Corporation is ...

Since its inception in 1890, KUBOTA Corporation has grown to rank as one of the major firms in Japan.

To achieve this status, the company has through the years diversified the range of its products and services to a remarkable extent. 30 plants and 35,000 employees produce over 1,000 different items, large and small.

All these products and all the services which accompany them, however, are unified by one central commitment. KUBOTA makes products which, taken on a national scale, are basic necessities. Products which are indispensable. Products which are intended to help individuals and nations fulfill the potential inherent in their environment. KUBOTA is the Basic Necessities Giant.

This potential includes water supply, food from the soil and from the sea, industrial development, architecture and construction, and transportation.

Thousands of people depend on KUBOTA's know-how, technology, experience and customer service. You too can depend on KUBOTA.