https://truckmanualshub.com/

PREFACE

1. This Parts Catalog covers the parts of crawler-backhoes Model YB401(-2).

2. All parts of the following YANMAR machine are listed up in this parts catalog.

   Model YB401 ····· From Machine No. 00501

   Model YB401-2 ····· From Machine No. 20501

   〔History〕

   1st edition ———————— Pub. No. 000Y00K2040

   2nd edition Issued : Feb., 1988 Pub. No. 000Y00K2041

   3rd edition Issued : Apr., 1992 Pub. No. 000Y00K2042

   (Please discard this old parts catalog)

3. Paint Color

   Old

Paint Color	Munsel No.	Paint Code (18ℓ)	Spray
YANMAR New Light Yellow	10YR6.5/8	933110-91602	981101-06041
YANMAR Cream	2.5Y9/1	933110-91803	981101-06340
YANMAR New Dark Olieve	5GY1/1	933110-91702	981101-05941

   New (From Oct. 1987)

Paint Color	Munsel No.	Paint Code (18ℓ)	Spray
YANMAR New Light Yellow	10YR6.5/8	933110-91602	981101-06041
YANMAR Cream White	5.0Y9/1	981101-09614	981101-10140
YANMAR Dark Olieve II	7.5GY1/1	981101-09515	981101-10141

https://truckmanualshub.com/

SPECIFICATIONS

Name			YANMAR CRAWLER BACHOE	
Model			YB401(-2)-UC	YB401(-2)-UZP
Engine	Model		Vertical 4-cylinder water-cooled turbo diesel	
	Type		4TNA78TL-D(R)B	
Dimensions	Transport length	mm	5180	
	Transport width	mm	1660	
	Transport height	mm	2415	
Std. bucket capacity		m^3	0.11	
Std. bucket width(Outside)		mm	600	
Max. digging depth		mm	3450	
Max. cutting height		mm	4250	5345
Max. dump height		mm	3000	3975
Max. reach at ground level		mm	5240	
Min. swing radius		mm	2450	1965
Boom swing angle		degree	Left 50・Right 90	
Max. digging force(Std. bucket)		kgf	2450	
Travel speed		km/h	3.7・1.9	
Gradability		degree	30	
Average ground pressure		kgf/cm^2	0.296	0.280
Track shoe width(Std.)		mm	350	
Blade	Width×height	mm	1660×350	
	Capacity	m^3	0.201	
Machine mass		kg	3650	3450

https://truckmanualshub.com/

各部の名称
PARTS NAME

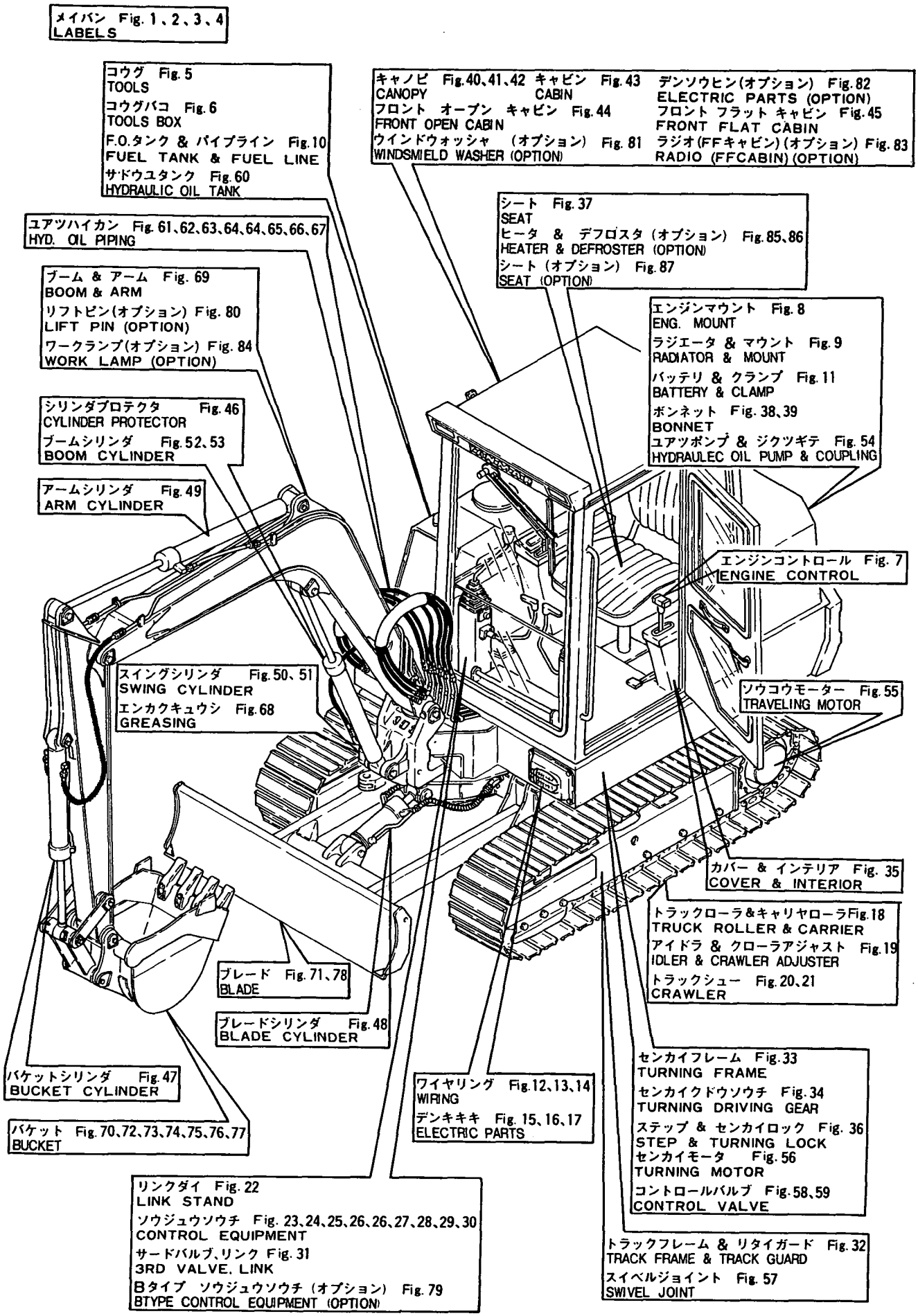

https://truckmanualshub.com/

配線図（キャノピ）
WIRING DIAGRAM (CANOPY)

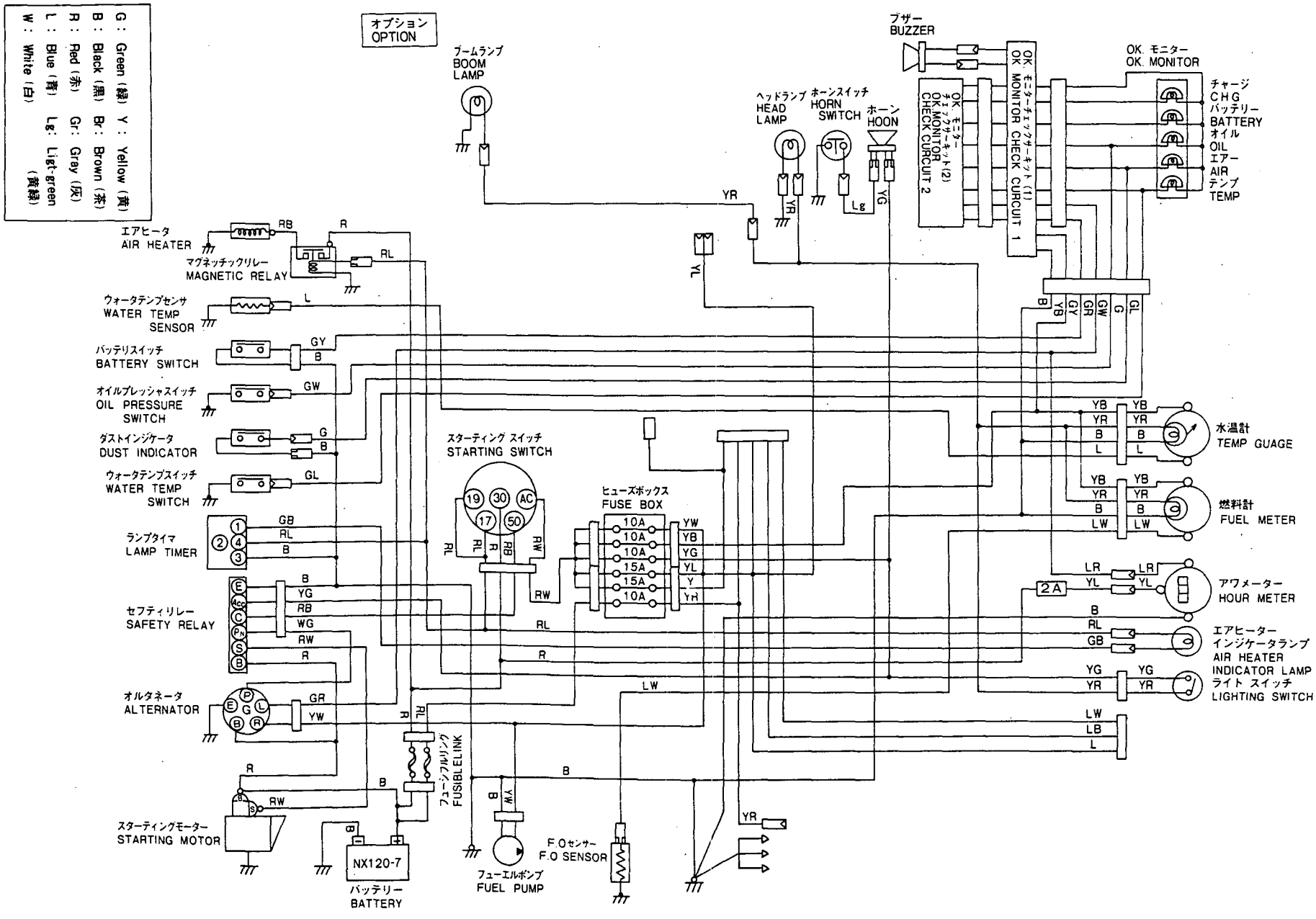

https://truckmanualshub.com/

配線図（キャビン）
WIRING DIAGRAM (CABIN)

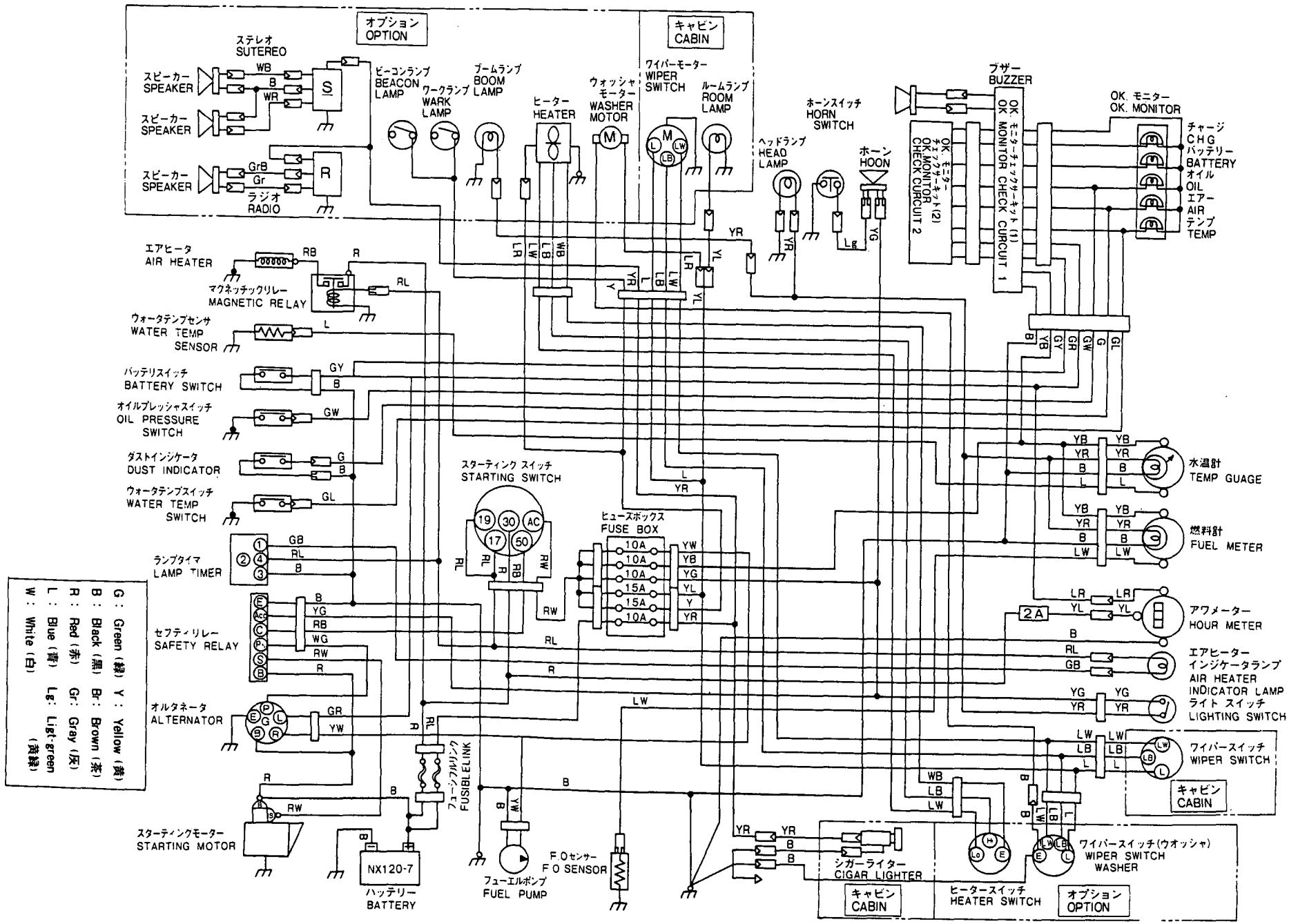

https://truckmanualshub.com/

```
2,1,,772130-03100,,"LABEL SET",1,,,,,,,,,,,,,,,,
2-1,1,,772130-03101,,"LABEL SET, CABIN",1,,,,,,N,,,M00559,,,,,,,,
3,2,,172130-03110,,"LABEL,SPECIFICATION",1,,,,,,,,,,,,,,,,
4,2,,172122-03120,,"LABEL, GREASE",1,,,,,,,,,,,,,,,,
5,2,,172130-03130,,"LABEL,WATER SUP,",1,,,,,,,,,,,,,,,,
6,2,,172122-03140,,"LABEL, GREASE",1,,,,,,,,,,,,,,,,
6-1,2,,172122-03141,,"LABEL, GREASE",1,,,,,,N,,,M00559,,,,,,,,
7,2,,172130-03150,,"LABEL,MODEL (YB401U",2,,,,,,,,,,,,,,,,
8,2,,172312-03210,,"LABEL, STRIPE (A)",1,,,,,,,,,,,,,,,,
9,2,,172312-03220,,"LABEL, STRIPE (B)",1,,,,,,,,,,,,,,,,
10,2,,172312-03230,,"LABEL, STRIPE (C)",1,,,,,,,,,,,,,,,,
11,2,,172312-03240,,"LABEL, STRIPE (D)",1,,,,,,,,,,,,,,,,
12,2,,172312-03250,,"LABEL, STRIPE (E)",1,,,,,,,,,,,,,,,,
13,2,,172312-03260,,"LABEL, STRIPE (F)",1,,,,,,,,,,,,,,,,
14,2,,172312-03270,,"LABEL, STRIPE (G)",1,,,,,,,,,,,,,,,,
15,2,,172122-03360,,"LABEL, STRIPE (LF2)",1,,,,,,,,,,,,,,,,
16,2,,172122-03370,,"LABEL, STRIPE (LF3)",1,,,,,,,,,,,,,,,,
17,2,,172122-03380,,"LABEL, STRIPE (LF1)",1,,,,,,,,,,,,,,,,
18,2,,172122-03410,,"LABEL, STRIPE (RF1)",1,,,,,,,,,,,,,,,,
19,2,,121470-44540,,"LABEL, SUB-TANK",1,,,,,,,,,,,,,,,,
20,2,,933112-45000,,"LABEL, DANGER",1,,,,,,,,,,,,,,,,
21,2,,933112-47500,,LABEL,1,,,,,,,,,,,,,,,,
22,2,,933112-50200,,LABEL,1,,,,,,,,,,,,,,,,
23,2,,933112-52000,,"LABEL, FUEL",1,,,,,,,,,,,,,,,,
24,2,,933112-91400,,"LABEL, YANMAR",2,,,,,,,,,,,,,,,,
25,2,,933112-92200,,"LABEL, SSS MARK",2,,,,,,Z,,,M00559,,,,,,,,
26,2,,933112-94100,,"LABEL, TURBO",1,,,,,,,,,,,,,,,,
27,2,,933112-94200,,"LABEL, TURBO",1,,,,,,,,,,,,,,,,
28,2,,933112-94300,,"LABEL, SALOON",1,,,,,,,,,,,,,,,,
29,2,,172122-03250,,"LABEL, NO.1 MARK",1,,,,,,W,,,M00559,,,,,,,,
30,2,,172122-03260,,"LABEL, NO.1 MARK",1,,,,,,W,,,M00559,,,,,,,,
31,2,,933112-23600,,"LABEL(A),OPERATION",1,,,,,,,,,,,,,,,,
32,1,,933112-23400,,"LABEL(B),OPERATION",,,1,,,,,,,,,,,,,,
33,1,,933112-23500,,"LABEL(C),OPERATION",,,1,,,,,,,,,,,,,,
34,1,,933112-23700,,"LABEL(D),OPERATION",,,1,,,,,,,,,,,,,,
```

https://truckmanualshub.com/

Fig. 1 メイバン(キャビン)(キュウガタ) LABEL(CABIN) (PREVIOS TYPE)

D 72130-03100
D 72122-03140
D 72122-03150
D 72122-03160
D 72122-03170
D 72122-03180

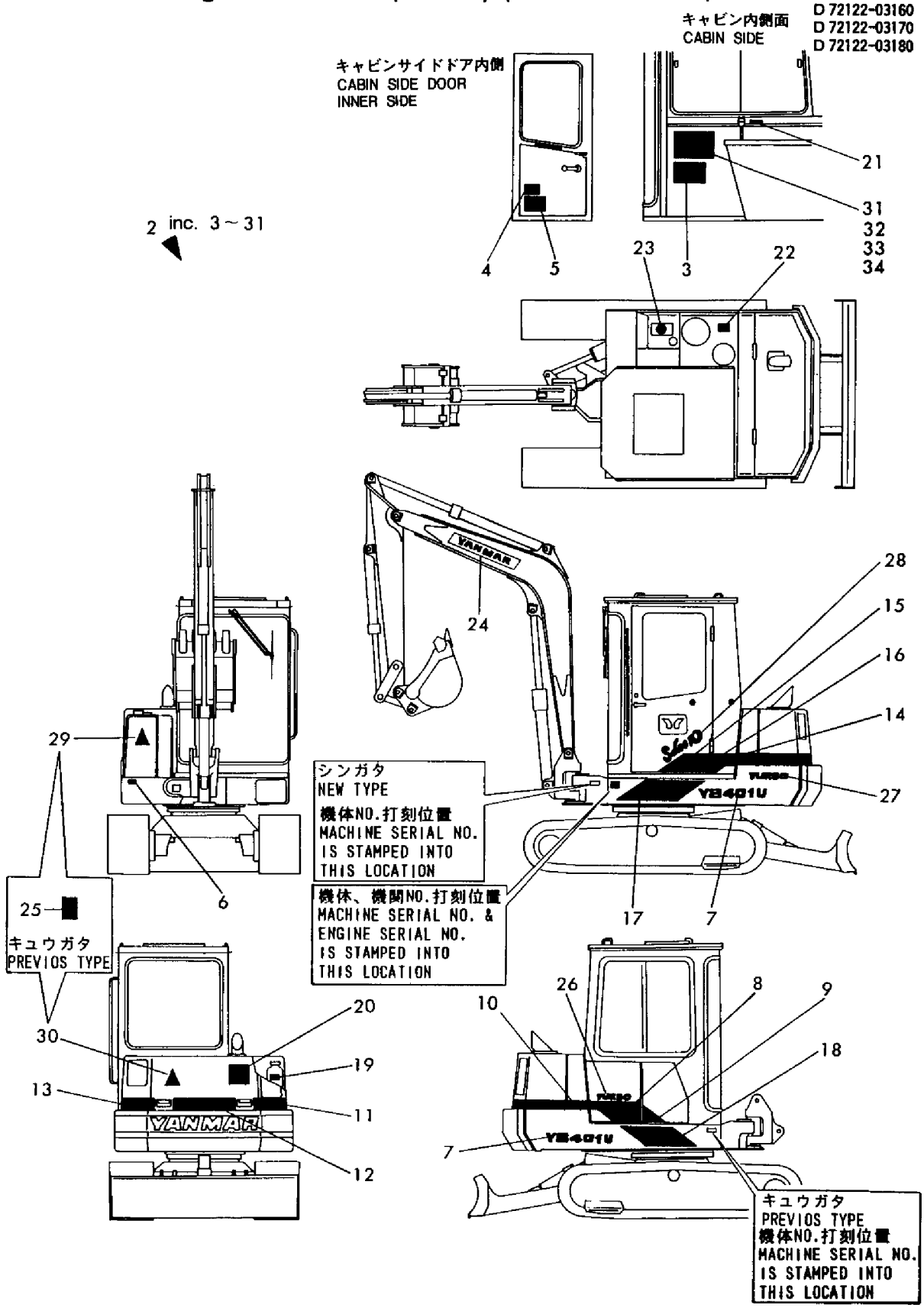

https://truckmanualshub.com/

```
2,1,,772130-03102,,"LABEL SET, CABIN(-2)",1,,,,,,,,,,,,,,,,
3,2,,172130-03111,,"LABEL, SPECIFICATION",1,,,,,,,,,,,,,,,,
4,2,,172122-03120,,"LABEL, GREASE",1,,,,,,,,,,,,,,,,
5,2,,172130-03130,,"LABEL,WATER SUP,",1,,,,,,,,,,,,,,,,
6,2,,172122-03141,,"LABEL, GREASE",1,,,,,,,,,,,,,,,,
7,2,,172130-03150,,"LABEL,MODEL (YB401U",2,,,,,,,,,,,,,,,,
8,2,,172135-03200,,"LABEL, STRIPE (LF2)",1,,,,,,,,,,,,,,,,
8-1,2,,172135-03201,,"LABEL, STRIPE (LF2)",1,,,,,,S,,,*1988.12,,,,,,,,
9,2,,172135-03210,,"LABEL, STRIPE(LF3)",1,,,,,,,,,,,,,,,,
9-1,2,,172135-03211,,"LABEL, STRIPE(LF3)",1,,,,,,S,,,*1988.12,,,,,,,,
10,2,,172312-03210,,"LABEL, STRIPE (A)",1,,,,,,,,,,,,,,,,
11,2,,172135-03220,,"LABEL, CAB.DOOR",1,,,,,,,,,,,,,,,,
12,2,,172312-03220,,"LABEL, STRIPE (B)",1,,,,,,,,,,,,,,,,
13,2,,172312-03230,,"LABEL, STRIPE (C)",1,,,,,,,,,,,,,,,,
14,2,,172312-03240,,"LABEL, STRIPE (D)",1,,,,,,,,,,,,,,,,
15,2,,172124-03320,,"LABEL, YANMAR (R)",1,,,,,,W,,,M20501,,,,,,,,
16,2,,172312-03250,,"LABEL, STRIPE (E)",1,,,,,,,,,,,,,,,,
17,2,,172122-03260,,"LABEL, NO.1 MARK",1,,,,,,,,,,,,,,,,
18,2,,172312-03260,,"LABEL, STRIPE (F)",1,,,,,,,,,,,,,,,,
19,2,,172312-03270,,"LABEL, STRIPE (G)",1,,,,,,,,,,,,,,,,
20,2,,172122-03380,,"LABEL, STRIPE (LF1)",1,,,,,,,,,,,,,,,,
21,2,,172122-03410,,"LABEL, STRIPE (RF1)",1,,,,,,,,,,,,,,,,
22,2,,172312-03470,,"LABEL, SEAL",1,,,,,,,,,,,,,,,,
22-1,2,,172312-03471,,"LABEL, SEAL",1,,,,,,S,,,*1988.12,,,,,,,,
23,2,,121470-44540,,"LABEL, SUB-TANK",1,,,,,,,,,,,,,,,,
24,2,,933112-45000,,"LABEL, DANGER",1,,,,,,,,,,,,,,,,
25,2,,933112-47500,,LABEL,1,,,,,,,,,,,,,,,,
26,2,,933112-50200,,LABEL,1,,,,,,,,,,,,,,,,
27,2,,933112-52000,,"LABEL, FUEL",1,,,,,,,,,,,,,,,,
28,2,,933112-91400,,"LABEL, YANMAR",2,,,,,,,,,,,,,,,,
28-1,2,,172124-03310,,"LABEL, YANMAR (L)",1,,,,,,S,,,M20501,,,,,,,,
29,2,,933112-94100,,"LABEL, TURBO",1,,,,,,,,,,,,,,,,
30,2,,933112-94200,,"LABEL, TURBO",1,,,,,,,,,,,,,,,,
31,2,,172137-03290,,"LABEL, NO.1 MARK",1,,,,,,,,,,,,,,,,
32,1,,933112-23600,,"LABEL(A),OPERATION",1,,,,,,,,,,,,,,,,
33,1,,933112-23400,,"LABEL(B),OPERATION",,,1,,,,,,,,,,,,,,
34,1,,933112-23500,,"LABEL(C),OPERATION",,,1,,,,,,,,,,,,,,
35,1,,933112-23700,,"LABEL(D),OPERATION",,,1,,,,,,,,,,,,,,
36,1,,172122-03280,,"LABEL,OPERATION",,,1,,,,,,,,,,,,,,
37,1,,172122-03290,,"LABEL,QUICK OPER.(A)",,,1,,,,,,,,,,,,,,
38,1,,172122-03300,,"LABEL,QUICK OPER.(B)",,,1,,,,,,,,,,,,,,
39,1,,172112-03251,,"LABEL, OPERATION",1,,,,,,,,,,,,,,,,
```

https://truckmanualshub.com/

Fig. 2 メイバン(キャビン)(シンガタ) LABEL(CABIN)(NEW TYPE)

D72130-03100
D72122-03140
D72122-03150
D72122-03160
D72122-03170
D72122-03180

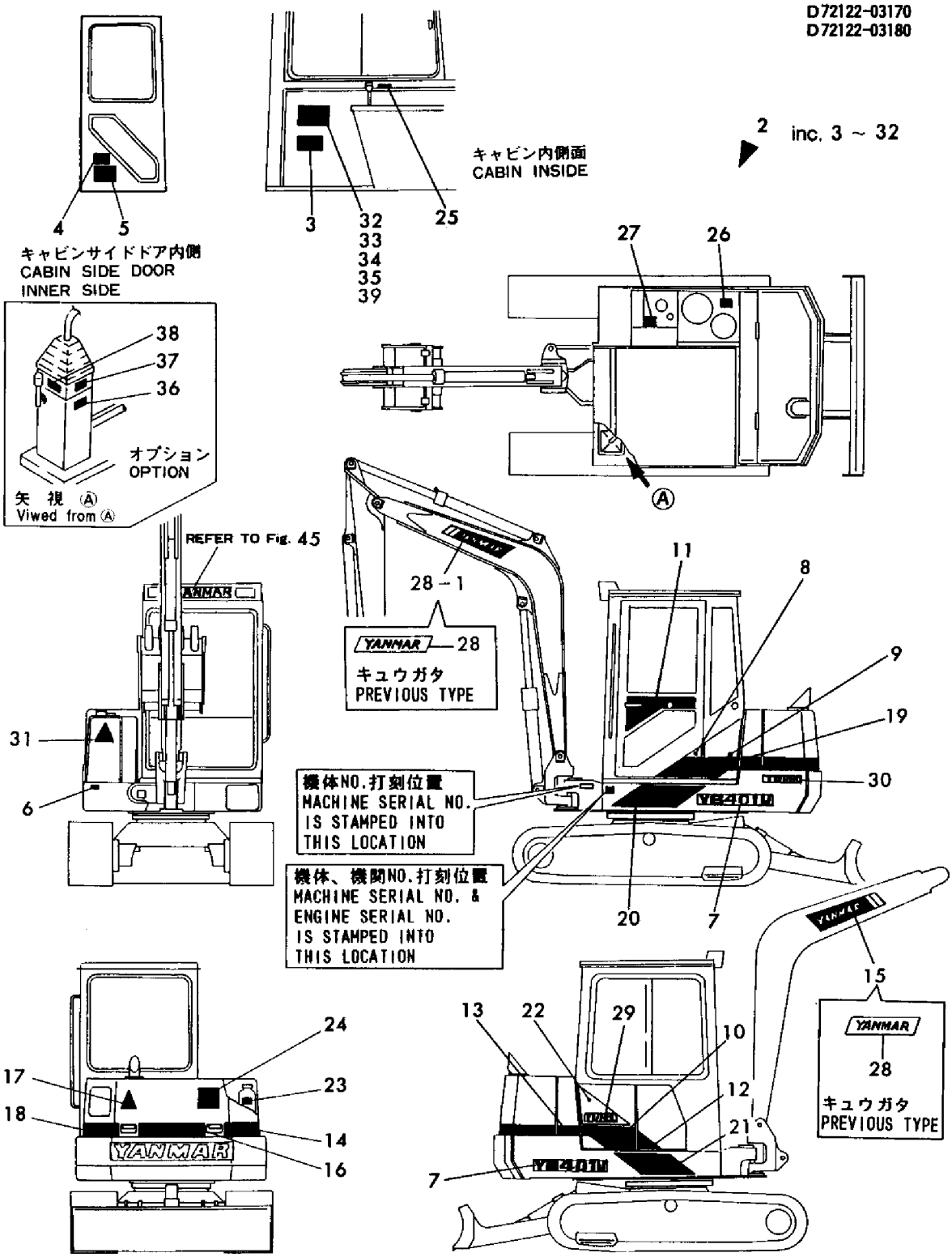

https://truckmanualshub.com/

```
2,1,,772130-03120,,"LABEL SET, CANOPY",,,,1,,,,,,,,,,,,,
2-1,1,,772130-03121,,"LABEL SET, CANOPY",,,,1,,,N,,,,,,,,,M00559,,
3,2,,172130-03110,,"LABEL,SPECIFICATION",,,,1,,,,,,,,,,,,,
4,2,,172122-03120,,"LABEL, GREASE",,,,1,,,,,,,,,,,,,
5,2,,172130-03130,,"LABEL,WATER SUP,",,,,1,,,,,,,,,,,,,
6,2,,172122-03140,,"LABEL, GREASE",,,,1,,,,,,,,,,,,,
6-1,2,,172122-03141,,"LABEL, GREASE",,,,1,,,N,,,,,,,,,M00559,,
7,2,,172130-03140,,"LABEL,MODEL (YB401U",,,,2,,,,,,,,,,,,,
8,2,,172312-03210,,"LABEL, STRIPE (A)",,,,1,,,,,,,,,,,,,
9,2,,172312-03220,,"LABEL, STRIPE (B)",,,,1,,,,,,,,,,,,,
10,2,,172312-03230,,"LABEL, STRIPE (C)",,,,1,,,,,,,,,,,,,
11,2,,172312-03240,,"LABEL, STRIPE (D)",,,,1,,,,,,,,,,,,,
12,2,,172312-03250,,"LABEL, STRIPE (E)",,,,1,,,,,,,,,,,,,
13,2,,172312-03260,,"LABEL, STRIPE (F)",,,,1,,,,,,,,,,,,,
14,2,,172312-03270,,"LABEL, STRIPE (G)",,,,1,,,,,,,,,,,,,
15,2,,172122-03350,,"LABEL, STRIPE (LF4)",,,,1,,,,,,,,,,,,,
16,2,,172122-03380,,"LABEL, STRIPE (LF1)",,,,1,,,,,,,,,,,,,
17,2,,172122-03410,,"LABEL, STRIPE (RF1)",,,,1,,,,,,,,,,,,,
18,2,,121470-44540,,"LABEL, SUB-TANK",,,,1,,,,,,,,,,,,,
19,2,,933112-45000,,"LABEL, DANGER",,,,1,,,,,,,,,,,,,
20,2,,933112-47500,,LABEL,,,,1,,,,,,,,,,,,,
21,2,,933112-50200,,LABEL,,,,1,,,,,,,,,,,,,
22,2,,933112-52000,,"LABEL, FUEL",,,,1,,,,,,,,,,,,,
23,2,,933112-91400,,"LABEL, YANMAR",,,,2,,,,,,,,,,,,,
24,2,,933112-91700,,"LABEL, Z MARK",,,,2,,,,,,,,,,,,,
25,2,,933112-92200,,"LABEL, SSS MARK",,,,2,,,Z,,,,,,,,,M00559,,
26,2,,933112-94100,,"LABEL, TURBO",,,,1,,,,,,,,,,,,,
27,2,,933112-94000,,"TURBO MARK 350",,,,1,,,,,,,,,,,,,
27-1,2,,933112-94200,,"LABEL, TURBO",,,,1,,,N,,,,,,,,,M00501,,
28,2,,172513-03350,,"LABEL, ""YANMAR""",,,,1,,,,,,,,,,,,,
29,2,,172122-03250,,"LABEL, NO.1 MARK",,,,1,,,W,,,,,,,,,M00559,,
30,2,,172122-03260,,"LABEL, NO.1 MARK",,,,1,,,W,,,,,,,,,M00559,,
31,2,,933112-23600,,"LABEL(A),OPERATION",,,,1,,,,,,,,,,,,,
32,1,,933112-23400,,"LABEL(B),OPERATION",,,,,1,,,,,,,,,,,,
33,1,,933112-23500,,"LABEL(C),OPERATION",,,,,1,,,,,,,,,,,,
34,1,,933112-23700,,"LABEL(D),OPERATION",,,,,1,,,,,,,,,,,,
```

https://truckmanualshub.com/

Fig. 3 メイバン(キャノピ)(キュウガタ) LABEL(CANOPY) (PREVIOS TYPE)

D 72130-03110
D 72130-03120
D 72122-03140
D 72122-03150
D 72122-03160
D 72122-03170
D 72122-03180

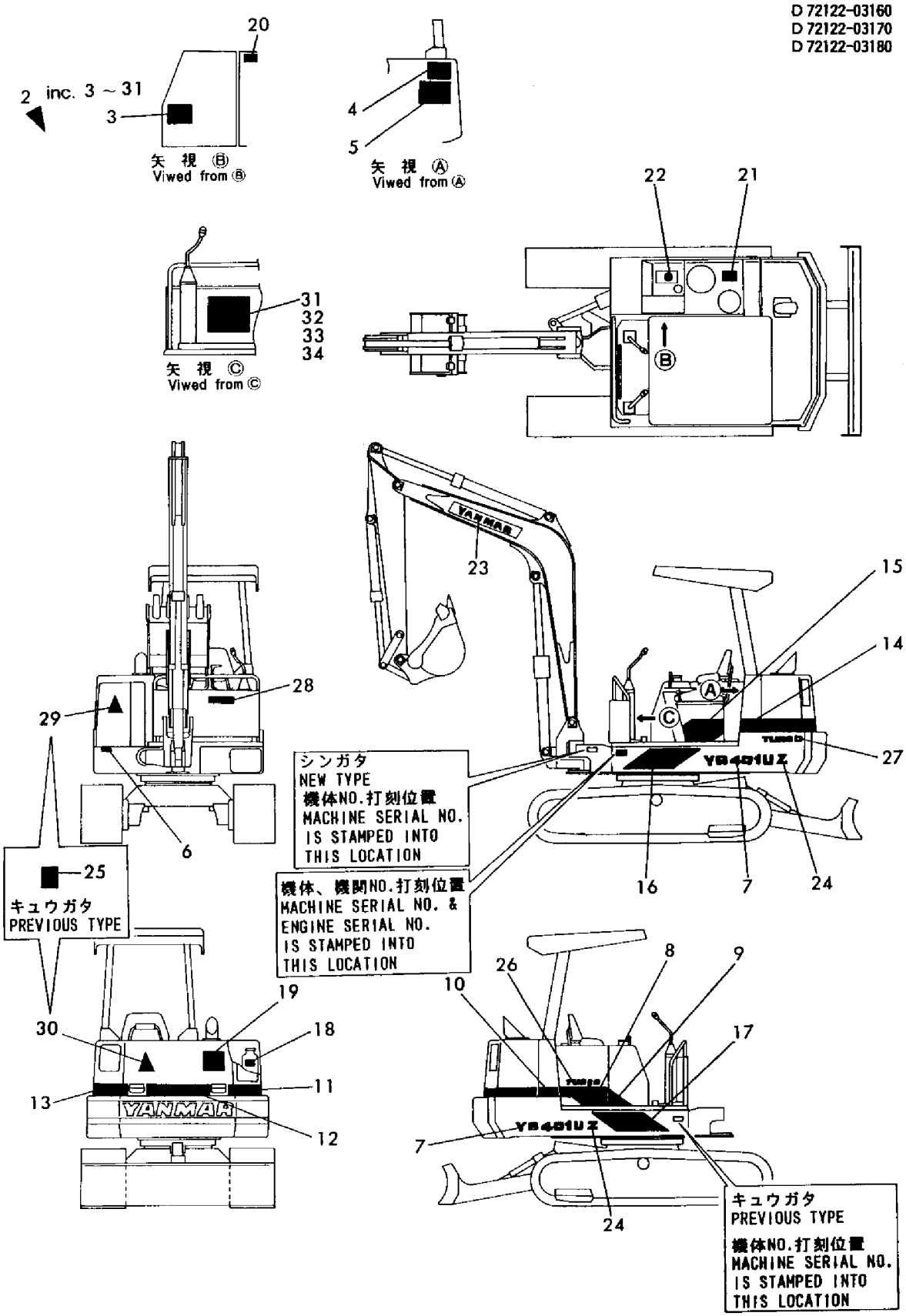

https://truckmanualshub.com/

```
2,1,,772130-03122,,"LABEL SET, CAN.-2-UZ",,,,1,,,,,,,,,,,,,
3,2,,172130-03111,,"LABEL, SPECIFICATION",,,,1,,,,,,,,,,,,,
4,2,,172122-03120,,"LABEL, GREASE",,,,1,,,,,,,,,,,,,
5,2,,172130-03130,,"LABEL,WATER SUP,",,,,1,,,,,,,,,,,,,
6,2,,172122-03141,,"LABEL, GREASE",,,,1,,,,,,,,,,,,,
7,2,,172130-03140,,"LABEL,MODEL (YB401U",,,,2,,,,,,,,,,,,,
8,2,,172312-03210,,"LABEL, STRIPE (A)",,,,1,,,,,,,,,,,,,
9,2,,172312-03220,,"LABEL, STRIPE (B)",,,,1,,,,,,,,,,,,,
10,2,,172312-03230,,"LABEL, STRIPE (C)",,,,1,,,,,,,,,,,,,
11,2,,172312-03240,,"LABEL, STRIPE (D)",,,,1,,,,,,,,,,,,,
12,2,,172124-03320,,"LABEL, YANMAR (R)",,,,1,,,W,,,,,,,,,M20501,,
13,2,,172312-03250,,"LABEL, STRIPE (E)",,,,1,,,,,,,,,,,,,
14,2,,172122-03260,,"LABEL, NO.1 MARK",,,,1,,,,,,,,,,,,,
15,2,,172312-03260,,"LABEL, STRIPE (F)",,,,1,,,,,,,,,,,,,
16,2,,172312-03270,,"LABEL, STRIPE (G)",,,,1,,,,,,,,,,,,,
17,2,,172122-03350,,"LABEL, STRIPE (LF4)",,,,1,,,,,,,,,,,,,
17-1,2,,172122-03351,,"LABEL, STRIPE (LF4)",,,,1,,,N,,,,,,,,,*1987.11,,
18,2,,172122-03380,,"LABEL, STRIPE (LF1)",,,,1,,,,,,,,,,,,,
19,2,,172122-03410,,"LABEL, STRIPE (RF1)",,,,1,,,,,,,,,,,,,
20,2,,172312-03470,,"LABEL, SEAL",,,,1,,,,,,,,,,,,,
20-1,2,,172312-03471,,"LABEL, SEAL",,,,1,,,S,,,,,,,,,*1988.12,,
21,2,,121470-44540,,"LABEL, SUB-TANK",,,,1,,,,,,,,,,,,,
22,2,,933112-45000,,"LABEL, DANGER",,,,1,,,,,,,,,,,,,
23,2,,933112-47500,,LABEL,,,,1,,,,,,,,,,,,,
24,2,,933112-50200,,LABEL,,,,1,,,,,,,,,,,,,
25,2,,933112-52000,,"LABEL, FUEL",,,,1,,,,,,,,,,,,,
26,2,,933112-91400,,"LABEL, YANMAR",,,,2,,,,,,,,,,,,,
26-1,2,,172124-03310,,"LABEL, YANMAR (L)",,,,1,,,S,,,,,,,,,M20501,,
27,2,,933112-91700,,"LABEL, Z MARK",,,,2,,,,,,,,,,,,,
28,2,,933112-91901,,"LABEL, YANMAR",,,,1,,,,,,,,,,,,,
29,2,,933112-94100,,"LABEL, TURBO",,,,1,,,,,,,,,,,,,
30,2,,933112-94200,,"LABEL, TURBO",,,,1,,,,,,,,,,,,,
31,2,,172137-03290,,"LABEL, NO.1 MARK",,,,1,,,,,,,,,,,,,
32,2,,933112-23600,,"LABEL(A),OPERATION",,,,1,,,,,,,,,,,,,
33,1,,933112-23400,,"LABEL(B),OPERATION",,,,,,1,,,,,,,,,,,
34,1,,933112-23500,,"LABEL(C),OPERATION",,,,,,1,,,,,,,,,,,
35,1,,933112-23700,,"LABEL(D),OPERATION",,,,,,1,,,,,,,,,,,
36,1,,172122-03280,,"LABEL,OPERATION",,,,,,1,,,,,,,,,,,
37,1,,172122-03290,,"LABEL,QUICK OPER.(A)",,,,,,1,,,,,,,,,,,
38,1,,172122-03300,,"LABEL,QUICK OPER.(B)",,,,,,1,,,,,,,,,,,
39,1,,172112-03251,,"LABEL, OPERATION",,,,1,,,,,,,,,,,,,
```

https://truckmanualshub.com/

Fig. 4 メイバン（キャノピ）（シンガタ） LABEL (CANOPY) (NEW TYPE)

D 72130-03110
D 72130-03120
D 72122-03140
D 72122-03150
D 72122-03160
D 72122-03170
D 72122-03180

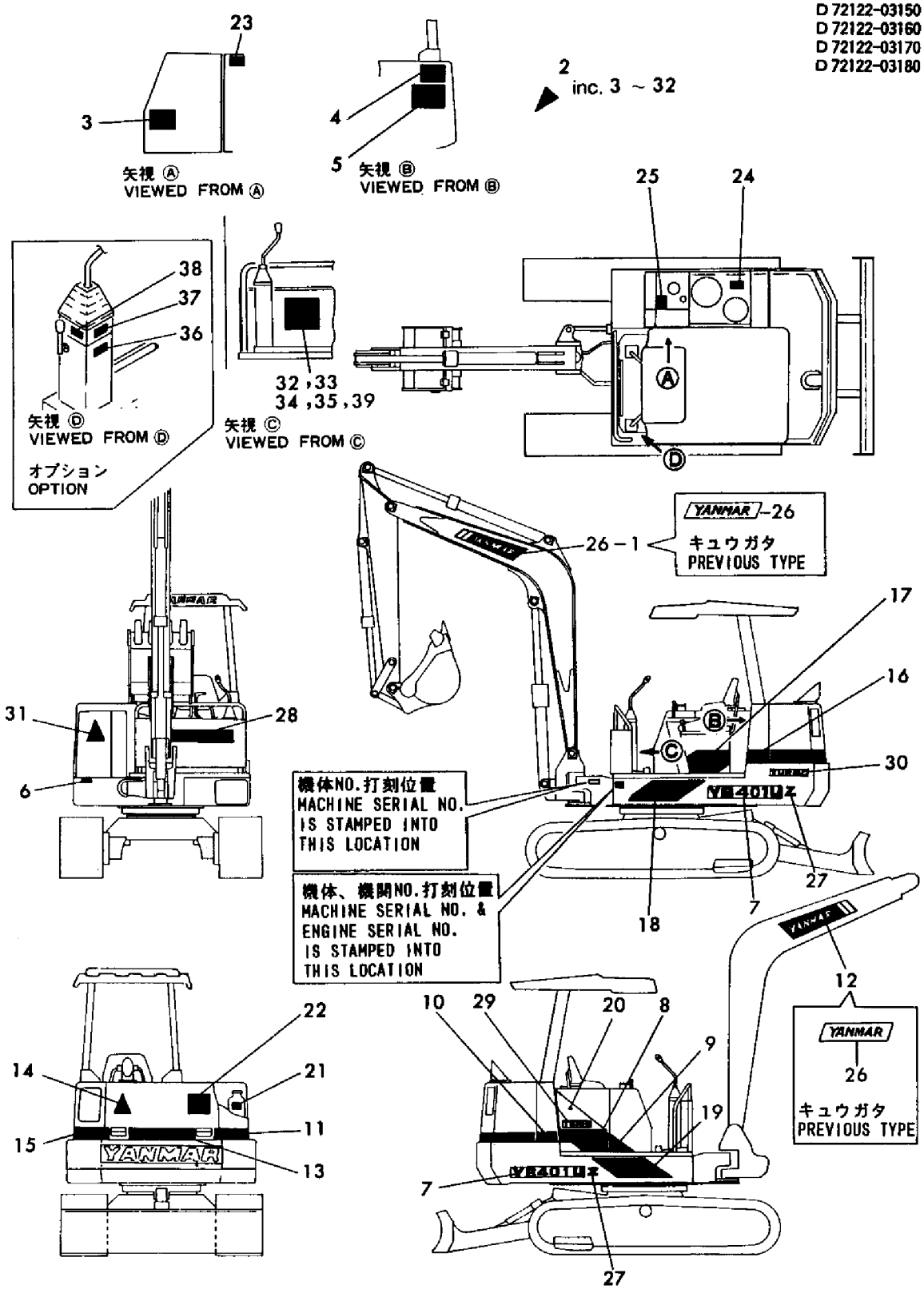

https://truckmanualshub.com/

```
1,1,,772130-05100,,"TOOL ASSY",1,,,1,,,,,,,,,,,,,
2,2,,172614-38300,,"PIN 5X45, LOCK",4,,,4,,,,,,,,,,,,,
3,2,,104200-92350,,"DRIVER, SCREW",1,,,1,,,,,,,,,,,,,
4,2,,171301-92750,,"WRENCH, L.O. FILTER",1,,,1,,,,,,,,,,,,,,
5,2,,22417-800500,,"COTTER PIN 8.0X50",4,,,4,,,,,,,,,,,,,
6,2,,28110-080100,,"WRENCH  8X10",1,,,1,,,,,,,,,,,,,
7,2,,28110-120140,,"WRENCH 12X14",1,,,1,,,,,,,,,,,,,
8,2,,28110-170190,,"WRENCH 17X19",1,,,1,,,,,,,,,,,,,
9,2,,28110-220240,,"WRENCH 22X24",1,,,1,,,,,,,,,,,,,
10,2,,28110-270300,,"WRENCH 27X30",1,,,1,,,,,,,,,,,,,
11,2,,28110-320360,,"WRENCH 32X36",1,,,1,,,,,,,,,,,,,
12,2,,28150-025000,,"BAR WRENCH  2.5",1,,,1,,,,,,,,,,,,,
13,2,,28150-080000,,"BAR WRENCH  8",1,,,1,,,,,,,,,,,,,
14,2,,28150-140000,,"BAR WRENCH 14",1,,,1,,,,,,,,,,,,,
15,2,,28227-271400,,"BOX WRENCH 27X140",1,,,1,,,,,,,,,,,,,
16,2,,933110-09700,,"HOSE, GREASE",1,,,1,,,,,,,,,,,,,
17,2,,933110-09800,,"GUN 800, GREASE",1,,,1,,,,,,,,,,,,,
18,2,,933171-00470,,"PLIER (200)",1,,,1,,,,,,,,,,,,,
19,2,,172122-05100,,NOZZLE,1,,,1,,,,,,,,,,,,,
20,2,,28230-120250,,"TURNING HANDLE",1,,,1,,,W,,,*1987.10,,,,,,*1987.10,,
```

https://truckmanualshub.com/

Fig. 5 コウグ TOOL

D 72130-05100

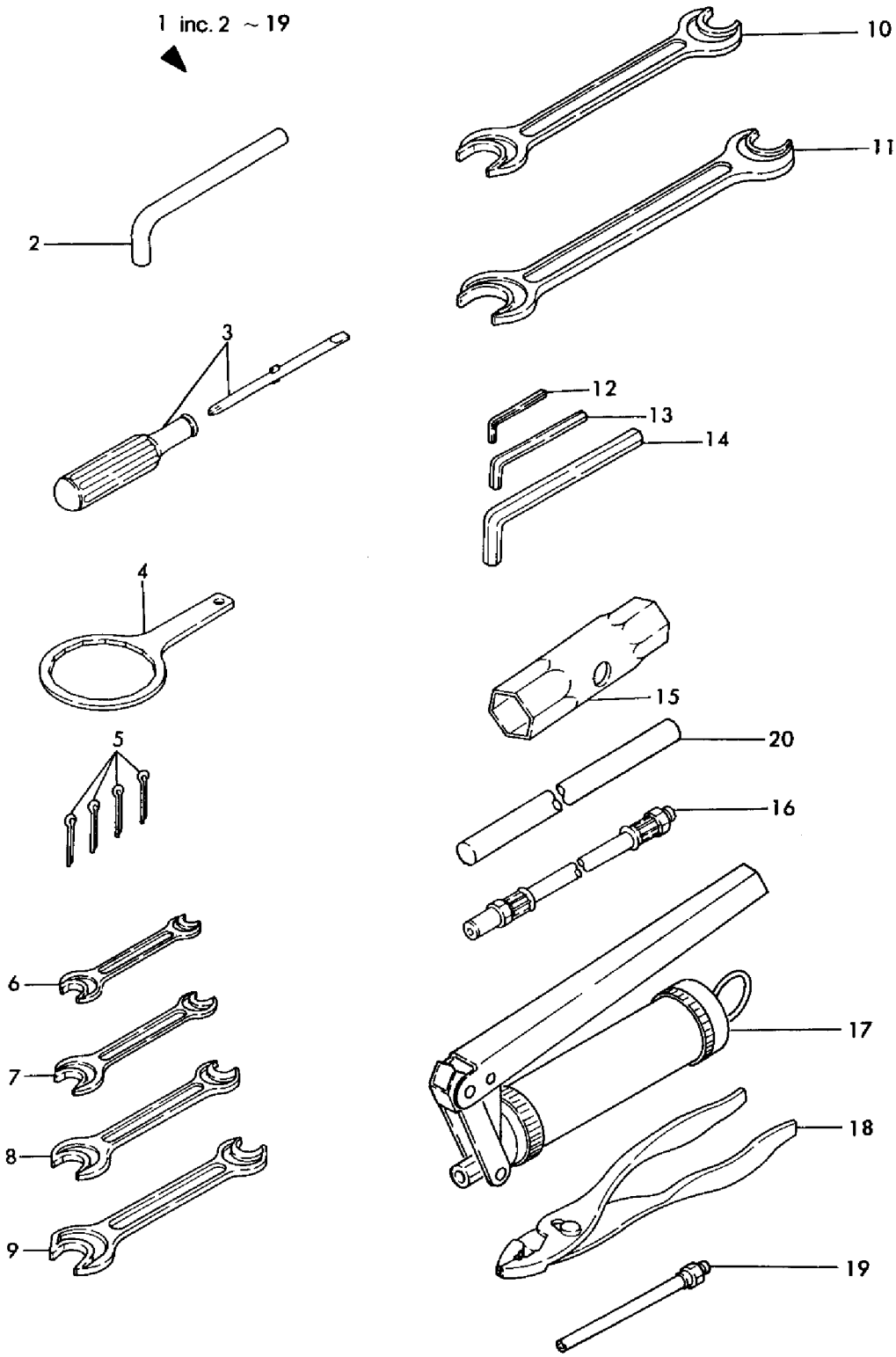

https://truckmanualshub.com/

```
1,1,,172130-05300,,"COVER, TOOL CASE",1,,,1,,,,,,,,,,,,,
2,1,,172130-05320,,"TOOL CASE",1,,,1,,,,,,,,,,,,,
3,1,,172112-14650,,CLAMP,1,,,1,,,,,,,,,,,,,
4,1,,22217-050000,,"SPRING WASHER  5",4,,,4,,,,,,,,,,,,,
5,1,,26013-080122,,"BOLT M 8X 12",2,,,2,,,,,,,,,,,,,
6,1,,26013-100202,,"BOLT W/WASHER M10X20",4,,,4,,,,,,,,,,,,,
7,1,,26557-050122,,"SCREW M 5X 12",4,,,4,,,,,,,,,,,,,
8,1,,26717-050002,,"NUT M 5",4,,,4,,,,,,,,,,,,,
9,1,,172738-61530,,RUBBER,2,,,2,,,,,,,,,,,,,
10,1,,172130-05410,,"COVER, TOOL CASE",1,,,1,,,,,,,,,,,,,
11,1,,172130-05430,,"TOOL CASE (3RD)",1,,,1,,,,,,,,,,,,,
12,1,,172130-05550,,"PLATE, TOOL CASE",1,,,1,,,,,,,,,,,,,
13,1,,172112-14650,,CLAMP,1,,,1,,,,,,,,,,,,,
14,1,,172738-61530,,RUBBER,2,,,2,,,,,,,,,,,,,
15,1,,22217-050000,,"SPRING WASHER  5",4,,,4,,,,,,,,,,,,,
16,1,,26013-080122,,"BOLT M 8X 12",2,,,2,,,,,,,,,,,,,
17,1,,26013-080122,,"BOLT M 8X 12",2,,,2,,,,,,,,,,,,,
18,1,,26013-100202,,"BOLT W/WASHER M10X20",4,,,4,,,,,,,,,,,,,
19,1,,26557-050122,,"SCREW M 5X 12",4,,,4,,,,,,,,,,,,,
20,1,,26717-050002,,"NUT M 5",4,,,4,,,,,,,,,,,,,
```

https://truckmanualshub.com/

Fig. 6 コウグバコ TOOL BOX

D 72130-05300
D 72130-05310

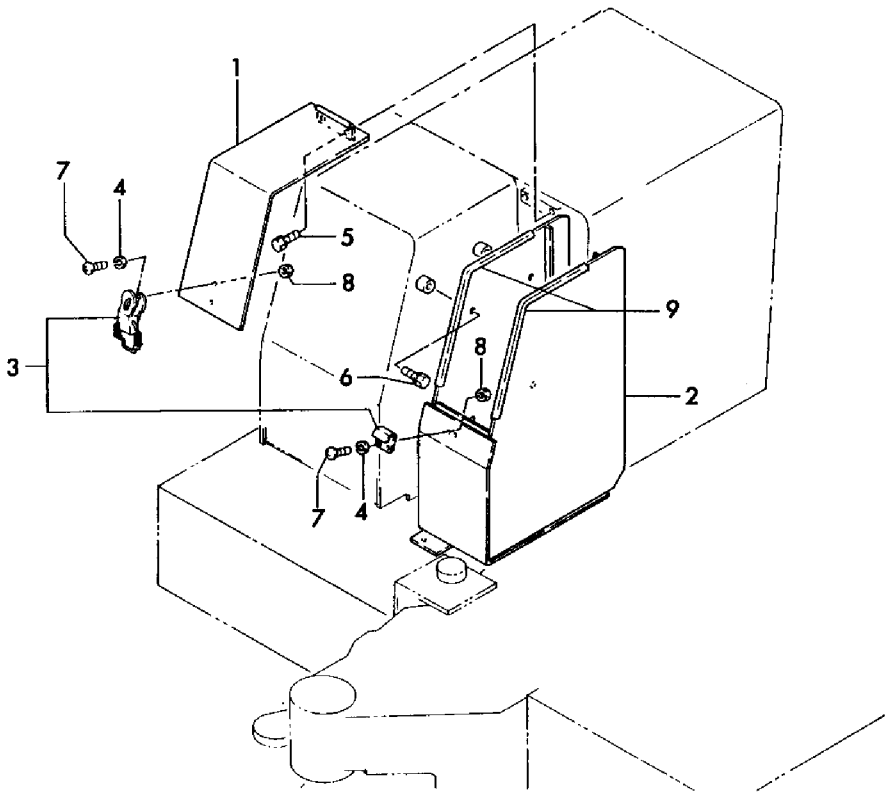

サードバルブシヨウ
FOR 3RD VILVE

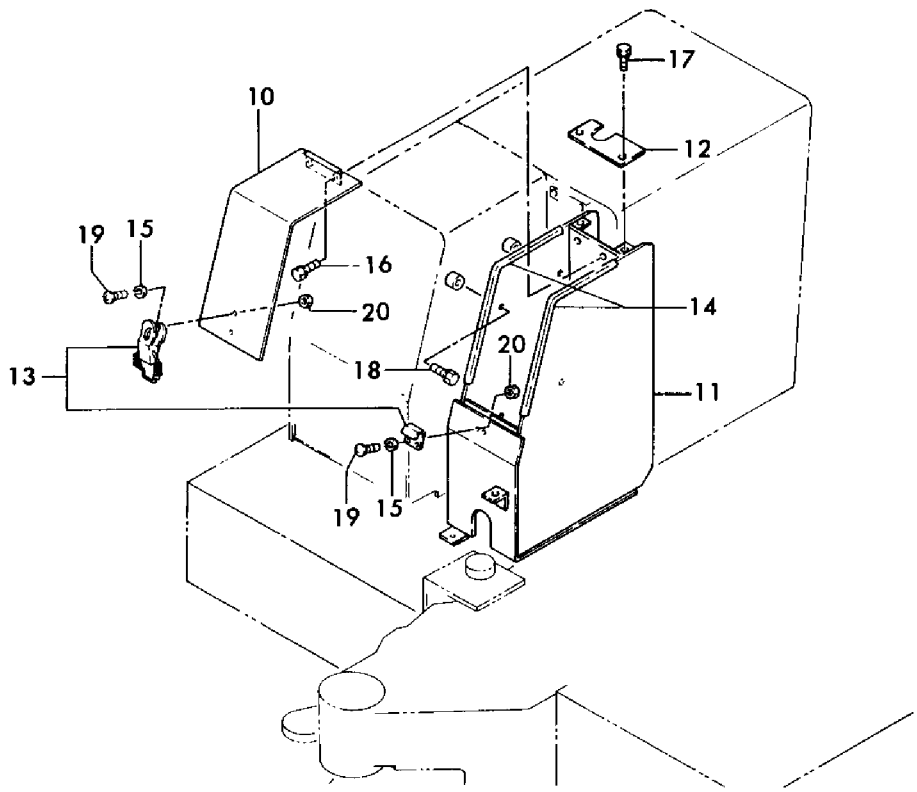

https://truckmanualshub.com/

```
1,1,,172124-12100,,"LEVER ASSY,THROTTLE",1,,,1,,,,,,,,,,,,,
2,2,,933171-23680,,"BUSH 14X15",2,,,2,,,,,,,,,,,,,
3,1,,172124-12120,,"SUPPORT (A), CABLE",1,,,1,,,,,,,,,,,,,
4,1,,172124-12140,,"SUPPORT (B), CABLE",1,,,1,,,,,,,,,,,,,
5,1,,172130-12150,,"CABLE, THROTTLE",1,,,1,,,,,,,,,,,,,
6,1,,172122-12170,,BOLT,1,,,1,,,,,,,,,,,,,
7,1,,172112-12520,,"PIVOT, ACCEL",1,,,1,,,,,,,,,,,,,
8,1,,172112-12530,,"JOINT, CABLE",1,,,1,,,,,,,,,,,,,
9,1,,1E6140-16160,,"WASHER 10.5X23X3.2",1,,,1,,,,,,,,,,,,,
9-1,1,,194145-04810,,"WASHER 10",1,,,1,,,N,,,*1988.10,,,,,,*1988.10,,
10,1,,172730-33190,,"SPRING, SIDE CLUTCH",1,,,1,,,,,,,,,,,,,
11,1,,172116-45940,,"KNOB (C), LEVER",1,,,1,,,,,,,,,,,,,
11-1,1,,172122-46630,,"KNOB(D), LEVER",1,,,1,,,R,,,M20501,,,,,,M20501,,
12,1,,1A1040-56900,,"PIN  6X 17",1,,,1,,,,,,,,,,,,,
13,1,,22137-120000,,"WASHER 12,POLISHED",2,,,2,,,,,,,,,,,,,
14,1,,22217-050000,,"SPRING WASHER  5",1,,,1,,,,,,,,,,,,,
15,1,,22272-000070,,"CIRCLIP E- 7",1,,,1,,,,,,,,,,,,,
16,1,,22417-200160,,"COTTER PIN 2.0X16",1,,,1,,,,,,,,,,,,,
17,1,,22417-320250,,"COTTER PIN 3.2X25",1,,,1,,,,,,,,,,,,,
18,1,,26013-080162,,"BOLT W/WASHER M8X16",2,,,2,,,,,,,,,,,,,
19,1,,26013-080202,,"BOLT W/WASHER M8X20",2,,,2,,,,,,,,,,,,,
20,1,,26717-050002,,"NUT M 5",1,,,1,,,,,,,,,,,,,
21,1,,26756-100002,,"LOCK NUT M10 PLATED",2,,,2,,,,,,,,,,,,,
22,1,,933110-25700,,"CASTLE NUT M12",1,,,1,,,,,,,,,,,,,
22-1,1,,1A1040-16270,,"NUT M12, CASTLE",1,,,1,,,R,,,M00501,,,,,,M00501,,
23,1,,933166-16110,,"GROMMET 30X9.5",1,,,1,,,,,,,,,,,,,
24,1,,933170-01490,,"SPRING 12",2,,,2,,,,,,,,,,,,,
25,1,,933168-28480,,"WASHER 20X9X3.2",2,,,2,,,W,,,M20501,,,,,,M20501,,
```

https://truckmanualshub.com/

Fig. 7 エンジンコントロール ENGINE CONTROL

D 72130-12100

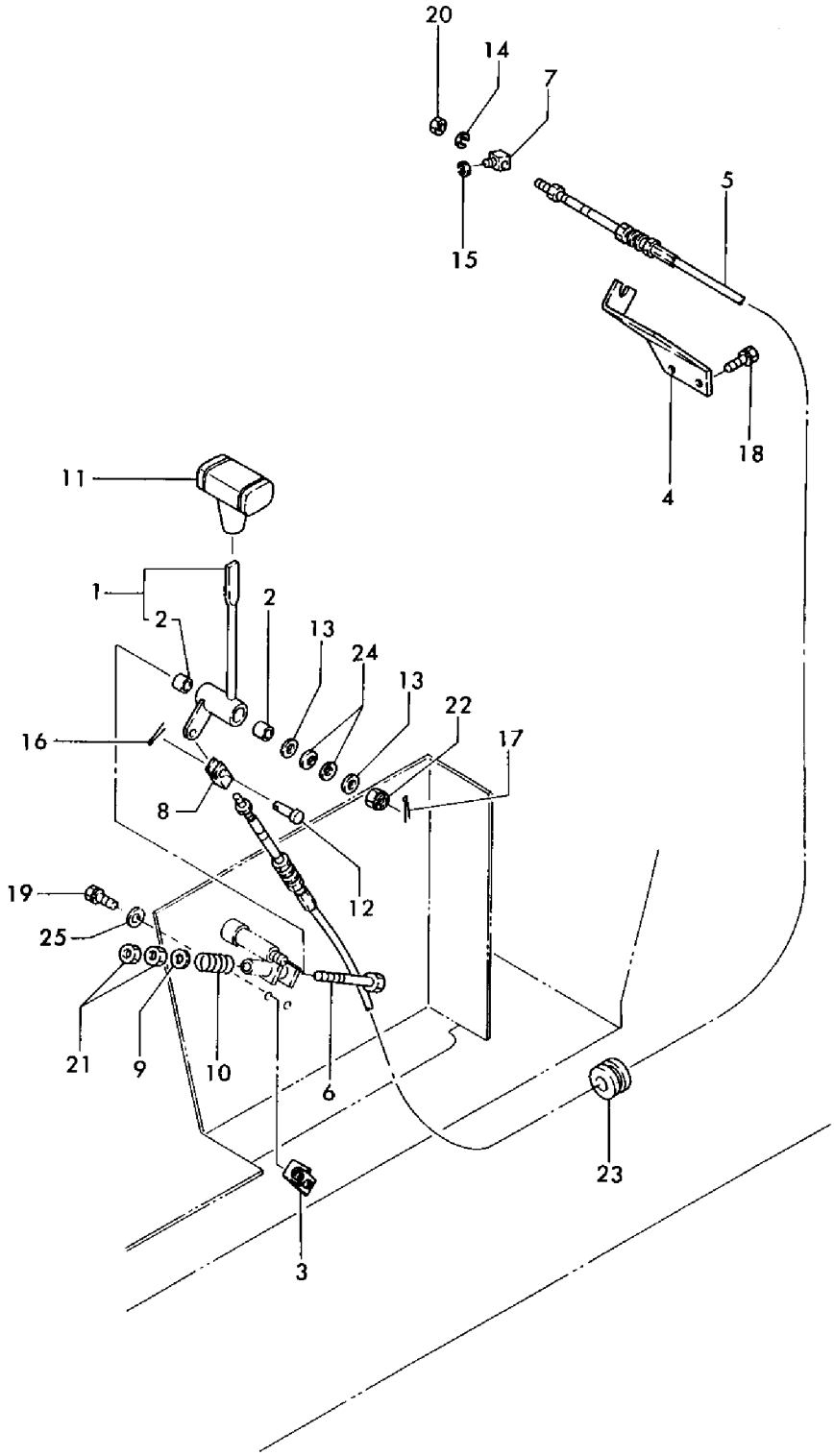

https://truckmanualshub.com/

```
1,1,,172124-13100,,"SUPPORT (A), ENGINE",4,,,4,,,,,,,,,,,,,
2,1,,172124-13150,,"BRACKET,ENG. ASSY",1,,,1,,,,,,,,,,,,,
3,1,,172124-13210,,"BRACKET,ENG(L)",1,,,1,,,,,,,,,,,,,
4,1,,172124-13220,,"BRACKET,ENG(R)ASSY",1,,,1,,,,,,,,,,,,,
5,1,,172124-13230,,"STOPPER, ENGINE",3,,,3,,,,,,,,,,,,,
6,1,,172116-13260,,"ABSORBER, SHOCK",4,,,4,,,,,,,,,,,,,
7,1,,22217-120000,,"WASHER 12,SPRING",8,,,8,,,,,,,,,,,,,
8,1,,26013-100252,,"BOLT W/WASHER M10X25",8,,,8,,,,,,,,,,,,,
9,1,,26013-100252,,"BOLT W/WASHER M10X25",6,,,6,,,,,,,,,,,,,
10,1,,26013-120252,,"BOLT M12X 25",16,,,16,,,,,,,,,,,,,
11,1,,26716-120002,,"NUT M12",8,,,8,,,,,,,,,,,,,
12,1,,933152-03700,,"WASHER, SIDE CLUTCH",4,,,4,,,,,,,,,,,,,
12-1,1,,172147-13150,,"WASHER 32X 12.5",4,,,4,,,N,,,*1988.09,,,,,,*1988.09,,
13,1,,129403-13500,,SILENCER,1,,,1,,,,,,,,,,,,,
14,1,,129403-13540,,"SUPPORT, SILENCER",1,,,1,,,,,,,,,,,,,
15,1,,129403-18090,,GASKET,1,,,1,,,,,,,,,,,,,
16,1,,26013-080162,,"BOLT W/WASHER M8X16",2,,,2,,,,,,,,,,,,,
17,1,,26013-080202,,"BOLT W/WASHER M8X20",2,,,2,,,,,,,,,,,,,
18,1,,26013-080202,,"BOLT W/WASHER M8X20",4,,,4,,,,,,,,,,,,,
19,1,,172124-11500,,"HOSE, AIR CLEANER",1,,,1,,,,,,,,,,,,,
20,1,,23000-070000,,"CLAMP 70",2,,,2,,,,,,,,,,,,,
```

https://truckmanualshub.com/

Fig. 8 エンジンマウント ENG. MOUNT

D 72124-11300
D 72124-11500
D 72312-13100

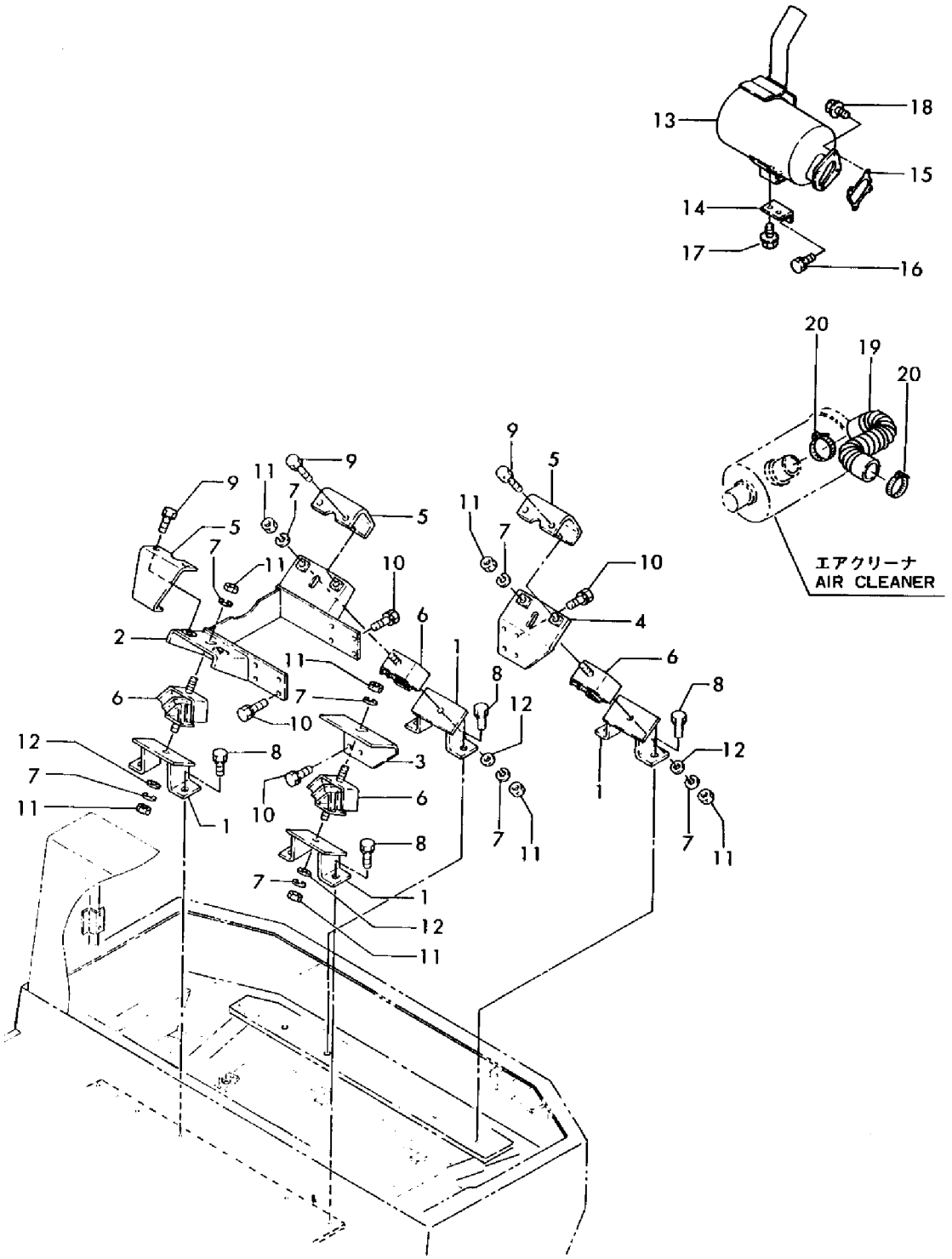

https://truckmanualshub.com/

```
1,1,,172312-13300,,"MOUNT (A), RADIATOR",1,,,1,,,,,,,,,,,,,
2,1,,172122-13310,,"MOUNT, RADIATOR",4,,,4,,,,,,,,,,,,,
2-1,1,,172124-13500,,"MOUNT, RADIATOR",4,,,4,,,N,,,M00550,,,,,,M00550,,
3,1,,172312-13320,,"MOUNT (B), RADIATOR",1,,,1,,,,,,,,,,,,,
4,1,,172130-13380,,"COVER,BOTTOM (EV)",1,,,1,,,,,,,,,,,,,
4-1,1,,172312-13380,,"COVER, BOTTOM",1,,,1,,,N,,,M00501,,,,,,M00501,,
5,1,,172124-13410,,"HOSE(B), DRAIN",1,,,1,,,,,,,,,,,,,
6,1,,172312-13410,,"SHIM (T=0.8)",2,,,2,,,Z,,,M00550,,,,,,M00550,,
7,1,,172312-13420,,"SHIM (T=1.2)",2,,,2,,,Z,,,M00550,,,,,,M00550,,
8,1,,172312-13430,,"HOSE(A), DRAIN",1,,,1,,,,,,,,,,,,,
9,1,,172124-13440,,COCK,1,,,1,,,,,,,,,,,,,
10,1,,172312-13440,,"COIL TUBE (A) 9X12",1,,,1,,,,,,,,,,,,,
11,1,,172124-13450,,PLUG,1,,,1,,,,,,,,,,,,,
12,1,,172124-13470,,"TUBE (B), COIL",1,,,1,,,,,,,,,,,,,
13,1,,129403-44500,,RADIATOR,1,,,1,,,,,,,,,,,,,
13-1,1,,129403-44501,,"RADIATOR ASSY",1,,,1,,,R,,,*1986.04,,,,,,*1986.04,,
13-2,1,,129403-44502,,RADIATOR,1,,,1,,,R,,,M20501,,,,,,M20501,,
14,2,,124450-44590,,"CAP, RADIATOR",1,,,1,,,,,,,,,,,,,
15,2,,121250-44590,,CLAMP,2,,,2,,,,,,,,,,,,,
16,2,,129403-44610,,SHROUD,1,,,1,,,,,,,,,,,,,
17,2,,129403-44640,,"BODY,RADIATOR",1,,,1,,,,,,,,,,,,,
18,2,,119631-44800,,"LABEL, RADIATOR",1,,,1,,,,,,,,,,,,,
19,2,,124722-49150,,"HOSE(A), WATER DRAIN",1,,,1,,,,,,,,,,,,,
20,2,,26014-060122,,"BOLT M 6X 12",4,,,4,,,,,,,,,,,,,
21,1,,171064-44510,,"SUB-TANK ASSY",1,,,1,,,,,,,,,,,,,
22,2,,171064-44530,,"CAP, SUB-TANK",1,,,1,,,,,,,,,,,,,
22-1,2,,121450-44531,,CAP,1,,,1,,,S,,,*1988.07,,,,,,*1988.07,,
23,2,,23065-070225,,"PIPE  7X 225",1,,,1,,,,,,,,,,,,,
24,2,,124450-44560,,CLAMP,1,,,1,,,,,,,,,,,,,
25,2,,171064-44520,,"BODY, SUB-TANK",1,,,1,,,,,,,,,,,,,
26,2,,121470-44570,,SPACER,1,,,1,,,Z,,,*1988.07,,,,,,*1988.07,,
27,2,,121470-44580,,GASKET,1,,,1,,,,,,,,,,,,,
27-1,2,,121470-44581,,GASKET,1,,,1,,,S,,,*1988.07,,,,,,*1988.07,,
28,1,,124450-44550,,"CLAMP, SUB-TANK",1,,,1,,,,,,,,,,,,,
29,1,,121256-44600,,"BRACKET, SUB-TANK",1,,,1,,,,,,,,,,,,,
30,1,,129403-49010,,"PIPE (A), C.WATER",1,,,1,,,,,,,,,,,,,
31,1,,129403-49020,,"PIPE (B), C.WATER",1,,,1,,,,,,,,,,,,,
32,1,,121267-49500,,"CLAMP 38",4,,,4,,,,,,,,,,,,,
32-1,1,,23010-038000,,"CLAMP 38",4,,,4,,,R,,,*1989.01,,,,,,*1989.01,,
33,1,,124766-59050,,"CLAMP 12",4,,,4,,,,,,,,,,,,,
34,1,,22217-080000,,"SPRING WASHER  8",8,,,8,,,,,,,,,,,,,
35,1,,24311-000160,,"O-RING 1A P-16.0",1,,,1,,,,,,,,,,,,,
36,1,,26013-080162,,"BOLT W/WASHER M8X16",2,,,2,,,,,,,,,,,,,
37,1,,26013-080162,,"BOLT W/WASHER M8X16",2,,,2,,,,,,,,,,,,,
38,1,,26013-100252,,"BOLT W/WASHER M10X25",4,,,4,,,,,,,,,,,,,
39,1,,26716-080002,,"NUT M 8",8,,,8,,,,,,,,,,,,,
40,1,,26013-080162,,"BOLT W/WASHER M8X16",2,,,2,,,,,,,,,,,,,
41,1,,22157-100000,,"WASHER 10",4,,,4,,,W,,,M00550,,,,,,M00550,,
```

https://truckmanualshub.com/

Fig. 9 ラジエータ & マウント RADIATOR & MOUNT

D 72312-13300

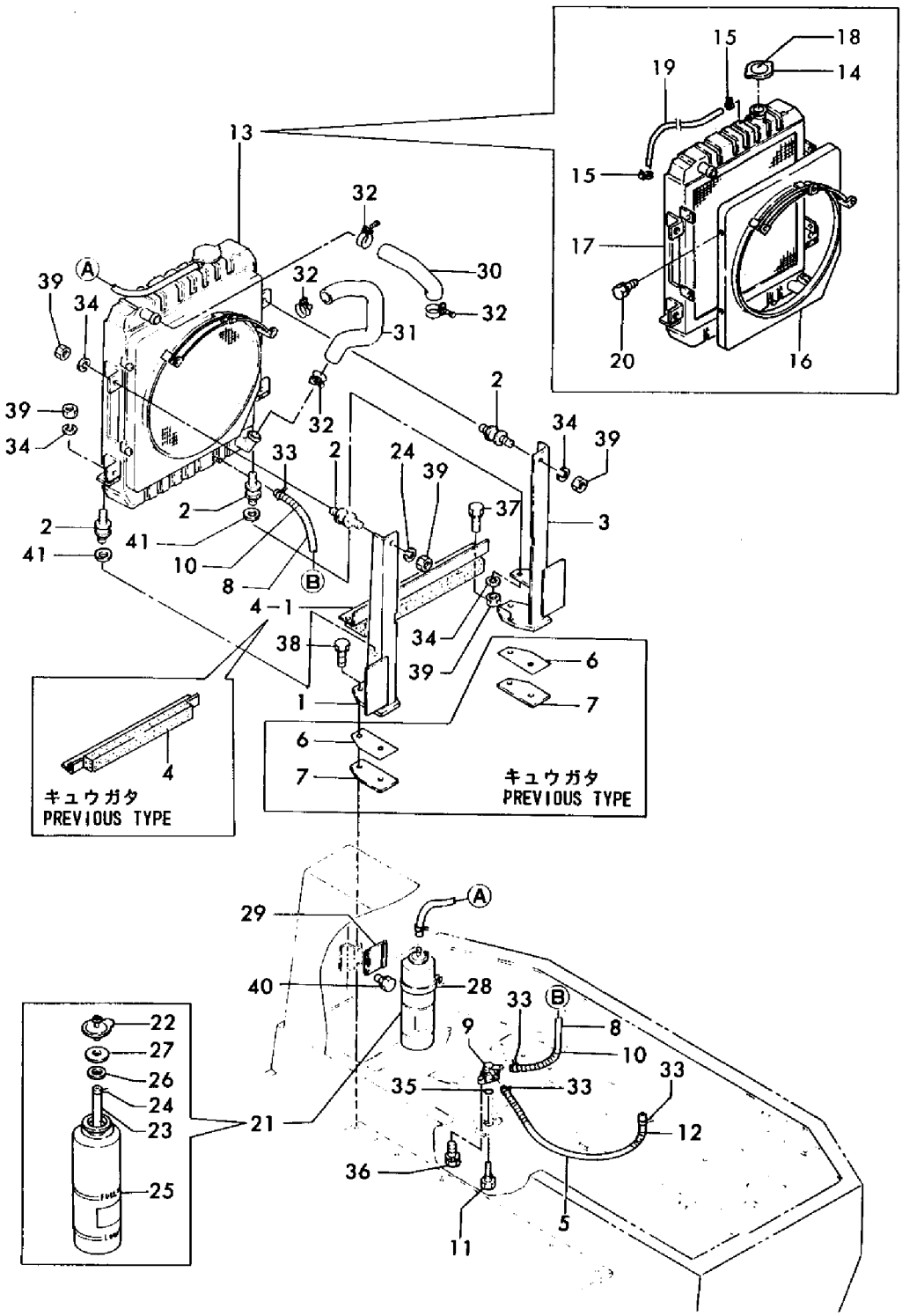

https://truckmanualshub.com/

```
1,1,,772130-14100,,"TANK ASSY, FUEL OIL",1,,,1,,,,,,,,,,,,,
1-1,1,,772130-14101,,"TANK ASSY, FUEL OIL",1,,,1,,,N,,,M20501,,,,,,M20501,,
2,2,,104200-11920,,COCK,1,,,1,,,,,,,,,,,,,
4,2,,172124-14230,,"COVER,FO CAP",1,,,1,,,Z,,,M20501,,,,,,M20501,,
5,2,,172124-14250,,"SPRING,CATCH",1,,,1,,,Z,,,M20501,,,,,,M20501,,
6,2,,105430-55041,,"CAP, FUEL TANK",1,,,1,,,,,,,,,,,,,
6-1,2,,172122-14400,,"CAP, FUEL TANK",1,,,1,,,S,,,M20501,,,,,,M20501,,
6-2,2,,172122-14300,,"CAP, FUEL TANK",1,,,1,,,N,,,M20520,,,,,,M20520,,
7,2,,101504-55101,,"STRAINER,FUEL INLET",1,,,1,,,,,,,,,,,,,
8,2,,22137-080000,,"WASHER 8, POLISHED",2,,,2,,,Z,,,M20501,,,,,,M20501,,
9,2,,26013-080122,,"BOLT M 8X 12",2,,,2,,,Z,,,M20501,,,,,,M20501,,
10,2,,26022-050102,,"SCREW M 5X 10",2,,,2,,,Z,,,M20501,,,,,,M20501,,
11,2,,26717-050002,,"NUT M 5",2,,,2,,,Z,,,M20501,,,,,,M20501,,
12,1,,26116-140302,,"BOLT M14X 30 PLATED",4,,,4,,,,,,,,,,,,,
13,1,,933169-22940,,"SPACER, RESERVOIR",2,,,2,,,,,,,,,,,,,
14,2,,933169-23070,,"SPACER (1.6)",2,,,2,,,,1,,,,,,,,,
15,2,,933169-23080,,"SPACER (3.2)",2,,,2,,,,1,,,,,,,,,
16,1,,933169-23040,,"WASHER 15X40",4,,,4,,,,,,,,,,,,,
17,1,,172130-14600,,"HOSE(A),FUEL OIL",1,,,1,,,,,,,,,,,,,,
17-1,1,,172130-14640,,"PIPE (D), FUEL",1,,,1,,,R,,,"FROM 1ST",,,,,,"FROM 1ST",,
18,1,,172130-14610,,"HOSE(B),FUEL OIL",1,,,1,,,,,,,,,,,,,
18-1,1,,172124-14610,,"HOSE L=200, FUEL",1,,,1,,,S,,,M00501,,,,,,M00501,,
18-2,1,,172124-14610,,"HOSE L=200, FUEL",1,,,1,,,Z,,,*1988.04,,,,,,*1988.04,,
19,1,,172312-14600,,"HOSE L=2900, FUEL",1,,,1,,,W,,,M00501,,,,,,M00501,,
20,1,,172132-14610,,"HOSE,FUEL OIL 700",1,,,1,,,,,,,,,,,,,
20-1,1,,172312-14610,,"HOSE L=700, FUEL",1,,,1,,,S,,,M00501,,,,,,M00501,,
20-2,1,,172137-13430,,"PIPE (B), DRAIN",1,,,1,,,R,,,*1988.04,,,,,,*1988.04,,
21,1,,172116-14620,,"PIPE (B), FUEL",1,,,1,,,,,,,,,,,,,
22,1,,172135-14600,,"HOSE(A),FUEL OIL",1,,,1,,,,,,,,,,,,,
23,1,,172124-14640,,"HOSE L=750, FUEL",1,,,1,,,Z,,,MXXX,,,,,,MXXX,,
24,1,,172130-14650,,"SUPPOT,SEPARATOR",1,,,1,,,,,,,,,,,,,
25,1,,172116-14680,,"HOSE, VENT",1,,,1,,,Z,,,MXXX,,,,,,MXXX,,
26,1,,172135-14610,,"JOINT, FUEL PIPE",1,,,1,,,,,,,,,,,,,
27,1,,194250-51660,,"BAND  250",1,,,1,,,,,,,,,,,,,
28,1,,129100-55600,,"STRAINER, FUEL",1,,,1,,,,2,,,,,,,,,
29,2,,104200-55321,,"VALVE, TAPER",1,,,1,,,,,,,,,,,,,
30,2,,104200-55330,,"SPRING, TAPER VALVE",1,,,1,,,,,,,,,,,,,
31,2,,104200-55750,,"SCREW M 4",1,,,1,,,,,,,,,,,,,
32,2,,24311-240100,,"O-RING 1A P-10A",1,,,1,,,,,,,,,,,,,
33,2,,129100-55670,,LEVER,1,,,1,,,,,,,,,,,,,
34,2,,129100-55680,,"CUP, STRAINER",1,,,1,,,,,,,,,,,,,
36,2,,129100-55690,,"RING, RETAINING",1,,,1,,,,,,,,,,,,,
37,2,,24321-000650,,"O-RING 1A G-65.0",1,,,1,,,,,,,,,,,,,
38,2,,129100-55650,,"ELEMENT, FUEL",1,,,1,,,,,,,,,,,,,
39,2,,129100-55700,,SPRING,1,,,1,,,,,,,,,,,,,
40,2,,24311-000160,,"O-RING 1A P-16.0",1,,,1,,,,,,,,,,,,,
41,1,,129335-55700,,"SEPARATOR, WATER",1,,,1,,,,,,,,,,,,,
42,2,,104200-55321,,"VALVE, TAPER",1,,,1,,,,,,,,,,,,,
43,2,,104200-55330,,"SPRING, TAPER VALVE",1,,,1,,,,,,,,,,,,,
44,2,,104200-55341,,"HANDLE, COCK",1,,,1,,,,,,,,,,,,,
45,2,,124064-55510,,"BOWL, FUEL STRAINER",1,,,1,,,,,,,,,,,,,
46,2,,102103-55520,,O-RING,1,,,1,,,,,,,,,,,,,
47,2,,110250-55610,,"RING, RETAINING",1,,,1,,,,,,,,,,,,,
48,2,,121257-55720,,"SPRING, SCREEN",1,,,1,,,,,,,,,,,,,
49,2,,121257-55731,,FLOAT,1,,,1,,,,,,,,,,,,,
51,2,,101720-55750,,"PLUG 6",2,,,2,,,,,,,,,,,,,
52,2,,104200-55750,,"SCREW M 4",1,,,1,,,,,,,,,,,,,
53,2,,171081-55910,,SCREEN,1,,,1,,,,,,,,,,,,,
54,2,,23418-060000,,"GASKET 6, NYLON",2,,,2,,,,,,,,,,,,,
55,2,,24311-240100,,"O-RING 1A P-10A",1,,,1,,,,,,,,,,,,,
56,1,,124766-59050,,"CLAMP 12",12,,,12,,,,,,,,,,,,,
56-1,1,,124766-59050,,"CLAMP 12",10,,,10,,,K,,,MXXX,,,,,,MXXX,,
57,1,,124066-59100,,"CLAMP  8",2,,,2,,,Z,,,MXXX,,,,,,MXXX,,
```

https://truckmanualshub.com/

```
58,1,,129322-77400,,"FEED PUMP",1,,,1,,,,,,,,,,,,,
58-1,1,,129322-77401,,"FEED PUMP",1,,,1,,,N,,,M20569,,,,,,M20569,,
59,1,,22217-080000,,"SPRING WASHER  8",2,,,2,,,,,,,,,,,,,
59-1,1,,22217-080000,,"SPRING WASHER  8",1,,,1,,,K,,,M00559,,,,,,M00559,,
60,1,,26013-060162,,"BOLT M 6X 16",2,,,2,,,,,,,,,,,,,
61,1,,26013-080162,,"BOLT W/WASHER M8X16",2,,,2,,,,,,,,,,,,,
62,1,,26116-080702,,"BOLT M 8X 70 PLATED",2,,,2,,,,,,,,,,,,,
62-1,1,,26116-080702,,"BOLT M 8X 70 PLATED",1,,,1,,,K,,,M00559,,,,,,M00559,,
63,1,,29311-325000,,"GROMMET 32X5.0",1,,,1,,,,,,,,,,,,,
64,1,,29311-325000,,"GROMMET 32X5.0",1,,,1,,,,,,,,,,,,,
65,1,,933168-55770,,"BAND 146",1,,,1,,,,,,,,,,,,,
65-1,1,,933168-55770,,"BAND 146",4,,,4,,,K,,,MXXX,,,,,,MXXX,,
66,1,,172126-16540,,"CLAMP 10X70",2,,,2,,,,,,,,,,,,,
67,1,,172122-14640,,"PIPE 13, CORRUGAT",1,,,1,,,,,,,,,,,,,
```

https://truckmanualshub.com/

Fig. 10 F.O.タンク & F.O.パイプ FUEL TANK & FUEL LINE

D 72130-14100
D 72130-14600

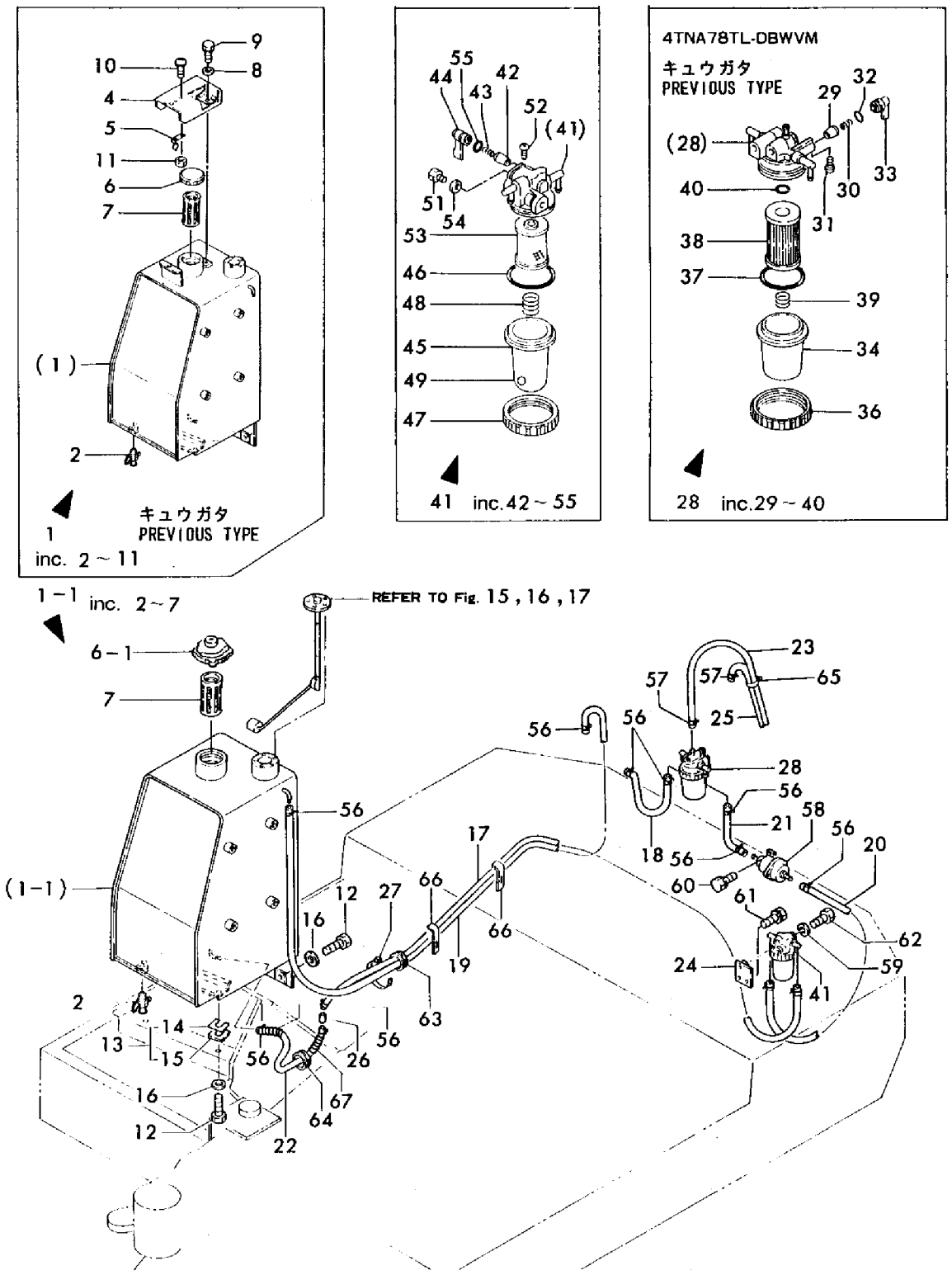

4TNA78TL-RBWVMのF.Oフィルタはエンジンの Fig 参照
4TNA78TL-RBWVM: ASSEMBLED PARTS OF FUEL STRAINER=REFER TO ENGINE Fig

https://truckmanualshub.com/

```
1,1,,172312-16100,,"CORD (-), BATTERY",1,,,1,,,,,,,,,,,,,
2,1,,172312-16110,,"CORD (+), BATTERY",1,,,1,,,,,,,,,,,,,
3,1,,124550-77030,,"COVER, TERMINAL",1,,,1,,,,,,,,,,,,,
4,1,,22217-080000,,"SPRING WASHER  8",1,,,1,,,,,,,,,,,,,
5,1,,22217-100000,,"SPRING WASHER 10",1,,,1,,,,,,,,,,,,,
6,1,,26712-100002,,"NUT M10",1,,,1,,,,,,,,,,,,,
7,1,,26716-080002,,"NUT M 8",1,,,1,,,,,,,,,,,,,
8,1,,933113-01200,,"BATTERY (NX120-7)",1,,,1,,,,,,,,,,,,,
8-1,1,,933113-01201,,"BATTERY (NX120-7)",1,,,1,,,S,1,,M00531,,,,,,M00531,,
9,2,,933113-01000,,"CAP (BATTERY",5,,,5,,,,,,,,,,,,,
10,2,,933113-01400,,SENSOR,1,,,1,,,,,,,,,,,,,
10-1,2,,933113-01600,,"SENSER, BATTERY",1,,,1,,,F,1,,M00531,,,,,,M00531,,
11,1,,172312-16301,,"MOUNT,BATTERY(B)",1,,,1,,,,,,,,,,,,,
12,1,,172116-16310,,"RETAINER, BATTERY",1,,,1,,,,,,,,,,,,,
13,1,,172312-16350,,"RUBBER 140X40X3.0",2,,,2,,,,,,,,,,,,,
14,1,,26013-100202,,"BOLT W/WASHER M10X20",2,,,2,,,,,,,,,,,,,,
15,1,,26717-080002,,"NUT M 8",4,,,4,,,,,,,,,,,,,
16,1,,933152-02900,,WASHER,2,,,2,,,,,,,,,,,,,
17,1,,933171-15710,,"ROD(B), BATTERY FIX",2,,,2,,,,,,,,,,,,,,
```

https://truckmanualshub.com/

Fig. 11 バッテリ & クランプ BATTERY & CLAMP

D 72312-16100
D 72312-16300

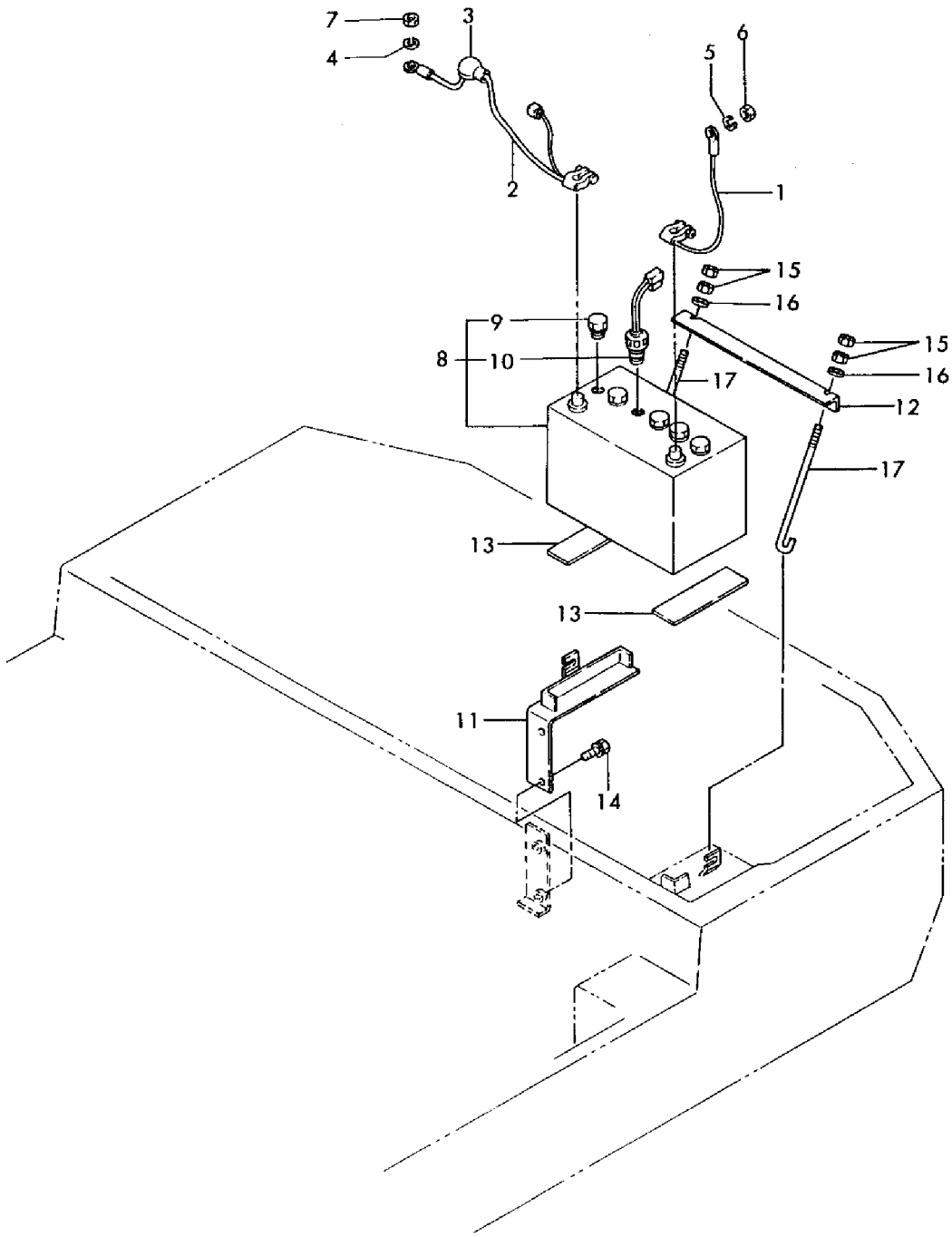

https://truckmanualshub.com/

```
1,1,,172130-16500,,"HARNESS (A), WIRE",1,,,,,,,,,,,,,,,,
2,1,,172116-16510,,"WIRE HARNESS(B",1,,,,,,,,,,,,,,,,
3,1,,172122-16530,,"LEAD WIRE",1,,,,,,,,,,,,,,,,
4,1,,172116-16560,,"LEAD WIRE(B",1,,,,,,,,,,,,,,,,
5,1,,172122-16570,,"LINK, FUSIBLE",1,,,,,,,,,,,,,,,,
6,1,,172122-16580,,"HARNESS (D), WIRE",1,,,,,,,,,,,,,,,,
7,1,,172122-16590,,"BAND 200F",19,,,,,,,,,,,,,,,,
8,1,,172122-16600,,W-CLAMP,4,,,,,,,,,,,,,,,,
9,1,,172122-16620,,"LEAD WIRE",1,,,,,,,,,,,,,,,,
10,1,,29311-515000,,"GROMMET 51X5",1,,,,,,,,,,,,,,,,
11,1,,22137-100000,,"WASHER 10,POLISHED",4,,,,,,,,,,,,,,,,
12,1,,22857-400120,,"SCREW 4X12",19,,,,,,,,,,,,,,,,
13,1,,26013-120202,,"BOLT W/WASHER M12X20",1,,,,,,,,,,,,,,,,
14,1,,26106-100162,,"BOLT M10X 16 PLATED",2,,,,,,,,,,,,,,,,
15,1,,26716-100002,,"NUT M10",1,,,,,,,,,,,,,,,,
16,1,,933171-15801,,"WIRE, EARTH",2,,,,,,,,,,,,,,,,
17,1,,172126-16540,,"CLAMP 10X70",1,,,,,,,,,,,,,,,,
18,1,,172122-16540,,"LEAD WIRE",1,,,,,,,,,,,,,,,,
```

https://truckmanualshub.com/

Fig. 12 ワイヤリング（キャビン）（キュウガタ） WIRING (CABIN) (PREVIOS TYPE)

D 72130-16500

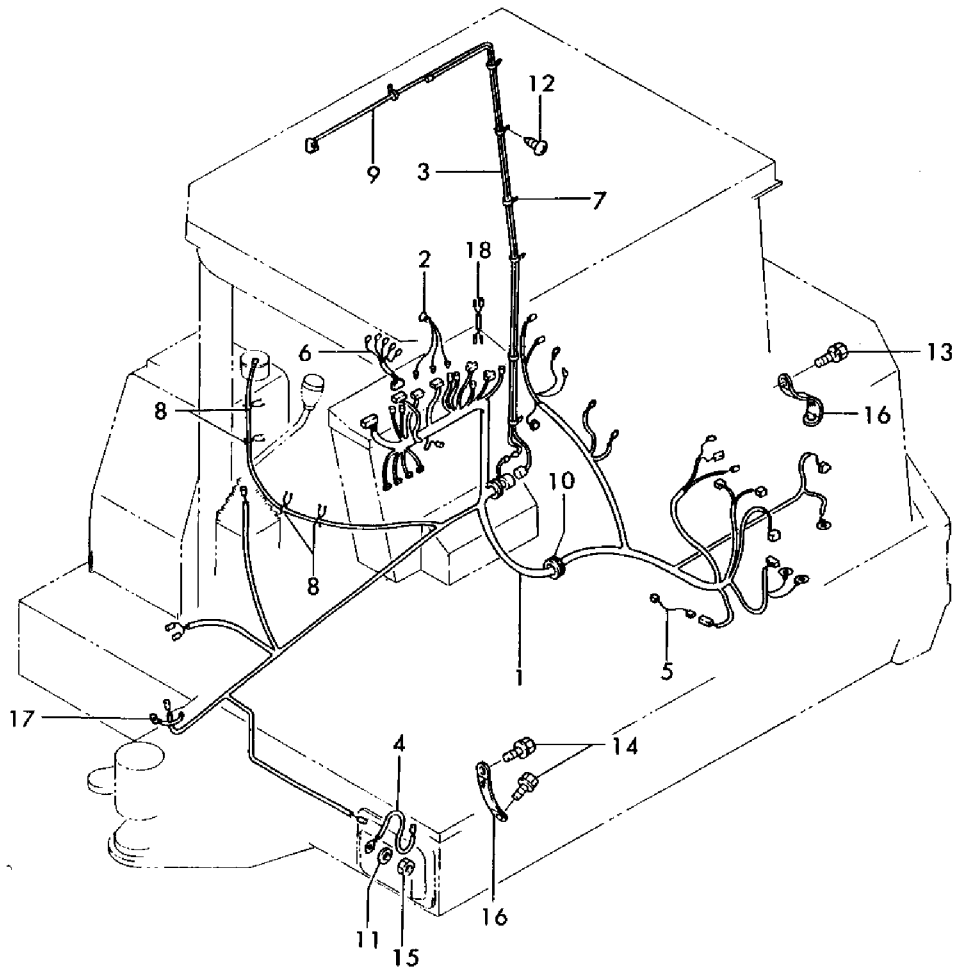

https://truckmanualshub.com/

```
1,1,,172137-16000,,WIRE,1,,,,,,,,,,,,,,,,
2,1,,172130-16501,,"HARNESS (A), WIRE",1,,,,,,,,,,,,,,,,
3,1,,172116-16510,,"WIRE HARNESS(B",1,,,,,,,,,,,,,,,,
4,1,,172122-16540,,"LEAD WIRE",1,,,,,,,,,,,,,,,,
5,1,,172135-16550,,"WIRE HARNESS",1,,,,,,,,,,,,,,,,
6,1,,172116-16560,,"LEAD WIRE(B",1,,,,,,,,,,,,,,,,
7,1,,172116-16560,,"LEAD WIRE(B",1,,,,,,,,,,,,,,,,
8,1,,172122-16570,,"LINK, FUSIBLE",1,,,,,,,,,,,,,,,,
9,1,,172122-16580,,"HARNESS (D), WIRE",1,,,,,,,,,,,,,,,,
10,1,,172122-16590,,"BAND 200F",19,,,,,,,,,,,,,,,,
11,1,,172122-16600,,W-CLAMP,4,,,,,,,,,,,,,,,,
12,1,,22137-100000,,"WASHER 10,POLISHED",1,,,,,,,,,,,,,,,,
13,1,,22857-400120,,"SCREW 4X12",19,,,,,,,,,,,,,,,,
14,1,,26013-120202,,"BOLT W/WASHER M12X20",1,,,,,,,,,,,,,,,,
15,1,,26106-100162,,"BOLT M10X 16 PLATED",2,,,,,,,,,,,,,,,,
16,1,,26716-100002,,"NUT M10",1,,,,,,,,,,,,,,,,
17,1,,29311-515000,,"GROMMET 51X5",1,,,,,,,,,,,,,,,,
18,1,,933171-15801,,"WIRE, EARTH",2,,,,,,,,,,,,,,,,
19,1,,172126-16540,,"CLAMP 10X70",1,,,,,,,,,,,,,,,,
20,1,,194250-51660,,"BAND  250",1,,,,,,,,,,,,,,,,
```

https://truckmanualshub.com/

Fig. 13 ワイヤリング（フロントフラットキャビン）（シンガタ） WIRING (FRONT FLAT CABIN) (NEW TYPE)

D 72130-16500

FROM M/#20514

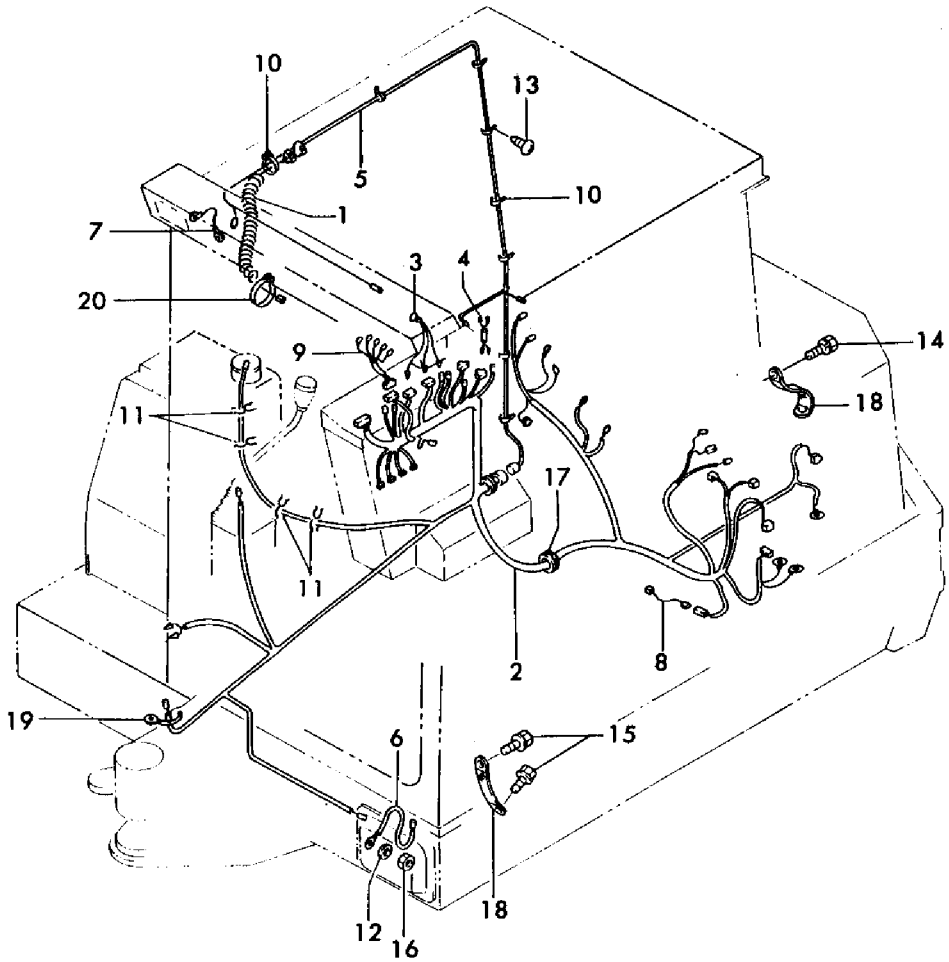

https://truckmanualshub.com/

```
1,1,,172130-16500,,"HARNESS (A), WIRE",,,,1,,,,,,,,,,,,,
1-1,1,,172130-16501,,"HARNESS (A), WIRE",,,,1,,,N,,,,,,,,,M20501,,
2,1,,172116-16510,,"WIRE HARNESS(B",,,,1,,,,,,,,,,,,,
3,1,,172116-16560,,"LEAD WIRE(B",,,,1,,,,,,,,,,,,,
4,1,,172122-16570,,"LINK, FUSIBLE",,,,1,,,,,,,,,,,,,
5,1,,172122-16580,,"HARNESS (D), WIRE",,,,1,,,,,,,,,,,,,
6,1,,172122-16600,,W-CLAMP,,,,4,,,,,,,,,,,,,
7,1,,22137-100000,,"WASHER 10,POLISHED",,,,1,,,,,,,,,,,,,
8,1,,26013-120202,,"BOLT W/WASHER M12X20",,,,1,,,,,,,,,,,,,
9,1,,26106-100162,,"BOLT M10X 16 PLATED",,,,2,,,,,,,,,,,,,
10,1,,26716-100002,,"NUT M10",,,,1,,,,,,,,,,,,,
11,1,,933171-15801,,"WIRE, EARTH",,,,2,,,,,,,,,,,,,
12,1,,29311-515000,,"GROMMET 51X5",,,,1,,,,,,,,,,,,,
13,1,,172126-16540,,"CLAMP 10X70",,,,1,,,,,,,,,,,,,
```

https://truckmanualshub.com/

Fig. 14 ワイヤリング（キャノピ） WIRING (CANOPY)

D 72130-16510

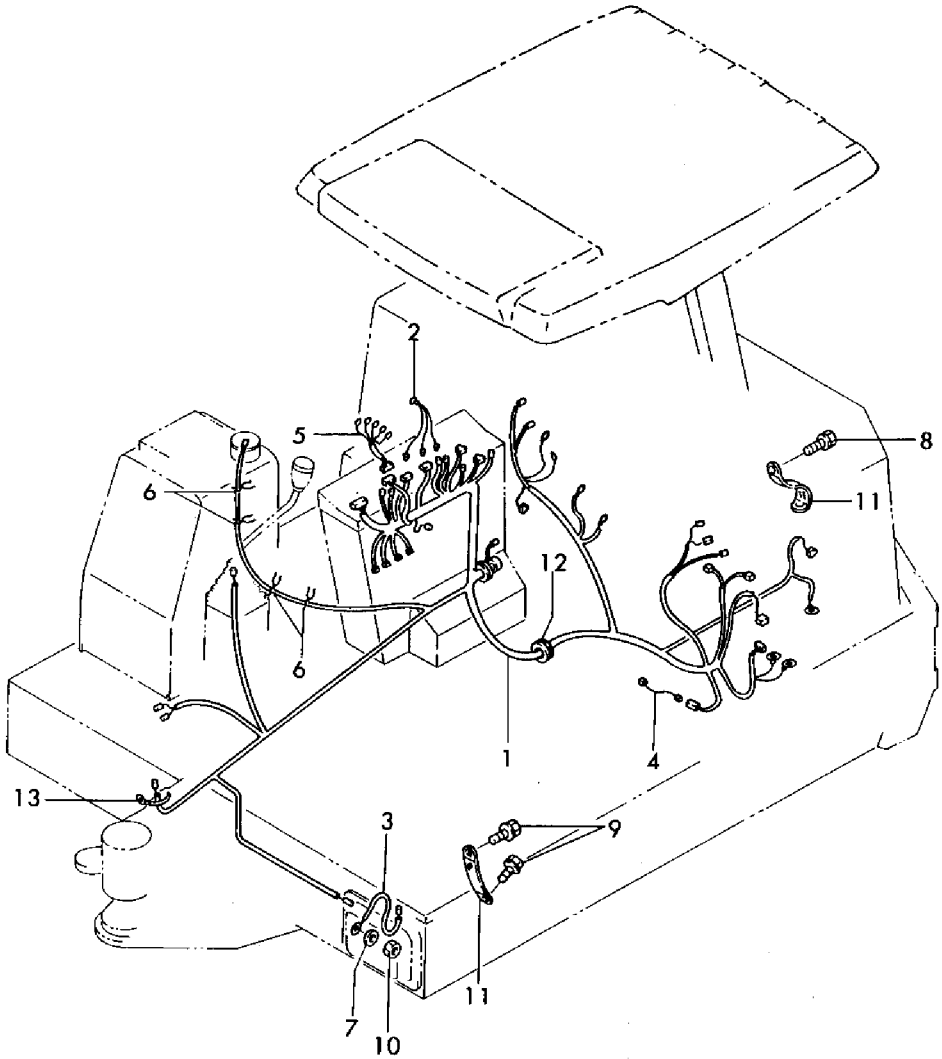

https://truckmanualshub.com/

```
1,1,,172112-17051,,"LAMP ASSY, ROOM",1,,,,,,,,,,,,,,,
2,2,,172112-17060,,"BULB 12V 10W",1,,,,,,,,,,,,,,,
3,1,,172511-17210,,"LAMP, GLOW",1,,,,,,,,,,,,,,,
4,2,,172734-17430,,"BULB 12V 13.4W",1,,,,,,,,,,,,,,,
5,1,,172116-17250,,"COVER, HEAD LIGHT",1,,,,,,,,,,,,,,,
6,1,,172734-17300,,"FUSE BOX",1,,,,,,,,,,,,,,,
7,2,,172734-17310,,COVER,1,,,,,,,,,,,,,,,
9,2,,194145-52830,,"FUSE 10A",5,,,,,,,,,,,,,,,
9-1,2,,29411-100000,,"FUSE (10A),CARTRIDGE",5,,,,,,R,,,*1987.03,,,,,,*1987.03,,
10,2,,194145-52840,,"FUSE 15A",3,,,,,,,,,,,,,,,
10-1,2,,29411-150000,,"FUSE (15A),CARTRIDGE",3,,,,,,R,,,*1987.03,,,,,,*1987.03,,
11,1,,172116-17361,,"METER, FUEL LEVEL",1,,,,,,,,,,,,,,,
12,2,,933113-10110,,"BULB 12V 3.4W",1,,,,,,,,,,,,,,,
13,1,,172730-53610,,"LAMP, HEAD",1,,,,,,,,,,,,,,,
14,2,,194262-53080,,"BULB 12V-25W",1,,,,,,,,,,,,,,,
15,1,,171051-77100,,"RELAY, SAFETY",1,,,,,,,,,,,,,,,
16,1,,124970-77920,,"TIMER, GLOW PLUG",1,,,,,,,,,,,,,,,
17,1,,22137-060000,,"WASHER 6, POLISHED",2,,,,,,,,,,,,,,,
18,1,,22217-100000,,"SPRING WASHER 10",2,,,,,,,,,,,,,,,
19,1,,26013-060122,,"BOLT M 6X 12",2,,,,,,,,,,,,,,,
20,1,,26013-100162,,"BOLT M10X 16",2,,,,,,,,,,,,,,,
21,1,,26013-100202,,"BOLT W/WASHER M10X20",4,,,,,,,,,,,,,,,
22,1,,26022-050122,,"SCREW M 5X 12",2,,,,,,,,,,,,,,,
23,1,,26022-060122,,"SCREW M 6X 12",2,,,,,,,,,,,,,,,
24,1,,26022-060162,,"SCREW M 6X 16",2,,,,,,,,,,,,,,,
25,1,,26022-060202,,"SCREW M 6X 20",1,,,,,,,,,,,,,,,
26,1,,26033-030122,,"SCREW M 3X12",2,,,,,,,,,,,,,,,
27,1,,26347-030002,,"U-NUT M 3",2,,,,,,,,,,,,,,,
28,1,,933110-00100,,"SWITCH ASSY, STARTER",1,,,,,,,,,,,,,,,
30,2,,933110-00301,,"KEY ASSY",1,,,,,,,,,,,,,,,
31,1,,933110-05300,,HORN,1,,,,,,,,,,,,,,,
32,1,,933113-03000,,"SWITCH, LIGHTING",1,,,,,,,,,,,,,,,
33,1,,933113-05000,,"BOX ASSY, PILOT",1,,,,,,,,,,,,,,,
33-1,1,,933113-05001,,"BOX ASSY, PILOT",1,,,,,,N,,,M00587,,,,,,,
34,2,,933113-05120,,"BULB 12V 1.7W",5,,,,,,,,,,,,,,,
36,1,,933113-10100,,"METER, TEMPERATURE",1,,,,,,,,,,,,,,,
36-1,1,,172734-17220,,"THERMOMETER ASSY",1,,,,,,N,,,M10501,,,,,,,
37,2,,933113-10110,,"BULB 12V 3.4W",1,,,,,,,,,,,,,,,
38,1,,933113-10300,,"HOURMETER ASSY.",1,,,,,,,,,,,,,,,
39,1,,933113-15000,,"CIGAR LIGHTER ASSY",1,,,,,,,,,,,,,,,
40,1,,933113-15100,,ASHTRAY,1,,,,,,,,,,,,,,,
41,1,,933113-15400,,CONTROLLER,1,,,,,,,,,,,,,,,
41-1,1,,933113-15401,,CONTROLLER,1,,,,,,S,1,,M00531,,,,,,,
42,1,,933113-15900,,"COVER, SWITCH TERMI.",1,,,,,,,,,,,,,,,
43,1,,172734-17070,,"BLADE 450, WIPER",1,,,,,,,,,,,,,,,
44,1,,26013-060122,,"BOLT M 6X 12",3,,,,,,,,,,,,,,,
45,1,,26022-060162,,"SCREW M 6X 16",1,,,,,,,,,,,,,,,
46,1,,933113-03100,,"SWITCH, WIPER",1,,,,,,,,,,,,,,,
47,1,,933113-15200,,"MOTOR 520, WIPER",1,,,,,,,,,,,,,,,
48,1,,933113-15300,,"ARM 500, WIPER",1,,,,,,,,,,,,,,,
49,1,,172122-17100,,"GAUGE UNIT, FUEL",1,,,,,,,,,,,,,,,
50,1,,22190-050000,,"SEAL WASHER  5(BOLT)",5,,,,,,,,,,,,,,,
51,1,,26557-050122,,"SCREW M 5X 12",5,,,,,,,,,,,,,,,
```

https://truckmanualshub.com/

Fig. 15 デンキキキ（キャビン）（キュウガタ） ELECTRIC PARTS (CABIN) (PREVIOS TYPE)

D 72122-17100
D 72122-17130

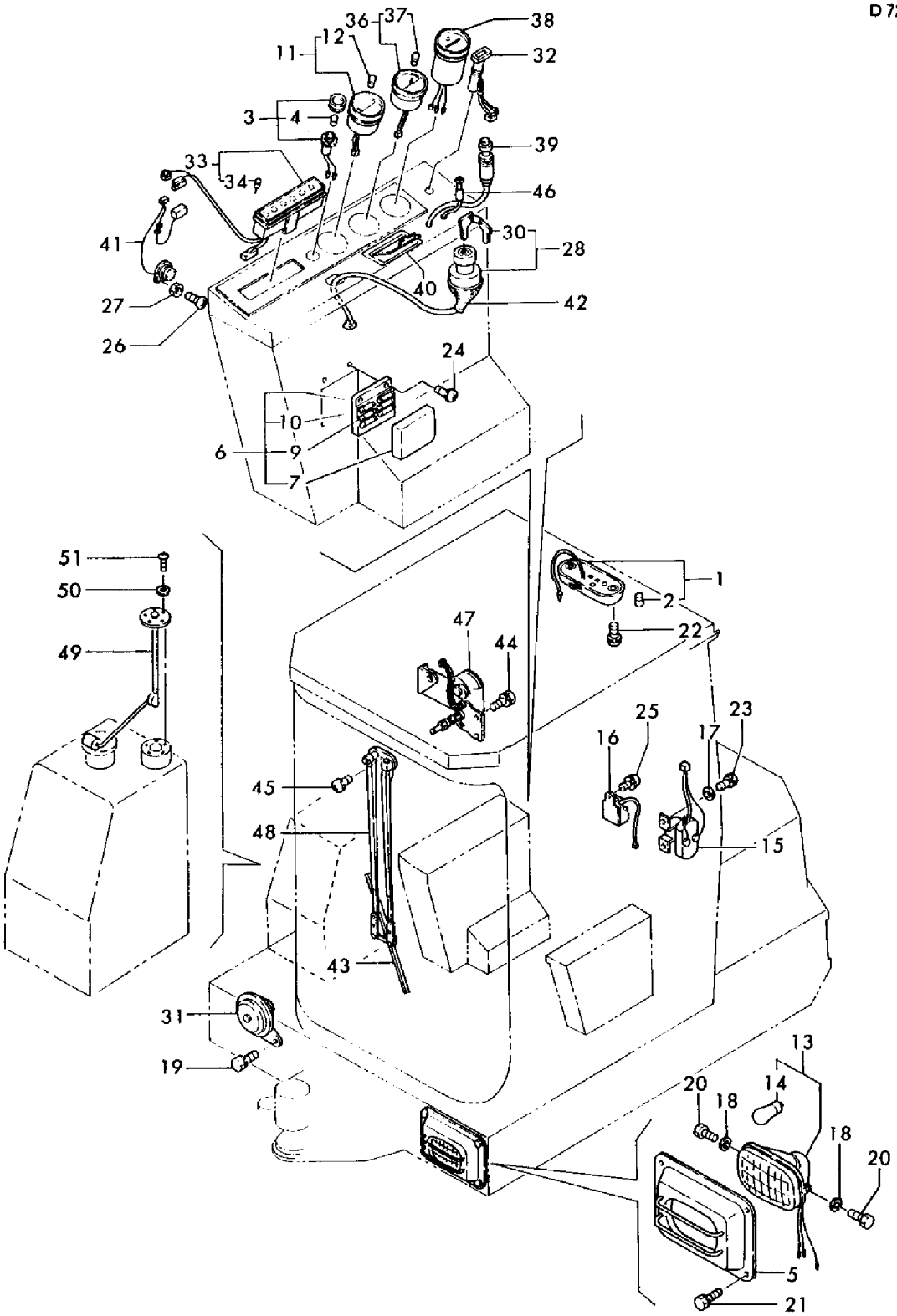

```
1,1,,933113-16200,,"MOTER 520 A, WIPER",1,,,,,,,,,,,,,,,,
2,1,,172122-17100,,"GAUGE UNIT, FUEL",1,,,,,,,,,,,,,,,,
3,1,,172511-17210,,"LAMP, GLOW",1,,,,,,,,,,,,,,,,
4,2,,172734-17430,,"BULB 12V 13.4W",1,,,,,,,,,,,,,,,,
5,1,,172734-17220,,"THERMOMETER ASSY",1,,,,,,,,,,,,,,,,
6,2,,933113-10110,,"BULB 12V 3.4W",1,,,,,,,,,,,,,,,,
7,1,,172116-17250,,"COVER, HEAD LIGHT",1,,,,,,,,,,,,,,,,
8,1,,172734-17300,,"FUSE BOX",1,,,,,,,,,,,,,,,,
9,2,,172734-17310,,COVER,1,,,,,,,,,,,,,,,,
11,2,,29411-100000,,"FUSE (10A),CARTRIDGE",5,,,,,,,,,,,,,,,,
12,2,,29411-150000,,"FUSE (15A),CARTRIDGE",3,,,,,,,,,,,,,,,,
13,1,,172116-17361,,"METER, FUEL LEVEL",1,,,,,,,,,,,,,,,,
14,2,,933113-10110,,"BULB 12V 3.4W",1,,,,,,,,,,,,,,,,
15,1,,172730-53610,,"LAMP, HEAD",1,,,,,,,,,,,,,,,,
16,2,,194262-53080,,"BULB 12V-25W",1,,,,,,,,,,,,,,,,
17,1,,171051-77100,,"RELAY, SAFETY",1,,,,,,,,,,,,,,,,
18,1,,124970-77920,,"TIMER, GLOW PLUG",1,,,,,,,,,,,,,,,,
19,1,,22137-060000,,"WASHER 6, POLISHED",2,,,,,,,,,,,,,,,,
20,1,,22190-050000,,"SEAL WASHER  5(BOLT)",5,,,,,,,,,,,,,,,,
21,1,,22217-100000,,"SPRING WASHER 10",2,,,,,,,,,,,,,,,,
22,1,,22857-400100,,"SCREW 4X10",2,,,,,,,,,,,,,,,,
23,1,,26013-060122,,"BOLT M 6X 12",2,,,,,,,,,,,,,,,,
24,1,,26013-080162,,"BOLT W/WASHER M8X16",2,,,,,,,,,,,,,,,,
25,1,,26013-100162,,"BOLT M10X 16",2,,,,,,,,,,,,,,,,
26,1,,26013-100202,,"BOLT W/WASHER M10X20",4,,,,,,,,,,,,,,,,
27,1,,26022-060122,,"SCREW M 6X 12",2,,,,,,,,,,,,,,,,
28,1,,26022-060162,,"SCREW M 6X 16",2,,,,,,,,,,,,,,,,
29,1,,26022-060202,,"SCREW M 6X 20",1,,,,,,,,,,,,,,,,
30,1,,26033-030122,,"SCREW M 3X12",2,,,,,,,,,,,,,,,,
31,1,,26347-030002,,"U-NUT M 3",2,,,,,,,,,,,,,,,,
32,1,,26557-050122,,"SCREW M 5X 12",5,,,,,,,,,,,,,,,,
33,1,,933110-00100,,"SWITCH ASSY, STARTER",1,,,,,,,,,,,,,,,,
34,2,,933110-00200,,"SWITCH ASSY,STARTER",1,,,,,,,,,,,,,,,,
35,2,,933110-00301,,"KEY ASSY",1,,,,,,,,,,,,,,,,
36,1,,933110-05300,,HORN,1,,,,,,,,,,,,,,,,
37,1,,933113-03000,,"SWITCH, LIGHTING",1,,,,,,,,,,,,,,,,
38,1,,933113-05001,,"BOX ASSY, PILOT",1,,,,,,,,,,,,,,,,
39,2,,933113-05120,,"BULB 12V 1.7W",5,,,,,,,,,,,,,,,,
41,1,,933113-05150,,"LAMP, ROOM",1,,,,,,,,,,,,,,,,
42,2,,933113-05160,,"BULB (12V5W)",1,,,,,,,,,,,,,,,,
43,1,,933113-05220,,"LAMP, HEAD",2,,,,,,,,,,,,,,,,
44,2,,933113-05230,,"BULB (12V20W)",2,,,,,,,,,,,,,,,,
45,1,,933113-10300,,"HOURMETER ASSY.",1,,,,,,,,,,,,,,,,
46,1,,933113-15000,,"CIGAR LIGHTER ASSY",1,,,,,,,,,,,,,,,,
47,1,,933113-15100,,ASHTRAY,1,,,,,,,,,,,,,,,,
48,1,,933113-15401,,CONTROLLER,1,,,,,,,,,,,,,,,,
49,1,,933113-15900,,"COVER, SWITCH TERMI.",1,,,,,,,,,,,,,,,,
50,1,,172135-16540,,"ARM 550, WIPER",1,,,,,,,,,,,,,,,,
51,1,,172734-17070,,"BLADE 450, WIPER",1,,,,,,,,,,,,,,,,
52,1,,26013-060122,,"BOLT M 6X 12",3,,,,,,,,,,,,,,,,
53,1,,26022-060162,,"SCREW M 6X 16",1,,,,,,,,,,,,,,,,
54,1,,933113-03100,,"SWITCH, WIPER",1,,,,,,,,,,,,,,,,
```

https://truckmanualshub.com/

Fig. 16 デンキキキ（キャビン）（シンガタ） ELECTRIC PARTS (CABIN) (NEW TYPE)

D 72135-17100
D 72135-17130

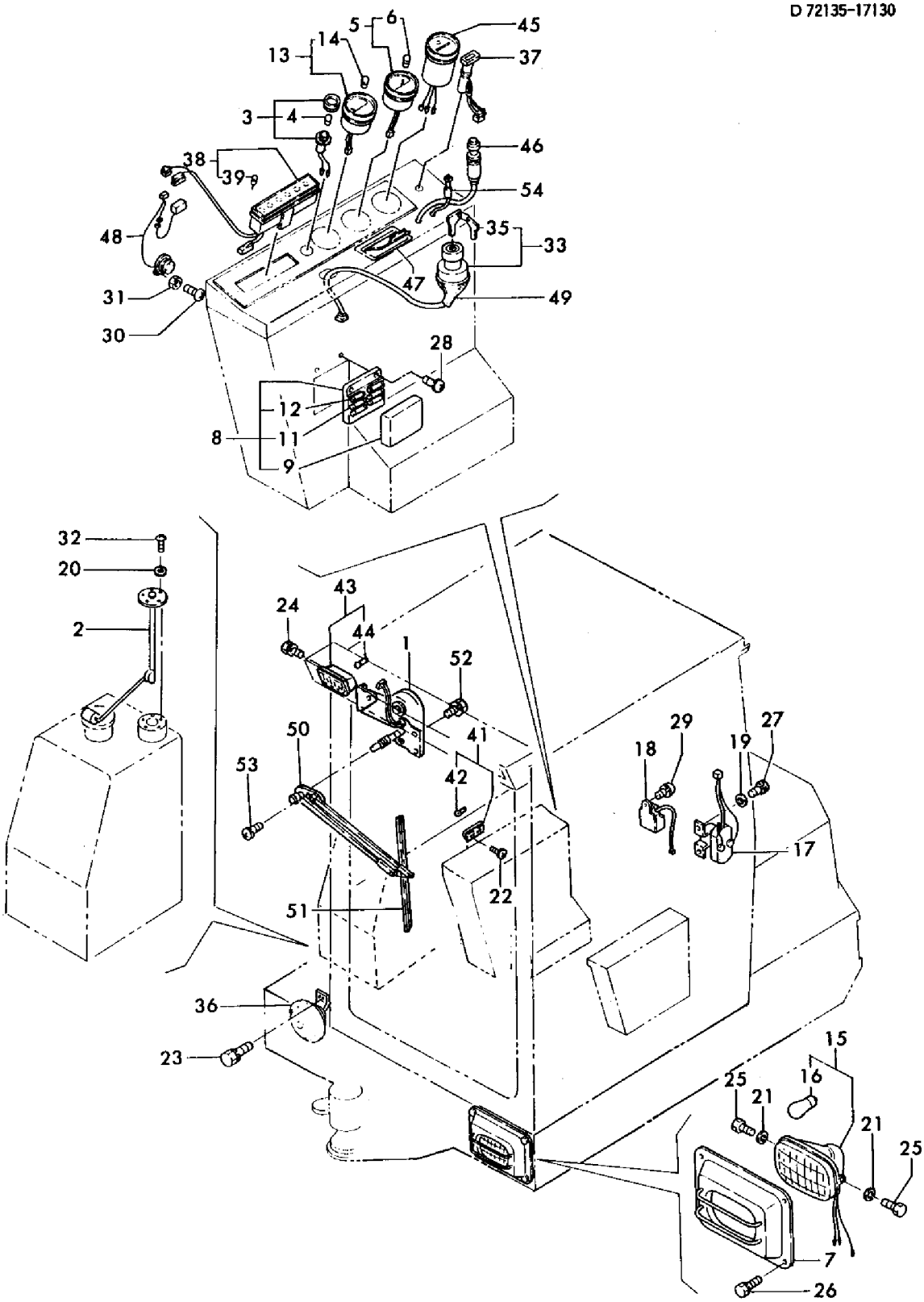

https://truckmanualshub.com/

```
1,1,,172511-17210,,"LAMP, GLOW",,,,1,,,,,,,,,,,,,
2,2,,172734-17430,,"BULB 12V 13.4W",,,,1,,,,,,,,,,,,,
3,1,,172116-17250,,"COVER, HEAD LIGHT",,,,1,,,,,,,,,,,,,
4,1,,172734-17300,,"FUSE BOX",,,,1,,,,,,,,,,,,,
5,2,,172734-17310,,COVER,,,,1,,,,,,,,,,,,,
7,2,,194145-52830,,"FUSE 10A",,,,5,,,,,,,,,,,,,
7-1,2,,29411-100000,,"FUSE (10A),CARTRIDGE",,,,5,,,R,,,,,,,,,*1987.03,,
8,2,,194145-52840,,"FUSE 15A",,,,3,,,,,,,,,,,,,
8-1,2,,29411-150000,,"FUSE (15A),CARTRIDGE",,,,3,,,R,,,,,,,,,*1987.03,,
9,1,,172116-17361,,"METER, FUEL LEVEL",,,,1,,,,,,,,,,,,,
10,2,,933113-10110,,"BULB 12V 3.4W",,,,1,,,,,,,,,,,,,
11,1,,172730-53610,,"LAMP, HEAD",,,,1,,,,,,,,,,,,,
12,2,,194262-53080,,"BULB 12V-25W",,,,1,,,,,,,,,,,,,
13,1,,171051-77100,,"RELAY, SAFETY",,,,1,,,,,,,,,,,,,
14,1,,124970-77920,,"TIMER, GLOW PLUG",,,,1,,,,,,,,,,,,,
15,1,,22137-060000,,"WASHER 6, POLISHED",,,,2,,,,,,,,,,,,,
16,1,,22217-100000,,"SPRING WASHER 10",,,,2,,,,,,,,,,,,,
17,1,,26013-060122,,"BOLT M 6X 12",,,,2,,,,,,,,,,,,,
18,1,,26013-100162,,"BOLT M10X 16",,,,2,,,,,,,,,,,,,
19,1,,26013-100202,,"BOLT W/WASHER M10X20",,,,4,,,,,,,,,,,,,
20,1,,26022-060122,,"SCREW M 6X 12",,,,2,,,,,,,,,,,,,
21,1,,26022-060162,,"SCREW M 6X 16",,,,2,,,,,,,,,,,,,
22,1,,26022-060202,,"SCREW M 6X 20",,,,1,,,,,,,,,,,,,
23,1,,26033-030122,,"SCREW M 3X12",,,,2,,,,,,,,,,,,,
24,1,,26347-030002,,"U-NUT M 3",,,,2,,,,,,,,,,,,,
25,1,,933110-00100,,"SWITCH ASSY, STARTER",,,,1,,,,,,,,,,,,,
27,2,,933110-00301,,"KEY ASSY",,,,1,,,,,,,,,,,,,
28,1,,933110-05300,,HORN,,,,1,,,,,,,,,,,,,
29,1,,933113-03000,,"SWITCH, LIGHTING",,,,1,,,,,,,,,,,,,
30,1,,933113-05000,,"BOX ASSY, PILOT",,,,1,,,,,,,,,,,,,
30-1,1,,933113-05001,,"BOX ASSY, PILOT",,,,1,,,N,,,,,,,,,*1987.01,,
31,2,,933113-05120,,"BULB 12V 1.7W",,,,5,,,,,,,,,,,,,
33,1,,933113-10100,,"METER, TEMPERATURE",,,,1,,,,,,,,,,,,,
33-1,1,,172734-17220,,"THERMOMETER ASSY",,,,1,,,N,,,,,,,,,M00559,,
34,2,,933113-10110,,"BULB 12V 3.4W",,,,1,,,,,,,,,,,,,
35,1,,933113-10300,,"HOURMETER ASSY.",,,,1,,,,,,,,,,,,,
36,1,,933113-15400,,CONTROLLER,,,,1,,,,,,,,,,,,,
36-1,1,,933113-15401,,CONTROLLER,,,,1,,,S,1,,,,,,,,M00531,,
37,1,,933113-15900,,"COVER, SWITCH TERMI.",,,,1,,,,,,,,,,,,,
38,1,,172122-17100,,"GAUGE UNIT, FUEL",,,,1,,,,,,,,,,,,,
39,1,,22190-050000,,"SEAL WASHER  5(BOLT)",,,,5,,,,,,,,,,,,,
40,1,,26557-050122,,"SCREW M 5X 12",,,,5,,,,,,,,,,,,,
```

https://truckmanualshub.com/

Fig. 17 デンキキキ (キャノピ) ELECTRIC PARTS (CANOPY)

D 72122-17110

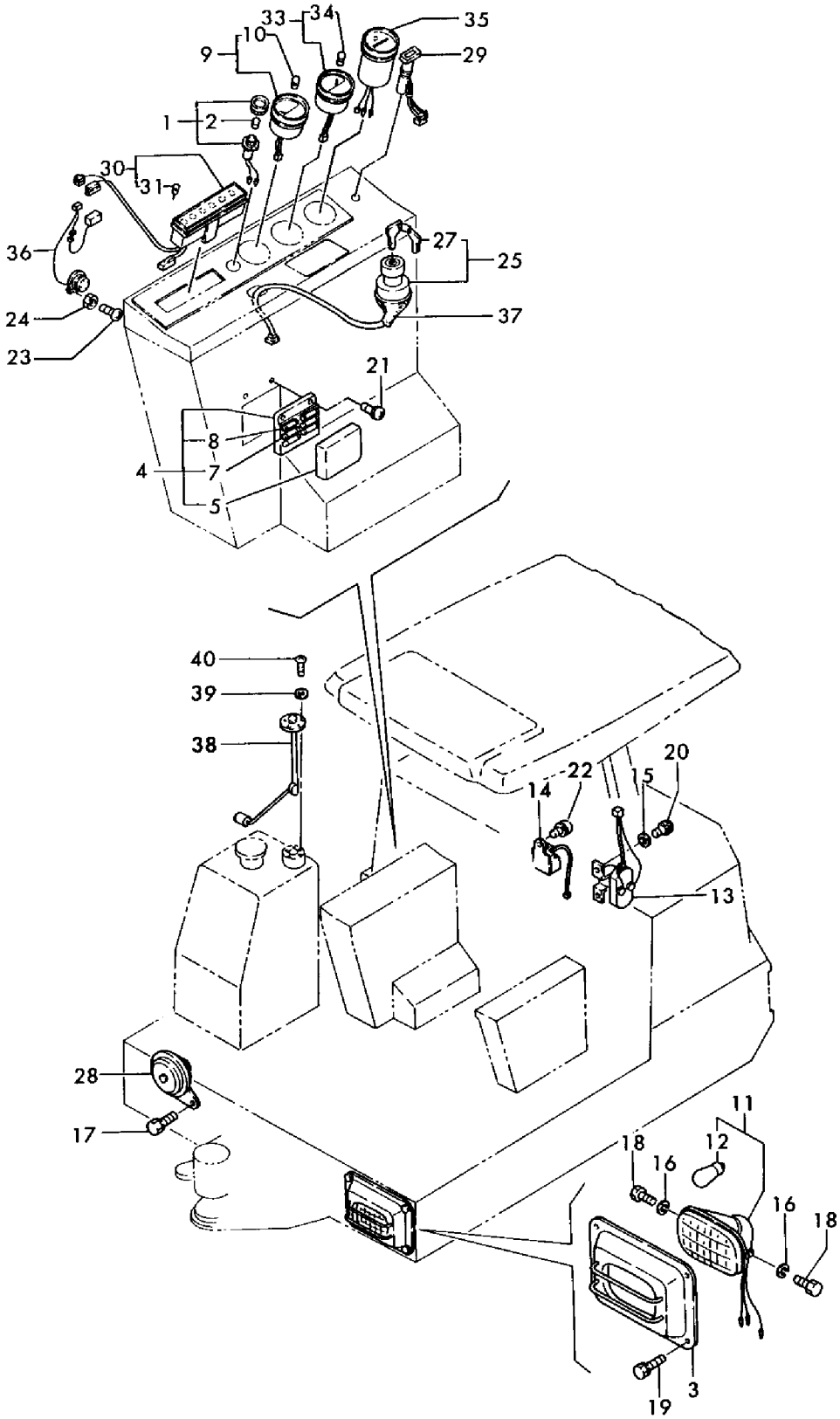

https://truckmanualshub.com/

```
1,1,,172122-29110,,SPROCKET,2,,,2,,,,,,,,,,,,,
2,1,,26013-120352,,"BOLT M12X 35",18,,,18,,,,,,,,,,,,,
3,1,,172113-36000,,"ROLLER ASSY, TRUCK",10,,,10,,,,,,,,,,,,,
3-1,1,,772113-37300,,"ROLLER ASSY, TRUCK",10,,,10,,,S,,,M00562,,,,,,M00562,,
5,2,,22252-000620,,"CIRCLIP 62(H)",20,,,20,,,,,,,,,,,,,
6,2,,24101-062064,,"BALL BEARING",20,,,20,,,,,,,,,,,,,
6-1,2,,933111-73800,,BEARING,20,,,20,,,N,,,M00562,,,,,,M00562,,
7,2,,933168-13850,,"SPACER, ROLLER",20,,,20,,,Z,,,M00562,,,,,,M00562,,
8,2,,933171-13801,,"SHAFT, ROLLER",10,,,10,,,,,,,,,,,,,
8-1,2,,933171-13802,,"SHAFT, ROLLER",10,,,10,,,S,,,M00562,,,,,,M00562,,
9,2,,933171-13811,,"COVER (A), SEAL",10,,,10,,,,,,,,,,,,,
10,2,,933171-13820,,"SEAL WSF30X62X20",20,,,20,,,,,,,,,,,,,
11,2,,933171-13830,,"SPACER, TRACK ROLLER",20,,,20,,,Z,,,M00562,,,,,,M00562,,
12,2,,933171-13960,,"COVER (B), SEAL",10,,,10,,,,,,,,,,,,,
13,1,,772116-37500,,"ROLLER ASSY, CARIA",2,,,2,,,,,,,,,,,,,
13-1,1,,772116-37501,,"ROLLER ASSY, CARIA",2,,,2,,,R,,,*1993.01,,,,,,*1993.01,,
13-2,1,,772116-37502,,"ROLLER ASSY, CARIA",2,,,2,,,N,,,*1993.06,,,,,,*1993.06,,
14,2,,172614-21820,,COLLER,2,,,2,,,Z,,,*1993.06,,,,,,*1993.06,,
15,2,,172614-23190,,"COLLER 25X34X2",2,,,2,,,Z,,,*1993.01,,,,,,*1993.01,,
17,2,,172116-37520,,"SHAFT, UPPER ROLLER",2,,,2,,,,,,,,,,,,,
17-1,2,,172146-37510,,"SHAFT, CARIA ROLLER",2,,,2,,,N,,,*1993.06,,,,,,*1993.06,,
18,2,,172116-37540,,"COVER, BLIND",2,,,2,,,,,,,,,,,,,
19,2,,22242-000250,,"CIRCLIP 25S",2,,,2,,,Z,,,*1993.06,,,,,,*1993.06,,
20,2,,22252-000520,,"CIRCLIP   52",4,,,4,,,,,,,,,,,,,
21,2,,24101-062054,,"BEARING #6205",4,,,4,,,,,,,,,,,,,
22,2,,24311-000460,,"O-RING 1A P-46.0",2,,,2,,,,,,,,,,,,,
23,2,,933171-13691,,"PLUG PT1/8",2,,,2,,,Z,,,*1993.01,,,,,,*1993.01,,
24,2,,933172-13990,,"SEAL S255218,WATER",2,,,2,,,,,,,,,,,,,
24-1,2,,1E6140-73420,,"SEAL QLF255218, OIL",2,,,2,,,S,,,*1993.01,,,,,,*1993.01,,
25,2,,22451-160170,,"WIRE 1.6X170",2,,,2,,,,,,,,,,,,,
26,2,,933110-21600,,"BOLT M 8X 18",2,,,2,,,,,,,,,,,,,
```

発行No. 000Y00K2042-1
更新年月 : 1994. 8.
REVISED :Aug., 1994

https://truckmanualshub.com/

Fig. 18 トラックローラ & キャリヤローラ / TRACK ROLLER & CARRIER ROLLER

D 17122-29100
D 72113-37300
D 72116-37500

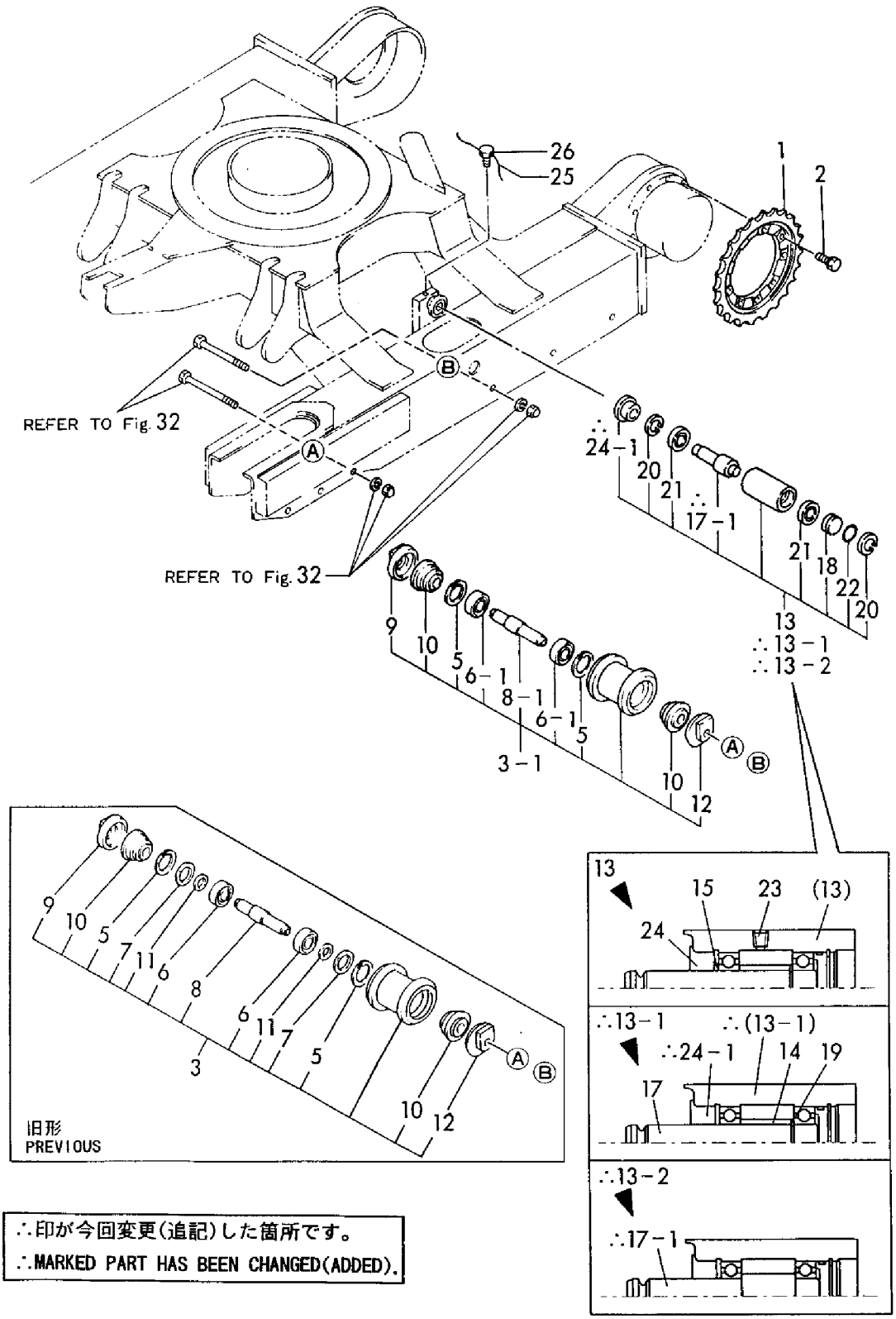

∴印が今回変更(追記)した箇所です。
∴MARKED PART HAS BEEN CHANGED(ADDED).

https://truckmanualshub.com/

```
1,1,,772631-37100,,"IDLER ASSY",2,,,2,,,,,,,,,,,,,
3,2,,172631-37150,,"COLLER 35X45X34",2,,,2,,,,,,,,,,,,,
4,2,,172631-37160,,"COLLER 35X45X22.5",4,,,4,,,,,,,,,,,,,
5,2,,172631-37170,,"SEAL 45 80 18, WATER",4,,,4,,,,,,,,,,,,,
6,2,,172631-37180,,"SHAFT, IDLER",2,,,2,,,,,,,,,,,,,
7,2,,172631-37200,,"COVER (A)",2,,,2,,,,,,,,,,,,,
8,2,,172631-37210,,"COVER (B)",2,,,2,,,,,,,,,,,,,
9,2,,22242-000300,,"CIRCLIP   30",2,,,2,,,,,,,,,,,,,
10,2,,22242-000350,,"CIRCLIP   35",2,,,2,,,,,,,,,,,,,
11,2,,24101-063074,,BEARING,4,,,4,,,,,,,,,,,,,
12,2,,933171-13691,,"PLUG PT1/8",2,,,2,,,,,,,,,,,,,
13,1,,172122-37710,,"HOLDER, ADJUSTER",2,,,2,,,,,,,,,,,,,
14,1,,172631-37710,,"SPRING, ADJUSTING",2,,,2,,,,,,,,,,,,,
15,1,,172122-37751,,"ADJUST CYLINDER",2,,,2,,,,,,,,,,,,,
16,2,,172122-37810,,PISTON,2,,,2,,,,,,,,,,,,,
17,2,,172122-37820,,"ADJUST SEAL SET",2,,,2,,,,,,,,,,,,,
18,3,,172122-37830,,"RING, BUCK UP",2,,,2,,,,,,,,,,,,,
19,3,,24325-000400,,"O-RING 1B G 40",2,,,2,,,,,,,,,,,,,
20,3,,933111-23600,,"SEAL 4052710",2,,,2,,,,,,,,,,,,,
21,1,,172122-37841,,"VALVE ASSY, NIPPLE",2,,,2,,,,,,,,,,,,,
21-1,1,,172122-37842,,"VALVE ASSY, NIPPLE",2,,,2,,,N,,,M00503,,,,,,M00503,,
26,2,,24315-000140,,"O-RING 1B P-14.0",2,,,2,,,,,,,,,,,,,
26-1,2,,24315-000120,,"O-RING 1B P-12.0",2,,,2,,,N,,,*1989.10,,,,,,*1989.10,,
27,2,,24761-020000,,"NIPPLE PT1/8,GREASE",2,,,2,,,,,,,,,,,,,
28,1,,26013-120402,,"BOLT M12X 40",8,,,8,,,,,,,,,,,,,
```

https://truckmanualshub.com/

Fig. 19 アイドラ & クローラアジャスト IDLER & CRAWLER ADJUSTER

D 72631-37100
D 72122-37700

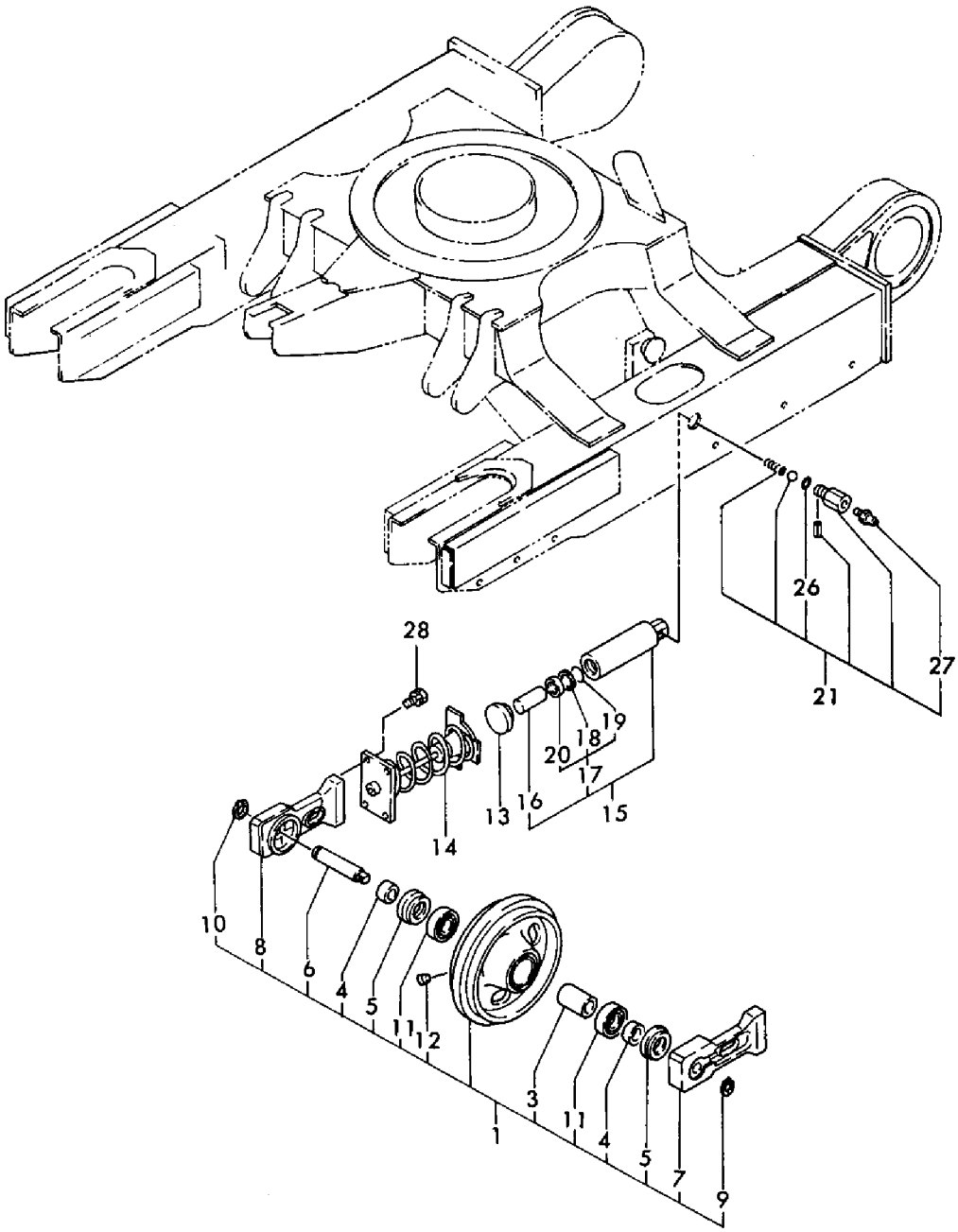

https://truckmanualshub.com/

```
1,1,,772130-38100,,"CRAWLER ASSY, 350",2,,,2,,,,,,,,,,,,,
2,2,,172130-38100,,"TRACK SHOE 350A",2,,,2,,,,,,,,,,,,,
3,3,,172130-38110,,"LINK (R)ASSY, TRACK",2,,,2,,,,,,,,,,,,,,
4,3,,172130-38240,,"SHOE PLATE 350",46,,,46,,,,,,,,,,,,,
5,2,,172130-38200,,"CRAWLER ASSY",2,,,2,,,,,,,,,,,,,
6,3,,172122-38150,,"LINK(R), TRACK",2,,,2,,,,,,,,,,,,,
7,3,,172130-38240,,"SHOE PLATE 350",40,,,40,,,,,,,,,,,,,
8,2,,172614-38290,,"PIN, MASTER",4,,,4,,,,,,,,,,,,,
9,2,,172614-38300,,"PIN 5X45, LOCK",4,,,4,,,,,,,,,,,,,
10,1,,172130-38300,,"TRACK 350(L), MASTER",1,,,1,,,,,,,,,,,,,
11,1,,172130-38310,,"TRACK 350(R), MASTER",1,,,1,,,,,,,,,,,,,
```

https://truckmanualshub.com/

Fig. 20 トラックシュー（キュウガタ） CRAWLER (PREVIOS TYPE)

D 72130-38100

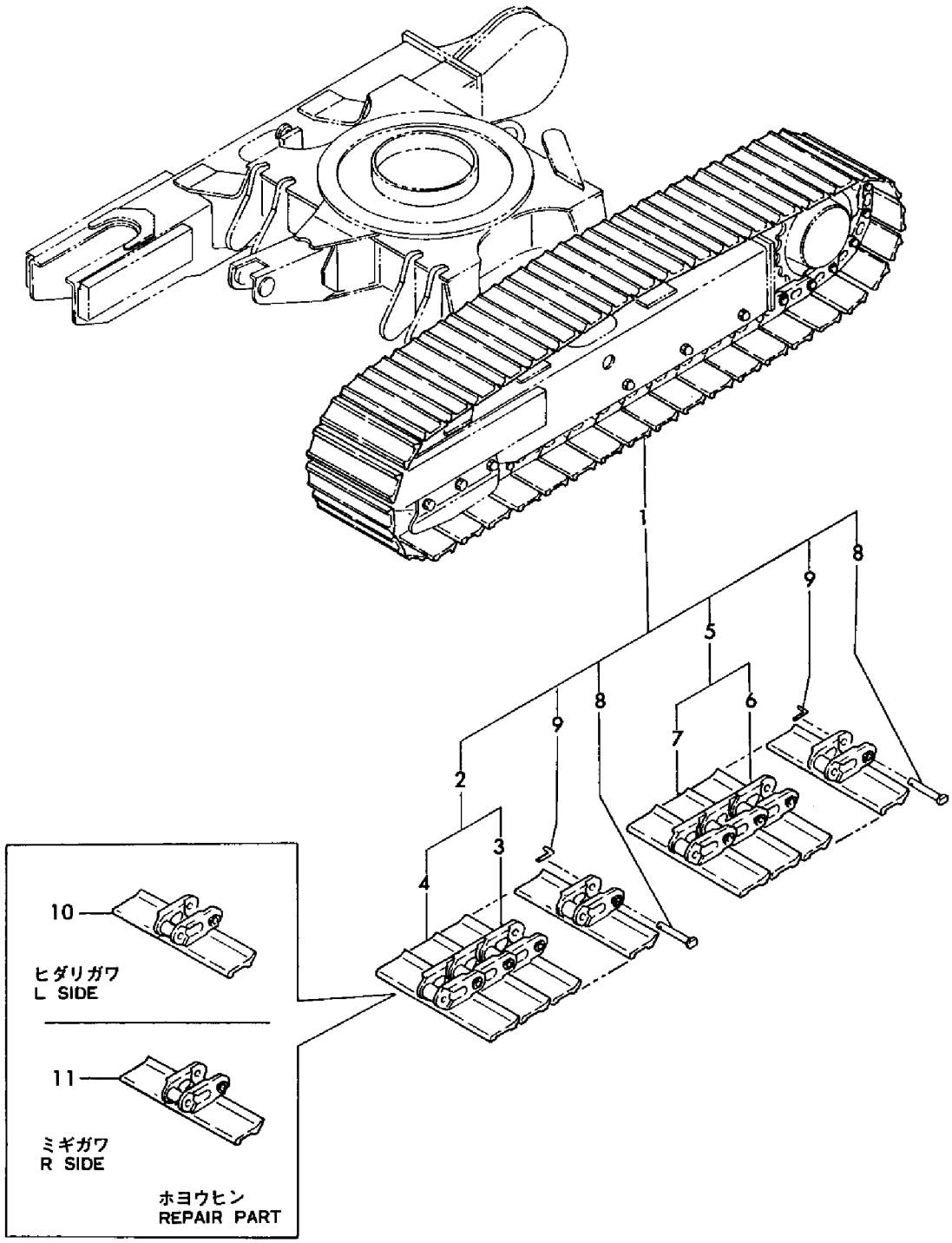

https://truckmanualshub.com/

```
1,1,,772130-38101,,"SHOE(R)ASSY,TRACK370",1,,,1,,,,,,,,,,,,,
2,2,,172130-38101,,"SHOE(R), TRACK 370A",1,,,1,,,,,,,,,,,,,
3,3,,172130-38110,,"LINK (R)ASSY, TRACK",1,,,1,,,,,,,,,,,,,
4,4,,172113-38180,,BUSH,23,,,23,,,,,,,,,,,,,
5,4,,172614-38210,,"PIN, TRACK",22,,,22,,,,,,,,,,,,,
6,3,,172071-61021,,"PLATE, SHOE 370",23,,,23,,,,,,,,,,,,,
7,2,,172130-38201,,"SHOE (R)ASSY, 370B",1,,,1,,,,,,,,,,,,,
8,3,,172122-38150,,"LINK(R), TRACK",1,,,1,,,,,,,,,,,,,
9,4,,172113-38180,,BUSH,20,,,20,,,,,,,,,,,,,
10,4,,172614-38210,,"PIN, TRACK",19,,,19,,,,,,,,,,,,,
11,3,,172071-61021,,"PLATE, SHOE 370",20,,,20,,,,,,,,,,,,,
12,3,,172614-38290,,"PIN, MASTER",2,,,2,,,,,,,,,,,,,
13,2,,172614-38300,,"PIN 5X45, LOCK",2,,,2,,,,,,,,,,,,,
14,1,,172122-38731,,"TRACK 370G(R),MASTER",1,,,1,,,,,,,,,,,,,
15,1,,772130-38110,,"SHOE(L)ASSY,TRACK370",1,,,1,,,,,,,,,,,,,
16,2,,172130-38131,,"SHOE(L), TRACK 370A",1,,,1,,,,,,,,,,,,,
17,3,,172130-38120,,"LINK (L), TRACK",1,,,1,,,,,,,,,,,,,
18,4,,172113-38180,,BUSH,23,,,23,,,,,,,,,,,,,
19,4,,172614-38210,,"PIN, TRACK",22,,,22,,,,,,,,,,,,,
20,3,,172071-61021,,"PLATE, SHOE 370",23,,,23,,,,,,,,,,,,,
21,2,,172130-38211,,"SHOE (L)ASSY, 370B",1,,,1,,,,,,,,,,,,,
22,3,,172122-38220,,"LINK(L), TRACK",1,,,1,,,,,,,,,,,,,
23,4,,172113-38180,,BUSH,20,,,20,,,,,,,,,,,,,
24,4,,172614-38210,,"PIN, TRACK",19,,,19,,,,,,,,,,,,,
25,3,,172071-61021,,"PLATE, SHOE 370",20,,,20,,,,,,,,,,,,,
26,2,,172614-38290,,"PIN, MASTER",2,,,2,,,,,,,,,,,,,
27,2,,172614-38300,,"PIN 5X45, LOCK",2,,,2,,,,,,,,,,,,,
28,1,,172122-38741,,"TRACK 370G(L),MASTER",1,,,1,,,,,,,,,,,,,
```

https://truckmanualshub.com/

Fig. 21 トラックシュー(370)(シンガタ) CRAWLER (370) (NEW TYPE)

(D 72122-38101)
D 72130-38101
D 72130-38110
(D 72122-38120)

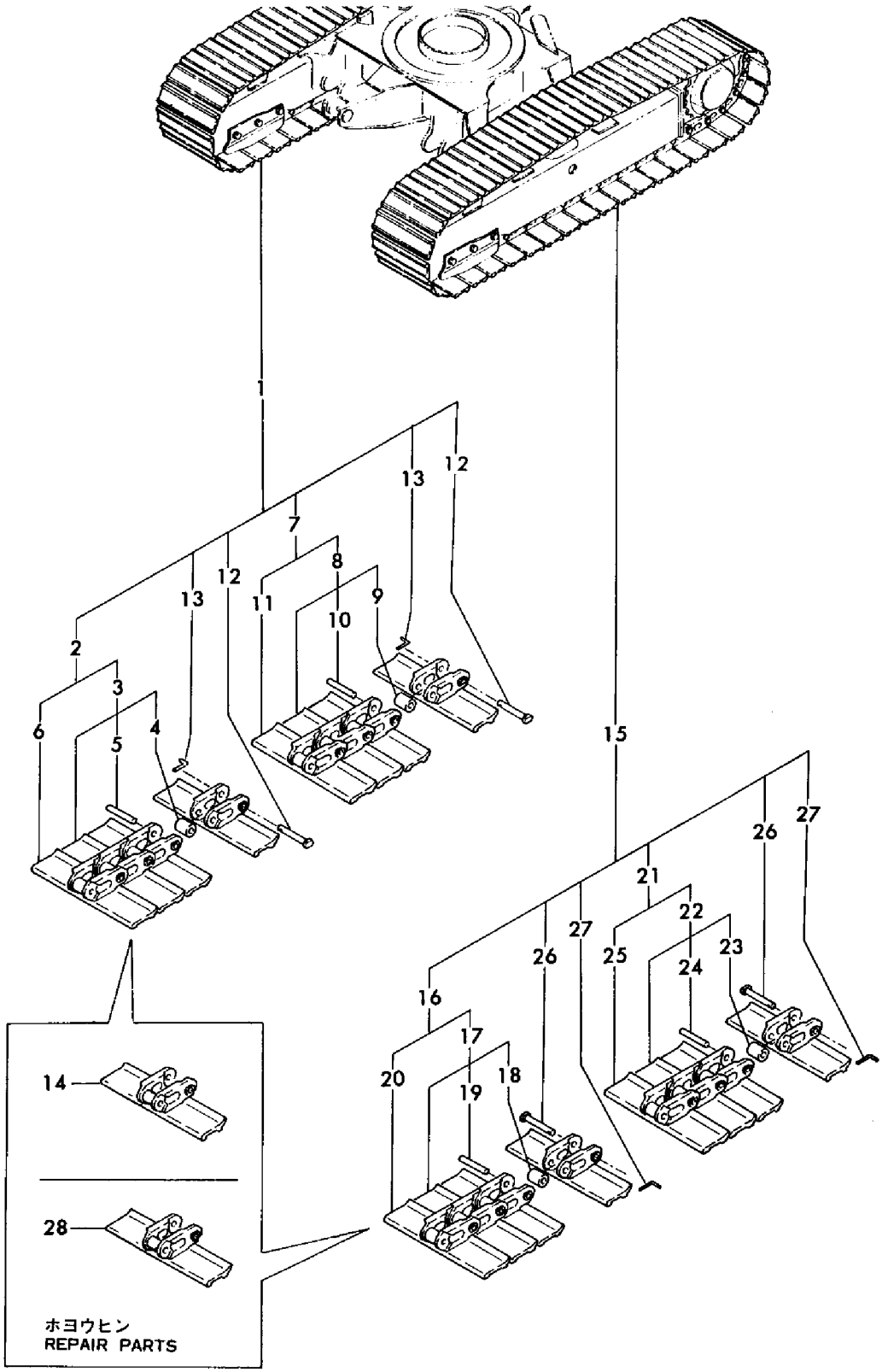

https://truckmanualshub.com/

```
1,1,,194264-24190,,"PLUG, SCREW",2,,,2,,,Z,,,X,,,,,,X,,
2,1,,172124-45600,,"STAND, LEVER (L)",1,,,1,,,,,,,,,,,,,
3,2,,933171-23680,,"BUSH 14X15",2,,,2,,,,,,,,,,,,,
4,1,,172124-45620,,"STAND, LEVER (R)",1,,,1,,,,,,,,,,,,,
5,2,,933171-23680,,"BUSH 14X15",2,,,2,,,,,,,,,,,,,
6,1,,172122-45871,,"PLATE, LINK",1,,,1,,,,,,,,,,,,,
6-1,1,,172122-45872,,"PLATE, LINK",1,,,1,,,S,,,M20501,,,,,,M20501,,
7,1,,172122-46160,,"COVER, UNDER",1,,,1,,,,,,,,,,,,,
8,1,,172112-69790,,"PLUG 32X2",1,,,1,,,,,,,,,,,,,
9,1,,26013-100162,,"BOLT M10X 16",4,,,4,,,,,,,,,,,,,
10,1,,26013-100202,,"BOLT W/WASHER M10X20",5,,,5,,,,,,,,,,,,,
11,1,,26013-100202,,"BOLT W/WASHER M10X20",4,,,4,,,,,,,,,,,,,
12,1,,26116-100402,,"BOLT M10X 40 PLATED",1,,,1,,,,,,,,,,,,,
13,1,,26716-100002,,"NUT M10",1,,,1,,,,,,,,,,,,,
14,1,,26756-100002,,"LOCK NUT M10 PLATED",1,,,1,,,,,,,,,,,,,
15,1,,933168-56000,,"GROMMET 17X19",1,,,1,,,Z,,,X,,,,,,,
16,1,,194990-22120,,"NUT W/WASHER  5",4,,,4,,,,,,,,,,,,,
17,1,,26757-050002,,"LOCK NUT M 5 PLATED",1,,,1,,,,,,,,,,,,,
17-1,1,,194990-22120,,"NUT W/WASHER  5",4,,,4,,,R,,,*1986.04,,,,,,*1986.04,,
18,1,,172122-45980,,"STAY, STOPPER",2,,,2,,,,,,,,,,,,,
19,1,,26979-050202,,"SCREW M 5X 20",4,,,4,,,,,,,,,,,,,
20,1,,26979-050202,,"SCREW M 5X 20",4,,,4,,,,,,,,,,,,,
```

https://truckmanualshub.com/

Fig. 22 リンクダイ LINK STAND

D 72122-45400

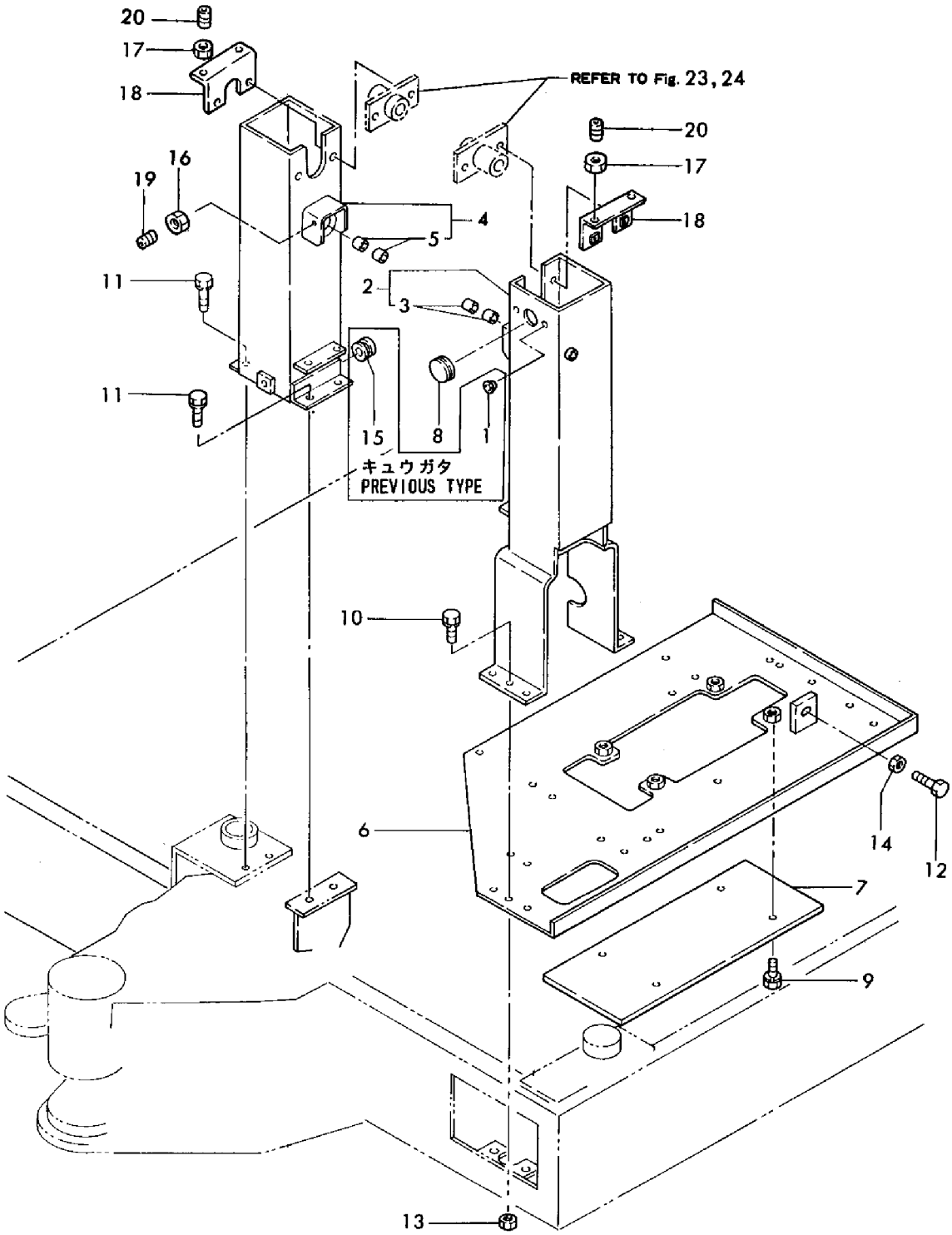

https://truckmanualshub.com/

```
1,1,,172122-45101,,LEVER,2,,,2,,,,,,,,,,,,,
2,1,,172122-45201,,"RUBBER BOOT, LEVER",2,,,2,,,,,,,,,,,,,
3,1,,172122-45210,,"BAND, BOOT",2,,,2,,,,,,,,,,,,,
4,1,,172122-45850,,"GRIP (A), LEVER",1,,,1,,,,,,,,,,,,,
4-1,1,,172122-45851,,"KNOB (A), CONTROL",1,,,1,,,N,,,*1985.10,,,,,,*1985.10,,
5,1,,172122-45860,,"LEAD WIRE(B),HORN",1,,,1,,,,,,,,,,,,,
6,1,,172116-45911,,"KNOB (B), CONTROL",1,,,1,,,,,,,,,,,,,
6-1,1,,172116-45912,,"KNOB (B), CONTROL",1,,,1,,,N,,,*1985.10,,,,,,*1985.10,,
7,1,,172116-45920,,"KNOB (L), LEVER",1,,,1,,,,,,,,,,,,,
8,1,,172116-45930,,"KNOB (R), LEVER",1,,,1,,,,,,,,,,,,,
9,1,,172122-46600,,"LEVER(R), DRIVING",1,,,1,,,,,,,,,,,,,
10,1,,172122-46880,,"LEVER(L), DRIVING",1,,,1,,,,,,,,,,,,,
11,1,,22217-160000,,"SPRING WASHER 16",2,,,2,,,,,,,,,,,,,
12,1,,26557-050122,,"SCREW M 5X 12",2,,,2,,,,,,,,,,,,,
13,1,,26757-050002,,"LOCK NUT M 5 PLATED",2,,,2,,,,,,,,,,,,,
14,1,,26757-100002,,"LOCK NUT M10 PLATED",2,,,2,,,,,,,,,,,,,
15,1,,26757-100002,,"LOCK NUT M10 PLATED",2,,,2,,,,,,,,,,,,,
16,1,,26777-160002,,"LOCK NUT M16",2,,,2,,,,,,,,,,,,,
17,1,,172614-45170,,"SPRING 12",2,,,2,,,,,,,,,,,,,
18,1,,172122-46180,,"LEVER, LOCK",2,,,2,,,,,,,,,,,,,
19,1,,172122-46210,,"ARM, LOCK",2,,,2,,,,,,,,,,,,,
20,1,,172116-46630,,"KNOB, LOCK LEVER",2,,,2,,,,,,,,,,,,,
21,1,,22351-040036,,"SPRING PIN 4X36",2,,,2,,,,,,,,,,,,,
22,1,,172122-45540,,"BOSS W/BUSH, LINK",2,,,2,,,,,,,,,,,,,
24,2,,172116-46960,,"BUSH 20X15",4,,,4,,,,,,,,,,,,,
25,1,,172122-45591,,"LINK (L) W/BUSH",1,,,1,,,,,,,,,,,,,
27,2,,933171-23680,,"BUSH 14X15",2,,,2,,,,,,,,,,,,,
28,1,,172122-45611,,"LINK (R) W/BUSH",1,,,1,,,,,,,,,,,,,
30,2,,933171-23680,,"BUSH 14X15",2,,,2,,,,,,,,,,,,,
31,1,,172122-45640,,"LINK, WORK",2,,,2,,,,,,,,,,,,,
32,1,,172122-45701,,"ARM, DRIVING LINK",2,,,2,,,,,,,,,,,,,
33,1,,172122-45770,,"SHAFT, LINK",2,,,2,,,,,,,,,,,,,
34,1,,22242-000200,,"CIRCLIP   20",2,,,2,,,,,,,,,,,,,
35,1,,22417-400400,,"COTTER PIN 4.0X40",2,,,2,,,,,,,,,,,,,
36,1,,26013-100202,,"BOLT W/WASHER M10X20",4,,,4,,,,,,,,,,,,,
37,1,,26757-050002,,"LOCK NUT M 5 PLATED",4,,,4,,,,,,,,,,,,,
37-1,1,,194990-22120,,"NUT W/WASHER  5",4,,,4,,,R,,,X,,,,,,X,,
38,1,,26757-050002,,"LOCK NUT M 5 PLATED",2,,,2,,,,,,,,,,,,,
38-1,1,,194990-22120,,"NUT W/WASHER  5",2,,,2,,,R,,,X,,,,,,X,,
39,1,,26979-050202,,"SCREW M 5X 20",4,,,4,,,,,,,,,,,,,
40,1,,26979-050202,,"SCREW M 5X 20",2,,,2,,,,,,,,,,,,,
41,1,,172122-45790,,SHIM,4,,,4,,,,,,,,,,,,,
42,1,,933168-55770,,"BAND 146",2,,,2,,,,,,,,,,,,,
```

https://truckmanualshub.com/

Fig. 23 ソウジュウソウチ(レバー)(キュウガタ) CONTROL EQUIPMENT (LEVER) (PREVIOS TYPE)

D 72122-45100
D 72122-45200
D 72123-45200
D 72122-45500
D 72122-45520

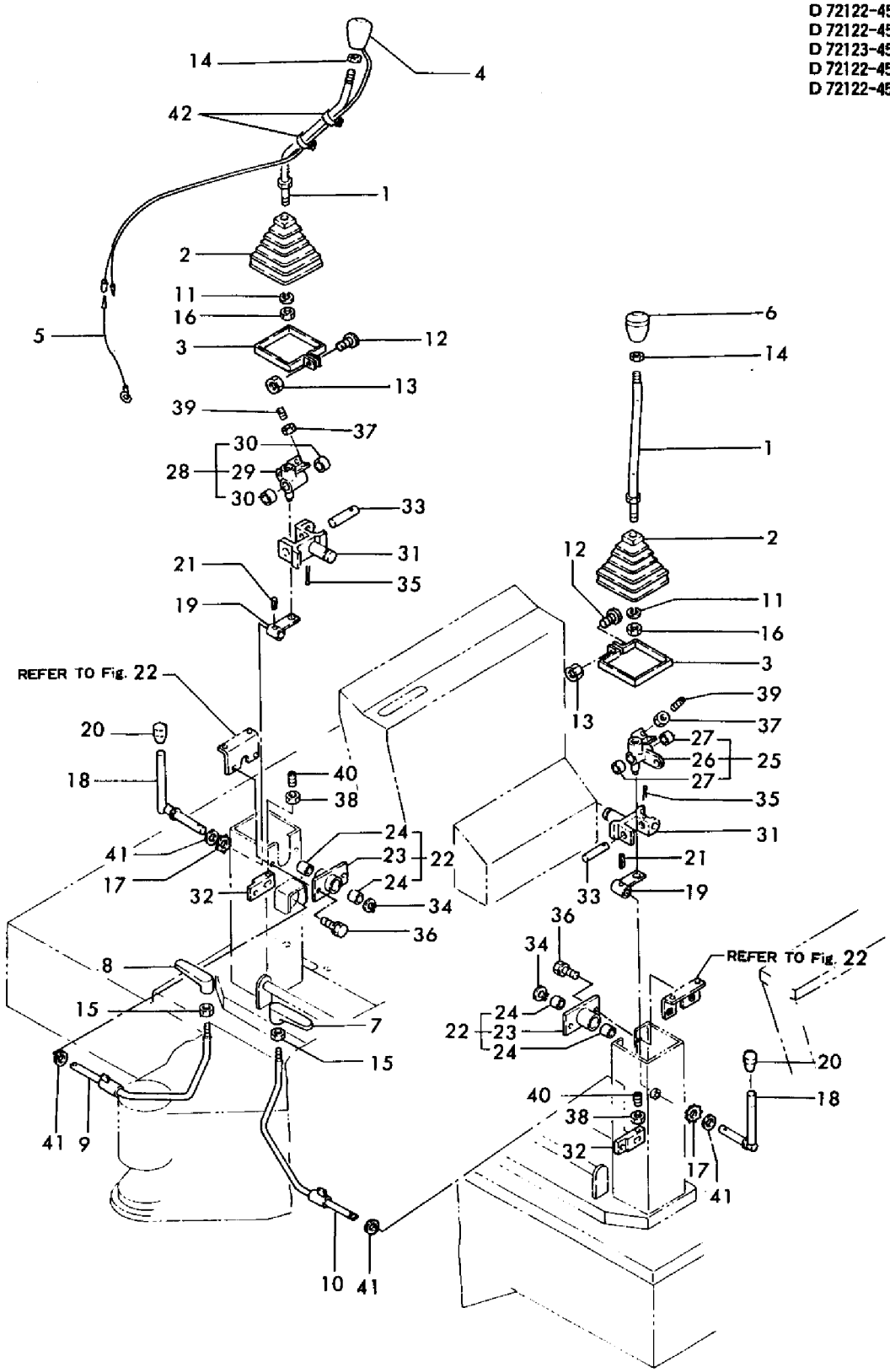

https://truckmanualshub.com/

```
1,1,,172122-45050,,"KNOB (L)",1,,,1,,,,,,,,,,,,,
2,1,,172122-45101,,LEVER,2,,,2,,,,,,,,,,,,,
3,1,,172122-45201,,"RUBBER BOOT, LEVER",2,,,2,,,,,,,,,,,,,
3-1,1,,172122-45202,,"BOOT, LEVER",2,,,2,,,N,,,M00609,,,,,,M00609,,
4,1,,172122-45060,,"KNOB (R)",1,,,1,,,,,,,,,,,,,
5,1,,172122-45860,,"LEAD WIRE(B),HORN",1,,,1,,,,,,,,,,,,,
6,1,,172312-46301,,KNOB(A),1,,,1,,,,,,,,,,,,,
7,1,,172312-46321,,KNOB(B),1,,,1,,,,,,,,,,,,,
8,1,,172122-46600,,"LEVER(R), DRIVING",1,,,1,,,,,,,,,,,,,
9,1,,172122-46880,,"LEVER(L), DRIVING",1,,,1,,,,,,,,,,,,,
10,1,,22217-160000,,"SPRING WASHER 16",2,,,2,,,,,,,,,,,,,
11,1,,172122-45330,,"O-RING 17",2,,,2,,,,,,,,,,,,,
12,1,,194630-25250,,"LINER 17X30X1",2,,,2,,,,,,,,,,,,,
13-1,1,,26757-100002,,"LOCK NUT M10 PLATED",2,,,2,,,,1,,,,,,,,,
14-1,1,,26757-100002,,"LOCK NUT M10 PLATED",2,,,2,,,,1,,,,,,,,,
15,1,,26776-160002,,"LOCK NUT M16 PLATED",2,,,2,,,,,,,,,,,,,
16,1,,172122-45541,,"BOSS W/BUSH, LINK",2,,,2,,,,,,,,,,,,,
17,2,,24162-172312,,"NEEDLE BEARING",4,,,4,,,,,,,,,,,,,
18,1,,172122-45592,,"LINK (L) W/BUSH",1,,,1,,,,,,,,,,,,,
19,2,,172124-46400,,"BUSH 14X15",2,,,2,,,,,,,,,,,,,
20,1,,172122-45612,,"LINK (R) W/BUSH",1,,,1,,,,,,,,,,,,,
21,2,,172124-46400,,"BUSH 14X15",2,,,2,,,,,,,,,,,,,
22,1,,172122-45641,,"LINK, WORK",2,,,2,,,,,,,,,,,,,
23,1,,172122-45701,,"ARM, DRIVING LINK",2,,,2,,,,,,,,,,,,,
24,1,,172122-45770,,"SHAFT, LINK",2,,,2,,,,,,,,,,,,,
25,1,,172122-45790,,SHIM,4,,,4,,,,,,,,,,,,,
26,1,,26979-050202,,"SCREW M 5X 20",4,,,4,,,,,,,,,,,,,
27,1,,26979-050202,,"SCREW M 5X 20",2,,,2,,,,,,,,,,,,,
28,1,,22242-000170,,"CIRCLIP   17",2,,,2,,,,,,,,,,,,,
29,1,,22417-400400,,"COTTER PIN 4.0X40",2,,,2,,,,,,,,,,,,,
30,1,,26013-100202,,"BOLT W/WASHER M10X20",4,,,4,,,,,,,,,,,,,
31,1,,194990-22120,,"NUT W/WASHER  5",4,,,4,,,,,,,,,,,,,
32,1,,194990-22120,,"NUT W/WASHER  5",2,,,2,,,,,,,,,,,,,
33,1,,172614-45170,,"SPRING 12",2,,,2,,,,,,,,,,,,,
34,1,,172122-46180,,"LEVER, LOCK",2,,,2,,,,,,,,,,,,,
35,1,,172122-46210,,"ARM, LOCK",2,,,2,,,,,,,,,,,,,
36,1,,172116-46630,,"KNOB, LOCK LEVER",2,,,2,,,,,,,,,,,,,
37,1,,22351-040036,,"SPRING PIN 4X36",2,,,2,,,,,,,,,,,,,
38,1,,933168-55770,,"BAND 146",2,,,2,,,,,,,,,,,,,
```

https://truckmanualshub.com/

Fig. 24 ソウジュウソウチ（レバー）（シンガタ） CONTROL EQUIPMENT (LEVER) (NEW TYPE)

D 72122-45100
D 72122-45201
D 72123-45201
D 72122-45500

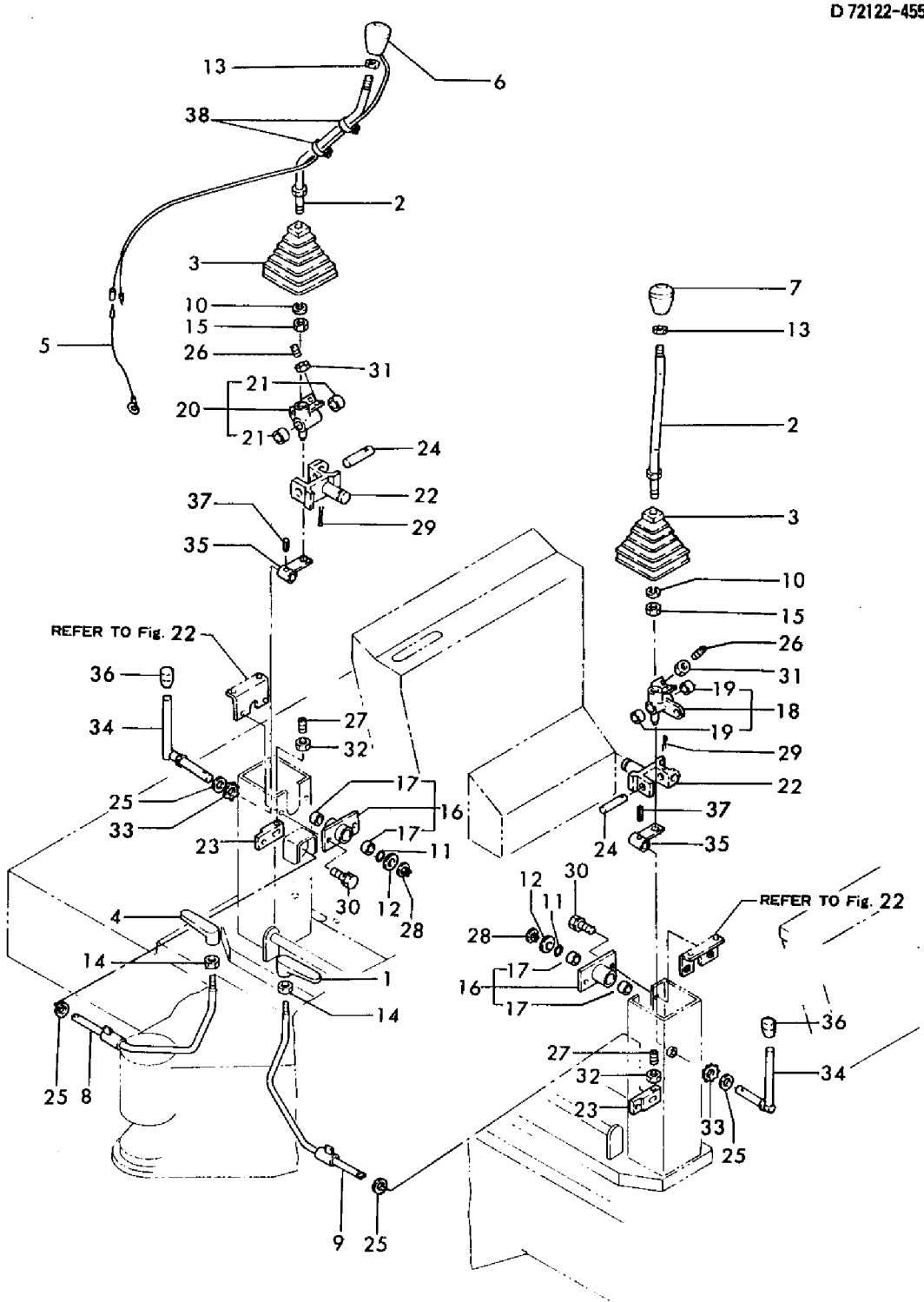

https://truckmanualshub.com/

```
1,1,,172122-45170,,"LEVER ASSY, BLADE",1,,,1,,,,,,,,,,,,,
3,2,,933171-23680,,"BUSH 14X15",2,,,2,,,,,,,,,,,,,
4,1,,172116-45940,,"KNOB (C), LEVER",1,,,1,,,,,,,,,,,,,
5,1,,172112-44180,,"PEDAL ASSY, SWING",1,,,1,,,,,,,,,,,,,
5-1,1,,172122-46690,,"PEDAL ASSY, SWING",1,,,1,,,S,,,M00559,,,,,,M00559,,
7,2,,933171-23680,,"BUSH 14X15",2,,,2,,,,,,,,,,,,,
8,1,,172122-45801,,"PEDAL,ACCELERATOR",1,,,1,,,,,,,,,,,,,
9,1,,172122-45830,,"PAD, METAL",1,,,1,,,,,,,,,,,,,
10,1,,22137-100000,,"WASHER 10,POLISHED",1,,,1,,,,,,,,,,,,,
11,1,,26347-100002,,"U-NUT M10",1,,,1,,,,,,,,,,,,,
12,1,,172122-41380,,"SHAFT, FULCRUM",2,,,2,,,,,,,,,,,,,
13,1,,172123-45201,,"LINK ASSY",1,,,1,,,,,,,,,,,,,
14,1,,172122-45670,,"BRACKET (B), LINK",1,,,1,,,,,,,,,,,,,
15,1,,172122-45680,,"FULCRUM, PEDAL",1,,,1,,,,,,,,,,,,,
16,1,,22417-400320,,"COTTER PIN 4.0X32",1,,,1,,,,,,,,,,,,,
17,1,,22417-400400,,"COTTER PIN 4.0X40",1,,,1,,,,,,,,,,,,,
18,1,,26013-100202,,"BOLT W/WASHER M10X20",2,,,2,,,,,,,,,,,,,
19,1,,22217-100000,,"SPRING WASHER 10",2,,,2,,,,,,,,,,,,,
20,1,,26112-100402,,"BOLT 10X40",1,,,1,,,,,,,,,,,,,
21,1,,26116-100504,,"BOLT M10X 50 PLATED",1,,,1,,,,,,,,,,,,,
22,1,,26716-100002,,"NUT M10",2,,,2,,,,,,,,,,,,,
```

https://truckmanualshub.com/

Fig. 25 ソウジュウソウチ(レバー & ペダル)(キュウガタ) CONTROL EQUIPMENT (LEVER & PEDAL)(PREVIOS TYPE)

D 72122-45100
D 72123-45200
D 72122-45301

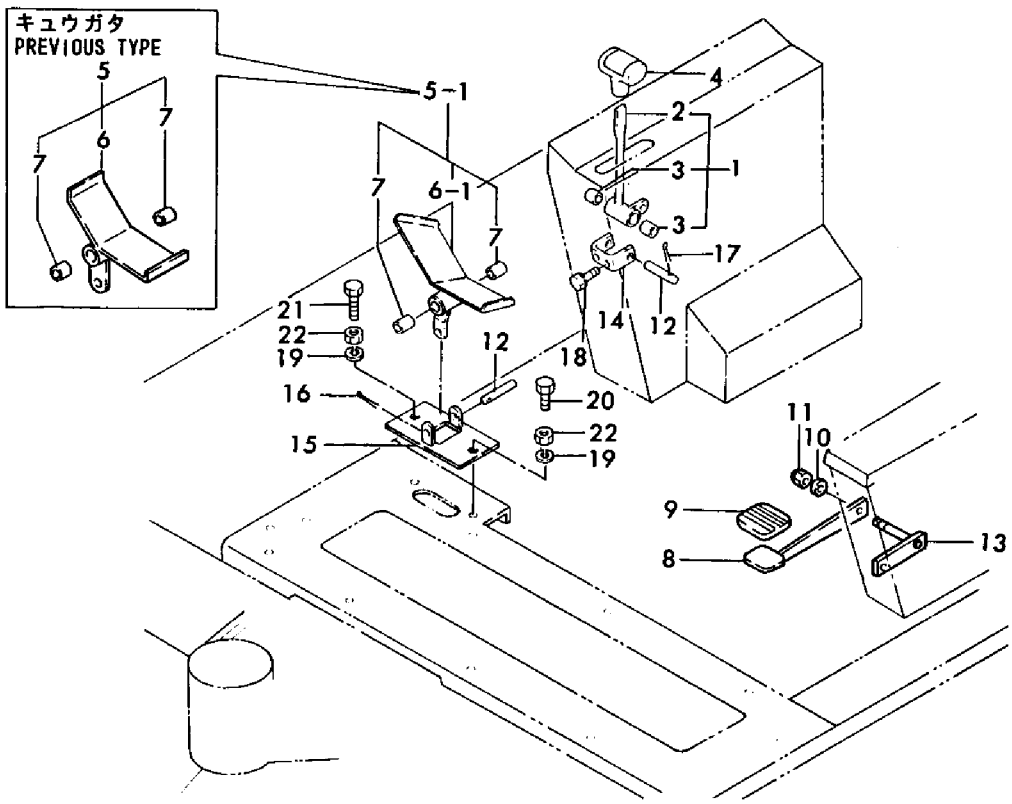

https://truckmanualshub.com/

```
1,1,,172122-45170,,"LEVER ASSY, BLADE",1,,,1,,,,,,,,,,,,,
2,2,,933171-23680,,"BUSH 14X15",2,,,2,,,,,,,,,,,,,
3,1,,172116-45940,,"KNOB (C), LEVER",1,,,1,,,,,,,,,,,,,
4,1,,172112-41380,,"SHAFT, BLADE LEVER",2,,,2,,,,,,,,,,,,,
5,1,,172122-45670,,"BRACKET (B), LINK",1,,,1,,,,,,,,,,,,,
6,1,,172122-45681,,"FULCRUM, PEDAL",1,,,1,,,,,,,,,,,,,
7,1,,22417-400400,,"COTTER PIN 4.0X40",1,,,1,,,,,,,,,,,,,
8,1,,22417-400400,,"COTTER PIN 4.0X40",1,,,1,,,,,,,,,,,,,
9,1,,26013-100202,,"BOLT W/WASHER M10X20",2,,,2,,,,,,,,,,,,,
10,1,,26116-100602,,"BOLT M10X 60 PLATED",1,,,1,,,,,,,,,,,,,
10-1,1,,26116-100604,,"BOLT M10X 60 PLATED",1,,,1,,,N,,,*1987.08,,,,,,*1987.08,,
11,1,,172122-46691,,"PEDAL ASSY, SWING",1,,,1,,,,,,,,,,,,,
12,2,,933171-23680,,"BUSH 14X15",2,,,2,,,,,,,,,,,,,
13,1,,22217-100000,,"SPRING WASHER 10",2,,,2,,,,,,,,,,,,,
14,1,,26716-100002,,"NUT M10",2,,,2,,,,,,,,,,,,,
15,1,,24311-000210,,"O-RING 1A P-21.0",2,,,2,,,,,,,,,,,,,
16,1,,26116-100354,,"BOLT M10X 35 PLATED",1,,,1,,,,,,,,,,,,,
17,1,,172122-45801,,"PEDAL,ACCELERATOR",1,,,1,,,,,,,,,,,,,
18,1,,172122-45830,,"PAD, METAL",1,,,1,,,,,,,,,,,,,
19,1,,22137-100000,,"WASHER 10,POLISHED",1,,,1,,,,,,,,,,,,,
20,1,,26347-100002,,"U-NUT M10",1,,,1,,,,,,,,,,,,,
21,1,,172123-45201,,"LINK ASSY",1,,,1,,,,,,,,,,,,,
```

https://truckmanualshub.com/

Fig. 26 ソウジュウソウチ(レバー & ペダル) (シンガタ) CONTROL EQUIPMENT (LEVER & PEDAL) (NEW TYPE)

D 72122-45100
D 72123-45201
D 72122-45301

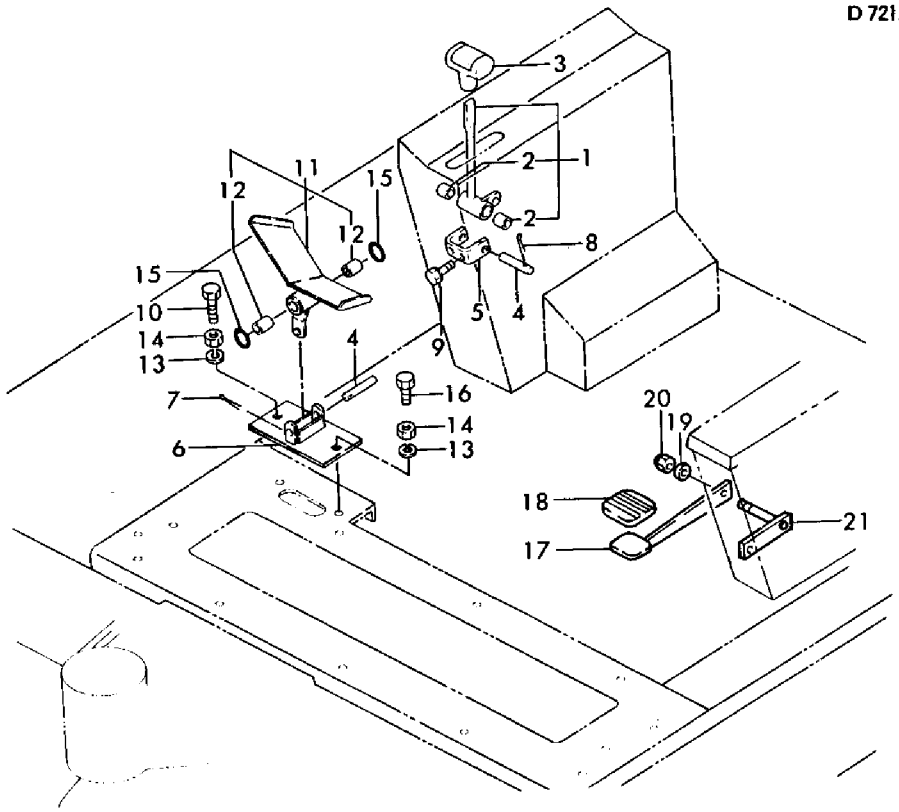

```
1,1,,172122-45340,,"LINK (E) W/BUSH",3,,,3,,,,,,,,,,,,,
3,2,,933171-23680,,"BUSH 14X15",6,,,6,,,,,,,,,,,,,
4,1,,172122-45510,,"LINK W/BUSH, BLADE",1,,,1,,,,,,,,,,,,,,
6,2,,933171-23680,,"BUSH 14X15",2,,,2,,,,,,,,,,,,,
7,1,,172122-45760,,"SHAFT, LINK",1,,,1,,,,,,,,,,,,,
8,1,,172122-45770,,"SHAFT, LINK",1,,,1,,,,,,,,,,,,,
9,1,,22417-400320,,"COTTER PIN 4.0X32",1,,,1,,,,,,,,,,,,,,
10,1,,172730-11440,,"TURNBUCKLE 10",3,,,3,,,,,,,,,,,,,
11,1,,194150-22480,,"NUT M10",3,,,3,,,,,,,,,,,,,
12,1,,172112-41960,,"PIN 8X25.5",2,,,2,,,,,,,,,,,,,
13,1,,172112-41980,,"BEARING, ROD-END",1,,,1,,,,,,,,,,,,,,
14,1,,172112-41980,,"BEARING, ROD-END",1,,,1,,,,,,,,,,,,,,
15,1,,172112-42130,,"ROD (A), ARM",1,,,1,,,,,,,,,,,,,
16,1,,172123-45250,,"ROD ASSY",1,,,1,,,,,,,,,,,,,
17,1,,172124-45700,,"ROD (A)",1,,,1,,,,,,,,,,,,,
18,1,,172124-45710,,"ROD (B)",2,,,2,,,,,,,,,,,,,
19,1,,172122-46290,,ROD,3,,,3,,,,,,,,,,,,,
20,1,,172122-46340,,ROD,2,,,2,,,,,,,,,,,,,
21,1,,172122-46360,,ROD,1,,,1,,,,,,,,,,,,,
22,1,,172122-46380,,ROD,1,,,1,,,,,,,,,,,,,
23,1,,172122-46400,,ROD,2,,,2,,,,,,,,,,,,,
24,1,,172122-46420,,ROD,2,,,2,,,,,,,,,,,,,
25,1,,172122-46560,,"ROD-END 10",6,,,6,,,,,,,,,,,,,
26,1,,172122-46570,,"ROD-END  8",2,,,2,,,,,,,,,,,,,
27,1,,22117-080000,,"WASHER  8",2,,,2,,,,,,,,,,,,,
28,1,,22217-080000,,"SPRING WASHER  8",1,,,1,,,,,,,,,,,,,
29,1,,22217-080000,,"SPRING WASHER  8",1,,,1,,,,,,,,,,,,,
30,1,,22217-100000,,"SPRING WASHER 10",6,,,6,,,,,,,,,,,,,
31,1,,22417-200160,,"COTTER PIN 2.0X16",18,,,18,,,,,,,,,,,,,
32,1,,22417-400320,,"COTTER PIN 4.0X32",1,,,1,,,,,,,,,,,,,
33,1,,26716-080002,,"NUT M 8",5,,,5,,,,,,,,,,,,,
34,1,,26716-080002,,"NUT M 8",2,,,2,,,,,,,,,,,,,
35,1,,26756-100002,,"LOCK NUT M10 PLATED",3,,,3,,,,,,,,,,,,,
36,1,,26776-100002,,"LOCK NUT M10 PLATED",12,,,12,,,,,,,,,,,,,,
37,1,,933171-21700,,"PIN (B), SPOOL LINK",16,,,16,,,,,,,,,,,,,,
38,1,,933171-21950,,"JOINT, ROD",1,,,1,,,,,,,,,,,,,
```

https://truckmanualshub.com/

Fig. 27 ソウジュウソウチ(ロッド)(キュウガタ) CONTROL EQUIPMENT (ROD) (OLD) (PREVIOS TYPE)

D 72130-45200
D 72123-45600

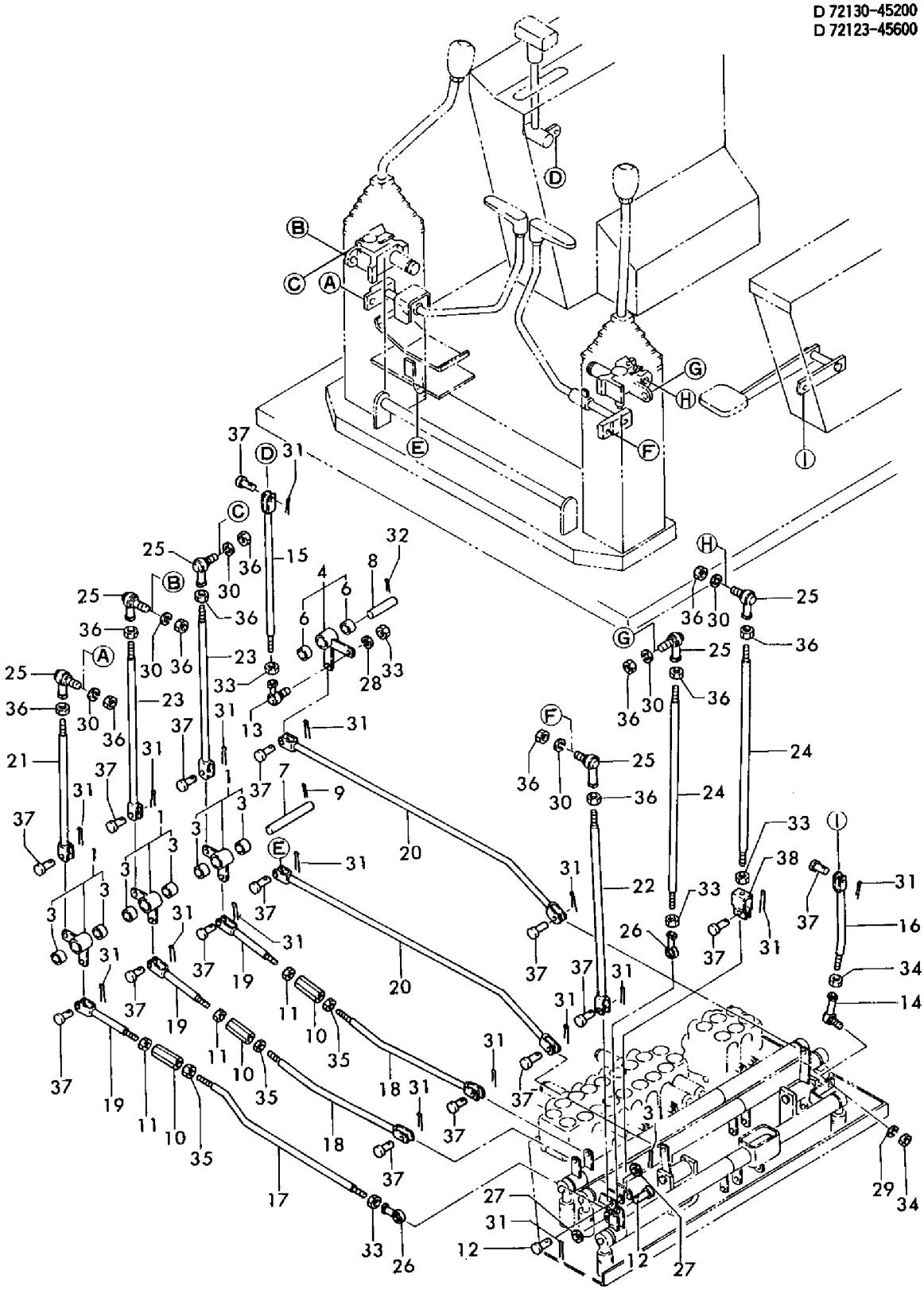

https://truckmanualshub.com/

```
1,1,,172122-45351,,"LINK (E) W/BUSH",3,,,3,,,,,,,,,,,,,
2,2,,933171-23680,,"BUSH 14X15",6,,,6,,,,,,,,,,,,,
3,1,,172122-45510,,"LINK W/BUSH, BLADE",1,,,1,,,,,,,,,,,,,,
4,2,,933171-23680,,"BUSH 14X15",2,,,2,,,,,,,,,,,,,
5,1,,172122-45760,,"SHAFT, LINK",1,,,1,,,,,,,,,,,,,
6,1,,172122-45770,,"SHAFT, LINK",1,,,1,,,,,,,,,,,,,
7,1,,22417-400320,,"COTTER PIN 4.0X32",1,,,1,,,,,,,,,,,,,,
8,1,,172730-11440,,"TURNBUCKLE 10",3,,,3,,,,,,,,,,,,,
9,1,,194150-22480,,"NUT M10",3,,,3,,,,,,,,,,,,,
10,1,,172122-47250,,"BALL 8, LINK",1,,,1,,,,,,,,,,,,,
11,1,,172122-46590,,"ELBALL 8",6,,,6,,,,,,,,,,,,,
12,1,,172112-42130,,"ROD (A), ARM",1,,,1,,,,,,,,,,,,,
13,1,,172124-45700,,"ROD (A)",1,,,1,,,,,,,,,,,,,
14,1,,172124-45721,,"ROD (B)",2,,,2,,,,,,,,,,,,,
15,1,,172122-46301,,"ROD (H)",3,,,3,,,,,,,,,,,,,
16,1,,172122-46340,,ROD,2,,,2,,,,,,,,,,,,,
17,1,,172122-46371,,"ROD (F)",1,,,1,,,,,,,,,,,,,
18,1,,172122-46391,,"ROD (G)",1,,,1,,,,,,,,,,,,,
19,1,,172122-46411,,"ROD (E)",2,,,2,,,,,,,,,,,,,
20,1,,172122-46420,,ROD,2,,,2,,,,,,,,,,,,,
21,1,,172122-46560,,"ROD-END 10",5,,,5,,,,,,,,,,,,,
22,1,,172122-46580,,"ROD END 10",1,,,1,,,,,,,,,,,,,
23,1,,933171-21700,,"PIN (B), SPOOL LINK",5,,,5,,,,,,,,,,,,,
24,1,,22217-080000,,"SPRING WASHER  8",7,,,7,,,,,,,,,,,,,
25,1,,22217-100000,,"SPRING WASHER 10",6,,,6,,,,,,,,,,,,,
26,1,,22417-200150,,"COTTER PIN 2.0X15",5,,,5,,,,,,,,,,,,,
27,1,,22417-400320,,"COTTER PIN 4.0X32",1,,,1,,,,,,,,,,,,,
28,1,,26716-080002,,"NUT M 8",20,,,20,,,,,,,,,,,,,
29,1,,26756-100002,,"LOCK NUT M10 PLATED",3,,,3,,,,,,,,,,,,,
30,1,,26776-100002,,"LOCK NUT M10 PLATED",12,,,12,,,,,,,,,,,,,,
31,1,,22137-140000,,"WASHER 14,POLISHED",2,,,2,,,,,,,,,,,,,
32,1,,172122-46590,,"ELBALL 8",1,,,1,,,,,,,,,,,,,
33,1,,172123-45250,,"ROD ASSY",1,,,1,,,,,,,,,,,,,
34,1,,22217-080000,,"SPRING WASHER  8",1,,,1,,,,,,,,,,,,,
35,1,,22417-200160,,"COTTER PIN 2.0X16",1,,,1,,,,,,,,,,,,,
36,1,,26716-080002,,"NUT M 8",2,,,2,,,,,,,,,,,,,
37,1,,933171-21700,,"PIN (B), SPOOL LINK",1,,,1,,,,,,,,,,,,,
38,1,,172122-46590,,"ELBALL 8",6,,,6,,,,,,,,,,,,,
38-1,1,,172112-41980,,"BEARING, ROD-END",6,,,6,,,N,,,M20561,,,,,,M20561,,
```

https://truckmanualshub.com/

Fig. 28 ソウジュウソウチ(ロッド)(シンガタ) CONTROL EQUIPMENT (ROD) (NEW TYPE)

D 72123-45201
D 72123-45601

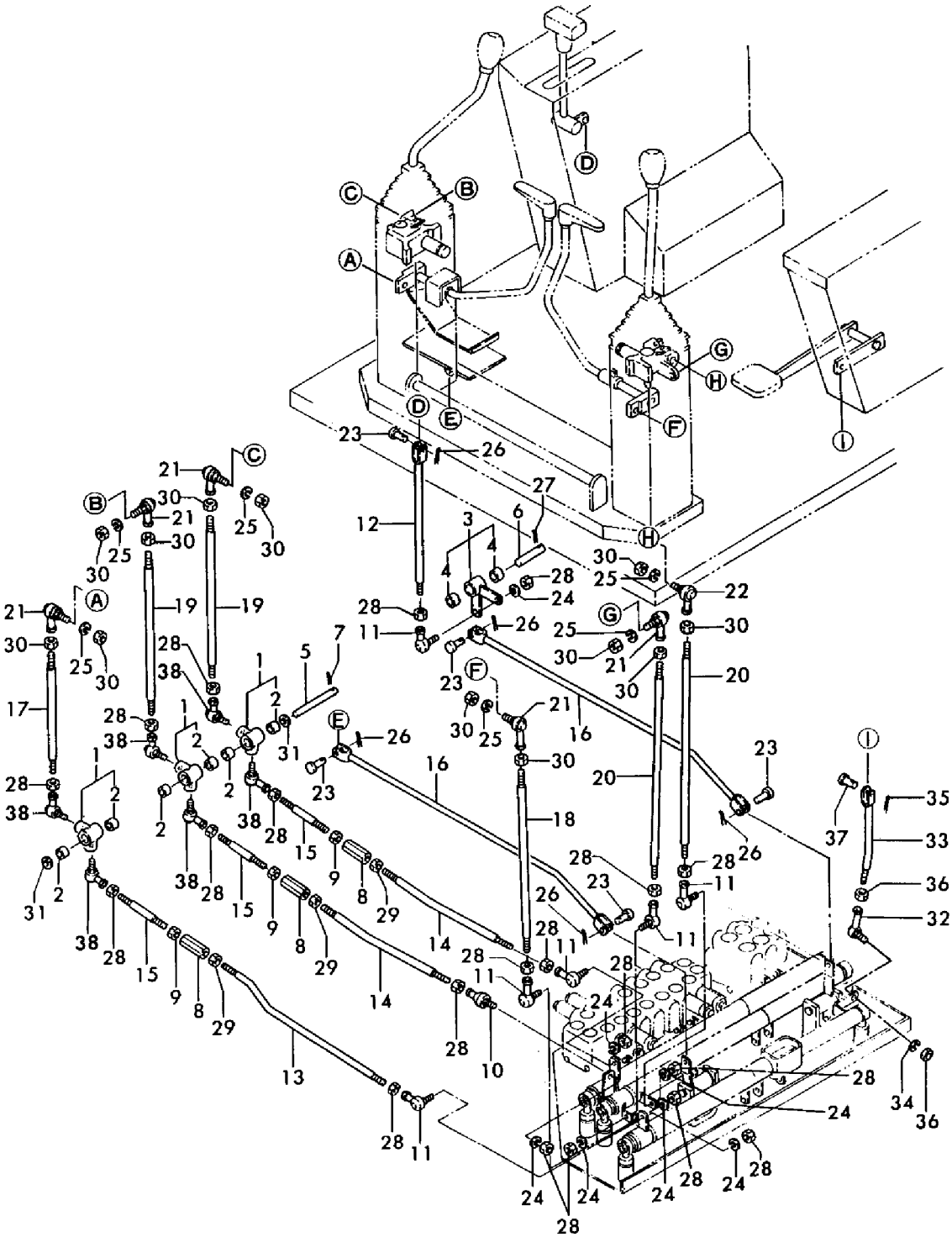

https://truckmanualshub.com/

```
1,1,,172112-41380,,"SHAFT, BLADE LEVER",2,,,2,,,,,,,,,,,,,
2,1,,172123-45101,,"LINK,ACCELERATOR",1,,,1,,,,,,,,,,,,,
3,2,,172112-42730,,"BUSH 20X15",2,,,2,,,,,,,,,,,,,
5,1,,172122-45250,,"LINK (B)",2,,,2,,,,,,,,,,,,,
6,1,,172124-45270,,"LINK (D)",1,,,1,,,,,,,,,,,,,
7,1,,172122-45280,,"LINK (C)",1,,,1,,,,,,,,,,,,,
8,1,,172122-45301,,"LINK (D)",2,,,2,,,,,,,,,,,,,
9,1,,172124-45330,,"LINK (A), SPOOL",4,,,4,,,,,,,,,,,,,
10,1,,172122-45381,,"LINK W/BUSH, ARM",1,,,1,,,,,,,,,,,,,
11,2,,172112-42730,,"BUSH 20X15",2,,,2,,,,,,,,,,,,,
13,1,,172122-45411,,"LINK W/BUSH, BOOM",1,,,1,,,,,,,,,,,,,
14,2,,172112-42730,,"BUSH 20X15",2,,,2,,,,,,,,,,,,,
16,1,,172122-45441,,"LINK W/BUSH, DRIVING",1,,,1,,,,,,,,,,,,,
17,2,,172112-42730,,"BUSH 20X15",2,,,2,,,,,,,,,,,,,
19,1,,172124-45441,,"LINK (D)ASSY, SPOOL",3,,,3,,,,,,,,,,,,,
20,1,,172122-45480,,"LINK (F)",2,,,2,,,,,,,,,,,,,
22,2,,933171-23680,,"BUSH 14X15",4,,,4,,,,,,,,,,,,,
23,1,,172122-45660,,"BRACKET (A), LINK",2,,,2,,,,,,,,,,,,,
24,1,,172122-45720,,"ROD-END 14",6,,,6,,,,,,,,,,,,,
25,1,,172122-45731,,"LINK SHAFT(R)",3,,,3,,,,,,,,,,,,,
26,1,,172122-45780,,"BOSS, SCREW",6,,,6,,,,,,,,,,,,,
27,1,,22137-140000,,"WASHER 14,POLISHED",6,,,6,,,,,,,,,,,,,
28,1,,22137-140000,,"WASHER 14,POLISHED",6,,,6,,,,,,,,,,,,,
29,1,,22217-140000,,"SPRING WASHER 14",6,,,6,,,,,,,,,,,,,
30,1,,22217-140000,,"SPRING WASHER 14",6,,,6,,,,,,,,,,,,,
31,1,,22351-050032,,"SPRING PIN 5X32",6,,,6,,,,,,,,,,,,,
32,1,,22417-400400,,"COTTER PIN 4.0X40",2,,,2,,,,,,,,,,,,,
33,1,,26013-100202,,"BOLT W/WASHER M10X20",4,,,4,,,,,,,,,,,,,
34,1,,26116-140202,,"BOLT M14X 20 PLATED",6,,,6,,,,,,,,,,,,,
35,1,,26712-140002,,"NUT M14",6,,,6,,,,,,,,,,,,,
36,1,,26757-080002,,"LOCK NUT M 8 PLATED",4,,,4,,,,,,,,,,,,,
37,1,,172124-45380,,"LINK (B), SPOOL",3,,,3,,,,,,,,,,,,,
38,1,,172124-45400,,"LINK (C), SPOOL",1,,,1,,,,,,,,,,,,,
39,1,,172122-46511,,"ROD (D), SPOOL",1,,,1,,,,,,,,,,,,,
40,1,,172122-46550,,"LINK (B), SPOOL",5,,,5,,,,,,,,,,,,,
41,1,,22417-200160,,"COTTER PIN 2.0X16",9,,,9,,,,,,,,,,,,,
42,1,,22417-160160,,"COTTER PIN 1.6X16",9,,,9,,,,,,,,,,,,,
43,1,,26756-100002,,"LOCK NUT M10 PLATED",5,,,5,,,,,,,,,,,,,
44,1,,933110-54100,,"PIN 4.75X14",9,,,9,,,,,,,,,,,,,
45,1,,933171-21700,,"PIN (B), SPOOL LINK",9,,,9,,,,,,,,,,,,,
46,1,,172130-45400,,"LINK,SPOOL(E)",1,,,1,,,,,,,,,,,,,
47,1,,172122-45790,,SHIM,4,,,4,,,,,,,,,,,,,
```

https://truckmanualshub.com/

Fig. 29 ソウジュウソウチ(リンク)(キュウガタ) CONTROL EQUIPMENT (LINK) (PREVIOS TYPE)

D 72130-45200
D 72123-45600

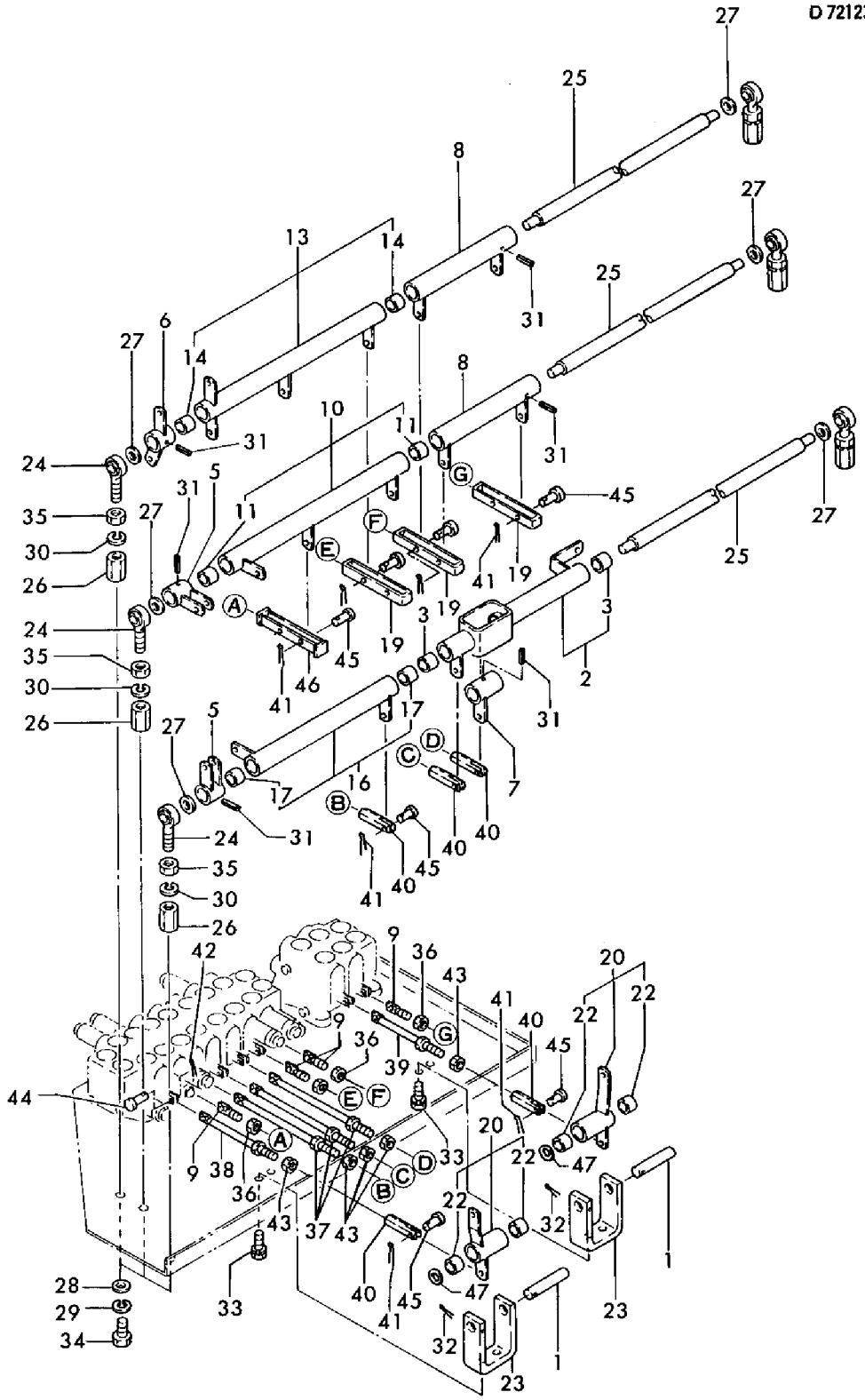

https://truckmanualshub.com/

```
1,1,,172112-41380,,"SHAFT, BLADE LEVER",2,,,2,,,,,,,,,,,,,
2,1,,172122-45251,,"LINK (B)",1,,,1,,,,,,,,,,,,,
3,1,,172124-45271,,"LINK (D)",1,,,1,,,,,,,,,,,,,
4,1,,172122-45281,,"LINK (C)",1,,,1,,,,,,,,,,,,,
5,1,,172122-45302,,"LINK (D)",1,,,1,,,,,,,,,,,,,
6,1,,172124-45331,,"LINK (A), SPOOL",2,,,2,,,,,,,,,,,,,
7,1,,172122-45382,,"LINK (H) W/BUSH",1,,,1,,,,,,,,,,,,,
8,2,,172112-42730,,"BUSH 20X15",2,,,2,,,,,,,,,,,,,
9,1,,172122-45412,,"LINK W/BUSH, BOOM",1,,,1,,,,,,,,,,,,,
10,2,,172112-42730,,"BUSH 20X15",2,,,2,,,,,,,,,,,,,
11,1,,172122-45442,,"LINK W/BUSH, DRIVING",1,,,1,,,,,,,,,,,,,
12,2,,172112-42730,,"BUSH 20X15",2,,,2,,,,,,,,,,,,,
13,1,,172122-46590,,"ELBALL 8",6,,,6,,,,,,,,,,,,,
14,1,,172122-45481,,"LINK (F)",2,,,2,,,,,,,,,,,,,
15,2,,933171-23680,,"BUSH 14X15",4,,,4,,,,,,,,,,,,,
16,1,,172123-45102,,LINK,1,,,1,,,,,,,,,,,,,
17,2,,172112-42730,,"BUSH 20X15",2,,,2,,,,,,,,,,,,,
18,1,,172122-45660,,"BRACKET (A), LINK",2,,,2,,,,,,,,,,,,,
19,1,,172122-45720,,"ROD-END 14",6,,,6,,,,,,,,,,,,,
20,1,,172122-45731,,"LINK SHAFT(R)",3,,,3,,,,,,,,,,,,,
21,1,,172122-45780,,"BOSS, SCREW",6,,,6,,,,,,,,,,,,,
22,1,,22157-120000,,"WASHER 12",6,,,6,,,,,,,,,,,,,
23,1,,22137-140000,,"WASHER 14,POLISHED",6,,,6,,,,,,,,,,,,,
24,1,,22217-140000,,"SPRING WASHER 14",6,,,6,,,,,,,,,,,,,
25,1,,22217-140000,,"SPRING WASHER 14",6,,,6,,,,,,,,,,,,,
26,1,,22351-050036,,"SPRING PIN 5X36",6,,,6,,,,,,,,,,,,,
27,1,,22417-400400,,"COTTER PIN 4.0X40",2,,,2,,,,,,,,,,,,,
28,1,,26013-100202,,"BOLT W/WASHER M10X20",4,,,4,,,,,,,,,,,,,
29,1,,26116-140202,,"BOLT M14X 20 PLATED",6,,,6,,,,,,,,,,,,,
30-1,1,,26712-140002,,"NUT M14",6,,,6,,,,1,,,,,,,,,
31,1,,26716-080002,,"NUT M 8",6,,,6,,,,,,,,,,,,,
32,1,,172124-45380,,"LINK (B), SPOOL",3,,,3,,,,,,,,,,,,,
33,1,,172124-45401,,"LINK (C)ASSY, SPOOL",1,,,1,,,,,,,,,,,,,
34,1,,172122-46512,,"ROD (D), SPOOL",1,,,1,,,,,,,,,,,,,
35,1,,172122-46550,,"LINK (B), SPOOL",3,,,3,,,,,,,,,,,,,
36,1,,22417-160160,,"COTTER PIN 1.6X16",9,,,9,,,,,,,,,,,,,
37,1,,22417-200160,,"COTTER PIN 2.0X16",3,,,3,,,,,,,,,,,,,
38,1,,26756-100002,,"LOCK NUT M10 PLATED",3,,,3,,,,,,,,,,,,,
39,1,,933110-54100,,"PIN 4.75X14",9,,,9,,,,,,,,,,,,,
40,1,,933171-21700,,"PIN (B), SPOOL LINK",3,,,3,,,,,,,,,,,,,
41,1,,172124-46300,,"LINK (B1) ASSY",1,,,1,,,,,,,,,,,,,
42,1,,172124-46200,,"O-RING 27X5.7",14,,,14,,,,,,,,,,,,,
43,1,,24761-020000,,"NIPPLE PT1/8,GREASE",2,,,2,,,,,,,,,,,,,
44,1,,24761-040000,,"NIPPLE B,GREASE",2,,,2,,,,,,,,,,,,,
45,1,,172124-46340,,"ROD (A), SPOOL",2,,,2,,,,,,,,,,,,,
46,1,,26716-080002,,"NUT M 8",6,,,6,,,,,,,,,,,,,
47,1,,22217-080000,,"SPRING WASHER  8",6,,,6,,,,,,,,,,,,,
48,1,,172122-46670,,"LINK (M)",1,,,1,,,,,,,,,,,,,
```

https://truckmanualshub.com/

Fig. 30 ソウジュウソウチ(リンク)(シンガタ) CONTROL EQUIPMENT (LINK) (NEW TYPE)

D 72123-45201
D 72123-45601

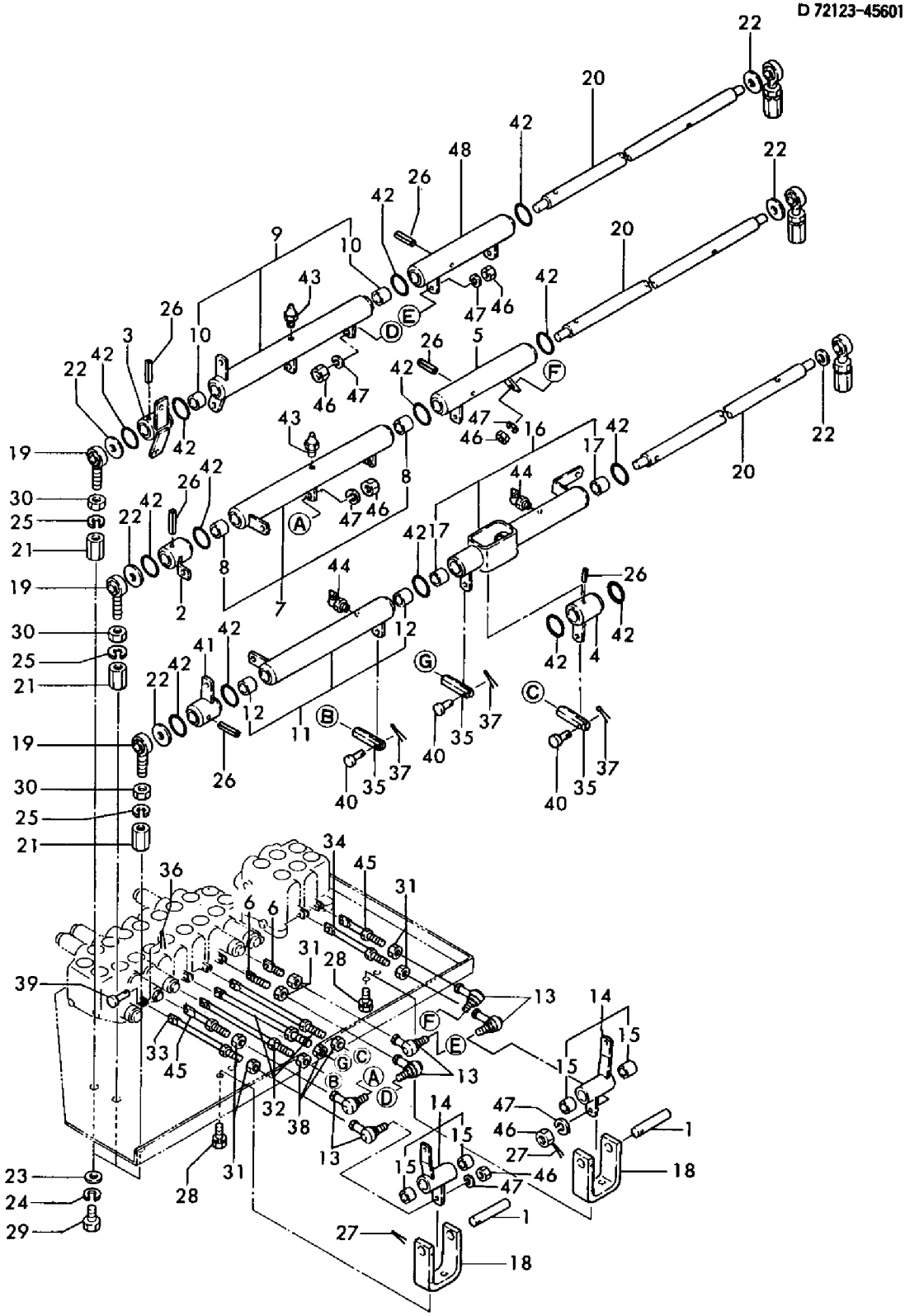

```
1,1,,172122-12140,,"LEVER ASSY,3RD VALVE",1,,,1,,,,,,,,,,,,,
2,2,,933171-23680,,"BUSH 14X15",2,,,2,,,,,,,,,,,,,
3,1,,172112-12530,,"JOINT, CABLE",1,,,1,,,,,,,,,,,,,
4,1,,172112-41380,,"SHAFT, BLADE LEVER",1,,,1,,,,,,,,,,,,,
5,1,,172112-41380,,"SHAFT, BLADE LEVER",1,,,1,,,,,,,,,,,,,
6,1,,172122-45670,,"BRACKET (B), LINK",1,,,1,,,,,,,,,,,,,
7,1,,172116-45940,,"KNOB (C), LEVER",1,,,1,,,,,,,,,,,,,
8,1,,172130-46100,,"LINK(A) W/BUSH",1,,,1,,,,,,,,,,,,,
9,2,,933171-23680,,"BUSH 14X15",2,,,2,,,,,,,,,,,,,
10,1,,172124-46130,,"CABLE, PUSH-PULL",1,,,1,,,,,,,,,,,,,
11,1,,172130-46150,,"LINK(B) W/BUSH",1,,,1,,,,,,,,,,,,,
12,2,,933171-23680,,"BUSH 14X15",2,,,2,,,,,,,,,,,,,
13,1,,172130-46180,,"LINK, SELECTOR",2,,,2,,,,,,,,,,,,,
14,1,,172130-46200,,"FULCRUM, SELECTOR",1,,,1,,,,,,,,,,,,,
15,1,,172122-47300,,"BRACKET, LEVER",1,,,1,,,,,,,,,,,,,
16,1,,172122-47460,,"SPOOL, 3RD",1,,,1,,,,,,,,,,,,,
17,1,,1A1040-56900,,"PIN  6X 17",1,,,1,,,,,,,,,,,,,
18,1,,22137-100000,,"WASHER 10,POLISHED",2,,,2,,,,,,,,,,,,,
19,1,,22137-120000,,"WASHER 12,POLISHED",1,,,1,,,,,,,,,,,,,
20,1,,22217-120000,,"WASHER 12,SPRING",1,,,1,,,,,,,,,,,,,
21,1,,22417-160160,,"COTTER PIN 1.6X16",1,,,1,,,,,,,,,,,,,
22,1,,22417-200160,,"COTTER PIN 2.0X16",3,,,3,,,,,,,,,,,,,
23,1,,22417-200160,,"COTTER PIN 2.0X16",1,,,1,,,,,,,,,,,,,
24,1,,22417-400350,,"COTTER PIN 4.0X35",1,,,1,,,,,,,,,,,,,
25,1,,22417-400350,,"COTTER PIN 4.0X35",1,,,1,,,,,,,,,,,,,
26,1,,26013-100202,,"BOLT W/WASHER M10X20",4,,,4,,,,,,,,,,,,,
27,1,,26013-100202,,"BOLT W/WASHER M10X20",2,,,2,,,,,,,,,,,,,
28,1,,26013-100202,,"BOLT W/WASHER M10X20",2,,,2,,,,,,,,,,,,,
29,1,,26716-120002,,"NUT M12",1,,,1,,,,,,,,,,,,,
30,1,,26717-050002,,"NUT M 5",1,,,1,,,,,,,,,,,,,
31,1,,933110-54100,,"PIN 4.75X14",1,,,1,,,,,,,,,,,,,
32,1,,933171-21700,,"PIN (B), SPOOL LINK",3,,,3,,,,,,,,,,,,,
33,1,,172119-74200,,"VALVE 3/8",1,,,1,,,,,,,,,,,,,
34,2,,172124-70850,,SUB-PLATE,1,,,1,,,,,,,,,,,,,
35,2,,172122-70970,,"VALVE (A), SELETOR",1,,,1,,,,,,,,,,,,,
36,3,,172123-70290,,"PLUG PT1/16",1,,,1,,,,,,,,,,,,,
37,3,,172123-70600,,O-RING,2,,,2,,,,,,,,,,,,,
38,3,,172124-70720,,BODY,1,,,1,,,,,,,,,,,,,
39,3,,172124-70730,,PLATE,1,,,1,,,,,,,,,,,,,
40,3,,172124-70740,,CAP,1,,,1,,,,,,,,,,,,,
41,3,,172124-70750,,WASHER,1,,,1,,,,,,,,,,,,,
42,3,,172124-70760,,"RING, BACK-UP",2,,,2,,,,,,,,,,,,,
43,3,,172124-70770,,BALL,1,,,1,,,,,,,,,,,,,
44,3,,172124-70780,,SPRING,1,,,1,,,,,,,,,,,,,
45,3,,172124-70800,,BOLT,2,,,2,,,,,,,,,,,,,
46,3,,172124-70810,,SPOOL,1,,,1,,,,,,,,,,,,,
47,3,,172124-70820,,PLATE,1,,,1,,,,,,,,,,,,,
48,3,,172124-70830,,BOLT,4,,,4,,,,,,,,,,,,,
49,3,,172122-70980,,"NUT PT3/8",2,,,2,,,,,,,,,,,,,
50,3,,22217-050000,,"SPRING WASHER  5",7,,,7,,,,,,,,,,,,,
51,3,,23871-010000,,"PLUG PT1/8,SCREW",2,,,2,,,,,,,,,,,,,
52,3,,24311-000140,,"O-RING 1A P-14.0",2,,,2,,,,,,,,,,,,,
53,3,,24315-000250,,"O-RING 1B P-25.0",4,,,4,,,,,,,,,,,,,
54,3,,26557-050122,,"SCREW M 5X 12",3,,,3,,,,,,,,,,,,,
55,3,,933152-07400,,"O-RING (A)",2,,,2,,,,,,,,,,,,,
56,1,,22217-100000,,"SPRING WASHER 10",2,,,2,,,,,,,,,,,,,
57,1,,26116-100602,,"BOLT M10X 60 PLATED",2,,,2,,,,,,,,,,,,,
```

https://truckmanualshub.com/

Fig. 31 サードバルブ(リンク & セレクタバルブ) 3RD VALVE (LINK & SELECTOR VALVE)

D72130-46100
D72123-74710

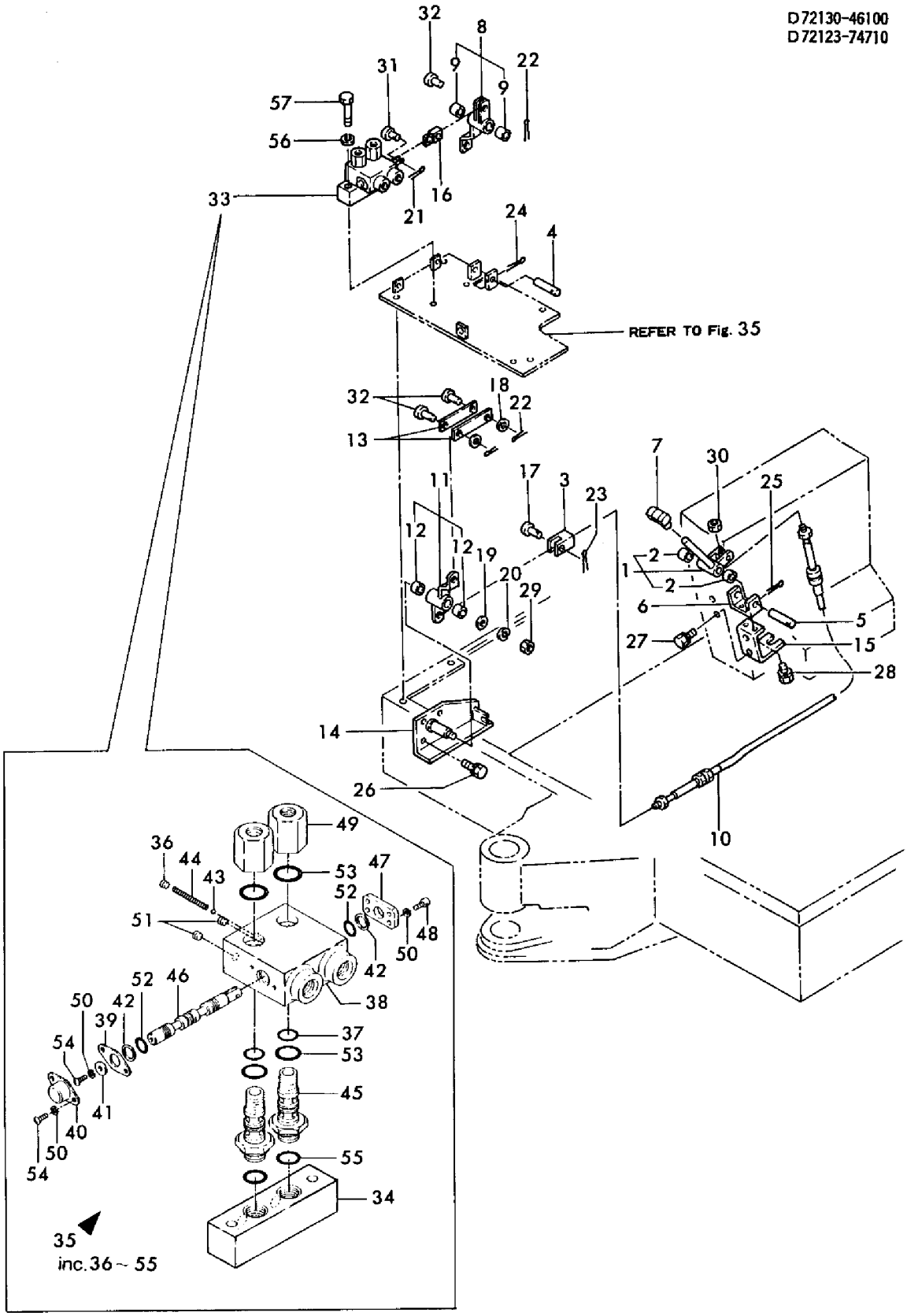

https://truckmanualshub.com/

```
1,1,,172130-50100,,"FRAME, TRACK",1,,,1,,,,,,,,,,,,,
1-1,1,,172130-50101,,"FRAME, TRACK",1,,,1,,,S,,,M00559,,,,,,M00559,,
2,1,,172122-50850,,"GUARD(L), SPROCKET",1,,,1,,,,,,,,,,,,,
2-1,1,,172122-50851,,"GUARD(L), SPROCKET",1,,,1,,,R,,,*1988.02,,,,,,*1988.02,,
3,1,,172122-50860,,"GUARD(R), SPROCKET",1,,,1,,,,,,,,,,,,,
3-1,1,,172122-50861,,"GUARD(R), SPROCKET",1,,,1,,,R,,,*1988.02,,,,,,*1988.02,,
4,1,,172122-51700,,"COVER, MOTOR",2,,,2,,,,,,,,,,,,,
5,1,,172130-51810,,"COVER,UNDER",1,,,1,,,,,,,,,,,,,
6,1,,172130-51850,,COVER,2,,,2,,,,,,,,,,,,,
7,1,,26013-100202,,"BOLT W/WASHER M10X20",10,,,10,,,,,,,,,,,,,
8,1,,26013-120302,,"BOLT W/WASHER M12X30",6,,,6,,,,,,,,,,,,,
9,1,,933166-17730,,"WASHER 10.5X30",10,,,10,,,,,,,,,,,,,
10,1,,172122-50901,,"GUARD(L), CRAWLER",2,,,2,,,,,,,,,,,,,
11,1,,172122-50911,,"GUARD(R), CRAWLER",2,,,2,,,,,,,,,,,,,
12,1,,22217-160000,,"SPRING WASHER 16",8,,,8,,,,,,,,,,,,,
13,1,,26116-160452,,"BOLT M16X 45 PLATED",8,,,8,,,,,,,,,,,,,
14,1,,26013-100202,,"BOLT W/WASHER M10X20",4,,,4,,,,,,,,,,,,,
15,1,,26013-100202,,"BOLT W/WASHER M10X20",12,,,12,,,,,,,,,,,,,,
16,1,,172113-36050,,"BOLT, ROLLER ADJUST",8,,,8,,,,,,,,,,,,,
17,1,,172116-37350,,"BOLT, ROLLER ADJUST",2,,,2,,,,,,,,,,,,,
18,1,,172130-51750,,GROMMET,2,,,2,,,,,,,,,,,,,
19,1,,22217-160000,,"SPRING WASHER 16",10,,,10,,,,,,,,,,,,,
20,1,,26657-160002,,"CAP NUT M16",10,,,10,,,,,,,,,,,,,
```

https://truckmanualshub.com/

Fig. 32 トラックフレーム & リタイガード TRACK FRAME & TRACK GUARD

(D 72130-50100
D 72130-50101
D 72122-50800

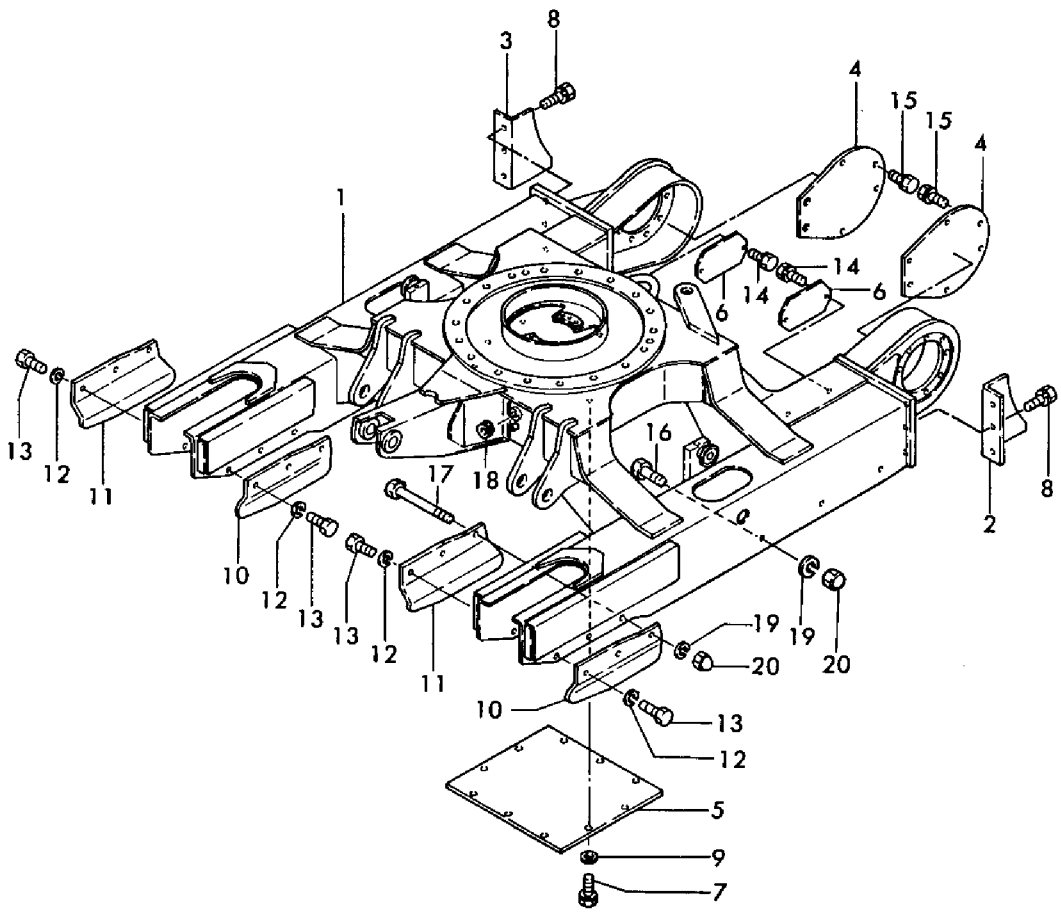

https://truckmanualshub.com/

```
1,1,,172130-53300,,"COUNTER WEIGHT",1,,,1,,,,,,,,,,,,,
2,1,,172117-53330,,SPACER,3,,,3,,,,,,,,,,,,,
3,1,,172123-53330,,"WASHER 21X70X9",2,,,2,,,,,,,,,,,,,
4,1,,22137-200000,,"WASHER 20,POLISHED",1,,,1,,,,,,,,,,,,,
5,1,,22217-200000,,"SPRING WASHER 20",3,,,3,,,,,,,,,,,,,
6,1,,26116-200602,,"BOLT M20X 60 PLATED",2,,,2,,,,,,,,,,,,,
7,1,,26116-200852,,"BOLT M20X 85 PLATED",1,,,1,,,,,,,,,,,,,
8,1,,172130-54010,,"TURNING FRAME",1,,,1,,,,,,,,,,,,,
8-1,1,,172130-54011,,"TURNING FRAME",1,,,1,,,S,,,M20578,,,,,,M20578,,
9,1,,172130-62520,,"PANEL(A),SOUND-PROOF",1,,,1,,,,,,,,,,,,,
10,1,,172130-62560,,"PANEL(B),SOUND-PROOF",1,,,1,,,,,,,,,,,,,
11,1,,172130-62600,,"PANEL(C),SOUND-PROOF",1,,,1,,,,,,,,,,,,,
12,1,,172130-62640,,"PANEL(D),SOUND-PROOF",1,,,1,,,,,,,,,,,,,
13,1,,172130-62680,,"PANEL(E),SOUND-PROOF",1,,,1,,,,,,,,,,,,,
14,1,,22137-100000,,"WASHER 10,POLISHED",4,,,4,,,,,,,,,,,,,
15,1,,22137-100000,,"WASHER 10,POLISHED",8,,,8,,,,,,,,,,,,,
16,1,,22137-100000,,"WASHER 10,POLISHED",4,,,4,,,,,,,,,,,,,
17,1,,22137-100000,,"WASHER 10,POLISHED",3,,,3,,,,,,,,,,,,,
18,1,,22137-100000,,"WASHER 10,POLISHED",4,,,4,,,,,,,,,,,,,
19,1,,26013-100202,,"BOLT W/WASHER M10X20",4,,,4,,,,,,,,,,,,,
20,1,,26013-100202,,"BOLT W/WASHER M10X20",8,,,8,,,,,,,,,,,,,
21,1,,26013-100202,,"BOLT W/WASHER M10X20",4,,,4,,,,,,,,,,,,,
22,1,,26013-100202,,"BOLT W/WASHER M10X20",3,,,3,,,,,,,,,,,,,
23,1,,26013-100202,,"BOLT W/WASHER M10X20",4,,,4,,,,,,,,,,,,,
24,1,,172130-62700,,"PANEL(F),SOUND-PROOF",1,,,1,,,,,,,,,,,,,
25,1,,22137-080000,,"WASHER 8, POLISHED",1,,,1,,,,,,,,,,,,,
26,1,,26013-080162,,"BOLT W/WASHER M8X16",1,,,1,,,,,,,,,,,,,
27,1,,172122-62851,,"PLATE,PANEL STAND",1,,,1,,,,,,,,,,,,,
28,1,,26013-100202,,"BOLT W/WASHER M10X20",2,,,2,,,,,,,,,,,,,
```

https://truckmanualshub.com/

Fig. 33 センカイフレーム TURNING FRAME

D72130-53300
D72130-54100
D72130-62800

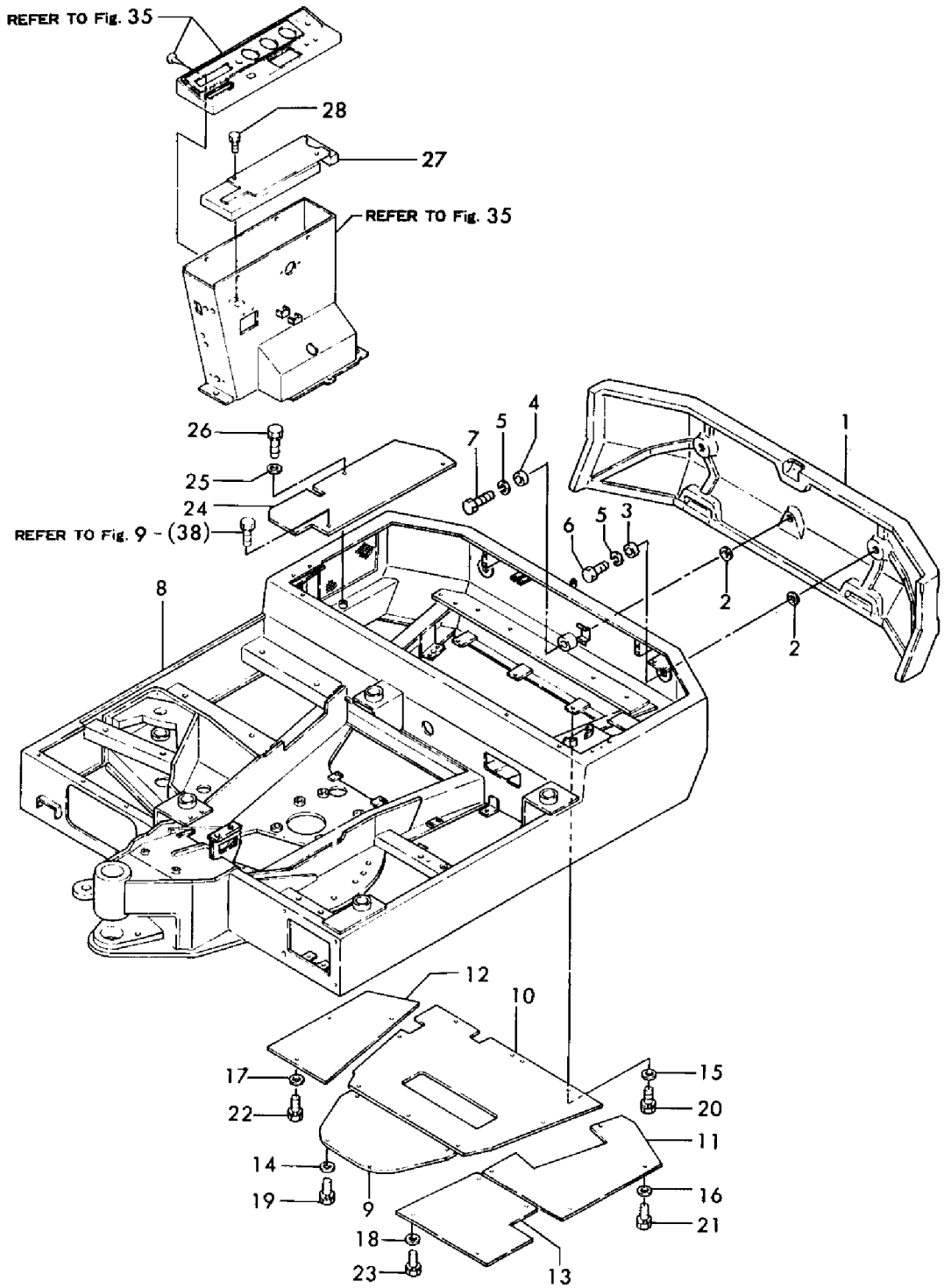

https://truckmanualshub.com/

```
1,1,,172122-57100,,"HOUSING,REVOLVE GEAR",1,,,1,,,,,,,,,,,,,
2,1,,172122-57110,,"COVER,GEAR HOUSING",1,,,1,,,,,,,,,,,,,
3,1,,172122-57150,,"PIPE, GAUGE",1,,,1,,,,,,,,,,,,,
4,1,,172122-57200,,"GAUGE, OIL LEVEL",1,,,1,,,,,,,,,,,,,
4-1,1,,172122-57201,,"GAUGE, OIL LEVEL",1,,,1,,,N,,,*1988.11,,,,,,*1988.11,,
5,1,,22217-140000,,"SPRING WASHER 14",5,,,5,,,,,,,,,,,,,
6,1,,23871-060000,,"PLUG PT3/4,SCREW",1,,,1,,,,,,,,,,,,,
7,1,,26013-120302,,"BOLT W/WASHER M12X30",5,,,5,,,,,,,,,,,,,
8,1,,26116-141102,,"BOLT M14X110 PLATED",5,,,5,,,,,,,,,,,,,
9,1,,933110-22800,,"PIN  8X10",2,,,2,,,,,,,,,,,,,
10,1,,172312-57300,,"PINION, REVOLVE",1,,,1,,,,,,,,,,,,,
11,1,,172122-57310,,"GEAR, PINION SHAFT",1,,,1,,,,,,,,,,,,,
12,1,,172116-57340,,"COLLAR (A), PINION",1,,,1,,,,,,,,,,,,,
13,1,,172116-57350,,"COLLAR (B), PINION",1,,,1,,,,,,,,,,,,,
14,1,,172116-57361,,"COLLAR (C), PINION",1,,,1,,,,,,,,,,,,,
15,1,,22242-000450,,"CIRCLIP   45",1,,,1,,,,,,,,,,,,,
16,1,,24145-003104,,BEARING,1,,,1,,,,,,,,,,,,,
17,1,,24148-002094,,BEARING,1,,,1,,,,,,,,,,,,,
17-1,1,,172312-57310,,BEARING,1,,,1,,,N,,,*1988.12,,,,,,*1988.12,,
18,1,,933171-13410,,"SEAL TCX6 628012,OIL",1,,,1,,,,,,,,,,,,,
19,1,,172124-57340,,BEARING,2,,,2,,,,,,,,,,,,,
20,1,,172122-57400,,"GEAR, SECOND",1,,,1,,,,,,,,,,,,,
21,1,,194200-01150,,SPRING,1,,,1,,,,,,,,,,,,,
21-1,1,,194740-00160,,"WASHER 10, CONICAL",1,,,1,,,R,,,M20501,,,,,,M20501,,
22,1,,195185-14890,,"BOLT M10X 26",1,,,1,,,,,,,,,,,,,
23,1,,172122-57500,,"GEAR,TURNING MOTOR",1,,,1,,,,,,,,,,,,,
24,1,,172122-57510,,"SPACER, MOTOR GEAR",1,,,1,,,,,,,,,,,,,
25,1,,172122-57520,,STOPPER,1,,,1,,,,,,,,,,,,,
26,1,,172312-57600,,"BEARING,REVOLVE",1,,,1,,,,,,,,,,,,,
27,2,,172312-57610,,"SEAL, UPPER",1,,,1,,,,,,,,,,,,,
28,2,,172312-57620,,"SEAL, LOWER",1,,,1,,,,,,,,,,,,,
29,1,,172116-57610,,"BOLT M16X 70",36,,,36,,,,,,,,,,,,,
30,1,,172122-57620,,"PARALLEL PIN 13X36",4,,,4,,,,,,,,,,,,,
```

https://truckmanualshub.com/

Fig. 34 センカイクドウソウチ TURNING DRIVING GEAR

D 72122-57100
D 72312-57300
D 72122-57400
D 72122-57500
D 72312-57600
(D 72312-73310)

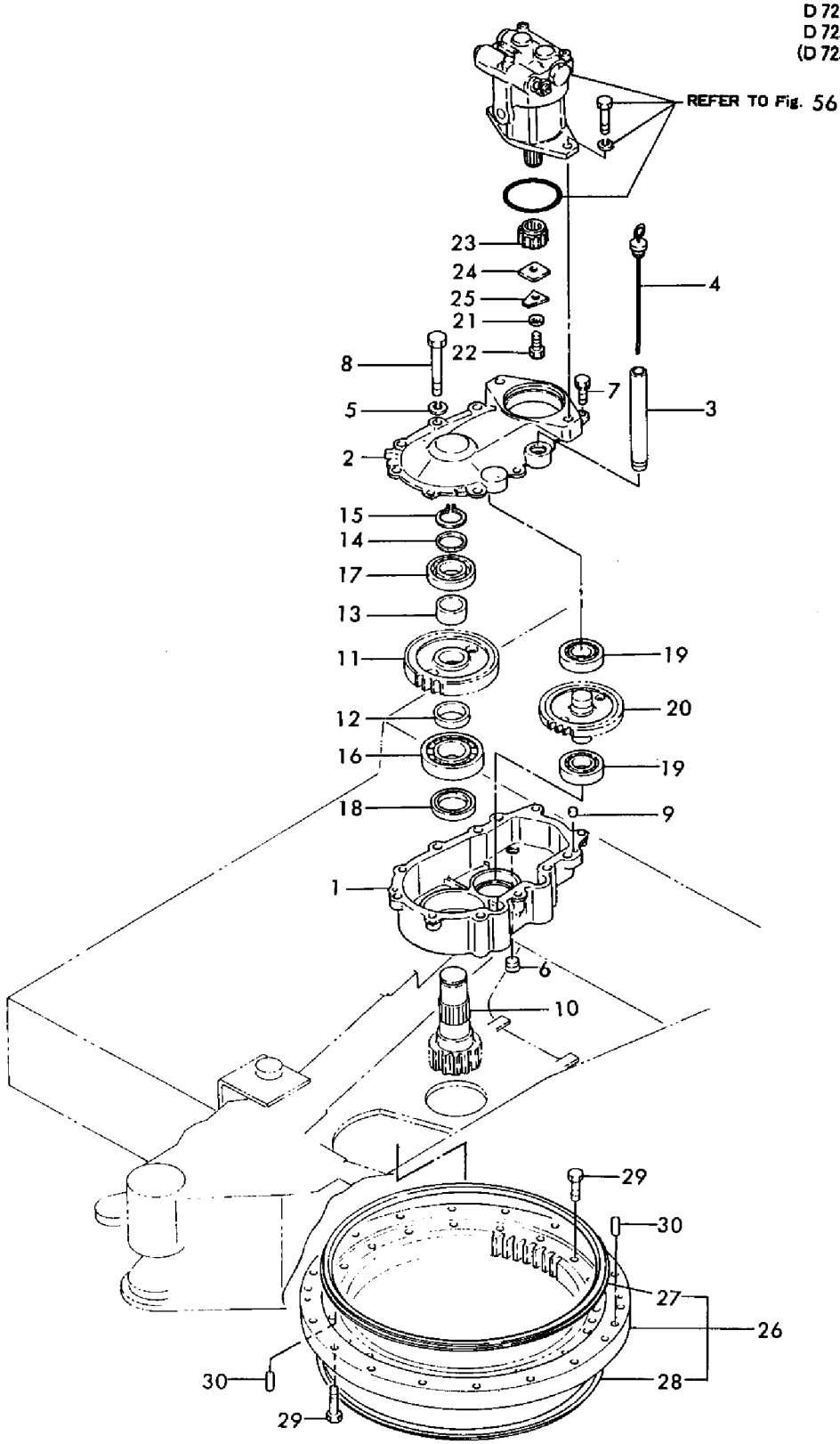

https://truckmanualshub.com/

```
1,1,,172122-61300,,"PANEL (S), COVER",1,,,1,,,,,,,,,,,,,
2,1,,172122-61371,,"STAND (L), PANEL",1,,,1,,,,,,,,,,,,,
3,1,,172130-61100,,"FRONT COVER",1,,,1,,,,,,,,,,,,,
4,1,,172122-61431,,"STAND (R), PANEL",1,,,1,,,,,,,,,,,,,
5-1,1,,172112-69790,,"PLUG 32X2",1,,,1,,,,1,,,,,,,,,
6,1,,26013-100202,,"BOLT W/WASHER M10X20",5,,,5,,,,,,,,,,,,,
7,1,,26013-100202,,"BOLT W/WASHER M10X20",4,,,4,,,,,,,,,,,,,
8,1,,26013-100202,,"BOLT W/WASHER M10X20",5,,,5,,,,,,,,,,,,,
9,1,,26013-100202,,"BOLT W/WASHER M10X20",3,,,3,,,,,,,,,,,,,
10,1,,26557-060302,,"SCREW M 6X 30",3,,,3,,,,,,,,,,,,,
11,1,,933171-23680,,"BUSH 14X15",2,,,2,,,,,,,,,,,,,
12,1,,172122-17110,,"PANEL, INSTRUMENT",1,,,,,,,,,,,,,,,,,
12-1,1,,172122-17200,,"PANEL, INSTRUMENT",1,,,,,,S,,,*1989.04,,,,,,,,
13,1,,172122-17180,,"PANEL, INSTRUMENT",,,,1,,,,,,,,,,,,,
14,1,,172122-17120,,"PANEL(L), INSTRUMENT",1,,,1,,,,,,,,,,,,,
14-1,1,,172122-17121,,"PANEL(L), INSTRUMENT",1,,,1,,,N,,,M00570,,,,,,M00570,,
14-2,1,,172122-17241,,"PANEL(L) ASSY",1,,,,,,R,,,*1988.10,,,,,,,,
15,2,,172122-17130,,"PANEL, INSTRUMENT",1,,,1,,,,,,,,,,,,,
15-1,2,,172122-17131,,"PANEL, INSTRUMENT",1,,,1,,,S,,,M00570,,,,,,M00570,,
16,2,,172122-17140,,COVER,1,,,1,,,,,,,,,,,,,
16-1,2,,172122-17141,,COVER,1,,,1,,,S,,,M00570,,,,,,M00570,,
16-2,2,,172122-17251,,COVER,1,,,1,,,R,,,*1988.10,,,,,,*1988.10,,
17,2,,172122-17150,,HINGE,2,,,2,,,,,,,,,,,,,
17-1,2,,172122-17151,,HINGE,2,,,2,,,S,,,M00570,,,,,,M00570,,
18,2,,172122-17160,,"ROD, STOPPER",1,,,1,,,,,,,,,,,,,
19,2,,22857-300050,,"SCREW 3X 5",8,,,8,,,,,,,,,,,,,
19-1,2,,22867-200080,,"SCREW 2X 8",12,,,12,,,S,,,M00570,,,,,,M00570,,
20,1,,172122-17190,,CLIP,2,,,2,,,,,,,,,,,,,
21,1,,22137-040000,,"WASHER 4, POLISHED",3,,,3,,,,,,,,,,,,,
22,1,,26022-040122,,"SCREW M 4X 12",3,,,3,,,,,,,,,,,,,
23,1,,26013-100202,,"BOLT W/WASHER M10X20",4,,,4,,,,,,,,,,,,,
24,1,,26013-100202,,"BOLT W/WASHER M10X20",5,,,5,,,,,,,,,,,,,
25,1,,172130-61150,,"COVER, FRONT",1,,,1,,,,,,,,,,,,,
26,1,,172130-61200,,"COVER, VALVE",1,,,1,,,,,,,,,,,,,
27,1,,172130-61240,,"COVER STAY, 3RD",1,,,1,,,,,,,,,,,,,
27-1,1,,172130-61241,,"STAY, COVER",1,,,1,,,S,,,M20540,,,,,,M20540,,
28,1,,22137-100000,,"WASHER 10,POLISHED",5,,,5,,,,,,,,,,,,,
29,1,,26013-100202,,"BOLT W/WASHER M10X20",2,,,2,,,,,,,,,,,,,
```

https://truckmanualshub.com/

Fig. 35 カバー & インテリア COVER & INTERIOR

D 72130-61100
D 72130-61110
(D 72122-63100)
D 72122-63110
D 72122-63120

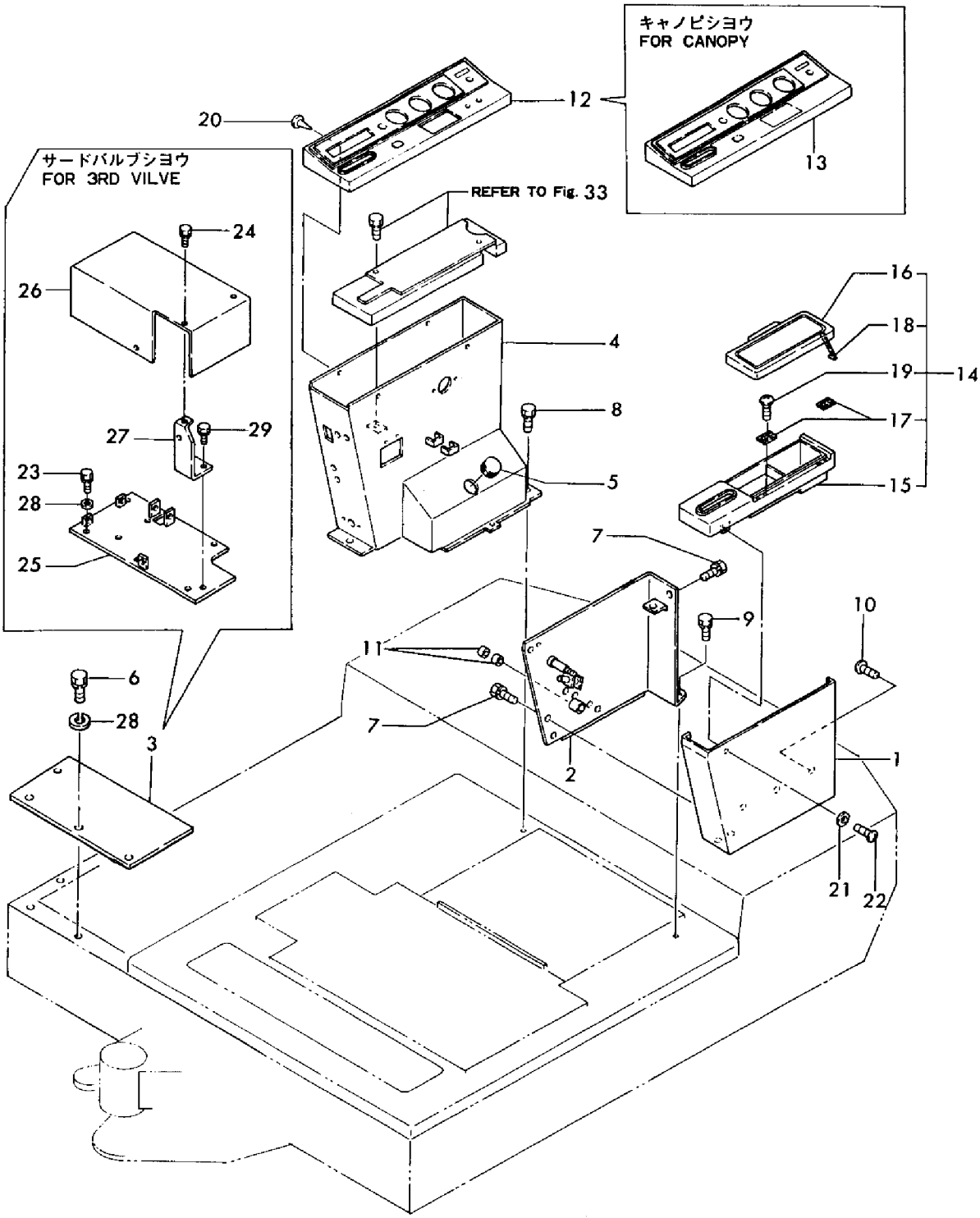

https://truckmanualshub.com/

```
1,1,,172122-58800,,"PIN, TURNING LOCK",1,,,1,,,,,,,,,,,,,
2,1,,172111-16890,,"GROMMET  9",1,,,1,,,,,,,,,,,,,
3,1,,172614-45170,,"SPRING 12",1,,,1,,,,,,,,,,,,,
4,1,,172122-62100,,"FLOOR FLOAT",1,,,1,,,,,,,,,,,,,
5,1,,172122-62200,,"STEP (A), FRONT",1,,,1,,,,,,,,,,,,,
6,1,,172122-62250,,"STEP (B), FRONT",1,,,1,,,,,,,,,,,,,
7,1,,172122-62290,,"STEP (C), FRONT",1,,,1,,,,,,,,,,,,,
8,1,,172122-62330,,"STEP, CENTER",1,,,,,,,,,,,,,,,,,
9,1,,172130-62360,,"REAR STEP",1,,,1,,,,,,,,,,,,,
10,1,,172122-62470,,"GUARD, PEDAL",1,,,1,,,,,,,,,,,,,
10-1,1,,172122-62471,,"GUARD, PEDAL",1,,,1,,,S,,,M00559,,,,,,M00559,,
11,1,,172122-62600,,"RIB, FLOOR",1,,,1,,,,,,,,,,,,,
12,1,,172122-69740,,"PAD,RUBBER",8,,,8,,,,,,,,,,,,,
12-1,1,,172112-69740,,"RUBBER, CUSHION",8,,,8,,,N,,,M00501,,,,,,M00501,,
13,1,,172122-69790,,"SHIM(B), DOOR CATCH",2,,,2,,,,,,,,,,,,,
13-1,1,,172112-69790,,"PLUG 32X2",2,,,2,,,N,,,M00501,,,,,,M00501,,
14,1,,172112-69910,,"BOLT M16X105",4,,,4,,,,,,,,,,,,,
15,1,,22117-100000,,"WASHER 10",2,,,2,,,,,,,,,,,,,
16,1,,22417-250200,,"COTTER PIN 2.5X20",1,,,1,,,,,,,,,,,,,
17,1,,22417-400250,,"COTTER PIN 4.0X25",4,,,4,,,,,,,,,,,,,
18,1,,26013-100202,,"BOLT W/WASHER M10X20",5,,,5,,,,,,,,,,,,,
19,1,,26013-100202,,"BOLT W/WASHER M10X20",6,,,6,,,,,,,,,,,,,
20,1,,26013-100202,,"BOLT W/WASHER M10X20",2,,,2,,,,,,,,,,,,,
21,1,,26013-100202,,"BOLT W/WASHER M10X20",2,,,2,,,,,,,,,,,,,
22,1,,26116-100502,,"BOLT M10X 50 PLATED",1,,,1,,,,,,,,,,,,,
23,1,,26837-160002,,"CASTLE NUT M16",4,,,4,,,,,,,,,,,,,
24,1,,933155-11490,,"WASHER 17X50, PIN",4,,,4,,,,,,,,,,,,,
25,1,,933168-56000,,"GROMMET 17X19",1,,,1,,,,,,,,,,,,,
26,1,,933171-18390,,"PIN, FOOT BAR",1,,,1,,,,,,,,,,,,,
27,1,,26013-100202,,"BOLT W/WASHER M10X20",4,,,4,,,,,,,,,,,,,
28,1,,172130-62100,,"RUBBER, PROTECTER",,,,1,,,W,,,,,,,,,M00546,,
29,1,,172135-62110,,"RUBBER, PROTECT. PAD",,,,1,,,W,,,,,,,,,M00546,,
30,1,,172135-62120,,"RUBBER, PROTECT.STAY",,,,1,,,W,,,,,,,,,M00546,,
31,1,,172122-62330,,"STEP, CENTER",,,,1,,,,,,,,,,,,,
31-1,1,,172122-64590,,"STEP, CENTER",,,,1,,,N,,,,,,,,,M20501,,
32,1,,26022-060162,,"SCREW M 6X 16",,,,3,,,W,,,,,,,,,M00546,,
```

https://truckmanualshub.com/

Fig. 36 ステップ & センカイロック STEP & TURNING LOCK

D 72122-58800
D 72130-62101
(D 72130-62100)
D 72130-62111
D 72130-62140
(D 72312-65100)
(D 72312-65110)
(D 72135-68100)

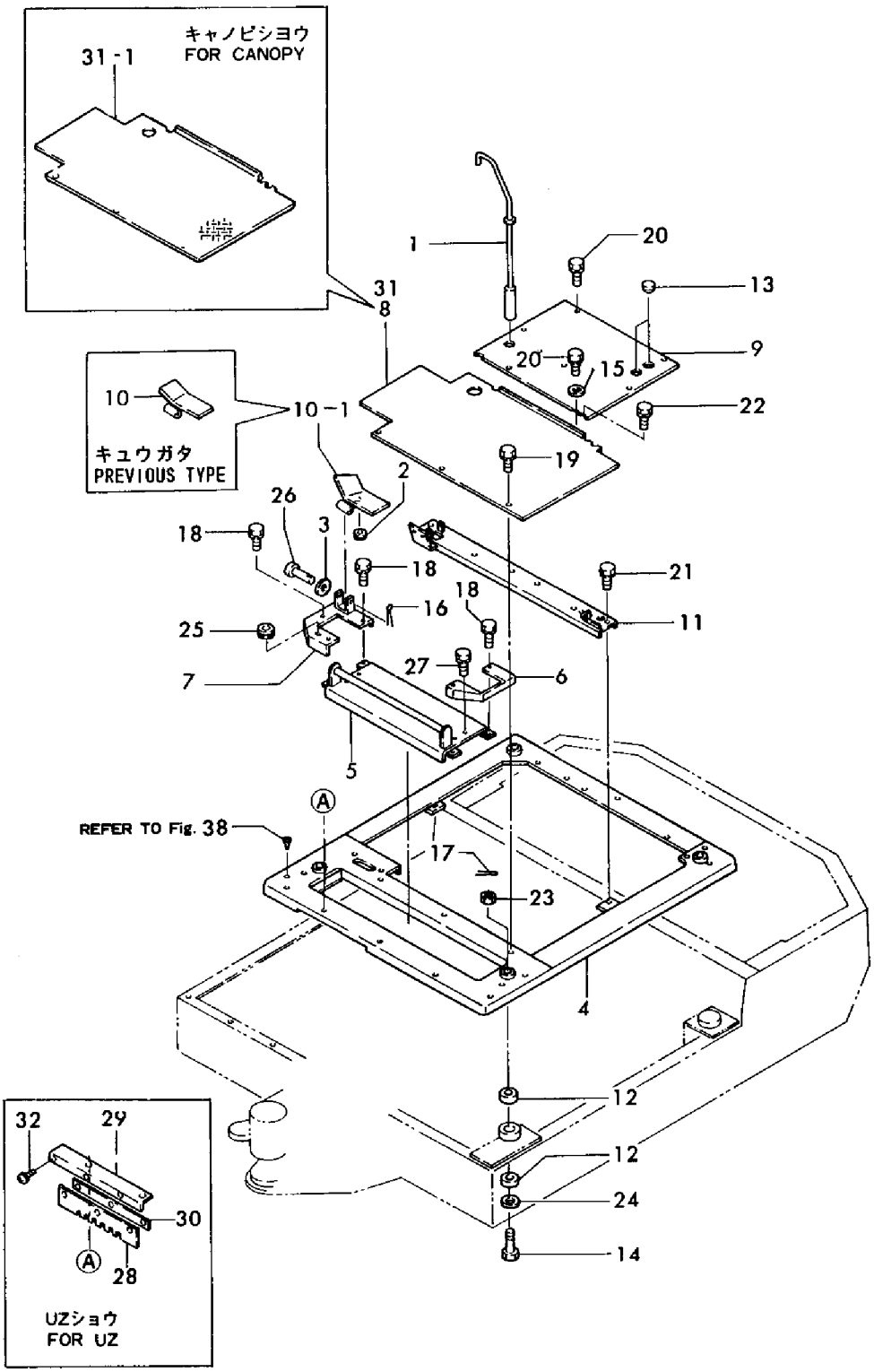

https://truckmanualshub.com/

```
1,1,,172122-62700,,"MAT, FLOOR",1,,,,,,,,,,,,,,,,
1-1,1,,172122-62701,,"MAT, FLOOR",1,,,,,,N,,,*1986.04,,,,,,,,
1-3,1,,172134-62700,,"MAT, FLOOR",1,,,,,,S,1,,M20501,,,,,,,,
2,1,,172122-62710,,"MAT, FLOOR",,,,1,,,Z,,,,,,,,,*1987.02,,
3,1,,172116-64100,,"SEAT, OPERATOR",1,,,,,,,,,,,,,,,,,
3-1,1,,172116-64101,,"SEAT ASSY",1,,,,,,N,,,*1989.03,,,,,,,,
4,2,,172116-64140,,"SLIDER R",1,,,,,,,,,,,,,,,,,
5,2,,172116-64180,,"BACK(A), SEAT",1,,,,,,,,,,,,,,,,,
5-1,2,,172116-64181,,"BACK(A), SEAT",1,,,,,,N,,,*1989.03,,,,,,,,
6,2,,172116-64190,,"SLIDER L",1,,,,,,,,,,,,,,,,,
7,2,,172116-64210,,"CUSHION, SEAT B",1,,,,,,,,,,,,,,,,,
7-1,2,,172116-64211,,"CUSHION, SEAT B",1,,,,,,N,,,*1989.03,,,,,,,,
8,2,,26013-060162,,"BOLT M 6X 16",4,,,,,,,,,,,,,,,,,
9,2,,26022-080162,,"SCREW M 8X 16",4,,,,,,,,,,,,,,,,,
10,1,,172116-64120,,"SEAT, OPERATOR",,,,1,,,,,,,,,,,,,
10-1,1,,172116-64121,,"SEAT, OPERATOR",,,,1,,,N,,,,,,,,,M20501,,
10-2,1,,172116-64122,,"SEAT, OPERATOR",,,,1,,,N,,,,,,,,,*1989.03,,
11,2,,172116-64130,,"ARM REST",,,,1,,,,,,,,,,,,,
12,2,,172116-64140,,"SLIDER R",,,,1,,,,,,,,,,,,,
13,2,,172116-64150,,"MAT, FLOOR",,,,1,,,,,,,,,,,,,
13-1,2,,172116-64220,,"CUSHION, SEAT A",,,,1,,,N,,,,,,,,,*1989.03,,
13-2,2,,172116-64221,,"CUSHION, SEAT A",,,,1,,,N,,,,,,,,,*1989.10,,
14,2,,172116-64180,,"BACK(A), SEAT",,,,1,,,,,,,,,,,,,
14-1,2,,172116-64181,,"BACK(A), SEAT",,,,1,,,N,,,,,,,,,*1989.03,,
15,2,,172116-64190,,"SLIDER L",,,,1,,,,,,,,,,,,,
16,2,,26013-060162,,"BOLT M 6X 16",,,,4,,,,,,,,,,,,,
17,2,,26022-080162,,"SCREW M 8X 16",,,,4,,,,,,,,,,,,,
18,2,,22137-060000,,"WASHER 6, POLISHED",,,,2,,,,,,,,,,,,,
19,2,,22217-060000,,"SPRING WASHER  6",,,,2,,,,,,,,,,,,,
20,2,,26716-060002,,"NUT M 6",,,,2,,,,,,,,,,,,,
20-1,2,,26712-060002,,"NUT M 6",,,,2,,,N,,,,,,,,,MXXX,,
21,1,,172116-64160,,"MOUNT, SEAT",1,,,1,,,,,,,,,,,,,
22,1,,22137-080000,,"WASHER 8, POLISHED",4,,,4,,,,,,,,,,,,,
23,1,,22137-100000,,"WASHER 10,POLISHED",4,,,4,,,,,,,,,,,,,
24,1,,22217-080000,,"SPRING WASHER  8",4,,,4,,,,,,,,,,,,,
25,1,,26013-100252,,"BOLT W/WASHER M10X25",4,,,4,,,,,,,,,,,,,,
26,1,,26717-080002,,"NUT M 8",4,,,4,,,,,,,,,,,,,
```

https://truckmanualshub.com/

Fig. 37 シート SEAT

D 72122-64200
D 72122-64210

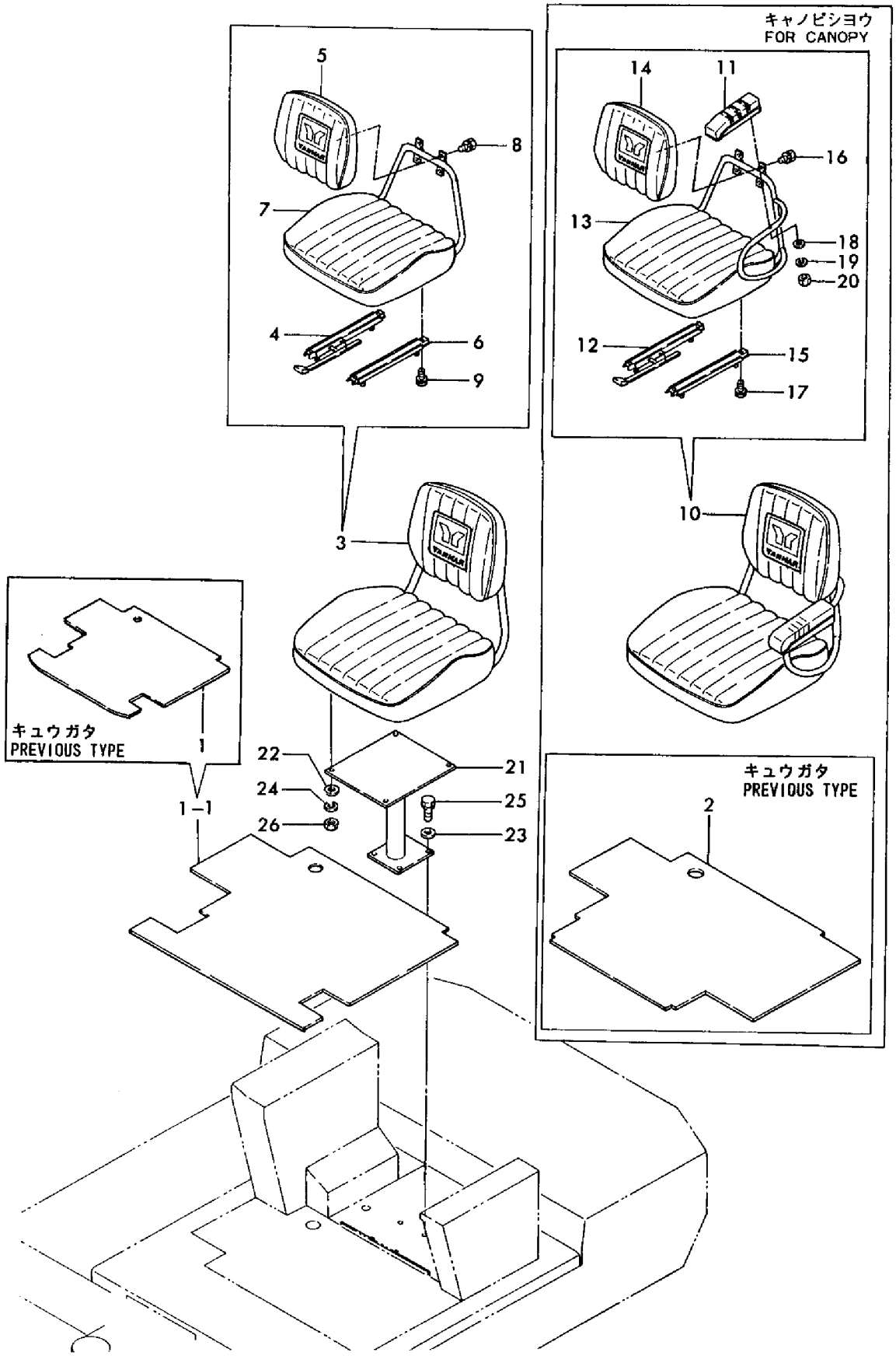

https://truckmanualshub.com/

```
1,1,,194145-62560,,"RUBBER,CUSHION",2,,,,,,,,,,,,,,,,
1-1,1,,172137-65700,,"RUBBER, CUSHION",4,,,,,,S,,,M00559,,,,,,,,
2,1,,172312-65101,,BONNET,1,,,,,,,,,,,,,,,,
2-1,1,,172312-65102,,"BONNET ASSY",1,,,,,,S,,,M00559,,,,,,,,
3,1,,172734-65260,,"PIN, BONNET LEVER",2,,,,,,,,,,,,,,,,
4,1,,172734-65270,,"SPRING, CATCH",2,,,,,,,,,,,,,,,,
5,1,,172312-65390,,"SPRING, GAS",1,,,,,,,,,,,,,,,,
6,1,,172312-65400,,"COVER (A), BONNET",1,,,,,,,,,,,,,,,,
6-1,1,,172312-65401,,"COVER (A), BONNET",1,,,,,,S,,,M00559,,,,,,,,
7,1,,172124-65450,,"LEVER, LOCK",2,,,,,,,,,,,,,,,,
8,1,,172124-65480,,CATCHER,2,,,,,,,,,,,,,,,,
9,1,,172124-65490,,"PLATE,CATCH",2,,,,,,,,,,,,,,,,
10,1,,172112-65501,,"PIPE,EXH.EXTENSION",1,,,,,,,,,,,,,,,,
11,1,,172124-65500,,"SHIM (T=0.8)",2,,,,,,,1,,,,,,,,,
12,1,,172124-65510,,"SHIM (T=1.0)",2,,,,,,,1,,,,,,,,,
13,1,,172124-65520,,"SHIM (T=1.6)",2,,,,,,,1,,,,,,,,,
14,1,,172122-65760,,"SHIM(A),BONNET COVER",2,,,,,,,,,,,,,,,,
15,1,,172122-65770,,"SHIM(B),BONNET COVER",2,,,,,,,,,,,,,,,,
16,1,,172312-65800,,PLATE(C),2,,,,,,,,,,,,,,,,
17,1,,172312-65810,,PLATE(D),1,,,,,,,,,,,,,,,,
18,1,,172312-65820,,"RUBBER (A)",1,,,,,,,,,,,,,,,,
19,1,,172312-65830,,"RUBBER (B)",1,,,,,,,,,,,,,,,,
20,1,,172312-65850,,"RUBBER (D)",1,,,,,,,,,,,,,,,,
21,1,,172312-65860,,"RUBBER (E)",1,,,,,,,,,,,,,,,,
22,1,,22137-100000,,"WASHER 10,POLISHED",4,,,,,,,,,,,,,,,,
23,1,,22417-200200,,"COTTER PIN 2.0X20",4,,,,,,,,,,,,,,,,
24,1,,26013-060162,,"BOLT M 6X 16",4,,,,,,,,,,,,,,,,
25,1,,26013-080162,,"BOLT W/WASHER M8X16",2,,,,,,,,,,,,,,,,
26,1,,26013-080162,,"BOLT W/WASHER M8X16",6,,,,,,,,,,,,,,,,
27,1,,26013-080202,,"BOLT W/WASHER M8X20",4,,,,,,,,,,,,,,,,
28,1,,26013-100202,,"BOLT W/WASHER M10X20",4,,,,,,,,,,,,,,,,
29,1,,26013-100252,,"BOLT W/WASHER M10X25",4,,,,,,,,,,,,,,,,
30,1,,26013-100302,,"BOLT M10X 30",6,,,,,,,,,,,,,,,,
31,1,,22137-100000,,"WASHER 10,POLISHED",6,,,,,,,,,,,,,,,,
31-1,1,,194145-04810,,"WASHER 10",6,,,,,,N,,,*1987.03,,,,,,,,
32,1,,172122-17190,,CLIP,3,,,,,,,,,,,,,,,,
33,1,,22137-080000,,"WASHER 8, POLISHED",4,,,,,,W,,,M00501,,,,,,,,
```

https://truckmanualshub.com/

Fig. 38 ボンネット(キャビン) BONNET (CABIN)

(D 72312-65100)
D 72312-65101

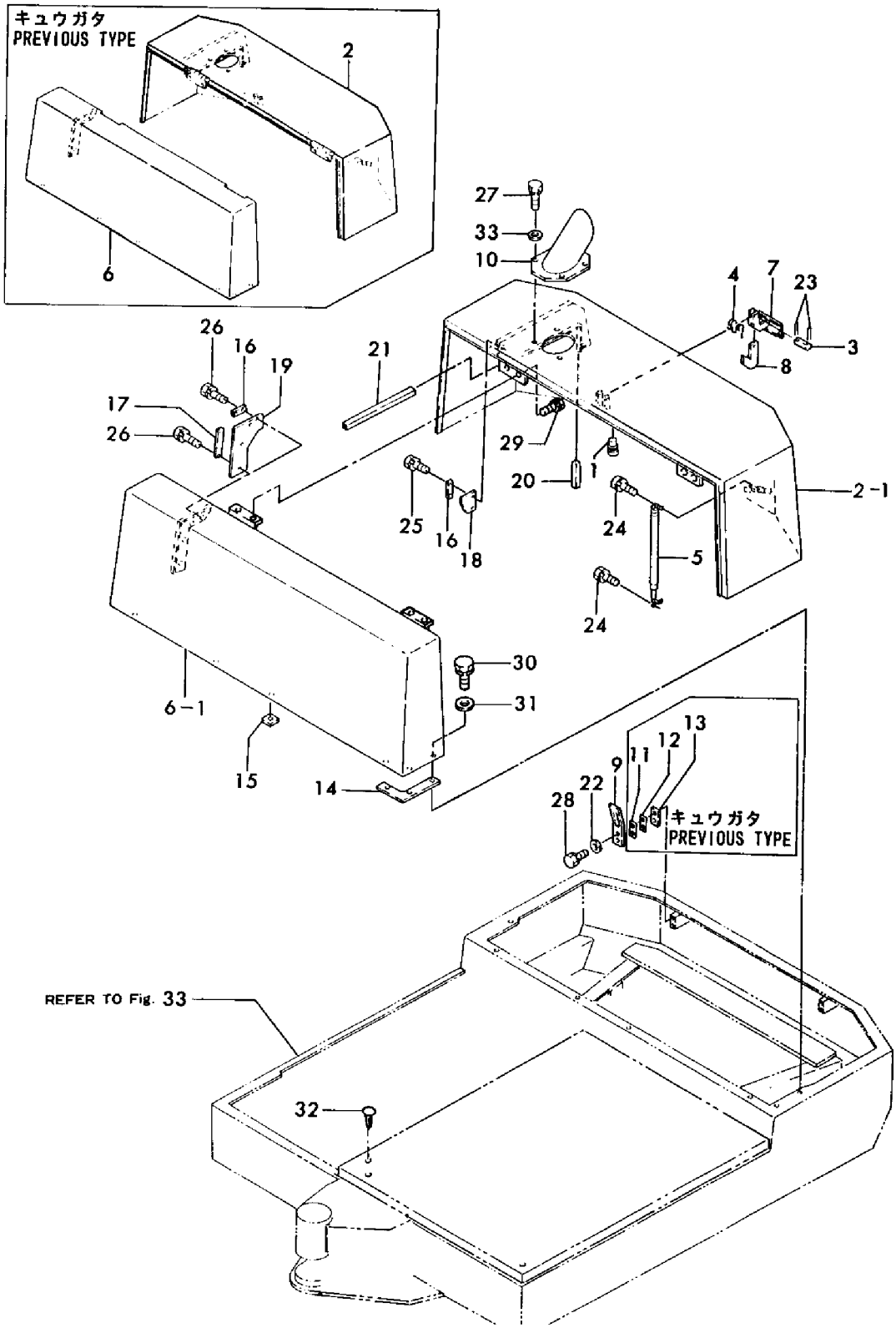

https://truckmanualshub.com/

```
1,1,,194145-61560,,"RUBBER, CUSHION",,,,2,,,,,,,,,,,,,
1-1,1,,172137-65700,,"RUBBER, CUSHION",,,,4,,,S,,,,,,,,,M00559,,
2,1,,172312-65101,,BONNET,,,,1,,,,,,,,,,,,,
2-1,1,,172312-65102,,"BONNET ASSY",,,,1,,,S,,,,,,,,,M00559,,
3,1,,172734-65260,,"PIN, BONNET LEVER",,,,2,,,,,,,,,,,,,
4,1,,172734-65270,,"SPRING, CATCH",,,,2,,,,,,,,,,,,,
5,1,,172312-65390,,"SPRING, GAS",,,,1,,,,,,,,,,,,,
6,1,,172124-65450,,"LEVER, LOCK",,,,2,,,,,,,,,,,,,
7,1,,172124-65480,,CATCHER,,,,2,,,,,,,,,,,,,
8,1,,172124-65490,,"PLATE,CATCH",,,,2,,,,,,,,,,,,,
9,1,,172112-65501,,"PIPE,EXH.EXTENSION",,,,1,,,,,,,,,,,,,
10,1,,172124-65500,,"SHIM (T=0.8)",,,,2,,,,1,,,,,,,,,
11,1,,172124-65510,,"SHIM (T=1.0)",,,,2,,,,1,,,,,,,,,
12,1,,172124-65520,,"SHIM (T=1.6)",,,,2,,,,1,,,,,,,,,
13,1,,172312-65601,,"COVER (B), BONNET",,,,1,,,,,,,,,,,,,
13-1,1,,172312-65602,,"COVER (B), BONNET",,,,1,,,S,,,,,,,,,M00559,,
14,1,,172122-65760,,"SHIM(A),BONNET COVER",,,,2,,,,,,,,,,,,,
15,1,,172122-65770,,"SHIM(B),BONNET COVER",,,,2,,,,,,,,,,,,,
16,1,,172312-65800,,PLATE(C),,,,2,,,,,,,,,,,,,
17,1,,172312-65810,,PLATE(D),,,,1,,,,,,,,,,,,,
18,1,,172312-65820,,"RUBBER (A)",,,,1,,,,,,,,,,,,,
19,1,,172124-65830,,"SUPPORT,FRONT COVER",,,,1,,,,,,,,,,,,,
20,1,,172312-65840,,"RUBBER (C)",,,,1,,,,,,,,,,,,,
21,1,,172312-65850,,"RUBBER (D)",,,,1,,,,,,,,,,,,,
22,1,,172312-65860,,"RUBBER (E)",,,,1,,,,,,,,,,,,,
23,1,,22137-100000,,"WASHER 10,POLISHED",,,,4,,,,,,,,,,,,,
24,1,,22417-200200,,"COTTER PIN 2.0X20",,,,4,,,,,,,,,,,,,
25,1,,26013-060162,,"BOLT M 6X 16",,,,4,,,,,,,,,,,,,
26,1,,26013-080162,,"BOLT W/WASHER M8X16",,,,2,,,,,,,,,,,,,
27,1,,26013-080162,,"BOLT W/WASHER M8X16",,,,6,,,,,,,,,,,,,
28,1,,26013-080202,,"BOLT W/WASHER M8X20",,,,4,,,,,,,,,,,,,
29,1,,26013-100202,,"BOLT W/WASHER M10X20",,,,4,,,,,,,,,,,,,
30,1,,26013-100252,,"BOLT W/WASHER M10X25",,,,4,,,,,,,,,,,,,
31,1,,26013-100302,,"BOLT M10X 30",,,,2,,,,,,,,,,,,,
32,1,,22137-100000,,"WASHER 10,POLISHED",,,,6,,,,,,,,,,,,,
32-1,1,,194145-04810,,"WASHER 10",,,,8,,,N,,,,,,,,,*1987.03,,
33,1,,26013-100252,,"BOLT W/WASHER M10X25",,,,4,,,,,,,,,,,,,
34,1,,172122-17190,,CLIP,,,,11,,,,,,,,,,,,,
35,1,,22137-080000,,"WASHER 8, POLISHED",,,,4,,,W,,,,,,,,,M00501,,
36,1,,22137-100000,,"WASHER 10,POLISHED",,,,4,,,W,,,,,,,,,M00501,,
37,1,,26013-100352,,"BOLT M10X 35",,,,6,,,W,,,,,,,,,M00501,,
```

https://truckmanualshub.com/

Fig. 39 ボンネット(キャノピ) BONNET (CANOPY)

(D 72312-65110)
D 72312-65111

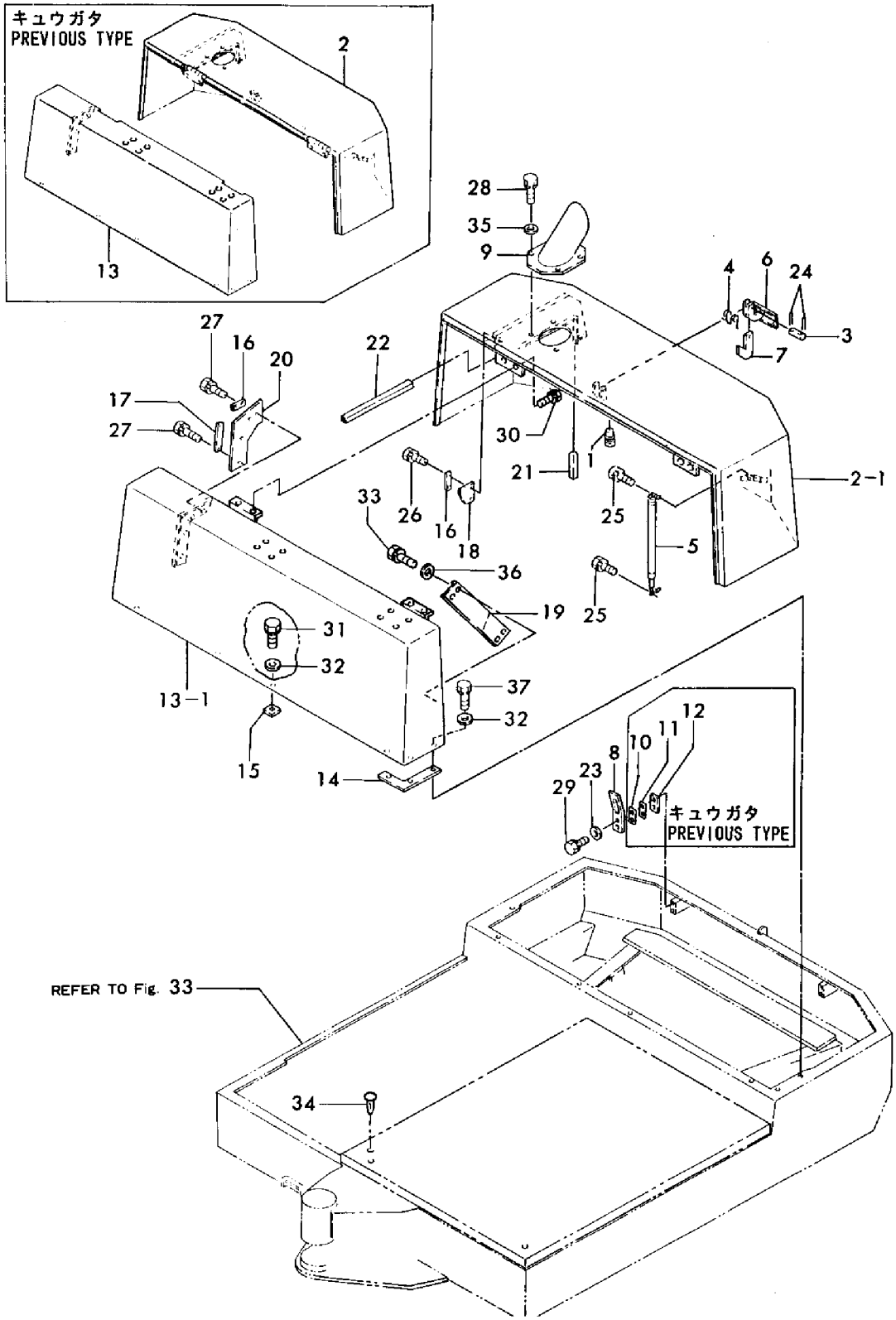

https://truckmanualshub.com/

```
1,1,,772122-68101,,"CANOPY ASSY",,,,1,,,,,,,,,,,,,
2,2,,172122-68101,,"COLUMN(L),CANOPY",,,,1,,,,,,,,,,,,,
3,2,,172122-68151,,"PROP (R), CANOPY",,,,1,,,,,,,,,,,,,
4,2,,172122-68201,,"HOOD ASSY",,,,1,,,,,,,,,,,,,
4-1,2,,172122-68202,,"HOOD ASSY",,,,1,,,R,,,,,,,,,*1985.05,,
4-2,2,,172122-68203,,"HOOD ASSY",,,,1,,,N,,,,,,,,,*1986.03,,
5,3,,172122-68211,,HOOD,,,,1,,,,,,,,,,,,,
5-1,3,,172122-68212,,HOOD,,,,1,,,N,,,,,,,,,*1986.03,,
6,3,,172122-68221,,ROPE(A),,,,1,,,,,,,,,,,,,
7,3,,172122-68230,,"ROPE (B)",,,,2,,,,,,,,,,,,,
8,2,,172122-68302,,"ROOF ASSY, CANOPY",,,,1,,,,,,,,,,,,,
9-1,2,,22137-120000,,"WASHER 12,POLISHED",,,,12,,,,1,,,,,,,,,,
10,2,,26013-120252,,"BOLT M12X 25",,,,6,,,,,,,,,,,,,
11,2,,26716-120002,,"NUT M12",,,,6,,,,,,,,,,,,,
12,1,,172122-68250,,"CANOPY (F)",,,,1,,,,,,,,,,,,,
13,1,,22137-100000,,"WASHER 10,POLISHED",,,,4,,,,,,,,,,,,,
14,1,,26013-100252,,"BOLT W/WASHER M10X25",,,,4,,,,,,,,,,,,,
15,1,,26013-100252,,"BOLT W/WASHER M10X25",,,,4,,,,,,,,,,,,,
16,1,,26013-120302,,"BOLT W/WASHER M12X30",,,,8,,,,,,,,,,,,,
17,1,,172135-68220,,"COVER, FRONT",,,,1,,,,,,,,,,,,,
18,1,,172135-68250,,"RUBBER, COVER",,,,1,,,,,,,,,,,,,
19,1,,22137-100000,,"WASHER 10,POLISHED",,,,4,,,,,,,,,,,,,
```

https://truckmanualshub.com/

Fig. 40 キャノピ(U)(キュウガタ) CANOPY (U) (PREVIOS TYPE)

D 72122-68100

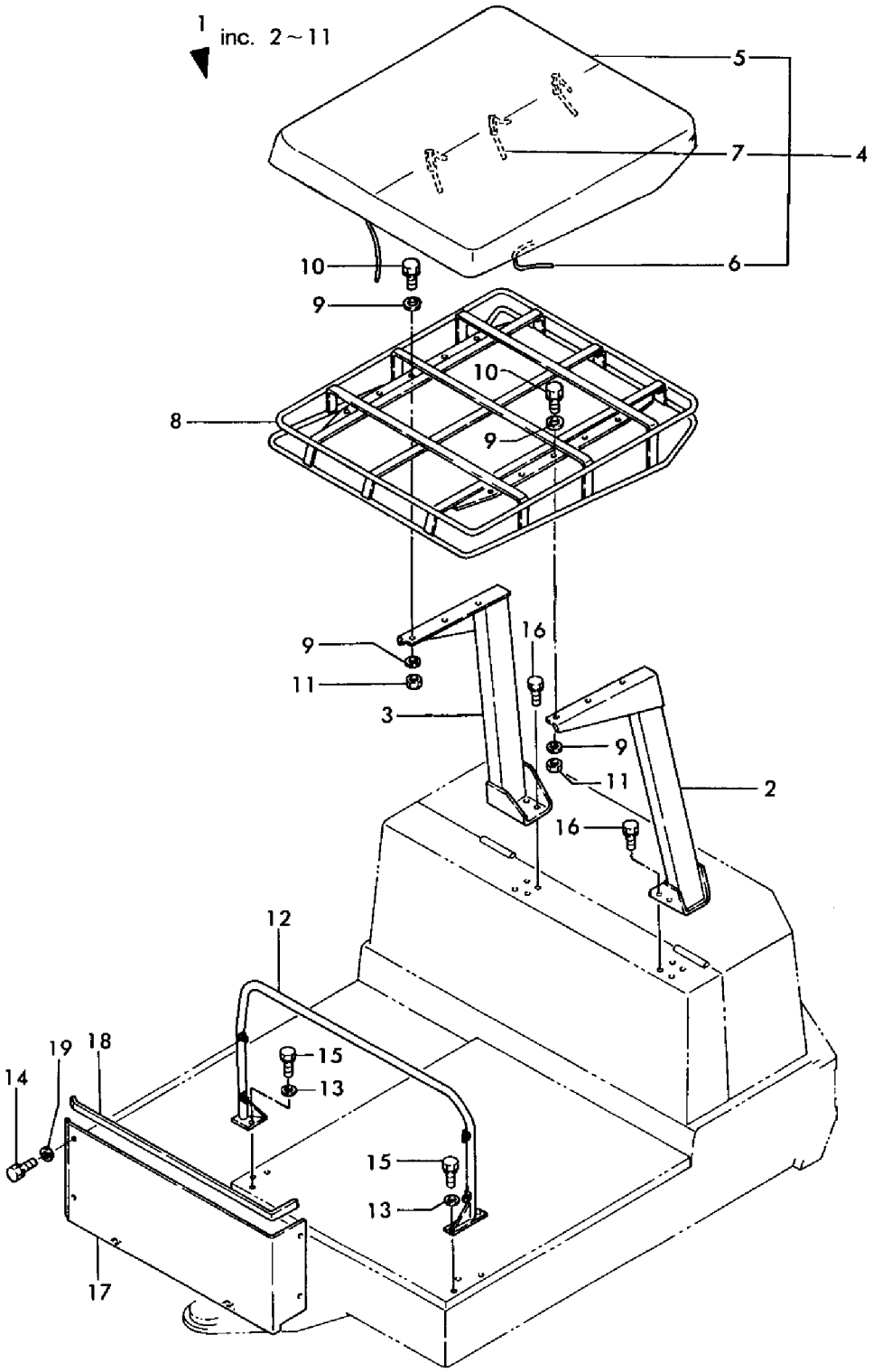

```
1,1,,772130-68110,,"CANOPY ASSY",,,,1,,,,,,,,,,,,,
2,2,,172122-68101,,"COLUMN(L),CANOPY",,,,1,,,,,,,,,,,,,
3,2,,172122-68151,,"PROP (R), CANOPY",,,,1,,,,,,,,,,,,,
4,2,,172122-68202,,"HOOD ASSY",,,,1,,,,,,,,,,,,,
5,3,,172122-68211,,HOOD,,,,1,,,,,,,,,,,,,
6,3,,172122-68221,,ROPE(A),,,,1,,,,,,,,,,,,,
7,3,,172122-68230,,"ROPE (B)",,,,2,,,,,,,,,,,,,
8,2,,172122-68302,,"ROOF ASSY, CANOPY",,,,1,,,,,,,,,,,,,
9,2,,26716-120002,,"NUT M12",,,,6,,,,,,,,,,,,,
10,2,,22137-100000,,"WASHER 10,POLISHED",,,,12,,,,,,,,,,,,,
11,2,,26013-120252,,"BOLT M12X 25",,,,6,,,,,,,,,,,,,
12,2,,26013-120302,,"BOLT W/WASHER M12X30",,,,8,,,,,,,,,,,,,
13,1,,172135-68202,,"CANOPY (F)",,,,1,,,,,,,,,,,,,
14,1,,22137-100000,,"WASHER 10,POLISHED",,,,7,,,,,,,,,,,,,
15,1,,22137-100000,,"WASHER 10,POLISHED",,,,4,,,,,,,,,,,,,
16,1,,172135-68222,,"COVER, FRONT",,,,1,,,,,,,,,,,,,
17,1,,26013-100252,,"BOLT W/WASHER M10X25",,,,7,,,,,,,,,,,,,
18,1,,26013-100202,,"BOLT W/WASHER M10X20",,,,4,,,,,,,,,,,,,
```

https://truckmanualshub.com/

Fig. 41 キャノピ(UZ)(キュウガタ) CANOPY (UZ)(PREVIOS TYPE)

D72135-68100

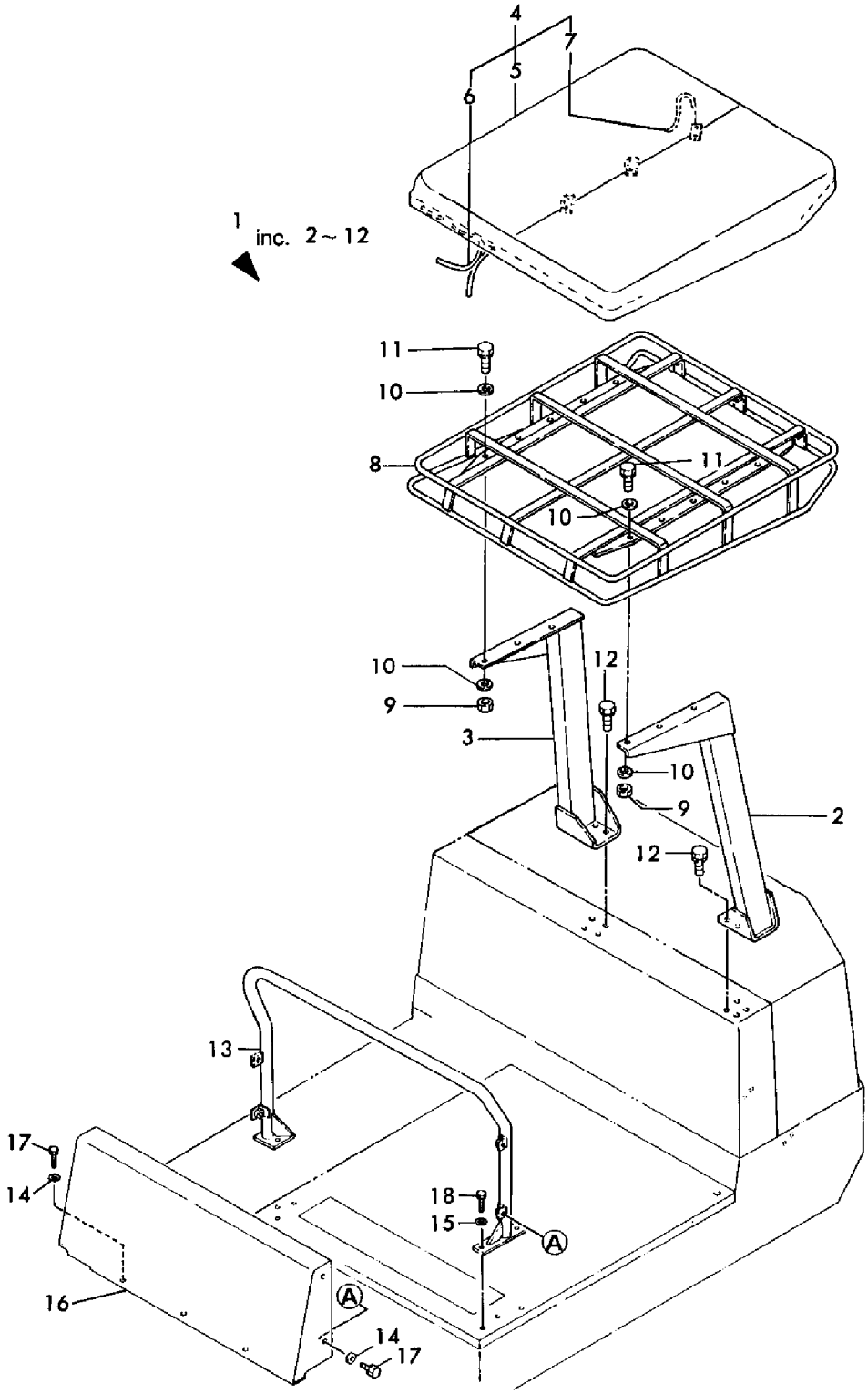

https://truckmanualshub.com/

```
1,1,,772130-68101,,"CANOPY ASSY",,,,1,,,,,,,,,,,,,
1-1,1,,772130-68102,,"CANOPY ASSY",,,,1,,,N,,,,,,,,,*1987.11,,
2,2,,172122-68102,,"COLUMN(L), CANOPY",,,,1,,,,,,,,,,,,,
2-1,2,,172122-68103,,"COLUMN(L), CANOPY",,,,1,,,F,1,,,,,,,,*1987.11,,
3,2,,172122-68152,,"COLUMN(R), CANOPY",,,,1,,,,,,,,,,,,,
3-1,2,,172122-68153,,"COLUMN(R), CANOPY",,,,1,,,S,1,,,,,,,,*1987.11,,
4,2,,172134-68200,,"ROOF, CANOPY",,,,1,,,,,,,,,,,,,
5,2,,26013-120252,,"BOLT M12X 25",,,,6,,,,,,,,,,,,,
6,2,,26013-120302,,"BOLT W/WASHER M12X30",,,,8,,,,,,,,,,,,,
7-1,2,,22137-120000,,"WASHER 12,POLISHED",,,,6,,,,2,,,,,,,,,
8,2,,194630-62360,,GROMMET,,,,2,,,W,,,,,,,,,*1987.11,,
9,1,,172135-68202,,"CANOPY (F)",,,,1,,,,,,,,,,,,,
10,1,,172135-68222,,"COVER, FRONT",,,,1,,,,,,,,,,,,,
11,1,,22137-100000,,"WASHER 10,POLISHED",,,,7,,,,,,,,,,,,,
12,1,,22137-100000,,"WASHER 10,POLISHED",,,,4,,,,,,,,,,,,,
13,1,,26013-100202,,"BOLT W/WASHER M10X20",,,,4,,,,,,,,,,,,,
14,1,,26013-100252,,"BOLT W/WASHER M10X25",,,,7,,,,,,,,,,,,,
15,1,,172122-17190,,CLIP,,,,10,,,W,,,,,,,,,"FROM 1ST",,
```

https://truckmanualshub.com/

Fig. 42 キャノピ(シンガタ) CANOPY (NEW TYPE)

D 72130-68100

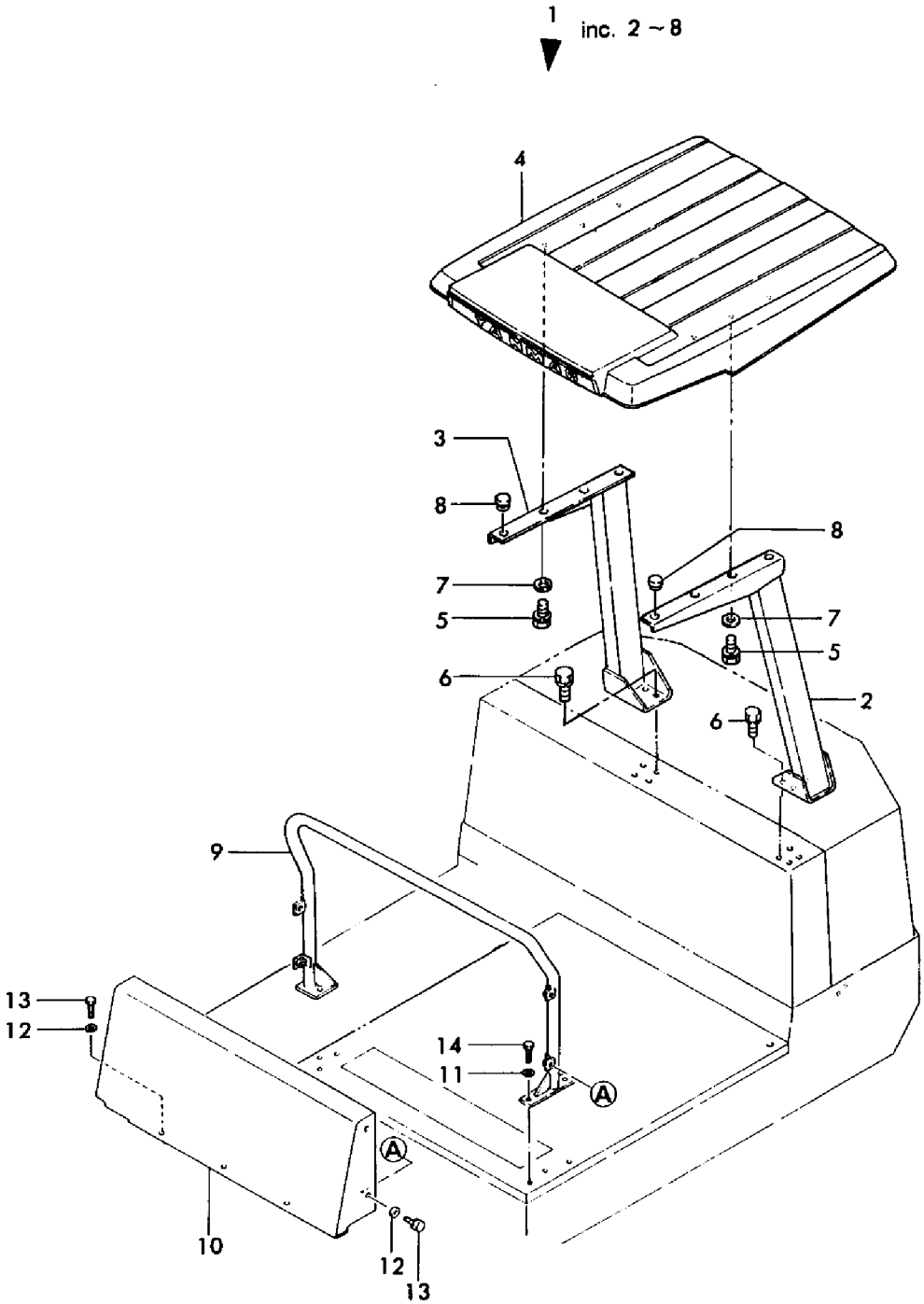

https://truckmanualshub.com/

```
1,1,,772122-68000,,"CABIN ASSY.",1,,,,,,,,,,,,,,,,
2,2,,172111-16890,,"GROMMET  9",1,,,,,,,,,,,,,,,,
3,2,,194150-24270,,"SCREW CAP 13",2,,,,,,,,,,,,,,,,
4,2,,172730-27220,,"SPRING 2X12X25",2,,,,,,,,,,,,,,,,
5,2,,172112-41960,,"PIN 8X25.5",4,,,,,,,,,,,,,,,,
6,2,,172122-68400,,CABIN,1,,,,,,,,,,,,,,,,
7,2,,172119-68590,,"RACK, HAT",1,,,,,,,,,,,,,,,,
8,2,,172122-69400,,"DOOR, ROOF",1,,,,,,,,,,,,,,,,
9,2,,172122-69460,,"ARM, ROOF DOOR",4,,,,,,,,,,,,,,,,
10,2,,172122-69500,,"GLASS, FRONT",1,,,,,,,,,,,,,,,,
11,2,,172122-69521,,"PLATE, STOPPER",4,,,,,,,,,,,,,,,,
12,2,,172122-69540,,"GLASS, REAR",1,,,,,,,,,,,,,,,,
13,2,,172122-69560,,"WINDOW (R), SASH",1,,,,,,,,,,,,,,,,
14,3,,172122-69350,,"LOCK, WINDOW",2,,,,,,,,,,,,,,,,
15,3,,172122-69360,,"HOLDER(F), LOCK",1,,,,,,,,,,,,,,,,
16,3,,172122-69370,,"HOLDER(R), LOCK",1,,,,,,,,,,,,,,,,
17,3,,172122-69570,,"GLASS (F), RIGHT",1,,,,,,,,,,,,,,,,
18,3,,172122-69580,,"GLASS (RE), RIGHT",1,,,,,,,,,,,,,,,,
19,2,,172117-69600,,"RUBBER, CUSHION",1,,,,,,,,,,,,,,,,
20,2,,172122-69600,,"SHAFT (B), ROOF DOOR",2,,,,,,,,,,,,,,,,
21,2,,172122-69630,,RUBBER,1,,,,,,,,,,,,,,,,
22,2,,172122-69640,,RUBBER,1,,,,,,,,,,,,,,,,
23,2,,172122-69650,,"SEAL, DOOR",1,,,,,,,,,,,,,,,,
24,2,,172122-69660,,"RUBBER, ROOF PANEL",1,,,,,,,,,,,,,,,,
25,2,,172122-69730,,RUBBER,1,,,,,,,,,,,,,,,,
26,2,,172122-69800,,"PANEL, SIDE",1,,,,,,,,,,,,,,,,
27,2,,172122-69810,,"PANEL, REAR",1,,,,,,,,,,,,,,,,
28,2,,172122-69830,,"PANEL (A), ROOF",1,,,,,,,,,,,,,,,,
29,2,,172122-69840,,"PANEL (B), ROOF",2,,,,,,,,,,,,,,,,
30,2,,172122-69850,,"PLATE (A), KEEP",2,,,,,,,,,,,,,,,,
31,2,,172122-69860,,"PLATE (B), KEEP",2,,,,,,,,,,,,,,,,
32,2,,172122-69870,,"PLATE (C), KEEP",2,,,,,,,,,,,,,,,,
33,2,,172122-69880,,"CLIP, TRIM",18,,,,,,,,,,,,,,,,
34,2,,172122-69930,,"RUBBER, CUSHION",1,,,,,,,,,,,,,,,,
35,2,,172122-69940,,"RUBBER, CUSHION",1,,,,,,,,,,,,,,,,
36,2,,22417-200200,,"COTTER PIN 2.0X20",8,,,,,,,,,,,,,,,,
37,2,,22857-400100,,"SCREW 4X10",14,,,,,,,,,,,,,,,,
38,2,,26013-100202,,"BOLT W/WASHER M10X20",11,,,,,,,,,,,,,,,,
39,2,,26013-100202,,"BOLT W/WASHER M10X20",6,,,,,,,,,,,,,,,,
40,2,,26013-100202,,"BOLT W/WASHER M10X20",8,,,,,,,,,,,,,,,,
41,2,,26022-060252,,"SCREW M 6X 25",1,,,,,,,,,,,,,,,,
42,2,,26567-040102,,"SCREW M 4X 10",4,,,,,,,,,,,,,,,,
43,2,,933110-53100,,"PIN 8X41.5",4,,,,,,,,,,,,,,,,
44,1,,772122-69000,,"SIDE DOOR ASSY",1,,,,,,,,,,,,,,,,
45,2,,172122-69100,,"DOOR ASSY, SIDE",1,,,,,,,,,,,,,,,,
46,3,,172122-69250,,HINGE,2,,,,,,,,,,,,,,,,
47,4,,172122-69380,,HINGE,2,,,,,,,,,,,,,,,,
48,4,,172122-69390,,HINGE,2,,,,,,,,,,,,,,,,
50,2,,172112-69300,,"GROMMET 22X2",1,,,,,,,,,,,,,,,,
51,2,,172122-69300,,"UNDAR COVER",1,,,,,,,,,,,,,,,,
52,2,,172122-69510,,"GLASS, SIDE DOOR",1,,,,,,,,,,,,,,,,
53,2,,172122-69610,,"OUTER HANDLE",1,,,,,,,,,,,,,,,,
54,2,,172122-69620,,"KNOB, DOOR",1,,,,,,,,,,,,,,,,
55,2,,172122-69670,,CHANNEL,1,,,,,,,,,,,,,,,,
56,2,,172122-69680,,REGULATOR,1,,,,,,,,,,,,,,,,
57,2,,172122-69690,,"HANDLE, REGULATOR",1,,,,,,,,,,,,,,,,
58,2,,172122-69700,,"PAD, DOOR GLASS",1,,,,,,,,,,,,,,,,
59,2,,172122-69710,,"CHANNEL, DOOR GLASS",1,,,,,,,,,,,,,,,,
60,2,,172122-69720,,"LOCK(R), DOOR",1,,,,,,,,,,,,,,,,
61,2,,172122-69750,,"CATCH, DOOR",1,,,,,,,,,,,,,,,,
62,3,,172122-69280,,"SPACER, CATCH-MALE",1,,,,,,,,,,,,,,,,
63,3,,172117-69640,,CATCH-FEMALE,1,,,,,,,,,,,,,,,,
64,3,,172117-69650,,GASKET,1,,,,,,,,,,,,,,,,
```

https://truckmanualshub.com/

```
65,3,,172117-69660,,CUSHION,1,,,,,,,,,,,,,,,
66,3,,172117-69690,,"CAP, KNOB",1,,,,,,,,,,,,,,,
67,3,,172122-69760,,CATCH-MALE,1,,,,,,,,,,,,,,,
68,3,,22217-050000,,"SPRING WASHER  5",3,,,,,,,,,,,,,,,
69,3,,26557-050202,,"SCREW M 5X 20",3,,,,,,,,,,,,,,,
70,3,,26716-050002,,"NUT M 5",3,,,,,,,,,,,,,,,
71,2,,172122-69770,,"NUT, DOOR CATCH",1,,,,,,,,,,,,,,,
72,2,,172122-69780,,"SHIM(A), DOOR CATCH",1,,,,,,,,,,,,,,,
73,2,,172122-69790,,"SHIM(B), DOOR CATCH",1,,,,,,,,,,,,,,,
74,2,,172122-69820,,"PANEL, SIDE DOOR",1,,,,,,,,,,,,,,,
75,2,,172122-69880,,"CLIP, TRIM",12,,,,,,,,,,,,,,,
76,2,,172122-69900,,"RUBBER, SIDE DOOR",2,,,,,,,,,,,,,,,
77,2,,22137-050000,,"WASHER 5, POLISHED",4,,,,,,,,,,,,,,,
78,2,,26022-050122,,"SCREW M 5X 12",4,,,,,,,,,,,,,,,
79,2,,26022-060082,,"SCREW M 6X  8",2,,,,,,,,,,,,,,,
80,2,,26022-060122,,"SCREW M 6X 12",4,,,,,,,,,,,,,,,
81,2,,26022-060202,,"SCREW M 6X 20",2,,,,,,,,,,,,,,,
82,2,,26022-060202,,"SCREW M 6X 20",4,,,,,,,,,,,,,,,
83,2,,26557-040082,,"SCREW M 4X  8",1,,,,,,,,,,,,,,,
84,2,,26557-050122,,"SCREW M 5X 12",4,,,,,,,,,,,,,,,
85,2,,26577-050162,,"SCREW M 5X 16",1,,,,,,,,,,,,,,,
86,2,,26577-050162,,"SCREW M 5X 16",2,,,,,,,,,,,,,,,
87,2,,172122-69310,,KEY,2,,,,,,,,,,,,,,,
88,2,,26557-050202,,"SCREW M 5X 20",4,,,,,,,,,,,,,,,
89,2,,22217-050000,,"SPRING WASHER  5",4,,,,,,,,,,,,,,,
90,2,,22217-050000,,"SPRING WASHER  5",4,,,,,,,,,,,,,,,
91,2,,172112-69290,,"HANDLE, INNER",1,,,,,,,,,,,,,,,
92,2,,172122-69290,,"COVER, DOOR LATCH",1,,,,,,,,,,,,,,,
```

https://truckmanualshub.com/

Fig. 43 キャビン CABIN

D 72122-68400

TO M/#00507

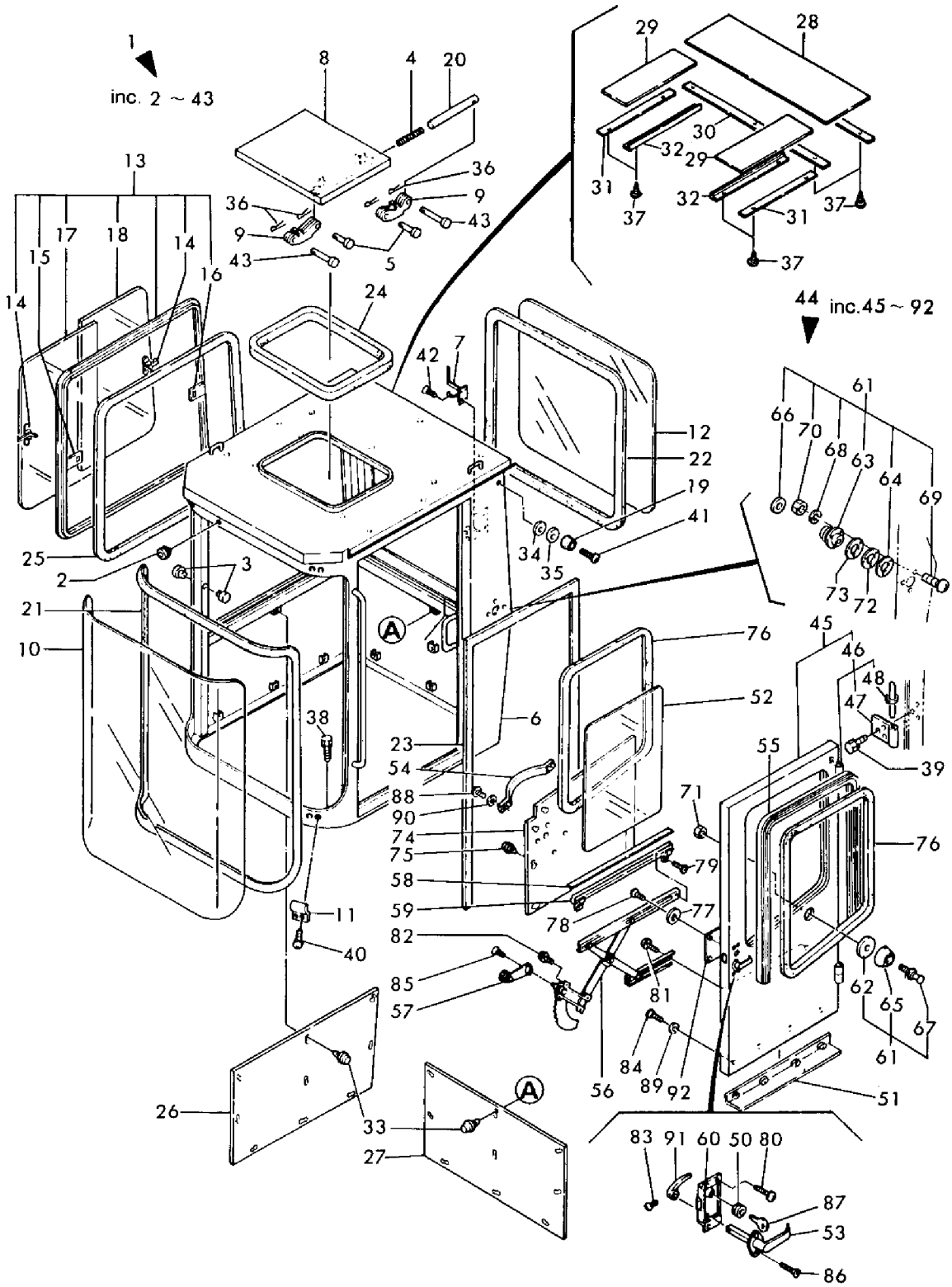

```
1,1,,772122-68410,,"CABIN ASSY, F.OPEN",1,,,,,,,,,,,,,,,,
2,2,,172111-16890,,"GROMMET  9",1,,,,,,,,,,,,,,,,
3-1,2,,194150-24270,,"SCREW CAP 13",2,,,,,,,1,,,,,,,,,
4,2,,172730-27220,,"SPRING 2X12X25",2,,,,,,,,,,,,,,,,
5,2,,172112-41960,,"PIN 8X25.5",4,,,,,,,,,,,,,,,,
6,2,,172122-67290,,"HOLDER, WIPER",1,,,,,,,,,,,,,,,,
7,2,,172122-67350,,WINDOW(F),1,,,,,,,,,,,,,,,,
8,3,,172122-67370,,"FRONT GLASS(A)",1,,,,,,,,,,,,,,,,
9,3,,172122-67380,,"FRONT GLASS(B)",1,,,,,,,,,,,,,,,,
10,3,,172122-67360,,"FRAME(F),WINDOW",1,,,,,,,,,,,,,,,,
11,3,,172122-67390,,LOCK(L),1,,,,,,,,,,,,,,,,
12,3,,172122-67400,,LOCK(R),1,,,,,,,,,,,,,,,,
13,3,,172122-67410,,"BRACKET(L),LOCK",1,,,,,,,,,,,,,,,,
14,3,,172122-67420,,"BRACKET(R),LOCK",1,,,,,,,,,,,,,,,,
15,3,,172122-67430,,"PROTECTOR,DUST",1,,,,,,,,,,,,,,,,
16,3,,172122-67440,,PLATE,2,,,,,,,,,,,,,,,,
17,3,,172122-67450,,CLAMP(L),2,,,,,,,,,,,,,,,,
18,3,,172122-67460,,CLAMP(R),2,,,,,,,,,,,,,,,,
19,3,,172122-67470,,GASKET,4,,,,,,,,,,,,,,,,
20,3,,172122-67480,,SPACER,6,,,,,,,,,,,,,,,,
21,3,,172122-67530,,"SEAL,VINYL STRIP",2,,,,,,,,,,,,,,,,
22,3,,172122-67540,,BRACKET,8,,,,,,,,,,,,,,,,
23,3,,172122-67550,,"PAD,RUBBER",1,,,,,,,,,,,,,,,,
24,3,,172122-67560,,"PAD,RUBBER",1,,,,,,,,,,,,,,,,
25,3,,172122-67570,,GASKET,6,,,,,,,,,,,,,,,,
26,3,,172122-67580,,SCREW,1,,,,,,,,,,,,,,,,
27,3,,172122-67590,,SCREW,1,,,,,,,,,,,,,,,,
28,3,,172122-67600,,SCREW,1,,,,,,,,,,,,,,,,
29,3,,172122-67610,,SCREW,1,,,,,,,,,,,,,,,,
30,3,,172122-67620,,SCREW,1,,,,,,,,,,,,,,,,
31,3,,172122-67630,,"GASKET SET",1,,,,,,,,,,,,,,,,
32,2,,172122-67500,,BALANCER(L),1,,,,,,,,,,,,,,,,
33,2,,172122-67510,,BALANCER(R),1,,,,,,,,,,,,,,,,
34,2,,172122-67650,,"NUT M14",1,,,,,,,,,,,,,,,,
35,2,,172122-67100,,"OPEN CABIN",1,,,,,,,,,,,,,,,,
36,2,,172122-69800,,"PANEL, SIDE",1,,,,,,,,,,,,,,,,
37,2,,172122-69830,,"PANEL (A), ROOF",1,,,,,,,,,,,,,,,,
38,2,,172119-68590,,"RACK, HAT",1,,,,,,,,,,,,,,,,
39,2,,172122-69400,,"DOOR, ROOF",1,,,,,,,,,,,,,,,,
40,2,,172122-69460,,"ARM, ROOF DOOR",4,,,,,,,,,,,,,,,,
41,2,,172122-69540,,"GLASS, REAR",1,,,,,,,,,,,,,,,,
42,2,,172122-69560,,"WINDOW (R), SASH",1,,,,,,,,,,,,,,,,
43,3,,172122-69350,,"LOCK, WINDOW",2,,,,,,,,,,,,,,,,
44,3,,172122-69360,,"HOLDER(F), LOCK",1,,,,,,,,,,,,,,,,
45,3,,172122-69370,,"HOLDER(R), LOCK",1,,,,,,,,,,,,,,,,
46,3,,172122-69570,,"GLASS (F), RIGHT",1,,,,,,,,,,,,,,,,
47,3,,172122-69580,,"GLASS (RE), RIGHT",1,,,,,,,,,,,,,,,,
48,2,,172117-69600,,"RUBBER, CUSHION",1,,,,,,,,,,,,,,,,
49,2,,172122-69600,,"SHAFT (B), ROOF DOOR",2,,,,,,,,,,,,,,,,
50,2,,172122-69640,,RUBBER,1,,,,,,,,,,,,,,,,
51,2,,172122-69650,,"SEAL, DOOR",1,,,,,,,,,,,,,,,,
52,2,,172122-69660,,"RUBBER, ROOF PANEL",1,,,,,,,,,,,,,,,,
53,2,,172122-69730,,RUBBER,1,,,,,,,,,,,,,,,,
54,2,,172122-69810,,"PANEL, REAR",1,,,,,,,,,,,,,,,,
55,2,,172122-69840,,"PANEL (B), ROOF",2,,,,,,,,,,,,,,,,
56,2,,172122-69850,,"PLATE (A), KEEP",2,,,,,,,,,,,,,,,,
57,2,,172122-69860,,"PLATE (B), KEEP",2,,,,,,,,,,,,,,,,
58,2,,172122-69870,,"PLATE (C), KEEP",2,,,,,,,,,,,,,,,,
59,2,,172122-69880,,"CLIP, TRIM",18,,,,,,,,,,,,,,,,
60,2,,172122-69930,,"RUBBER, CUSHION",1,,,,,,,,,,,,,,,,
61,2,,172122-69940,,"RUBBER, CUSHION",1,,,,,,,,,,,,,,,,
62,2,,194990-22120,,"NUT W/WASHER  5",26,,,,,,,,,,,,,,,,
63,2,,172122-68890,,"WASHER, CUSHI.RUBBER",1,,,,,,,,,,,,,,,,
```

64,2,,26013-050162,,"BOLT M 5X 16",4,,,,,,,,,,,,,,,
65,2,,22417-200200,,"COTTER PIN 2.0X20",8,,,,,,,,,,,,,,,
66,2,,22857-400100,,"SCREW 4X10",14,,,,,,,,,,,,,,,
67,2,,26587-050162,,"SCREW M 5X 16",26,,,,,,,,,,,,,,,
68,2,,26013-100202,,"BOLT W/WASHER M10X20",11,,,,,,,,,,,,,,,
69,2,,26013-100202,,"BOLT W/WASHER M10X20",6,,,,,,,,,,,,,,,
70,2,,26022-060252,,"SCREW M 6X 25",1,,,,,,,,,,,,,,,
71,2,,26567-040102,,"SCREW M 4X 10",4,,,,,,,,,,,,,,,
72,2,,933110-53100,,"PIN 8X41.5",4,,,,,,,,,,,,,,,
73,1,,772122-69000,,"SIDE DOOR ASSY",1,,,,,,,,,,,,,,,
74,2,,172112-69310,,KEY,2,,,,,,,,,,,,,,,
75,2,,172122-69300,,"UNDAR COVER",1,,,,,,,,,,,,,,,
76,2,,172122-69100,,"DOOR ASSY, SIDE",1,,,,,,,,,,,,,,,
77,3,,172122-69250,,HINGE,2,,,,,,,,,,,,,,,
78,4,,172122-69380,,HINGE,2,,,,,,,,,,,,,,,
79,4,,172122-69390,,HINGE,2,,,,,,,,,,,,,,,
81,2,,172112-69290,,"HANDLE, INNER",1,,,,,,,,,,,,,,,
82,2,,172122-69290,,"COVER, DOOR LATCH",1,,,,,,,,,,,,,,,
83,2,,172112-69300,,"GROMMET 22X2",1,,,,,,,,,,,,,,,
84,2,,172122-69510,,"GLASS, SIDE DOOR",1,,,,,,,,,,,,,,,
85,2,,172122-69610,,"OUTER HANDLE",1,,,,,,,,,,,,,,,
86,2,,172122-69620,,"KNOB, DOOR",1,,,,,,,,,,,,,,,
87,2,,172122-69670,,CHANNEL,1,,,,,,,,,,,,,,,
88,2,,172122-69680,,REGULATOR,1,,,,,,,,,,,,,,,
89,2,,172122-69690,,"HANDLE, REGULATOR",1,,,,,,,,,,,,,,,
90,2,,172122-69700,,"PAD, DOOR GLASS",1,,,,,,,,,,,,,,,
91,2,,172122-69710,,"CHANNEL, DOOR GLASS",1,,,,,,,,,,,,,,,
92,2,,172122-69720,,"LOCK(R), DOOR",1,,,,,,,,,,,,,,,
93,2,,172122-69750,,"CATCH, DOOR",1,,,,,,,,,,,,,,,
94,3,,172122-69280,,"SPACER, CATCH-MALE",1,,,,,,,,,,,,,,,
95,3,,172117-69640,,CATCH-FEMALE,1,,,,,,,,,,,,,,,
96,3,,172117-69650,,GASKET,1,,,,,,,,,,,,,,,
97,3,,172117-69660,,CUSHION,1,,,,,,,,,,,,,,,
98,3,,172117-69690,,"CAP, KNOB",1,,,,,,,,,,,,,,,
99,3,,172122-69760,,CATCH-MALE,1,,,,,,,,,,,,,,,
100,3,,22217-050000,,"SPRING WASHER 5",3,,,,,,,,,,,,,,,
101,3,,26557-050162,,"SCREW M 5X 16",3,,,,,,,,,,,,,,,
102,3,,26717-050002,,"NUT M 5",3,,,,,,,,,,,,,,,
103,2,,172122-69770,,"NUT, DOOR CATCH",1,,,,,,,,,,,,,,,
104,2,,172122-69780,,"SHIM(A), DOOR CATCH",1,,,,,,,,,,,,,,,
105,2,,172122-69790,,"SHIM(B), DOOR CATCH",1,,,,,,,,,,,,,,,
106,2,,172122-69820,,"PANEL, SIDE DOOR",1,,,,,,,,,,,,,,,
107,2,,172122-69880,,"CLIP, TRIM",10,,,,,,,,,,,,,,,
108,2,,172122-69900,,"RUBBER, SIDE DOOR",2,,,,,,,,,,,,,,,
109,2,,26557-050202,,"SCREW M 5X 20",4,,,,,,,,,,,,,,,
110,2,,26022-060082,,"SCREW M 6X 8",2,,,,,,,,,,,,,,,
111,2,,26022-060122,,"SCREW M 6X 12",4,,,,,,,,,,,,,,,
112,2,,26022-060202,,"SCREW M 6X 20",2,,,,,,,,,,,,,,,
113,2,,26022-060202,,"SCREW M 6X 20",4,,,,,,,,,,,,,,,
114,2,,26557-040082,,"SCREW M 4X 8",1,,,,,,,,,,,,,,,
115,2,,26557-050122,,"SCREW M 5X 12",4,,,,,,,,,,,,,,,
116,2,,26557-050122,,"SCREW M 5X 12",4,,,,,,,,,,,,,,,
117,2,,26577-050162,,"SCREW M 5X 16",1,,,,,,,,,,,,,,,
118,2,,26577-050162,,"SCREW M 5X 16",2,,,,,,,,,,,,,,,
119,2,,22137-050000,,"WASHER 5, POLISHED",4,,,,,,,,,,,,,,,

https://truckmanualshub.com/

Fig. 44 フロントオープンキャビン FRONT OPEN CABIN

D 72312-68410

FROM M/#00508

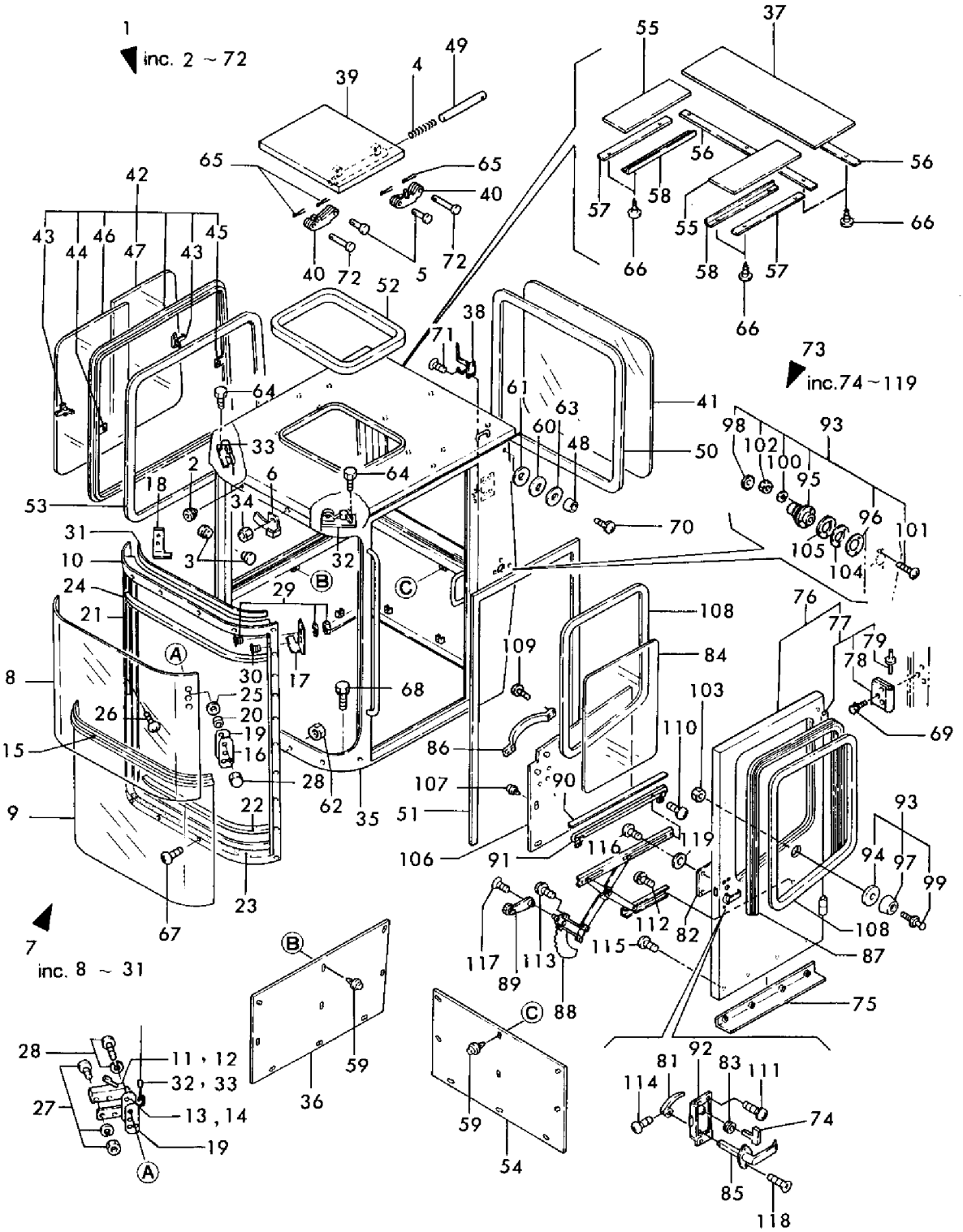

https://truckmanualshub.com/

```
1,1,,772135-68400,,"CABIN ASSY, F.FLAT",1,,,,,,,,,,,,,,,,
2,2,,172111-16890,,"GROMMET  9",1,,,,,,,,,,,,,,,,
3,2,,194150-24270,,"SCREW CAP 13",1,,,,,,,,,,,,,,,,
4,2,,194630-28670,,"NUT M 5, PUSH",4,,,,,,,,,,,,,,,,
5,2,,172137-46210,,SCREW,18,,,,,,,,,,,,,,,,
6,2,,172137-46210,,SCREW,7,,,,,,,,,,,,,,,,
7,2,,194555-65570,,"MARK (YANMAR)",1,,,,,,,,,,,,,,,,
8,2,,172135-68300,,"CABIN ASSY",1,,,,,,,,,,,,,,,,
9,2,,172119-68590,,"RACK, HAT",1,,,,,,,,,,,,,,,,
10,2,,172135-68820,,"MOUNT, LOCK",1,,,,,,,,,,,,,,,,
11,2,,172135-68830,,CUSHION,2,,,,,,,,,,,,,,,,
12,2,,172137-68940,,PLATE,1,,,,,,,,,,,,,,,,
13,2,,172135-69010,,"FRAME (L), GLASS",1,,,,,,,,,,,,,,,,
14,2,,172135-69030,,"FRAME (R), GLASS",1,,,,,,,,,,,,,,,,
15,2,,172135-69070,,"GASKET, FRAME (L)",1,,,,,,,,,,,,,,,,
16,2,,172135-69080,,"GASKET, FRAME (R)",1,,,,,,,,,,,,,,,,
17,2,,172135-69140,,"GLASS, FRONT",1,,,,,,,,,,,,,,,,
18,2,,172135-69150,,"GLASS, FRONT LOWER",1,,,,,,,,,,,,,,,,
19,2,,172135-69180,,"GLASS, SIDE",1,,,,,,,,,,,,,,,,
20,2,,172135-69190,,"GLASS, REAR",1,,,,,,,,,,,,,,,,
21,2,,172135-69200,,"SASH ASSY",1,,,,,,,,,,,,,,,,
22,3,,172135-69210,,"GLASS, SASH (A)",1,,,,,,,,,,,,,,,,
23,3,,172135-69220,,"GLASS, SASH (B)",1,,,,,,,,,,,,,,,,
24,3,,172122-69350,,"LOCK, WINDOW",2,,,,,,,,,,,,,,,,
25,3,,172122-69360,,"HOLDER(F), LOCK",1,,,,,,,,,,,,,,,,
26,3,,172122-69370,,"HOLDER(R), LOCK",1,,,,,,,,,,,,,,,,
27,2,,172137-69260,,BEARING,4,,,,,,,,,,,,,,,,
27-1,2,,24104-062004,,"BALL BEARING",4,,,,,,N,,,*1988.08,,,,,,,,
28,2,,172137-69270,,"LATCH (L)",1,,,,,,,,,,,,,,,,
29,2,,172135-69280,,"SEAL (C), SIDE",1,,,,,,,,,,,,,,,,
30,2,,172135-69290,,"SEAL (D), REAR",1,,,,,,,,,,,,,,,,
31,2,,172135-69300,,"RUBBER (A)",2,,,,,,,,,,,,,,,,
32,2,,172135-69320,,"SUPPORT (A L)ASSY",1,,,,,,,,,,,,,,,,
33,3,,172135-69340,,"SUPPORT (A L)",1,,,,,,,,,,,,,,,,
34,3,,172135-69360,,RUBBER,1,,,,,,,,,,,,,,,,
35,2,,172135-69330,,"SUPPORT (A R)ASSY",1,,,,,,,,,,,,,,,,
36,3,,172135-69350,,"SUPPORT (A R)",1,,,,,,,,,,,,,,,,
37,3,,172135-69360,,RUBBER,1,,,,,,,,,,,,,,,,
38,2,,172135-69420,,"SEAL, FRONT GLASS",1,,,,,,,,,,,,,,,,
39,2,,172135-69430,,"SEAL, DOOR",1,,,,,,,,,,,,,,,,
40,2,,172135-69480,,"COVER, LIGHT",1,,,,,,,,,,,,,,,,
41,2,,172135-69490,,MOUNT,2,,,,,,,,,,,,,,,,
42,2,,172135-69500,,"TRIM, SIDE",1,,,,,,,,,,,,,,,,
43,2,,172135-69510,,"TRIM, REAR",1,,,,,,,,,,,,,,,,
44,2,,172135-69520,,"TRIM, ROOF (A)",1,,,,,,,,,,,,,,,,
45,2,,172135-69530,,"TRIM, ROOF (B)",1,,,,,,,,,,,,,,,,
46,2,,172137-69541,,"SHAFT, ROLLER",4,,,,,,,,,,,,,,,,
47,2,,172137-69570,,LATCH(R),1,,,,,,,,,,,,,,,,
48,2,,172117-69600,,"RUBBER, CUSHION",1,,,,,,,,,,,,,,,,
49,2,,172137-69651,,"COLLAR, GLASS",7,,,,,,,,,,,,,,,,
50,2,,172137-69840,,SCREW,7,,,,,,,,,,,,,,,,
51,2,,172122-69940,,"RUBBER, CUSHION",1,,,,,,,,,,,,,,,,
52,2,,22137-060000,,"WASHER 6, POLISHED",1,,,,,,,,,,,,,,,,
53,2,,22137-060000,,"WASHER 6, POLISHED",4,,,,,,,,,,,,,,,,
54,2,,22137-060000,,"WASHER 6, POLISHED",4,,,,,,,,,,,,,,,,
55,2,,22137-080000,,"WASHER 8, POLISHED",4,,,,,,,,,,,,,,,,
56,2,,22137-100000,,"WASHER 10,POLISHED",10,,,,,,,,,,,,,,,,
57,2,,22157-080000,,"WASHER  8",7,,,,,,,,,,,,,,,,
58,2,,26013-080202,,"BOLT W/WASHER M8X20",4,,,,,,,,,,,,,,,,
59,2,,26013-100202,,"BOLT W/WASHER M10X20",10,,,,,,,,,,,,,,,,
60,2,,26022-050122,,"SCREW M 5X 12",12,,,,,,,,,,,,,,,,
61,2,,26022-060122,,"SCREW M 6X 12",4,,,,,,,,,,,,,,,,
62,2,,26022-060122,,"SCREW M 6X 12",4,,,,,,,,,,,,,,,,
```

https://truckmanualshub.com/

```
63,2,,26557-060252,,"SCREW M 6X 25",1,,,,,,,,,,,,,,,,
64,2,,26567-040102,,"SCREW M 4X 10",4,,,,,,,,,,,,,,,,
65,2,,26756-140002,,"LOCK NUT M14 PLATED",4,,,,,,,,,,,,,,,,,,
66,2,,933160-09220,,GROMMET,4,,,,,,,,,,,,,,,,
67,2,,172135-69700,,RUBBER(A),2,,,,,,W,,,M20566,,,,,,,,
68,2,,172135-69710,,RUBBER(B),2,,,,,,W,,,M20566,,,,,,,,
69,1,,772135-68850,,"SIDE DOOR ASSY",1,,,,,,,,,,,,,,,,
70,2,,172135-68850,,"DOOR ASSY, SIDE",1,,,,,,,,,,,,,,,,,,
71,3,,172137-69410,,HINGE,2,,,,,,,,,,,,,,,,
73,4,,172137-66650,,HINGE(B),2,,,,,,,,,,,,,,,,,,
74,4,,172122-69390,,HINGE,2,,,,,,,,,,,,,,,,
75,2,,172135-68950,,"COVER, LATCH",1,,,,,,,,,,,,,,,,
76,2,,172135-69160,,"GLASS, SIDE DOOR(A)",1,,,,,,,,,,,,,,,,,
77,2,,172135-69170,,"GLASS, SIDE DOOR(B)",1,,,,,,,,,,,,,,,,,
78,2,,172137-69200,,"HANDLE, OUTER",1,,,,,,,,,,,,,,,,
79,2,,172137-69210,,"HANDLE, INNER",1,,,,,,,,,,,,,,,,
80,2,,172137-69220,,GROMMET,1,,,,,,,,,,,,,,,,
81,2,,172135-69260,,"SEAL (A), DOOR",1,,,,,,,,,,,,,,,,
82,2,,172135-69270,,"SEAL (B), DOOR",1,,,,,,,,,,,,,,,,
83,2,,172122-69620,,"KNOB, DOOR",1,,,,,,,,,,,,,,,,
84,2,,172117-69630,,"CATCH ASSY, DOOR",1,,,,,,,,,,,,,,,,,
85,3,,172117-69640,,CATCH-FEMALE,1,,,,,,,,,,,,,,,,
86,3,,172117-69650,,GASKET,1,,,,,,,,,,,,,,,,
87,3,,172117-69660,,CUSHION,1,,,,,,,,,,,,,,,,
88,3,,172117-69670,,CATCH-MALE,1,,,,,,,,,,,,,,,,
89,3,,172117-69680,,WASHER,1,,,,,,,,,,,,,,,,
90,3,,172117-69690,,"CAP, KNOB",1,,,,,,,,,,,,,,,,
91,3,,22217-050000,,"SPRING WASHER  5",3,,,,,,,,,,,,,,,,
92,3,,22217-080000,,"SPRING WASHER  8",1,,,,,,,,,,,,,,,,
93,3,,26557-050162,,"SCREW M 5X 16",3,,,,,,,,,,,,,,,,
94,3,,26716-050002,,"NUT M 5",3,,,,,,,,,,,,,,,,
95,3,,26716-080002,,"NUT M 8",1,,,,,,,,,,,,,,,,
96,2,,172122-69780,,"SHIM(A), DOOR CATCH",1,,,,,,,,,,,,,,,,
97,2,,172122-69790,,"SHIM(B), DOOR CATCH",1,,,,,,,,,,,,,,,,
98,2,,172112-69790,,"PLUG 32X2",1,,,,,,,,,,,,,,,,
99,2,,22137-100000,,"WASHER 10,POLISHED",4,,,,,,,,,,,,,,,,
100,2,,26013-100252,,"BOLT W/WASHER M10X25",4,,,,,,,,,,,,,,,,,
101,2,,26022-050202,,"SCREW M 5X 20",4,,,,,,,,,,,,,,,,
102,2,,26022-060122,,"SCREW M 6X 12",4,,,,,,,,,,,,,,,,
103,2,,26023-050122,,"SCREW M 5X 12",5,,,,,,,,,,,,,,,,
104,2,,26577-050122,,"SCREW M 5X 12",2,,,,,,,,,,,,,,,,
105,2,,933110-00301,,"KEY ASSY",1,,,,,,,,,,,,,,,,
106,2,,172137-66230,,GROMMET,1,,,,,,,,,,,,,,,,
107,2,,172137-66240,,"LOCK, DOOR",1,,,,,,,,,,,,,,,,
```

https://truckmanualshub.com/

Fig. 45 フロントフラットキャビン FRONT FLAT CABIN

D 72135-68400

FROM M/#20514

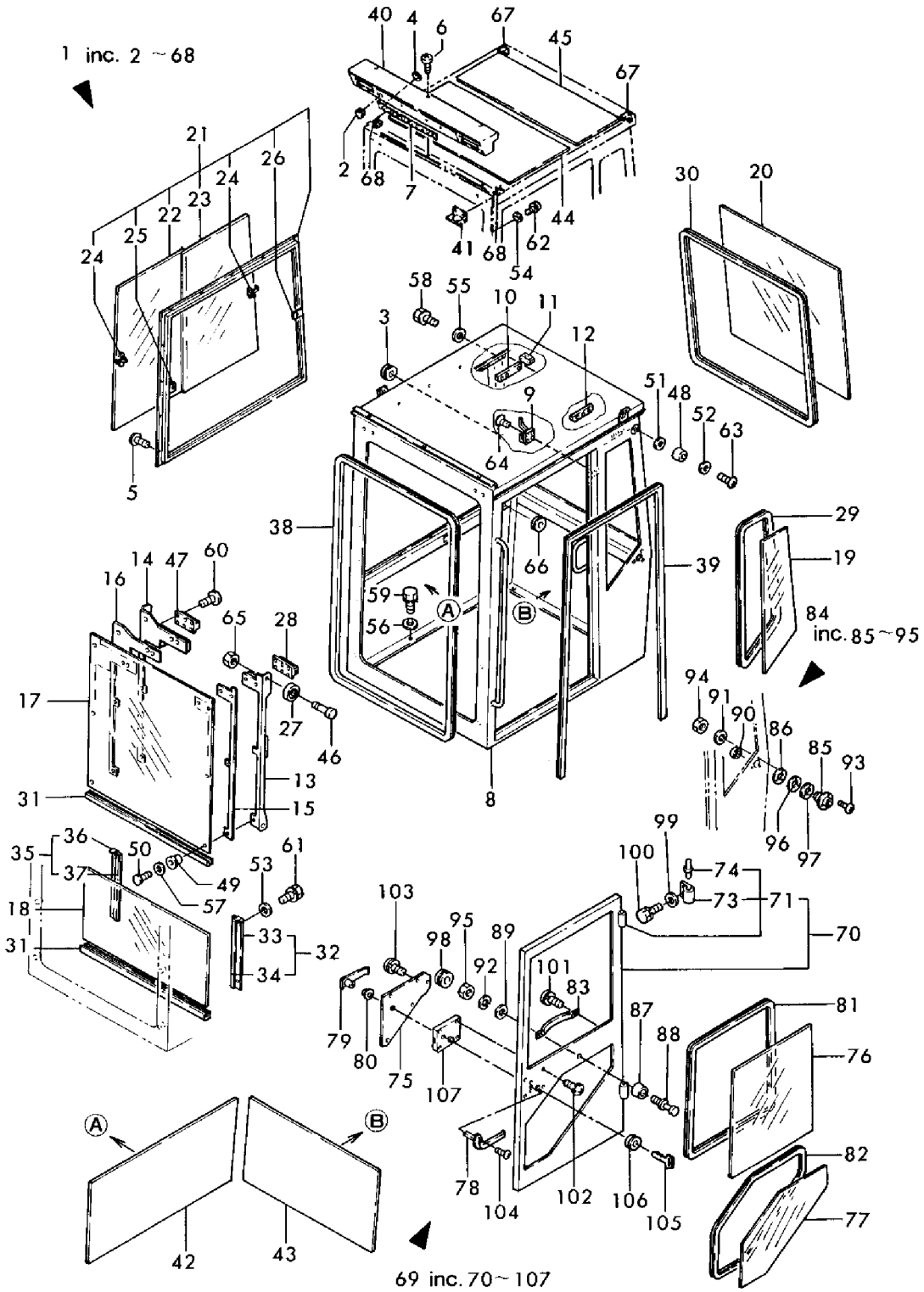

https://truckmanualshub.com/

```
1,1,,172725-17160,,BOLT,,,,1,,,,,,,,,,,,,,
2,1,,172135-72502,,"PROTECTOR(A), S.CYL.",,,,1,,,,,,,,,,,,,
3,1,,172135-72542,,"PROTECTOR(B), S.CYL.",,,,1,,,,,,,,,,,,,
4,1,,172135-72582,,"PROTECTOR(C), S.CYL.",,,,1,,,,,,,,,,,,,
5,1,,172135-72620,,"BOLT M 8X 22",,,,2,,,,,,,,,,,,,
6,1,,172135-72630,,"PLUG BALL  8",,,,12,,,,,,,,,,,,,
7,1,,172135-72630,,"PLUG BALL  8",,,,6,,,,,,,,,,,,,
8,1,,22137-140000,,"WASHER 14,POLISHED",,,,2,,,,,,,,,,,,,
9,1,,22217-080000,,"SPRING WASHER  8",,,,1,,,,,,,,,,,,,
10,1,,22217-100000,,"SPRING WASHER 10",,,,1,,,,,,,,,,,,,
11,1,,26013-080162,,"BOLT W/WASHER M8X16",,,,3,,,,,,,,,,,,,
12,1,,172130-72400,,"PROTECTOR(A), CYL.",,,,1,,,,,,,,,,,,,
12-1,1,,172130-72390,,"PROTECTOR(A), CYL,",,,,1,,,S,,,,,,,,,M00501,,
12-2,1,,172130-72391,,"PROTECTOR(A), CYL.",,,,1,,,N,,,,,,,,,*1987.07,,
13,1,,172130-72410,,"PROTECTOR(B), CYL.",,,,1,,,,,,,,,,,,,
14,1,,172135-72440,,"PLUG BALL  9.5",,,,4,,,,,,,,,,,,,
14-1,1,,172135-72630,,"PLUG BALL  8",,,,5,,,R,,,,,,,,,M00501,,
15,1,,172135-72450,,"PROTECTOR(C),CYL.",,,,1,,,,,,,,,,,,,
16,1,,22137-080000,,"WASHER 8, POLISHED",,,,2,,,,,,,,,,,,,
17,1,,22137-100000,,"WASHER 10,POLISHED",,,,4,,,,,,,,,,,,,
18,1,,22137-140000,,"WASHER 14,POLISHED",,,,1,,,,,,,,,,,,,
19,1,,22417-400200,,"COTTER PIN 4.0X20",,,,1,,,,,,,,,,,,,
20,1,,26013-080162,,"BOLT W/WASHER M8X16",,,,2,,,,,,,,,,,,,
21,1,,26013-100162,,"BOLT M10X 16",,,,4,,,,,,,,,,,,,
22,1,,172112-41240,,"SEAL WASHER 14",,,,1,,,W,,,,,,,,,*1986.01,,
```

https://truckmanualshub.com/

Fig. 46 シリンダプロテクタ CYLINDER PROTECTOR

D 72130-72110

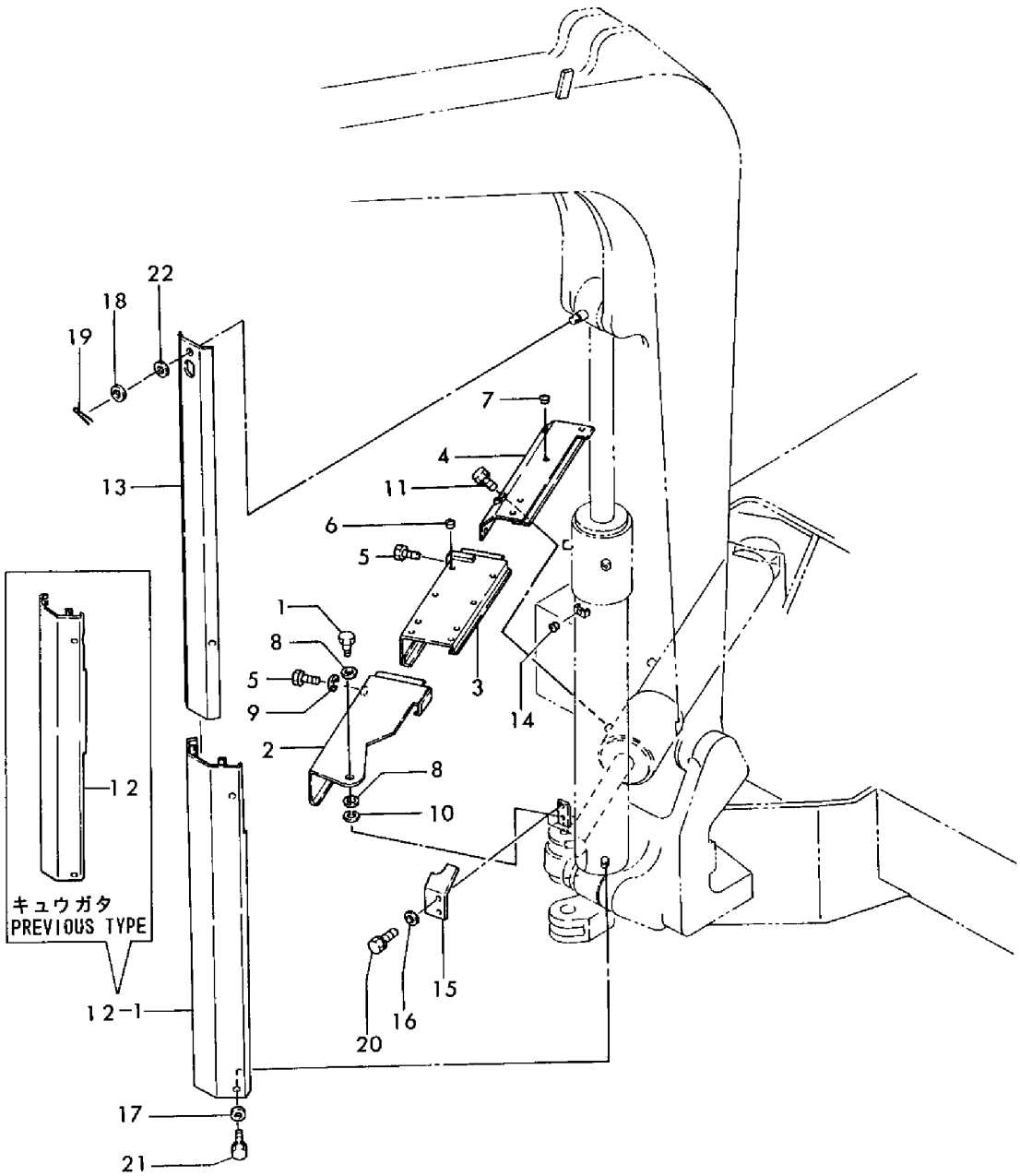

https://truckmanualshub.com/

```
1,1,,933120-48600,,"CYLINDER ASSY,BUCKET",1,,,1,,,,,,,,,,,,,
2,2,,22252-000550,,"CIRCLIP   55",1,,,1,,,,,,,,,,,,,
3,2,,933711-33800,,"SEAL SET, HEAD",1,,,1,,,,,,,,,,,,,
4,3,,22417-500500,,"COTTER PIN 5.0X50",1,,,1,,,,,,,,,,,,,
8,2,,24761-020000,,"NIPPLE PT1/8,GREASE",1,,,1,,,Z,,,*1987.08,,,,,,*1987.08,,
9,2,,24761-040000,,"NIPPLE B,GREASE",1,,,1,,,,,,,,,,,,,
9-1,2,,24761-040000,,"NIPPLE B,GREASE",2,,,2,,,K,,,*1987.08,,,,,,*1987.08,,
10,2,,26013-120252,,"BOLT M12X 25",1,,,1,,,,,,,,,,,,,
11,2,,933111-05301,,"WASHER 70",1,,,1,,,,,,,,,,,,,
12,2,,933111-06000,,"GLAND 55 40, GASKET",1,,,1,,,,,,,,,,,,,
13,2,,933111-10903,,"HEAD 70 40",1,,,1,,,,,,,,,,,,,
14,3,,933111-02000,,"BUSH 40 40, ROD",1,,,1,,,,,,,,,,,,,
16,2,,933111-15503,,"PISTON 70 A",1,,,1,,,,,,,,,,,,,
17,2,,933111-17502,,"RING 70, BACK-UP",1,,,1,,,,,,,,,,,,,
18,2,,933111-17701,,"RING 70 12, BACK-UP",1,,,1,,,,,,,,,,,,,
19,2,,933111-20400,,"CASTLE NUT M27",1,,,1,,,,,,,,,,,,,
20,2,,933711-33900,,"SEAL SET, PISTON",1,,,1,,,,,,,,,,,,,
21,3,,22417-500500,,"COTTER PIN 5.0X50",1,,,1,,,,,,,,,,,,,
23,2,,933111-26600,,"RING 55, SPRING",1,,,1,,,,,,,,,,,,,
24-1,2,,933721-48300,,"TUBE ASSY, BUCKET",1,,,1,,,,1,,,,,,,,,
26,3,,933125-12701,,"BUSH 38 50A",1,,,1,,,,,,,,,,,,,
27,2,,933131-60700,,"JOINT 17.3, COLLET",1,,,1,,,,,,,,,,,,,
28,3,,172116-76210,,"SPACER, COLLET",1,,,1,,,,,,,,,,,,,
29,3,,933131-60900,,NUT,1,,,1,,,,,,,,,,,,,
30,3,,933131-61000,,SLEEVE,1,,,1,,,,,,,,,,,,,
31,3,,933131-61100,,O-RING,1,,,1,,,,,,,,,,,,,
32,3,,933131-61200,,"RING, BUCK UP",1,,,1,,,,,,,,,,,,,
33,2,,933722-48600,,"ROD ASSY, BUCKET",1,,,1,,,,,,,,,,,,,
35,3,,933125-12701,,"BUSH 38 50A",1,,,1,,,,,,,,,,,,,
36,2,,933136-40500,,"PIPE (R), BUCKET",1,,,1,,,,,,,,,,,,,
```

https://truckmanualshub.com/

Fig. 47 バケットシリンダ BUCKET CYLINDER

D 72130-72100
D 72130-72110

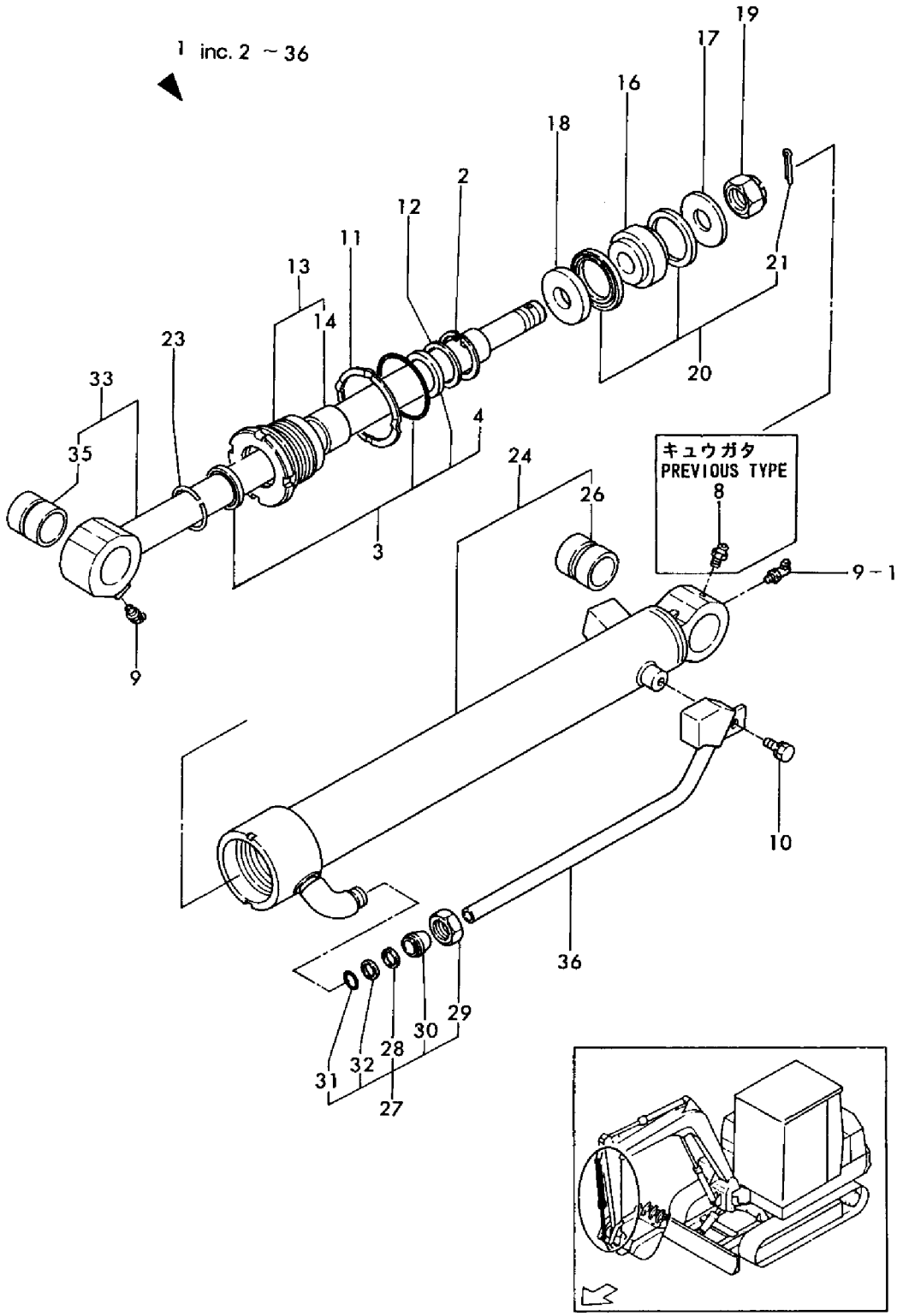

https://truckmanualshub.com/

```
1,1,,933120-67700,,"CYLINDER ASSY,BLADE",1,,,1,,,,,,,,,,,,,
1-1,1,,933120-83500,,"CYLINDER ASSY, BLADE",1,,,1,,,N,,,M00559,,,,,,M00559,,
2,2,,22252-000650,,"CIRCLIP 65H",1,,,1,,,,,,,,,,,,,
3,2,,933711-33600,,"SEAL SET, HEAD",1,,,1,,,,,,,,,,,,,
3-1,2,,933711-33601,,"SEAL SET, HEAD",1,,,1,,,S,,,M00559,,,,,,M00559,,
7,2,,933111-05902,,"GLAND 50 80, GASKET",1,,,1,,,,,,,,,,,,,
8,2,,933111-06700,,"WASHER 75",1,,,1,,,,,,,,,,,,,
8-1,2,,933125-75100,,"WASHER 90",1,,,1,,,S,,,M00559,,,,,,M00559,,
9,2,,933111-11202,,"HEAD 80 50",1,,,1,,,,,,,,,,,,,
9-1,2,,933134-20400,,"HEAD 90 55",1,,,1,,,S,,,M00559,,,,,,M00559,,
10,3,,933111-01900,,"BUSH 50 30, ROD",1,,,1,,,,,,,,,,,,,
12,2,,933111-15602,,"PISTON 80 A",1,,,1,,,,,,,,,,,,,
12-1,2,,933124-01700,,"PISTON 90 G",1,,,1,,,S,,,M00559,,,,,,M00559,,
13,2,,933721-67700,,"TUBE W/BUSH, BLADE",1,,,1,,,,,,,,,,,,,
13-1,2,,933721-83500,,"TUBE ASSY, BLADE",1,,,1,,,S,,,M00559,,,,,,M00559,,
14,3,,933111-18802,,"BUSH 40X50 B, PIN",1,,,1,,,,,,,,,,,,,
16,2,,933111-20200,,"U-NUT M33",1,,,1,,,,,,,,,,,,,
17,2,,933711-33500,,"SEAL SET, PISTON",1,,,1,,,,,,,,,,,,,
17-1,2,,933727-15100,,"SEAL SET, PISTON",1,,,1,,,S,,,M00559,,,,,,,,
19,2,,933111-26700,,"RING 65, SPRING",1,,,1,,,,,,,,,,,,,
20,2,,933722-66900,,"ROD W/BUSH, BLADE",1,,,1,,,,,,,,,,,,,
20-1,2,,933722-68400,,"ROD ASSY, BLADE",1,,,1,,,S,,,M00559,,,,,,M00559,,
21,3,,933111-18802,,"BUSH 40X50 B, PIN",1,,,1,,,,,,,,,,,,,
23,2,,933124-80400,,"GLAND 80, GASKET",2,,,2,,,,,,,,,,,,,
23-1,2,,933124-89600,,"GLAND, PACKING",1,,,1,,,S,,,M00559,,,,,,M00559,,
24,2,,933124-89700,,"GLAND, PACKING",1,,,1,,,W,,,M00559,,,,,,M00559,,
```

https://truckmanualshub.com/

Fig. 48 ブレードシリンダ BLADE CYLINDER

D 72130-72100
D 72130-72110
933120-83500

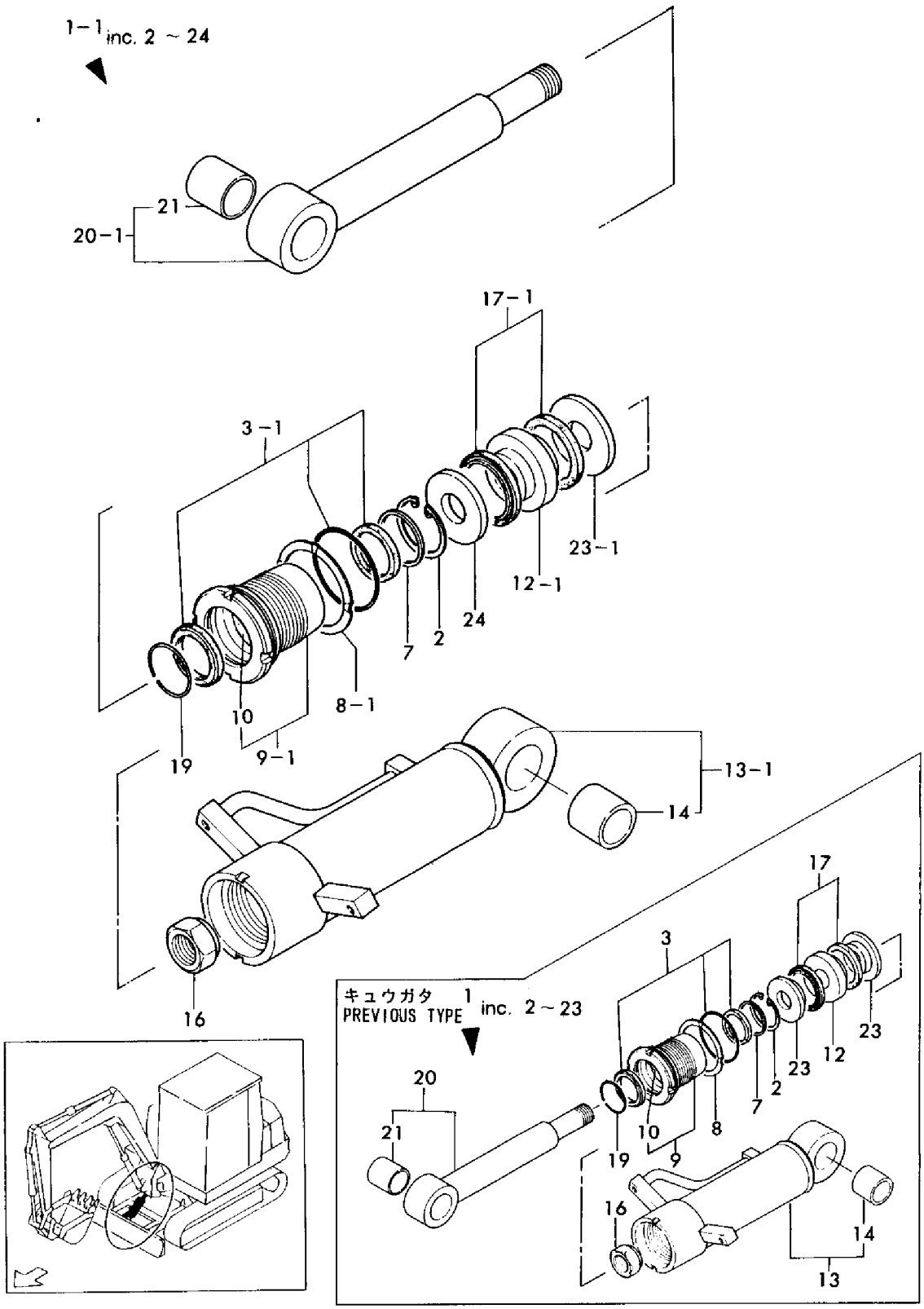

https://truckmanualshub.com/

```
1,1,,933120-68100,,"CYLINDER ASSY,ARM",1,,,1,,,,,,,,,,,,,
2,2,,22252-000600,,"CIRCLIP   60",1,,,1,,,,,,,,,,,,,
3,2,,933738-34700,,"SEAL SET, HEAD",1,,,1,,,,,,,,,,,,,
7,2,,24761-050000,,"NIPPLE C,GREASE",2,,,2,,,,,,,,,,,,,
7-1,2,,24761-050000,,"NIPPLE C,GREASE",1,,,1,,,K,,,*1987.08,,,,,,*1987.08,,
8,2,,933111-06700,,"WASHER 75",1,,,1,,,,,,,,,,,,,
9,2,,933111-15602,,"PISTON 80 A",1,,,1,,,,,,,,,,,,,
10,2,,933111-20200,,"U-NUT M33",1,,,1,,,,,,,,,,,,,
11,2,,933711-33500,,"SEAL SET, PISTON",1,,,1,,,,,,,,,,,,,
13,2,,933721-68100,,"ARM TUBE ASSY",1,,,1,,,,,,,,,,,,,
15,3,,933125-22500,,"BUSH 40X50, PIN",1,,,1,,,,,,,,,,,,,
16,2,,933722-49500,,"ROD ASSY, ARM",1,,,1,,,,,,,,,,,,,
18,3,,933125-22500,,"BUSH 40X50, PIN",1,,,1,,,,,,,,,,,,,
19,2,,933124-24500,,"GLAND 60 45, GASKET",1,,,1,,,,,,,,,,,,,
20,2,,933124-80400,,"GLAND 80, GASKET",2,,,2,,,,,,,,,,,,,
21,2,,933125-94500,,"RING 60, SPRING",1,,,1,,,,,,,,,,,,,
22,2,,933134-08300,,"HEAD 75 45",1,,,1,,,,,,,,,,,,,
24,3,,933135-14500,,"BUSH 45 40, ROD",1,,,1,,,,,,,,,,,,,
25,2,,24761-040000,,"NIPPLE B,GREASE",1,,,1,,,W,,,*1987.08,,,,,,*1987.08,,
```

https://truckmanualshub.com/

Fig. 49 アームシリンダ ARM CYLINDER

D 72130-72100
D 72130-72110
933120-68100

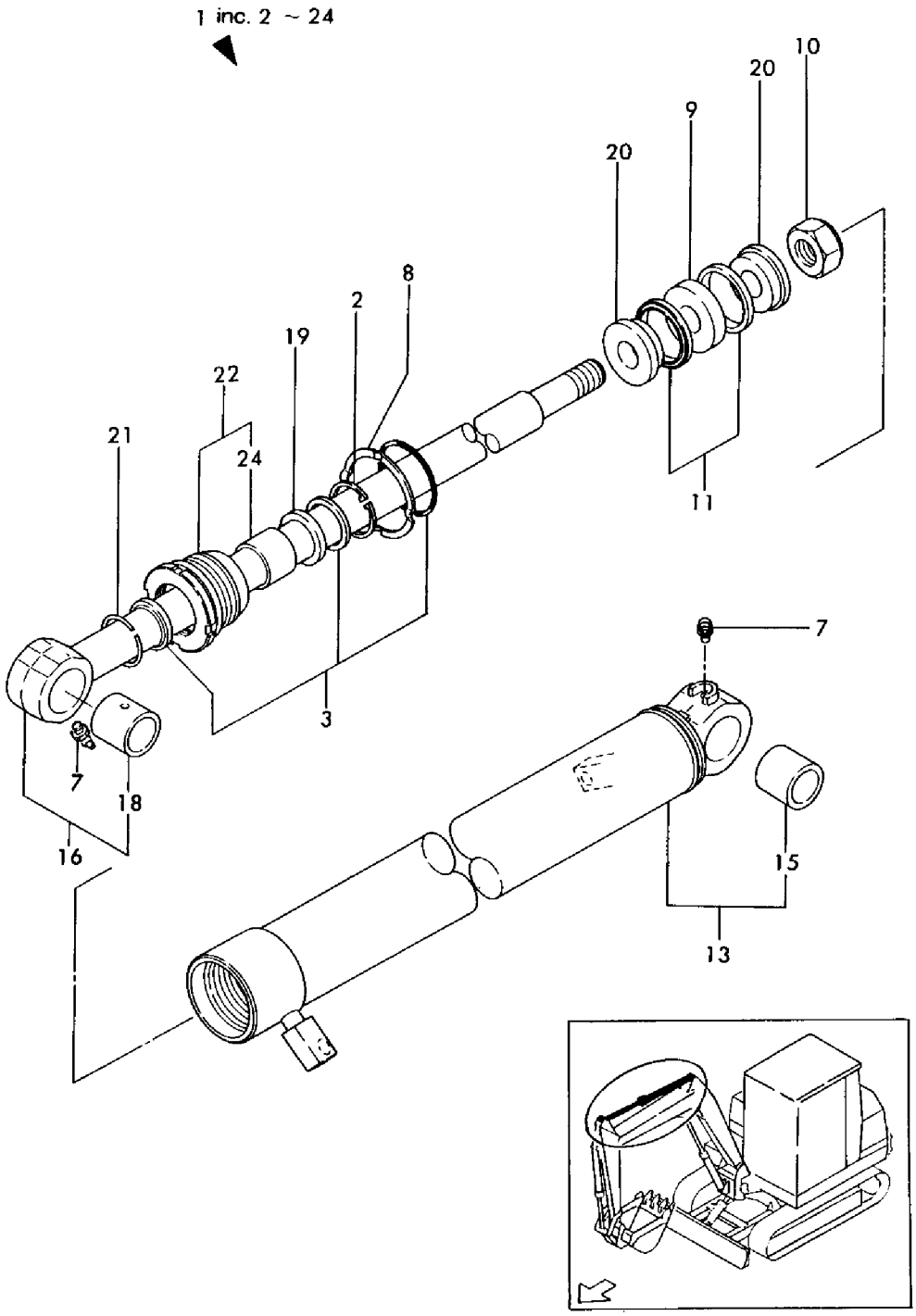

https://truckmanualshub.com/

```
1,1,,933120-83000,,"CYLINDER ASSY, SWING",1,,,,,,,,,,,,,,,,,
1-1,1,,933120-83001,,"CYLINDER ASSY, SWING",1,,,,,,N,,,M20501,,,,,,,,
1-2,1,,933120-83002,,"CYLINDER ASSY, SWING",1,,,,,,N,,,M20508,,,,,,,,
2,2,,22242-000220,,"CIRCLIP   22",1,,,,,,,,,,,,,,,,,
2-1,2,,172142-72810,,"CIRCLIP 22",1,,,,,,S,,,M20539,,,,,,,,
3,2,,933138-40400,,"SEAL SET, HEAD",1,,,,,,,,,,,,,,,,,
4,3,,22417-500500,,"COTTER PIN 5.0X50",1,,,,,,Z,,,*1990.09,,,,,,,,
10,2,,933138-75600,,"SEAL SET, PISTON",1,,,,,,,,,,,,,,,,,
10-1,2,,172122-72150,,"SEAL SET, PISTON 90",1,,,,,,S,,,M20501,,,,,,,,
10-2,2,,172122-72151,,"SEAL SET, PISTON 90",1,,,,,,S,,,M20523,,,,,,,,
11,3,,22417-500500,,"COTTER PIN 5.0X50",1,,,,,,Z,,,*1990.09,,,,,,,,
18,2,,933721-83000,,"TUBE W/BUSH, SWING",1,,,,,,,,,,,,,,,,,
18-1,2,,933721-83001,,"TUBE W/BUSH, SWING",1,,,,,,S,,,M20501,,,,,,,,
20,3,,933125-22500,,"BUSH 40X50, PIN",1,,,,,,,,,,,,,,,,,
21,2,,933722-49600,,"ROD W/BUSH, SWING",1,,,,,,,,,,,,,,,,,
21-1,2,,933722-49601,,"ROD W/BUSH, SWING",1,,,,,,S,,,M20539,,,,,,,,
23,3,,933125-22500,,"BUSH 40X50, PIN",1,,,,,,,,,,,,,,,,,
24,2,,933124-01500,,"PISTON 90 E",1,,,,,,,,,,,,,,,,,
24-1,2,,172122-72121,,"PISTON 90 I",1,,,,,,S,,,M20515,,,,,,,,
24-2,2,,172122-72122,,"PISTON 90 (I)",1,,,,,,S,,,M20523,,,,,,,,
25,2,,933124-89400,,"GLAND 90 6 B,GASKET",2,,,,,,Z,,,M20515,,,,,,,,
26,2,,172122-72460,,"GLAND 90 5, GASKET",1,,,,,,W,,,M20515,,,,,,,,
26-1,2,,172122-72461,,"GLAND 90 8 A,GASKET",1,,,,,,S,,,M20523,,,,,,,,
27,2,,933125-75100,,"WASHER 90",1,,,,,,,,,,,,,,,,,
28,2,,933127-20000,,"CUSHION PLUNGER 35 B",1,,,,,,,,,,,,,,,,,
28-1,2,,172137-72710,,"COLLAR 40B, CUSHION",1,,,,,,S,,,M20501,,,,,,,,
29,2,,933127-23000,,"CUSHION PLUNGER 48 B",1,,,,,,,,,,,,,,,,,
29-1,2,,933127-23001,,"CUSHION PLUNGER 44 C",1,,,,,,S,,,M20501,,,,,,,,
30,2,,933134-08700,,"HEAD 9040 B W/BUSH",1,,,,,,,,,,,,,,,,,
30-1,2,,933134-08701,,"HEAD 9040 B W/BUSH",1,,,,,,S,,,M20501,,,,,,,,
31,3,,933111-02000,,"BUSH 40 40, ROD",1,,,,,,,,,,,,,,,,,
33,2,,24761-050000,,"NIPPLE C,GREASE",1,,,,,,,,,,,,,,,,,
33-1,2,,24761-020000,,"NIPPLE PT1/8,GREASE",1,,,,,,S,,,M10501,,,,,,,,
34,2,,933111-20400,,"CASTLE NUT M27",1,,,,,,,,,*1990.09,,,,,,,,
34-1,2,,172141-72250,,"U-NUT M27",1,,,,,,N,,,*1990.09,,,,,,,,
35,2,,933111-26600,,"RING 55, SPRING",1,,,,,,,,,,,,,,,,,
36,2,,172137-72720,,"COLLAR 40A, CUSHION",1,,,,,,W,,,M20501,,,,,,,,
37,2,,172137-72730,,"RING 44B, CUSHION",1,,,,,,W,,,M20501,,,,,,,,
38,2,,172135-72800,,"RING 40 B, CUSHION",1,,,,,,W,,,M20501,,,,,,,,
39,2,,22252-000561,,"CIRCLIP   56",1,,,,,,W,,,M20501,,,,,,,,
```

https://truckmanualshub.com/

Fig. 50 スイングシリンダ SWING CYLINDER

D 72130-72100
933120-83002

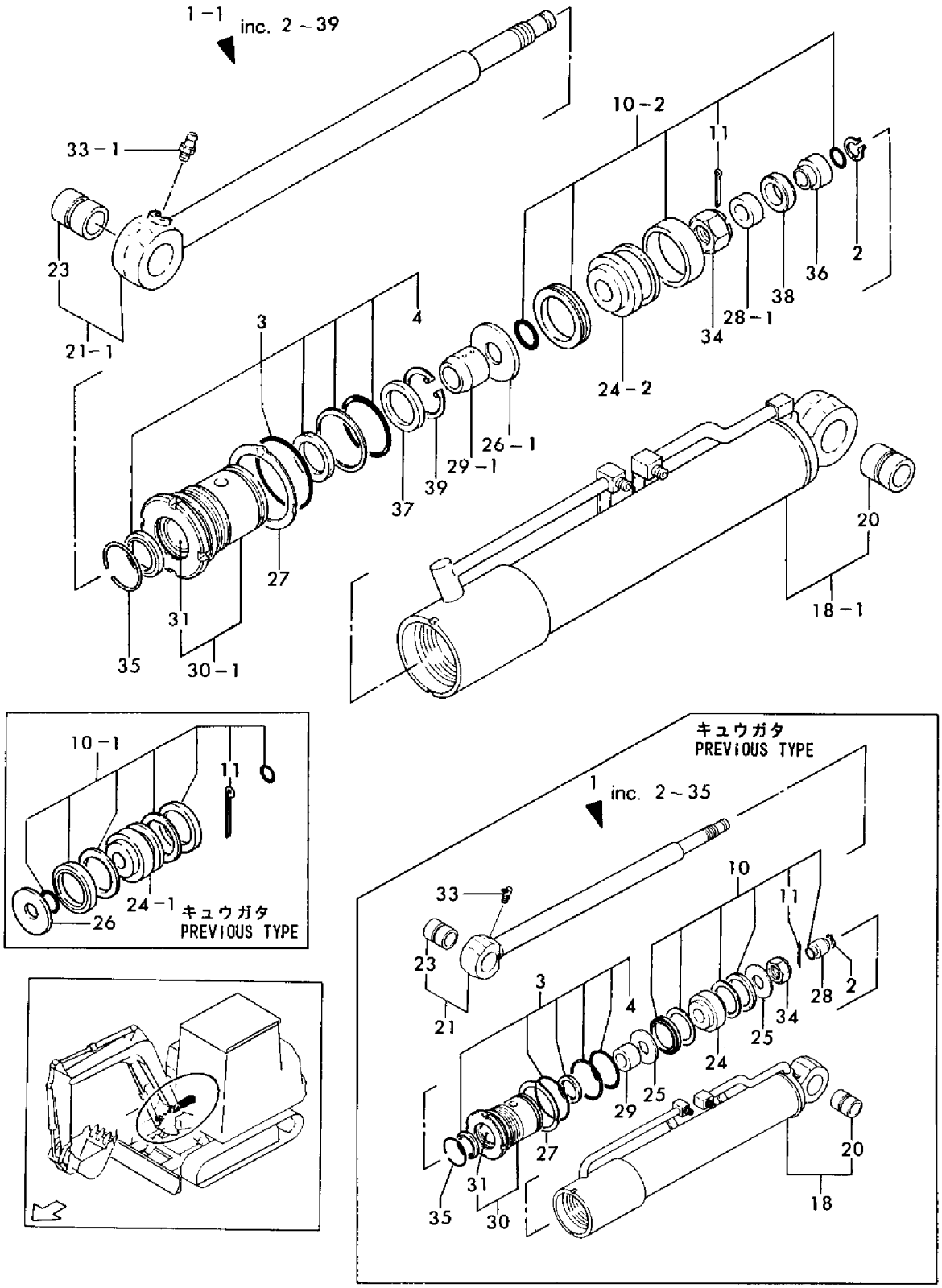

https://truckmanualshub.com/

```
1,1,,933120-83300,,"CYLINDER ASSY, SWING",,,,1,,,,,,,,,,,,,
1-1,1,,933120-83301,,"CYLINDER ASSY, SWING",,,,1,,,N,,,,,,,,,M20501,,
1-2,1,,933120-83302,,"CYLINDER ASSY. SWING",,,,1,,,N,,,,,,,,,M20508,,
2,2,,22242-000220,,"CIRCLIP   22",,,,1,,,,,,,,,,,,,
2-1,2,,172142-72810,,"CIRCLIP 22",,,,1,,,S,,,,,,,,,M20539,,
3,2,,933138-40400,,"SEAL SET, HEAD",,,,1,,,,,,,,,,,,,
4,3,,22417-500500,,"COTTER PIN 5.0X50",,,,1,,,Z,,,,,,,,,*1990.09,,
10,2,,933138-75600,,"SEAL SET, PISTON",,,,1,,,,,,,,,,,,,
10-1,2,,172122-72150,,"SEAL SET, PISTON 90",,,,1,,,S,,,,,,,,,M20501,,
10-2,2,,172122-72151,,"SEAL SET, PISTON 90",,,,1,,,S,,,,,,,,,M20523,,
11,3,,22417-500500,,"COTTER PIN 5.0X50",,,,1,,,Z,,,,,,,,,*1990.09,,
12-3,3,,172135-72820,,,,,,1,,,R,,,,,,,,,M20608,,
18,2,,933721-83300,,"TUBE W/BUSH, SWING",,,,1,,,,,,,,,,,,,
18-1,2,,933721-83301,,"TUBE W/BUSH, SWING",,,,1,,,S,,,,,,,,,M20501,,
20,3,,933125-22500,,"BUSH 40X50, PIN",,,,1,,,,,,,,,,,,,
21,2,,933722-49600,,"ROD W/BUSH, SWING",,,,1,,,,,,,,,,,,,
21-1,2,,933722-50500,,"ROD W/BUSH, SWING",,,,1,,,S,,,,,,,,,M00559,,
21-2,2,,933722-50501,,"ROD W/BUSH, SWING",,,,1,,,S,,,,,,,,,M20539,,
23,3,,933125-22500,,"BUSH 40X50, PIN",,,,1,,,,,,,,,,,,,
24,2,,933124-01500,,"PISTON 90 E",,,,1,,,,,,,,,,,,,
24-1,2,,172122-72121,,"PISTON 90 I",,,,1,,,S,,,,,,,,,M20515,,
24-2,2,,172122-72122,,"PISTON 90 (I)",,,,1,,,S,,,,,,,,,M20523,,
25,2,,933124-89400,,"GLAND 90 6 B,GASKET",,,,2,,,Z,,,,,,,,,M20515,,
26,2,,172122-72460,,"GLAND 90 5, GASKET",,,,1,,,W,,,,,,,,,M20515,,
26-1,2,,172122-72461,,"GLAND 90 8 A,GASKET",,,,1,,,S,,,,,,,,,M20523,,
27,2,,933125-75100,,"WASHER 90",,,,1,,,,,,,,,,,,,
28,2,,933127-20000,,"CUSHION PLUNGER 35 B",,,,1,,,,,,,,,,,,,
28-1,2,,172137-72710,,"COLLAR 40B, CUSHION",,,,1,,,S,,,,,,,,,M20501,,
29,2,,933127-23000,,"CUSHION PLUNGER 48 B",,,,1,,,,,,,,,,,,,
29-1,2,,933127-23001,,"CUSHION PLUNGER 44 C",,,,1,,,S,,,,,,,,,M20501,,
30,2,,933134-08700,,"HEAD 9040 B W/BUSH",,,,1,,,,,,,,,,,,,
30-1,2,,933134-08701,,"HEAD 9040 B W/BUSH",,,,1,,,S,,,,,,,,,M20501,,
31,3,,933111-02000,,"BUSH 40 40, ROD",,,,1,,,,,,,,,,,,,
33,2,,24761-050000,,"NIPPLE C,GREASE",,,,1,,,,,,,,,,,,,
34,2,,933111-20400,,"CASTLE NUT M27",,,,1,,,,,,,,,,,*1990.09,,
34-1,2,,172141-72250,,"U-NUT M27",,,,1,,,N,,,,,,,,,*1990.09,,
35,2,,933111-26600,,"RING 55, SPRING",,,,1,,,,,,,,,,,,,
36,2,,172137-72720,,"COLLAR 40A, CUSHION",,,,1,,,W,,,,,,,,,M20501,,
37,2,,172137-72730,,"RING 44B, CUSHION",,,,1,,,W,,,,,,,,,M20501,,
38,2,,172135-72800,,"RING 40 B, CUSHION",,,,1,,,W,,,,,,,,,M20501,,
39,2,,22252-000561,,"CIRCLIP   56",,,,1,,,W,,,,,,,,,M20501,,
```

https://truckmanualshub.com/

Fig. 51 スイングシリンダ (UZ) SWING CYLINDER (UZ)

D 72130-72110
933120-83302

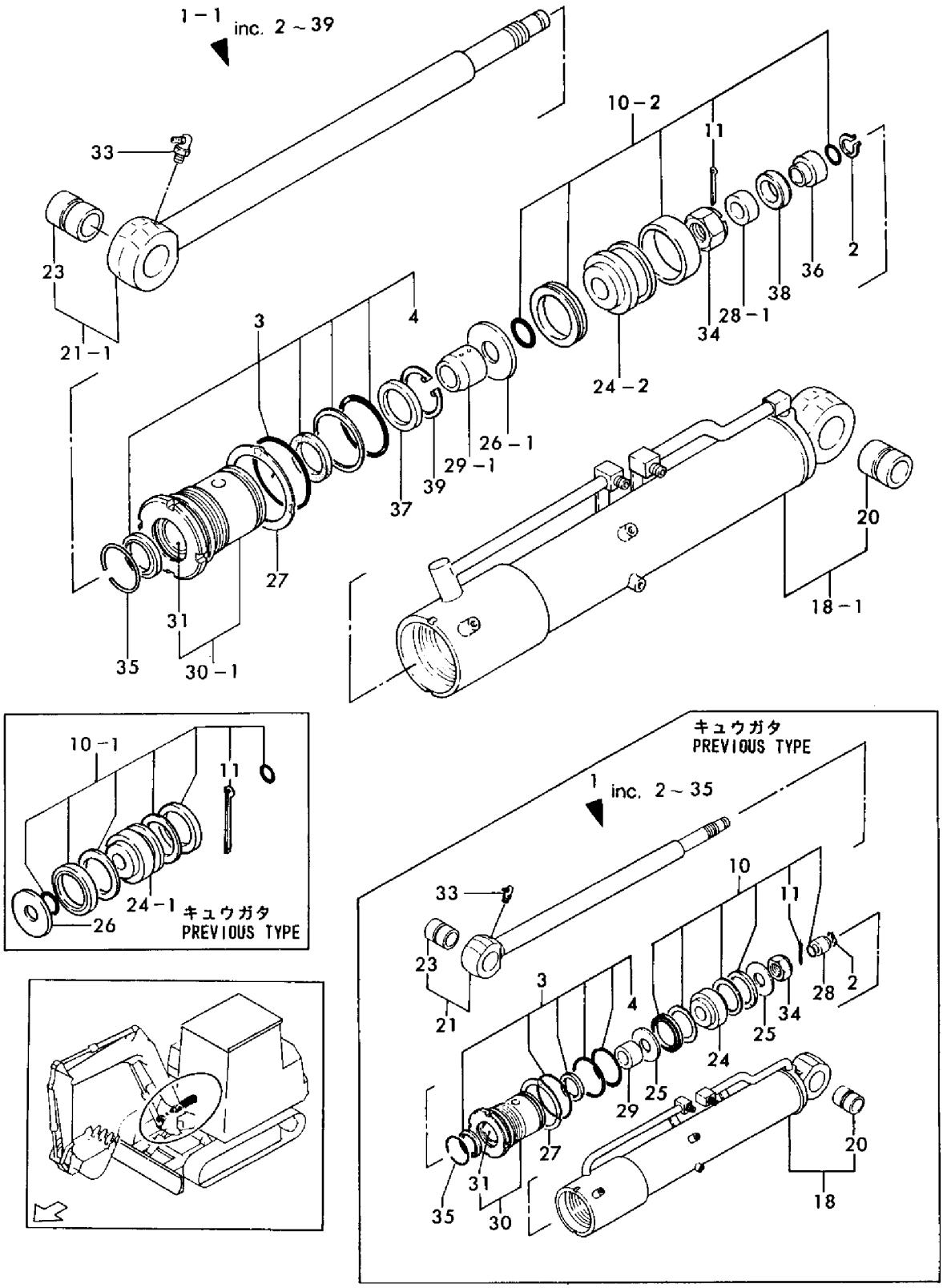

https://truckmanualshub.com/

```
1,1,,933120-83200,,"CYLINDER ASSY, BOOM",1,,,,,,,,,,,,,,,,
1-1,1,,933120-83202,,"CYLINDER ASSY, BOOM",1,,,,,,N,,,M00559,,,,,,,,
1-2,1,,933120-83203,,"CYLINDER ASSY, BOOM",1,,,,,,N,,,M20508,,,,,,,,
2-1,2,,933138-40600,,"SEAL SET, HEAD",1,,,,,,,1,,,,,,,,,,
3,3,,22417-600700,,"COTTER PIN 6.0X70",1,,,,,,Z,,,*1990.09,,,,,,,,
9,2,,933138-75500,,"SEAL SET,PISTON",1,,,,,,,,,,,,,,,,,,
9-1,2,,933138-75501,,"SEAL SET,PISTON",1,,,,,,S,,,M20508,,,,,,,,
9-2,2,,933138-75502,,"SEAL SET,PISTON",1,,,,,,S,,,M20523,,,,,,,,
10,3,,22417-600700,,"COTTER PIN 6.0X70",1,,,,,,Z,,,*1990.09,,,,,,,,
15,2,,933111-26700,,"RING 65, SPRING",1,,,,,,,,,,,,,,,,,,
16,2,,933721-83200,,"TUBE W/BUSH, BOOM",1,,,,,,,,,,,,,,,,,,
16-1,2,,933721-83201,,"TUBE W/BUSH, BOOM",1,,,,,,S,,,M00559,,,,,,,,
18,3,,933125-30100,,"BUSH 45X60, PIN",1,,,,,,,,,,,,,,,,,,
19,2,,933722-68100,,"BOOM ROD",1,,,,,,,,,,,,,,,,,,
21,3,,933125-30100,,"BUSH 45X60, PIN",1,,,,,,,,,,,,,,,,,,
22,2,,933124-01600,,"PISTION 90 F",1,,,,,,,,,,,,,,,,,,
22-1,2,,172122-72111,,"PISTION 90 H",1,,,,,,S,,,M20511,,,,,,,,
22-2,2,,172122-72112,,"PISTION 90 H",1,,,,,,S,,,M20523,,,,,,,,
23,2,,933125-75100,,"WASHER 90",1,,,,,,,,,,,,,,,,,,
24,2,,933126-25200,,"CASTLE NUT M39",1,,,,,,,,,,,,,,,,,,
24-1,2,,172151-72270,,"U-NUT M39",1,,,,,,N,,,*1990.09,,,,,,,,
25,2,,933127-32100,,"PLUNGER 62B, CUSHION",1,,,,,,,,,,,,,,,,,,
25-1,2,,933127-32101,,"PLUNGER 56, CUSHION",1,,,,,,S,,,M20508,,,,,,,,
26,2,,933134-20300,,"CYLINDER HEAD",1,,,,,,,,,,,,,,,,,,
26-1,2,,933134-20301,,"HEAD 90 50 ASSY",1,,,,,,S,,,M20508,,,,,,,,
27,3,,933111-01900,,"BUSH 50 30, ROD",1,,,,,,,,,,,,,,,,,,
29,2,,23871-020000,,"PLUG PT1/4,SCREW",1,,,,,,,,,,,,,,,,,,
30,2,,24761-020000,,"NIPPLE PT1/8,GREASE",2,,,,,,,,,,,,,,,,,,
31,2,,172130-72800,,"RING 56, CUSHION",1,,,,,,W,,,M20508,,,,,,,,
32,2,,172130-72820,,"GLAND 90 5 B,PACKING",1,,,,,,W,,,M20515,,,,,,,,
32-1,2,,172130-72821,,"GLAND 90 8 B,PACKING",1,,,,,,S,,,M20523,,,,,,,,
33,2,,22252-000701,,"CIRCLIP 70",1,,,,,,W,,,M20508,,,,,,,,
```

https://truckmanualshub.com/

Fig. 52 ブームシリンダ BOOM CYLINDER

D 72130-72100
933120-83203

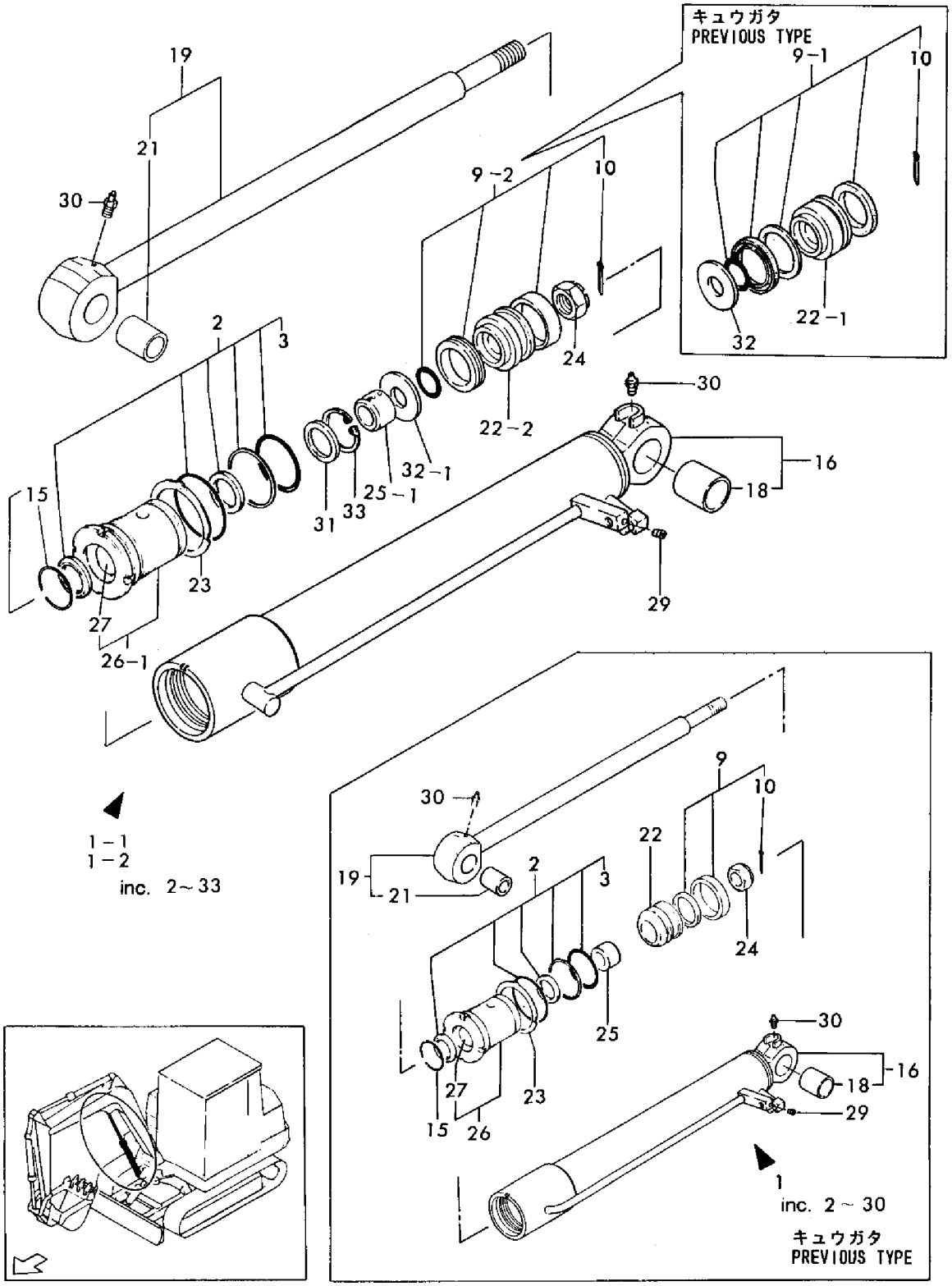

https://truckmanualshub.com/

```
1,1,,933120-83100,,"CYLINDER ASSY, BOOM",,,,1,,,,,,,,,,,,,
1-1,1,,933120-83102,,"CYLINDER ASSY, BOOM",,,,1,,,N,,,,,,,,,M20508,,
2,2,,933138-40600,,"SEAL SET, HEAD",,,,1,,,,,,,,,,,,,
3,3,,22417-600700,,"COTTER PIN 6.0X70",,,,1,,,Z,,,,,,,,,*1990.09,,
9,2,,933138-75500,,"SEAL SET,PISTON",,,,1,,,,,,,,,,,,,
9-1,2,,933138-75501,,"SEAL SET,PISTON",,,,1,,,S,,,,,,,,,M20508,,
9-2,2,,933138-75502,,"SEAL SET,PISTON",,,,1,,,S,,,,,,,,,M20523,,
10,3,,22417-600700,,"COTTER PIN 6.0X70",,,,1,,,Z,,,,,,,,,*1990.09,,
15,2,,933111-26700,,"RING 65, SPRING",,,,1,,,,,,,,,,,,,
16,2,,933721-83100,,"BOOM TUBE",,,,1,,,,,,,,,,,,,
18,3,,933125-30100,,"BUSH 45X60, PIN",,,,1,,,,,,,,,,,,,
19,2,,933722-68000,,"BOOM ROD",,,,1,,,,,,,,,,,,,
21,3,,933125-30100,,"BUSH 45X60, PIN",,,,1,,,,,,,,,,,,,
22,2,,933124-01600,,"PISTION 90 F",,,,1,,,,,,,,,,,,,
22-1,2,,172122-72111,,"PISTION 90 H",,,,1,,,S,,,,,,,,,M20515,,
22-2,2,,172122-72112,,"PISTION 90 H",,,,1,,,S,,,,,,,,,M20523,,
23,2,,933125-75100,,"WASHER 90",,,,1,,,,,,,,,,,,,
24,2,,933126-25200,,"CASTLE NUT M39",,,,1,,,,,,,,,,,,,
24-1,2,,172151-72270,,"U-NUT M39",,,,1,,,N,,,,,,,,,*1990.09,,
25,2,,933127-32200,,"PLUNGER 62B, CUSHION",,,,1,,,,,,,,,,,,,
25-1,2,,933127-32101,,"PLUNGER 56, CUSHION",,,,1,,,S,,,,,,,,,M20508,,
26,2,,933134-20300,,"CYLINDER HEAD",,,,1,,,,,,,,,,,,,
26-1,2,,933134-20301,,"HEAD 90 50 ASSY",,,,1,,,S,,,,,,,,,M20508,,
27,3,,933111-01900,,"BUSH 50 30, ROD",,,,1,,,,,,,,,,,,,
29,2,,23871-020000,,"PLUG PT1/4,SCREW",,,,1,,,,,,,,,,,,,
30,2,,24761-020000,,"NIPPLE PT1/8,GREASE",,,,2,,,,,,,,,,,,,
31,2,,172130-72800,,"RING 56, CUSHION",,,,1,,,W,,,,,,,,,M20508,,
32,2,,172130-72820,,"GLAND 90 5 B,PACKING",,,,1,,,W,,,,,,,,,M20515,,
32-1,2,,172130-72821,,"GLAND 90 8 B,PACKING",,,,1,,,S,,,,,,,,,M20523,,
33,2,,22252-000701,,"CIRCLIP 70",,,,1,,,W,,,,,,,,,M20508,,
```

https://truckmanualshub.com/

Fig. 53 ブームシリンダ (UZ) BOOM CYLINDER (UZ)

D 72130-72110
933120-83202

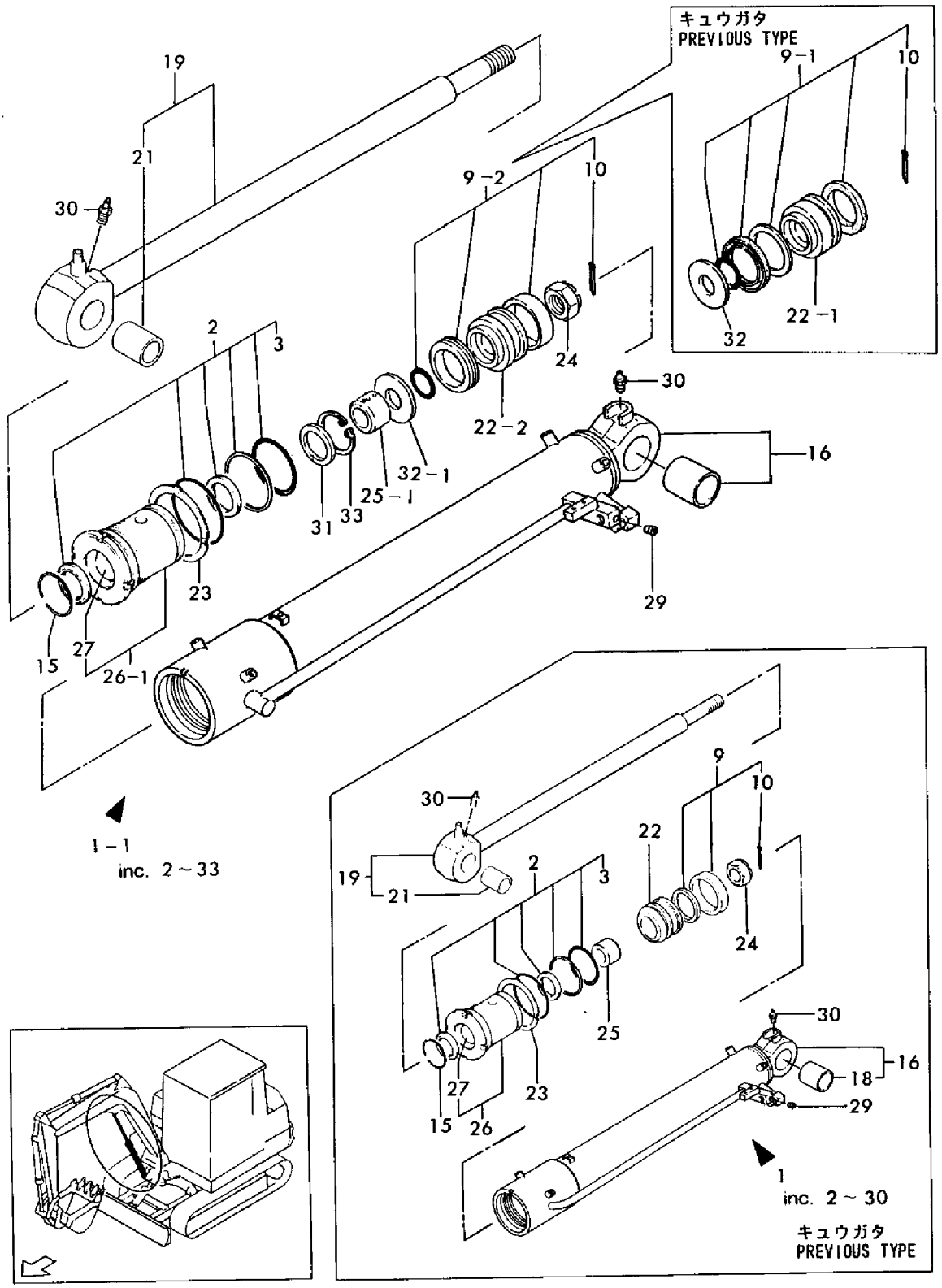

```
1,1,,172312-71100,,"COVER, FLYWHEEL",1,,,1,,,,,,,,,,,,,
2,1,,26013-100252,,"BOLT W/WASHER M10X25",6,,,6,,,,,,,,,,,,,
3,1,,172122-71121,,"JOINT, PUMP SHAFT",1,,,1,,,,,,,,,,,,,
4,1,,22351-050010,,"SPRING PIN 5X10",6,,,6,,,,,,,,,,,,,
5,1,,22351-050020,,"SPRING PIN 5X20",3,,,3,,,,,,,,,,,,,
6,1,,26450-120402,,"BOLT M12X 40",6,,,6,,,,,,,,,,,,,
7,1,,933171-23101,,"COUPLING CF16",1,,,1,,,,,,,,,,,,,
8,1,,172122-71130,,"BOLT M10X 30",2,,,2,,,,,,,,,,,,,
9,1,,172122-73100,,"PUMP ASSY, GEAR",1,,,1,,,,,,,,,,,,,
10,2,,172122-73110,,"PUMP ASSY, FRONT",1,,,1,,,,,,,,,,,,,
11,2,,172122-73120,,"PUMP ASSY, CENTER",1,,,1,,,,,,,,,,,,,
12,2,,172122-73130,,"PUMP ASSY, REAR",1,,,1,,,,,,,,,,,,,
13,2,,172122-73140,,COVER,1,,,1,,,,,,,,,,,,,
14,2,,172122-73150,,"PLATE, CENTER",2,,,2,,,,,,,,,,,,,
15,2,,172122-73160,,"FLANGE, MOUNTING",1,,,1,,,,,,,,,,,,,
16,2,,172122-73170,,"COUPLING, SPLINE",2,,,2,,,,,,,,,,,,,
17,2,,172122-73180,,BOLT,4,,,4,,,,,,,,,,,,,
18,2,,172122-73190,,"WASHER, SPRING",4,,,4,,,,,,,,,,,,,
18-1,2,,22217-100000,,"SPRING WASHER 10",4,,,4,,,R,,,M00501,,,,,,M00501,,
19,2,,172122-73200,,"SEAL SET",1,,,1,,,,,,,,,,,,,
```

https://truckmanualshub.com/

Fig. 54 ユアツポンプ & ジクツギテ HYD. OIL PUMP & COUPLING

D 72312-71100
D 72312-71200
D 72122-73100

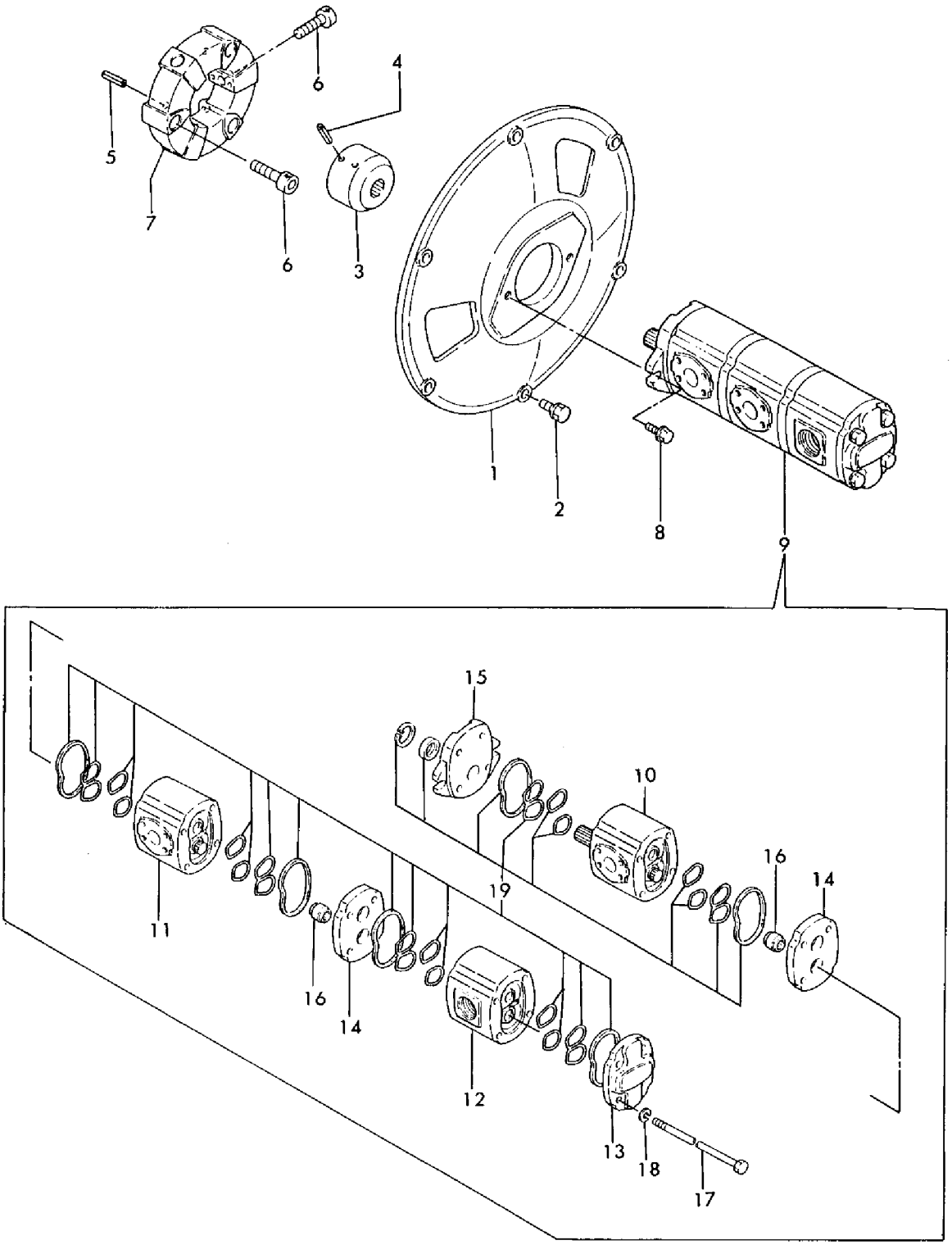

```
1,1,,172130-73350,,"MOTOR ASSY, DRIVE",2,,,2,,,,,,,,,,,,,
2,2,,172122-70010,,PIN,2,,,2,,,,,,,,,,,,,
3,2,,172122-70020,,"SEAL CASE",2,,,2,,,,,,,,,,,,,
4,2,,172122-70030,,BEARING,2,,,2,,,,,,,,,,,,,
5,2,,172122-70040,,"RING NUT",2,,,2,,,,,,,,,,,,,
6,2,,172122-70050,,"PLATE, THRUST",2,,,2,,,,,,,,,,,,,
7,2,,172122-70060,,"PLANETRY GEAR(B)",6,,,6,,,,,,,,,,,,,
8,2,,172122-70070,,COLLAR,6,,,6,,,,,,,,,,,,,
9,2,,172122-70080,,"GAUGE & ROLLER",6,,,6,,,,,,,,,,,,,
10,2,,172122-70090,,"SHAFT(B), GEAR",6,,,6,,,,,,,,,,,,,
11,2,,172122-70100,,"PLATE, THRUST",12,,,12,,,,,,,,,,,,,
12,2,,172122-70110,,"SPRING PIN",12,,,12,,,,,,,,,,,,,
13,2,,172122-70120,,BOLT,18,,,18,,,,,,,,,,,,,
14,2,,172122-70130,,"SUN GEAR",2,,,2,,,,,,,,,,,,,
15,2,,172122-70140,,"SNAP RING",2,,,2,,,,,,,,,,,,,
16,2,,172122-70150,,HOLDER,2,,,2,,,,,,,,,,,,,
17,2,,172122-70160,,"PLANETRY GEAR(A)",6,,,6,,,,,,,,,,,,,
18,2,,172122-70170,,"GAUGE & ROLLER",6,,,6,,,,,,,,,,,,,
19,2,,172122-70180,,"SHAFT(A), GEAR",6,,,6,,,,,,,,,,,,,
20,2,,172122-70190,,"PLATE, THRUST",2,,,2,,,,,,,,,,,,,
21,2,,172122-70200,,"GEAR, DRIVE",2,,,2,,,,,,,,,,,,,
22,2,,172122-70210,,"SNAP RING",2,,,2,,,,,,,,,,,,,
23,2,,172122-70220,,"PLATE, THRUST",2,,,2,,,,,,,,,,,,,
24,2,,172122-70230,,COVER,2,,,2,,,,,,,,,,,,,
25,2,,172122-70240,,WIRE,2,,,2,,,,,,,,,,,,,
26,2,,172122-70250,,SHAFT,2,,,2,,,,,,,,,,,,,
27,2,,172122-70260,,BEARING,2,,,2,,,,,,,,,,,,,
28,2,,172130-70010,,PLATE,2,,,2,,,,,,,,,,,,,
29,2,,172123-70020,,BALL,4,,,4,,,,,,,,,,,,,
31,2,,172122-70300,,COLLAR,2,,,2,,,,,,,,,,,,,
32,2,,172122-70310,,SPRING,2,,,2,,,,,,,,,,,,,
33,2,,172122-70320,,COLLAR,2,,,2,,,,,,,,,,,,,
34,2,,172122-70330,,"SNAP RING",2,,,2,,,,,,,,,,,,,
35,2,,172122-70340,,PIN,6,,,6,,,,,,,,,,,,,
36,2,,172122-70350,,BALL,2,,,2,,,,,,,,,,,,,
37,2,,172122-70360,,COLLAER,2,,,2,,,,,,,,,,,,,
38,2,,172122-70370,,"PLATE, RETAINER",2,,,2,,,,,,,,,,,,,
40,2,,172123-70030,,"PLATE, VALVE",2,,,2,,,,,,,,,,,,,
41,2,,172122-70400,,BEARING,2,,,2,,,,,,,,,,,,,
42,2,,172122-70410,,PIN,4,,,4,,,,,,,,,,,,,
43,2,,172122-70420,,PLUNGER,2,,,2,,,,,,,,,,,,,
44,2,,172122-70430,,"VALVE, CHECK",4,,,4,,,,,,,,,,,,,
45,2,,172122-70440,,SPRING,4,,,4,,,,,,,,,,,,,
46,2,,172122-70450,,PLUG,4,,,4,,,,,,,,,,,,,
47,2,,172122-70460,,"SPRING SEAT",4,,,4,,,,,,,,,,,,,
48-1,2,,172122-70840,,SPRING,4,,,4,,,S,1,,M00501,,,,,,M00501,,
49-1,2,,172122-70480,,CAP,4,,,4,,,S,1,,M00501,,,,,,M00501,,
50-1,2,,172122-70490,,"GUIDE, POPPET",4,,,4,,,S,1,,M00501,,,,,,M00501,,
51-1,2,,172122-70500,,POPPET,4,,,4,,,S,1,,M00501,,,,,,M00501,,
52-1,2,,172122-70510,,SPRING,4,,,4,,,S,1,,M00501,,,,,,M00501,,
53-1,2,,172122-70520,,PLUG,4,,,4,,,S,1,,M00501,,,,,,M00501,,
54-1,2,,172122-70530,,PIN,2,,,2,,,S,1,,M00501,,,,,,M00501,,
55-1,2,,172122-70540,,"BOLT, SOCKET",12,,,12,,,S,1,,M00501,,,,,,M00501,,
56,2,,172123-70051,,"SEAL SET,DRIVE MOTOR",2,,,2,,,,,,,,,,,,,
57,3,,172123-70150,,"SEAL SET, BASE PLATE",2,,,2,,,,,,,,,,,,,
58,3,,172123-70161,,"SEAL SET, VALVE",2,,,2,,,,,,,,,,,,,
59,3,,172122-70560,,"SEAL SET",2,,,2,,,,,,,,,,,,,
60,3,,172122-70570,,"SEAL SET",2,,,2,,,,,,,,,,,,,
61,2,,172123-70071,,"VALVE S/A",2,,,2,,,,,,,,,,,,,
64,3,,172123-70101,,SPRING,4,,,4,,,,,,,,,,,,,
65,3,,172123-70111,,PLUG,4,,,4,,,,,,,,,,,,,
66,3,,172123-70121,,PLUG,2,,,2,,,,,,,,,,,,,
67,2,,23871-020000,,"PLUG PT1/4,SCREW",4,,,4,,,,,,,,,,,,,
```

https://truckmanualshub.com/

```
68,2,,172124-70600,,"BOLT, SOCKET",4,,,4,,,,,,,,,,,,,,
69,2,,172123-70130,,"PISTON S/A",4,,,4,,,W,,,*1988.08,,,,,,*1988.08,,
70,1,,26013-120352,,"BOLT M12X 35",18,,,18,,,,,,,,,,,,,,
```

https://truckmanualshub.com/

Fig. 55 ソウコウモータ DRIVING MOTOR

D 72130-73300

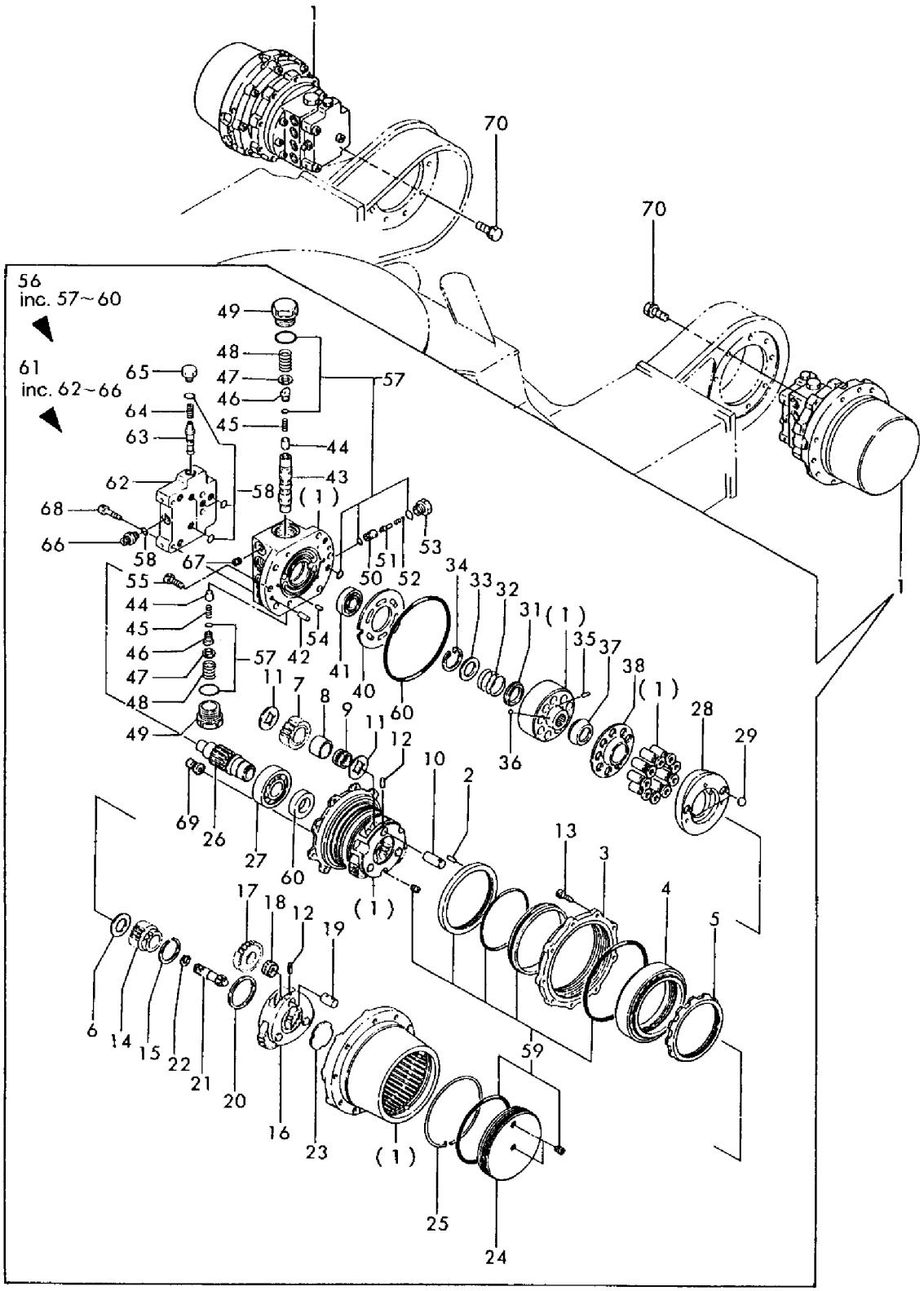

```
1,1,,172312-73300,,"MOTOR ASSY,TURNING",1,,,1,,,,,,,,,,,,,
2,2,,172312-73340,,"VALVE, TURNING BRAKE",1,,,1,,,,,,,,,,,,,,
3,3,,172122-70460,,"SPRING SEAT",2,,,2,,,,,,,,,,,,,
4,3,,172122-70470,,SPRING,2,,,2,,,,,,,,,,,,,
5,3,,172122-70710,,SPRING,2,,,2,,,,,,,,,,,,,
6,3,,172122-70720,,PLUG,2,,,2,,,,,,,,,,,,,
7,3,,172122-70740,,CAP,2,,,2,,,,,,,,,,,,,
8,3,,172122-70750,,"VALVE SEATSET",1,,,1,,,,,,,,,,,,,
9,3,,172312-73370,,"VALVE ASSY, RELIEF",2,,,2,,,,,,,,,,,,,,
10,2,,172112-74351,,"PISTON MOTOR",1,,,1,,,,,,,,,,,,,
11,3,,172122-70610,,"BOLT, SOCKET",3,,,3,,,,,,,,,,,,,
12,3,,172122-70620,,"SNAP RING",1,,,1,,,,,,,,,,,,,
13,3,,172122-70630,,"SNAP RING",1,,,1,,,,,,,,,,,,,
14,3,,172122-70640,,"SNAP RING",1,,,1,,,,,,,,,,,,,
15,3,,172122-70650,,"PARALLEL PIN",1,,,1,,,,,,,,,,,,,
16,3,,172122-70660,,SPRING,1,,,1,,,,,,,,,,,,,
17,3,,172122-70670,,WASHER,2,,,2,,,,,,,,,,,,,
18,3,,172122-70680,,"SEAL SET, MOTOR",1,,,1,,,,,,,,,,,,,
19,3,,23871-030000,,"PLUG PT3/8,SCREW",2,,,2,,,,,,,,,,,,,
20,1,,22217-140000,,"SPRING WASHER 14",2,,,2,,,,,,,,,,,,,
21,1,,24321-001100,,"O-RING 1A G-110.0",1,,,1,,,,,,,,,,,,,
22,1,,26116-140702,,"BOLT M14X 70 PLATED",2,,,2,,,,,,,,,,,,,,
```

https://truckmanualshub.com/

Fig. 56 センカイモータ TURNING MOTOR

D 72312-73310
(D 72312-73320)

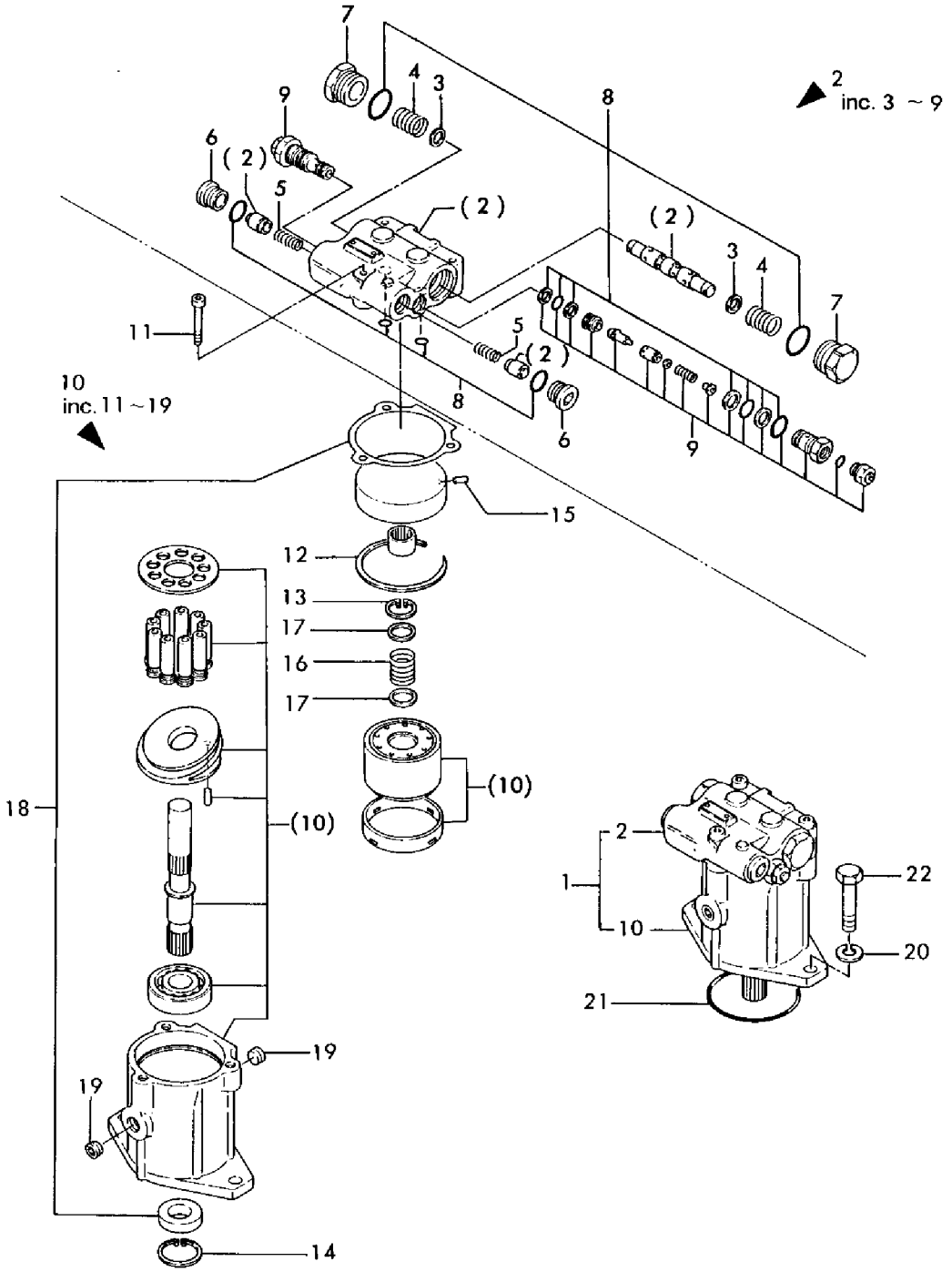

https://truckmanualshub.com/

```
1-1,1,,172124-73800,,"JOINT ASSY, SWIVEL",1,,,1,,,S,1,,M00501,,,,,,M00501,,
2-1,2,,172124-73830,,"HUB, SWIVEL JOINT",1,,,1,,,S,1,,M00501,,,,,,M00501,,
3-1,2,,172124-73810,,"SHAFT, SWIVEL",1,,,1,,,S,1,,M00501,,,,,,M00501,,
4,2,,172123-73850,,"COVER, SWIVEL END",1,,,1,,,,,,,,,,,,,
5,2,,172122-73860,,"SPACER, SWIVEL",1,,,1,,,,,,,,,,,,,
6,2,,172122-73870,,"THRUST WASHER",1,,,1,,,,,,,,,,,,,
7,2,,172123-73880,,"SEAL SET",1,,,1,,,,,,,,,,,,,
8,3,,172122-73890,,"SEAL, SWIVEL",9,,,9,,,,,,,,,,,,,
9,3,,24311-000800,,"O-RING 1A P-80.0",1,,,1,,,,,,,,,,,,,
10,3,,24311-001000,,"O-RING 1A P-100.0",1,,,1,,,,,,,,,,,,,
11,3,,24321-000950,,"O-RING 1A G-95.0",1,,,1,,,,,,,,,,,,,
12,2,,22242-000700,,"CIRCLIP   70",1,,,1,,,,,,,,,,,,,
13,2,,23871-020000,,"PLUG PT1/4,SCREW",4,,,4,,,,,,,,,,,,,
14,2,,23871-030000,,"PLUG PT3/8,SCREW",4,,,4,,,,,,,,,,,,,
15,2,,26013-100252,,"BOLT W/WASHER M10X25",4,,,4,,,,,,,,,,,,,
16,1,,172122-73910,,"CIRCLIP, SWIVEL",1,,,1,,,,,,,,,,,,,
17,1,,22217-140000,,"SPRING WASHER 14",2,,,2,,,,,,,,,,,,,
18,1,,22312-080220,,"PARALLEL PIN 8X22",2,,,2,,,,,,,,,,,,,
19,1,,26013-120252,,"BOLT M12X 25",4,,,4,,,,,,,,,,,,,
20,3,,26116-140402,,"BOLT M14X 40 PLATED",2,,,2,,,,,,,,,,,,,
```

https://truckmanualshub.com/

Fig. 57 スイベルジョイント SWIVEL JOINT

(D 72123-73800)
D 72124-73800

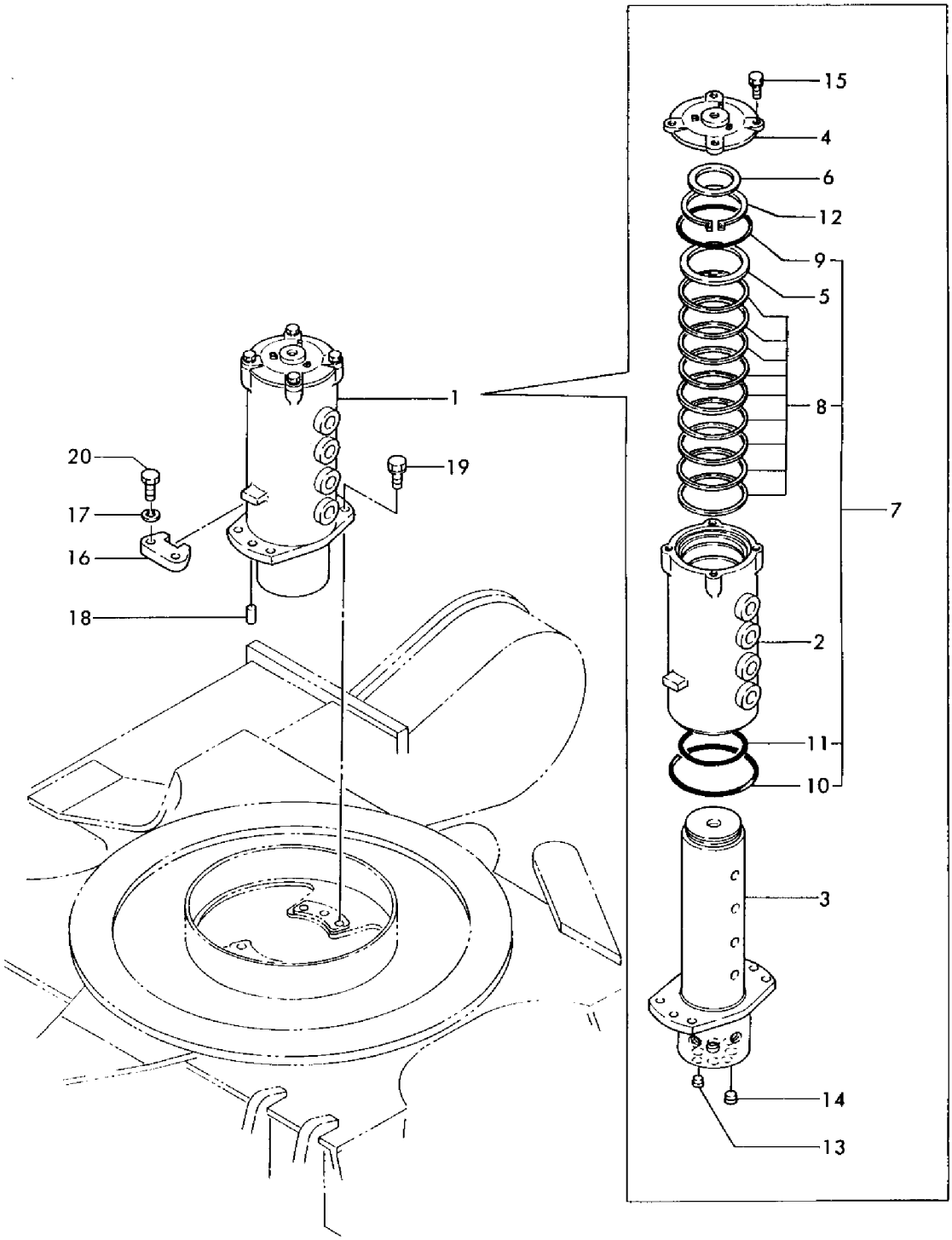

```
1,1,,172130-74100,,"CONTROL VALVE 7 ASSY",1,,,1,,,,,,,,,,,,,
2,2,,172130-74010,,"SECTION ASSY, VALVE",1,,,1,,,,,,,,,,,,,
3,3,,172124-74160,,"VALVE ASSY, RELIEF",1,,,1,,,,,,,,,,,,,
3-1,3,,172124-74370,,"VALVE, RELIEF",1,,,1,,,S,,,M00501,,,,,,M00501,,
4,4,,172116-74150,,O-RING,1,,,1,,,,,,,,,,,,,
5,3,,172116-74170,,"SECTION, INLET",1,,,1,,,,,,,,,,,,,
5-1,3,,172122-74530,,"SECTION, INLET",1,,,1,,,S,,,M00501,,,,,,M00501,,
6,4,,172122-74580,,"HOUSING, INLET",1,,,1,,,,,,,,,,,,,
7,4,,933171-80590,,O-RING,1,,,1,,,,,,,,,,,,,
8,2,,172130-74020,,"SECTION ASSY, VALVE",1,,,1,,,,,,,,,,,,,
9,3,,933166-80580,,"VALVE ASSY, RELIEF",2,,,2,,,,,,,,,,,,,
9-1,3,,172130-74160,,"VALVE ASSY, RELIEF",1,,,1,,,S,,,M00501,,,,,,M00501,,
10,4,,172116-74150,,O-RING,1,,,1,,,,,,,,,,,,,
11,3,,172122-74180,,"SECTION ASSY, VALVE",1,,,1,,,,,,,,,,,,,
11-1,3,,172122-74470,,"SECTION, SPOOL",1,,,1,,,S,,,M00501,,,,,,M00501,,
12,4,,172122-74130,,POPPET,1,,,1,,,,,,,,,,,,,
13,4,,933171-80540,,SPRING,1,,,1,,,,,,,,,,,,,
13-1,4,,172113-74170,,SPRING,1,,,1,,,S,,,M00501,,,,,,M00501,,
14,4,,172112-06330,,"SPRING,CONTROL VALVE",1,,,1,,,,,,,,,,,,,
14-1,4,,172113-74190,,SPRING,1,,,1,,,S,,,M00501,,,,,,M00501,,
15,4,,172116-74190,,"PLATE, SEAL",2,,,2,,,,,,,,,,,,,
16,4,,172116-74220,,SCREW,2,,,2,,,,,,,,,,,,,
17,4,,172116-74230,,"HEAD BOLT, SOCKET",2,,,2,,,,,,,,,,,,,
18,4,,933166-80520,,WIPER,2,,,2,,,,,,,,,,,,,
19,4,,933166-80530,,CAP,1,,,1,,,,,,,,,,,,,
20,4,,933166-80550,,"SCREW, CAP",1,,,1,,,,,,,,,,,,,
21,4,,933171-80510,,"SEAT, SPRING",2,,,2,,,,,,,,,,,,,
22,4,,933171-80590,,O-RING,1,,,1,,,,,,,,,,,,,
23,4,,933171-80610,,O-RING,2,,,2,,,,,,,,,,,,,
24,2,,172130-74030,,"SECTION ASSY, VALVE",1,,,1,,,,,,,,,,,,,
25,3,,172116-74130,,"VALVE (200KG/CM2)",1,,,1,,,,,,,,,,,,,
25-1,3,,172130-74170,,"VALVE, RELIEF",1,,,1,,,S,,,M00501,,,,,,M00501,,
26,4,,172116-74150,,O-RING,1,,,1,,,,,,,,,,,,,
27,3,,172116-74170,,"SECTION, INLET",1,,,1,,,,,,,,,,,,,
27-1,3,,172122-74480,,"SECTION, SPOOL",1,,,1,,,S,,,M00501,,,,,,M00501,,
28,4,,172122-74130,,POPPET,1,,,1,,,,,,,,,,,,,
29,4,,172113-74190,,SPRING,1,,,1,,,,,,,,,,,,,
30,4,,172116-74190,,"PLATE, SEAL",2,,,2,,,,,,,,,,,,,
31,4,,172116-74220,,SCREW,2,,,2,,,,,,,,,,,,,
32,4,,172116-74230,,"HEAD BOLT, SOCKET",2,,,2,,,,,,,,,,,,,
33,4,,933166-80520,,WIPER,2,,,2,,,,,,,,,,,,,
34,4,,933166-80530,,CAP,1,,,1,,,,,,,,,,,,,
35,4,,933166-80550,,"SCREW, CAP",1,,,1,,,,,,,,,,,,,
36,4,,933171-80510,,"SEAT, SPRING",2,,,2,,,,,,,,,,,,,
37,4,,933171-80540,,SPRING,1,,,1,,,,,,,,,,,,,
38,4,,933171-80590,,O-RING,1,,,1,,,,,,,,,,,,,
39,4,,933171-80610,,O-RING,2,,,2,,,,,,,,,,,,,
40,2,,172130-74040,,"SECTION ASSY, VALVE",1,,,1,,,,,,,,,,,,,
41,3,,172130-74110,,"SPOOL SECTION",1,,,1,,,,,,,,,,,,,
42,4,,172122-74130,,POPPET,1,,,1,,,,,,,,,,,,,
43,4,,172113-74190,,SPRING,1,,,1,,,,,,,,,,,,,
44,4,,172116-74190,,"PLATE, SEAL",2,,,2,,,,,,,,,,,,,
45,4,,172312-74200,,BOLT,2,,,2,,,,,,,,,,,,,
46,4,,172312-74210,,BOLT,2,,,2,,,,,,,,,,,,,
47,4,,172312-74220,,SPACER,2,,,2,,,,,,,,,,,,,
48,4,,172312-74230,,O-RING,2,,,2,,,,,,,,,,,,,
49,4,,933166-80520,,WIPER,2,,,2,,,,,,,,,,,,,
50,4,,933166-80530,,CAP,1,,,1,,,,,,,,,,,,,
51,4,,933166-80550,,"SCREW, CAP",1,,,1,,,,,,,,,,,,,
52,4,,933171-80510,,"SEAT, SPRING",2,,,2,,,,,,,,,,,,,
53,4,,933171-80540,,SPRING,1,,,1,,,,,,,,,,,,,
54,4,,933171-80590,,O-RING,1,,,1,,,,,,,,,,,,,
55,4,,933171-80610,,O-RING,2,,,2,,,,,,,,,,,,,
```

```
56,3,,172116-74130,,"VALVE (200KG/CM2)",2,,,2,,,,,,,,,,,,,
56-1,3,,172130-74170,,"VALVE, RELIEF",2,,,2,,,S,,,M00501,,,,,,M00501,,
57,4,,172116-74150,,O-RING,2,,,2,,,,,,,,,,,,,
58,2,,172130-74050,,"SECTION ASSY, VALVE",1,,,1,,,,,,,,,,,,,
59,3,,172130-74120,,"SPOOL SECTION",1,,,1,,,,,,,,,,,,,
60,4,,172122-74130,,POPPET,1,,,1,,,,,,,,,,,,,
61,4,,172113-74190,,SPRING,1,,,1,,,,,,,,,,,,,
62,4,,172116-74190,,"PLATE, SEAL",2,,,2,,,,,,,,,,,,,
63,4,,172312-74200,,BOLT,2,,,2,,,,,,,,,,,,,
64,4,,172312-74210,,BOLT,2,,,2,,,,,,,,,,,,,
65,4,,172312-74220,,SPACER,2,,,2,,,,,,,,,,,,,
66,4,,172312-74230,,O-RING,2,,,2,,,,,,,,,,,,,
67,4,,933166-80520,,WIPER,2,,,2,,,,,,,,,,,,,
68,4,,933166-80530,,CAP,1,,,1,,,,,,,,,,,,,
69,4,,933166-80550,,"SCREW, CAP",1,,,1,,,,,,,,,,,,,
70,4,,933171-80510,,"SEAT, SPRING",2,,,2,,,,,,,,,,,,,
71,4,,933171-80540,,SPRING,1,,,1,,,,,,,,,,,,,
72,4,,933171-80590,,O-RING,1,,,1,,,,,,,,,,,,,
73,4,,933171-80610,,O-RING,2,,,2,,,,,,,,,,,,,
74,3,,172116-74130,,"VALVE (200KG/CM2)",2,,,2,,,,,,,,,,,,,
74-1,3,,172130-74170,,"VALVE, RELIEF",2,,,2,,,S,,,M00501,,,,,,M00501,,
75,4,,172116-74150,,O-RING,2,,,2,,,,,,,,,,,,,
76,2,,172130-74060,,"SECTION ASSY, VALVE",1,,,1,,,,,,,,,,,,,
77,3,,172124-74160,,"VALVE ASSY, RELIEF",1,,,1,,,,,,,,,,,,,
77-1,3,,172124-74370,,"VALVE, RELIEF",1,,,1,,,S,,,M00501,,,,,,M00501,,
78,4,,172116-74150,,O-RING,1,,,1,,,,,,,,,,,,,
79,3,,172116-74160,,"SECTION, INLET",1,,,1,,,,,,,,,,,,,
79-1,3,,172122-74520,,"SECTION, INLET",1,,,1,,,S,,,M00501,,,,,,M00501,,
80,4,,172122-74590,,"HOUSING, INLET",1,,,1,,,,,,,,,,,,,
81,4,,933171-80590,,O-RING,1,,,1,,,,,,,,,,,,,
82,2,,172122-74070,,SPACER,1,,,1,,,,,,,,,,,,,
83,2,,172116-74150,,O-RING,1,,,1,,,,,,,,,,,,,
84,2,,172122-74150,,"SECTION, SPOOL",1,,,1,,,,,,,,,,,,,
85,3,,933171-80540,,SPRING,1,,,1,,,,,,,,,,,,,
85-1,3,,172122-74050,,SPRING,1,,,1,,,S,,,M00501,,,,,,M00501,,
86,3,,172116-74190,,"PLATE, SEAL",2,,,2,,,,,,,,,,,,,
87,3,,172116-74220,,SCREW,2,,,2,,,,,,,,,,,,,
88,3,,172116-74230,,"HEAD BOLT, SOCKET",2,,,2,,,,,,,,,,,,,
89,3,,933166-80520,,WIPER,2,,,2,,,,,,,,,,,,,
90,3,,933166-80530,,CAP,1,,,1,,,,,,,,,,,,,
91,3,,933166-80550,,"SCREW, CAP",1,,,1,,,,,,,,,,,,,
92,3,,933171-80510,,"SEAT, SPRING",2,,,2,,,,,,,,,,,,,
93,3,,933171-80590,,O-RING,1,,,1,,,,,,,,,,,,,
94,3,,933171-80610,,O-RING,2,,,2,,,,,,,,,,,,,
95,2,,172122-74160,,"SECTION ASSY, SPOOL",1,,,1,,,,,,,,,,,,,
96,3,,172122-74040,,"SCREW, CAP",1,,,1,,,,,,,,,,,,,
97,3,,172122-74120,,WASHER,1,,,1,,,,,,,,,,,,,
98,3,,172116-74190,,"PLATE, SEAL",2,,,2,,,,,,,,,,,,,
99,3,,172122-74190,,"HEAD, SPOOL",1,,,1,,,,,,,,,,,,,
100,3,,172116-74220,,SCREW,2,,,2,,,,,,,,,,,,,
101,3,,172116-74230,,"HEAD BOLT, SOCKET",2,,,2,,,,,,,,,,,,,
102,3,,172122-74270,,O-RING,2,,,2,,,,,,,,,,,,,
103,3,,172116-74420,,PLUG,1,,,1,,,,,,,,,,,,,
104,3,,172116-74430,,O-RING,1,,,1,,,,,,,,,,,,,
105,3,,23871-030000,,"PLUG PT3/8,SCREW",1,,,1,,,,,,,,,,,,,
106,3,,933166-80520,,WIPER,2,,,2,,,,,,,,,,,,,
107,3,,933166-80530,,CAP,1,,,1,,,,,,,,,,,,,
108,3,,933171-80510,,"SEAT, SPRING",2,,,2,,,,,,,,,,,,,
109,3,,933171-80540,,SPRING,1,,,1,,,,,,,,,,,,,
110,3,,933171-80590,,O-RING,1,,,1,,,,,,,,,,,,,
111,3,,933171-80610,,O-RING,2,,,2,,,,,,,,,,,,,
112,2,,172122-74170,,"SECTION, SPOOL",1,,,1,,,,,,,,,,,,,
113,3,,172122-74050,,SPRING,1,,,1,,,,,,,,,,,,,
```

https://truckmanualshub.com/

```
114,3,,172116-74190,,"PLATE, SEAL",2,,,2,,,,,,,,,,,,,
115,3,,172116-74220,,SCREW,2,,,2,,,,,,,,,,,,,
116,3,,172116-74230,,"HEAD BOLT, SOCKET",2,,,2,,,,,,,,,,,,,,
117,3,,933166-80520,,WIPER,2,,,2,,,,,,,,,,,,,
118,3,,933166-80530,,CAP,1,,,1,,,,,,,,,,,,,
119,3,,933166-80550,,"SCREW, CAP",1,,,1,,,,,,,,,,,,,
120,3,,933171-80510,,"SEAT, SPRING",2,,,2,,,,,,,,,,,,,,
121,3,,933171-80590,,O-RING,1,,,1,,,,,,,,,,,,,
122,3,,933171-80610,,O-RING,2,,,2,,,,,,,,,,,,,
123,2,,172122-74240,,TIE-ROD,1,,,1,,,,,,,,,,,,,
124,2,,172122-74250,,TIE-ROD,2,,,2,,,,,,,,,,,,,
125,2,,172116-74320,,PLUG,1,,,1,,,,,,,,,,,,,
126,2,,172124-74150,,NUT,4,,,4,,,,,,,,,,,,,
126-1,2,,26716-080002,,"NUT M 8",4,,,4,,,R,,,M00501,,,,,,M00501,,
127,2,,172124-74140,,NUT,2,,,2,,,,,,,,,,,,,
127-1,2,,26716-100002,,"NUT M10",2,,,2,,,R,,,M00501,,,,,,M00501,,
128,1,,22217-100000,,"SPRING WASHER 10",4,,,4,,,,,,,,,,,,,
129,1,,26013-100352,,"BOLT M10X 35",4,,,4,,,,,,,,,,,,,
130,1,,26716-100002,,"NUT M10",4,,,4,,,,,,,,,,,,,
```

https://truckmanualshub.com/

Fig. 58 コントロールバルブ(メイン) CONTROL VALVE (MAINE)

D 72130-74100

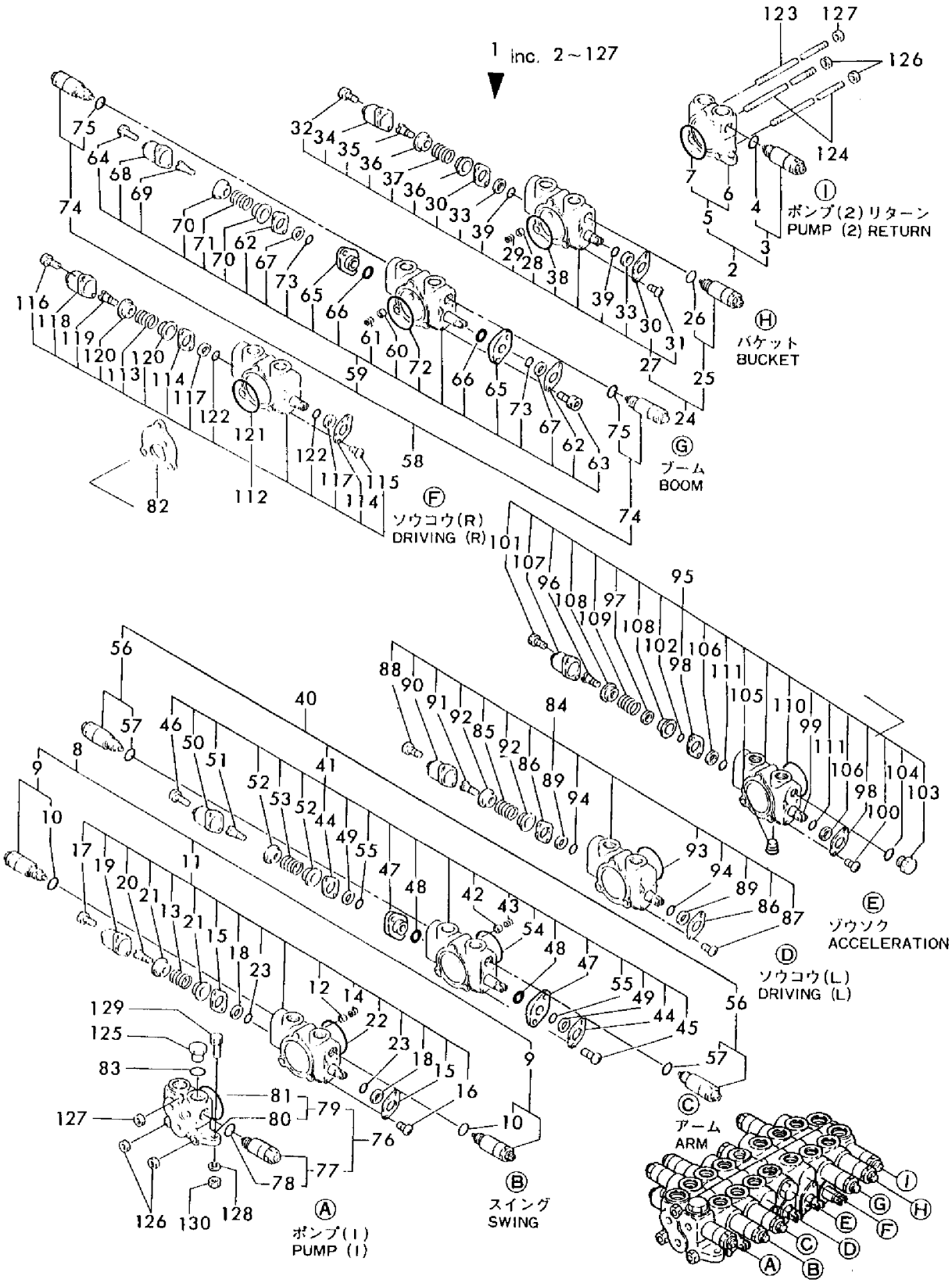

https://truckmanualshub.com/

```
1,1,,172130-74200,,"CONTROL VALVE 2 COMP",1,,,1,,,,,,,,,,,,,
2,2,,172122-74010,,"OUTLET SECTION ASSY",1,,,1,,,,,,,,,,,,,
3,2,,172122-74140,,"SECTION, SPOOL",1,,,1,,,,,,,,,,,,,
4,3,,172614-74230,,"SCREW, CAP",1,,,1,,,,,,,,,,,,,
5,3,,172614-74240,,"SEAT, SPRING",2,,,2,,,,,,,,,,,,,
6,3,,172614-74250,,"SPRING, PLUNGER",1,,,1,,,,,,,,,,,,,
7,3,,172614-74260,,CAP,1,,,1,,,,,,,,,,,,,
8,3,,172614-74270,,"PLATE, SEAL",2,,,2,,,,,,,,,,,,,
9,3,,172614-74290,,WIPER,2,,,2,,,,,,,,,,,,,
10,3,,172614-74310,,SCREW,2,,,2,,,,,,,,,,,,,
11,3,,172614-74320,,"HEAD BOLT, SOCKET",2,,,2,,,,,,,,,,,,,
12,3,,172122-74640,,"HEAD, SPOOL",1,,,1,,,,,,,,,,,,,
13,3,,172614-74300,,O-RING,2,,,2,,,,,,,,,,,,,
13-1,3,,24311-000120,,"O-RING 1A P 12.0",2,,,2,,,R,,,M00501,,,,,,M00501,,
14,3,,172614-74130,,O-RING,1,,,1,,,,,,,,,,,,,
14-1,3,,24321-000550,,"O-RING 1A G-55.0",1,,,1,,,R,,,M00501,,,,,,M00501,,
15,2,,172122-74230,,TIE-ROD,3,,,3,,,,,,,,,,,,,
16,2,,172130-74300,,"SECTION ASSY, VALVE",1,,,1,,,,,,,,,,,,,
17,3,,172614-74350,,"VALVE ASSY, RELIEF",1,,,1,,,,,,,,,,,,,
17-1,3,,172130-74280,,"VALVE ASSY, RELIEF",1,,,1,,,S,,,M00501,,,,,,M00501,,
18,4,,172614-74360,,O-RING,1,,,1,,,,,,,,,,,,,
18-1,4,,24315-000140,,"O-RING 1B P-14.0",1,,,1,,,R,,,M00501,,,,,,M00501,,
19,4,,172614-74370,,O-RING,2,,,2,,,,,,,,,,,,,
19-1,4,,24315-000180,,"O-RING 1B P-18.0",1,,,1,,,R,,,M00501,,,,,,M00501,,
20,3,,172614-74110,,"SECTION, INLET",1,,,1,,,,,,,,,,,,,
20-1,3,,172122-74630,,"SECTION, INLET",1,,,1,,,S,,,M00501,,,,,,M00501,,
21,4,,172122-74620,,"HOUSING, INLET",1,,,1,,,,,,,,,,,,,
22,4,,172614-74130,,O-RING,1,,,1,,,,,,,,,,,,,
22-1,4,,24321-000550,,"O-RING 1A G-55.0",1,,,1,,,R,,,M00501,,,,,,M00501,,
23,2,,172130-74310,,"SECTION ASSY, VALVE",1,,,1,,,,,,,,,,,,,
24,3,,172130-74210,,"SPOOL SECTION",1,,,1,,,,,,,,,,,,,
25,4,,172122-74020,,"VALVE, LOAD CHECK",1,,,1,,,,,,,,,,,,,
26,4,,172614-74230,,"SCREW, CAP",1,,,1,,,,,,,,,,,,,
27,4,,172614-74240,,"SEAT, SPRING",2,,,2,,,,,,,,,,,,,
28,4,,172614-74250,,"SPRING, PLUNGER",1,,,1,,,,,,,,,,,,,
29,4,,172614-74260,,CAP,1,,,1,,,,,,,,,,,,,
30,4,,172614-74270,,"PLATE, SEAL",2,,,2,,,,,,,,,,,,,
31,4,,172122-74030,,SPRING,1,,,1,,,,,,,,,,,,,
31-1,4,,172614-74280,,"SPRING, CHECK VALVE",1,,,1,,,S,,,M00501,,,,,,M00501,,
32,4,,172614-74290,,WIPER,2,,,2,,,,,,,,,,,,,
33,4,,172614-74310,,SCREW,2,,,2,,,,,,,,,,,,,
34,4,,172614-74320,,"HEAD BOLT, SOCKET",2,,,2,,,,,,,,,,,,,
35,4,,172614-74300,,O-RING,2,,,2,,,,,,,,,,,,,
35-1,4,,24311-000120,,"O-RING 1A P 12.0",2,,,2,,,R,,,M00501,,,,,,M00501,,
36,4,,172614-74130,,O-RING,1,,,1,,,,,,,,,,,,,
36-1,4,,24321-000550,,"O-RING 1A G-55.0",1,,,1,,,R,,,M00501,,,,,,M00501,,
37,3,,172130-74220,,"VALVE ASSY",1,,,1,,,,,,,,,,,,,
38,4,,172614-74360,,O-RING,1,,,1,,,,,,,,,,,,,
38-1,4,,24315-000140,,"O-RING 1B P-14.0",1,,,1,,,R,,,M00501,,,,,,M00501,,
39,4,,172614-74370,,O-RING,1,,,1,,,,,,,,,,,,,
39-1,4,,24315-000180,,"O-RING 1B P-18.0",1,,,1,,,R,,,M00501,,,,,,M00501,,
40,2,,172130-74250,,PLUG,1,,,1,,,,,,,,,,,,,
40-1,2,,23871-020000,,"PLUG PT1/4,SCREW",1,,,1,,,R,,,*1987.02,,,,,,*1987.02,,
41,2,,172130-74260,,NUT,6,,,6,,,,,,,,,,,,,
41-1,2,,26716-080002,,"NUT M 8",6,,,6,,,R,,,M00501,,,,,,M00501,,
42,1,,22217-100000,,"SPRING WASHER 10",3,,,3,,,,,,,,,,,,,
43,1,,26013-100352,,"BOLT M10X 35",3,,,3,,,,,,,,,,,,,
44,1,,26716-100002,,"NUT M10",3,,,3,,,,,,,,,,,,,
```

https://truckmanualshub.com/

Fig. 59 コントロールバルブ(ブレード) CONTROL VALVE (BLADE)

D 72130-74100

1 inc. 2 ~ 41

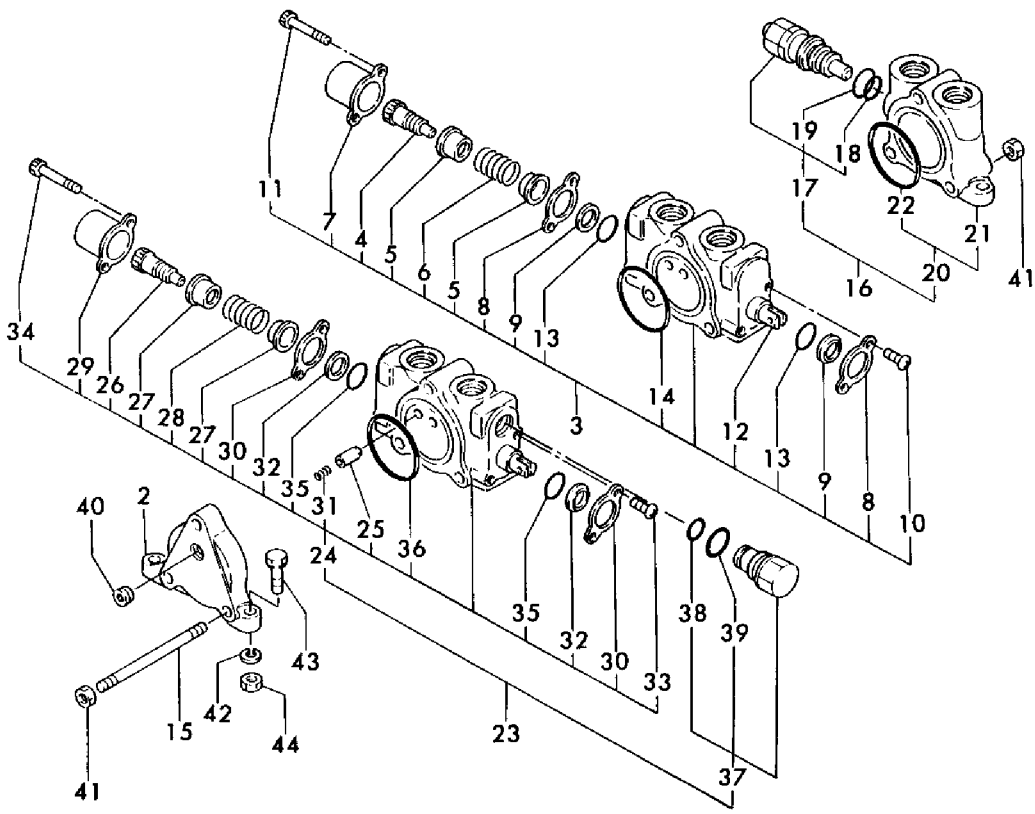

https://truckmanualshub.com/

```
1,1,,772312-75200,,"RESERVOIR TANK ASSY",1,,,1,,,,,,,,,,,,,
2,2,,172312-73700,,"ROD, FILTER",1,,,1,,,,,,,,,,,,,
2-1,2,,172122-73711,,"ROD, FILTER SUPPORT",1,,,1,,,R,,,*1985.07,,,,,,*1985.07,,
3,2,,172112-74801,,"STRAINER, SUCTION",1,,,1,,,,,,,,,,,,,
4,2,,172112-74901,,"ELEMENT W/VALVE",1,,,1,,,,,,,,,,,,,
5,3,,172112-74911,,ELEMENT,1,,,1,,,,,,,,,,,,,
6,3,,172112-74971,,"VALVE, BY-PASS",1,,,1,,,,,,,,,,,,,
7,2,,172112-75770,,"SPRING, STRAINER",1,,,1,,,,,,,,,,,,,
8,2,,172112-75780,,"SPRING, STRAINER",1,,,1,,,,,,,,,,,,,
9,2,,26716-100002,,"NUT M10",1,,,1,,,,,,,,,,,,,
10,2,,172312-75110,,"CAP, RESERVIOR(A)",1,,,1,,,,,,,,,,,,,
11,2,,172312-75130,,"BREATHER, AIR",1,,,1,,,,,,,,,,,,,
13,2,,172122-75330,,"COVER (B), RESERVOIR",1,,,1,,,,,,,,,,,,,
13-1,2,,172122-75331,,"COVER (B),
RESERVOIR",1,,,1,,,N,,,*1988.02,,,,,,*1988.02,,
14,2,,172110-75460,,"GAUGE, OIL LEVEL",1,,,1,,,,,,,,,,,,,
14-1,2,,172122-75600,,"GAUGE, OIL LEVEL",1,,,1,,,R,,,M00559,,,,,,M00559,,
16,3,,172122-75620,,BOLT,2,,,2,,,,,,,,,,,,,
17,3,,172122-75630,,GASKET,4,,,4,,,,,,,,,,,,,
19,2,,22134-240000,,"WASHER 24",1,,,1,,,,,,,,,,,,,
20,2,,22417-200160,,"COTTER PIN 2.0X16",1,,,1,,,,,,,,,,,,,
21,2,,23871-060000,,"PLUG PT3/4,SCREW",1,,,1,,,,,,,,,,,,,
22,2,,24321-000650,,"O-RING 1A G-65.0",1,,,1,,,,,,,,,,,,,
23,2,,24321-001350,,"O-RING 1A G-135.0",1,,,1,,,,,,,,,,,,,
24,2,,24321-001900,,"O-RING 1A G-190.0",1,,,1,,,,,,,,,,,,,
25,2,,26013-100202,,"BOLT W/WASHER M10X20",8,,,8,,,,,,,,,,,,,
26,2,,933171-23042,,MAGNET,1,,,1,,,,,,,,,,,,,
27,2,,933171-23050,,"PLUG 1/4",1,,,1,,,Z,,,*1988.02,,,,,,*1988.02,,
28,2,,933171-23062,,"PLUG 24, DRAIN",1,,,1,,,,,,,,,,,,,
29,1,,22217-140000,,"SPRING WASHER 14",4,,,4,,,,,,,,,,,,,
30,1,,26116-140302,,"BOLT M14X 30 PLATED",4,,,4,,,,,,,,,,,,,
31,1,,933169-22940,,"SPACER, RESERVOIR",2,,,2,,,,,,,,,,,,,
32,2,,933169-23070,,"SPACER (1.6)",2,,,2,,,,1,,,,,,,,,
33,2,,933169-23080,,"SPACER (3.2)",2,,,2,,,,1,,,,,,,,,
34,1,,933169-23040,,"WASHER 15X40",4,,,4,,,,,,,,,,,,,
35,1,,172122-77210,,"COVER,HYD.RESERVOIR",1,,,1,,,,2,,,,,,,,,
35-1,1,,172122-77211,,"COVER,HYD.RESERVOIR",1,,,1,,,N,,,*1988.02,,,,,,*1988.02,,
```

https://truckmanualshub.com/

Fig. 60 サドウユタンク HYD. OIL TANK

D 72312-73700
D 72312-75100
D 72130-75110

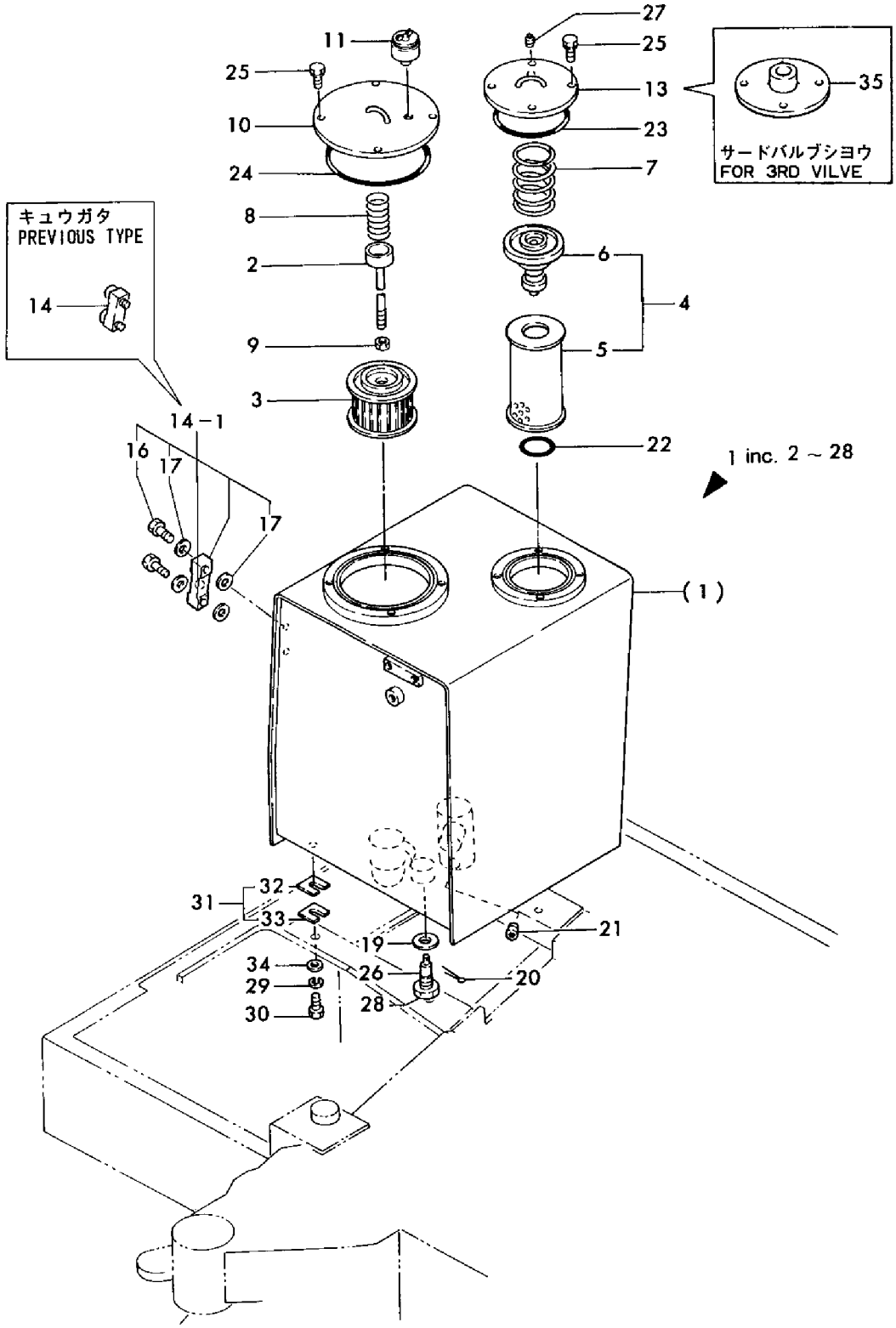

```
1,1,,172312-76100,,"FLANGE,PUMP INLET",2,,,2,,,,,,,,,,,,,
2,1,,172122-76120,,"CONNECTOR PF1/2-60",1,,,1,,,,,,,,,,,,,
3,1,,172312-76130,,"NIPPLE,PUMP INLET",1,,,1,,,,,,,,,,,,,
4,1,,172116-76140,,"CONNECTOR 1-1/16",1,,,1,,,,,,,,,,,,,
4-1,1,,172116-76141,,"CONNECTOR 1-1/16",1,,,1,,,N,,,X,,,,,,,,
5,2,,933160-03570,,"O-RING (B)",1,,,1,,,W,,,X,,,,,,,,
6,1,,172122-76150,,"FLANGE, DISCHARGE",2,,,2,,,,,,,,,,,,,
7,1,,172116-76360,,"3-WAY CONNECTOR",1,,,1,,,,,,,,,,,,,
7-1,1,,172116-76361,,"3-WAY CONNECTOR",1,,,1,,,N,,,X,,,,,,,,
8,2,,933152-07400,,"O-RING (A)",1,,,1,,,W,,,X,,,,,,,,
9,1,,24311-000140,,"O-RING 1A P-14.0",1,,,1,,,,,,,,,,,,,
10,1,,24311-000300,,"O-RING 1A P-30.0",2,,,2,,,,,,,,,,,,,
11,1,,24311-000300,,"O-RING 1A P-30.0",2,,,2,,,,,,,,,,,,,
12,1,,26013-100202,,"BOLT W/WASHER M10X20",8,,,8,,,,,,,,,,,,,
13,1,,26013-100202,,"BOLT W/WASHER M10X20",8,,,8,,,,,,,,,,,,,
14,1,,933152-07274,,CONNECTOR,2,,,2,,,,,,,,,,,,,
15,1,,933152-07400,,"O-RING (A)",2,,,2,,,,,,,,,,,,,
16,1,,933155-08111,,"NUT 1-1/16-12UN",1,,,1,,,Z,,,X,,,,,,,,
17,1,,933155-08120,,"RING, BACK-UP",1,,,1,,,Z,,,X,,,,,,X,,
18,1,,933160-01510,,"NUT (A), CONNECTOR",1,,,1,,,Z,,,X,,,,,,X,,
19,1,,933160-03570,,"O-RING (B)",1,,,1,,,Z,,,X,,,,,,X,,
20,1,,933166-25420,,ADAPTER,1,,,1,,,,,,,,,,,,,
20-1,1,,23391-040000,,"JOINT RGI 1/2",1,,,1,,,N,,,*1989.05,,,,,,*1989.05,,
21,1,,933171-24740,,"PLUG PT3/8",1,,,1,,,,,,,,,,,,,
22,1,,172112-76300,,"RETAINER A,BOOM PIPE",1,,,1,,,,,,,,,,,,,
23,1,,172122-76400,,"PIPE P1",1,,,1,,,,,,,,,,,,,
24,1,,172130-76400,,"PIPE(A),SUCTION",1,,,1,,,,,,,,,,,,,
25,1,,172130-76420,,"PIPE(B),SUCTION",1,,,1,,,,,,,,,,,,,
26,1,,172122-76450,,"PIPE P2",1,,,1,,,,,,,,,,,,,
27,1,,172122-76480,,"STAY(A), PIPE",1,,,1,,,Z,,,M00559,,,,,,M00559,,
28,1,,26013-100252,,"BOLT W/WASHER M10X25",2,,,2,,,,,,,,,,,,,
29,1,,26013-100252,,"BOLT W/WASHER M10X25",2,,,2,,,Z,,,M00559,,,,,,M00559,,
30,1,,26013-100352,,"BOLT M10X 35",1,,,1,,,,,,,,,,,,,
31,1,,933171-24740,,"PLUG PT3/8",2,,,2,,,,,,,,,,,,,
32,1,,26013-100252,,"BOLT W/WASHER M10X25",2,,,2,,,,,,,,,,,,,
33,1,,172130-78100,,"HOSE G716YY045",1,,,1,,,,,,,,,,,,,
34,1,,172130-78100,,"HOSE G716YY045",1,,,1,,,,,,,,,,,,,
35,1,,172130-78110,,"HOSE G716YY040",1,,,1,,,,,,,,,,,,,
36,1,,172130-78130,,"HOSE G208BE055",1,,,1,,,,,,,,,,,,,
37,1,,172130-78140,,"HOSE G208BB050",1,,,1,,,,,,,,,,,,,
38,1,,172130-78150,,"HOSE G208BC078",1,,,1,,,,,,,,,,,,,
39,1,,172312-78240,,"HOSE  45X380",1,,,1,,,,,,,,,,,,,
40,1,,172312-78250,,"HOSE  45X750",1,,,1,,,,,,,,,,,,,
40-1,1,,172312-78251,,"HOSE  45X735",1,,,1,,,S,,,*1987.06,,,,,,*1987.06,,
41,1,,172110-78270,,"CLAMP (B), HOSE",1,,,1,,,,,,,,,,,,,
42,1,,23000-041000,,"CLAMP 41",6,,,6,,,,,,,,,,,,,
43,1,,23000-070000,,"CLAMP 70",4,,,4,,,,,,,,,,,,,
43-1,1,,23000-070000,,"CLAMP 70",8,,,8,,,K,,,M20501,,,,,,M20501,,
44,1,,933152-07400,,"O-RING (A)",1,,,1,,,Z,,,X,,,,,,X,,
45,1,,933152-07410,,"RING (A), BUCK UP",1,,,1,,,Z,,,X,,,,,,X,,
```

https://truckmanualshub.com/

Fig. 61 ユアツハイカン(タンクーポンプーバルブ) HYD. OIL PIPING (TANK-PUMP-VALVE)

サドウユタンク → メーンポンプ → コントロールバルブ
HYD. OIL TANK → MAIN PUMP → CONTOROL VALVE

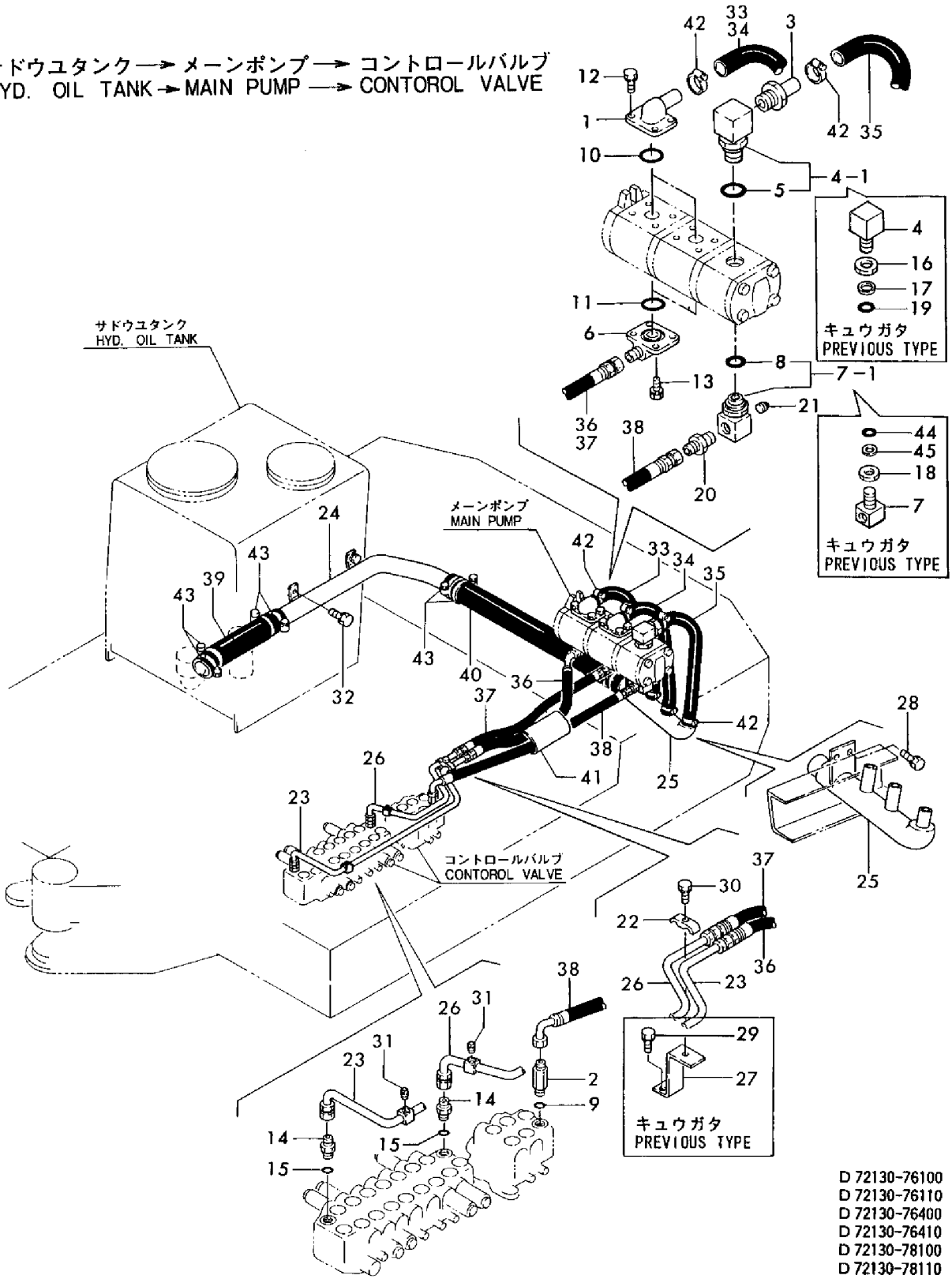

D 72130-76100
D 72130-76110
D 72130-76400
D 72130-76410
D 72130-78100
D 72130-78110

https://truckmanualshub.com/

```
1,1,,172730-75140,,ADAPTOR,1,,,1,,,,,,,,,,,,,
2,1,,172116-76380,,ADAPTER,1,,,1,,,,,,,,,,,,,
3,1,,24311-000140,,"O-RING 1A P-14.0",2,,,2,,,,,,,,,,,,,
4,1,,24315-000180,,"O-RING 1B P-18.0",2,,,2,,,,,,,,,,,,,
5,1,,933152-24120,,"O-RING (B)",6,,,6,,,,,,,,,,,,,
6,1,,933160-01370,,"CONNECTOR PF1/2-3/8",2,,,2,,,,,,,,,,,,,
7,1,,933166-24120,,"CONNECTOR PF1/2-10",6,,,6,,,,,,,,,,,,,
8,1,,172130-76500,,PIPE(A2),1,,,1,,,,,,,,,,,,,
9,1,,172130-76520,,PIPE(B2),1,,,1,,,,,,,,,,,,,
10,1,,172130-76540,,PIPE(A6),1,,,1,,,,,,,,,,,,,
10-1,1,,172130-76541,,PIPE(A6),1,,,1,,,F,1,,M00521,,,,,,M00521,,
11,1,,172130-76560,,PIPE(B6),1,,,1,,,,,,,,,,,,,
11-1,1,,172130-76561,,PIPE(B6),1,,,1,,,S,,,M00521,,,,,,M00521,,
12,1,,172130-76580,,PIPE(A7),1,,,1,,,,,,,,,,,,,
13,1,,172130-76600,,PIPE(B7),1,,,1,,,,,,,,,,,,,
14,1,,172130-76850,,"STAY,PIPE",1,,,1,,,,,,,,,,,,,
14-1,1,,172130-76851,,"STAY, PIPE",1,,,1,,,S,,,M00527,,,,,,M00521,,
15,1,,22137-100000,,"WASHER 10,POLISHED",2,,,2,,,,,,,,,,,,,
16,1,,26013-100202,,"BOLT W/WASHER M10X20",2,,,2,,,,,,,,,,,,,,
17,1,,26013-100352,,"BOLT M10X 35",3,,,3,,,,,,,,,,,,,
18-1,1,,933155-09670,,"CLAMP, PIPE",3,,,3,,,,2,,,,,,,,,
19,1,,172130-78300,,"PIPE P206CD068",1,,,1,,,,,,,,,,,,,
20,1,,172130-78300,,"PIPE P206CD068",1,,,1,,,,,,,,,,,,,
21,1,,172130-76920,,"STAY, PIPE",1,,,1,,,,,,,,,,,,,
```

https://truckmanualshub.com/

Fig. 62 ユアツハイカン(バルブーモータ，ブーム) HYD. OIL PIPING (VALVE-MOTOR, BOOM)

D 72130-76100
D 72130-76110
D 72130-76400
D 72130-76410
D 72130-78100
D 72130-78110

コントロールバルブ → センカイモーター ，ブーム
CONTOROL VALVE → REVOLVE. MOTOR ， BOOM

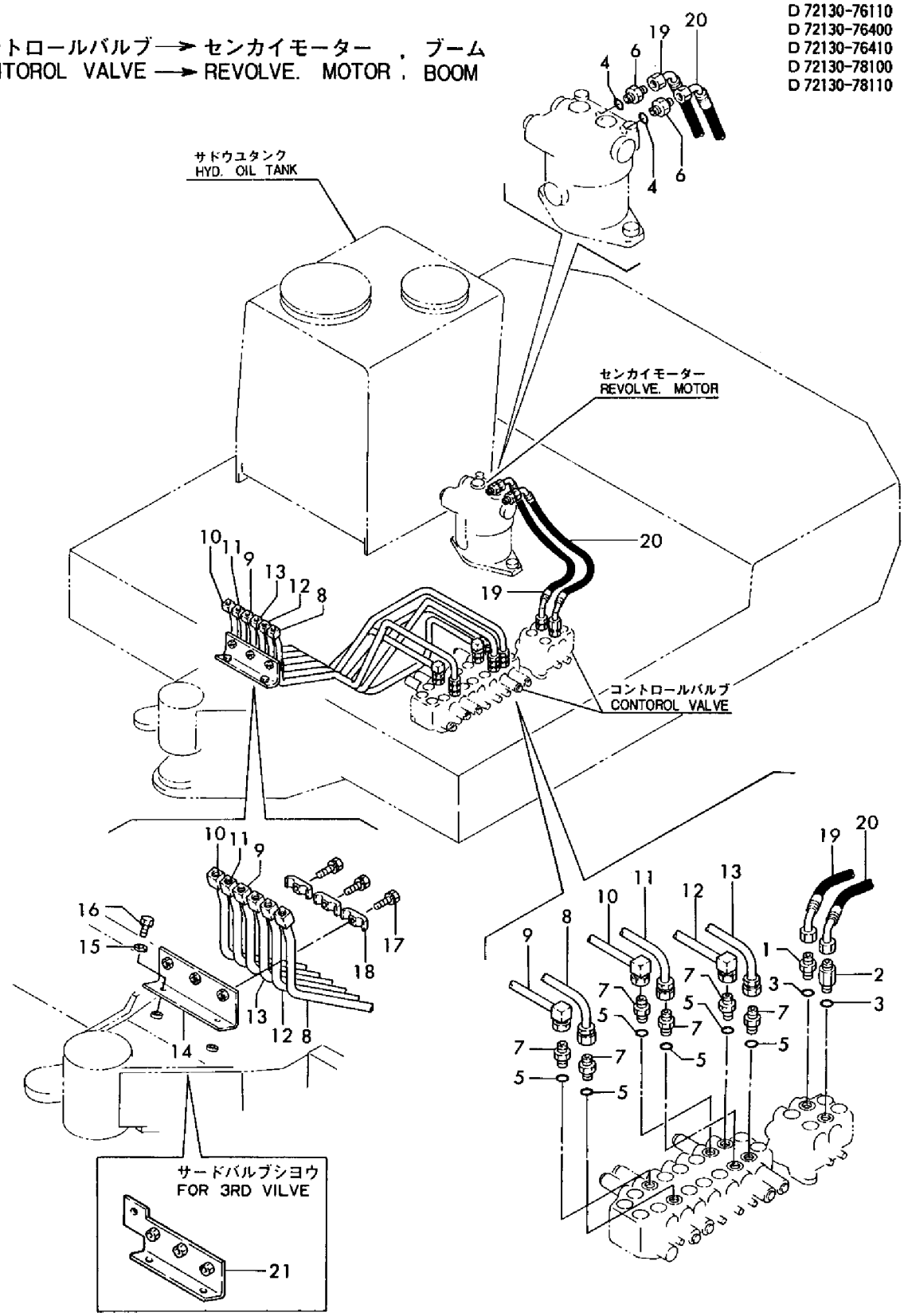

https://truckmanualshub.com/

```
1,1,,172730-75140,,ADAPTOR,1,,,1,,,,,,,,,,,,,
2,1,,172123-76100,,"CONNECTOR PT1/4-40",1,,,1,,,,,,,,,,,,,
2-1,1,,172123-76101,,"CONNECTOR PT1/4-40",1,,,1,,,N,,,X,,,,,,X,,
3,2,,933152-24120,,"O-RING (B)",1,,,1,,,W,,,X,,,,,,X,,
4,1,,172135-76100,,"ELBOW 3/8",2,,,2,,,,,,,,,,,,,
5,1,,172122-76110,,"VALVE 2.7, THROTTLE",1,,,1,,,,,,,,,,,,,
6,1,,172312-76220,,"CONNECTOR 1/4-3/4UN",1,,,1,,,,,,,,,,,,,
7,1,,172135-76110,,"VALVE 3.6",2,,,2,,,,,,,,,,,,,
8,2,,172135-76120,,VALVE,2,,,2,,,,,,,,,,,,,
9,2,,172135-76130,,SPOOL,2,,,2,,,,,,,,,,,,,
10,2,,22252-000140,,"CIRCLIP   14",2,,,2,,,,,,,,,,,,,
11,1,,172130-76110,,"CONNECTOR PF 1/2-47",4,,,4,,,,,,,,,,,,,
12,1,,172110-76440,,ELBOW,2,,,2,,,,,,,,,,,,,
12-1,1,,23393-020000,,"JOINT 90RGI1/4",2,,,2,,,R,,,*1989.05,,,,,,*1989.05,,
13,1,,24311-000140,,"O-RING 1A P-14.0",2,,,2,,,,,,,,,,,,,
14,1,,933166-25350,,"ELBOW 1/2 (90ß)",4,,,4,,,,,,,,,,,,,
14-1,1,,23393-040000,,"JOINT 90RGI 1/4",4,,,4,,,R,,,*1989.05,,,,,,*1989.05,,
15,1,,933152-24061,,CONNECTOR,1,,,1,,,,,,,,,,,,,
15-1,1,,933152-24062,,"CONNECTOR (C)",2,,,2,,,N,,,X,,,,,,X,,
16,2,,933152-24120,,"O-RING (B)",1,,,1,,,W,,,X,,,,,,X,,
17,1,,933152-24120,,"O-RING (B)",8,,,8,,,,,,,,,,,,,
17-1,1,,933152-24120,,"O-RING (B)",5,,,5,,,K,,,X,,,,,,X,,
18,1,,933169-24090,,"CONNECTOR PF3/8-70",1,,,1,,,,,,,,,,,,,
18-1,1,,933169-24091,,CONNECTOR,1,,,1,,,N,,,X,,,,,,X,,
19,2,,933152-24120,,"O-RING (B)",1,,,1,,,W,,,X,,,,,,X,,
20,1,,172110-76470,,NIPPLE,1,,,1,,,,,,,,,,,,,
20-1,1,,23391-020000,,"JOINT RGI1/4",1,,,1,,,R,,,*1988.01,,,,,,*1988.01,,
21,1,,933152-22771,,"ELBOW (90ß)",1,,,1,,,,,,,,,,,,,
21-1,1,,23393-030000,,"JOINT 90RGI 3/8",1,,,1,,,R,,,*1989.05,,,,,,*1989.05,,
22,1,,933152-22761,,"ELBOW (45ß)",1,,,1,,,,,,,,,,,,,
22-1,1,,23394-030000,,"JOINT 45RGI 3/8",1,,,1,,,R,,,*1989.05,,,,,,*1989.05,,
23,1,,172130-78210,,"HOSE P208CD077",1,,,1,,,,,,,,,,,,,
24,1,,172130-78180,,"PIPE P204BB040",1,,,1,,,,,,,,,,,,,
25,1,,172130-78220,,HOSE,1,,,1,,,,,,,,,,,,,
26,1,,172130-78190,,"HOSE P204BC065",1,,,1,,,,,,,,,,,,,
27,1,,172130-78250,,HOSE,1,,,1,,,,,,,,,,,,,
28,1,,172130-78260,,HOSE,1,,,1,,,,,,,,,,,,,
29,1,,172130-78230,,HOSE,1,,,1,,,,,,,,,,,,,
29-1,1,,172130-78231,,HOSE,1,,,1,,,N,,,*1986.11,,,,,,*1986.11,,
30,1,,172312-78300,,HOSE,1,,,1,,,,,,,,,,,,,
31,1,,172130-78240,,HOSE,1,,,1,,,,,,,,,,,,,
32,1,,172130-78320,,HOSE,1,,,1,,,,,,,,,,,,,
33,1,,172116-78820,,"CLAMP (A), HOSE",1,,,1,,,,,,,,,,,,,
34,1,,933152-24130,,"RING (B), BUCK UP",3,,,3,,,Z,,,X,,,,,,X,,
35,1,,933152-24140,,"NUT (B), CONNECTOR",3,,,3,,,Z,,,X,,,,,,X,,
```

https://truckmanualshub.com/

Fig. 63 ユアツハイカン(バルブースイベル, スイング) HYD. OIL PIPING (VALVE-SWIVEL, SWING)

D 72130-76100
D 72130-76110
D 72130-78100
D 72130-78110

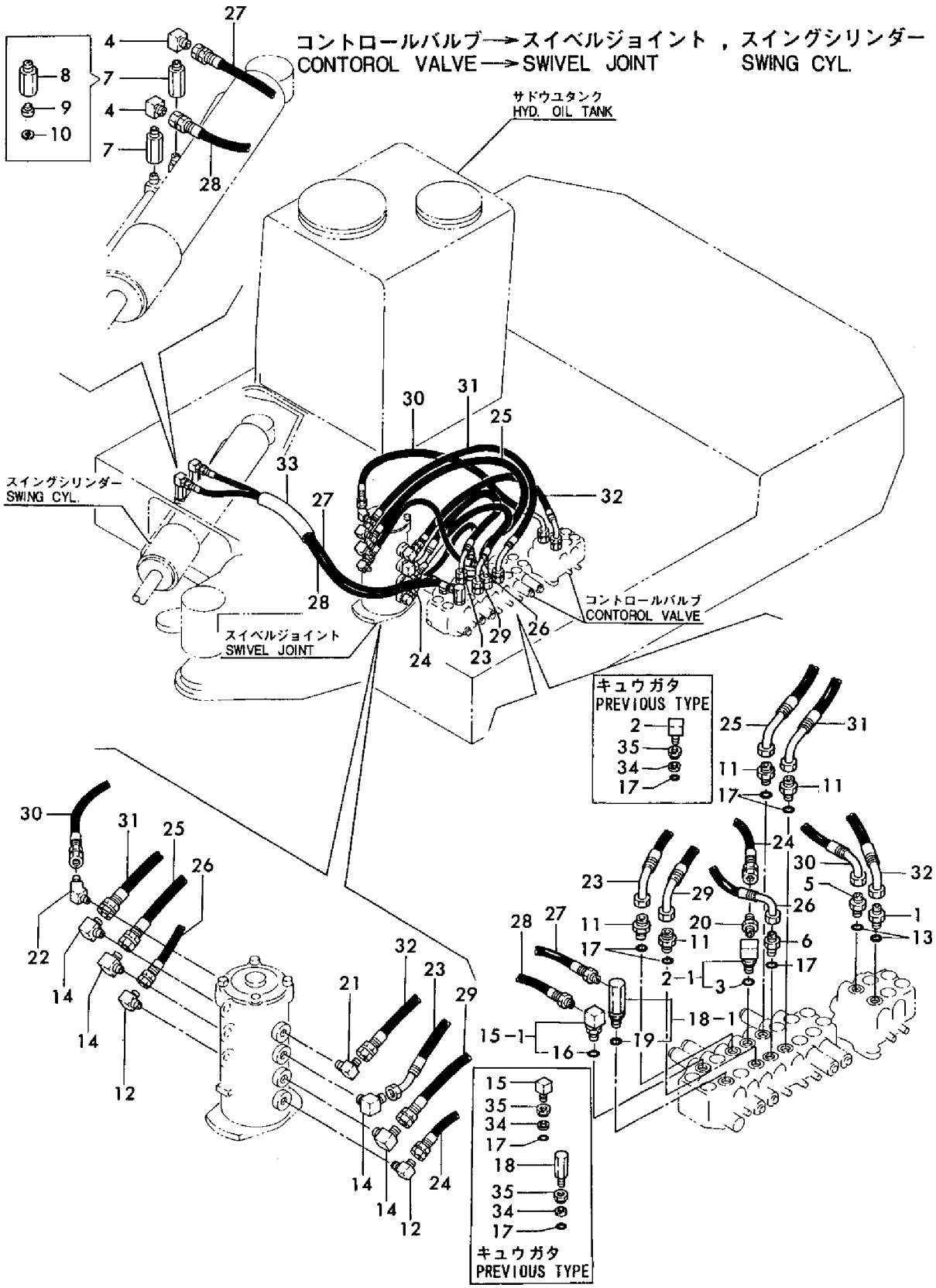

https://truckmanualshub.com/

```
1,1,,172130-76100,,"BUSHING 3/8-1/4",1,,,1,,,,,,,,,,,,,
1-1,1,,23396-030200,,"JOINT RRB3/8X1/4",1,,,1,,,R,,,*1989.05,,,,,,*1989.05,,
2,1,,172122-76130,,"CONNECTOR PT1/2-45",1,,,1,,,,,,,,,,,,,
2-1,1,,172122-76131,,"CONNECTOR PT1/2-45",1,,,1,,,N,,,X,,,,,,X,,
3,2,,24315-000180,,"O-RING 1B P-18.0",1,,,1,,,W,,,X,,,,,,X,,
4,1,,172123-76130,,"CONNECTOR 3/4-1/4-55",1,,,1,,,,,,,,,,,,,
5,1,,172122-76170,,"T-JOINT 1/4, DRAIN",1,,,1,,,,,,,,,,,,,
6,1,,172122-76170,,"T-JOINT 1/4, DRAIN",1,,,1,,,,,,,,,,,,,
7,1,,172110-76440,,ELBOW,1,,,1,,,,,,,,,,,,,
7-1,1,,23393-020000,,"JOINT 90RGI1/4",1,,,1,,,R,,,*1989.05,,,,,,*1989.05,,
8,1,,933111-53400,,"NUT 1/2, CONNECTOR",1,,,1,,,Z,,,X,,,,,,X,,
9,1,,933111-53500,,"RING P18, BUCK UP",1,,,1,,,Z,,,X,,,,,,X,,
10,1,,933152-07400,,"O-RING (A)",1,,,1,,,Z,,,X,,,,,,X,,
11,1,,933152-07410,,"RING (A), BUCK UP",1,,,1,,,Z,,,X,,,,,,X,,
12,1,,933152-24120,,"O-RING (B)",1,,,1,,,,,,,,,,,,,
13,1,,933166-25360,,"ELBOW 3/4 (90ß)",1,,,1,,,,,,,,,,,,,
14,1,,933166-25420,,ADAPTER,1,,,1,,,,,,,,,,,,,
14-1,1,,23391-040000,,"JOINT RGI 1/2",1,,,1,,,R,,,*1989.05,,,,,,*1989.05,,
15,1,,933171-24900,,"CONNECTOR 3/4",1,,,1,,,,,,,,,,,,,
15-1,1,,933171-24901,,CONNECTOR,1,,,1,,,N,,,X,,,,,,X,,
16,2,,933152-07400,,"O-RING (A)",1,,,1,,,W,,,X,,,,,,X,,
17,1,,172122-76621,,"PIPE, RETURN",1,,,1,,,,,,,,,,,,,
18,1,,26013-100252,,"BOLT W/WASHER M10X25",2,,,2,,,,,,,,,,,,,
19,1,,172122-78300,,"HOSE JA112 03",1,,,1,,,,,,,,,,,,,
20,1,,172122-78330,,"HOSE R904F 01",1,,,1,,,,,,,,,,,,,
21,1,,172122-78340,,"HOSE R904F 02",1,,,1,,,,,,,,,,,,,
22,1,,172123-78130,,"HOSE R904G 01",1,,,1,,,,,,,,,,,,,
22-1,1,,172130-78420,,HOSE,1,,,1,,,N,,,*1986.11,,,,,,*1986.11,,
23,1,,172130-78430,,"HOSE G708BY027",1,,,1,,,,,,,,,,,,,
24,1,,172130-78440,,"HOSE G718CY070",1,,,1,,,,,,,,,,,,,
25,1,,23000-022000,,"CLAMP 22",1,,,1,,,,,,,,,,,,,
26,1,,23000-035000,,"CLAMP 35",1,,,1,,,,,,,,,,,,,
27,1,,23000-048000,,"CLAMP 48",1,,,1,,,,,,,,,,,,,
28,1,,24315-000180,,"O-RING 1B P-18.0",1,,,1,,,Z,,,X,,,,,,X,,
29,1,,933160-01510,,"NUT (A), CONNECTOR",1,,,1,,,Z,,,X,,,,,,X,,
```

https://truckmanualshub.com/

Fig. 64 ユアツハイカン(リターン) HYD. OIL PIPING (RETURN)

D 72130-76100
D 72130-76110
D 72130-76400
D 72130-76410
D 72130-78100
D 72130-78110

オイルリターン
OIL RETURN

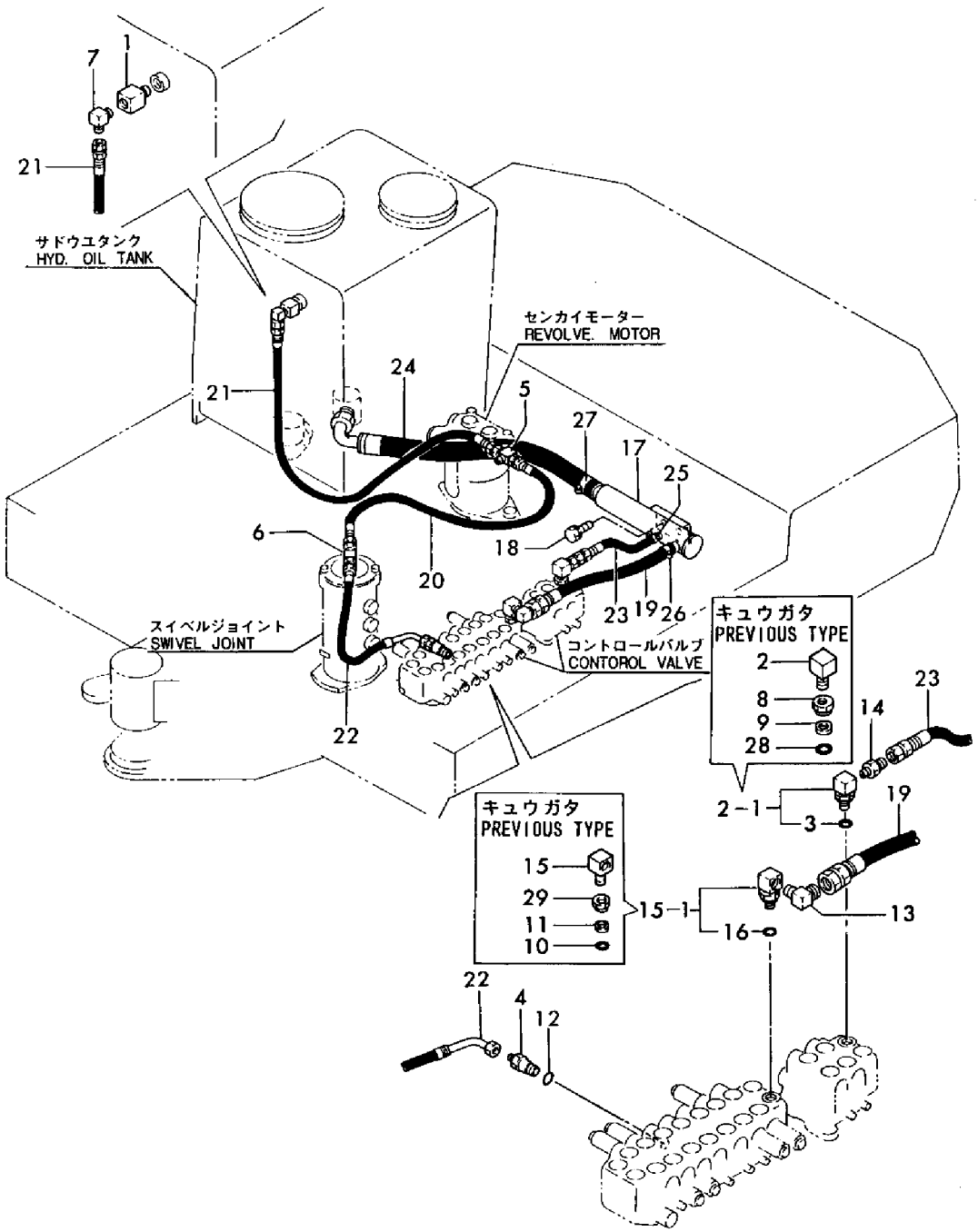

https://truckmanualshub.com/

```
1,1,,172122-76170,,"T-JOINT 1/4, DRAIN",1,,,1,,,,,,,,,,,,,
2,1,,172110-76440,,ELBOW,1,,,1,,,,,,,,,,,,,
2-1,1,,23393-020000,,"JOINT 90RGI1/4",1,,,1,,,R,,,*1988.05,,,,,,*1988.05,,
3,1,,172110-76470,,NIPPLE,2,,,2,,,,,,,,,,,,,
3-1,1,,23391-020000,,"JOINT RGI1/4",2,,,2,,,R,,,*1988.01,,,,,,*1988.01,,
4,1,,24315-000180,,"O-RING 1B P-18.0",4,,,4,,,,,,,,,,,,,
5,1,,933168-53550,,"ELBOW 3/8(45ß)",2,,,2,,,,,,,,,,,,,
6,1,,933166-25420,,ADAPTER,2,,,2,,,,,,,,,,,,,
6-1,1,,23391-040000,,"JOINT RGI 1/2",2,,,2,,,R,,,*1989.05,,,,,,*1989.05,,
7,1,,172112-77360,,"CONNECTOR PF1/2PF1/2",4,,,4,,,,,,,,,,,,,
8,1,,933171-23050,,"PLUG 1/4",2,,,2,,,,,,,,,,,,,
9,1,,172110-76470,,NIPPLE,1,,,1,,,,,,,,,,,,,
9-1,1,,23391-020000,,"JOINT RGI1/4",1,,,1,,,R,,,*1988.01,,,,,,*1988.01,,
10,1,,933152-24410,,"CONNECTOR (A)",2,,,2,,,,,,,,,,,,,
11,1,,172130-76800,,"PIPE(R),BLADE",1,,,1,,,,,,,,,,,,,
12,1,,172130-76820,,"PIPE(B),BLADE",2,,,2,,,,,,,,,,,,,
12-1,1,,172130-76821,,"PIPE(B),BLADE",2,,,2,,,S,,,M00559,,,,,,M00559,,
13,1,,26013-100202,,"BOLT W/WASHER M10X20",2,,,2,,,,,,,,,,,,,
14,1,,933166-17730,,"WASHER 10.5X30",2,,,2,,,,,,,,,,,,,
15,1,,172130-76870,,"PIPE(L) BLADE",1,,,1,,,,,,,,,,,,,
16,1,,172130-78200,,"HOSE P204BB130W",2,,,2,,,,,,,,,,,,,
17,1,,172130-78330,,HOSE,2,,,2,,,,,,,,,,,,,
17-1,1,,172122-78620,,"HOSE G106AB056W",2,,,2,,,S,,,M00559,,,,,,M00559,,
18,1,,172130-78340,,HOSE,2,,,2,,,,,,,,,,,,,
19,1,,172130-78350,,HOSE,2,,,2,,,,,,,,,,,,,
20,1,,172130-78400,,"HOSE G804BB120W",2,,,2,,,,,,,,,,,,,
21,1,,933152-22761,,"ELBOW (45ß)",2,,,2,,,W,,,M00559,,,,,,M00559,,
21-1,1,,23394-030000,,"JOINT 45RGI 3/8",2,,,2,,,R,,,*1989.05,,,,,,*1989.05,,
22,1,,933152-24410,,"CONNECTOR (A)",2,,,2,,,W,,,M00501,,,,,,M00501,,
22-1,1,,933152-24410,,"CONNECTOR (A)",2,,,2,,,Z,,,M00559,,,,,,M00559,,
```

https://truckmanualshub.com/

Fig. 65 ユアツハイカン(トラックフレーム) HYD. OIL PIPING (TRACK FRAME)

D 72130-76100
D 72130-76110
D 72130-76400
D 72130-76410
D 72130-78100
D 72130-78110

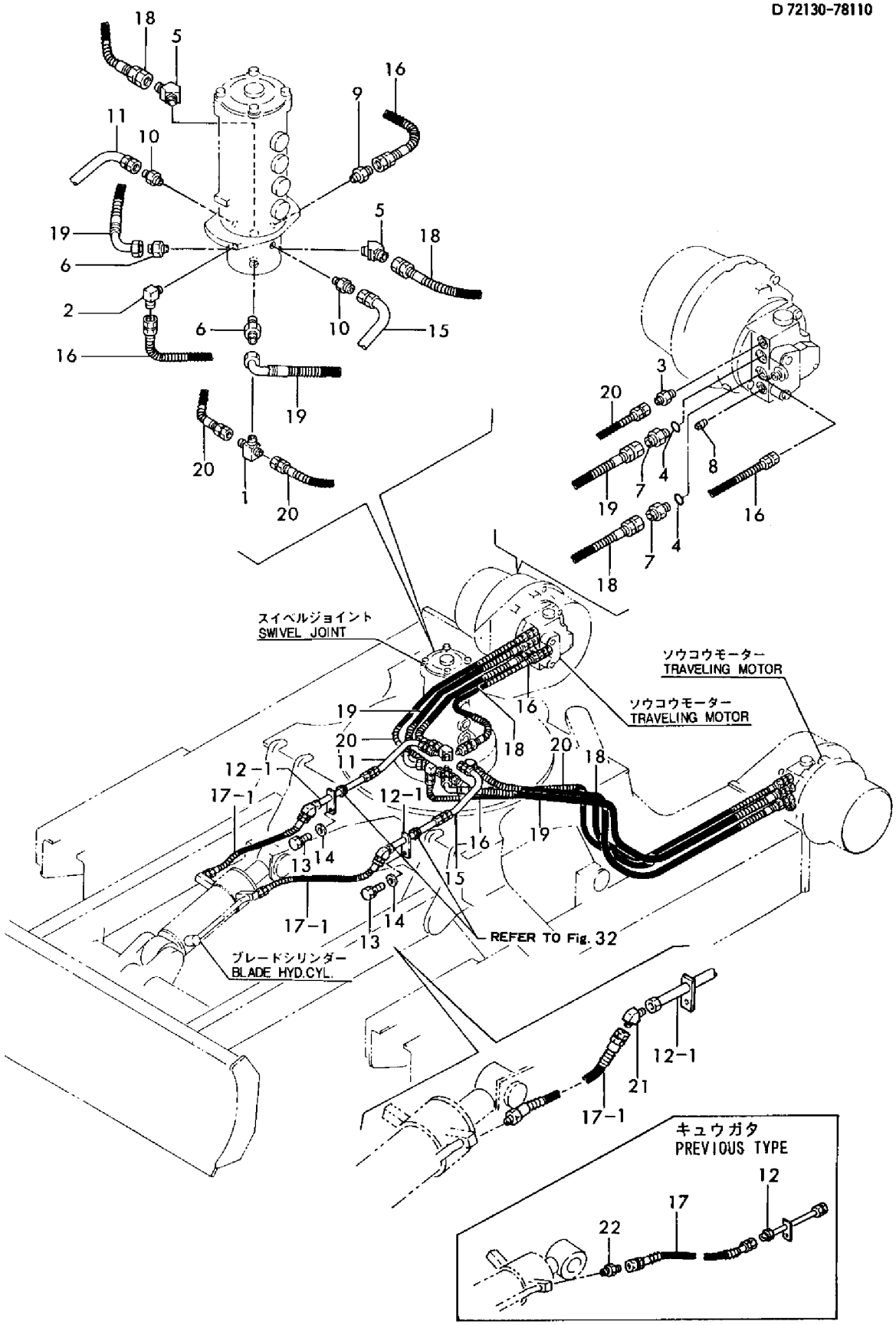

https://truckmanualshub.com/

```
1,1,,172130-76130,,VALVE,1,,,1,,,,,,,,,,,,,
2,2,,172130-76140,,"BODY, VALVE",1,,,1,,,,,,,,,,,,,
3,2,,172135-76130,,SPOOL,1,,,1,,,,,,,,,,,,,
4,2,,22252-000140,,"CIRCLIP   14",1,,,1,,,,,,,,,,,,,
5,1,,172312-76810,,"PLATE, CLAMP",1,,,1,,,,,,,,,,,,,
6,1,,172312-77550,,"PIPE(C), ARM",1,,,1,,,,,,,,,,,,,
7,1,,172312-77570,,"PIPE(D), ARM",1,,,1,,,,,,,,,,,,,
8,1,,172312-77590,,"PIPE(C), BUCKET",1,,,1,,,,,,,,,,,,,
9,1,,172312-77610,,"PIPE(D), BUCKET",1,,,1,,,,,,,,,,,,,
10,1,,22217-080000,,"SPRING WASHER  8",6,,,6,,,,,,,,,,,,,
11,1,,26013-100162,,"BOLT M10X 16",1,,,1,,,,,,,,,,,,,
12,1,,26013-100302,,"BOLT M10X 30",2,,,2,,,,,,,,,,,,,
13,1,,26013-100402,,"BOLT M10X 40",2,,,2,,,,,,,,,,,,,
14,1,,26716-080002,,"NUT M 8",6,,,6,,,,,,,,,,,,,
15,1,,933155-09670,,"CLAMP, PIPE",2,,,2,,,,,,,,,,,,,
16,1,,172312-78140,,"PIPE P206AB120W",2,,,2,,,,,,,,,,,,,
17,1,,172312-78160,,"PIPE P206AB145",2,,,2,,,,,,,,,,,,,
18,1,,172312-78160,,"PIPE P206AB145",2,,,2,,,,,,,,,,,,,
19,1,,172312-78160,,"PIPE P206AB145",2,,,2,,,,,,,,,,,,,
20,1,,172122-78260,,"HOSE F406C 03",2,,,2,,,,,,,,,,,,,
21,1,,172312-78280,,"PIPE P206AB060",2,,,2,,,,,,,,,,,,,
22,1,,172116-78820,,"CLAMP (A), HOSE",2,,,2,,,,,,,,,,,,,
23,1,,933152-24410,,"CONNECTOR (A)",1,,,1,,,,,,,,,,,,,
24,1,,933152-22771,,"ELBOW (90ß)",6,,,6,,,,,,,,,,,,,
24-1,1,,23393-030000,,"JOINT 90RGI 3/8",6,,,6,,,R,,,*1989.05,,,,,,*1989.05,,
25,1,,1E4460-21680,,"COLLAR 12.7X17.3X16",2,,,2,,,,,,,,,,,,,
26,1,,172112-76321,,"RETAINER B,BOOM PIPE",3,,,3,,,,,,,,,,,,,
```

https://truckmanualshub.com/

Fig. 66 ユアツハイカン(ブーム) HYD. OIL PIPING (BOOM)

D 72130-76100
D 72130-76110
D 72130-76400
D 72130-76410
D 72130-78100
D 72130-78110

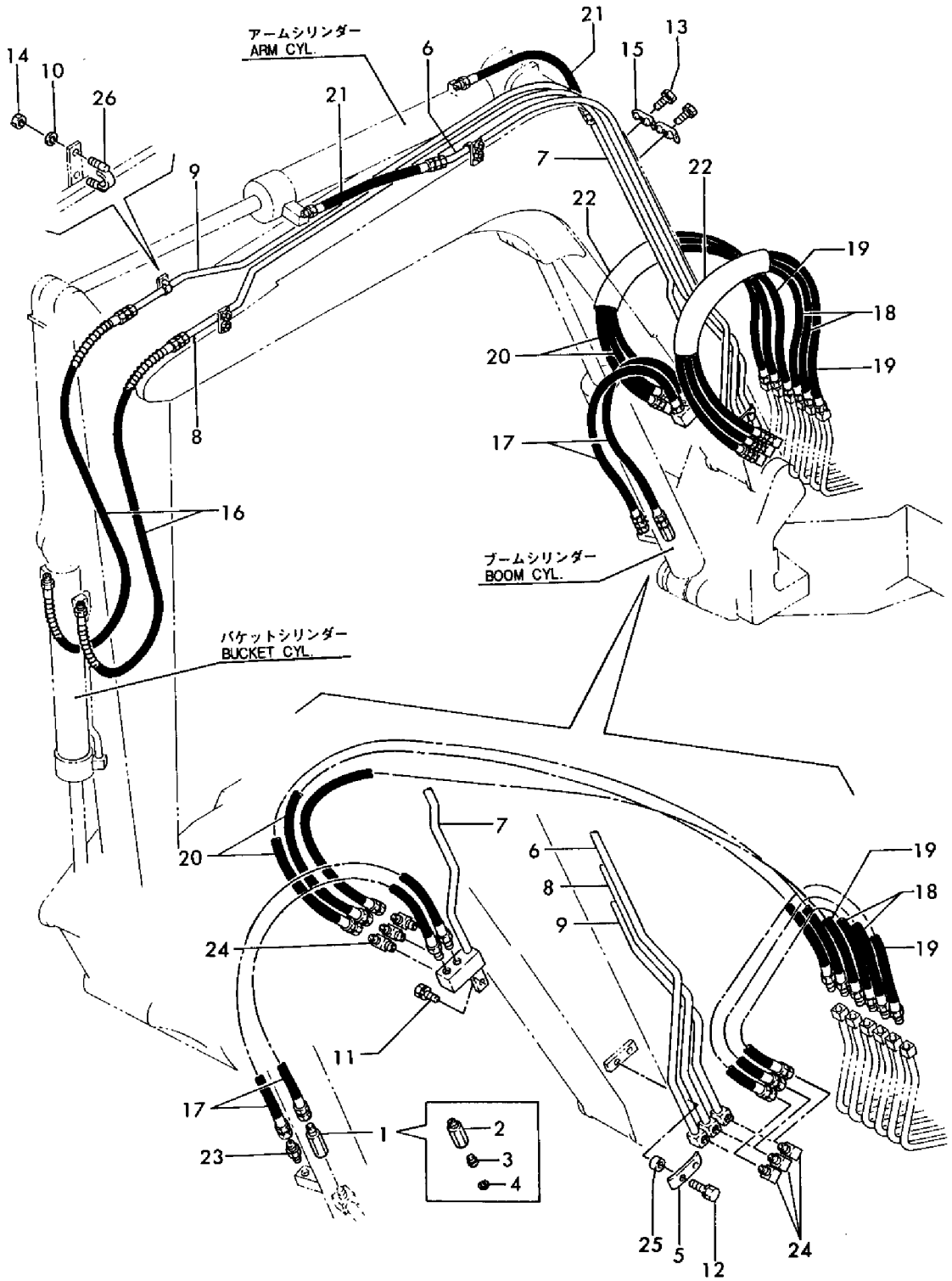

https://truckmanualshub.com/

```
1,1,,172123-76330,,"CONNECTOR 3/8 3/4",1,,,1,,,,,,,,,,,,,
2,1,,172110-76550,,CONNECTOR,2,,,2,,,,,,,,,,,,,
3,1,,933152-22771,,"ELBOW (90ß)",2,,,2,,,,,,,,,,,,,
3-1,1,,23393-030000,,"JOINT 90RGI 3/8",2,,,2,,,R,,,*1989.05,,,,,,*1989.05,,
4,1,,933152-22771,,"ELBOW (90ß)",2,,,2,,,,,,,,,,,,,
4-1,1,,23393-030000,,"JOINT 90RGI 3/8",2,,,2,,,R,,,*1989.05,,,,,,*1989.05,,
5,1,,933152-22771,,"ELBOW (90ß)",1,,,1,,,,,,,,,,,,,
5-1,1,,23393-030000,,"JOINT 90RGI 3/8",,,,1,,,R,,,*1989.05,,,,,,*1989.05,,
6,1,,933152-24062,,"CONNECTOR (C)",2,,,2,,,,,,,,,,,,,
7,2,,933152-24120,,"O-RING (B)",2,,,2,,,,,,,,,,,,,
8,1,,933152-24120,,"O-RING (B)",2,,,2,,,,,,,,,,,,,
9,1,,933152-24410,,"CONNECTOR (A)",1,,,1,,,,,,,,,,,,,
10,1,,933166-24120,,"CONNECTOR PF1/2-10",2,,,2,,,,,,,,,,,,,
11,1,,933166-25360,,"ELBOW 3/4 (90ß)",1,,,1,,,,,,,,,,,,,
12,1,,172130-76650,,"TUBE A1, 3RD",1,,,1,,,,,,,,,,,,,
12-1,1,,172130-76651,,PIPE,1,,,1,,,S,,,M20540,,,,,,M20540,,
13,1,,172130-76670,,"TUBE B1, 3RD",1,,,1,,,,,,,,,,,,,
13-1,1,,172130-76671,,PIPE,1,,,1,,,S,,,M20540,,,,,,M20540,,
14,1,,172130-76700,,PIPE,1,,,1,,,,,,,,,,,,,
15,1,,172130-76720,,PIPE,1,,,1,,,,,,,,,,,,,
16,1,,172130-76750,,"PIPE, RETURN",1,,,1,,,,,,,,,,,,,
17,1,,172312-77630,,"PIPE(C), THIRD",1,,,1,,,,,,,,,,,,,
18,1,,172312-77650,,"PIPE(D), THIRD",1,,,1,,,,,,,,,,,,,
19,1,,172125-76900,,CLAMP,4,,,4,,,,,,,,,,,,,
20,1,,172312-77930,,"SPACER, CLAMP",4,,,4,,,,,,,,,,,,,
21,1,,22137-100000,,"WASHER 10,POLISHED",1,,,1,,,,,,,,,,,,,
22,1,,22217-100000,,"SPRING WASHER 10",1,,,1,,,,,,,,,,,,,
23,1,,22217-100000,,"SPRING WASHER 10",1,,,1,,,,,,,,,,,,,
24,1,,22217-120000,,"WASHER 12,SPRING",4,,,4,,,,,,,,,,,,,
25,1,,23871-030000,,"PLUG PT3/8,SCREW",1,,,1,,,,,,,,,,,,,
26,1,,23871-060000,,"PLUG PT3/4,SCREW",1,,,1,,,,,,,,,,,,,
27,1,,23871-060000,,"PLUG PT3/4,SCREW",1,,,1,,,,,,,,,,,,,
28,1,,26013-080162,,"BOLT W/WASHER M8X16",2,,,2,,,,,,,,,,,,,
29,1,,26116-100502,,"BOLT M10X 50 PLATED",1,,,1,,,,,,,,,,,,,
30,1,,26116-100602,,"BOLT M10X 60 PLATED",1,,,1,,,,,,,,,,,,,
31,1,,26116-120552,,"BOLT M12X 55 PLATED",4,,,4,,,,,,,,,,,,,
32,1,,26717-100002,,"NUT M10",1,,,1,,,,,,,,,,,,,
33,1,,933155-09670,,"CLAMP, PIPE",1,,,1,,,,,,,,,,,,,
34,1,,933155-09670,,"CLAMP, PIPE",1,,,1,,,,,,,,,,,,,
35,1,,172122-77250,,"PIPE,HI-PRESS.",1,,,1,,,,,,,,,,,,,
36,1,,172312-77920,,"HOSE G212AB190",1,,,1,,,,,,,,,,,,,
37,1,,172312-78150,,HOSE,1,,,1,,,,,,,,,,,,,
38,1,,172130-78500,,HOSE,1,,,1,,,,,,,,,,,,,
39,1,,172130-78500,,HOSE,1,,,1,,,,,,,,,,,,,
40,1,,172130-78510,,HOSE,1,,,1,,,,,,,,,,,,,
41,1,,172130-78520,,HOSE,1,,,1,,,,,,,,,,,,,
42,1,,172116-78820,,"CLAMP (A), HOSE",1,,,1,,,,,,,,,,,,,
```

https://truckmanualshub.com/

Fig. 67 ユアツハイカン（サードバルブ） HYD. OIL PIPING (3RD VALVE)

D 72130-76110
D 72130-76410
D 72130-78110

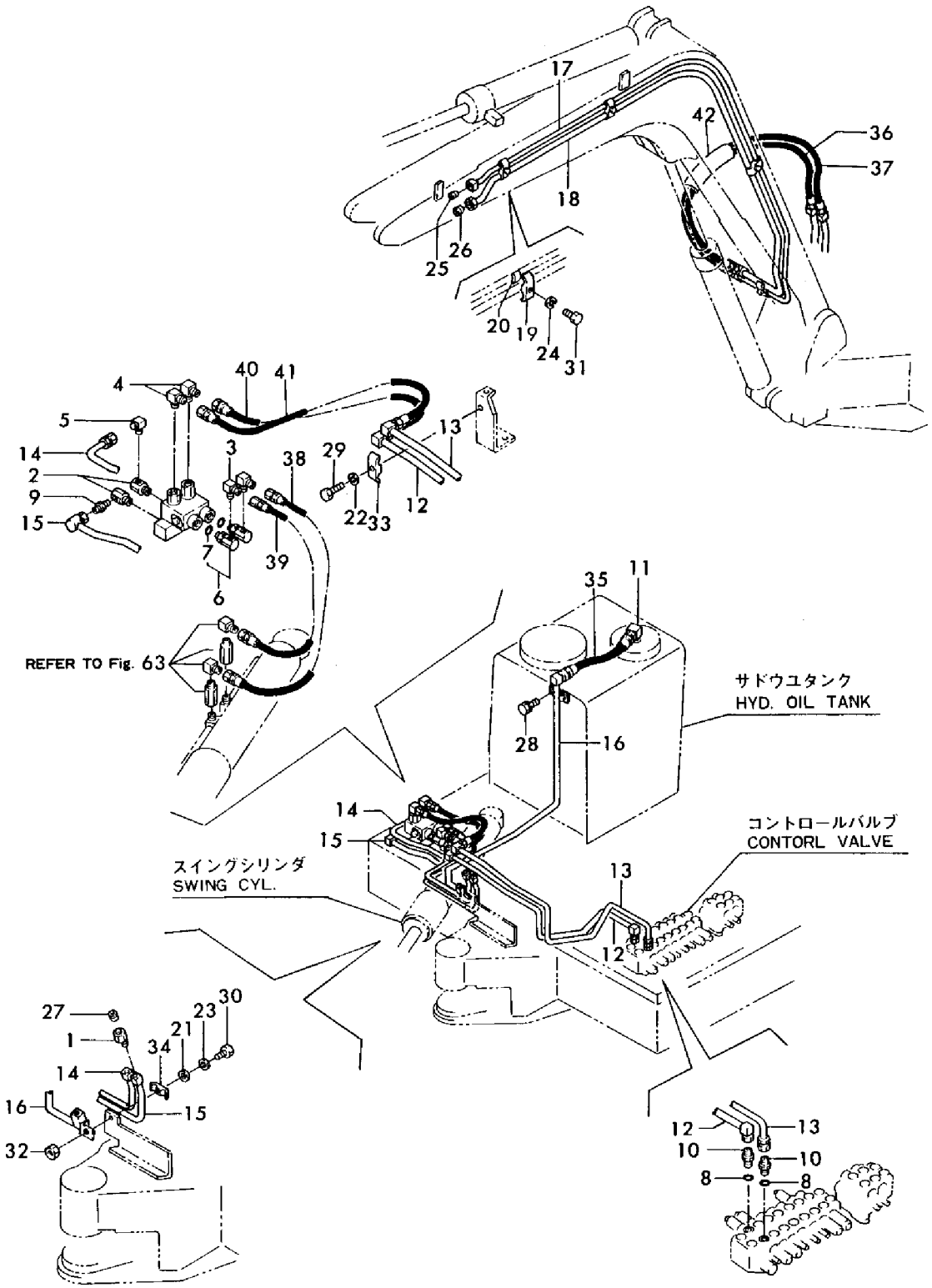

https://truckmanualshub.com/

```
1,1,,172122-77470,,"JOINT,MALE/FEM 1/8",1,,,1,,,,,,,,,,,,,,
1-1,1,,172112-77470,,"JOINT 1/8",1,,,1,,,S,,,M00501,,,,,,M00501,,
2,1,,172112-77580,,"JOINT 1/8",2,,,2,,,,,,,,,,,,,,
3,1,,172112-77660,,"L-JOINT 1/8",2,,,2,,,,,,,,,,,,,,
3-1,1,,172112-77660,,"L-JOINT 1/8",1,,,1,,,K,,,MXXX,,,,,,MXXX,,
4,1,,172124-78370,,"PIPE P202AF045",1,,,1,,,,,,,,,,,,,,
5,1,,172135-78110,,HOSE,1,,,1,,,,,,,,,,,,,,
5-1,1,,172122-78110,,"HOSE 45X2P 02",1,,,1,,,S,,,MXXX,,,,,,MXXX,,
6,1,,172116-78790,,"HOSE Y1T-3,M.H.PRESS",1,,,1,,,,,,,,,,,,,,
7,1,,24761-020000,,"NIPPLE PT1/8,GREASE",3,,,3,,,,,,,,,,,,,,
```

https://truckmanualshub.com/

Fig. 68 エンカクキュウシ GREASING

D 72130-77800

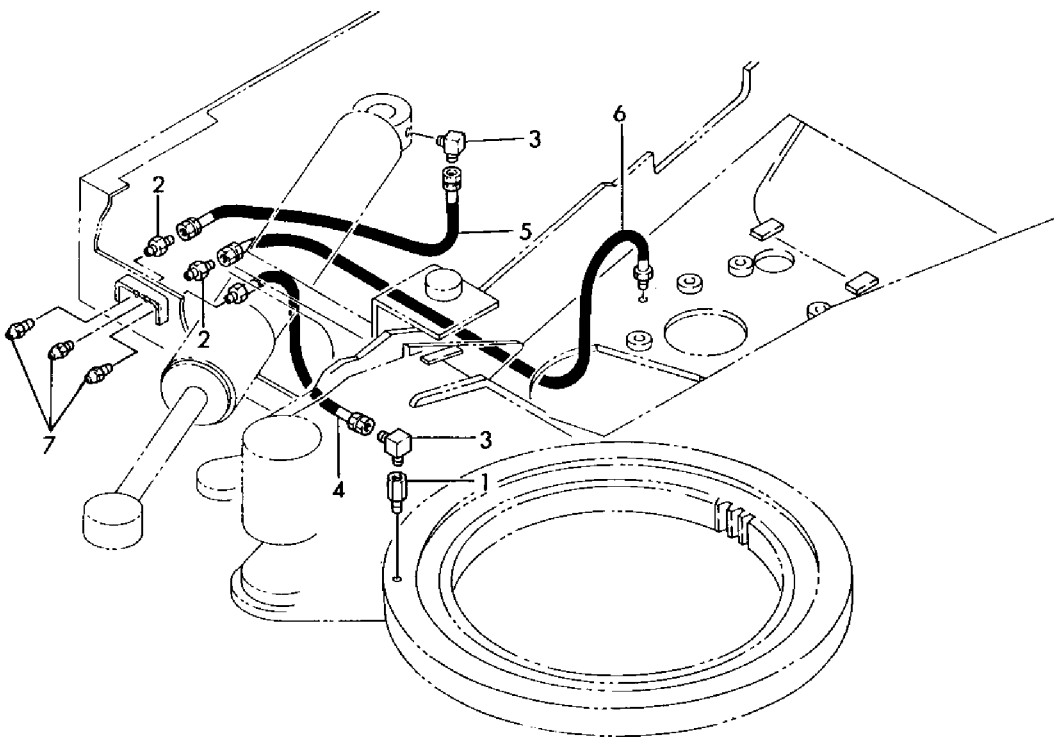

```
1,1,,172312-81010,,"BOOM ASSY",1,,,1,,,,,,,,,,,,,
1-1,1,,172312-81011,,"BOOM ASSY",1,,,1,,,N,,,M00501,,,,,,M00501,,
2,2,,172112-83500,,"PIN BUSH 45X60",2,,,2,,,,,,,,,,,,,
3,1,,172312-81170,,"PIN (45-198)",1,,,1,,,,,,,,,,,,,
4,1,,172116-81580,,"PIN (B), BOOM",1,,,1,,,,,,,,,,,,,
5,1,,172112-87840,,"SHIM 45X1",2,,,2,,,,,,,,,,,,,
6,1,,22417-800630,,"COTTER PIN 8.0X63",2,,,2,,,,,,,,,,,,,
7,1,,24761-040000,,"NIPPLE B,GREASE",1,,,1,,,,,,,,,,,,,
8,1,,172130-81200,,ARM(1530),1,,,1,,,,,,,,,,,,,
8-1,1,,172130-81201,,"ARM W/BUSH",1,,,1,,,N,,,M20596,,,,,,M20596,,
9,2,,172116-82400,,"PIN BUSH 38X55",4,,,4,,,,,,,,,,,,,
10,2,,172112-83500,,"PIN BUSH 45X60",2,,,2,,,,,,,,,,,,,
11,1,,172312-81610,,"PIN 38X103",1,,,1,,,,,,,,,,,,,
12,1,,172312-81640,,"PIN 40X103",1,,,1,,,,,,,,,,,,,
13,1,,172122-82290,,"SEAL, DUST",4,,,4,,,,,,,,,,,,,
13-1,1,,172122-82290,,"SEAL, DUST",2,,,2,,,K,,,M20596,,,,,,M20596,,
14,1,,172112-87860,,"SHIM 40X1",2,,,2,,,,,,,,,,,,,
15,1,,22417-800500,,"COTTER PIN 8.0X50",2,,,2,,,,,,,,,,,,,
16,1,,24761-040000,,"NIPPLE B,GREASE",1,,,1,,,,,,,,,,,,,
17,1,,933171-29750,,"SHIM SET, PIN 38",1,,,1,,,,,,,,,,,,,
18,2,,933171-29970,,"SHIM 0.8, PIN",1,,,1,,,,1,,,,,,,,,
19,2,,933171-29980,,"SHIM 1.2, PIN",1,,,1,,,,1,,,,,,,,,
20,1,,172122-82290,,"SEAL, DUST",2,,,2,,,,,,,,,,,,,
21,1,,172122-84400,,"LINK, BUCKET",1,,,1,,,,,,,,,,,,,
22,2,,172116-82400,,"PIN BUSH 38X55",2,,,2,,,,,,,,,,,,,
23,2,,172116-84490,,"PIN BUSH 38X41",2,,,2,,,,,,,,,,,,,
24,1,,172122-84501,,"PIN (A), BUCKET ARM",1,,,1,,,,,,,,,,,,,
25,1,,172116-84530,,"ARM (L), BUCKET",1,,,1,,,,,,,,,,,,,
26,1,,172116-84580,,"ARM (R), BACKET",1,,,1,,,,,,,,,,,,,
27,1,,172116-84590,,"PIN, BUCKET ARM",1,,,1,,,,,,,,,,,,,
28,1,,24761-020000,,"NIPPLE PT1/8,GREASE",3,,,3,,,,,,,,,,,,,
29,1,,933110-86600,,"NUT M24, NYLON",2,,,2,,,,,,,,,,,,,
30,1,,933171-29750,,"SHIM SET, PIN 38",2,,,2,,,,,,,,,,,,,
31,2,,933171-29970,,"SHIM 0.8, PIN",2,,,2,,,,1,,,,,,,,,
32,2,,933171-29980,,"SHIM 1.2, PIN",2,,,2,,,,1,,,,,,,,,
33,1,,933171-29760,,WASHER,2,,,2,,,,,,,,,,,,,
34,1,,172312-81501,,"BOOM,THIRD VALVE",1,,,1,,,,,,,,,,,,,
35,2,,172112-83500,,"PIN BUSH 45X60",2,,,2,,,,,,,,,,,,,
36,1,,172116-81580,,"PIN (B), BOOM",1,,,1,,,,,,,,,,,,,
37,1,,172130-82300,,"BRACKET,BOOM",1,,,1,,,,,,,,,,,,,
38,2,,172112-85601,,"BUSH 70X85",2,,,2,,,,,,,,,,,,,
39,1,,172312-82320,,"PIN (45-274)",1,,,1,,,,,,,,,,,,,
40,1,,172135-82400,,"PIN ASSY, BOOM(U",1,,,,,,,,,,,,,,,,,
41,1,,172135-82430,,"PIN ASSY, BOOM(UZ",,,,1,,,,,,,,,,,,,
42,1,,172116-83150,,"PIN, BOOM FULCRUM",1,,,1,,,,,,,,,,,,,
42-1,1,,172116-83151,,PIN,1,,,1,,,S,,,M20578,,,,,,M20578,,
43,1,,172117-83970,,"PLATE (C), LOCK",1,,,1,,,,,,,,,,,,,
44,1,,172117-83980,,"PIN (B), SWING CYL.",1,,,1,,,,,,,,,,,,,
45,1,,172112-87370,,"PLATE (A), LOCK",1,,,1,,,,,,,,,,,,,
45-1,1,,172112-87371,,"PLATE (A), LOCK",1,,,1,,,S,,,*1987.12,,,,,,*1987.12,,
46,1,,172112-87800,,"SHIM 70X1",4,,,4,,,,1,,,,,,,,,
47,1,,172112-87810,,"SHIM 70X2",2,,,2,,,,1,,,,,,,,,
48,1,,172112-87830,,"SHIM 70X4",1,,,1,,,,1,,,,,,,,,
49,1,,172112-87840,,"SHIM 45X1",2,,,2,,,,1,,,,,,,,,
50,1,,172112-87840,,"SHIM 45X1",2,,,2,,,,1,,,,,,,,,
51,1,,172112-87850,,"SHIM 40X5",1,,,1,,,,1,,,,,,,,,
52,1,,172112-87860,,"SHIM 40X1",1,,,1,,,,1,,,,,,,,,
53,1,,22417-800560,,"COTTER PIN 8.0X 56",1,,,1,,,,,,,,,,,,,
54,1,,22417-800630,,"COTTER PIN 8.0X63",1,,,1,,,,,,,,,,,,,
55,1,,22417-800630,,"COTTER PIN 8.0X63",1,,,1,,,,,,,,,,,,,
56,1,,24761-040000,,"NIPPLE B,GREASE",2,,,2,,,,,,,,,,,,,
57,1,,26013-100202,,"BOLT W/WASHER M10X20",1,,,1,,,,,,,,,,,,,
58,1,,26013-120302,,"BOLT W/WASHER M12X30",2,,,2,,,,,,,,,,,,,
```

https://truckmanualshub.com/

```
58-1,1,,26116-160402,,"BOLT M16X 40 PLATED",2,,,2,,,S,,,M20578,,,,,,M20578,,
59,1,,172312-82340,,"PIN 40-123, BOOM",1,,,1,,,,,,,,,,,,,
60,1,,172112-87860,,"SHIM 40X1",2,,,2,,,,,,,,,,,,,
61,1,,22417-800500,,"COTTER PIN 8.0X50",1,,,1,,,,,,,,,,,,,
62,1,,172142-81620,,O-RING,2,,,2,,,W,,,M20596,,,,,,M20596,,
63,1,,22217-160000,,"SPRING WASHER 16",2,,,2,,,W,,,M20578,,,,,,M20578,,
64,1,,22242-000700,,"CIRCLIP   70",1,,,1,,,W,,,M20578,,,,,,M20578,,
65,1,,933171-29750,,"SHIM SET, PIN 38",1,,,1,,,,,,,,,,,,,
```

https://truckmanualshub.com/

Fig. 69 ブーム & アーム BOOM & ARM

D 72312-81100
D 72312-81110
D 72312-81120
D 72130-81200
D 72122-81300
D 72130-82300
D 72130-82310

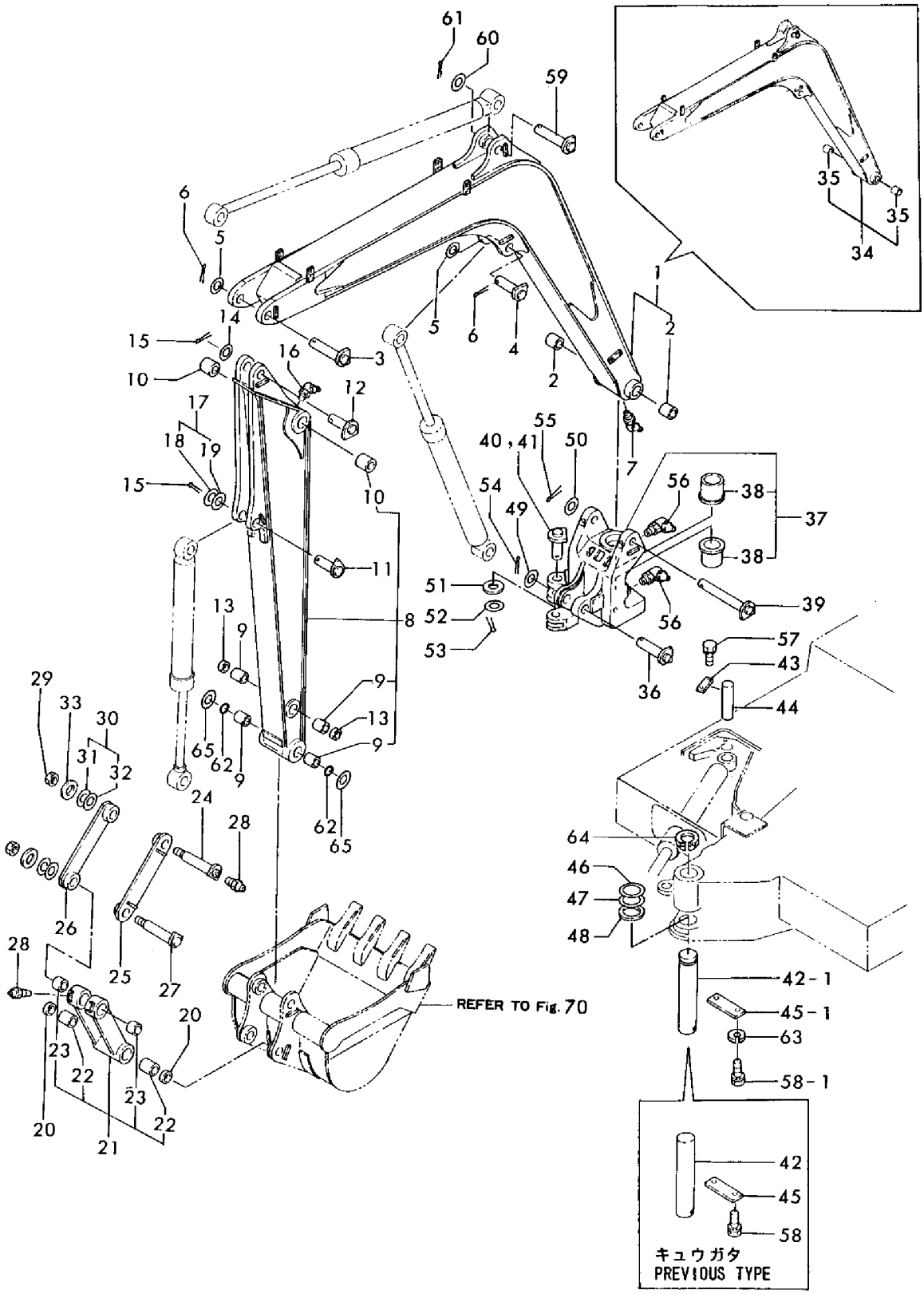

https://truckmanualshub.com/

```
1,1,,772122-81440,,"BUCKET ASSY,600",1,,,1,,,,,,,,,,,,,
3,3,,172116-86240,,"SIDE CUTTER, BUCKET",2,,,2,,,,,,,,,,,,,
4,2,,772122-86120,,"TEETH ASSY",4,,,4,,,,,,,,,,,,,
4-1,2,,772122-86121,,"TEETH ASSY",4,,,4,,,R,,,M20501,,,,,,M20501,,
4-2,2,,772122-86122,,"TEETH ASSY",4,,,4,,,N,,,*1989.03,,,,,,*1989.03,,
5,3,,172113-86120,,TEETH,4,,,4,,,,,,,,,,,,,
5-1,3,,172113-86121,,TEETH,4,,,4,,,R,,,M20501,,,,,,M20501,,
5-2,3,,172113-86122,,TEETH,4,,,4,,,R,,,MXXX,,,,,,MXXX,,
5-3,3,,172113-86123,,TEETH,4,,,4,,,S,,,*1989.03,,,,,,*1989.03,,
6,3,,933110-81900,,"BOLT M14X40X20",4,,,4,,,Z,,,*1989.03,,,,,,*1989.03,,
7-1,3,,933110-82100,,"BOLT M14X50X20",4,,,4,,,,1,,,,,,,,,,
7-2,3,,172142-81380,,BOLT,8,,,8,,,S,,,*1989.03,,,,,,*1989.03,,
8,3,,22217-140000,,"SPRING WASHER 14",8,,,8,,,Z,,,*1989.03,,,,,,*1989.03,,
9,3,,26606-140002,,"NUT M14",8,,,8,,,,,,,,,,,,,
9-1,3,,172142-81390,,NUT,8,,,8,,,S,,,*1989.03,,,,,,*1989.03,,
10,3,,172113-86130,,"TEETH SHIM SET",4,,,4,,,,,,,,,,,,,
10-1,3,,172137-86710,,"TEETH SHIM 17 SET",4,,,4,,,S,,,*1989.03,,,,,,*1989.03,,
11,4,,172113-86140,,"TEETH SHIM T0.3",4,,,4,,,,2,,,,,,,,,,
11-1,4,,172137-86720,,"TEETH SHIM T0.3",16,,,16,,,S,2,,*1989.03,,,,,,*1989.03,,
12,4,,172113-86150,,"TEETH SHIM T0.5",2,,,2,,,,2,,,,,,,,,,
12-1,4,,172137-86730,,"TEETH SHIM T0.5",4,,,4,,,S,2,,*1989.03,,,,,,*1989.03,,
13,4,,172113-86160,,"TEETH SHIM T1.0",8,,,8,,,,2,,,,,,,,,,
13-1,4,,172137-86740,,"TEETH SHIM T1.0",4,,,4,,,S,2,,*1989.03,,,,,,*1989.03,,
14,1,,172122-86261,,"PIN, BUCKET",2,,,2,,,,,,,,,,,,,
15,1,,933171-29750,,"SHIM SET, PIN 38",2,,,2,,,,,,,,,,,,,
15-1,1,,933171-29751,,"SHIM
SET,38X(0.8,1.2",2,,,2,,,N,2,,*1988.04,,,,,,*1988.04,,
16,2,,933171-29970,,"SHIM 0.8, PIN",2,,,2,,,,2,,,,,,,,,,
16-1,2,,172122-86800,,"SHIM 38X0.8",2,,,2,,,N,2,,*1988.04,,,,,,*1988.04,,
17,2,,933171-29980,,"SHIM 1.2, PIN",2,,,2,,,,2,,,,,,,,,,
17-1,2,,172122-86810,,"SHIM 38X1.2",2,,,2,,,N,2,,*1988.04,,,,,,*1988.04,,
18,1,,24761-020000,,"NIPPLE PT1/8,GREASE",2,,,2,,,,,,,,,,,,,
19,1,,22417-800500,,"COTTER PIN 8.0X50",2,,,2,,,,,,,,,,,,,
```

https://truckmanualshub.com/

Fig. 70 バケット(600) BUCKET (600)

D 72122-81440

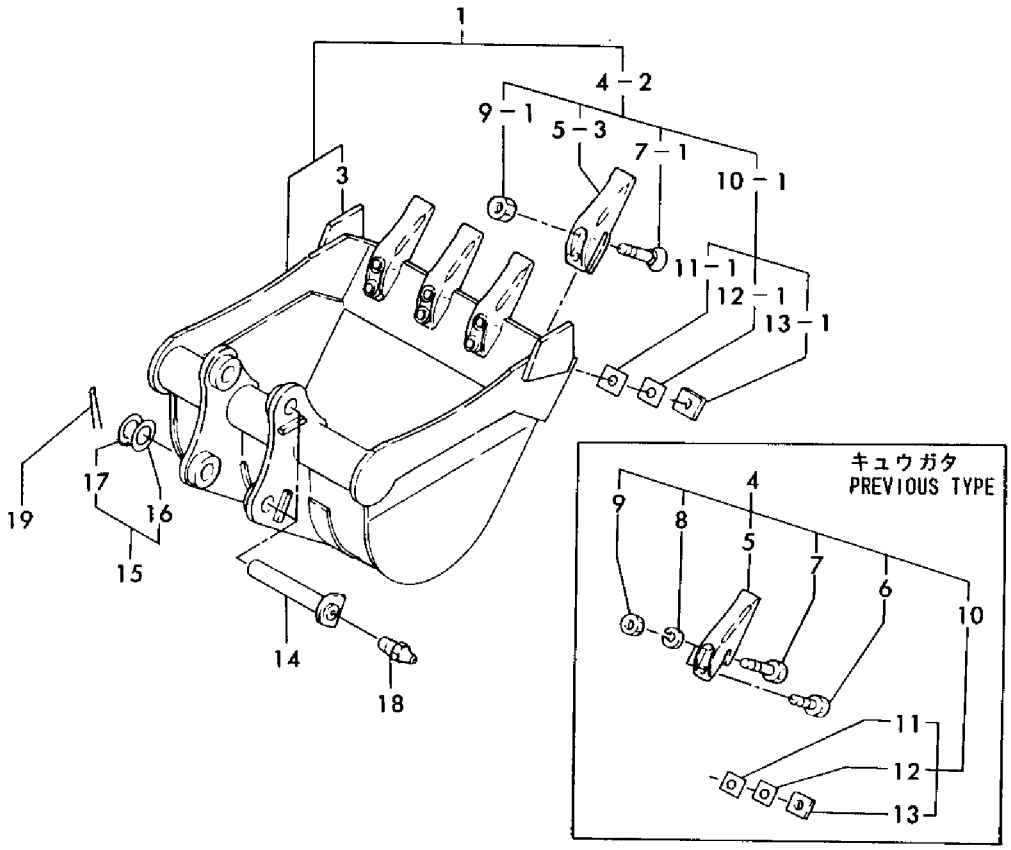

https://truckmanualshub.com/

```
1,1,,172112-87850,,"SHIM 40X5",1,,,1,,,,1,,,,,,,,,
2,1,,172112-87860,,"SHIM 40X1",2,,,2,,,,1,,,,,,,,,
3,1,,172130-94100,,"BLADE ASSY",1,,,1,,,,,,,,,,,,,
3-1,1,,172130-94101,,"BLADE ASSY",1,,,1,,,N,,,M00559,,,,,,M00559,,
3-2,1,,172130-94102,,"BLADE ASSY",1,,,1,,,N,,,M20501,,,,,,M20501,,
4,2,,172071-27161,,"BUSH 38X85",2,,,2,,,,,,,,,,,,,
5,1,,172116-94390,,"SHIM 40X3.2, ADJUST",1,,,1,,,,,,,,,,,,,
6,1,,172122-94401,,"PIN, BLADE",2,,,2,,,,,,,,,,,,,
7,1,,172122-94410,,"CIRCLIP, BLADE PIN",2,,,2,,,,,,,,,,,,,
8,1,,172122-94431,,"PIN 40-144A, BLADE",1,,,1,,,,,,,,,,,,,
8-1,1,,172122-94480,,"PIN 40-144C, BLADE",1,,,1,,,R,,,M00559,,,,,,M00559,,
9,1,,172122-94450,,"PIN 40-144B, BLADE",1,,,1,,,,,,,,,,,,,
10,1,,22417-800560,,"COTTER PIN 8.0X 56",2,,,2,,,,,,,,,,,,,
11,1,,24761-050000,,"NIPPLE C,GREASE",2,,,2,,,,,,,,,,,,,
12,1,,24761-050000,,"NIPPLE C,GREASE",2,,,2,,,,,,,,,,,,,
13,1,,26013-100252,,"BOLT W/WASHER M10X25",4,,,4,,,,,,,,,,,,,
```

https://truckmanualshub.com/

Fig. 71 ブレード BLADE

D72130-94100

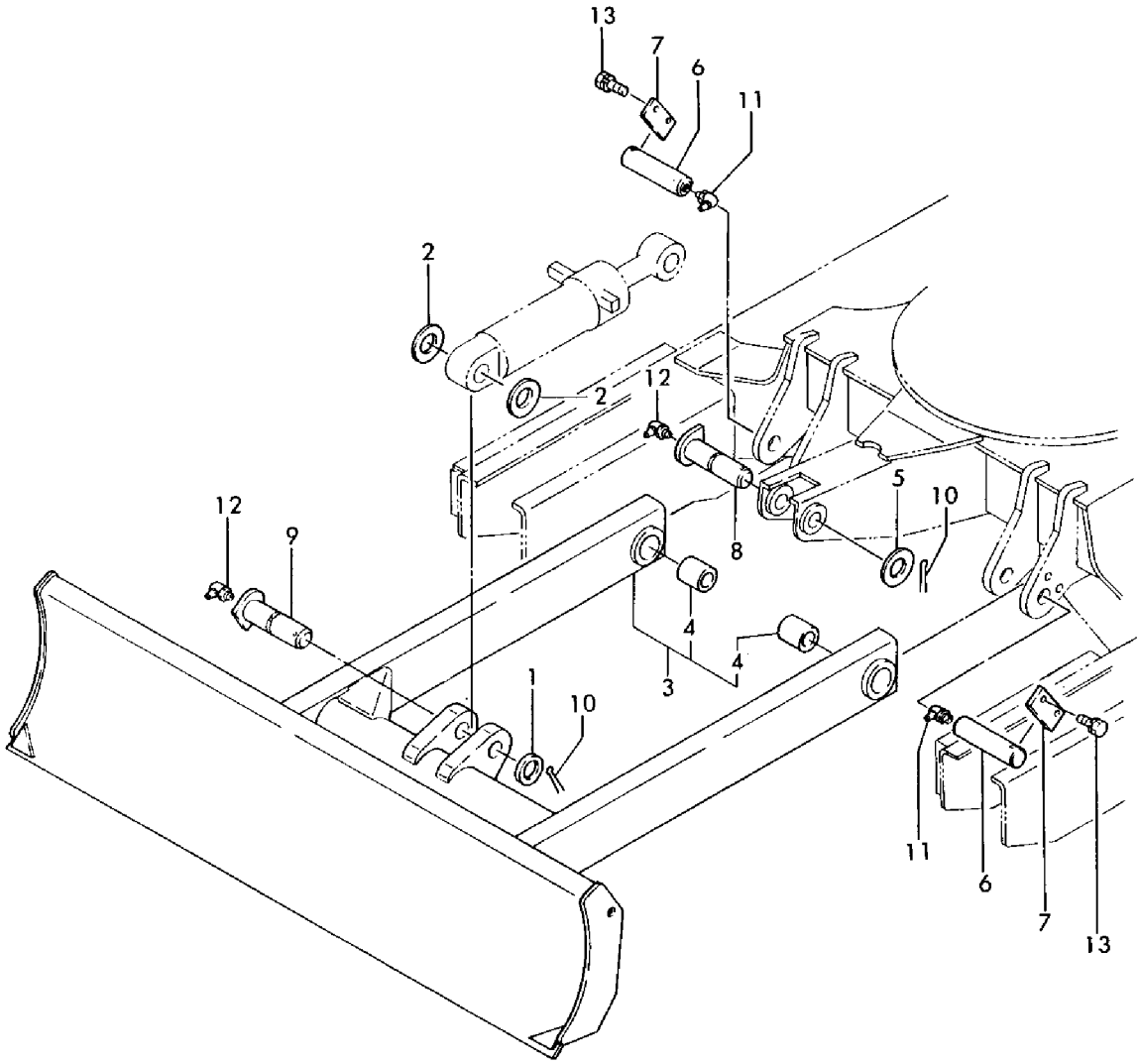

https://truckmanualshub.com/

```
1,1,,772122-81420,,"BUCKET ASSY.300",,1,,,1,,,,,,,,,,,,
3,3,,172116-86240,,"SIDE CUTTER, BUCKET",,2,,,2,,,,,,,,,,,,
4,2,,772122-86120,,"TEETH ASSY",,2,,,2,,,,,,,,,,,,
4-1,2,,772122-86121,,"TEETH ASSY",,2,,,2,,R,,,,,M20501,,,,,,M20501
4-2,2,,772122-86122,,"TEETH ASSY",,2,,,2,,S,,,,,*1989.03,,,,,,*1989.03
5,3,,172113-86120,,TEETH,,2,,,2,,,,,,,,,,,,
5-1,3,,172113-86121,,TEETH,,2,,,2,,R,,,,,M20501,,,,,,M20501
5-2,3,,172113-86122,,TEETH,,2,,,2,,R,,,,,MXXX,,,,,,MXXX
5-3,3,,172113-86123,,TEETH,,2,,,2,,S,,,,,*1989.03,,,,,,*1989.03
6,3,,933110-81900,,"BOLT M14X40X20",,2,,,2,,Z,,,,,*1989.03,,,,,,*1989.03
7,3,,933110-82100,,"BOLT M14X50X20",,2,,,2,,,,,,,,,,,,
7-1,3,,172142-81380,,BOLT,,2,,,2,,S,,,,,*1989.03,,,,,,*1989.03
8,3,,22217-140000,,"SPRING WASHER 14",,4,,,4,,Z,,,,,*1989.03,,,,,,*1989.03
9,3,,26606-140002,,"NUT M14",,4,,,4,,,,,,,,,,,,
9-1,3,,172142-81390,,NUT,,4,,,4,,S,,,,,*1989.03,,,,,,*1989.03
10,3,,172113-86130,,"TEETH SHIM SET",,2,,,2,,,,,,,,,,,,
10-1,3,,172137-86710,,"TEETH SHIM 17 SET",,2,,,2,,S,,,,,*1989.03,,,,,,*1989.03
11,4,,172113-86140,,"TEETH SHIM T0.3",,2,,,2,,,1,,,,,,,,,
11-1,4,,172137-86720,,"TEETH SHIM T0.3",,8,,,8,,S,1,,,,*1989.03,,,,,,*1989.03
12,4,,172113-86150,,"TEETH SHIM T0.5",,2,,,2,,,1,,,,,,,,,
12-1,4,,172137-86730,,"TEETH SHIM T0.5",,2,,,2,,S,1,,,,*1989.03,,,,,,*1989.03
13,4,,172113-86160,,"TEETH SHIM T1.0",,6,,,6,,,1,,,,,,,,,
13-1,4,,172137-86740,,"TEETH SHIM T1.0",,2,,,2,,S,1,,,,*1989.03,,,,,,*1989.03
14,1,,172122-86261,,"PIN, BUCKET",,2,,,2,,,,,,,,,,,,
15,1,,933171-29750,,"SHIM SET, PIN 38",,2,,,2,,,,,,,,,,,,
15-1,1,,933171-29751,,"SHIM
SET,38X(0.8,1.2",,2,,,2,,N,,,,,*1988.04,,,,,,*1988.04
16,2,,933171-29970,,"SHIM 0.8, PIN",,2,,,2,,,1,,,,,,,,,
16-1,2,,172122-86800,,"SHIM 38X0.8",,2,,,2,,N,1,,,,*1988.04,,,,,,*1988.04
17,2,,933171-29980,,"SHIM 1.2, PIN",,2,,,2,,,1,,,,,,,,,
17-1,2,,172122-86810,,"SHIM 38X1.2",,2,,,2,,N,1,,,,*1988.04,,,,,,*1988.04
18,1,,24761-020000,,"NIPPLE PT1/8,GREASE",,2,,,2,,,,,,,,,,,,
19,1,,22417-800500,,"COTTER PIN 8.0X50",,2,,,2,,,,,,,,,,,,
```

https://truckmanualshub.com/

Fig. 72 バケット(300)(アタッチメント) BUCKET (300) (ATTACHMENT)

D72122-81420

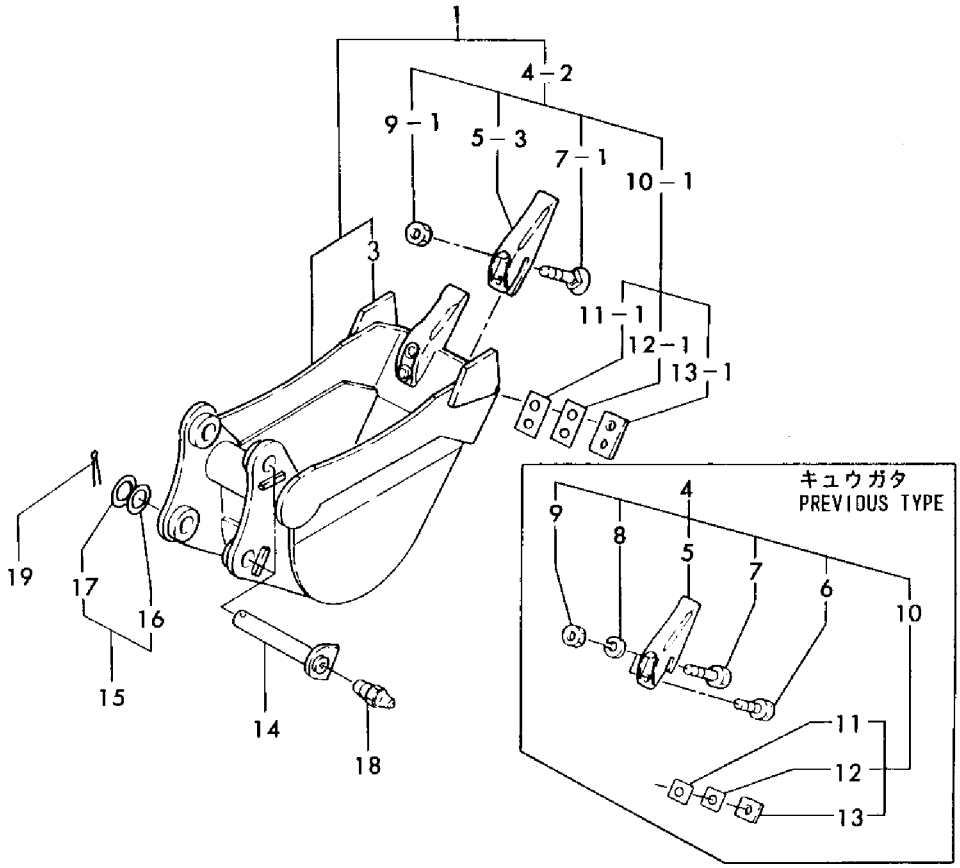

https://truckmanualshub.com/

```
1,1,,772122-81400,,"BUCKET ASSY 450",,1,,,1,,,,,,,,,,,,,
2-1,2,,172122-86101,,"BUCKET 450",,1,,,1,,R,,,,,*1989.05,,,,,,*1989.05
3,3,,172116-86240,,"SIDE CUTTER, BUCKET",,2,,,2,,,,,,,,,,,,,
4,2,,772122-86120,,"TEETH ASSY",,4,,,4,,,,,,,,,,,,,
4-1,2,,772122-86121,,"TEETH ASSY",,4,,,4,,R,,,,,M20501,,,,,,M20501
4-2,2,,772122-86122,,"TEETH ASSY",,4,,,4,,S,,,,,*1989.03,,,,,,*1989.03
5,3,,172113-86120,,TEETH,,4,,,4,,,,,,,,,,,,,
5-1,3,,172113-86121,,TEETH,,4,,,4,,R,,,,,M20501,,,,,,M20501
5-2,3,,172113-86122,,TEETH,,4,,,4,,R,,,,,MXXX,,,,,,MXXX
5-3,3,,172113-86123,,TEETH,,4,,,4,,S,,,,,*1989.03,,,,,,*1989.03
6,3,,933110-81900,,"BOLT M14X40X20",,4,,,4,,Z,,,,,*1989.03,,,,,,*1989.03
7,3,,933110-82100,,"BOLT M14X50X20",,4,,,4,,,,,,,,,,,,,
7-1,3,,172142-81380,,BOLT,,8,,,8,,S,,,,,*1989.03,,,,,,*1989.03
8,3,,22217-140000,,"SPRING WASHER 14",,8,,,8,,Z,,,,,*1989.03,,,,,,*1989.03
9,3,,26606-140002,,"NUT M14",,8,,,8,,,,,,,,,,,,,
9-1,3,,172142-81390,,NUT,,8,,,8,,S,,,,,*1989.03,,,,,,*1989.03
10,3,,172113-86130,,"TEETH SHIM SET",,4,,,4,,,,,,,,,,,,,
10-1,3,,172137-86710,,"TEETH SHIM 17 SET",,4,,,4,,S,,,,,*1989.03,,,,,,*1989.03
11,4,,172113-86140,,"TEETH SHIM T0.3",,4,,,4,,,1,,,,,,,,,,
11-1,4,,172137-86720,,"TEETH SHIM T0.3",,16,,,16,,S,1,,,,*1989.03,,,,,,*1989.03
12,4,,172113-86150,,"TEETH SHIM T0.5",,2,,,2,,,1,,,,,,,,,,
12-1,4,,172137-86730,,"TEETH SHIM T0.5",,4,,,4,,S,1,,,,*1989.03,,,,,,*1989.03
13,4,,172113-86160,,"TEETH SHIM T1.0",,8,,,8,,,1,,,,,,,,,,
13-1,4,,172137-86740,,"TEETH SHIM T1.0",,4,,,4,,S,1,,,,*1989.03,,,,,,*1989.03
14,1,,172122-86261,,"PIN, BUCKET",,2,,,2,,,,,,,,,,,,,
15,1,,933171-29750,,"SHIM SET, PIN 38",,2,,,2,,,,,,,,,,,,,
15-1,1,,933171-29751,,"SHIM
SET,38X(0.8,1.2",,2,,,2,,N,1,,,,*1988.04,,,,,,*1988.04
16,2,,933171-29970,,"SHIM 0.8, PIN",,2,,,2,,,1,,,,,,,,,,
16-1,2,,172122-86800,,"SHIM 38X0.8",,2,,,2,,N,1,,,,*1988.04,,,,,,*1988.04
17,2,,933171-29980,,"SHIM 1.2, PIN",,2,,,2,,,1,,,,,,,,,,
17-1,2,,172122-86810,,"SHIM 38X1.2",,2,,,2,,N,1,,,,*1988.04,,,,,,*1988.04
18,1,,24761-020000,,"NIPPLE PT1/8,GREASE",,2,,,2,,,,,,,,,,,,,
19,1,,22417-800500,,"COTTER PIN 8.0X50",,2,,,2,,,,,,,,,,,,,
```

https://truckmanualshub.com/

Fig. 73 バケット(450)(アタッチメント) BUCKET (450) (ATTACHMENT)

D72122-81400

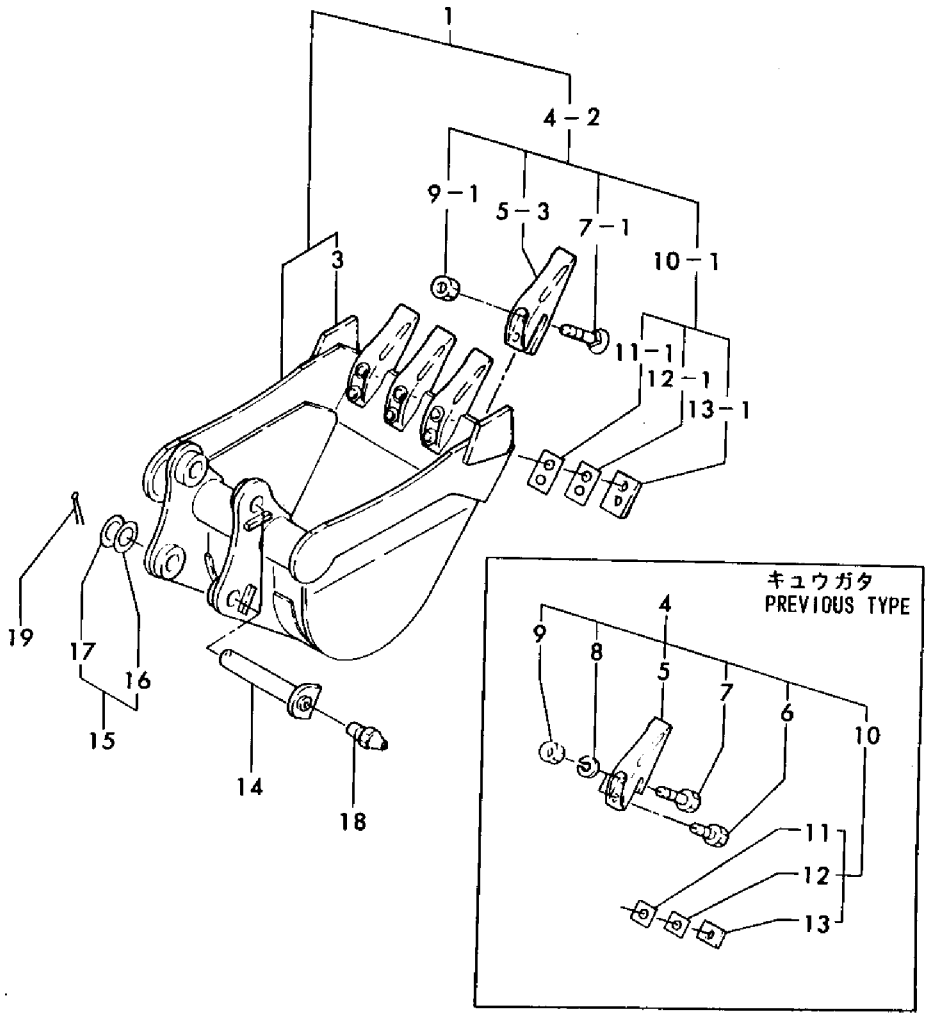

https://truckmanualshub.com/

```
1,1,,772122-81410,,"BUCKET ASSY.500",,1,,,1,,,,,,,,,,,,
3,3,,172116-86240,,"SIDE CUTTER, BUCKET",,2,,,2,,,,,,,,,,,,
4,2,,772122-86120,,"TEETH ASSY",,4,,,4,,,,,,,,,,,,
4-1,2,,772122-86121,,"TEETH ASSY",,4,,,4,,R,,,,,M20501,,,,,,M20501
4-2,2,,772122-86122,,"TEETH ASSY",,4,,,4,,S,,,,,*1989.03,,,,,,*1989.03
5,3,,172113-86120,,TEETH,,4,,,4,,,,,,,,,,,,
5-1,3,,172113-86121,,TEETH,,4,,,4,,R,,,,,M20501,,,,,,M20501
5-2,3,,172113-86122,,TEETH,,4,,,4,,R,,,,,MXXX,,,,,,MXXX
5-3,3,,172113-86123,,TEETH,,4,,,4,,S,,,,,*1989.03,,,,,,*1989.03
6,3,,933110-81900,,"BOLT M14X40X20",,4,,,4,,Z,,,,,*1989.03,,,,,,*1989.03
7,3,,933110-82100,,"BOLT M14X50X20",,4,,,4,,,,,,,,,,,,
7-1,3,,172142-81380,,BOLT,,8,,,8,,S,,,,,*1989.03,,,,,,*1989.03
8,3,,22217-140000,,"SPRING WASHER 14",,8,,,8,,Z,,,,,*1989.03,,,,,,*1989.03
9,3,,26606-140002,,"NUT M14",,8,,,8,,,,,,,,,,,,
9-1,3,,172142-81390,,NUT,,8,,,8,,S,,,,,*1989.03,,,,,,*1989.03
10,3,,172113-86130,,"TEETH SHIM SET",,4,,,4,,,,,,,,,,,,
10-1,3,,172137-86710,,"TEETH SHIM 17 SET",,4,,,4,,S,,,,,*1989.03,,,,,,*1989.03
11,4,,172113-86140,,"TEETH SHIM T0.3",,4,,,4,,,1,,,,,,,,,
11-1,4,,172137-86720,,"TEETH SHIM T0.3",,16,,,16,,S,1,,,,*1989.03,,,,,,*1989.03
12,4,,172113-86150,,"TEETH SHIM T0.5",,2,,,2,,,1,,,,,,,,,
12-1,4,,172137-86730,,"TEETH SHIM T0.5",,4,,,4,,S,1,,,,*1989.03,,,,,,*1989.03
13,4,,172113-86160,,"TEETH SHIM T1.0",,8,,,8,,,1,,,,,,,,,
13-1,4,,172137-86740,,"TEETH SHIM T1.0",,4,,,4,,S,1,,,,*1989.03,,,,,,*1989.03
14,1,,172122-86261,,"PIN, BUCKET",,2,,,2,,,,,,,,,,,,
15,1,,933171-29750,,"SHIM SET, PIN 38",,2,,,2,,,,,,,,,,,,
15-1,1,,933171-29751,,"SHIM
SET,38X(0.8,1.2",,2,,,2,,N,,,,,*1988.04,,,,,,*1988.04
16,2,,933171-29970,,"SHIM 0.8, PIN",,2,,,2,,,1,,,,,,,,,
16-1,2,,172122-86800,,"SHIM 38X0.8",,2,,,2,,N,1,,,,*1988.04,,,,,,*1988.04
17,2,,933171-29980,,"SHIM 1.2, PIN",,2,,,2,,,1,,,,,,,,,
17-1,2,,172122-86810,,"SHIM 38X1.2",,2,,,2,,N,1,,,,*1988.04,,,,,,*1988.04
18,1,,24761-020000,,"NIPPLE PT1/8,GREASE",,2,,,2,,,,,,,,,,,,
19,1,,22417-800500,,"COTTER PIN 8.0X50",,2,,,2,,,,,,,,,,,,
```

https://truckmanualshub.com/

Fig. 74 バケット(500)(アタッチメント) BUCKET (500) (ATTACHMENT)

D72122-81410

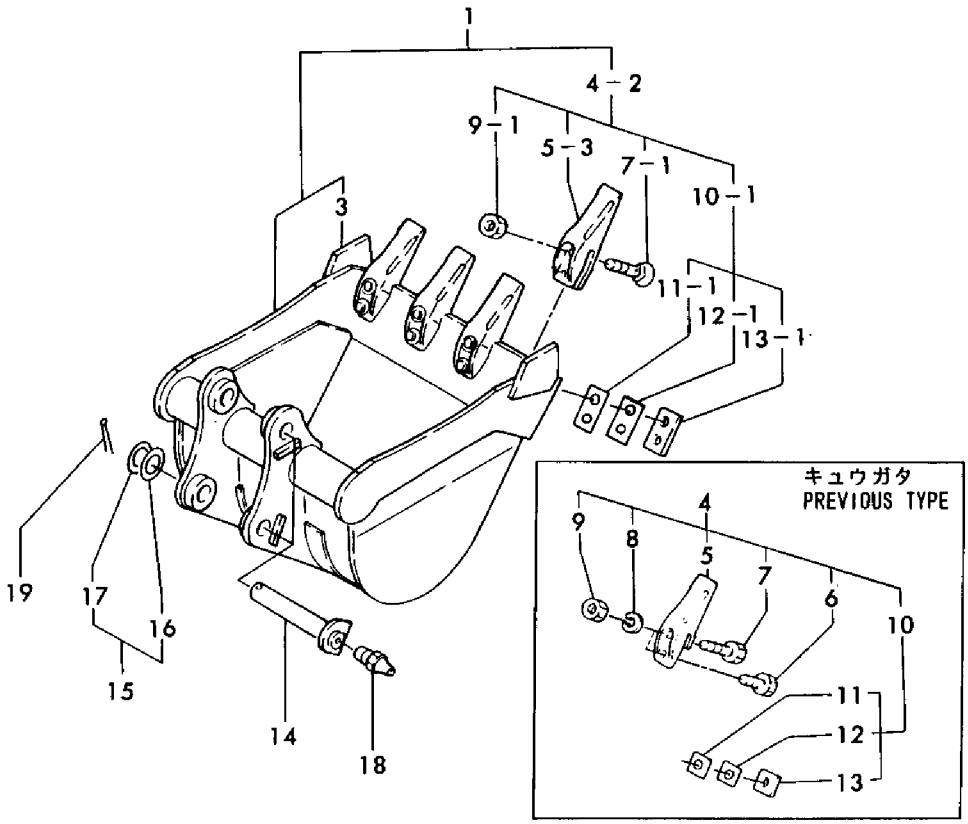

https://truckmanualshub.com/

```
1,1,,772122-81430,,"BUCKET ASSY,550",,1,,,1,,,,,,,,,,,,
3,3,,172116-86240,,"SIDE CUTTER, BUCKET",,2,,,2,,,,,,,,,,,,
4,2,,772122-86120,,"TEETH ASSY",,4,,,4,,,,,,,,,,,,
4-1,2,,772122-86121,,"TEETH ASSY",,4,,,4,,N,,,,,M20501,,,,,,M20501
4-2,2,,772122-86122,,"TEETH ASSY",,4,,,4,,S,,,,,*1989.03,,,,,,*1989.03
5,3,,172113-86120,,TEETH,,4,,,4,,,,,,,,,,,,
5-1,3,,172113-86121,,TEETH,,4,,,4,,R,,,,,M20501,,,,,,M20501
5-2,3,,172113-86122,,TEETH,,4,,,4,,R,,,,,MXXX,,,,,,MXXX
5-3,3,,172113-86123,,TEETH,,4,,,4,,S,,,,,*1989.03,,,,,,*1989.03
6,3,,933110-81900,,"BOLT M14X40X20",,4,,,4,,Z,,,,,*1989.03,,,,,,*1989.03
7,3,,933110-82100,,"BOLT M14X50X20",,4,,,4,,,,,,,,,,,,
7-1,3,,172142-81380,,BOLT,,8,,,8,,S,,,,,*1989.03,,,,,,*1989.03
8,3,,22217-140000,,"SPRING WASHER 14",,8,,,8,,Z,,,,,*1989.03,,,,,,*1989.03
9,3,,26606-140002,,"NUT M14",,8,,,8,,,,,,,,,,,,
9-1,1,,172142-81390,,NUT,,8,,,8,,S,,,,,*1989.03,,,,,,*1989.03
10,3,,172113-86130,,"TEETH SHIM SET",,4,,,4,,,,,,,,,,,,
10-1,3,,172137-86710,,"TEETH SHIM 17 SET",,4,,,4,,S,,,,,*1989.03,,,,,,*1989.03
11,4,,172113-86140,,"TEETH SHIM T0.3",,4,,,4,,,1,,,,,,,,,
11-1,4,,172137-86720,,"TEETH SHIM T0.3",,16,,,16,,S,1,,,,*1989.03,,,,,,*1989.03
12,4,,172113-86150,,"TEETH SHIM T0.5",,2,,,2,,,1,,,,,,,,,
12-1,4,,172137-86730,,"TEETH SHIM T0.5",,4,,,4,,S,1,,,,*1989.03,,,,,,*1989.03
13,4,,172113-86160,,"TEETH SHIM T1.0",,8,,,8,,,1,,,,,,,,,
13-1,4,,172137-86740,,"TEETH SHIM T1.0",,4,,,4,,S,1,,,,*1989.03,,,,,,*1989.03
14,1,,172122-86261,,"PIN, BUCKET",,2,,,2,,,,,,,,,,,,
15,1,,933171-29750,,"SHIM SET, PIN 38",,2,,,2,,,,,,,,,,,,
15-1,1,,933171-29751,,"SHIM
SET,38X(0.8,1.2",,2,,,2,,N,,,,,*1988.04,,,,,,*1988.04
16,2,,933171-29970,,"SHIM 0.8, PIN",,2,,,2,,,1,,,,,,,,,
16-1,2,,172122-86800,,"SHIM 38X0.8",,2,,,2,,N,1,,,,*1988.04,,,,,,*1988.04
17,2,,933171-29980,,"SHIM 1.2, PIN",,2,,,2,,,1,,,,,,,,,
17-1,2,,172122-86810,,"SHIM 38X1.2",,2,,,2,,N,1,,,,*1988.04,,,,,,*1988.04
18,1,,24761-020000,,"NIPPLE PT1/8,GREASE",,2,,,2,,,,,,,,,,,,
19,1,,22417-800500,,"COTTER PIN 8.0X50",,2,,,2,,,,,,,,,,,,
```

https://truckmanualshub.com/

Fig. 75 バケット(550)(アタッチメント) BUCKET (550) (ATTACHMENT)

D72122-81430

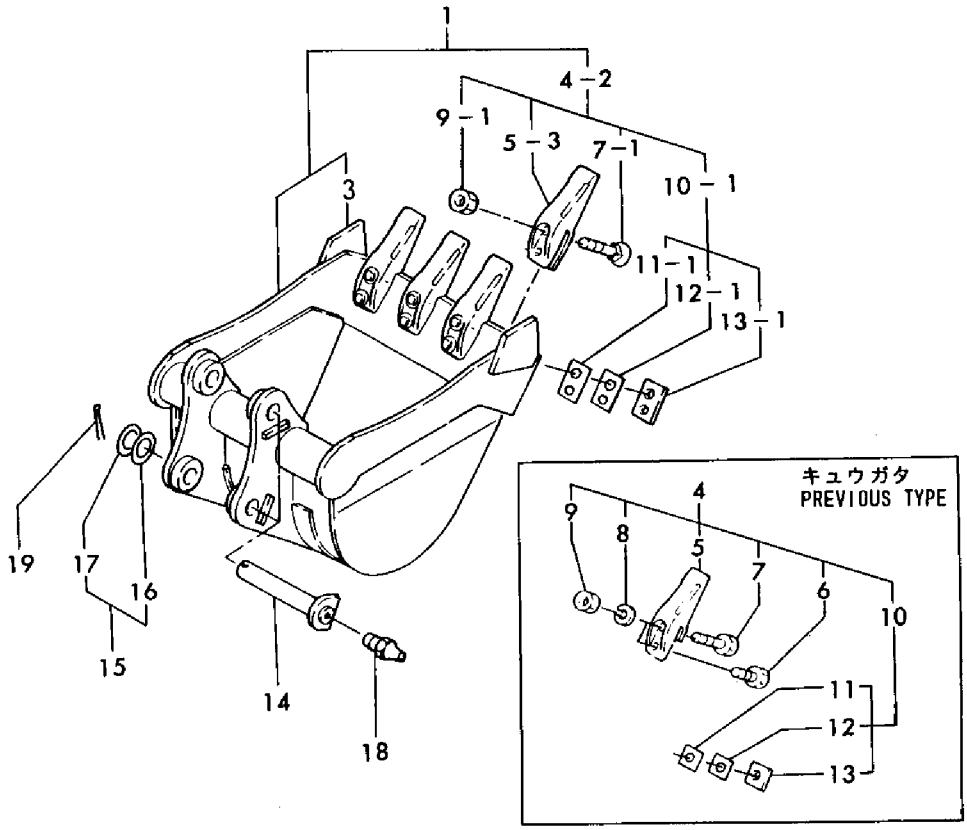

https://truckmanualshub.com/

```
1,1,,772312-81400,,"BUCKET ASSY,650",,1,,,1,,,,,,,,,,,,
3,3,,172116-86240,,"SIDE CUTTER, BUCKET",,2,,,2,,,,,,,,,,,,
4,2,,772122-86120,,"TEETH ASSY",,5,,,5,,,,,,,,,,,,
4-1,2,,772122-86121,,"TEETH ASSY",,5,,,5,,R,,,,,M20501,,,,,,M20501
4-2,2,,772122-86122,,"TEETH ASSY",,5,,,5,,S,,,,,*1989.03,,,,,,*1989.03
5,3,,172113-86120,,TEETH,,5,,,5,,,,,,,,,,,,
5-1,3,,172113-86121,,TEETH,,5,,,5,,R,,,,,M20501,,,,,,M20501
5-2,3,,172113-86122,,TEETH,,5,,,5,,R,,,,,MXXX,,,,,,MXXX
5-3,3,,172113-86123,,TEETH,,5,,,5,,S,,,,,*1989.03,,,,,,*1989.03
6,3,,933110-81900,,"BOLT M14X40X20",,5,,,5,,Z,,,,,*1989.03,,,,,,*1989.03
7,3,,933110-82100,,"BOLT M14X50X20",,5,,,5,,,,,,,,,,,,
7-1,3,,172142-81380,,BOLT,,10,,,10,,S,,,,,*1989.03,,,,,,*1989.03
8,3,,22217-140000,,"SPRING WASHER 14",,10,,,10,,Z,,,,,*1989.03,,,,,,*1989.03
9,3,,26606-140002,,"NUT M14",,10,,,10,,,,,,,,,,,,
9-1,3,,172142-81390,,NUT,,10,,,10,,S,,,,,*1989.03,,,,,,*1989.03
10,3,,172113-86130,,"TEETH SHIM SET",,5,,,5,,,,,,,,,,,,
10-1,3,,172137-86710,,"TEETH SHIM 17 SET",,5,,,5,,S,,,,,*1989.03,,,,,,*1989.03
11,4,,172113-86140,,"TEETH SHIM T0.3",,5,,,5,,,1,,,,,,,,,
11-1,4,,172137-86720,,"TEETH SHIM T0.3",,20,,,20,,S,1,,,,*1989.03,,,,,,*1989.03
12,4,,172113-86150,,"TEETH SHIM T0.5",,5,,,5,,,1,,,,,,,,,
12-1,4,,172137-86730,,"TEETH SHIM T0.5",,5,,,5,,S,1,,,,*1989.03,,,,,,*1989.03
13,4,,172113-86160,,"TEETH SHIM T1.0",,5,,,5,,,1,,,,,,,,,
13-1,4,,172137-86740,,"TEETH SHIM T1.0",,5,,,5,,S,1,,,,*1989.03,,,,,,*1989.03
14,1,,172122-86261,,"PIN, BUCKET",,2,,,2,,,,,,,,,,,,
15,1,,933171-29750,,"SHIM SET, PIN 38",,2,,,2,,,,,,,,,,,,
15-1,1,,933171-29751,,"SHIM
SET,38X(0.8,1.2",,2,,,2,,N,,,,,*1988.04,,,,,,*1988.04
16,2,,933171-29970,,"SHIM 0.8, PIN",,2,,,2,,,1,,,,,,,,,
16-1,2,,172122-86800,,"SHIM 38X0.8",,2,,,2,,N,1,,,,*1988.04,,,,,,*1988.04
17,2,,933171-29980,,"SHIM 1.2, PIN",,2,,,2,,,1,,,,,,,,,
17-1,2,,172122-86810,,"SHIM 38X1.2",,2,,,2,,N,1,,,,*1988.04,,,,,,*1988.04
18,1,,24761-020000,,"NIPPLE PT1/8,GREASE",,2,,,2,,,,,,,,,,,,
19,1,,22417-800500,,"COTTER PIN 8.0X50",,2,,,2,,,,,,,,,,,,
```

https://truckmanualshub.com/

Fig. 76 バケット(650) (アタッチメント) BUCKET (650) (ATTACHMENT)

D72312-81400

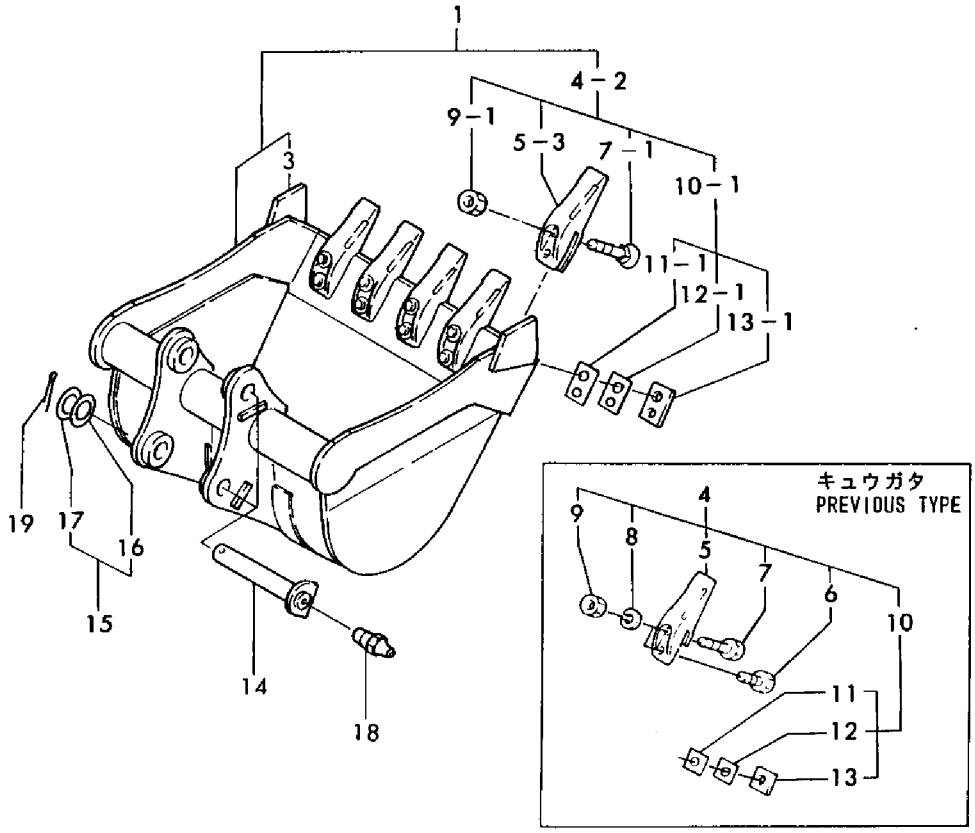

https://truckmanualshub.com/

```
1,1,,772122-81500,,"BUCKET, EJECTOR",,1,,,1,,,,,,,,,,,,
3,2,,772122-86250,,"TEETH ASSY",,3,,,3,,,,,,,,,,,,
4,3,,172122-86250,,TEETH,,3,,,3,,,,,,,,,,,,
5,3,,933110-81900,,"BOLT M14X40X20",,3,,,3,,,,,,,,,,,,
6,3,,933110-82100,,"BOLT M14X50X20",,3,,,3,,,,,,,,,,,,
7,3,,22217-140000,,"SPRING WASHER 14",,6,,,6,,,,,,,,,,,,
8,3,,26606-140002,,"NUT M14",,6,,,6,,,,,,,,,,,,
9,3,,172113-86130,,"TEETH SHIM SET",,3,,,3,,,,,,,,,,,,
10,4,,172113-86140,,"TEETH SHIM T0.3",,3,,,3,,,1,,,,,,,,,,
11,4,,172113-86150,,"TEETH SHIM T0.5",,3,,,3,,,1,,,,,,,,,,
12,4,,172113-86160,,"TEETH SHIM T1.0",,6,,,6,,,1,,,,,,,,,,
13,2,,172116-87000,,"PLATE, EJECTOR",,1,,,1,,,,,,,,,,,,
14,3,,172116-84490,,"PIN BUSH 38X41",,2,,,2,,,,,,,,,,,,
15,3,,24761-020000,,"NIPPLE PT1/8,GREASE",,2,,,2,,,,,,,,,,,,
16,1,,172122-86761,,"PIN, BUCKET",,2,,,2,,,,,,,,,,,,
17,1,,933171-29750,,"SHIM SET, PIN 38",,2,,,2,,,,,,,,,,,,
17-1,1,,933171-29751,,"SHIM
SET,38X(0.8,1.2",,2,,,2,,N,,,,*1988.04,,,,,*1988.04
18,2,,933171-29970,,"SHIM 0.8, PIN",,2,,,2,,,1,,,,,,,,,,
18-1,2,,172122-86800,,"SHIM 38X0.8",,2,,,2,,N,1,,,,*1988.04,,,,,*1988.04
19,2,,933171-29980,,"SHIM 1.2, PIN",,2,,,2,,,1,,,,,,,,,,
19-1,2,,172122-86810,,"SHIM 38X1.2",,2,,,2,,N,1,,,,*1988.04,,,,,*1988.04
20,1,,24761-020000,,"NIPPLE PT1/8,GREASE",,2,,,2,,,,,,,,,,,,
21,1,,22417-800500,,"COTTER PIN 8.0X50",,2,,,2,,,,,,,,,,,,
```

https://truckmanualshub.com/

Fig. 77 バケット(ツチオトシ) (アタッチメント) BUCKET (EJECTOR) (ATTACHMENT) D72122-81500

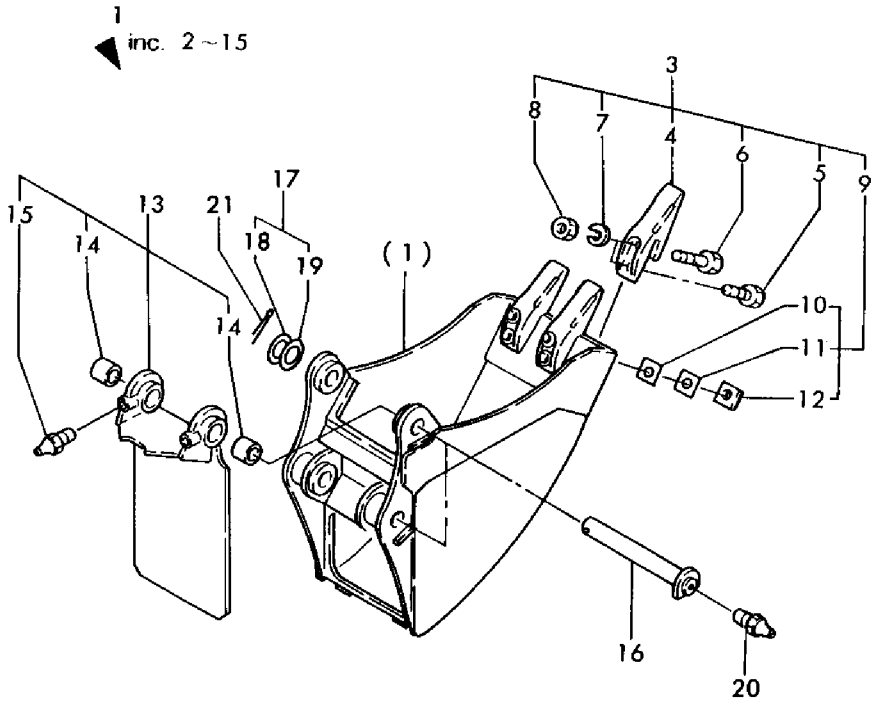

https://truckmanualshub.com/

```
1,1,,172112-87850,,"SHIM 40X5",,1,,,1,,,1,,,,,,,,,
2,1,,172112-87860,,"SHIM 40X1",,2,,,2,,,,,,,,,,,,
3,1,,172130-94300,,BLADE(965),,1,,,1,,,,,,,,,,,,
3-1,1,,172130-94301,,BLADE(965),,1,,,1,,N,,,,,M00559,,,,,,M00559
3-2,1,,172130-94302,,BLADE(965),,1,,,1,,N,,,,,M20501,,,,,,M20501
4,1,,172071-27161,,"BUSH 38X85",,2,,,2,,,,,,,,,,,,
5,1,,172116-94390,,"SHIM 40X3.2, ADJUST",,1,,,1,,,,,,,,,,,,
6,1,,172122-94401,,"PIN, BLADE",,2,,,2,,,,,,,,,,,,
7,1,,172122-94410,,"CIRCLIP, BLADE PIN",,2,,,2,,,,,,,,,,,,
8,1,,172122-94431,,"PIN 40-144A, BLADE",,2,,,2,,,,,,,,,,,,
8-1,1,,172122-94480,,"PIN 40-144C, BLADE",,2,,,2,,R,,,,,M00559,,,,,,M00559
9,1,,22417-800560,,"COTTER PIN 8.0X 56",,2,,,2,,,,,,,,,,,,
10,1,,24761-050000,,"NIPPLE C,GREASE",,2,,,2,,,,,,,,,,,,
11,1,,24761-050000,,"NIPPLE C,GREASE",,2,,,2,,,,,,,,,,,,
12,1,,26013-100252,,"BOLT W/WASHER M10X25",,4,,,4,,,,,,,,,,,,
```

https://truckmanualshub.com/

Fig. 78 ブレード (965)(オプション) BLADE (965) (OPTION)

D72130-94110

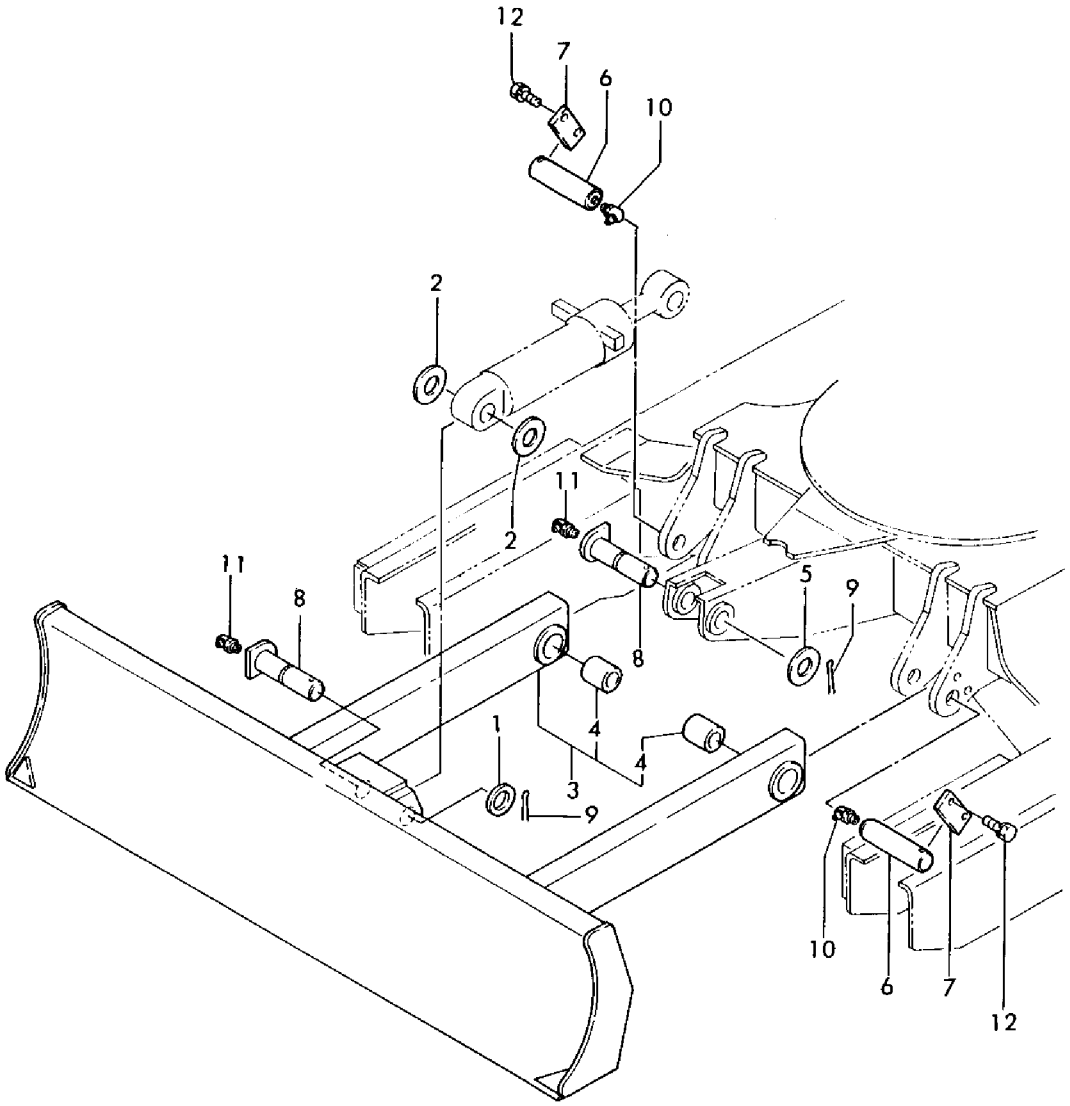

https://truckmanualshub.com/

```
1,1,,772122-45110,,"LEVER ASSY, QUICK",,,1,,,1,,,,,,,,,,,
1-1,1,,772122-45111,,"LEVER ASSY",,,1,,,1,S,,,,,,,M20501,,,,,,M20501
2,2,,172122-03280,,"LABEL,OPERATION",,,1,,,1,,,,,,,,,,,
3,2,,172122-03290,,"LABEL,QUICK OPER.(A)",,,1,,,1,,,,,,,,,,,
4,2,,172122-03300,,"LABEL,QUICK OPER.(B)",,,1,,,1,,,,,,,,,,,
5,2,,172122-46801,,"LEVER (L)",,,1,,,1,,,,,,,,,,,
6,2,,172122-46831,,"JOINT, LEVER",,,1,,,1,,,,,,,,,,,
7,2,,172122-46861,,"NUT M24",,,1,,,1,,,,,,,,,,,
8,2,,172122-46871,,"LINK W/BUSH, ARM",,,1,,,1,,,,,,,,,,,
8-1,2,,172122-46872,,"LINK W/BUSH, ARM",,,1,,,1,S,,,,,,,M20501,,,,,,M20501
9,3,,172112-42730,,"BUSH 20X15",,,2,,,2,,,,,,,,,,,
11,2,,172122-46900,,"LINK (G)",,,1,,,1,,,,,,,,,,,
11-1,2,,172122-46901,,"LINK G",,,1,,,1,S,,,,,,,M20501,,,,,,M20501
12,2,,172122-46920,,"BOSS W/BUSH, LINK",,,1,,,1,,,,,,,,,,,
12-1,2,,172122-46921,,"BOSS W/BUSH, LINK",,,1,,,1,S,,,,,,,M20501,,,,,,M20501
14,3,,172116-46960,,"BUSH 20X15",,,2,,,2,,,,,,,,,,,
14-1,3,,24162-172312,,"NEEDLE BEARING",,,2,,,2,S,,,,,,,M20501,,,,,,M20501
15,2,,172124-45900,,"STAND W/BUSH,LEVER L",,,1,,,1,,,,,,,,,,,
15-1,2,,172124-45901,,"STAND, LEVER (L)",,,1,,,1,N,,,,,,,M20501,,,,,,M20501
16,3,,933171-23680,,"BUSH 14X15",,,2,,,2,,,,,,,,,,,
17,2,,172122-47180,,"PIPE, LINK",,,1,,,1,,,,,,,,,,,
18,2,,26013-100162,,"BOLT M10X 16",,,1,,,1,,,,,,,,,,,
19,2,,26013-100202,,"BOLT W/WASHER M10X20",,,2,,,2,,,,,,,,,,,
20,2,,172122-46980,,"ARM, LOCK",,,1,,,1,,,,,,,,,,,
21,2,,22351-040020,,"SPRING PIN 4X20",,,1,,,1,,,,,,,,,,,
21-1,2,,22351-040036,,"SPRING PIN 4X36",,,1,,,1,S,,,,,,,M00501,,,,,,M00501
22,2,,172122-47250,,"BALL 8, LINK",,,2,,,2,,,,,,,,,,,
23,2,,22217-080000,,"SPRING WASHER  8",,,2,,,2,,,,,,,,,,,
24,2,,26756-080002,,"LOCK NUT M 8 PLATED",,,2,,,2,,,,,,,,,,,
25,2,,22351-050032,,"SPRING PIN 5X32",,,1,,,1,,,,,,,,,,,
25-1,2,,22351-050036,,"SPRING PIN 5X36",,,1,,,1,N,,,,,,,M20501,,,,,,M20501
26,2,,172122-45330,,"O-RING 17",,,2,,,2,W,,,,,,,M20501,,,,,,M20501
27,2,,194630-25250,,"LINER 17X30X1",,,2,,,2,W,,,,,,,M20501,,,,,,M20501
```

https://truckmanualshub.com/

Fig. 79 Bタイプソウジュウソウチ(オプション) B TYPE CONTROL EQUIPMENT (OPTION)

D72122-03180
D72122-45110
(D72122-45210)
D72123-45210
D72122-45410
D72122-45510
(D72123-45610)
D72123-45611

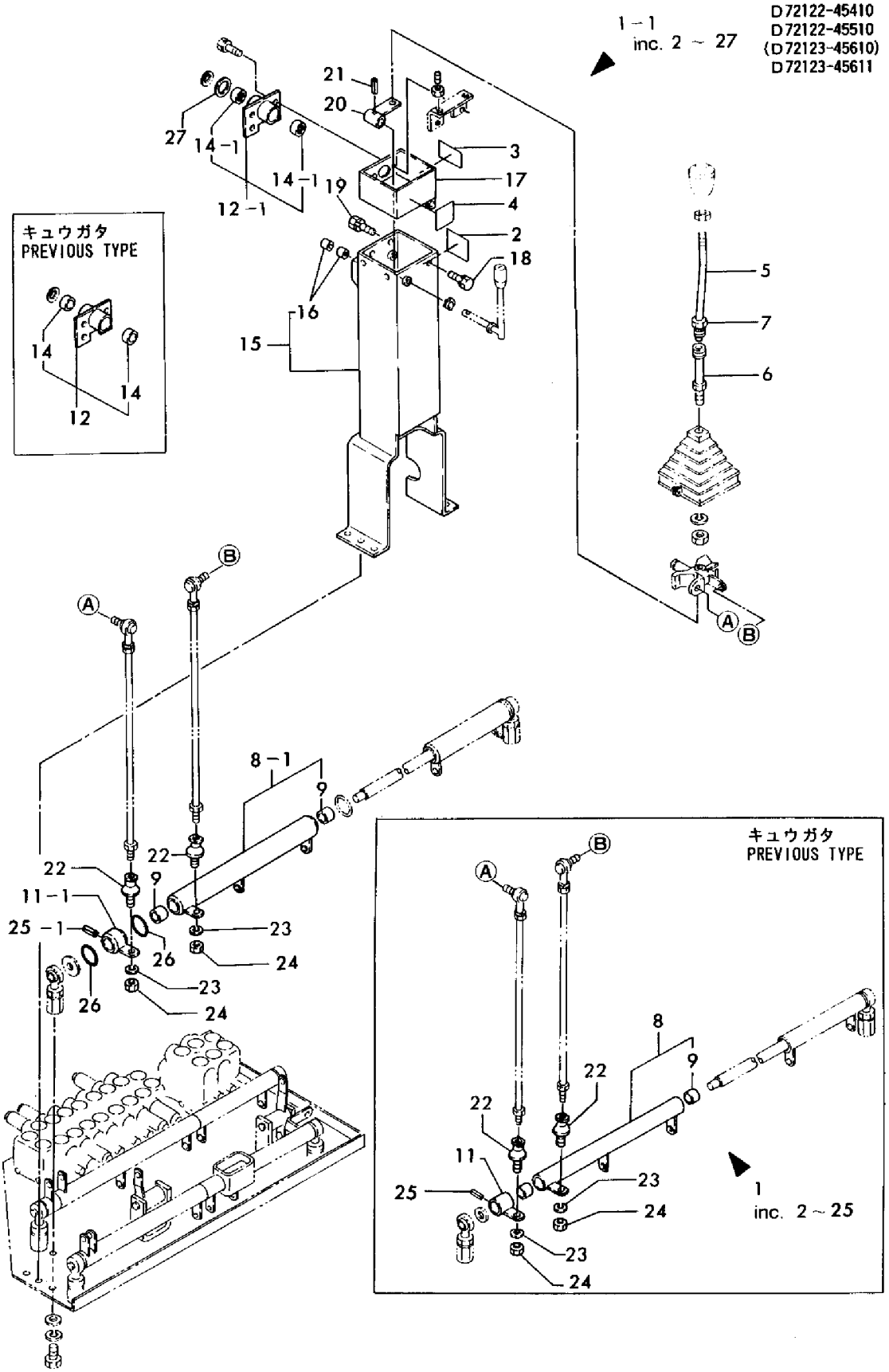

https://truckmanualshub.com/

```
1,1,,772312-05700,,"PIN ASSY, LIFT",,,1,,,1,,,,,,,,,,,
2,2,,172312-05700,,"PIN (40-121)",,,1,,,1,,,,,,,,,,,
3,2,,172112-87860,,"SHIM 40X1",,,1,,,1,,,,,,,,,,,
4,2,,22242-000400,,"CIRCLIP   40",,,1,,,1,,,,,,,,,,,
5,2,,933110-86600,,"NUT M24, NYLON",,,1,,,1,,,,,,,,,,,
6,2,,933171-29760,,WASHER,,,1,,,1,,,,,,,,,,,
```

https://truckmanualshub.com/

Fig. 80 リフトピン（オプション） LIFT PIN (OPTION)

D72312-05700

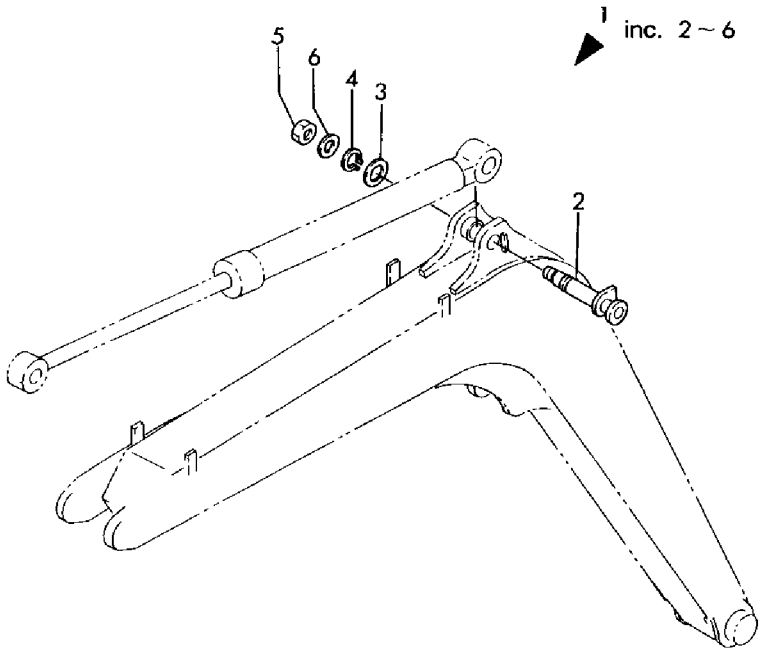

https://truckmanualshub.com/

```
1,1,,772122-17140,,"WINDOW WASHER ASSY",,,1,,,,,,,,,,,,,,
2,2,,172122-16630,,"LEAD WIRE",,,1,,,,,,,,,,,,,,
3,2,,22137-050000,,"WASHER 5, POLISHED",,,2,,,,,,,,,,,,,,
4,2,,22857-500120,,"SCREW 5X12",,,2,,,,,,,,,,,,,,
5,2,,933113-03300,,"SWITCH, WIPER",,,1,,,,,,,,,,,,,,
6,2,,933113-15600,,"WINDOW WASHER",,,1,,,,,,,,,,,,,,
7,2,,933113-15800,,"NOZZLE, WASHER",,,1,,,,,,,,,,,,,,
8,2,,172122-16590,,"BAND 200F",,,4,,,,,,,,,,,,,,
9,2,,22857-400120,,"SCREW 4X12",,,4,,,,,,,,,,,,,,
10,2,,1E6102-84970,,"BAND 140,WIRE LOCK",,,2,,,,,,,,,,,,,,,
```

https://truckmanualshub.com/

Fig. 81 ウインドウオッシャ(オプション)(キュウガタ) WINDSHIELD WASHER (OPTION) (PREVIOS TYPE)

D 72122-17140

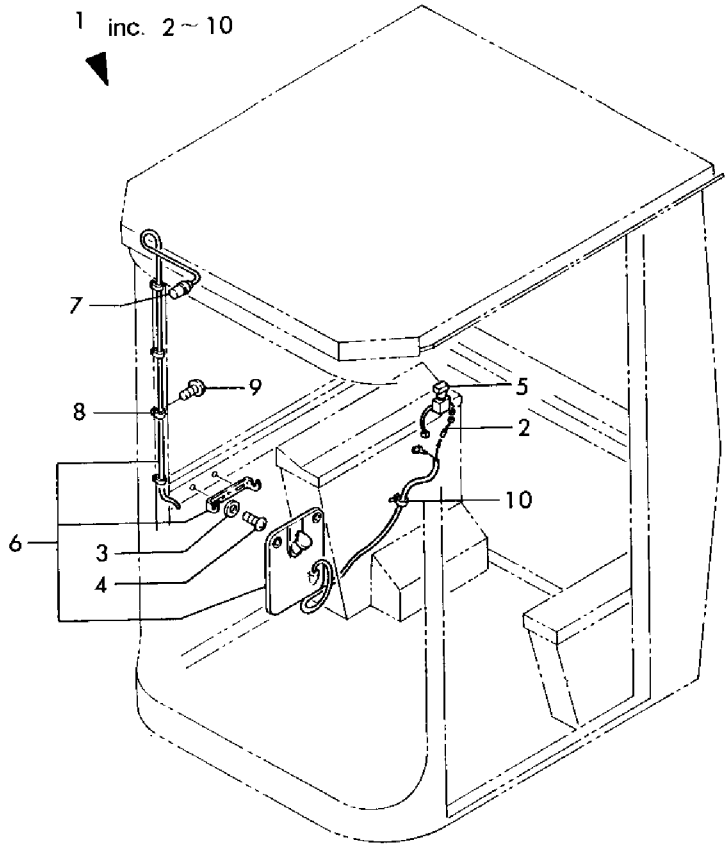

https://truckmanualshub.com/

```
1,1,,772122-63130,,"PANEL ASSY,OVER HEAD",,,1,,,,,,,,,,,,,,
2,2,,172122-16710,,"BUSH 115",,,1,,,,,,,,,,,,,
3,2,,172111-16890,,"GROMMET  9",,,2,,,,,,,,,,,,,
4,2,,172122-18101,,"PANEL, OVER HEAD",,,1,,,,,,,,,,,,,
5,2,,172122-18200,,"COVER (A)",,,2,,,,,,,,,,,,,
6,2,,172122-18210,,"COVER (B)",,,1,,,,,,,,,,,,,
7,2,,22137-100000,,"WASHER 10,POLISHED",,,2,,,,,,,,,,,,,
8,2,,22217-040000,,"SPRING WASHER  4",,,8,,,,,,,,,,,,,
9,2,,26013-100402,,"BOLT M10X 40",,,2,,,,,,,,,,,,,
10,2,,26023-060122,,"SCREW M 6X 12",,,5,,,,,,,,,,,,,
10-1,2,,26022-060122,,"SCREW M 6X 12",,,5,,,,S,,,,,,,M00501,,,,
11,2,,26557-040102,,"SCREW M 4X 10",,,12,,,,,,,,,,,,,
12,2,,26716-040002,,"NUT M 4",,,8,,,,,,,,,,,,,
13,2,,22137-060000,,"WASHER 6, POLISHED",,,5,,,,W,,,,,,,M00501,,,,
14,1,,772122-17800,,RADIO,,,1,,,,,,,,,,,,,
14-1,1,,772122-17801,,RADIO,,,1,,,,N,,,,,,,*1987.02,,,,
15,2,,172122-16550,,"LEAD WIRE",,,1,,,,,,,,,,,,,
16,2,,172112-17150,,"RADIO (RA-155)",,,1,,,,,,,,,,,,,
17,2,,172112-17160,,"PANEL (PLA-03-100)",,,1,,,,,,,,,,,,,
18,2,,172112-17170,,"SPEAKER (SPA-457)",,,1,,,,,,,,,,,,,
18-1,2,,172112-17171,,"SPEAKER (SPA-413)",,,1,,,,F,1,,,,,,*1987.02,,,,
19,2,,172112-17190,,"ANTENNA (NCP-314)",,,1,,,,,,,,,,,,,
20,2,,172124-17810,,"STAY, SPEAKER",,,2,,,,,,,,,,,,,
20-1,2,,172124-17812,,"STAY, SPEAKER",,,1,,,,S,1,,,,,,*1987.02,,,,
21,2,,172122-18190,,"PANEL, RADIO",,,1,,,,,,,,,,,,,
22,2,,22857-400120,,"SCREW 4X12",,,4,,,,,,,,,,,,,
22-1,2,,22857-400120,,"SCREW 4X12",,,3,,,,K,1,,,,,,*1987.02,,,,
23,2,,22857-500120,,"SCREW 5X12",,,4,,,,,,,,,,,,,
23-1,2,,22857-500120,,"SCREW 5X12",,,2,,,,K,1,,,,,,*1987.02,,,,
24,2,,26013-060162,,"BOLT M 6X 16",,,2,,,,,,,,,,,,,
24-1,2,,26557-040122,,"SCREW M 4X 12,PAN HD",,,2,,,,S,1,,,,,,*1987.02,,,,
25,2,,933168-56000,,"GROMMET 17X19",,,1,,,,,,,,,,,,,
26,2,,933168-56000,,"GROMMET 17X19",,,1,,,,W,1,,,,,,*1987.02,,,,
27,1,,772122-17820,,"STEREO RADIO ASSY.",,,1,,,,,,,,,,,,,
28,2,,172122-16590,,"BAND 200F",,,7,,,,,,,,,,,,,
29,2,,172122-16640,,"LEAD WIRE",,,1,,,,,,,,,,,,,
30,2,,172112-17170,,"SPEAKER (SPA-457)",,,2,,,,,,,,,,,,,
30-1,2,,172112-17171,,"SPEAKER (SPA-413)",,,2,,,,F,2,,,,,,*1987.02,,,,
31,2,,172112-17190,,"ANTENNA (NCP-314)",,,1,,,,,,,,,,,,,
32,2,,172124-17810,,"STAY, SPEAKER",,,4,,,,,,,,,,,,,
32-1,2,,172124-17812,,"STAY, SPEAKER",,,2,,,,S,2,,,,,,*1987.02,,,,
33,2,,22857-400120,,"SCREW 4X12",,,8,,,,,,,,,,,,,
33-1,2,,22857-400120,,"SCREW 4X12",,,6,,,,K,2,,,,,,*1987.02,,,,
34,2,,22857-400120,,"SCREW 4X12",,,7,,,,,,,,,,,,,
35,2,,22857-500120,,"SCREW 5X12",,,2,,,,,,,,,,,,,
36,2,,26013-060162,,"BOLT M 6X 16",,,4,,,,,,,,,,,,,
36-1,2,,26557-040122,,"SCREW M 4X 12,PAN HD",,,4,,,,S,2,,,,,,*1987.02,,,,
37,2,,933113-15500,,STELEO,,,1,,,,,,,,,,,,,
38,2,,933168-56000,,"GROMMET 17X19",,,1,,,,,,,,,,,,,
39,2,,933168-56000,,"GROMMET 17X19",,,2,,,,W,2,,,,,,*1987.02,,,,
40,1,,26577-040142,,"SCREW M 4 X 14",,,4,,,,,,,,,,,,,
41,1,,933113-10200,,"QUARTZ CLOCK",,,1,,,,,,,,,,,,,
```

https://truckmanualshub.com/

Fig. 82 デンソウヒン(オプション)(キュウガタ) ELECTRIC PARTS (OPTION) (PREVIOS TYPE)

(D 72122-17800)
D 72135-17800
D 72122-17150
D 72122-17820
D 72122-63130

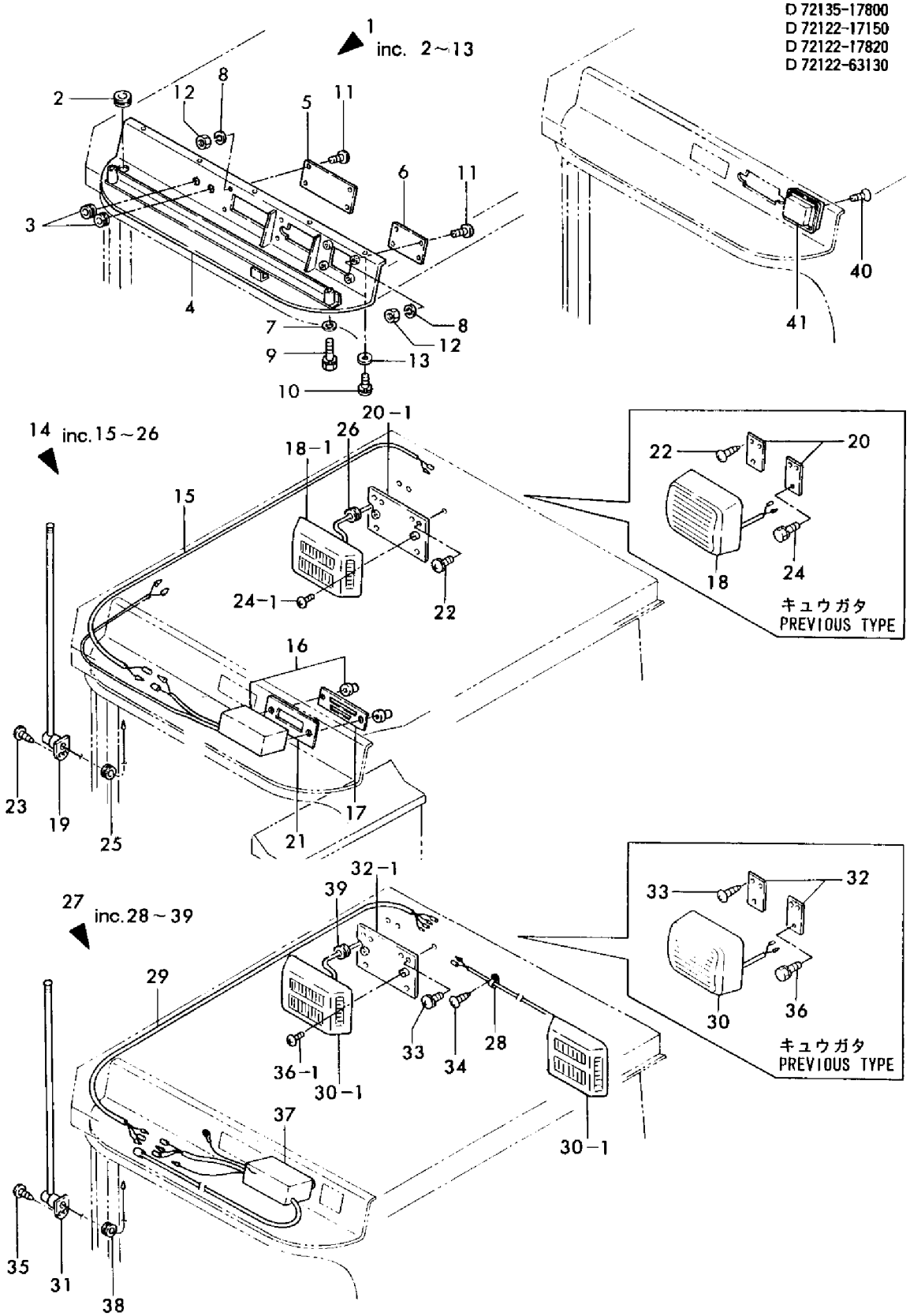

https://truckmanualshub.com/

```
1,1,,772135-17800,,"RADIO ASSY",,,1,,,,,,,,,,,,,
2,2,,172122-16590,,"BAND 200F",,,8,,,,,,,,,,,,,
3,2,,172135-17100,,"BRACKET (A)",,,1,,,,,,,,,,,,,
4,2,,172135-17140,,"BRACKET (B)",,,1,,,,,,,,,,,,,
5,2,,172112-17150,,"RADIO (RA-155)",,,1,,,,,,,,,,,,,
6,2,,172112-17160,,"PANEL (PLA-03-100)",,,1,,,,,,,,,,,,,,
7,2,,172112-17171,,"SPEAKER (SPA-413)",,,1,,,,,,,,,,,,,,
8,2,,172112-17190,,"ANTENNA (NCP-314)",,,1,,,,,,,,,,,,,,
9,2,,172135-17200,,"LEAD WIRE, RADIO",,,1,,,,,,,,,,,,,,
10,2,,172124-17812,,"STAY, SPEAKER",,,1,,,,,,,,,,,,,,
11,2,,172112-69300,,"GROMMET 22X2",,,1,,,,,,,,,,,,,,
12,2,,22857-400120,,"SCREW 4X12",,,8,,,,,,,,,,,,,,
13,2,,22857-500120,,"SCREW 5X12",,,2,,,,,,,,,,,,,,
14,2,,26023-060122,,"SCREW M 6X 12",,,5,,,,,,,,,,,,,,
15,2,,26023-060122,,"SCREW M 6X 12",,,2,,,,,,,,,,,,,,
16,2,,26557-040122,,"SCREW M 4X 12,PAN HD",,,2,,,,,,,,,,,,,,,
17,2,,933168-56000,,"GROMMET 17X19",,,1,,,,,,,,,,,,,,
18,2,,933168-56000,,"GROMMET 17X19",,,1,,,,,,,,,,,,,,
19,2,,172135-17210,,"LEAD WIRE, ANTENNA",,,1,,,,,,,,,,,,,,,
```

https://truckmanualshub.com/

Fig. 83 ラジオ(フロントフラットキャビン)(オプション) RADIO (FRONT FLAT CABIN) (OPTION)

D72135-17800

FROM M/#20514

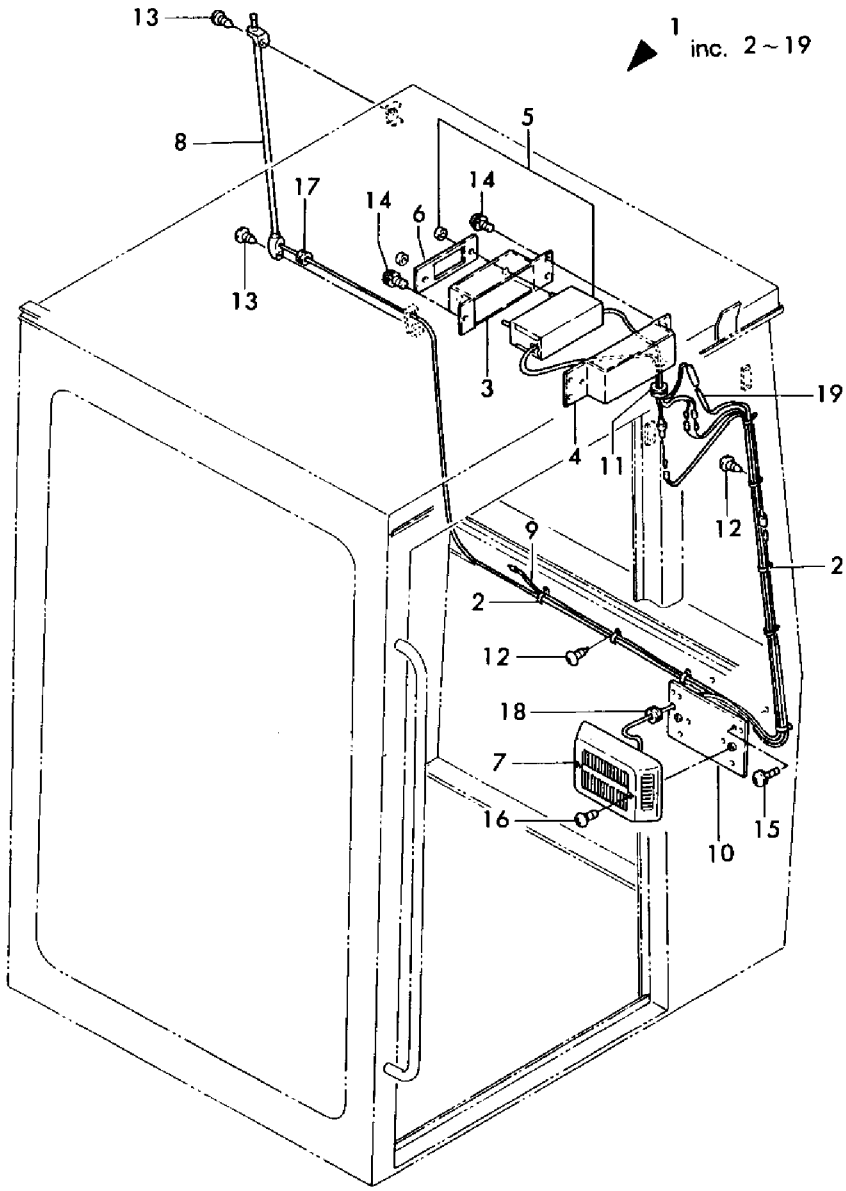

https://truckmanualshub.com/

```
1,1,,772122-17400,,"LAMP ASSY, WORK",,,1,,,1,,,,,,,,,,,
2,2,,172122-16560,,"LEAD WIRE",,,1,,,1,,,,,,,,,,,
3,2,,172116-17431,,"LAMP, WORK",,,1,,,1,,,,,,,,,,,
4,3,,172116-17441,,"BULB 14V 60W",,,1,,,1,,,,,,,,,,,
5,2,,172116-17460,,"STAY, WORK LAMP",,,1,,,1,,,,,,,,,,,
6,2,,194440-51620,,"CLAMP, WIRE HARNESS",,,1,,,1,,,,,,,,,,,
7,2,,22117-100000,,"WASHER 10",,,2,,,2,,,,,,,,,,,
8,2,,26013-100202,,"BOLT W/WASHER M10X20",,,2,,,2,,,,,,,,,,,
9,1,,933169-15230,,STAPLE,,,5,,,5,,,,,,,,,,,
```

https://truckmanualshub.com/

Fig. 84 ワークランプ（オプション） WORK LAMP (OPTION)

D72122-17400

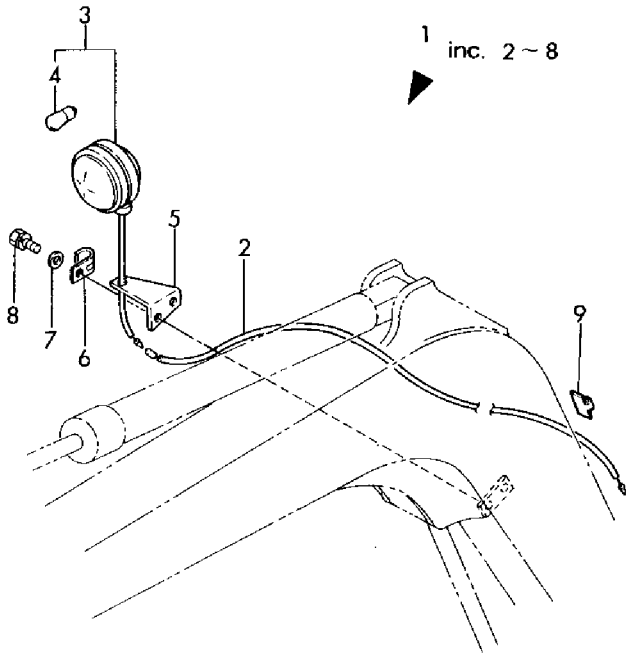

https://truckmanualshub.com/

```
1,1,,772130-17600,,"HEATER ASSY",,,1,,,,,,,,,,,,,
2,2,,172122-16650,,"LEAD WIRE",,,1,,,,,,,,,,,,,
3,2,,172124-17630,,"VALVE, MINIATURE",,,1,,,,,,,,,,,,,
4,2,,172122-17640,,"BASE, HEATER",,,2,,,,,,,,,,,,,
5,2,,172124-17640,,"JOINT 3/8",,,2,,,,,,,,,,,,,
6,2,,172122-17650,,"BUSH 185",,,1,,,,,,,,,,,,,
7,2,,172122-17830,,"HOSE(GR), HEATER",,,2,,,,,,,,,,,,,
8,2,,194250-51660,,"BAND  250",,,3,,,,,,,,,,,,,
9,2,,23000-022000,,"CLAMP 22",,,4,,,,,,,,,,,,,
10,2,,22137-100000,,"WASHER 10,POLISHED",,,4,,,,,,,,,,,,,
11,2,,22217-100000,,"SPRING WASHER 10",,,4,,,,,,,,,,,,,
12,2,,26716-100002,,"NUT M10",,,4,,,,,,,,,,,,,
13,2,,26013-100252,,"BOLT W/WASHER M10X25",,,4,,,,,,,,,,,,,
14,2,,26116-100252,,"BOLT M10X 25 PLATED",,,4,,,,,,,,,,,,,
15,2,,933113-15700,,"HEATER ASSY",,,1,,,,,,,,,,,,,
16,2,,933171-15680,,"GROMMET 40X13",,,2,,,,,,,,,,,,,
17,2,,933113-03200,,"SWITCH, HEATER",,,1,,,,,,,,,,,,,
18,2,,933166-24240,,"ELBOW, SWIVEL JOINT",,,1,,,,,,,,,,,,,
19,1,,772122-17700,,"DEFROSTER ASSY",,,1,,,,,,,,,,,,,
20,2,,172122-17700,,"STAY, NOZZLE",,,1,,,,,,,,,,,,,
20-1,2,,172122-17701,,"STAY, NOZZLE",,,1,,,,N,,,,,,,*1988.01,,,,
21,2,,172120-17710,,"NOZZLE, DEFROSTER",,,2,,,,,,,,,,,,,
22,2,,172122-17711,,"TUBE 60, AIR",,,1,,,,,,,,,,,,,
23,2,,172122-17720,,"JOINT, 3-WAY",,,1,,,,,,,,,,,,,
24,2,,172122-17730,,"COVER, DEFROSTER",,,1,,,,,,,,,,,,,
25,2,,172122-17700,,"STAY, NOZZLE",,,1,,,,,,,,,,,,,
25-1,2,,172122-17740,,"STAY (L), NOZZLE",,,1,,,,N,,,,,,,*1986.06,,,,
25-2,2,,172135-17730,,"STAY COMP.,NOZZLE L",,,1,,,,N,,,,,,,*1988.10,,,,
26,2,,172122-17770,,"TUBE 40(A), AIR",,,1,,,,,,,,,,,,,
27,2,,172122-17780,,"TUBE 40(B), AIR",,,1,,,,,,,,,,,,,
28,2,,26557-050102,,"SCREW M 5X 10",,,4,,,,,,,,,,,,,
29,2,,933152-09280,,"BAND 170",,,4,,,,,,,,,,,,,
30,2,,26013-100252,,"BOLT W/WASHER M10X25",,,4,,,,,,,,,,,,,
31,1,,172122-17200,,"PANEL, INSTRUMENT",,,1,,,,,,,,,,,,,
```

https://truckmanualshub.com/

Fig. 85 ヒータ & デフロスタ(オプション)(キュウガタ) HEATER & DEFROSTER (OPTION)(PREVIOS TYPE)

D 72130-17600
(D 72122-17700)
D 72122-63120
D 72122-17710
D 72122-17730

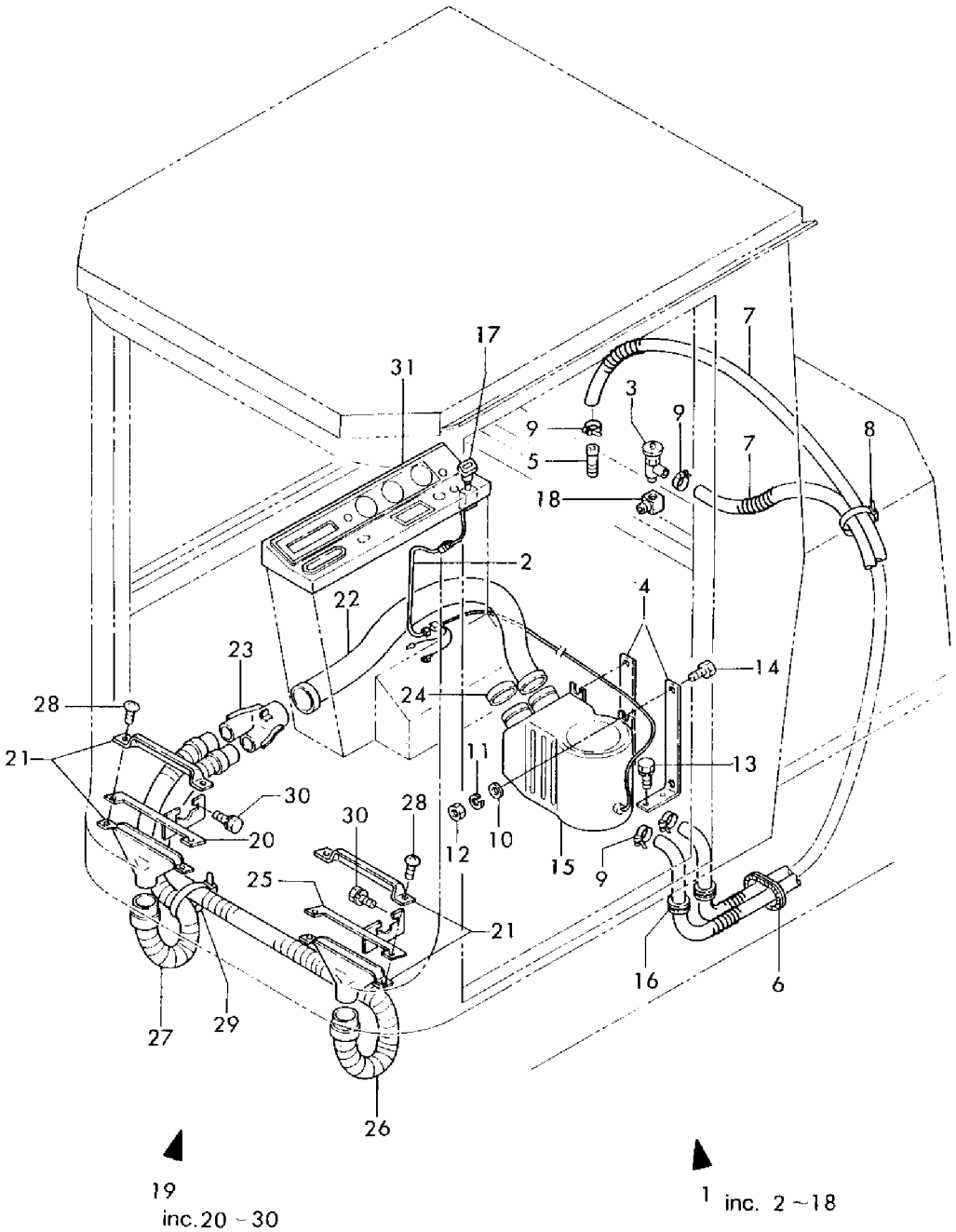

https://truckmanualshub.com/

```
1,1,,772130-17600,,"HEATER ASSY",,,1,,,,,,,,,,,,,
2,2,,172122-16650,,"LEAD WIRE",,,1,,,,,,,,,,,,,
3,2,,172124-17630,,"VALVE, MINIATURE",,,1,,,,,,,,,,,,,
4,2,,172122-17640,,"BASE, HEATER",,,2,,,,,,,,,,,,,
5,2,,172124-17640,,"JOINT 3/8",,,2,,,,,,,,,,,,,
6,2,,172122-17650,,"BUSH 185",,,1,,,,,,,,,,,,,
7,2,,172122-17830,,"HOSE(GR), HEATER",,,2,,,,,,,,,,,,,
8,2,,194250-51660,,"BAND  250",,,3,,,,,,,,,,,,,
9,2,,23000-022000,,"CLAMP 22",,,4,,,,,,,,,,,,,
10,2,,22137-100000,,"WASHER 10,POLISHED",,,4,,,,,,,,,,,,,
11,2,,22217-100000,,"SPRING WASHER 10",,,4,,,,,,,,,,,,,
12,2,,26716-100002,,"NUT M10",,,4,,,,,,,,,,,,,
13,2,,26013-100252,,"BOLT W/WASHER M10X25",,,4,,,,,,,,,,,,,
14,2,,26116-100252,,"BOLT M10X 25 PLATED",,,4,,,,,,,,,,,,,
15,2,,933113-15700,,"HEATER ASSY",,,1,,,,,,,,,,,,,
16,2,,933171-15680,,"GROMMET 40X13",,,2,,,,,,,,,,,,,
17,2,,933113-03200,,"SWITCH, HEATER",,,1,,,,,,,,,,,,,
18,2,,933166-24240,,"ELBOW, SWIVEL JOINT",,,1,,,,,,,,,,,,,
19,1,,772122-17700,,"DEFROSTER ASSY",,,1,,,,,,,,,,,,,
20,2,,172122-17700,,"STAY, NOZZLE",,,1,,,,,,,,,,,,,
20-1,2,,172122-17701,,"STAY, NOZZLE",,,1,,,,N,,,,,,,*1988.01,,,,
21,2,,172120-17710,,"NOZZLE, DEFROSTER",,,2,,,,,,,,,,,,,
22,2,,172122-17711,,"TUBE 60, AIR",,,1,,,,,,,,,,,,,
23,2,,172122-17720,,"JOINT, 3-WAY",,,1,,,,,,,,,,,,,
24,2,,172122-17730,,"COVER, DEFROSTER",,,1,,,,,,,,,,,,,
25-1,2,,172122-17701,,"STAY, NOZZLE",,,1,,,,,1,,,,,,,,,
25-2,2,,172135-17700,,STAY,,,1,,,,N,,,,,,,*1988.10,,,,
26,2,,172122-17770,,"TUBE 40(A), AIR",,,1,,,,,,,,,,,,,
27,2,,172122-17780,,"TUBE 40(B), AIR",,,1,,,,,,,,,,,,,
28,2,,26557-050102,,"SCREW M 5X 10",,,4,,,,,,,,,,,,,
29,2,,933152-09280,,"BAND 170",,,4,,,,,,,,,,,,,
30,2,,26013-100252,,"BOLT W/WASHER M10X25",,,4,,,,,,,,,,,,,
31,1,,172122-17200,,"PANEL, INSTRUMENT",,,1,,,,,,,,,,,,,
32,1,,172122-16590,,"BAND 200F",,,1,,,,W,,,,,,,*1988.09,,,,
33,1,,172126-11510,,"BAND 300",,,1,,,,W,,,,,,,*1988.09,,,,
34,1,,22857-400120,,"SCREW 4X12",,,1,,,,W,,,,,,,*1989.09,,,,
```

https://truckmanualshub.com/

Fig. 86 ヒータ & デフロスタ (オプション) (シンガタ) HEATER & DEFROSTER (OPTION) (NEW TYPE)

D 72130-17600
(D 72122-17700)
D 72122-17720
D 72122-63120

FROM M/#20514

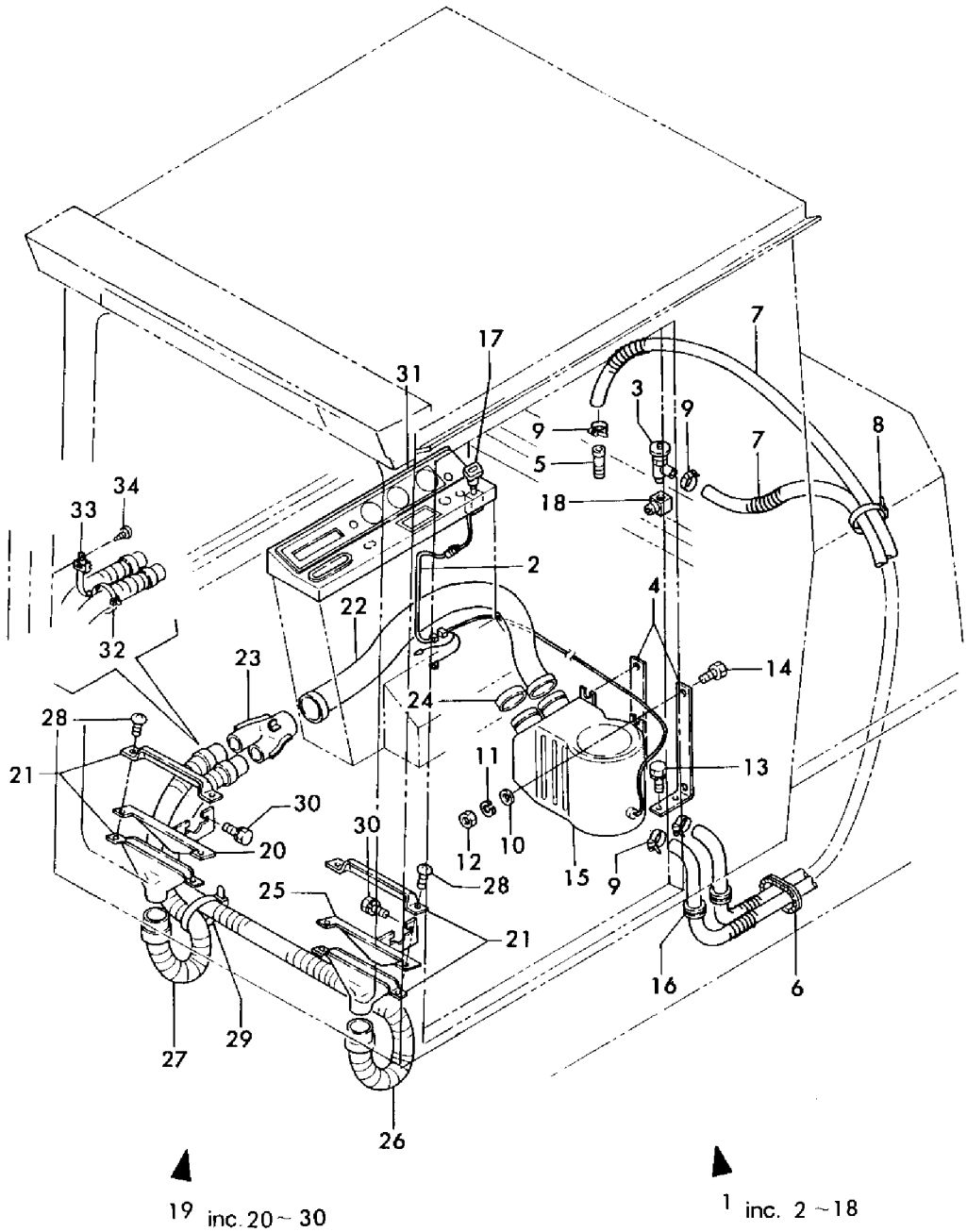

https://truckmanualshub.com/

```
1,1,,772122-64220,,"SEAT, OPERATOR",,,1,,,1,,,,,,,,,,,
2,2,,172122-64200,,"SEAT, OPERATOR",,,1,,,1,,,,,,,,,,,
3,2,,172122-64210,,"MOUNT (A), SEAT",,,1,,,1,,,,,,,,,,,
4,2,,22217-100000,,"SPRING WASHER 10",,,4,,,4,,,,,,,,,,,
5,2,,26013-100202,,"BOLT W/WASHER M10X20",,,4,,,4,,,,,,,,,,,
6,2,,26736-100002,,"NUT M10",,,4,,,4,,,,,,,,,,,
```

https://truckmanualshub.com/

Fig. 87 シート(オプション) SEAT (OPTION)

D72122-64220

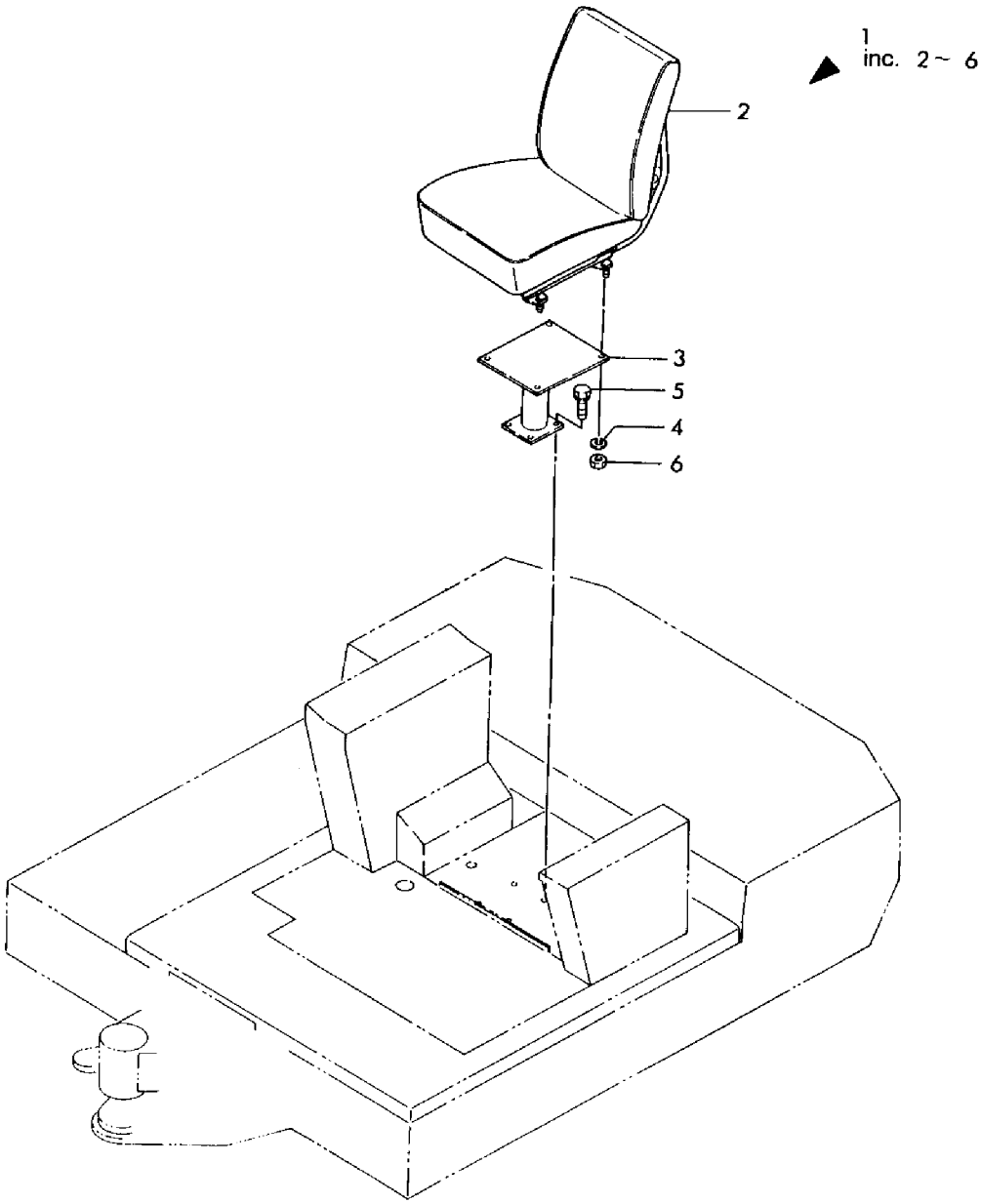

https://truckmanualshub.com/

```
[Info]
PcNo=Y00K2042
PcName=YB401U.UZ(B3661)
JpnUse=1
JpnSec1=Œš‹@
JpnSec2=ƒoƒbƒNƒz[
JpnSec3=YB
JpnPreface=1
EngUse=1
EngSec1=CONSTRUCTION
EngSec2=EXCAVATOR (YB)
EngSec3=YB
EngPreface=1
```