https://truckmanualshub.com/

h2000 SERIES

# OPERATION & SERVICE MANUAL

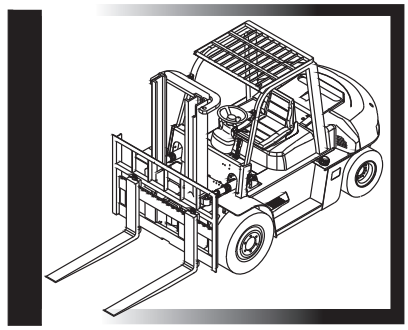

5 to 10 Ton Balanceweight Type
Forklift Truck with Engine

HELI

安徽合力股份有限公司
ANHUI HELI CO., LTD.

https://truckmanualshub.com/

# FOREWORD

This manual states the performance, structure, safe operation and regular maintenance of the "HELI" H2000 series forklift truck from 5t–10t so as to help the operators, mechanics and supervisors of forklift truck operate correctly and attain the highest function. It is necessary to read over the manual before operating.

If any operation or maintenance does' t accord with requires in this manual, our related promises is inefficacy.

Due to continuous improvements in design, it is possible that the latest description contained herein may differ slightly from the truck delivered to you. Moreover, the specification of the forklift truck may be changed insignificantly depending on its destination.

NOTE: The"Model" in this MANUAL is different from the "Model" on the name plate and the certificate of quality. The "Model" in this MANUAL includes "Model" and "Configuration No." on the name plate and the certificate of quality.

CPCD50 – W2

Configuration No.

Model

https://truckmanualshub.com/

# CONTENTS

Ⅰ. Safety Rules for Operation and Daily Maintenance of Forklift Truck ..... 1
Ⅱ. Primary Technic Parameter of Forklift ..... 7
Ⅲ. Primary Assembly Introduce of Forklift ..... 22
Ⅳ. The Structure, Principle, Adjustment and Maintenance of Forklift ..... 23
1. Dynamic System ..... 23
1.1 Fuel system ..... 26
1.1.1 Fuel tank ..... 26
1.1.2 Fuel sender ..... 26
1.1.3 Fuel filter ..... 28
1.2 Cooling system ..... 28
1.3 Inspection and adjustment ..... 28
1.3.1 Air cleaner ..... 28
1.3.2 Oil filter(fuel) ..... 29
1.3.3 Oil filter(machine oil) ..... 29
1.3.4 Cooling system ..... 30
1.3.5 Tightening the cylinder head bolts of engine ..... 31
1.3.6 Adjustment of clearance of air gate ..... 31
1.3.7 Confirmation of the ignition time of oil injectio ..... 32
1.3.8 Adjustment of ignition time of oil injection ..... 33
1.3.9 Measurement of the compression pressure ..... 33
1.3.10 Exhaust air of oil injection pump ..... 34
2. Electric System ..... 35
2.1 General ..... 37
2.2 Lamp switch ..... 37
2.3 Battery ..... 39
2.4 Wire harness ..... 38
3. Transmission System ..... 72
3.1 General description ..... 74
3.2 Torque converter ..... 74
3.3 Oil pump ..... 75
3.4 Hydraulic clutch group ..... 76
3.5 Control valve & inching valve ..... 77
3.6 Hydraulic circulation system in tor–con ..... 78
3.7 Cautions when the forklift truck trouble occurs ..... 80

https://truckmanualshub.com/

3.8 Trouble shooting 80
4. Drive Axle 84
4.1 General description 84
4.2 Differential 84
4.3 Hub reduction gear 88
4.4 Trouble shooting 89
4.5 Data use for service 89
5. Brake System 90
5.1 General description 91
5.2 Power brake 91
5.2.1 Brake pedal device 91
5.2.2 Brake valve 93
5.2.3 Accumulator 95
5.3 Vacuum servo brake 95
5.3.1 Vacuum booster and main brake cylinder assembly 96
5.3.2 Installation method for vacuum booster and main brake cylinder assembly 98
5.3.3 Points of attention for users 99
5.3.4 Trouble shooting and cause analysis 99
5.4 Travel brake 99
5.4.1 Travel brake(5–7t forklift truck) 100
5.4.2 Travel brake(8–10t forklift truck) 103
5.5 Stop brake 104
5.6 Trouble shooting 106
6. Steering System 107
6.1 Steering unit 109
6.2 Checking after mounting on the machine 110
6.3 Troubleshooting guide 111
6.4 Steering axle 112
6.4.1 Steering axle body 112
6.4.2 Left and right steering knuckle assembly 112
6.4.3 Wheel hub 112
6.4.4 Steering oil cylinder 112
7. Hydraulic System 115
7.1 General description 116
7.2 Main pump 116
7.3 Control valve 116
7.4 Operation of control valve 117

https://truckmanualshub.com/

7.5 Operation of relief valve ..... 118
7.6 Operation of tilt lock valve ..... 119
7.7 Operation unit of the control valve ..... 120
7.8 Oil tank ..... 121
7.9 Hydraulic circulation system ..... 122
7.10 Maintenance ..... 122
8. Lift Cylinder & tilt cylinder ..... 125
8.1 Lift cylinder ..... 125
8.2 Cut–off valve ..... 128
8.3 Flow regulator ..... 128
8.4 Tilt cylinder ..... 130
9. Hoist System ..... 132
9.1 General description ..... 133
9.2 Outer & inner mast ..... 133
9.3 Lift bracket ..... 133
9.4 Adjustment of hoist system ..... 133
9.4.1 Adjustment of shims of lift cylinder ..... 133
9.4.2 Carriage adjustment ..... 134
9.5 Roller position of mounting ..... 135

https://truckmanualshub.com/

## Ⅰ. Safety Rules for Operation and Daily Maintenance of Forklift Truck

It is important that driver and manager for forklift trucks remember the principle of the "first safety" and ensure the safety operation as the description in 《OPERATION AND SERVICE MANUAL》.

### 1. Delivery of Forklift Truck

Pay attention to the following items when you deliver forklift trucks with container or truck.

(1) Apply the parking brake.

(2) Fix the mast and the balanceweight with steel wire.Wedge up all wheels.

(3) Sling points should be always at the positions specified in sling index plate when hoisting up the forklift truck.

### 2. Storage of Forklift Truck

(1) Drain off fuel completely. Don't drain off the cooling water containing antifreeze and rustproof agent.

(2) Apply antirust to the surface of the parts not painted. Apply lubrication oil to the lift chain.

(3) Lower the mast to the lowest position.

(4) Apply the parking brake.

(5) Wedged up the wheels.

### 3. Precautions Before Operation

(1) Don't check fuel leakage and lever or instruments at the place where there is open flame. Never fill the fuel tank with the engine running.

(2) Check the tire inflation pressure.

(3) The forward–reverse lever should be in neutral.

(4) Never smoke while the fuel system is under working or the battery is inspected.

(5) Check all the levers and pedals.

(6) Complete the provisions before starting.

(7) Release the parking lever.

(8) Make trying opteration of the mast for lifting, lowing and Fwd/Bwd tilting and the truck for steering and braking.

### 4. Operation of Forklift Truck

(1) Only trained and authorized operator shall be permitted to operate the truck.

(2) Wear all the safety guards, such as shoes, helmet, clothing and gloves while operating the truck.

(3) Check all the control and warning devices before starting the truck. If any damages or defects are found, operate it after repairing.

(4) Overload or overload operation is strictly prohibited. The fork should insert

https://truckmanualshub.com/

completely under the cargo and make the cargo placed on it evenly. Do not raise an object with one fork end.

(5) The starting, turning, driving, braking and stopping operation of the truck should be done smoothly. When steering on the humid or low friction road, the truck should be decelerated.

(6) Travel with loads as low as possible and tilted backward.

(7) Be careful when traveling on a slope. When climbing grades with a slope more than 10%, the truck should forward travel, and when descending so grades, backward travel. Never turning on a slope. Avoid loading and unloading operation when decending.

(8) Pay attention to pedestrian, obstacle and bumpy road when driving. Pay attention to the clearance over forklift truck.

(9) Never allow any persons to stand on the forks or the truck to carry persons.

(10) Never permit anyone to stand or walk under upraised forks.

(11) Don’t operate truck and attachment of it at any position out of the drive seat.

(12) If the goods are lifted more than 3m, be careful that the goods on it should not fall down or the protection measures must be taken if necessary.

(13) Tilt the mast of the high lift forklift truck as backward as possible while the truck working. Use minimum forward tilt angle and Min. reverse tilt angle when loading and unloading.

(14) Drive slowly and carefully over a dockboard or bridge plate.

(15) Shut down the engine and don’t stay on the truck when filling fuel. Don’t ignite the engine while checking battery or fuel lever.

(16) The unloaded forklift truck with attachments should be operated as a loaded truck.

(17) Don’t handle unfixed stacked goods. Be careful with bulky goods to be handled.

(18) If leaving the truck, lower the forks to the ground and let the shift lever to neutral, shut down the engine or cut down electric supply. If parking on a slope is unavoidable, apply the parking brake and block the wheels.

(19) Don’t open the radiator cap when the engine is worm.

(20) Don’t adjust the control valve and relief valve at will to prevent the damage of hydraulic system and its components because of excessive pressure passing them.

(21) The test for the maximum radiation noise outside the body of the forklift shall be carried out according to the noise standard of EN 12053.

(22) Notice and be familiar with all kinds of decals’ function.

https://truckmanualshub.com/

## 5. Arrangement Sketch of Instruments and Controls

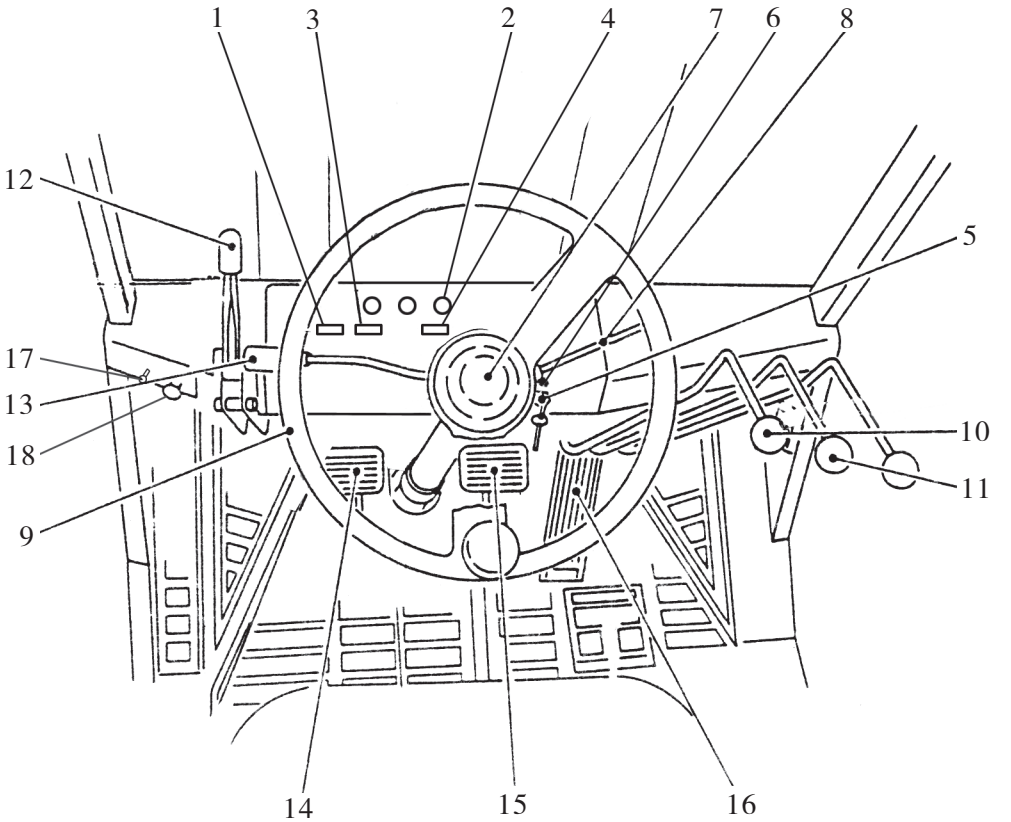


1. Fuel gauge
2. Monitor
3. Water temp.meter
4. Hour meter
5. Ignition switch
6. Lamp switch
7. Horn button
8. Turn signal switch
9. Steering handwheel
10. Lift lever
11. Tilt lever
12. Parking brake lever
13. Forward–reverse lever
14. Inching pedal
15. Brake pedal
16. Acceleration pedal
17. Cable of cover
18. Cable of extinguish

https://truckmanualshub.com/

## 6. Daily Maintenance of Forklift Truck

6.1 Caution for starting

(1) The amount of hydraulic oil:The oil level should be at the middle position between the upper and lower scale marks of oil level meter.

(2) Check if there is any leak or damage on the piping joints, pumps and valves.

(3) Check the travelling brakes:

a ) The free travel of brake pedal should be within the range of 40mm.

b ) The clearance between the front floor and the pedal should be bigger than 20mm.

(4) Often check the parking brake.The laden truck can park on the 20% grade ramp,when the parking lever is pulled to the bottom.

(5) Check the meters,lights,switches and electric wirings to see if they are properly in operation.

6.2 Fuel and lubrication used in forklift truck.

| Name | | Brand and temp. of using | | | | |
|---|---|---|---|---|---|---|
| Gasoline | | 93# or 97# | | | | |
| Diesel | | Brand(diesel) | 0# | −10# | −20# | −35# |
| | | Temp. of using | ⩾4 | ⩾−5 | ⩾−5~−14 | ⩾−14~−29 |
| Gear oil (gasoline,SF) Electric injection(SG) | Chang cheng | Sticky grade | 5W/30 | 10W/40 | 10W/30 | 15W/40 |
| | | Temp. of using | −30 ~ +30 | −25~+40 | −25~+30 | −20~+40 |
| Gear oil (diesel,CD) | Chang cheng | Sticky grade | 5W/30 | 10W/30 | 15W/40 | 20W/50 |
| | | Temp.of using | −30 ~ +30 | −25~+30 | −20~+40 | −15~+50 |
| Hydraulic oil | Chang cheng | Sticky grade | L−HM32 wearable hydraulic oil | | L−HV32 low temp. wearable oil | |
| | | Temp. of using | ⩾−5 | | ⩾−20(cold region) | |
| Torque converter oil | Hai pai | 6# Tor−con oil | | | | |
| Brake fluid | Chong qing yi ping | 4604 compound brake fluid GB12981 HZY4 | | | | |
| Lubricating oil | Hai pai | 3# lithium base grease(−20℃~+120℃) | | | | |
| Gear oil of heavy−laden vehicle | Hai pai | Sticky grade | 85W/90GL−5 | | 80W/90GL−5 | |
| | | Temp. of using | −15 ~ +49 | | −25~+49 | |
| Antifreeze fluid | Jin bai | Number | FD−1 | FD−2 | FD−2A | FD−3 |
| | | Temp. of using | ⩾−25 | ⩾−35 | ⩾−45 | ⩾−50 |

https://truckmanualshub.com/

6.3 Cautions on cooling system

(1) During operation, if the radiator of forklift "boils" or the temperature of cooling liquid is too high, do not open the cover of radiator immediately. If the cover needs to be removed to find out the cause for it, reduce the rotational speed of engine to the moderate, slowly rotate the cover and not remove it very soon so as to prevent operators from being scalded by the splashing liquid. When recovering the radiator, it must be screwed tightly, otherwise, the system may not be well enclosed and the system pressure stipulated cannot be formed.

(2) There is a compensation can on the left of engine.The letter" FULL" and "LOW" are marked on the upper and lower end of the can wall.Correct antifreeze agent level should be between marked lever. Antifreeze liquid of same type should be replenished after the liquid leaks or evaporates, which is not changed around the year, regardless of summer or winter. Generally, after being used for one year, it should be let out for filtration and purification and then use again.

(3) Based on different working conditions, regularly clean the outer surface of the radiator with detergent, compressed air or high-pressure water (no high than $4kg/cm^2$).

https://truckmanualshub.com/

## 6.4 Lubrication system table

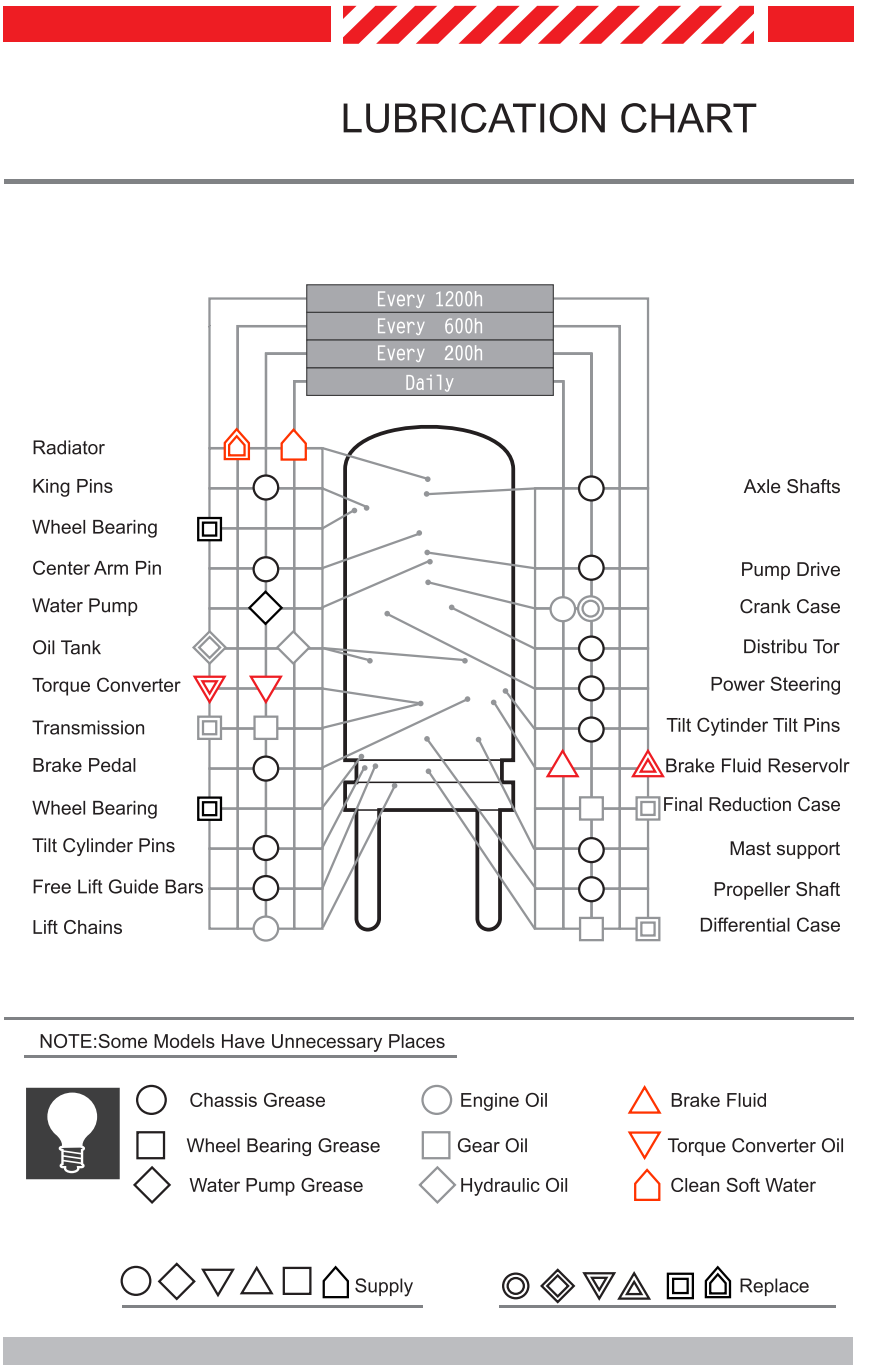

https://truckmanualshub.com/

## Ⅱ. Primary Technic Parameter of Forklift

Table 1

| Item | | Unit | CPCD50-WX | CPCD60-WX | CPCD70-WX | CPCD80-WX | CPCD100-WX |
|---|---|---|---|---|---|---|---|
| Rated capacity | | kg | 5000 | 6000 | 7000 | 8000 | 10000 |
| Load center | | mm | 600 | | | | |
| Max.lift height | | mm | 3000 | | | | |
| Free lift height | | mm | 205 | | | | |
| Tilt angle (Fwd/Bwd) | | deg | 6/12 | | | | |
| Wheelbase | | mm | 2250 | | | 2500 | 2800 |
| Tread | Front | mm | 1470 | | | 1600 | |
| | Rear | mm | 1700 | | | | |
| Weight | | kg | 7980 | 8640 | 9350 | 10960 | 12510 |
| Overall width | | mm | 1995 | | | 2165 | 2245 |
| Overall height (At mast) | | mm | 2500 | | 2625 | 2700 | 2850 |
| Overall length | | mm | 4660 | 4735 | 4800 | 5160 | 5480 |
| Min. under clearance | | mm | 200 | | | 245 | |
| Min. turning radius | | mm | 3250 | 3300 | 3370 | 3700 | 3900 |
| Max. traveling speed(loaded/unloaded) | | km/h | 29/32 | | | 26/30 | |
| Lifting speed | Loaded | mm/s | 400 | | 300 | 400 | 330 |
| | Unloaded | mm/s | 410 | | 410 | 430 | 350 |
| Max. drawbar pull (Loaded) | | kN | 42 | | 41 | 63.2 | 61 |
| Gradeability | Loaded | % | 25 | 22 | 20 | 21 | 15 |
| | Unloaded | % | 19 | | | 21 | 20 |
| Tyre | Front 4 | | 8.25-15-14PR | | | 9.00-20-14PR | |
| | Rear 2 | | 8.25-15-14PR | | | 9.00-20-14PR | |

https://truckmanualshub.com/

Table 2

| Item | | Unit | CPCD50-WX3 | CPCD60-WX3 | CPCD70-WX3 | CPCD50-C8 | CPCD60-C8 | CPCD70-C8 |
|---|---|---|---|---|---|---|---|---|
| Rated capacity | | kg | 5000 | 6000 | 7000 | 5000 | 6000 | 7000 |
| Load center | | mm | 600 | | | | | |
| Max.lift height | | mm | 3000 | | | | | |
| Free lift height | | mm | 205 | | | | | |
| Tilt angle (Fwd/Bwd) | | deg | 6/12 | | | | | |
| Wheelbase | | mm | 2250 | | | 2250 | | |
| Tread | Front | mm | 1470 | | | 1470 | | |
| | Rear | mm | 1700 | | | | | |
| Weight | | kg | 7980 | 8640 | 9350 | 7980 | 8640 | 9350 |
| Overall width | | mm | 1995 | | | 1995 | | |
| Overall height (At mast) | | mm | 2500 | | 2625 | 2500 | | 2625 |
| Overall length | | mm | 4660 | 4735 | 4800 | 4660 | 4735 | 4800 |
| Min. under clearance | | mm | 200 | | | 200 | | |
| Min. turning radius | | mm | 3250 | 3300 | 3370 | 3250 | 3300 | 3370 |
| Max. traveling speed(loaded/unloaded) | | km/h | 26/30 | | | 30/34 | | |
| Lifting speed | Loaded | mm/s | 510 | | 500 | 390 | | 325 |
| | Unloaded | mm/s | 530 | | 520 | 450 | | 380 |
| Max. drawbar pull (Loaded) | | kN | 63 | | 62 | 53 | | 52 |
| Gradeability | Loaded | % | 38 | 35 | 32 | 15 | | |
| | Unloaded | % | 19 | | | 20 | | |
| Tyre | Front 4 | | 8.25-15-14PR | | | 8.25-15-14PR | | |
| | Rear 2 | | 8.25-15-14PR | | | 8.25-15-14PR | | |

https://truckmanualshub.com/

Table 3

| Item | | Unit | CPCD50-W2 | CPCD60-W2 | CPCD70-W2 | CPCD80-W5 | CPCD100-W5 |
|---|---|---|---|---|---|---|---|
| Rated capacity | | kg | 5000 | 6000 | 7000 | 8000 | 10000 |
| Load center | | mm | 600 | | | | |
| Max.lift height | | mm | 3000 | | | | |
| Free lift height | | mm | 205 | | | | |
| Tilt angle (Fwd/Bwd) | | deg | 6/12 | | | | |
| Wheelbase | | mm | 2250 | | | 2500 | 2800 |
| Tread | Front | mm | 1470 | | | 1600 | |
| | Rear | mm | 1700 | | | | |
| Weight | | kg | 7980 | 8640 | 9350 | 10960 | 12510 |
| Overall width | | mm | 1995 | | | 2165 | 2245 |
| Overall height (At mast) | | mm | 2500 | | 2625 | 2700 | 2850 |
| Overall length | | mm | 4660 | 4735 | 4800 | 5160 | 5480 |
| Min. under clearance | | mm | 200 | | | 245 | |
| Min. turning radius | | mm | 3250 | 3300 | 3370 | 3700 | 3900 |
| Max. traveling speed(loaded/unloaded) | | km/h | 26/28 | | | 26/30 | |
| Lifting speed | Loaded | mm/s | 430 | | 350 | 380 | 310 |
| | Unloaded | mm/s | 500 | | 380 | 410 | 350 |
| Max. drawbar pull (Loaded) | | kN | 54 | | | 63.2 | 58 |
| Gradeability | Loaded | % | 15 | | | 21 | 15 |
| | Unloaded | % | 20 | | | 21 | 20 |
| Tyre | Front 4 | | 8.25-15-14PR | | | 9.00-20-14PR | |
| | Rear 2 | | 8.25-15-14PR | | | 9.00-20-14PR | |

https://truckmanualshub.com/

Table 4

| Item | | Unit | CPCD50–C6 | CPCD60–C6 | CPCD70–C6 | CPCD80–C3 | CPCD100–C3 |
|---|---|---|---|---|---|---|---|
| Rated capacity | | kg | 5000 | 6000 | 7000 | 8000 | 10000 |
| Load center | | mm | 600 | | | | |
| Max.lift height | | mm | 3000 | | | | |
| Free lift height | | mm | 205 | | | | |
| Tilt angle (Fwd/Bwd) | | deg | 6/12 | | | | |
| Wheelbase | | mm | 2250 | | | 2500 | 2800 |
| Tread | Front | mm | 1470 | | | 1600 | |
| | Rear | mm | 1700 | | | | |
| Weight | | kg | 7980 | 8640 | 9350 | 10960 | 12510 |
| Overall width | | mm | 1995 | | | 2165 | 2245 |
| Overall height (At mast) | | mm | 2500 | | 2625 | 2700 | 2850 |
| Overall length | | mm | 4660 | 4735 | 4800 | 5160 | 5480 |
| Min. under clearance | | mm | 200 | | | 245 | |
| Min. turning radius | | mm | 3250 | 3300 | 3370 | 3700 | 3900 |
| Max. traveling speed(loaded/unloaded) | | km/h | 26/28 | | | 26/30 | |
| Lifting speed | Loaded | mm/s | 390 | | 325 | 360 | 260 |
| | Unloaded | mm/s | 450 | | 380 | 400 | 320 |
| Max. drawbar pull (Loaded) | | kN | 53 | | 52 | 51 | 57 |
| Gradeability | Loaded | % | 15 | | | 21 | 15 |
| | Unloaded | % | 20 | | | 21 | 20 |
| Tyre | Front 4 | | 8.25–15–14PR | | | 9.00–20–14PR | |
| | Rear 2 | | 8.25–15–14PR | | | 9.00–20–14PR | |

https://truckmanualshub.com/

Table 5

| Item | | Unit | CPCD50-C10 | CPCD60-C10 | CPCD50-WF2 | CPCD60-WF2 |
|---|---|---|---|---|---|---|
| Rated capacity | | kg | 5000 | 6000 | 5000 | 6000 |
| Load center | | mm | 600 | | | |
| Max.lift height | | mm | 3000 | | | |
| Free lift height | | mm | 205 | | | |
| Tilt angle (Fwd/Bwd) | | deg | 6/12 | | | |
| Wheelbase | | mm | 2250 | | | |
| Tread | Front | mm | 1470 | | | |
| | Rear | mm | 1700 | | | |
| Weight | | kg | 8640 | | 7980 | 8640 |
| Overall width | | mm | 1995 | | | |
| Overall height (At mast) | | mm | 2500 | | | |
| Overall length | | mm | 4802 | | 4660 | 4735 |
| Min. under clearance | | mm | 200 | | | |
| Min. turning radius | | mm | 3250 | | 3250 | 3300 |
| Max. traveling speed(loaded/unloaded) | | km/h | 26/28 | | 26/30 | |
| Lifting speed | Loaded | mm/s | 430 | | 330 | |
| | Unloaded | mm/s | 500 | | 480 | |
| Max. drawbar pull (Loaded) | | kN | 54 | | 41.5 | |
| Gradeability | Loaded | % | 15 | | 26 | 22 |
| | Unloaded | % | 20 | | 23 | 20 |
| Tyre | Front 4 | | 8.25-20-14PR | | 8.25-15-14PR | |
| | Rear 2 | | 8.25-15-14PR | | | |

https://truckmanualshub.com/

Table 6

| Item | | Unit | CPCD50–CU3 | CPCD60–CU3 | CPCD70–CU3 | CPCD80–CU1 | CPCD100–CU1 |
|---|---|---|---|---|---|---|---|
| Rated capacity | | kg | 5000 | 6000 | 7000 | 8000 | 10000 |
| Load center | | mm | 600 | | | | |
| Max.lift height | | mm | 3000 | | | | |
| Free lift height | | mm | 205 | | | | |
| Tilt angle (Fwd/Bwd) | | deg | 6/12 | | | | |
| Wheelbase | | mm | 2250 | | | 2500 | 2800 |
| Tread | Front | mm | 1470 | | | 1600 | |
| | Rear | mm | 1700 | | | | |
| Weight | | kg | 7980 | 8640 | 9350 | 10960 | 12510 |
| Overall width | | mm | 1995 | | | 2245 | |
| Overall height (At mast) | | mm | 2500 | | | 2700 | 2850 |
| Overall length | | mm | 4660 | 4735 | 4800 | 5160 | 5480 |
| Min. under clearance | | mm | 200 | | | 245 | |
| Min. turning radius | | mm | 3250 | 3300 | 3370 | 3700 | 3900 |
| Max. traveling speed(loaded/unloaded) | | km/h | 26/28 | | | 26/30 | |
| Lifting speed | Loaded | mm/s | 490 | | 480 | 440 | 350 |
| | Unloaded | mm/s | 510 | | 500 | 470 | 370 |
| Max. drawbar pull (Loaded) | | kN | 57 | | | 60 | 58 |
| Gradeability | Loaded | % | 19 | | | 27 | 21 |
| | Unloaded | % | 21 | | | 19 | 20 |
| Tyre | Front 4 | | 8.25–15–14PR | | | 9.00–20–14PR | |
| | Rear 2 | | 8.25–15–14PR | | | 9.00–20–14PR | |

https://truckmanualshub.com/

Table 7

| Item | | Unit | CPCD50-P1 | CPCD60-P1 | CPCD70-P1 | CPCD80-P | CPCD100-P |
|---|---|---|---|---|---|---|---|
| Rated capacity | | kg | 5000 | 6000 | 7000 | 8000 | 10000 |
| Load center | | mm | 600 | | | | |
| Max.lift height | | mm | 3000 | | | | |
| Free lift height | | mm | 205 | | | | |
| Tilt angle (Fwd/Bwd) | | deg | 6/12 | | | | |
| Wheelbase | | mm | 2250 | | | 2500 | 2800 |
| Tread | Front | mm | 1470 | | | 1600 | |
| | Rear | mm | 1700 | | | | |
| Weight | | kg | 7980 | 8640 | 9350 | 10960 | 12510 |
| Overall width | | mm | 1995 | | | 2245 | |
| Overall height (At mast) | | mm | 2500 | | | 2700 | 2850 |
| Overall length | | mm | 4660 | 4735 | 4800 | 5160 | 5480 |
| Min. under clearance | | mm | 200 | | | 245 | |
| Min. turning radius | | mm | 3250 | 3300 | 3370 | 3700 | 3900 |
| Max. traveling speed(loaded/unloaded) | | km/h | 24/29 | | | 26/30 | |
| Lifting speed | Loaded | mm/s | 530 | | 510 | 400 | 360 |
| | Unloaded | mm/s | 550 | | 540 | 440 | 380 |
| Max. drawbar pull (Loaded) | | kN | 60 | | | 60 | 58 |
| Gradeability | Loaded | % | 34 | 31 | 29 | 25 | 21 |
| | Unloaded | % | 19 | | | 20 | 20 |
| Tyre | Front 4 | | 8.25-15-14PR | | | 9.00-20-14PR | |
| | Rear 2 | | 8.25-15-14PR | | | 9.00-20-14PR | |

https://truckmanualshub.com/

Table 8

| Item | | Unit | CPCD50-M1 | CPCD60-M1 | CPCD70-M1 |
|---|---|---|---|---|---|
| Rated capacity | | kg | 5000 | 6000 | 7000 |
| Load center | | mm | 600 | | |
| Max.lift height | | mm | 3000 | | |
| Free lift height | | mm | 205 | | |
| Tilt angle (Fwd/Bwd) | | deg | 6/12 | | |
| Wheelbase | | mm | 2250 | | |
| Tread | Front | mm | 1470 | | |
| | Rear | mm | 1700 | | |
| Weight | | kg | 7980 | 8640 | 9350 |
| Overall width | | mm | 1995 | | |
| Overall height (At mast) | | mm | 2500 | | |
| Overall length | | mm | 4660 | 4735 | 4800 |
| Min. under clearance | | mm | 200 | | |
| Min. turning radius | | mm | 3250 | 3300 | 3370 |
| Max. traveling speed(loaded/unloaded) | | km/h | 26/30 | | |
| Lifting speed | Loaded | mm/s | 450 | 440 | 410 |
| | Unloaded | mm/s | 460 | 460 | 450 |
| Max. drawbar pull (Loaded) | | kN | 42 | 40 | 40 |
| Gradeability | Loaded | % | 23 | 20 | 20 |
| | Unloaded | % | 19 | | |
| Tyre | Front 4 | | 8.25-15-14PR | | |
| | Rear 2 | | 8.25-15-14PR | | |

https://truckmanualshub.com/

Table 9

| Item | | Unit | CP(Q)YD50-TY1 | CP(Q)YD60-TY1 | CP(Q)YD70-TY1 |
|---|---|---|---|---|---|
| Capacity | | kg | 5000 | 6000 | 7000 |
| Load center | | mm | 600 | 600 | 600 |
| Max. lift height | | mm | 3000 | 3000 | 3000 |
| Free lift (without backrest) | | mm | 205 | 205 | 205 |
| Mast tilt angle (Fwd/Bwd) | | ° | 6/12 | 6/12 | 6/12 |
| Max. lifting speed (Loaded/unloaded) | | mm/s | 350/355 | 350/355 | 340/350 |
| Max. traveling speed (Loaded/unloaded) | | km/h | 28/31 | 28/31 | 23/31 |
| Gradeability (Load) | | % | 24 | 21 | 18 |
| Max. drawbar pull (Loaded) | | kN | 44 | 44 | 44 |
| Wheelbase | | mm | 2250 | 2250 | 2800 |
| Tread (F/R) | | mm | 1470/1700 | 1470/1700 | 1470/1700 |
| Overhang (F/R) | | mm | 590/600 | 590/675 | 590/740 |
| Length (with fork) | | mm | 4660 | 4735 | 4800 |
| Width | | mm | 1995 | 1995 | 1995 |
| Height (at mast) | | mm | 2450 | 2450 | 2450 |
| Height from seat to overhead guard | | mm | 1120 | 1120 | 1120 |
| Min. Turning radius | | mm | 3250 | 3300 | 3370 |
| Min. Underclearance (at drive axle) | | mm | 200 | 200 | 200 |
| Weight | | | 7980 | 8640 | 9350 |
| Tire | Front | | 8.25-15-14PR | 8.25-15-14PR | 8.25-15-14PR |
| | Rear | | 8.25-15-14PR | 8.25-15-14PR | 8.25-15-14PR |
| Engine type | | | GM4.3 | | |
| Rated output/Speed | | kW/rpm | 70/2300 | | |
| Rated torque/Speed | | Nm/rpm | 287/1700 | | |

https://truckmanualshub.com/

| Specifications | Unit | CPCD50 ~ 70–C8 |
|---|---|---|
| Model | | Chaoyang 6102BG–6A |
| Type | | In–line 6–cylinder, 4–cycle,water–cooled, direct injection |
| Cyl.number–bore × stroke | mm | 6–102 × 118 |
| Total displacement | l | 5.785 |
| Compression ratio | | 17.5:1 |
| Rated speed | r/min | 2500 |
| Rated output | kW | 81 |
| Max.torque/speed | Nm | 353/1650rpm |
| Highest speed without load | rpm | 2800 |
| Lowest speed without load | rpm | 750 |
| Min. fuel consumption | g/kWh | 220 |

| Specifications | Unit | CPCD50 ~ 70–WX | CPCD50 ~ 70–WX3<br>CPCD80,100–WX |
|---|---|---|---|
| Model | | Wuxi CA4110 | Wuxi CA6110/125–HL10 |
| Type | | In–line 4–cylinder, 4–cycle, water–cooed, direct injection | In–line 6–cylinder, 4–cycle, water–cooled, direct injection |
| Cyl.number–bore × stroke | mm | 4–110 × 125 | 6–110 × 125 |
| Total displacement | l | 4.752 | 7.127 |
| Compression ratio | | 17:1 | 17:1 |
| Rated speed | r/min | 2300 | 2000 |
| Rated output | kW | 64 | 83 |
| Max.torque/speed | Nm | 305/1400 ~ 1600rpm | 450/1400 ~ 1500rpm |
| Highest speed without load | rpm | 2530 | 2200 |
| Lowest speed without load | rpm | 700 | 750 |
| Min. fuel consumption | g/kWh | 230 | 220 |

https://truckmanualshub.com/

| Specifications | Unit | CPCD50 ~ 70–W2 | CPCD80,100–W5 |
|---|---|---|---|
| Model | | ISUZU A–6BG1QC–02 | |
| Type | | In–line 6–cylinder, 4–cycle,water–cooled, direct injection | |
| Cyl.number–bore × stroke | mm | 6–105 × 125 | |
| Total displacement | l | 6.494 | |
| Compression ratio | | 17.5:1 | |
| Rated speed | r/min | 2000 | |
| Rated output | kW | 82.3 | |
| Max.torque/speed | Nm | 416/1400 ~ 1600rpm | |
| Highest speed without load | rpm | 2270 | |
| Lowest speed without load | rpm | 720 | |
| Min. fuel consumption | g/kWh | 222 | |

| Specifications | Unit | CPCD50 ~ 70–C6 | CPCD80,100–C3 |
|---|---|---|---|
| Model | | Chaoyang 6102BG | |
| Type | | In–line 6–cylinder, 4–cycle,water–cooled, direct injection | |
| Cyl.number–bore × stroke | mm | 6–102 × 118 | |
| Total displacement | l | 5.785 | |
| Compression ratio | | 17.5:1 | |
| Rated speed | r/min | 2500 | |
| Rated output | kW | 81 | |
| Max.torque/speed | Nm | 353/1650rpm | |
| Highest speed without load | rpm | 2800 | |
| Lowest speed without load | rpm | 750 | |
| Min. fuel consumption | g/kWh | 220 | |

| Specifications | Unit | CPCD50,60–WF2 | CPCD50,60–C10 |
|---|---|---|---|
| Model | | Weifang R4105G32 | Chaoyang 6102GB–A6B |
| Type | | | In–line 6–cylinder, 4–cycle, water–cooled, direct injection |
| Cyl.number–bore × stroke | mm | 4–105 × 125 | 6–102 × 118 |
| Total displacement | l | | 6.494 |
| Compression ratio | | | 17:1 |
| Rated speed | r/min | 2400 | 2200 |
| Rated output | kW | 59 | 73 |
| Max.torque/speed | Nm | 270/1400 ~ 1600rpm | 353/1650rpm |
| Highest speed without load | rpm | | 2464 |
| Lowest speed without load | rpm | | 750 |
| Min. fuel consumption | g/kWh | 243 | 220 |

| Specifications | Unit | CPCD50 ~ 70–CU3 | CPCD80,100–CU1 |
|---|---|---|---|
| Model | | Cummins QSB4.5–C110 | |
| Type | | In–line 4–cylinder, 4–cycle,water–cooled, direct injection | |
| Cyl.number–bore × stroke | mm | 4–110 × 120 | |
| Total displacement | l | 4.5 | |
| Compression ratio | | 17.2:1 | |
| Rated speed | r/min | 2200 | |
| Rated output | kW | 82 | |
| Max.torque/speed | Nm | 488/1500rpm | |
| Highest speed without load | rpm | 2350 | |
| Lowest speed without load | rpm | 750 | |
| Min. fuel consumption | g/kWh | 235 | |

| Specifications | Unit | CPCD50 ~ 70–P1 | CPCD80,100–P |
|---|---|---|---|
| Model | | Perkins 1104D–44TA | |
| Type | | In line 4–cylinder, 4–cycle, water cooled | |
| Cyl.number–bore × stroke | mm | 4–105 × 127 | |
| Total displacement | l | 4.4 | |
| Compression ratio | | 18.2:1 | |
| Rated speed | r/min | 2200 | |
| Rated output | kW | 83 | |
| Max.torque/speed | Nm | 418/1400rpm | |
| Highest speed without load | rpm | 2400 | |
| Lowest speed without load | rpm | 900 | |
| Min. fuel consumption | g/kWh | 196 | |

| Specifications | Unit | CPCD50 ~ 70–M1 |
|---|---|---|
| Model | | Mitsubishi S6S–T |
| Type | | In line 6–cylinder, 4–cycle, water cooled |
| Cyl.number–bore × stroke | mm | 6–94 × 120 |
| Total displacement | l | 4.996 |
| Compression ratio | | 22:1 |
| Rated speed | r/min | 2300 |
| Rated output | kW | 63.9 |
| Max.torque/speed | Nm | 285/1700rpm |
| Highest speed without load | rpm | 2570 |
| Lowest speed without load | rpm | 800 |
| Min. fuel consumption | g/kWh | 250 |

The supplementary of Cummins QSB4.5:

1.Notes on Cummins QSB4.5

(1) It is not recommended to weld on the parts of the whole machine. If it is necessary, pull out the connectors of the ECM and the cables of both positive pole and negative pole from the battery. When connecting the grounded cable of the welding machine, keep the cable more than 0.16m away from the welding parts. It is strictly forbidden to connect the grounded cable to the ECM.

(2) The ECM will make a systematic examination on the whole engine and record

https://truckmanualshub.com/

certain data after the turning off of the engine. So turn off the supplying power which is power switch after 30 seconds of the turning off of the key switch. If the turning off of the power is too early, the ECM will display faults. The power of the engine will be reduced as well.

(3) Fill up the oil filter with oil first before the installation of remote oil filter. Connect the pipeline first, and then install the whole part.

(4) It is not allowed to flush the engine with water in case of ECM short circuit causing by the entering of water into the electrical system.

(5) Please connect with the local Cummins dealers in time when a fault of the engine is displayed. It is strictly prohibit from detaching the high pressure pipeline because the maximize pressure in the high pressure chamber is up to 160MPa.

(6) Before loading, keep the machine in an idle mood 3–5 minutes after the starting of the engine. Before turning off the key switch, keep the machine in an idle mood 3–5 minutes after full loading.

(7) It is recommended not to start the engine before the finding out of the fault code. It is strictly prohibit from running whit high speed or load after starting.

(8) In order to protect the turbocharger, it is not allowed to start the engine without air cleaner.

(9) 6–wire electronic throttle replaces the mechanical lever throttle, so there is no connection between the throttle and engine operation. The reflection of throttle operation thus becomes more sensitive.

2.Engine automatic diagnostic system

Cummins QSB4.5 has a function of automatic diagnosis and alarming. If there is something wrong with the whole machine, both the yellow warning light and the red warning light on the instrument will flash indicating that it is need to check the whole machine. And also fault code can be read through the red warning light flashing frequency.

Fault indications with two different colors are used according to the severity of failure.

[ ] yellow warning light: the yellow warning light is on indicating that it needs to troubleshoot as soon as possible.

[ ] red stop signal: the red light is on indicating that it needs to stop the engine and troubleshoot as soon as possible. Do not start the engine before troubleshooting.

Check whether the current fault code exists or not .turn the key switch to "OFF" position, and the diagnostic switch to the “ON" position, then the key switch to the "ON" position.

If there is no record of the current fault code, the yellow warning light and red stop signal will be on at the same time, and will be always on.

https://truckmanualshub.com/

If there is current fault code record, the yellow warning light and red stop lights will turn on instantly, and then start flashing recorded fault code.

Fault codes will flash in the following order:

The yellow warning light lights up. After 1 to 2 seconds' pause, the red signal begins to flash the fault code with 1 to 2 seconds between each number.

The yellow light lights up again after the red signal finishes its flashing. And then red signal repeats flashing the fault code.

When the whole machine is more than one fault, use the fault diagnosis switch for page turning.

Flip the "idling adjustment switch" to the (+) position to check the next fault code; Flip the "idling adjustment switch" to the (–) position to check the fault code before. If there is only one fault code, the fault signal will display the one constantly in either (+) position or (–) position.

Disconnect the diagnosis switch when the diagnostic system is not in use. If the diagnosis switch is not turned off, ECM will not record some of the fault code.

If the diagnosis switch is not turned off after the starting of the engine, when adjusting "idling adjustment switch", the idling of the engine will be adjusted. The idling will be increased or decreased by 25r/min in each page up or page down .

https://truckmanualshub.com/

## Ⅲ. Primary Assembly of Forklift Truck

Primary Assembly of Forklift Truck

| No. | Name | Contents |
|---|---|---|
| 01 | Engine System | Includes engine mounting,fuel system,exhaust system, cooling system(torque converter pipelines)etc. |
| 02 | Transmission System | Includes transmission, tor–con, transmission shaft control linkages etc. |
| 03 | Drive Axle | Includes axle house, half shafts, differential, hub reduction, brake, front wheel etc. |
| 04 | Steering System | Includes powered steering unit, redirector etc. |
| 05 | Steering Axle | Includes axle box, steering cylinder,rear wheel etc. |
| 06 | Hoist System | Includes outer & inner mast, lift bracket, backrest, fork, tilt cylinder, lift cylinder, end roller, side roller, sheave, chain etc. |
| 07 | Frame System | Includes frame, cabinet,tank in frame, hood, floor, counterweight, seat,cover of radiator etc. |
| 08 | Operation system | Includes operation series of brake & inching control, parking brake and accelerator etc. |
| 09 | Hydraulic system | Includes pump,valve,high & low pressure oil pipe, connecter,etc. |
| 10 | Electric system | Includes lights,battery,instruments harness,meter etc. |
| 11 | Overhead guard | Overhead guard(cab is option) |

https://truckmanualshub.com/

## Ⅳ. The Structure, Principle, Adjustment and Maintenance of Forklift

### 1. Dynamic System

(1) Brief introduction

The dynamic system includes the engine, air inlet system, cooling system and exhaust system, etc. The engine is linked to transmission device. The holder of engine is connected with the frame of the forklift through a rubber cushion to reduce vibration. The engine is connected to the tor-con,the transmission,transmission shaft and drive axle,see following figure:

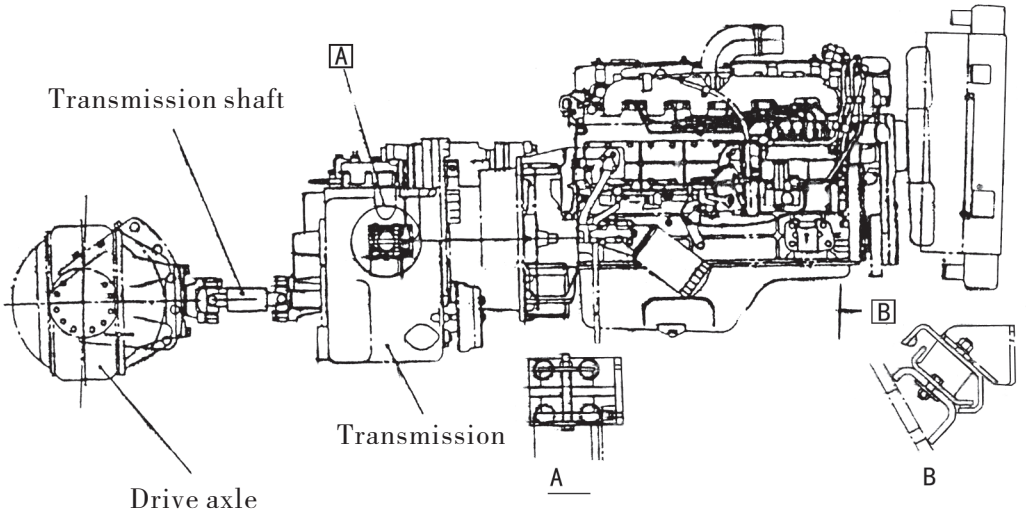


Fig.1.1 Engine mounted

(2) The engine and its accessories

The power of 5-7t forklift truck is provided by diesel engine ISUZU(6BG1), CUMMINS(B3.3,QSB4.5), PERKINS(1104D), MITSUBISHI(S6S-T). The homeland diesel engine includes Chaoyang(6102BG),Weifang(R4105G32), Wuxi(CA4110).

The power of 8-10t forklift truck is provided by diesel engine ISUZU (6BG1), CUMMINS(4BTAA3.9, QSB4.5), PERKINS(1104D). The homeland diesel engine includes Chaoyang(6102BG), Wuxi(CA6110).

Refer to relevant manual for the details of operation and maintenances for the engine. The structure figure of ISUZU(6BG1) engine as following:

https://truckmanualshub.com/

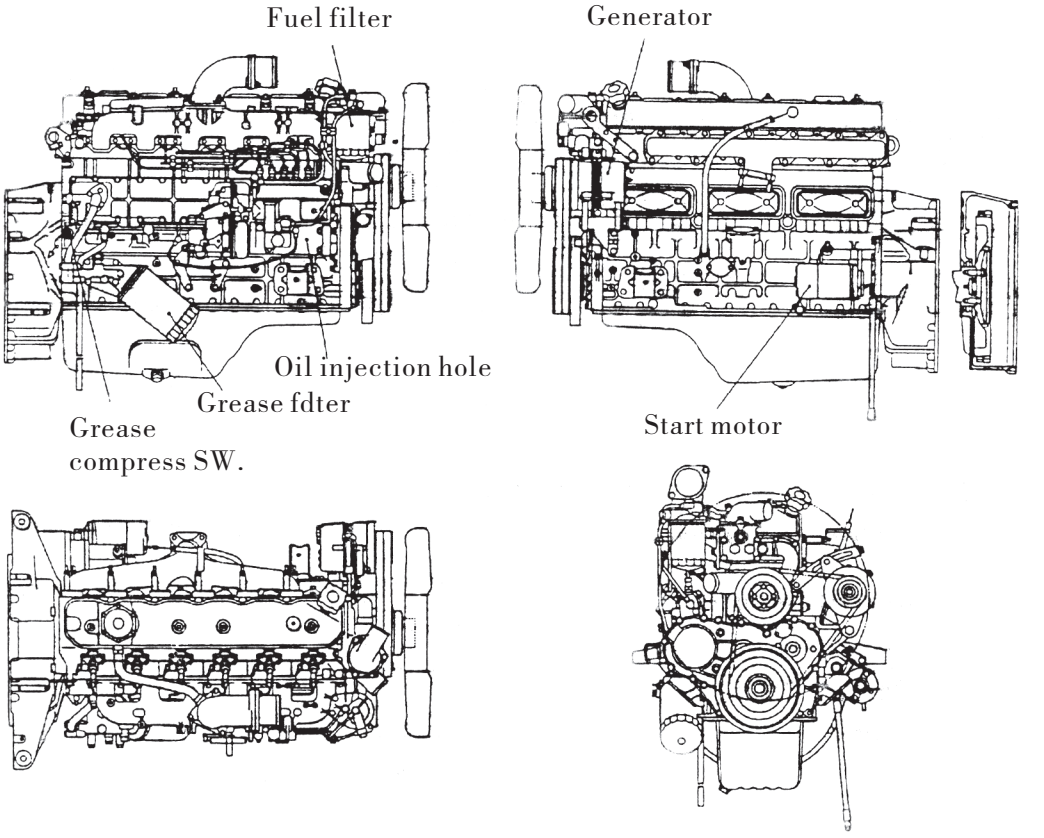


Fig.1.2 A-6BG1QC diesel engine

| | |
|---|---|
| Name | A6BG1QC |
| Type | 4-cycle,water-cooled, in line,overhead valve system |
| Cyl.number-bore × stroke | 6-105mm × 125mm |
| Total displacement (L) | 6.494 |
| Compression ratio | 17 |
| Performance | |
| Rated speed (rpm) | 2000 |
| Rated output (kW) | 82.3 |
| Max.torque (Nm/rpm) | 416/1400-1600 |
| Full-load fuel rate (g/kWh) | 233 |
| Idle(rpm) | 700 |
| Weight(kg) | 450 |
| Measure(mm) | 1129.5 × 672.0 × 860.0 |
| Ignition order | 1-5-3-6-2-4 |
| Rotating direction | Clockwise |

https://truckmanualshub.com/

| | |
|---|---|
| Valve device | Overhead |
| Fuel device | |
| Injection pump | Boshing |
| Plunger piston radiu × stroke | 9.5mm × 8mm |
| Injection nozzle | Porous type |
| Oil pump | Plunger piston type |
| Fuel filter | Paper filter core |
| Governor | |
| Governing method | Centrifugal,all–speed control |
| Lubricating method | Forced lubrication |
| Lubricating device | |
| Pump type | Gear pump |
| Driving method | Camshaft drive |
| Hydraulic regulator | Piston spring type |
| Oil pressure indicator | Switch type |
| Filting method | Full–fluid,filter–paper |
| Radiator | Water cooling,inner store type |
| Cooling device | |
| Cooling method | Water cooling |
| Cooling fan | Outside radiu 550mm,7–blade,pusher type |
| Drive method | Belt driving |
| Pump type | Vortex type |
| Driving method | Belt driving |
| Water temp.regulator | Wax pellet type |
| Water temp.regulator,open temp. | 82℃ |
| Water temp.regulator,full–open temp. | 95℃ |
| Start motor | |
| Type | Engage magnet type |
| Voltage | 24V |
| Output | 4.5kW |
| Flameout device | Fuel cut–off |
| Preheating device | provided |
| Charging generator | |
| Type | AC,diode commutated generator |

https://truckmanualshub.com/

| | |
|---|---|
| Voltage | 24V |
| Output | 25V |
| Driving method | Belt driving |
| Automatic charging regulator | IC type(inside engine) |
| Referrence data | |
| Oil disc oil quantity | Max:12l,Min:10l |
| Cooling water | 12l |
| Valve clearance | |
| Suction valve | 0.4mm(cold) |
| Exhaust valve | 0.4mm(cold) |
| Valve opening and closing timing | |
| Suction valve opening | 19° before T.D.C. |
| Suction valve closing | 47° after B.D.C. |
| Exhaust valve opening | 57° before B.D.C. |
| Exhaust valve closing | 15° after T.D.C. |
| Injection timing | 14° before T.D.C. |
| Injection starting pressure | 185kg/cm$^2$ |
| Compression pressure | 31kg/cm$^2$(200rpm) |

**1.1 Fuel system**

The fuel system is composed of fuel tank, filter and fuel sensor.

1.1.1 Fuel tank

The fuel tank of welding structure is connected into one body with frame and placed at the left side of frame. There is an oil tank cap plate on which the fuel sensor is mounted. Refer to Fig. 1.3.

1.1.2 Fuel sensor

The function of fuel sensor is to convert the oil stored in the fuel tank into current through up and down movement of float, which will be finally displayed on the fuel meter on the instrument panel so that people can directly know the quantity of oil inside the fuel tank. Refer to Fig. 1.4.

https://truckmanualshub.com/

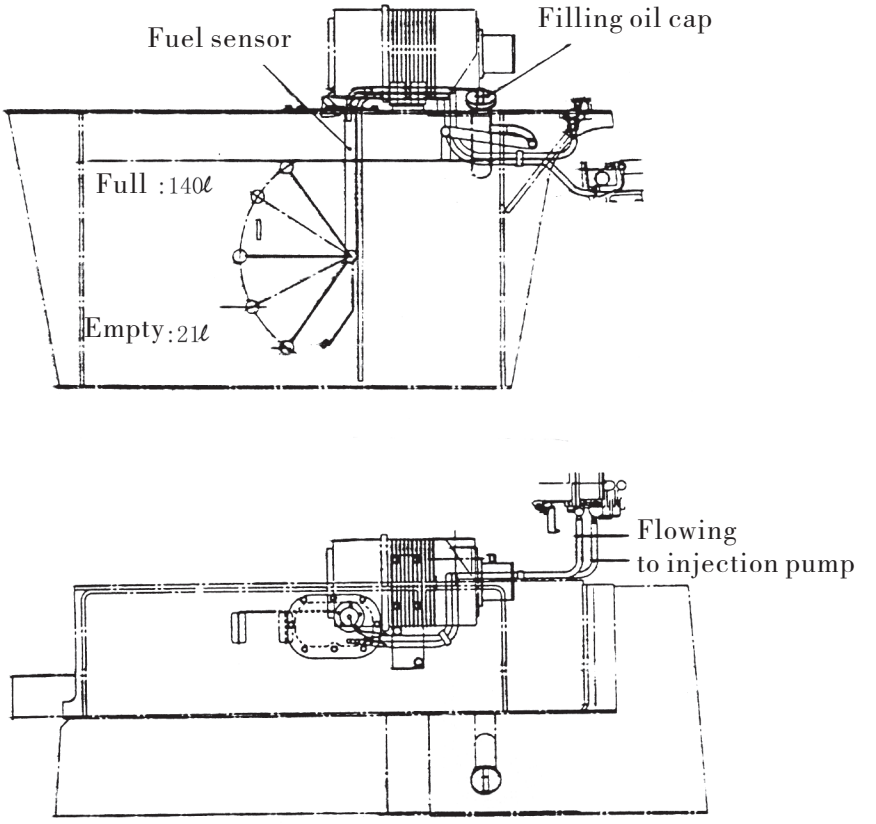


Fig.1.3 Fuel box

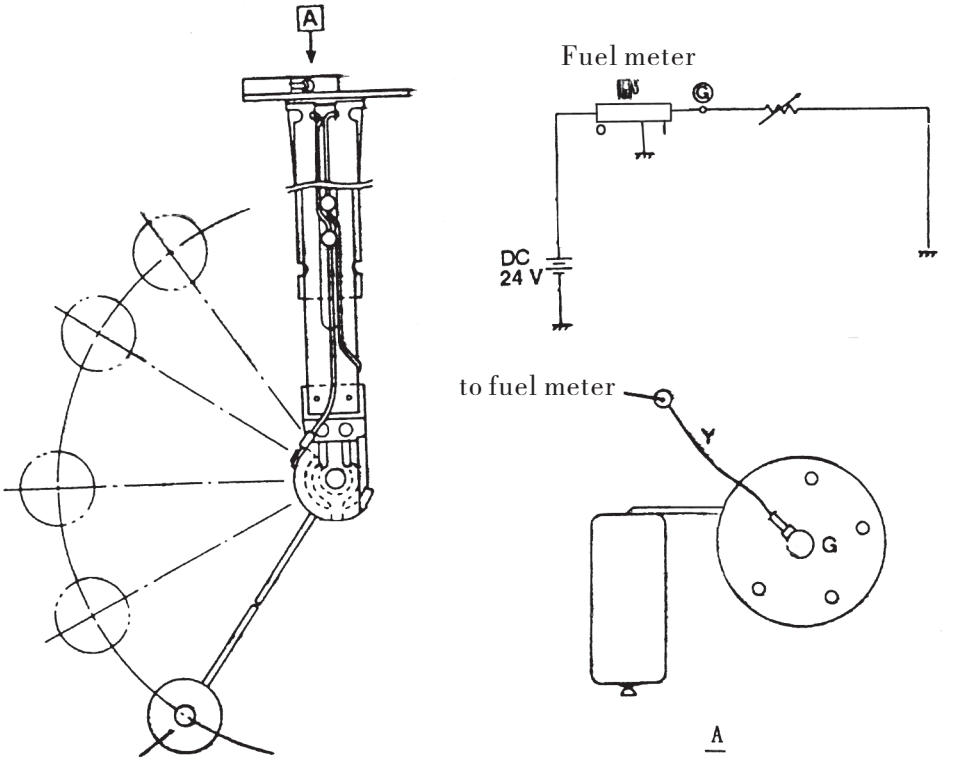


Fig.1.4 Fuel sensor unit

https://truckmanualshub.com/

1.1.3 Fuel filter

The fuel filter is mounted on the fuel-feeding manifold of engine and used to filter the fuel supplied to engine. The bypass valve is mounted inside filter , which can supply fuel to engine in case of obstruction of filter element.

**1.2 Cooling system**

The cooling system is made up of water pump, fan, water tank and auxiliary water tank. The water pump is mounted on the engine and crankshaft drives the work of water pump through V-shaped rubber tape.

**1.3 Check and adjustment**

In order to keep the engine in good working state, it is necessary to make regular check and adjustment and the main points are as follows:

1.3.1 For air filter, please See Fig. 1.5.

(1)Take out filter element

(2)Check the dust and damage state of the filter element. The lower pressure air is used to blow from inside to outside for purging and replace the filter element with a new one if it can' t be cleaned due to serious obstruction or damaged.

(3)Clean off the dust inside the cap.

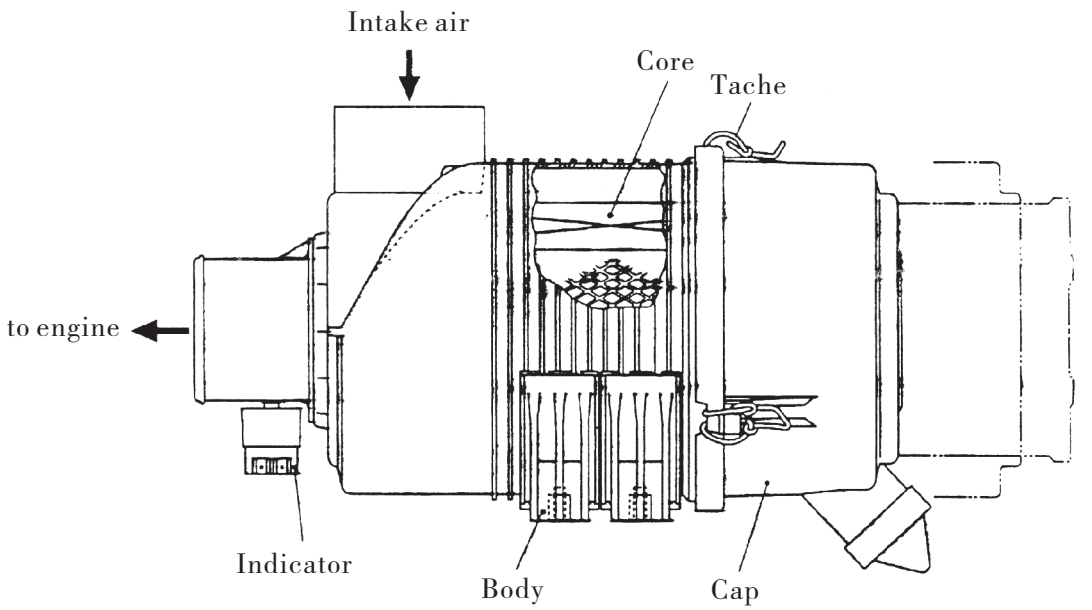


Fig.1.5 Air cleaner

https://truckmanualshub.com/

1.3.2 For fuel filter, See Fig. 1.6.

(1) Dismantle it with the spanner specially used for filter and change it if it is damaged and obstructed.

(2) Mount it after applying a few drops of fuel oil around the sealing ring of the new fuel filter and screw in 2/3 turns after the sealing ring contacts with the main body of the fuel filter.

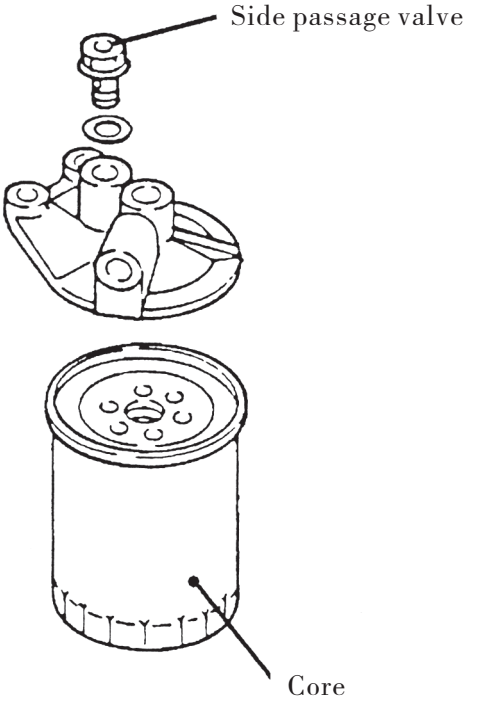


Fig. 1.6

1.3.3 For the machine oil filter, See Fig. 1.7.

(1)Dismantle it with a spanner specially used for fuel filter and change it.

(2)Mount it after applying a few drops of lubricating oil around the sealing ring of the new filter and screw in 2/3 turns after the sealing ring contacts with the machine body.

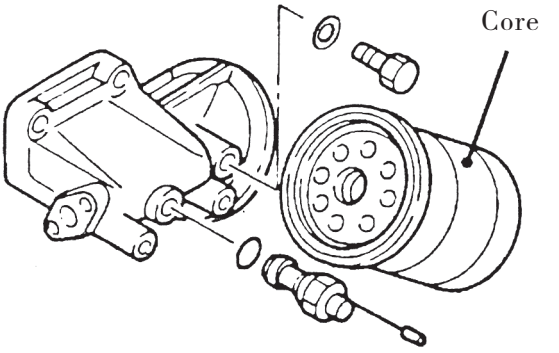


Fig. 1.7

https://truckmanualshub.com/

1.3.4 Cooling system

(1) Check the cooling liquid of auxiliary water tank

For auxiliary water tank, refer to 1.8. When the cooling liquid is lower than making line of "LOW", it indicates that the supplementation amount in the water tank is small and the cooling liquid needs to be added. The cooling liquid should be added to the 2/3 graduation of upper and lower marking lines during cooling down.

(2) Replacing cooling liquid

a) Open the water tank cover after cooling when the machine stops for over half an hour and loosen the water drainage valve at the lower part of water tank.

b) Loosen the water drainage valve of engine and thoroughly drain dry the cooling liquid.

c) The above two water drainage valves should be tightened after drainage.

d) Fill in the specified cooling liquid and check if the level of auxiliary water tank is at 2/3 of the upper and lower graduation lines after running at slow speed.

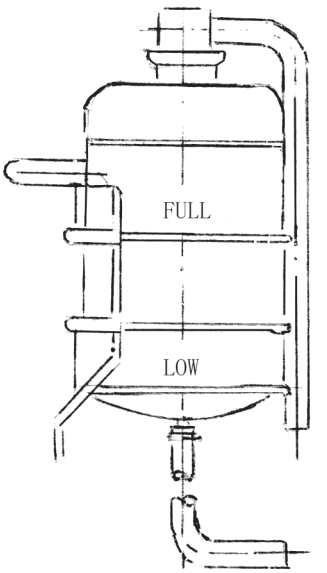


Fig. 1.8

(3) Adjust the belt of fan and tighten if it is loosened. Refer to Fig. 1.9.

**Steps:** Loosen the fixed bolt B and C of the generator, move it towards outside, press down the belt at place A with finger with 10kg force. Its flexibility is about 10 mm and then tighten the B and C bolts in proper order.

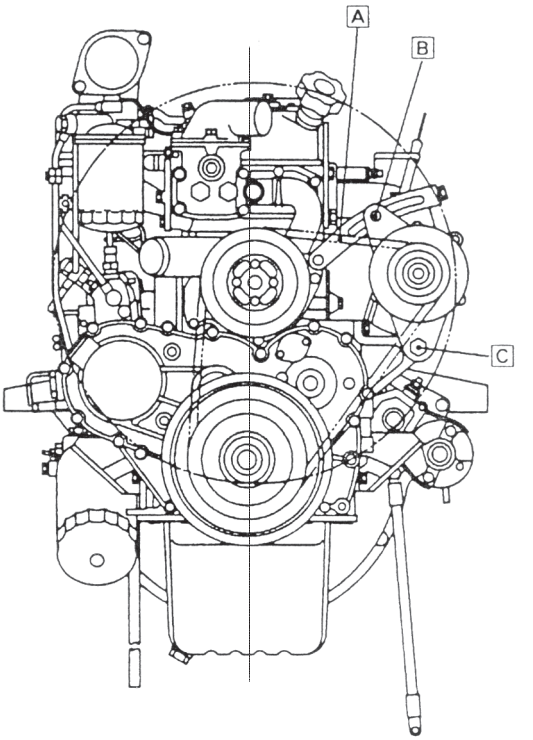


Fig. 1.9

https://truckmanualshub.com/

1.3.5 Tightening the cylinder head bolts of engine

(1) Tighten the cylinder head bolts one by one with 68 Nm moment according to the order shown in Fig. 1.10.

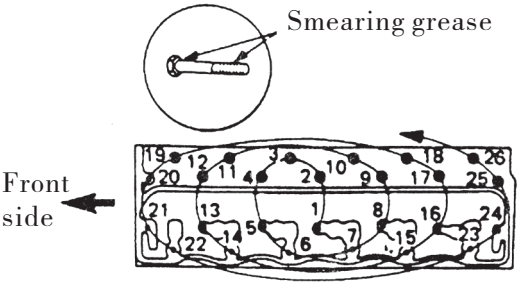


Fig. 1.10

(2)Increase the tightening moment to 93 Nm and tighten the bolts one by one.

(3) Then turn each bolt 90° and screw tightly.

1.3.6 Adjustment of clearance of air gate

(1) Turn the crankshaft clockwise and make the "TC" mark of belt wheel shock absorber coincide with the needle.

(2) Open the manhole cover and confirm the mark of the bottom plate and position of the needle. If the mark of the bottom plate coincides with the needle position, it indicates the upper dead point on the compression stroke of the first cylinder, adjust the clearances of the air gate with "△" and "※" as well. The clearance value of the air gate: 0.4mm (When it is under cooling state, the air suction and exhaustion are of the same value.)For details, please refer to Figs 1.11,1.12,1.13

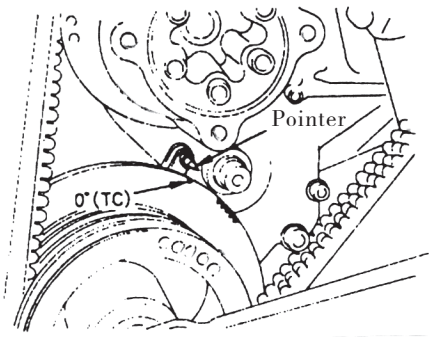


Fig. 1.11

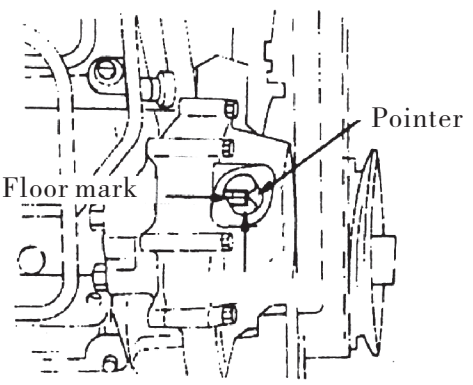


Fig. 1.12

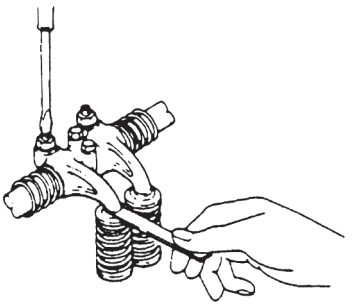

Fig. 1.13

https://truckmanualshub.com/

For the concrete adjustment table, refer to Table 1.2.

Table 1.2

| Air cylinder Sequence No. | 1 | | 2 | | 3 | | 4 | | 5 | | 6 | |
|---|---|---|---|---|---|---|---|---|---|---|---|---|
| Valve sequence No. I: Suction valve E: Exhaust valve | I | E | I | E | I | E | I | E | I | E | I | E |
| Dead point at compression stroke of the 1st cylinder | △ | △ | △ | | | △ | △ | | | △ | | |
| Dead point at compression stroke of the 6th cylinder | | | | ※ | ※ | | | ※ | ※ | | ※ | ※ |

1.3.7 Confirmation of the ignition time of oil injection

(1) First make sure if the "assembly marks" on the flange of oil injection pump are in conformity with each other, See Fig. 1.14.

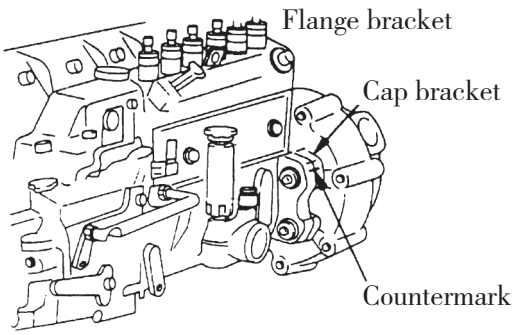


Fig. 1.14

(2)Place the first cylinder at the dead point position of compression stroke and turn the crankshaft about 30 ° from this position. See Fig. 1.15.

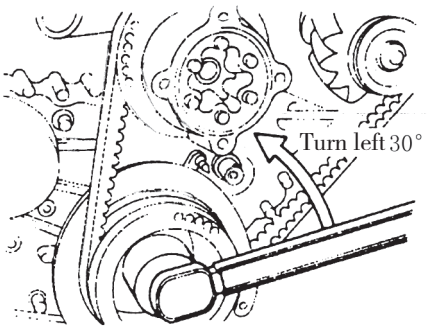


Fig. 1.15

https://truckmanualshub.com/

(3) Loosen the oil injection pipe of the first cylinder; dismantle the spring of dump valve bracket and the valve. Mount the dump valve bracket on the oil injection pump. See Fig.1.16.

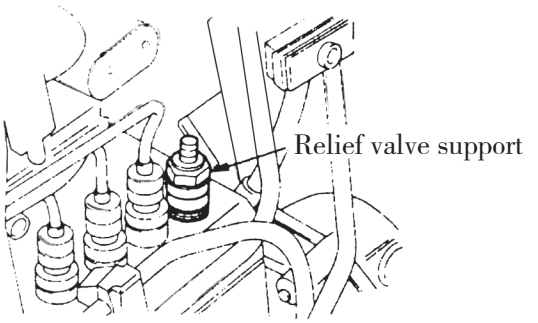


Fig. 1.16

(4)While the fuel is compressed and delivered by oil supply pump, turn slowly the crankshaft clockwise as shown in Fig.1.16 and stop turning it when the oil level of dump valve base raises to the position it stops. See Fig. 1.17 to confirm the marks of the needle.

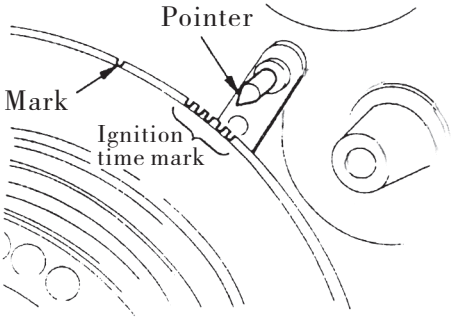


Fig. 1.17

1.3.8 Adjustment of ignition time of oil injection

(1) Dismantle the pipes mounted on the oil injection pump (fuel and lubrication oil)

(2) Loosen the mounting bolts of oil injection pump.

(3) While making sure the ignition time according to the main points of 1.6.7, adjust it in the direction far away from the engine in case of “ Ahead of time” and adjust in the direction close to the engine in case of “delay” .

(4) After adjustment, screw tight all the assembly bolts of oil injection pump and confirm again the ignition time.

(5) Assemble the oil discharge valve used for the first cylinder and mount each pipe on their original and respective positions.

1.3.9 Measurement of the compression pressure (See Fig.1.18)

(1) Dismantle completely the heat spark plug and oil injection pipes.

(2) Mount the manometer on the assembly positions of the heat spark plug of the first cylinder. ( The nominal valve is 500N/cm$^2$);

(3) Start the device with battery of sufficient electrical power and measure the pressure at this time.

(4)Measurement is made with the same method to the 6th cylinder, over twice for each, then calculate their respective average values: Compressed pressure: 304N/cm$^2$ (Limiting value 255N/cm$^2$) .

https://truckmanualshub.com/

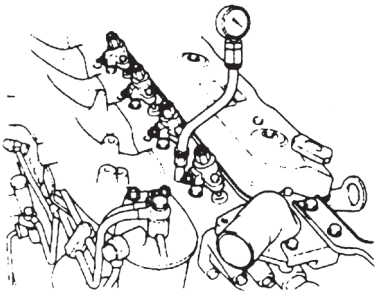

Fig. 1.18

1.3.10 Air exhaust of oil injection pump (See Fig.1.19)

(1) Loosen the exhaust plug of oil injection pump.

(2)Operate slowly the manual pump till no air bulbs come from the exhaust plug.

(3)Then tighten the air exhaust plug.

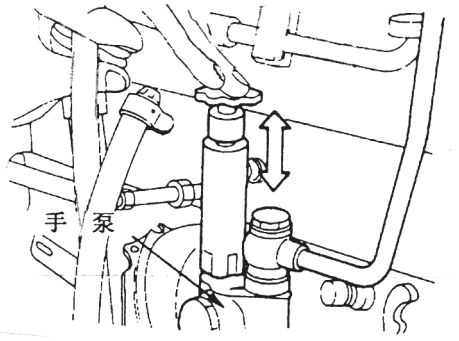


Fig. 1.19

https://truckmanualshub.com/

## 2. Electric System

### 2.1 General

The electric system for this forklift truck is of the single-pole type, in which the frame of the truck provides the return path for the electricity. The electric system seems like "the nerve centre" of the truck and it mainly consists of the following :

2.1.1 Charging devices

This devices contains generator, battery,charging indicator, etc. It supplies electric energy for all the electric devices.

Voltage: 24V

2.1.2 Start system

This system mainly consists of automatic pre-heating unit, key switch, start protection circuit, start motor, etc. The function of this system is starting the engine.

2.1.3 Stop system(use for ISUZU,CUMMINS, PERKINS and MITSUBISHI diesel engine)

Stop system(use for ISUZU engine) consists of key switch,flameout and automatic flameout device.Stop system(use for CUMMINS, PERKINS and MITSUBISHI diesel engine) consists of key switch and shut-off fuel valve.

2.1.4 Instruments

It mainly consists of hour meter, fuel meter, water temperature meter, charging indicator, oil pressure indicator, neutral indicator, warning lamp of air cleaner etc. They are all checking instruments of the forklift truck.

2.1.5 Lighting and signal instruments

They include all kinds of illuminating lamps, signal lamp, horn and buzzer, etc.

Headlight: 35W

Front lamp: 70W

Front combination lamp(turning/front): 21W/8W

Rear combination lamp:(turning/rear/reverse/braking):21W(red)/8W(red)/10W (white)/21W(red)

Warning lamp:(optional)21W

Rear lamp:(optional)70W

Licenese lamp:(optional)10W

https://truckmanualshub.com/

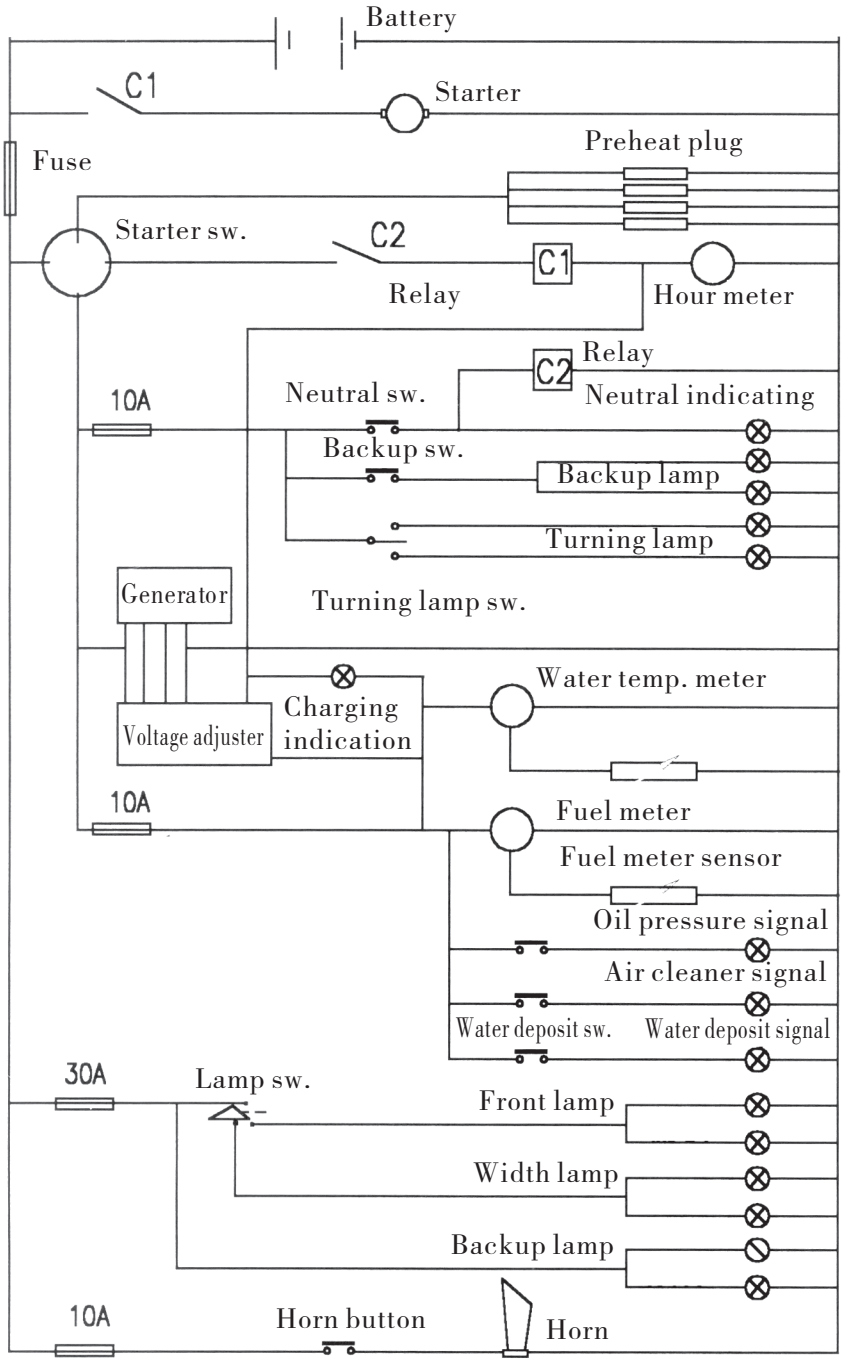


Starter sw. table

| | B | Ac | R | C |
|---|---|---|---|---|
| H | ○ | | ○ | |
| OFF | ○ | | | |
| 1 | ○ | ○ | | |
| 2 | ○ | ○ | ○ | ○ |

Lamp sw. table

| | ST | I | H |
|---|---|---|---|
| OFF | ○ | | |
| 1 | ○ | ○ | |
| 2 | ○ | ○ | ○ |

Fig.2.1 Electric principle

https://truckmanualshub.com/

2.1.6 Starting

There is a starting protection circuit in the shiftlever of the forklift truck. You have to shift the shiftlever in neutral before you start the engine. Otherwise, you can not start the engine.

Turn the key switch anti-clockwise to the "H" position (pre-heating position),the air of the engine is heated to benefit for starting. Turn the key switch clockwise to the first "on" position, the instrument circuit and the ignition circuit are ready for work. The key switch as follows:

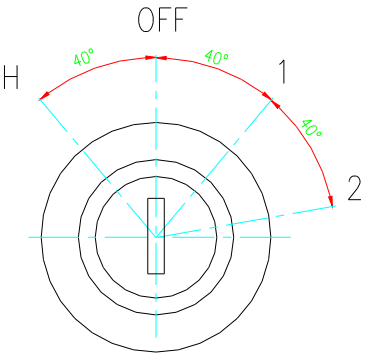


Fig.2.2 Key switch

Turn the key switch clockwise to the second "on" position(starting position), then start the engine.

Release the brake switch before starting, Otherwise, the forklift truck can not step because the drive unit is cut off.

After engine starting, push the shiftlever forward (that is in forward shifts), then pedal accelerator shift, the forklift truck runs faster and you can begin to work. When pull the shiftlever backward(that is in reverse shifts), the back lamp is on and the buzzer sounds.

**2.2 Lamp switch**

2.2.1 Turn the lamp switch clockwise to the first "on" position, the front and rear width lamps turn on; turn the lamp switch to the second "on: position, the headlight turns on and the front and rear lamps keep on.

2.2.2 Push the turning switch backward, the left turning lamps on the front combination lamp and the rear combination lamp flash, Pull the turning switch forward, the right turning lamps on the front combination lamp and the rear combination lamp flash.

2.2.3 Brake signal: When you step on the brake pedal, the brake lamps (red) in the rear combination lamp are on.

https://truckmanualshub.com/

2.2.4 Reverse signal: When you need to reverse the forklift truck ,pull the shiftlever backward and the transmission is in reverse shift. Then the reverse lamps (white) in the rear combination lamps are on and the buzzer sounds.

2.2.5 Charging signal: Before you start the engine, put the key switch to the first "on" position and the charging lamp is on. After engine starting, the charging lamp is automatically off. If the charging lamp becomes on while the engine is working , it means something is wrong with the charging circuit and you must stop working and check the charging circuit as soon as possible.

2.2.6 Oil pressure signal: Before you start the engine, put the key switch to the first "on" position and the oil pressure alarm lamp is on, After engine starting, the oil pressure alarm lamp is automatically off. If this lamp becomes on while the engine is working , it indicates low lubricating oil pressure and you must stop working and check the lubricating system as soon as possible.

2.2.7 Fuel meter: It indicates how much fuel is left in tank.

2.2.8 Water temperature meter: It indicates the temperature of the engine coolant.

2.2.9 Hour meter: It indicates how many hours the engine has worked .

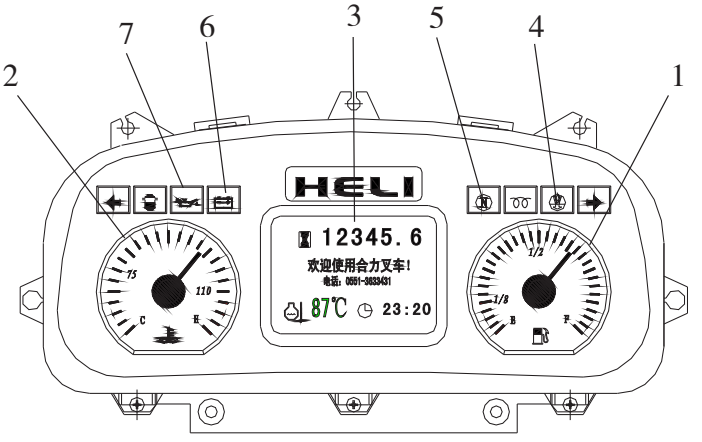


Fig.2.3–1 908 type combination meter

1.Fuel meter 2.Water temp. meter 3.Hour meter 4.Air cleaner indicator
5.Neutral gear indicator 6.Charging indicator 7.Oil pressure indicator

https://truckmanualshub.com/

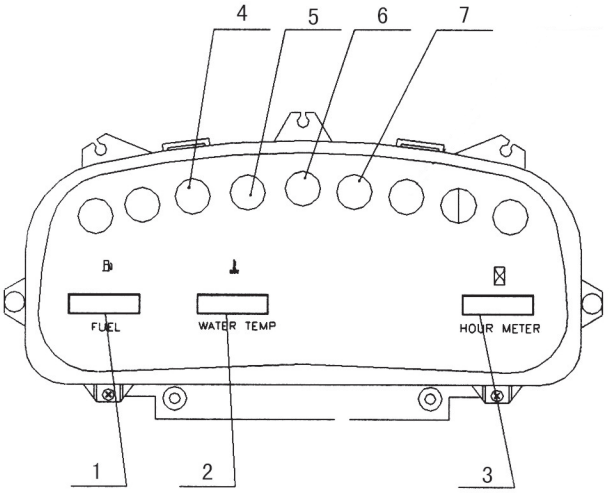


Fig.2.3–2 H2001 type combination meter

1.Fuel meter 2.Water temp. meter 3.Hour meter 4.Air cleaner indicator

5.Neutral gear indicator 6.Charging indicator 7.Oil pressure indicator

**2.3 Battery**

▲Notice

(1) The battery will produce combustible air which has a danger of explosion. Avoid short circuit and the produced spark. Firework should be kept away from the battery.

(2) The electrolyte is a sparse vitriol, it is dangerous if skin or eye touches it. If skin touches electrolyte,it must be flush with the water immediately, While eye touches it, flush with water and see a doctor immediately.

**2.4 Wire harness**

(1) The wire harness colour corresponding table:

| B | R | G | Y | L | W | Br | Lg | P | V |
|---|---|---|---|---|---|---|---|---|---|
| black | red | green | yellow | blue | white | brown | Light green | pink | violet |

The GY, GR, GW, WB, YR, RY, RB, LB etc. means two colors line, the former's quantity occupies 2/3, and the latter's quantity occupies 1/3.The number before the two colour means section area.

(2) Laden current of low pressure wire harness allowing

| Section area($mm^2$) | 0.5 | 0.8 | 1.0 | 1.5 | 2.5 | 3.0 | 4.0 | 5.0 | 6.0 |
|---|---|---|---|---|---|---|---|---|---|
| Laden current(A) | | | 11 | 14 | 20 | 22 | 25 | 25 | 35 |

https://truckmanualshub.com/

3) Forklift truck type and wire harness

**2.5 Operator presence system(OPS)**

Operator presence system(OPS) has two functions:

(1)Lock the transmission

When the OPS detects the driver leaving the seat for five seconds, it will disengage the transmission to cut off the power; when driver seats back and the seat switch is closed, the direction lever is shifted to neutral position, then the lock status can be released.

(2)Warning indication

When the OPS detects the driver leaving the seat for one second, the OPS alarm will make a warning sound as "BEE", in the mean time the warning light will show on the dash display; the warning light will be always on during the driver absence, it means the forklift is locked on the transmission. When the driver seats back the forklift will be still locked if the direction lever is not put into neutral position, in that case the OPS alarm will make a continuing warning sound as "BEE...."

Attachment：wiring harness show in Fig.2.4–Fig.2.34:

https://truckmanualshub.com/

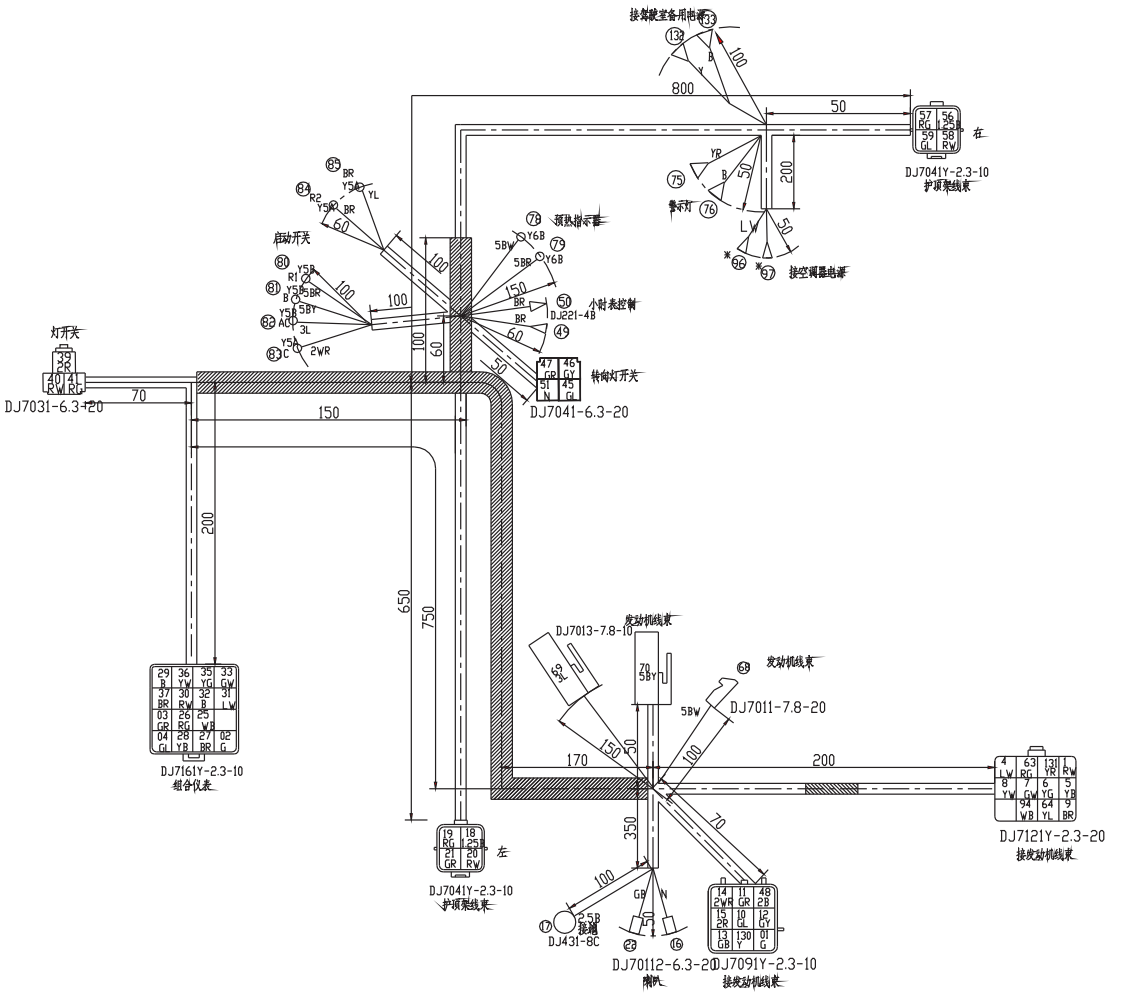


Fig. 2.4 Cabinet wire harness
(CPCD50 ~ 100–W,CPCD50 ~ 70–WX for normal control valve)

https://truckmanualshub.com/

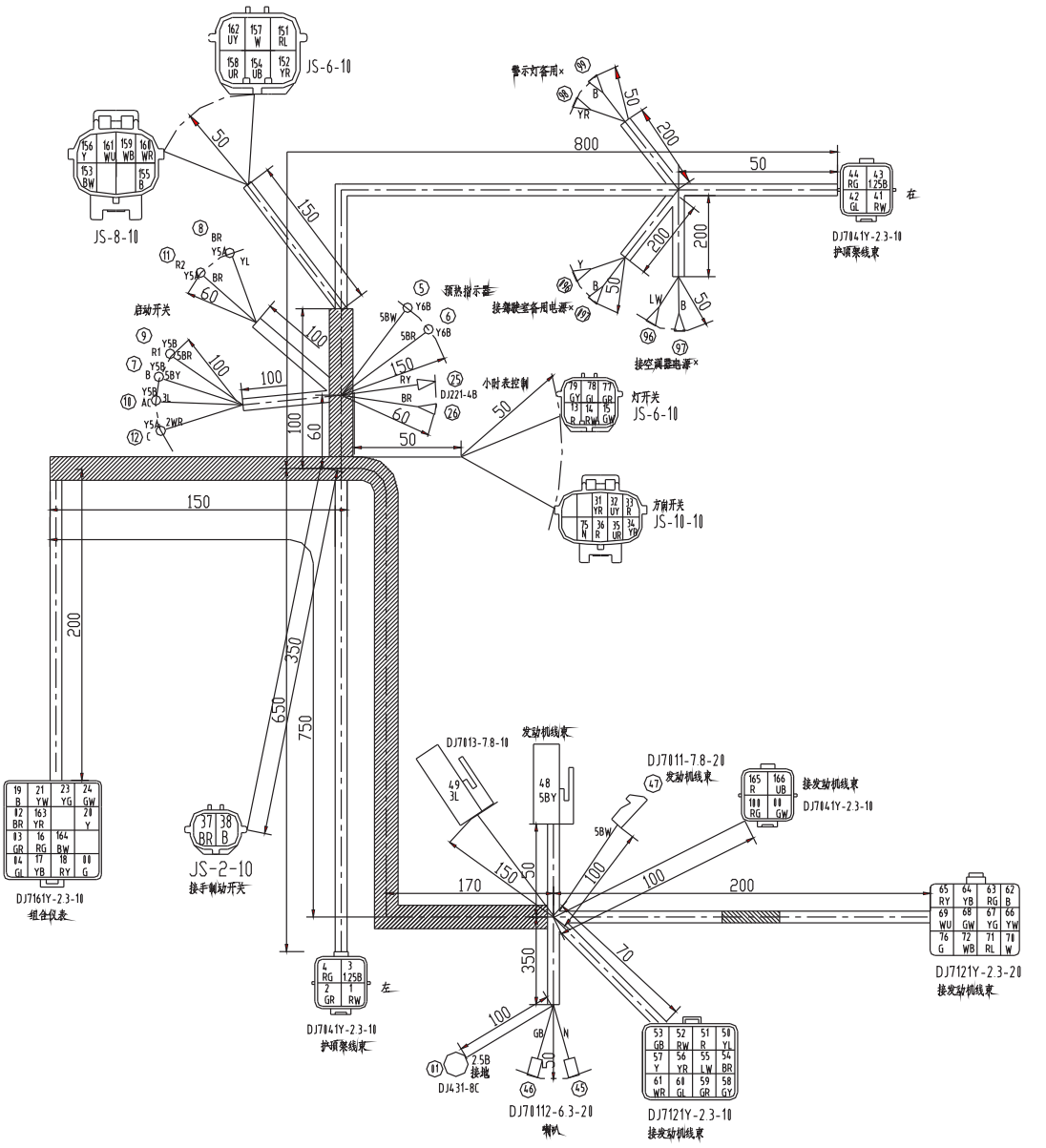


Fig. 2.5 Cabinet wire harness
(CPCD50 ~ 100–W for electric–hydraulic valve)

https://truckmanualshub.com/

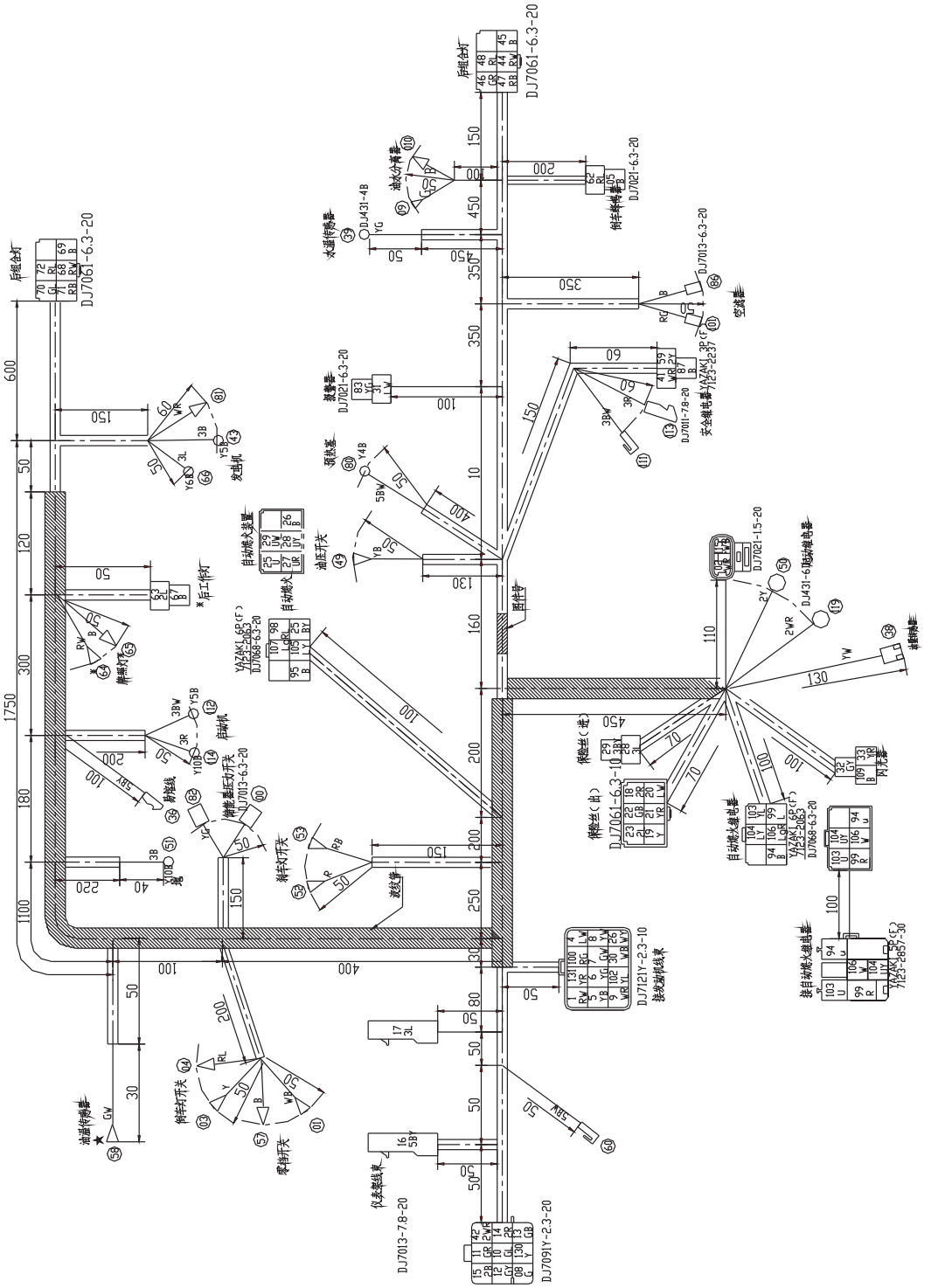


Fig. 2.6 Engine wire harness
(CPCD50 ~ 70–W for normal control valve)

https://truckmanualshub.com/

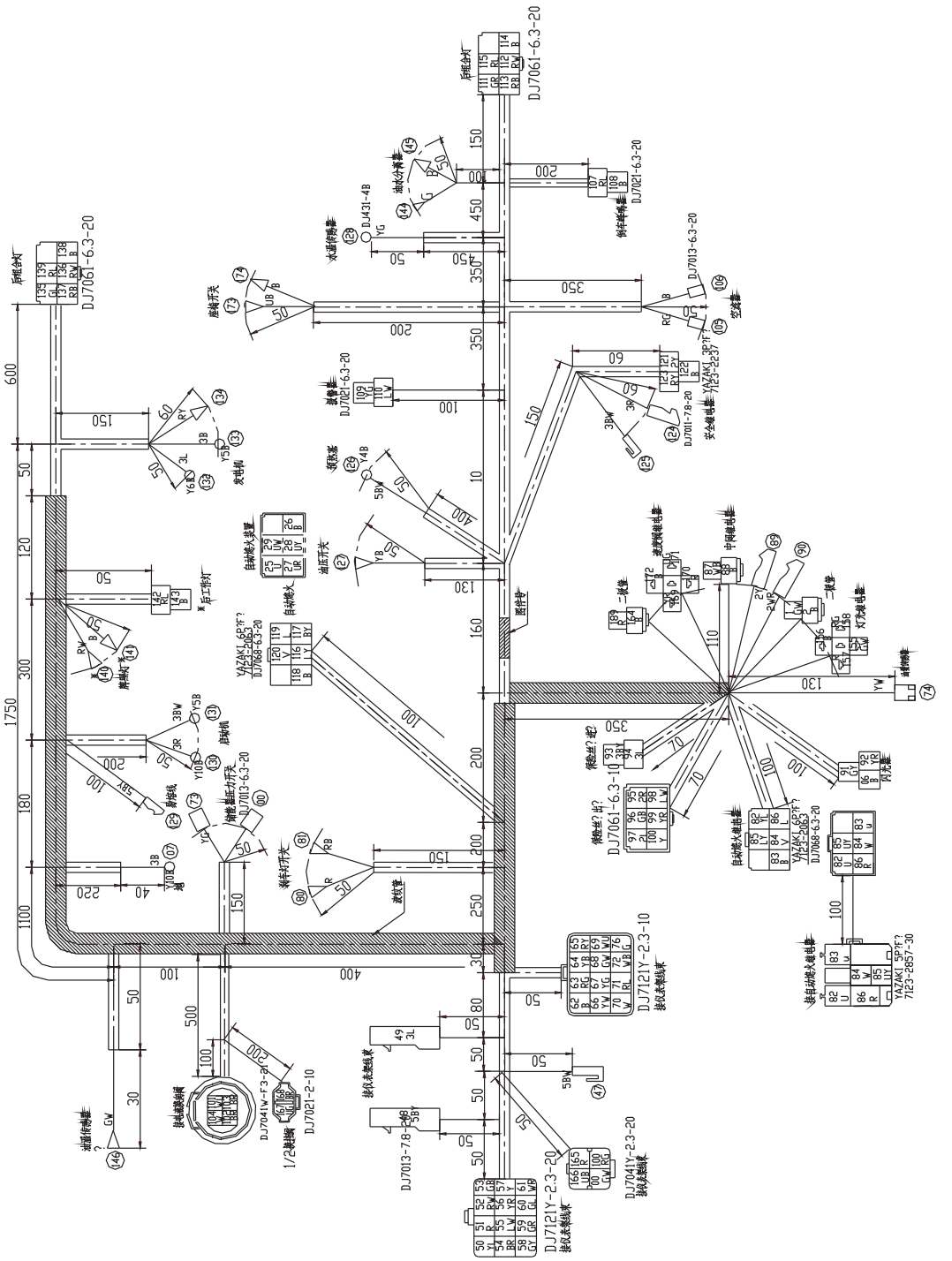

Fig. 2.7 Engine wire harness
(CPCD50 ~ 70–W for electric–hydraulic valve)

https://truckmanualshub.com/

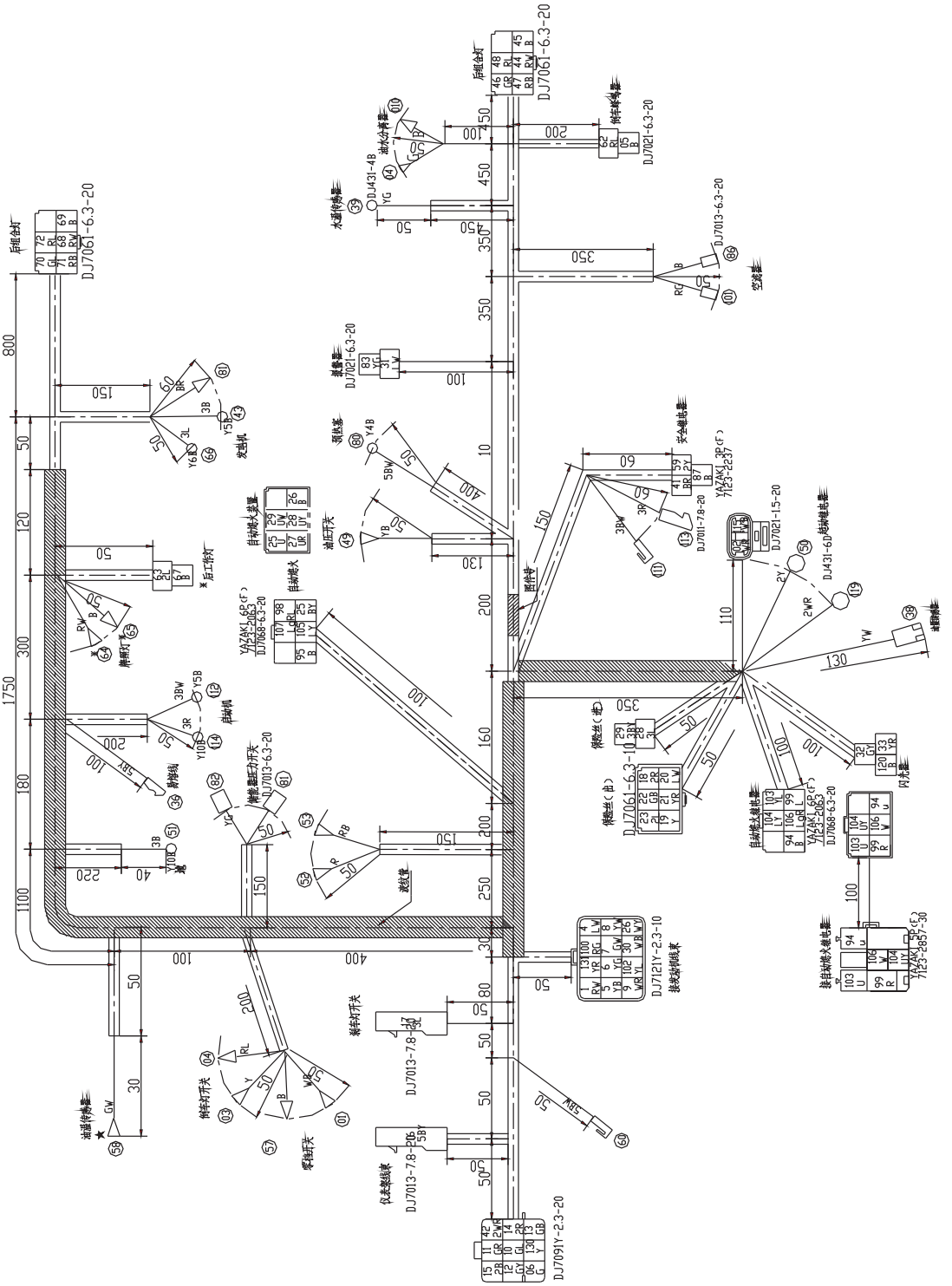

Fig. 2.8 Engine wire harness
(CPCD80,100–W for normal control valve)

https://truckmanualshub.com/

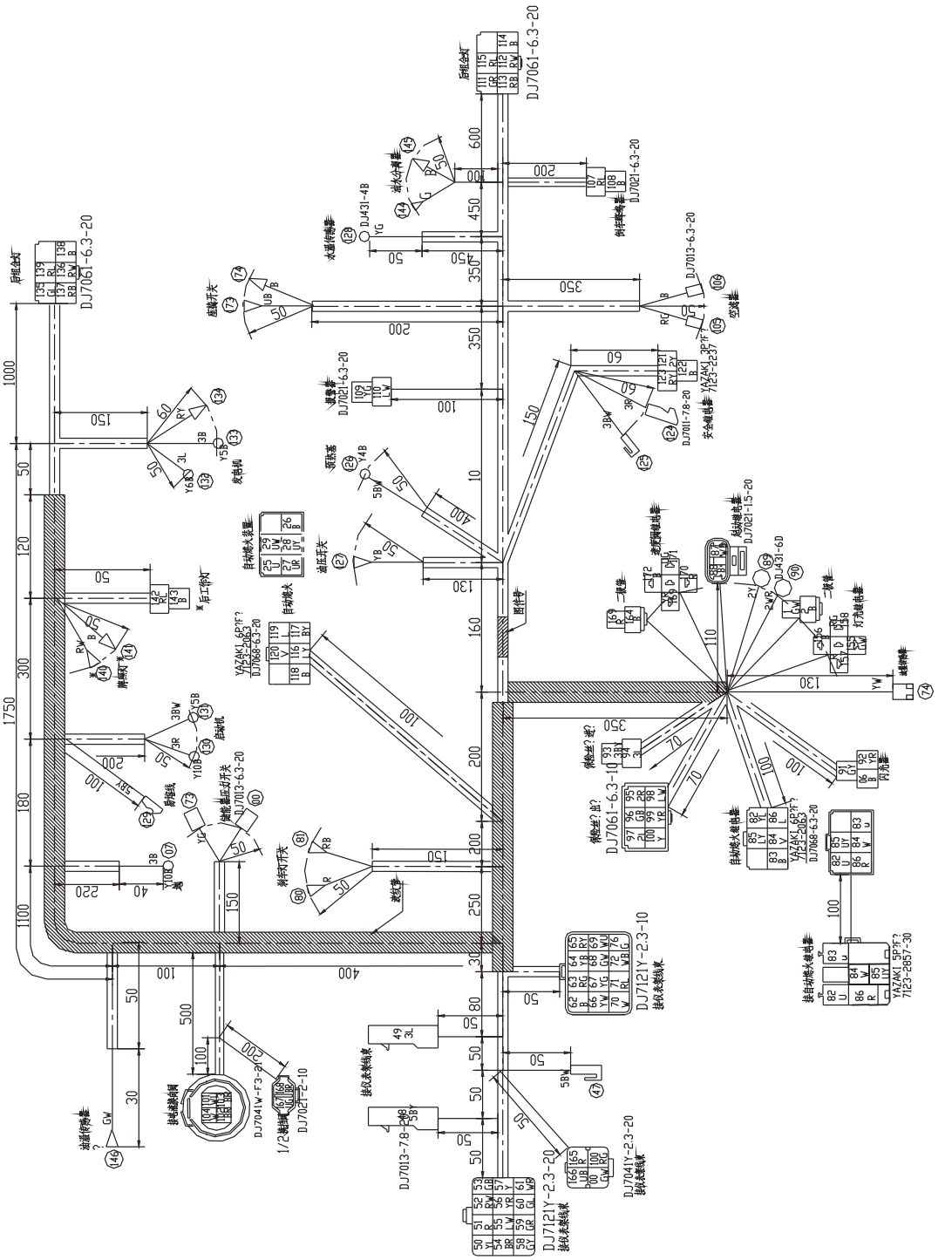

Fig. 2.9 Engine wire harness
(CPCD80,100–W for electric–hydraulic valve)

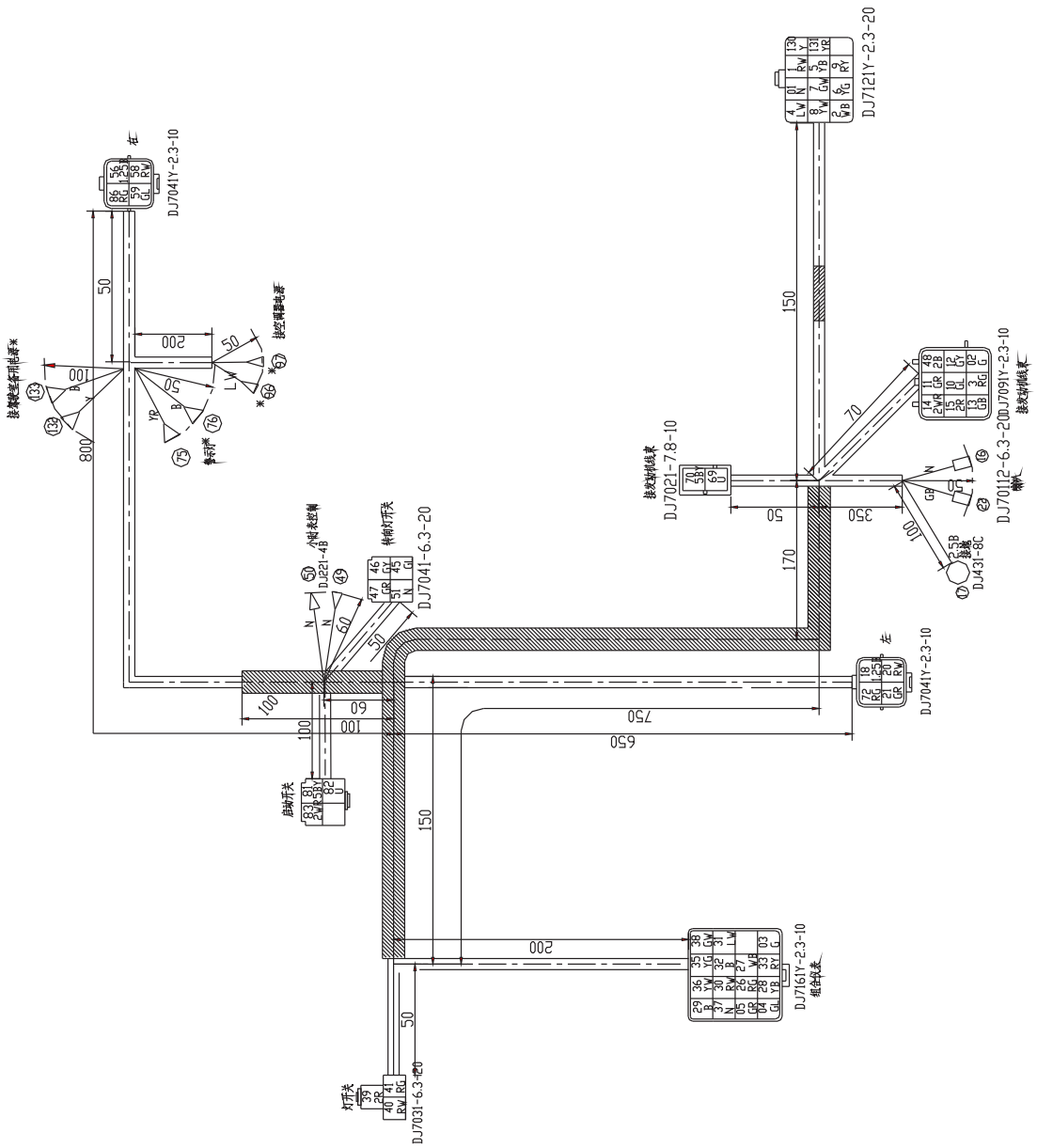


Fig. 2.10 Cabinet wire harness
(CPCD50 ~ 100–C for normal control valve)

https://truckmanualshub.com/

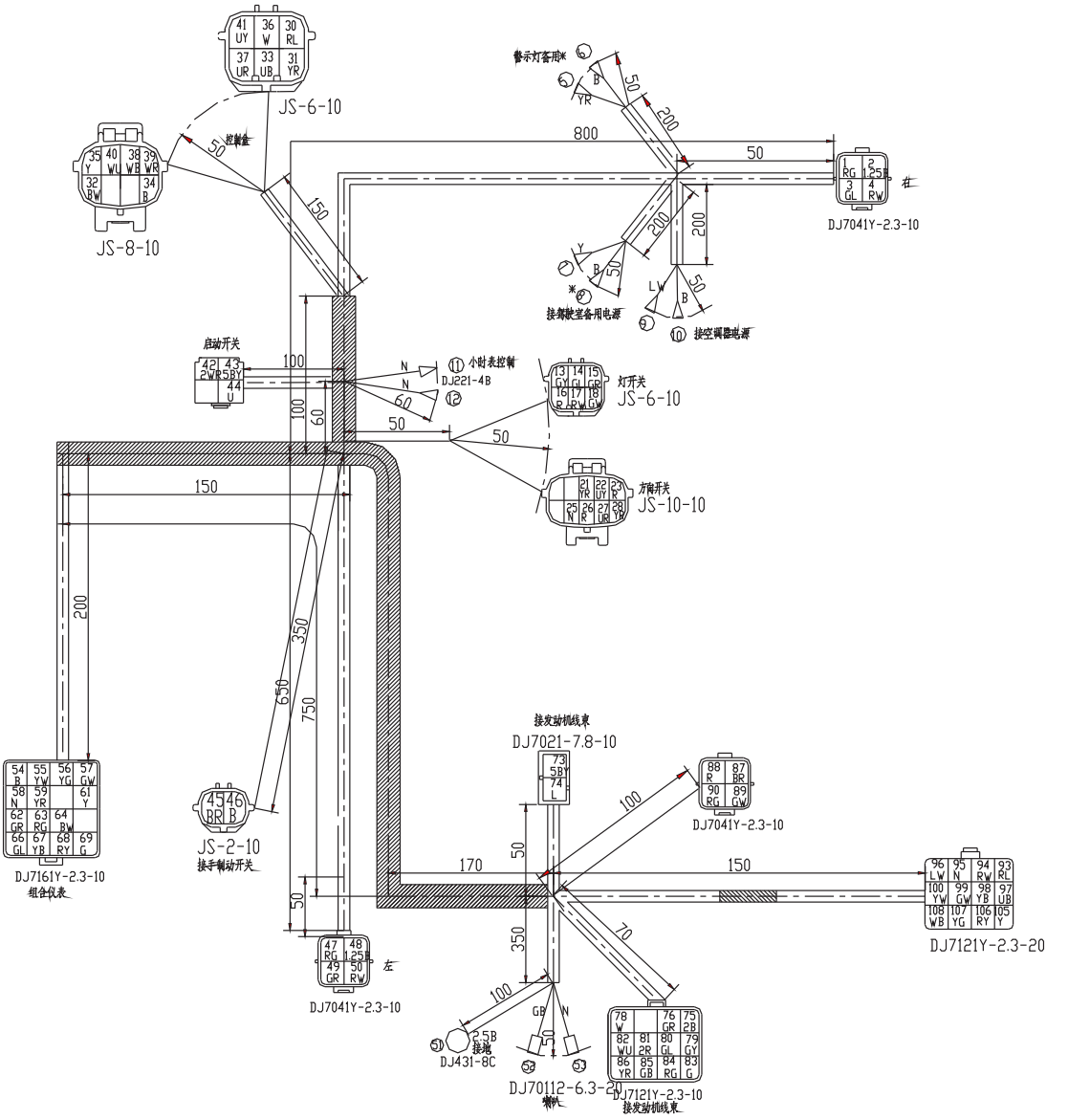


Fig. 2.11 Cabinet wire harness
(CPCD50 ~ 100–C for electric–hydraulic valve)

https://truckmanualshub.com/

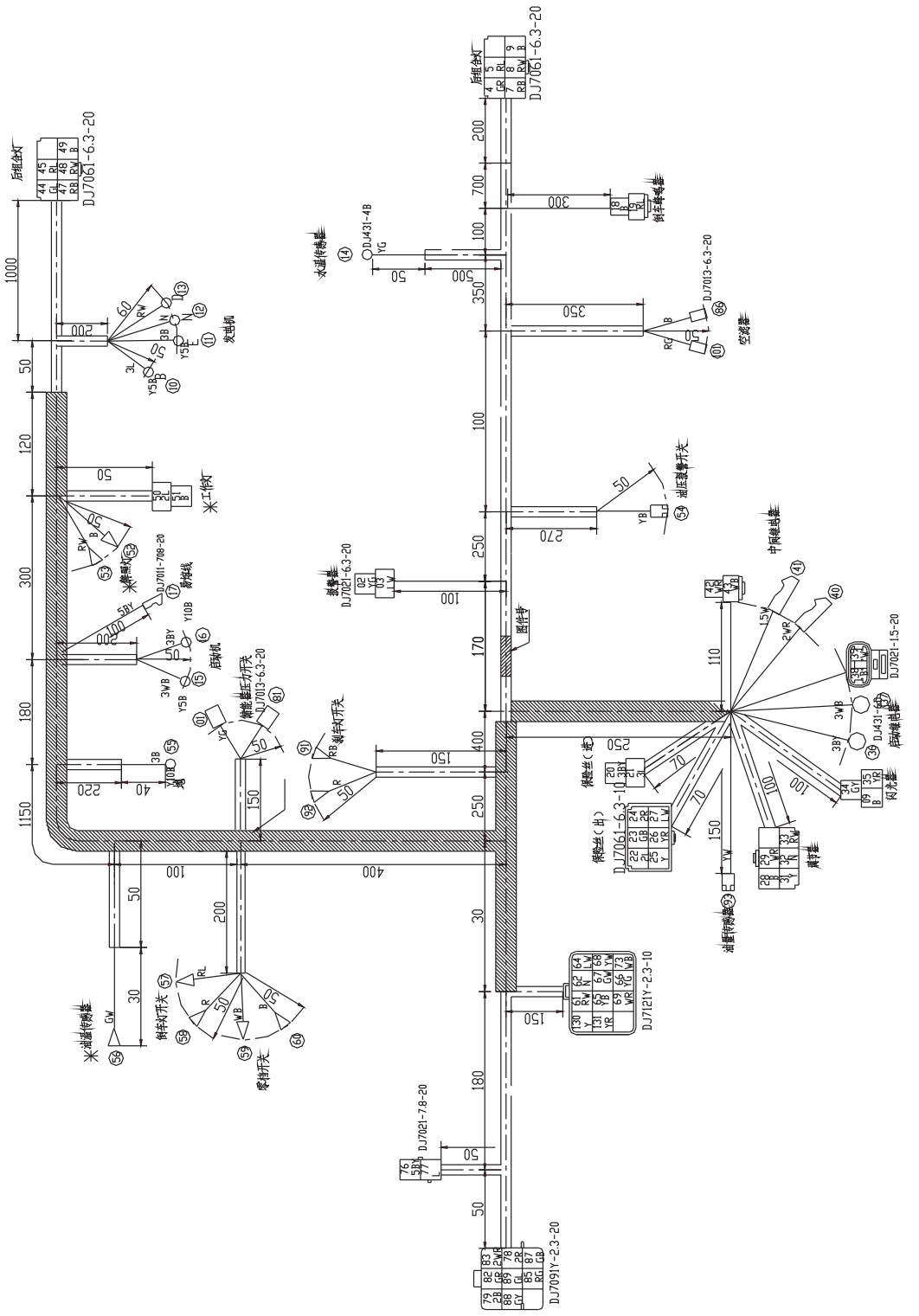


Fig. 2.12 Engine wire harness
(CPCD50 ~ 70–C for normal control valve)

https://truckmanualshub.com/

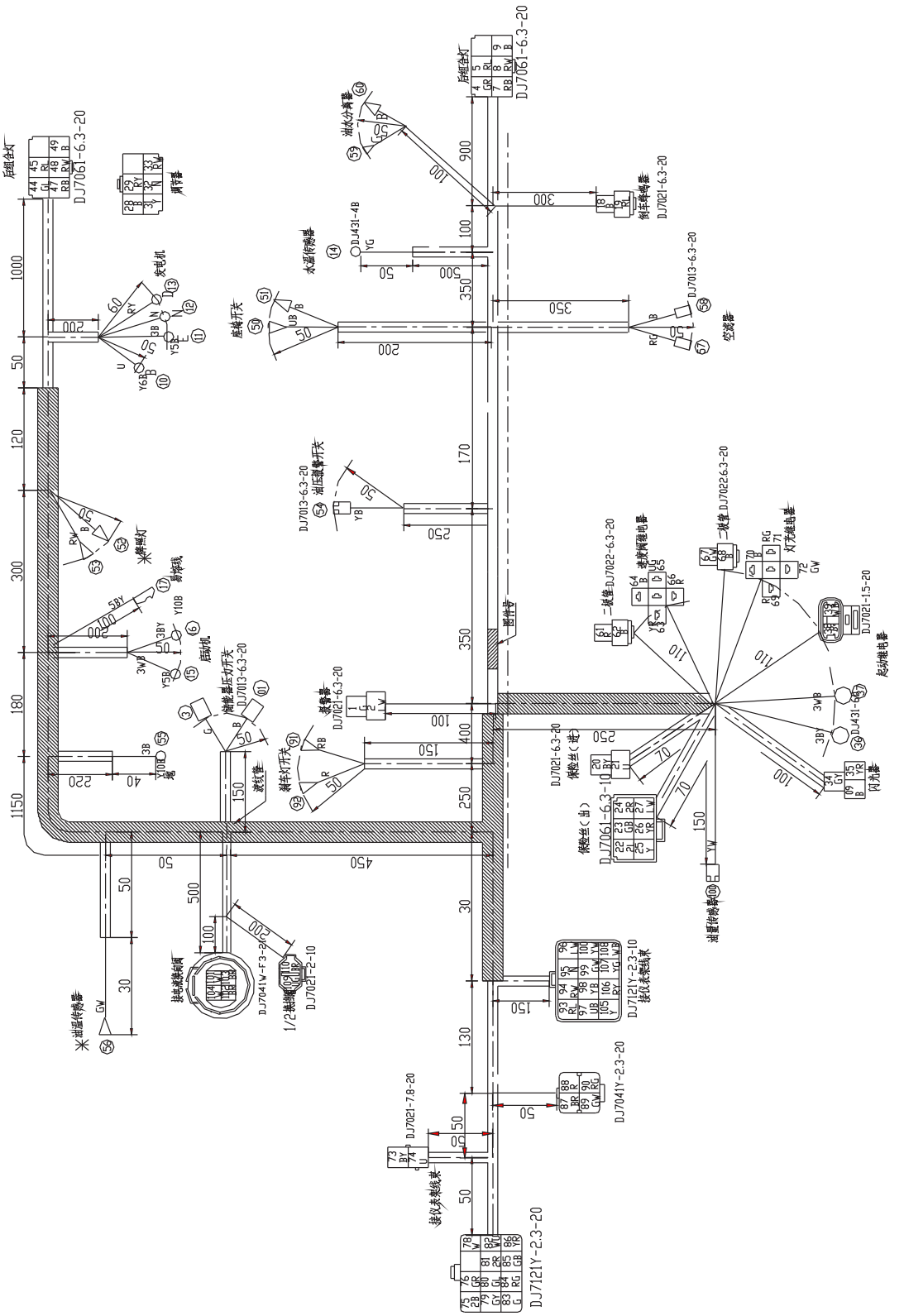


Fig. 2.13 Engine wire harness
(CPCD50 ~ 70–C for electric–hydraulic valve)

https://truckmanualshub.com/

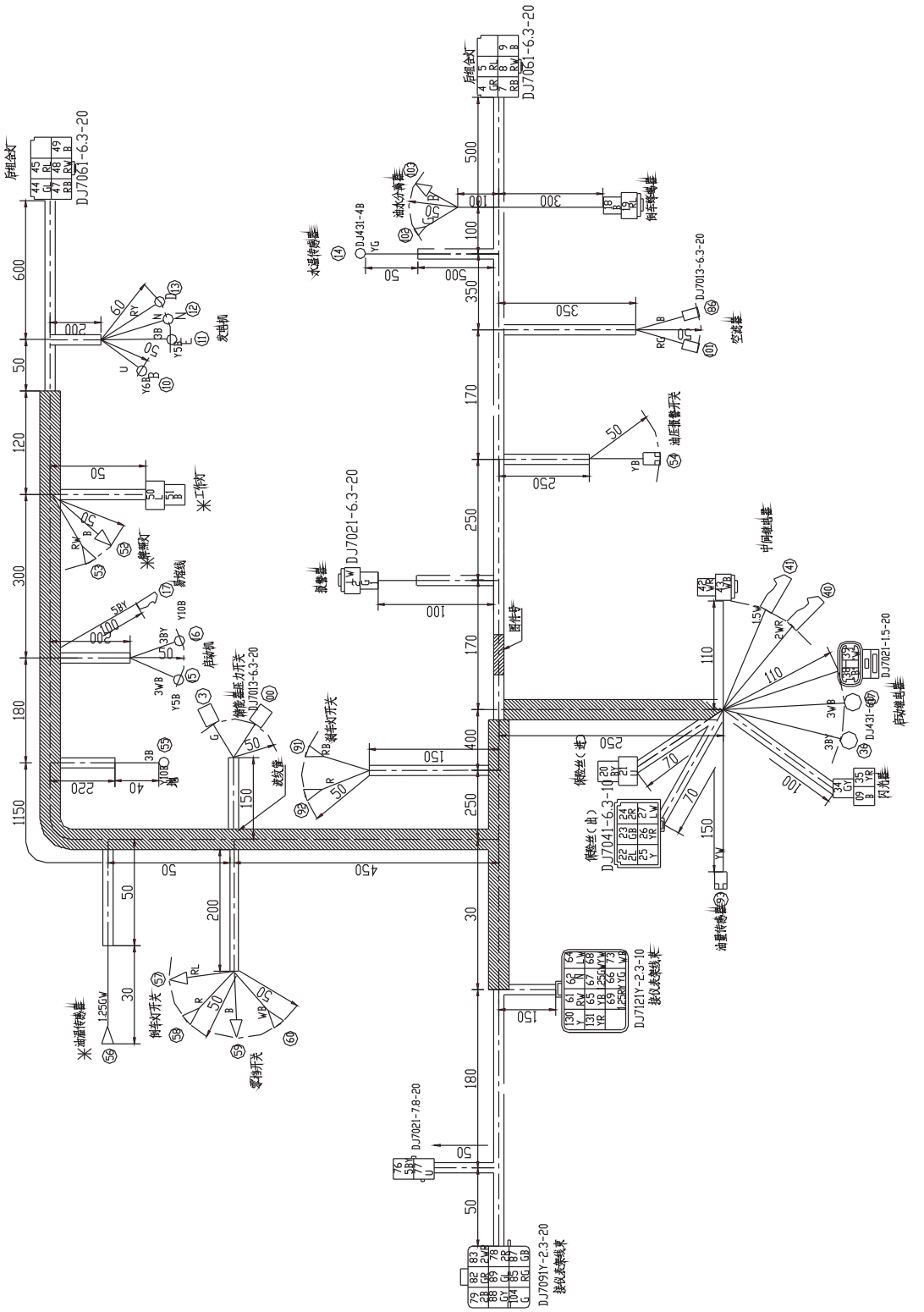


Fig. 2.14 Engine wire harness
(CPCD80,100–C for normal control valve)

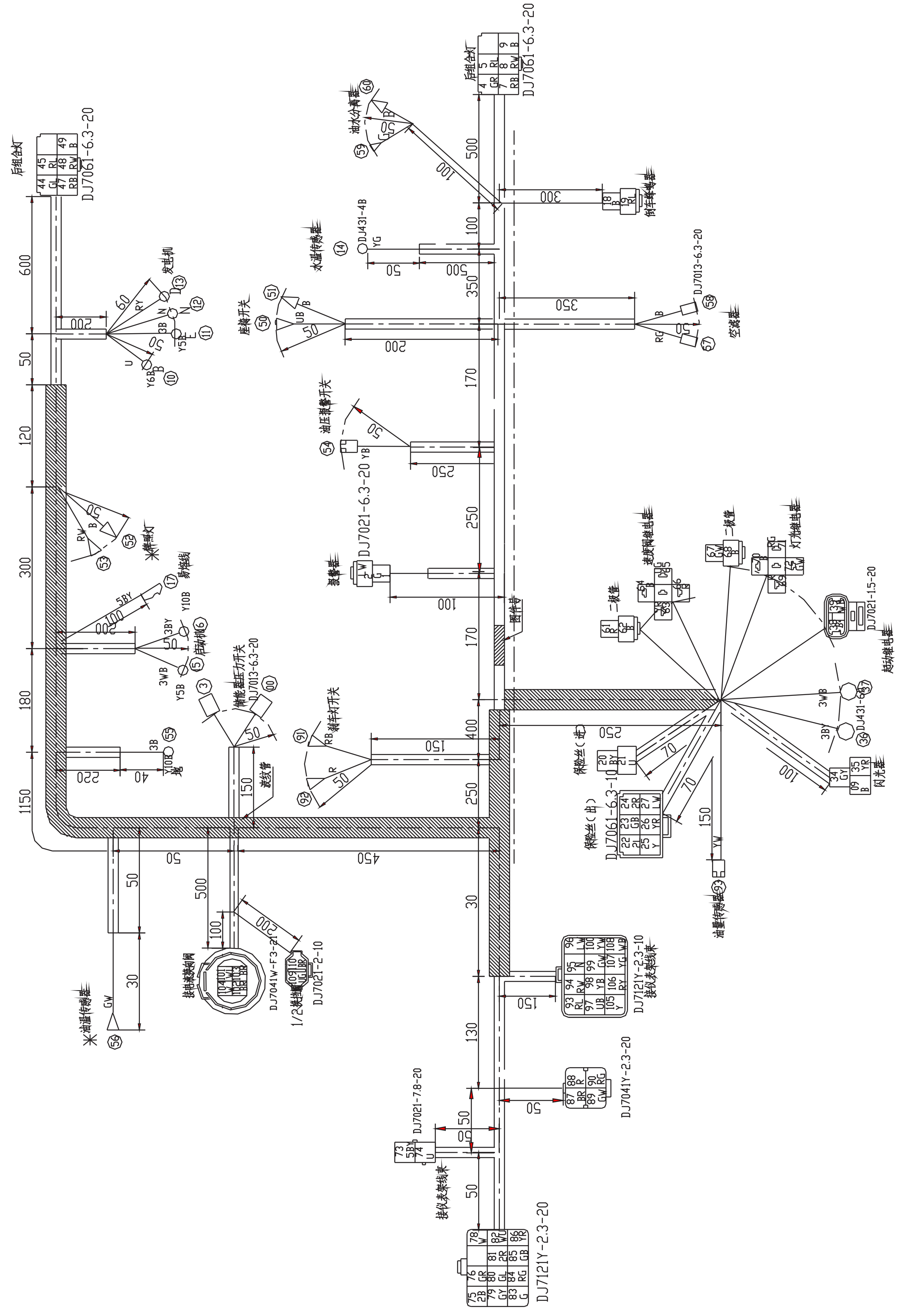


Fig. 2.15 Engine wire harness
(CPCD80,100−C for electric−hydraulic valve)

https://truckmanualshub.com/

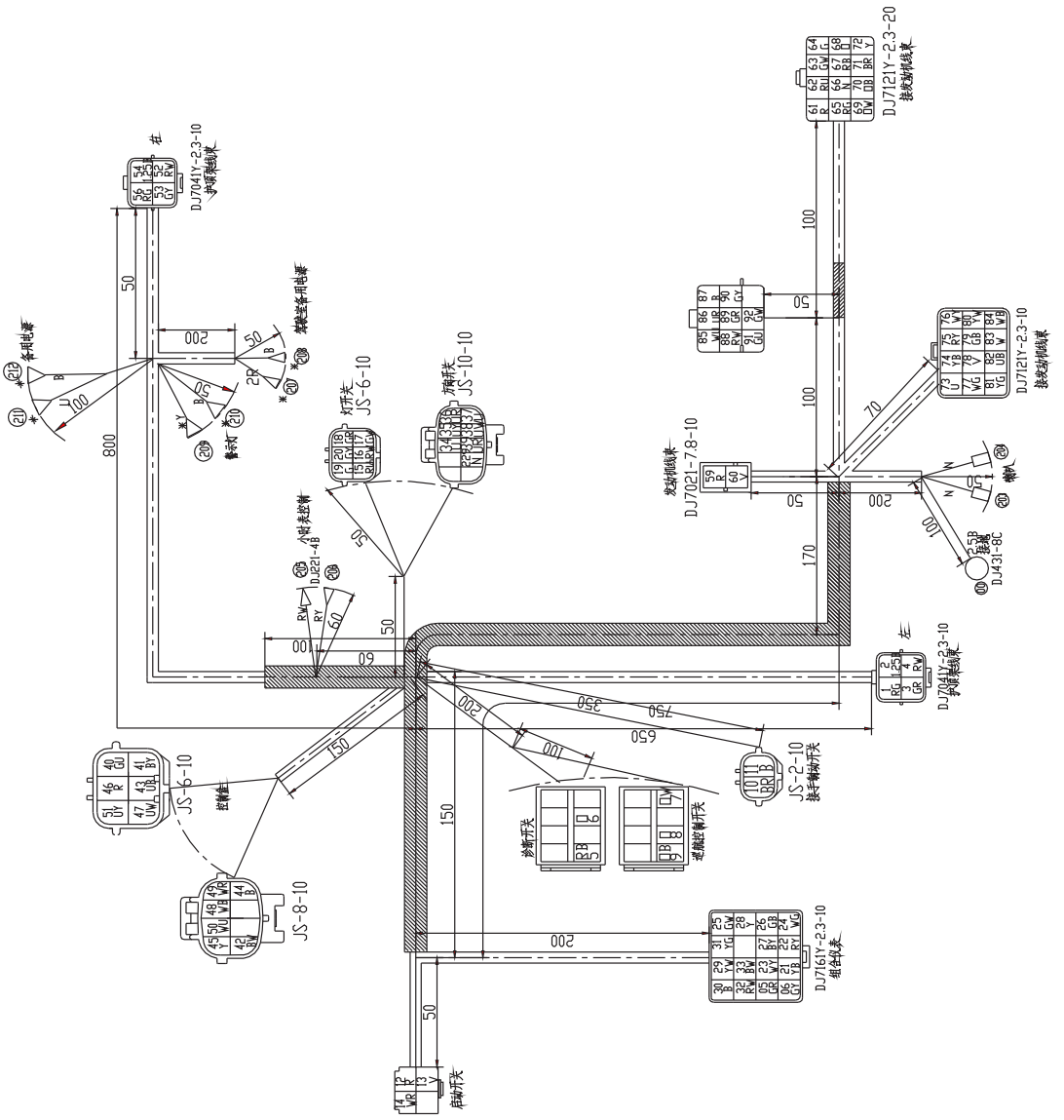


Fig. 2.16 Cabinet wire harness
(CPCD50 ~ 100-CU for electric-hydraulic valve)

https://truckmanualshub.com/

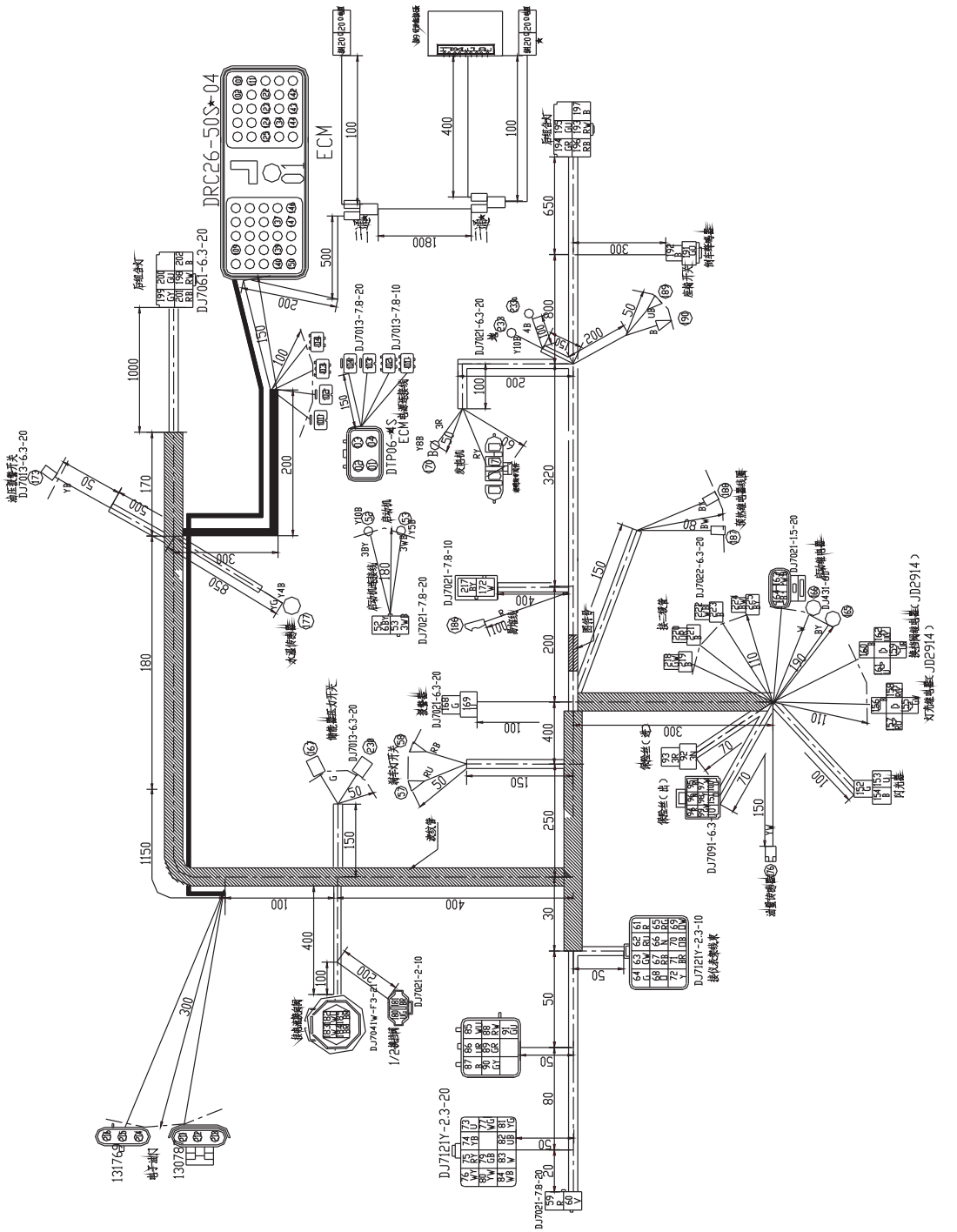


Fig. 2.17 Engine wire harness
(CPCD50 ~ 70–CU3 for electric–hydraulic valve)

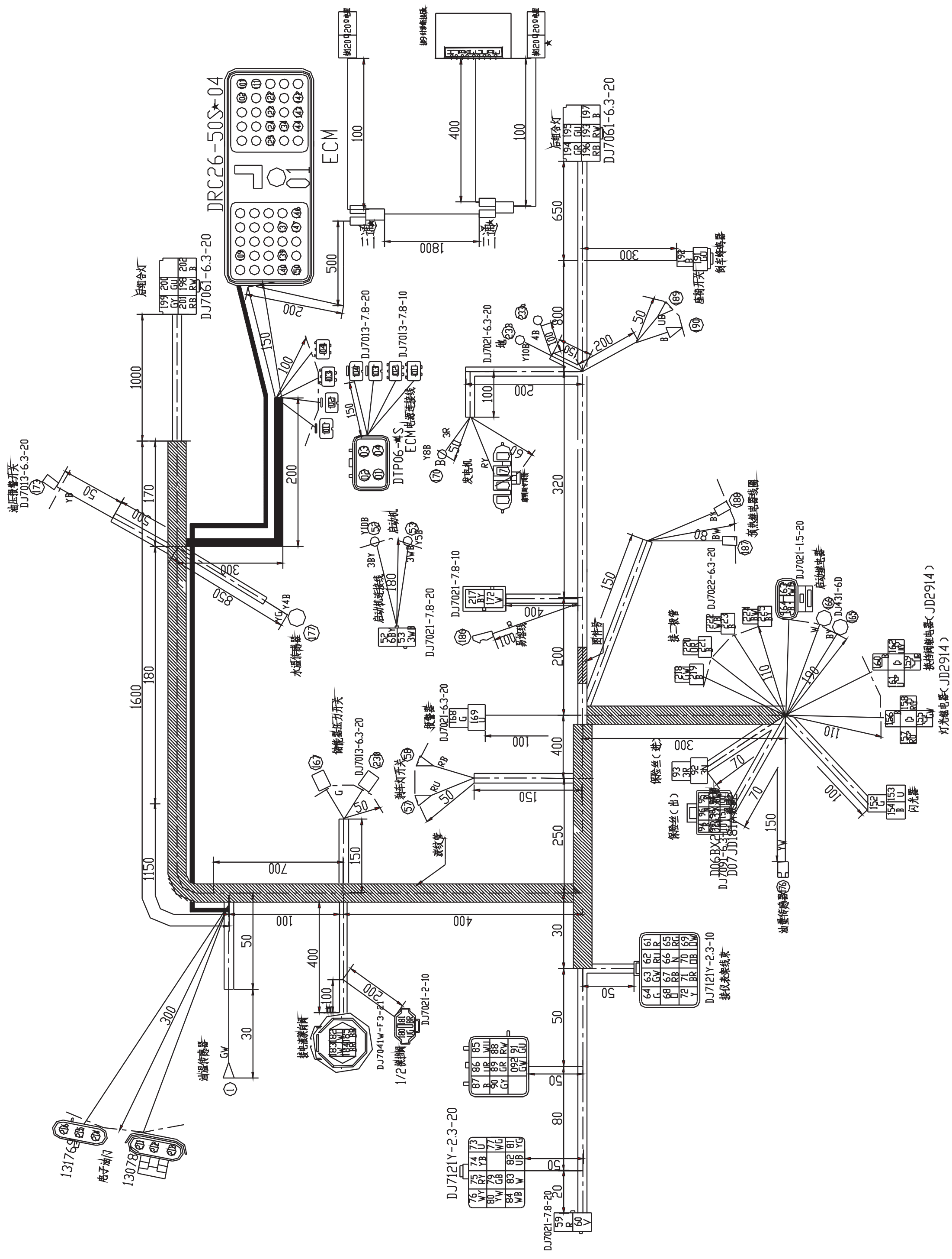


Fig. 2.18 Engine wire harness
(CPCD80,100−CU1 for electric−hydraulic valve)

https://truckmanualshub.com/

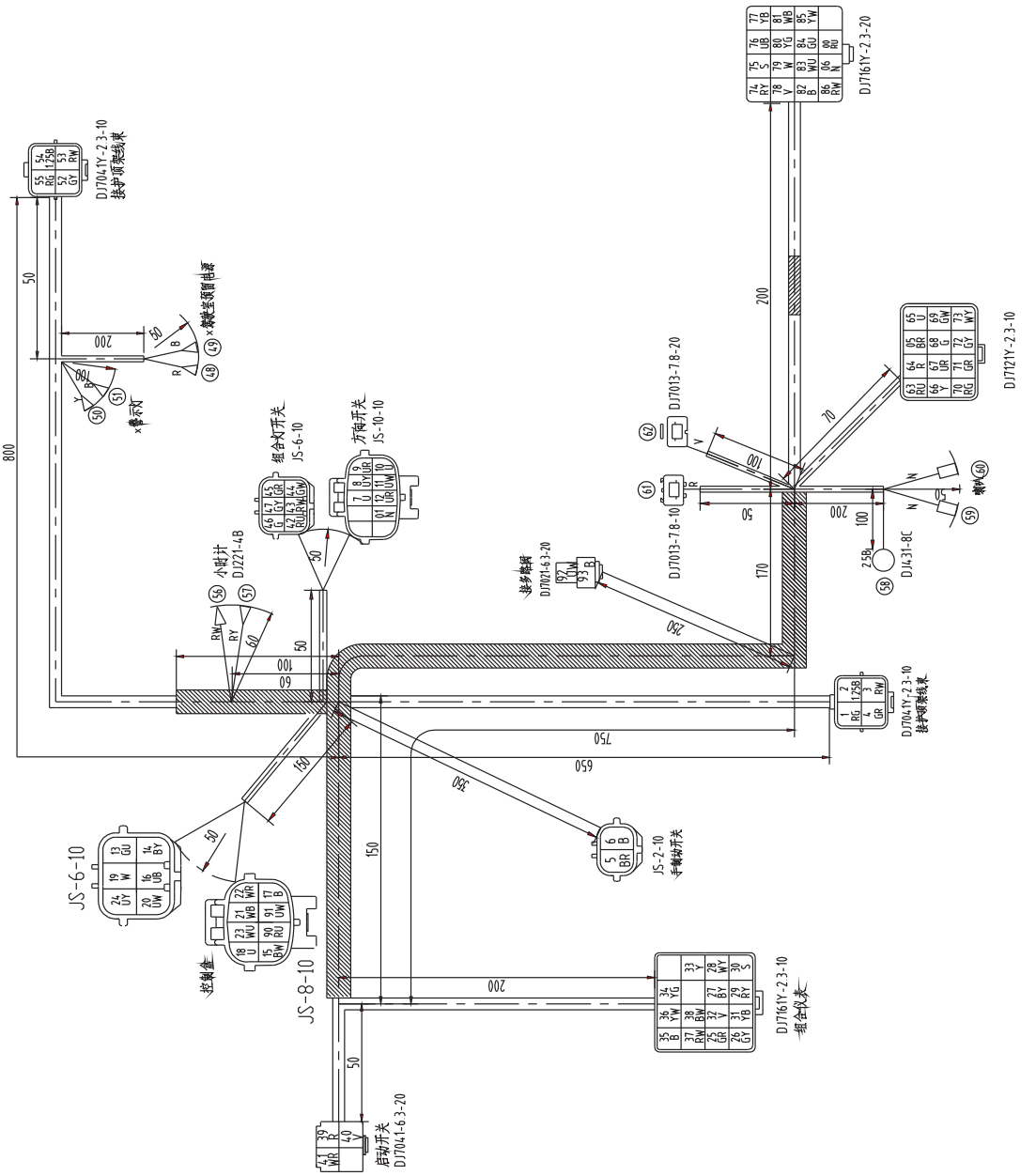


Fig. 2.19 Cabinet wire harness
(CPCD50 ~ 100–P for electric–hydraulic valve)

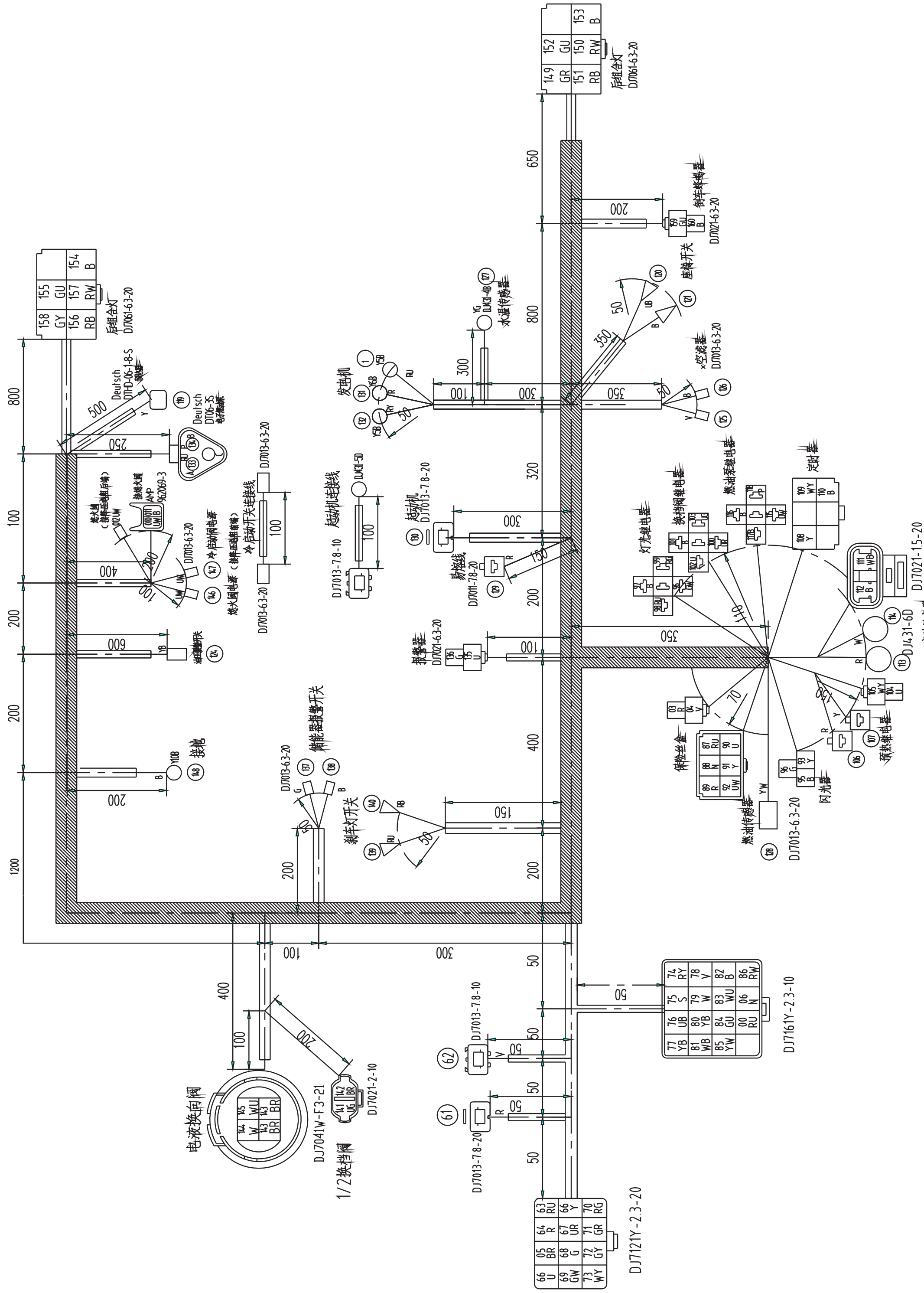


Fig. 2.20 Engine wire harness
(CPCD50 ~ 70–P1 for electric–hydraulic valve)

https://truckmanualshub.com/

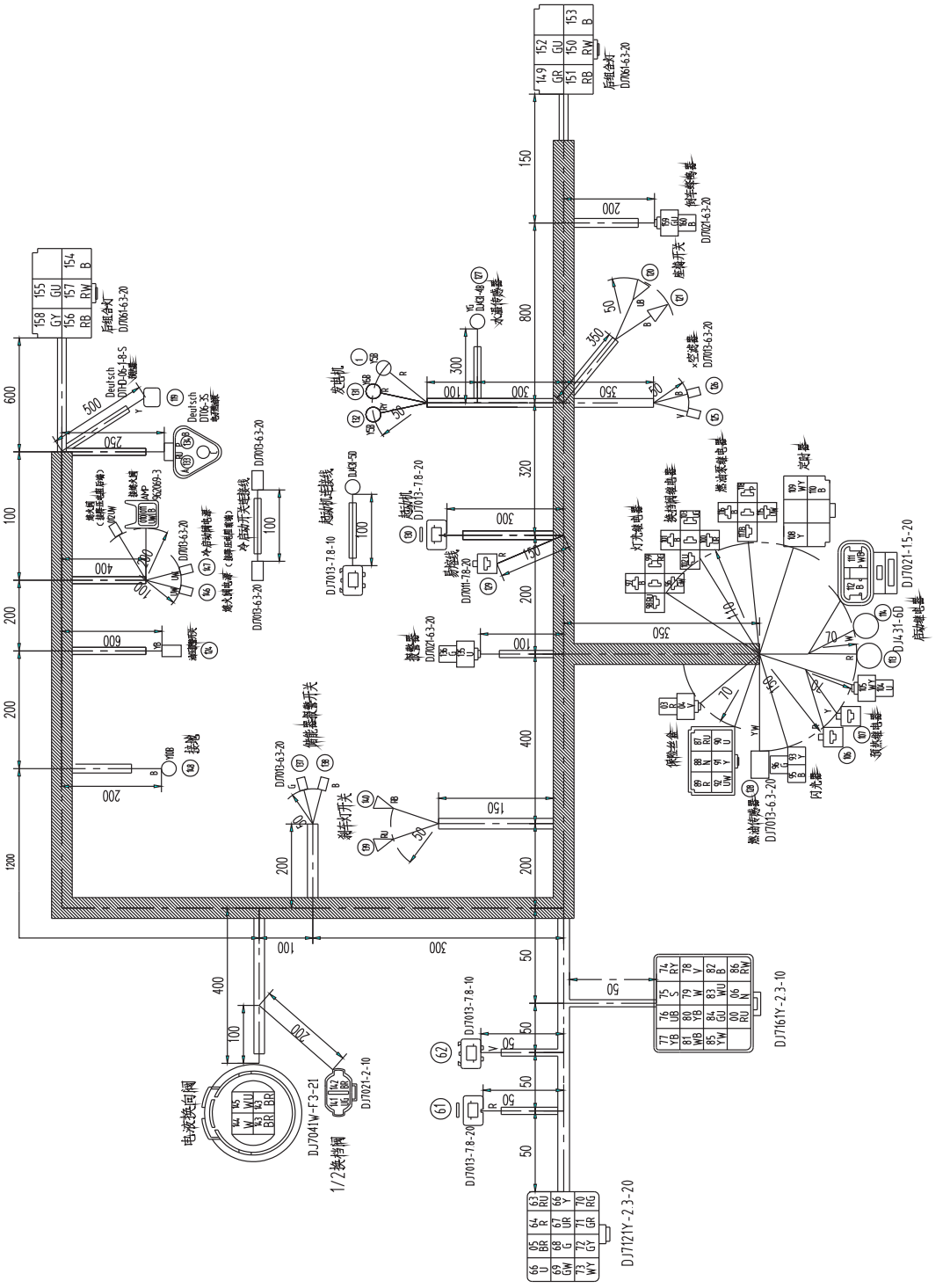


Fig. 2.21 Engine wire harness
(CPCD80,100-P for electric-hydraulic valve)

https://truckmanualshub.com/

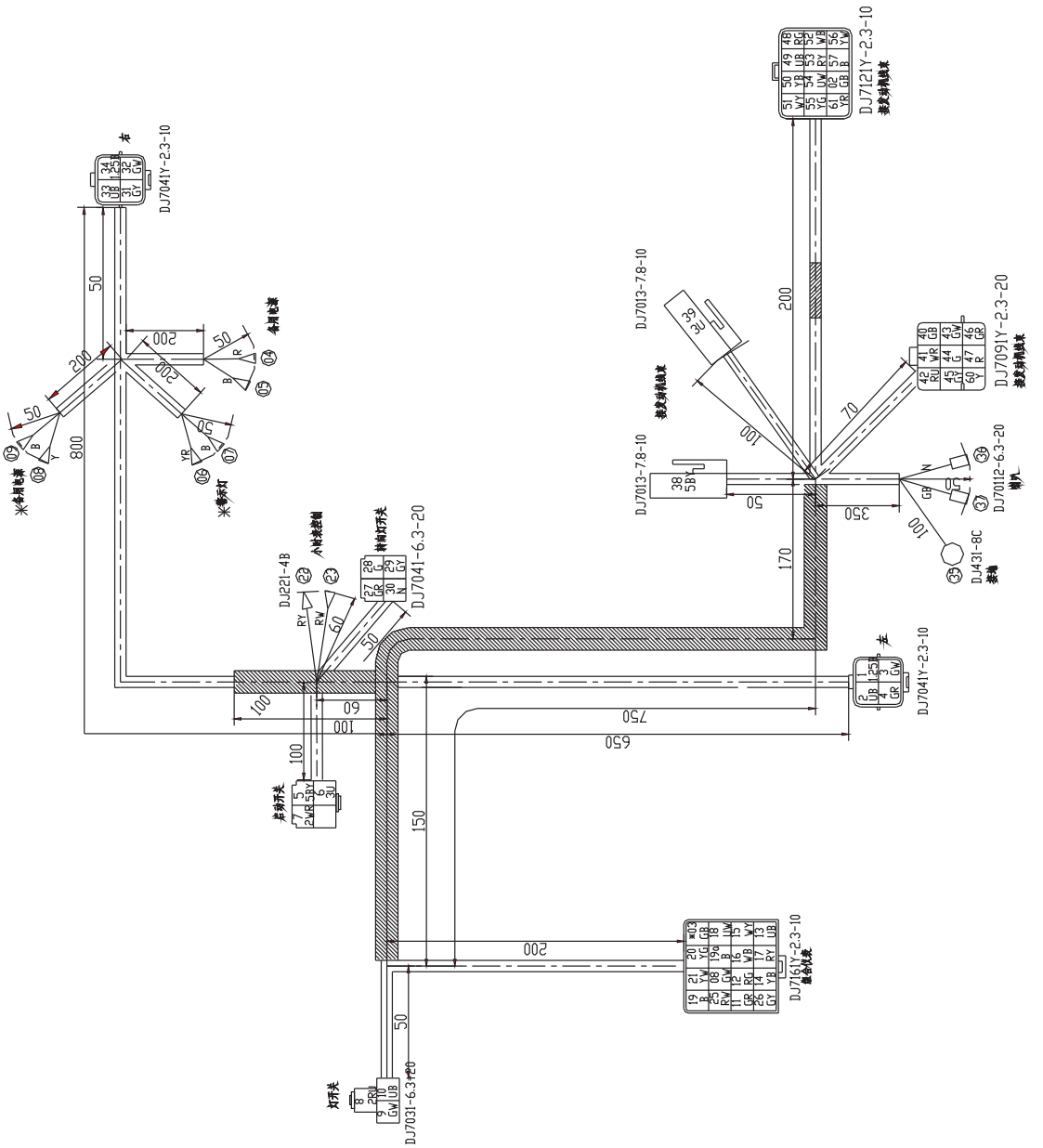


Fig. 2.22 Cabinet wire harness
(CPCD50 ~ 70–M1 for normal control valve)

https://truckmanualshub.com/

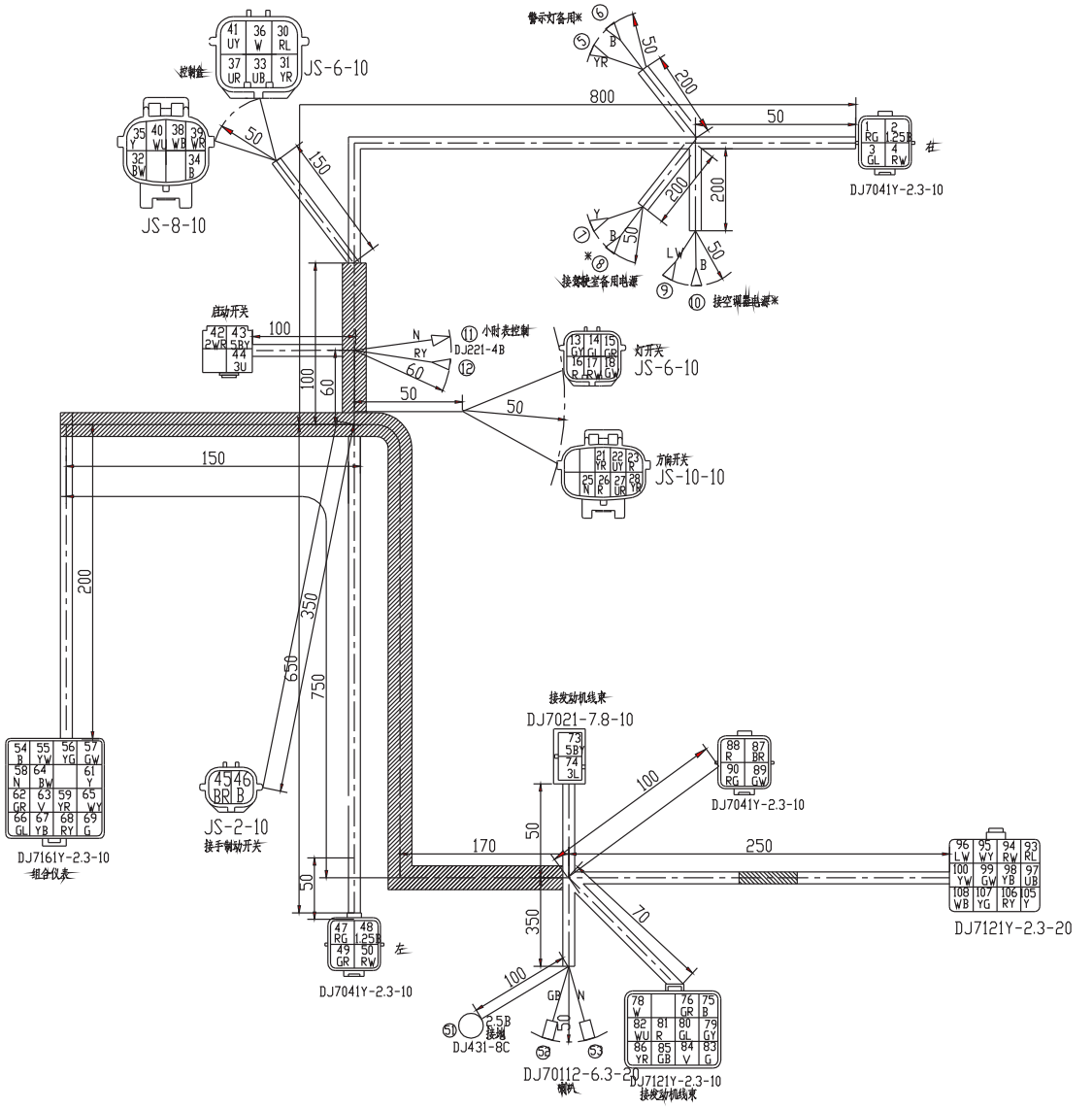


Fig. 2.23 Cabinet wire harness
(CPCD50 ~ 70–M1 for electric–hydraulic valve)

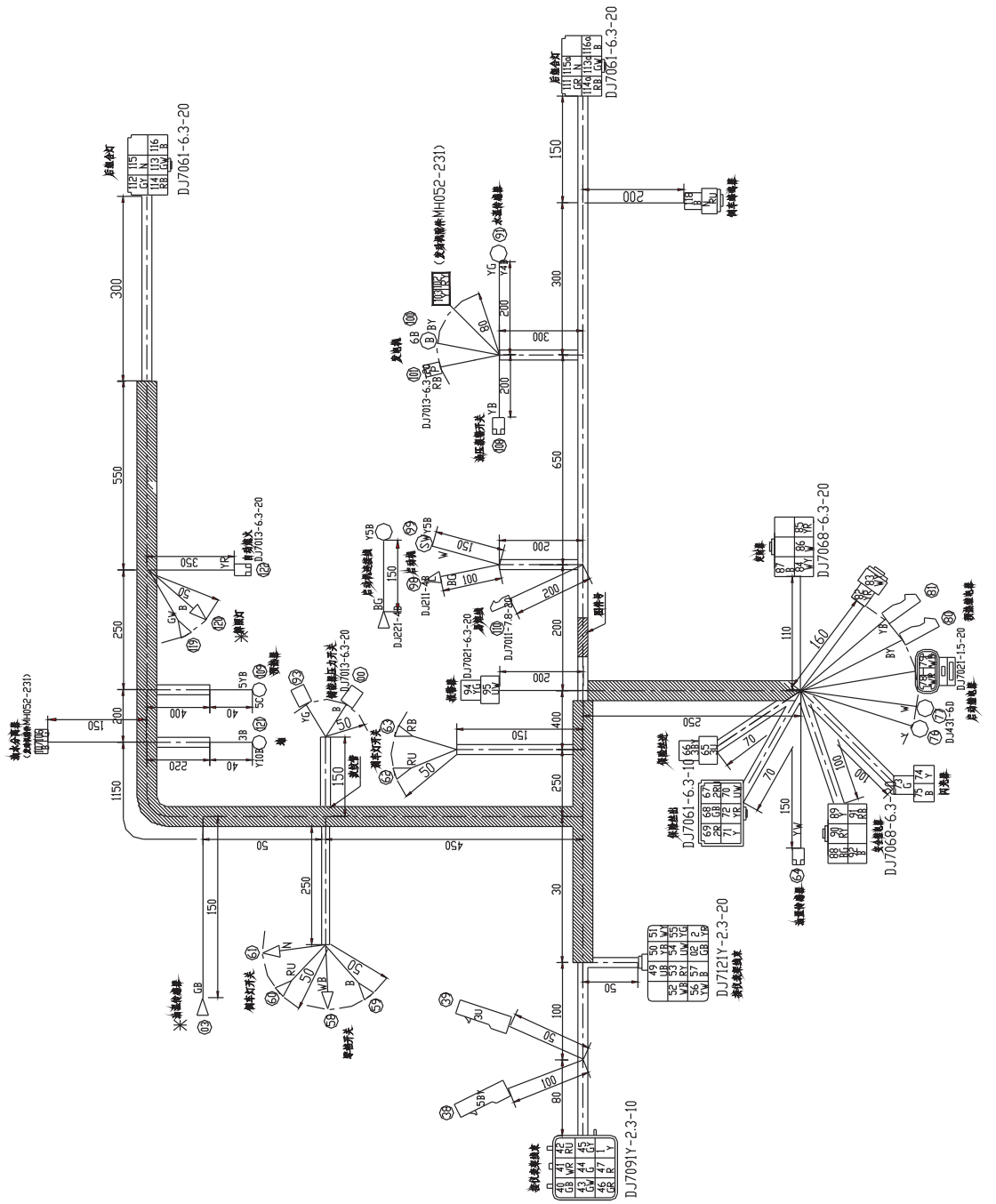


Fig. 2.24 Engine wire harness
(CPCD50 ~ 70–M1 for normal control valve)

https://truckmanualshub.com/

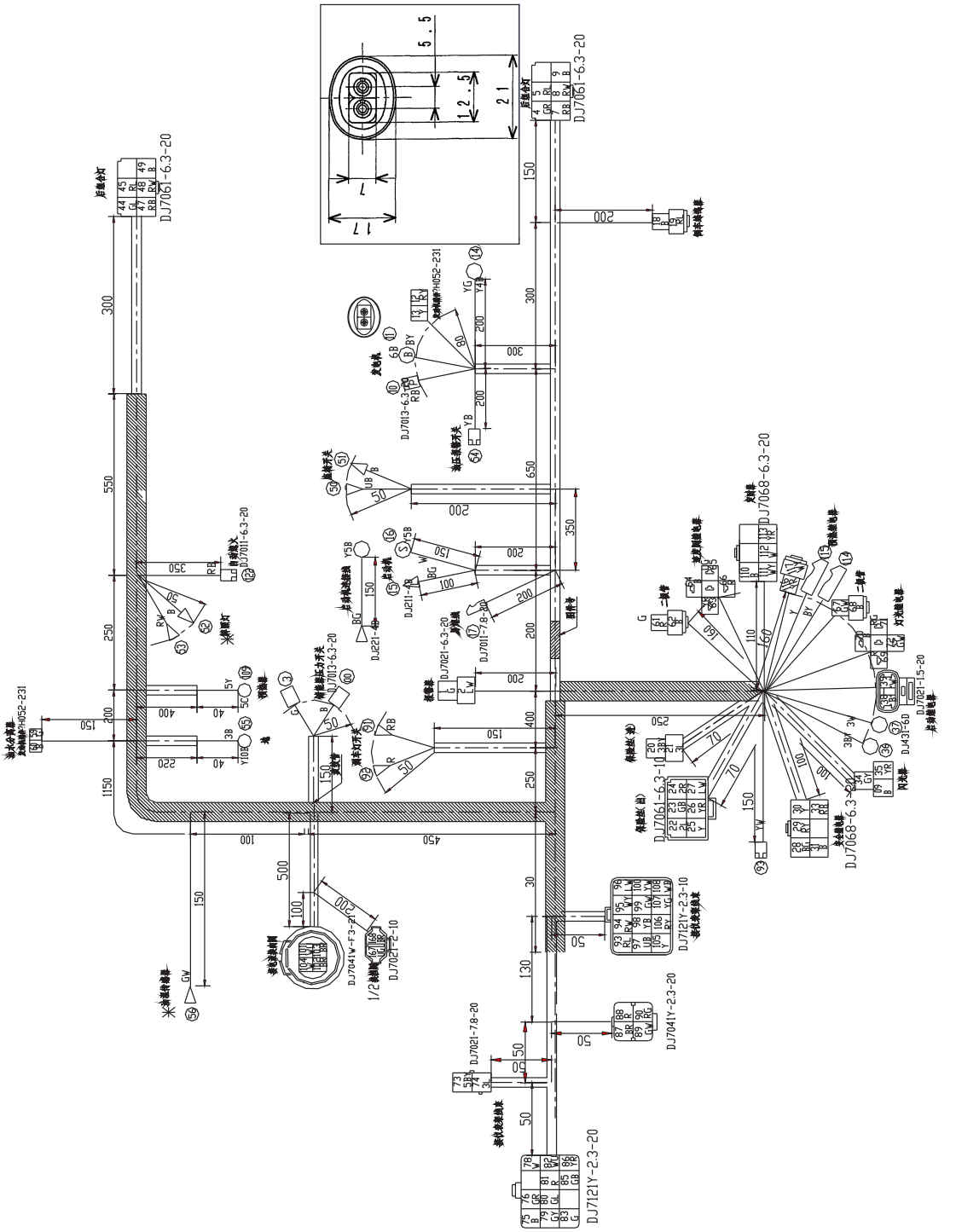

Fig. 2.25 Engine wire harness
(CPCD50 ~ 70–M1 for electric–hydraulic valve)

https://truckmanualshub.com/

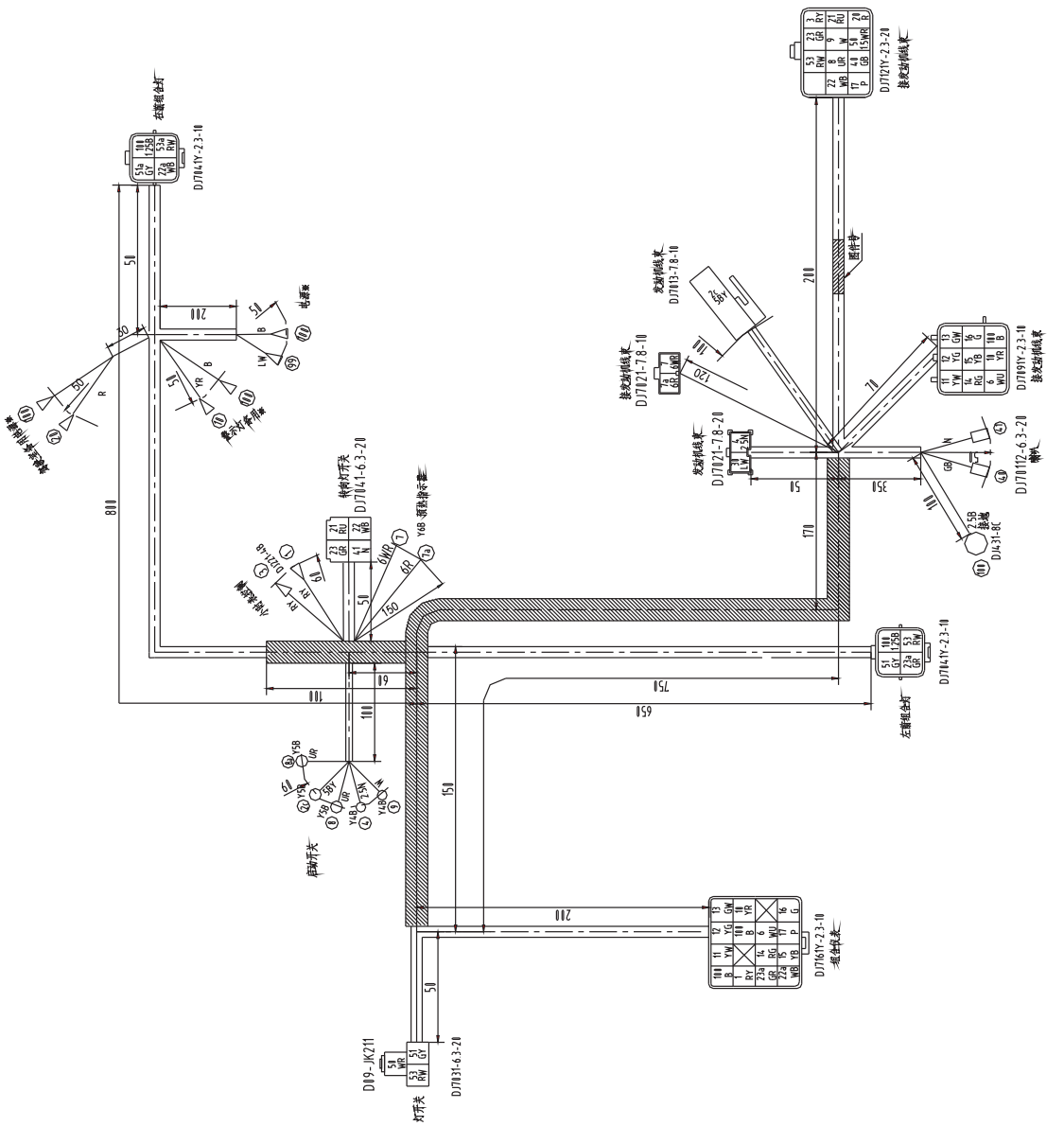


Fig. 2.26 Cabinet wire harness
(CPCD80,100–WX for normal control valve)

https://truckmanualshub.com/

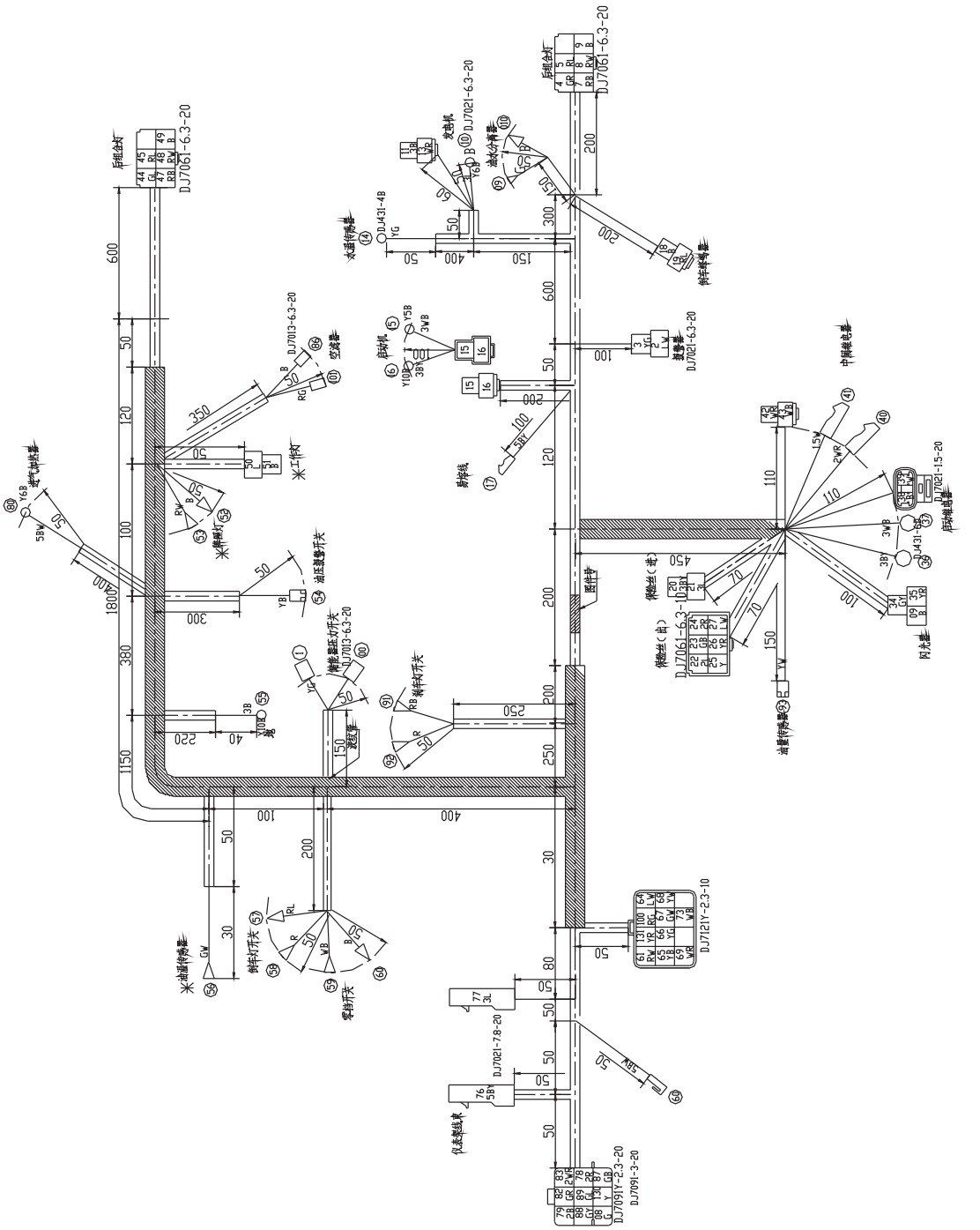


Fig. 2.27 Engine wire harness
(CPCD50 ~ 70-WX for normal control valve)

https://truckmanualshub.com/

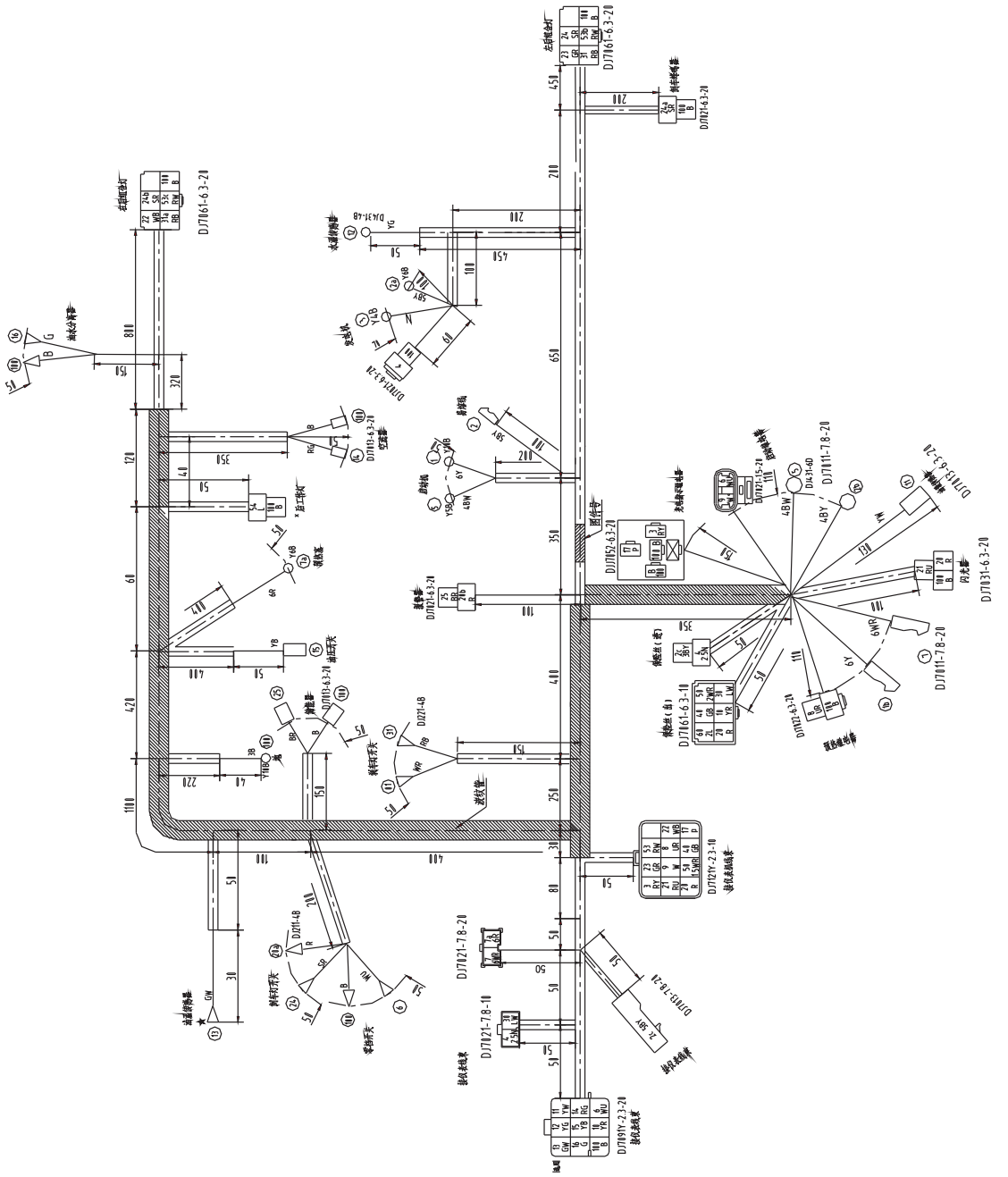

Fig. 2.28 Engine wire harness
(CPCD80,100-WX for normal control valve)

https://truckmanualshub.com/

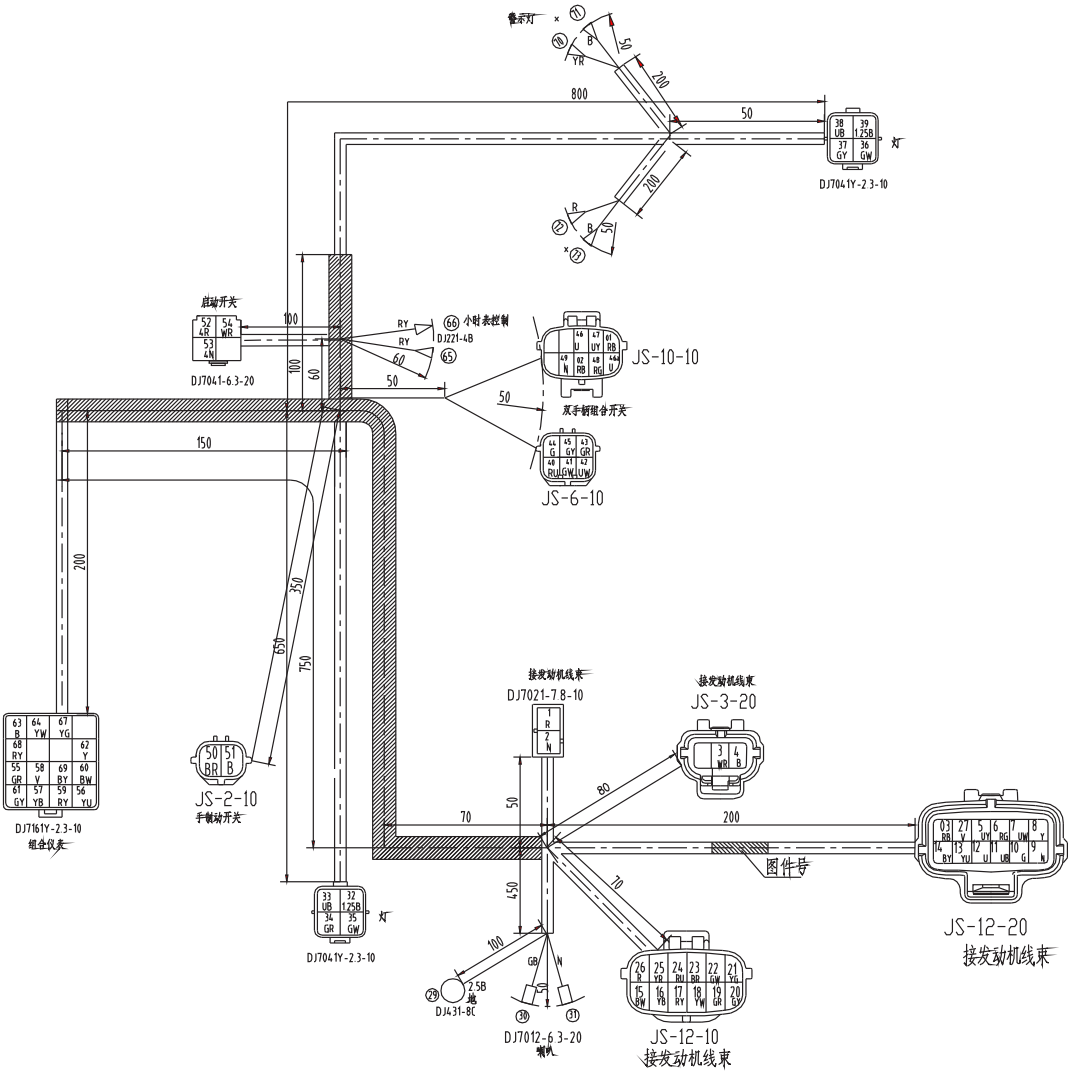


Fig. 2.29 Cabinet wire harness (CPQD50 ~ 70–TY1)

https://truckmanualshub.com/

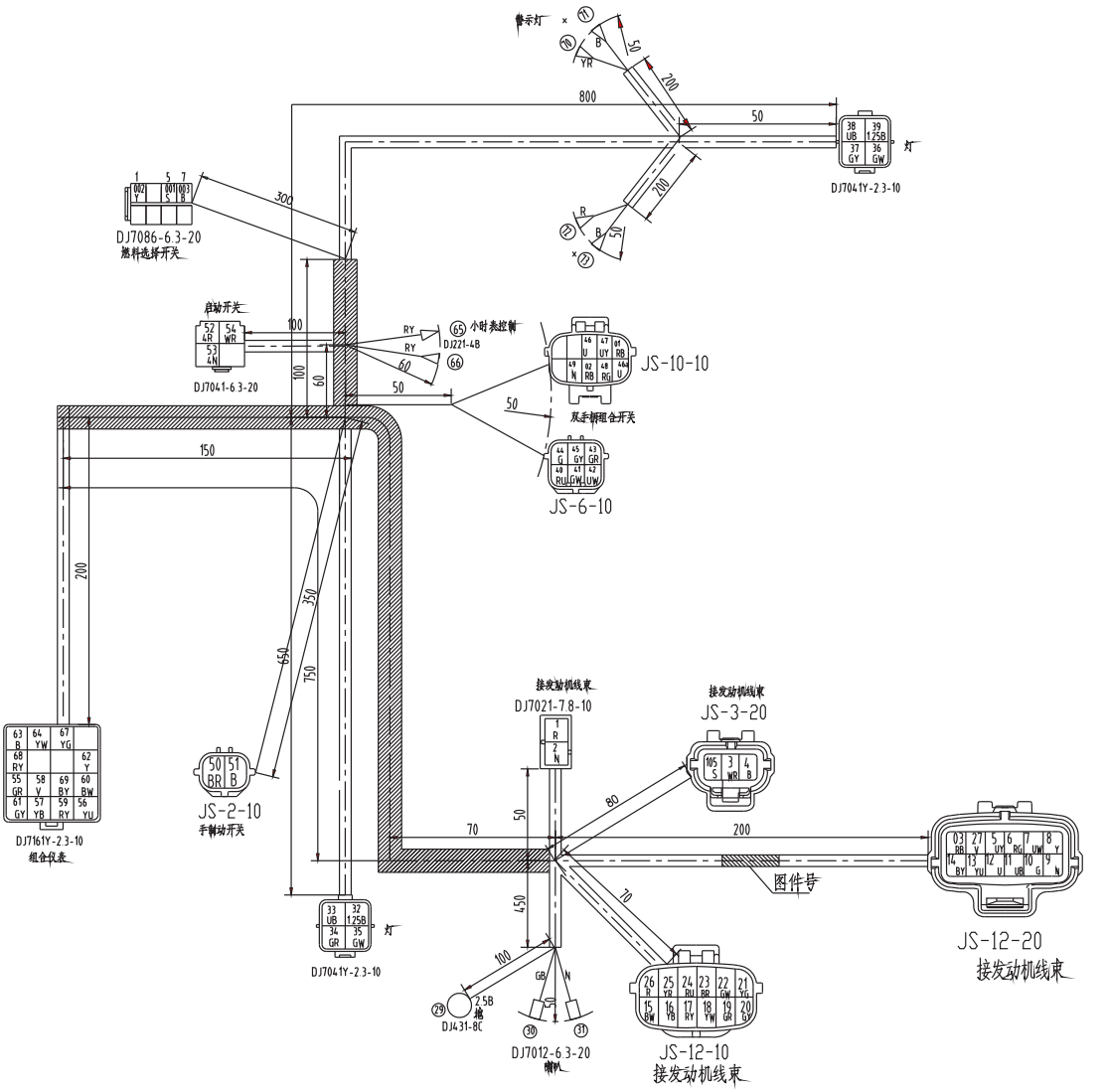


Fig. 2.30 Cabinet wire harness (CPQYD50 ~ 70–TY1)

https://truckmanualshub.com/

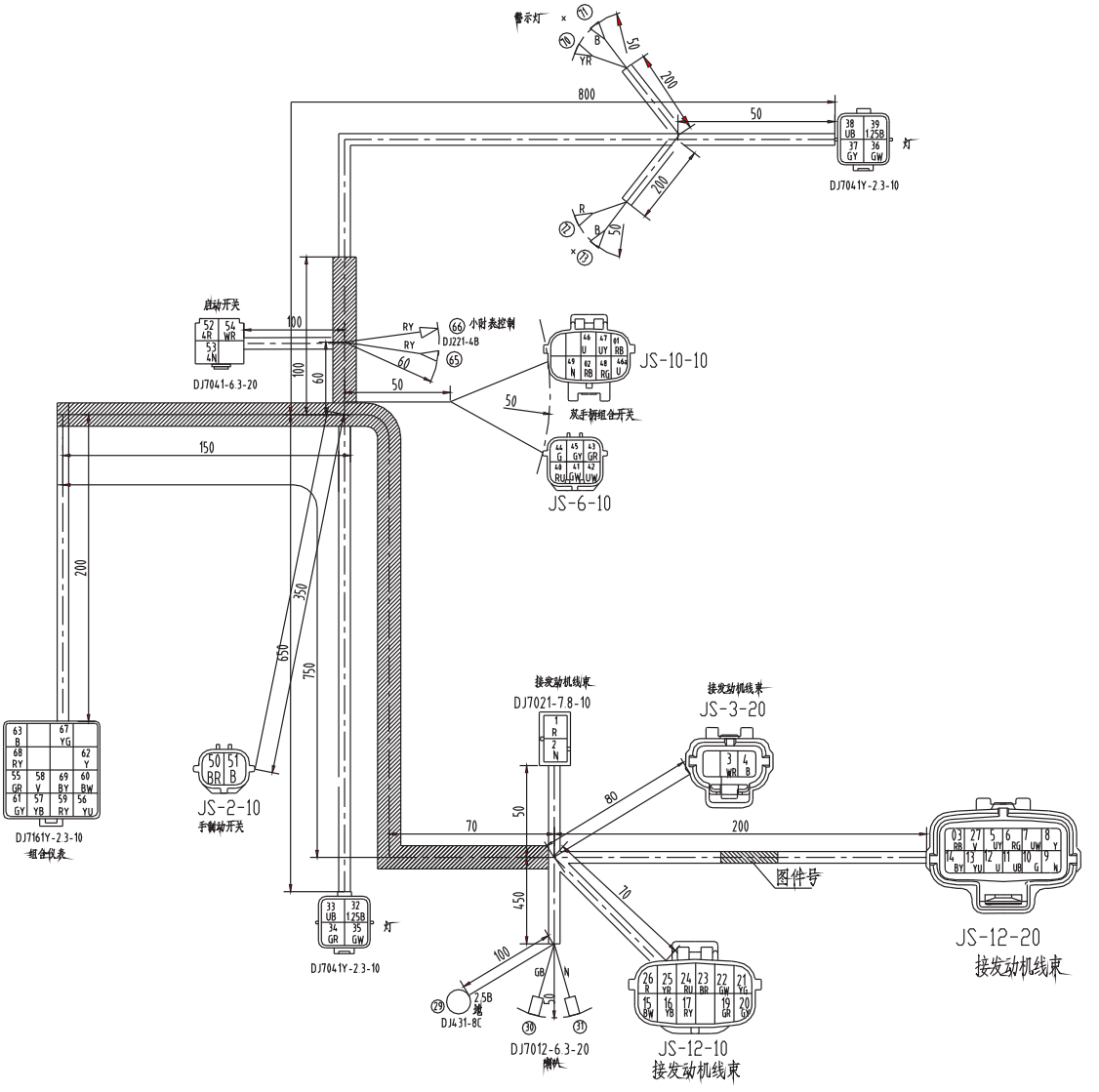


Fig. 2.31 Cabinet wire harness (CPYD50 ~ 70–TY1)

https://truckmanualshub.com/

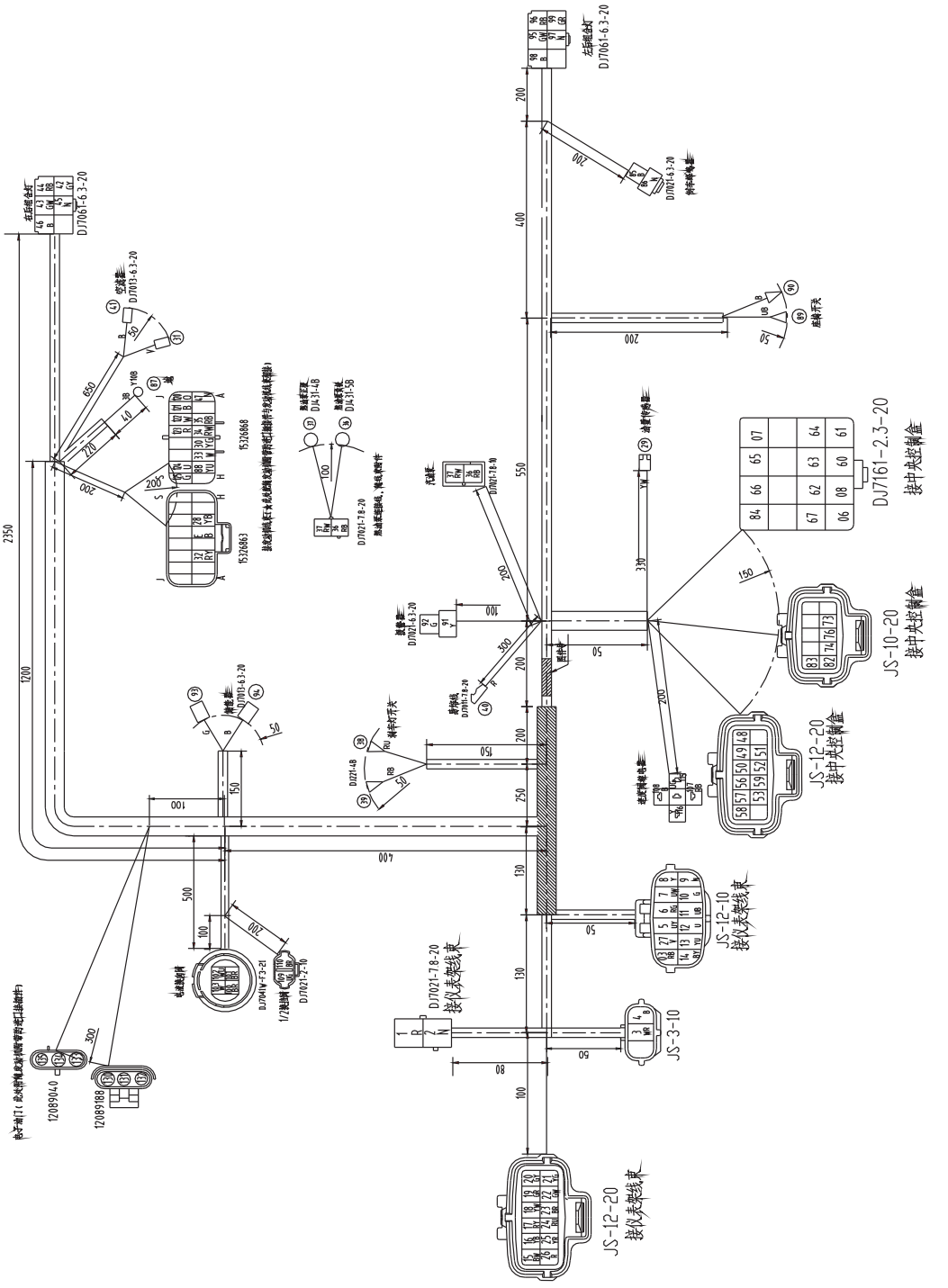


Fig. 2.32 Engine wire harness (CPQD50 ~ 70–TY1)

https://truckmanualshub.com/

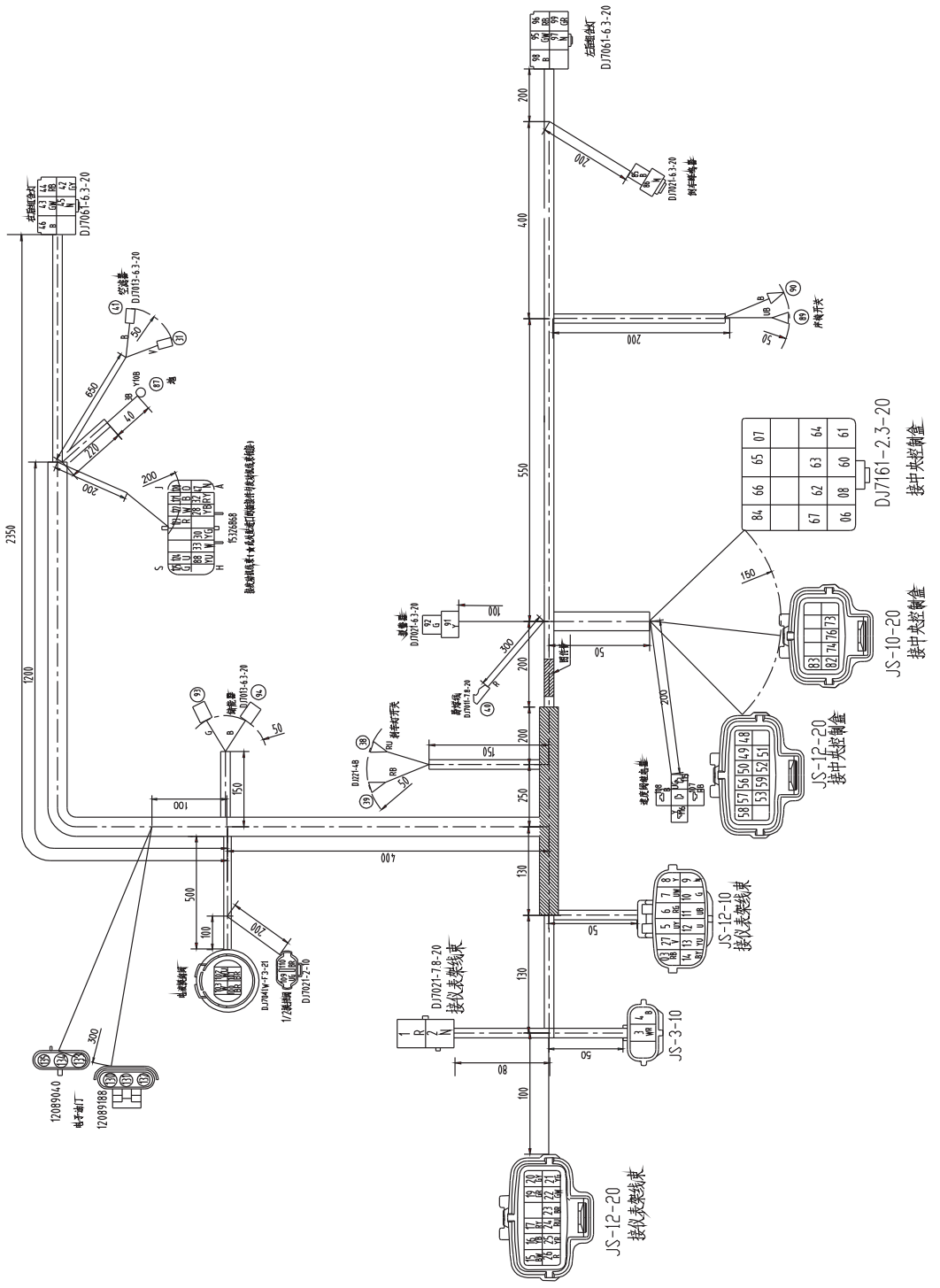


Fig. 2.33 Engine wire harness (CPYD50 ~ 70–TY1)

https://truckmanualshub.com/

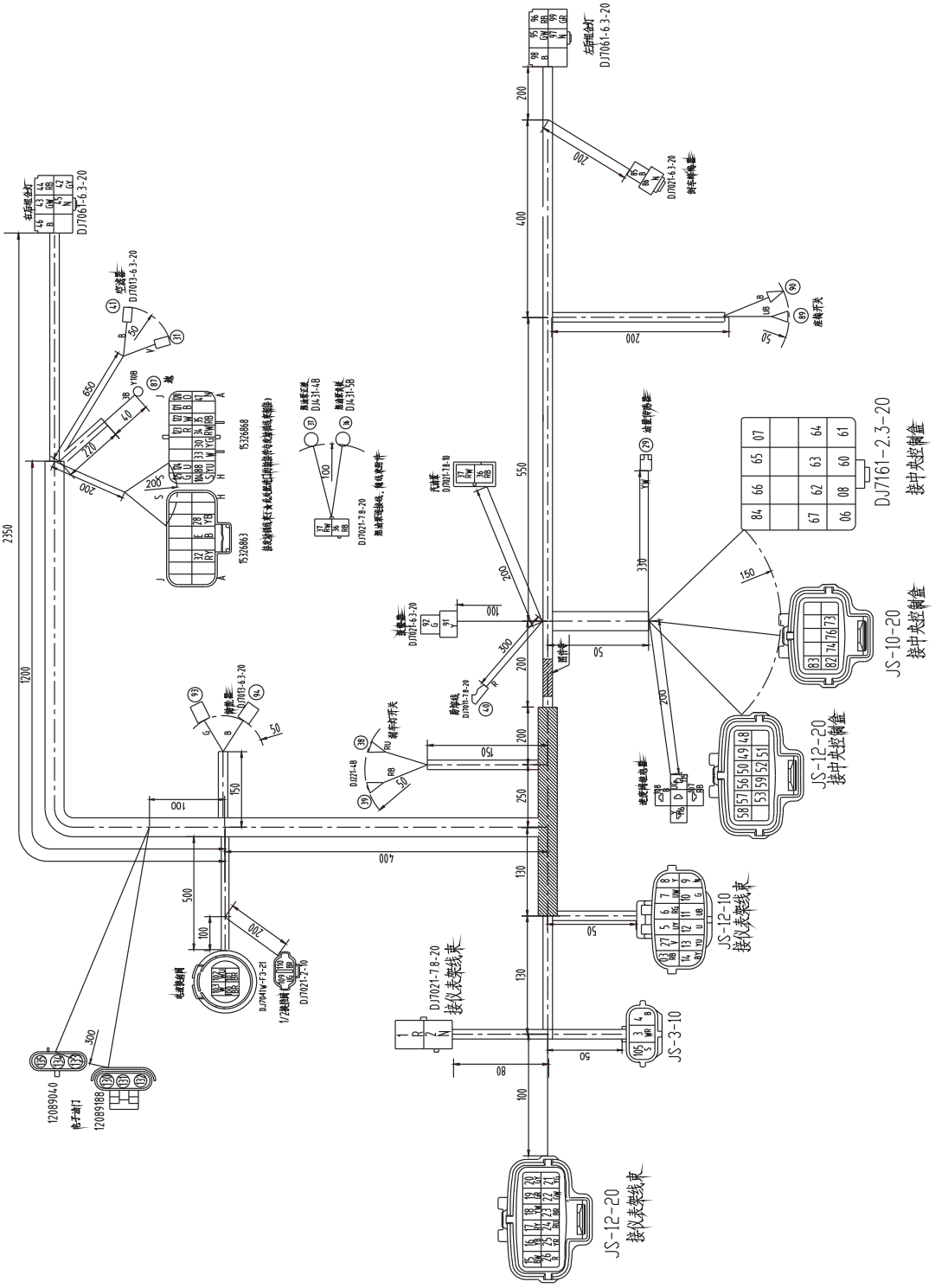


Fig. 2.34 Engine wire harness(CPQYD50 ~ 70–TY1)

https://truckmanualshub.com/

### 3. Transmission System

The transmission system consists of torque converter transmission & torque converter.

The main specifications of the system see table3.1

| Item | | | Specifications |
|---|---|---|---|
| Torque converter | Type | | 3–element,1–stage,2–phase |
| | Circular Dia.& stall torque ratio | | Dia.12.5” (ϕ315),stall torque ratio 3:1 |
| | Pressure setting MPa | | 0.5~0.7 |
| Charging pump | Type | | Crescent type,gear pump, transmission output |
| | Discharge r/min | | 40(2000rpm,2MPa) |
| Torque Converter Transmission | | | Power shift type |
| | Gear ratio | 1st(forward and backward) | 1.621 |
| | | 2nd(forward and backward) | 0.526 |
| | Hydraulic Clutch | Clutch outer dia. mm | 134 |
| | | Clutch inner dia. mm | 90 |
| | | Clutch thickness mm | 2.8 |
| | | Clutch surface area $cm^2$ | 77.4(6 faces) |
| | | Pressure setting MPa | 1.2~1.50 |
| Weight kg | | | About 295 |
| Oil amount l | | | About 30 |
| Oil type | | | Model SAE10W engine oil or No. 6 torque converter oil made in China |

https://truckmanualshub.com/

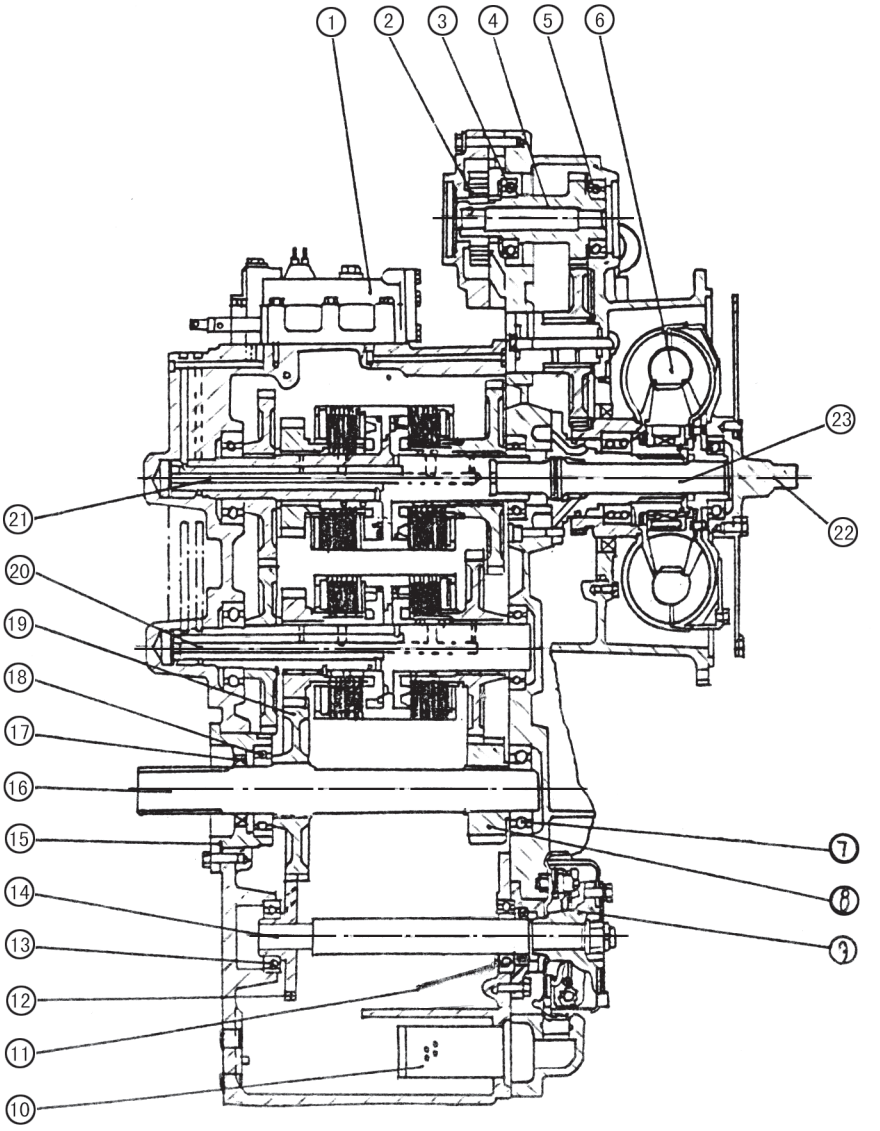


Fig.3.1 Hydraulic transmission

| | | |
|---|---|---|
| 1.Control valve | 2.Charging pump | 3.Ball bearing |
| 4.Drive shaft | 5.Ball bearing | 6.Torque converter |
| 7.Ball bearing | 8.Gear(30T) | 9.Parking brake |
| 10.Strainer | 11.Oil seal | 12.Gear(32T) |
| 13.Ball bearing | 14.Shaft | 15.Bearing cage |
| 16.Output shaft | 17.Oil seal | 18.Ball bearing |
| 19.Gear(47T) | 20.Reverse clutch pack | 21.Forward clutch pack |
| 22.Input plate | 23.Transmission output shaft | |

https://truckmanualshub.com/

### 3.1 General description

The transmission adopted in this machine is a rational combination of torque converter with power–shift type transmission.It has the following features.

(1) The inching valve is provided so as to improve the inching performance.Hence,the inching performance can be maintained when starting and at any rotational speed of engine.

(2) The clutch has 7 steel plates and 7 specially treated paper plates.Therefore excellent durability is ensured.

(3) The torque converter is provided with the free wheel so as to enhance the transmission efficiency(3–element,1–stage,2–phase type).

(4) The line filter is provided in the torque converter circuit so as to improve the durability.

### 3.2 Torque converter

Generally,the torque converter consists of pump wheel fitted to the input shaft,turbine wheel fitted to the output shaft,and stator wheel fixed to the housing(3–element,1–stage type).

The pump wheel is rotated by the drive shaft,so that the fluid in the pump forced out by the centrifugal force along the vanes of pump wheel.(At this time mechanical energy is converted to kinetic energy).

Thereby the fluid flows into the impeller of turbine wheel,transmitting torque to the output shaft.The direction of the fluid leaving the turbine wheel is changed by the stator wheel so that it flows into the pump wheel at the best angle.At this time a reaction torque pushing the stator is generated,as a result of which the output torque becomes larger than the input torque by the valve equal to the reaction torque.

As the rotational speed of turbine wheel increases,approaching to the input rotational speed,the change of fluid flow angle reduces,and the output shaft torque also reduces.And finally the fluid begins to flow contrary to the direction of stator vanes,as a result of which the reaction torque beings to affect in the reverse direction.

In this case the output shaft torque becomes smaller than the input shaft torque.So as to prevent this phenomenon,a free wheel(one–way clutch) is provided on the stator. When the reaction torque acts in the reverse direction,the stator wheel rotates idly.In this state the input torque becomes equal to the output torque so that high performance is ensured.

As the phase of torque transmission is changed by the mechanical means (clutch),the torque converter is called the 2–phase type.It features smooth operation and enhanced efficiency.

The torque converter is fixed to the flywheel through the flex plate so that it rotates always together with the engine.

https://truckmanualshub.com/

The torque converter case, turbine wheel, pump wheel and stator wheel are mounted inside the torque converter. The inside of the torque converter is filled with torque converter fluid. The inside of torque converter is filled with torque converter fluid.

The pump wheel has gear at its end which is engaged with the drive gear of charging pump to drive the charging pump.

The turbine wheel is spline-jointed to the main shaft.It serves to transmit power to the wet type multidisk clutch.

The construction of the torque converter see Fig.3.2.

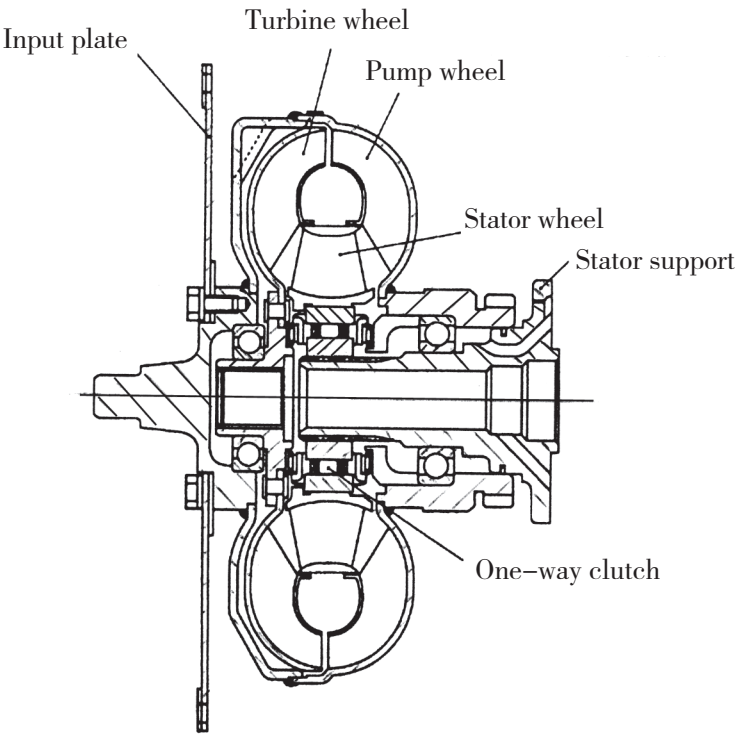


Fig.3.2 Torque converter

### 3.3 Charging pump

The construct of charging pump See Fig.3.3.

https://truckmanualshub.com/

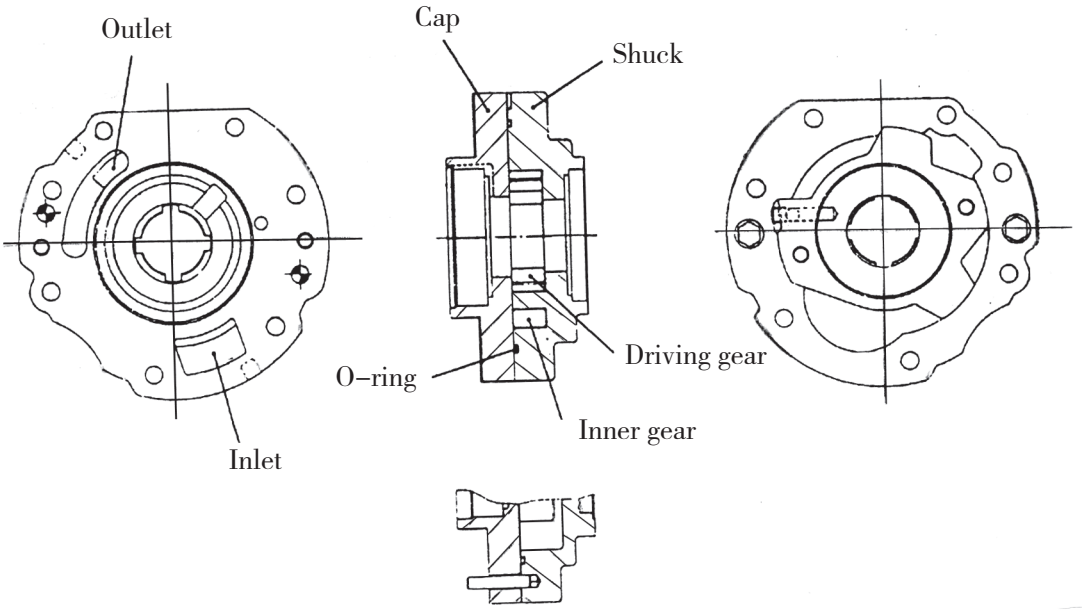


Fig.3.3 Oil pump

Charging pump consists of driving gear,inner gear(diven gear),shuck and cover,mounted on the upper end of the tor-con housing.Driving gear is driven by pump wheel,idle gear and oil pump driven gear ,the oil pump supply oil in lower half of the transmission for every area of the transmission.

**3.4 The hydraulic clutch group**

The hydraulic wet type multidisk clutch group is provided at the transmission side.The drive gear of forward clutch side is engaged with the driven gear whereas the counter drive gear of reverse clutch side is engaged with the counter shaft gear.

Inside one clutch group the 6 clutch disks(sintered plates) and the 7 clutch steel disks (steel plates) are alternately and assembled together with the piston.

Oiltightness of outer periphery and inner periphery of the piston is ensured with the slipper seal and "O" -ring,respectively,when it operates.In the neutral state the coil spring acts to disengage the multidisk clutch.The clutch surface is always lubricated with the oil returned from the oil cooler so that seizure and wear of the clutch surface are prevented.

When hydraulic pressure affects the piston,the alternately arranged sintered plates and steel plates are depressed so that the clutch group is made integral and transmits power from the torque converter to the drive gear.

Accordingly,power transmission route from the Tor-Co-Matic transmission is as follows:Turbine wheel→Main shaft→Clutch drum→Steel plate→Sintered plate→Forward

https://truckmanualshub.com/

or reverse gear→Output shaft.

### 3.5 Control valve and inching valve

The control valve see Fig.3.5.

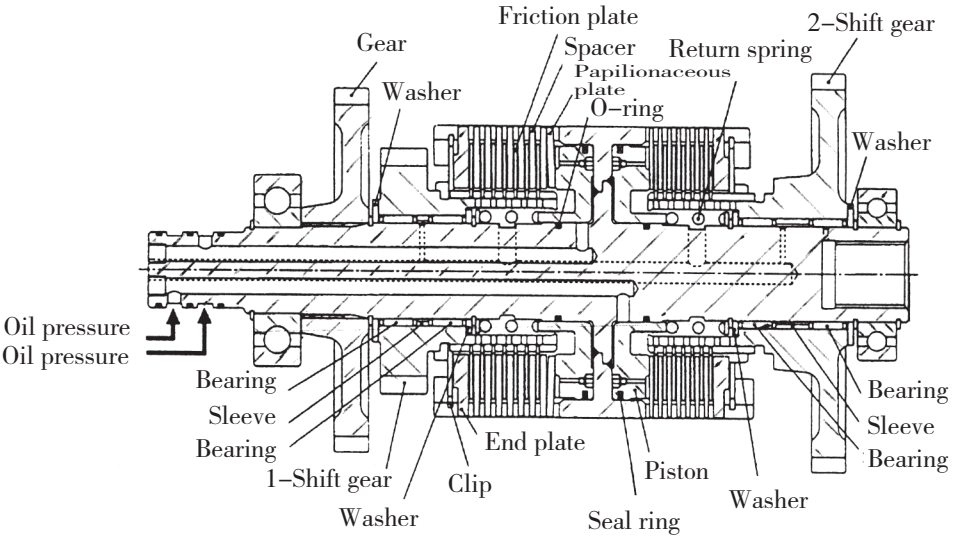


Fig.3.4 Forward clutch

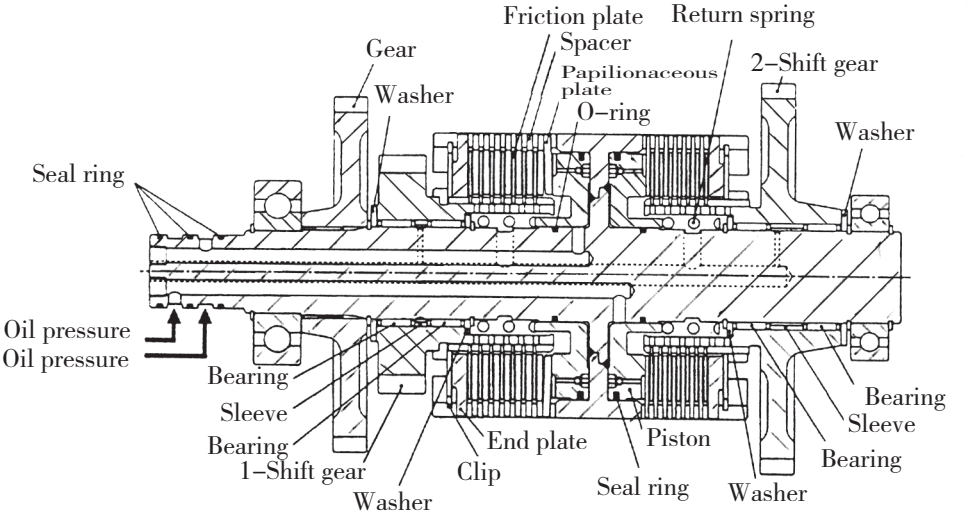


Fig.3.5 Reverse clutch

https://truckmanualshub.com/

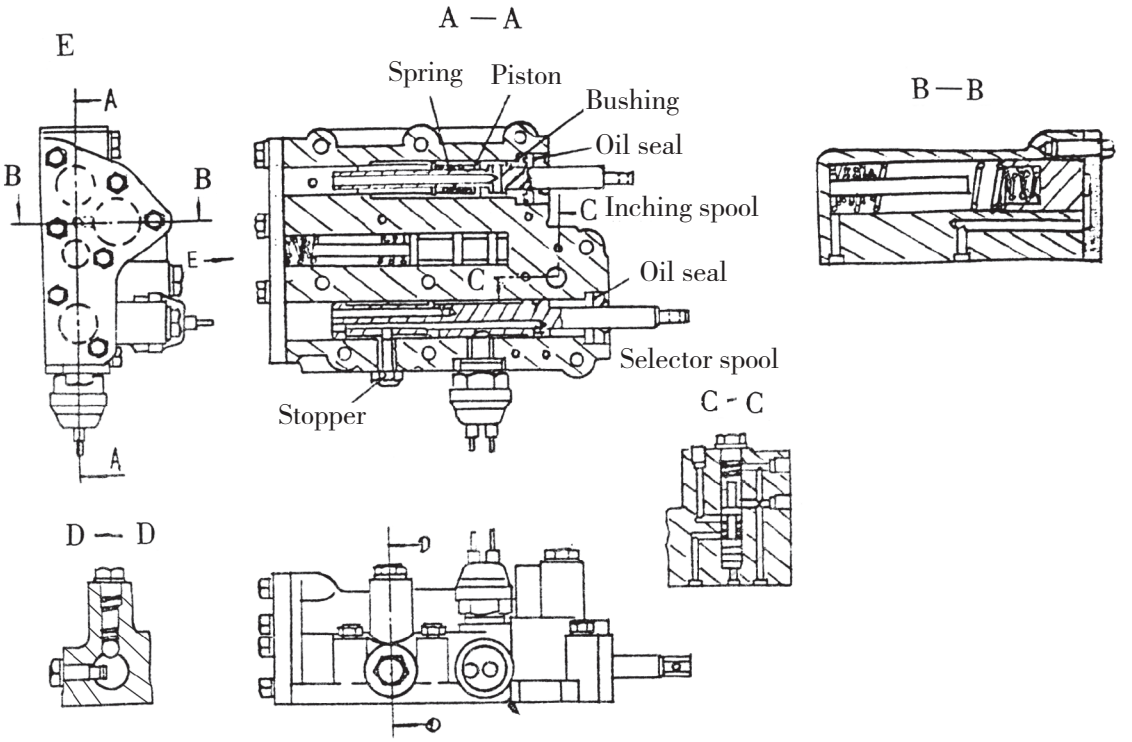


Fig.3.6 Control valve

The control valve is provided on the upper part of transmission case.The change spool and inching spool are incorporated in the valve body.

The clutch relief valve is designated to adjust the hydraulic pressure of the transmission clutch.The converter relief valve serves to adjust the hydraulic pressures of fluid which fills the converter.

The inching spool is connected to the link of brake pedal.When the brake pedal is depressed,the spool is forced in,so that hydraulic pressure of clutch is lowered temporarily to disengage the clutch.

**3.6 Hydraulic circulation system(See Fig.3.7)**

When the engine is started and the charging pump is put into operation,the torque converter fluid in the oil tank (transmission case) is forcibly sent to the control valve from the pump through the strainer.

The fluid sent from the charging pump is divided to two directions in the torque converter case,one for torque converter and the other for transmission.

https://truckmanualshub.com/

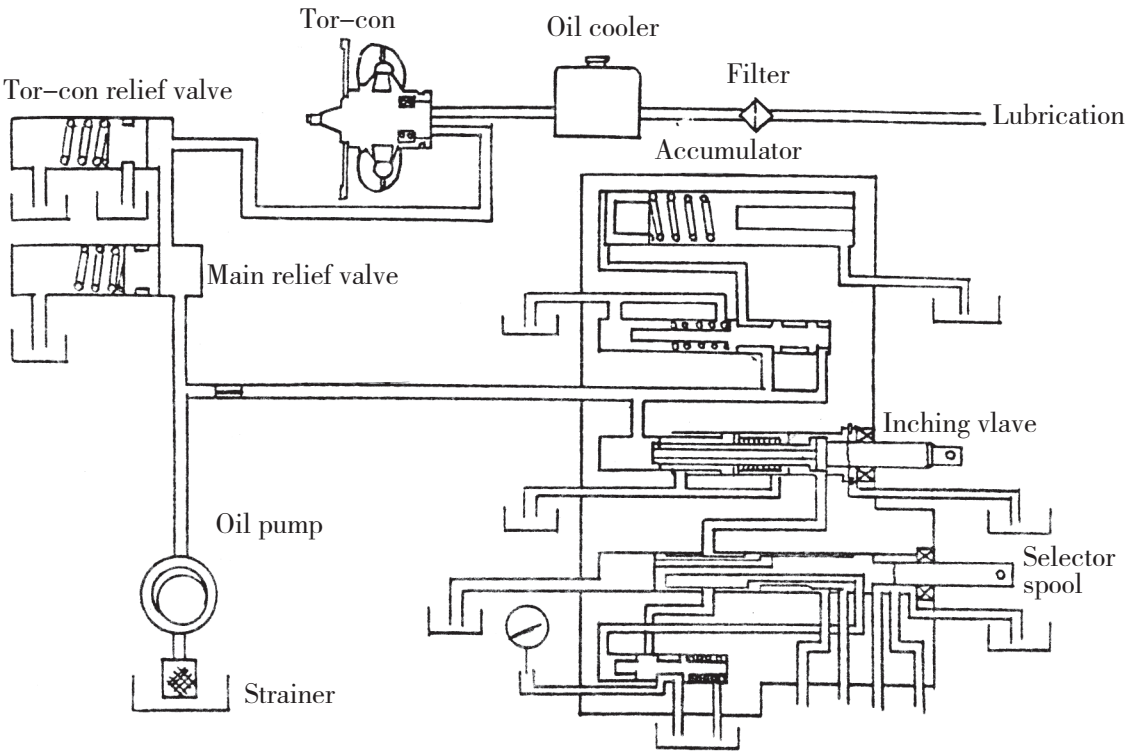


Fig.3.7 Tor–con hydraulic system

Pressure of the fluid for clutch is adjusted to 1.2 to 1.5 MPa with the relief valve.And then it is supplied to the control valve.Pressure of the fluid divided for the converter is adjusted to 0.5 to 0.7 MPa with the converter relief valve.After that this fluid reaches the wheel of torque converter.After it is cooled by the oil cooler,it lubricates the clutch group and then returns to the oil tank through the filter.

When the selector valve is in neutral position,the circuit from the selector valve to the clutch is closed.Therefore the fluid is joined with the torque converter filling fluid.

When the selector spool is set to the forward or reverse position,fluid flows into the accumulator due to action of modulate valve,so that pressure rises gradually,During this time the clutch starts to engage.

When the accumulator is filled with fluid,hydraulic preesure rises intensively so that the hydraulic clutch is completely engaged.

While the forward or reverse clutch is operating,another clutch is rotating between the sintered plates and the steel plates.Therefore this part is lubricated with oil sent from the oil cooler to prevent seizure of plates.

When the brake pedal is depressed and the inching valve is actuated,most of

https://truckmanualshub.com/

hydraulic oil supplied to the clutch is drained from the inching valve and returns to the transmission case.The fluid for the torque converter circulates in the same manner as in neutral state.

### 3.7 Cautions when the machine trouble occurs

When the machine with Tor–Co–Matic transmission cannot run by itself due to trouble and it must be dragged with another machine,be sure to observe the following requirements.

(1) Remove the propeller shaft between the differential and the transmission.

(2) Set the change lever in neutral position.

Since the torque converter pump does not operate,normal lubrication is not performed.Therefore,if rotation is transmitted from the front wheel to the transmission gear and clutch disk,seizure may occur.

### 3.8 Troubleshooting Guide

(1) Low power:see Table 3.2

(2) Abnormal rise of oil temperature:See Table 3.3

(3) Noisy transmission:see Table 3.4

(4) No power transmission:See Table 3.5

(5) Oil leakage:See table 3.6

https://truckmanualshub.com/

Table 3.2

| | Possible causes | Checking method | Remedy |
|---|---|---|---|
| Torque Converter | A.Oil pressure too low | | |
| | (1) Low oil level | Check oil level | Add oil |
| | (2) Air sucked from suction side. | Check joints and pipe | Retighten and replace packing |
| | (3) Clogged oil filter | Disassemble and check | Clean or replace |
| | (4) Insufficient discharge of pump | Disassemble and check | Replace |
| | (5) Main relief valve coil spring deteriorated | Check spring tension | Replace |
| | (6) Seal ring or O–ring damaged or worn. | Disassemble,check and measure. | Replace |
| | B.Flywheel damaged or in contact with other parts | Drain a small quantity of oil and check for presence of foreign matter. | Replace |
| Transmission | A.Improper oil is used or bubbles are foamed. | Check | |
| | (1) Air sucked from suction side. | Check joints and pipes | Retighten or replace |
| | (2) Torque converter oil pressure is too low and bubbles are foamed. | Measure pressure. | Adjust pressure |
| | B.Clutch slips | | |
| | (1) Low oil pressure | Measure pressure | Adjust pressure |
| | (2) Seal ring worn | Disassemble,check and measure | Replace |
| | (3) Clutch piston ring worn | Disassemble and check | Replace |
| | (4) Clutch disks are burned and plates deformed. | Disassemble and check,Start engine and place direction control lever in forward, reverse and neutral respec–tively.Truck runs with the lever in neutral but not in fwd.or bwd. | Replace |
| | C. Link lever between brake shift and valve spool is improperly positioned. | Check and measure. | Adjust |
| Engine | Engine power drops | Check STALL rmp.Check working sound of enginge. Check maximum rmp of engine with gears in neutral. | Adjust or repair engine |

https://truckmanualshub.com/

Table 3.3

| Possible Causes | | Checking Method | Remedy |
|---|---|---|---|
| Torque Converter | (1)Low oil level | Check oil level | Add oil |
| | (2)Clogged oil filter | Disassemble and check | Clean or replace |
| | (3)Flywheel is in contact with other parts | Drain oil from oil filter or oil tank and check for foreign matter. | Replace |
| | (4)Air is sucked | Check joints and piping at suction side | Retighten or replace gasket |
| | (5)Water mixed in oil | Drain and check oil | Replace oil |
| | (6)Low flow rate of oil | Check piping for damage or bending | Repair or replace |
| | (7) Bearings worn or seized | Disassemble and check | Repair or replace |
| Transmi-ssion | (1)Clutch drags | Check whether the truck runs with gears in neutral. | Replace clutch plates |
| | (2)Bearings worn or seized | Disassemble and check | Replace |

Table 3.4

| Possible Causes | | Checking Method | Remedy |
|---|---|---|---|
| Torque converter | (1) input plate broken | Check rotational sound at low rmp. | Replace input plate |
| | (2) Bearings damaged or worn | Disassemble and check. | Replace |
| | (3) Gears broken | Disassemble and check. | Replace |
| | (4) Spline worn | Disassemble and check. | Replace |
| | (5) Noisy gear pump | Disassemble and check. | Repair or replace |
| | (6) Loose bolts | Disassemble and check. | Retighten or replace |
| Transmission | (1) Bearings worn or seized | Disassemble and check. | Replace |
| | (2) Gears broken | Disassemble and check. | Replace |
| | (3) Spline worn | Disassemble and check. | Replace |
| | (4) Loose bolts | Disassemble and check. | Retighten or replace |

https://truckmanualshub.com/

Table 3.5

| | Possible Causes | Checking Method | Remedy |
|---|---|---|---|
| Torque Converter | (1) Input plate broken | Check rotational sound at low rmp and check whether front cover rotates | Replace |
| | (2) lack of oil | Check oil level | Add oil |
| | (3) Driving system of oil pump malfunctioning | Disassemble and check | Replace |
| | (4) Shaft is broken | Disassemble and check | Replace |
| | (5) Oil pressure is too low | Check whether suction pressure generates at inlet side of pump | Replace |
| Transmission | (1) Lack of oil | Check oil level | Add oil |
| | (2) Damaged seal ring | Disassemble and check | Replace |
| | (3) Clutch plates seized | Check clutch oil pressure | Replace |
| | (4) Shaft is broken | Disassemble and check | Replace |
| | (5) Clutch cover broken | Disassemble and check | Replace |
| | (6) Snap ring for clutch cover is broken. | Disassemble and check | Replace |
| | (7) Foreign material in clutch oil tank | Disassemble and check | Clean or replace |
| | (8) Spline part of shaft is worn. | Disassemble and check | Replace |

Table 3.6

| | Possible Causes | Checking method | Remedy |
|---|---|---|---|
| Torque Converter and transmission | (1) Damaged oil seal | Disassemble and check.Oil seal lip or its mating sliding part is worn. | Replace oil seal |
| | (2) Case connected improperly. | Check | Retighten or replace gasket. |
| | (3) Loose joints and piping | Check | Repair or replace gasket. |
| | (4) loose drain plug | Check | Retighten or replace gasket |
| | (5) Oil is ejected from breather | Drain oil and check for mixing of water. Check whether air is sucked from suction joint. Check air hole of air breather. | Replace oil. Retighten or replace packing. Repair |
| | (6) Excessive oil | Check oil level. | Remove excess oil. |

https://truckmanualshub.com/

## 4.Front Axle

The main specifications of the front axle see Tale 4.1.

Tale 4.1

| | | 5–7t | 8–10t |
|---|---|---|---|
| Type | | Cast–steel,full–floating type | |
| Main reduction | Type | Spiral bevel pinion type | |
| | Reduction ratio | 4.75 | 6.33 |
| Hub reduction | Type | Planetary gear type | |
| | Reduction ratio | 4.25 | 3.75 |
| Total reduction ratio | | 20.19 | 23.75 |
| Oil amount | Main reduction,differential | 10L | |
| | Hub reduction | Left and right each 8L | Left and right each 10L |
| Driving wheel | Tire(left and right each 2) | 8.25–15–14PR | 9.00–20–14PR |
| | Rim | 6.50–15 | 7.0–20 |
| | Air pressure kPa | 830 | 760 |

### 4.1 General description

The front axle that consists of a main reduction,differential,hub reduction and brakes as shown in Fig.4.1 and Fig.4.2 is bolted to the front side of the frame.The masts are installed on the axle housing.

### 4.2 Main reduction and differential

The main reduction and differential consists primarily of a cross case,ring gear and drive pinions,which are all assembled on the differential carrier as shown in Fig.4.3,and is fitted to the axle housing through packings.

The cross case is of the split type.The cross case,assembled with bolts,contains side gears and pinions fitted to the spider,being in mesh with each another.The drive pinions supported by two taper roller bearings are installed in the bearing cage fitted to the differential carrier through shims and packings.The ring gear is of the spiral bevel gear type.It is bolted to the cross case.Power from the transmission is reduced by the combination of the ring gear and drive pinions.

https://truckmanualshub.com/

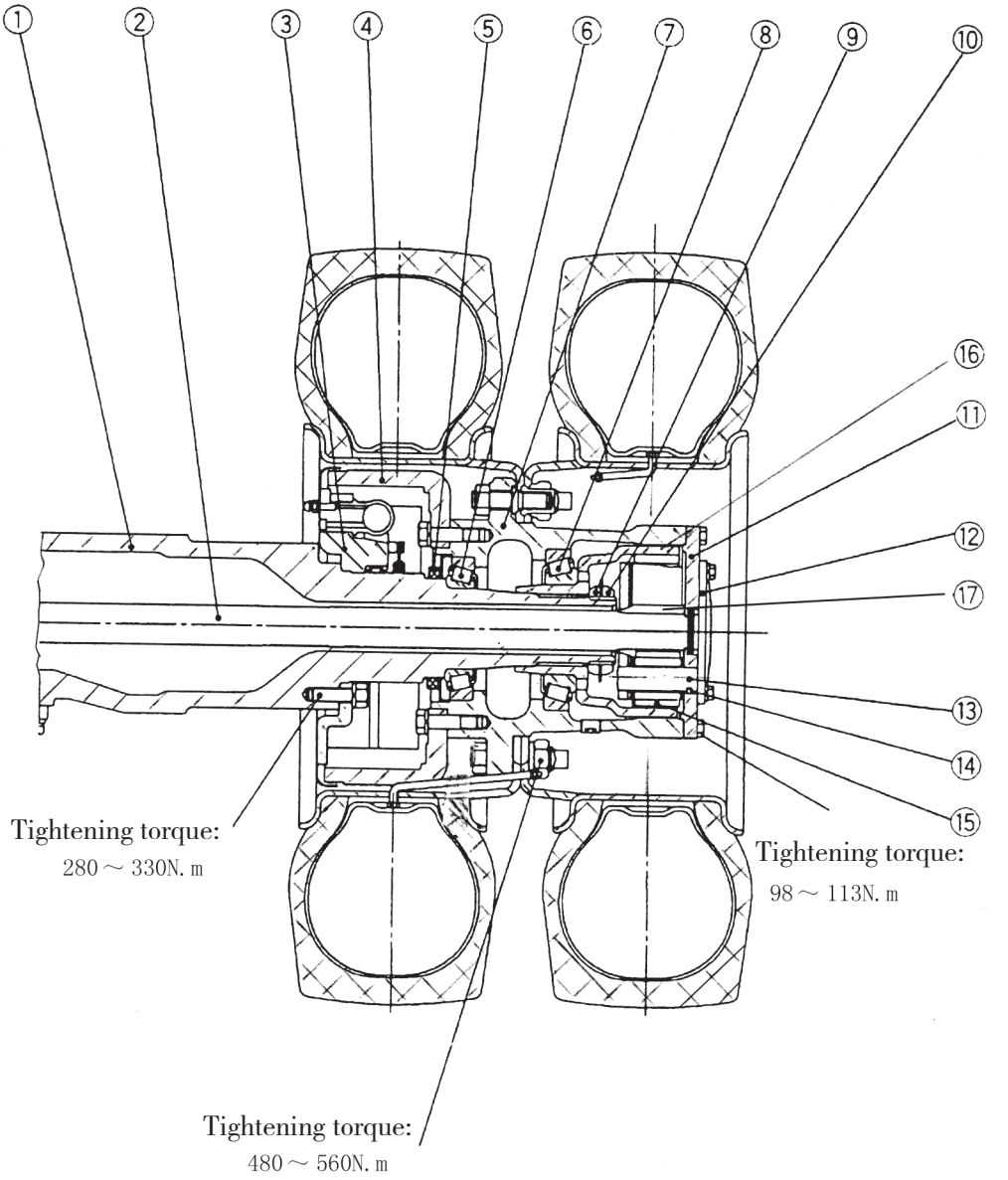


Fig.4.1 Front axle(5–7t truck)

| | | | |
|---|---|---|---|
| 1.Axle house | 2. Half–shaft | 3. Wheel brake | 4.Brake drum |
| 5.Oil seal | 6.Taper roller bearing | 7.Hub | |
| 8. Taper roller bearing | | 9.Adjust nut | 10.Lock nut |
| 11.Planet carrier | 12.Thrust cap | 13.Shaft | 14.Steel ball |
| 15. Planet gear | 16.Gear | 17.Sun gear | |

https://truckmanualshub.com/

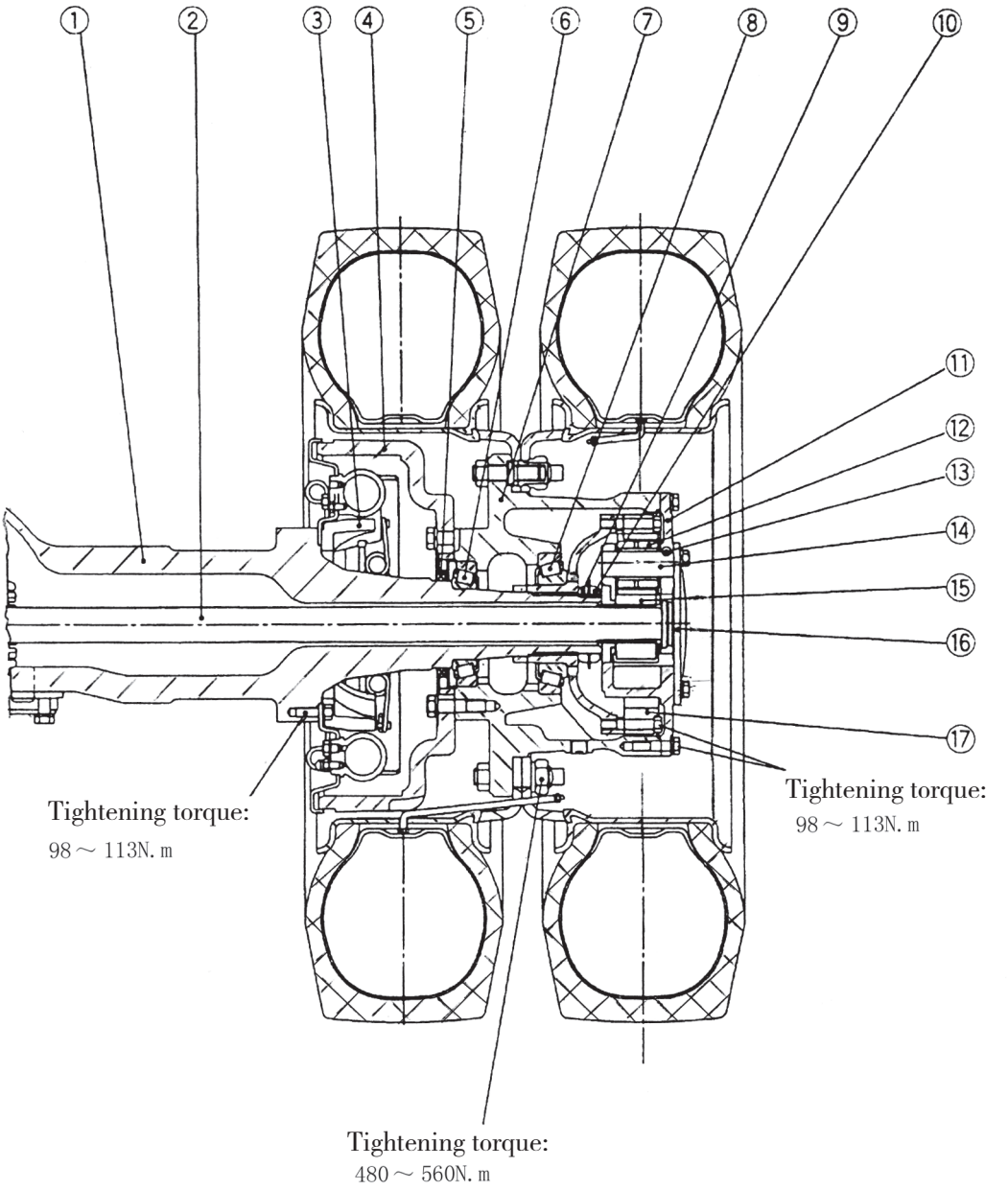


Fig.4.2 Front axle(8–10t truck)

| | | | |
|---|---|---|---|
| 1.Axle house | 2. Half–shaft | 3. Wheel brake | 4.Brake drum |
| 5.Oil seal | 6.Taper roller bearing | 7.Hub | |
| 8. Taper roller bearing | | 9.Adjust nut | 10.Lock nut |
| 11.Planet carrier | 12.Thrust cap | 13.Steel ball | 14.Shaft |
| 15 Sun gear | 16.Thrust cap | 17.Gear | |

https://truckmanualshub.com/

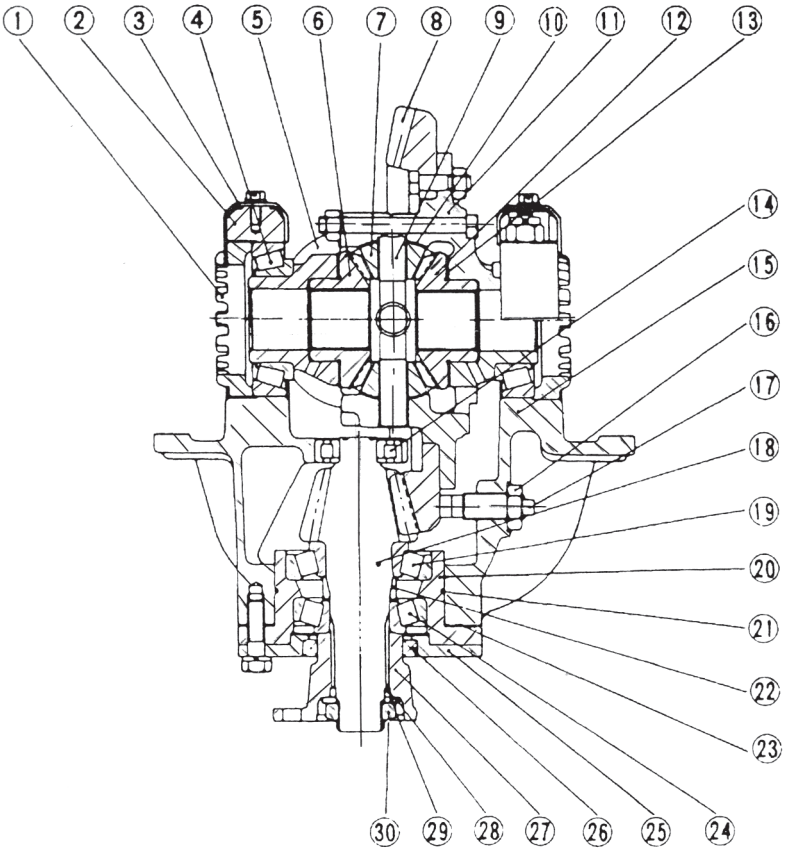


Fig.4.3 Main reduction,differential

| | | |
|---|---|---|
| 1.Adjust nut | 2.Thrust cap | 3.Lock plate |
| 4.Tapper roller bearing | 5.Differential house | 6.Half-shaft gear |
| 7.Planet gear | 8.Gear | 9.Spider |
| 10.Thrust washer | 11.Differential house(right) | 12.Half-shaft gear |
| 13.Thrust washer | 14.Needle bearing | 15.Main reduction house |
| 16.Lock nut | 17.Adjust nut | 18.Driving pinion |
| 19.Taper roller bearing | 20.Bearing cage | 21.O-ring |
| 22.Spacer | 23.Shim | 24.Taper roller bearing |
| 25.Oil seal carrier | 26.Oil seal | 27.Flange |
| 28.O-ring | 29.Washer | 30.Lock nut |

https://truckmanualshub.com/

### 4.3 Hub reduction

The hub reduction is of the planet gear type consisting of a sun gear,planetary gears and an internal gear.Two hub reduction are installed on each end of the axle housing.The sun gear is splined to the axle shaft and locked with snap ring.The planetary gears are installed onto the shafts in the planet carrier which is fixed to the wheel hub.The internal gear is splined to the axle spindle through hub.

The principle of power transmission is followed (see Fig.4.4): When the sun gear turns,the rotation is transmitted to the pinion gears and ring gear.However,since the ring gear is fixed to the spindle,the pinion gears revolve around the sun gear while spining themselves.The pinion gears are installed to the carrier which is fixed to the wheel hub,therefore,power of the drive shaft causes the wheel to turn.

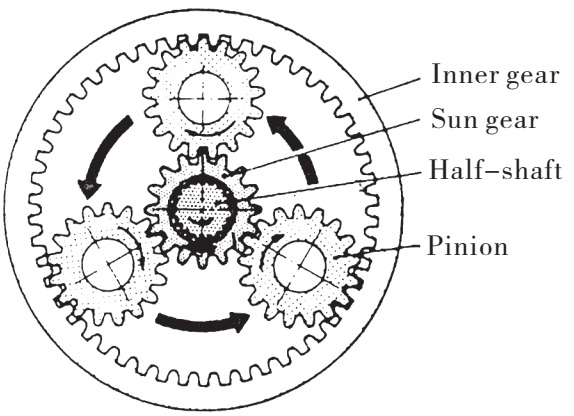


Fig.4.4 Hub reduction

https://truckmanualshub.com/

### 4.4 Troubleshooting guide

See Table 4.2

| Cause | Trouble | Correction |
|---|---|---|
| (1)Oil leaks from differential carrier | Loose bolt or broken gasket of differential carrier. | Replace or retighten. |
| | Breather is clogged. | Clean or replace. |
| | Oil seal is worn or damage. | Replace. |
| (2)Noisy differential | Gear is worn,damaged or broken. | Replace. |
| | Bearing is worn,damaged or broken. | Replace. |
| | Improper backlash | Adjust. |
| | Loose spline fitness of side gear to propeller shaft | Replace parts. |
| | Insufficient gear oil | Add as necessary. |

### 4.5 The remedy specifications

See Table 4.3

| Part | Item | STD Value |
|---|---|---|
| Differential | Thickness of bearing cage shim | 0.1,0.2,0.5 |
| | O.D. of oil seal sliding part of companion flange | 69.95–70 |
| | Backlash of spline part of companion flange and drive pinion. | 0.036–0.067 |
| | Backlash of drive pinion and ring gear | 0.20–0.30 |
| | Preload of drive pinion(N.m) | 2.5–3.5 |
| | Back swing of ring gear. | 0.25–0.38 |
| | Tightening torque of ring gear set bolt (N.m) | 100–150 |
| | Tightening torque of cross case set bolt(N.m) | 100–150 |
| | Thickness of pinion washers | 1.562–1.613 |
| | Backlash of spline of side gear and drive shaft | 0.038–0.130 |
| Axle housing | Tightening torque of the set bolt for axle housing and differential carrier(N.m) | 150–175 |
| | O.D. of hub bearing fitting part of spindle | 89.66–89.88 |
| | O.D. of spindle oil seal sliding part | 109.913–110 |
| | Tightening torque set bolt securing axle housing to frame(N.m) | 630–946 |
| | Tightening torque set bolt securing brake floor to axle housing | 280–330 |
| | O.D. of mast support part(N.m) | 189.2–190 |
| Hub | I.D. of hub bearing fitting part (Inside) | 159.32–159.72 |
| | I.D. of hub bearing fitting part (Outside) | 179.32–179.72 |
| | I.D. of hub Oil seal fitting part | 164.6–165 |
| | Tightening torque of set bolt securing brake drum to hub(N.m) | 280–330 |
| | Tightening torque of set bolt securing planet carrier to hub(N.m) | 98–113 |
| | Tightening torque of hub nut (N.m) | 480–560 |

https://truckmanualshub.com/

## 5.Brake System

The main specifications of the brake system See Table 5.1.

Table 5.1

| | | | CPCD50,60,70 | | CPCD80,100 |
|---|---|---|---|---|---|
| | | | Homeland engine | Import engine | |
| Wheel brake | Brake type | | Vaccum assistant | Power brake | |
| | Brake model | | Front wheel,internal expansion type,lining brake | | |
| | I.D. of brake drum | | Φ317.5 | | Φ438.15 |
| | Wheel cylinder drum | | Φ31.75 | | Φ47.62 |
| | Lining size | | 324×100×10 | | 489×100×12.7 |
| | Surface area of lining $cm^2$ | | 4×324 | | 4×489 |
| Parking brake | Type | | Transmission middle shaft–mounted,internal expansion mechanical type | | |
| | I.D. of brake drum | | Φ160 | | |
| | Disk size | | 140×36×3.5 | | |
| | Surface area of disk $cm^2$ | | 50.4 | | |
| Brake pump & valve | Brake cylinder mm | | Φ31.75 | | |
| | I.D. of Vaccum assistant Fwd/bwd | | Φ9” /Φ10” | | |
| | Brake valve | Type:main vale/safety valve | | Open core type/Close core type | |
| | | Move model | | Spring type | |
| | | Intake flux | | 27 | |
| | | Max.working oil pressure | | 10.5 | |
| Reserver | Type | | | Spring type | |
| | Capacity cc | | | 66.7 | |
| | Piston:I.D. × Stroke mm | | | Φ50×34 | |
| | Oil pressure: Max./Working time MPa | | | 7.2/4.9 | |
| | Relief oil pressure | | | 13 | |

https://truckmanualshub.com/

**5.1 General description**

The braking system consists of traveling and parking brakes. The traveling brake is mounted inside the driving wheel, while the parking brake is mounted on a intermediate shaft at the rear side of the gear box. The traveling brake has two modes of power brake and vacuum brake.

**5.2 Power brake (For the schematic diagram of the system, refer to 5.1)**

The traveling braking system that adopts the power brake mode consists of brake pedal, brake valve, energy storage and brake.

The power brake is to make use of the pressure oil transferred by pinion pump set specially for the hydraulic system of forklift, one way of oil enters into brake valve and the sub–pump of brake to produce braking, while the other way of oil enters into accumulator to store energy for spare use. Both ways of the oil are controlled by the stroke of brake pedal.

5.2.1 Brake pedal device (See Fig. 5.2)

Brake pedal and inching pedal are mounted at the left side of the frame through a bracket. The brake pedal at the right side pushes forward the piston assembly of brake valve through connecting bar and makes the pedal control the pressure oil. The inching pedal at the left side and brake pedal at the right side play the role of linkage and can manipulate the brake valve and the inching valve of gearbox as well.

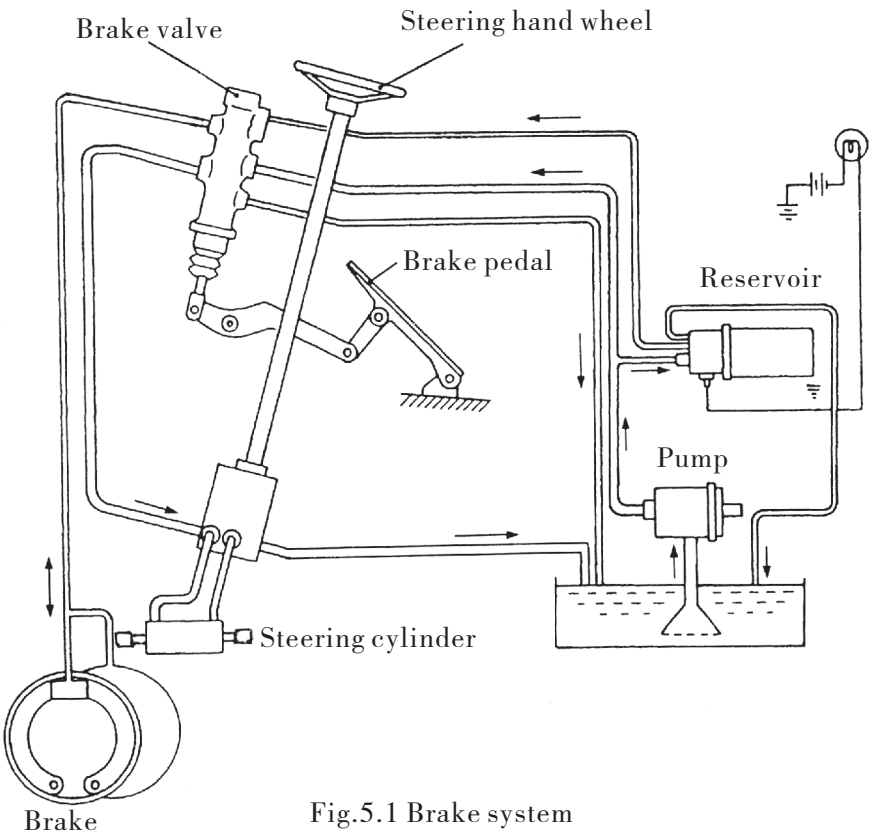


Fig.5.1 Brake system

https://truckmanualshub.com/

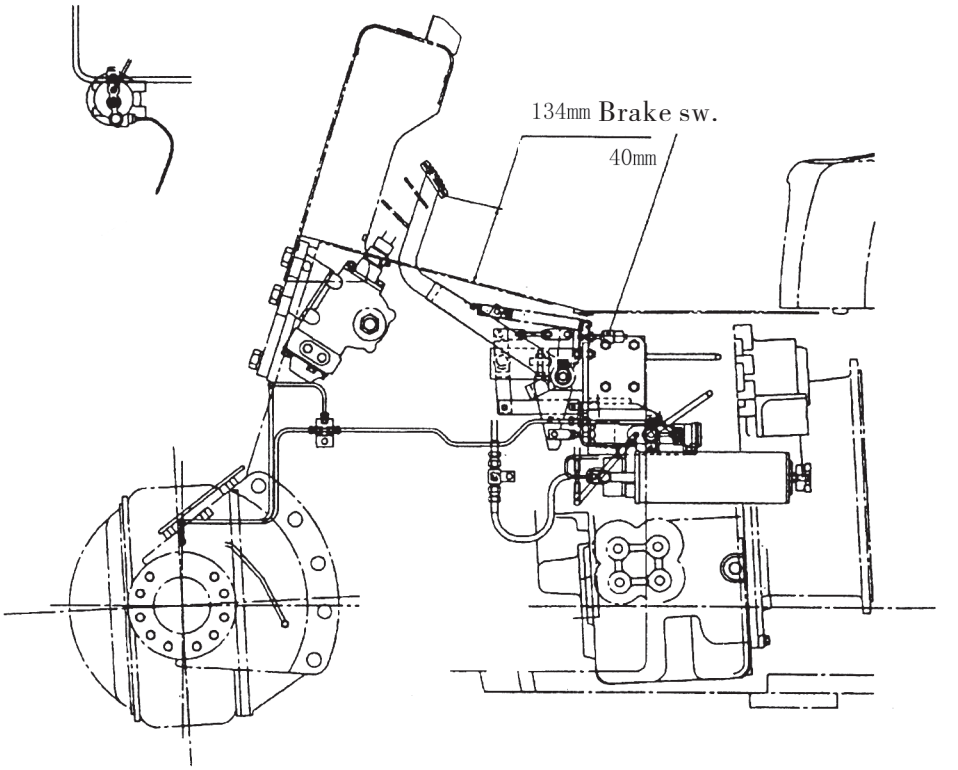


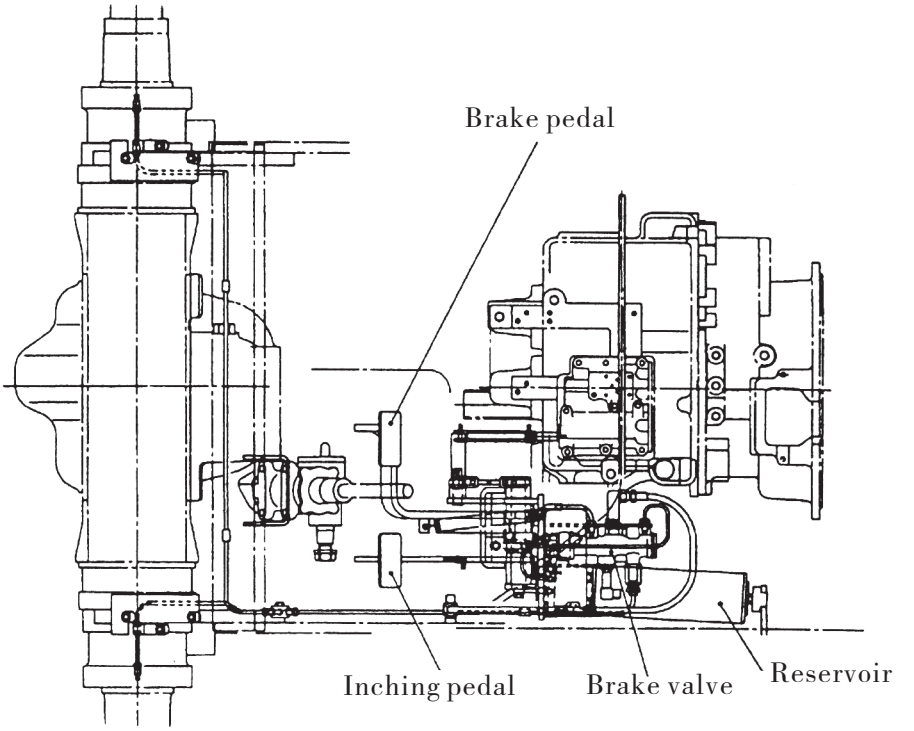


Fig.5.2 Brake pedal unit

https://truckmanualshub.com/

5.2.2 Brake valve (See Fig. 5.3)

(1) Non–brake status

In case of not–braking state and due to opening of port A of brake valve , the pump interface and the steering interface are interlinked and the steering works normally. When the brake pedal is not stepped on, even if the steering operation will not produce braking, the oil pressure of control oil pressure chamber D will not rise as the port B is closed at this time.

(2)Starting and finishing of the braking

a)When the brake pedal is stepped on, the piston assembly (part NO.10) moves to the left , the valve sleeve (part NO.7) and backflush piston (part NO.5) are pressed to the left side by the spring set (part NO.8) and meanwhile the return spring (part NO.6) is compressed to the left side .

b)The movement of work piece (part NO.7) closes the place A, breaks the interface of D and oil return tank. B opens correspondingly and makes D chamber and pump interface connect.

c)At this time, the valve sleeve (part NO.7) moves to the left and the oil pressure that leads to the sub–pump of brake rises along with the increase of oil pressure of pump interface and chamber D due to compression. Meanwhile, the relatively higher oil pressure in chamber D moves to the right and push the backflush piston (part NO.5) and this pushing force is in balance with pedal force.

d)When the maximum pedal force is input in the right end of piston and in order that the oil pressure of D chamber will not exceed the maximum adjusting oil pressure, the bolts and pedal brackets are used for position limitation.

e)When your foot leaves off the pedal , the counterforce of backflush piston and the spring counterforce of work pieces (part NO.6) and (part NO.8) return the valve sleeve (part NO.7) to the original position and the braking process is finished.

(3)The working process of accumulator

When the oil pump stops working, ( due to engine stops) or is damaged, the accumulator needs to enter into working state.

a)When the brake pedal is further stepped on, valve sleeve (part NO.7), back flush piston (part NO.5) and contact pin of check valve move together towards left, the contact pin will prop open the ball and chamber D and accumulator are interlinked at this time and the pressure oil of accumulator is utilized to play the braking role for brake sub–pump.

b)When your foot leaves off the pedal, the valve sleeve , back flush piston and contact pin move to the right at the same time. The ball of the check valve restores joining with valve seat under the action of spring force (check valve closes) and the contact pin stops at this position correspondingly.

https://truckmanualshub.com/

c)The backflush piston moves to the right and C open to make the oil of brake sub-pump of brake return to the fuel tank through chamber D.

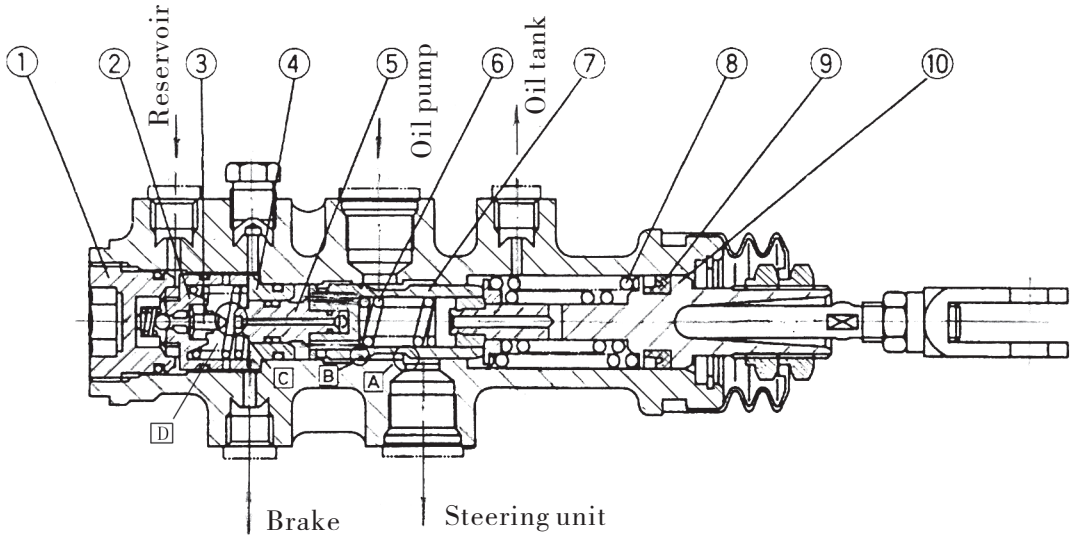


1.Plug 2.1-way valve seat 3.1-way valve pin 4.Bounce-back piston seat
5. Bounce-back piston 6. Return spring 7. Valve sleeve 8.Spring
9.Oil seal 10.Piston ass' y

Fig.5.3 Brake valve

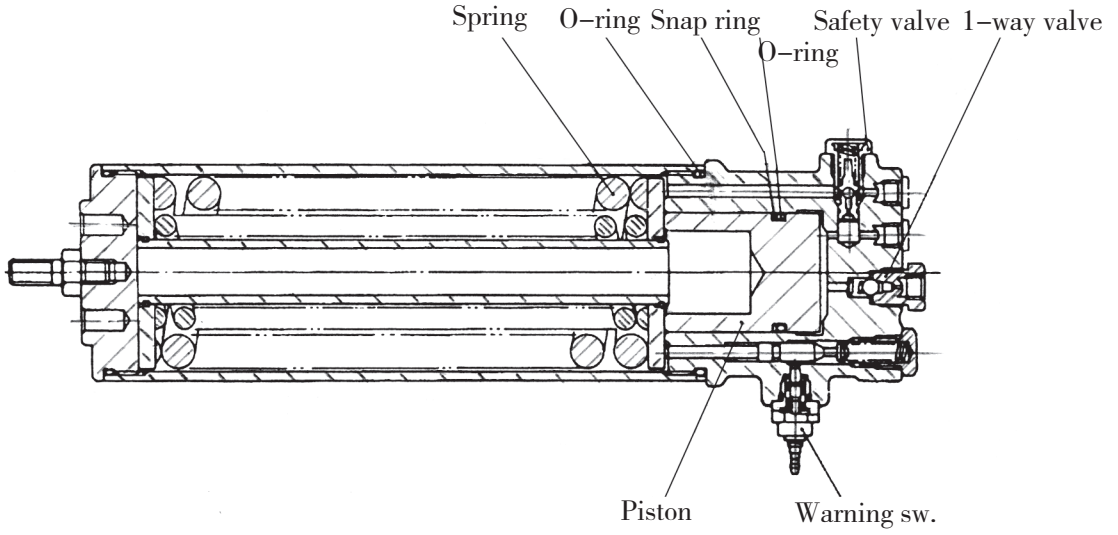


Fig.5.4 Reservior

https://truckmanualshub.com/

5.2.3 Accumulator (See Fig. 5.4)

When the engine stops working or there is trouble on the oil pump, the accumulator can be used as the abnormal (extra) energy to meet the needs of braking.

The accumulating mode is of spring type.

The Fig. Shows the non–accumulating state and the buzzer of alarming switch is in normal sounding state.

When the brake pedal is operated and the oil pressure reaches over 3.9 MPa, the check valve opens and feeds the oil to the accumulator so as to push forward the piston.

Move to the left and compress the combined spring to set up oil pressure.

Meanwhile, the piston moves towards left and makes the switch control lever at alarming switch move towards left under the action of spring pressure and the switch valve spool drop into recess of switch control lever. Now the alarm is in the silence state.

With the increase of oil pressure of the pump, the left moving stroke of the piston is restricted by the stop tube in the middle of combined spring. The accumulator stores the maximum energy at this time and the oil pressure is 13 MPa, which is controlled by safety valve.

5.3 Vacuum servo brake

5–7t forklift that matched with domestic machine adopts vacuum servo brake, i.e. vacuum booster and main brake cylinder (main pump) assembly to realize the servo brake.

The vacuum booster is to use vacuum (negative pressure) as dynamic force (use the pressure difference between vacuum pressure and atmosphere) to obtain the higher oil pressure of sub–cylinder (sub–pump) of brake under the action of light brake pedal force of operator and play the role of boosting and force saving, thus alleviating the working strength of drivers and improving the safety of traveling brake.

For main technical performances, See Table 5.2

| Name | | | Metering unit | Value |
|---|---|---|---|---|
| Effective diameter of vacuum cylinder | | Maximum | mm | Φ 263 |
| | | Minimum | mm | Φ 236 |
| Maximum stroke of vacuum servo brake | | | mm | 39 |
| Servo ratio | | | | 7 |
| Main brake cylinder | Diameter | | mm | Φ 31.75 |
| | Maximum stroke | | mm | 38 |
| | Front cavity displacement | | ml | 15.8 |
| | Rear cavity displacement | | ml | 14.2 |
| Maximum outside diameter of the assembly | | | mm | Φ 272 |
| Dimension of mounting plate | | | mm | 60 × 80, 4–M8 hole |
| Oil outlet dimension | | | mm | 2–M10 × 1 |
| Dead weight | | | kg | 5.3 |

https://truckmanualshub.com/

5.3.1 Vacuum booster and main brake cylinder assembly

The outline dimension of 9″ +10″ dual-diaphragm vacuum booster and main brake cylinder assembly used for the forklift 5-7t is shown in Fig. 5.5 and the internal structure is in the Fig. 5.6. The working status of the assembly is briefed as follows:

(1) Non-working status

When the vacuum booster does not work, the big cone spring 3 pushes the push rod 1 of control valve together with piston 5 of control valve to the rear end limiting position, while control air valve 4 is pressed tightly against work piece 5 by small cone spring, thus closing the air valve port. The two cavities of air cell of booster are interconnected through channel A, control valve cavity and channel B and are isolated with the atmosphere. When the engine and vacuum pump are working, there is a certain vacuum degree in both front and rear cavities of the air cell of the booster.

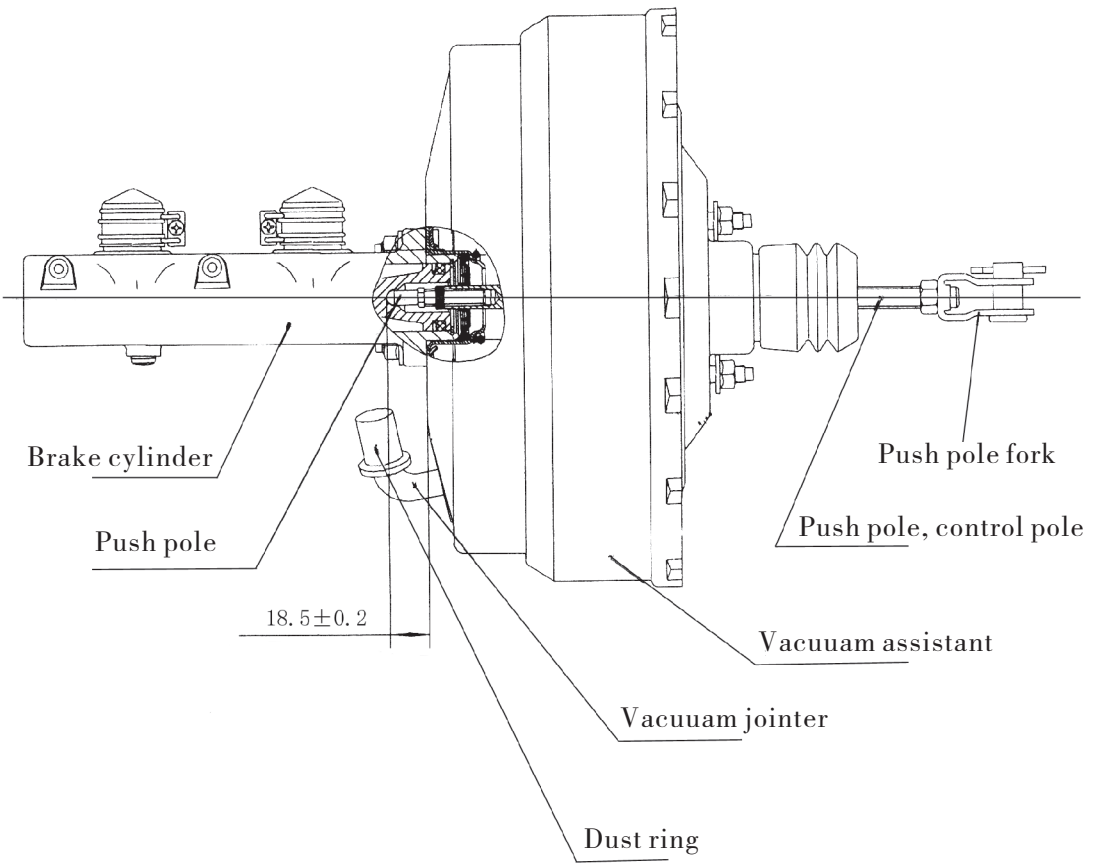


Fig.5.5 Vacuum assistant and brake cylinder

https://truckmanualshub.com/

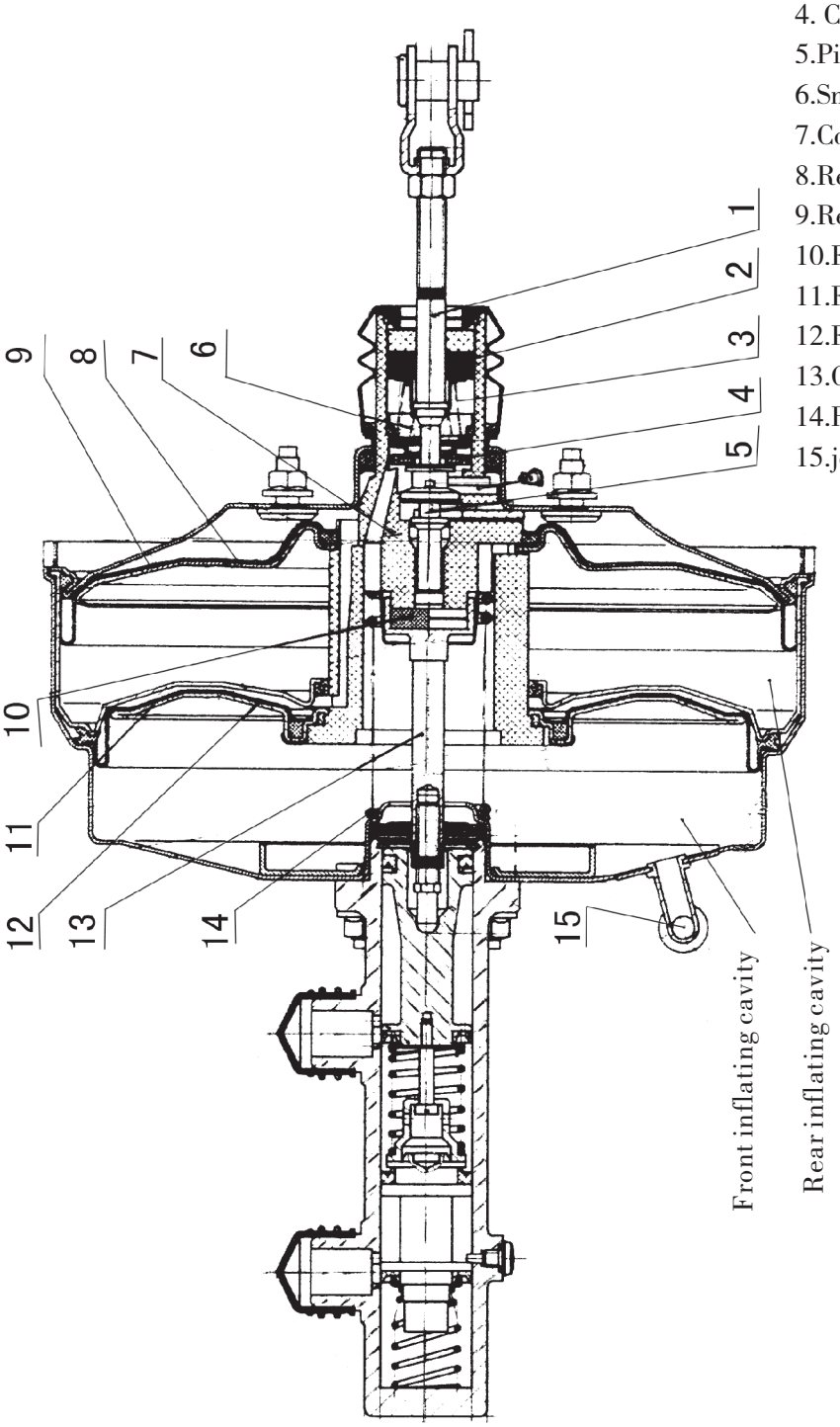


1.Control valve push rod
2.Air cleaner
3.Big cone spring
4. Control air valve
5.Piston of control valve
6.Small cone spring
7.Control valve body
8.Rear film hull
9.Rear film
10.Feedback tray
11.Front film hull
12.Front flim
13.Cylinder push rod
14.Return spring
15.joint

Fig.5.6 Vacuum booster and main brake cylinder constructure

https://truckmanualshub.com/

(2) Working conditions of braking

a)As soon as the brake pedal is stepped on, the pedal acts on the control valve rod 1 after the pedal force being amplified by lever and compresses the work piece 3 and moves forward with work piece 5. Certain pressure will be produced inside main brake cylinder through the actions of feed back disc 10 and push rod 13 of main cylinder and transmitted to the sub-cylinder (sub-pump) of brake inside the braking wheel 5. Meanwhile, the control air valve 4 moves forward together with work piece 5 under the action of small cone spring 6, contacts with vacuum valve port on control valve body 7 and closes it, thus isolating the front and rear cavities of the air cell of booster. (i.e. the rear cavity of air cell of booster disconnects with vacuum source.

b)With the continuous moving forward of the push rod 1 of the control valve , the piston 5 of control valve leaves work piece 4, the outside atmosphere fills into the rear cavity of air-cell of booster through air filter pad 2 , control valve cavity and channel B. Thus, most of the acting force caused by the two cavities of air cell of booster, except a small part of it is used to balance the acting force of big cone spring 3, acts on the feed back disc through control valve body 7 and is transmitted to the main brake cylinder, thus playing the boosting role.

(3)The braking process terminates and the non-working state resumes

a)In the course of stepping on the brake pedal( the push rod of control valve moves forwards), the air through the air valve port opened constantly enters into the front and rear cavities of air cell of booster and control valve body constantly moves forward. When the brake pedal stops being stepped on and stays at a position, the control valve body moves forward with it and stops at the position that can close the air valve port. Now, the vacuum valve port and air valve port are closed and the booster is in the balanced state, i.e. the air pressure difference of the front and rear cavities of the air cell of the booster remains balanced with the oil pressure of the oil in main brake cylinder and pushing force of push rod of control valve and the wheel brake is under the braking state.

b)When the brake pedal is released, the push rod 1 and piston 5 of the control valve are pushed backward at once under the action of return spring 14 and big cone spring 3 and make the control air valve 4 separate with vacuum valve port, thus a braking process is finished and the original non-working state restored.

5.3.2 Installation method for vacuum booster and main brake cylinder assembly

(1)Connect the 4-M8 bolt of booster with mounting bracket, then mount it on the frame of forklift, connect the adjusting fork at the end of booster with connecting bar of brake pedal, then tightened 4-M8 bolts. The tightening moment is 12N.m-18N.m.

(2)Connect the vacuum host to the vacuum pipe connector of booster and keep it sealed.

https://truckmanualshub.com/

(3)Connect the brake oil pipe with the 2–M10 × 1 thread at oil outlet of main cylinder of brake. The tightening moment is 12N.m–16N.m.

(4)Open the screwed cover of liquid storage tank, fill in the brake liquid (the dust or impurities are not allowed to enter) and drain off the air inside the entire braking system.

(5)When the main cylinder of brake or vacuum booster is independently changed, the tightening moment of the connecting nut between the two is 12 N.m–18N.m.

(6)Please do not easily adjust the vacuum booster and push–rod head of main brake cylinder matching surface.

5.3.3 Points of attention for users

(1)The product must use the braking liquid stipulated in the instruction.

(2)The air in the pipes must be drained completely after the assembly is added with braking liquid.

(3)Observe if the liquid level of storage tank is in the middle position after exhaust.

(4)The troubles listed in Table 5.3 must be repaired by the professional personnel with qualification and the users are not allowed to dismantle it without authorization.

5.3.4 Trouble shooting and cause analysis (See Table 5.3)

| Trouble and phenomenon | Analysis |
|---|---|
| No oil pressure set up in two cavities or in one of them of the main cylinder, which is reflected by: Pedal stroke becomes bigger | (1) The leather ring of main cylinder wears.<br>(2) The oil outlet pipe is damaged. |
| The output oil pressure is not big and pedal force becomes heavy. | (1) The vacuum of booster leaks.<br>(2) The vacuum pipe of engine leaks |
| The oil storage tank often lacks oil. | (1) The joint at oil cylinder leaks.<br>(2) The leather ring of the first piston wears. |
| The brake pedal is low and soft. | (1) There is air in the oil circuit system<br>(2) The clearance between push rod of booster and piston of main cylinder is too big. |

5.4 Travel brake

Travel brake is an internal expanding and shoe brake. There is one symmetrically on the left and right each, which are mounted respectively in the two driving wheels. Brake is composed of a pair of braking shoes (one primary and one secondary), brake sub–pump (one for 5–7t truck and two for 8–10t truck), a clearance adjuster, three or four return springs and bottom plate of brake. A friction disc is riveted on the outside of braking shoe. Clearance adjuster is used to adjust the clearance between friction disc of braking shoe

https://truckmanualshub.com/

and internal wall of braking drum.

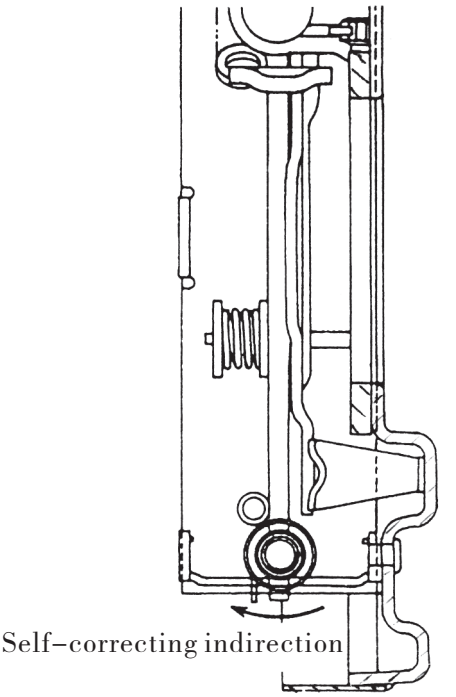


Fig, 5.7

5.4.1 Travel brake (5-7t forklift truck) (See Fig. 5.8)

There is only one brake sub-pump on travel brake of 5-7t forklift and the two ends of its piston rod contact with the upper end of primary and secondary braking shoes respectively. The lower end of primary and secondary braking shoes contact with the both ends of clearance adjuster and are pressed against the bottom plate of brake by spring and rod for setting lever spring.

The automatic clearance adjusting device generally plays the role when the forklift brakes for reversal i.e. when the adjusting lever has a large clearance, the gear on the automatic adjuster turns a tooth and makes the clearance after adjustment remain at 0.4 to 0.6mm. For the adjustment of rotation direction of the gear, See Fig. 5.7.

Because the braking of 5-7t forklift has two open-types, there are two kinds of material used for leather bowl of brake sub-pump, i.e. the leather bowl of dynamic braking type uses oil-resistant rubber and the leather bowl of vacuum assisted type is made up of leather or synthetic leather. More attention should be paid in changing parts and fittings.

https://truckmanualshub.com/

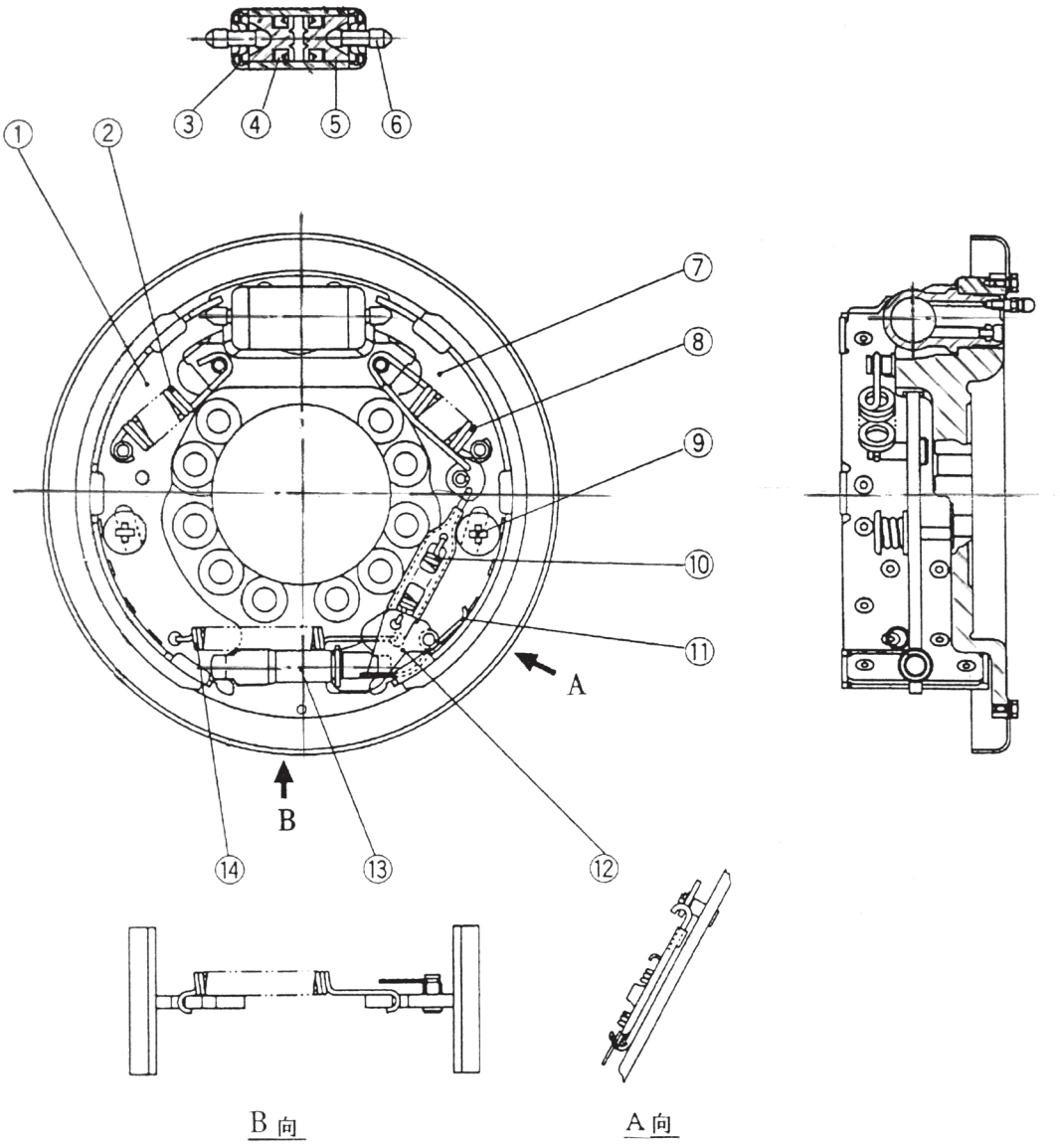


1.Brake shoe
2.Return spring
3.Dust ring
4.Boot
5.Piston
6.Push rod
7.Secondary shoe
8.Returning spring
9.Securing pin for shoe
10.Compression spring
11.Self-adjuster spring
12.Adjuster lever
13.Adjuster
14.Return spring

Fig.5.8 Brake(5-7t)

https://truckmanualshub.com/

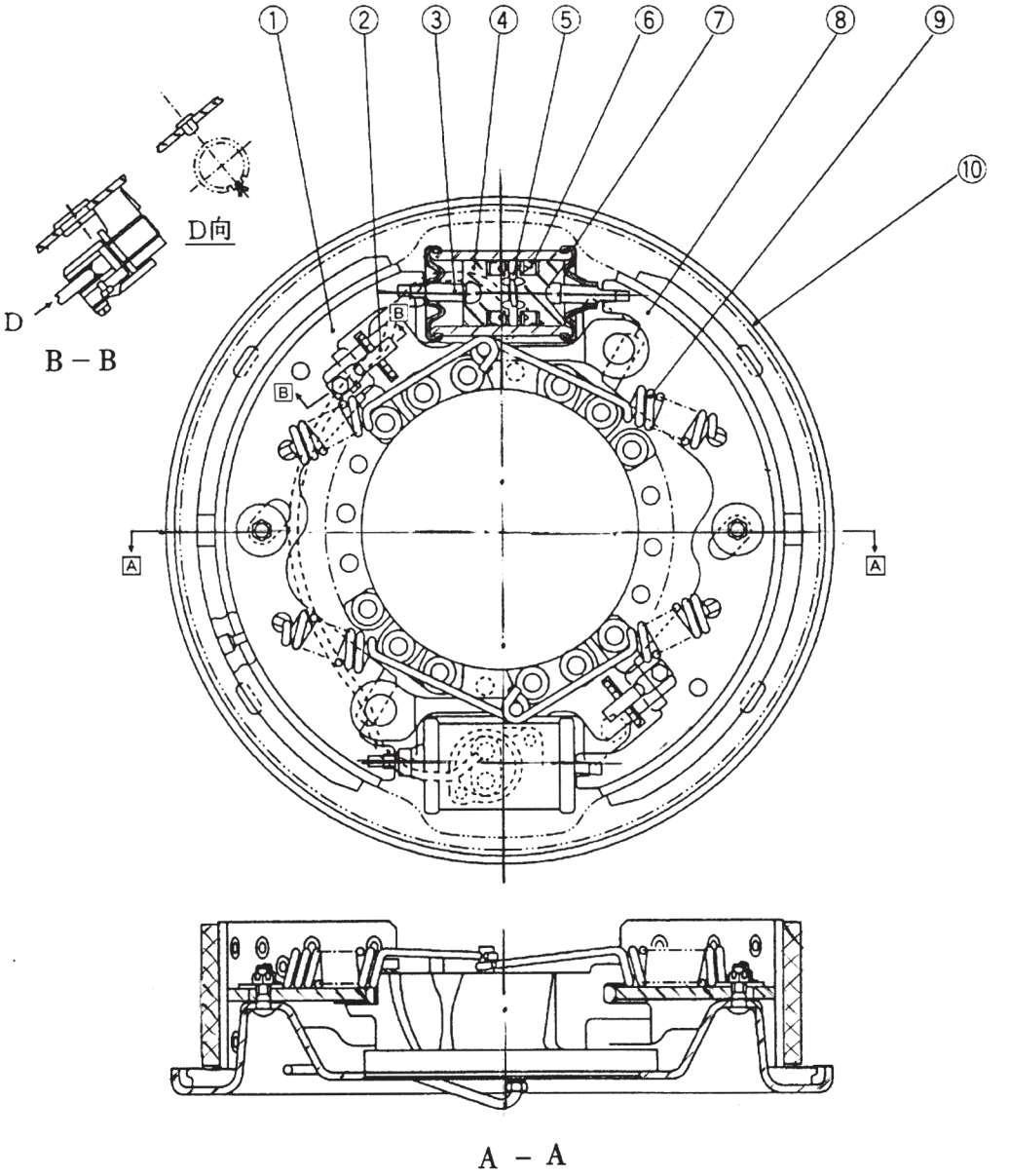


| | |
|---|---|
| 1.Brake shoe | 6.Boot |
| 2.Adjuster | 7.Dust hood |
| 3.Push rod | 8.Secondary shoe |
| 4.Piston | 9.Return spring |
| 5.Spring | 10.Brake floor |

Fig.5.9 Brake(8–10t)

https://truckmanualshub.com/

5.4.2 Travel brake (8–10t forklift truck) (See Fig. 5.9)

There are two brake sub– pumps for travel brake of 8–10t forklift. The upper and lower ones contact with two ends of primary and secondary braking shoes and the clearance adjuster is next to the brake sub–pump.

When the clearance is adjusted, remove the rubber cover installed at the adjuster location on the bottom plate of the brake and the tooth of the adjuster is rotated from inside to outside with screwdriver until the friction disc contacts with the inner wall of braking drum. Then the tooth of the adjuster is back rotated about 5 or 6 splines. (See Fig. 5.10)

8–10t forklift adopts dynamic braking and the material used for leather bowl of brake sub–pump is oil–resistant rubber. More attention should be paid in the replacement.

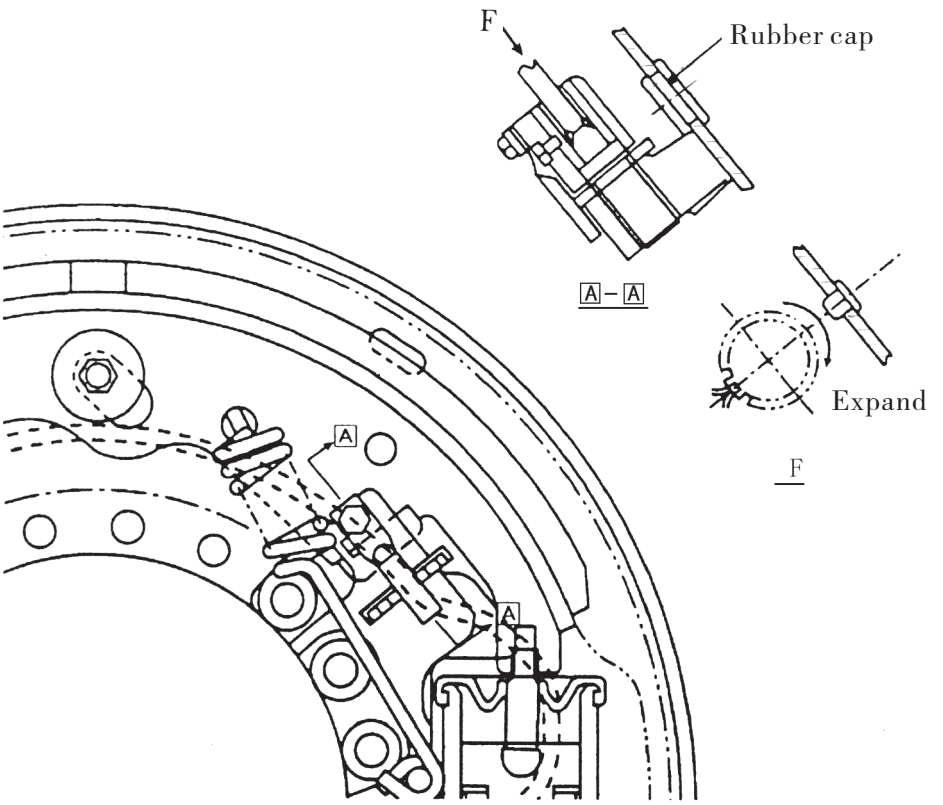


Fig.5.10

https://truckmanualshub.com/

### 5.5 Parking brake

Parking brake is an internal expanding and shoe type brake and is installed on the output end of one intermediary shaft at the rear side of the gearbox. (See No. 9 of Fig. 3.1) For detailed structure, See Fig. 5.12.

The operation of stop brake is shown in Fig. 5.11. When the forklift is under the standard loading state and stop brake is made on the slope, the manual operating force should be not bigger than 300N. The pulling force is adjusted according to the direction shown in the Fig and B is the force measurement point.

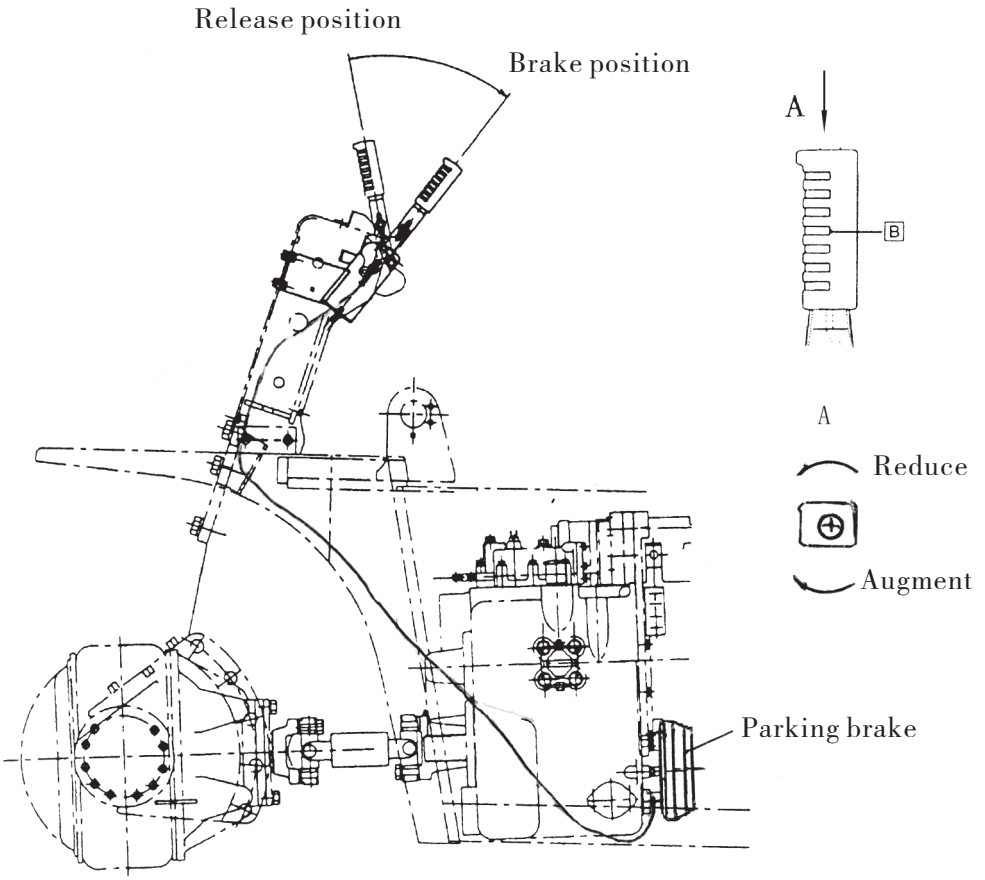


Fig.5.11 Parking brake unit

https://truckmanualshub.com/

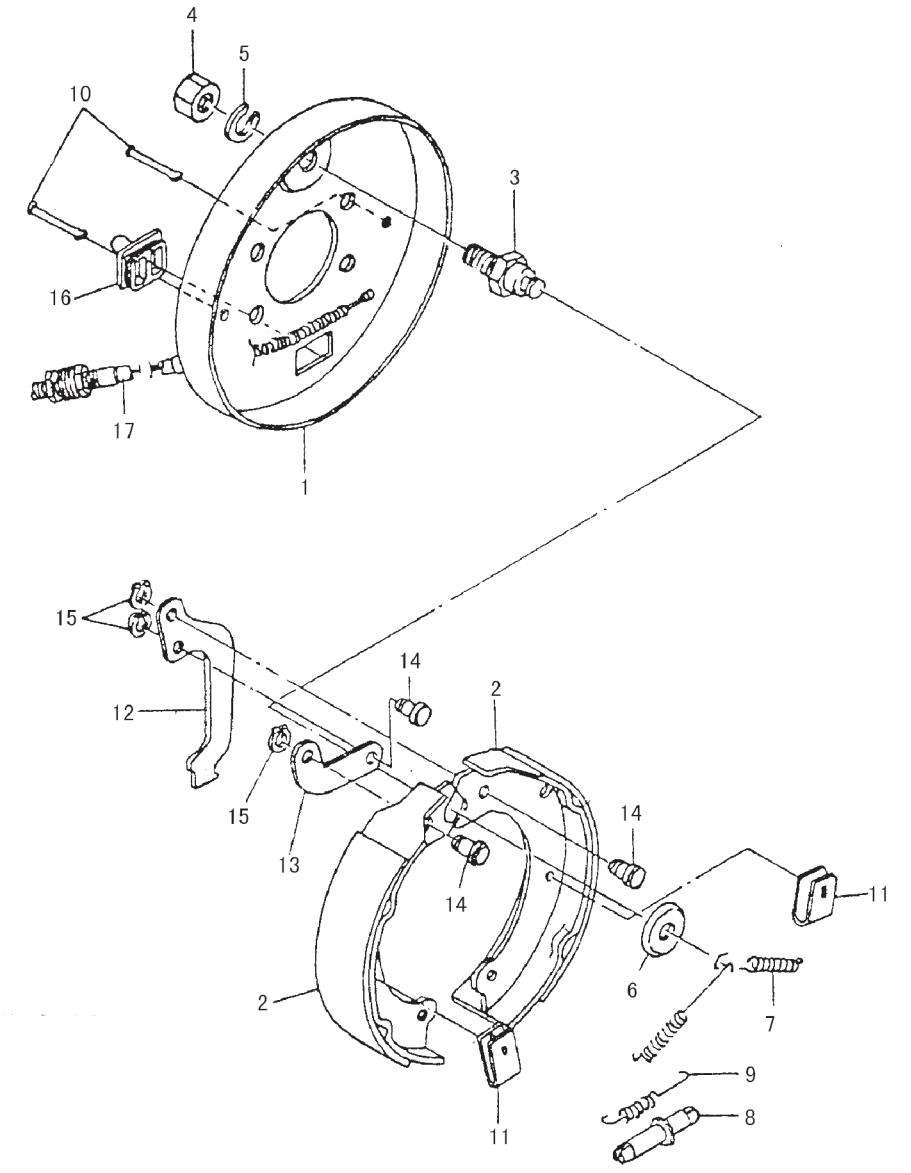


1.Floor
2.Brake shoe
3.Securing bolt
4.Nut
5.Washer,lock
6.Washer
7.Return spring
8.Adjuster
9.Adjuster spring
10.Pin
11.Spring seat
12.Lever
13.Support plate
14.Pin
15.U–ring
16.Plug
17.Parking brake cable

Fig.5.12 Parking brake

https://truckmanualshub.com/

5.6 Troubleshooting guide (See Table 5.3).

| Problem | Possible cause | Remedy |
|---|---|---|
| Poor braking force | Fluid leakage from brake system | Repair |
| | Improper clearance of pads | Adjust |
| | Overheat of brake | Checking if it sliding |
| | Improper cantact of rotor and pads | Adjust |
| | Foreign material adhering to pad surface | Repair or replace |
| | Foreign material mixed in brake fluid | Change fluid |
| | Incorrect adjustment of pedal(inching valve) | Adjust |
| Noisy braking operation | Hardened pad surface foreign material adhered to it | Repair or replace |
| | Loose carrier mounting bolts,floor distortion | Repair or replace |
| | Deformed or incorrectly installed pad | Repair or replace |
| | Worn pad | Replace |
| | Loose ball bearing | Replace |
| | Bearing of wheel improper | Repair |
| Uneven braking | Foreign material adhering to pad surface | Repair or replace |
| | Auxiliary pump act improper | Repair or replace |
| | Drum eccentricity | Repair or replace |
| | Improper clearance of pads | Adjust |
| | Improper tire pressure | Adjust |
| Soft or spongey pedal | Brake fluid leakage from brake system | Repair |
| | Improper clearance of pads | Repair or replace |
| | Air mixed in brake system | Bleed air |
| | Incorrect pedal adjustment | Readjust |

https://truckmanualshub.com/

## 6.Steering System

The main specifications of the steering system see table 6.1.

| Item | | 5–7t | 8t | 10t |
|---|---|---|---|---|
| Type | | Rear wheel steering powered | | |
| Dia. Of steering handwheel mm | | 360 | | |
| Steering unit | Type | BZZ series powered steering unit | | |
| | Delivery rate ml/min | 280 | | |
| | Rated pressure MPa | 16 | | |
| Steering cylinder | Bore mm | Landscape，double function | | |
| | Dia. Of cyl./Dia. Of piston rod mm | Φ115/Φ85 | | |
| | Stroke | 2×216 | | 2×260 |
| Flow–divider | Setting pressure MPa | 12.3 | | |
| | Rated flow l/min | 25 | | 27 |
| Steering axle | Type | Center pin supported,landscape cylinder | | |
| | Steering angle:Inner/Outer wheel | 79°/50° | | |
| | Rear wheel:tread | 1700 | | |
| | King pin:interval | 1500 | | |
| Gimbal swivel radius | | Φ42 | | |
| Steering wheels | Tire | 8.25–15–14PR | 9.00–20–14PR | |
| | Rim | 6.50–15 | 7.0–20 | |
| | Inflation pressure | 830 | 760 | |

https://truckmanualshub.com/

Steering system consists of a steering handwheel, a steering column,gimal assembly, steering unit, steering axle and steering cylinder. Steering control unit see Fig.6.1.

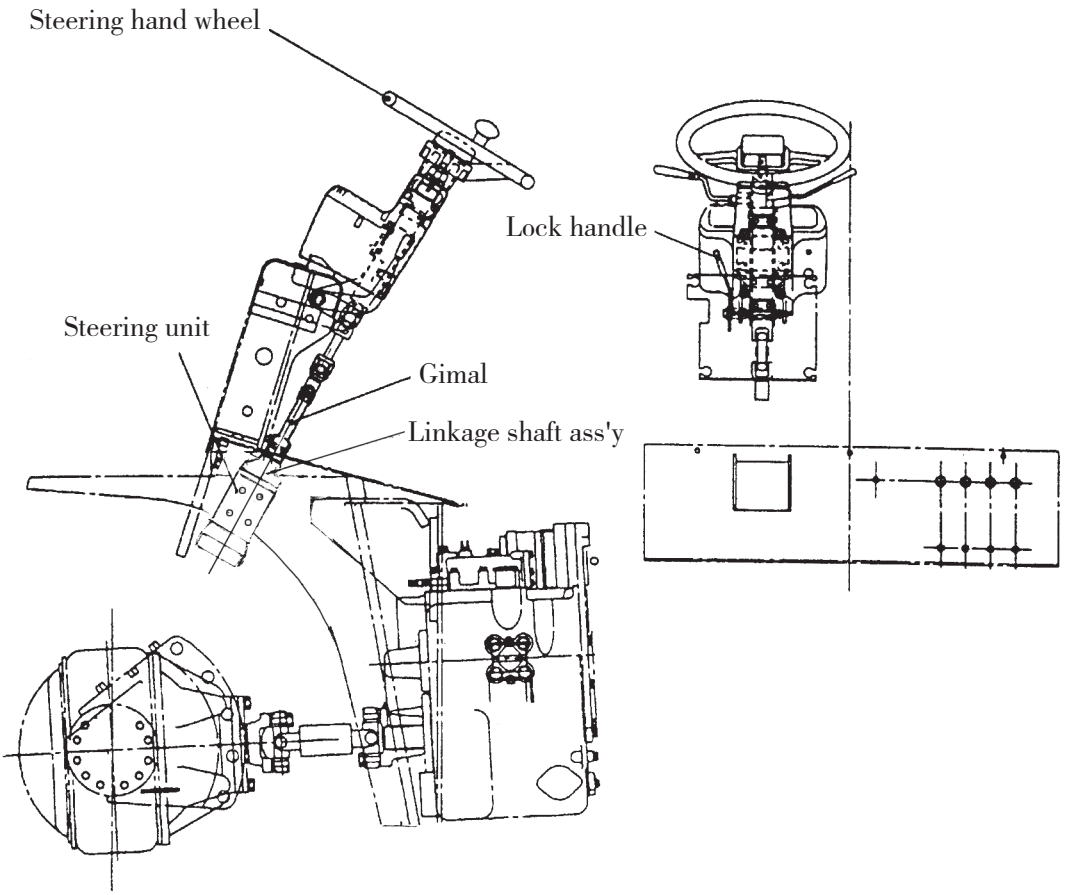


Fig.6.1 Steering control unit

https://truckmanualshub.com/

The steering shaft connects the steering unit with a gimbal,the steering handwheel turns with the steering shaft and steering column, realizing hydraulic steering. The steering column supporting steering shaft changes some tilt angle forward and backward to adjust to a proper position ,so as to satisfy the driver's need.

**6.1 Steering unit**

The steering unit is a full-hydraulic steering unit,and can transmit the pressure oil from the flow-divider to steering cylinder through the oil pipe by metering.The oil volume changes with the rotation angle of the handwheel.When the engine goes out and the oil pump can not supply oil,the steering shall be done by manpower.

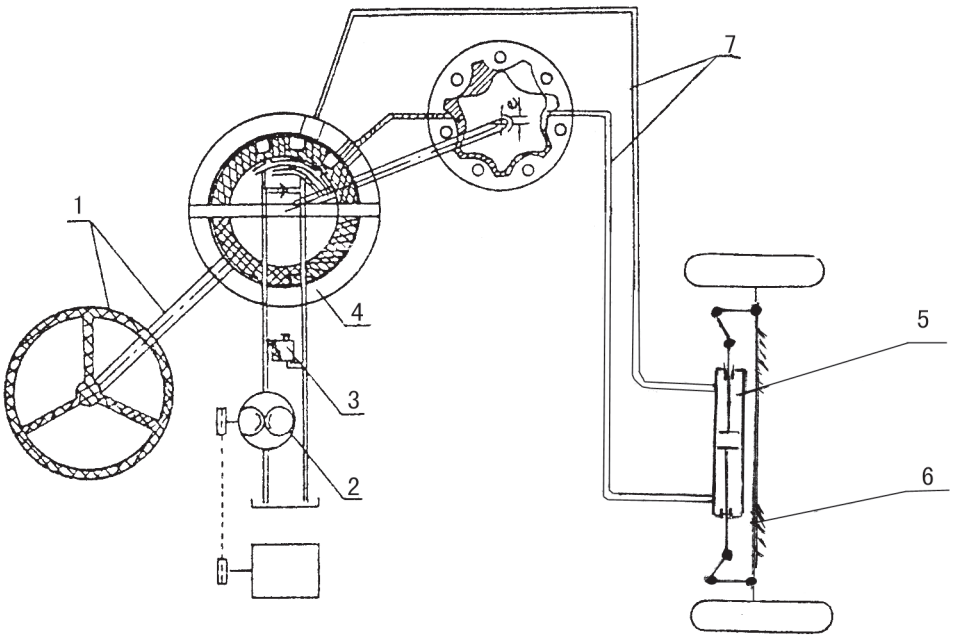


Fig.6.2 Full-hydraulic steering system

1.Handwheel and steering shaft
2.pump
3.Flow-divider
4.Powered steering unit
5.Steering cylinder
6.Steering axle
7.Hose

https://truckmanualshub.com/

### 6.2 Checking after mounting on the machine

(1) Check the arrangement of hydraulic pipeline and turing direction of the truck for correctness.

(2) Check the forces necessary to turn the steering handwheel to right and left until it can' t be turned any more to see if they are identical with each other and check the operation of the steering handwheel for smoothness during above operation.

(3) After mounting on the machine,jack up the rear wheels,run the engine idly,and steer the steering wheel several times to discharge air from the piping and power steering system.Let down the rear wheels,steer the steering wheel several times to check for abnormal sound.If abnormal sound is not heard,this indicates that air has been completely discharged.Then set the engine in idling state to raise oil temperature.

(4) Measurement of steering power

Stop the machine on a flat dry paved road, and apply its parking brake. Attach a spring balancer to the steering wheel rim to measure the steering power.The steering power must be less than approx.150N.

(5) To measure hydraulic pressure,use the pressure gauge(15–20MPa),stop valve and hoses connected as shown in fig.6.3.

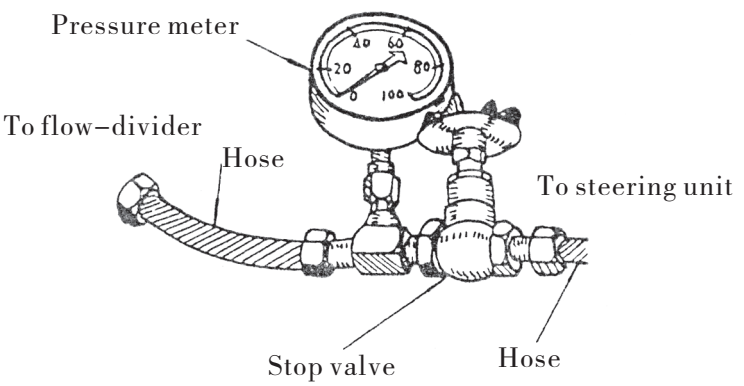


Fig.6.3 Measure pressure

Disconnect the hose which has been connected from the flow valve to the power steering,connect the hose provided with the stop valve to the power steering side,and run the engine idly.

When the steering wheel is kept in free state,the hydraulic pressure is about 0.5 to 2MPa.If the hydraulic pressure exceeds this value,check for clogging of the control valve and piping.If no abnormality is found,raise the rotational speed of engine up to about 1500rpm,and slowly close the stop valve,paying attention to preesure rise.

https://truckmanualshub.com/

The limit pressure of relief valve has been set to 12MPa.Therefore,when the stop valve is completely closed,the preeure gauge indicates its setting preesure.

If the hydraulic pressure exceeds 12MPa,this indicates that the relief valve malfunctions.If the hydraulic pressure is too low,this indicates that the oil pump malfunctions or the relief valve spring has been broken.In this case be careful not to keep the stop valve closed for more than 15 seconds.

Caution:The pump supplies the hydraulic oil to actuate the power cylinder.Its work must be considered from two different aspects,namely pressure and flow rate.

Pressure is designated to give thrust to the cylinder whereas flow rate relates to the kinetic speed of the cylinder.

Therefore,even when the hydraulic pressure is normal,say 12MPa,the power steering cannot work normally if flow rate is insufficient.This results in heavy steering.Since the flow valve and relief valve have been properly adjusted according to capacity and use conditions of the power steering,it is necessary put the match mark in the set position or measure the distance to the screw head if disassembly of valve is needed.

### 6.3 Troubleshooting guide

| Problem | Possible cause | Remedy |
|---|---|---|
| Steering wheel is caught when rapidly turned | Flow control valve spool stuck | Disassemble,repair or replace |
| | Flow control valve spool worn | Replace as assembly |
| Oil pressure does not rise | Relief valve stuck open | Replace as assembly |
| Oil pressure higher than relief set pressure | Relief valve stuck closed | Replace as assembly |
| Noisy relief valve | Relief valve vibrating | Replace as assembly |
| Too high oil temperature | Relief valve stuck closed | Replace as assembly |
| Hard steering operation while idling | Relief valve stuck open | Replace as assembly |
| | Flow control valve spool stuck | Disassemble and repair or replace |
| | Flow control valve spool worn | Replace as assembly |
| Varying steering force | Relief valve vibrating | Replace as assembly |
| | Flow control valve spool stuck | |
| | Flow control valve spool worn | Replace as assembly |
| Hard steering operation | Relief valve stuck open | Replace as assembly |
| | Flow control valve spool stuck | Disassemble and repair or replace |
| | Flow control valve spool worn | Replace as assembly |

https://truckmanualshub.com/

**6.4 Steering axle**

5–10t forklift entirely adopts transverse steering oil cylinder. The front and rear of the center are supported by two supporting axle through sleeve on the steering axle base, the later is fixed on the forklift frame. The two supporting axle can sway a certain angle to the right and left. The structures of steering axle of 5–10t forklifts are the same in the most parts and the main structure is presented in the Fig. 6.3 and Fig. 6.4.

Steering axle is mainly made up of steering axle body, left and right steering knuckle assembly, connecting rod assembly, wheel, wheel hub and steering oil cylinder

6.4.1 Steering axle body

Steering axle body is a steel plate with welding structure. On its two ends there are upper and lower bosses (holes) that connect the left and right steering knuckle assembly with the axle body by using the steering stub. The opening size of the boss for 5–8t forklift is small while that for 10t is large.

6.4.2 Left and right steering knuckle assembly

Left and right steering knuckle assembly is supported on the wheel hub through two thrust bearings and the wheel is mounted on the wheel hub. Oil seal is provided on the wheel hub in order to prevent grease from overflowing. The plane thrust bearing is mounted between the steering knuckle and the upper and lower bosses of steering axle body, under which a gasket can be used to regulate the rotation clearance. In the inner hole of upper and lower bosses, the steering stub is mounted and is supported by the upper and lower needle bearings, under which the oil seal is used. An oil nozzle is mounted on the upper extreme cover in order to lubricate all the bearings through the inner hole of stub. Users should fill in the grease on time. The locking pin is used for fixture between the steering stubs of steering knuckle assembly.

6.4.3 Wheel hub

Wheel hub is spherical iron. As the tires of 8–10t forklifts are different from those of 5–7t, the wheel hubs are also different.

6.4.4 Steering ram (oil cylinder)

The steering ram horizontally set in the middle of the axle body is of double–action type. The piston rods on two ends are connected with connecting bar assembly; the other end of the later can propel the steering knuckle arm to make the wheel change direction. On the two ends of the oil cylinder are the pilot sleeves and the steel–backed bearing , baffle plate , sealing ring and anti–dust ring are installed in the inner holes of the sleeve, which contact with piston rod. Outside the sleeve are the supporting ring and O–shaped ring, which contact with the inner wall of the cylinder. The oil cylinder of 5–8t forklift is for general use. For the structure, refer to Fig. 6.6.

https://truckmanualshub.com/

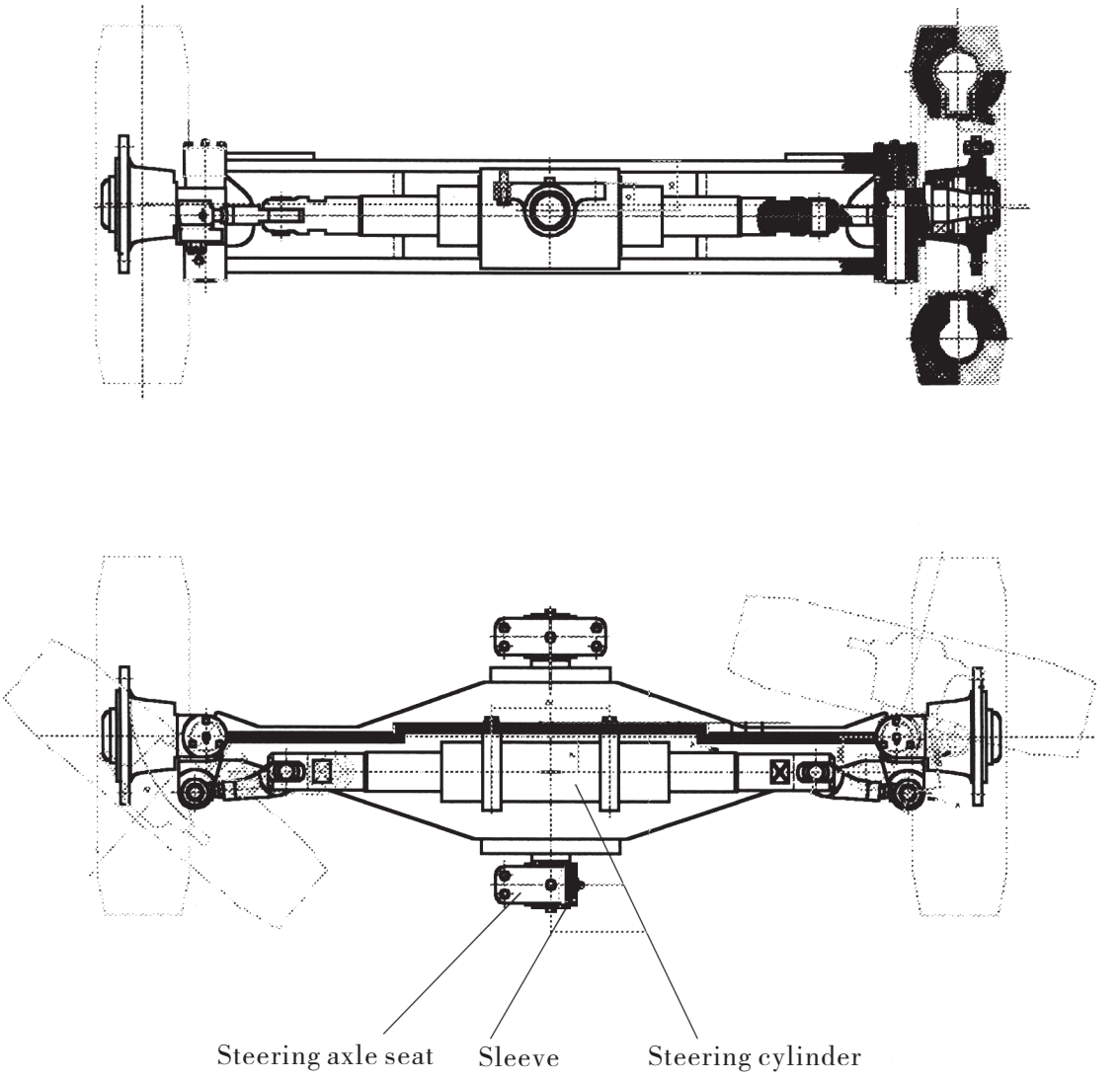


Fig.6.4 Steering axle

https://truckmanualshub.com/

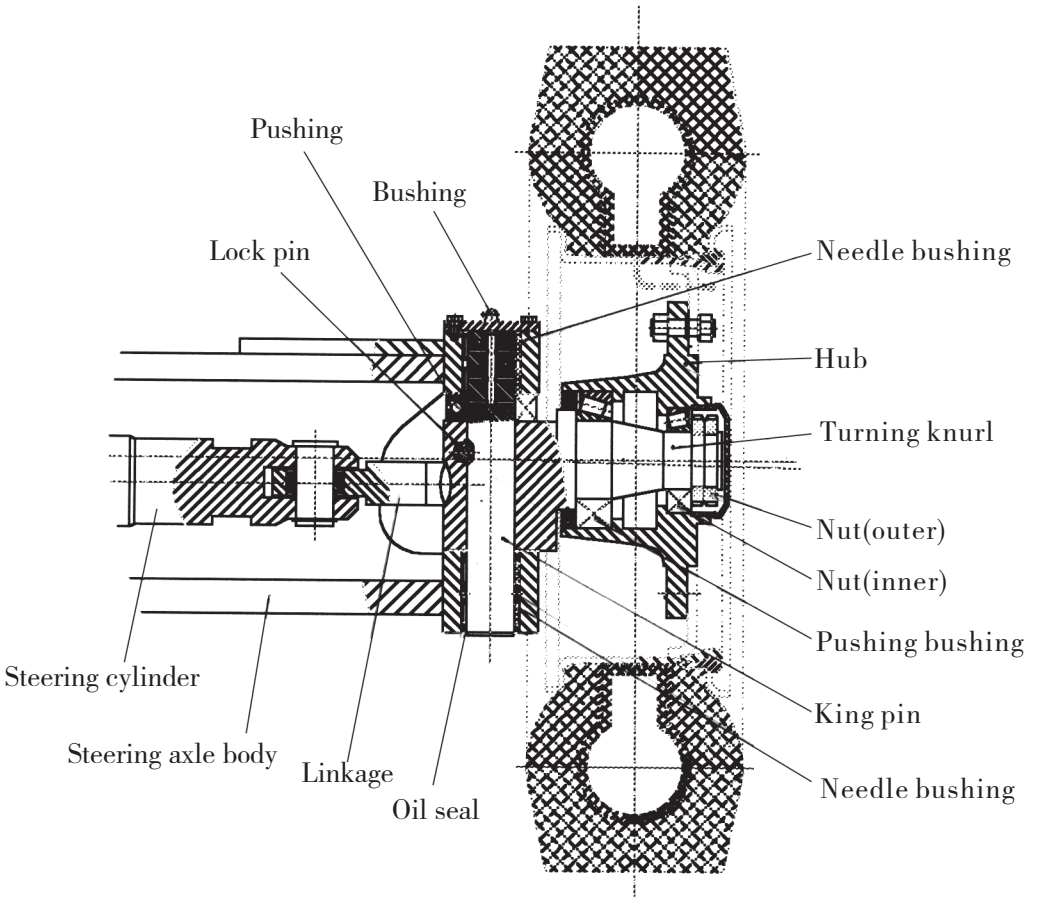


Fig.6.5 Steering axle

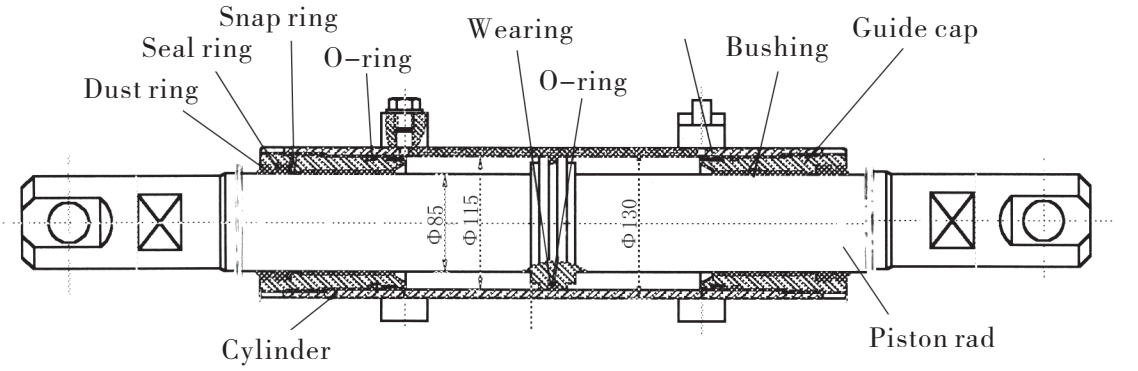


Fig.6.6 Steering cylinder

https://truckmanualshub.com/

## 7. Hydraulic System

| | | | 5–7t | | 8–10t |
|---|---|---|---|---|---|
| | | | Power brake | Vacuum assistant | Power brake |
| Oil pump | Drive type | | Transmission P.T.O. | | |
| | Rated pressure | | 25MPa | | |
| | Front pump NO. | Match Japan 6BG1 | A45E7–10202 36R/4R Double–gear pump | | A45E7–10202 36R/4R Double–gear pump |
| | | Match Chaochai 6102BG | A05E7–10202 32R/3.5 Double–gear pump | H09E7–10202 32R | |
| | | Match Komatsu S4D95LE–2 | A05E7–10202 32R/3.5 Double–gear pump | | |
| | | Match Weifang R4105G32 | | H09E7–10202 32R(5–6t truck) | |
| | Rear pump NO. | Match Japan 6BG1 | A45E7–10301 36L | | A45E7–10301 36L |
| | | Match Chaochai 6102BG | A05E7–10301 32L | A05E7–10301 32L | |
| | | Match Komatsu S4D95LE–2 | A05E7–10301 32L | | |
| | | Match Weifang R4105G32 | | A05E7–10301 32L(5–6t truck) | |
| Control valve | Type | | Two–spool sliding type(with relief valve and tilt–lock valve) | | |
| | Setting pressure | | 20MPa | | |
| | Part NO. | Two–throw | 25787–30202G | | 25907–30201G |
| | | Three–throw | 25787–30212G | | 25907–30301G |
| | | Four–throw | 25787–30222G | | 25907–30401G |

https://truckmanualshub.com/

### 7.1 General description

The hydraulic system mainly consists of main pump,control valve,high & low pressure oil pipes and joints.The main pump is a gear type and installed on the top of the transmission.This pump is fitted to a gear to which the charging pump is also fitted.As the engine runs,the main pump is driven to draw up oil from the tank and send it to the control valve.The control valve,provided with a relief valve to keep the circuit pressure within the specified one,controls the cylinders by changing over the oil passages inside the valve body with the spools.

### 7.2 Main pump

The main pump consists primarily of a drive gear,driven gear and pump body which contains the two gears and other components.The drive gear is in mesh with the driven gear.

### 7.3 Control valve(See Fig.7.1)

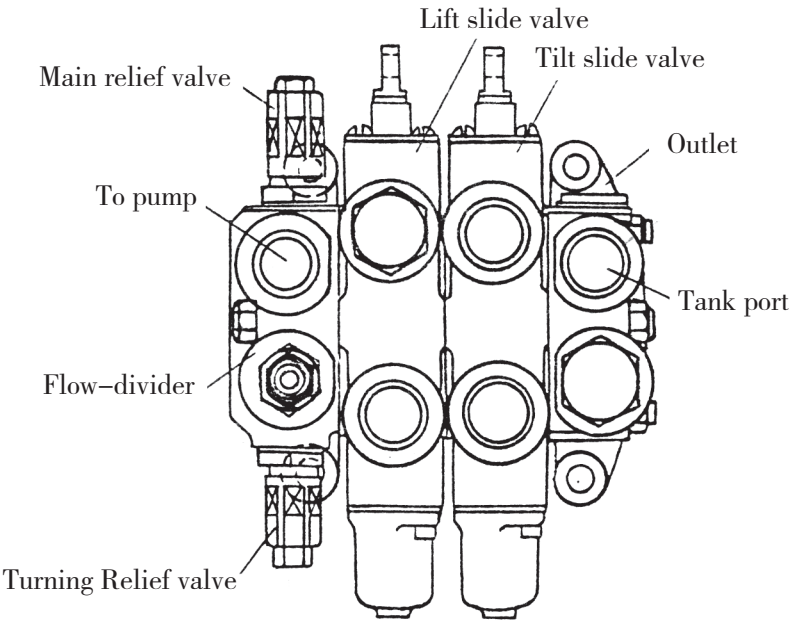


Fig.7.1 Control valve

The control valve is a sectional type consisting of the inlet section,plunger section and outlet section which are assembled with three bolts.

At the inlet section is a cartridge type relief valve to set the oil pressure in the circuit.The plunger section controls the hydraulic cylinders by changing over the flow of oil from the relief valve with plungers.The tilt cylinder plunger section is equipped with a tilt lock valve.Oil returned from the cylinders is returned to the tank through the outlet

https://truckmanualshub.com/

section. Each section is sealed with O-ring,and the oil passage at the high pressure side is given a check valve.

**7.4 Operation of control valve**

(1) Neutral position (See Fig.7-2)

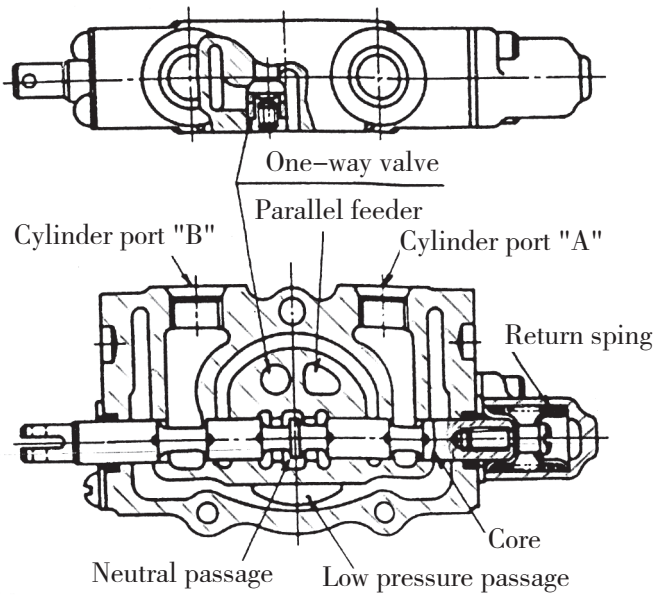


Fig.7.2 Neutral position

The oil discharged from the pump returns to the tank through the neutral passage.The cylinder ports "A" and "B" are kept closed.

(2)Pushing-in of plunger (See Fig.7.3)

The neutral passage is closed,and the oil pushes up the load check valve from the parallel feeder and flows to the cylinder port "B". The returning oil from the cylinder port "A" flows through the low-pressure passage to the tank.The plunger is restored to the neutral position by thr return spring.

(3)Drawing-out of plunger(See Fig.7.4)

With the neutral passage closed,the oil pushes up the load check valve from paralled feeder and flows to the cylinder port "A". The returning oil from the cylinder port "B" flows through the low-pressure passage to the tank. The plunger is restored to the neutral position by the return spring.

https://truckmanualshub.com/

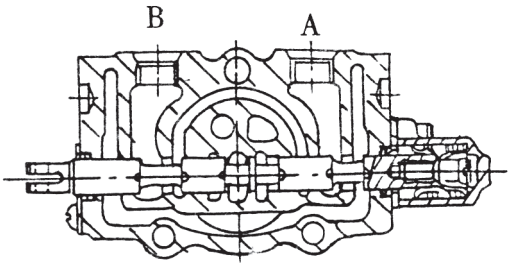


Fig.7.3 Push slide valve

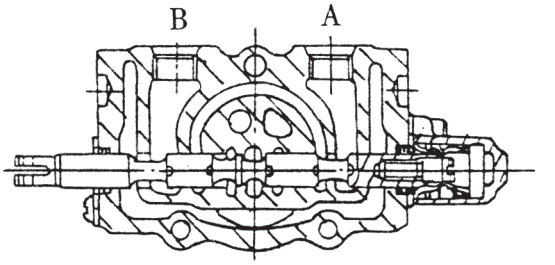


Fig.7.4 Pull slide valve

**7.5 Operation of relief valve**

(1) The relief valve is mounted between the cylinder port "HP" and the low-pressure passage "LP",The oil flows through the poppet "C" and affects the two areas "A" and "B" differently in diameter,so that the check valve poppet "K" and the relief valve poppet "D" are securely seated.(See Fig.7.5)

(2) When the pressure in the cylinder port "HP" reaches the set pressure of the pilot poppet spring force,the pilot poppet "E" opens.The oil passes around the poppet,flowing through the drilled hole to the low pressure side "LP".(See Fig.7.6)

(3) As the pilot poppet "E" is opened,the preeure behind the poppet "C" drops,due to which the poppet "C" is moved to seat on the pilot poppet "E".As a result of this,the oil flowing behind the relief valve poppet," D" is shut off and the pressure at the inner side is reduced.(See Fig.7.7)

(4) Compared to the pressure at the cylinder port "HP" side,the inner pressure becomes unbalanced,causing the relief valve poppet "D" to open and thereby sending the oil directly to the low-pressure passage "LP".(See Fig.7.8)

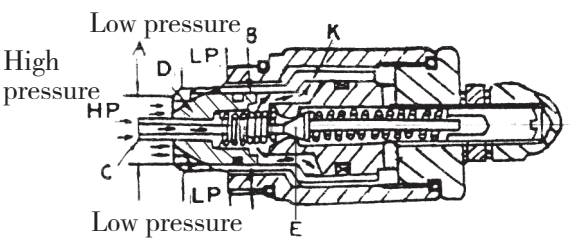


Fig.7.5

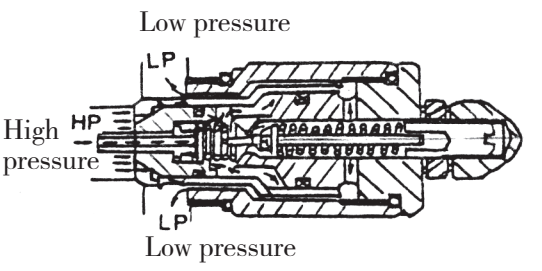


Fig.7.6

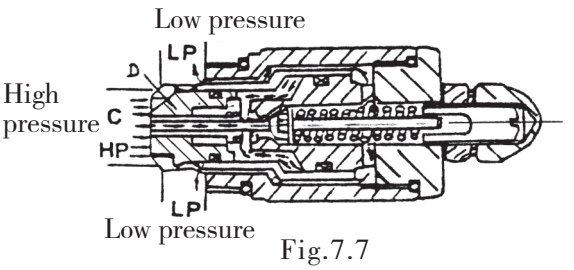


Fig.7.7

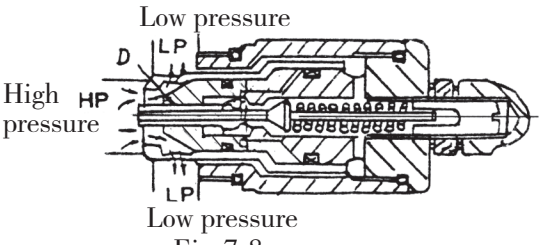


Fig.7.8

https://truckmanualshub.com/

### 7.6 Operation of tilt lock valve

The tilt—lock valves are intended to prevent vibrations of the mast due to possible creation of internal negative pressure in the tilt cylinder and also to avoid a danger of the mast tilting due to accidental lever action when the engine is at rest.On the conventional model,even if the engine is kept at rest,the mast can be tilted forward by actuating the tiltlever.but this newly adopted tilt—lock valves does not allow the mast to tilt forward as far as the engine is at rest,even if the tilt lever is pushed with the full load.Refer to fig.7–9 for the construction of the tilt—lock valve.

The port "A" side of the plunger housing is led to the front side of the tilt cylinder,and the port "B" side to its rear side.When the tilt lever is pulled(plunger drawn out),the oil from the pump flows into the port "A" while the port "B" side oil returns to the tank,due to which the mast is tilted backward by the tilt cylinders.

When the tilt lever is pushed (plunger pressed),the oil from the pump flows into the port "B".But the port "A" side oil does not return to the tank unless the poppet installed in the plunger is moved,nor does the mast tilt forward.Hence,while the engine is being shut down,the mast never tilts forward nor does the internal pressure in the tilt cylinders get negative.

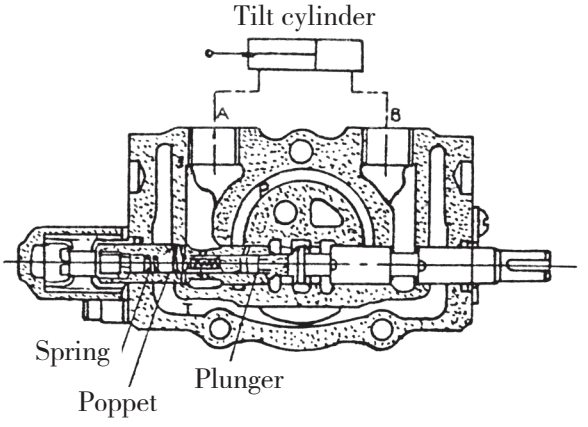


T: To tank P: To oil pump A、B: To tilt cylinder

Fig.7.9 Tilt lock valve

https://truckmanualshub.com/

### 7.7 Operation unit of the control valve (refer to the fig. 7.10)

The control valve is operated with the valve levers are assembled together with a shaft and the shaft is assembled on the bracket of the cabinet. The valve levers operate the control valve with the joints.

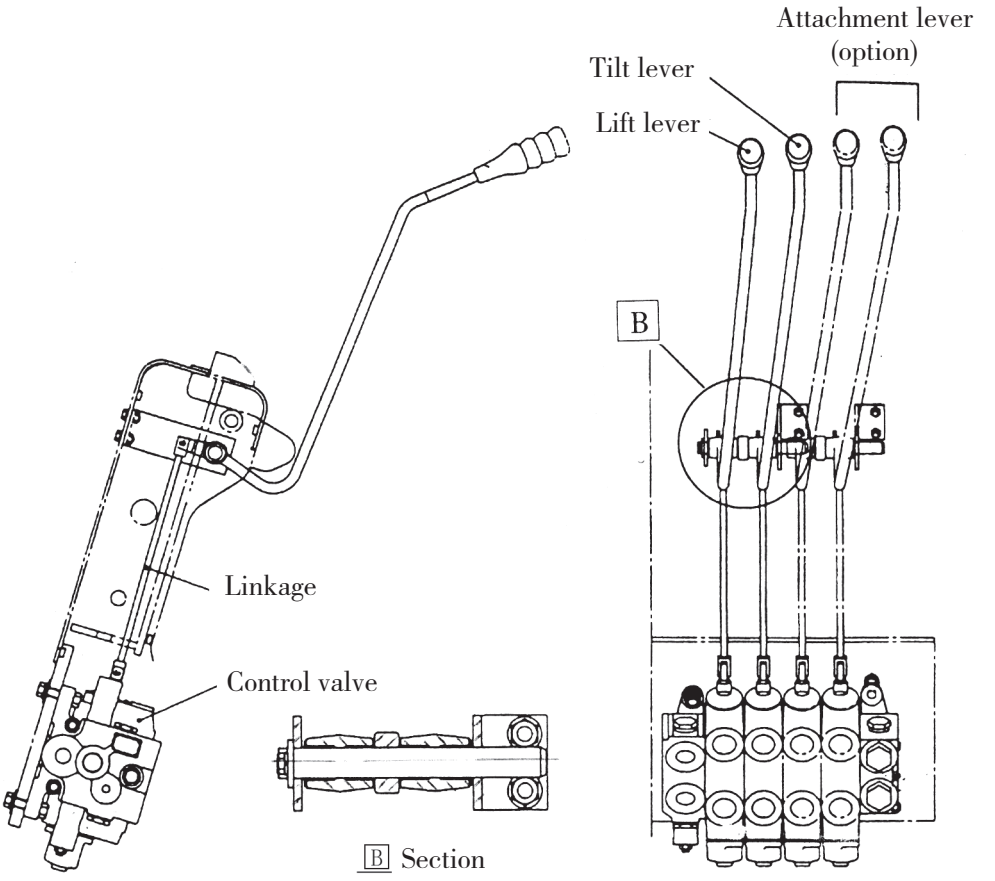


Fig.7.10 Control valve lever unit

https://truckmanualshub.com/

### 7.8 Oil tank (refer to the fig. 7.11)

The hydraulic oil tank is on the right side of the frame. Oil filter of the front and rear oil pump, the oil cap with a oil meter and brake return oil pipe used when powered braking are assembled on the tank' s plate.

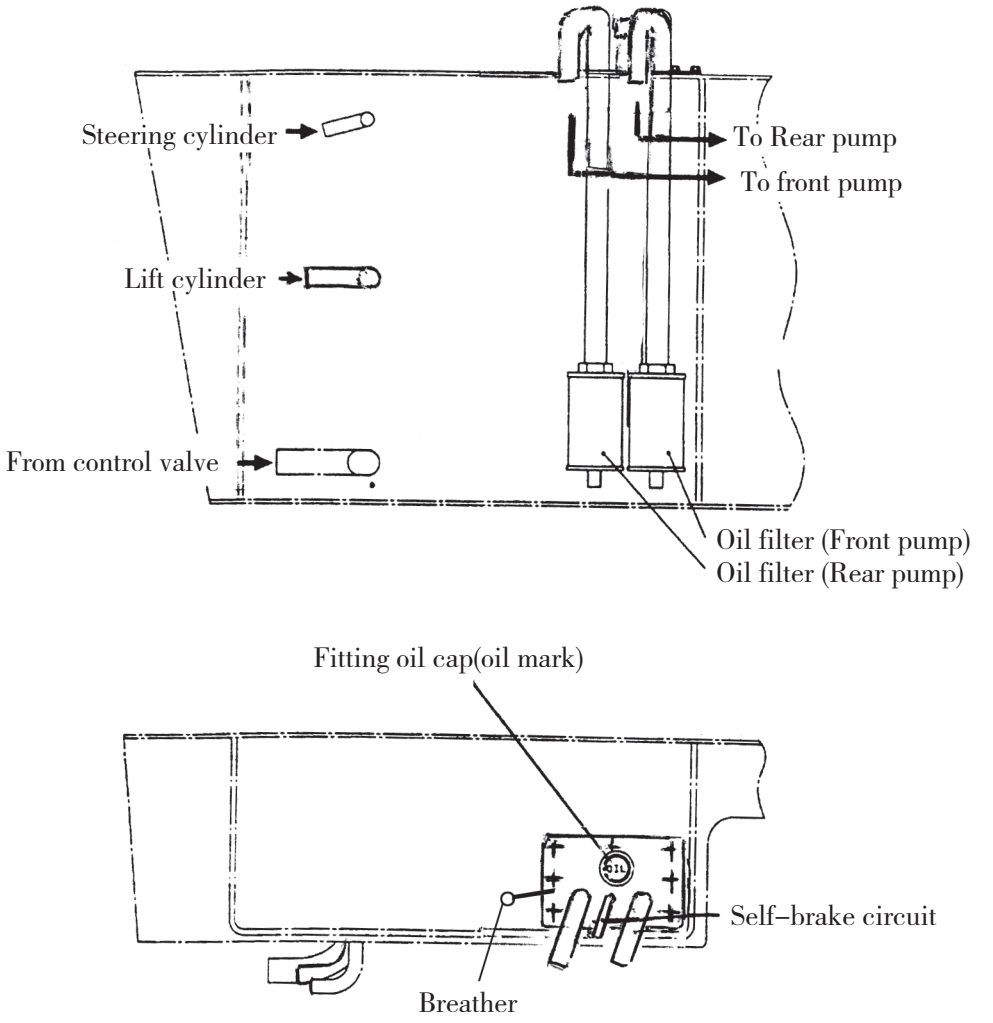


Fig.7.11 Oil tank

https://truckmanualshub.com/

## 7.9 Hydraulic circulation system(Main circuit)

The hydraulic system sketch see following:

The hydraulic circulation system of 5 to 8 ton forklift trucks see Fig.7.12.

The hydraulic circulation system of 10 ton forklift trucks see Fig.7.13

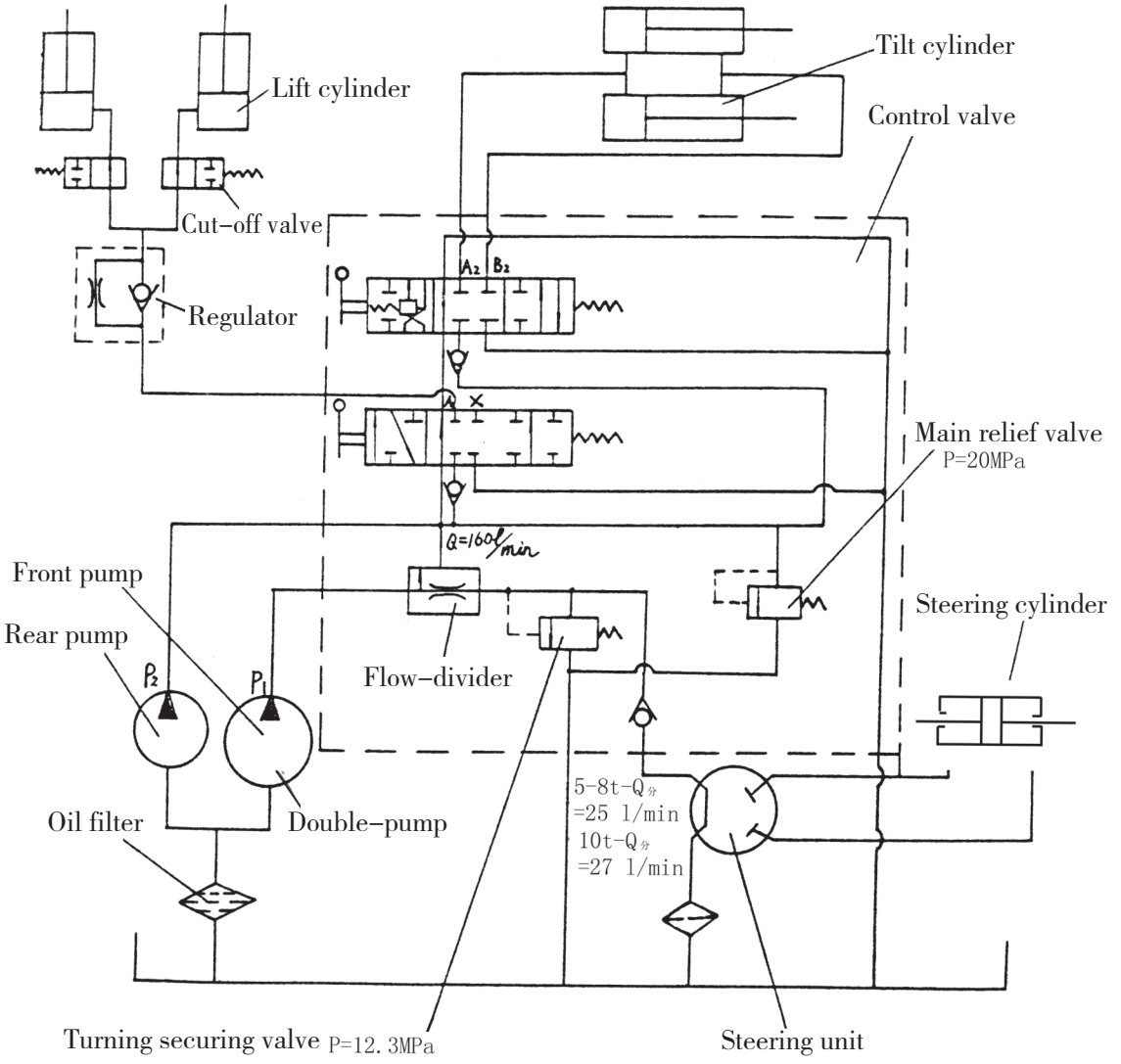


Fig.7.12 Hydraulic system

https://truckmanualshub.com/

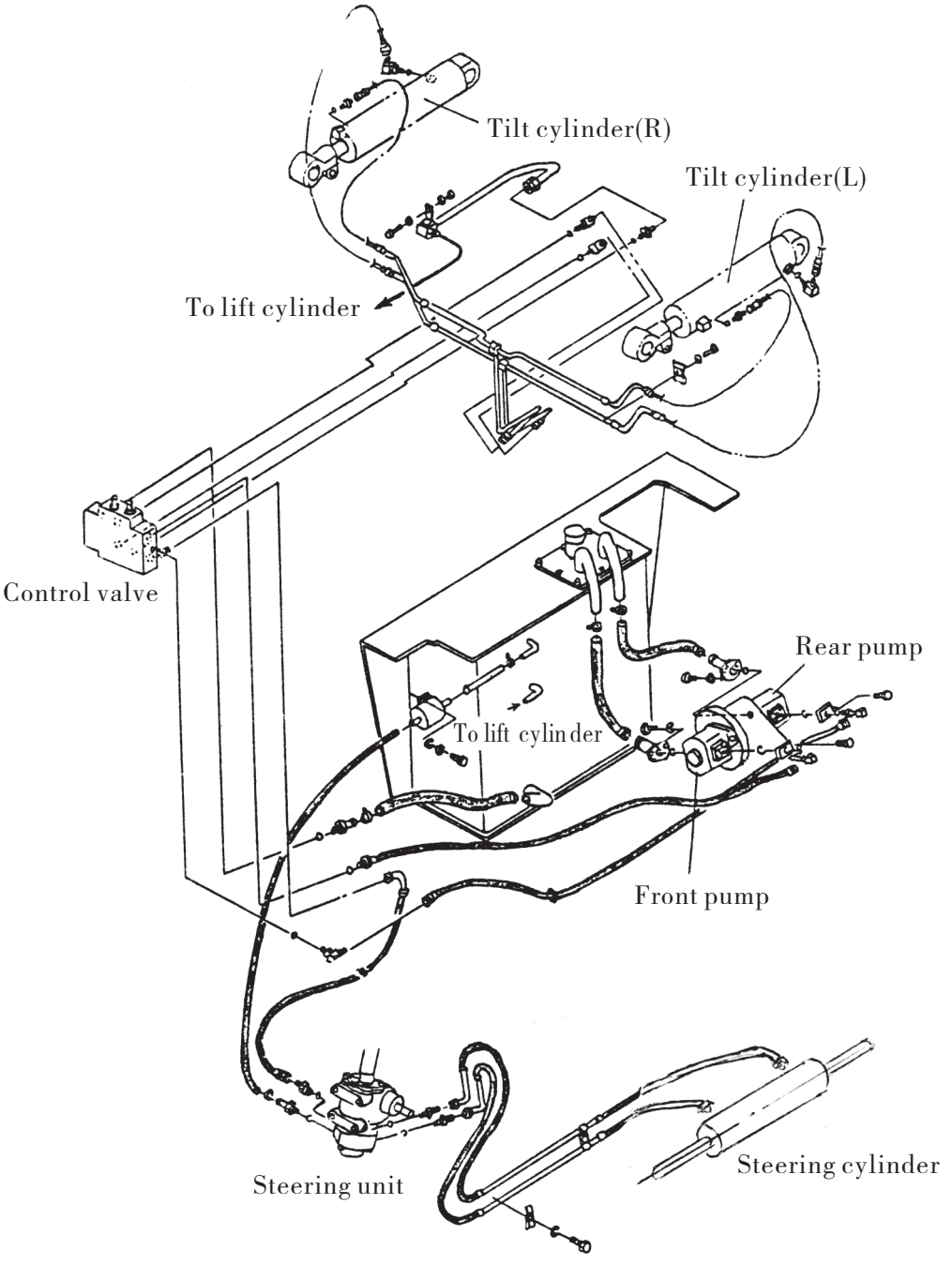


Fig.7.13 Hydraulic circuit(for 5–10t truck)

https://truckmanualshub.com/

The hydraulic circulation system of the main circuit becomes complicated because of the application of the hydraulic circuit for power steering.The hydraulic piping is of O-ring fitting type with excellent sealing performance,providing secure oil tightness.

The hydraulic oil sent from the rear main pump flows directly to the control valve,while the hydraulic oil sent from the front main pump is divided by the flow divider valve in two portions for steering and load handling operation.

The hydraulic oil for load handling flows into the control valve and mingles with the hydraulic oil from the rear main pump.With the control valve in neutral position,the oil returns to the oil tank,passing through the valve.

When the lift lever is pulled,the hydraulic oil from the control valve flows through the flow regulator valve and reaches the lower part of the lift cylinder piston to push up the piston rod.When the lift lever is pushed,the circuit between the lower part of the lift cylinder piston and the oil tank is opened,and the piston begins to descend due to the weight of the piston rod,lift bracket,forks,etc.In this case,the oil returning to the control valve is regulated by the flow regulator.When the tilt lever is operated,the hydraulic oil from the main pump reaches one side of the piston to push it.The oil pushed by the piston returns to the oil tank through the control valve.

**7.10 maintenance**

7.10.1 Disassembly of control valve

Dismount the control valve from the machine and clean the exterior of it.

(1)Remove the fitting bolts and separate the control valve into each section.Don’t lose the check valves and springs arranged at the joint sections.

(2)Remove the screws at the plunger head side and the bolts with hex.Groove at the cap side,and remove the wiper,O-ring and seal plate from the valve housing together with plunger.

(3)Put the plunger on the vice and remove the cap screw.And then remove the springs and spring seats.On the plunger provided with a tilt lock,remove also the spring and poppet in the plunger.

7.10.2 Reassembly of control valve

Using mineral oil,clean all the disassembled parts.Check them for burrs or nicks,and replace as necessary.The valve housing and plunger,and the plunger and poppet are assembled by wrapping.If replacement is needed,replace the assembly.

(1) Fasten the plunger with vice,and install the poppet and spring in the plunger,observing the direction of poppet.

(2) Install the O-ring,wiper,seal plate,spring seat,spring and spring seat in this order to the plunger end side,and tighten them with cap screw to the torque of 25 to 32N.m.

(3) Insert the assembled plunger into the valve housing and fit the cap by the bolt

https://truckmanualshub.com/

with hex groove.(Tightening torque:9 to 11 N.m)

(4) Fasten the O-ring and wiper to the plunger head side and tighten the seal plate with screw to the torque of 4.6 to 5.8 N.m.

(5) After assembling,install the check valve,spring and O-ring in each section and tighten them to the specified torques with three bolts.(one bolt:103N.m;the others:66N.m)

7.10.3 Note

The pressures of the safe valves inside the control valve are adjusted before leaving the factory. They can not be adjusted as will by users avoiding the damaged of the hydraulic system and hydraulic units because of over high pressures. Regulate the pressures of the safe valves according to the manual after repair.

## 8. Lift Cylinder & Tilt Cylinder

The main specification see Table 8.1.

Table 8.1

| | | | 5-7t | 8t | 10t |
|---|---|---|---|---|---|
| Lift cylinder | Type | | Single-acting piston type | | |
| | Cylinder bore | mm | Φ80 | Φ90 | Φ100 |
| | O.D. of piston rod | | Φ60 | Φ70 | |
| | Stroke | | 1495 | | |
| Tilt cylinder | Type | | Double-acting piston type | | |
| | Cylinder bore | mm | Φ115 | | |
| | O.D. of piston rod | | Φ50 | | |
| | Stroke | | 227 | 242 | |

### 8.1 Lift Cylinder

The two lift cylinders of single acting type are used and located behind each outer mast frame.The bottoms of the cylinders are sustained by the mast support of the outer mast while the tops of them,or the piston rod ends are inserted into the one body construction piston head.

The lift cylinder assembly consists primarily of a cylinder body,piston,piston rod and cylinder cap.At the lower part of the cylinder body is arranged an inlet for high-pressure oil,and at the upper part there is an outlet for low-pressure oil above the piston packing,to which a return pipe is connected.The piston is fastened to the piston rod with castle nut and cotter pin together with an O-ring.A wear ring,packing and back-up ring are attached to the outside periphery of the piston which is moved along the inner surface of the cylinder by high-pressure oil.An oil seal and bushing are installed on the cylinder cap which is screwed into the cylinder body.The bushing supports the piston rod,and oil seal

https://truckmanualshub.com/

prevents dust from entering the cylinder.The upper end of the piston rod is locked with piston head set bolts.

When the lift lever is tilted backward,high oil pressure is sent into the lift cylinders through their inlets to push up the piston rods and active beam causing the forks to rise through chains.The height from the ground to the fork position at which the inner mast frame connecting member begins to be lifted is called "Free Lift" range.Within this range,the mast height does not vary.With the lift lever tilted forward,the pistons of the lift cylinders descend by the weights of the piston rods,lift bracket,finger bar and forks,causing oil under the piston to flow out of the cylinders.The oil discharged from the cylinders is regulated by the flow regulator and returns through the control valve to the oil tank.

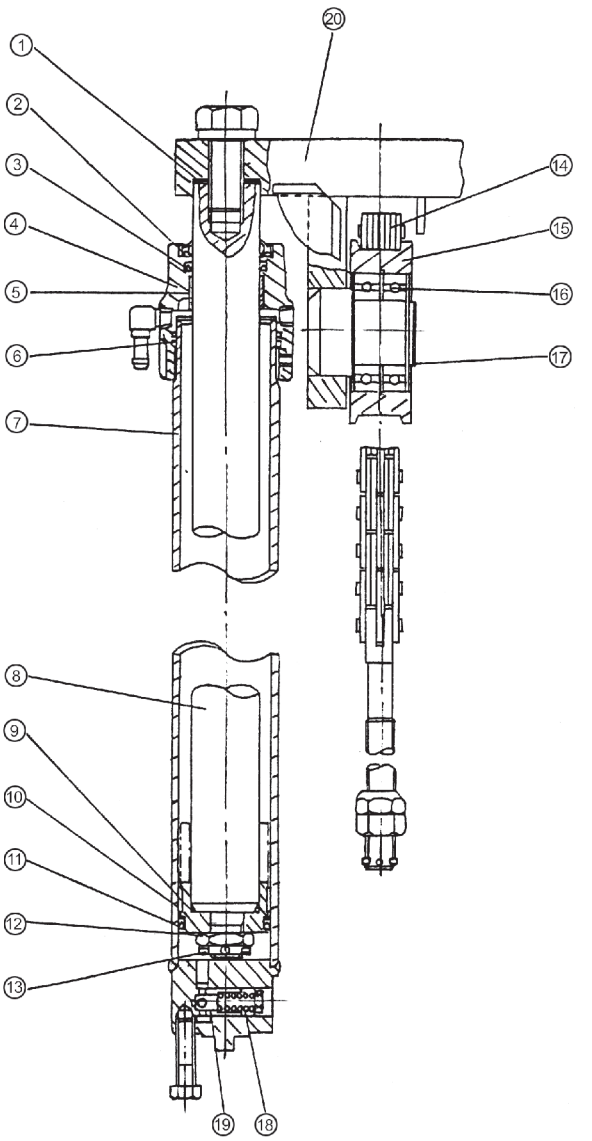


1.Washer
2.Dust
3.Yx-ring
4.Guide cap
5.Ball bushing
6.O-ring
7.Cylinder body
8.Piston rod
9.O-ring
10.Wearing
11.Yx-ring
12.Groove nut
13.Cotter pin
14.Lift chain
15.Sheave
16.Ball bushing
17.Snap ring
18.Spring
19.Cut-off valve
20.Active beam

Fig.8.1 Lift cylinder(5-8t truck)

https://truckmanualshub.com/

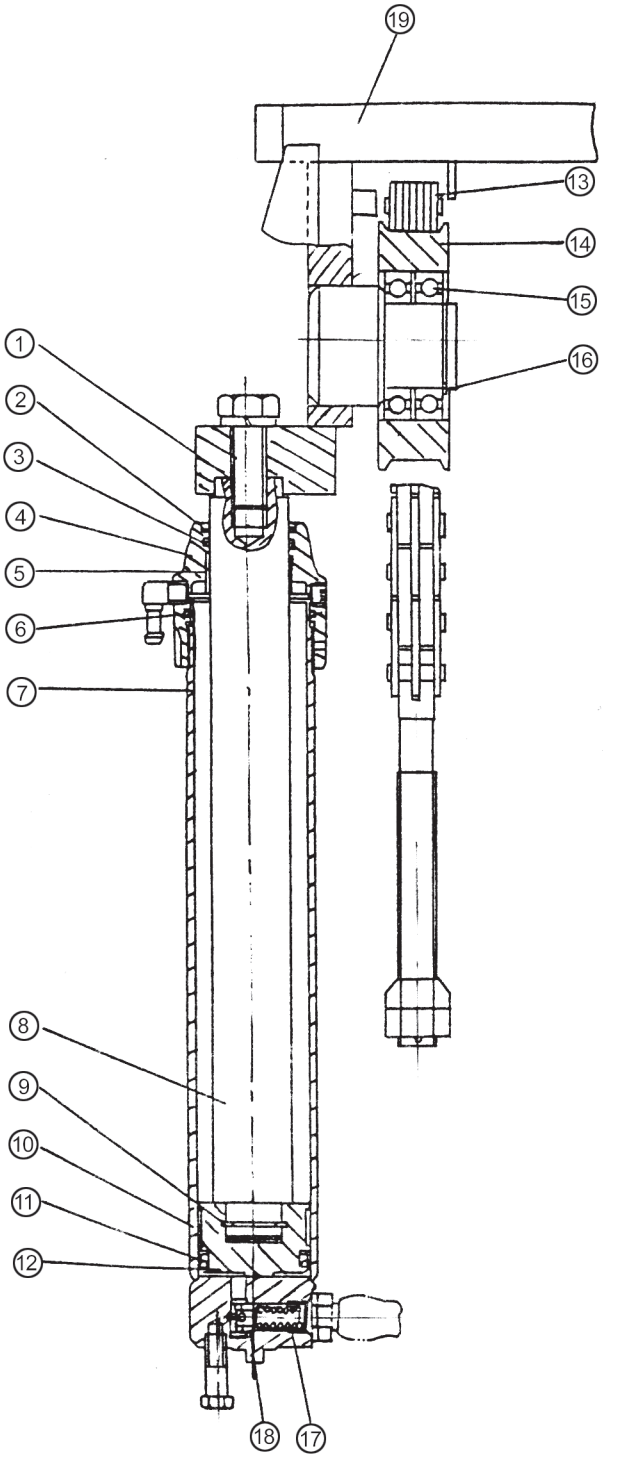


1.Washer
2.Dust
3.Yx-ring
4.Guide cap
5.Ball bushing
6.O-ring
7.Cylinder body
8.Piston rod
9.Ring
10.Wearing
11.Yx-ring
12.Piston
13.Lift chain
14.Sheave
15.Ball bushing
16.Snap ring
17.Spring
18.Cut-off valve
19.Active beam

Fig.8.2 Lift cylinder(10t truck)

https://truckmanualshub.com/

### 8.2 Cut-off valve

At the bottom of the two lift cylinders are two cut-off valves(See Fig.8.1 No.19 or Fig.8.2 No.18) which operate when the high-pressure hose bursts for any reason to prevent the load from dropping down abruptly.The oil from the lift cylinder flows through small holes in the circumference of the cut-off piston and produce a pressure difference between two chambers. As the pressure difference as result of passing the holes is smaller than the spring force so that the cut-off spool won't move.If the high-pressure hose bursts, it allows only a small amount of oil to flow through the holes in the spool head to let the forks descend at low speed.

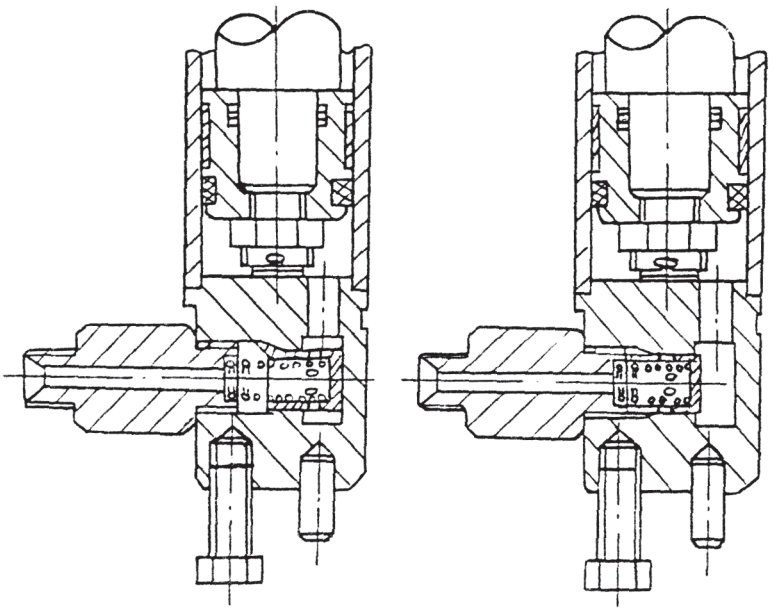

Natural conditions　　Cut-off conditions

Fig.8.3 Cut-off valve

### 8.3 Flow regulator

The flow regulator valve is located between the control valve and the high pressure ports of the two lift cylinders,near the left cylinder (See Fig.8.4).The structure of the flow regulator valve is shown in Fig.8.5. The structures of 8 ton and 10 ton forklift trucks are almost the same as 5 to 7 ton forklift trucks.No.3 in Fig.8.5 is taper helical spring for 8 ton forklift trucks and is coil spring for 10 ton forklift trucks.

The flow regulator valve serves both as a flow regulating valve while forks are lowering and a safety device if rubber hoses between the control valve and lift cylinders are damaged due to any reason.

The operation of the flow regulator valve is given below.

https://truckmanualshub.com/

See Fig.8.5.With the forks upraised,high pressure oil led from the control valve flows into the chamber (A) and shifts the sleeve (2) to the left.This opens the opening (G) to allow the high pressure oil to flow along the two routes(A–B–G–D–E and A–B–C–D) and both flows of oil lead to the lift cylinders.In this case,the flows of oil is not regulated.When the forks begin to lower,oil discharged from the lift cylinders enters the chamber (E) and shifts the sleeve until it contacts the nipple.This closes the opening (G) so that oil flows through (E),(D),(H),(C),(B) and (A) to the tank.If the amount of oil discharged from the lift cylinders is rapidly increased,the pressure in the chamber (F) rises and moves the piston (5) to the right in spite of the spring force,narrowing the opening (H).So the flow of oil from the chamber (D) to the chamber (C) is decreased so that the descending speed of the forks is controlled.

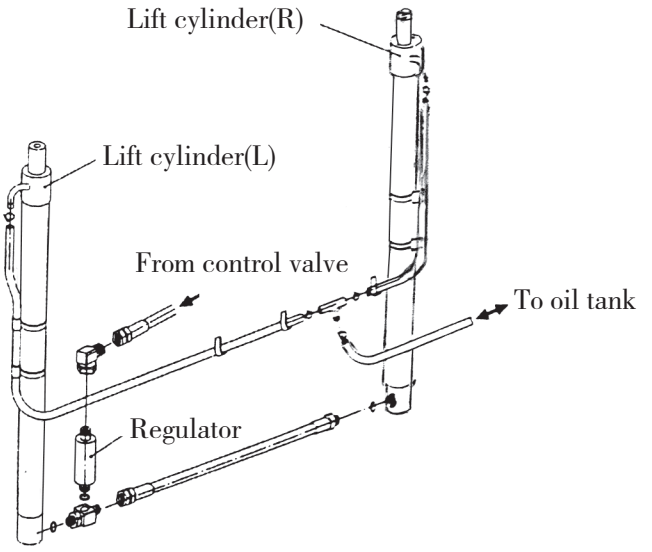


Fig.8.4 Regulator mounting position

https://truckmanualshub.com/

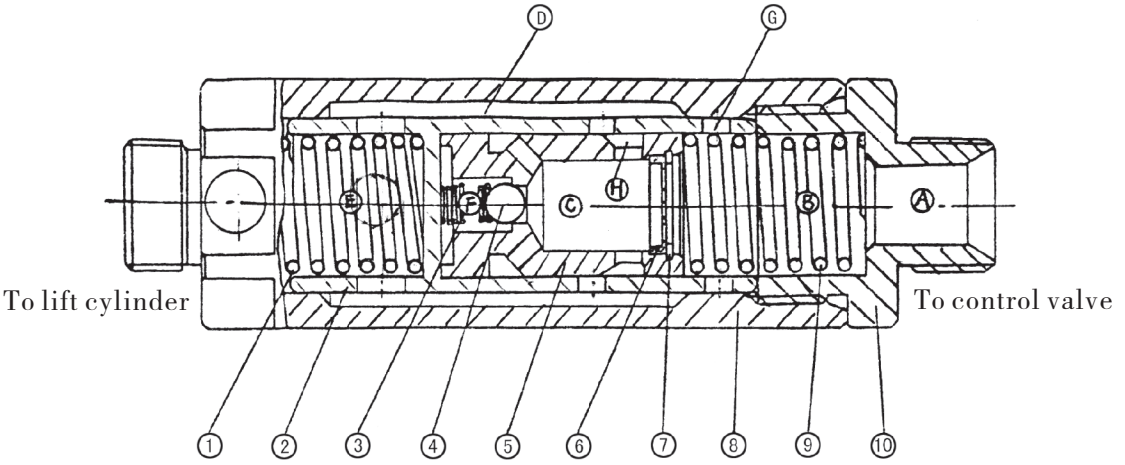


| | | | |
|---|---|---|---|
| 1.Spring | 4.Nylon ball | 7.Snap ring | 10.Nipple |
| 2.Valve sleeve | 5.Valve core | 8.Valve body | |
| 3.Spring | 6.Regulator plate | 9.Spring | |

Fig.8.5 Regulator(5–7t truck)

## 8.4 Tilt cylinder

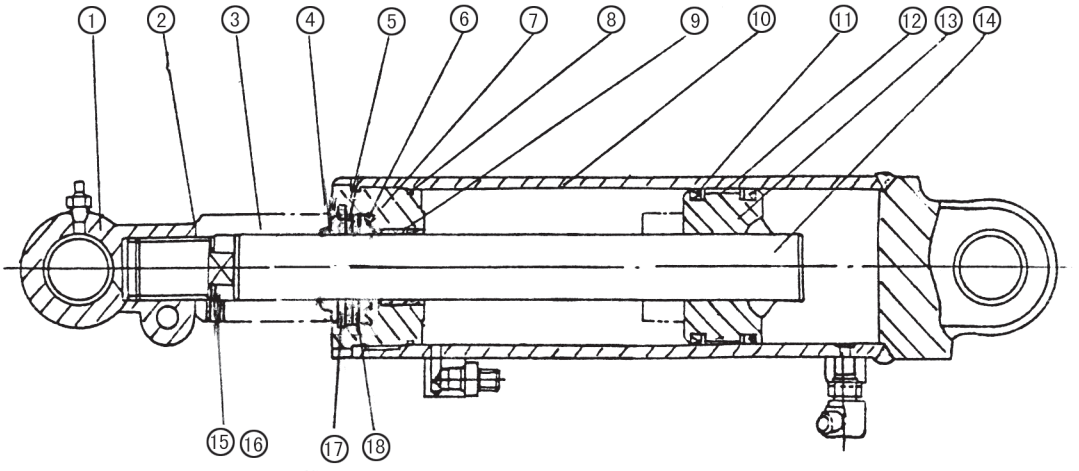

| | | | |
|---|---|---|---|
| 1.Earring | 6.Yx–ring | 11.Yx–ring | 16.Screw |
| 2.Washer | 7.Guide(cylinder cap) | 12.Wearing | 17.Snap ring |
| 3.Adjuster sleeve | 8.O–ring | 13.Piston | 18.Snap ring |
| 4.Dust ring | 9.Bushing | 14.Piston rod | |
| 5.Snap ring | 10.Cylinder body | 15.Plug | |

Fig.8.6 Tilt cylinder

https://truckmanualshub.com/

Two tilt cylinders of double acting type are provided at each side of the frame.The front end of the piston rod is installed on the mast and the cylinder tail is on the frame with pins.

The tilt cylinder assembly aonsists primarily of a cylinder body,cylinder cap,piston and piston rod.The piston is welded to the piston rod.The piston,of which the outside periphery is given two packings and a wear ring,slides inside the cylinder by hydraulic oil.The inside periphery of the cylinder cap has a press—fitted bushing,packing and dust seal to keep oil tightness between the piston rod and the inside of the cylinder cap.

The cap,fitted with an O–ring on the outer periphery,is screwed into the cylinder body and fastened with a lock ring.

When the tilt lever in the drive's room is tilted forward,high pressure oil enters from the cylinder tail side to shifts the piston forward,tilting the mast forward 6 degrees.With the tilt lever tilted backward,high pressure oil enters from the cylinder cap side.This shifts the piston to the rear,causing the mast to tilt backward 12 degrees.

https://truckmanualshub.com/

## 9. Hoist System

The main specifications see table 9.1.

| | | 5–7t | 8t | 10t |
|---|---|---|---|---|
| Type | | Rolling type,welded mast with free lift, 2–stage telescopic mast | | |
| Cross section of inner mast | | 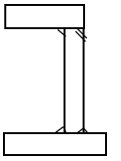 | | |
| Cross section of outer mast | | 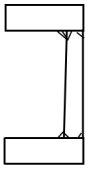 | | 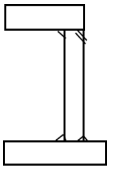 |
| Max. Lift Height (S.T.D.) | | 3000mm | | |
| Forward tilt (S.T.D.) | | 6° | | |
| Backward tilt (S.T.D.) | | 12° | | |
| Rollers | O.D. of end rollers mm | Φ151.5 | Φ183.5 | |
| | O.D. of side rollers mm | Φ82 | | |
| | O.D. of retaining (on bracket) mm | Φ102 | Φ109.7 | Φ119 |
| Lift chain | | LH2044,4×4, P=31.75 | LH2444,4×4, P=38.1 | LH2844,4×4, P=44.5 |
| Fork lifting method | | Hydraulic | | |
| Mast tilting method | | Hydraulic | | |
| Fork spacing adjustment | | Manual | | |

https://truckmanualshub.com/

### 9.1 General

The hoist system is of the two-stage,rolling telescopic mast type. The inner mast frames have J-shaped section. The outer mast frames have J-shaped section of 10 ton forklift trucks and have C-shaped section of 5 to 8 ton forklift trucks. The masts of 5 to 10 ton forklift trucks all contain a free lift range.

### 9.2 Outer & inner mast

The mast assembly is of the free lift range-contained two stage telescopic type consisting of the inner and outer mast,and is sustained by mast supports.The mast supports are welded to the bottom of the outer mast,being extended from the axle housing. The outer masts are provided with brackets for lock pins of tilt cylinder connecting hardware.The mast is tilted by operation of the tilt cylinders,forward 6° and backward 12° .

The inner mast is composed of right and left mast frames which are connected with each other by upper and lower connecting members.At the upper inside of each outer mast frame an end roller is installed on the end roller shaft welded to the frame,with a snap ring.In addition,the outer mast frames are fitted with side rollers to sustain the inner mast frames.At the lower outside of each inner mast frame an end roller is installed on the end roller shaft with snap ring,which is welded to the inner mast.Under the end rollers other side rollers are located to sustain transverse load.With the aid of these rollers,the inner mast can smoothly operates.

### 9.3 Lift bracket

At the lift brackets,end rolers that roll along the inside of the inner mast frames are installed on the end roller shafts with snap rings.The end roller shafts are welded to the lift brackets.The side rollers that roll along the inside of the inner mast frames are bolt fitted,being shim adjusted.To prevent the tolling of the finger bar,two retaining rollers are used,which roll along the outside of inner mast frames.The lingitudinal load is sustained by the end rollers of which the upper ones emerge from the mast top when the forks reaches the maximum lift height.The transverse load is sustained by upper retaining rollers and lower side rollers.As we mentioned above,the mast assembly and lift brackets are designed with rigidity,stability and smooth operation in mind.Furthermore,the finger bar and lift brackets are made into one body construction using high tension steel to improve the durability.This meets the ISO Standards.

The two forks installed on the finger bar are made of special alloy steel which has been subjected to heat treatment.

### 9.4 Adjustment of hoist system

9.4.1 Adjustment of lift cylinder

When replace the lift cylinder,inner mast or outer mast,we shall readjust the stroke of the lift cylinder as following steps.

(1)Install the piston rod in the upper beam of the inner mast without shims.

(2)Lift the mast slowly to the max. stroke of the cylinder and check whether the two cylinders synchronize or not.

(3)Install shims between the top of the piston rod of the cylinder which stop first and the upper beam of the inner mast.The shim are 0.2mm or 0.5mm thick.

(4)Adjust the tightness of lift chains.

https://truckmanualshub.com/

The adjustment of the lift cylinder also belongs to exalted maintenance. Please be careful.

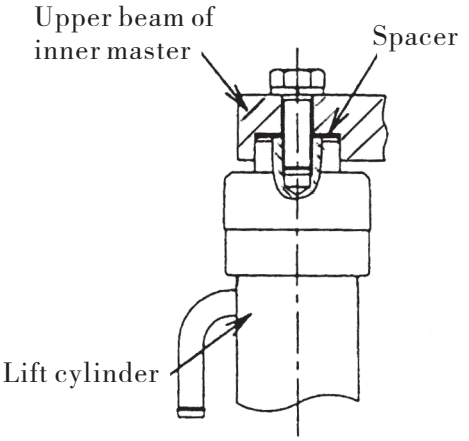


Fig.9.1

9.4.2 Rust protection and maintenance of the lift cylinder

The moisture content of the atmosphere and salt fog will go into the cylinder through the oil return pipe and the clearance between the sealing parts and other parts if the cylinder is not used for a long time. And thus the piston rod and inside of the cylinder barrel will be corroded and the exterior of the cylinder will become rusty. Once the cylinder gets rusty, it will be no longer serviceable.

Rust protection and maintenance measures:

(1) Rust protection of the piston rod exposed outside: wipe the surface of the piston rod with oil cloth evenly every one or two week in sunny days so as to form oil firm. If it is humid weather, do as above every 3–5days.

(2) Rust protection of the interior of the cylinder: lift and lower the mast several times in sunny days every 3–5 days to make the interior of the cylinder be fully oil lubricated; do the above every 2–3 days in humid weather.

9.4.3 Carriage adjustment

(1)Let the truck parking on the horizontal ground and make the mast vertical.

(2)Let the bottom of the fork contact with the ground.Adjust the adjusting nut for the

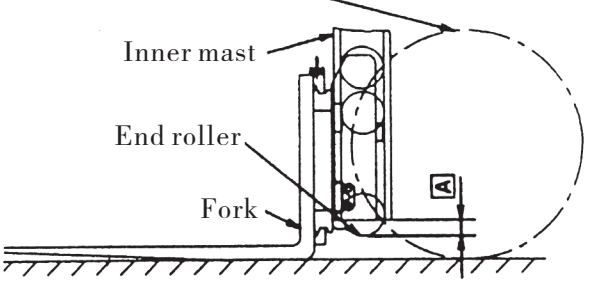


Fig.9.2

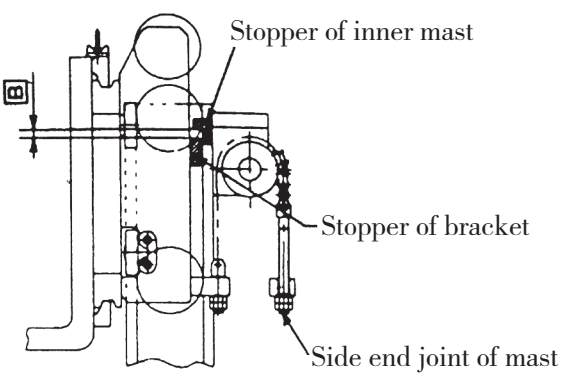


Fig.9.3

https://truckmanualshub.com/

end nipple of the upper chain and make a distance A between the main roller and the carriage A. The A's value equals the 1/4–1/3 value of the main roller's radiu.

(3)Lift the fork to the max. height to ensure the clearance B between the stopper of bracket and the stopper of inner mast is 5–10mm.

(4) Make the fork down to the ground and tilt backward fully. Adjust the adjusting nut for the end nipple of the upper chain and make the two chains' tightness equal.

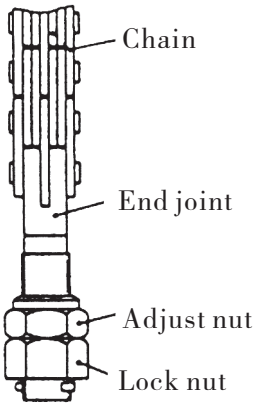


Fig.9.4

**9.5 Roller disposal**

There are three kinds of rollers in the hoist system,main roller,side roller group,side roller.They are separately mounted on the outer mast,inner mast and carriage. Roller disposal of the trucks of 5–10t is almost similar.The main rollers sustain the loads from front and rear direction, and generally can not be adjusted.The side rollers sustain the side loads. Clearance in right and left side direction can be adjusted with shims so that outer mast, inner mast and bracket can move freely up and down.

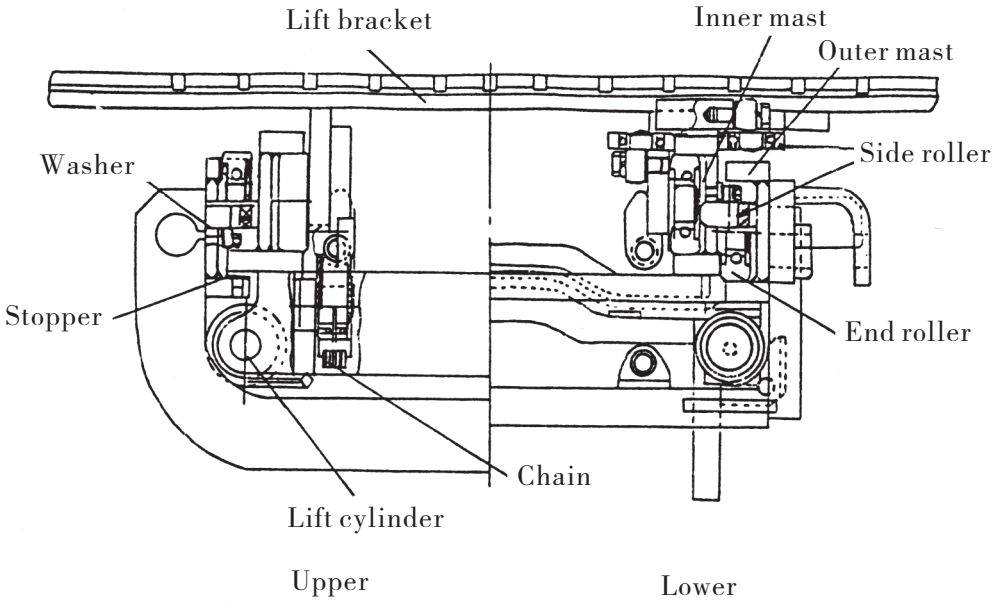


Fig.9.5 Roller lay(for 5–7t truck)

https://truckmanualshub.com/

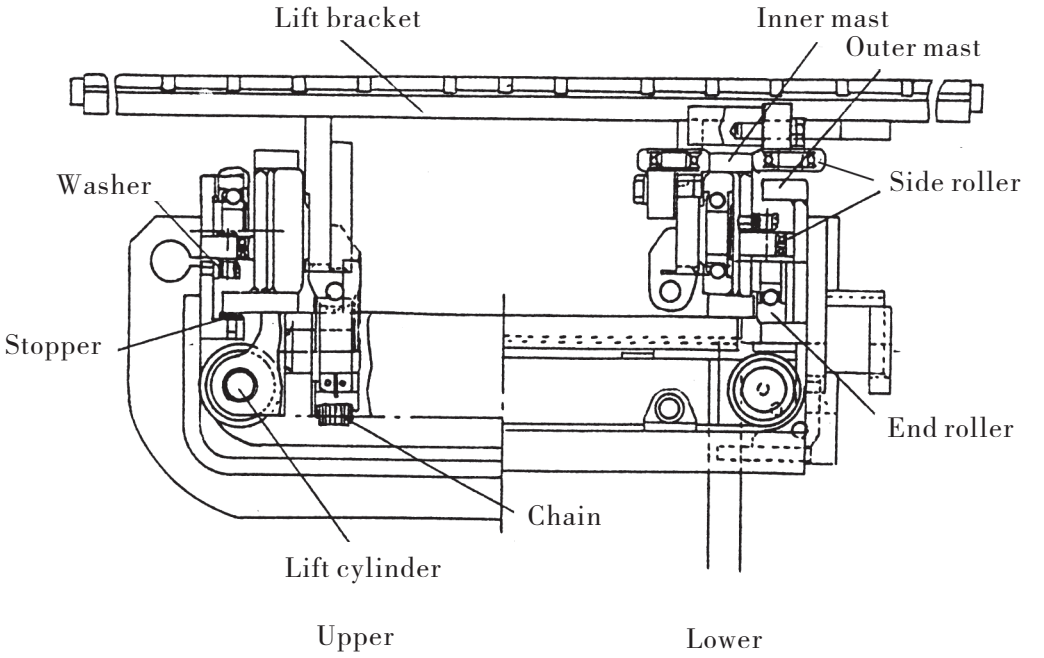


Fig.9.6 Roller lay(for 8t truck)

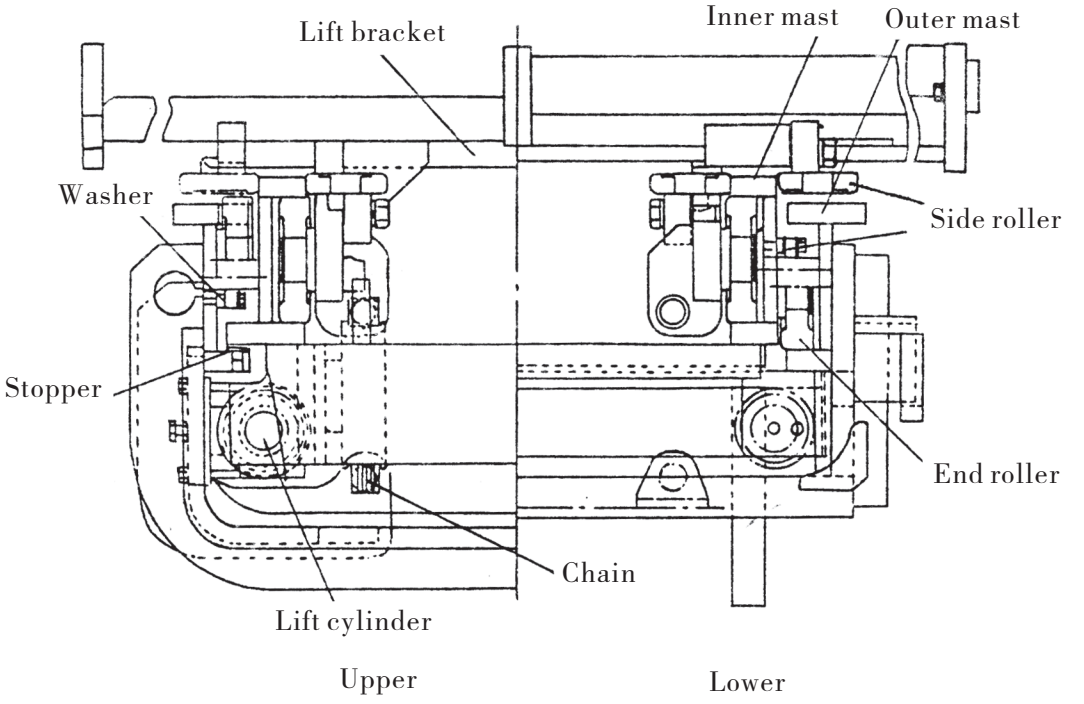


Fig.9.7 Roller lay(for 10t truck)

https://truckmanualshub.com/

HELI
安徽合力股份有限公司
ANHUI HELI CO., LTD.

地址：安徽 合肥 经开区方兴大道668号
电话：0551 63689000
传真：0551 63689666

http://www.heliforklift.com
E-mail：heli@helichina.com
邮编：230601

S66-6:2013