https://truckmanualshub.com/

Allison Transmission®

Mechanic's Tips

3000 and 4000 Product Families

MT3004EN

https://truckmanualshub.com/

Mechanic's Tips

2006 MARCH

MT3004EN

Allison Transmission

Allison WTEC III Controls (Except 3000 Product Family 7-Speed)

3000 Product Family
4000 Product Family

Allison Transmission, Inc.
P.O. Box 894 Indianapolis, Indiana 46206-0894
www.allisontransmission.com

Printed in USA

Copyright © 2007 Allison Transmission, Inc.

https://truckmanualshub.com/

NOTES

https://truckmanualshub.com/

TABLE OF CONTENTS

SECTION I INTRODUCTION

1–1 ABOUT THIS MANUAL 7

SECTION II PREVENTIVE MAINTENANCE

2–1 PERIODIC INSPECTION AND CARE 20
2–2 IMPORTANCE OF PROPER TRANSMISSION FLUID LEVEL 20
2–3 TRANSMISSION FLUID TEST 21
2–4 KEEPING FLUID CLEAN 27
2–5 FLUID RECOMMENDATIONS 27
2–6 TRANSMISSION FLUID AND FILTER CHANGE INTERVALS 28
2–7 TRANSMISSION FLUID CONTAMINATION 32
2–8 TRANSMISSION FLUID AND FILTER CHANGE PROCEDURE 35
2–9 FLUID LEAK DIAGNOSIS 37
2–10 BREATHER 40
2–11 TROUBLESHOOTING 40
2–12 TRANSMISSION STALL TEST AND NEUTRAL COOL-DOWN CHECK 45

SECTION III REMOVING TRANSMISSION

3–1 DRAINING TRANSMISSION 51
3–2 DISCONNECTING CONTROLS 51
3–3 UNCOUPLING FROM DRIVELINE, ENGINE, AND VEHICLE 52
3–4 REMOVING THE TRANSMISSION 53
3–5 REMOVING OUTPUT FLANGE OR YOKE 53

SECTION IV TRANSMISSION PREPARATION

4–1 INSPECTING INPUT COMPONENTS 55
4–2 INSTALLING OUTPUT FLANGE OR YOKE 55
4–3 INSTALLING PTO 56
4–4 INSTALLING FILL TUBE AND SEAL 57
4–5 INSPECTING PLUGS AND OPENINGS 58

https://truckmanualshub.com/

SECTION V PREPARING VEHICLE FOR TRANSMISSION INSTALLATION

5–1 ENGINE, TRANSMISSION ADAPTATION REQUIREMENTS 59
5–2 CHECKING FLEXPLATE DRIVE ASSEMBLY 62
5–3 CHASSIS AND DRIVELINE INSPECTION 63
5–4 COOLER, FILTER, AND LINES 64
5–5 INSPECTING CONTROLS 65

SECTION VI INSTALLING TRANSMISSION INTO VEHICLE

6–1 HANDLING 69
6–2 MOUNTING TO ENGINE 69
6–3 INSTALLING TRANSMISSION MOUNTING COMPONENTS 70
6–4 COUPLING TO DRIVELINE 70
6–5 CONNECTING OUTPUT RETARDER ACCUMULATOR 70
6–6 CONNECTING POWER TAKEOFF CONTROLS 71
6–7 CONNECTING PARKING BRAKE CONTROL 72
6–8 CONNECTING COOLER 72
6–9 CONNECTING ELECTRICAL COMPONENTS 72
6–10 CONNECTING SPEEDOMETER DRIVE 74
6–11 FILLING HYDRAULIC SYSTEM 75
6–12 INSTALLATION INSPECTION LIST 75

SECTION VII INSPECTIONS AND ADJUSTMENTS

7–1 INSTALLATION INSPECTION LIST 76
7–2 ROAD TEST AND VEHICLE OPERATION INSPECTION LIST 78

SECTION VIII CUSTOMER SERVICE

8–1 OWNER ASSISTANCE 80
8–2 SERVICE LITERATURE 80

https://truckmanualshub.com/

TRADEMARK USAGE

The following trademarks are the property of the companies indicated:

- Allison DOC™ is a trademark of General Motors Corporation.
- DEXRON® is a registered trademark of the General Motors Corporation.
- TranSynd™ is a trademark of Castrol Ltd.
- LPS Electro Contact Cleaner® is a registered trademark of LPS Laboratories.

https://truckmanualshub.com/

WARNINGS, CAUTIONS, NOTES

IT IS YOUR RESPONSIBILITY to be completely familiar with the warnings and cautions described in this handbook. It is, however, important to understand that these warnings and cautions are not exhaustive. Allison Transmission could not possibly know, evaluate, and advise the service trade of all conceivable ways in which service might be done or of the possible hazardous consequences of each way. The vehicle manufacturer is responsible for providing information related to the operation of vehicle systems (including appropriate warnings, cautions, and notes). Consequently, Allison Transmission has not undertaken any such broad evaluation. Accordingly, ANYONE WHO USES A SERVICE PROCEDURE OR TOOL WHICH IS NOT RECOMMENDED BY ALLISON TRANSMISSION OR THE VEHICLE MANUFACTURER MUST first be thoroughly satisfied that neither personal safety nor equipment safety will be jeopardized by the service methods selected.

Proper service and repair is important to the safe, reliable operation of the equipment. The service procedures recommended by Allison Transmission (or the vehicle manufacturer) and described in this handbook are effective methods for performing service operations. Some of these service operations require the use of tools specially designed for the purpose. The special tools should be used when and as recommended.

The following three types of headings are used in this manual to attract your attention.

WARNING: A warning is used when an operating procedure, practice, etc., if not correctly followed, could result in personal injury or loss of life.

CAUTION: A caution is used when an operating procedure, practice, etc., if not strictly observed, could result in damage to or destruction of equipment.

NOTE: A note is used when an operating procedure, practice, etc., is essential to highlight.

https://truckmanualshub.com/

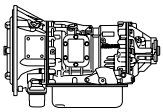

INTRODUCTION

Section I

1–1. ABOUT THIS MANUAL

This handbook is a mechanic’s reference for maintaining, removing, or installing the 3000 and 4000 Product Families on-highway transmission with a WTEC III control system. WTEC III controls were optional on the 3000 and 4000 Product Families on-highway transmission units built in 1997, but became standard on units built starting in 1998.

All features of the transmission and the vehicle involved in installation procedures are discussed. The information presented will help the mechanic maintain, remove, or install the transmission in a manner that promotes satisfactory operation and long service life. For additional detailed information, refer to the appropriate transmission service manual and electronic controls troubleshooting manual.

Unless specifically indicated otherwise, this handbook refers to all 3000 and 4000 Product Families on-highway transmissions, except 7-speed models. The differences between the various transmissions are explained as required.

https://truckmanualshub.com/

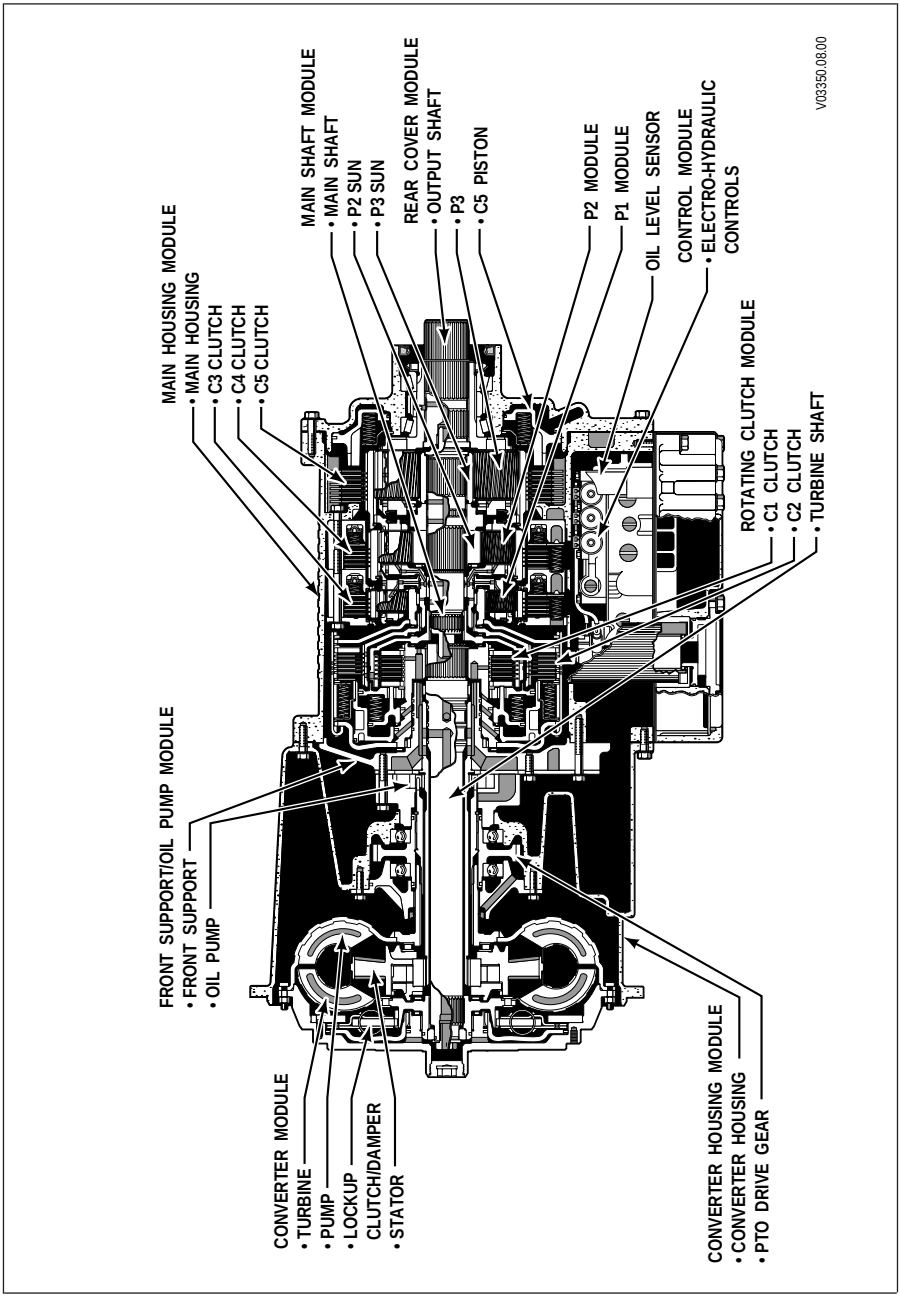

Figure 1–1. 3000 Product Family Transmission with PTO—Cross Section

https://truckmanualshub.com/

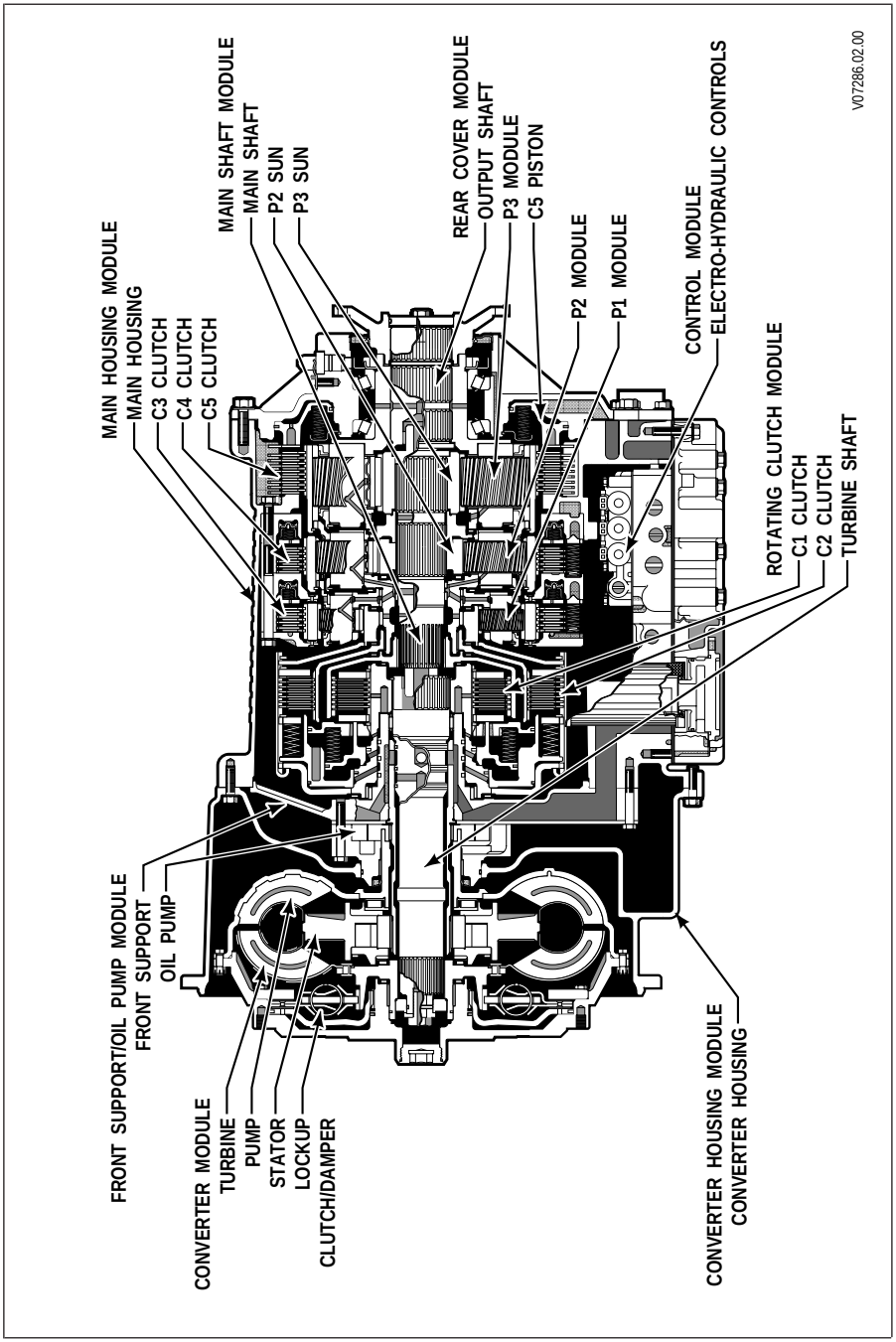

Figure 1–2. 3000 Product Family Transmission—Cross Section

https://truckmanualshub.com/

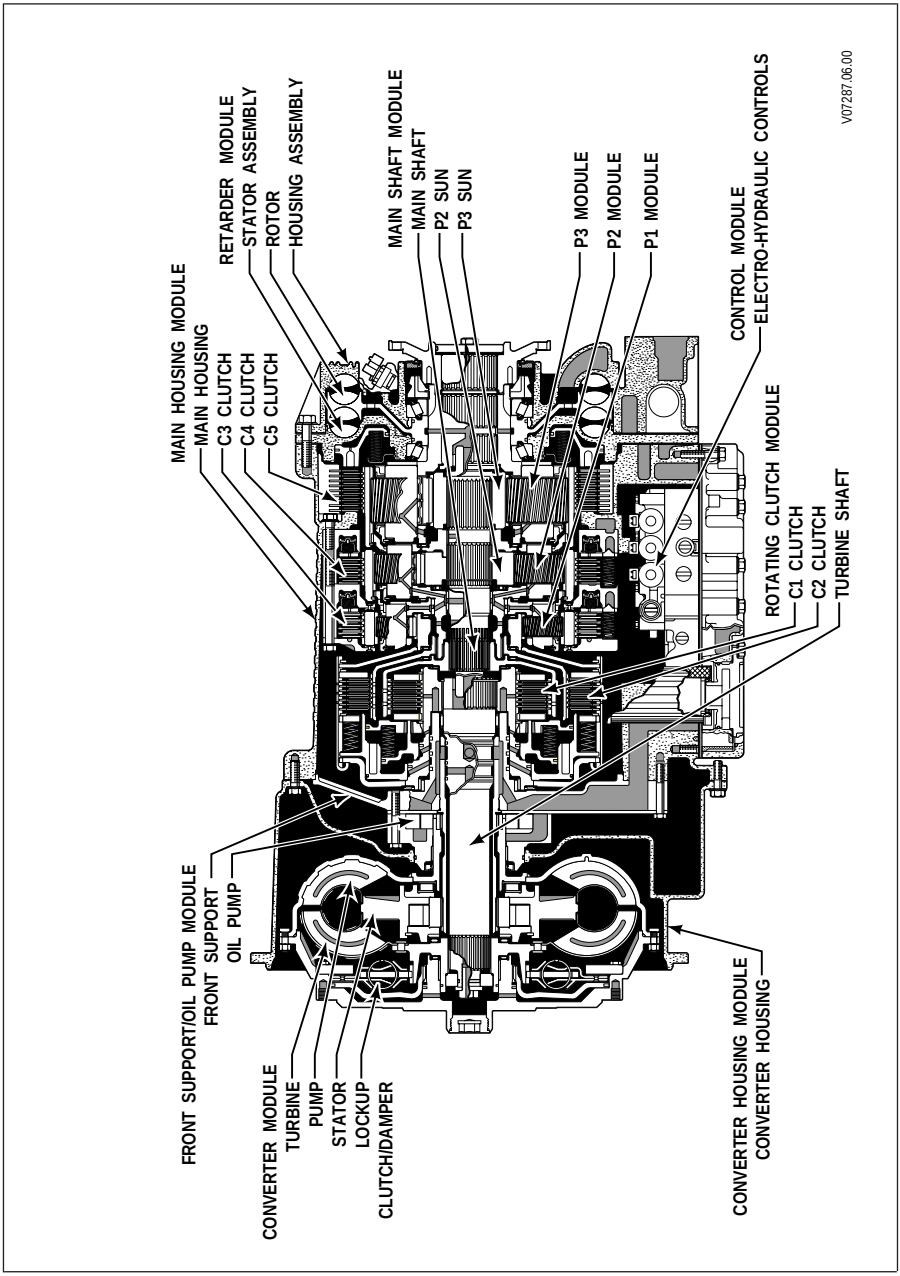

Figure 1–3. 4000 Product Family Transmission with Retarder—Cross Section

https://truckmanualshub.com/

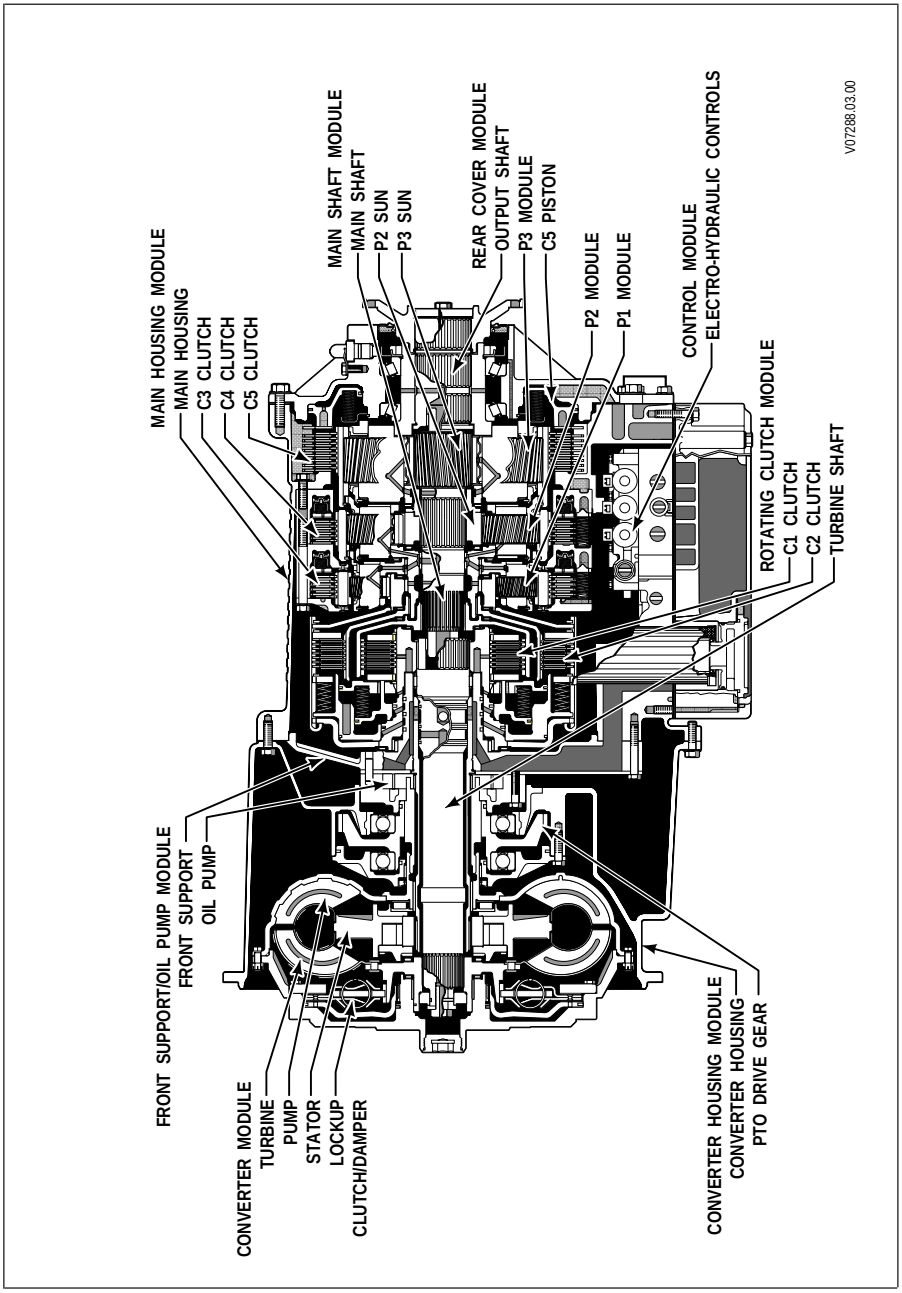

Figure 1–4. 4000 Product Family Transmission with PTO—Cross Section

https://truckmanualshub.com/

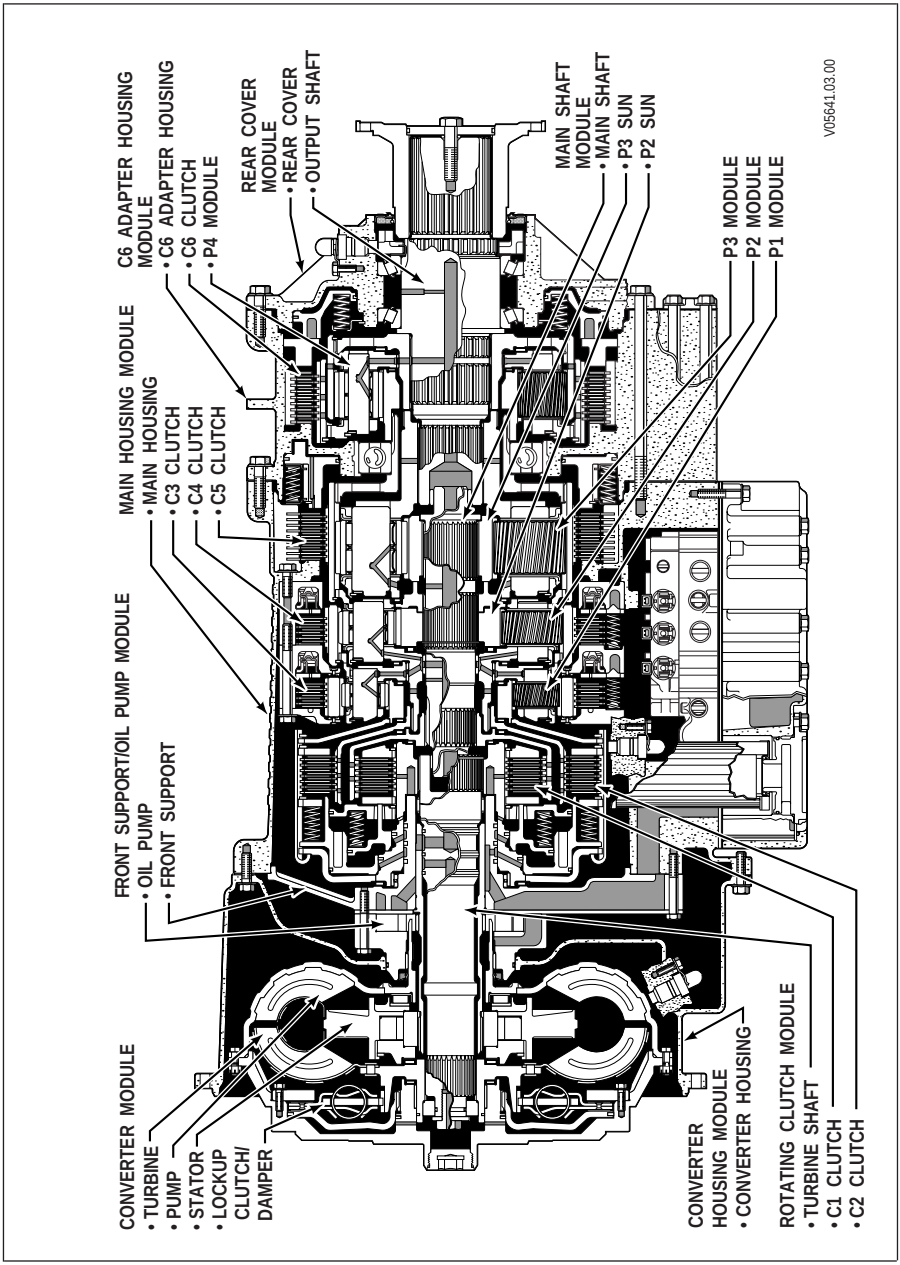

Figure 1–5. 4000 Product Family Transmission 7-Speed—Cross Section

https://truckmanualshub.com/

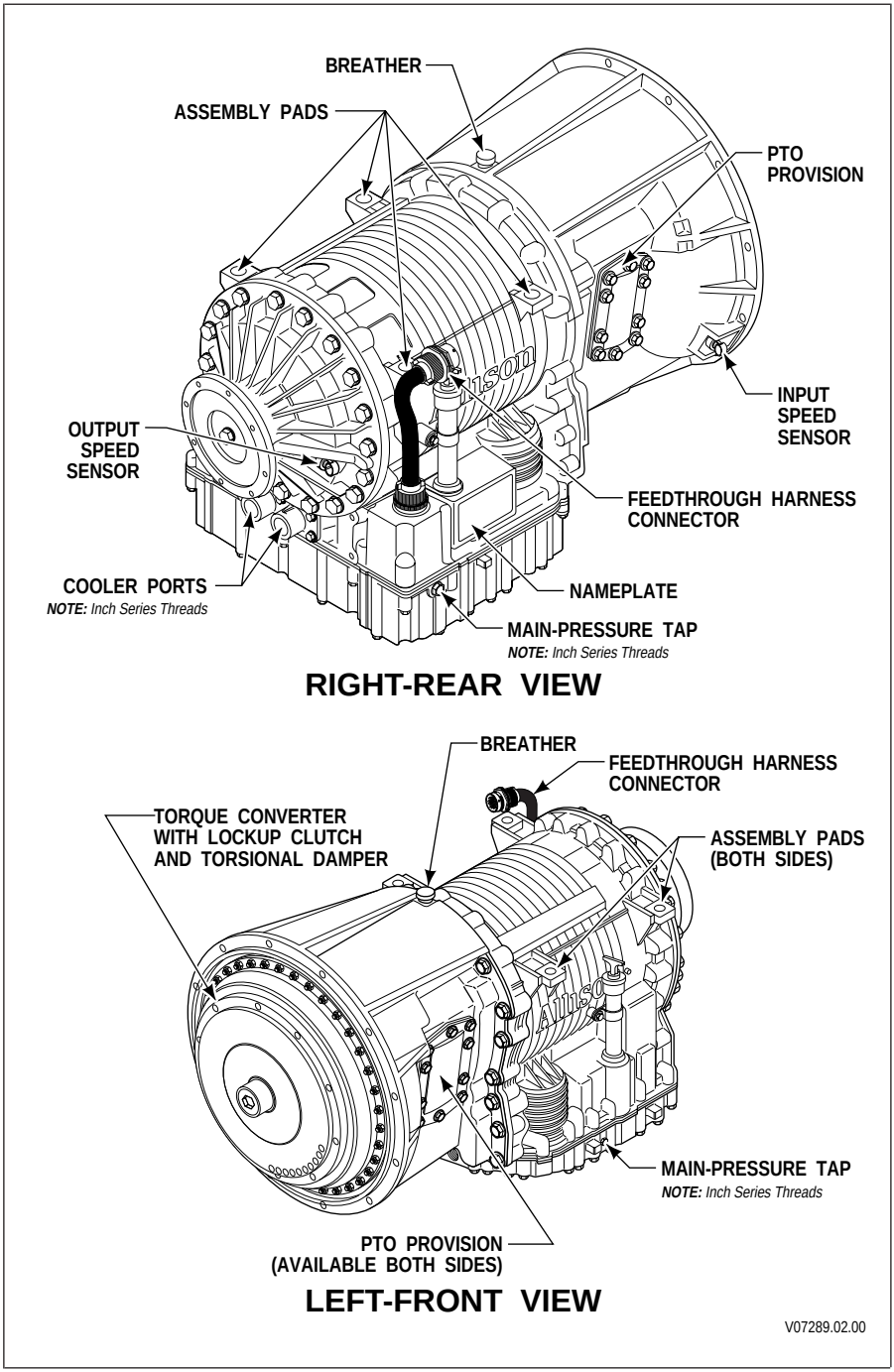

Figure 1–6. 3000 Product Family Transmission with PTO

https://truckmanualshub.com/

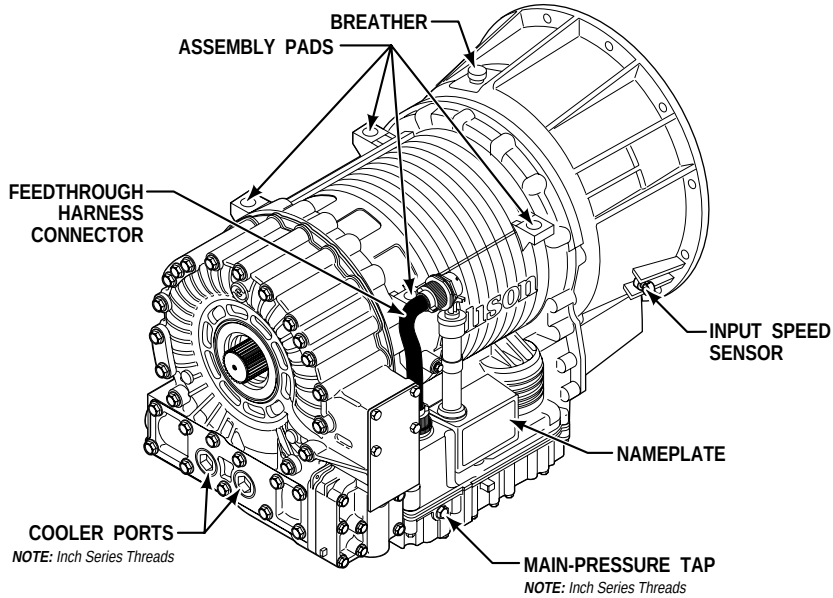

RIGHT-REAR VIEW

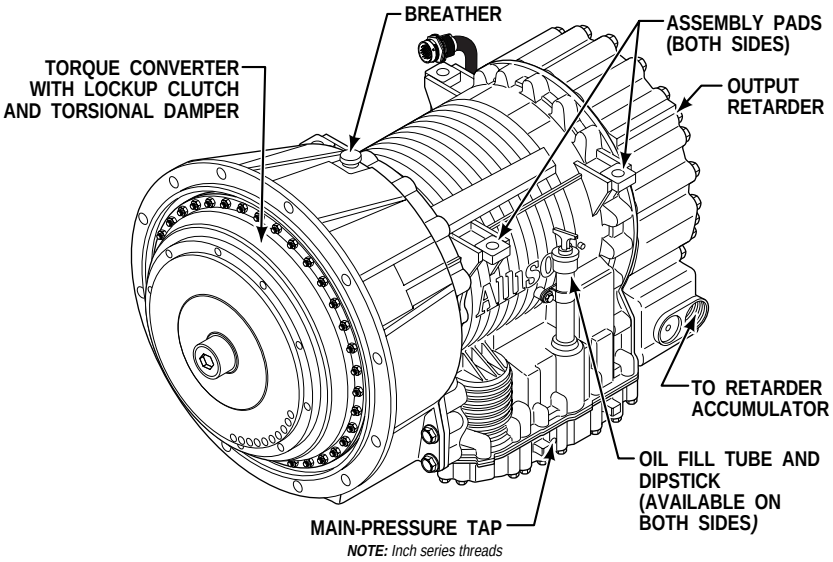

LEFT-FRONT VIEW

V07290.01.00

Figure 1–7. 3000 Product Family Transmission with Retarder

https://truckmanualshub.com/

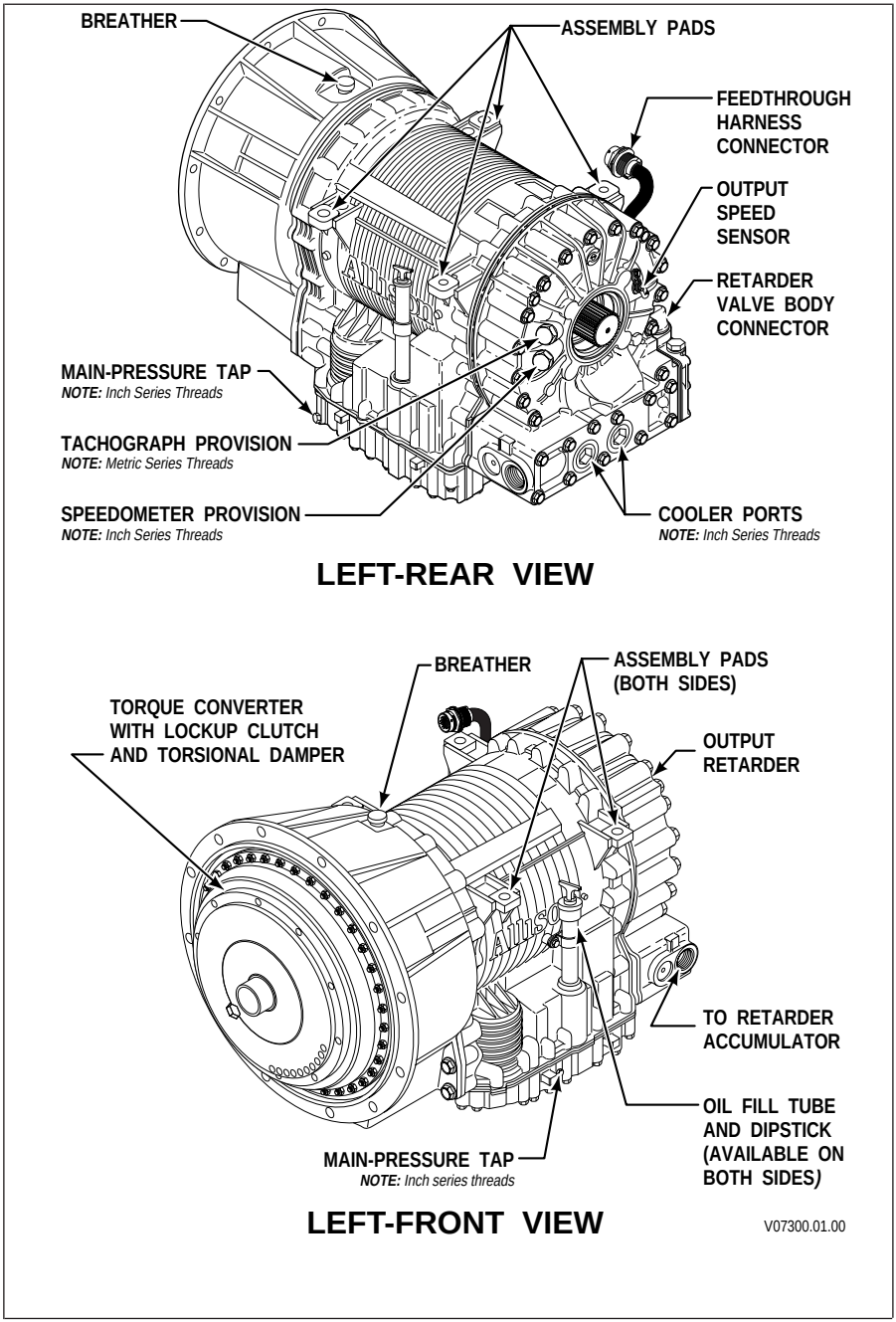

Figure 1–8. 3000 Product Family Transmission with Retarder and Provisions for Tachograph and Speedometer

https://truckmanualshub.com/

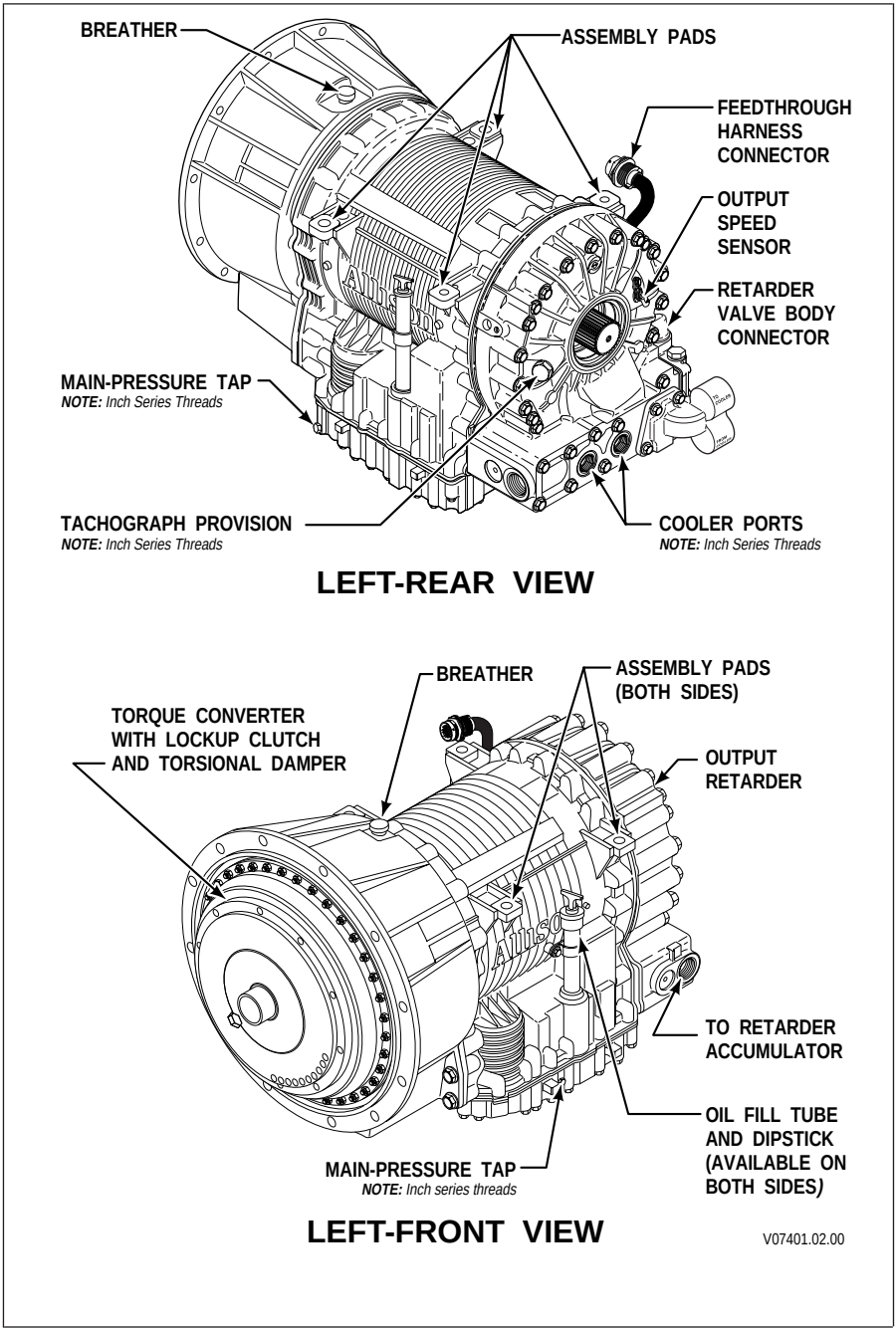

Figure 1–9. 3000 Product Family Transmission with Retarder and Provisions for Tachograph and Sump Cooler

https://truckmanualshub.com/

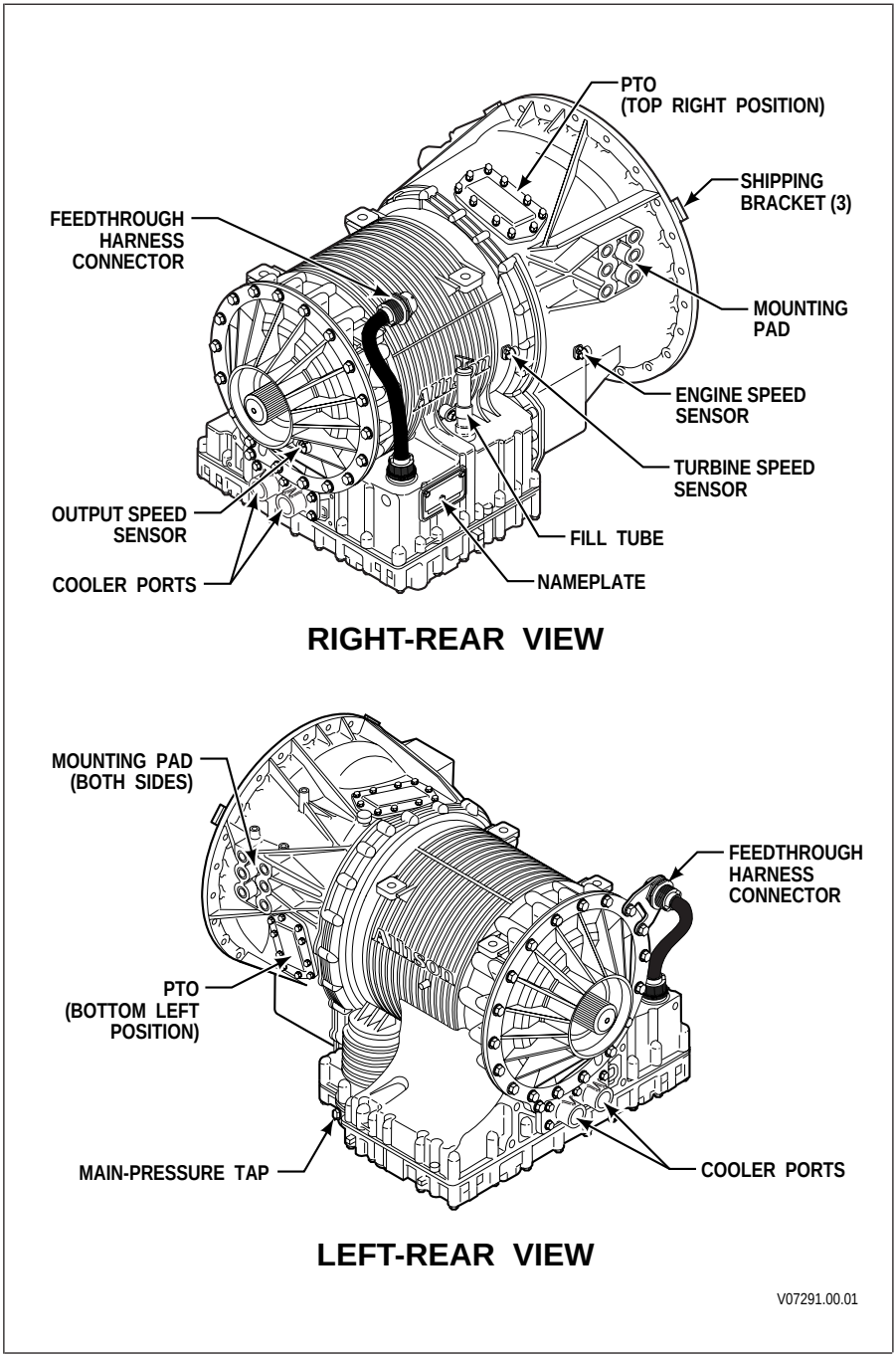

Figure 1–10. 4000 Product Family Transmission with PTO

https://truckmanualshub.com/

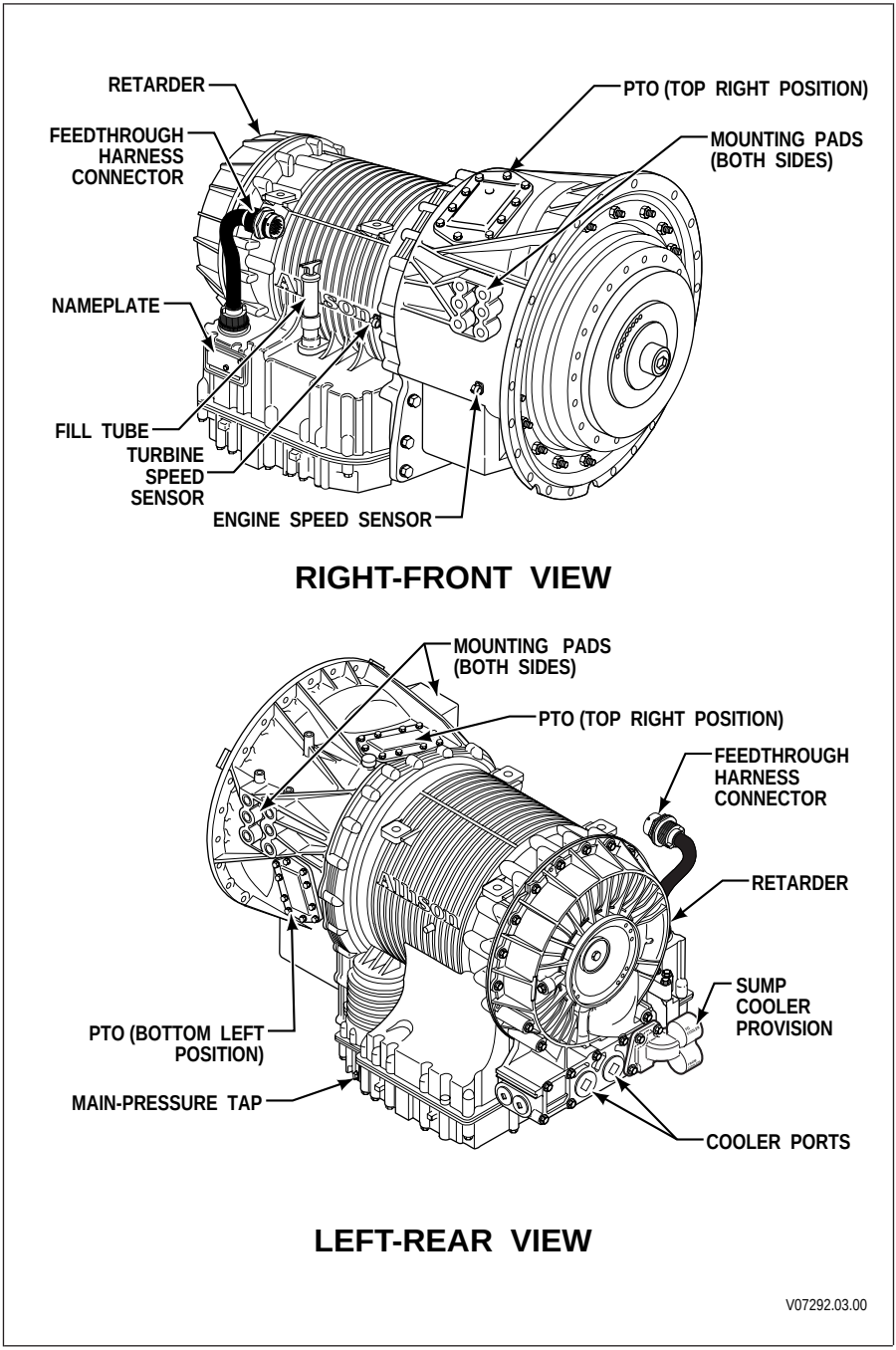

Figure 1–11. 4000 Product Family Transmission with Retarder and PTO

https://truckmanualshub.com/

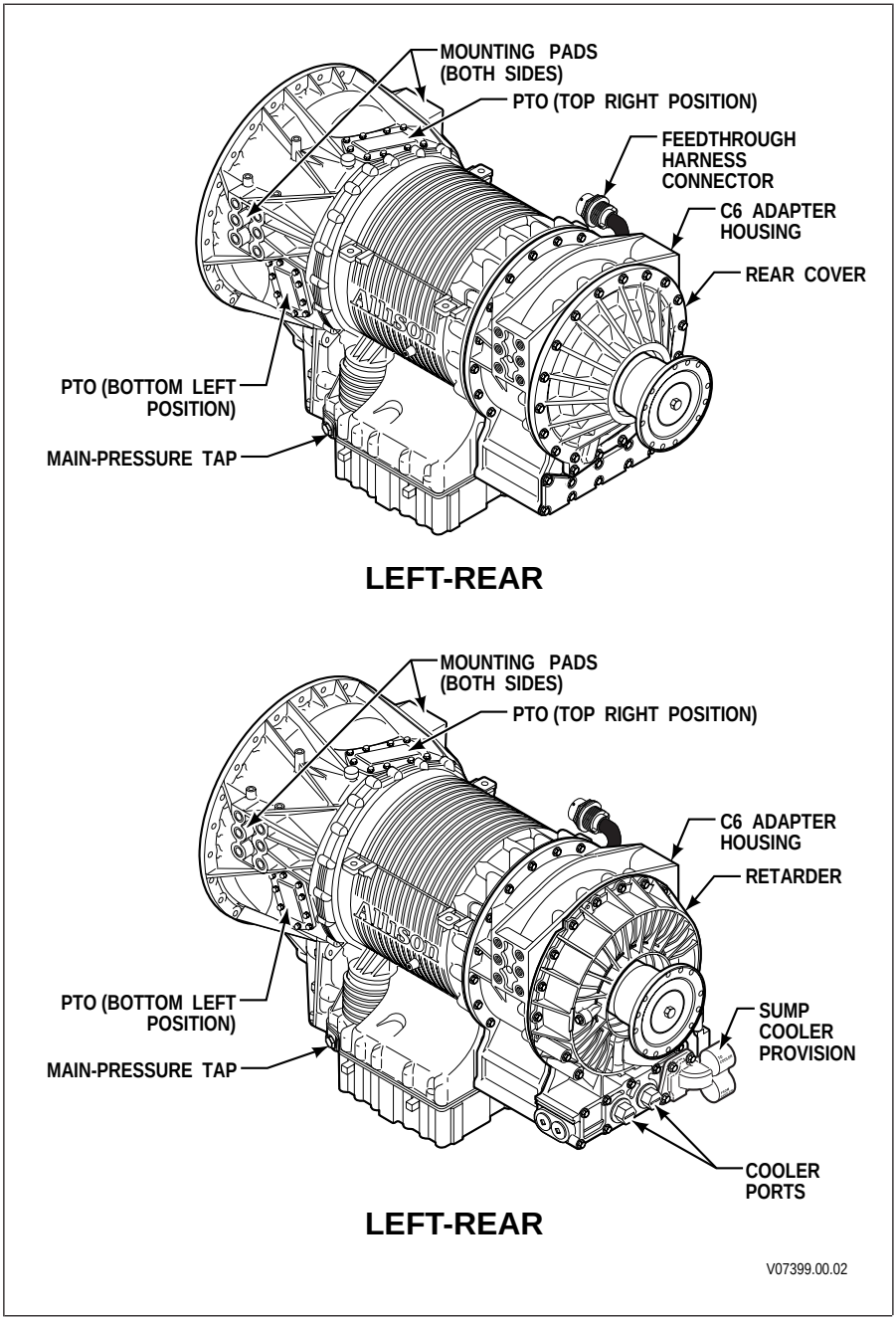

Figure 1–12. 4000 Product Family 7-Speed Transmission with PTO (Top) and 7-Speed with PTO and Retarder (Bottom)

https://truckmanualshub.com/

Section II — PREVENTIVE MAINTENANCE

2–1. PERIODIC INSPECTION AND CARE

Clean and inspect the exterior of the transmission at regular intervals. Severity of service and operating conditions determine the frequency of these inspections. Inspect the transmission for:

- Loose bolts—transmission and mounting components
- Fluid leaks—repair immediately
- Loose, dirty, or improperly adjusted throttle sensor
- Damaged or loose hoses
- Worn, frayed, or improperly routed electrical harnesses
- Worn or frayed electrical connections
- Dented, worn or out-of-phase driveline U-joints and slip fittings
- Clogged or dirty breather

Inspect the vehicle cooling system occasionally for evidence of transmission fluid. Transmission fluid in the vehicle cooling system indicates a faulty oil cooler.

CAUTION: When welding on the vehicle:

- DO NOT WELD on the vehicle without disconnecting all control system wiring harness connectors from the ECU.
- DO NOT WELD on the vehicle without disconnecting ECU battery power and ground leads.
- DO NOT WELD on any control components.
- DO NOT CONNECT welding cables to any control components.

A label (ST2067EN) describing on-vehicle welding precautions is available from your authorized Allison service dealer and should be installed in a conspicuous place. A vehicle used in a vocation that requires frequent modifications or repairs involving welding **must have** an on-vehicle welding label.

2–2. IMPORTANCE OF PROPER TRANSMISSION FLUID LEVEL

Transmission fluid cools, lubricates, and transmits hydraulic power. Always maintain proper fluid level. If fluid level is too low, the torque converter and clutches do not receive an adequate supply of fluid and the transmission overheats.

https://truckmanualshub.com/

If the level is too high, the fluid aerates—causing the transmission to shift erratically and overheat. Fluid may be expelled through the breather or dipstick tube when the fluid level is too high.

2–3. TRANSMISSION FLUID TEST

a. Electronic Fluid Test Procedure. Fluid level can be electronically displayed on a pushbutton (non-strip type) shift selector, lever shift selector, or Allison DOC™ For PC–Service Tool if there is an oil level sensor (OLS) installed and "autodetected" by the WTEC III control system. Frequently test for the presence of oil level diagnostics if the transmission is known to contain an OLS.

If an OLS is not detected during the first 49 engine starts, the WTEC III system concludes that no OLS is present. If an OLS is known to be present, but has not been "autodetected", then troubleshoot the OLS circuit.

After the OLS circuit is repaired, reset "autodetect" or manually select the OLS function using the Allison DOC™ service tool and then reset autodetect (refer to TS2973EN, WTEC III Troubleshooting Manual for detailed troubleshooting procedures).

- Displaying Fluid Level Information. Use the following procedure to display fluid level information (refer to Figure 2–1).
  - — For a pushbutton shift selector: Simultaneously press the ↑ **(Up)** and ↓ **(Down)** arrow buttons once.
  - — For a lever shift selector: Press the **DISPLAY MODE/DIAGNOSTIC** button once.
  - — For Allison DOC™ For PC–service tool: Connect the Allison DOC™ For PC–service tool to the diagnostic tool connector on the wiring harness and scroll down the DIAGNOSTIC DATA LIST to read the OLS information.
- Fluid Level Display Criteria. As soon as fluid level information is requested, the ECU determines if conditions are right to allow display. Certain operating conditions **must have been met** for a period of two minutes before fluid level is displayed. These operating conditions are:
  - — Engine at idle
  - — Sump fluid at operating temperature 60–104°C (140–220°F)
  - — Transmission output shaft stopped
  - — Transmission in neutral
  - — OLS functioning properly

https://truckmanualshub.com/

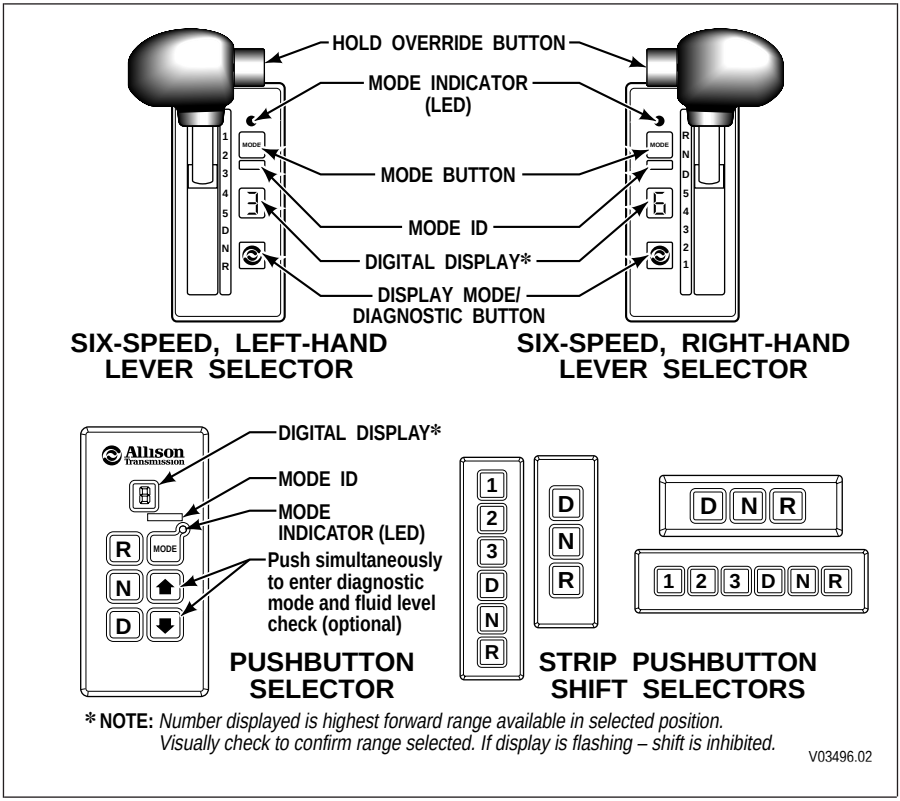

Figure 2–1. Typical Shift Selectors

Information is displayed immediately if the two minute time period elapsed before a fluid level data request was made. However, if the two minute period has not elapsed, there will be a countdown display before fluid level information displays. The countdown display flashes constantly. Countdown starts at 8 and decreases sequentially to 1 during the two minute period. When fluid level data is requested, and the two minute countdown is in process, the flashing display shows the number corresponding to the countdown progress.

For example:

- If the fluid level data was requested in the middle of the two minute countdown period, the display would flash a 5 or a 4 and decrease to 1.
- Shift Selector Display. Fluid level information is displayed one character at a time as in Table 2–1:

https://truckmanualshub.com/

Table 2–1. Fluid Level Shift Selector Display

Display Sequence	Interpretation of Display
o L o K	Fluid level is correct
o L L o 1	Fluid level is 1 quart low
o L H I 1	Fluid level is 1 quart high

The shift selector display will also show “invalid for display” codes one character at a time. An “invalid for display” code is returned when fluid level data is requested, but an operational condition has not been met. The “invalid for display” condition interrupts the two minute countdown (momentary increase in engine speed does not affect the countdown). The “invalid for display” codes and their meaning are:

Table 2–2. Invalid For Display Codes

Display Sequence	Interpretation of Display
o L – 5 0	Engine rpm too low
o L – 5 9	Engine rpm too high
o L – 6 5	**N** (Neutral) not selected
o L – 7 0	Sump fluid temperature too low
o L – 7 9	Sump fluid temperature too high
o L – 8 9	Output shaft rotation
o L – 9 5	Sensor failure

NOTE: Report sensor failure to a distributor or dealer in your area. Consult the telephone directory for the Allison Transmission distributor or dealer near you.

The countdown is restarted when the condition causing the “invalid for display” code 59 has been corrected. The countdown is not restarted if there is a momentary increase in engine rpm which may generate a code 59. “Invalid for display” messages are as follows:

- Allison DOC™ Display. “Invalid for display” messages are displayed in the Oil (±) field of the Data Monitor.

		Allison DOC™ Message
OL	—	SETTLING TIME X
OL	—	ENGINE SPEED LO
OL	—	ENGINE SPEED HI
OL	—	SELECT **N** (NEUTRAL)
OL	—	SUMP TEMP LO

https://truckmanualshub.com/

		Allison DOC™ Message
OL	—	SUMP TEMP HI
OL	—	OUTPUT SPEED HI
OL	—	CHECK CODES

- Exiting the Fluid Level Mode. Exit as follows:
  - — For a pushbutton shift selector, press the **N** (Neutral) pushbutton once.
  - — For a lever selector, press the **DISPLAY MODE/DIAGNOSTIC** button once or move the lever to a range position.
  - — Allison DOC™ does not use a special Fluid Level Mode.

b. Manual Fluid Test Procedure.

> **WARNING:** To help avoid personal injury or property damage caused by sudden and unexpected vehicle movement, **do not determine** the fluid level until you:
> 1. Put the transmission into **N** (Neutral).
> 2. Apply the parking brake and emergency brakes and make sure they are properly engaged.
> 3. Chock the wheels and take any other steps necessary to keep the vehicle from moving.

Clean all dirt from around the end of the fluid fill tube before removing the dipstick. **Do not allow** dirt or foreign matter to enter the transmission. Dirt or foreign matter in the hydraulic system may cause undue wear of transmission parts, make valves stick, and clog passages. Determine the fluid level using the following procedure and report any abnormal fluid levels to your service management.

c. Cold Test Procedure. The purpose of the cold test is to determine if the transmission has enough fluid to be safely operated until a hot test can be made.

> **CAUTION:** The fluid level rises as fluid temperature increases. DO NOT fill above the “COLD CHECK” band if the transmission fluid is below normal operating temperature. During operation, an over full transmission can become overheated, leading to transmission damage.

1. Park the vehicle on a level surface. Apply the parking brake and chock the wheels.
2. Run the engine for at least one minute. Shift to **D** (Drive), then to **N** (Neutral), and then to **R** (Reverse) to fill the hydraulic system.
3. Shift to **N** (Neutral) and allow the engine to idle (500–800 rpm).

https://truckmanualshub.com/

4. With the engine running, remove the dipstick from the tube and wipe the dipstick clean.
5. Insert the dipstick into the tube until it stops and then remove. Read the fluid level. Repeat the test procedure to verify the reading.
6. If the fluid level is between the **“COLD ADD”** and the **“COLD FULL”** bands (refer to Figure 2–2), the transmission may be operated until the fluid is hot enough to perform a **“HOT RUN”** test. If the fluid level **is not** between the **“COLD ADD”** and the **“COLD FULL”** bands, add or drain fluid as necessary to bring it to the middle of this level.
7. Perform a hot test at the first opportunity after the normal operating sump temperature of 71°C–93°C (160°F–200°F) is reached.

d. Hot Test Procedure.

CAUTION: The fluid level rises as temperature increases. The fluid **must be hot** to be sure of an accurate test.

1. Operate the transmission in **D** (Drive) until normal operating temperatures are reached:
   — Sump temperature 71°C–93°C (160°F–200°F)
   — Converter-out temperature 82°C–104°C (180°F–220°F)
2. Park the vehicle on a level surface and shift to **N** (Neutral). Apply the parking brake and chock the wheels. Allow the engine to idle (500–800 rpm).
3. With the engine running, remove the dipstick from the tube and wipe clean.
4. Insert the dipstick into the tube until it stops. Then remove it. Read fluid level.
5. Repeat the test procedure to verify the reading.

NOTE: Safe operating level is within the “HOT RUN” band on the dipstick. The “HOT RUN” band is between the “HOT FULL” and the “HOT ADD” bands. Refer to Figure 2–2.

- If the fluid level is not between the HOT FULL and HOT ADD bands (refer to Figure 2–2), add or drain fluid as necessary to bring the fluid level within these bands.

e. Consistency of Readings. Always determine the fluid level at least twice, with the engine running. Consistency (repeatable readings) is important to maintaining accuracy of the readings. If inconsistent readings persist, inspect the transmission breather to be sure it is clean and unclogged.

https://truckmanualshub.com/

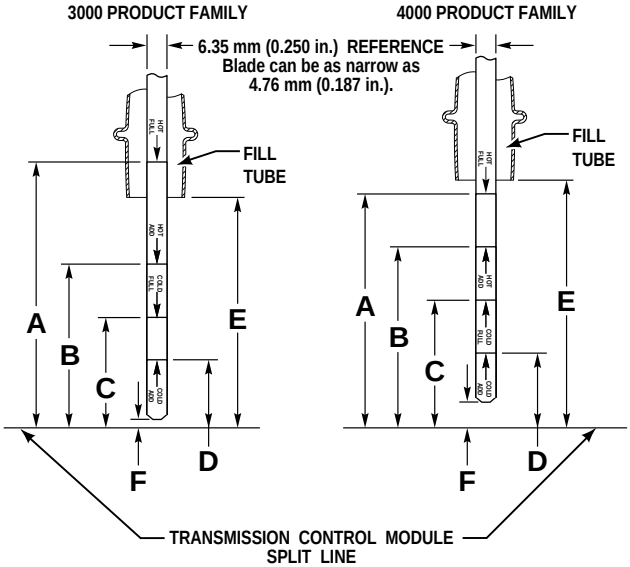

OIL SUMP	TRANSMISSION/SUMP DESCRIPTION	DIMENSION A	DIMENSION B	DIMENSION C	DIMENSION D	DIMENSION E	DIMENSION F**
2.00 in. and 4.00 in.****	4000 PRODUCT FAMILY	106.7 mm (4.20 in.)	76.2 mm (3.00 in.)	66.0 mm (2.60 in.)	*	132.6 mm (5.22 in.)	13.8 mm (0.54 in.)
2.00 in.***	3000 PRODUCT FAMILY	101.6 mm (4.00 in.)	73.7 mm (2.90 in.)	50.8 mm (2.00 in.)	*	86.6 mm (3.41 in.)	5.9 mm (0.23 in.)
4.00 in.***	3000 PRODUCT FAMILY	101.6 mm (4.00 in.)	63.5 mm (2.50 in.)	45.7 mm (1.80 in.)	*	86.6 mm (3.41 in.)	5.9 mm (0.23 in.)

NOTE: *Calibrate level marking locations with respect to transmission control module split line and fill tube.*
Scale none.
**Dimension determined by installation.*
***Reference dimension only. Actual dimension to be determined by installation.*
****Reference drawing AS66-460.*
*****Reference drawing AS67-460.*

V07301.00.05

Figure 2–2. Standard 3000 And 4000 Product Families Dipstick Markings

https://truckmanualshub.com/

2–4. KEEPING FLUID CLEAN

Prevent foreign material from entering the transmission by using clean containers, fillers, etc. Lay the dipstick in a clean place while filling the transmission.

CAUTION: Containers or fillers that have been used for antifreeze solution or engine coolant must **NEVER** be used for transmission fluid. Antifreeze and coolant solutions contain ethylene glycol which, if put into the transmission, can cause the clutch plates to fail.

2–5. FLUID RECOMMENDATIONS

The hydraulic fluid (oil) used in the transmission directly affects transmission performance, reliability, and durability. Customers may continue to choose from a wide variety of approved DEXRON®–III or Allison qualified C4 fluids. Customers may elect to use TranSynd™ or TES 295 equivalent and extend drain-intervals. Equivalent TranSynd™ fluid **must meet or exceed** TES 295 specifications. TranSynd™ is a fully synthetic transmission fluid developed by Allison Transmission and Castro, Ltd. and is fully qualified to the GM TES 295 specifications.

DEXRON®-III fluids are also acceptable for off-highway applications. To be sure a fluid is qualified for use in Allison transmissions, look for fluid license or approval numbers on the container, or consult the lubricant manufacturer. Consult your Allison Transmission dealer or distributor before using other fluid types.

CAUTION: Disregarding minimum fluid temperature limits can result in transmission malfunction or reduced transmission life.

When choosing the optimum viscosity grade of fluid, duty cycle, preheat capabilities, and/or geographical location **must be** taken into consideration. Table 2–4 lists the minimum fluid temperatures at which the transmission may be safely operated without preheating the fluid. Preheat with auxiliary heating equipment or by running the equipment or vehicle with the transmission in neutral for a minimum of 20 minutes before attempting range operation.

Table 2–4. Transmission Fluid Operating Temperature Requirements

	Ambient Temperature Below Which Preheat is Required	
Viscosity Grade	**Celsius**	**Fahrenheit**
TranSynd™/SAE 0W–20 *	–30	–22
DEXRON®–III	–25	–13
SAE 10W	–20	–4

https://truckmanualshub.com/

Table 2–4. Transmission Fluid Operating Temperature Requirements *(cont'd)*

	Ambient Temperature Below Which Preheat is Required	
Viscosity Grade	**Celsius**	**Fahrenheit**
SAE 15W–40	–15	5
SAE 30W	0	32
SAE 40W	10	50
* "Arctic" as defined by MIL-L-46167B (Ref. SIL 13-TR-90)		

2–6. TRANSMISSION FLUID AND FILTER CHANGE INTERVALS

a. Frequency.

CAUTION: Transmission fluid and filter change frequency is determined by the severity of transmission service. More frequent changes may be necessary than recommended in the general guidelines when operating conditions create high levels of contamination or overheating.

Table 2–5 and Table 2–6, Recommended Fluid/Filter Change Intervals, is a general guide for fluid and filter change intervals.

https://truckmanualshub.com/

Table 2–5. Recommended Fluid/Filter Change for 3000 Product Family

SEVERE VOCATION*				GENERAL VOCATION**			
	Filters***				Filters***		
Fluid†	Main	Internal	Lube/ Auxiliary	Fluid†	Main	Internal	Lube/ Auxiliary
INITIAL FILTER CHANGE INTERVAL: Main/Lube—5000 miles (8000 km) / 200 hours.							
Schedule 1. Non-TranSynd™/Non-TES 295 Fluid (2 or 4 inch control module)							
12,000 Miles (20 000 km) 6 Months 500 Hours	12,000 Miles (20 000 km) 6 Months 500 Hours	Overhaul	12,000 Miles (20 000 km) 6 Months 500 Hours	25,000 Miles (40 000 km) 12 Months 1000 Hours	25,000 Miles (40 000 km) 12 Months 1000 Hours	Overhaul	25,000 Miles (40 000 km) 12 Months 1000 Hours
Recommendations in Schedule 2 are based upon the transmission containing 100 percent TranSynd™ or TES 295 fluid. 3000 Product Family filter change intervals in Schedule 2 are only valid with the use of Allison Gold series filters. Flushing machines are not recommended or recognized due to variation and inconsistencies with assuring removal of 100 percent of the used fluid.							
Schedule 2. TranSynd™/TES 295 Fluid (2 or 4 inch control module)							
75,000 Miles (120 000 km) 36 Months 3000 Hours	75,000 Miles (120 000 km) 36 Months 3000 Hours	Overhaul	75,000 Miles (120 000 km) 36 Months 3000 Hours	150,000 Miles (240 000 km) 48 Months 4000 Hours	75,000 Miles (120 000 km) 36 Months 3000 Hours	Overhaul	75,000 Miles (120 000 km) 36 Months 3000 Hours

* **Severe Vocation:** All retarders, On/Off-Highway, Refuse, Transit, and Intercity Coach with duty cycle greater than one stop per mile.

** **General Vocation:** Intercity Coach with duty cycle less than or equal to one stop per mile and all other vocations not listed in severe vocation

† Local conditions, severity of operation, or duty cycle may require more or less frequent change intervals that differ from the published recommended fluid change intervals of Allison Transmission. Transmission protection and fluid change intervals can be optimized by the use of fluid analysis.

*** Filters must be changed at or before recommended mileage, months, or elapsed hour intervals (whichever occurs first).

https://truckmanualshub.com/

Table 2–6. Recommended Fluid/Filter Change Intervals For 4000 Product Family

SEVERE VOCATION*				GENERAL VOCATION**			
	Filters***				Filters***		
Fluid†	Main	Internal	Lube/ Auxiliary	Fluid†	Main	Internal	Lube/ Auxiliary
INITIAL FILTER CHANGE INTERVAL: Main/Lube—5000 miles (8000 km) / 200 hours							
Schedule 1. Recommended Fluid and Filter Change Intervals (Non-TranSynd™/Non-TES 295 Fluid)							
12,000 Miles (20 000 km) 6 Months 500 Hours	12,000 Miles (20 000 km) 6 Months 500 Hours	Overhaul	12,000 Miles (20 000 km) 6 Months 500 Hours	25,000 Miles (40 000 km) 12 Months 1000 Hours	25,000 Miles (40 000 km) 12 Months 1000 Hours	Overhaul	25,000 Miles (40 000 km) 12 Months 1000 Hours
NOTE: The following recommendations in Schedule 2 and 3 based upon the transmission containing 100 percent TranSynd™ or TES 295 fluid. Filter change intervals are valid only if Allison Transmission supplied filters are used. 4000 Product Family filter change intervals in Schedule 2 and 3 are valid only with the use of Allison Transmission Gold series filters. Flushing machines are not recommended or recognized due to variation and inconsistencies with assuring removal of 100 percent of the used fluid.							
4 inch Control Module (3.5 inch approximately)—Requires filter kit P/N 29540494							
Schedule 2. Recommended Fluid and Filter Change Intervals (TranSynd™/TES 295 Fluid)							
75,000 Miles (120 000 km) 36 Months 3000 Hours	75,000 Miles (120 000 km) 36 Months 3000 Hours	Overhaul	75,000 Miles (120 000 km) 36 Months 3000 Hours	150,000 Miles (240 000 km) 48 Months 4000 Hours	75,000 Miles (120 000 km) 36 Months 3000 Hours	Overhaul	75, 000 Miles (120 000 km) 36 Months 3000 Hours

https://truckmanualshub.com/

Table 2–6. Recommended Fluid/Filter Change Intervals For 4000 Product Family *(cont'd)*

SEVERE VOCATION*				GENERAL VOCATION**			
	Filters***				Filters***		
Fluid†	Main	Internal	Lube/ Auxiliary	Fluid†	Main	Internal	Lube/ Auxiliary
2 inch Control Module (1.75 inch approximately)—Requires filter kit P/N 29540493							
Schedule 3. Recommended Fluid and Filter Change Intervals (TranSynd™/TES 295 Fluid)							
50,000 Miles (80 000 km) 24 Months 2000 Hours	50,000 Miles (80 000 km) 24 Months 2000 Hours	Overhaul	50,000 Miles (80 000 km) 24 Months 2000 Hours	150,000 Miles (240 000 km) 48 Months 4000 Hours	50,000 Miles (80 000 km) 24 Months 2000 Hours	Overhaul	50,000 Miles (80 000 km) 24 Months 2000 Hours

* **Severe Vocation:** All retarders, On/Off-Highway, Refuse, Transit, and Intercity Coach with duty cycle greater than one stop per mile.

** **General Vocation:** Intercity Coach with duty cycle less than or equal to one stop per mile.

† Local conditions, severity of operation, or duty cycle may require more or less frequent change intervals that differ from the published recommended fluid change intervals of Allison Transmission. Transmission protection and fluid change intervals can be optimized by the use of fluid analysis.

*** Filters must be changed at or before recommended mileage, months, or elapsed hour intervals (whichever occurs first).

https://truckmanualshub.com/

b. Abnormal Conditions. Transmission fluid **must be changed** whenever there is evidence of dirt in the fluid or the fluid is discolored, which indicates a high temperature condition. Fluid analysis will also reveal a high temperature condition. Local conditions, severity of operation, or duty cycle may require more or less frequent fluid or filter changes.

c. Fluid Analysis. Transmissions used in high cycle rate applications should have a fluid analysis performed to be sure of the proper change interval. Transmission protection and fluid change intervals can be optimized by monitoring fluid oxidation according to the tests and limits shown in Table 2–7. Consult your local telephone directory for fluid analysis firms. To be sure of consistent and accurate fluid analysis, use only one fluid analysis firm. Refer to the Technician's Guide for Automatic Transmission Fluid, GN2055EN, for additional information.

Table 2–7. Fluid Oxidation Measurement Limits

Test	Limit
Viscosity	±25% change from new fluid
Total Acid Number	+3.0* change from new fluid
Solids	2 percent by volume maximum
* mg of potassium hydroxide (KOH) to neutralize a gram of fluid.	

2–7. TRANSMISSION FLUID CONTAMINATION

a. Fluid Examination. The presence of fluid contamination in an automatic transmission can be detrimental to continued operation. A normal amount of condensation will appear in the fluid during operation. At each fluid change, examine the drained fluid for evidence of dirt or water. Contamination limits are shown in Table 2–8.

Contaminant	Limit
Water	0.2% maximum
Glycol	No trace allowed
Alien fluids*	If detected, change transmission fluid
* Any fluid not included on the Allison Approved Fluid List. The Approved Fluids Lists may be found at the Allison Transmission website, *www.allisontransmission.com.*	

b. Monitoring Wear. Absolute maximum values **cannot be applied** to wear metals of an automatic transmission due to the many variables present that affect concentration limits. Wear metal analysis results **must be** evaluated using a trendline approach.

A trendline approach plots the concentration level of each wear metal over a period of time. A minimum of four data points for each metal is required to establish a trendline. A line of "best fit" drawn through the plotted points is

https://truckmanualshub.com/

considered a trendline. Cause for concern should only occur when significant deviations in the established trendline are present.

While trendline analysis on wear metals can prove informative and useful, a transmission removal decision **should not be** based solely upon the analysis. A removal based solely on wear metal analysis may result in an unnecessary tear down. The results should be used in conjunction with other inspection procedures such as functional check, road test, or fluid sump/internal filter inspection. Transmission removal **should occur only** if the additional investigation warrants it.

c. Water/Engine Coolant Contaminant.

NOTE: Cooler water can be contaminated by engine oil. Be sure to locate the actual source of cooler contamination.

The presence of water and/or ethylene glycol coolant mixture in the transmission fluid is detrimental to the reliability and durability of the internal components because it has a deteriorating effect on the transmission components. Frictional capacity of drive clutch plates can be greatly reduced as a result of surface film or impregnation and the presence of glycol will physically deteriorate clutch plate materials.

If contamination is suspected, obtain a fluid sample when transmission fluid is at normal operating temperature to be sure a contaminant, if present, is thoroughly dispersed in the fluid being sampled. The analysis of the sample, by the fluid supplier or any qualified laboratory, will provide the degree of contamination and possibly a clue as to its source. A minimal amount of water and glycol may be due to one or all of the following:

- Uncovered oil drums
- Open transmission fill tube
- Glycol from an all-purpose fill container
- Defective transmission oil cooler.

Do not use fluid contaminated by water, regardless of whether it contains glycol, if the water is greater than 0.2 percent by volume of fluid.

https://truckmanualshub.com/

CAUTION: If the transmission fluid is contaminated by water at a volume greater than 0.2 percent, or by any trace of ethylene glycol, disassemble the transmission and replace the following:

- Seals
- Gaskets
- Clutch Plates
- Bearings
- Torque converters that cannot be disassembled
- Components that have rusted
- Solenoids that do not meet resistance specifications

Remove all traces of ethylene glycol and varnish deposits. Failure to follow this procedure decreases transmission reliability and durability.

CAUTION: After flushing the cooler, test the external cooler circuit for restrictions. If circuit pressure drop is above specifications, the cooler has trapped particles and **must be replaced**.

Nelco Company offers a kit that detects presence of ethylene glycol in transmission fluid. The kit is identified as “GLY-TEK” Test Kit and can be obtained from:

Nelco Company
1047 McKnight Road South
Saint Paul, Minnesota, 55119
(651) 738–2014

Some conditions that may indicate water and/or glycol in the fluid are:

- Rust or pitted transmission parts
- Transmission fluid spewing out of transmission breather
- Transmission fluid in radiator
- Gaskets blistered or wrinkled in uncompressed areas
- Appearance of fluid (presence of water causes a cloudy or gray, pink, or strawberry colored fluid)
- Steam from the breather.

For additional field analysis information, refer to Allison Transmission publication number GN2055EN, Automatic Transmission Fluid Technician’s Guide. Use this publication to review testing methods and limits of water/glycol content.

d. Metal. Metal particles in the fluid (except for minute particles normally trapped in the oil filter) indicate internal transmission damage. If these particles are found in the sump, the transmission **must be disassembled** and closely

https://truckmanualshub.com/

inspected to find their source. Metal contamination requires complete transmission disassembly. Clean all internal and external hydraulic circuits, cooler, and all other areas where the particles could lodge.

2–8. TRANSMISSION FLUID AND FILTER CHANGE PROCEDURE

a. Drain Fluid.

NOTE: Do not drain the transmission if replacing only the filters.

WARNING: Avoid contact with hot fluid or the sump when draining transmission fluid. Direct contact with hot fluid or the hot sump may result in bodily injury.

1. Drain the fluid when the transmission is at the normal operating sump temperature of 71°C–93°C (160°F–200°F). Hot fluid flows quicker and drains more completely.
2. Remove the drain plug from the oil pan and allow the fluid to drain into a suitable container.
3. Examine the fluid as described in Section 2–7, TRANSMISSION FLUID CONTAMINATION, Paragraph a. Fluid Examination.

b. Replace Filters. Refer to Figure 2–3.

For 3000 Product Family before S/N 6510069120:

1. Remove twelve bolts 1, two filter covers 2, two O-rings 5, two square-cut seals 4, and two filters 6 from the bottom of the control module.
2. When installing parts, lubricate and install new O-rings 5 on each cover 2. Install a square-cut seal 4 on each cover 2. Lubricate filter O-ring (inside filter) and install filters 6 onto covers 2.

https://truckmanualshub.com/

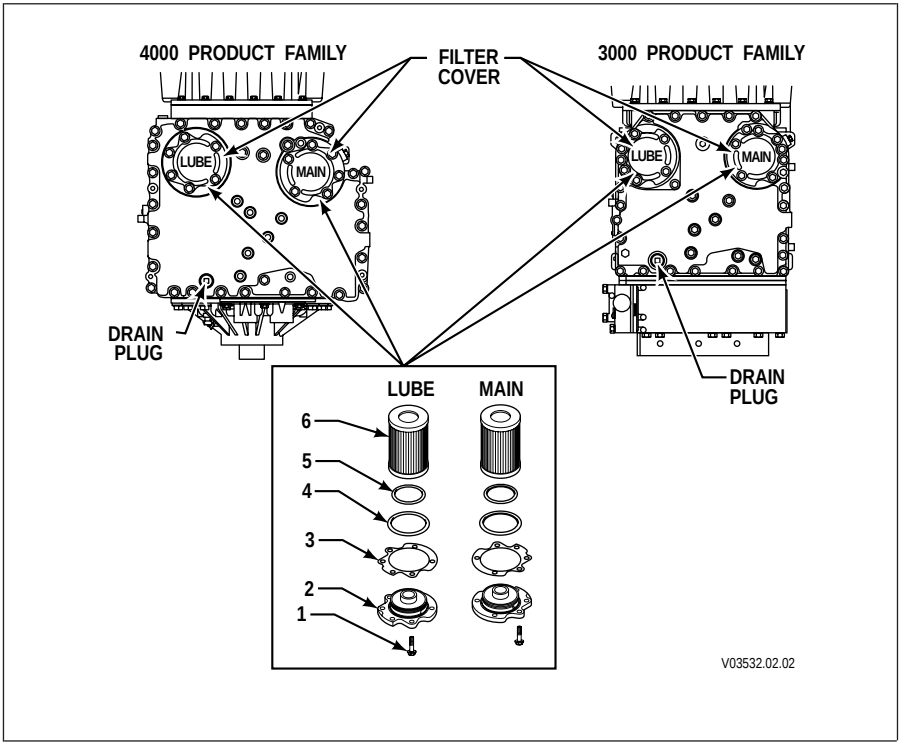

Figure 2–3. Location of Filters for Service

For 3000 Product Family beginning with S/N 6510069120 and 4000 Product Family beginning with S/N 6610009730:

1. Remove twelve bolts 1, two filter covers 2, two gaskets 3, two O-rings 4, two O-rings 5 and two filters 6 from the bottom of the control module.
2. When reinstalling parts, lubricate and install new O-rings 4 and 5 on each cover. Lubricate O-ring inside filter 6 and push filter onto each cover 2. Install new gaskets 3 on each cover 2 and align bolt holes in gasket with holes in cover.

For all transmissions:

1. Install filter cover assemblies into the filter compartments. Align each filter/cover assembly with the holes in the bottom of the control module. Push the cover assemblies in by hand to seat the seals.

https://truckmanualshub.com/

CAUTION: Do not use the bolts to draw the filter covers to the control module. Do not use an impact wrench to tighten the bolts. Using an impact wrench to tighten the bolts may cause stripped threads and expensive parts replacement. Use a torque wrench to tighten the bolts.

- Install six bolts into each cover assembly and tighten to 51–61 N•m (38–45 lb ft).
- Replace the drain plug O-ring. Install the drain plug and tighten to 25–32 N•m (18–25 lb ft).

c. Refill Transmission. Refer to Table 2–9 for fluid refill quantities. The amount of refill fluid is less than the amount used for the initial fill. Fluid remains in the external circuits and transmission cavities after draining the transmission.

After refill, check the fluid level using the procedure described in Section 2–3, TRANSMISSION FLUID TEST, Paragraph b. Manual Fluid Test Procedure.

Table 2–9. Transmission Fluid Capacity

		Initial Fill*		Refill*	
Transmission	**Sump**	**Liters**	**Quarts**	**Liters**	**Quarts**
3000 Product Family	4 inch	27	29	18	19
	2 inch	25	26	16	17
4000 Product Family	4 inch†	45	48	37	39
	2 inch†	38	40	30	31

* Approximate quantities, do not include external lines and cooler hose.
† Add 2.8 liters (3 quarts) for transmissions with PTO.

2–9. FLUID LEAK DIAGNOSIS

a. Finding the Leak.

1. Identify the fluid. Determine whether the fluid is:
   - Engine oil
   - Automatic transmission fluid
   - Hydraulic fluid from a particular vehicle system
2. Operate the vehicle to reach normal operating temperature and park the vehicle. Inspect the vehicle to identify the source of the leak. Refer to the following list for possible points of transmission fluid leaks and their causes.

- Transmission mating surfaces:
  - — Attaching bolts not correctly aligned
  - — Improperly installed or damaged gasket
  - — Mating surface(s) damaged
- Housing leak:
  - — Fill tube or plug seal damaged or missing
  - — Fill tube bracket dislocated
  - — Oil cooler connector fittings loose or damaged
  - — Output shaft seals worn-out or damaged
  - — Pressure port plugs loose
  - — Porous casting
- Leak at converter end:
  - — Converter seal damaged
  - — Seal lip cut—check converter hub for damage
  - — Garter spring missing from seal
  - — Converter leak in weld area or O-ring seal
  - — Porous casting
- Fluid comes out of fill tube:
  - — Overfilled—incorrect dipstick
  - — Plugged vent
  - — Water or coolant in fluid—fluid appears milky
  - — Incorrect electronic fluid indication
  - — Drain-back holes plugged

3. Visually inspect the suspected area. Inspect all gasket mating surfaces for leaks.
4. If the leak still cannot be identified, clean the suspected area with a degreaser, steam, or spray solvent. Clean and dry the area.
5. Operate the vehicle for several miles at varying speeds. Inspect the vehicle for leaks.
6. If the leak source still cannot be identified, use the powder method, and/or the black light and dye method as explained below.

b. Powder Method.

1. Clean the suspected area.
2. Apply an aerosol-type white powder to the suspected area.
3. Operate the vehicle under normal operating conditions.

4. Visually inspect the suspected area and trace the leak path over the white powder.

c. Black light and Dye Method. A dye and black light kit for finding leaks is available. Refer to the manufacturer's directions when using the kit. Refer to the kit directions for the color of the fluid/dye mix.

1. Pour the specified amount of dye into the transmission fill tube.
2. Operate the vehicle under normal operating conditions.
3. Direct the black light toward the area suspected of leaking. Dyed fluid will appear as a brightly colored path leading to the leak.

d. Repairing the Leak. Once the leak has been traced back to its source, inspect the leaking part for the following conditions, and repair the leaking part.

- Gaskets:
  - — Fluid level/pressure is too high
  - — Plugged vent or drain-back holes
  - — Improperly tightened fasteners or damaged threads
  - — Warped flanges or sealing surfaces
  - — Scratches, burrs, or other damage to sealing surfaces
  - — Damaged or worn-out gasket
  - — Cracked or porous casting
  - — Improper sealant used, where applicable
- Seals:
  - — Fluid level/pressure is too high
  - — Plugged vent or drain-back hole
  - — Damaged seal bore
  - — Damaged or worn-out seal
  - — Improper seal installation
  - — Cracks in component
  - — Output shaft surface scratched, nicked, or damaged
  - — Loose or worn-out bearing causing excess seal wear
- Sealing Flange:
  - — Inspect the sealing flange for bends
  - — Replace the sealing flange if bent

https://truckmanualshub.com/

2–10. BREATHER

a. Location and Purpose. The breather is located on top of the transmission converter housing. The breather prevents air pressure build-up within the transmission and its passage **must be** kept clean and open.

b. Maintenance.

> **CAUTION: DO NOT SPRAY STEAM, WATER, OR CLEANING SOLUTION DIRECTLY AT THE BREATHER.** Spraying steam, water, or cleaning solution at the breather can force water or cleaning solution into the transmission and contaminate the transmission fluid. Seal all openings and vent assembly (breather) before spraying steam, water, or cleaning solution on the transmission.

The amount of dust and dirt encountered will determine the frequency of breather cleaning. Use care when cleaning the transmission.

c. Replacement. Always use the correct wrench sized to remove or replace the breather. Using pliers or a pipe wrench can crush or damage the breather stem and produce metal particles which could enter the transmission. Tighten the breather to 12–16 N•m (9–12 lb ft).

2–11. TROUBLESHOOTING

a. CHECK TRANS Light.

> **NOTE:** Strip Pushbutton Shift Selectors cannot display or clear diagnostic codes.

The **CHECK TRANS** light is usually located on the vehicle's instrument panel.

When the light is "ON" and the shift selector display is flashing, shifts are being inhibited by the ECU.

- This occurs when the ECU senses abnormal conditions in the transmission.
- During this time, the digit on the shift selector displays the range in which the transmission is locked.
- The transmission may continue to operate with inhibited shifts.
- The ECU will not respond to shift selector requests.
- Direction changes and shifts to and from neutral will not occur.
- If the ignition is turned "OFF" and then "ON" while the **CHECK TRANS** light is illuminated, the transmission will remain in neutral until the diagnostic code is cleared.

https://truckmanualshub.com/

Whenever the **CHECK TRANS** light is illuminated, the ECU logs a diagnostic code in memory. The diagnostic codes can be accessed through the shift selector display or through the Allison DOC™ service tool.

NOTE: Diagnostic codes can be logged without illuminating the **CHECK TRANS** light. This occurs when the ECU senses a problem but determines that the problem will not cause immediate transmission damage or dangerous performance.

b. Diagnostic Codes. Diagnostic codes are stored in memory. Up to five codes, in memory positions d1 through d5, can be stored, with the most recently stored code displayed first.

Table 2–10. Diagnostic Codes Overview

Code List Position*	Main Code*	Subcode*	Active Indicator**	Ignition Cycle Counter†	Event Number†
d1	21	12	YES	00	10
d2	41	12	YES	00	04
d3	23	12	NO	08	00
d4	34	12	NO	13	02
d5	56	11	NO	22	02

* Displayed on shift selector and Allison DOC™ service tool
** YES = mode indicator (LED) illuminated
† Accessible by Allison DOC™ service tool

Diagnostic codes consist of a two-digit main code and a two-digit subcode (refer to Table 2–10).

- Main codes are listed first and provide the general condition or area of a fault detected by the ECU.
- Subcodes are listed second and provide specific areas or conditions within the main code that caused the fault.
- Example of Code 13 12:
  - — 13 indicates a problem with ECU voltage
  - — 12 indicates the problem is caused by low voltage
- Example of Code 32 12:
  - — 32 indicates a problem with the throttle position sensor signal
  - — 12 indicates that the throttle position sensor signal is low

Diagnostic codes are displayed one character or digit at a time. Table 2–11 is an example of code 21 12. Each character or digit is displayed for about one second.

https://truckmanualshub.com/

Table 2–11. Diagnostic Code Display

Code List Position		Main Code		Subcode	
d	1	2	1	1	2

When using the shift selector to retrieve trouble codes, if the mode indicator (LED) is illuminated the displayed code is active. If the mode indicator is not illuminated the displayed code is inactive. In normal operating mode, an illuminated mode indicator signifies secondary mode operation.

- The Ignition Cycle Counter determines when inactive diagnostic codes are automatically cleared from the code list. The counter is incremented each time a normal ECU powerdown occurs (ignition turned off). Inactive codes are cleared from the code list after the Ignition Cycle Counter reaches 25.
- The Event Counter counts the number of occurrences of a diagnostic code. If a code is already in the code list and the code is again detected, that code is moved to position d1, the active indicator is turned on, the Ignition Cycle Counter is cleared, and 1 is added to the Event Counter.
- You can access the ignition cycle counter and event counter information through the Allison DOC™ For PC–Service Tool.

c. Clearing Trouble Codes Using Shift Selector.

NOTE: Note: Strip Pushbutton Shift Selectors cannot display or clear diagnostic codes.

During installation, “false” codes can be recorded in the electronic control’s memory. Clear these codes before road testing the vehicle. Use the shift selector to clear the codes (refer to Figure 2–4).

- Pushbutton shift selectors—Enter the diagnostic mode by pressing the ↑ **(Up)** and ↓ **(Down)** arrows simultaneously. Simultaneously press both buttons twice if there is an oil level sensor present.
- Lever shift selector—enter the diagnostic mode by momentarily pressing the **DISPLAY MODE** button. Press twice if there is an oil level sensor present.
- To clear all active indicators, press and hold the **MODE** button approximately 3 seconds until the mode indicator (LED) flashes.
- To remove all codes, press and hold the **MODE** button for approximately 10 seconds until the mode indicator (LED) flashes again.

https://truckmanualshub.com/

d. Retrieving Troubleshooting Codes.

NOTE: Strip Pushbutton Shift Selectors cannot display or clear diagnostic codes.

After road testing the vehicle, determine if any diagnostic codes have set. Retrieve the codes by using the shift selector. Refer to Figure 2–4.

- Enter diagnostic mode.
- The display will list the first code's logged position (d1), then follow with the main code and a subcode (refer to Table 2–11 for display sequence). This display sequence repeats until the **MODE** button is pressed again.
- Momentarily press the **MODE** button to move to the next code stored in memory.
- When the **MODE** button is pressed after displaying the code in the d5 position, the code in the d1 position is displayed.
- Any code position that does not have a code set will display a dash, as well as all subsequent positions thereafter.

NOTE: You can also use the Allison DOC™ For PC–Service Tool to clear and retrieve the troubleshooting codes. Refer to Allison DOC™ For PC–Service Tool User's Manual, GN3433EN, for specific instructions.

e. Troubleshooting When No Diagnostic Codes Are Present.

- Always start with the basics:
  - — Make sure the shifter is in the appropriate range.
  - — Inspect the fluid level.
  - — Make sure batteries are properly connected and charged.
  - — Make sure electrical connections are properly made.
  - — Inspect support equipment for proper installation and operation.
- If the troubleshooting charts refer you to an Electronic Control test procedure, use the diagnostic code troubleshooting information that best applies to the situation.
- Use the transmission's individual clutch-apply circuit pressure taps when necessary.

f. Troubleshooting Intermittent Diagnostic Codes. Intermittent codes are a result of conditions which are not always present.

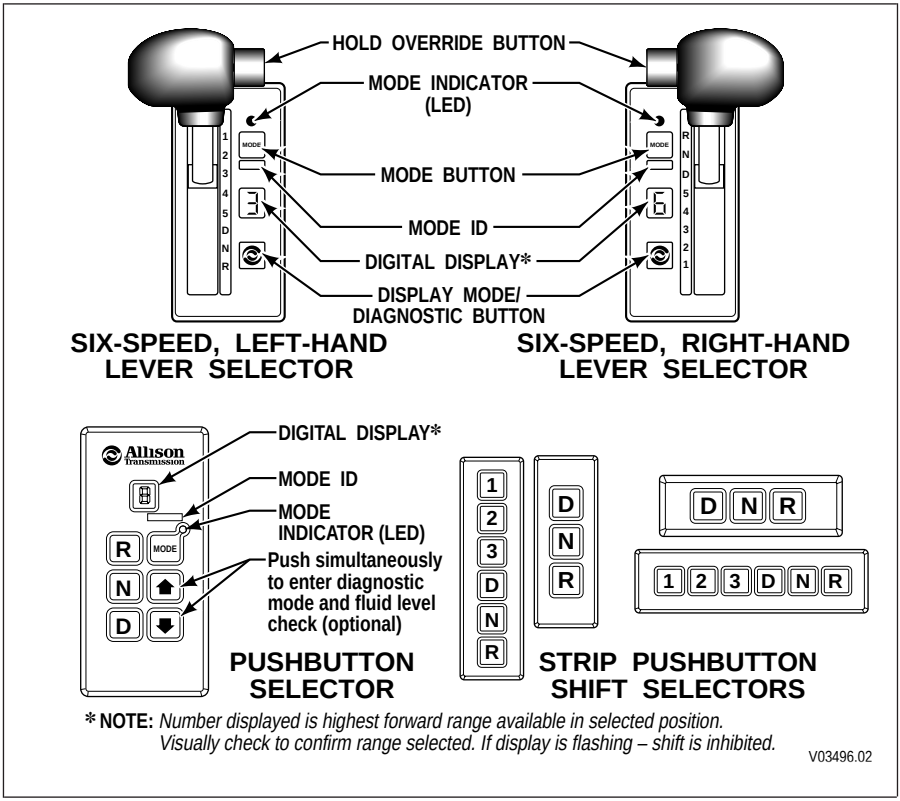

Figure 2–4. Typical Shift Selectors

When conditions causing the code exist, the code is logged in memory. The code stays in memory until it is manually cleared or cycled out.

When intermittently occurring codes exist, inspect, test, and correct the following items:

- Dirty, damaged, or corroded harness connectors and terminals.
- Terminals not fully seated in connectors.
- Damaged harnesses (due to poor routing, chafing, excessive heat, tight bends, etc.).
- Improperly mounted electronic control components.
- Poor connector seals (where applicable).
- Exposed harness wires.
- EMI generating components and accessories.
- Loose ground connections.

https://truckmanualshub.com/

To help locate intermittents, it sometimes helps to place the appropriate tester on the suspected component or circuit and simulate operating conditions—wiggle, pull, bump, and bend while watching the tester.

g. Exiting Diagnostic Mode.

NOTE: Strip Pushbutton Shift Selectors cannot display or clear diagnostic codes.

To exit the diagnostic mode, do one of the following:

- Do nothing; wait until the calibrated time has passed and the system automatically returns to normal operation.
- Using a pushbutton shift selector, simultaneously press the ↑ **(Up)** and ↓ **(Down)** arrow buttons.
- Using a pushbutton shift selector, press **N** (Neutral).
- Using a lever shift selector, press the **DISPLAY MODE** button once.
- Using a lever shift selector, move the selector lever to any position other than the one it was in when the diagnostic display mode was activated.

2–12. TRANSMISSION STALL TEST AND NEUTRAL COOL-DOWN CHECK

a. Purpose. Stall testing is performed to determine if a vehicle performance complaint is due to an engine or transmission malfunction. Stall testing is a troubleshooting procedure only—never perform a stall test as a general test or during routine maintenance.

Transmission stall speed is the maximum engine rpm attainable when the engine is at full throttle and the torque converter turbine is not moving, or “stalled.” After a transmission stall test, compare the actual full throttle engine speed at torque converter turbine stall with specifications established by the vehicle manufacturer.

NOTE: Engine speed data can be obtained from the engine manufacturer or from the equipment dealer or distributor. Some engine manufacturers provide a programmable parameter to limit engine speed when the transmission output speed is 0 rpm, such as at a stop. This parameter should be set to a higher value than the expected transmission stall speed before performing the stall test.

---

b. Stall Testing Preparation. If a transmission stall test is to be performed, make sure the following preparations have been made before conducting the transmission stall test:

https://truckmanualshub.com/

1. The manufacturer concurs with performing a full-throttle transmission stall test.
2. The engine programmable parameter for 0 rpm transmission output speed is set higher than the value expected at transmission stall speed.
3. The vehicle is in an area in which a transmission stall test can be safely performed.
4. Make sure the fuel control linkage goes to full throttle and does not stick when released.
5. Make sure the engine air induction system and exhaust system have no restrictions.
6. Determine the cold transmission fluid level and adjust as necessary.
7. Connect Allison DOC™ For PC–Service Tool to the vehicle diagnostic data connector or install an accurate tachometer (do not rely on the vehicle tachometer).
8. Install a temperature gauge with the probe in the transmission converter-out (to cooler) line. Allison DOC™ displays sump temperature only.
9. Install wheel chocks.
10. A driver is in the driver's position.
11. The vehicles brakes are fully locked.

WARNING: To help avoid personal injury, such as burns, from hot transmission fluid and/or to help avoid equipment damage, **do not stall** the torque converter for more than ten seconds maximum and monitor transmission fluid temperature. Immediately return the engine to idle if converter out (to cooler) temperature exceeds 150°C (300°F). Operating the transmission at high engine power at transmission stall or near stall conditions causes a rapid rise in the transmission fluid temperature. The fluid in the transmission torque converter is absorbing all of the engine power and the vehicle cooling system cannot dissipate the excessive heat load. Extended operation under high heat load conditions causes transmission and cooling system damage, and can possibly fail hydraulic lines causing high temperature fluid.

WARNING: To help avoid personal injury and equipment damage while conducting a transmission stall test, the vehicle **must be** positively prevented from moving. Apply the parking brake, the service brake, and chock the wheels securely. Warn personnel to keep clear of the vehicle and its travel path.

https://truckmanualshub.com/

c. Performing a Transmission Stall Test.

1. Start the engine. While in neutral let the transmission warm to normal operating temperature:
   — Sump temperature 71–93°C (160–200°F)
   — Converter out temperature 82–104°C (180–220°F)
2. Determine the hot transmission fluid level and adjust as necessary.
3. Turn **OFF** all engine accessories.
4. Place the Allison DOC™ diagnostic tool in clutch test mode. Use the shift selector to select 4th range. Using 4th range reduces the torque imposed on the transmission driveline. Do not perform a transmission stall test in reverse.

> **CAUTION:** To help avoid transmission or driveline damage, full throttle stall tests **must not be performed** in **R** (Reverse) range, all models, or low ranges, 7-speed models.

5. Notify personnel in the area to keep clear of the vehicle.
6. Slowly increase engine rpm until engine speed stabilizes.
7. Record engine speed.

> **CAUTION:** The transmission stall test procedure causes a rapid rise in transmission fluid temperature that can damage the transmission. **Never** maintain a stall condition once engine speed stabilizes or converter out (to cooler) temperature exceeds 150°C (300°F). During a stall condition, converter out temperature rises much faster than the internal (sump) temperature. **Never** use sump fluid temperature to determine the length of the stall condition. If the stall test is repeated, **do not let** the engine overheat.

8. Record converter out (to cooler) temperature.
9. Reduce the engine speed to idle and shift the transmission to neutral.
10. Raise engine speed to 1200–1500 rpm for 2 minutes to cool transmission fluid.
11. At the end of two minutes, record converter out (to cooler) temperature.
12. Proceed to the Paragraph g. Neutral Cool-Down Check Procedure.

https://truckmanualshub.com/

d. Driving Transmission Stall Test.

NOTE: If the vehicle is equipped with a smoke controlled or an emission controlled engine or engine control programming inhibiting engine acceleration, the following stall test procedure can be used.

WARNING: To help avoid personal injury and/or equipment damage, a driving transmission stall test **must be performed** by a trained driver and a qualified technician.

e. Driving Transmission Stall Test Preparation. If a driving transmission stall test is to be performed, make sure the following preparations have been made before conducting the test.

1. The manufacturer concurs with performing a full-throttle transmission stall test.
2. The engine programmable parameter for 0 rpm transmission output speed is set higher than the value expected at transmission stall speed.
3. The vehicle is in an area in which the transmission stall test can be safely performed.
4. Make sure the fuel control linkage goes to full throttle and does not stick when released.
5. Inspect the engine air induction system and exhaust system to make sure there are no restrictions.
6. Determine the cold transmission fluid level and adjust as necessary.
7. Connect the Allison DOC™ service tool to the vehicle diagnostic data connector.
8. Install an accurate tachometer (do not rely on the vehicle tachometer).
9. Install a temperature gauge with the probe in the transmission converter-out (to cooler) hose. Allison DOC™ displays sump temperature only.

https://truckmanualshub.com/

f. Performing A Driving Transmission Stall Test.

> **CAUTION:** The transmission stall test procedure causes a rapid rise in transmission fluid temperature that can damage the transmission. **Never** maintain a stall condition once engine speed stabilizes or converter out (to cooler) temperature exceeds 150°C (300°F). During a stall condition, converter out temperature rises much faster than the internal (sump) temperature. **Never** use sump fluid temperature to determine the length of the stall condition. If the stall test is repeated, **do not let** the engine overheat.

1. Start the engine. While in neutral let the transmission warm to normal operating temperature:
   - Sump temperature 71–93°C (160–200°F)
   - Converter out temperature 82–104°C (180–220°F)
2. Determine the hot transmission fluid level and adjust as necessary.
3. Turn **OFF** all engine accessories.
4. While located in an isolated area, begin the driving transmission stall test.
5. Select a hold range that will limit road speed (usually 2nd or 3rd range). Never perform a driving stall test in reverse or low range (seven speed models).
6. Operate the engine at 100 percent full throttle, maximum governed speed.
7. With the engine at maximum governed speed, begin gradually applying the vehicle service brakes while maintaining 100 percent full throttle. When the vehicle comes to a complete stop, record engine speed.
8. Record converter out (to cooler) temperature.
9. Reduce the engine speed to idle and shift the transmission to neutral.
10. Raise engine speed to 1200–1500 rpm for two minutes to cool transmission fluid. At the end of two minutes, record converter out (to cooler) temperature.
11. Proceed to Paragraph g. Neutral Cool-Down Check Procedure.

g. Neutral Cool-Down Check Procedure.

1. At the end of two minutes the converter out (to cooler) fluid temperature should return to within normal operating temperature range.
2. If the transmission fluid does not cool within two minutes, the cause could be a stuck torque converter stator or an issue with the transmission cooler, lines, or fittings.

https://truckmanualshub.com/

h. Transmission Stall Test Results.

NOTE: Environmental conditions, such as ambient temperature, altitude, engine accessory loss variations, etc., affect the power input to the converter. Due to such conditions, stall speed can vary from specification by ±150 rpm and still be accepted as within published stall speed.

- If engine speed with the transmission stalled is more than 150 rpm below the stall speed specification an engine issue is indicated.
- If engine stall speed is more than 150 rpm above specification, a transmission issue is indicated.
- Conditions that can exist to cause stall speed to 150 rpm above specification could be:
  - — Transmission fluid cavitation or aeration. Verify proper fluid level using the oil level sensor, if equipped or dipstick.
  - — Slipping clutch.
  - — Torque converter malfunction.
  - — Sticking or damaged torque converter valve.
- A low stall speed (at least 33 percent lower than published stall speed) could indicate an engine issue or a freewheeling stator in the torque converter.

https://truckmanualshub.com/

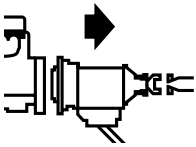

REMOVING TRANSMISSION

Section III

3–1. DRAINING TRANSMISSION

Drain the transmission fluid before removing the transmission from the vehicle.

1. Remove the drain plug from the oil pan. Examine the drained fluid for evidence of contamination (refer to Section 2–7, TRANSMISSION FLUID CONTAMINATION, Paragraph a. Fluid Examination). Reinstall the drain plug.
2. Remove the transmission fill tube if it interferes with transmission removal. Plug the fill tube hole in the main housing to keep dirt from entering the transmission.

NOTE: A significant amount of fluid may drain from the hydraulic lines when they are disconnected from the transmission.

3. Disconnect all hydraulic lines from the transmission. Remove the lines from the vehicle if they interfere with transmission removal. Plug all openings to keep dirt from entering the hydraulic system.
4. If an integral cooler is used, drain coolant from cooler and disconnect coolant hoses. Remove the hoses from the vehicle if they interfere with transmission removal. Plug all openings to keep dirt from entering the cooling system.

3–2. DISCONNECTING CONTROLS

1. Disconnect or completely remove controls. If controls are not removed from the transmission, position them so that they do not interfere with transmission removal.
2. Disconnect the external wiring harness at the feedthrough harness connector. Refer to Figure 3–1 or Figure 3–2. Prevent dirt or moisture from entering a disconnected connector. Position the wiring harness so it does not interfere with transmission removal.
   - For the 3000 Product Family transmissions, disconnect the input (engine) and output speed sensors.
   - For the 4000 Product Family transmissions, disconnect the input (engine), turbine, and output speed sensors (refer to Figure 3–1).

NOTE: There may be residual transmission fluid in the retarder-accumulator hydraulic line.

3. If a retarder is used, disconnect the retarder accumulator hydraulic line from the retarder. Disconnect any cooling lines.
   — For 3000 Product Family transmissions built before January, 1998, disconnect the transmission external harness from the retarder connector. If used, disconnect the tachograph or speedometer cable from the port on the rear of the retarder housing
   — For 3000 Product Family transmissions built beginning in January, 1998, disconnect the wiring harness from the retarder temperature thermistor, the output speed sensor, and the retarder valve body connector. If used, disconnect the tachograph cable from the port on the rear of the retarder housing (refer to Figure 3–2).
   — For the 4000 Product Family transmissions, disconnect the retarder connector, the retarder temperature sensor connector, and if used, the tachograph cable (refer to Figure 3–1).
4. If a PTO(s) is used, disconnect the PTO(s) wiring harness.

3–3. UNCOUPLING FROM DRIVELINE, ENGINE, AND VEHICLE

1. Disconnect the vehicle drive shaft from the transmission output flange or yoke. Position the disconnected shaft to avoid interference when removing the transmission.
2. If PTO equipped, disconnect PTO connections such as:
   — PTO hydraulic hoses
   — PTO-powered equipment drive shaft
3. If transmission mountings support the rear of the engine, place a jack or other support under the engine.
4. Securely support the transmission with a hoist, jack, or other suitable removal equipment.
5. Remove all bolts, nuts, washers, spacers, and supports that attach the transmission to the vehicle and the engine.

https://truckmanualshub.com/

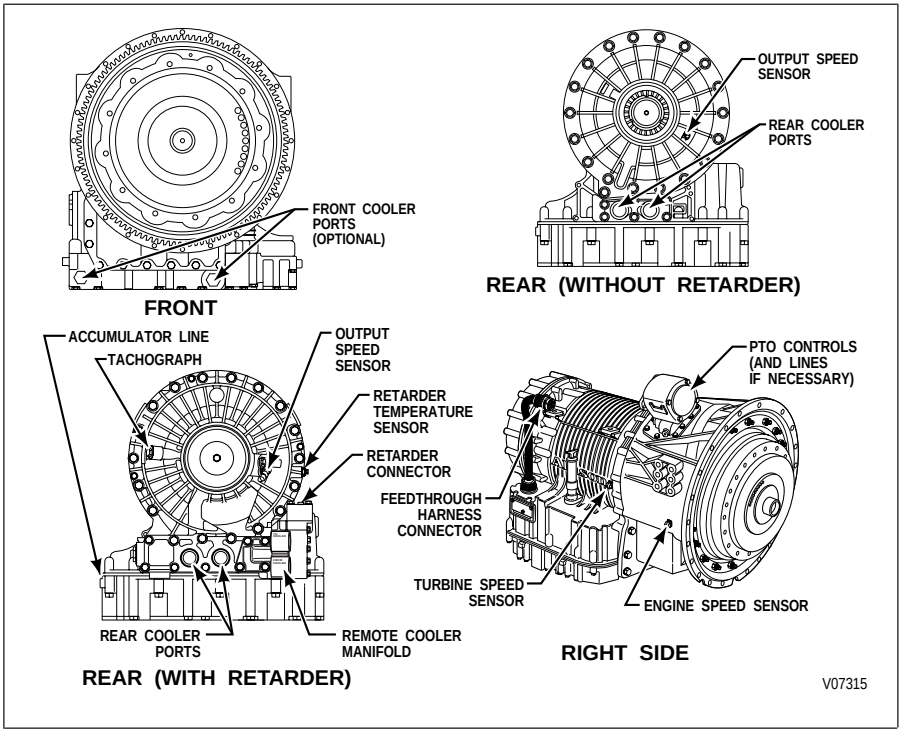

Figure 3–1. 4000 Product Family Transmissions Disconnect Locations

3–4. REMOVING THE TRANSMISSION

1. Move the transmission away from the engine, approximately 110 mm (4.35 inches), until it is completely clear of the engine. If used, remove the adapter ring and/or gasket.
2. Raise or lower the transmission as necessary to remove it from the vehicle.

3–5. REMOVING OUTPUT FLANGE OR YOKE

If replacing the transmission, you may need to transfer the output flange or yoke to the replacement transmission. Before December 1, 1998, output flanges or yokes were retained by two M10 x 1.5 x 30 bolts. Output flanges or yokes are now retained by one M14 x 2.0 x 70 bolt. For the 3000 Product Family, the one-bolt design began at S/N 6510184819. For the 4000 Product Family, the one-bolt design began at S/N 6610038064. All 4000 Product Family use the one-bolt design.

https://truckmanualshub.com/

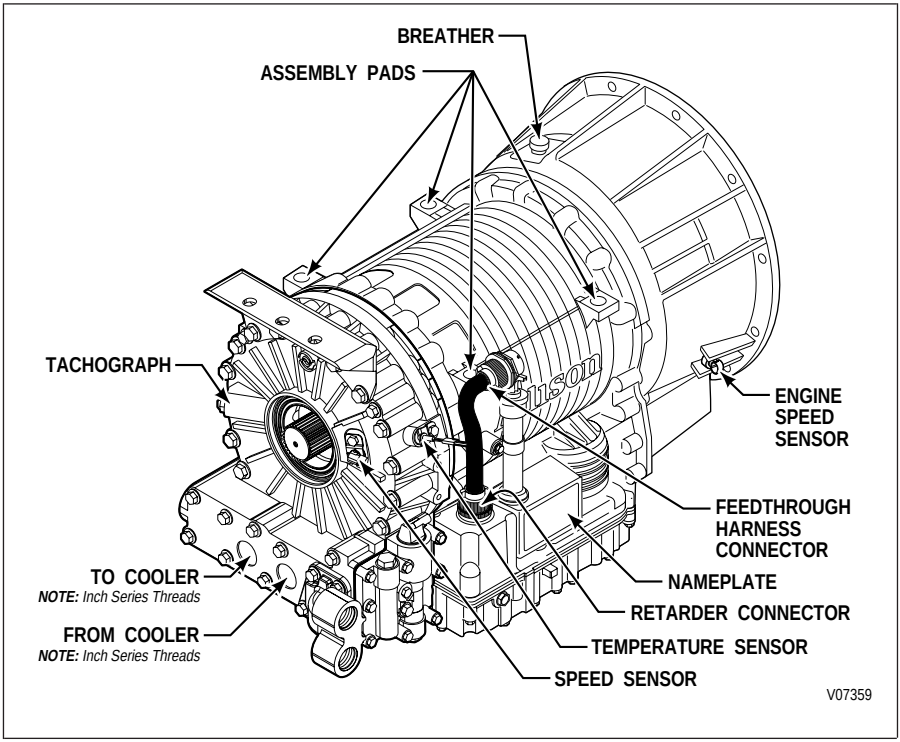

Figure 3–2. 3000 Product Family Transmissions Disconnect Locations

https://truckmanualshub.com/

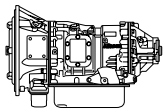

TRANSMISSION PREPARATION

Section IV

4–1. INSPECTING INPUT COMPONENTS

a. Bolt Holes. Inspect all bolt holes on the front of the transmission and rear of the engine that are used in connecting the transmission to the engine. The threads **must be** undamaged and the holes free of chips or foreign material.

b. Pilot Boss. Inspect the pilot boss (at the center of the flywheel) for damage or raised metal that prevents free entry into the crankshaft hub (or adapter).

c. Starter Ring Gear. Inspect the starter ring gear for excessive wear or damage.

d. Transmission Mounting Flange. Inspect the transmission mounting flange for raised metal, dirt, or if used, pieces of gasket material.

e. Transmission-to-Engine Mounting. Inspect the transmission-to-engine mounting flange for raised metal, burrs, or pieces of gasket material (if used). Remove any of these defects. Inspect the threaded holes for damaged threads.

4–2. INSTALLING OUTPUT FLANGE OR YOKE

a. Output Oil Seal. Inspect the output oil seal for leaks or damage. Refer to Customer Service Section, Table 8–1, for the appropriate service manual for replacement instructions. If not replacing the oil seal, lubricate it with high-temperature grease or transmission fluid.

CAUTION: DO NOT attempt to polish the oil seal contact surface on the flange or yoke. Scratches or machine-type lead can cause the seal to leak.

b. Inspect Flange or Yoke. Inspect flange or yoke for damage or wear. The oil seal contact surface **must be** smooth and regular to prevent oil leaking past the seal. Rotate the flange after installation to be sure that the flange isn’t binding.

https://truckmanualshub.com/

c. Install Output Flange or Yoke.

- 3000 Product Family before S/N 6510184819 and
  4000 Product Family before S/N 6610038064.
  - — Install flange or yoke onto output shaft. Install the large O-ring on the retainer plug. Install a belleville washer on each bolt so that the coned end of the washer contacts the underside of the bolt head. Insert two bolt/washer assemblies into the bolt holes in the plug. Install a small O-ring over the threads of each bolt, so that the O-ring seats against the retainer plug. Install retainer plug and bolts into the flange or yoke.
  - — Tighten bolts to 30–35 N•m (22–26 lb ft) for a 3000 Product Family transmission.
  - — Tighten bolts to 51–61 N•m (38–45 lb ft) for a 4000 Product Family transmission.
  - — Rotate the flange or yoke to check for binding.
- 3000 Product Family beginning with S/N 6510184819 and
  4000 Product Family beginning with S/N 6610038064
  - — Install flange or yoke onto output shaft. Install the large O-ring on the retainer plug. Insert one bolt into the bolt hole in the plug. Install a small O-ring over the threads of the bolt so that the O-ring seats against the retainer plug. Install retainer plug and bolt into the flange or yoke.
  - — Tighten bolt to 70–80 N•m (52–59 lb ft).

4–3. INSTALLING PTO

Access to the PTO mounting pads and the space available to maneuver the transmission determine whether the PTO should be installed before or after the transmission is installed.

CAUTION: DO NOT use cork or other soft gaskets to install the PTO. Use only the shims/gaskets listed in the appropriate parts catalogs. Refer to the Customer Service section, Table 8–1, for the current publication number.

NOTE: DO NOT use sealing compounds—they are usually incompatible with automatic transmission fluid.

https://truckmanualshub.com/

a. Install Guide Pins. Guide pins are included in the PTO manufacturers installation kit. Determine the required position of the guide pins in relation to the mounted position of the PTO. The guide pins **must align** with the two blind holes in the PTO pad. Install two headless guide pins into the converter-housing PTO pad. Tighten the pins.

b. Install Gasket. Install the special gasket over the guide pins—ribbed surface away from the transmission.

c. Mount the PTO. Mount the PTO on the guide pins, meshing the PTO driven gear with the transmission PTO drive gear. Attach the PTO by installing a bolt in the top bolt hole. Install the remaining bolts. Tighten all bolts to 51–61 N•m (38–45 lb ft).

4–4. INSTALLING FILL TUBE AND SEAL

a. Location.

- The 3000 Product Family fill tube may be mounted on either the right or left side. The unused fill tube provision **must have** a plug to fill the tube opening.
- The 4000 Product Family fill tube is on the right side.

CAUTION: Install the fill tube bracket with the correct length bolt. A bolt that is too long may cause cracks and leaks in the main housing. Refer to the Customer Service section, Table 8–1, for the appropriate parts catalog for the correct bolt.

b. Installation. Install the fill tube seal into the main housing. Insert the fill tube through the seal. Align the tube bracket with its bolt location. Install the fill tube bolt and tighten to 24–29 N•m (18–21 lb ft).

- On all 3000 Product Family transmission models before S/N 6510107518 install the expansion plug in the unused fill tube hole, if the plug is reusable. Tighten the plug to 1–2 N•m. (9–18 lb inch).
- On all 3000 Product Family transmission models beginning with S/N 6510107518, the unused hole is blocked using a fill tube seal and a new plug. Install the fill tube seal into the unused fill tube hole. Install the new plug so that the underside of the plug head contacts the fill tube seal. This plug and seal may be used on earlier units when the expansion plug is not reusable.

https://truckmanualshub.com/

4–5. INSPECTING PLUGS AND OPENINGS

Carefully inspect all sides and the bottom of the transmission for loose or missing plugs.

a. Pressure Plugs. Determine if 0.4375–20 UNF-2A pressure plugs are tightened to 10–13 N•m (7–10 lb ft).

b. Fluid Drain Plug. Determine that the drain plug is tightened to 25–32 N•m (18–24 lb ft).

c. Cleanliness. Inspect the openings into which the cooler lines connect for deformities or obstructions. Inspect the transmission electrical connectors for cleanliness. Clean electrical connectors with LPS Electro Contact Cleaner® only.

https://truckmanualshub.com/

PREPARING VEHICLE FOR TRANSMISSION INSTALLATION

Section V

5–1. ENGINE, TRANSMISSION ADAPTATION REQUIREMENTS

You **must make sure** a new transmission installation can be adapted to the vehicle's engine. Use the measurements described in this section for correct transmission-to-engine adaptation. Refer to Figure 5–1 or Figure 5–2 and/or AS67–020. Typical arrangement of adaptation components is shown in Figure 5–4.

a. Measuring Equipment. The following measuring equipment is required:

- 600 mm (24 inch) precision caliper
- 50–100 mm (2–4 inch) telescoping gauge
- 25–76 mm (1–3 inch) outside micrometer
- Dial indicator and mounting attachments—base, posts, and clamps
- 0–150 mm (0–6 inch) depth micrometer

b. Flywheel Housing Pilot Bore Diameter. The flywheel housing pilot bore diameter **must measure**:

- 3000 Product Family—447.68–447.81 mm (17.625–17.630 inches).
- 4000 Product Family—511.18–511.30 mm (20.125–20.130 inches).

c. Flywheel Housing Bore Runout. Flywheel housing bore runout **cannot exceed** 0.51 mm (0.020 inch) TIR.

d. Flywheel Housing Face Squareness. The flywheel housing face **cannot be** out-of-square more than 0.51 mm (0.020 inch) TIR.

e. Crankshaft Hub Pilot or Adapter Diameter. The crankshaft hub pilot or hub adapter pilot diameter **must measure** between 50.94–50.99 mm (2.006–2.008 inches).

f. Crankshaft Hub Pilot or Adapter Squareness. The crankshaft hub or hub adapter **cannot be** out-of-square more than 0.13 mm (0.005 inch) TIR.

g. Crankshaft Hub Pilot or Adapter Concentricity. The crankshaft hub pilot or the hub adapter pilot concentricity **cannot exceed** 0.13 mm (0.005 inch) TIR.

https://truckmanualshub.com/

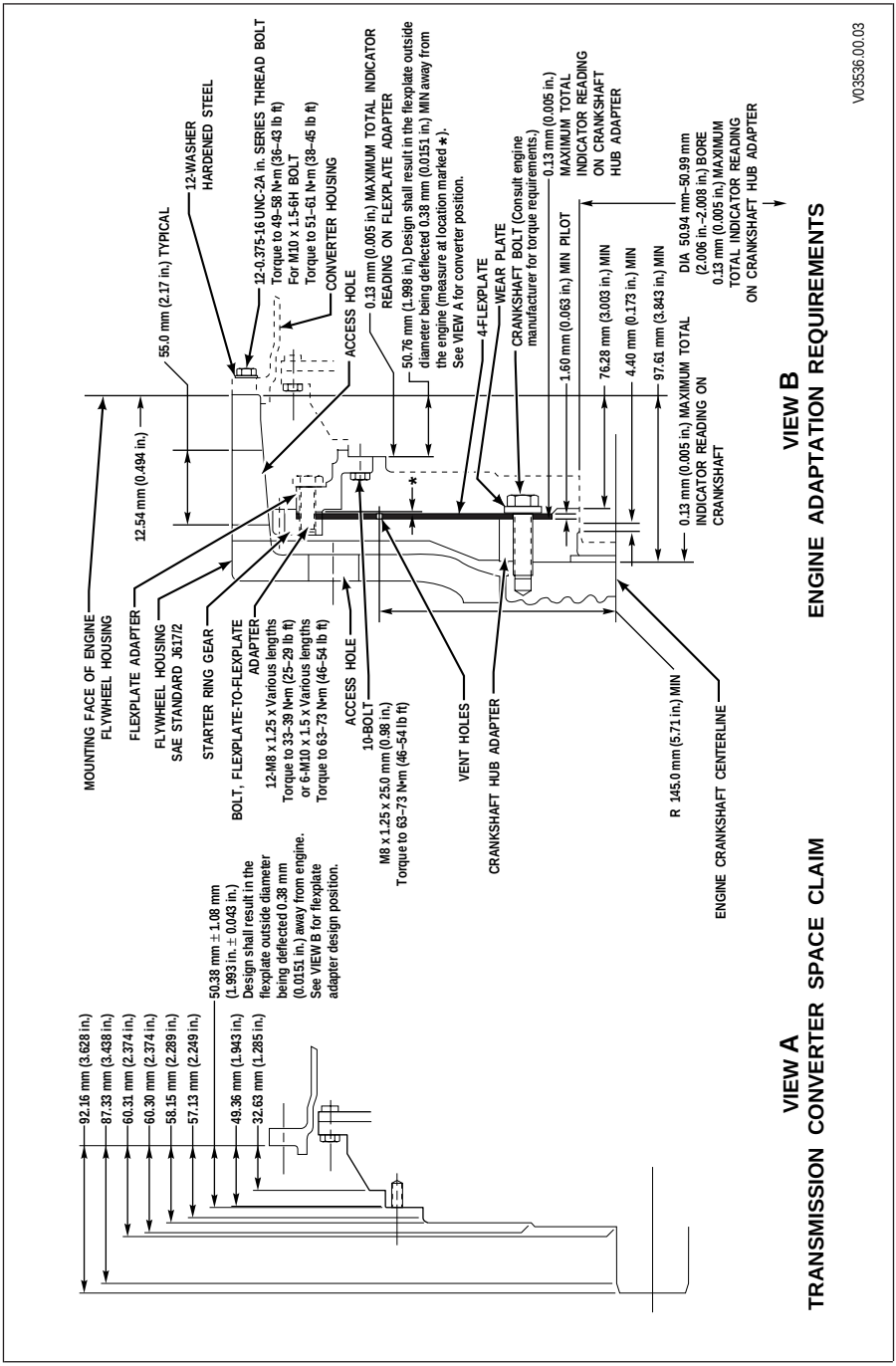

Figure 5–1. 3000 Product Family Engine Adaptation

https://truckmanualshub.com/

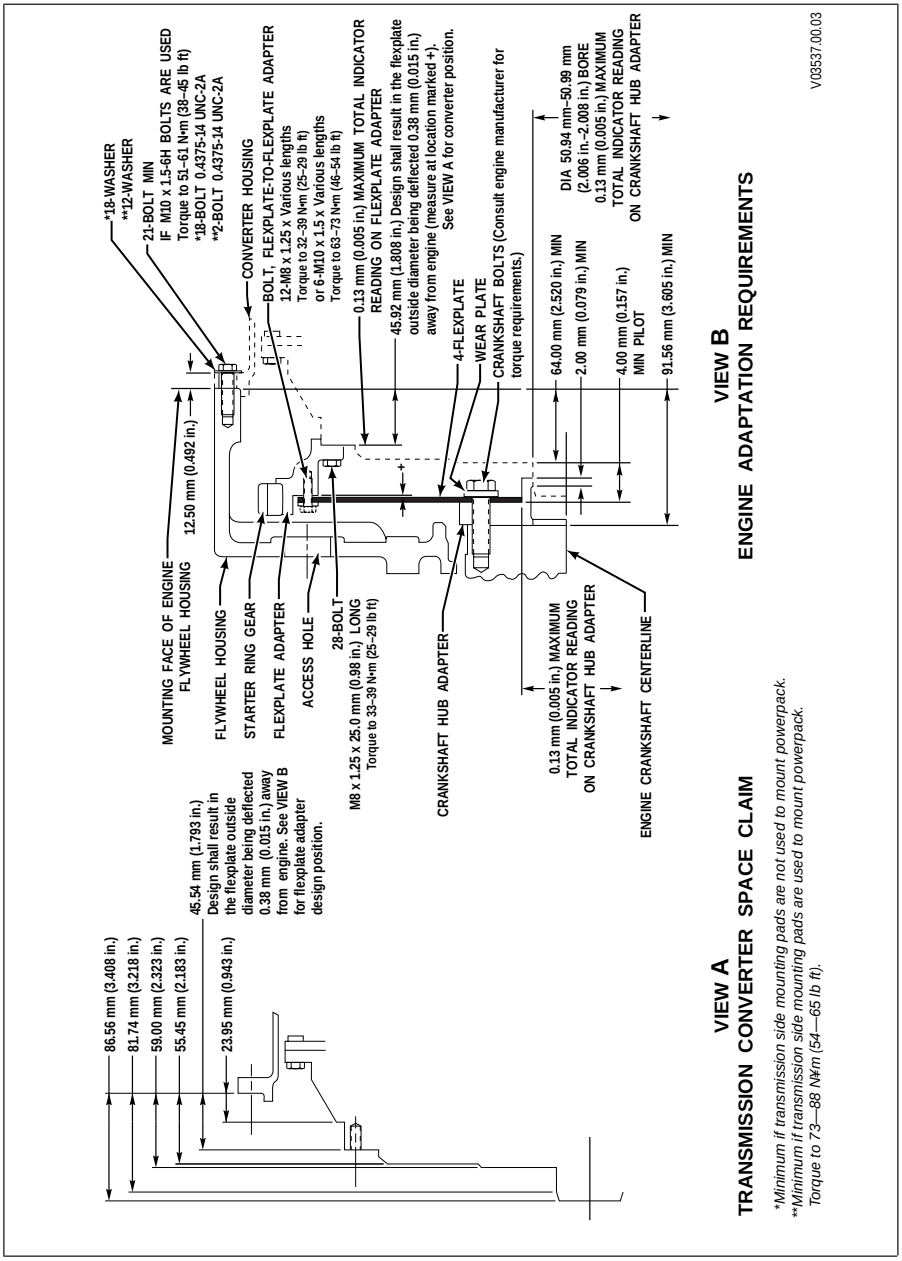

Figure 5–2. 4000 Product Family Engine Adaptation

https://truckmanualshub.com/

h. Flexplate Bolt Hole Flatness. Flexplate flatness in the area of the bolt holes is not a measurement required for the 3000 and 4000 Product Families transmissions.

i. Torque Converter Axial Location. Using a depth gauge, measure from the face of the torque converter housing to the torque converter flexplate adapter mounting face. The torque converter axial location should measure:

- 3000 Product Family—49.36–50.38 mm (1.943–1.983 inches).
- 4000 Product Family—45.54 mm (1.793 inches).

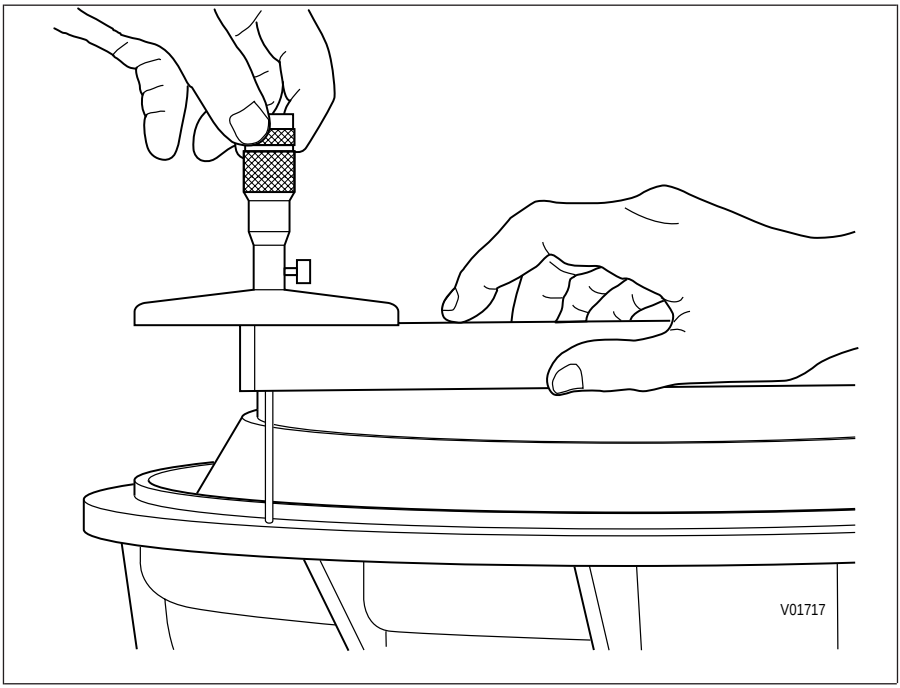

Figure 5–3. Converter Axial Location Measurement

5–2. CHECKING FLEXPLATE DRIVE ASSEMBLY

a. Flexplate Inspection. Inspect the flexplate for cracks, distortion, or elongated bolt holes. Replace a worn or damaged flexplate.

b. Engine Crankshaft End Play. Be sure engine crankshaft end play is within the engine manufacturer's specifications.

NOTE: When assembling the flexplate to the crankshaft hub or hub adapter, be sure the outer flexplate bolt holes are aligned.

https://truckmanualshub.com/

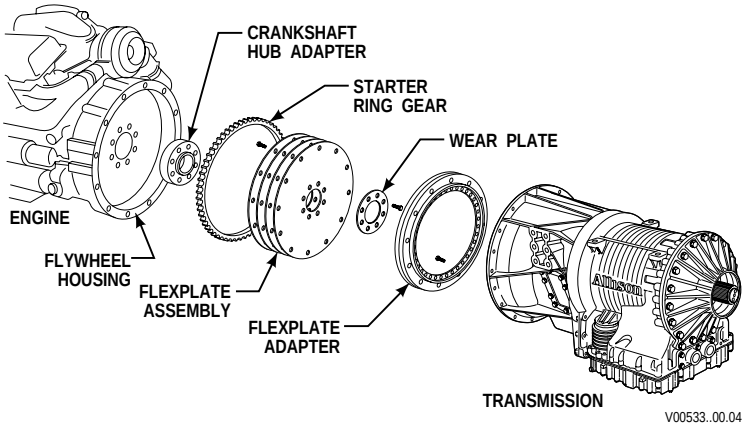

Figure 5–4. Arrangement of Adaptation Components

5–3. CHASSIS AND DRIVELINE INSPECTION

Inspect the chassis and driveline components for the following conditions, and correct them as appropriate.

- Transmission mounts—broken or worn-out
- Bolts and other hardware—damaged, missing, or incorrect
- Isolators (rubber mounts)—damaged or missing
- Driveline angles—runout, or balance which does not conform to the manufacturer's recommendations
- Driveline yoke slip joints:
  - — freedom of movement
  - — damaged or worn-out
  - — correctly lubricated
  - — correctly indexed
- Driveline midship or hanger bearings—damaged or misaligned

https://truckmanualshub.com/

- Universal joints:
  - — freedom of movement
  - — damaged or worn-out
  - — correctly lubricated
  - — correctly indexed
- Vehicle differential backlash—manufacturer's specification
- Universal joint coupling—alignment and differential damage
- Cross-frame members and rear support members—condition and location
- PTO-driven equipment shafts and couplings—damaged or misaligned
- Auxiliary transmission:
  - — shaft alignment
  - — alignment of yoke or flange
  - — backlash
  - — fluid leaks

5–4. COOLER, FILTER, AND LINES

a. Inspection. Perform the following and correct any faulty conditions:

- Transmission fluid cooler and related coolant lines:
  - — Inspect for contamination—clean and flush as necessary
  - — Inspect for deterioration
  - — Inspect for faulty connectors or kinks
  - — Clean and flush transmission fluid cooler, both coolant and oil sides. Pressure test both sides using a 276 kPa (40 psi) air supply.
- Hydraulic lines:
  - — Inspect for contamination—clean and flush as necessary
  - — Inspect for deterioration
  - — Inspect for faulty connectors or kinks

b. After Overhaul. A complete cleanup of the transmission system after an overhaul cannot be assumed. Repeated cleaning and flushing may not remove all debris from the transmission fluid cooler system. Replace the transmission "from cooler" (lube) filter after 5000 miles (8000 km). Refill the transmission to the correct fluid level (refer to Section 2–3, TRANSMISSION FLUID TEST).

https://truckmanualshub.com/

5–5. INSPECTING CONTROLS

a. Inspection. Inspect the following and correct any faulty conditions:

- Shift selector:
  - — improper operation
  - — poor electrical connections
  - — improper harness routing
- Cab and chassis wiring harness:
  - — poor electrical connections
  - — frayed insulation
  - — wiring damage
- Throttle sensor components, if present:
  - — freedom of movement
  - — improper routing
  - — bellows damage
  - — improper or loose cable mounting
- PTO controls, if present:
  - — damage
  - — wear
  - — improper operation
  - — lubrication
  - — electrical harness connections and wiring damage
- Temperature gauge:
  - — capillary tube damage (if used)
  - — sensor damage
- Retarder Controls:
  - — damage
  - — wear
  - — poor electrical connections
  - — frayed insulation
  - — wiring damage
- Fluid pressure gauge tubing:
  - — damage
  - — kinks
  - — improper routing

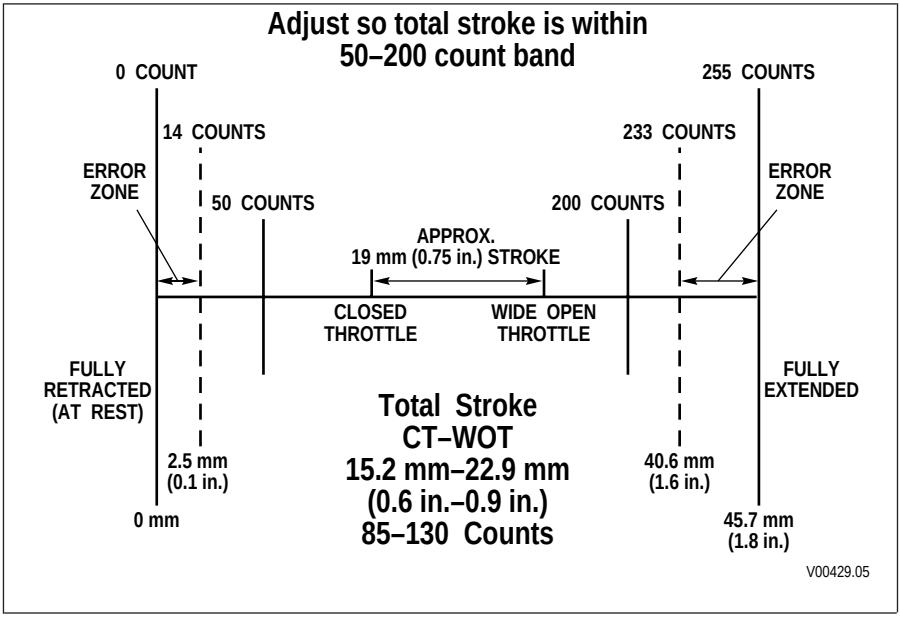

Figure 5–5. Throttle Position Determination Diagram

b. Throttle Position Sensor (TPS) Adjustment—Using Diagnostic Tool. When properly installed by the equipment manufacturer, the TPS should not need adjustment. If TPS adjustment is necessary, confirm that it has been installed to Allison Transmission specification (refer to Figure 5–5). The TPS is self-calibrating and therefore has no optimum closed throttle or full throttle count value. Idle count should be 50 or higher and full throttle count 200 or lower. As long as the counts are in the 50 and 200 count range with a difference of 85 to 130 counts between closed and full throttle the TPS is set correctly.

Error codes occur if the idle position is less than 14 counts or when the full throttle position is more than 233 counts.

The Allison DOC™ For PC–Service Tool can read TPS counts. Watch the TPS movements as the controls move it through a full stroke. Be sure the following conditions **DO NOT EXIST**:

- Misalignment or obstruction to smooth movement through the full stroke
- Idle and full throttle positions are not within an error zone (refer to Figure 5–5)

c. Hitch-Pin Throttle Position Sensor Installation.

- Install the throttle sensor body as follows:
  1. Clamp cable end using clamp and shims (refer to Figure 5–6).

https://truckmanualshub.com/

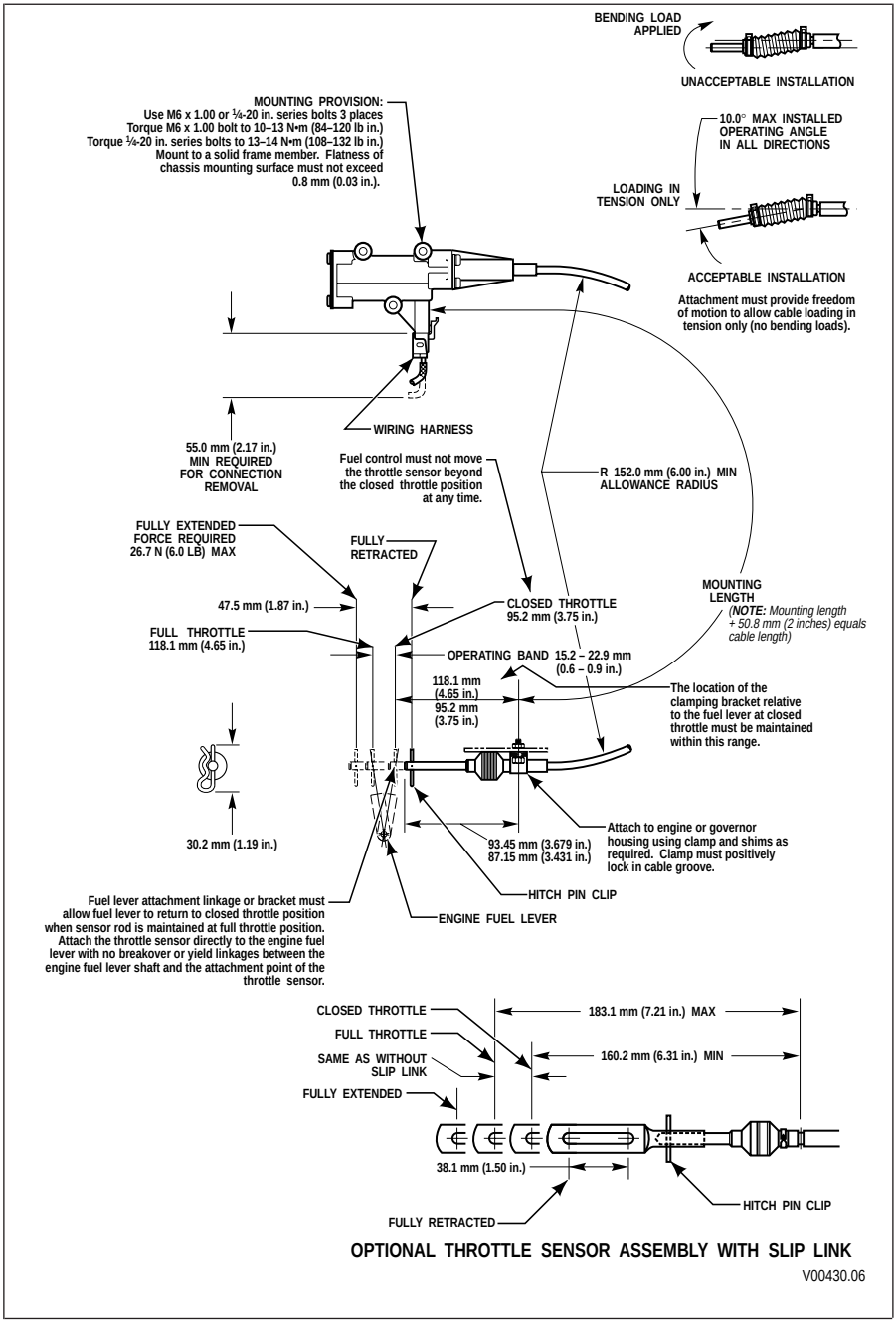

Figure 5–6. Hitch-Pin Throttle Position Sensor Installation Diagram

https://truckmanualshub.com/

2. Secure the sensor body using the mounting holes provided.
3. Install a heat shield if any part of the throttle sensor is near the exhaust manifold, turbochargers, or any other heat source.

- Adjust the throttle sensor as follows:
  1. The engine fuel lever **must be** at the closed throttle position.
  2. Install the hitch pin cable end of the sensor to the engine fuel lever with brackets so that at the idle position the cable end is 11–17 mm (0.44–0.67 inch) from its fully retracted position, and at wide open throttle the cable end is pulled 15.2–22.9 mm (0.60–0.90 inch) from the idle position.
  3. Determine the stroke distance of the throttle sensor, from closed to wide open. Stroke distance **must be** from 15–22.9 mm (0.60–0.90 inch).
  4. Recheck for zero clearance at the fuel lever. Make sure that the 15.2–22.9 mm (0.60–0.90 inch) dimension has not changed.
  5. Design throttle sensor linkage brackets and levers to nominal dimensions so that the system stays within tolerance bands throughout its operating life.

NOTE: The throttle position signal may be provided via communication link on electronically controlled engines.

---

https://truckmanualshub.com/

6–1. HANDLING

a. Preventing Damage. Handle the transmission carefully to prevent damage to components in the installation path.

b. Control of Transmission Movements. Use a hoist or transmission jack that allows precise control of transmission movements during installation.

6–2. MOUNTING TO ENGINE

Use the following procedure to mount the transmission to the engine:

1. Align one of the flexplate's bolt holes with the access opening in the engine flywheel housing.
2. Lubricate the center pilot boss with molybdenum disulfide grease (Molycote G, or equivalent).
3. Install a headless guide bolt into one of the flexplate bolt holes in the flexplate adapter or torque converter mounting lug (refer to Figure 5–3). Align the guide bolt with the flexplate hole at the access opening.
4. Push the transmission toward the engine while guiding the pilot boss on the torque converter into the flexplate hub adapter and the guide bolt into the hole on the flexplate.
5. Seat the transmission squarely against the engine flywheel housing—**NO FORCE IS REQUIRED**. If interference is encountered, move the transmission away from the engine and investigate the cause.
6. Align the bolt holes in the converter housing with those in the engine flywheel housing.
7. Install all transmission-to-engine bolts finger tight.

CAUTION: The entire converter housing circumference **must be** flush against the engine flywheel housing before tightening any bolts. **DO NOT** use the bolts to seat the housing.

8. Tighten four bolts at equally-spaced intervals around the converter housing bolt circle. Use the torque specified by the engine or vehicle manufacturer—usually M10 x 1.5-6H bolts tightened to 51–61 N•m

https://truckmanualshub.com/

(38–45 lb ft) or $^{7}/_{16}$-14 bolts tightened to 73–88 N•m (54–65 lb ft) or $^{3}/_{8}$-16 bolts tightened to 49–58 N•m (36–43 lb ft).

9. Remove the flexplate guide bolt through the engine flywheel housing access opening. Replace it with a self-locking bolt. Tighten the bolt finger tight.

NOTE: DO NOT tighten any flexplate-to-flexplate adapter bolts until all of the bolts have been installed and tightened finger tight.

10. Rotate the engine crankshaft to install the remaining self-locking bolts into the flexplate adapter. After all bolts have been installed finger tight, tighten M8 bolts to 33–39 N•m (25–29 lb ft) and M10 bolts to 63–73 N•m (46–54 lb ft).
11. Install the flywheel housing access cover, if used.

6–3. INSTALLING TRANSMISSION MOUNTING COMPONENTS

CAUTION: Use the type and grade of mounting bolts recommended by the vehicle manufacturer.

1. Install all bolts, washers, spacer, isolators, or supports required to support the transmission in the vehicle frame.
2. Tighten the bolts to the torque values recommended by the vehicle manufacturer.

6–4. COUPLING TO DRIVELINE

1. Couple the driveline companion flange or universal joint yoke to the flange or yoke on the transmission. Use the bolts and torque values recommended by the vehicle manufacturer.
2. Determine the universal joint angularity of all U-joints in the driveline. Confirm that they are within specification.

6–5. CONNECTING OUTPUT RETARDER ACCUMULATOR

The output retarder is connected to the vehicle air system by an air supply line attached to the retarder control solenoid mounted on the end of the retarder accumulator (refer to Figure 6–1).

https://truckmanualshub.com/

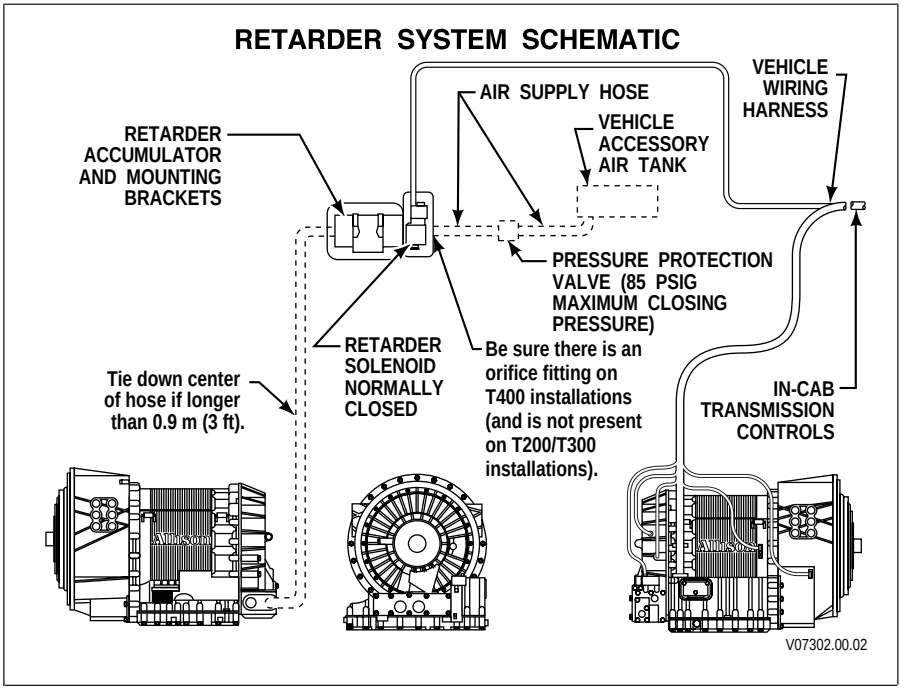

Figure 6–1. 3000 And 4000 Product Families Output Retarder Accumulator Installation

NOTE: Be sure a pressure protection valve is correctly installed between the vehicle brake air system and the accumulator control solenoid.

1. Connect the air supply hose fitting to the retarder air control solenoid. Tighten the fitting to 16–22 N•m (12–16 lb ft).
2. Connect the hydraulic hose between the retarder and the accumulator. Tighten hose fittings to 68–81 N•m (50–60 lb ft).

6–6. CONNECTING POWER TAKEOFF CONTROLS

If not already mounted, mount the PTO(s) onto the transmission (refer to Section 4–3, Installing PTO).

1. Inspect the PTO harness routing for kinks and sharp bends. Avoid routing the cable close to exhaust pipes or manifold. The PTO harness **must not rub** or interfere with adjacent parts.
2. Connect controls to the PTO.
3. Determine if PTO control operation is correct.

https://truckmanualshub.com/

CAUTION: PTO units using transmission main pressure to engage the PTO gear **must have** a positive main pressure shut-off at the solenoid valve when the PTO is not engaged. Failure to provide this feature may cause inadvertent clutch apply and PTO damage.

4. Couple the PTO output to its driven equipment. Inspect couplings or universal joints for correct assembly and alignment. If the driven component is not a direct mount arrangement, inspect the PTO drivelines for angularity, phasing, and offsets.

6–7. CONNECTING PARKING BRAKE CONTROL

1. Connect and properly adjust the parking brake.
2. If present, adjust the brake shoe-to-drum clearance as specified by the manufacturer.

This does not apply to 4000 Product Family.

6–8. CONNECTING COOLER

Refer to Figure 6–2 for typical cooler port locations on the transmission and recommended torque for cooler line fittings.

6–9. CONNECTING ELECTRICAL COMPONENTS

NOTE: Allison Transmission electronic control systems are designed and manufactured to comply with all FCC and other guidelines regarding radio frequency interference/electromagnetic interference (RFI/EMI) for transportation electronics. Manufacturers, assemblers, and installers of radio-telephone or other two-way communication radios have the sole responsibility to correctly install and integrate those devices into Allison Transmission-equipped vehicles to customer satisfaction. For further information, refer to TS2973EN, the WTEC III Electronic Controls Troubleshooting Manual.

1. Remove the cover from the transmission feedthrough connector and carefully connect the transmission external wiring harness. Keep dirt and debris out of the connector.
2. Connect the external wiring harness.

   a. For the 4000 Product Family connect: engine, turbine, and output speed sensors, retarder control connector (if retarder is present), and the retarder temperature sensor

https://truckmanualshub.com/

4000 PRODUCT FAMILY

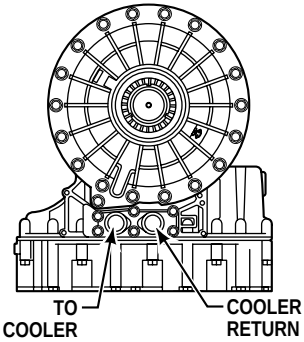

TORQUE 54–68 N•m (40–50 lb ft)

REAR VIEW

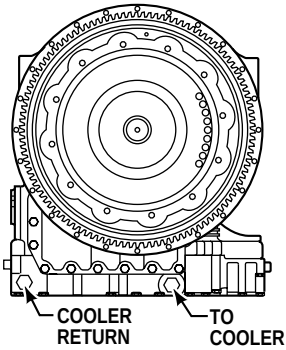

TORQUE 54–68 N•m (40–50 lb ft)

FRONT VIEW

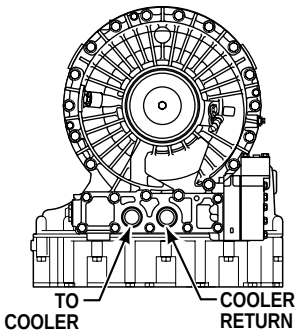

TORQUE 68–81 N•m (50–60 lb ft)

REAR VIEW

3000 PRODUCT FAMILY

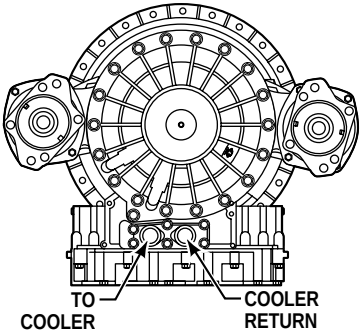

TORQUE 54–68 N•m (40–50 lb ft)

REAR VIEW

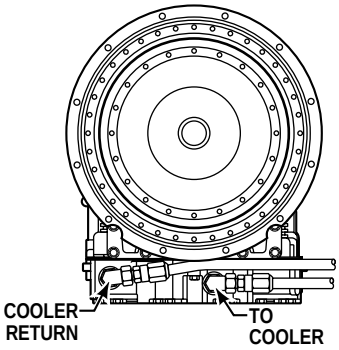

TORQUE 34–47 N•m (25–35 lb ft)

FRONT VIEW

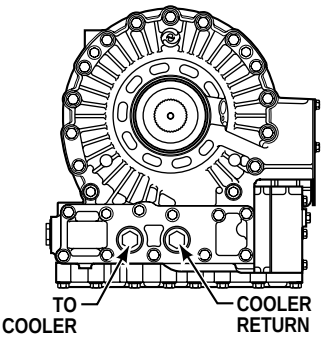

TORQUE 68–81 N•m (50–60 lb ft)

REAR VIEW

NOTE: *All torque values apply to cooler fittings*

V07293.00.01

Figure 6–2. Torque Values of Typical Fluid Cooler Lines

https://truckmanualshub.com/

b. For the 3000 Product Family connect: engine and output speed sensors, and the retarder control connector (if retarder is present and unit was built before January, 1998)

c. For 3000 Product Family units with retarder built beginning January, 1998 connect: the retarder temperature thermistor, the output speed sensor, and the retarder valve body connector. Also the tachograph cable, if used, to the port on the rear of the retarder housing.

3. If used, connect the PTO(s) connector(s). The PTO connector is not part of the Allison Transmission external wiring harness.
4. Be sure the speed sensors, the PTO connector, and other connections are securely seated and latched by pulling on the connector—**NOT THE WIRES**. On the 3000 Product Family, turn the retarder connector (if used) until feeling a positive snap on the connector.
5. The transmission has a sump fluid temperature sensor on the internal wiring harness. A retarder fluid temperature sensor is installed in the retarder on retarder-equipped models. Actual temperature reading can be made with diagnostic tool. Hot fluid conditions in the sump or retarder are read through the diagnostic tool by programming an output function.
6. A temperature gauge may be installed in the “To Cooler” line. No temperature gauge installations are available on integral cooler installations. If equipped for them, install a temperature probe—capillary tube and bulb or thermocouple.
7. If equipped with a capillary tube and bulb:

   a. Tightened the adapter tight enough to prevent leakage.

   b. Install the bulb into the adapter and tighten the nut.

   c. Inspect the capillary tube for interference with other parts that might chafe or damage the tube.
8. If equipped with a thermocouple:

   a. Long tubes may require support clips or brackets.

   b. Install the thermocouple and connect the leads.
9. Install and connect other electrical components—such as heaters.

   a. If equipped, install the pressure gauge tube or line.

   b. Be sure that all unused hydraulic openings are plugged.

6–10. CONNECTING SPEEDOMETER DRIVE

The ECU, through the VIM, provides an electronic speedometer speed signal. If used, consult the OEM for connection procedures.

https://truckmanualshub.com/

6–11. FILLING HYDRAULIC SYSTEM

1. Select a transmission fluid—refer to Section 2–5, FLUID RECOMMENDATIONS.
2. Fill the transmission with the required amount of fluid—refer to Table 2–9.
3. Run the engine for about one minute and check the fluid level—refer to Section 2–3, TRANSMISSION FLUID TEST, Paragraph c, Cold Test Procedure.

6–12. INSTALLATION INSPECTION LIST

Complete the Installation Inspection List. Refer to Section 7, Inspections and Adjustments.

https://truckmanualshub.com/

Section VII — INSPECTIONS AND ADJUSTMENTS

7–1. INSTALLATION INSPECTION LIST

Use this inspection list after transmission installation. As items are confirmed, mark them off this list.

- **Torque Values:**
  - — All control module bolts—51–61 N•m (38–45 lb ft)
  - — Speed sensor bolts—24–29 N•m (18–21 lb ft)
  - — Flexplate-to-crankshaft hub bolts—Consult Engine Manufacturer Specifications
  - — Flexplate-to-flexplate adapter bolts 12-bolt design— 33–39 N•m (25–29 lb ft); 6-bolt design—63–73 N•m (46–54 lb ft)
  - — Fluid drain plug—25–32 N•m (18–24 lb ft)
  - — Fluid fill tube bracket—24–29 N•m (18–21 lb ft)
  - — Control module pressure taps—10–13 N•m (7–10 lb ft)
  - — Cooler fittings

    #12, 34–47 N•m (25–35 lb ft)

    #16, 54–68 N•m (40–50 lb ft)

    #20, 68–81 N•m (50–60 lb ft)
  - — Cooler port cover bolts—51–61 N•m (38–45 lb ft)
  - — Expansion plug (prior to April 1997)—1–2 N•m (9–18 lb inch)
  - — Flexplate adapter-to-converter cover bolts—33–39 N•m (25–29 lb ft)
  - — Output flange bolt(s):

    3000 Product Family transmission—30–35 N•m (22–26 lb ft)

    4000 Product Family transmission—51–61 N•m (38–45 lb ft)

    3000 and 4000 Product Families Transmissions built after December 1, 1998—70–80 N•m (52–59 lb ft)
  - — PTO cover bolts—51–61 N•m (38–45 lb ft)
  - — PTO mounting bolts—51–61 N•m (38–45 lb ft)
  - — Breather—12–16 N•m (9–12 lb ft)
  - — PTO pressure hose to transmission—10–13 N•m (7–10 lb ft)
  - — Rear cover bolts—90–110 N•m (66–81 lb ft)

https://truckmanualshub.com/

— TPS to transmission bracket M6 bolts—10–13 N•m (84–120 lb inch); $^{1}/_{4}$-20 bolts—12–15 N•m (108–132 lb inch)

- **Cooler Fluid Lines and Air Hose for:**
  — No leaks
  — Connection tightness
  — Correct routing
- **Throttle sensor for:**
  — Proper adjustment
  — Correct routing of cable and harness
- **Driveline for:**
  — Proper indexing of universal joints
  — Proper drive shaft angles
  — Driveline backlash
  — Lubricated universals and slip-joints
- **Hydraulic System for:**
  — Recommended fluid—TranSynd™ or DEXRON®-III
  — Correct fluid level in transmission
  — Dipstick correctly calibrated—refer to Figure 2–2
  — Fill tube tight
  — Fill tube cap tight
  — Breather clean and free of restrictions
  — No fluid leaks during operation
- **Instruments and Electrical Equipment for:**
  — Proper wiring and electrical connections
  — Instruments, gauges, and lights work correctly
  — Shift Selector display is on and **CHECK TRANS** light is off
  — Fluid temperature gauge
- **Power Takeoff—if installed—for:**
  — Controls connected and operative
  — Correctly coupled to driven equipment
  — Lubrication line correctly installed and routed—if used

https://truckmanualshub.com/

7–2. ROAD TEST AND VEHICLE OPERATION INSPECTION LIST

a. Driveability.

NOTE: Refer to the latest edition of the 3000 and 4000 Product Families Transmission Operator's Handbook or 3000MH and 4000MH Owner's Manual for operating instructions. Refer to the Customer Service section, Table 8–1, for the latest publication number.

Drive-away tests are performed to verify proper transmission and support equipment installation and operation. The following steps outline drive-away test procedures:

- Determine fluid level—fill the transmission with the appropriate fluid
- Start the vehicle—determine proper system response during start-up
  - — Turn on the vehicle's master/ignition switch.
  - — The **CHECK TRANS** light should come on
  - — Start the engine
  - — The **CHECK TRANS** light should go off
  - — **"N"** should appear in the shift selector display
- Clear Trouble Codes—during installation, it is common for "false" codes to be stored in the electronic control's ECU. These codes **must be cleared** prior to road testing the vehicle.
- Road Test the Vehicle—allow the electronic control time to "converge" shifts.
- Determine Proper Operation—inspect all components for proper mounting and operation, and inspect for transmission fluid leaks at gasket surfaces, lines, and hoses.
- Determine new Trouble Codes—use the Allison DOC™ For PC–Service Tool, or shift selector to determine if codes were set during the road test. Refer to Section 2–11, TROUBLESHOOTING, Paragraph c. Clearing Trouble Codes Using Shift Selector and Paragraph d. Retrieving Troubleshooting Codes.
- Troubleshoot—if codes exist after the road test, problems **must be** found and corrected (refer to TS2973EN, WTEC III Troubleshooting Manual).

b. Service and Maintenance. Refer to the current issue of the 3000 and 4000 Product Families service manuals for detailed transmission service and maintenance instructions. Refer to the latest issue of the WTEC III Troubleshooting Manual for detailed electronic control system troubleshooting. Refer to the Customer Service section, Table 8–1, for the latest publication number.

https://truckmanualshub.com/

c. **Road Test Inspection List.** Complete the following checklist.

- **Neutral Start Circuit**:
  - — Starts only in neutral
- **Instruments:**
  - — **CHECK TRANS** light and shift selector display
  - — Transmission fluid pressure gauge—if used
  - — Speedometer
  - — Temperature gauge—if used
  - — Reverse warning system—if used
- **Transmission Fluid:**
  - — Fluid level meets specifications—cold, neutral, level
  - — No leaks
- **No-Load Governed Engine Speed:**
  - — No-load governed speed of engine
  - — Adjust governor as necessary—refer to the manufacturer's specifications for the engine-transmission being tested.
- **Output Retarder:**
  - — Operation of the output retarder, if installed, while descending a grade or slowing on a level road.
- **PTO—if installed:**
  - — PTO operation—Refer to the appropriate Operator's Manual. Refer to the Customer Service section, Table 8–1, for the current publication number.
- **Shift Sequence:**
  - — Transmission upshifts and downshifts smoothly through all ranges
- **Other Tests:**
  - — Stall test
  - — Shift quality
- **Comments:**

_____

_____

_____

_____

https://truckmanualshub.com/

Section VIII CUSTOMER SERVICE

8–1. OWNER ASSISTANCE

There are distributors and dealers around the world ready to stand behind every Allison Transmission product. Any situation that arises in connection with the sale, operation, or service of your transmission will be handled by the distributor or dealer in your area.

Refer to the Worldwide Sales and Service Directory SA2229EN for a current listing of Allison Transmission authorized distributors and service dealers.

8–2. SERVICE LITERATURE

Additional service literature is available as shown in the following table. This service literature provides fully illustrated instructions for the operation, maintenance, service, overhaul, and parts support of your transmission. To be sure that you receive maximum performance and service life from your transmission, you may order publications from:

SGI Inc.
Attn: Allison Literature Fulfillment Desk
8350 Allison Avenue
Indianapolis, IN 46268
TOLL FREE: 888–666–5799
INTERNATIONAL: 317–471–4995

https://truckmanualshub.com/

Table 8–1. Available Service Literature

Transmission Model	3000 Product Family	3000 Product Family 7–Speed	4000 Product Family
Allison DOC™ User Guide	GN3433EN	GN3433EN	GN3433EN
Automatic Transmission Fluid Technician's Guide	GN2055EN	GN2055EN	GN2055EN
Job-Aid Cards	JA3426EN	JA3426EN	JA3427EN
Operator's Manual*	OM2995EN	OM2683EN	OM2995EN
MH Owner's Manual*	OM3349EN	—	OM3349EN
Parts Catalog*	PC2150EN	PC2150EN	PC2456EN
Parts Catalog CD-ROM	CD2150EN	CD2150EN	CD2456EN
Principles of Operation	PO2454EN	PO2454EN	PO2454EN
Service Manual	SM2148EN	SM2148EN	SM2457EN
Electronic Troubleshooting Manual	TS2973EN	TS2973EN	TS2973EN
Worldwide Sales and Service Directory*	SA2229EN	SA2229EN	SA2229EN
*Also Available On The Internet At ***www.allisontransmission.com***			

https://truckmanualshub.com/

Allison Transmission®

MT3004EN 200603 www.allisontransmission.com Printed in USA 200701