https://truckmanualshub.com/

PARTS MANUAL

GLP050LX
(A974)

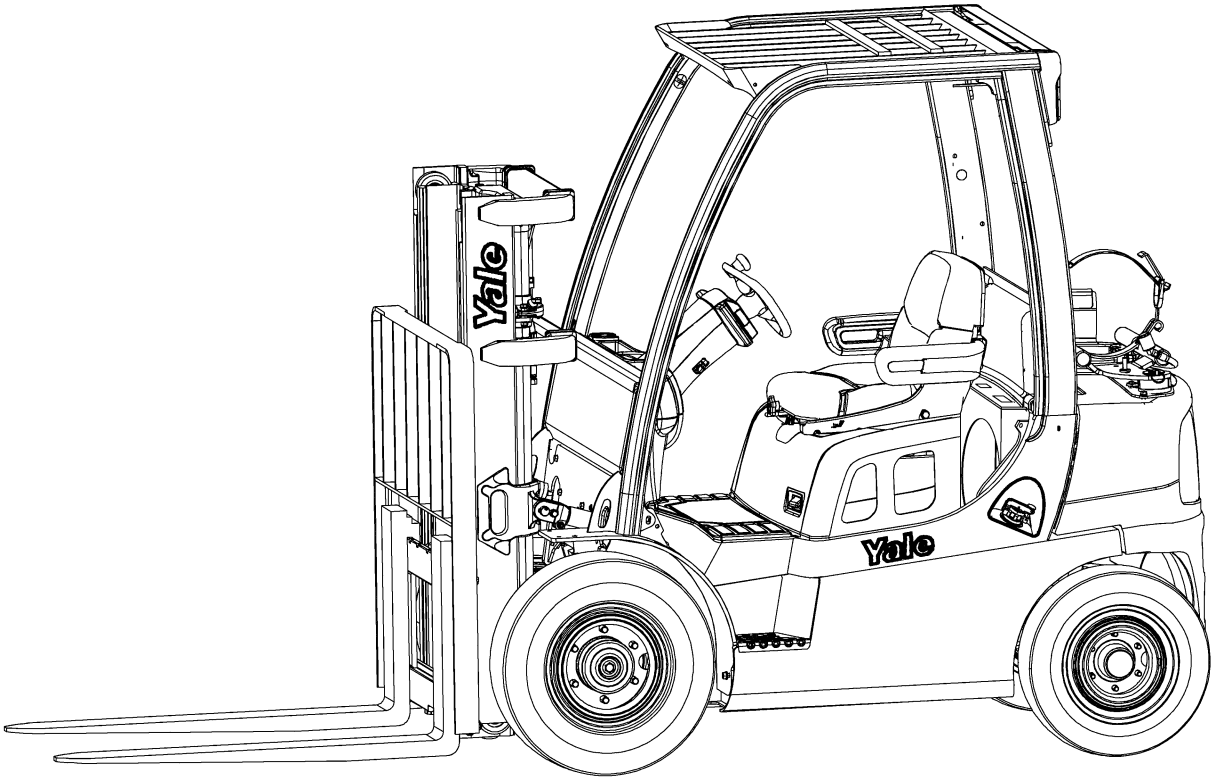

Yale Materials Handling Corporation
1400 Sullivan Drive
Caller No. 12011
Greenville, NC 27834-2011

550013968
©Yale Corp.
09/2010

https://truckmanualshub.com/

MODEL NOMENCLATURE

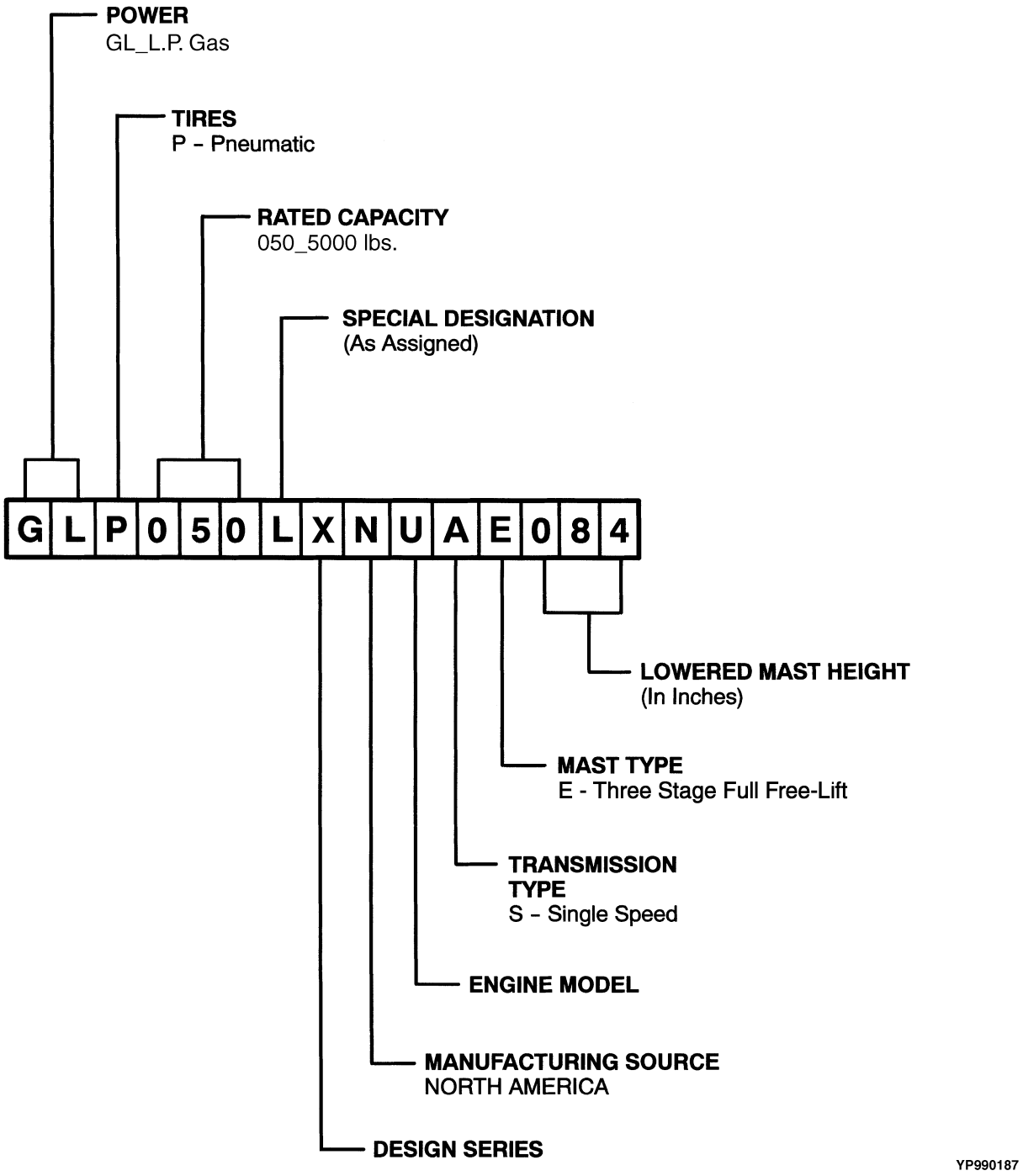

NOTE: This parts manual contains alternate pages for certain assemblies. The truck model code can be used to determine many of the assemblies on your lift truck (power, tire type, mast type). The complete truck model and serial number are stamped into the nameplate. See for further information.

https://truckmanualshub.com/

Yale

SECTIONS

1	GENERAL TRUCK
2	ENGINE ASSEMBLY
3	EXHAUST SYSTEM
4	COOLING SYSTEM
5	FUEL SYSTEM
6	ELECTRICAL SYSTEM
7	TRANSMISSION
8	DRIVE AXLE
9	STEERING SYSTEM
10	BRAKE SYSTEM
11	HYDRAULIC SYSTEM
12	MAST-THREE STAGE FULL FREE-LIFT
13	OPTIONS
14	NUMERICAL INDEX
15	USER SUPPORT INFORMATION

This Parts Manual is divided into 15 major sections which are listed above. Quick reference to these sections can be made by placing the right thumb on the tab of the desired section, bending the book back and thumbing the pages to the corresponding tab.

https://truckmanualshub.com/

https://truckmanualshub.com/

TABLE OF CONTENTS

DESCRIPTION	PAGE
A	
AIR FILTER ASSEMBLY	5-4
AIR INTAKE SYSTEM	5-2
ASSEMBLED ENGINE	
MAZDA 2.0L, LPG - 2010 EMISSION COMPLIANT ENGINES	2-6
AUDIBLE BACKUP ALARM	13-3
B	
BATTERY AND CABLES	6-4
BRAKE ASSEMBLY	10-2
BRAKE PEDAL LINKAGE	10-4
C	
CARRIAGE	
THREE STAGE FULL FREE-LIFT	12-20
CENTER SECTION	8-4
COOLING SYSTEM	4-2
COUNTER/REVERSE CLUTCH	
SINGLE SPEED TRANSMISSION	7-14
COUNTERWEIGHT	1-6
COWL MOUNT	1-10
CRANKSHAFT AND PISTONS	
MAZDA 2.0L, LPG - 2010 EMISSION COMPLIANT ENGINES	2-14
CYLINDER BLOCK	
MAZDA 2.0L LPG - 2010 EMISSION COMPLIANT ENGINES	2-10
CYLINDER HEAD AND COVER	
MAZDA 2.0L LPG - 2010 EMISSION COMPLIANT ENGINES	2-8
D	
DISPLAY CLUSTER	6-8
DRIVE AXLE AND ATTACHING PARTS	8-2
DRIVE TIRE AND WHEEL	8-6
E	
ELECTRICAL ARRANGEMENT	6-2
ELECTRONIC PRESSURE REGULATOR ASSEMBLY	
MAZDA 2.0L LPG - 2010 EMISSION COMPLIANT ENGINES	5-14
ELECTRONIC PRESSURE REGULATOR KIT	
(MAZDA 2.0L LPG)	5-16
EMISSION CONTROL SYSTEM	
MAZDA 2.0L, LPG - 2010 EMISSION COMPLIANT ENGINES	2-22
ENGINE CONTROL MODULE	
MAZDA 2.0L LPG	6-9
ENGINE COOLING SYSTEM	
MAZDA 2.0L, LPG - 2010 EMISSION COMPLIANT ENGINES	2-20
ENGINE MOUNTING	2-4
EXHAUST MANIFOLD	
MAZDA 2.0L, LPG - 2010 EMISSION COMPLIANT ENGINES	2-18

©2010 Yale Materials Handling Corporation

https://truckmanualshub.com/

TABLE OF CONTENTS (continued)

DESCRIPTION	PAGE
EXHAUST SYSTEM WITH CATALYTIC CONVERTER	
MAZDA 2.0L, LPG	3-2
MAZDA 2.0L, LPG - LATIN AMERICAN SERIES	3-4
F	
FIRE EXTINGUISHER	13-4
FLOORPLATES AND COVERS	1-12
FLYWHEEL AND HOUSING ASSEMBLY	
MAZDA 2.0L	2-2
FORKS	1-2
OPTIONAL	1-3
FREE LIFT CYLINDER ASSEMBLY	
THREE STAGE FULL FREE LIFT	12-16
FUEL SYSTEM	
MAZDA 2.0L LPG - 2010 EMISSION COMPLIANT ENGINES	5-8
FUEL SYSTEM HOSES AND ATTACHING PARTS	
MAZDA 2.0L LPG - 2010 EMISSION COMPLIANT ENGINES	5-10
FUEL TANK COVERS	
LATIN AMERICAN SERIES	5-5
FULL SUSPENSION SEAT	
MANUAL HYDRAULIC - NON-SWIVEL	1-20
SHEET 2 OF 2	1-24
G	
GEAR PUMP ASSEMBLY	11-4
H	
HAND LEVERS	
2 AND 3 FUNCTION	11-14
HEADER HOSE AND ATTACHING PARTS	
3 FUNCTION	12-18
HOOD	1-16
HYDRAULIC CONTROL VALVE	
MANUAL - 3 FUNCTION	11-16
HYDRAULIC FILTER HOUSING	11-10
HYDRAULIC HOSES	
STEERING	11-6
HYDRAULIC SUPPLY AND RETURN	11-2
I	
INPUT/FORWARD CLUTCH	
SINGLE SPEED TRANSMISSION	7-12
INTAKE MANIFOLD	
MAZDA 2.0L, LPG - 2010 EMISSION COMPLIANT ENGINES	2-16
INTEGRAL SIDE-SHIFT CARRIAGE	
THREE STAGE FULL FREE-LIFT	13-6
INTEGRAL SIDE-SHIFT CYLINDER	13-10
INTEGRAL SIDE-SHIFT HYDRAULIC HOSES	
THREE STAGE FULL FREE-LIFT	13-8

©2010 Yale Materials Handling Corporation

https://truckmanualshub.com/

TABLE OF CONTENTS (continued)

DESCRIPTION	PAGE
L	
LABELS	
SHEET 1 OF 2	1-26
SHEET 2 OF 2	1-28
LIGHTS	
STOP, TAIL, TURN, BACKUP, AND STROBE - WITH OVERHEAD GUARD	6-6
LOAD BACKREST EXTENSION	1-4
LPG FUEL TANK AND MOUNTING	5-6
M	
MAIN LIFT CYLINDER ASSEMBLY	
THREE STAGE FULL FREE LIFT	12-12
MAST ASSEMBLY	
INNER MAST AND FREE-LIFT	12-8
INTERMEDIATE MAST AND MAIN LIFT	12-4
OUTER MAST	12-2
MIRRORS	13-2
MIXER AND THROTTLE BODY ASSEMBLY	
MAZDA 2.0L - 2010 EMISSION COMPLIANT ENGINES	5-12
N	
NON SUSPENSION SEAT	
WITHOUT ELECTRONIC CONTROLS	1-18
O	
OIL PUMP AND FILTER	
MAZDA 2.0L, LPG - 2010 EMISSION COMPLIANT ENGINES	2-24
OVERHEAD GUARD	1-8
P	
PARK BRAKE	10-6
S	
STEER TIRE AND WHEEL	9-10
STEERING AXLE AND ATTACHING PARTS	9-6
STEERING COLUMN ASSEMBLY	9-4
STEERING CYLINDER	9-8
STEERING WHEEL AND COLUMN	9-2
T	
THROTTLE PEDAL AND ATTACHING PARTS	5-18
TILT AND AUXILIARY HOSES	11-8
TILT CYLINDER AND MAST INSTALLATION	11-11
TILT CYLINDER ASSEMBLY	11-12
TIMING GEAR COVER AND OIL PAN	
MAZDA 2.0L, LPG - 2010 EMISSION COMPLIANT ENGINES	2-12
TORQUE CONVERTER	7-8
TORQUE CONVERTER HOUSING AND ATTACHING PARTS	7-6
TRANSMISSION COOLING	
MAZDA 2.0L LPG	7-2

©2010 Yale Materials Handling Corporation

https://truckmanualshub.com/

TABLE OF CONTENTS (continued)

DESCRIPTION	PAGE
TRANSMISSION HOUSING AND ASSEMBLY	
SINGLE SPEED	7-10
TRANSMISSION MOUNT	
SINGLE SPEED	7-4
V	
VALVE ASSEMBLY, AUXILIARY	
MANUAL CONTROL VALVE - THREE FUNCTION	11-20
VALVE ASSEMBLY, LIFT AND TILT	
MANUAL CONTROL VALVE - THREE FUNCTION	11-18
VALVE ASSEMBLY, OUTLET SECTION	
MANUAL CONTROL VALVE - THREE FUNCTION	11-22
W	
WIRE HARNESS	
MAZDA 2.0L LPG - POWERTRAIN	6-10
RH CHASSIS - SHEET 1 OF 2	6-14
RH CHASSIS - SHEET 2 OF 2	6-16
WIRE HARNESS ADAPTER	
LOW FUEL PRESSURE	6-18

©2010 Yale Materials Handling Corporation

https://truckmanualshub.com/

ABBREVIATIONS QUICK REFERENCE SHEET

Listed below are abbreviations used in parts manuals to denote the following expressions:

TERM	DEFINITION
Amp	Amperes
AR	As Required
BDI	Battery Discharge Indicators
BWI	Brush Wear Indicator
CE	Communicator End
CRE	Corrosive Environment
D/B	Date Break
dbA	Decibel "A" Scale
DE	Drive End
ECH	Empty Container Handler
ECH-3	Empty Container Handler - 3 High Stacking
ECH-4	Empty Container Handler - 4 High Stacking
ECH-5	Empty Container Handler - 5 High Stacking
ECH-6	Empty Container Handler - 6 High Stacking
ECH-7	Empty Container Handler - 7 High Stacking
ECM	Electronic Control Module
ECN	Engineering Change Notice
EEPROM	Electrically Erasable Programmable Read Only Memory
EPA	US Environmental Protection Agency
EPROM	Electrically Programmable Read Only Memory

TERM	DEFINITION
FRE	Freezer Environment
in.	inches
LPG	Liquefied Petroleum Gas
MAP	Manifold Absolute Pressure
mm	millimeters
MSTS	Microprocessor Spark Timing System
NPT	National Pipe Threads
O/S	Oversize
PTO	Power Take Off
RPM	Revolutions per Minute
S/N	Serial Number
TMM	Truck Management Module
UL Type D	Diesel-Powered Safety Rating
UL Type DS	Diesel-Powered Safety Rating
UL Type E	Battery-Powered Safety Rating
UL Type EE	Battery-Powered Safety Rating
UL Type ES	Battery-Powered Safety Rating
UL Type G	Gasoline-Powered Safety Rating
UL Type GS	Gasoline-Powered Safety Rating
UL Type LP	Gas-Powered Safety Rating
UL Type LPS	LP Gas-Powered Safety Rating
U/S	Undersize
UL	Underwriters Laboratory
V	Volts

©2010 Yale Materials Handling Corporation

https://truckmanualshub.com/

HOW TO USE THE ILLUSTRATED PARTS MANUAL

This parts manual describes and illustrates assemblies, subassemblies, and detail parts needed for service replacement.

The different constructions are indicated by keys and footnotes. The callouts correspond to descriptions found on the next page.

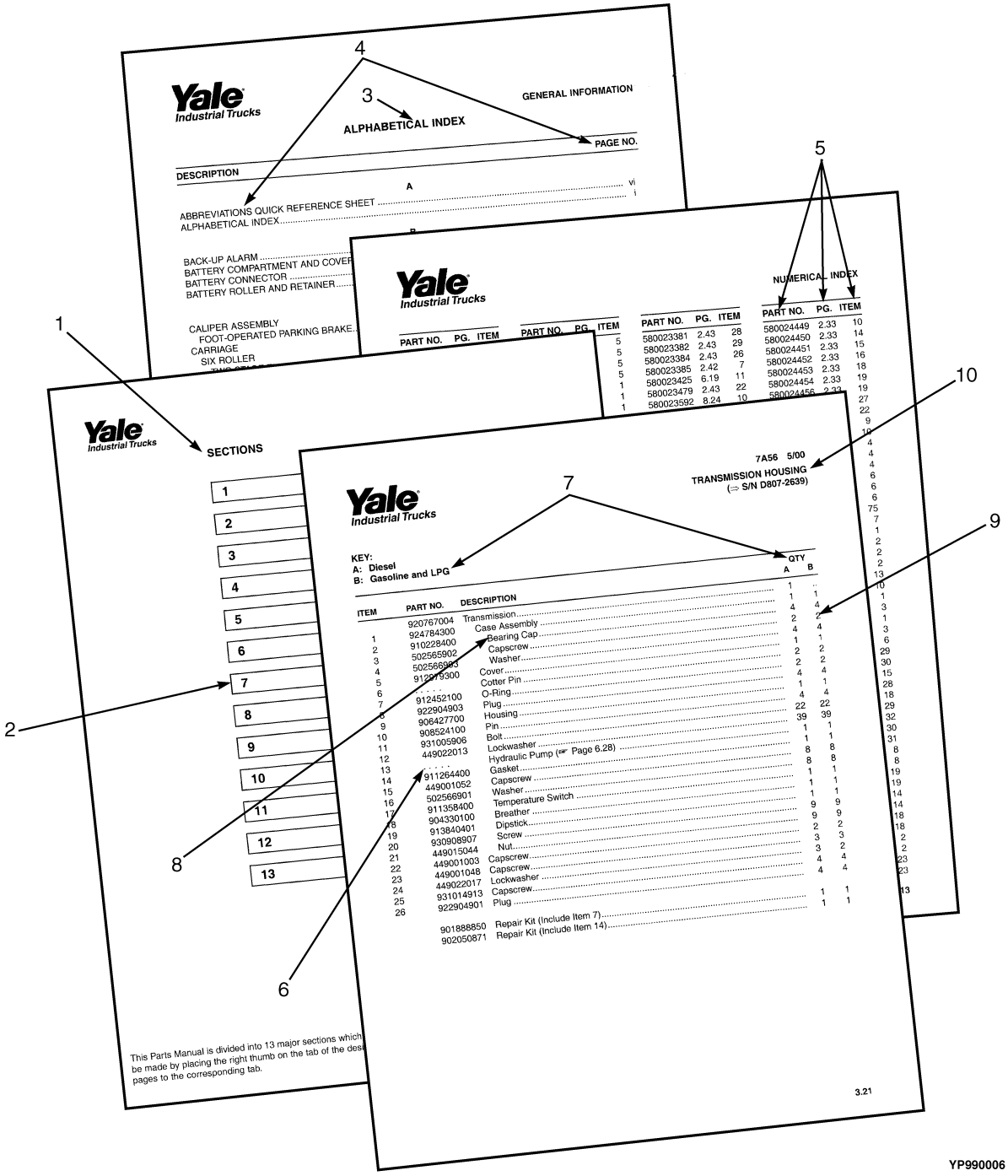

©2010 Yale Materials Handling Corporation

https://truckmanualshub.com/

HOW TO FIND THE DESIRED PART NUMBER

WHEN THE PART NUMBER AND THE NEXT HIGHER ASSEMBLY IS NOT KNOWN:

1. Determine the function and application of the part required. Turn to the Sections Page. Choose the general area of reference most likely to include the part.
2. Turn to the section you chose. Use the Section Table of Contents to determine the assembly which would normally contain the part required. Then locate the part on the assembly breakdown page.

WHEN THE PART NUMBER IS NOT KNOWN AND THE NEXT HIGHER ASSEMBLY IS KNOWN:

3. Determine the assembly the required part is used on. Turn to the Table of Contents (Page i).
4. Locate the assembly the required part is used on and turn to the page indicated for that assembly. Then locate the part on the assembly breakdown page.

WHEN THE PART NUMBER IS KNOWN:

5. Use the Numerical Index (Page 14-1) to find the part number. Turn to the page listed and locate the part as indicated by the item number.

GENERAL:

The assembly breakdowns include part numbers, descriptions, quantities required, keys and footnotes to help in selecting correct parts.

6. Parts Supersession Information. Part numbers that have this history will be displayed in the parts list in the order that they were superseded (from oldest to newest). The superseded part numbers will be shown with a line through them.

   Five periods in the PART NO. column (. . . . .) indicate that the part is either *Not Serviced Separately* or there is a reference to another figure. A figure reference is denoted by a pointing hand followed by a parts page number in the DESCRIPTION column (☞7A56)
7. Keys are used to show two or more similar assemblies, RH and LH assembly parts, etc. Select the appropriate key, "A", "B", "C", "D", or "E" and the corresponding quantity column to find the required parts. Two periods in the QTY column (..) indicate that the part is not used for that assembly.
8. Indented descriptions under the DESCRIPTION column are used to indicate assemblies and subparts of assemblies. In the example on the previous page, *BEARING CAP* (Item 2) is a subpart of the major assembly *CASE*.
9. Quantities shown are for one assembly. The quantities of the subpart *BEARING CAP* are indicated as two and two. This means two per *CASE* assembly.
10. Serial number breaks identify the most current parts information and are shown as follows:
    → **S/N A810N2639**
    Indicates last serial number affected.
    S/N A810N2640 →
    Indicates the first serial number affected.
    S/N A810N1553 ↔ S/N A810N3291
    Indicates a range of serial numbers affected.

    ECN numbers for pending serial numbers are shown to allow for the inclusion of the most current parts information and are identified as follows:
    → **S/N Pending Per ECN 63243**
    Indicates a pending serial number for last unit affected.
    S/N Pending Per ECN 63243 →
    Indicates a pending serial number for first unit affected.

    Date breaks are used to indicate when a change occurred but a subsequent serial number break was not recorded. This is an arbitrary date usually based on the ECN release and are identified as follows:
    → **D/B 3/00**
    Indicates that a change occurred sometime within that month for the item affected.
    D/B 3/00 →
    Indicates that a change occurred sometime within that month for the item affected.
    D/B 3/00 ↔ D/B 4/00
    Indicates a range of production dates of the item affected.

    Contact your local dealer for Yale lift trucks for serial number information for items with a ECN or a date break.

ORDERING PARTS:

When ordering replacement parts, give the unit serial number, part number, name of part and quantity required.

For any further information on parts, service, or ordering, consult your local dealer for Yale lift trucks.

©2010 Yale Materials Handling Corporation

https://truckmanualshub.com/

IDENTIFICATION OF TRUCK SERIAL NUMBERS

X	OOO	X	OOOO	X
(1)	(2)	(3)	(4)	(5)

NOTE: Serial Number breakdown is only for trucks built after 1994.

(1) and (2) The first letter and three numbers indicate the truck unit code.

(3) The second letter indicates the plant of manufacture.

(4) The four or five digit number indicates the production sequence number of the truck.

(5) The final letter indicates the year of manufacture starting with "A" in 1957, 1980, and 2003. The letters "I", "O", and "Q" will not be used.

For pending serial numbers contact your local dealer for Yale lift trucks.

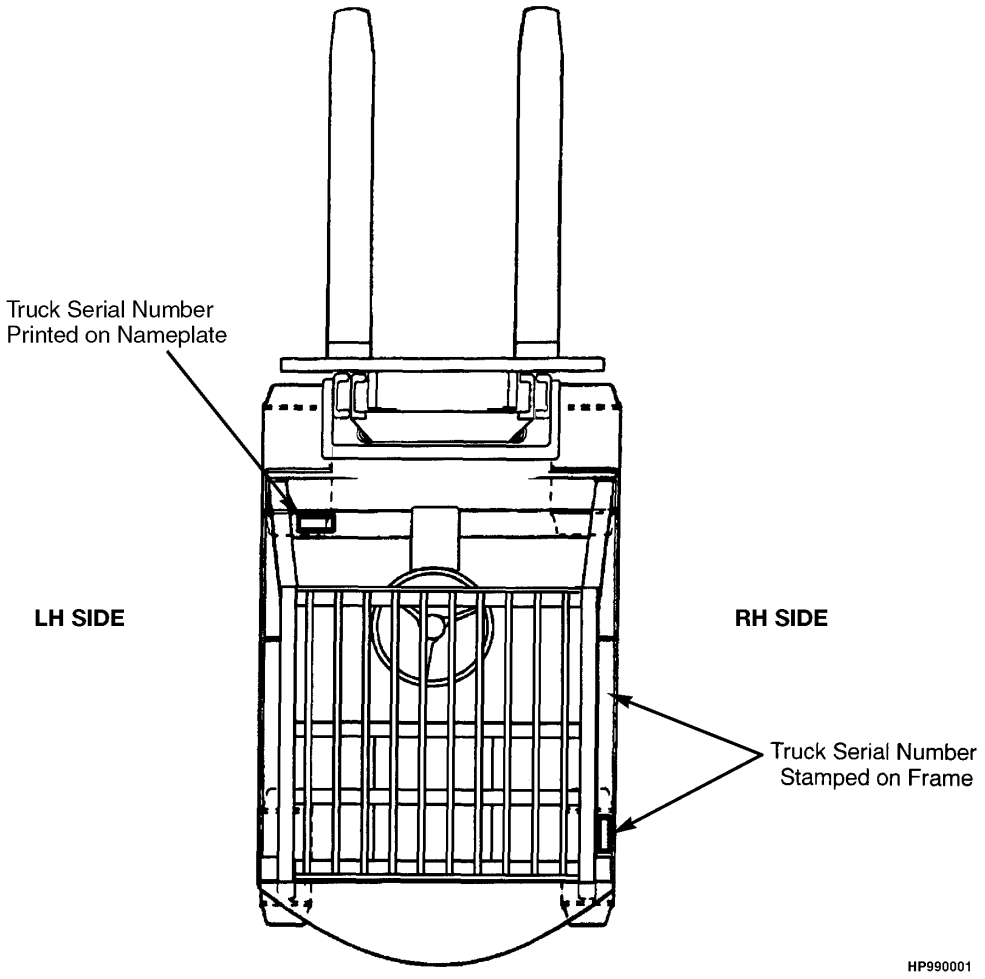

Parts referred to in this book as right or left hand parts are in accordance with the illustration above.

©2010 Yale Materials Handling Corporation

https://truckmanualshub.com/

IDENTIFICATION OF MAST SERIAL NUMBERS

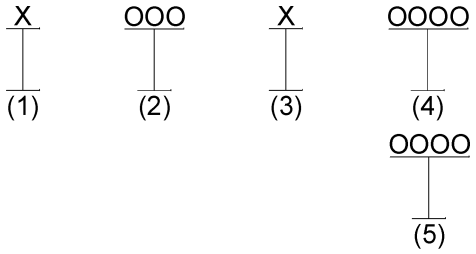

(1) and (2)	The first letter and number indicates the mast unit code.
(3)	The second letter indicates the plant of manufacture.
(4)	The four or five digit number indicates the production sequence number of the mast.
(5)	Carriage travel in millimeters stamped just below the serial number.

Mast Group identification consists of mast unit code (1) and (2) plus carriage travel (5).

For pending production sequence numbers contact your local dealer for Yale lift trucks.

LIFT EQUIPMENT IDENTIFICATION

1. Fork part number, capacity rating, plant code letter, and date of manufacture are stamped approximately six inches below the top of most forks.
2. The carriage group number is stamped on the right hand side of the top crossmember (pin type) or on the back of the right hand end of the bottom crossmember (hook type). A date code has two letters in line with or below the carriage group number.
3. The mast identification number has a unit code, a letter indicating the plant of manufacture, and a serial number. Underneath the production sequence number is a four digit number that indicates the carriage travel in millimeters.
4. Tilt and lift cylinder group numbers are stamped on the cylinder shell.

   Always refer to the group, serial, or part number when ordering service parts.

   Modification of masts and carriages by SPED (Special Products Engineering Department) are identified by a model prefix code beginning with the letter "S". contact your dealer for Yale lift trucks for information on these assemblies.

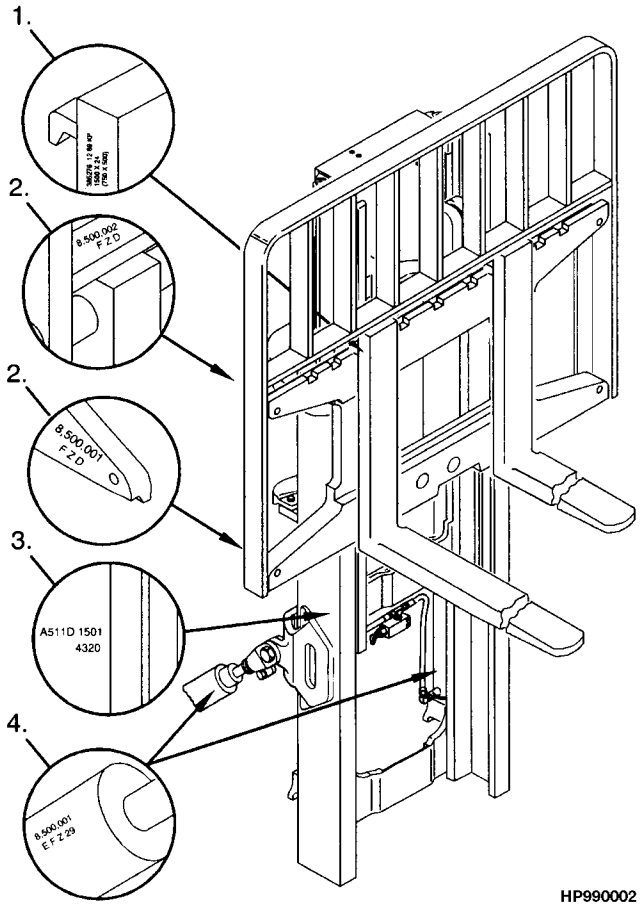

©2010 Yale Materials Handling Corporation

https://truckmanualshub.com/

IDENTIFICATION OF ATTACHMENT AND SIDE-SHIFT CARRIAGE SERIAL NUMBERS

X	OOO	X	OOOO
(1)	(2)	(3)	(4)

(1) and (2) The first letter and three numbers indicate the attachment unit code.

(3) The second letter indicates the plant of manufacture.

(4) The four or five digit number indicates the production sequence number.

For pending production sequence numbers contact your local dealer for Yale lift trucks.

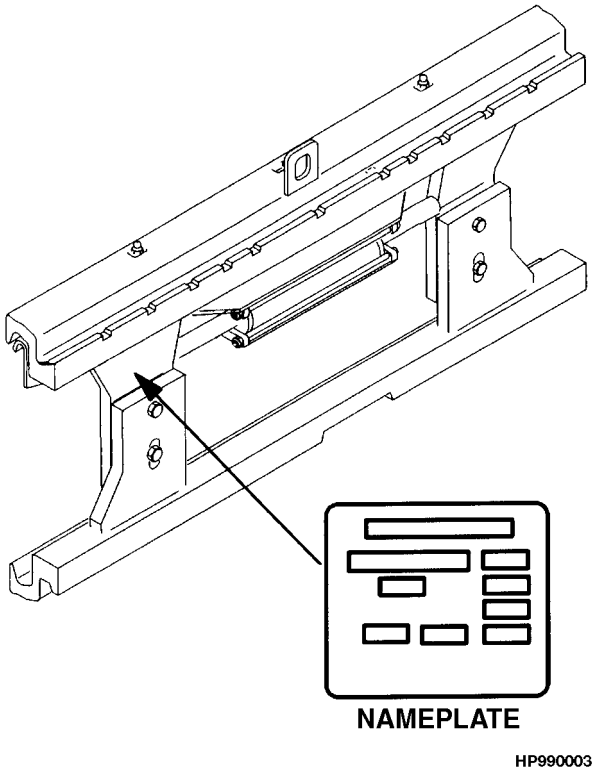

Side-shift carriages and attachments have nameplates. Use the serial number found on the nameplate to identify the attachment.

Always refer to the group, serial, or part number when ordering service parts.

Modifications of attachments and side-shift carriages by SPED (Special Products Engineering Department) are identified by a model prefix code beginning with the letter "S". Contact your dealer for Yale lift trucks for information on these assemblies.

©2010 Yale Materials Handling Corporation

https://truckmanualshub.com/

PUBLICATIONS

Every new lift truck is provided with an OPERATING MANUAL. This manual has information that the operator must know for inspection and operation of the lift truck.

SERVICE MAINTENANCE MANUALS, which provide service and overhaul procedures, and PARTS MANUALS with complete replacement part identification, are available at a nominal fee from your Yale dealer to assist users in effectively maintaining Yale lift trucks in a safe, useful condition. See the list below for information on ordering specific publications for this model lift truck.

PUBLICATION	YALE PART NUMBER
Operating Manual	550013965
Service Manual (Complete)	550013971
Parts Manual	550013968

©2010 Yale Materials Handling Corporation

https://truckmanualshub.com/

MASTER PART SHEET CROSS-REFERENCE

NOTE: Throughout this manual are references to Part Sheet Numbers. These references are usually found after the description of a part or assembly. The Part Sheet Number is found on the upper left- or righthand corner of the parts pages.

EXAMPLE:

ITEM	PART NO.	DESCRIPTION	QTY
31	505965530	Steering Cylinder (☞6E67 [Figure 4-3])	1
32	504224261	Pin	4

Below is a numerical listing of Part Sheet Numbers found in this parts book and what page number they are on.

PART SHEET	PAGE
P21596	1-18
P21895	1-10
P21896	1-6
P21897	1-12
P21898	1-8
P21899	1-16
P21900	1-26
P21901	1-28
P21902	1-4
P21903	2-4
P21904	3-2
P21905	3-4
P21906	2-2
P21907	2-8
P21908	2-10
P21909	2-12
P21910	2-14
P21911	2-16
P21912	2-18
P21913	2-20
P21914	2-22
P21916	2-24
P21917	2-6
P21918	4-2
P21949	5-5
P21950	5-6
P21951	5-2
P21952	5-8
P21953	5-10
P21954	5-12

PART SHEET	PAGE
P21955	5-14
P21956	5-16
P21957	7-8
P21958	7-10
P21959	7-6
P21960	7-12
P21961	7-14
P21962	7-4
P21963	7-2
P21976	11-2
P21977	11-6
P21978	11-8
P21979	11-10
P21980	11-11
P21981	11-12
P21982	11-14
P21983	11-16
P21984	11-18
P21985	11-20
P21986	11-22
P22004	12-2
P22005	12-4
P22006	12-8
P22007	12-12
P22008	12-16
P22009	12-18
P22010	6-6
P22011	6-8
P22012	6-9
P22013	6-14

PART SHEET	PAGE
P22014	6-16
P22015	6-10
P22028	8-2
P22029	8-4
P22030	8-6
P22031	9-6
P22032	9-2
P22033	9-4
P22034	13-2
P22035	13-3
P22036	13-4
P22041	5-18
P22042	6-2
P22043	6-4
P22050	12-20
P22051	13-6
P22052	13-8
P22053	13-10
P22054	10-2
P22055	10-4
P22056	10-6
P22060	9-10
P22063	5-4
P22063	1-2
P22064	1-3
P22064	9-8
P22068	1-20
P22075	6-18
P22082	1-24
P22083	11-4

©2010 Yale Materials Handling Corporation

https://truckmanualshub.com/

1 GENERAL TRUCK

https://truckmanualshub.com/

https://truckmanualshub.com/

SECTION 1
GENERAL TRUCK

DESCRIPTION **PAGE**

COUNTERWEIGHT 1-6
COWL MOUNT 1-10
FLOORPLATES AND COVERS 1-12
FORKS 1-2
  OPTIONAL 1-3
FULL SUSPENSION SEAT
  MANUAL HYDRAULIC - NON-SWIVEL 1-20
  SHEET 2 OF 2 1-24
HOOD 1-16
LABELS
  SHEET 1 OF 2 1-26
  SHEET 2 OF 2 1-28
LOAD BACKREST EXTENSION 1-4
NON SUSPENSION SEAT
  WITHOUT ELECTRONIC CONTROLS 1-18
OVERHEAD GUARD 1-8

©2010 Yale Materials Handling Corporation

https://truckmanualshub.com/

FORKS (FIGURE 1-1)

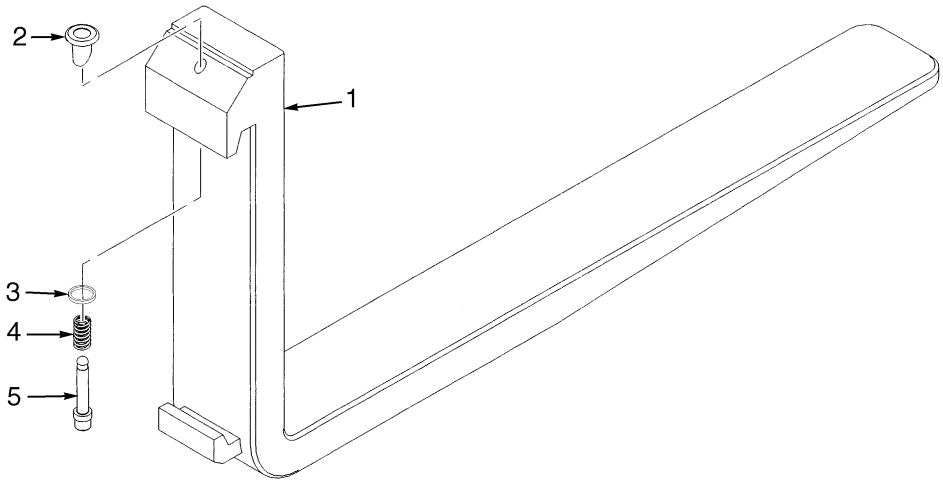

BP000177

ITEM	PART NO.	DESCRIPTION	QTY
1	504111202	Fork (42 in.)	2
1	504111203	Fork (48 in.)	2
2	580034999	Knob	2
3	580035001	Pin	2
4	580026749	Spring	2
5	580035000	Pin	2
	580035002	Kit-Latch	2

©2010 Yale Materials Handling Corporation

https://truckmanualshub.com/

FORKS (FIGURE 1-2)
OPTIONAL

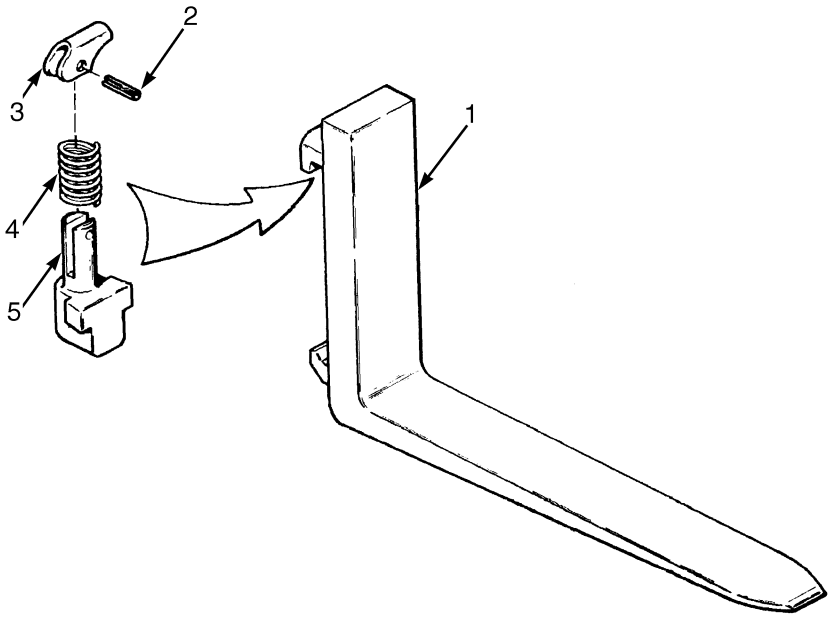

HP120793

ITEM	PART NO.	DESCRIPTION	QTY
1	524199303	Fork (42 in.)	2
2	580006844	Roll Pin	2
3	580006843	Latch	2
4	580006842	Spring	2
5	580049861	Pin	2
	580049860	Kit-Latch (Class II)	1

©2010 Yale Materials Handling Corporation

https://truckmanualshub.com/

LOAD BACKREST EXTENSION (FIGURE 1-3)

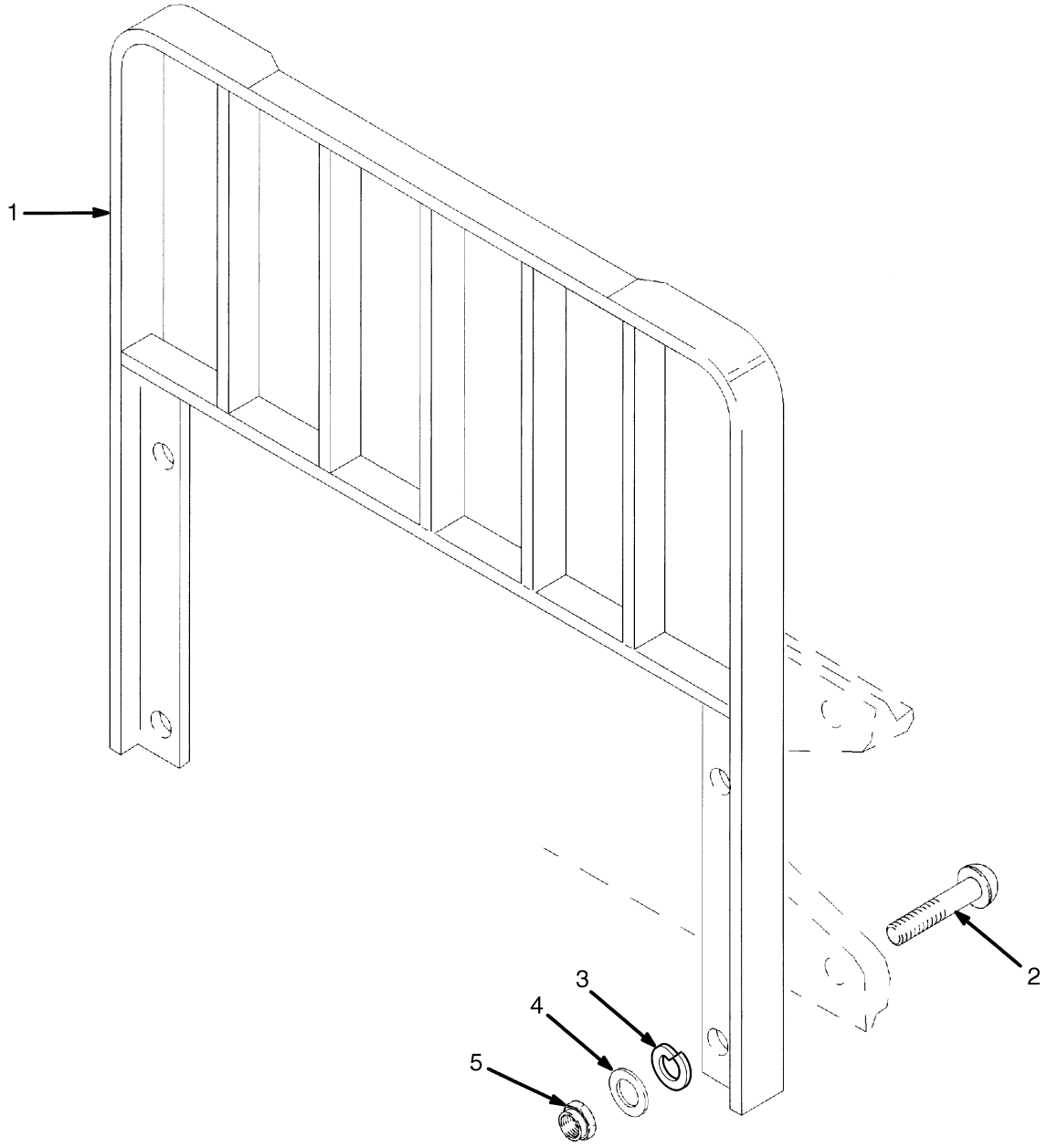

HP120836

©2010 Yale Materials Handling Corporation

https://truckmanualshub.com/

KEY:
A: For Use With Standard Carriage Only
B: For Use With Integral Side-Shift Carriage Only

ITEM	PART NO.	DESCRIPTION	QTY A	QTY B
1	524310196	Load Backrest (38.5 in.)	1	..
1	524310197	Load Backrest (42 in.) (1067 mm)	..	1
2	501749901	Capscrew	..	4
2	505960578	Capscrew	4	..
3	504233271	Washer	4	4
4	061278200	Washer	4	4
5	909882405	Nut	4	4

©2010 Yale Materials Handling Corporation

https://truckmanualshub.com/

COUNTERWEIGHT (FIGURE 1-4)

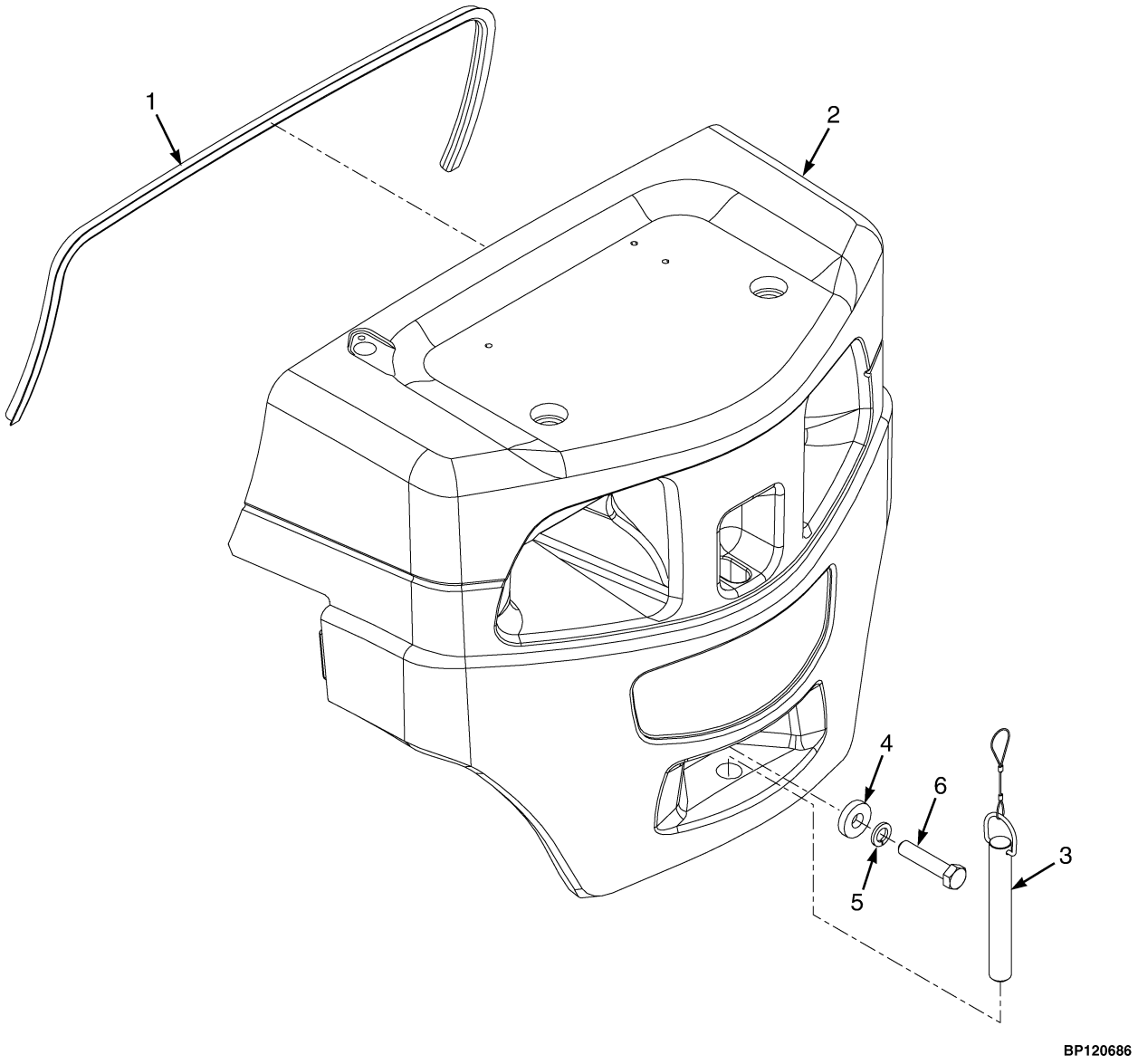

©2010 Yale Materials Handling Corporation

https://truckmanualshub.com/

COUNTERWEIGHT

ITEM	PART NO.	DESCRIPTION	QTY
1	580051185	Seal	1
2	550005006	Counterweight	1
3	580080171	Tow Pin	1
4	580002019	Washer	1
5	955400911	Washer	1
6	449001406	Capscrew	1

©2010 Yale Materials Handling Corporation

https://truckmanualshub.com/

OVERHEAD GUARD (FIGURE 1-5)

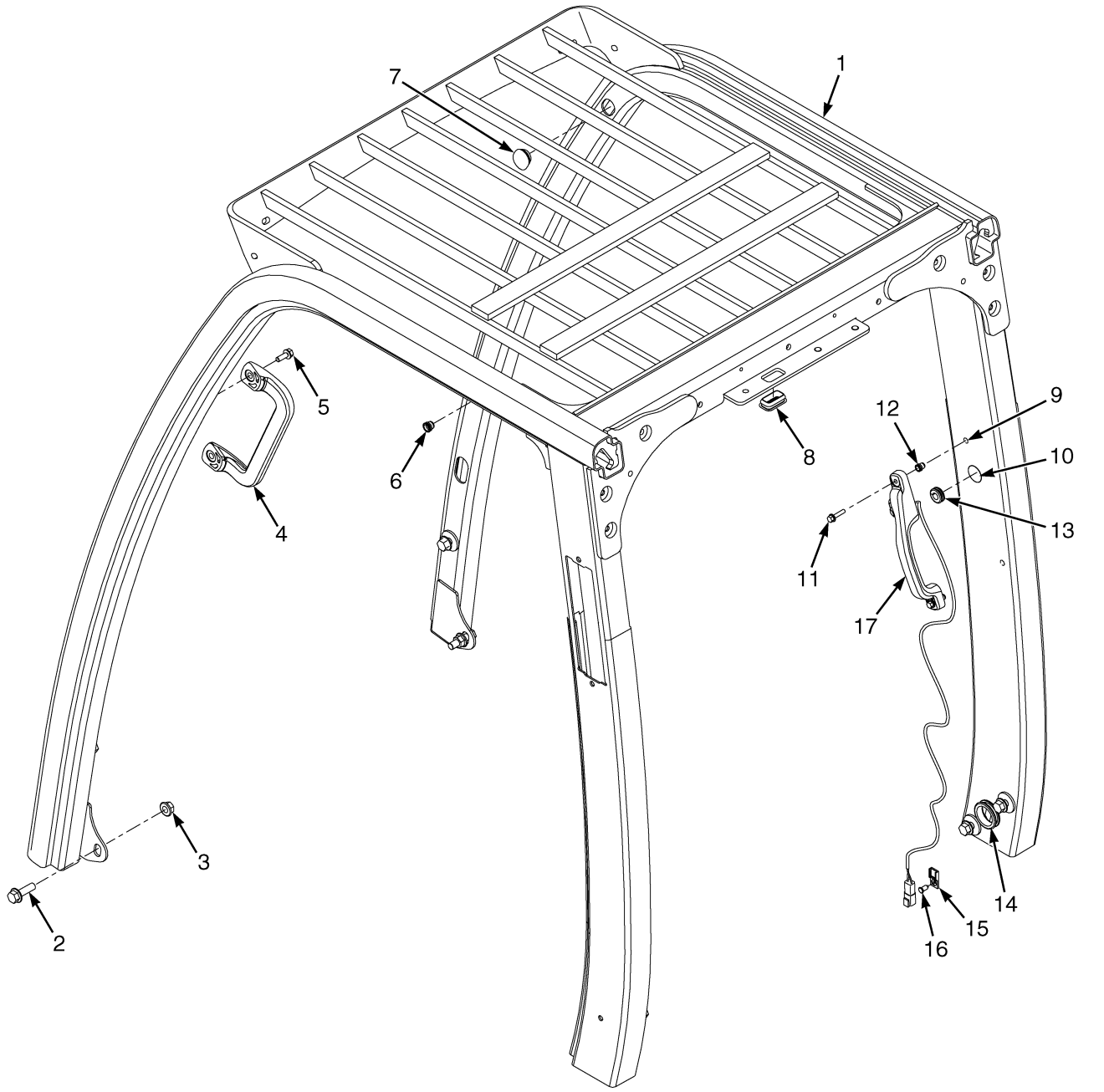

©2010 Yale Materials Handling Corporation

https://truckmanualshub.com/

OVERHEAD GUARD

ITEM	PART NO.	DESCRIPTION	QTY
1	524240422	Overhead Guard	1
2	580056667	Capscrew	8
2	580051941	Capscrew (Optional)	8
3	580056528	Nut (Shoulder)	2
4	580056526	Handle (Grab)	1
5	580056815	Capscrew	2
6	580044861	Insert	4
7	580090887	Grommet	2
8	524208883	Grommet	1
9	258979300	Plug	4
10	524240692	Plug	1
11	580058212	Capscrew	2
12	580041704	Insert	2
13	580063390	Grommet	1
14	500136904	Grommet	1
15	580026812	Clip	1
16	580056613	Fastener	1
17	580051747	Handle Assembly	1
17	580050959	Handle	1
17	580058447	Push Button Switch	1
17	580022893	Connector	1
17	505968540	Connector (Secondary Lock)	1
17	505968514	Terminal (Pin)	1

©2010 Yale Materials Handling Corporation

https://truckmanualshub.com/

COWL MOUNT (FIGURE 1-6)

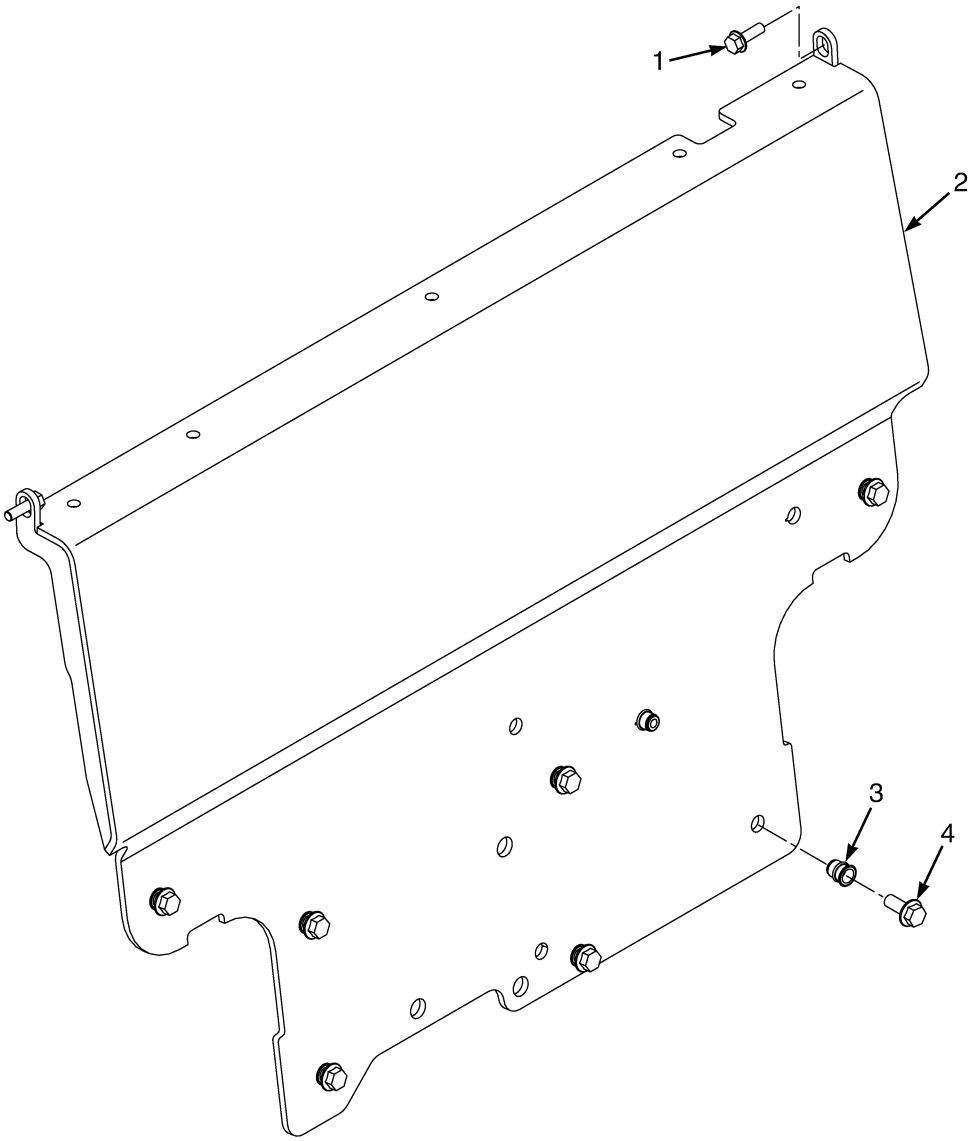

BP120684

ITEM	PART NO.	DESCRIPTION	QTY
1	580056815	Capscrew	2
1	580030966	Capscrew (Optional)	2
2	550007449	Cowl	1
3	580074879	Insert	7
3	580055652	Nut (Optional)	7
3	504071785	Washer (Optional)	7
4	580064483	Capscrew	7

©2010 Yale Materials Handling Corporation

https://truckmanualshub.com/

NOTES

©2010 Yale Materials Handling Corporation

https://truckmanualshub.com/

FLOORPLATES AND COVERS (FIGURE 1-7)

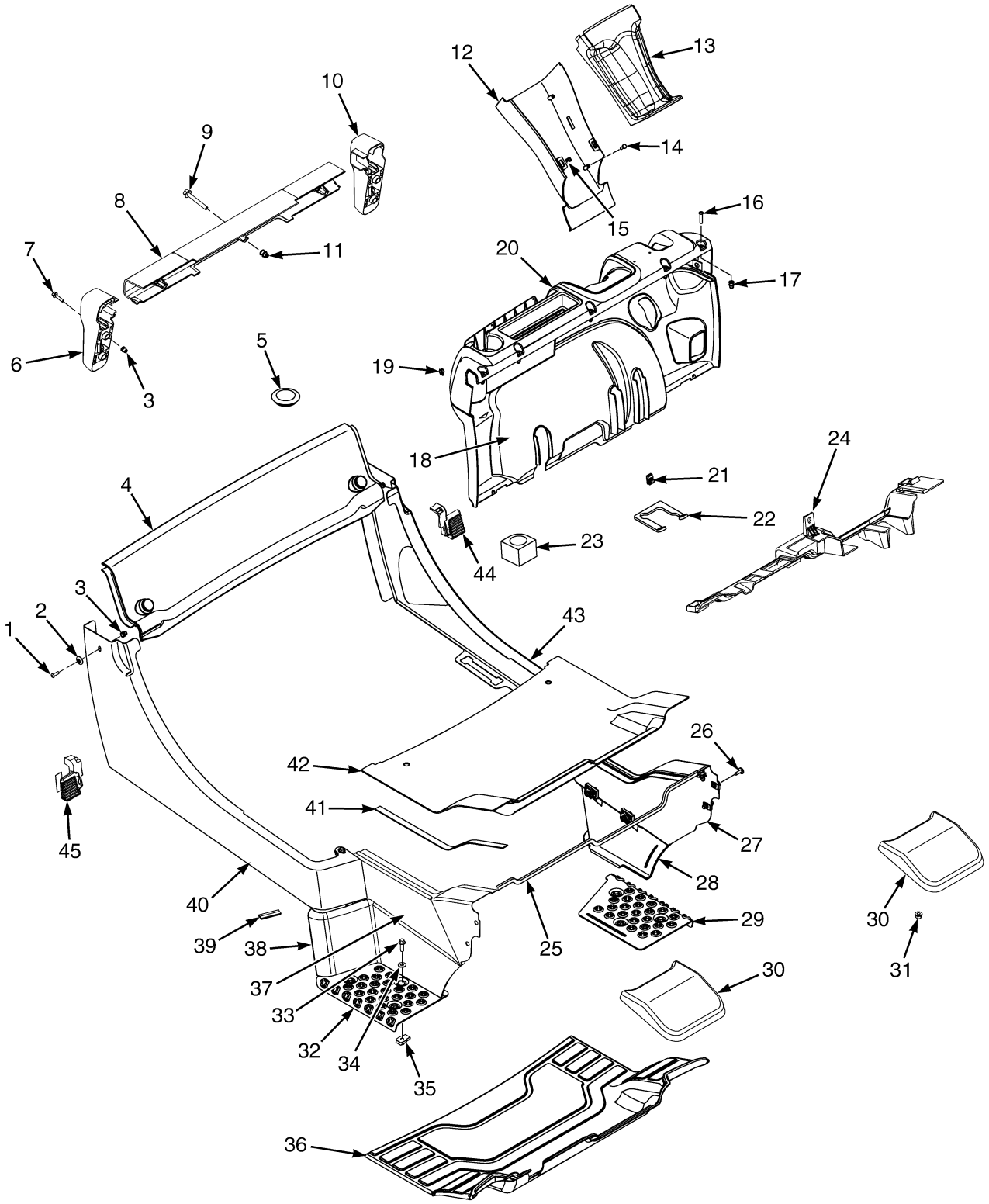

©2010 Yale Materials Handling Corporation

https://truckmanualshub.com/

FLOORPLATES AND COVERS

ITEM	PART NO.	DESCRIPTION	QTY
1	582001890	Capscrew	2
2	582001885	Washer	2
3	580041704	Insert	6
4	524195752	Cover (Radiator)	1
4	580061815	Seal (LH)	1
4	580061814	Seal (RH)	1
4	580058734	Screw	2
4	449021001	Washer	2
4	507353800	Retaining Ring	2
5	925776402	Cap	4
6	580092936	Tail Light Base (RH)	1
7	580058212	Capscrew	4
8	580048561	Cover (Rear)	1
9	580041711	Capscrew	3
10	580092937	Tail Light Base (LH)	1
11	580044859	Insert	3
12	580046138	Cover (Steering Column Lower)	1
13	580083020	Cover (Steering Column Upper)	1
14	909904403	Screw	2
15	580046139	Clip	6
16	582001891	Capscrew	5
17	580044859	Insert	5
18	580053146	Panel (Kick)	1
19	580046139	Clip	6
20	580052910	Dash Panel	1
20	580052409	Cup Holder	1
21	580026621	Nut	17
22	580055698	Seal	1
23	580038033	Grommet	1
24	580056531	Cover Plate Assembly	1
24	580052974	Cover	1
25	580045192	Seal	1
26	580056815	Capscrew	17
27	524188740	Panel (Front)	1
28	580087185	Step Panel (LH)	1
29	582010050	Plate	1
30	580050478	Mud Flap	2
31	580042963	Locknut	4
32	580096406	Plate	1
33	582004500	Capscrew	6
34	580056003	Washer	6
35	580012987	Nut	6
36	580054070	Floormat	1
37	524188745	Panel (Front)	1
38	580087184	Step Panel (RH)	1
39	580056224	Trim Seal	2
40	524177726	Panel (Rear)	1
41	580050773	Seal	2
42	580038024	Floorplate	1
43	524177725	Panel (Rear)	1
44	580054710	Seal (LH)	1

©2010 Yale Materials Handling Corporation

https://truckmanualshub.com/

FLOORPLATES AND COVERS

ITEM	PART NO.	DESCRIPTION	QTY
45	580052993	Seal (RH)	1

©2010 Yale Materials Handling Corporation

https://truckmanualshub.com/

NOTES

©2010 Yale Materials Handling Corporation

https://truckmanualshub.com/

HOOD (FIGURE 1-8)

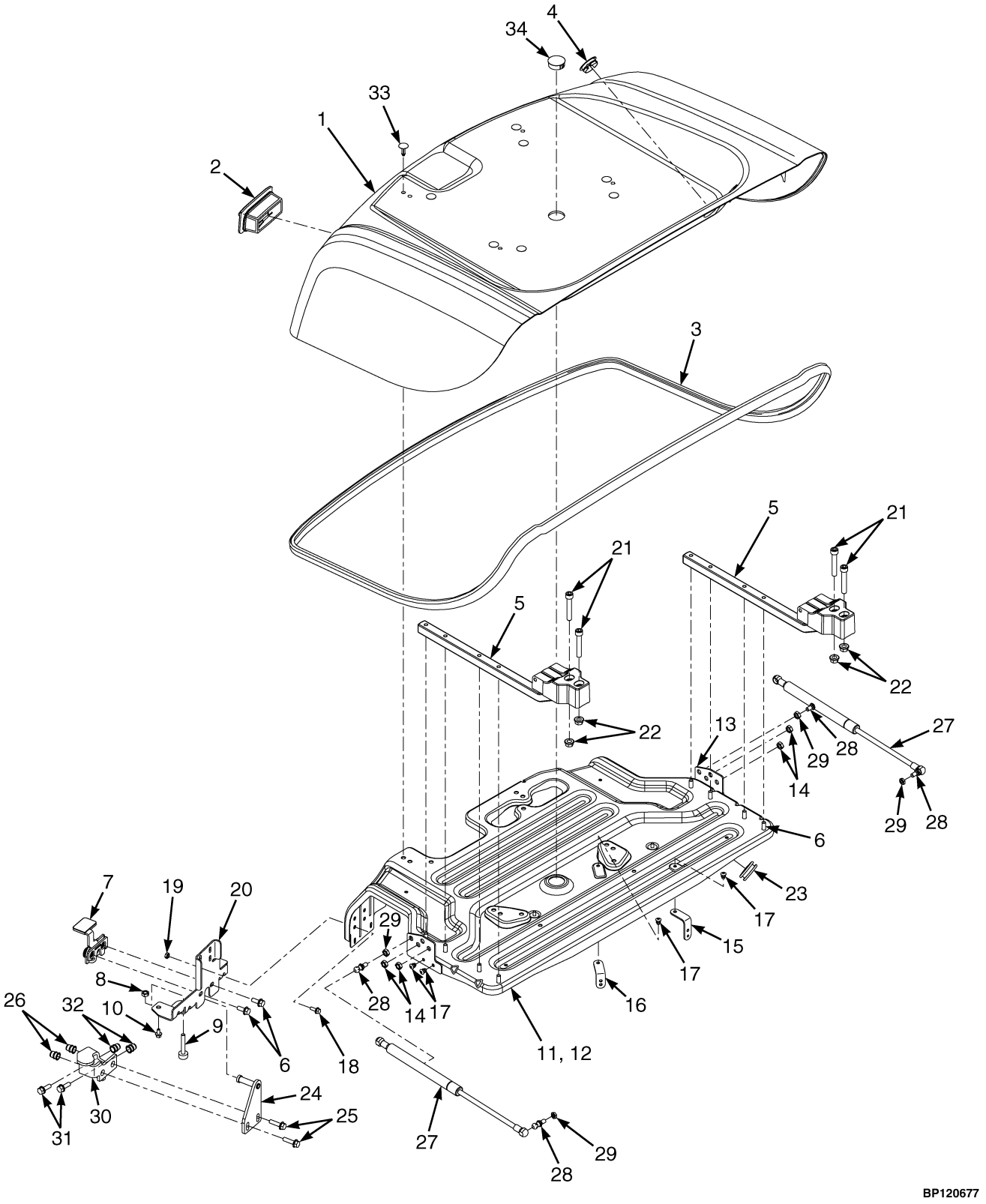

©2010 Yale Materials Handling Corporation

https://truckmanualshub.com/

HOOD

ITEM	PART NO.	DESCRIPTION	QTY
	550015595	Hood	1
1	550015378	Hood	1
2	580084480	Boot	1
3	580054201	Seal	1
4	524255979	Plug (Gold)	2
5	580054196	Hinge	2
6	580049231	Capscrew	10
7	580084478	Latch	1
8	580004592	Nut	2
9	580058383	Bumper (Hood)	2
10	580039900	Capscrew	6
11	580087164	Seat Pan	1
12	580065405	Hood Reinforcement	1
13	580065388	Bracket	2
14	518805632	Nut	10
15	580058135	Bracket	1
16	580064907	Bracket	1
17	580065386	Capscrew	6
18	580049011	Capscrew	4
19	580091885	Nut	4
20	580085970	Plate	1
21	580023008	Capscrew	4
22	580027572	Nut	4
23	580051832	Grommet	1
24	580084483	Striker Bolt	1
25	580049229	Capscrew	2
26	580044860	Insert	2
27	580056664	Gas Spring (RH)	1
27	580056664	Gas Spring (LH)	1
27	**a** 582004571	Gas Spring (LH)	1
28	580049915	Ball Stud (RH)	2
28	580049915	Ball Stud (LH)	2
28	**a** 582004516	Ball Stud (LH)	2
29	580004592	Nut	2
30	580086342	Hood Support	1
31	580056815	Capscrew	2
32	580044860	Insert	2
33	580049758	Fastener	8
34	580058137	Plug	1

FOOTNOTES:

a With lift and latch option

©2010 Yale Materials Handling Corporation

https://truckmanualshub.com/

NON SUSPENSION SEAT (FIGURE 1-9)
WITHOUT ELECTRONIC CONTROLS

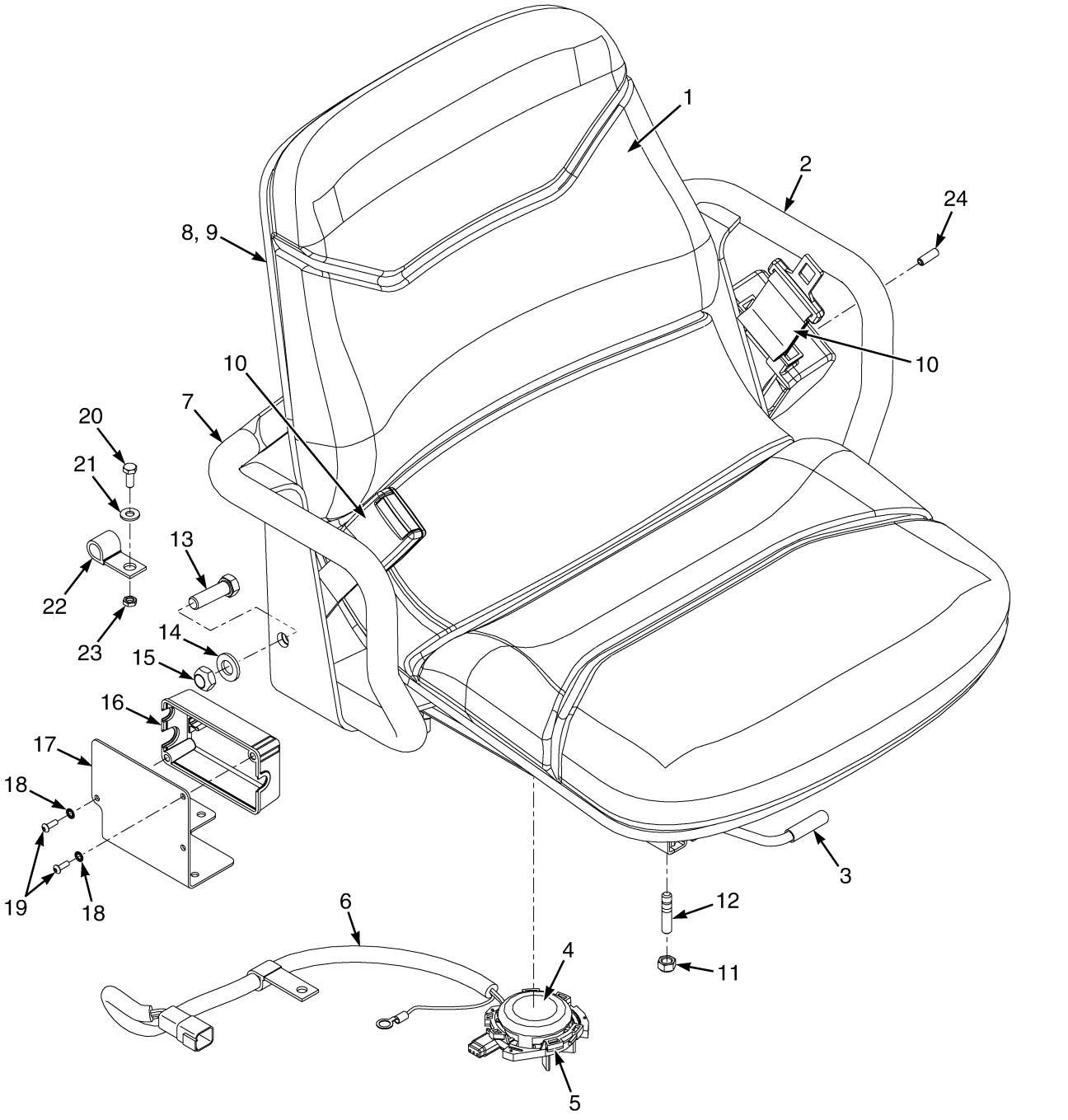

©2010 Yale Materials Handling Corporation

https://truckmanualshub.com/

NON SUSPENSION SEAT
WITHOUT ELECTRONIC CONTROLS

ITEM	PART NO.	DESCRIPTION	QTY
	582003574	Seat-Non Suspension	1
1	580049906	Kit-Seat Cushion (Vinyl)	1
2	580049892	Hip Restraint (LH)	1
3	580090679	Kit-Seat Rail	1
4	580097531	Sensor (Operator Presence)	1
5	582000813	Bracket (Operator Presence Sensor)	1
6	582005028	Wire Harness	1
7	580049893	Hip Restraint (RH)	1
8	580056926	Storage Box	1
9	580018614	Cover	1
10	580086211	Seat Belt	1
10	580062078	Kit-Seat Belt (Black)	1
10	524281279	Kit-Seat Belt (Red)	1
11	449015098	Nut	4
12	580087659	Stud	4
13	520082877	Capscrew	2
14	580056005	Washer	6
15	502097909	Locknut	2
16	580092987	Cover (Seat Side Electrical)	1
17	582002621	Cover Plate	1
18	940400905	Washer	2
19	580092732	Capscrew	2
20	449001412	Capscrew	2
21	016103500	Washer	1
22	580046396	Clamp	1
23	580060018	Nut	2
24	023021000	Roll Pin	1

©2010 Yale Materials Handling Corporation

https://truckmanualshub.com/

FULL SUSPENSION SEAT (FIGURE 1-10)
MANUAL HYDRAULIC — NON-SWIVEL

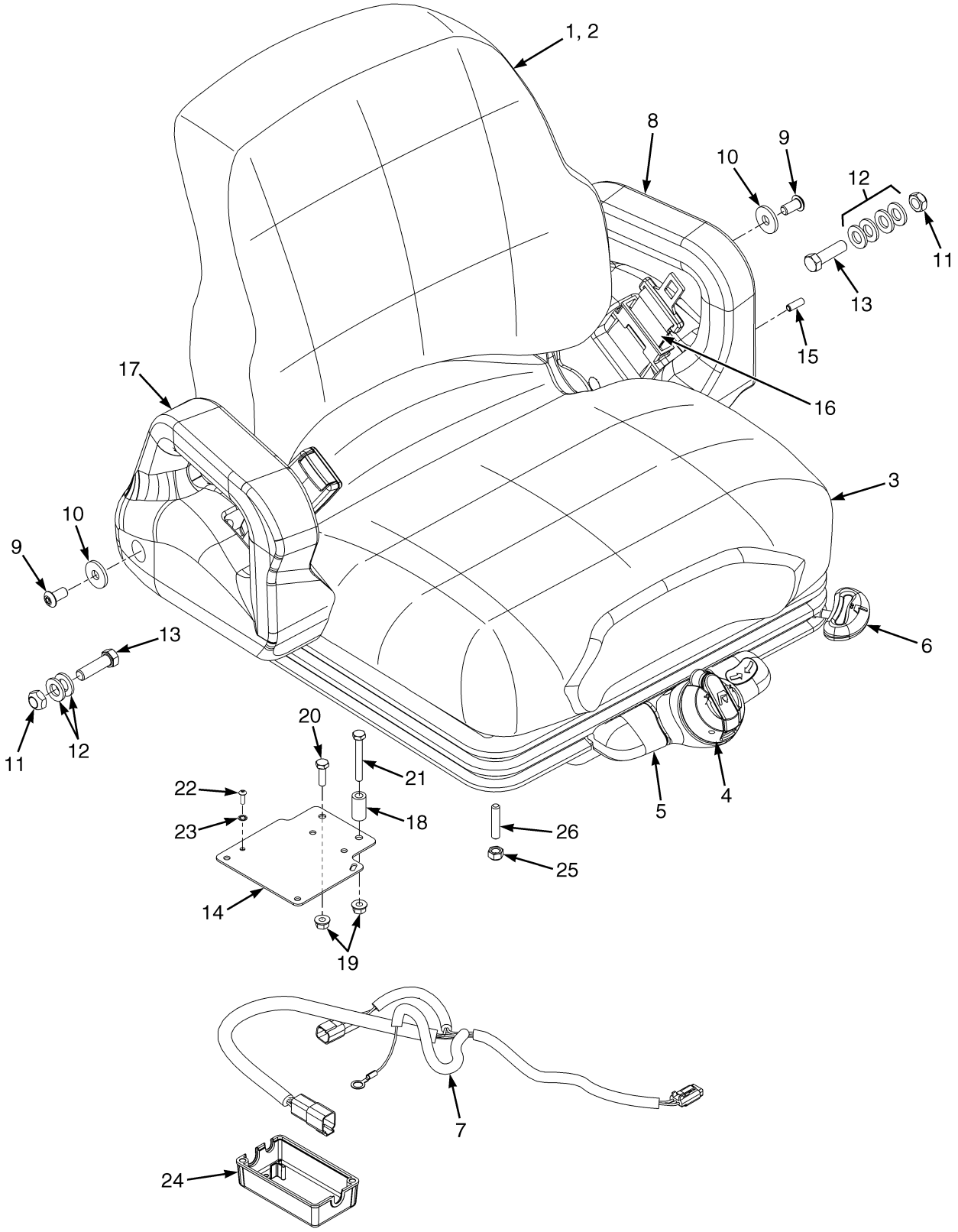

©2010 Yale Materials Handling Corporation

https://truckmanualshub.com/

FULL SUSPENSION SEAT
MANUAL HYDRAULIC – NON-SWIVEL

ITEM	PART NO.	DESCRIPTION	QTY
	582003582	Seat-Full Suspension (Vinyl) (Non-Swivel)	1
1	580095476	Kit-Cushion (Seat and Back, Vinyl)	1
2	580095474	Kit-Cushion (Back Cushion, Vinyl)	1
2	. . . . .	Back Cushion	1
2	. . . . .	Screw	2
3	580095475	Kit-Seat Cushion (Vinyl)	1
3	. . . . .	Seat Cushion	1
3	. . . . .	Spring	2
3	. . . . .	Cotter Pin	2
4	580095462	Kit-Weight Adjuster	1
4	. . . . .	Knob	1
4	. . . . .	Bushing	1
4	. . . . .	Washer	1
4	. . . . .	Pin	1
5	580095463	Kit-Service (Front Panel) (Non Swivel)	1
5	. . . . .	Front Panel	1
5	. . . . .	Socket Head Capscrew	2
5	. . . . .	Roll Pin	1
6	580095477	Kit-Seat Rail	1
6	. . . . .	Locking Rail	1
6	. . . . .	Slave Rail	1
6	. . . . .	Bolt	4
6	. . . . .	Nut	4
7	582005028	Wire Harness	1
7	580049884	Sensor (Operator Presence)	1
8	582004126	Armrest (Left-Hand Side)	1
9	311207098	Screw	2
10	580057451	Washer	2
11	502097909	Locknut	2
12	580056005	Washer	6
13	520082877	Capscrew	2
14	582002534	Cover Plate	1
15	023021000	Roll Pin	1
16	. . . . .	Seat Belt	1
17	580084956	Armrest (Right-Hand Side)	1
18	582002535	Spacer	2
19	518803677	Nut	4
20	203142800	Capscrew	2
21	062151600	Capscrew	2
22	580092732	Capscrew	2
23	940400905	Washer	2
24	580092987	Cover (Seat Side Electrical)	1
25	504230271	Nut	4
26	580087659	Stud	4
	a 580014465	Information Case (Kit)	1
	580095465	Kit-Service Internal Tether-80 MM Travel	1
	580095460	Kit-Damper Service	1
	580095461	Kit-Recliner (Back Seat Adjustment)	1

©2010 Yale Materials Handling Corporation

https://truckmanualshub.com/

FOOTNOTES:

a Not Illustrated

©2010 Yale Materials Handling Corporation

https://truckmanualshub.com/

NOTES

©2010 Yale Materials Handling Corporation

https://truckmanualshub.com/

FULL SUSPENSION SEAT (FIGURE 1-11)
SHEET 2 OF 2

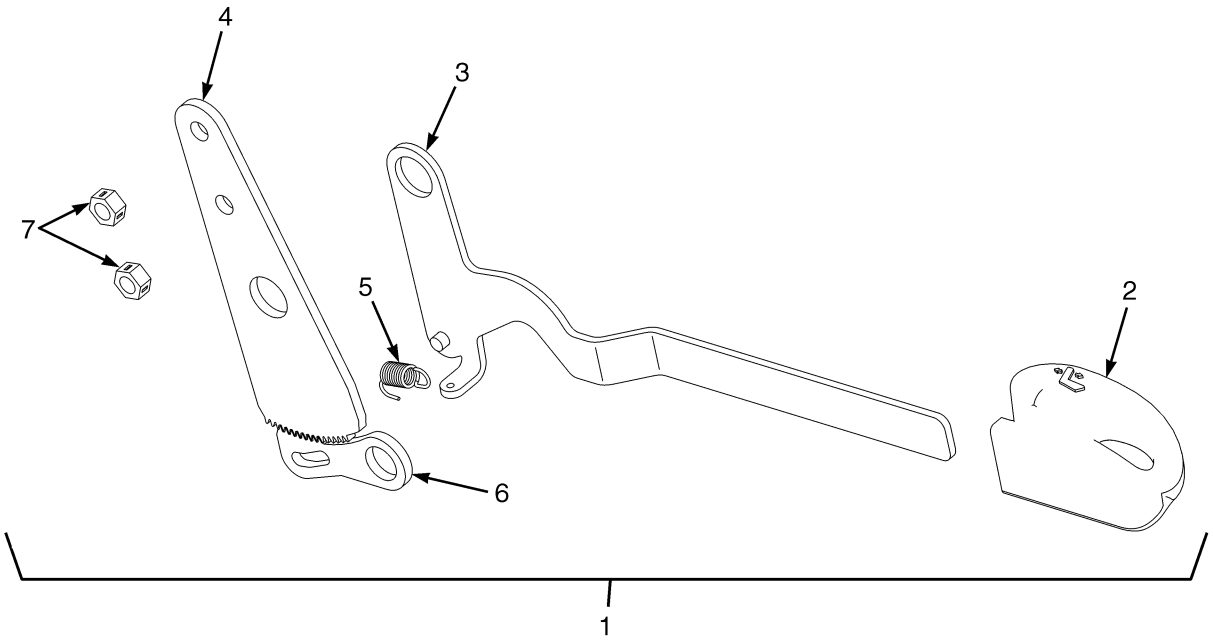

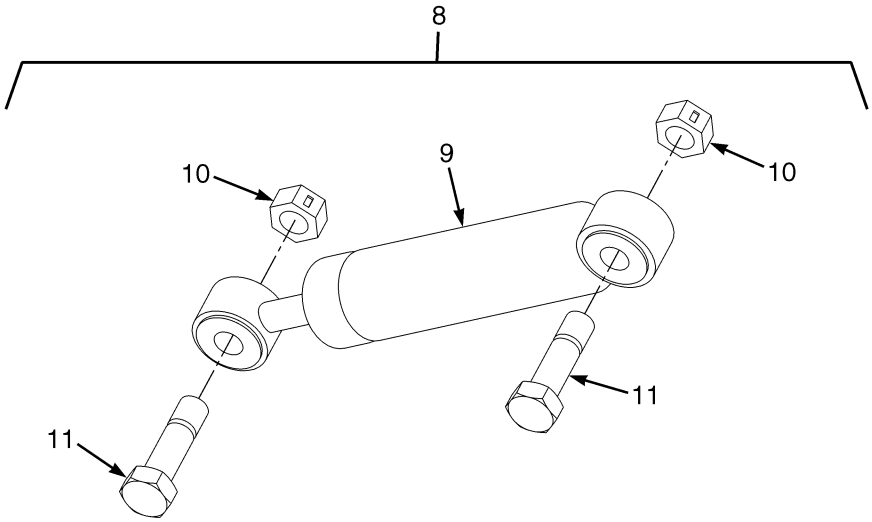

BP120646

©2010 Yale Materials Handling Corporation

https://truckmanualshub.com/

FULL SUSPENSION SEAT

SHEET 2 OF 2

ITEM	PART NO.	DESCRIPTION	QTY
1	580095461	Kit-Recliner (Back Seat Adjustment)	1
2	. . . . .	Knob	1
3	. . . . .	Lever	1
4	580018642	Plate	1
5	. . . . .	Spring	1
6	580018643	Latch	1
7	580057307	Nut	2
8	580095460	Kit-Damper Service	1
9	580057260	Damper	1
10	580057307	Nut	2
11	580057266	Bolt	2

©2010 Yale Materials Handling Corporation

https://truckmanualshub.com/

LABELS (FIGURE 1-12)
SHEET 1 OF 2

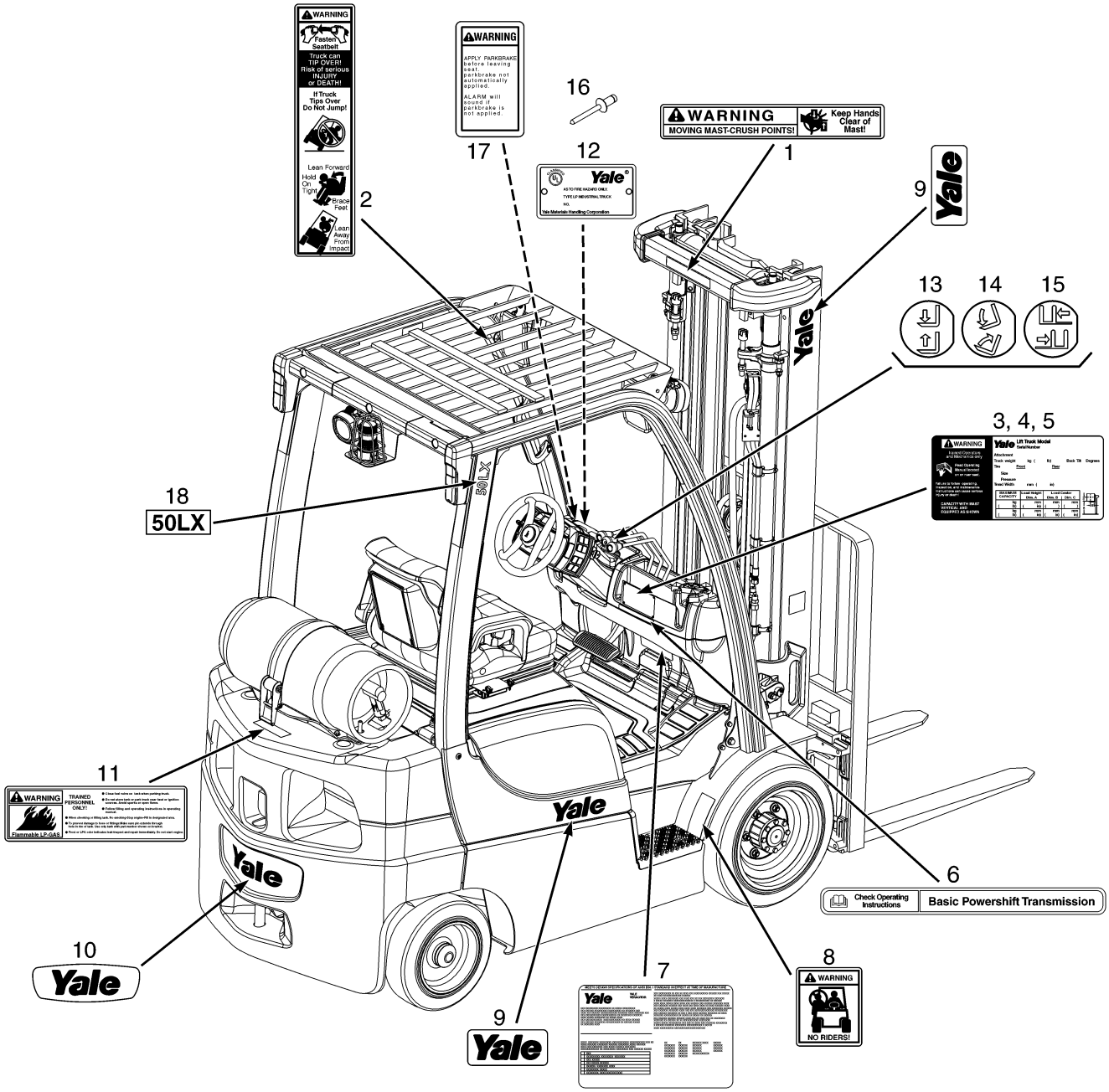

YP120248

©2010 Yale Materials Handling Corporation

https://truckmanualshub.com/

LABELS

SHEET 1 OF 2

ITEM	PART NO.	DESCRIPTION	QTY
1	504231215	Label (Mast Warning)	1
2	504231296	Label (Operator Restraint)	1
3	**a**	Nameplate Tag	1
4	580008064	Nameplate	1
5	505976530	Rivet	4
5	501904907	Rivet (Optional)	4
6	524232141	Label (Standard Transmission)	1
7	524162256	Label (Patents and Trademarks)	1
8	504231248	Label (No Riders)	2
9	524208880	Label (Yale)	1
10	524310789	Label (Yale Logo)	1
11	505977565	Label (Flammable LP-Gas)	1
12	**a**	U.L. Plate	1
13	580051779	Lens (Lift)	1
14	580051780	Lens (Tilt)	1
15	580051790	Lens (Side-Shift)	1
15	580052203	Lens (Blank)	1
16	505976530	Rivet	4
16	640032905	Rivet (Optional)	1
16	505977584	Gripnail (Optional)	4
17	580056430	Label (Parking Brake Warning)	1
18	550016119	Label (Capacity)	2

FOOTNOTES:

a Contact your local Yale dealer

©2010 Yale Materials Handling Corporation

https://truckmanualshub.com/

LABELS (FIGURE 1-13)
SHEET 2 OF 2

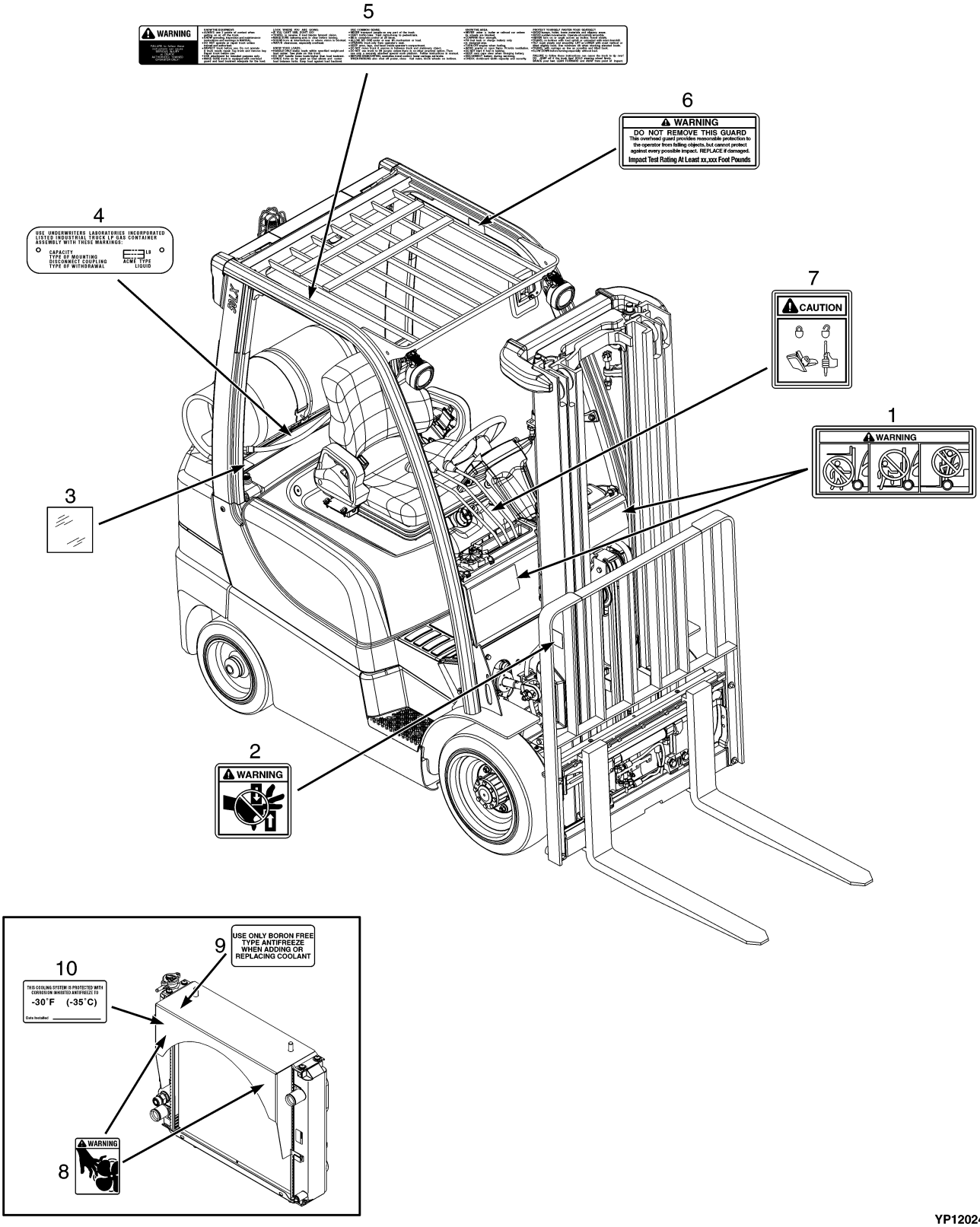

©2010 Yale Materials Handling Corporation

https://truckmanualshub.com/

LABELS
SHEET 2 OF 2

ITEM	PART NO.	DESCRIPTION	QTY
1	580058821	Label (Mast Warning)	2
2	504231252	Label (Pinch Point)	2
3	582006614	Label	1
4	580026933	Nameplate (LP Tank)	1
5	580055312	Label (Operator Warning)	1
6	**a**	Overhead Guard	1
7	580058357	Label (Locking Gas Spring)	1
7	580058356	Label (Locking Gas Spring)	1
8	505976556	Label (Fan Warning)	1
9	505976545	Label (Antifreeze)	1
10	518806645	Label (Boron-Free Antifreeze)	1

FOOTNOTES:

a Contact your local Yale dealer

©2010 Yale Materials Handling Corporation

https://truckmanualshub.com/

NOTES

©2010 Yale Materials Handling Corporation

https://truckmanualshub.com/

2 ENGINE ASSEMBLY

https://truckmanualshub.com/

https://truckmanualshub.com/

SECTION 2
ENGINE ASSEMBLY

DESCRIPTION	PAGE
ASSEMBLED ENGINE	
MAZDA 2.0L, LPG - 2010 EMISSION COMPLIANT ENGINES	2-6
CRANKSHAFT AND PISTONS	
MAZDA 2.0L, LPG - 2010 EMISSION COMPLIANT ENGINES	2-14
CYLINDER BLOCK	
MAZDA 2.0L LPG - 2010 EMISSION COMPLIANT ENGINES	2-10
CYLINDER HEAD AND COVER	
MAZDA 2.0L LPG - 2010 EMISSION COMPLIANT ENGINES	2-8
EMISSION CONTROL SYSTEM	
MAZDA 2.0L, LPG - 2010 EMISSION COMPLIANT ENGINES	2-22
ENGINE COOLING SYSTEM	
MAZDA 2.0L, LPG - 2010 EMISSION COMPLIANT ENGINES	2-20
ENGINE MOUNTING	2-4
EXHAUST MANIFOLD	
MAZDA 2.0L, LPG - 2010 EMISSION COMPLIANT ENGINES	2-18
FLYWHEEL AND HOUSING ASSEMBLY	
MAZDA 2.0L	2-2
INTAKE MANIFOLD	
MAZDA 2.0L, LPG - 2010 EMISSION COMPLIANT ENGINES	2-16
OIL PUMP AND FILTER	
MAZDA 2.0L, LPG - 2010 EMISSION COMPLIANT ENGINES	2-24
TIMING GEAR COVER AND OIL PAN	
MAZDA 2.0L, LPG - 2010 EMISSION COMPLIANT ENGINES	2-12

©2010 Yale Materials Handling Corporation

https://truckmanualshub.com/

FLYWHEEL AND HOUSING ASSEMBLY (FIGURE 2-1)

MAZDA 2.0L

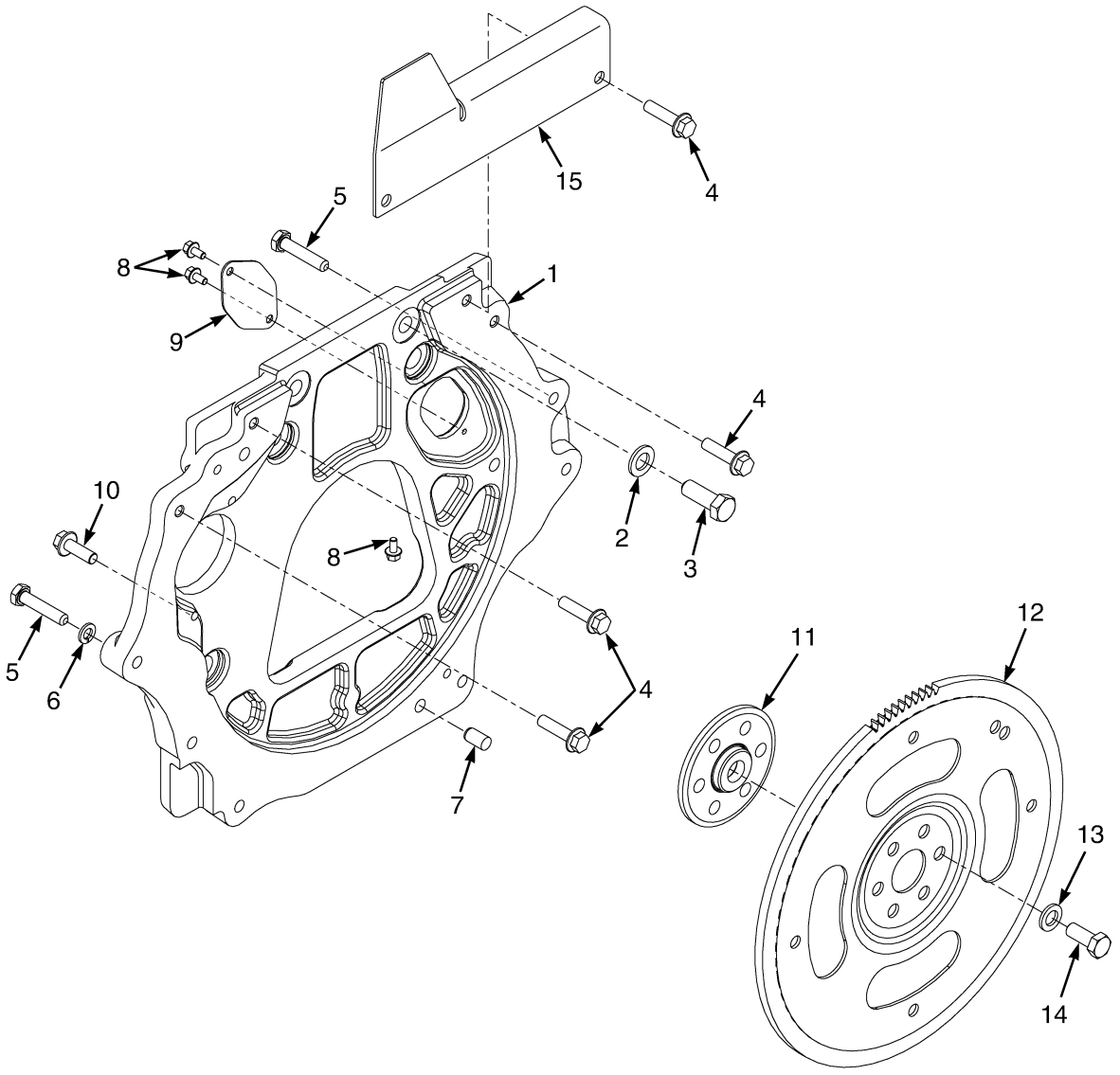

BP090423

©2010 Yale Materials Handling Corporation

https://truckmanualshub.com/

FLYWHEEL AND HOUSING ASSEMBLY

MAZDA 2.0L

ITEM	PART NO.	DESCRIPTION	QTY
1	580048123	Flywheel Housing	1
2	940102909	Washer	6
3	930903905	Capscrew	6
4	580032011	Capscrew	4
5	449001138	Capscrew	6
6	~~504057795~~		
	449022013	Lockwasher	6
7	580050042	Dowel	2
8	580039900	Capscrew	5
9	580070914	Dust Cover	1
10	580046451	Capscrew	2
11	580056439	Fitting	1
12	580064311	Flywheel (With Ring Gear)	1
12	580056441	Flywheel (With Ring Gear)	1
13	502566902	Washer	6
14	580056440	Capscrew	6
15	582005953	Bracket	1
	501702901	Loctite	AR

©2010 Yale Materials Handling Corporation

https://truckmanualshub.com/

ENGINE MOUNTING (FIGURE 2-2)

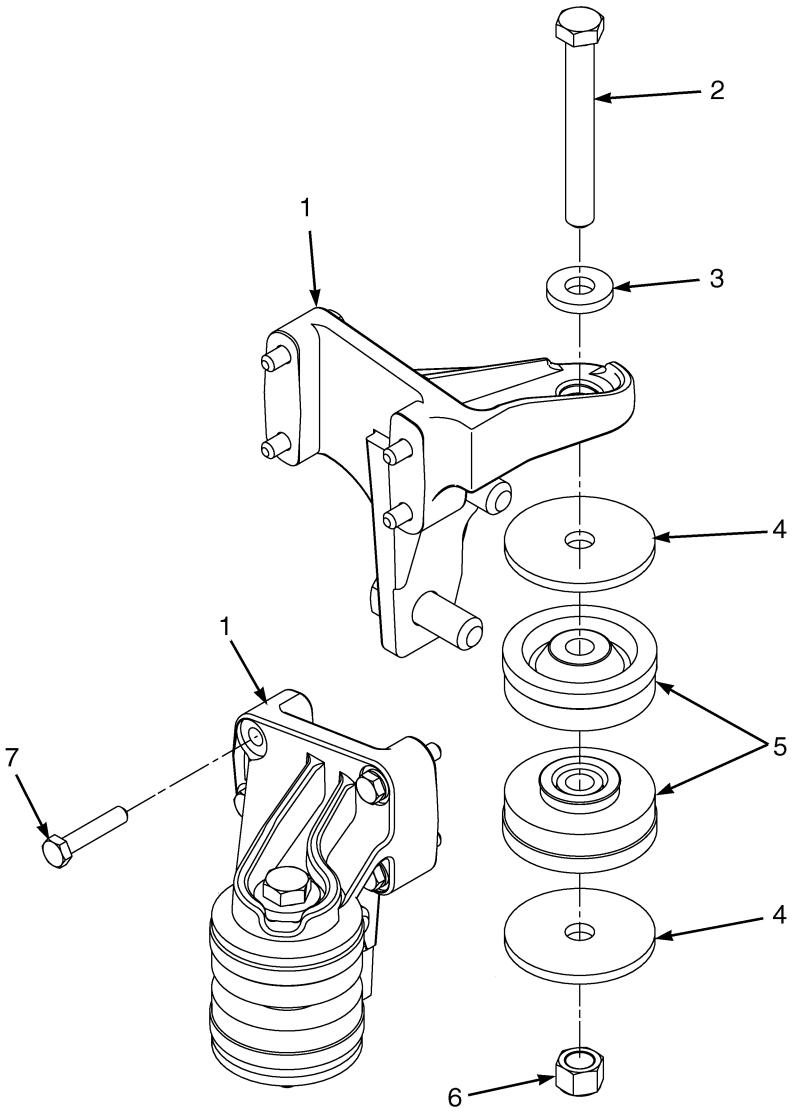

BP090163

©2010 Yale Materials Handling Corporation

https://truckmanualshub.com/

ENGINE MOUNTING

ITEM	PART NO.	DESCRIPTION	QTY
1	580060600	Mount (RH)	1
1	580060601	Mount (LH)	1
2	931017918	Capscrew	2
3	580027945	Washer	2
4	580048458	Washer	4
5	580051383	Isolator	4
6	580051384	Nut (Flange)	2
7	580056444	Bolt (Flange)	8

©2010 Yale Materials Handling Corporation

https://truckmanualshub.com/

ASSEMBLED ENGINE (FIGURE 2-3)

MAZDA 2.0L, LPG — 2010 EMISSION COMPLIANT ENGINES

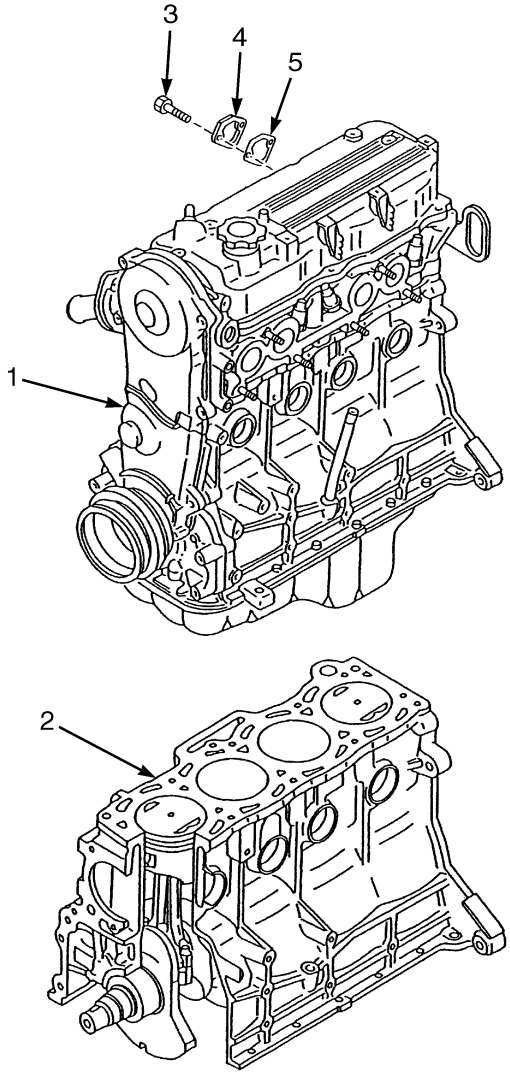

BP090371

©2010 Yale Materials Handling Corporation

https://truckmanualshub.com/

ASSEMBLED ENGINE

MAZDA 2.0L, LPG – 2010 EMISSION COMPLIANT ENGINES

ITEM	PART NO.	DESCRIPTION	QTY
1	580078922	Long Block	1
2	580053154	Short Block	1
3	901290828	Bolt	2
4	910983100	Cover	1
5	901300827	Gasket	1

©2010 Yale Materials Handling Corporation

https://truckmanualshub.com/

CYLINDER HEAD AND COVER (FIGURE 2-4)
MAZDA 2.0L LPG — 2010 EMISSION COMPLIANT ENGINES

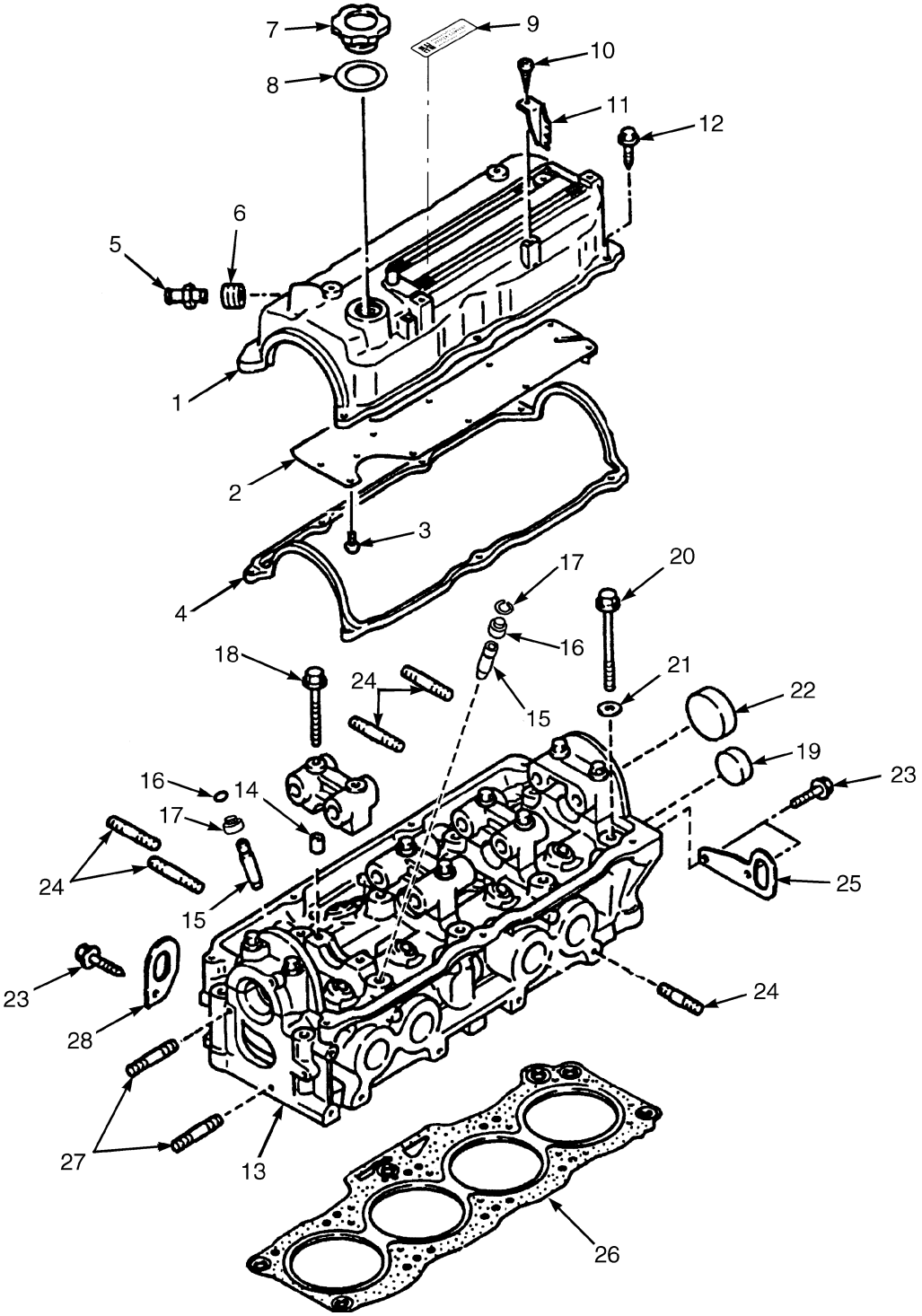

©2010 Yale Materials Handling Corporation

https://truckmanualshub.com/

CYLINDER HEAD AND COVER

MAZDA 2.0L LPG – 2010 EMISSION COMPLIANT ENGINES

ITEM	PART NO.	DESCRIPTION	QTY
	580078922	Long Block	1
1	901290834	Engine Cover	1
2	901290808	Plate	1
3	901848826	Screw	10
4	901290811	Gasket	1
5	580046873	PCV Valve	1
6	901290818	Seal	1
7	901270814	Cap	1
8	901270815	Gasket	1
9	. . . . .	Label	1
10	901290843	Screw	2
11	505960516	Bracket	2
12	901290825	Bolt	7
13	901290836	Cylinder Head	1
14	901290832	Pin	10
15	901290838	Guide	8
16	901270802	Clip	1
17	**b** 901274801	Seal (Inlet)	4
17	**a** 901290837	Seal (Exhaust)	4
18	901290831	Bolt	10
19	901271817	Plug	1
20	901290803	Bolt	10
21	901290804	Washer	10
22	901290806	Cap	8
23	580033512	Bolt	3
24	901085837	Stud	20
25	901290842	Hanger	1
26	504259764	Gasket (Cylinder Head)	1
27	901290829	Stud	2
28	901290816	Bracket	1

FOOTNOTES:

a Black

b Red/Brown

©2010 Yale Materials Handling Corporation

https://truckmanualshub.com/

CYLINDER BLOCK (FIGURE 2-5)

MAZDA 2.0L LPG — 2010 EMISSION COMPLIANT ENGINES

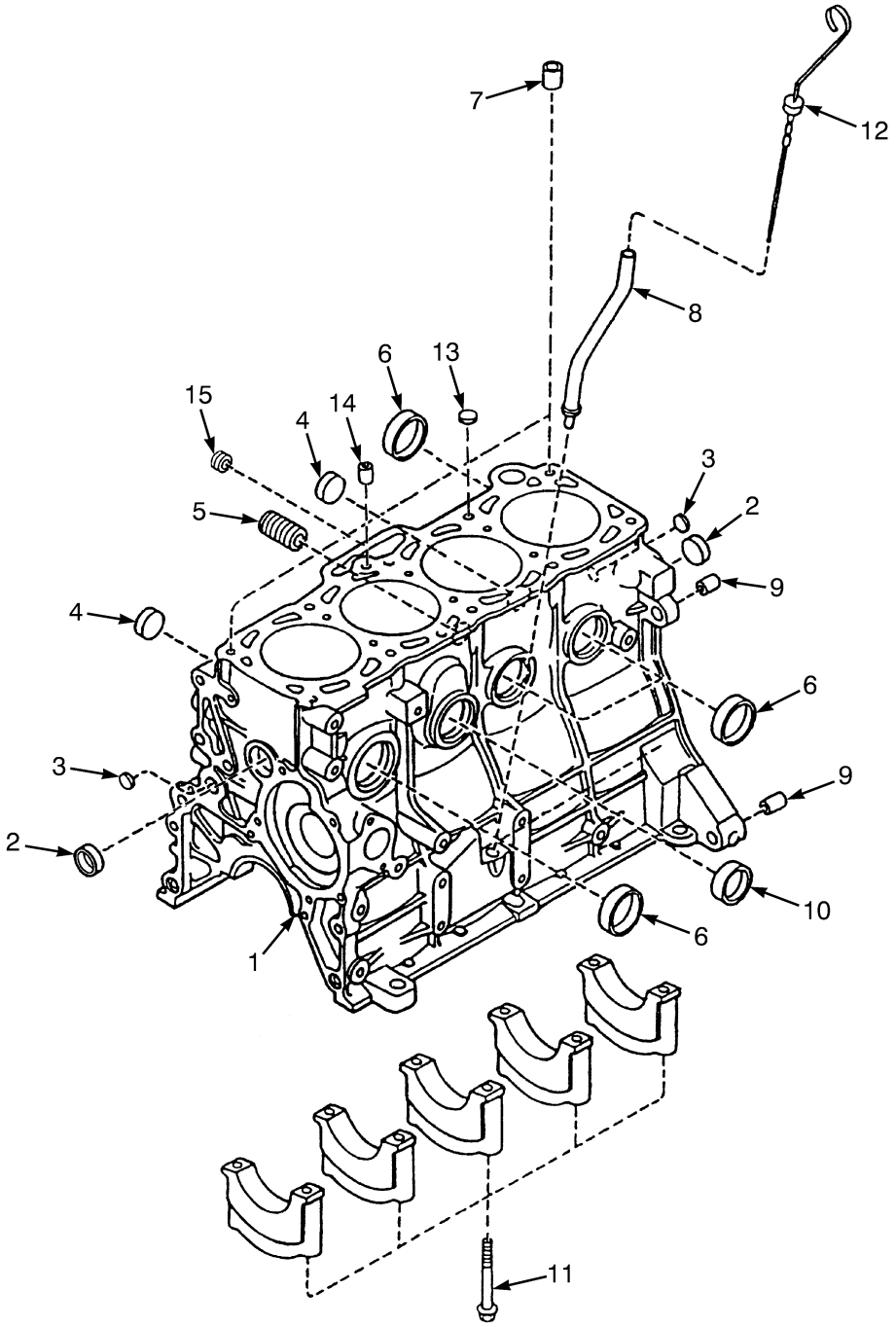

BP090328

©2010 Yale Materials Handling Corporation

https://truckmanualshub.com/

CYLINDER BLOCK

MAZDA 2.0L LPG – 2010 EMISSION COMPLIANT ENGINES

ITEM	PART NO.	DESCRIPTION	QTY
	580078922	Long Block	1
	580053154	Short Block	1
1	580046879	Cylinder Block	1
2	900542813	Plug	2
3	900281820	Plug	2
4	901015826	Plug	2
5	901291803	Joint Fitting	1
6	901271817	Plug	4
7	901291801	Pin	2
8	901291804	Tube Assy	1
9	901291813	Pin	2
10	901271816	Plug	2
11	901291814	Bolt	10
12	901291807	Dipstick	1
13	900281819	Plug	1
14	901574814	Plug	2
15	580046878	Plug	2

©2010 Yale Materials Handling Corporation

https://truckmanualshub.com/

TIMING GEAR COVER AND OIL PAN (FIGURE 2-6)
MAZDA 2.0L, LPG — 2010 EMISSION COMPLIANT ENGINES

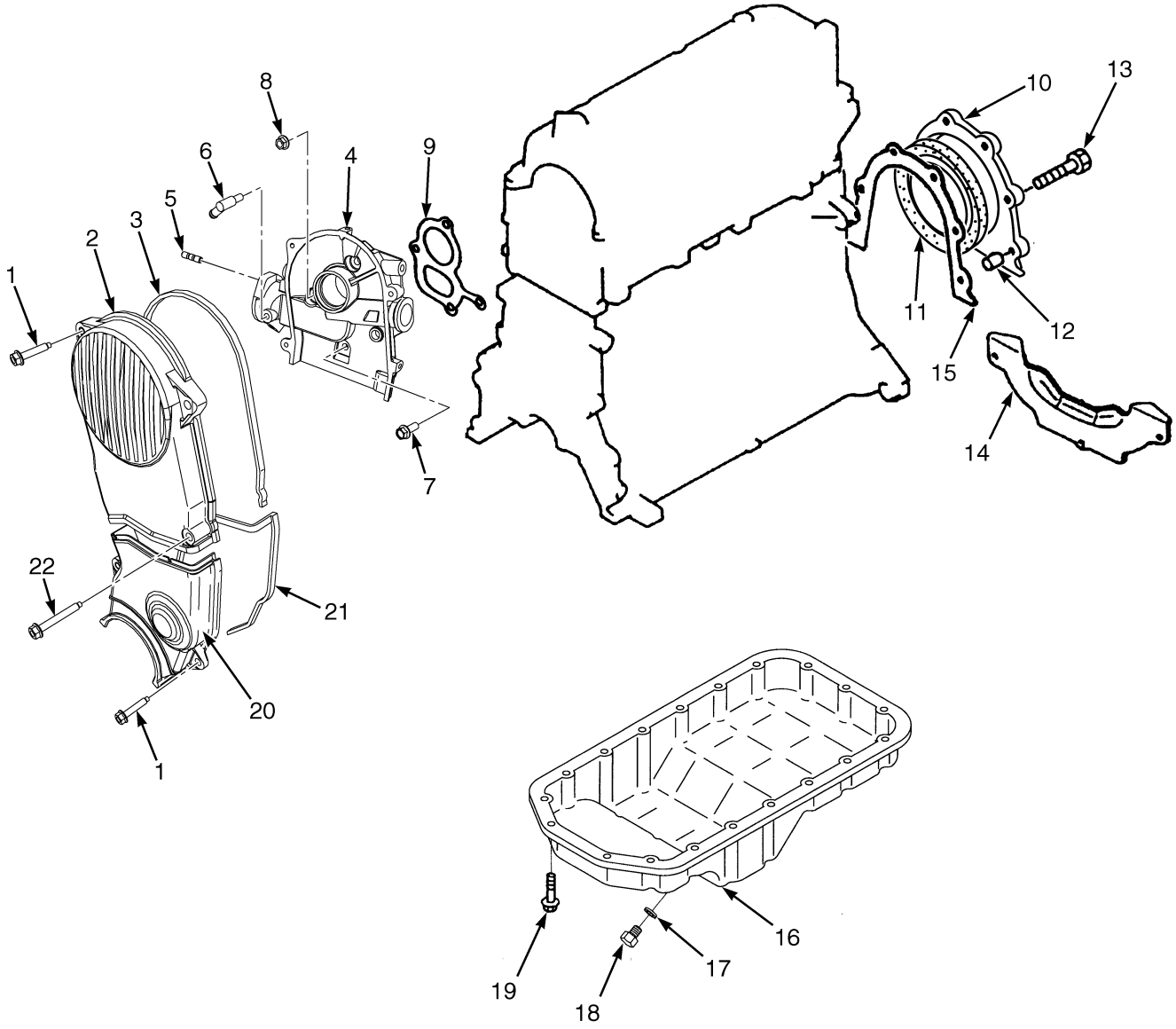

©2010 Yale Materials Handling Corporation

https://truckmanualshub.com/

TIMING GEAR COVER AND OIL PAN

MAZDA 2.0L, LPG – 2010 EMISSION COMPLIANT ENGINES

ITEM	PART NO.	DESCRIPTION	QTY
	580078922	Long Block (2.0L LPG)	1
1	901290825	Bolt	5
2	580046886	Cover (Upper Timing Belt) (2.0L)	1
3	580046887	Gasket (2.0L)	1
4	580046885	Housing (2.0L)	1
4	901292811	Oil Seal	1
5	901292816	Stud	2
6	505960594	Connector	1
7	901292819	Screw	2
8	900559852	Nut	2
9	901292831	Gasket	1
10	901292812	Cover	1
11	901292814	Oil Seal (Rear)	1
12	505960538	Pin	2
13	901575820	Bolt	6
14	911378400	Cover (Lower)	1
15	901292832	Gasket	1
16	901292803	Oil Pan (2.0L)	1
17	900543845	Gasket	1
18	901272802	Drain Plug	1
19	901272820	Capscrew	19
20	901575826	Cover	1
21	901575808	Gasket	1
22	901575824	Bolt	1
	504259763	Kit-Gasket	1

©2010 Yale Materials Handling Corporation

https://truckmanualshub.com/

CRANKSHAFT AND PISTONS (FIGURE 2-7)

MAZDA 2.0L, LPG — 2010 EMISSION COMPLIANT ENGINES

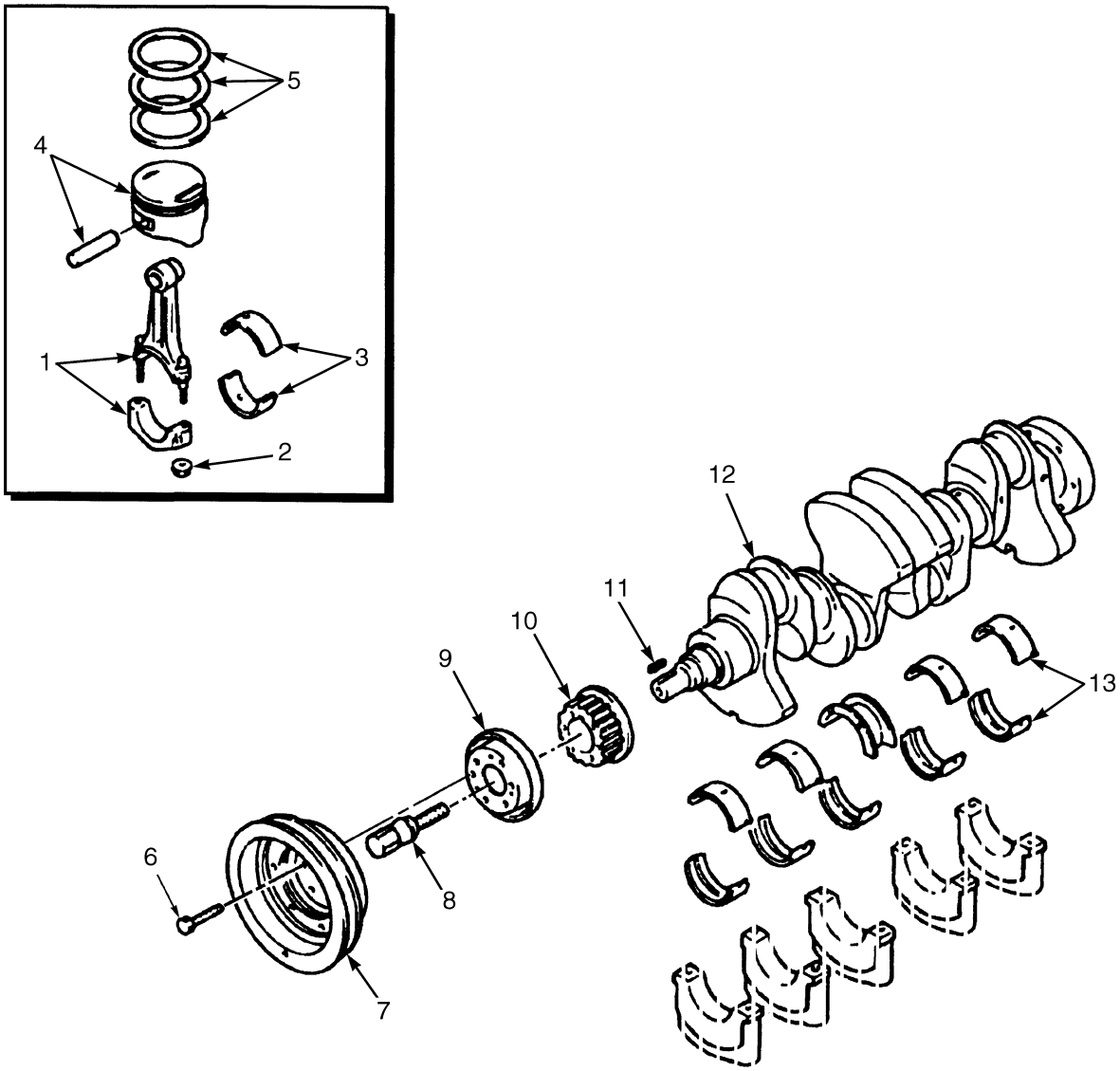

BP090439

©2010 Yale Materials Handling Corporation

https://truckmanualshub.com/

CRANKSHAFT AND PISTONS

MAZDA 2.0L, LPG – 2010 EMISSION COMPLIANT ENGINES

ITEM	PART NO.	DESCRIPTION	QTY
	580078922	Long Block (2.0L, LPG)	1
1	524319552	Piston Rod	4
2	901293825	Nut	2
3	901293811	Piston Rod Bearing (Standard)	1
3	901293812	Piston Rod Bearing (0.25 mm)	1
3	901293813	Piston Rod Bearing (0.50 mm)	1
3	901293814	Piston Rod Bearing (0.75 mm)	1
4	580053173	Piston and Rod (Standard)	4
4	580053177	Piston (0.25 mm)	4
4	580053175	Piston (0.50 mm)	4
5	580024213	Kit-Piston Ring (Standard)	1
5	580024215	Kit-Piston Ring (0.25 mm)	1
5	580024214	Kit-Piston Ring (0.50 mm)	1
6	505960536	Bolt	6
7	580046889	Crankshaft Pulley	1
8	504259749	Bolt	1
9	504259748	Plate	1
10	504259745	Pulley	1
11	505960548	Key	1
12	505960503	Crankshaft (2.0L)	1
13	901293861	Kit-Crankshaft Bearing (Standard)	1
13	901293862	Crankshaft Bearing (0.25 mm)	1
13	901293863	Crankshaft Bearing (0.50 mm)	1
13	901293864	Crankshaft Bearing (0.75 mm)	1

©2010 Yale Materials Handling Corporation

https://truckmanualshub.com/

INTAKE MANIFOLD (FIGURE 2-8)

MAZDA 2.0L, LPG — 2010 EMISSION COMPLIANT ENGINES

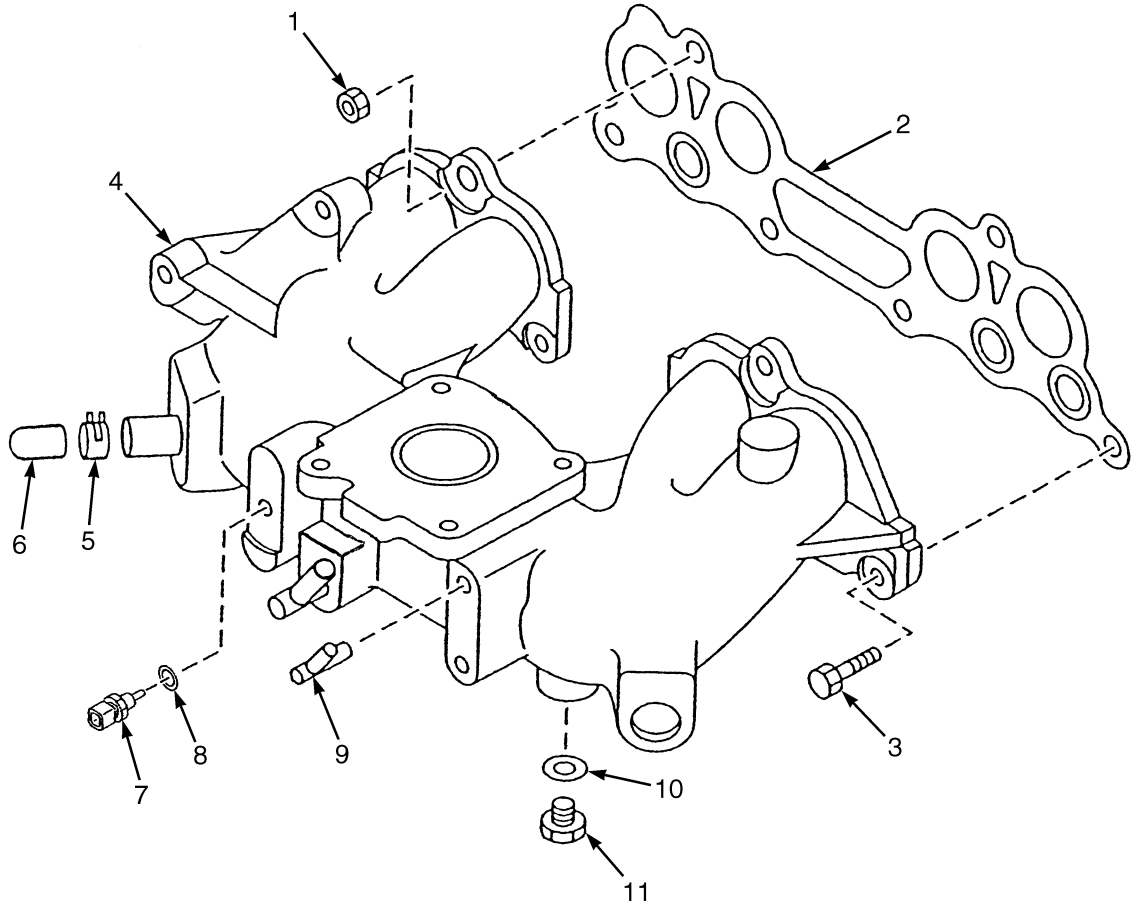

BP090332

©2010 Yale Materials Handling Corporation

https://truckmanualshub.com/

INTAKE MANIFOLD

MAZDA 2.0L, LPG – 2010 EMISSION COMPLIANT ENGINES

ITEM	PART NO.	DESCRIPTION	QTY
1	900559852	Nut	4
2	580046909	Gasket	1
3	901295811	Bolt	2
4	580089541	Intake Manifold	1
5	580053508	Clamp	1
6	580053803	Cap	1
7	580041817	Sensor (Air Temperature)	1
7	901084817	Plug	1
8	900542824	Washer	1
9	580078951	Connector	1
10	900529808	Seal	1
11	901085825	Bolt	1

©2010 Yale Materials Handling Corporation

https://truckmanualshub.com/

EXHAUST MANIFOLD (FIGURE 2-9)

MAZDA 2.0L, LPG — 2010 EMISSION COMPLIANT ENGINES

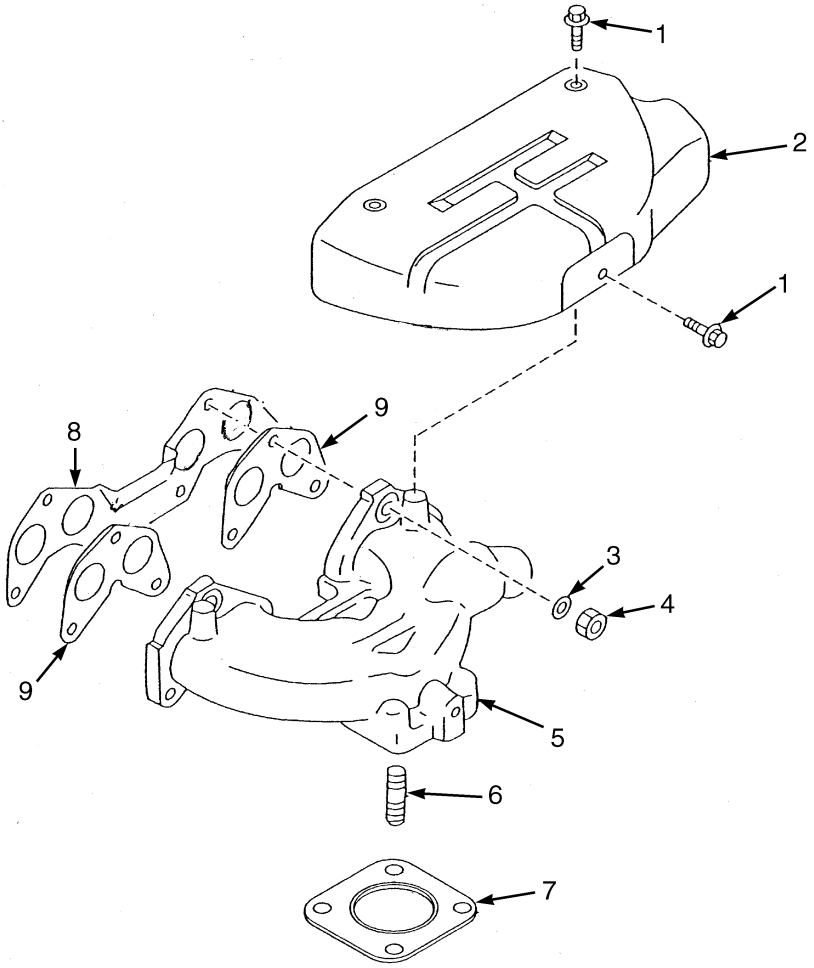

BP090330

ITEM	PART NO.	DESCRIPTION	QTY
1	901290828	Bolt	3
2	901296807	Cover	1
3	901296805	Washer	6
4	901276803	Nut	6
5	901296806	Exhaust Manifold	1
6	901276809	Stud	4
7	912189300	Gasket	2
8	901296804	Gasket	1
9	504256775	Gasket	2

©2010 Yale Materials Handling Corporation

https://truckmanualshub.com/

NOTES

©2010 Yale Materials Handling Corporation

https://truckmanualshub.com/

ENGINE COOLING SYSTEM (FIGURE 2-10)

MAZDA 2.0L, LPG — 2010 EMISSION COMPLIANT ENGINES

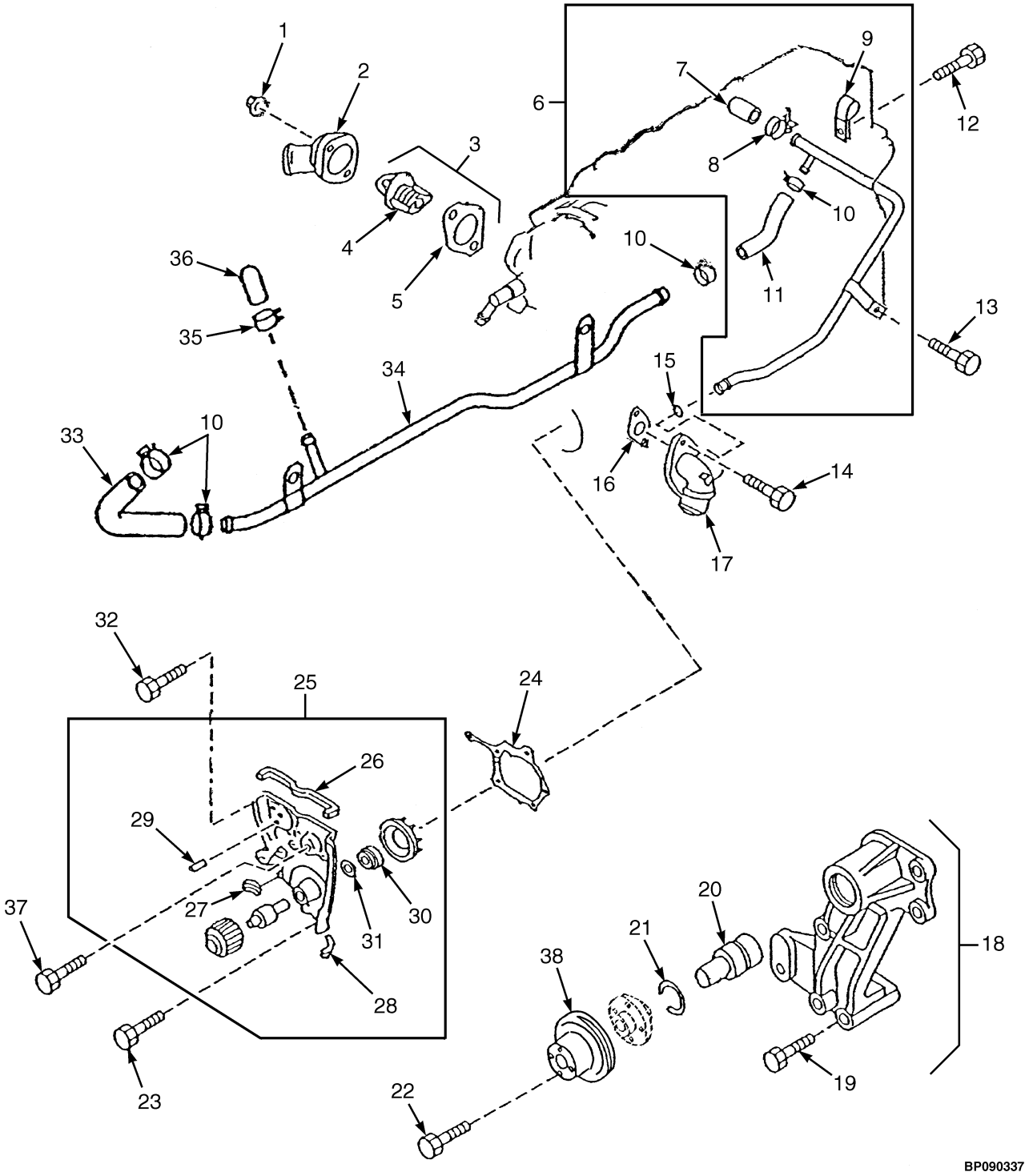

©2010 Yale Materials Handling Corporation

https://truckmanualshub.com/

ENGINE COOLING SYSTEM

MAZDA 2.0L, LPG – 2010 EMISSION COMPLIANT ENGINES

ITEM	PART NO.	DESCRIPTION	QTY
	580078922	Long Block	1
1	900559852	Nut	2
2	901302814	Cover	1
3	580024168	Thermostat	1
4	524253576	Thermostat	1
5	901282846	Gasket	1
6	580046981	Pipe (Water)	1
7	505960545	Cap	1
8	580053508	Clamp	1
9	901579818	Clip	1
10	505959558	Clamp	4
11	901579806	Radiator Hose (Water)	1
12	901290828	Bolt	1
13	901302834	Bolt	1
14	901292819	Screw	2
15	901302821	O-Ring	1
16	901579833	Gasket (Inlet)	1
17	901579811	Adapter (Inlet)	1
18	580053400	Bracket (Fan)	1
19	504258737	Screw	3
20	901579827	Shaft	1
21	504258725	Clip	1
22	900526819	Bolt	4
23	524264688	Bolt	5
24	901579805	Gasket	1
25	524242078	Water Pump	1
26	901579804	Seal	1
27	901579802	Seal	1
28	901579803	Seal	1
29	901302840	Stud	1
30	901096876	Seal	1
31	504258732	Baffle	1
32	524264690	Bolt	1
33	505960550	Radiator Hose	1
34	505960521	Pipe (Water Bypass)	1
35	580024169	Hose Clamp	1
36	505960531	Cap	1
37	901302839	Bolt	1
38	582005785	Fan Pulley	1
	a 580000727	Fan	1

FOOTNOTES:

a Not Illustrated

©2010 Yale Materials Handling Corporation

https://truckmanualshub.com/

EMISSION CONTROL SYSTEM (FIGURE 2-11)

MAZDA 2.0L, LPG — 2010 EMISSION COMPLIANT ENGINES

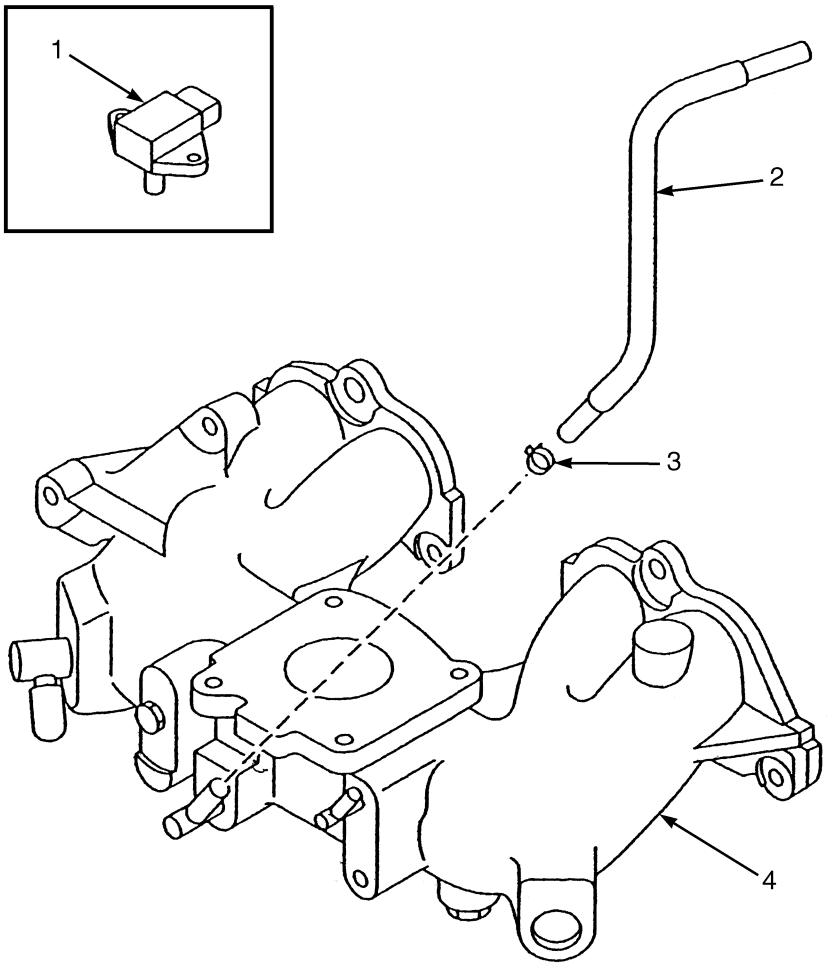

BP090334

ITEM	PART NO.	DESCRIPTION	QTY
1	580045523	Sensor (Boost, M.A.P.) (Boost)	1
2	580078965	Hose (PCV)	1
3	505960520	Clamp	1
4	580078950	Intake Manifold	1
4	580089541	Intake Manifold	1

©2010 Yale Materials Handling Corporation

https://truckmanualshub.com/

NOTES

©2010 Yale Materials Handling Corporation

https://truckmanualshub.com/

OIL PUMP AND FILTER (FIGURE 2-12)

MAZDA 2.0L, LPG — 2010 EMISSION COMPLIANT ENGINES

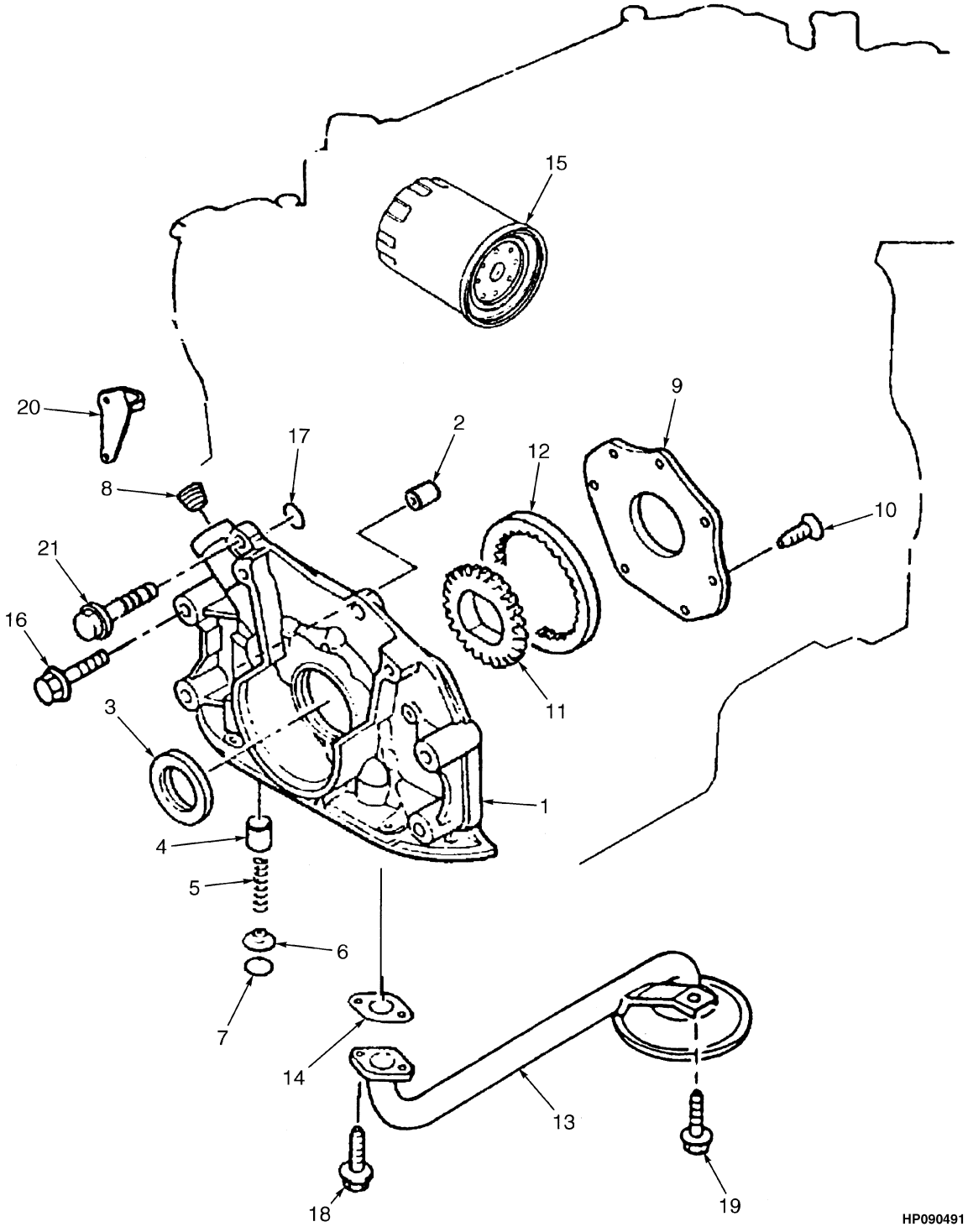

©2010 Yale Materials Handling Corporation

https://truckmanualshub.com/

OIL PUMP AND FILTER

MAZDA 2.0L, LPG – 2010 EMISSION COMPLIANT ENGINES

ITEM	PART NO.	DESCRIPTION	QTY
	580078922	Long Block	1
1	580001828	Engine Oil Pump	1
2	901271803	Pin (Timing Indicator)	2
3	901292811	Oil Seal	1
4	580001826	Plunger	1
5	900291803	Spring	1
6	900291804	Spring Seat	1
7	901301821	Snap Ring	1
8	580024166	Plug	1
9	901578809	Cover	1
10	580001829	Screw	7
11	901578811	Gear (Inner)	1
12	901578812	Gear (Outer)	1
13	901301823	Strainer	1
14	901301822	Gasket	1
15	901301815	Oil Filter	1
16	901578816	Bolt	2
17	901301802	O-Ring	1
18	901301818	Screw	2
19	901282833	Screw	1
20	580024167	Pin (Top Indicator)	1
21	901292819	Screw	4
	524264678	Gasket (Liquid)	AR

©2010 Yale Materials Handling Corporation

https://truckmanualshub.com/

NOTES

©2010 Yale Materials Handling Corporation

https://truckmanualshub.com/

3 EXHAUST SYSTEM

https://truckmanualshub.com/

https://truckmanualshub.com/

SECTION 3
EXHAUST SYSTEM

DESCRIPTION **PAGE**

EXHAUST SYSTEM WITH CATALYTIC CONVERTER
MAZDA 2.0L, LPG 3-2
MAZDA 2.0L, LPG - LATIN AMERICAN SERIES 3-4

©2010 Yale Materials Handling Corporation

https://truckmanualshub.com/

EXHAUST SYSTEM WITH CATALYTIC CONVERTER (FIGURE 3-1)

MAZDA 2.0L, LPG

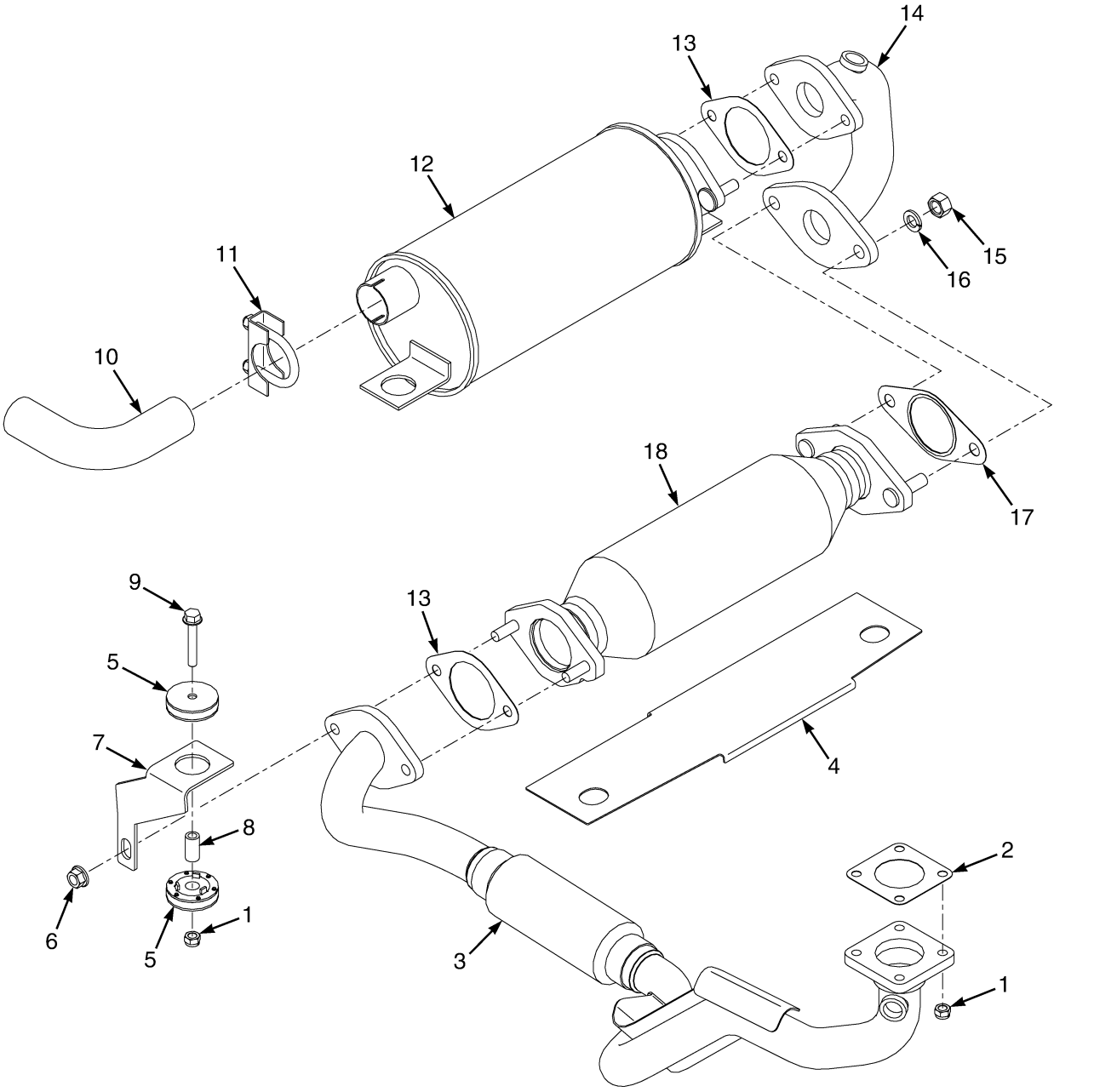

©2010 Yale Materials Handling Corporation

https://truckmanualshub.com/

EXHAUST SYSTEM WITH CATALYTIC CONVERTER

MAZDA 2.0L, LPG

ITEM	PART NO.	DESCRIPTION	QTY
1	580056381	Locknut	6
2	912189300	Gasket	1
3	580093953	Exhaust Pipe	1
4	580057842	Exhaust Shield	1
5	580097537	Isolator	4
6	580027572	Nut	4
7	580039142	Bracket	1
8	582000157	Spacer	2
9	580030968	Capscrew	2
10	580058890	Exhaust Pipe	1
11	057092500	Clamp	1
12	580073415	Muffler (Welded) (Optional)	1
12	580073416	Muffler (Crimped)	1
13	580087650	Gasket	2
14	580073413	Exhaust Pipe	1
15	580020060	Nut	2
16	449022017	Lockwasher	2
17	580087651	Gasket	1
18	582001684	Catalytic Converter	1

©2010 Yale Materials Handling Corporation

https://truckmanualshub.com/

EXHAUST SYSTEM WITH CATALYTIC CONVERTER (FIGURE 3-2)

MAZDA 2.0L, LPG — LATIN AMERICAN SERIES

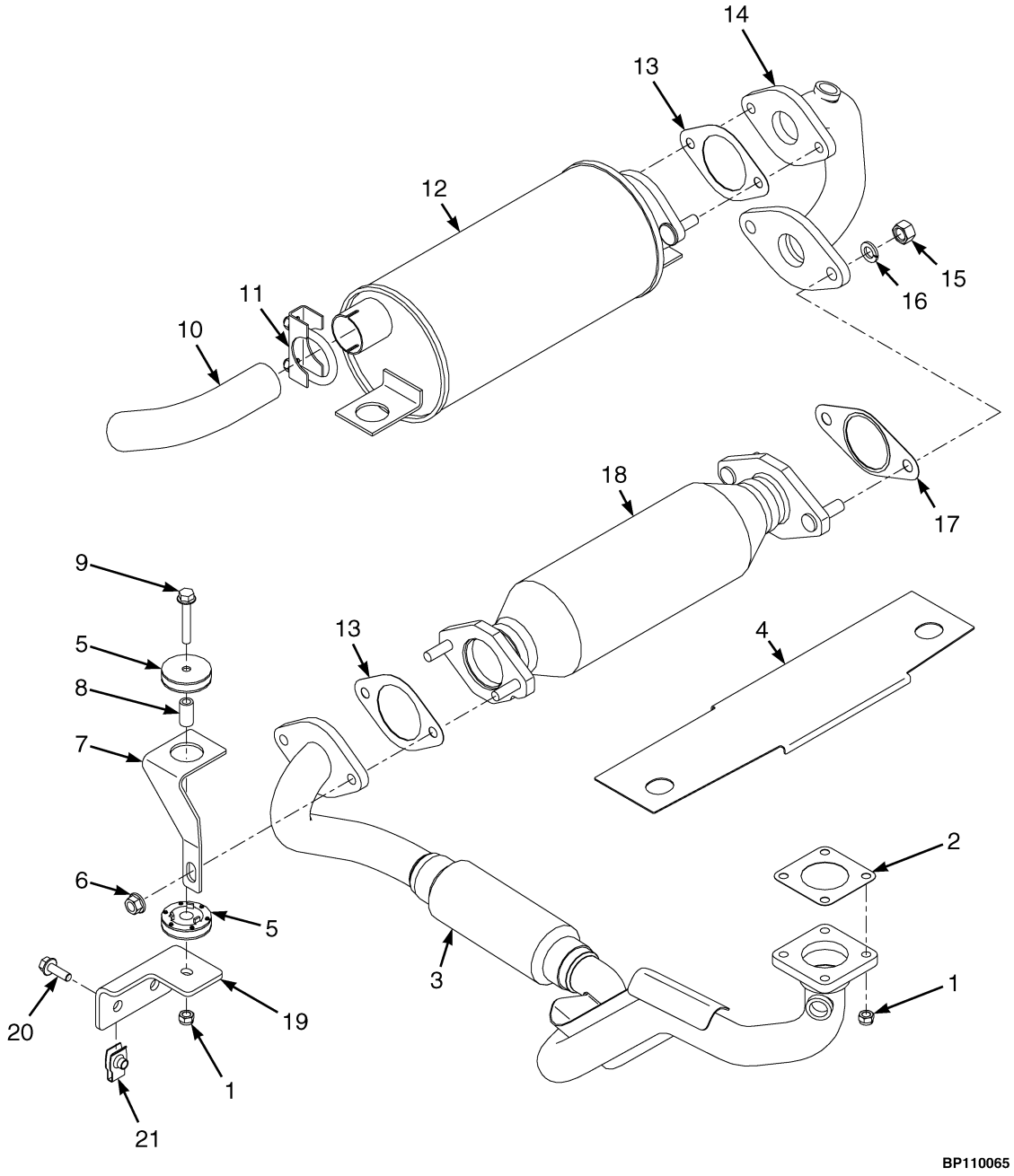

©2010 Yale Materials Handling Corporation

https://truckmanualshub.com/

EXHAUST SYSTEM WITH CATALYTIC CONVERTER

MAZDA 2.0L, LPG – LATIN AMERICAN SERIES

ITEM	PART NO.	DESCRIPTION	QTY
1	580056381	Locknut	6
2	912189300	Gasket	1
3	580093953	Exhaust Pipe	1
4	580057842	Exhaust Shield	1
5	580097537	Isolator	4
6	580027572	Nut	4
7	582006504	Bracket	1
8	582000157	Spacer	2
9	580030968	Capscrew	2
10	580058890	Exhaust Pipe	1
11	057092500	Clamp	1
12	580073415	Muffler (Welded) (Optional)	1
12	580073416	Muffler (Crimped)	1
13	580087650	Gasket	2
14	580073413	Exhaust Pipe	1
15	580020060	Nut	2
16	449022017	Lockwasher	2
17	580087651	Gasket	1
18	582001684	Catalytic Converter	1
19	582006503	Bracket (LH)	1
19	582006502	Bracket (RH)	1
20	580030966	Capscrew	4
21	580012987	Nut	4

©2010 Yale Materials Handling Corporation

https://truckmanualshub.com/

NOTES

©2010 Yale Materials Handling Corporation

https://truckmanualshub.com/

4 COOLING SYSTEM

https://truckmanualshub.com/

https://truckmanualshub.com/

SECTION 4
COOLING SYSTEM

DESCRIPTION **PAGE**

COOLING SYSTEM 4-2

©2010 Yale Materials Handling Corporation

https://truckmanualshub.com/

COOLING SYSTEM (FIGURE 4-1)

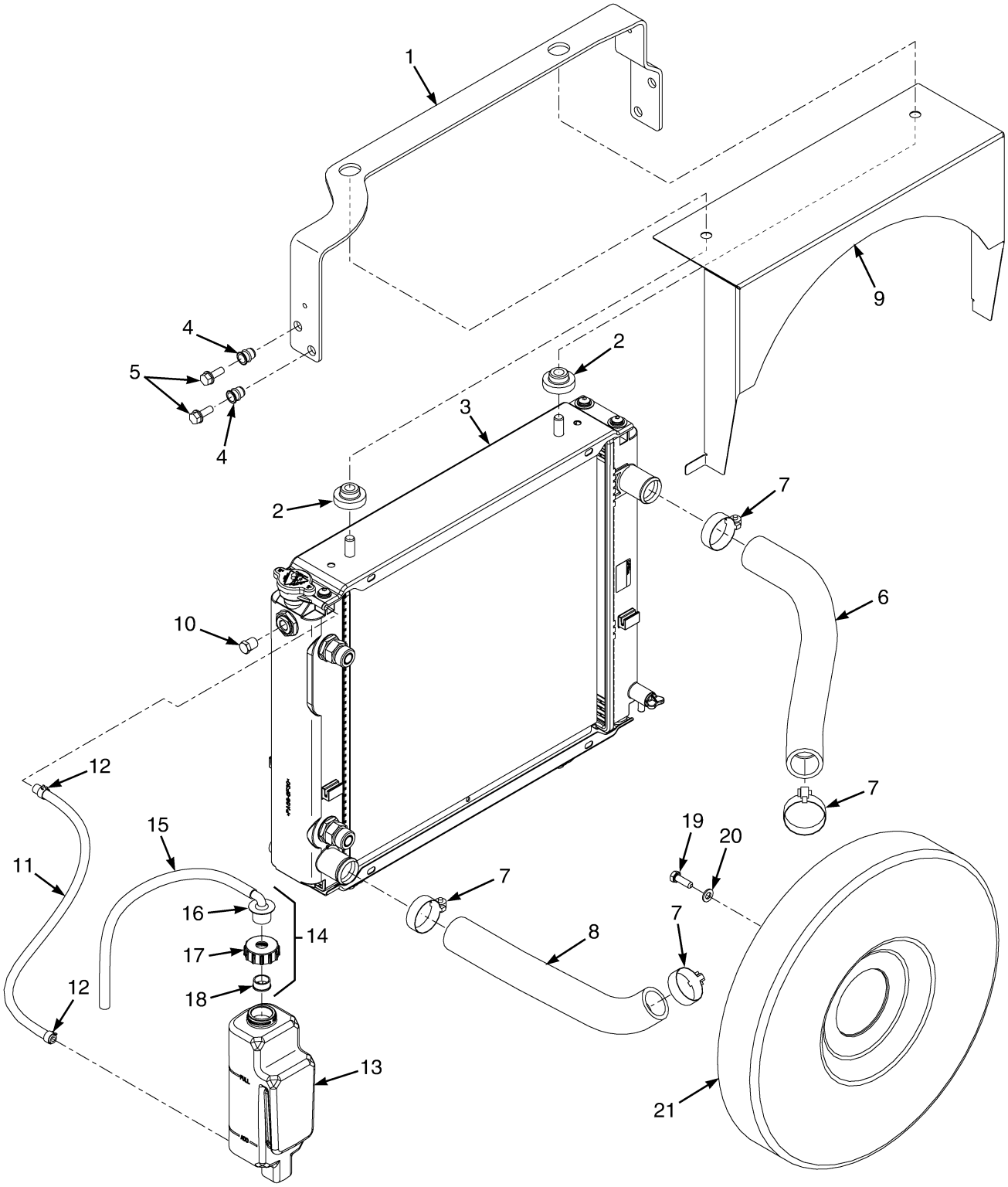

©2010 Yale Materials Handling Corporation

https://truckmanualshub.com/

COOLING SYSTEM

ITEM	PART NO.	DESCRIPTION	QTY
1	582010093	Bracket	1
2	580037325	Isolator	4
3	580039800	Radiator	1
3	505972563	Radiator Cap	1
3	580036680	Drain Plug	1
4	580044860	Insert	4
5	580056815	Capscrew	4
6	582005862	Hose	1
7	502056903	Clamp	4
8	580038861	Radiator Hose	1
9	582003495	Shroud	1
10	501884906	Fitting	1
10	505970592	Sealant	1
11	580041132	Hose	1
12	505966595	Clamp	2
13	580072689	Reservoir	1
14	580002885	Outlet Assembly	1
15	580083733	Hose	1
16	900001230	Outlet (Reservoir)	1
17	900001231	Cap	1
18	900003260	Bushing	1
19	449001241	Capscrew	4
20	502566901	Washer	4
21	580086666	Fan	1

©2010 Yale Materials Handling Corporation

https://truckmanualshub.com/

NOTES

©2010 Yale Materials Handling Corporation

https://truckmanualshub.com/

5 FUEL SYSTEM

https://truckmanualshub.com/

https://truckmanualshub.com/

SECTION 5
FUEL SYSTEM

DESCRIPTION **PAGE**

AIR FILTER ASSEMBLY 5-4
AIR INTAKE SYSTEM 5-2
ELECTRONIC PRESSURE REGULATOR ASSEMBLY
MAZDA 2.0L LPG - 2010 EMISSION COMPLIANT ENGINES 5-14
ELECTRONIC PRESSURE REGULATOR KIT
(MAZDA 2.0L LPG) 5-16
FUEL SYSTEM
MAZDA 2.0L LPG - 2010 EMISSION COMPLIANT ENGINES 5-8
FUEL SYSTEM HOSES AND ATTACHING PARTS
MAZDA 2.0L LPG - 2010 EMISSION COMPLIANT ENGINES 5-10
FUEL TANK COVERS
LATIN AMERICAN SERIES 5-5
LPG FUEL TANK AND MOUNTING 5-6
MIXER AND THROTTLE BODY ASSEMBLY
MAZDA 2.0L - 2010 EMISSION COMPLIANT ENGINES 5-12
THROTTLE PEDAL AND ATTACHING PARTS 5-18

©2010 Yale Materials Handling Corporation

https://truckmanualshub.com/

AIR INTAKE SYSTEM (FIGURE 5-1)

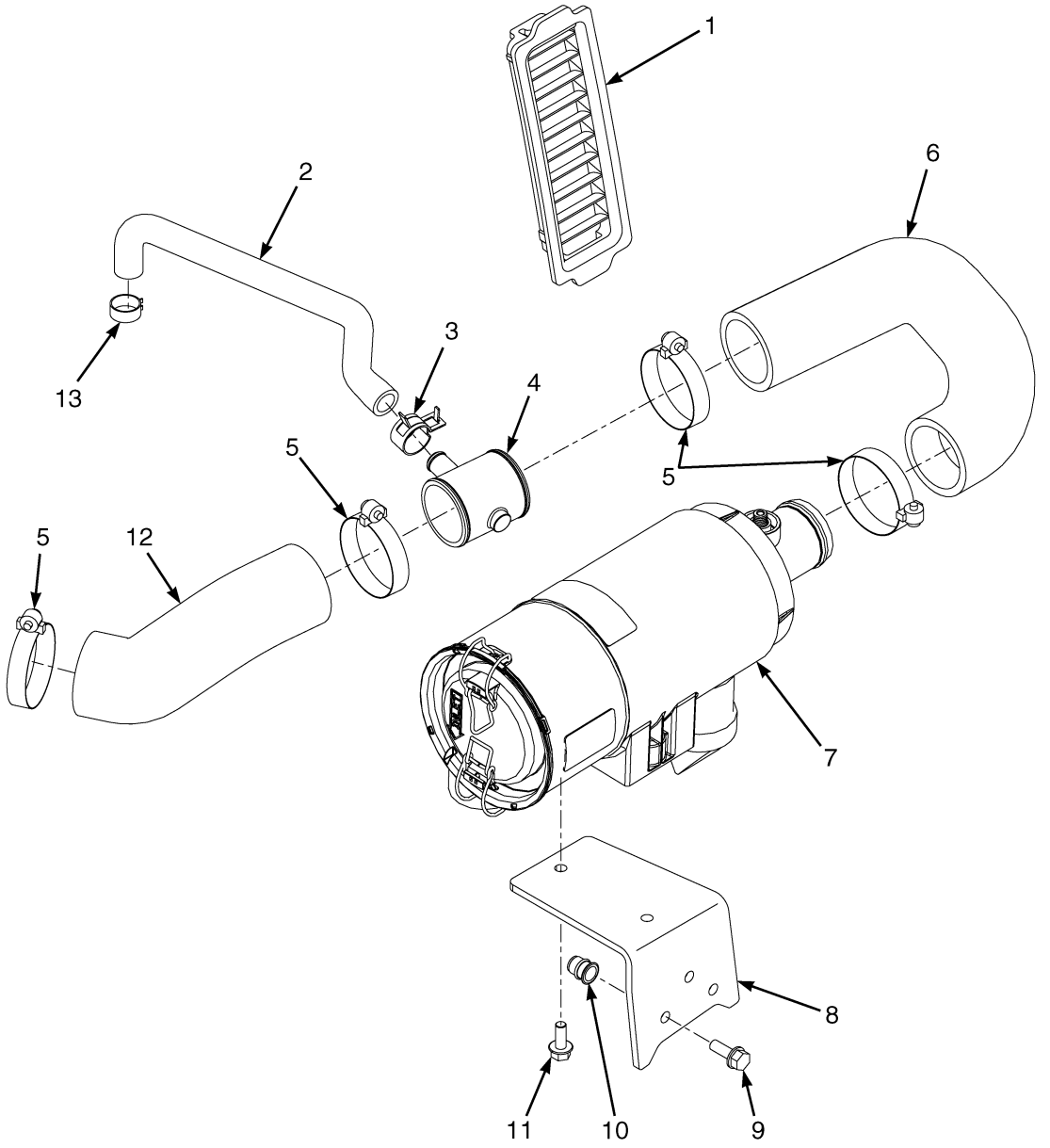

©2010 Yale Materials Handling Corporation

https://truckmanualshub.com/

AIR INTAKE SYSTEM

ITEM	PART NO.	DESCRIPTION	QTY
1	580048576	Grill	1
2	580074876	Hose	1
3	580039890	Hose Clamp	1
4	580074778	Coupler	1
5	505970524	Hose Clamp	4
6	580069181	Hose	1
7	580041002	Air Filter (☞P22063 [Page 5-4])	1
8	580046412	Bracket	1
9	580056815	Capscrew	3
10	580044860	Insert	3
11	580047714	Capscrew	2
12	580073429	Hose	1
13	580008524	Hose Clamp	1

©2010 Yale Materials Handling Corporation

https://truckmanualshub.com/

AIR FILTER ASSEMBLY (FIGURE 5-2)

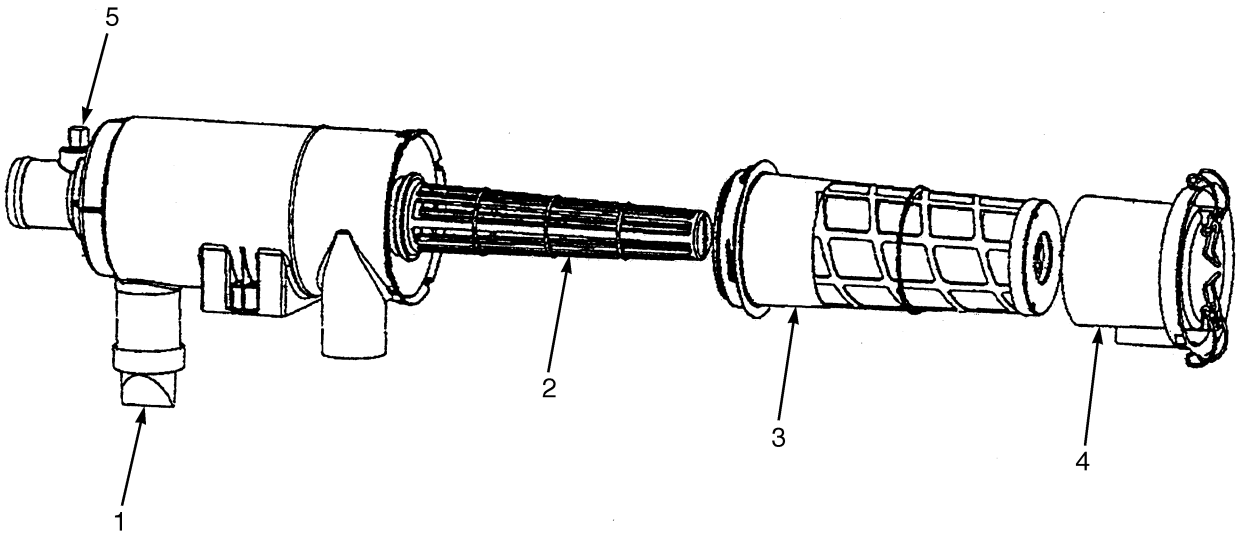

BP130113

ITEM	PART NO.	DESCRIPTION	QTY
	580041002	Air Filter	1
1	505967516	Valve	1
2	580048840	Guide (With O-Ring)	1
3	580048839	Filter Element	1
4	580048841	Cover	1
5	580003427	Cap	1

©2010 Yale Materials Handling Corporation

https://truckmanualshub.com/

FUEL TANK COVERS (FIGURE 5-3)
LATIN AMERICAN SERIES

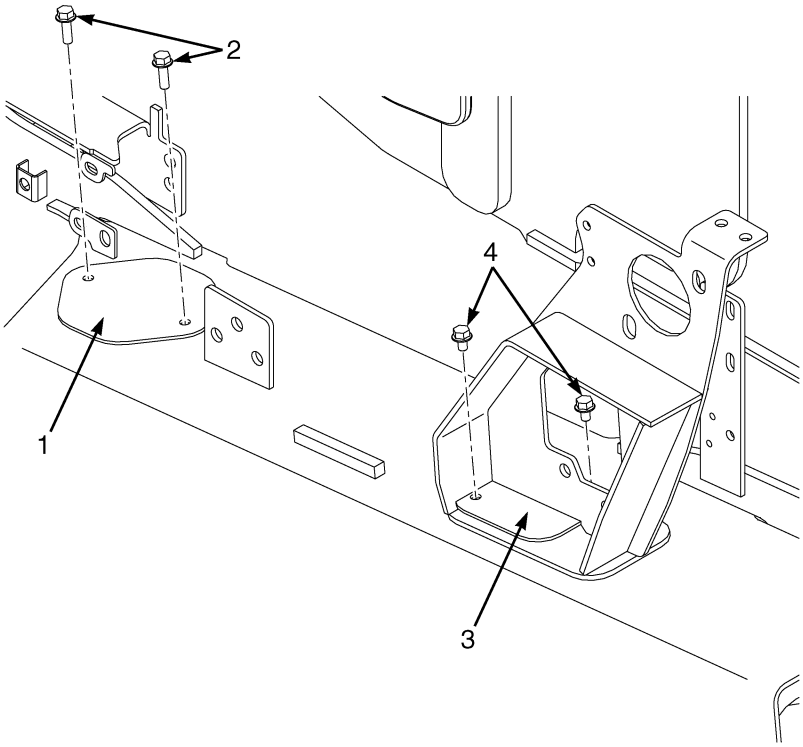

ITEM	PART NO.	DESCRIPTION	QTY
1	. . . . .	Cover	1
2	580030966	Capscrew	2
3	. . . . .	Cover	1
4	580037180	Capscrew	2
	580057351	Sealant	AR

©2010 Yale Materials Handling Corporation

https://truckmanualshub.com/

LPG FUEL TANK AND MOUNTING (FIGURE 5-4)

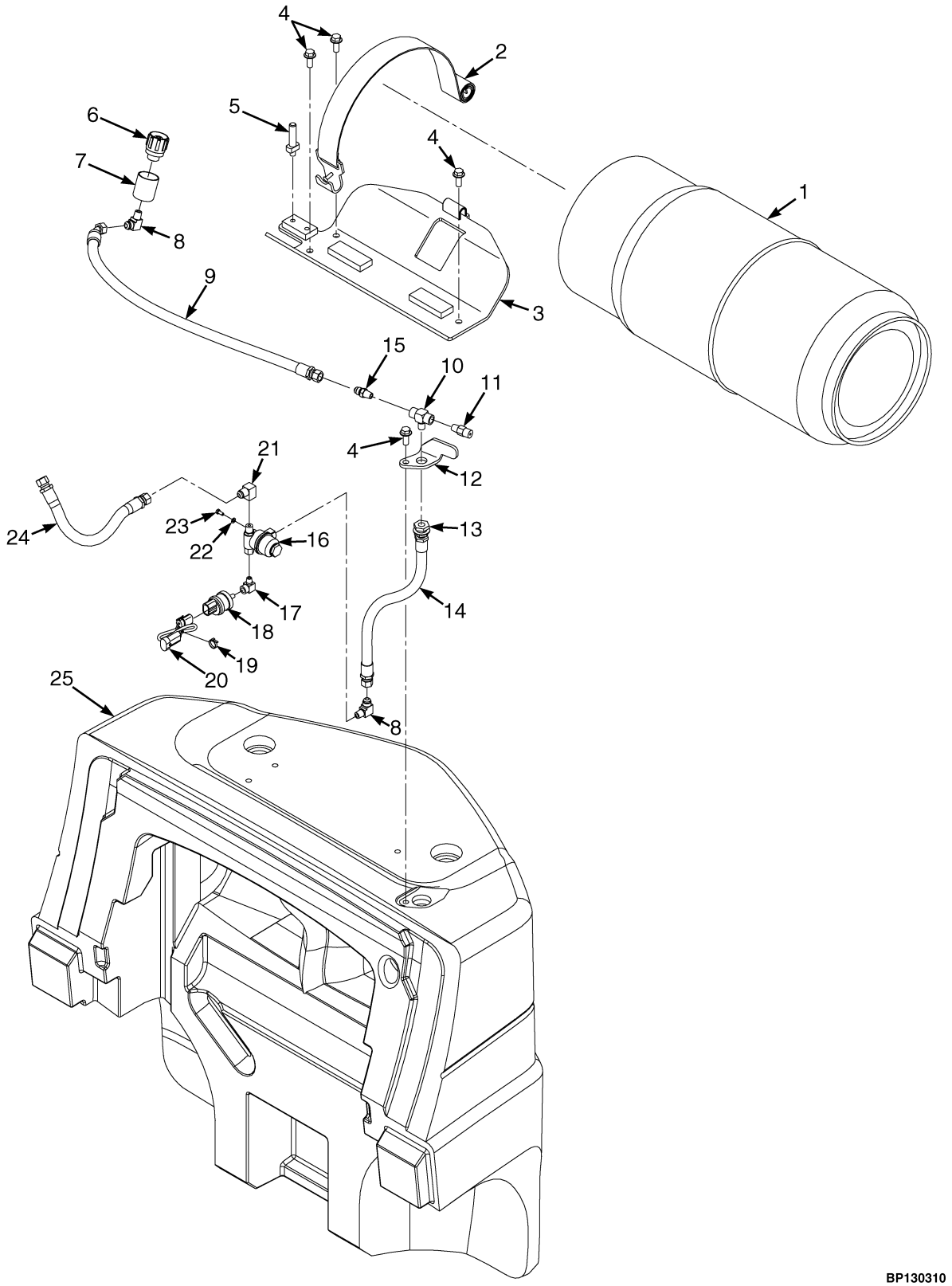

©2010 Yale Materials Handling Corporation

https://truckmanualshub.com/

LPG FUEL TANK AND MOUNTING

ITEM	PART NO.	DESCRIPTION	QTY
1	505967586	Lpg Tank (33.5 LB Steel)	1
1	580037838	LPG Tank (33.5 LB Aluminum)	1
2	582005075	Strap	1
3	582005302	LPG Tank Bracket	1
4	580030970	Capscrew	4
5	582009792	Pin	1
6	912514300	Fitting	1
7	580053000	Sleeve	1
8	056623800	Fitting	1
9	582009793	Hose Assy	1
10	013392600	Fitting	1
11	019299600	Relief Valve	1
12	582009794	Bracket	1
13	580027766	Fitting	1
14	582002292	Hose Assy	1
15	909267300	Fitting	1
16	580090374	Fuel Filter (LPG)	1
16	580090387	Kit-Filter Element	1
17	019930000	Fitting	1
18	580037008	Pressure Switch (Low Fuel)	1
19	312850042	Strap Clamp	1
20	582002989	Wire Harness (Adapter) (☞P22075 [Page 6-18])	1
21	580017034	Fitting	1
22	449021002	Washer	2
23	449001268	Capscrew	2
24	580074044	Hose Assy	1
25	. . . . .	Counterweight (☞P21896 [Page 1-6])	1

©2010 Yale Materials Handling Corporation

https://truckmanualshub.com/

FUEL SYSTEM (FIGURE 5-5)

MAZDA 2.0L LPG — 2010 EMISSION COMPLIANT ENGINES

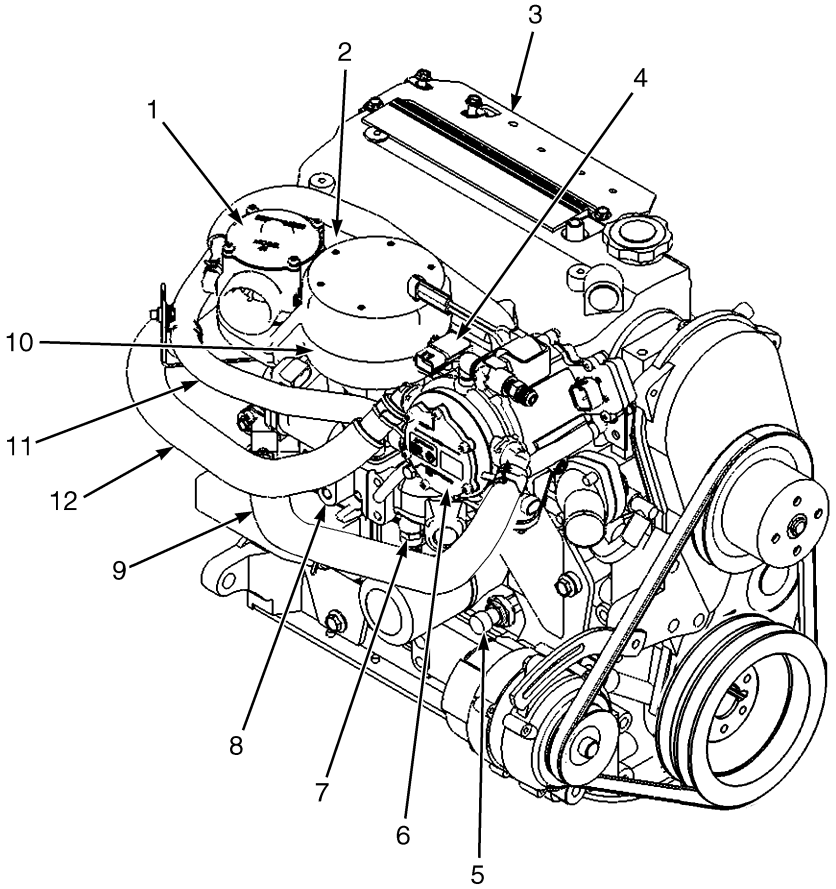

BP130244

ITEM	PART NO.	DESCRIPTION	QTY
1	580078224	Mixer (☞P21954 [Page 5-12])	1
2	580041817	Sensor (Air Temperature)	1
3	580078288	Bracket (Relay) (☞P21954 [Page 5-12])	1
4	580045523	Sensor (Boost, M.A.P.)	1
5	582006499	Pressure Transducer	1
5	580078287	Adapter	1
6	580094784	Pressure Regulator (EPR) (☞P21955 [Page 5-14])	1
7	582001685	Sensor (Temperature)	1
8	582002509	Engine Control Module (☞P22012 [Page 6-9])	1
9	580078250	Hose (RH) (Cooling) (☞P21953 [Page 5-10])	2
10	580078220	Throttle Body (☞P21954 [Page 5-12])	1
11	580078248	Hose	1
12	580078250	Hose (RH) (Cooling)	1

©2010 Yale Materials Handling Corporation

https://truckmanualshub.com/

NOTES

©2010 Yale Materials Handling Corporation

https://truckmanualshub.com/

FUEL SYSTEM HOSES AND ATTACHING PARTS (FIGURE 5-6)

MAZDA 2.0L LPG — 2010 EMISSION COMPLIANT ENGINES

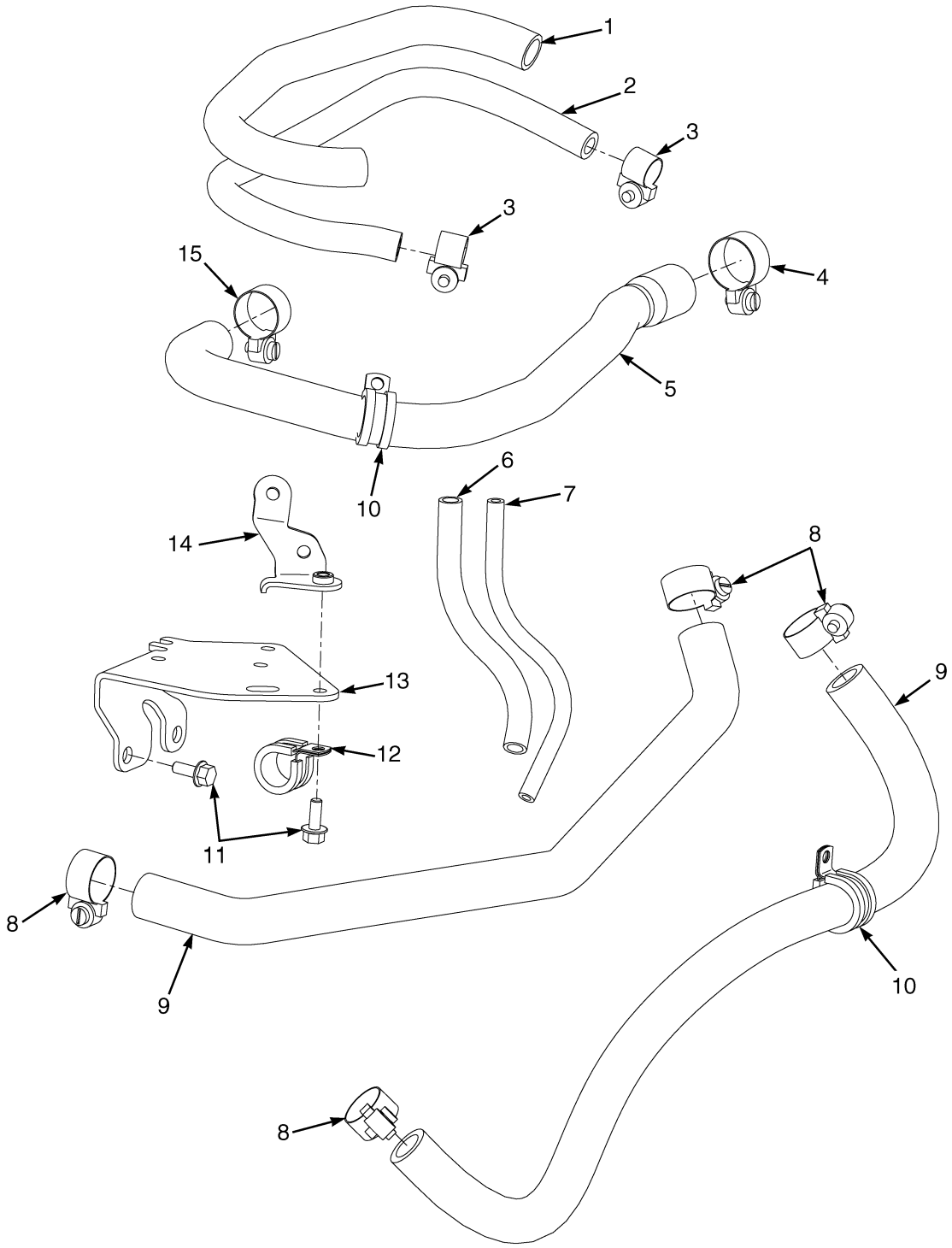

BP130317

©2010 Yale Materials Handling Corporation

https://truckmanualshub.com/

FUEL SYSTEM HOSES AND ATTACHING PARTS

MAZDA 2.0L LPG – 2010 EMISSION COMPLIANT ENGINES

ITEM	PART NO.	DESCRIPTION	QTY
1	580078246	Hose	1
2	580078245	Hose (Vacuum Balance)	1
3	580067185	Hose Clamp	2
4	582005779	Hose Clamp	1
5	580078248	Hose (Fuel)	1
6	580078257	Hose	1
7	580078251	Hose (Vacuum)	1
8	582005777	Hose Clamp	4
9	580078250	Hose (RH) (Cooling)	2
10	580079546	Clamp	2
11	580049011	Capscrew	3
12	580079545	Clamp	1
13	580078228	Bracket	1
14	580078255	Bracket	1
15	582005778	Hose Clamp	1

©2010 Yale Materials Handling Corporation

https://truckmanualshub.com/

MIXER AND THROTTLE BODY ASSEMBLY (FIGURE 5-7)

MAZDA 2.0L — 2010 EMISSION COMPLIANT ENGINES

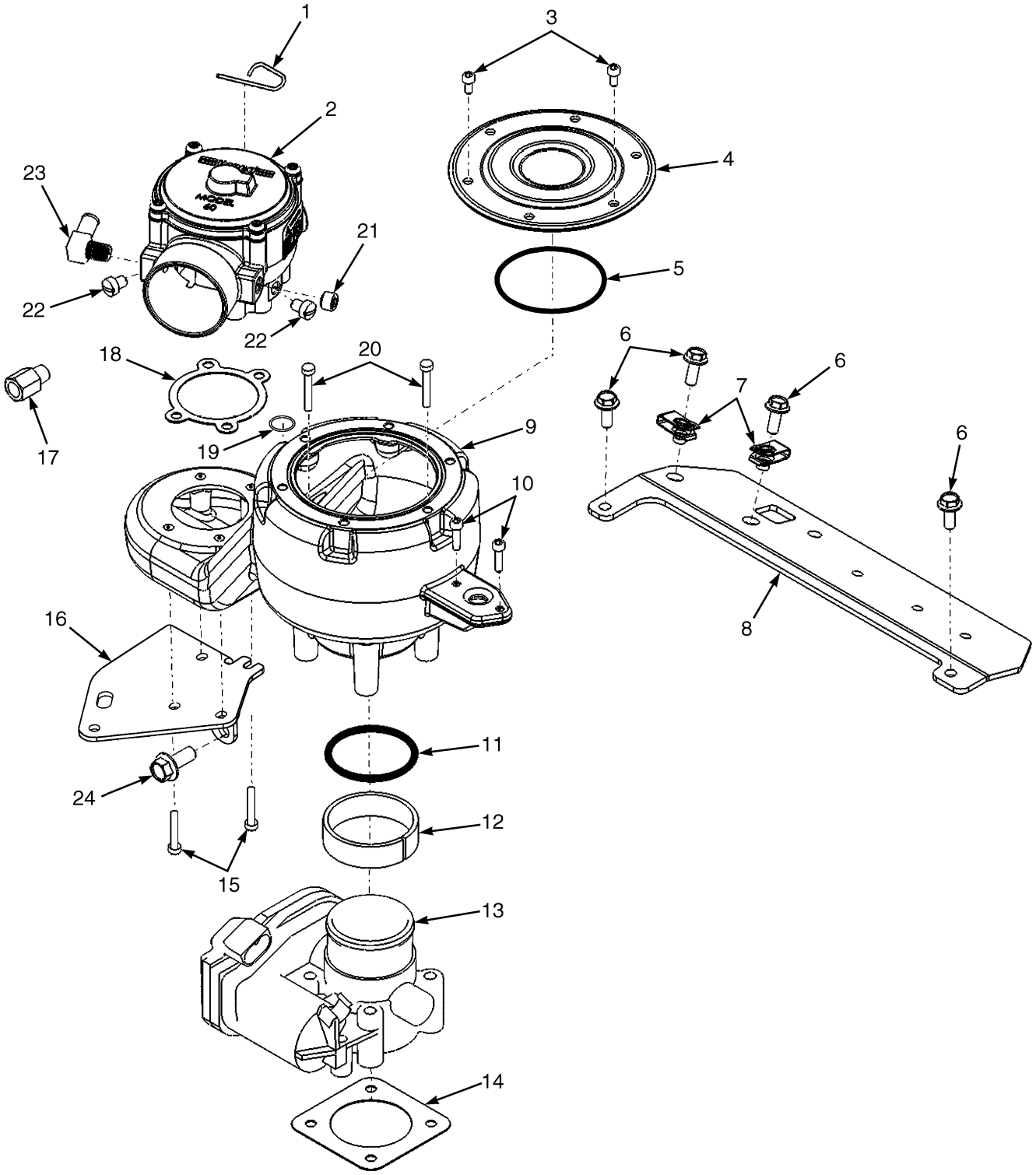

©2010 Yale Materials Handling Corporation

https://truckmanualshub.com/

MIXER AND THROTTLE BODY ASSEMBLY

MAZDA 2.0L – 2010 EMISSION COMPLIANT ENGINES

ITEM	PART NO.	DESCRIPTION	QTY
1	580048590	Pin	4
2	580078224	Mixer	1
3	518798654	Screw	6
4	580078226	Cover	1
5	580077954	O-Ring	1
6	580048664	Bolt	6
7	580078218	Nut	2
8	580078288	Bracket (Relay)	1
9	580078227	Adapter	1
10	580006764	Capscrew	2
11	580078221	O-Ring	1
12	580078222	Sleeve	1
13	580078220	Throttle Body	1
14	580078285	Gasket (Throttle Body)	1
15	580078223	Screw	4
16	580078228	Bracket	1
17	580078287	Adapter	1
18	516987808	Gasket	1
19	580078219	Seal	1
20	580088461	Screw	4
21	580088462	Plug	1
22	505963547	Screw	2
23	505959522	Fitting	1
24	580049011	Capscrew	2

©2010 Yale Materials Handling Corporation

https://truckmanualshub.com/

ELECTRONIC PRESSURE REGULATOR ASSEMBLY (FIGURE 5-8)

MAZDA 2.0L LPG — 2010 EMISSION COMPLIANT ENGINES

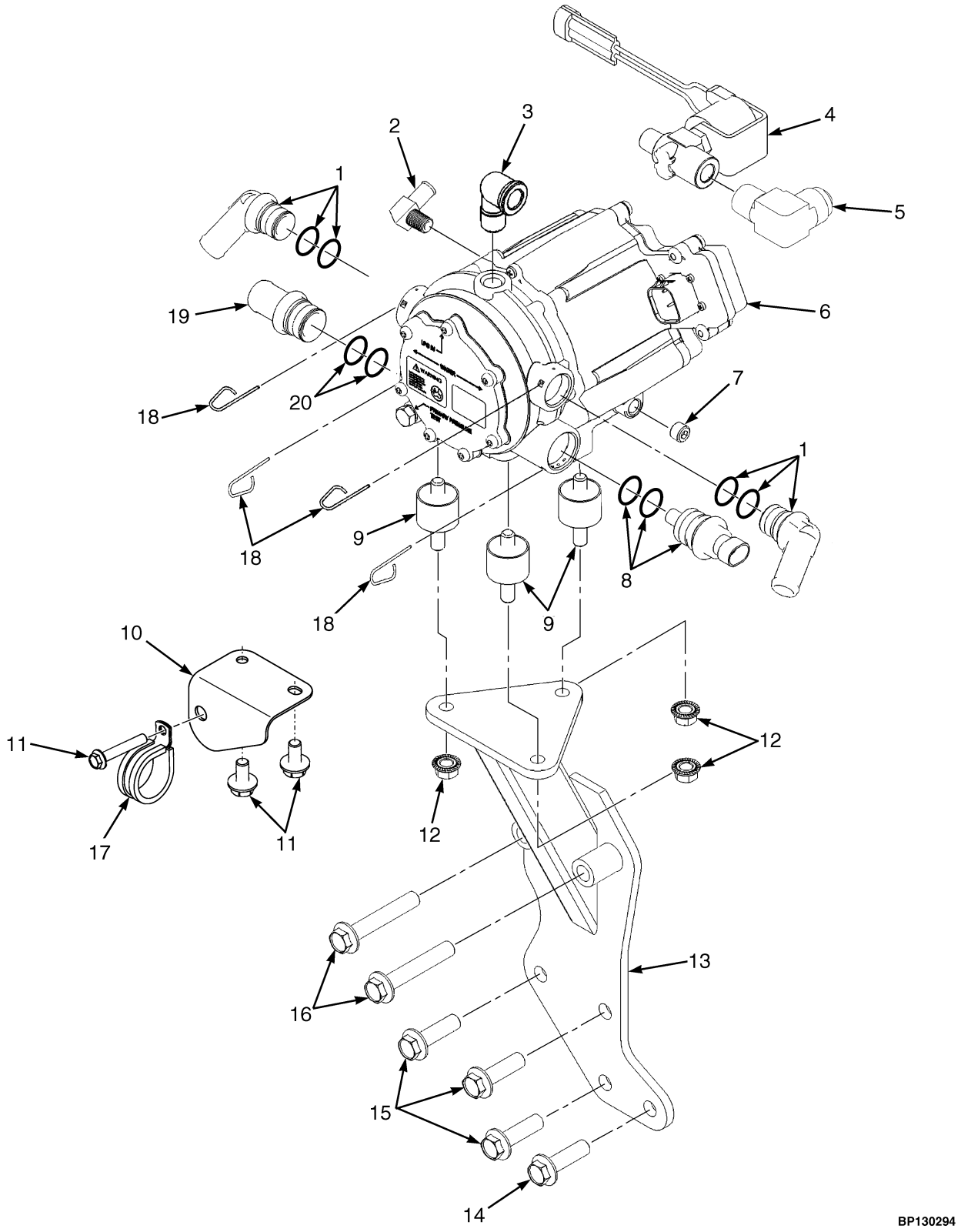

©2010 Yale Materials Handling Corporation

https://truckmanualshub.com/

ELECTRONIC PRESSURE REGULATOR ASSEMBLY

MAZDA 2.0L LPG – 2010 EMISSION COMPLIANT ENGINES

ITEM	PART NO.	DESCRIPTION	QTY
1	580048610	Fitting	2
2	505959522	Fitting	1
3	580078235	Fitting	1
4	580093615	Shutoff Valve	1
5	580078236	Fitting	1
6	580094784	Pressure Regulator	1
7	580088462	Plug	1
8	580086071	Sensor	1
8	580064014	O-Ring	2
9	580078232	Mount (Vibration)	3
10	580079547	Bracket	1
11	580049011	Capscrew	3
12	580027573	Nut (Flange)	3
13	580078238	Bracket	1
14	580078233	Screw	1
15	580078329	Screw	3
16	580078239	Screw	2
17	580079546	Clamp	1
18	580048590	Pin	4
19	580078229	Fitting	1
20	580064014	O-Ring	2

©2010 Yale Materials Handling Corporation

https://truckmanualshub.com/

ELECTRONIC PRESSURE REGULATOR KIT (FIGURE 5-9)
(MAZDA 2.0L LPG)

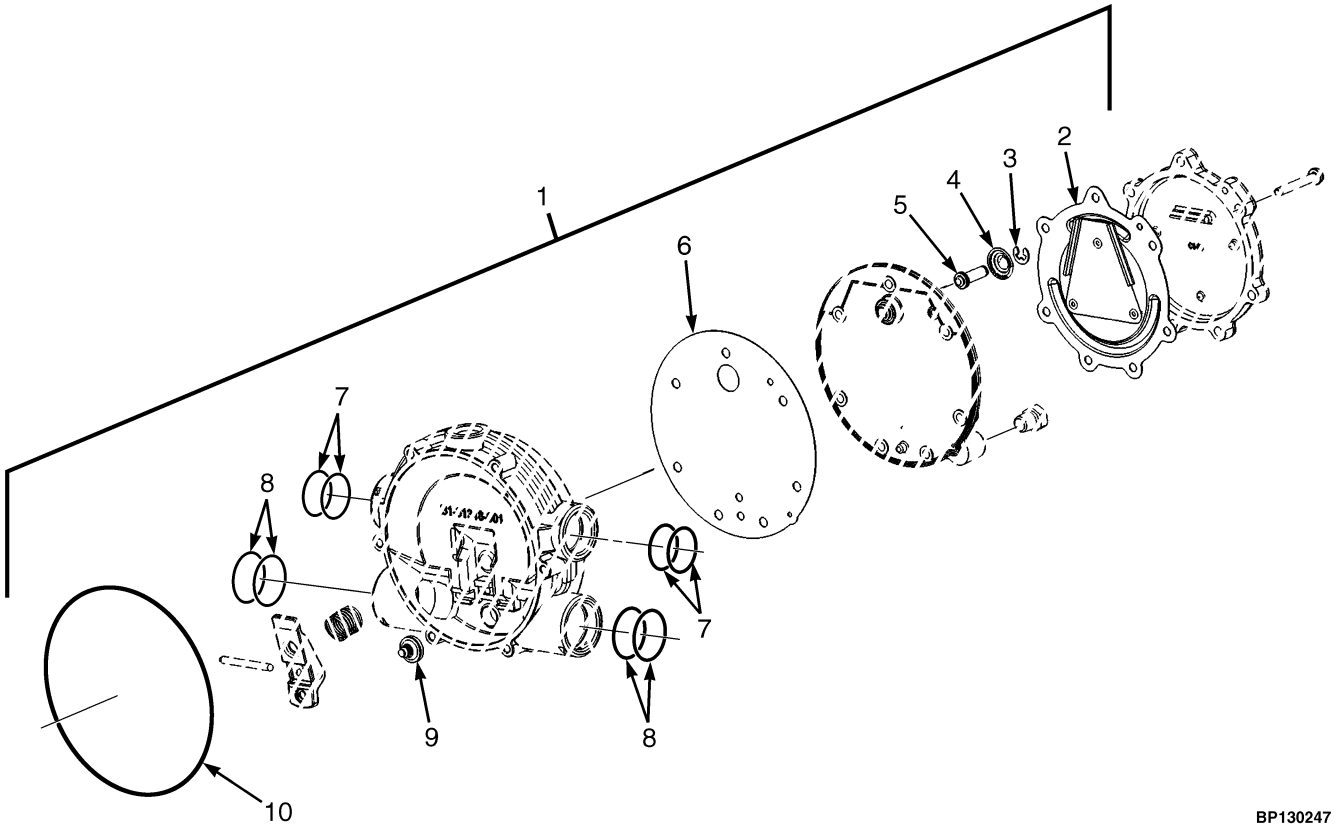

ITEM	PART NO.	DESCRIPTION	QTY
	580094784	Pressure Regulator	1
1	582005706	Kit-Repair (Regulator Assembled)	1
2	. . . . .	Diaphram (Not Serviced Seperately)	1
3	580001734	E-Ring (Primary)	1
4	. . . . .	Spring (Not Serviced Seperately)	1
5	580004656	Pin (Primary)	1
6	518807683	Gasket (Body Secondary)	1
7	. . . . .	O-Ring (Not Serviced Seperately)	4
8	580064014	O-Ring	4
9	. . . . .	Seat (Not Serviced Seperately)	1
10	. . . . .	Clamp Plate Seal (Not Serviced Seperately)	1
	580078244	Kit-Repair (Electronic Pressure Regulator)	1

©2010 Yale Materials Handling Corporation

https://truckmanualshub.com/

NOTES

©2010 Yale Materials Handling Corporation

https://truckmanualshub.com/

THROTTLE PEDAL AND ATTACHING PARTS (FIGURE 5-10)

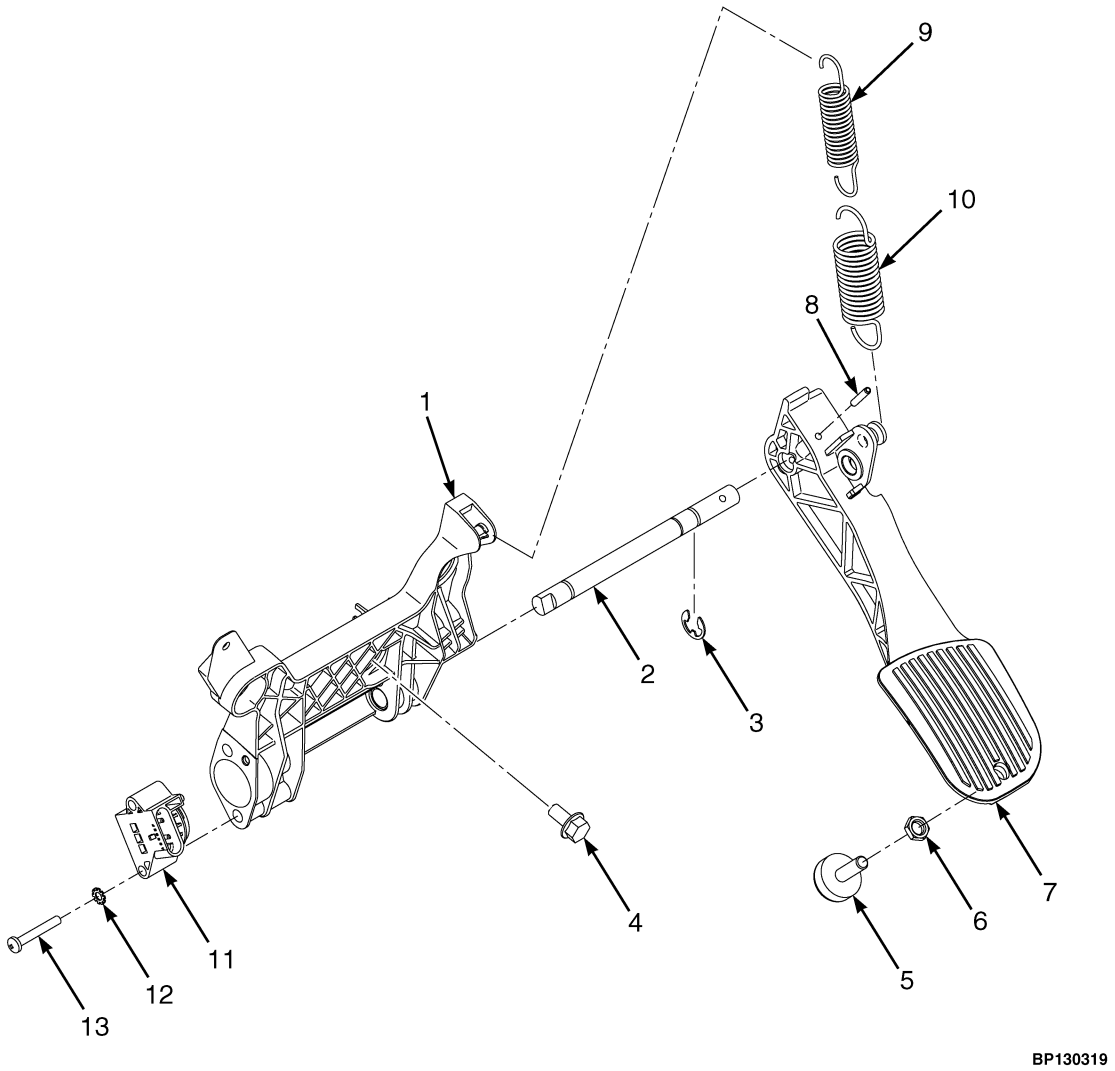

©2010 Yale Materials Handling Corporation

https://truckmanualshub.com/

THROTTLE PEDAL AND ATTACHING PARTS

ITEM	PART NO.	DESCRIPTION	QTY
1	580080022	Throttle Plate	1
2	580080021	Shaft	1
3	580038063	E-Ring	1
4	580047714	Capscrew	3
5	580037700	Screw (Stop)	1
6	580004592	Nut	1
7	580052661	Pedal (Standard)	1
8	449034011	Roll Pin	1
9	580056460	Spring (Inner)	1
10	580056459	Spring (Outer)	1
11	580043866	Sensor (Half Throttle Position)	1
12	940600906	Washer	2
13	580056839	Capscrew	2

©2010 Yale Materials Handling Corporation

https://truckmanualshub.com/

NOTES

©2010 Yale Materials Handling Corporation

https://truckmanualshub.com/

6 ELECTRICAL SYSTEM

https://truckmanualshub.com/

https://truckmanualshub.com/

SECTION 6
ELECTRICAL SYSTEM

DESCRIPTION	PAGE
BATTERY AND CABLES	6-4
DISPLAY CLUSTER	6-8
ELECTRICAL ARRANGEMENT	6-2
ENGINE CONTROL MODULE	
MAZDA 2.0L LPG	6-9
LIGHTS	
STOP, TAIL, TURN, BACKUP, AND STROBE - WITH OVERHEAD GUARD	6-6
WIRE HARNESS	
MAZDA 2.0L LPG - POWERTRAIN	6-10
RH CHASSIS - SHEET 1 OF 2	6-14
RH CHASSIS - SHEET 2 OF 2	6-16
WIRE HARNESS ADAPTER	
LOW FUEL PRESSURE	6-18

©2010 Yale Materials Handling Corporation

https://truckmanualshub.com/

ELECTRICAL ARRANGEMENT (FIGURE 6-1)

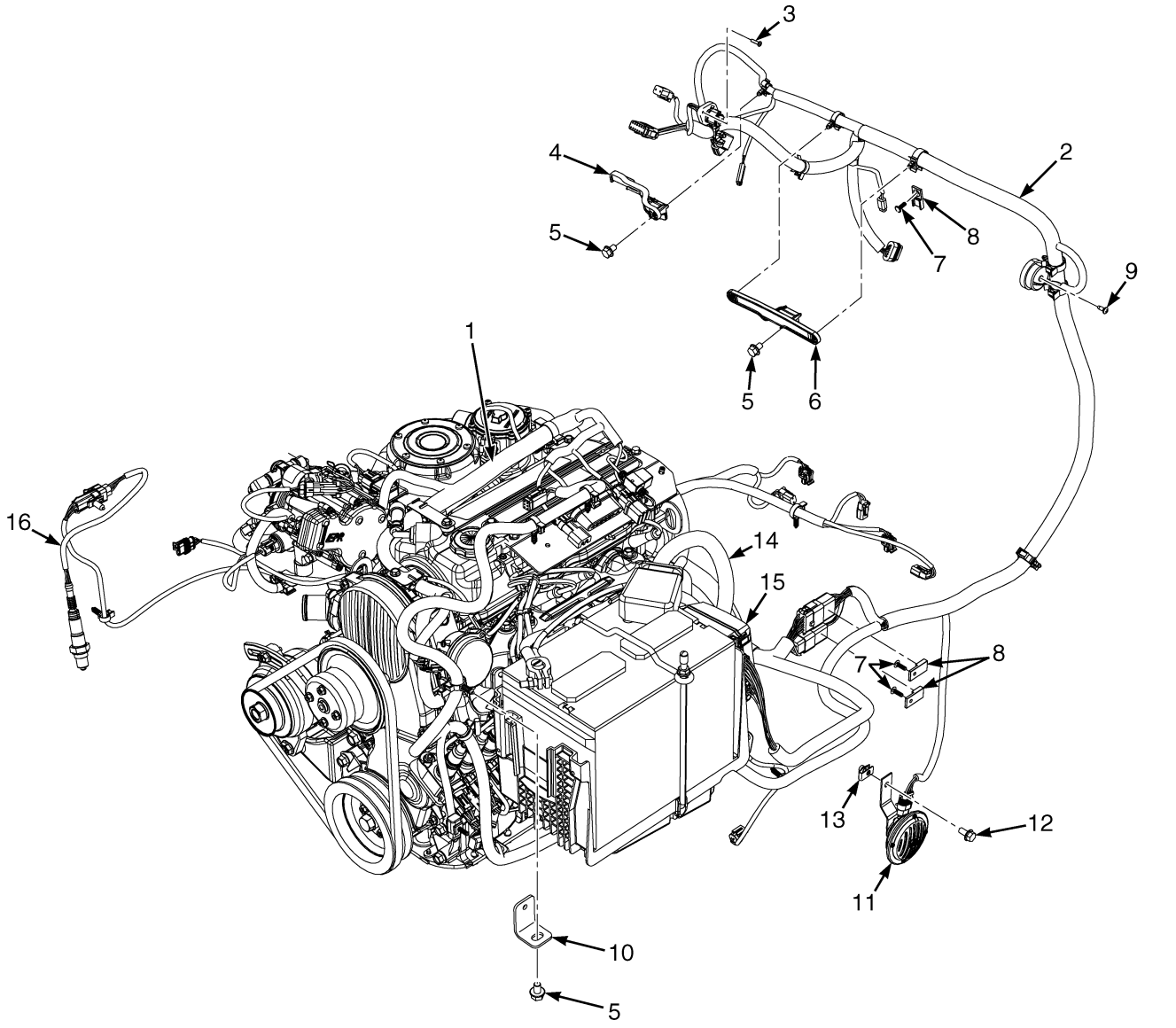

©2010 Yale Materials Handling Corporation

https://truckmanualshub.com/

ELECTRICAL ARRANGEMENT

ITEM	PART NO.	DESCRIPTION	QTY
1	582005468	Wire Harness (Powertrain) (☞P22015 [Page 6-10])	1
2	582003496	Wire Harness (RH Chassis) (☞P22013 [Page 6-14], ☞P22014 [Page 6-16])	1
3	580047200	Screw	2
4	580096474	Bracket (Left Hand)	1
5	580037180	Capscrew	3
6	580096475	Bracket (Right Hand)	1
7	580056613	Fastener	5
8	580026812	Clip	3
9	582003822	Screw	1
10	582003214	Bracket	1
11	582006520	Horn	1
12	580047714	Capscrew	1
13	580026621	Nut	1
14	. . . . .	Battery and Cables (☞P22043 [Page 6-4])	1
15	. . . . .	Power Distribution Module (☞P22043 [Page 6-4])	1
16	580076752	Sensor (Oxygen)	1

©2010 Yale Materials Handling Corporation

https://truckmanualshub.com/

BATTERY AND CABLES (FIGURE 6-2)

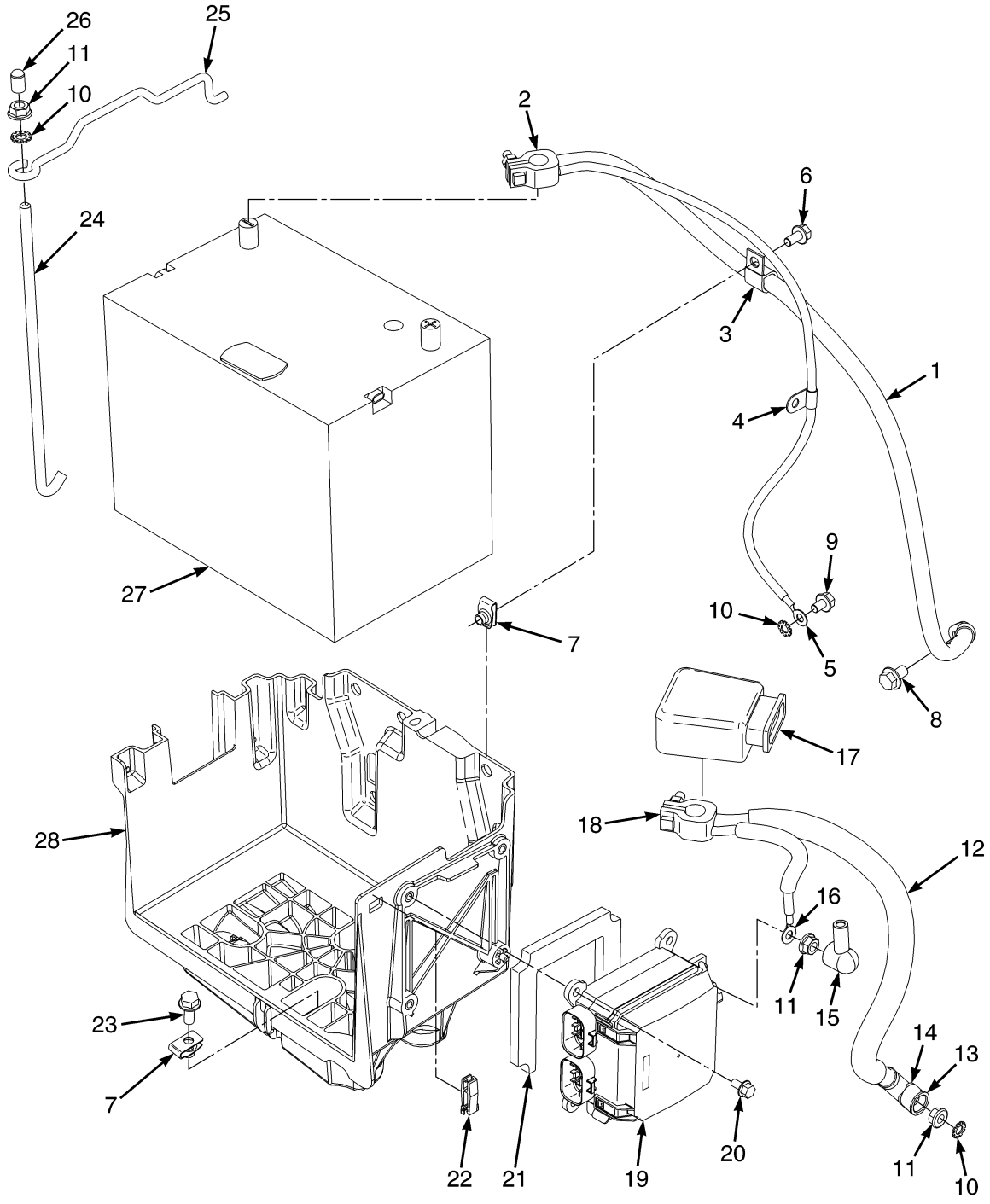

©2010 Yale Materials Handling Corporation

https://truckmanualshub.com/

BATTERY AND CABLES

ITEM	PART NO.	DESCRIPTION	QTY
1	580050644	Battery Cable	1
1	580073520	Battery Cable	AR
1	580076450	Wire-Bulk	AR
2	580063618	Terminal	1
3	505970529	Clamp	1
4	580050293	E-Ring	1
5	580006553	E-Ring	1
6	580047714	Capscrew	1
7	580026621	Nut	4
8	580047792	Bolt	1
9	580037180	Capscrew	1
10	940600908	Washer	3
11	580027573	Nut (Flange)	4
12	580091916	Battery Cable (Positive)	1
12	580073519	Battery Cable (Red)	AR
12	580074878	Wire (Bulk)	AR
13	580063617	Terminal	1
14	505976537	Boot	1
15	580052019	Boot	1
16	580006553	E-Ring	1
17	580040374	Boot	1
18	580063616	Terminal	1
19	582003951	Fuse Box	1
20	580039900	Capscrew	3
21	580056730	Seal	1
22	580023854	Fuse Puller	1
23	580049231	Capscrew	3
24	580046263	Link (Battery Hold Down)	1
25	580075004	Link (Battery Hold Down)	1
26	580041768	Cap	1
27	520052851	Start Battery Wet	1
27	580076313	Start Battery Wet (Optional)	1
28	580074432	Battery Tray	1

©2010 Yale Materials Handling Corporation

https://truckmanualshub.com/

LIGHTS (FIGURE 6-3)

STOP, TAIL, TURN, BACKUP, AND STROBE — WITH OVERHEAD GUARD

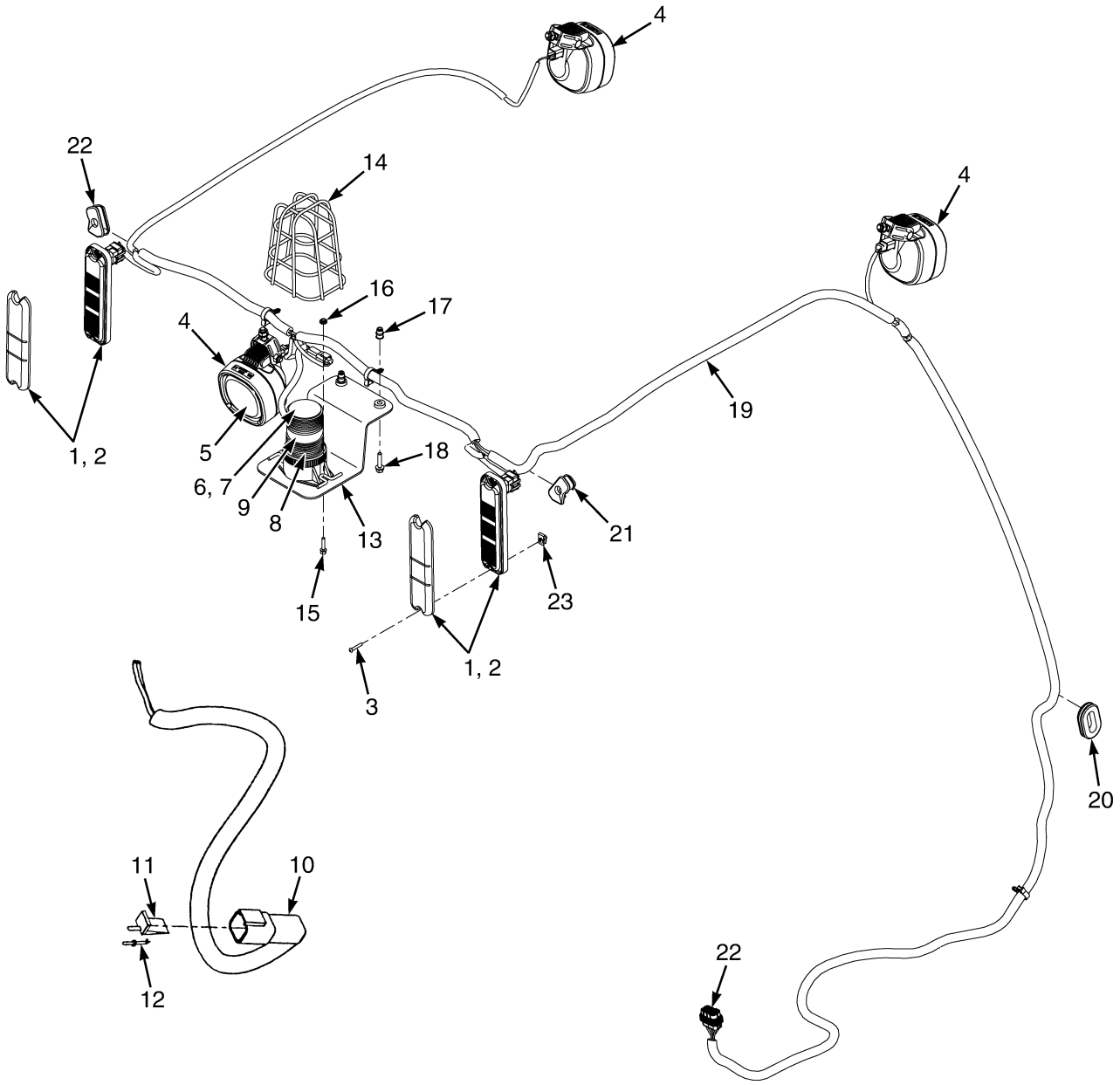

©2010 Yale Materials Handling Corporation

https://truckmanualshub.com/

LIGHTS

STOP, TAIL, TURN, BACKUP, AND STROBE – WITH OVERHEAD GUARD

ITEM	PART NO.	DESCRIPTION	QTY
1	580037207	Brake/Backup Light (Stop,Turn,Tail, And Back-Up)	2
1	. . . . .	Tail Light Base (☞P21897 [Page 1-12])	2
2	580037209	Reflector (Tail)	2
3	580051168	Screw	4
4	580082532	Work Light (Rear) (Halogen)	1
4	580082533	Work Light (RH Front) (Halogen)	1
4	580082534	Work Light (LH Front) (Halogen)	1
5	580082531	Bulb (Halogen)	1
6	580049225	Grommet (LH Tail Light)	1
7	580040850	Nut	4
8	580079615	Strobe Light Assembly	1
9	580000037	Strobe Light	1
10	580056006	Connector	1
11	580056004	Connector	1
12	580041195	Terminal	2
13	580051159	Bracket Wldmt	1
14	504232297	Guard	1
15	580058314	Capscrew	2
16	580058188	Nut	2
17	580044859	Insert	2
18	580058212	Capscrew	2
19	582003497	Wire Harness	1
20	580041360	Grommet	1
21	580049224	Grommet (RH Tail Light)	1
22	582002870	Connector	1

©2010 Yale Materials Handling Corporation

https://truckmanualshub.com/

DISPLAY CLUSTER (FIGURE 6-4)

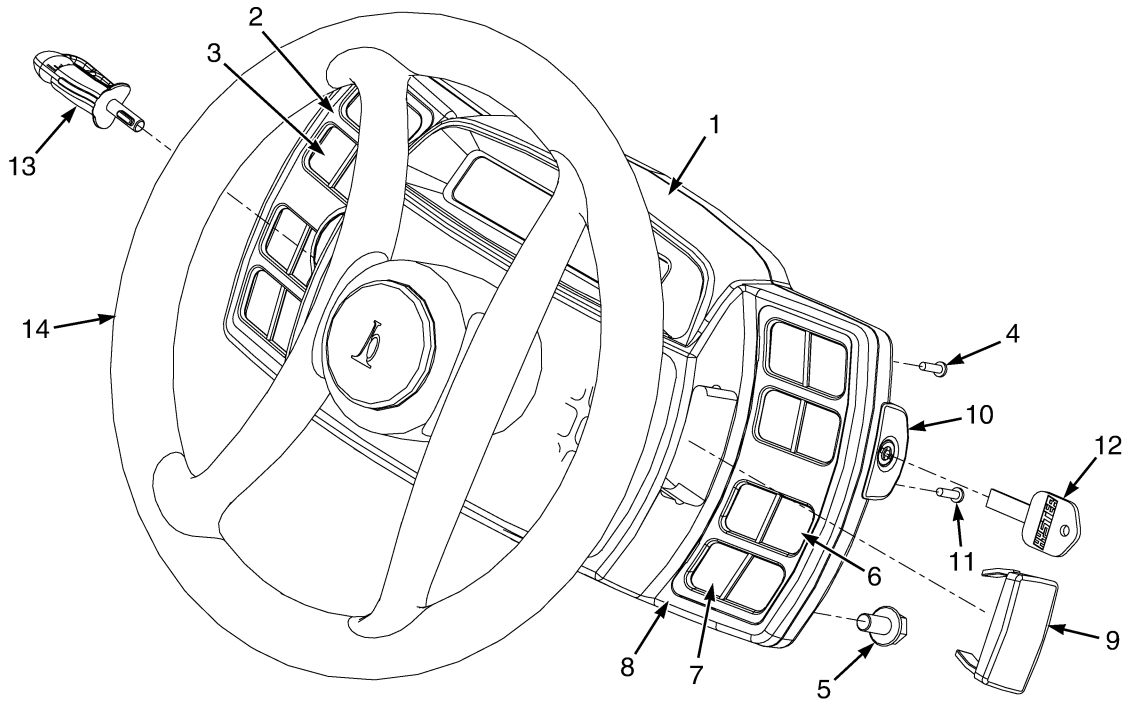

BP080952

ITEM	PART NO.	DESCRIPTION	QTY
1	582004384	Dash Display	1
2	580047049	Bezel	1
3	580050933	Label (Blank)	1
4	580047200	Screw	17
5	580047714	Capscrew	4
6	582004373	Label (Overlay RH Display Cluster)	1
7	582004374	Label (RH Display Cluster)	1
8	580047049	Bezel	1
9	580039846	Cover (Display Lever)	1
10	580037904	Ignition Switch (Without Keys)	1
11	580047200	Screw	3
12	504240712	Key Set	1
13	582005136	Lever	1
14	. . . . .	Steering Wheel (☞P22032 [Page 9-2])	1

©2010 Yale Materials Handling Corporation

https://truckmanualshub.com/

ENGINE CONTROL MODULE (FIGURE 6-5)

MAZDA 2.0L LPG

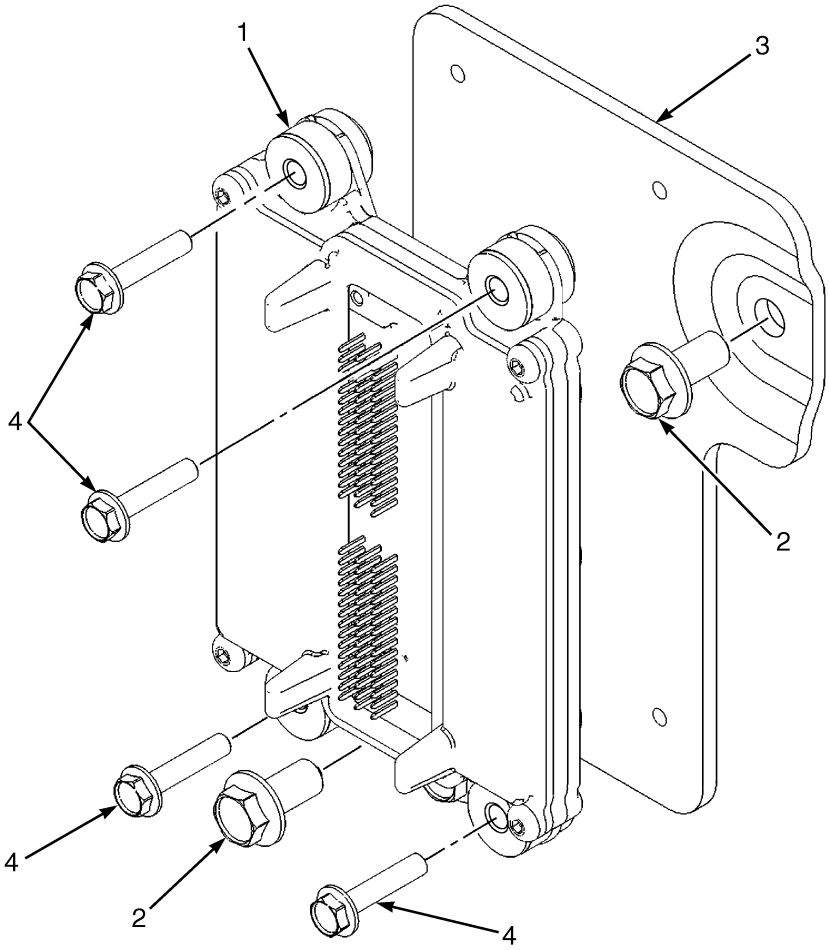

BP080543

ITEM	PART NO.	DESCRIPTION	QTY
1	582002509	Engine Control Module (2700 RPM)	1
2	580080338	Screw	2
3	580078294	Bracket	1
4	580038355	Capscrew	4

©2010 Yale Materials Handling Corporation

https://truckmanualshub.com/

WIRE HARNESS (FIGURE 6-6)
MAZDA 2.0L LPG — POWERTRAIN

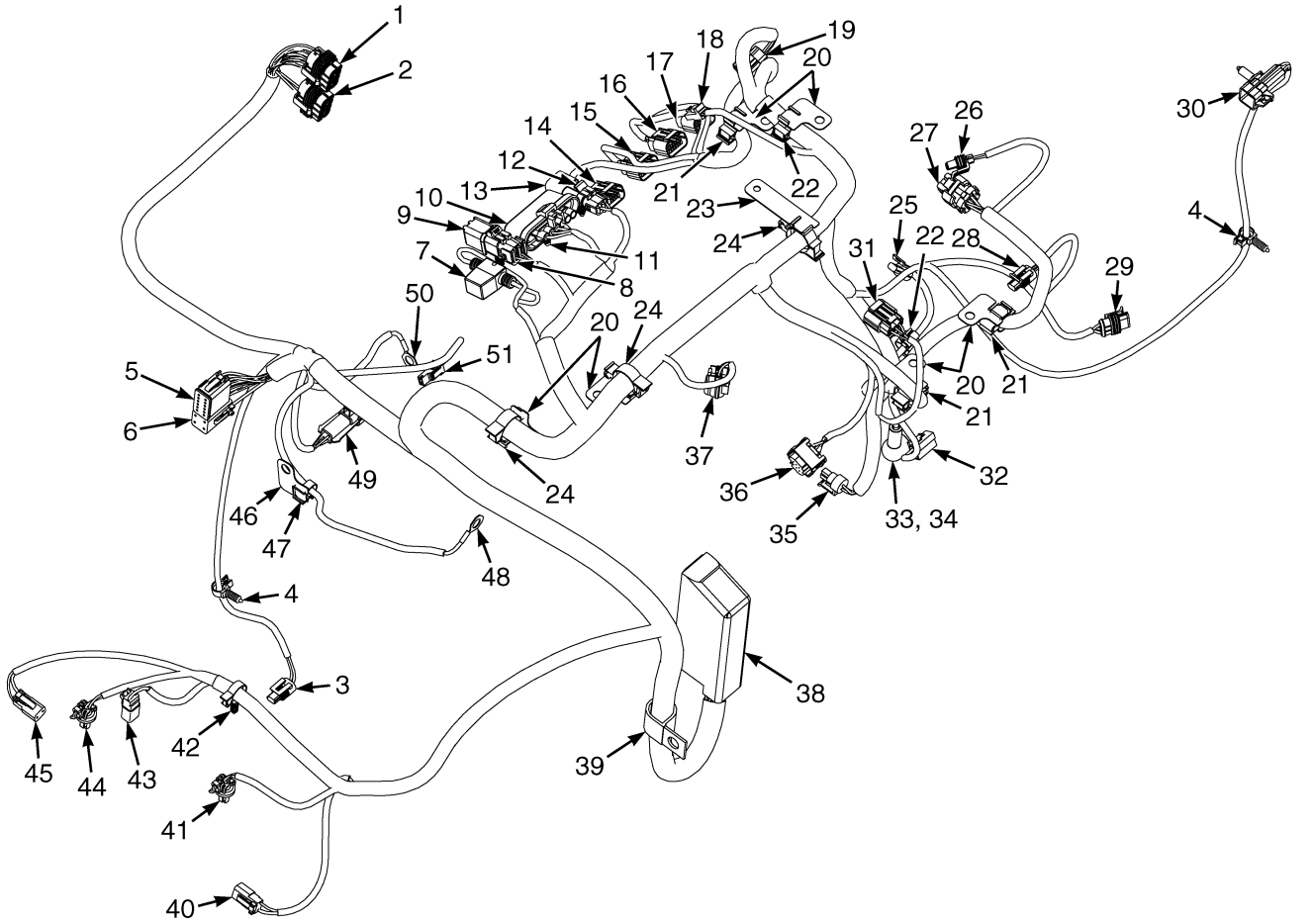

BP080950

©2010 Yale Materials Handling Corporation

https://truckmanualshub.com/

WIRE HARNESS
MAZDA 2.0L LPG – POWERTRAIN

ITEM	PART NO.	DESCRIPTION	QTY
	582005468	Wire Harness	1
1	. . . . .	Connector Assembly (PDM 1)	1
1	582002867	Connector	1
1	504288733	Terminal	5
1	580034658	Terminal	3
1	580023845	Seal	4
1	505968505	Seal	4
1	580034509	Lock (Secondary Lock)	1
2	. . . . .	Connector Assembly (PDM 2)	1
2	582002869	Connector	1
2	504288730	Seal	6
2	504288733	Terminal	2
2	580023845	Seal	2
2	580034509	Lock (Secondary Lock)	1
3	. . . . .	Connector Assembly (Transmission Temperature)	1
3	582003174	Connector	1
3	504288741	Terminal	2
4	580030876	Clip	1
5	. . . . .	Connector Assembly (Chassis Harness 1)	1
5	580022859	Connector (12-Way)	1
5	505968568	Terminal (Socket)	12
5	580026813	Connector (Secondary Lock)	1
6	. . . . .	Connector Assembly (Chassis Harness 2)	1
6	580040820	Connector	1
6	505968566	Plug	2
6	580050627	Terminal	2
6	580040821	Connector (Secondary Lock)	1
7	. . . . .	Connector Assembly (Max Fuse)	1
7	582002667	Connector (Fuse Holder)	1
7	580080025	Terminal	2
7	520044819	Fuse Connector	2
8	. . . . .	Connector Assembly (Diagnostic)	1
8	520037898	Connector	1
8	580080026	Terminal	2
9	580044131	Connector (Cap)	1
10	. . . . .	Cap	1
11	. . . . .	Connector Assembly (Fuse Holder)	1
11	504288731	Connector	1
11	504288733	Terminal	4
11	580022121	Seal	4
11	504288732	Lock (Secondary Lock)	1
12	. . . . .	Connector Assembly (ECU Test Port)	1
12	580012323	Connector	1
12	580028333	Terminal	2
12	580022121	Seal	2
13	580012324	Connector (Cap)	1
14	. . . . .	Connector Assembly (Coil 3)	1
15	. . . . .	Connector Assembly (Coil 1)	1
16	. . . . .	Connector Assembly (Coil 2)	1
17	. . . . .	Connector Assembly (Coil 4)	1

©2010 Yale Materials Handling Corporation

https://truckmanualshub.com/

WIRE HARNESS
MAZDA 2.0L LPG – POWERTRAIN

ITEM	PART NO.	DESCRIPTION	QTY
18	. . . . .	Connector Assembly	1
19	. . . . .	Connector Assembly (Cam Sensor)	1
20	580039282	Clip	7
21	580039252	Clip	3
22	580039251	Clip	2
23	580048719	Clip	1
24	580039254	Clip	3
25	. . . . .	Connector Assembly (Engine Coolant Temperature)	1
25	504288740	Connector	1
25	580039158	Terminal	2
26	. . . . .	Connector Assembly (LP Lockoff)	1
26	580041518	Connector	1
26	520045804	Terminal	2
26	520045805	Seal	2
27	. . . . .	Connector Assembly (ERP Interface)	1
27	580075365	Connector	1
27	520202601	Connector	4
28	. . . . .	Connector Assembly (LP Temperature)	1
28	580096539	Electrical Connector	1
28	504288741	Terminal	2
29	. . . . .	Connector Assembly (LPG Low Pressure)	1
29	580062118	Connector	1
29	580035034	Terminal	3
29	580040456	Wire Seal	3
30	. . . . .	Connector Assembly	1
30	580025799	Housing	1
30	580080031	Terminal (Gold)	4
30	580026649	Wire Seal	4
31	. . . . .	Connector Assembly (Map Sensor)	1
31	580049522	Connector Body	1
32	. . . . .	Connector Assembly (Alternator)	1
32	505968511	Connector Body	1
32	505966522	Terminal	2
33	580034357	Boot	1
34	520045874	E-Ring	1
35	. . . . .	Connector Assembly (Oil Pressure)	1
35	504288749	Connector	1
35	580039158	Terminal	3
36	. . . . .	Connector Assembly (Bosch Throttle)	1
36	580056679	Connector Body	1
36	580082329	Terminal	6
36	580039602	Seal	6
37	. . . . .	Connector Assembly (Intake Air Temperature)	1
37	580022997	Connector Body	1
37	580038303	Terminal	2
37	580023586	Wire Seal	2
38	. . . . .	Connector Assembly (ECU Connector)	1
38	580080032	Terminal (Gold)	56
39	580024321	Clamp	1
40	. . . . .	Connector Assembly (Forward Clutch)	1

©2010 Yale Materials Handling Corporation

https://truckmanualshub.com/

WIRE HARNESS
MAZDA 2.0L LPG – POWERTRAIN

ITEM	PART NO.	DESCRIPTION	QTY
40	580021087	Connector	1
40	505968568	Terminal (Socket)	2
40	580021088	Connector (Secondary Lock)	1
41	. . . . .	Connector Assembly (Forward Pressure)	1
41	580063697	Connector	1
41	580044852	Terminal (Socket)	3
41	580044854	Seal	3
41	580063751	Connector (Secondary Lock)	1
42	580030878	Clip	1
43	. . . . .	Connector Assembly (Transmission Enable)	1
43	505968568	Terminal (Socket)	2
43	580021088	Connector (Secondary Lock)	1
43	580021087	Connector	1
44	. . . . .	Connector Assembly (Reverse Pressure)	1
44	580063697	Connector	1
44	580044852	Terminal (Socket)	3
44	580044854	Seal	3
44	580063751	Connector (Secondary Lock)	1
45	. . . . .	Connector Assembly (Reverse Clutch)	1
45	580021087	Connector	1
45	505968568	Terminal (Socket)	2
45	580021088	Connector (Secondary Lock)	1
46	580048721	Clip	1
47	580039250	Clip	1
48	580024032	Ring Terminal	1
49	. . . . .	Connector Assembly	1
49	580025799	Housing	1
49	580080031	Terminal (Gold)	4
49	580026649	Wire Seal	4
50	580024032	Ring Terminal	1
51	. . . . .	Connector Assembly (Starter)	1
51	580055342	Connector	1
51	580055343	Terminal	1

©2010 Yale Materials Handling Corporation

https://truckmanualshub.com/

WIRE HARNESS (FIGURE 6-7)
RH CHASSIS — SHEET 1 OF 2

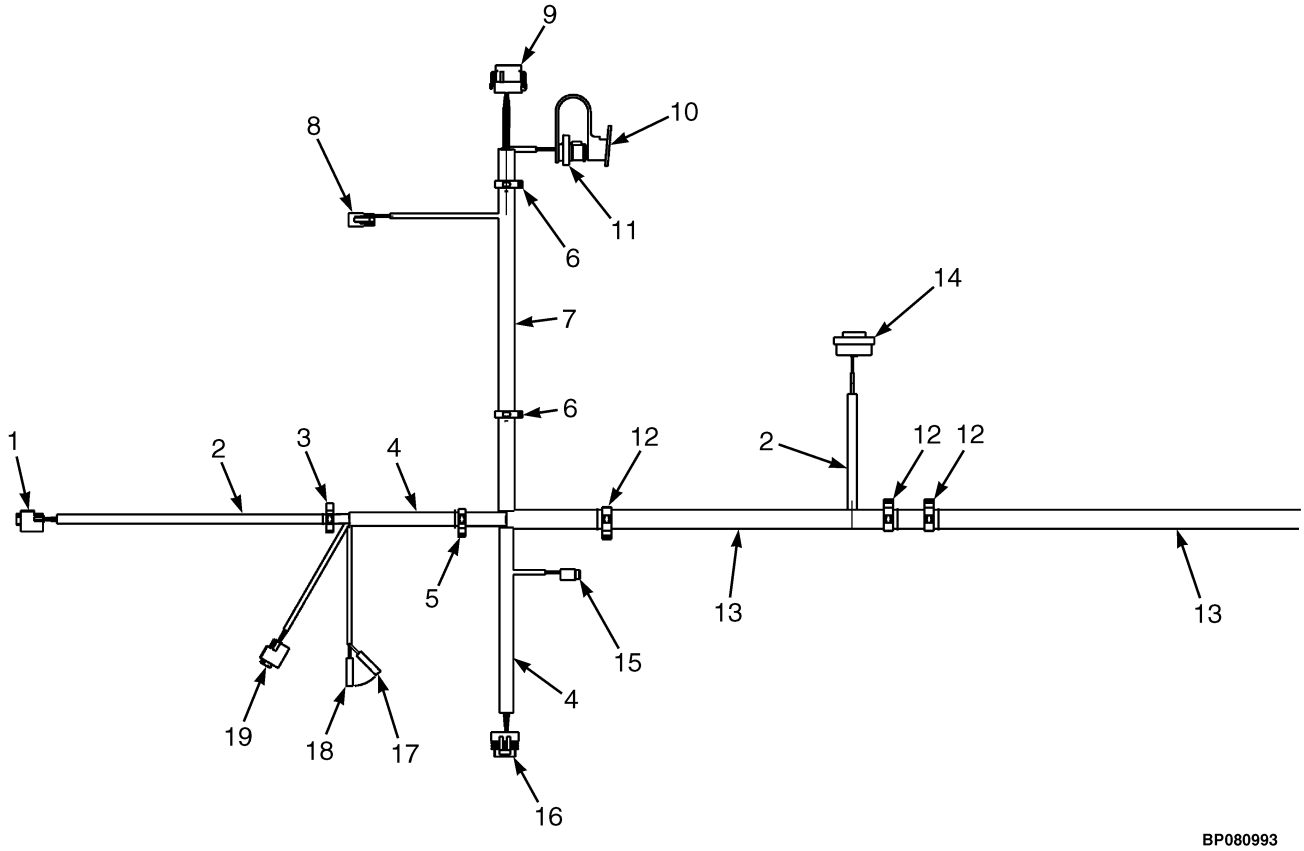

©2010 Yale Materials Handling Corporation

https://truckmanualshub.com/

WIRE HARNESS

RH CHASSIS – SHEET 1 OF 2

ITEM	PART NO.	DESCRIPTION	QTY
	582003496	Wire Harness	1
1	. . . . .	Connector Assembly (Brake Pedal)	1
1	580094544	Connector	1
1	580094546	Terminal	3
2	580044908	Conduit	AR
3	580025560	Clip	1
4	520038855	Conduit	AR
5	580025559	Clip	1
6	580026809	Clip	2
7	910065119	Conduit	AR
8	. . . . .	Connector Assembly (Horn Button)	1
8	580021087	Connector	1
8	505968568	Terminal (Socket)	2
8	580021088	Connector (Secondary Lock)	1
9	. . . . .	Connector Assembly (Display)	1
9	580036981	Connector	1
9	580039513	Terminal	9
9	580019119	Plug	3
9	580036986	Connector (Secondary Lock)	1
10	580051704	Dust Cap	1
10	580011639	Lubricant	AR
11	. . . . .	Connector Assembly (Diagnostic)	1
11	580051703	Connector	1
11	505968568	Terminal (Socket)	3
11	580039194	Connector (Secondary Lock)	1
12	580039799	Clip	3
13	520045672	Conduit	AR
14	. . . . .	Connector Assembly (Buzzer)	1
14	580086232	Buzzer	1
15	. . . . .	Connector Assembly (Hydraulic Lockout Solenoid 1)	1
15	580019245	Connector	1
15	580039513	Terminal	2
15	580019246	Connector (Secondary Lock)	1
16	. . . . .	Connector Assembly (Accelerator Pedal Sensor)	1
16	580038661	Connector	1
16	580039158	Terminal	6
17	. . . . .	Connector Assembly (Brake Fluid)	1
17	952405902	Terminal	1
17	952408901	Sleeve	1
18	. . . . .	Connector Assembly (Brake Fluid)	1
18	952405902	Terminal	1
18	952408901	Sleeve	1
19	. . . . .	Connector Assembly (Park Brake)	1
19	580094544	Connector	1
19	580094546	Terminal	3

©2010 Yale Materials Handling Corporation

https://truckmanualshub.com/

WIRE HARNESS (FIGURE 6-8)
RH CHASSIS — SHEET 2 OF 2

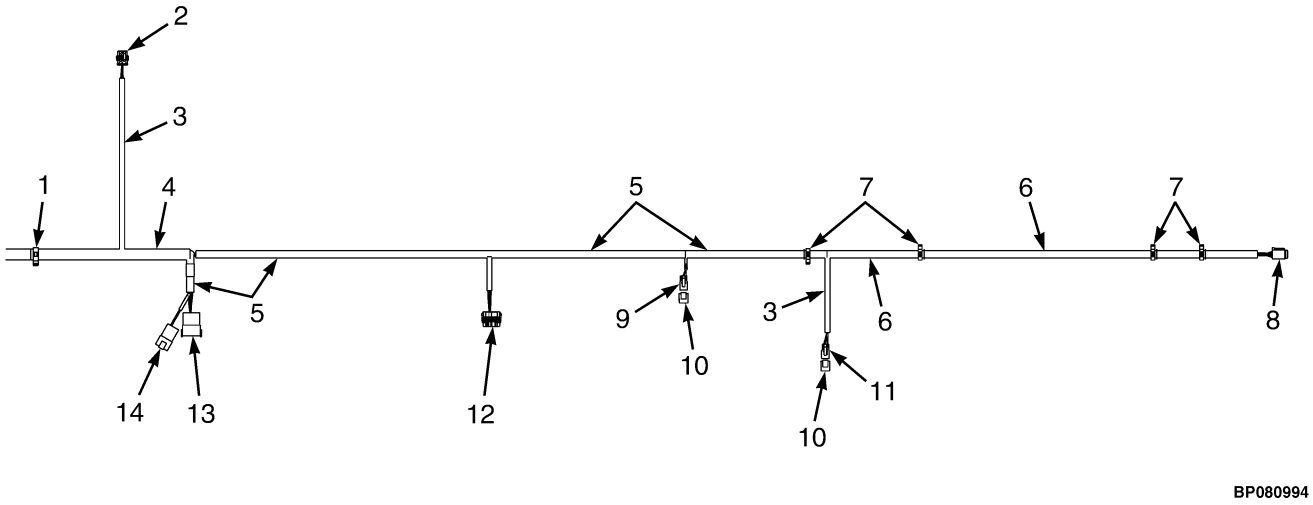

ITEM	PART NO.	DESCRIPTION	QTY
	582003496	Wire Harness	1
1	580039799	Clip	1
2	. . . . .	Connector Assembly (Horn)	1
2	580023924	Connector	1
2	520045804	Terminal	3
2	520045805	Seal	3
2	580034658	Terminal	1
2	504288730	Seal	1
3	580044908	Conduit	AR
4	520045672	Conduit	AR
5	520038855	Conduit	AR
6	580094353	Conduit	AR
7	580030878	Clip	4
8	. . . . .	Connector Assembly (To Seat Harness)	1
8	580039499	Connector	1
8	580039513	Terminal	4
8	580019119	Plug	2
8	580039500	Connector (Secondary Lock)	1
9	. . . . .	Connector Assembly (Backup Alarm)	1
9	580021087	Connector	1
9	505968568	Terminal (Socket)	2
9	580021088	Connector (Secondary Lock)	1
10	580071066	Connector (Endcap)	2
11	. . . . .	Connector Assembly (Alternate Horn Button)	1
11	580021087	Connector	1
11	505968568	Terminal (Socket)	2

©2010 Yale Materials Handling Corporation

https://truckmanualshub.com/

ITEM	PART NO.	DESCRIPTION	QTY
11	580021088	Connector (Secondary Lock)	1
12	. . . . .	Connector Assembly (PDM)	1
12	582002868	Connector	1
12	504288733	Terminal	6
12	505968505	Seal	6
12	580023845	Seal	1
12	580034509	Lock (Secondary Lock)	1
13	. . . . .	Connector Assembly (To Engine Harness)	1
13	580026816	Connector	1
13	505968514	Terminal (Pin)	12
14	. . . . .	Connector Assembly (To Engine Harness)	1
14	580040822	Connector	1
14	505968566	Plug	2
14	150121835	Terminal	2
14	580040823	Connector (Secondary Lock)	1
14	505972589	Connector (Secondary Lock)	1

©2010 Yale Materials Handling Corporation

https://truckmanualshub.com/

WIRE HARNESS ADAPTER (FIGURE 6-9)
LOW FUEL PRESSURE

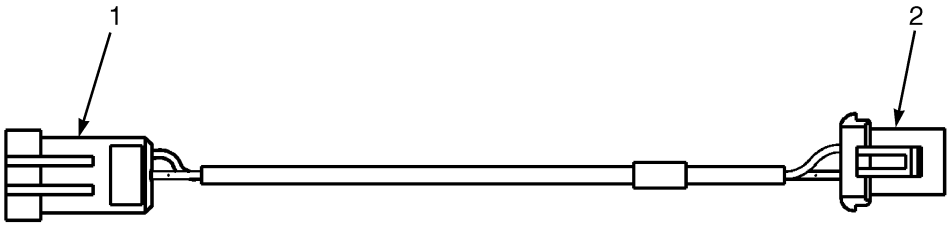

HP082028

ITEM	PART NO.	DESCRIPTION	QTY
	582002989	Wire Harness	1
1	. . . . .	Connector Assembly (To LH Chassis Harness)	1
1	272478100	Connector Block	1
1	278131700	Pin Terminal	2
1	580050847	Plug	1
1	580040456	Wire Seal	2
2	. . . . .	Connector Assembly (Low LPG Switch)	1
2	520045074	Plug	1
2	520045069	Terminal	1
2	504288733	Terminal	2
2	580023845	Seal	2

©2010 Yale Materials Handling Corporation

https://truckmanualshub.com/

7 TRANSMISSION

https://truckmanualshub.com/

https://truckmanualshub.com/

SECTION 7
TRANSMISSION

DESCRIPTION	PAGE
COUNTER/REVERSE CLUTCH	
SINGLE SPEED TRANSMISSION	7-14
INPUT/FORWARD CLUTCH	
SINGLE SPEED TRANSMISSION	7-12
TORQUE CONVERTER	7-8
TORQUE CONVERTER HOUSING AND ATTACHING PARTS	7-6
TRANSMISSION COOLING	
MAZDA 2.0L LPG	7-2
TRANSMISSION HOUSING AND ASSEMBLY	
SINGLE SPEED	7-10
TRANSMISSION MOUNT	
SINGLE SPEED	7-4

©2010 Yale Materials Handling Corporation

https://truckmanualshub.com/

TRANSMISSION COOLING (FIGURE 7-1)
MAZDA 2.0L LPG

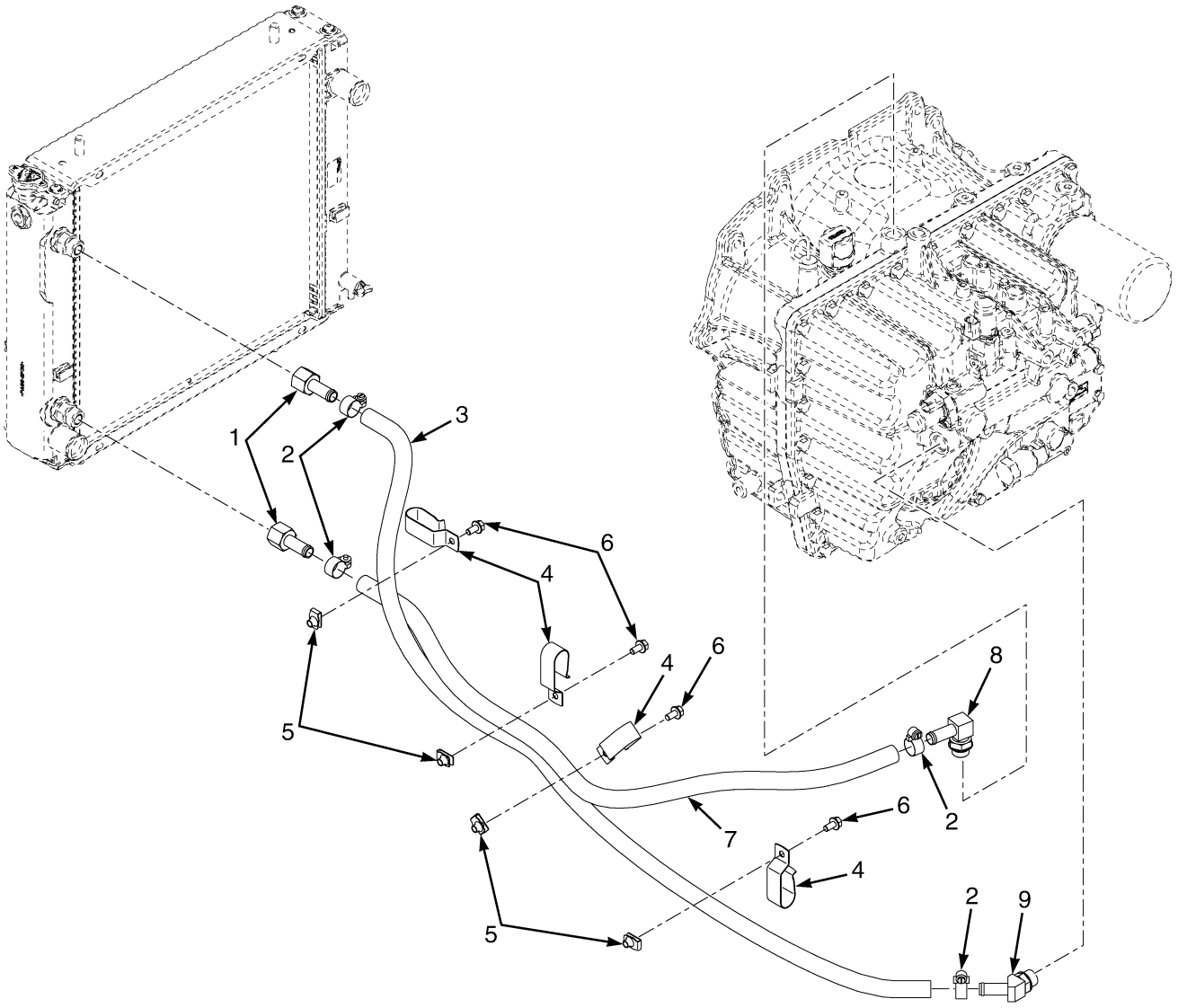

©2010 Yale Materials Handling Corporation

https://truckmanualshub.com/

TRANSMISSION COOLING

MAZDA 2.0L LPG

ITEM	PART NO.	DESCRIPTION	QTY
1	580091165	Fitting	2
2	062159500	Clamp	4
3	580094751	Hose	1
4	580049814	Clip	4
5	580026621	Nut	4
6	580047714	Capscrew	4
7	580094703	Hose	1
8	316448036	Fitting	1
8	052645400	O-Ring	1
9	580011625	Fitting	1
9	052645400	O-Ring	1

©2010 Yale Materials Handling Corporation

https://truckmanualshub.com/

TRANSMISSION MOUNT (FIGURE 7-2)
SINGLE SPEED

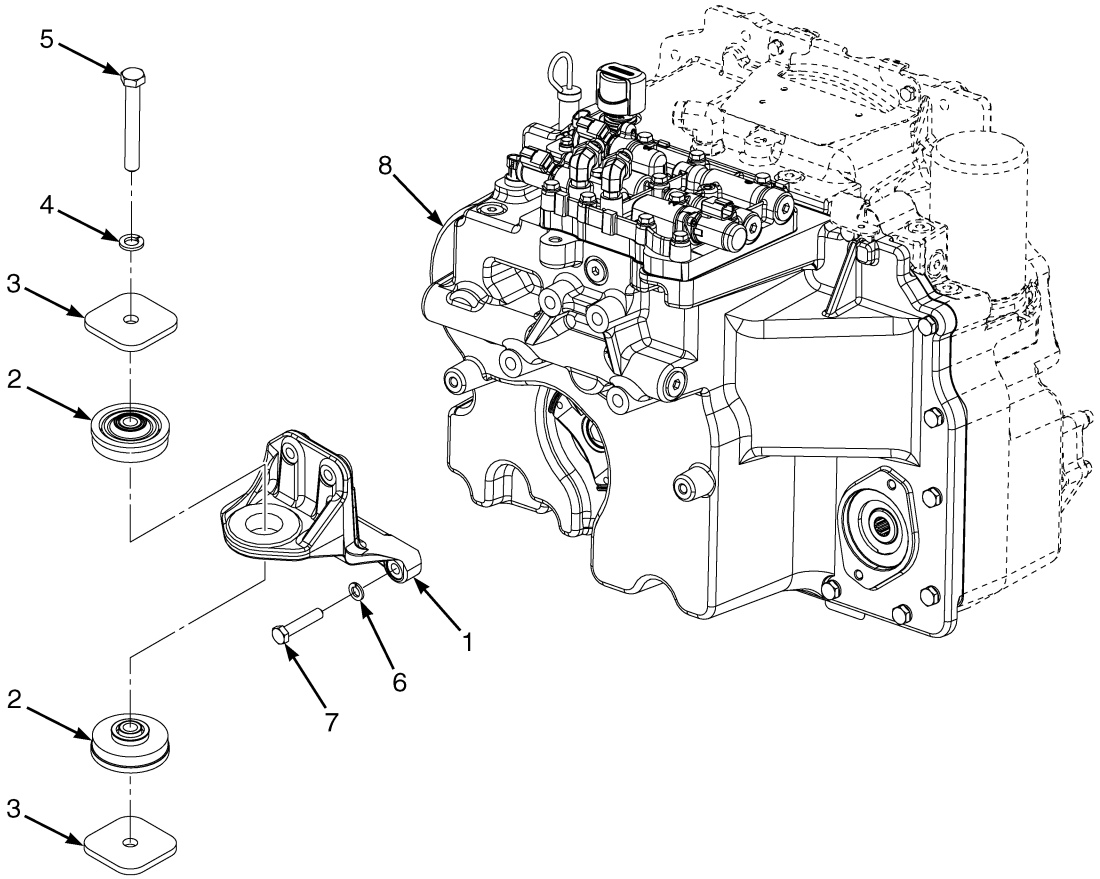

BP240180

©2010 Yale Materials Handling Corporation

https://truckmanualshub.com/

TRANSMISSION MOUNT
SINGLE SPEED

ITEM	PART NO.	DESCRIPTION	QTY
1	580093693	Bracket	1
2	580051670	Isolator	2
3	449021019	Washer	2
4	449022041	Lockwasher	1
4	449021019	Washer (Alternate Part)	1
5	931017917	Capscrew	1
6	449022017	Lockwasher	4
7	449001048	Capscrew	4
8	582003678	Transmission Assy	1
	501702903	Loctite	AR

©2010 Yale Materials Handling Corporation

https://truckmanualshub.com/

TORQUE CONVERTER HOUSING AND ATTACHING PARTS (FIGURE 7-3)

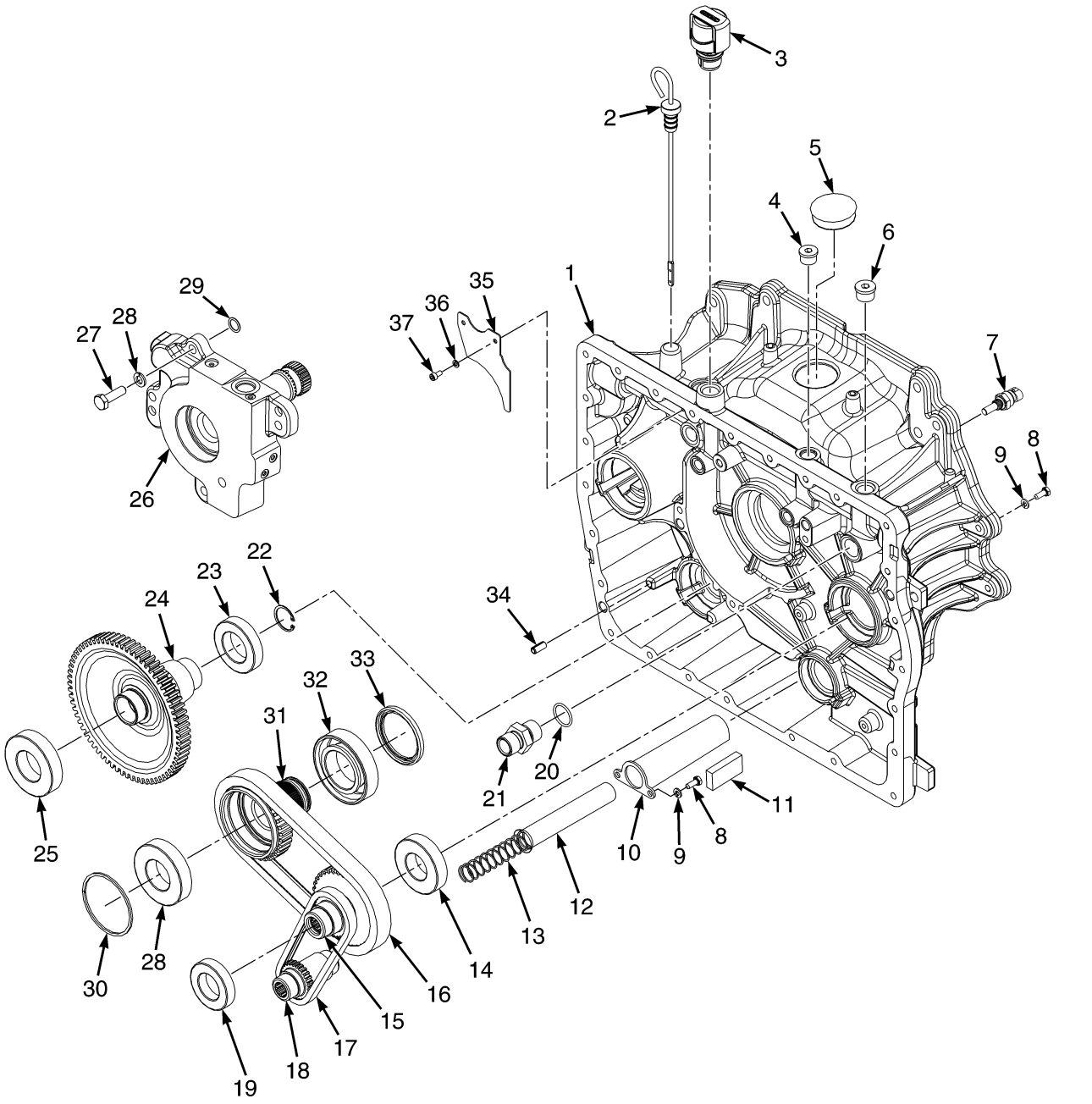

©2010 Yale Materials Handling Corporation

https://truckmanualshub.com/

TORQUE CONVERTER HOUSING AND ATTACHING PARTS

ITEM	PART NO.	DESCRIPTION	QTY
	582008126	Transmission Assy	1
1	582006406	Converter Housing	1
2	580070353	Dipstick	1
3	580073345	Breather	1
4	505967551	Fitting	1
5	580095332	Plug	1
6	514454800	Fitting	3
7	580036023	Temperature Sensor	1
8	449001412	Capscrew	2
9	449022018	Washer	2
10	580094950	Cover	1
11	505967598	Magnet	1
12	505967534	Screen	1
13	580090191	Spring	1
14	015125800	Ball Bearing	1
15	582006408	Sprocket	1
16	582008293	Drive Chain	1
17	582008292	Drive Chain	1
18	582003870	Sprocket	1
19	500505908	Bearing	1
20	501802901	O-Ring	1
21	580048738	Fitting	1
22	064570300	Snap Ring	1
23	500025905	Ball Bearing	1
24	580089318	Transmission Gear	1
25	031206200	Ball Bearing	8
26	580087219	Housing	1
27	449001015	Capscrew	4
28	~~504057795~~		
	449022013	Lockwasher	4
29	012823500	O-Ring	2
30	580045072	Sealing Ring	1
31	582006407	Sprocket	1
32	580045064	Bearing	1
33	580046273	Oil Seal (Torque Converter)	1
34	582004818	Roll Pin	2
35	582008319	Plate	1
36	449022021	Washer	2
37	505975518	Capscrew	2

©2010 Yale Materials Handling Corporation

https://truckmanualshub.com/

TORQUE CONVERTER (FIGURE 7-4)

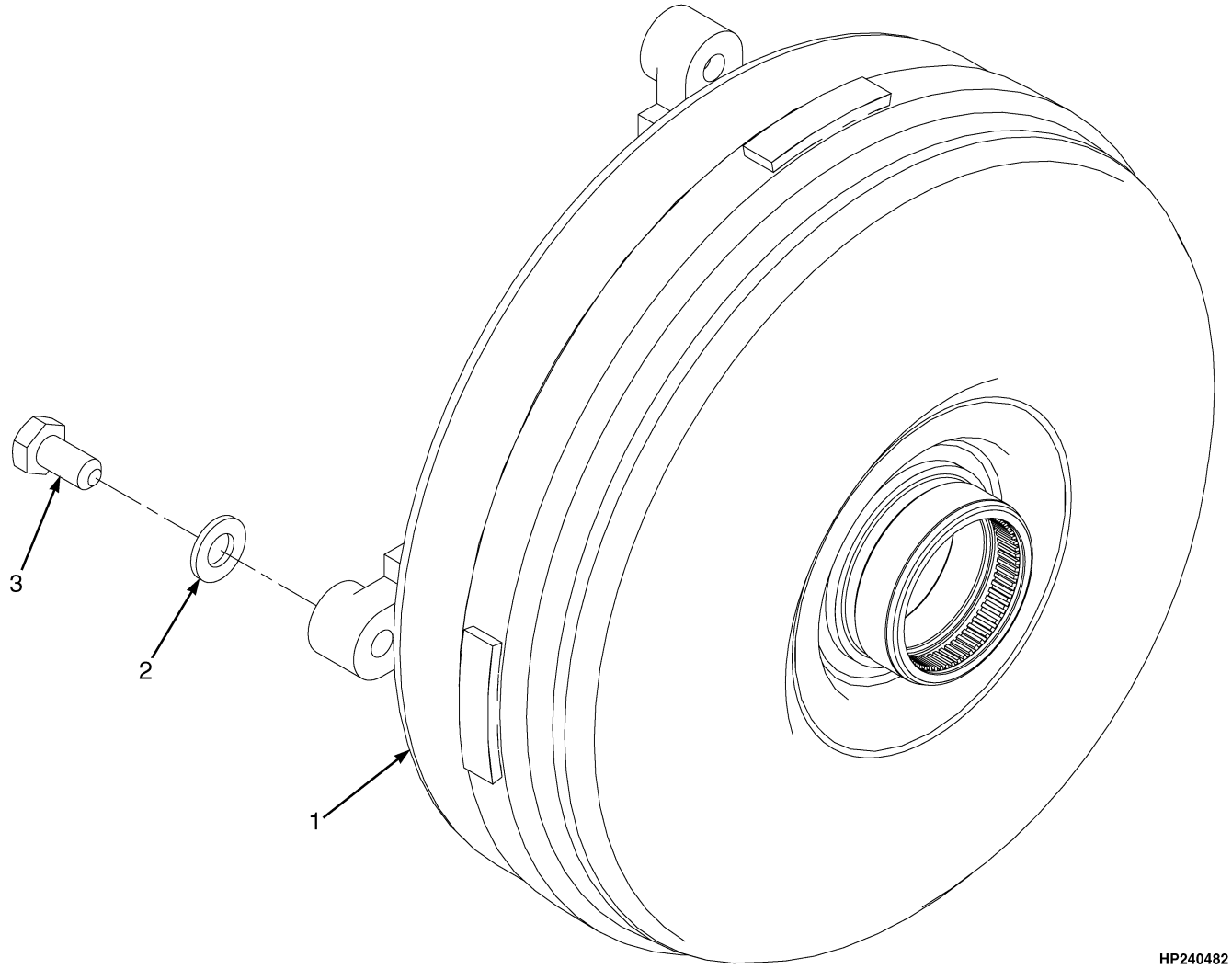

ITEM	PART NO.	DESCRIPTION	QTY
1	580047025	Torque Converter	1
2	502566904	Washer	4
3	580042194	Capscrew	4
	501702901	Loctite	AR
	504226218	Lubricant	AR

©2010 Yale Materials Handling Corporation

https://truckmanualshub.com/

NOTES

©2010 Yale Materials Handling Corporation

https://truckmanualshub.com/

TRANSMISSION HOUSING AND ASSEMBLY (FIGURE 7-5)
SINGLE SPEED

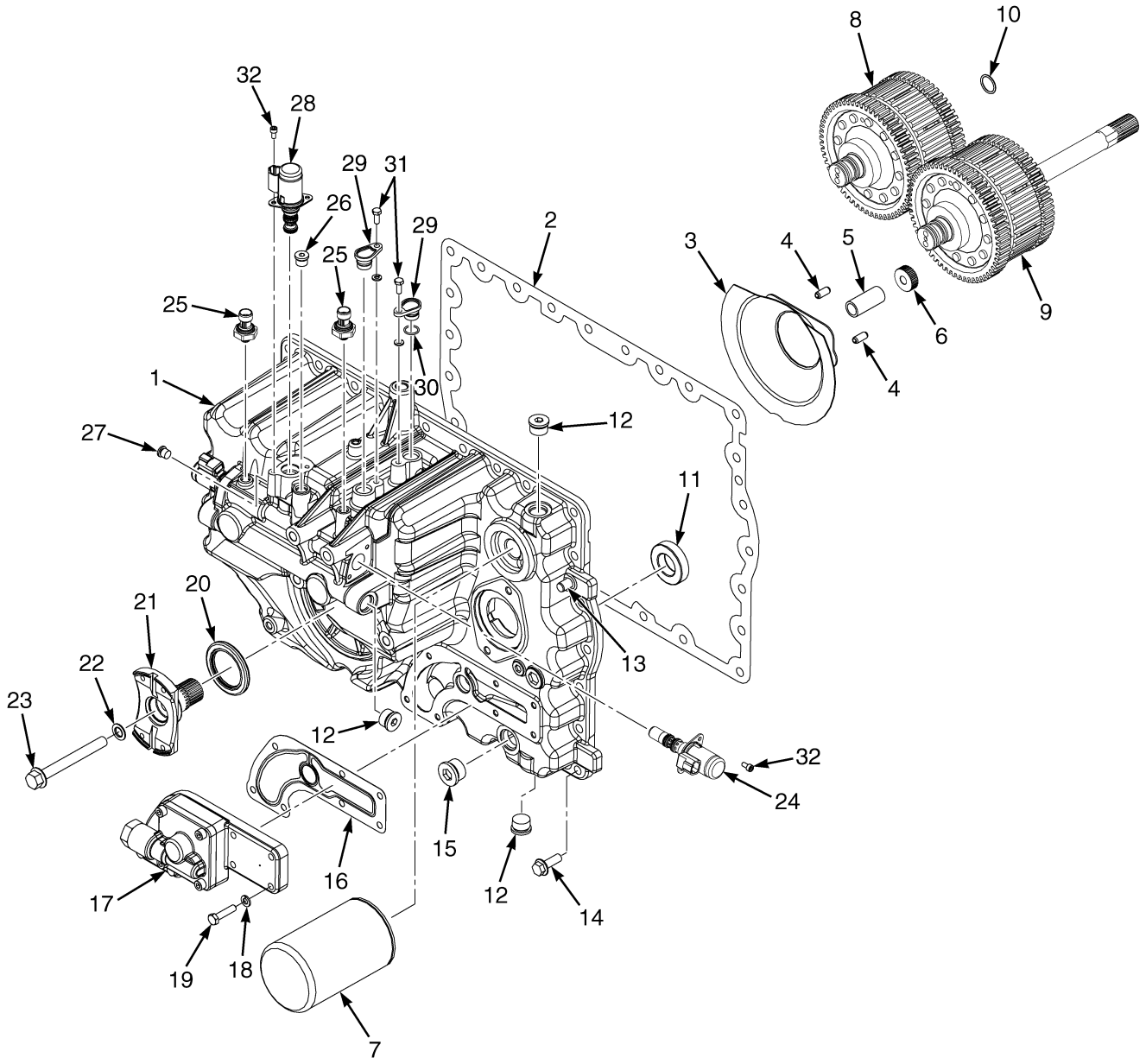

BP240178

©2010 Yale Materials Handling Corporation

https://truckmanualshub.com/

TRANSMISSION HOUSING AND ASSEMBLY
SINGLE SPEED

ITEM	PART NO.	DESCRIPTION	QTY
	582008126	Transmission Assy	1
1	582006405	Transmission Housing	1
2	580094879	Gasket	1
3	580090094	Cover	1
4	. . . . .	Pin	2
5	580074887	Spacer	1
6	580035708	Nut	1
7	580072982	Filter	1
7	550020335	Transmission Filter (Alternate Part)	1
8	580087195	Clutch Pack (Reverse) (☞P21961 [Page 7-14])	1
9	580087194	Clutch Pack (Forward) (☞P21960 [Page 7-12])	1
10	502604901	O-Ring	1
11	950409907	Ball Bearing	2
12	514454800	Fitting	3
13	580050042	Dowel	2
14	580046451	Capscrew	26
15	500390901	Fitting	1
16	580094880	Gasket	1
17	~~580087458~~		
	582007293	Charge Pump	1
17	582010310	Pin	2
17	580096514	O-Ring	1
17	582010311	Ball	1
17	582006862	Pin	1
18	449022016	Lockwasher	9
19	931013907	Capscrew	7
20	580046274	Oil Seal	1
21	580080753	Yoke	1
22	580011108	Seal	1
23	580079982	Flange Head Capscrew	1
24	580082537	Solenoid Valve	1
25	580051796	Pressure Transducer	1
26	315976070	Fitting	1
27	315976062	Fitting	1
28	580037013	Solenoid	1
29	582003502	Plug	2
30	582010096	O-Ring	2
31	449001412	Capscrew	2
32	505975518	Capscrew	6
	a 580059631	O-Ring	1

FOOTNOTES:

a Not Illustrated

©2010 Yale Materials Handling Corporation

https://truckmanualshub.com/

INPUT/FORWARD CLUTCH (FIGURE 7-6)
SINGLE SPEED TRANSMISSION

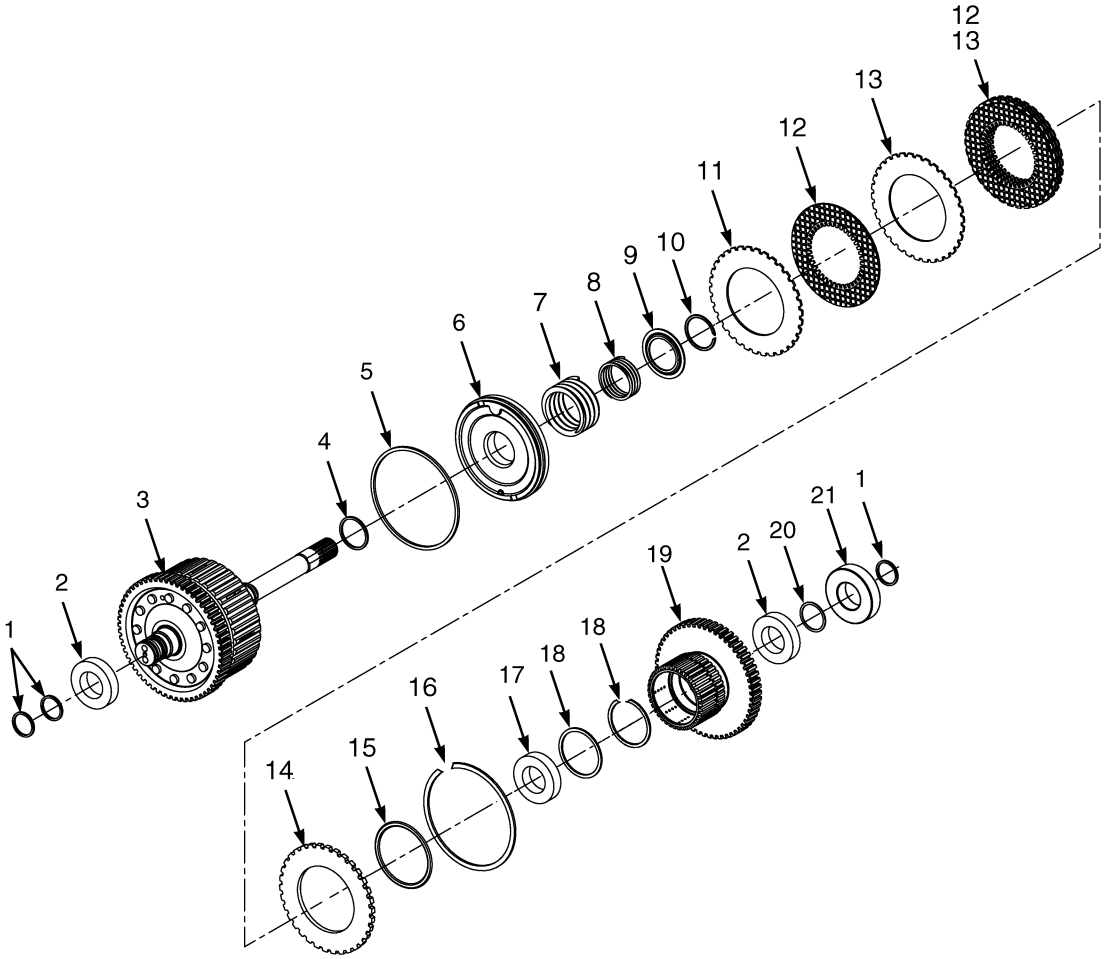

©2010 Yale Materials Handling Corporation

https://truckmanualshub.com/

INPUT/FORWARD CLUTCH
SINGLE SPEED TRANSMISSION

ITEM	PART NO.	DESCRIPTION	QTY
	580087194	Clutch Pack	1
1	. . . . .	Ring Seal	3
2	580055213	Ball Bearing	2
3	582002614	Shaft	1
4	. . . . .	Ring Seal	1
5	. . . . .	Ring Seal	1
6	524259220	Piston	1
7	580055204	Spring	1
8	580055193	Spring	1
9	580055195	Spring Guide	1
10	580055196	Snap Ring	1
11	. . . . .	Conical Plate	1
12	. . . . .	Friction Plate	5
13	. . . . .	Separator Plate	4
14	580040786	Pressure Plate (6.0 mm)	1
15	. . . . .	O-Ring	1
16	580040787	Snap Ring	1
17	580055216	Ball Bearing	1
18	580055203	Snap Ring	2
19	582002615	Clutch Gear	1
20	580040796	Snap Ring	1
21	015125800	Ball Bearing	1
	580042533	Kit-Clutch Pack Plates	1
	580060755	Kit-Clutch Pack Seals	1

©2010 Yale Materials Handling Corporation

https://truckmanualshub.com/

COUNTER/REVERSE CLUTCH (FIGURE 7-7)
SINGLE SPEED TRANSMISSION

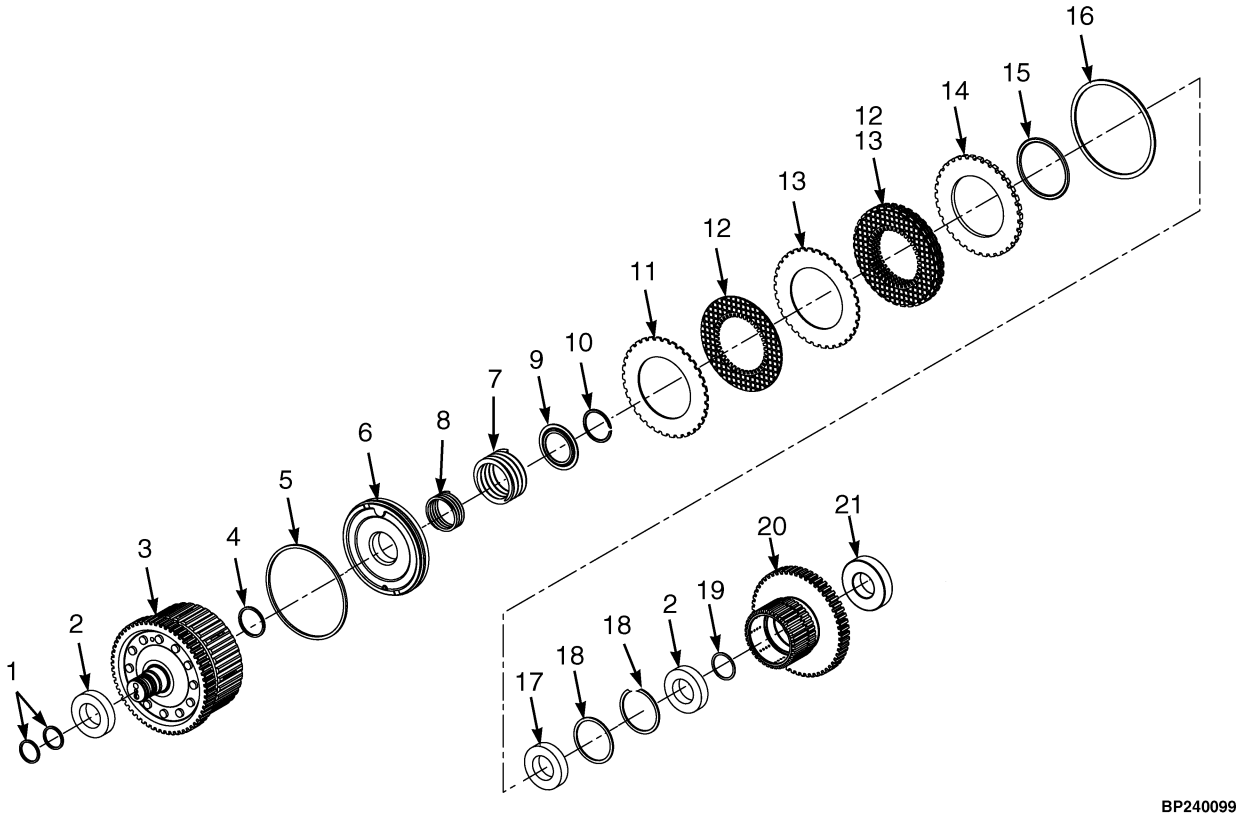

©2010 Yale Materials Handling Corporation

https://truckmanualshub.com/

COUNTER/REVERSE CLUTCH
SINGLE SPEED TRANSMISSION

ITEM	PART NO.	DESCRIPTION	QTY
	580087195	Clutch Pack	1
1	. . . . .	Seal	2
2	580055213	Ball Bearing	2
3	582002614	Shaft	1
4	. . . . .	Seal	1
5	. . . . .	Seal	1
6	524259220	Piston	1
7	580055204	Spring	1
8	580055193	Spring	1
9	580055195	Spring Guide	1
10	580055196	Snap Ring	1
11	. . . . .	Conical Plate	1
12	. . . . .	Friction Plate	5
13	. . . . .	Separator Plate	4
14	580042529	Pressure Plate (5.8 mm)	1
15	. . . . .	O-Ring	1
16	580040787	Snap Ring	1
17	580055216	Ball Bearing	1
18	580055203	Snap Ring	1
19	580040796	Snap Ring	1
20	582002615	Clutch Gear	1
21	015125800	Ball Bearing	1
	580042533	Kit-Clutch Pack Plates	1
	580060755	Kit-Clutch Pack Seals	1

©2010 Yale Materials Handling Corporation

https://truckmanualshub.com/

NOTES

©2010 Yale Materials Handling Corporation

https://truckmanualshub.com/

8 DRIVE AXLE

https://truckmanualshub.com/

https://truckmanualshub.com/

SECTION 8
DRIVE AXLE

DESCRIPTION	PAGE
CENTER SECTION	8-4
DRIVE AXLE AND ATTACHING PARTS	8-2
DRIVE TIRE AND WHEEL	8-6

©2010 Yale Materials Handling Corporation

https://truckmanualshub.com/

DRIVE AXLE AND ATTACHING PARTS (FIGURE 8-1)

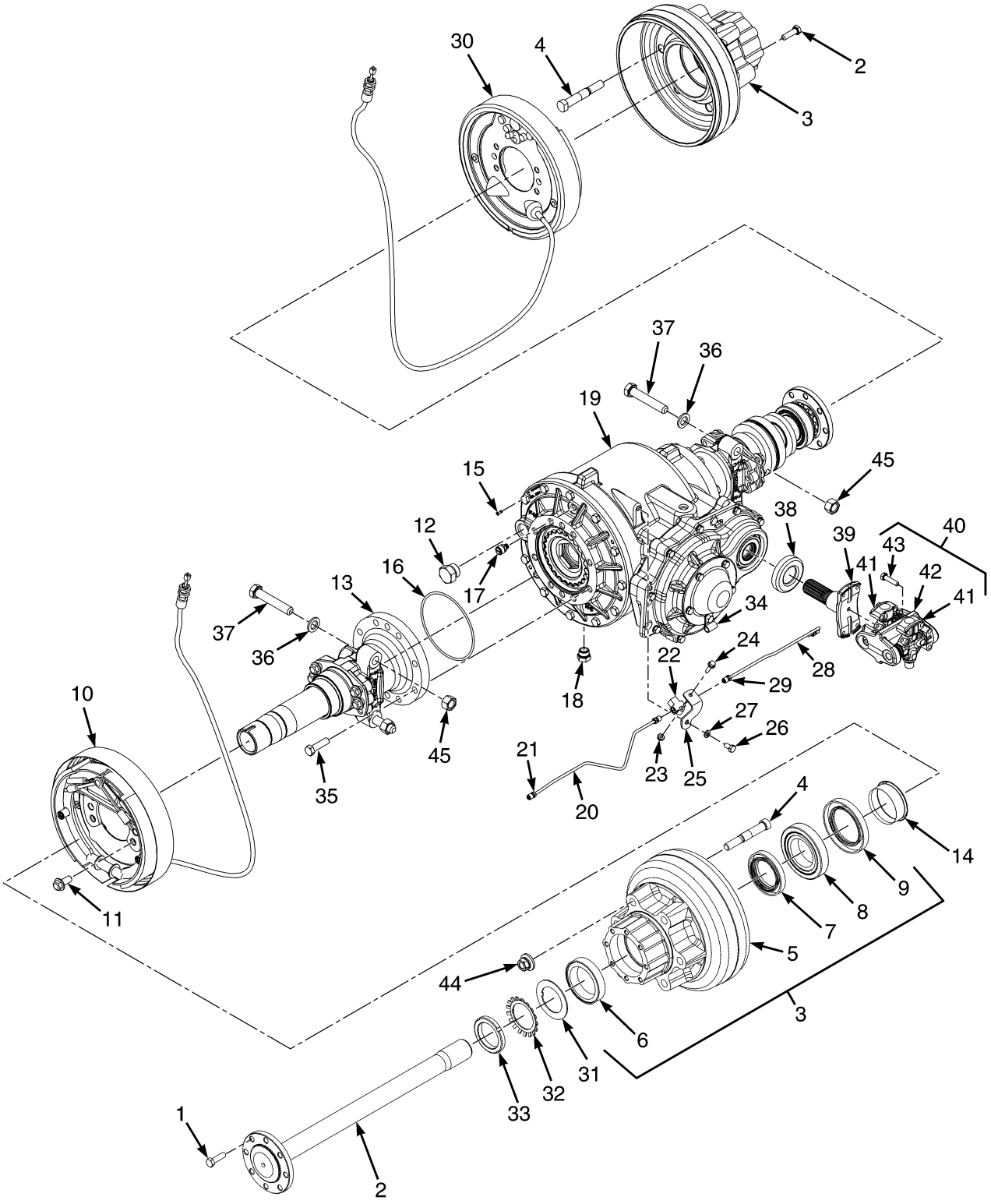

©2010 Yale Materials Handling Corporation

https://truckmanualshub.com/

DRIVE AXLE AND ATTACHING PARTS

ITEM	PART NO.	DESCRIPTION	QTY
	582006711	Drive Axle	1
1	582001179	Axle Shaft	2
2	931014906	Capscrew	16
3	580037237	Hub Assembly	2
4	580036619	Wheel Stud (Hub)	6
5	580036946	Hub (Brake Drum)	1
6	580036620	Bearing Set	1
6	519244814	Bearing Set (Optional)	1
7	921949300	Seal	1
8	909932409	Bearing Set	1
8	449058011	Roller Bearing (Optional)	1
9	920802300	Seal	1
10	580046640	Brake Assembly (LH, with Cable) (☞P22054 [Page 10-2])	1
11	908076100	Bolt	12
12	080437000	Plug	1
13	582006709	Drive Axle Housing	1
14	311321035	Capscrew	20
15	580044373	Blind Break (Pop) Rivet	2
16	582006769	O-Ring	2
17	582006770	Plug	1
18	580034643	Drain Plug	1
19	582001467	Drive Axle Center Section (☞P22029 [Page 8-4])	1
20	582001469	Tube Assy	1
21	518805618	Nut	2
22	580075200	Fitting	1
23	580047919	Nut	1
24	580049840	Capscrew	1
25	580068404	Bracket	1
26	449001415	Capscrew	1
27	449022016	Lockwasher	1
28	582001468	Tube Assy	1
29	518805618	Nut	2
30	580046641	Brake Assembly (RH, with Cable) (☞P22054 [Page 10-2])	1
31	919921300	Washer	2
32	906085100	Lockwasher	2
33	940800907	Nut	2
34	580057863	Clamp	1
34	900003231	Clamp (Optional)	1
35	502565903	Capscrew	20
36	502566903	Washer	4
37	931017918	Capscrew	4
38	. . . . .	Dust Cover	1
39	580033339	Shaft	1
40	580045195	Drive Shaft	1
41	580051814	Universal Joint	2
42	580051813	Coupling	1
43	931013907	Capscrew	8
44	580033391	Wheel Nut	12
	580080654	Nut	4

©2010 Yale Materials Handling Corporation

https://truckmanualshub.com/

CENTER SECTION (FIGURE 8-2)

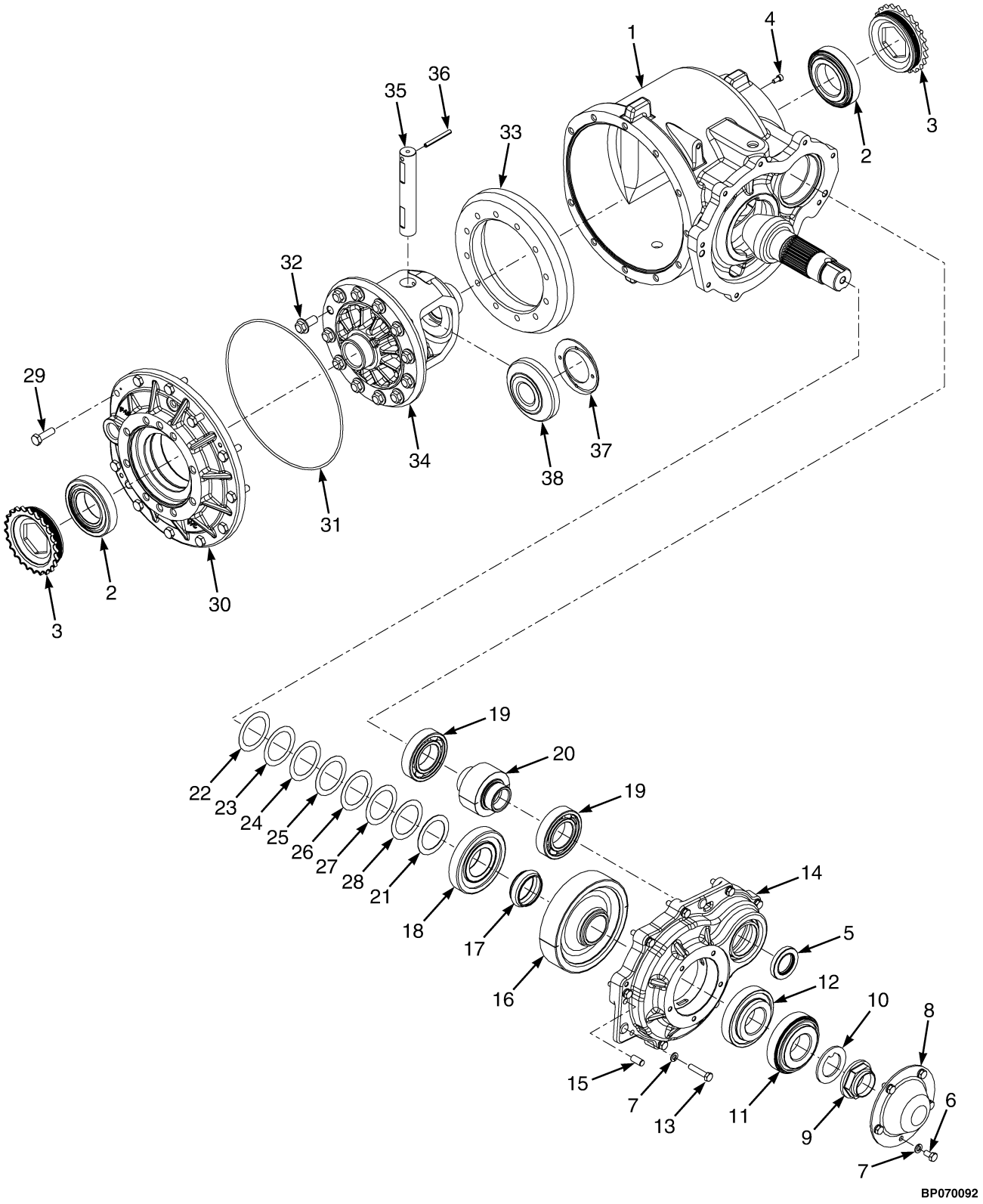

©2010 Yale Materials Handling Corporation

https://truckmanualshub.com/

CENTER SECTION

ITEM	PART NO.	DESCRIPTION	QTY
	582001467	Drive Axle Center Section (Assembly)	1
1	. . . . .	Center Section Housing	1
2	909932401	Bearing Set	2
3	582001248	Nut	2
4	932200902	Capscrew	2
5	580034754	Oil Seal	1
6	449001415	Capscrew	5
7	449022016	Lockwasher	14
8	580032975	Cover	1
9	924234401	Nut	1
10	580037836	Washer	1
11	950513905	Bearing Set	1
12	580087365	Bearing Set	1
13	449001028	Capscrew	9
14	580032974	Housing	1
15	505967544	Dowel	2
16	582001249	Gear	1
17	582001250	Sleeve	1
18	906196100	Bearing Set	1
18	582010095	Bearing Set	1
19	580034889	Ball Bearing	2
20	580033315	Gear	1
21	580034313	Shim (1.00 mm)	1
22	580052865	Shim (0.20 mm)	1
23	580052864	Shim (0.25 mm)	1
24	580034310	Shim (0.30 mm)	1
25	580052866	Shim (0.35 mm)	1
26	580034311	Shim (0.40 mm)	1
27	580052867	Shim (0.45 mm)	1
28	580034312	Shim (0.50 mm)	1
29	931014906	Capscrew	11
30	582001466	Cover	1
31	580088730	O-Ring	1
32	908076100	Bolt	12
33	580035540	Gear and Pinion	1
34	580035137	Differential	1
35	580060232	Shaft	1
36	580060225	Split Pin	1
37	580060289	Washer	2
38	580062090	Kit-Gear	2
	580057351	Sealant	1
	520042831	Adhesive	1

©2010 Yale Materials Handling Corporation

https://truckmanualshub.com/

DRIVE TIRE AND WHEEL (FIGURE 8-3)

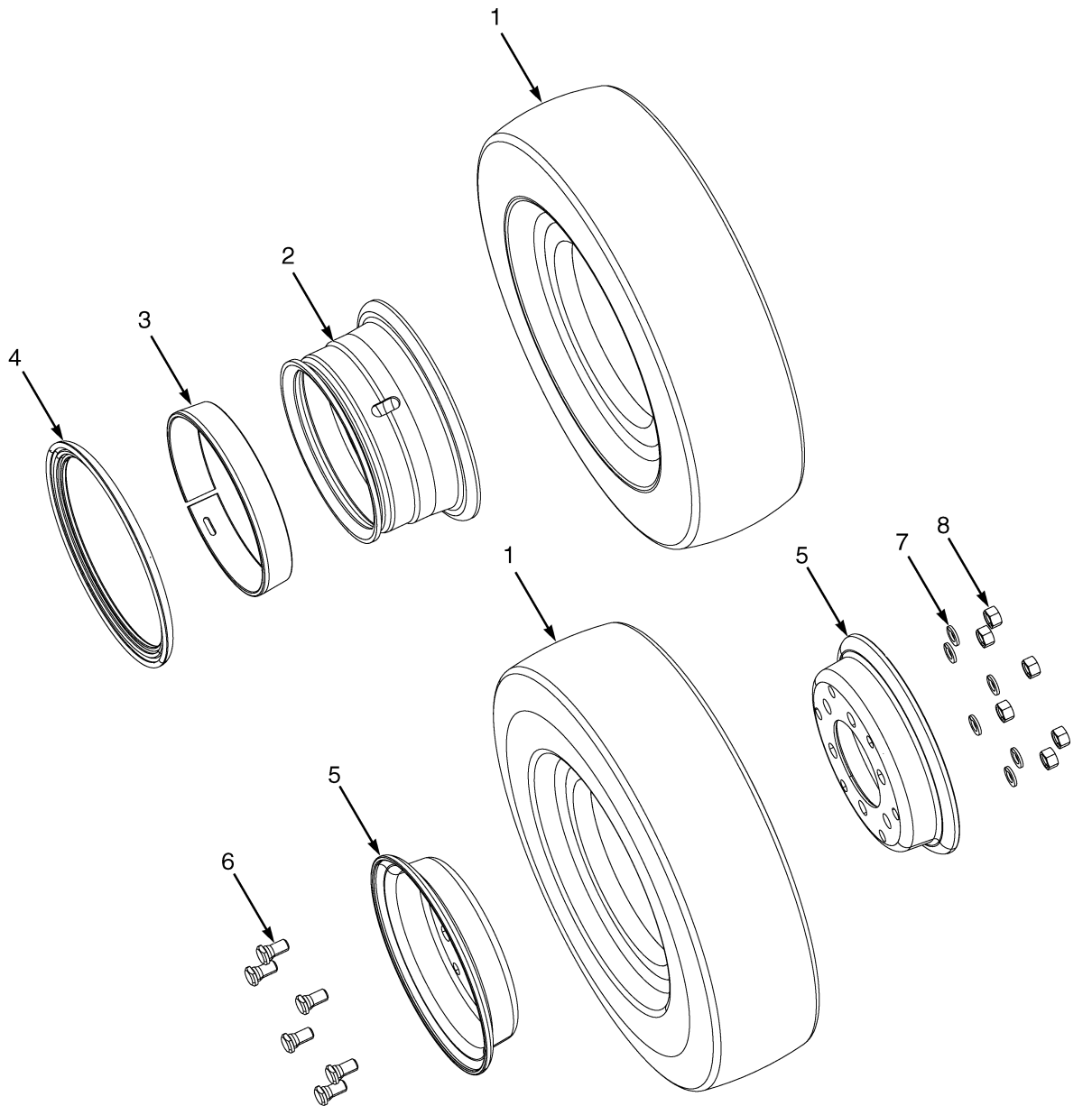

©2010 Yale Materials Handling Corporation

https://truckmanualshub.com/

DRIVE TIRE AND WHEEL

ITEM	PART NO.	DESCRIPTION	QTY
1	580043016	Solid Pneumatic Tire (6.50x10/5.0)	2
1	580043014	Pneumatic Tire (6.50 x 10-12PR)	2
2	580047728	Rim (6.50x10/5.0)	2
3	505971519	Wheel Side Ring	1
4	505971543	Wheel Lock Ring	1
5	580076563	Wheel Assy (6.50x10-12 PR)	2
5	. . . . .	Inner Rim	1
5	. . . . .	Outer Rim	1
6	906646100	Wheel Stud	6
7	449022041	Lockwasher	6
8	449015011	Nut	6
	a 505971656	Label (Warning)	1

FOOTNOTES:

a Not Illustrated

©2010 Yale Materials Handling Corporation

https://truckmanualshub.com/

NOTES

©2010 Yale Materials Handling Corporation

https://truckmanualshub.com/

9 STEERING SYSTEM

https://truckmanualshub.com/

https://truckmanualshub.com/

SECTION 9
STEERING SYSTEM

DESCRIPTION	PAGE
STEER TIRE AND WHEEL	9-10
STEERING AXLE AND ATTACHING PARTS	9-6
STEERING COLUMN ASSEMBLY	9-4
STEERING CYLINDER	9-8
STEERING WHEEL AND COLUMN	9-2

©2010 Yale Materials Handling Corporation

https://truckmanualshub.com/

STEERING WHEEL AND COLUMN (FIGURE 9-1)

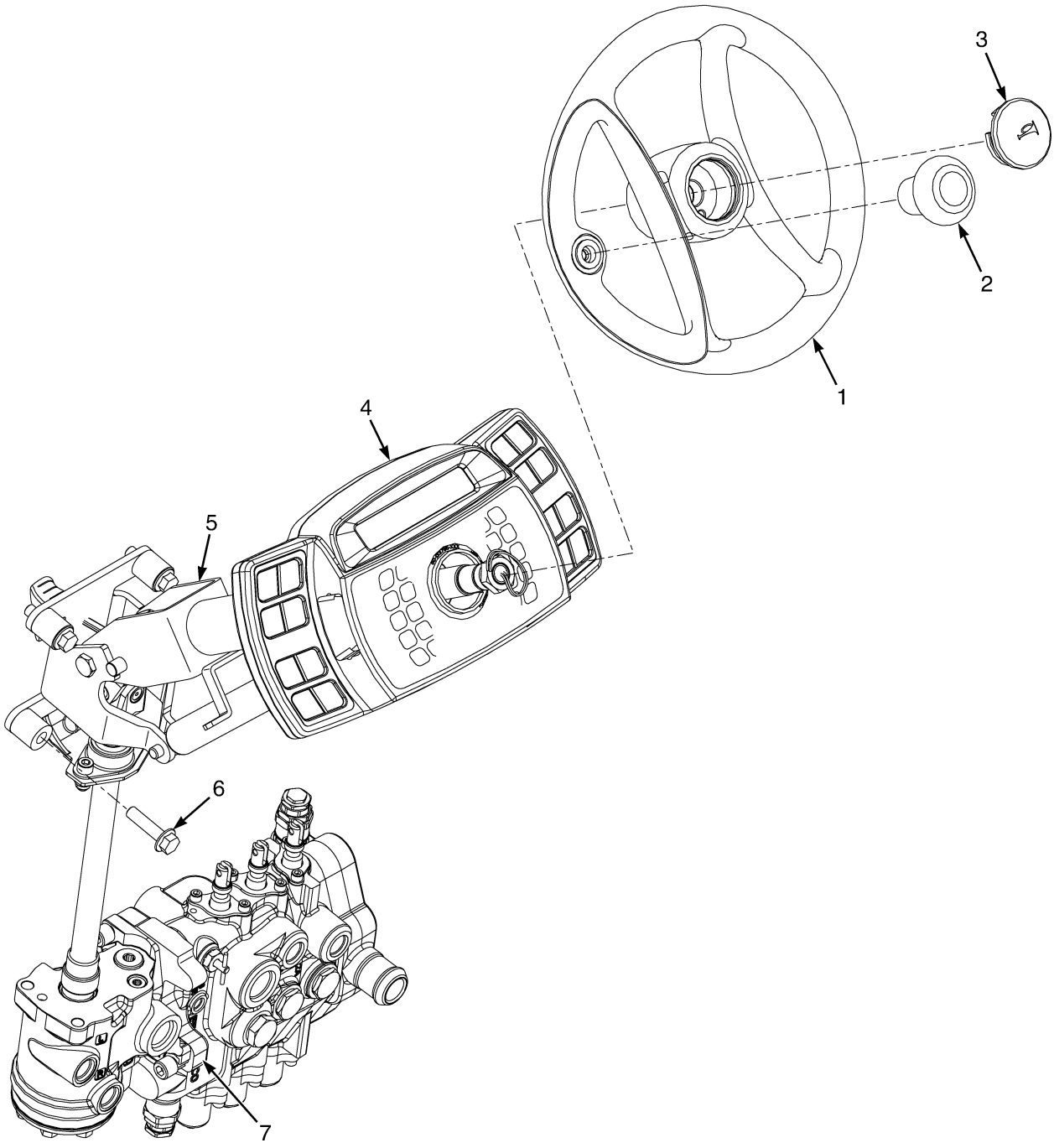

BP220175

©2010 Yale Materials Handling Corporation

https://truckmanualshub.com/

STEERING WHEEL AND COLUMN

ITEM	PART NO.	DESCRIPTION	QTY
1	580046399	Steering Wheel (Without Spinner Knob)	1
1	580045338	Steering Wheel (With Spinner Knob)	1
2	580058078	Knob	1
2	580086874	Knob	1
2	580086875	Cap	1
2	580086876	Insert	1
3	580065002	Horn Button	1
4	. . . . .	Display Cluster (☞P22011 [Page 6-8])	1
5	580081787	Steering Column (☞P22033 [Page 9-4])	1
6	580032011	Capscrew	4
7	. . . . .	Hydraulic Control Valve	1

©2010 Yale Materials Handling Corporation

https://truckmanualshub.com/

STEERING COLUMN ASSEMBLY (FIGURE 9-2)

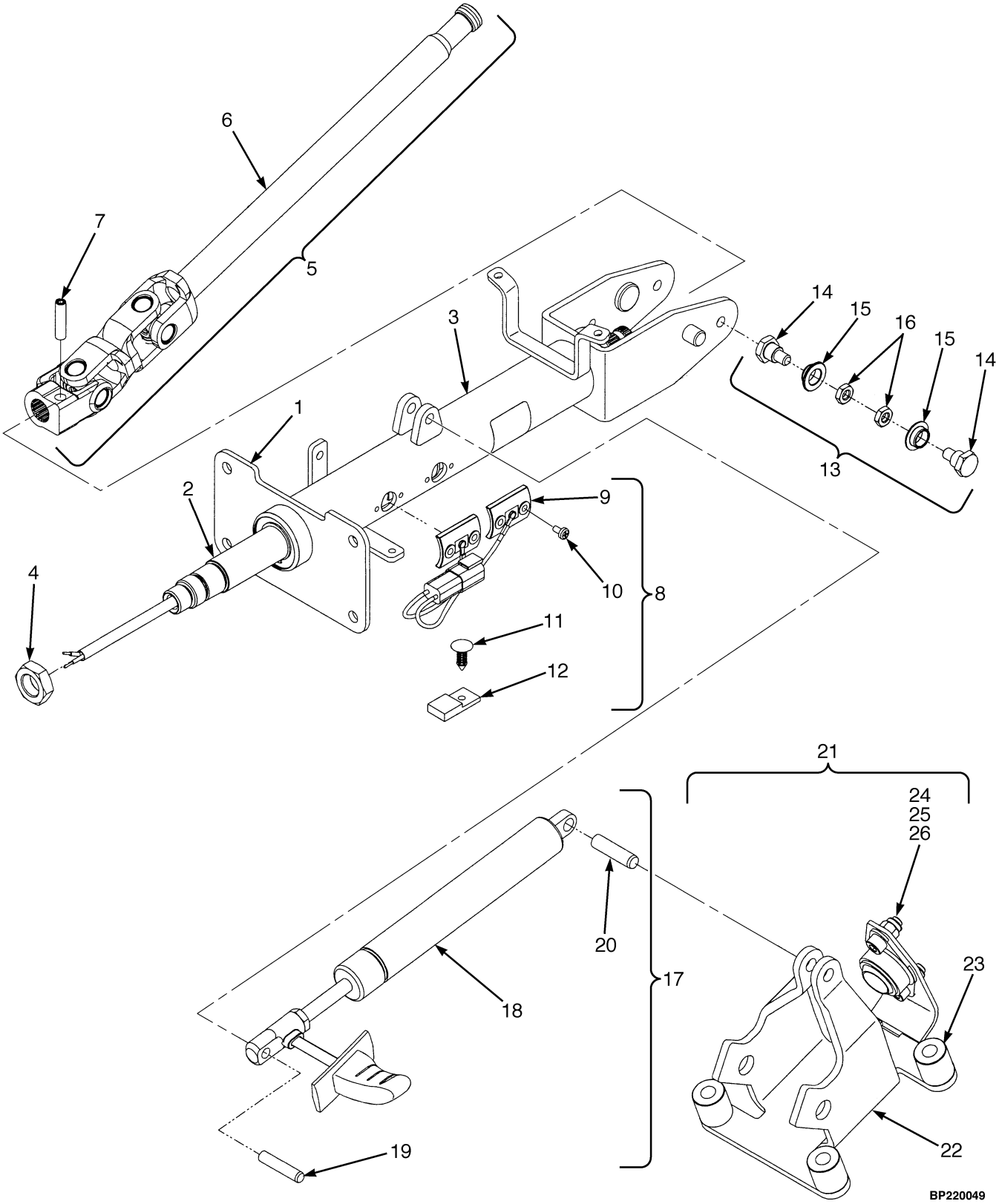

©2010 Yale Materials Handling Corporation

https://truckmanualshub.com/

STEERING COLUMN ASSEMBLY

ITEM	PART NO.	DESCRIPTION	QTY
	580081787	Steering Column	1
1	580078690	Kit-Shaft (Upper)	1
2	. . . . .	Shaft Assembly (Upper)	1
3	. . . . .	Housing	1
4	580049810	Kit-Nut	1
4	. . . . .	Nut	2
5	580049811	Kit-Shaft (Lower)	1
6	. . . . .	Shaft Assembly (Lower)	1
7	. . . . .	Pin	1
8	580049812	Kit-Contact	1
9	. . . . .	Contact Assembly (Horn)	1
10	. . . . .	Screw	4
11	. . . . .	Fastener	1
12	. . . . .	Connector	1
13	580049806	Kit-Pivot (Lower)	1
14	. . . . .	Bolt (Pivot)	2
15	. . . . .	Bushing	2
16	. . . . .	Nut	2
17	580049807	Kit-Gas Spring	1
18	. . . . .	Gas Spring	1
19	. . . . .	Pin	1
20	. . . . .	Pin	1
21	580049808	Kit-Support	1
22	. . . . .	Support	1
23	. . . . .	Spacer	4
24	. . . . .	Nut	2
25	. . . . .	Washer	2
26	. . . . .	Screw	2

©2010 Yale Materials Handling Corporation

https://truckmanualshub.com/

STEERING AXLE AND ATTACHING PARTS (FIGURE 9-3)

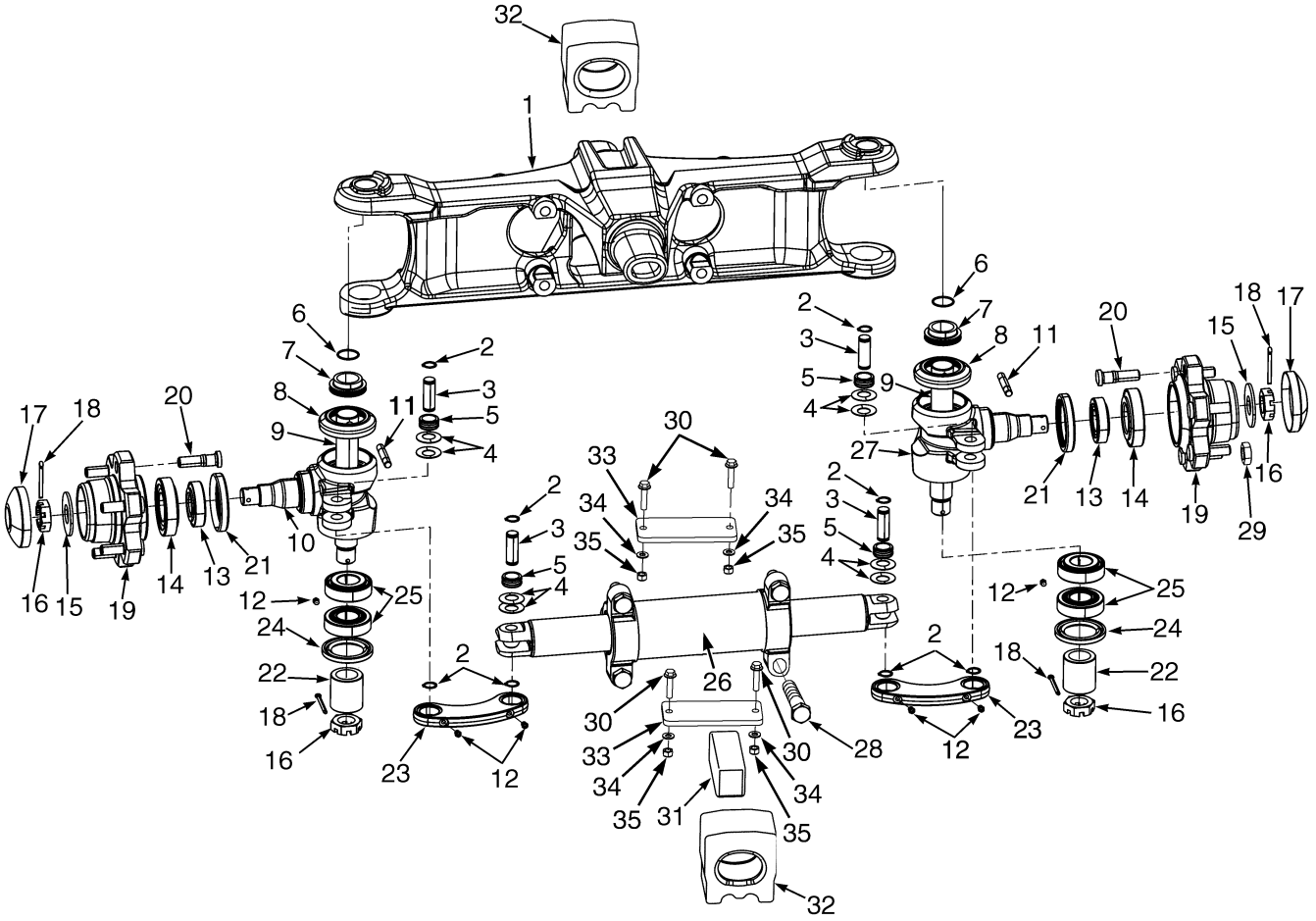

BP220174

©2010 Yale Materials Handling Corporation

https://truckmanualshub.com/

STEERING AXLE AND ATTACHING PARTS

ITEM	PART NO.	DESCRIPTION	QTY
	580035777	Steer Axle Assembly	1
1	580035774	Steering Axle	1
2	015918200	Snap Ring	8
3	580052360	Pin	4
4	505972590	Spherical Washer	8
5	505972565	Bushing	4
6	505969521	O-Ring	2
7	505971538	Spacer	2
8	505971512	Seal	2
9	580040319	King Pin	2
10	580035771	Spindle (LH)	1
11	505969551	Pin	2
12	015631500	Grease Fitting	6
13	950517907	Bearing Set	2
13	909932406	Bearing Set (Optional)	2
14	580061343	Bearing Set	2
14	909932405	Bearing Set (Optional)	2
15	580040318	Washer	2
16	505971513	Nut	4
17	922363300	Cap	2
18	015421600	Cotter Pin	4
19	580035778	Hub	2
20	580061342	Wheel Stud	6
21	958506995	Seal	2
22	505971590	Sleeve	2
23	580035775	Tie Rod	2
24	505970544	Oil Seal	2
25	059695400	Bearing Set	4
25	582002078	Bearing Set	4
26	580036340	Steering Cylinder (☞P22064 [Page 9-8])	1
27	580035770	Spindle (RH)	1
28	311323023	Capscrew	4
29	580033391	Wheel Nut	12
30	580049331	Capscrew	4
31	580002046	Rubber Mount	1
32	524179205	Rubber Mount	2
33	582001483	Plate	2
34	449021006	Washer	4
35	909882404	Nut	4

©2010 Yale Materials Handling Corporation

https://truckmanualshub.com/

STEERING CYLINDER (FIGURE 9-4)

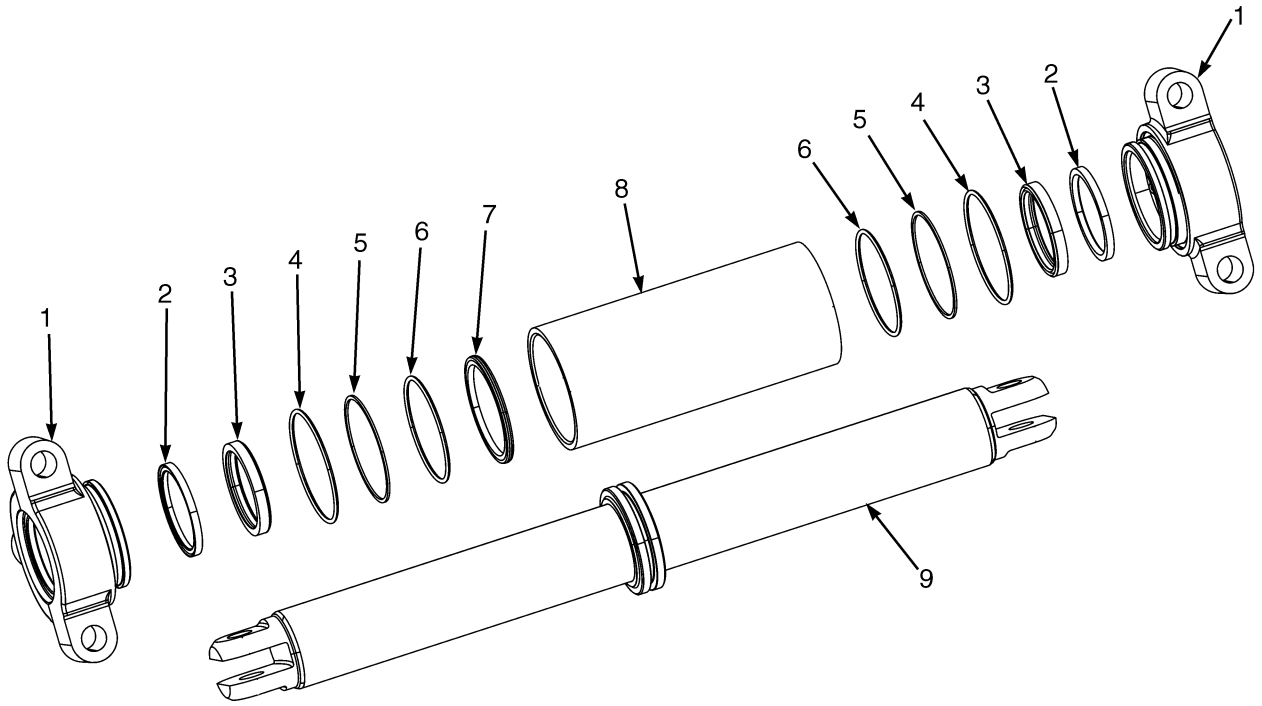

ITEM	PART NO.	DESCRIPTION	QTY
	580036340	Steering Cylinder	1
1	580039584	End Cap	2
2	580061341	Rod Wiper	2
3	580039757	Rod Seal	2
4	052674100	O-Ring	2
5	504225242	Back-Up Ring	2
6	504236262	O-Ring	2
7	504305701	Piston Seal	1
8	580040032	Tube Wldmt-Cylinder	1
9	580039586	Cylinder Rod	1
	580039758	Kit-Seal	1

©2010 Yale Materials Handling Corporation

https://truckmanualshub.com/

NOTES

©2010 Yale Materials Handling Corporation

https://truckmanualshub.com/

STEER TIRE AND WHEEL (FIGURE 9-5)

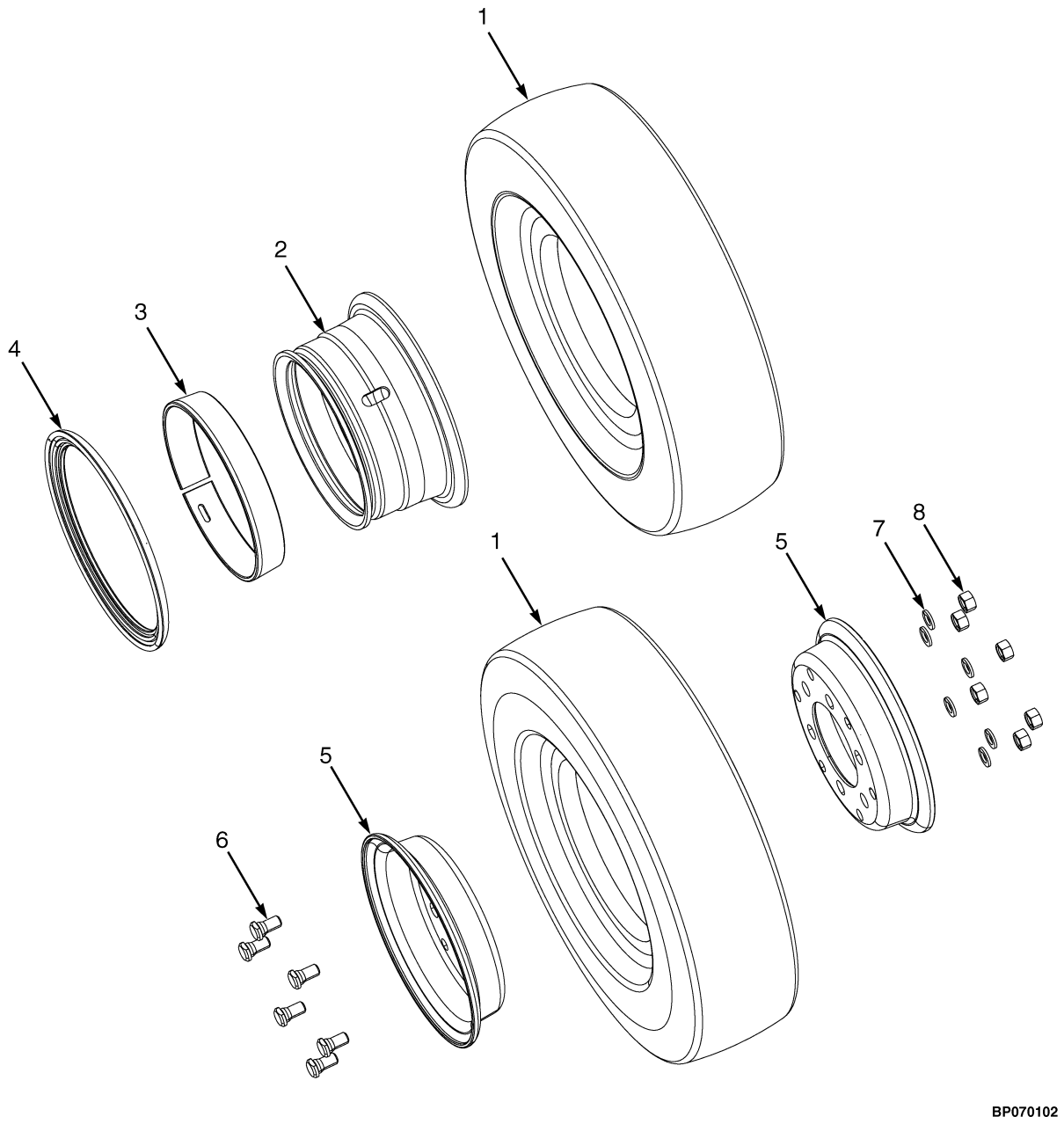

©2010 Yale Materials Handling Corporation

https://truckmanualshub.com/

STEER TIRE AND WHEEL

ITEM	PART NO.	DESCRIPTION	QTY
1	504060776	Solid Pneumatic Tire (18x7-8)	2
1	580043015	Pneumatic Tire (5.00x8-10PR)	2
2	580047741	Rim (4.33 x 8) (18x7-8)	2
3	902136802	Ring	1
4	902136803	Lockring	1
5	580076561	Wheel Assy (5.00x8-10PR)	2
5	. . . . .	Inner Rim	1
5	. . . . .	Outer Rim	1
6	906268100	Wheel Stud	6
7	449022017	Lockwasher	6
8	580064978	Nut	6
	a 505971656	Label (Warning)	1

FOOTNOTES:

a Not Illustrated

©2010 Yale Materials Handling Corporation

https://truckmanualshub.com/

NOTES

©2010 Yale Materials Handling Corporation

https://truckmanualshub.com/

10 BRAKE SYSTEM

https://truckmanualshub.com/

https://truckmanualshub.com/

SECTION 10
BRAKE SYSTEM

DESCRIPTION	PAGE
BRAKE ASSEMBLY	10-2
BRAKE PEDAL LINKAGE	10-4
PARK BRAKE	10-6

©2010 Yale Materials Handling Corporation

https://truckmanualshub.com/

BRAKE ASSEMBLY (FIGURE 10-1)

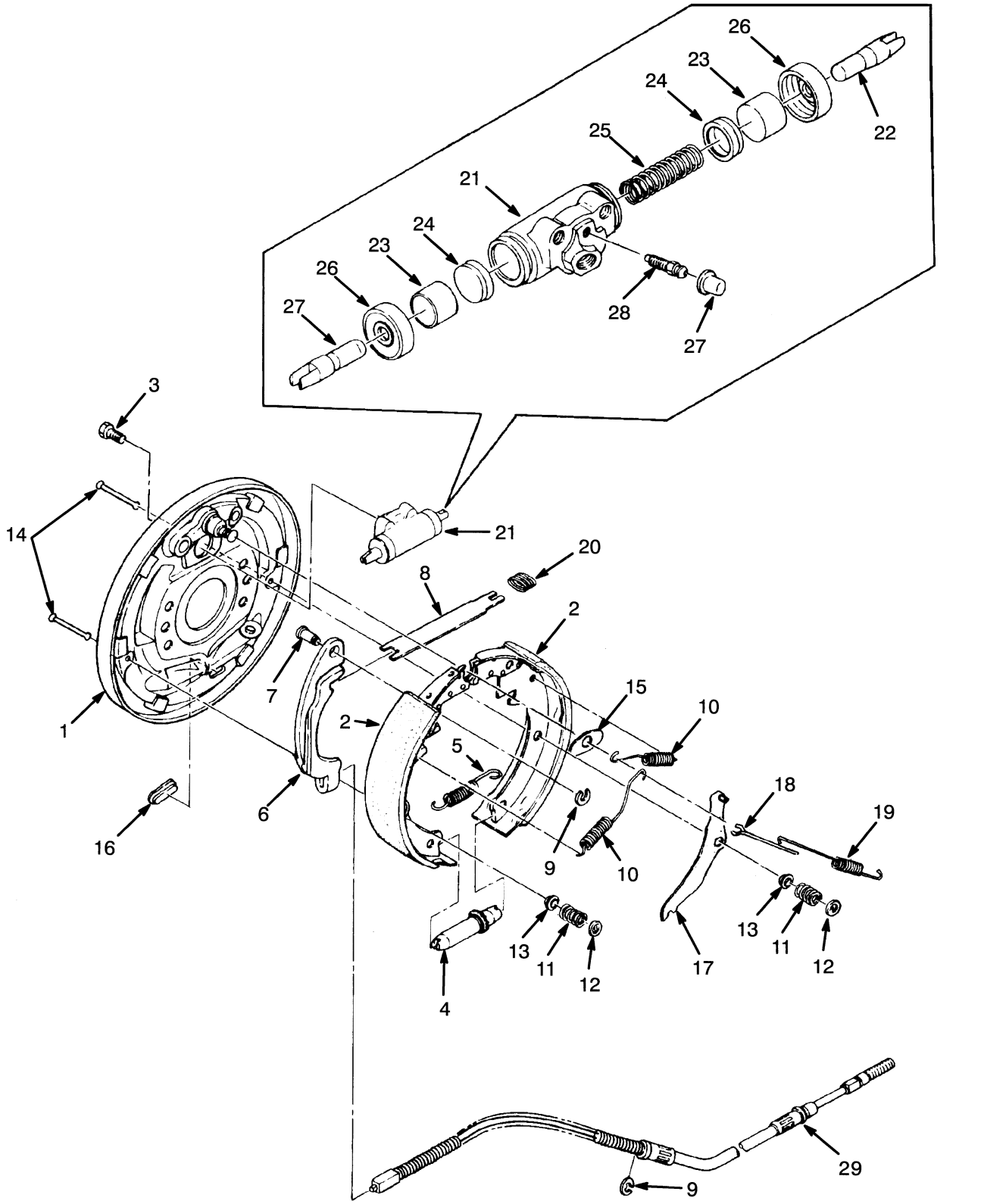

©2010 Yale Materials Handling Corporation

https://truckmanualshub.com/

BRAKE ASSEMBLY

KEY:
A: Left Hand
B: Right Hand

ITEM	PART NO.	DESCRIPTION	QTY A	QTY B
	580046640	Brake Assembly (LH, with Cable)	1	..
	580046641	Brake Assembly (RH, with Cable)	..	1
	580060321	Brake Assembly (LH, without cable)	1	..
	580060322	Brake Assembly (RH, without cable)	..	1
1	902194801	Backplate	..	1
1	902194802	Backplate	1	..
2	. . . . .	Brake Shoe	2	2
3	902194804	Bolt	2	2
4	. . . . .	Adjuster Assembly	..	1
4	. . . . .	Adjuster Assembly	1	..
5	. . . . .	Spring (Adjuster)	1	1
6	902194805	Lever (RH)	..	1
6	902194806	Lever (LH)	1	..
7	. . . . .	Pin	1	1
8	902194808	Strut	1	1
9	902194809	Retaining Ring	2	2
10	902194810	Spring	2	2
11	. . . . .	Spring (Shoe Hold Down)	2	2
12	. . . . .	Washer	2	2
13	. . . . .	Washer (Lower)	1	1
14	. . . . .	Pin	2	2
15	580060323	Wear Plate	1	1
16	900094826	Plug	1	1
17	. . . . .	Lever	..	1
17	. . . . .	Lever	1	..
18	. . . . .	Stop (Lever)	1	1
19	. . . . .	Spring	1	1
20	902194811	Spring	1	1
21	902194803	Wheel Cylinder	1	1
22	902194840	Piston Rod	2	2
23	. . . . .	Piston	2	2
24	. . . . .	Cup	2	2
25	. . . . .	Spring	1	1
26	. . . . .	Boot	2	2
27	900870815	Cup	1	1
28	900094842	Bleeder Screw	1	1
29	580046642	Parking Brake Cable (LH)	1	..
29	580046643	Parking Brake Cable (RH)	..	1
	929151300	Kit-Brake Shoe	1	1
	924307401	Kit-Adjuster (LH)	1	..
	924307402	Kit-Adjuster (RH)	..	1
	929150300	Kit-Hold Down	1	1
	904165100	Kit-Repair Wheel Cylinder	1	1
	936301301	Kit-Repair Wheel Cylinder	1	1

©2010 Yale Materials Handling Corporation

https://truckmanualshub.com/

BRAKE PEDAL LINKAGE (FIGURE 10-2)

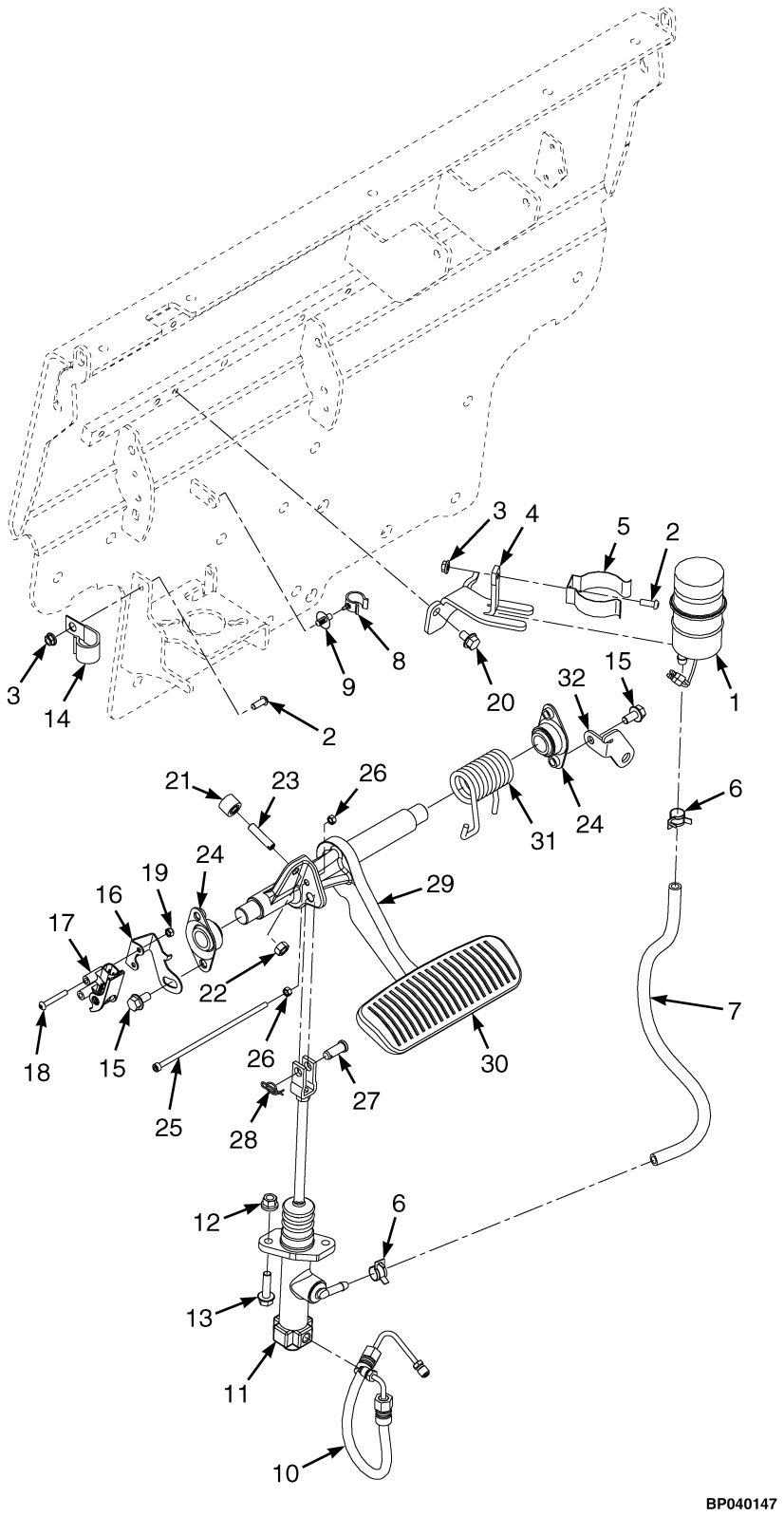

©2010 Yale Materials Handling Corporation

https://truckmanualshub.com/

BRAKE PEDAL LINKAGE

ITEM	PART NO.	DESCRIPTION	QTY
1	934403300	Reservoir	1
1	922100300	Cap	1
1	934404300	Tank	1
1	922102300	Packing	1
2	580030975	Screw (Button Head)	2
3	580047919	Nut	2
4	582000718	Mount	1
5	922627300	Holder	1
6	580039908	Hose Clamp	2
7	580056627	Hose	1
8	580042794	Clamp (Swivel)	1
9	580042842	Clamp	1
10	580039640	Hose Assy	1
11	582005114	Master Cylinder	1
12	580042963	Locknut	2
13	580049229	Capscrew	2
14	504231226	Clamp	1
15	580047714	Capscrew	2
16	582001972	Mount	1
17	580083939	Sensor (Brake Position)	1
18	582004169	Screw	2
19	449015112	Locknut	2
20	580037180	Capscrew	1
21	580047742	Bumper	1
22	449015014	Nut	1
23	580040128	Bolt	1
24	580057831	Bushing	2
25	580095974	Capscrew	1
26	937100904	Nut	2
27	580056624	Pin (Rod End)	1
28	580000868	Lockring	1
29	580096884	Brake Pedal	1
30	580052931	Rubber Pad	1
31	580052279	Spring (RH)	1
32	580060576	Bracket	1
	501702902	Loctite	1
	a 580096655	Wire Harness (Jumper) (Brake Sensor/Cowl Harness)	1

FOOTNOTES:

a Not Illustrated

©2010 Yale Materials Handling Corporation

https://truckmanualshub.com/

PARK BRAKE (FIGURE 10-3)

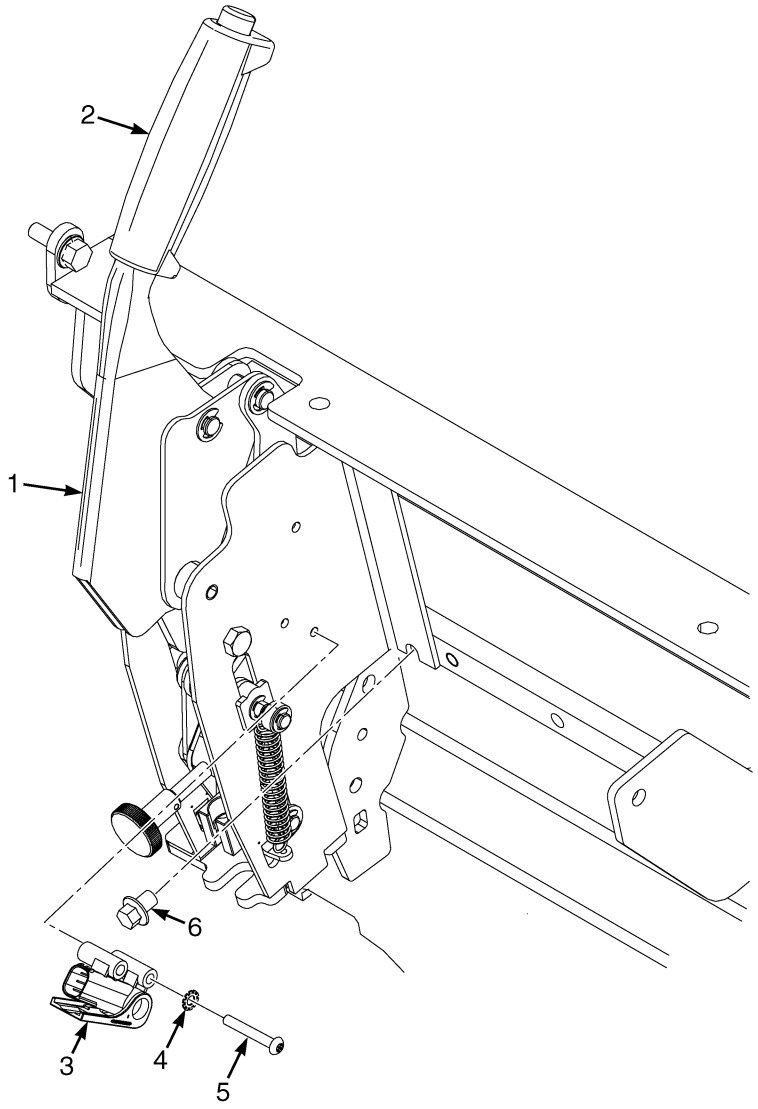

BP040148

©2010 Yale Materials Handling Corporation

https://truckmanualshub.com/

PARK BRAKE

ITEM	PART NO.	DESCRIPTION	QTY
1	580043144	Parking Brake Assembly	1
2	580044783	Parking Brake Lever	1
2	580084626	Grip	1
3	580083939	Sensor (Brake Position)	1
4	940600906	Washer	2
5	582004169	Screw	2
6	580037180	Capscrew	4
	a 580096655	Wire Harness (Jumper) (Brake Sensor/Cowl Harness)	1

FOOTNOTES:

a Not Illustrated

©2010 Yale Materials Handling Corporation

https://truckmanualshub.com/

NOTES

©2010 Yale Materials Handling Corporation

https://truckmanualshub.com/

11 HYDRAULIC SYSTEM

https://truckmanualshub.com/

https://truckmanualshub.com/

SECTION 11
HYDRAULIC SYSTEM

DESCRIPTION	PAGE
GEAR PUMP ASSEMBLY	11-4
HAND LEVERS	
2 AND 3 FUNCTION	11-14
HYDRAULIC CONTROL VALVE	
MANUAL - 3 FUNCTION	11-16
HYDRAULIC FILTER HOUSING	11-10
HYDRAULIC HOSES	
STEERING	11-6
HYDRAULIC SUPPLY AND RETURN	11-2
TILT AND AUXILIARY HOSES	11-8
TILT CYLINDER AND MAST INSTALLATION	11-11
TILT CYLINDER ASSEMBLY	11-12
VALVE ASSEMBLY, AUXILIARY	
MANUAL CONTROL VALVE - THREE FUNCTION	11-20
VALVE ASSEMBLY, LIFT AND TILT	
MANUAL CONTROL VALVE - THREE FUNCTION	11-18
VALVE ASSEMBLY, OUTLET SECTION	
MANUAL CONTROL VALVE - THREE FUNCTION	11-22

©2010 Yale Materials Handling Corporation

https://truckmanualshub.com/

HYDRAULIC SUPPLY AND RETURN (FIGURE 11-1)

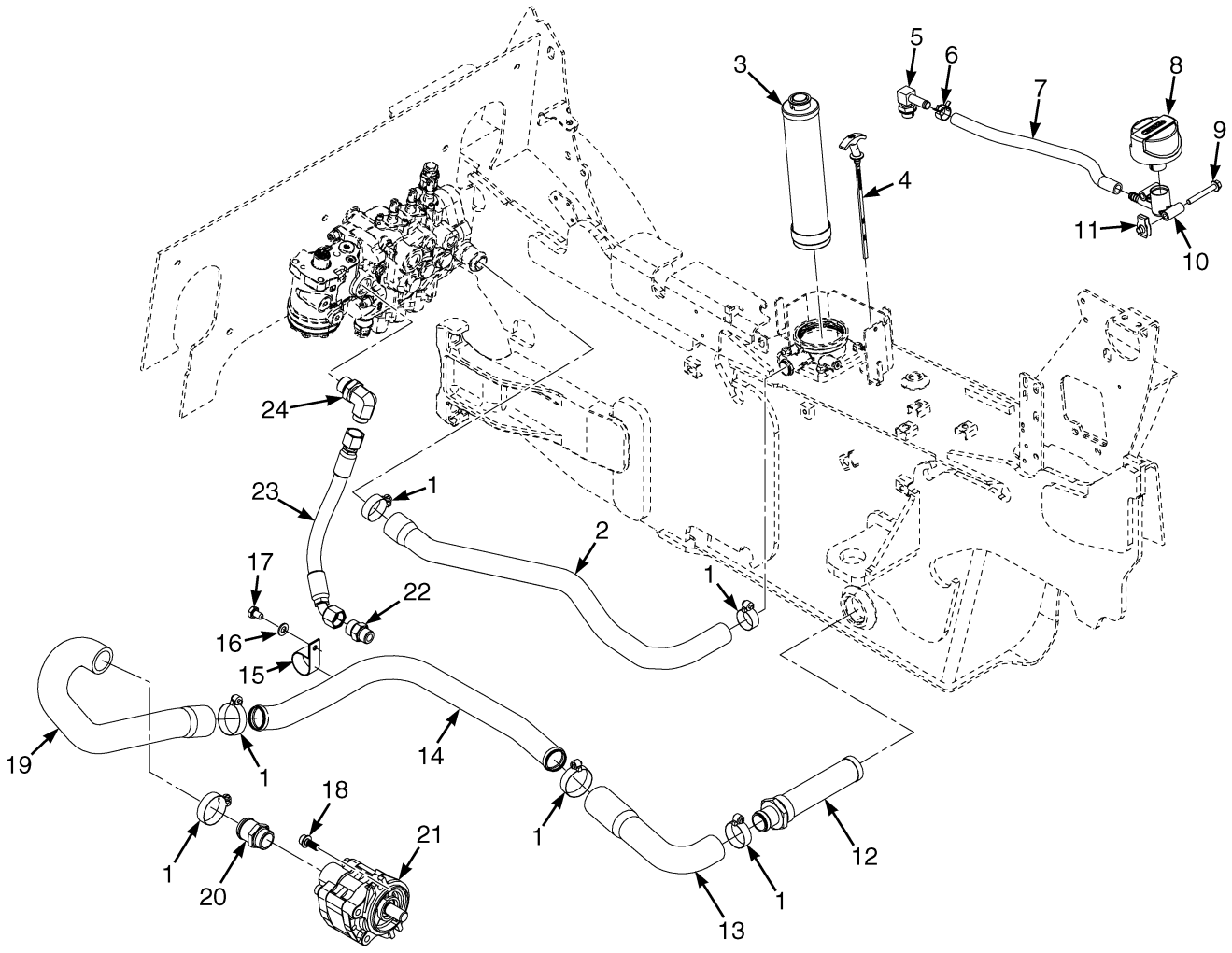

©2010 Yale Materials Handling Corporation

https://truckmanualshub.com/

HYDRAULIC SUPPLY AND RETURN

ITEM	PART NO.	DESCRIPTION	QTY
1	502056903	Clamp	6
2	580096833	Hose (Return)	1
3	. . . . .	Hydraulic Filter (☞P21979 [Page 11-10])	1
4	580040912	Dipstick	1
4	580054992	O-Ring	1
5	500154904	Fitting	1
6	580039912	Hose Clamp	1
7	580027066	Hose	1
7	580027270	Hose (Optional)	1
8	580056337	Breather	1
9	580030969	Capscrew	2
10	580056336	Adapter (Breather)	1
11	580012987	Nut	2
12	580071011	Strainer	1
12	052645900	O-Ring	1
13	582006514	Hose	1
14	582005520	Tube	1
15	582005336	Clamp	2
16	502566904	Washer	2
17	449001418	Capscrew	2
18	580050641	Capscrew	2
19	582006484	Hose	1
20	580052324	Adapter (Suction)	1
20	052645700	O-Ring	1
21	580083460	Gear Pump (☞P22083 [Page 11-4])	1
22	580019817	Fitting	1
23	582008181	Hose Assy	1
24	580019871	Fitting	1
	a 520042831	Adhesive	AR

FOOTNOTES:

a Not Illustrated

©2010 Yale Materials Handling Corporation

https://truckmanualshub.com/

GEAR PUMP ASSEMBLY (FIGURE 11-2)

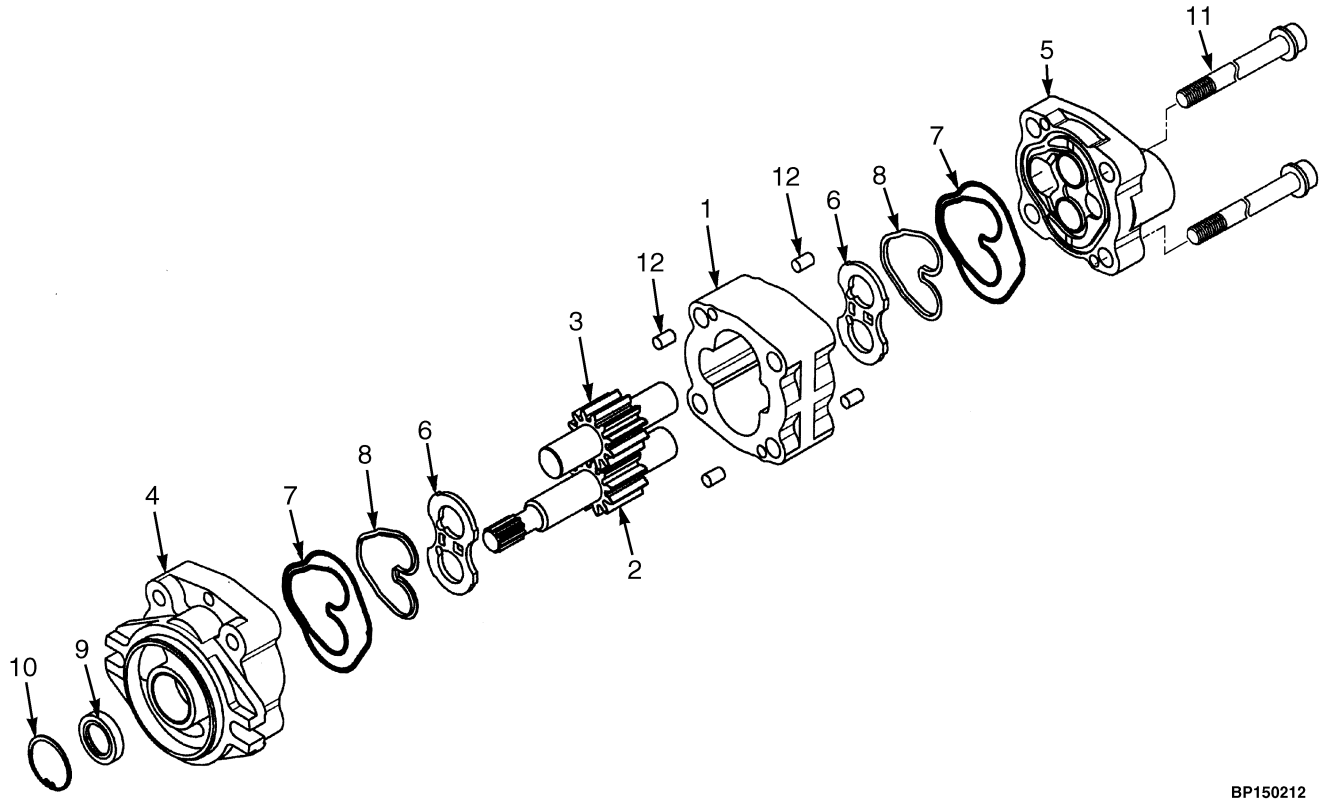

©2010 Yale Materials Handling Corporation

https://truckmanualshub.com/

GEAR PUMP ASSEMBLY

ITEM	PART NO.	DESCRIPTION	QTY
	580083460	Gear Pump	1
1	. . . . .	Gear Plate	1
2	. . . . .	Drive Gear	1
3	. . . . .	Driven Gear	1
4	580055594	Flange	1
5	580054026	Cover	1
6	580054029	Side Plate	2
7	. . . . .	Plate Seal	2
8	. . . . .	Back-Up Ring	2
9	. . . . .	Oil Seal	1
10	. . . . .	Snap Ring	1
11	580054027	Screw	4
12	580054028	Dowel	4
	580055595	Gear Set	1
	580012159	Kit-Seal	1

©2010 Yale Materials Handling Corporation

https://truckmanualshub.com/

HYDRAULIC HOSES (FIGURE 11-3)
STEERING

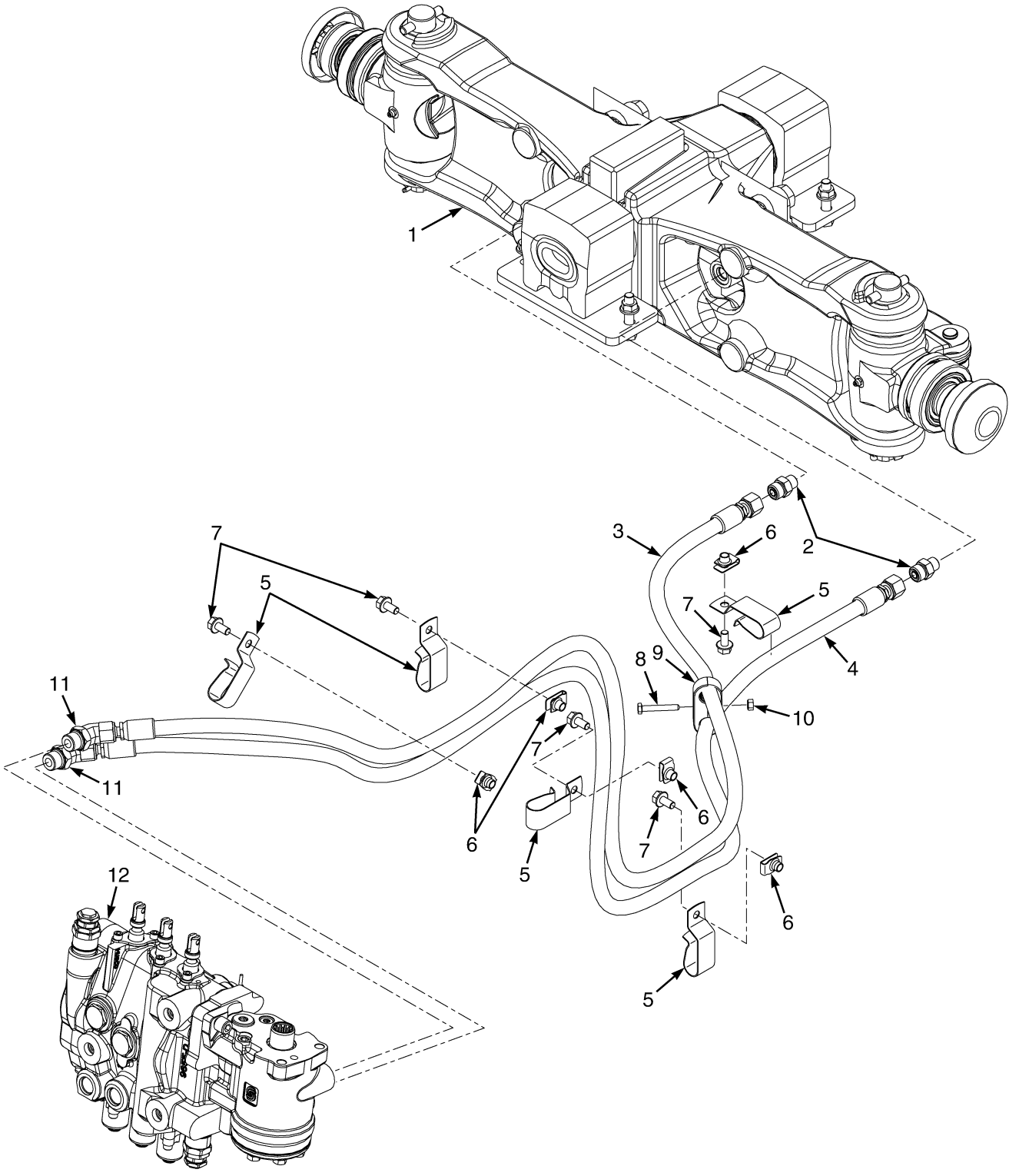

©2010 Yale Materials Handling Corporation

https://truckmanualshub.com/

HYDRAULIC HOSES
STEERING

ITEM	PART NO.	DESCRIPTION	QTY
1	. . . . .	Steer Axle (☞P22031 [Page 9-6])	1
2	580019808	Fitting	2
3	582001948	Hose Assy	1
4	582001947	Hose Assy	1
5	580045558	Clip	6
6	580026621	Nut	6
7	580047714	Capscrew	6
8	449001204	Capscrew	1
9	580096725	Hose Clamp	1
10	504231270	Nut	1
11	580039349	Fitting	2
12	. . . . .	Hydraulic Control Valve (☞P21983 [Page 11-16])	1

©2010 Yale Materials Handling Corporation

https://truckmanualshub.com/

TILT AND AUXILIARY HOSES (FIGURE 11-4)

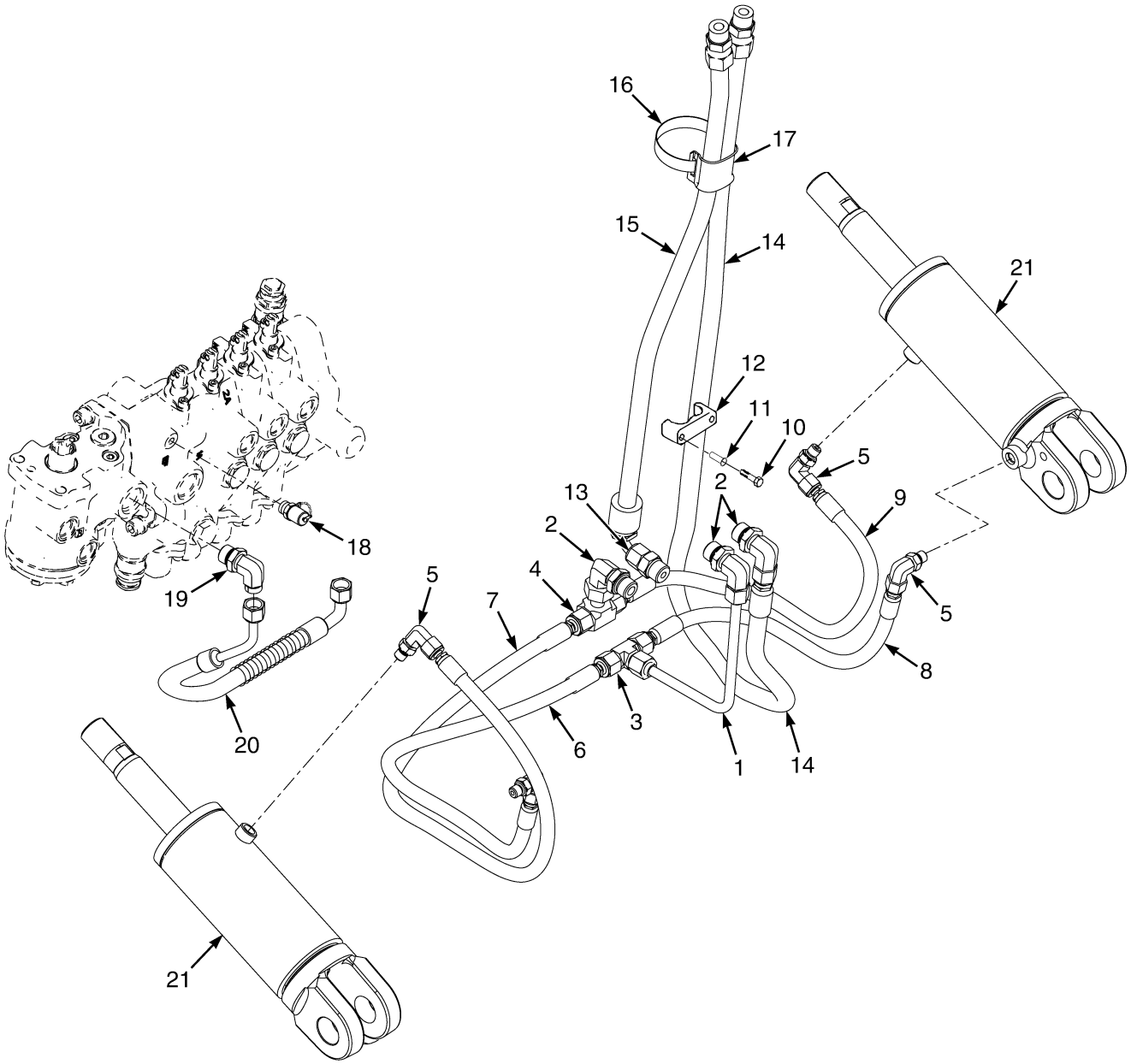

©2010 Yale Materials Handling Corporation

https://truckmanualshub.com/

TILT AND AUXILIARY HOSES

ITEM	PART NO.	DESCRIPTION	QTY
1	580046577	Tube Assy (Supply)	1
2	580055804	Fitting	3
2	580039386	O-Ring	1
2	052645300	O-Ring	1
3	580039365	Fitting	1
4	580020468	Fitting	1
5	580019860	Fitting	4
6	580047454	Hose Assy (Tilt Hose)	1
7	582005712	Hose Assy (Tilt Hose)	1
8	582005714	Hose Assy (Tilt Hose)	1
9	582005713	Hose Assy (Tilt Hose)	1
10	580024707	Capscrew	2
11	580041704	Insert	2
12	580087631	Clamp	1
13	580019810	Fitting	1
14	580055585	Hose Assy (Third Function)	1
15	580045323	Hose Assy (Third Function)	1
16	524141696	Hose Clamp	1
17	580068221	Clamp	1
18	580041208	Fitting (Diagnostic)	1
19	580019871	Fitting	1
20	582005715	Hose Assy (Hoist Hose)	1
21	. . . . .	Tilt Cylinder (RH) (☞P21981 [Page 11-12])	1
21	. . . . .	Tilt Cylinder (LH) (☞P21981 [Page 11-12])	1
	a 580039425	Fitting	2
	a 580047941	Plug	1

FOOTNOTES:

a Not Illustrated

©2010 Yale Materials Handling Corporation

https://truckmanualshub.com/

HYDRAULIC FILTER HOUSING (FIGURE 11-5)

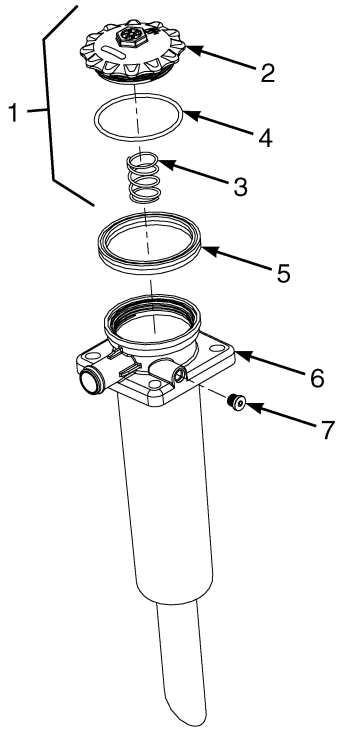

BP150392

ITEM	PART NO.	DESCRIPTION	QTY
	582002952	Hydraulic Filter Housing Assembly	1
1	580087580	Cover Assembly	1
2	580087582	Lid	1
3	580087583	Spring	1
4	. . . . .	Seal	1
5	. . . . .	Quad Ring	1
6	582005523	Bowl	1
7	580087579	Plug	1
	580087581	Kit-Seal	1

©2010 Yale Materials Handling Corporation

https://truckmanualshub.com/

TILT CYLINDER AND MAST INSTALLATION (FIGURE 11-6)

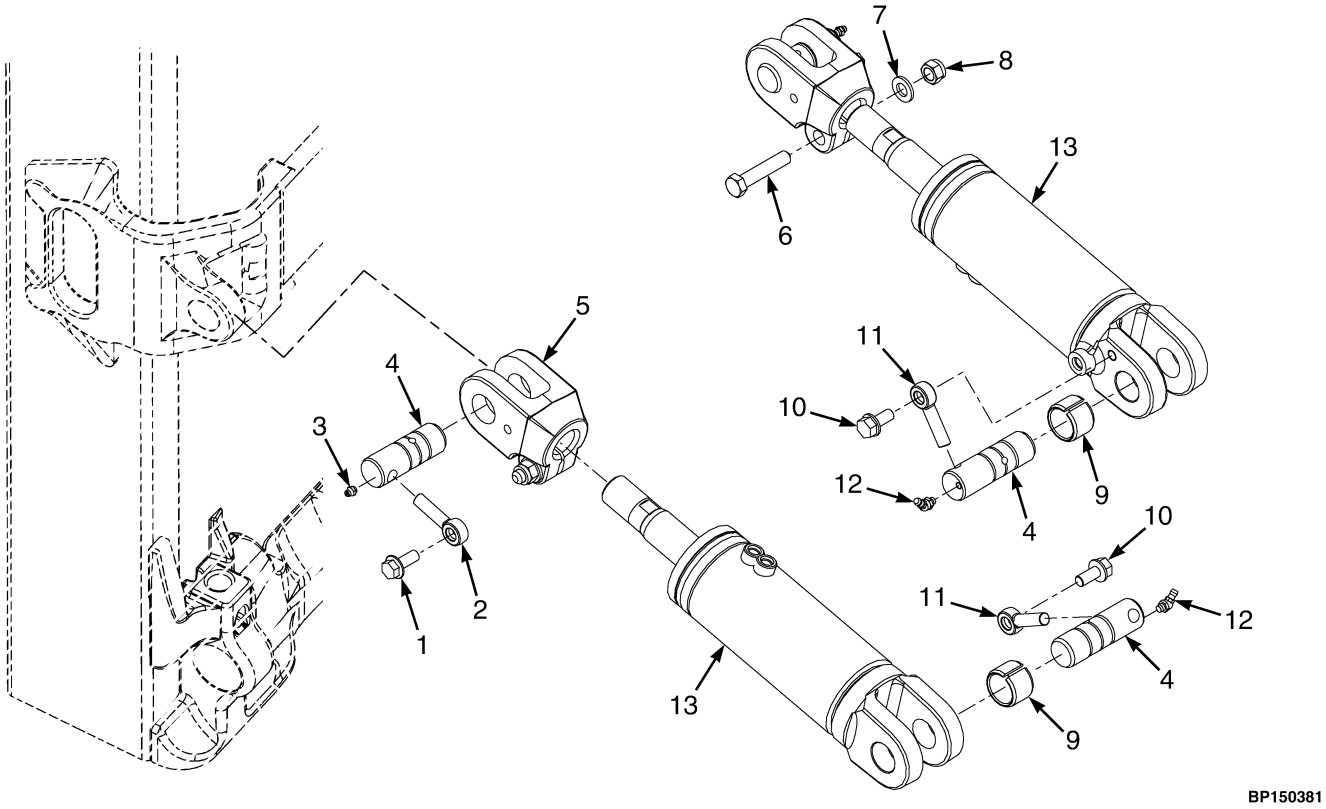

ITEM	PART NO.	DESCRIPTION	QTY
1	580030970	Capscrew	2
2	580040489	Pin	4
3	015628700	Grease Fitting	2
4	582001797	Pin	2
5	582001796	Rod End	2
6	580061352	Capscrew	2
7	580056005	Washer	2
8	580056000	Nut	2
9	504229225	Bushing	2
10	580058009	Capscrew	2
11	582001957	Pin	2
12	015630900	Grease Fitting	2
13	. . . . .	Tilt Cylinder (☞P21981 [Page 11-12])	2

©2010 Yale Materials Handling Corporation

https://truckmanualshub.com/

TILT CYLINDER ASSEMBLY (FIGURE 11-7)

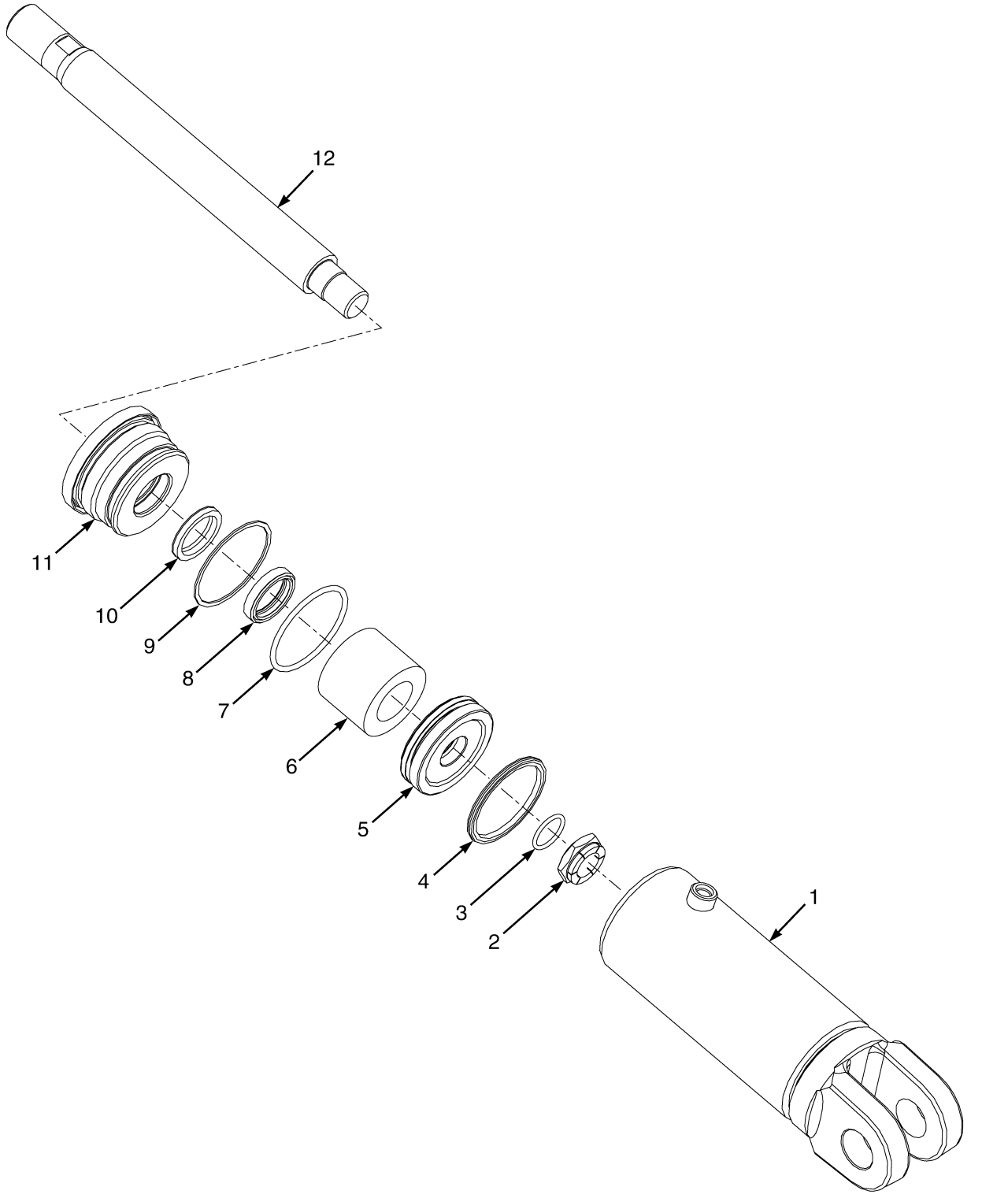

©2010 Yale Materials Handling Corporation

https://truckmanualshub.com/

TILT CYLINDER ASSEMBLY

ITEM	PART NO.	DESCRIPTION	QTY
	582001484	Tilt Cylinder	2
1	524172607	Tube Wldmt-Cylinder	1
2	502637902	Locknut	1
4	504305701	Piston Seal	1
5	506002500	Piston	1
6	506986116	Spacer	1
7	015493400	O-Ring	1
8	580022505	Rod Seal	1
9	502011914	Back-Up Ring	1
10	580022514	Rod Wiper	1
11	518852600	Gland	1
12	. . . . .	Cylinder Rod	1
	504234269	Lubricant	AR

©2010 Yale Materials Handling Corporation

https://truckmanualshub.com/

HAND LEVERS (FIGURE 11-8)
2 AND 3 FUNCTION

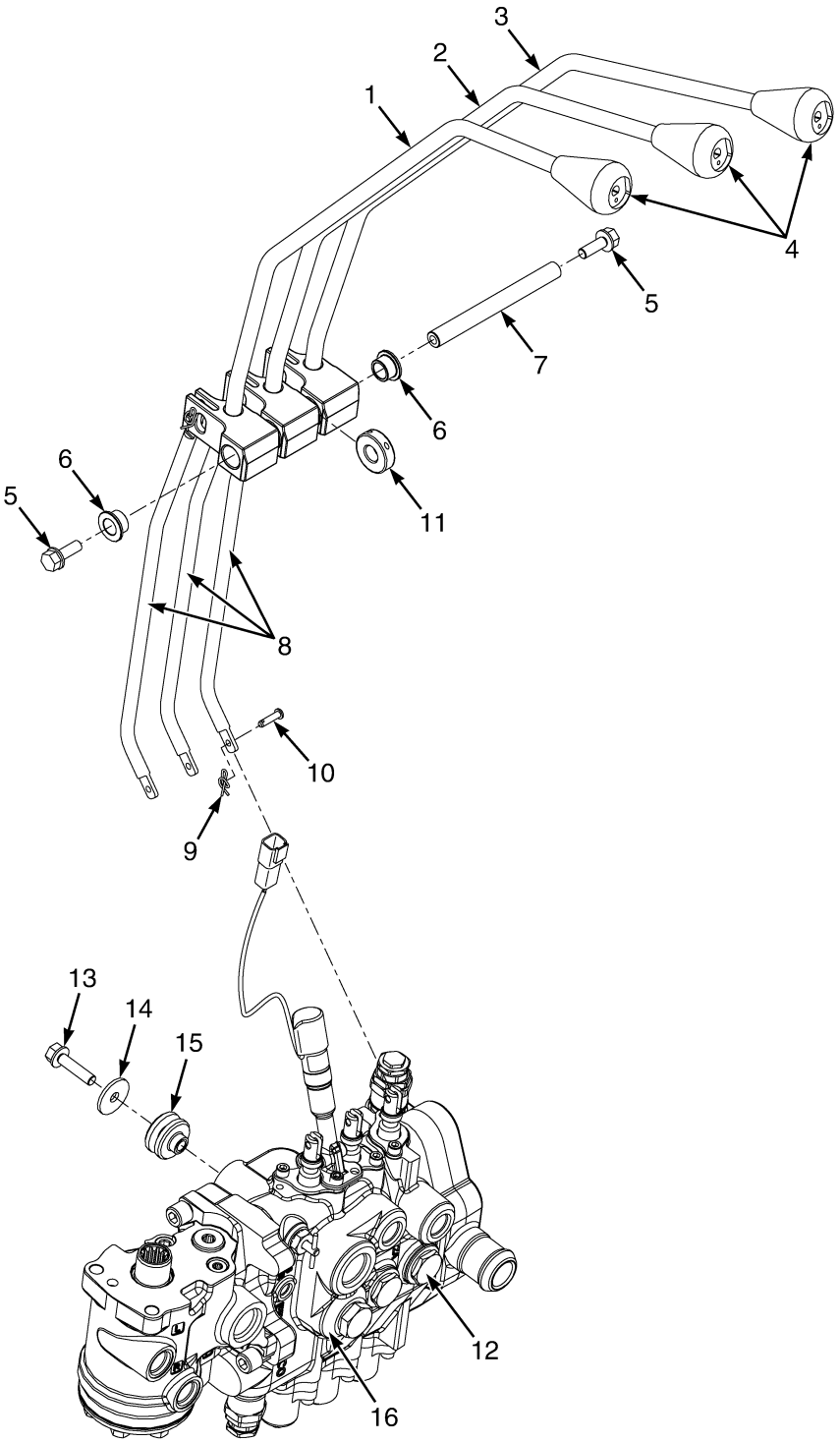

BP150382

©2010 Yale Materials Handling Corporation

https://truckmanualshub.com/

HAND LEVERS
2 AND 3 FUNCTION

KEY:
A: 2 Lever/Function
B: 3 Lever/Function

ITEM	PART NO.	DESCRIPTION	QTY A	QTY B
1	580084411	Lever	1	1
2	580084412	Lever (Tilt)	1	1
3	580084413	Lever	..	1
4	580056844	Knob	2	3
5	580056815	Capscrew	2	2
6	580050978	Bushing	4	6
7	580085082	Shaft (Pivot)	1	1
8	580083423	Link	2	3
9	580056840	Locking Ring Cotter Pin	4	6
10	500583902	Pin	4	6
11	580003145	Collar	1	..
12	505967551	Fitting	2	..
13	580058269	Capscrew	3	3
14	580056666	Washer	3	3
15	580044129	Isolator	3	3
16	580090439	Hydraulic Control Valve (Manual) (☞P21983 [Page 11-16])	1	1

©2010 Yale Materials Handling Corporation

https://truckmanualshub.com/

HYDRAULIC CONTROL VALVE (FIGURE 11-9)
MANUAL — 3 FUNCTION

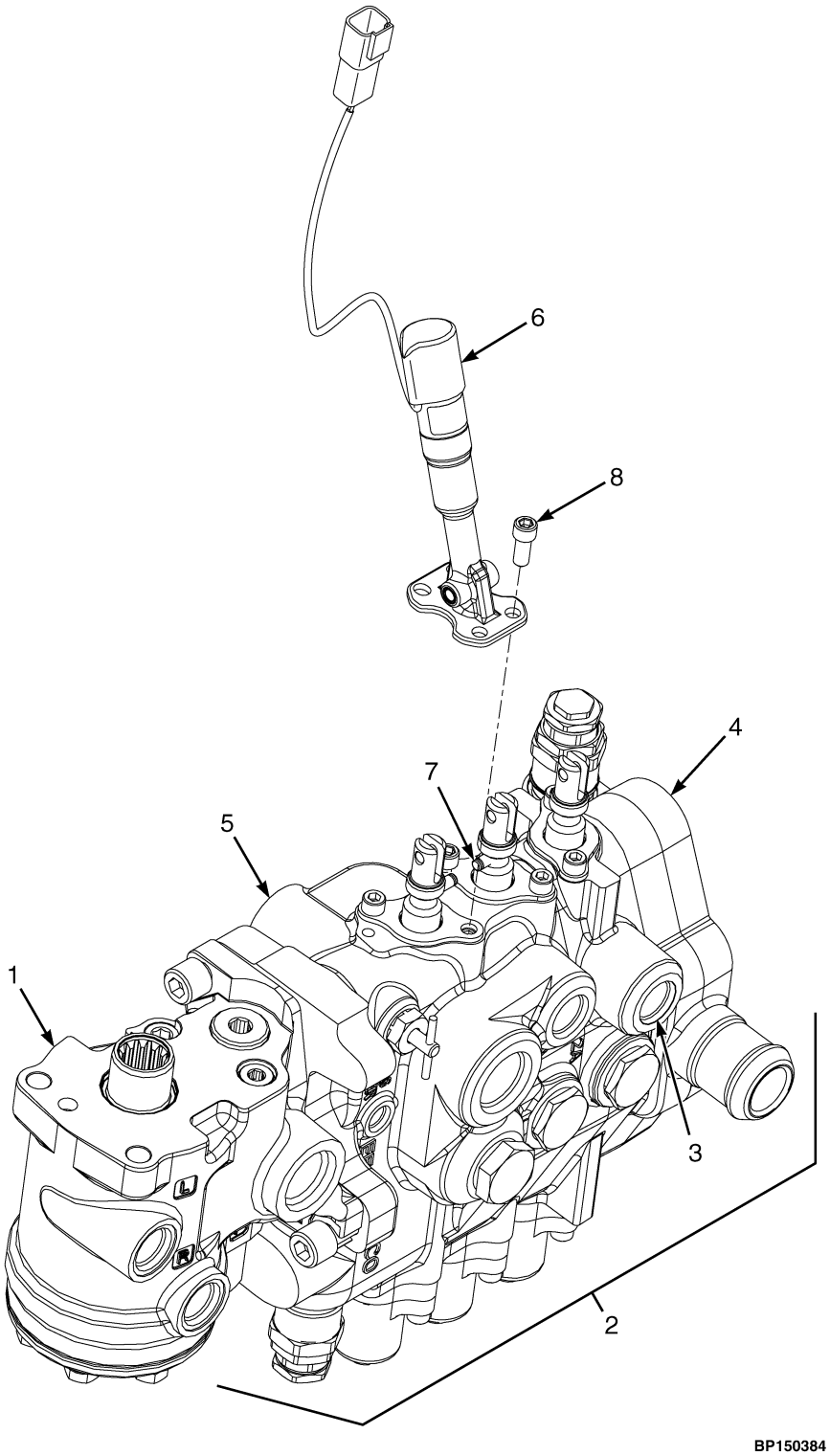

©2010 Yale Materials Handling Corporation

https://truckmanualshub.com/

HYDRAULIC CONTROL VALVE
MANUAL – 3 FUNCTION

ITEM	PART NO.	DESCRIPTION	QTY
	580090439	Hydraulic Control Valve (Manual)	1
1	580037270	Steering Control Unit	1
2	580090449	Hydraulic Control Valve	1
3	580085165	Valve Section (Aux.) (☞P21985 [Page 11-20])	1
4	580054062	Valve Section (Outlet) (☞P21986 [Page 11-22])	1
5	580094926	Valve Section (Lift And Tilt) (☞P21984 [Page 11-18])	1
6	580088718	Solenoid Assembly (Double Function)	1
7	580085134	Needle Roller	2
8	580052297	Capscrew	2

©2010 Yale Materials Handling Corporation

https://truckmanualshub.com/

VALVE ASSEMBLY, LIFT AND TILT (FIGURE 11-10)

MANUAL CONTROL VALVE — THREE FUNCTION

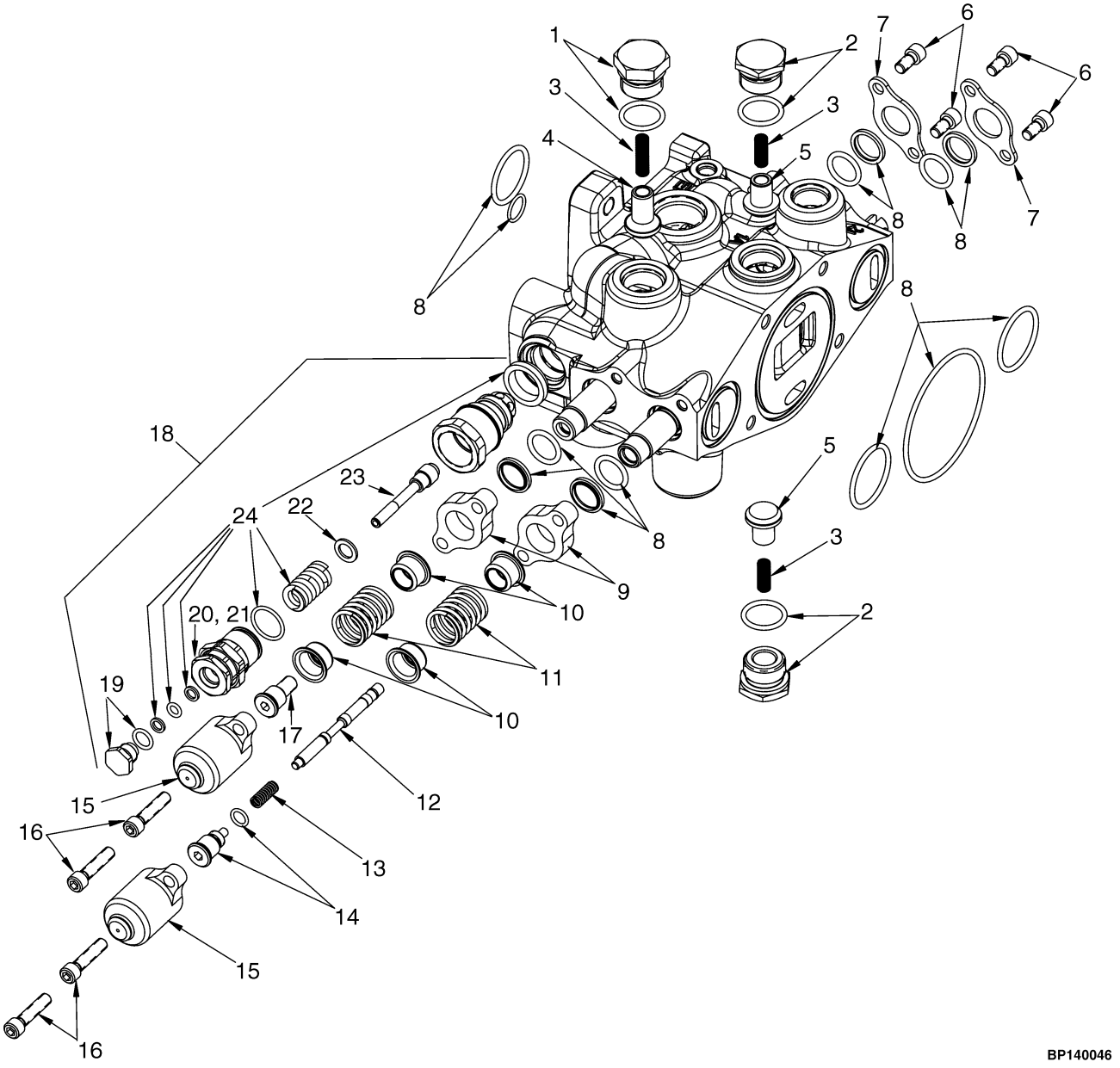

©2010 Yale Materials Handling Corporation

https://truckmanualshub.com/

VALVE ASSEMBLY, LIFT AND TILT

MANUAL CONTROL VALVE – THREE FUNCTION

ITEM	PART NO.	DESCRIPTION	QTY
	580094926	Valve Section (Lift And Tilt)	1
1	580054052	Plug	2
2	580054462	Plug	1
3	580006977	Spring	3
4	580054465	Poppet	1
5	580006976	Poppet	2
6	502635907	Screw	4
7	580049294	Plate	2
8	580085146	Kit-Seal (Lift and Tilt)	1
9	580062938	Plate	2
10	504230236	Spring Seat	4
11	580056023	Spring	2
12	580056024	Piston	1
13	504230207	Spring	1
14	580056877	Spool End	1
15	580054869	Cap	2
16	580054044	Capscrew	4
17	580056022	Spool End	1
18	580054063	Relief Valve (3100 PSI) (Main Relief) (Low Relief)	1
18	580054064	Relief Valve (3400 PSI) (Main Relief) (High Relief)	1
19	. . . . .	Plug	1
20	. . . . .	Screw	1
21	. . . . .	Nut	1
22	. . . . .	Washer	1
23	. . . . .	Poppet	1
24	580054672	Kit-Seal	1

©2010 Yale Materials Handling Corporation

https://truckmanualshub.com/

VALVE ASSEMBLY, AUXILIARY (FIGURE 11-11)

MANUAL CONTROL VALVE — THREE FUNCTION

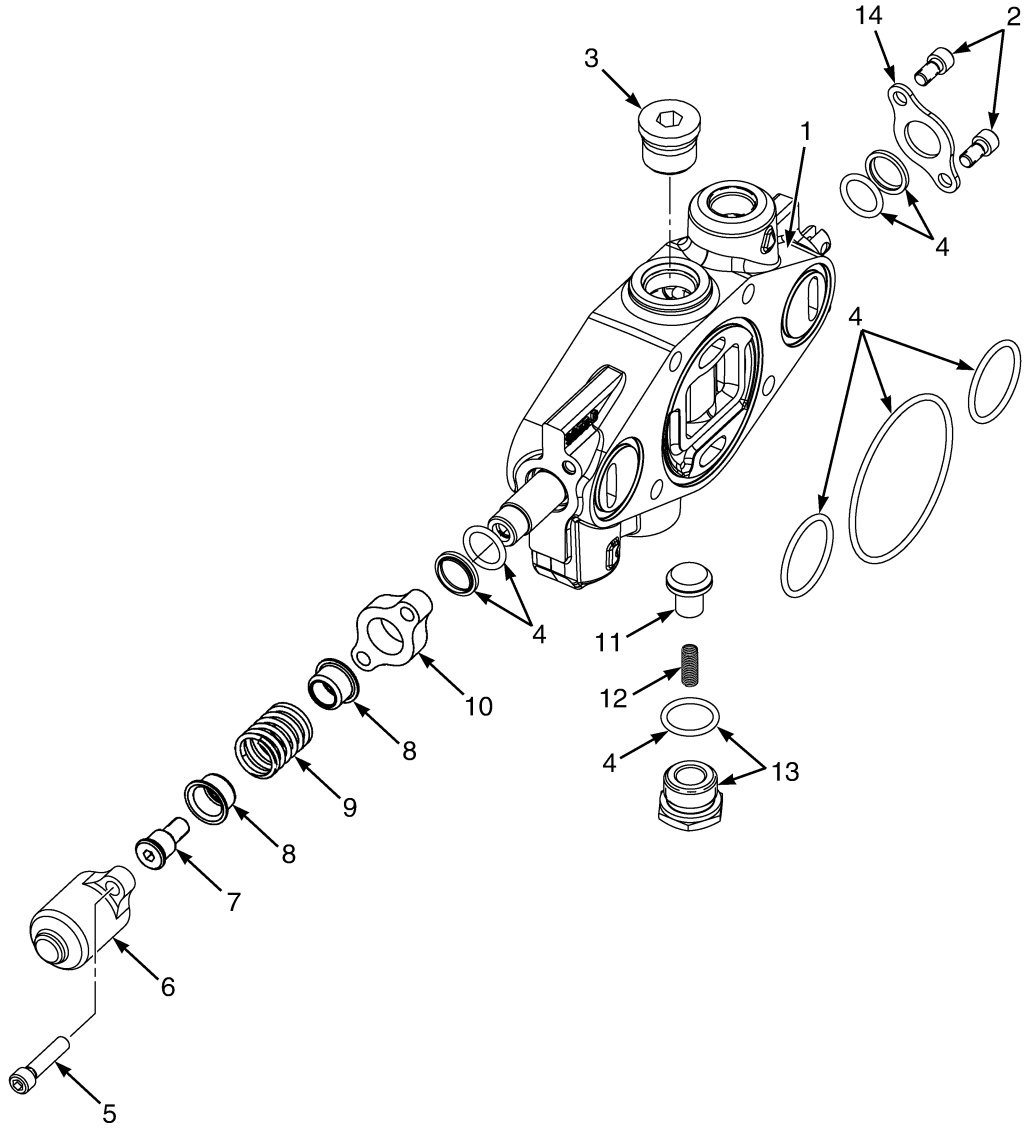

BP150383

©2010 Yale Materials Handling Corporation

https://truckmanualshub.com/

VALVE ASSEMBLY, AUXILIARY

MANUAL CONTROL VALVE – THREE FUNCTION

ITEM	PART NO.	DESCRIPTION	QTY
1	580085165	Valve Section	1
2	502635907	Screw	2
3	580054053	Plug	1
4	580054689	Kit-Seal (Auxiliary Functions)	1
5	580054044	Capscrew	2
6	580054869	Cap	1
7	580056022	Spool End	1
8	504230236	Spring Seat	2
9	580056023	Spring	1
10	580062938	Plate	1
11	580006976	Poppet	1
12	580006977	Spring	1
13	580054052	Plug	1
14	580049294	Plate	1
	580085142	Kit-Seal (Three Function)	1

©2010 Yale Materials Handling Corporation

https://truckmanualshub.com/

VALVE ASSEMBLY, OUTLET SECTION (FIGURE 11-12)

MANUAL CONTROL VALVE — THREE FUNCTION

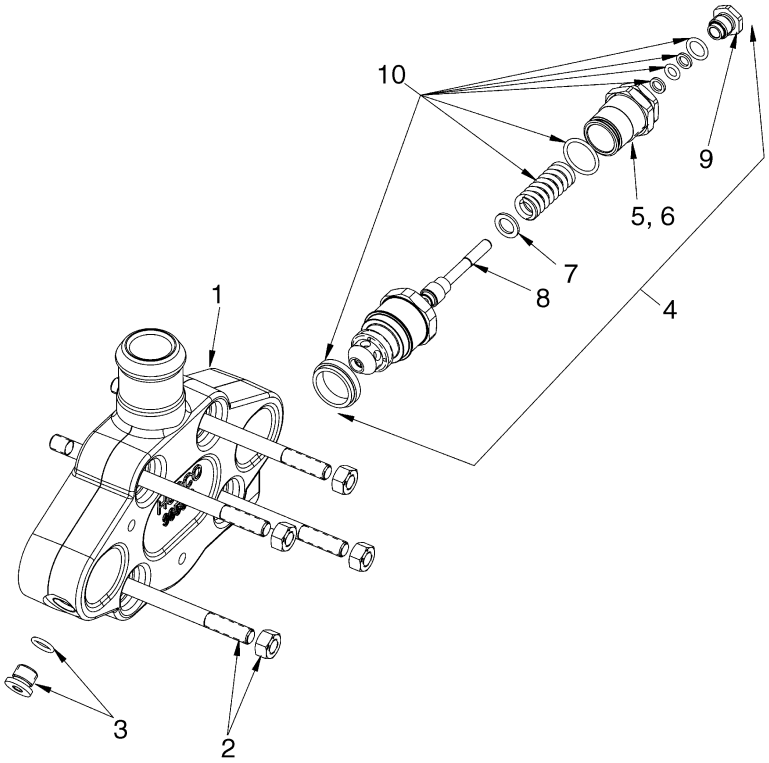

BP140048

ITEM	PART NO.	DESCRIPTION	QTY
1	580054062	Valve Section	1
2	580055166	Kit-Tie Rod (Three Function)	1
2	014936600	Nut	4
3	. . . . .	Plug	1
4	580054046	Relief Valve (2250 PSI) (Secondary)	1
5	. . . . .	Nut	1
6	. . . . .	Screw	1
7	. . . . .	Washer	1
8	. . . . .	Poppet	1
9	. . . . .	Plug	1
10	580054684	Kit-Seal	1

©2010 Yale Materials Handling Corporation

https://truckmanualshub.com/

12 MAST-THREE STAGE FULL FREE-LIFT

https://truckmanualshub.com/

https://truckmanualshub.com/

SECTION 12
MAST-THREE STAGE FULL FREE-LIFT

DESCRIPTION	PAGE
CARRIAGE	
THREE STAGE FULL FREE-LIFT	12-20
FREE LIFT CYLINDER ASSEMBLY	
THREE STAGE FULL FREE LIFT	12-16
HEADER HOSE AND ATTACHING PARTS	
3 FUNCTION	12-18
MAIN LIFT CYLINDER ASSEMBLY	
THREE STAGE FULL FREE LIFT	12-12
MAST ASSEMBLY	
INNER MAST AND FREE-LIFT	12-8
INTERMEDIATE MAST AND MAIN LIFT	12-4
OUTER MAST	12-2

©2010 Yale Materials Handling Corporation

https://truckmanualshub.com/

MAST ASSEMBLY (FIGURE 12-1)
OUTER MAST

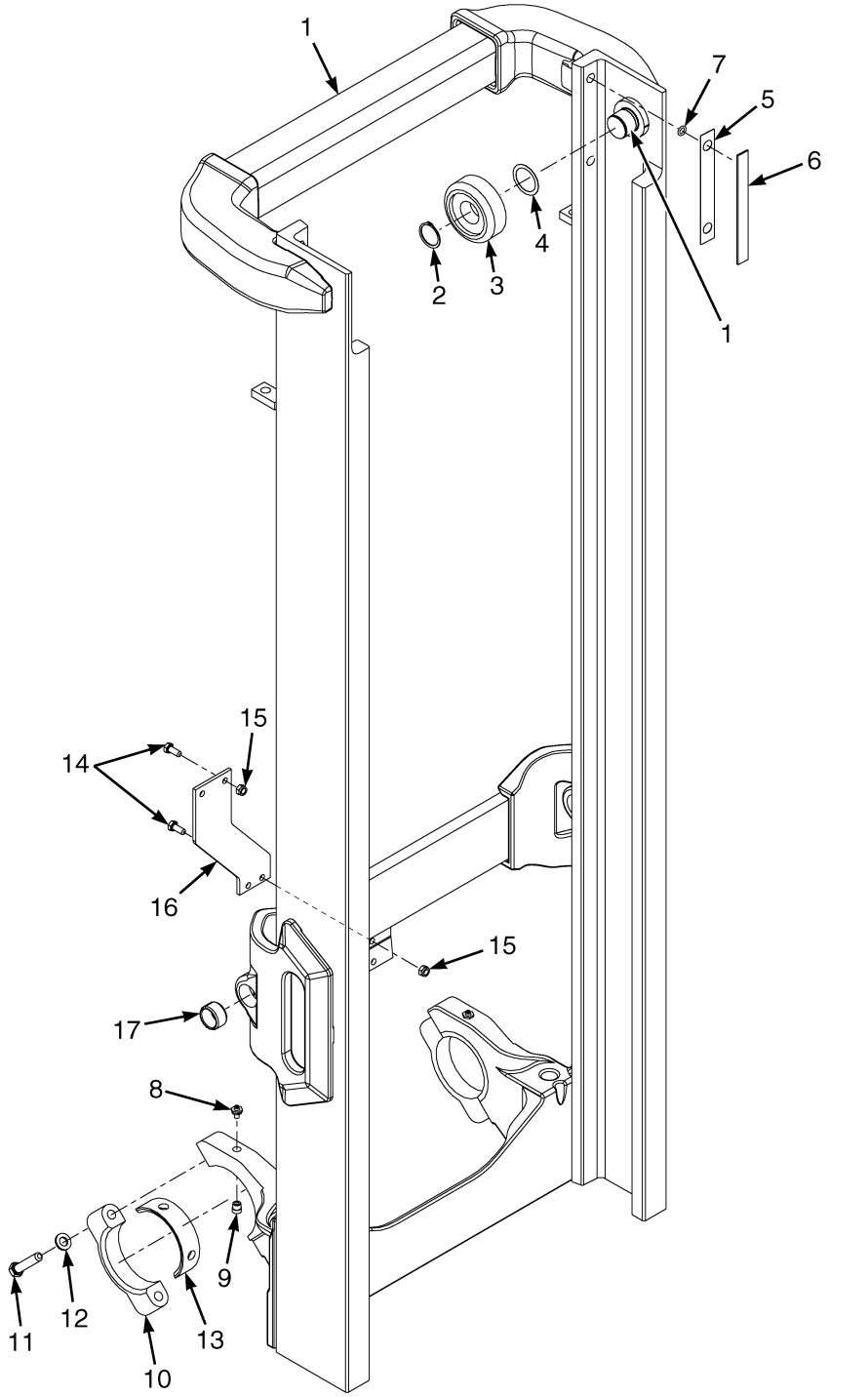

©2010 Yale Materials Handling Corporation

https://truckmanualshub.com/

MAST ASSEMBLY
OUTER MAST

A698

ITEM	DESCRIPTION 1 2 3 4	LIFT HEIGHT TO BOTTOM OF FORKS		
		4285 mm (168.7 in.)	4735 mm (186.4 in.)	5035 mm (198.2 in.)
	Mast Group Number	A698 4285	A698 4735	A698 5035
	Mast Assy	582007263	582007265	582007267
1	Outer Mast	582007251	582007252	582007253

ITEM	PART NO.	DESCRIPTION	QTY
	a	Mast Assy	1
1	**a**	Outer Mast	1
1	504066700	Stubshaft	2
2	015916300	Snap Ring	1
3	520036852	Load Roller	2
3	580001430	Load Roller (Optional)	2
4	504233232	Shim (0.020 in.)	AR
5	012824300	O-Ring	2
6	504234265	Shim (0.020 in.)	AR
7	504075764	Wear Strip	2
8	524197919	Plug	2
9	582005921	Bushing	2
10	582006737	Trunnion	2
11	580056005	Washer	4
12	580061352	Capscrew	4
13	520051893	Grease Fitting	2
14	900003277	Bushing	2
15	582006766	Plate	1
16	580055733	Capscrew	2
17	580055651	Nut	4

FOOTNOTES:

a Refer to Table

©2010 Yale Materials Handling Corporation

https://truckmanualshub.com/

MAST ASSEMBLY (FIGURE 12-2)
INTERMEDIATE MAST AND MAIN LIFT

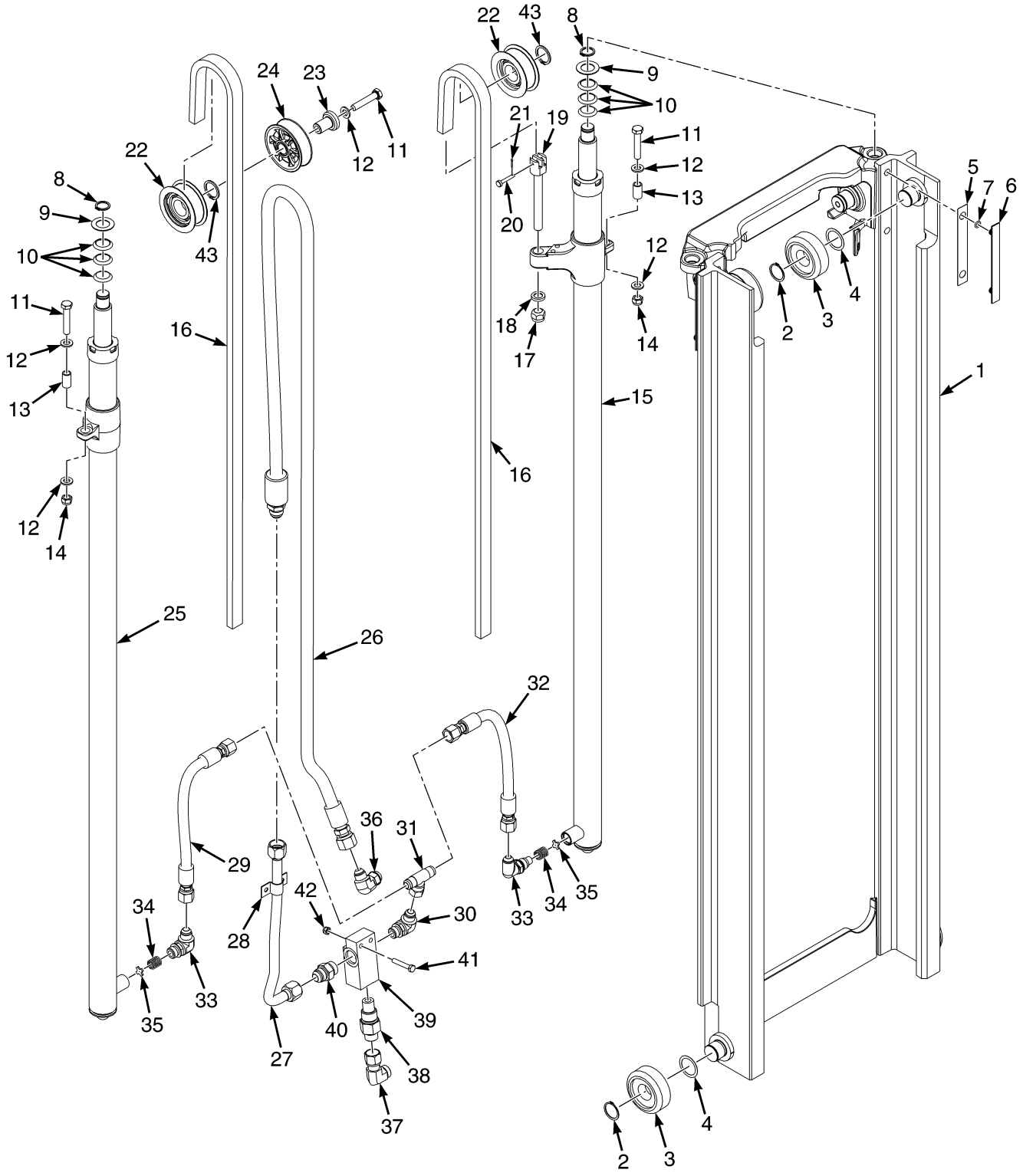

©2010 Yale Materials Handling Corporation

https://truckmanualshub.com/

MAST ASSEMBLY
INTERMEDIATE MAST AND MAIN LIFT

A698

ITEM	DESCRIPTION 1 2 3 4	LIFT HEIGHT TO BOTTOM OF FORKS		
		4285 mm (168.7 in.)	4735 mm (186.4 in.)	5035 mm (198.2 in.)
	Mast Group Number	A698 4285	A698 4735	A698 5035
	Mast Assy	582007263	582007265	582007267
1	Intermediate Mast	504070754	582007346	504073748
15	Cylinder Assy	582007415	582007414	582007413
16	Chain	504064781	900002264	518791631
25	Cylinder Assy	582007416	582007412	582007411
26	Hose Assy	582001645	582001646	582001647

ITEM	PART NO.	DESCRIPTION	QTY
	a	Mast Assy	1
1	**a**	Intermediate Mast	1
1	504066700	Stubshaft	4
2	015916300	Snap Ring	4
3	520036852	Load Roller	4
3	580001430	Load Roller (Optional)	4
4	504233232	Shim (0.020 in.)	AR
5	504234265	Shim (0.020 in.)	2
6	504075764	Wear Strip	2
7	012824300	O-Ring	4
8	500227907	Snap Ring	2
9	504064767	Washer (0.060 in.)	2
10	504064769	Washer (0.010 in.)	2
10	504069791	Washer (0.030 in.)	2
10	504069702	Washer (0.060 in.)	2
11	580055976	Capscrew	3
12	580056005	Washer	5
13	504064739	Spacer	2
14	580056001	Nut	2
15	**a**	Cylinder Assy (☞P22007 [Page 12-12])	1
16	**a**	Chain	1
17	504234266	Nut	2
18	504064758	Ring	2
19	518801644	Chain Anchor	2
20	580033718	Pin	2
21	015415900	Cotter Pin	2
22	504281794	Chain Sheave	2
23	900002259	Stubshaft	1
23	504070732	Stubshaft	1
24	504064782	Hose Sheave	1
25	**a**	Cylinder Assy	1
26	**a**	Hose Assy	1
27	518806660	Tube Assy	1

©2010 Yale Materials Handling Corporation

https://truckmanualshub.com/

MAST ASSEMBLY
INTERMEDIATE MAST AND MAIN LIFT

ITEM	PART NO.	DESCRIPTION	QTY
28	900003213	Clamp	1
29	580010912	Hose Assy	1
30	052229600	Fitting	1
31	501801901	Fitting	1
32	504064740	Hose Assy	1
33	504064729	Fitting	2
34	504075776	Spring	2
35	504236253	Washer	2
36	582007601	Valve	1
37	580019838	Fitting	1
38	524141846	Lowering Control Valve	1
39	504064742	Housing	1
40	052643500	Connector	1
41	580055736	Capscrew	2
42	580055651	Nut	2
43	500227910	Snap Ring	2

FOOTNOTES:

a Refer to Table

©2010 Yale Materials Handling Corporation

https://truckmanualshub.com/

NOTES

©2010 Yale Materials Handling Corporation

https://truckmanualshub.com/

MAST ASSEMBLY (FIGURE 12-3)
INNER MAST AND FREE-LIFT

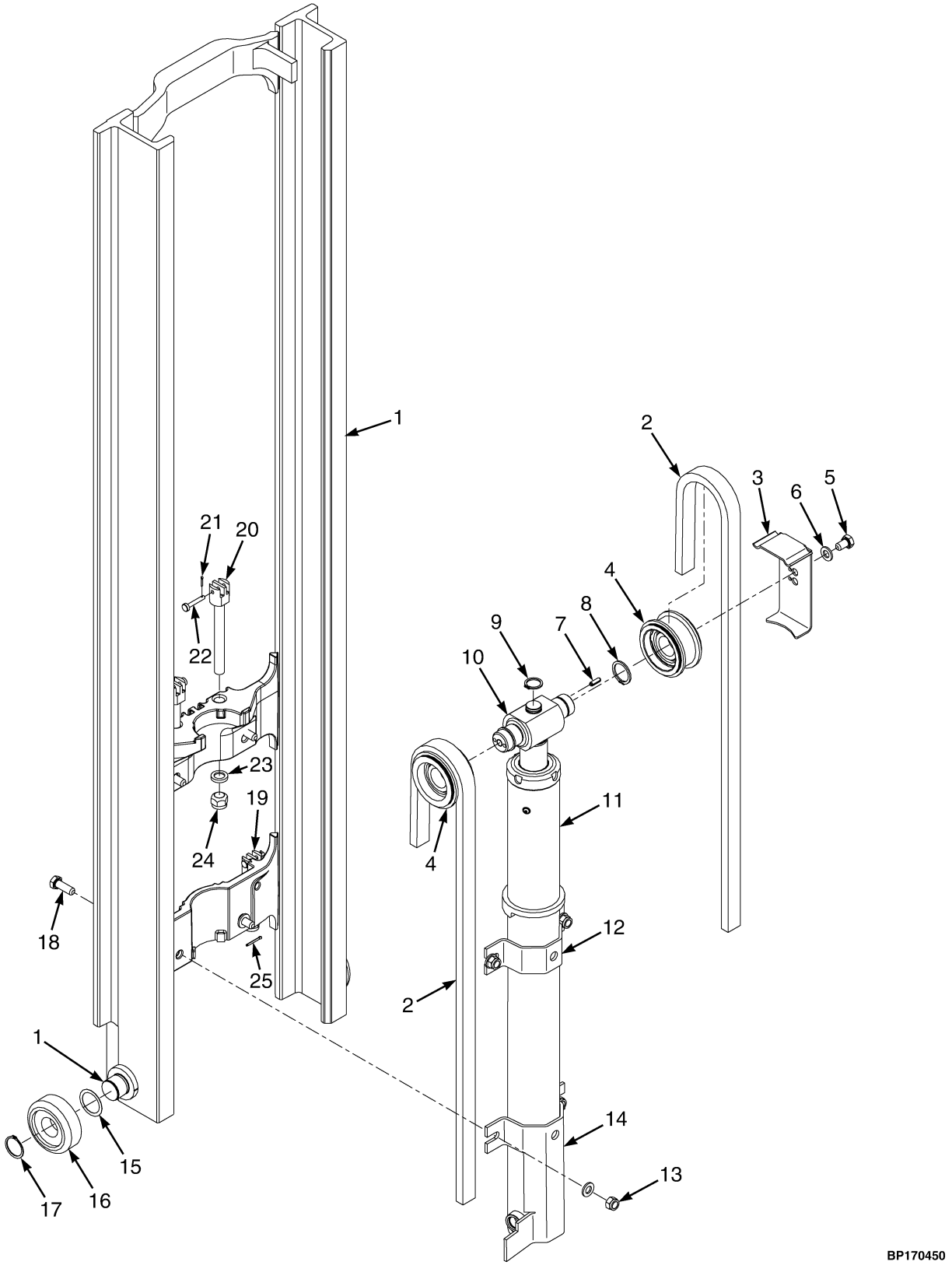

©2010 Yale Materials Handling Corporation

https://truckmanualshub.com/

MAST ASSEMBLY
INNER MAST AND FREE-LIFT

A698

ITEM	DESCRIPTION 1 2 3 4	LIFT HEIGHT TO BOTTOM OF FORKS		
		4285 mm (168.7 in.)	4735 mm (186.4 in.)	5035 mm (198.2 in.)
	Mast Group Number	A698 4285	A698 4735	A698 5035
	Mast Assy	582007263	582007265	582007267
1	Inner Mast	504073788	582010094	504073759
2	Chain	504064745	504075721	900002253
11	Cylinder Assy	582007288	582007289	582007290

KEY:
A: w/ 3rd Function Header Hose
B: w/o 3rd Function Header Hose

ITEM	PART NO.	DESCRIPTION	QTY A	QTY B
	a	Mast Assy	1	1
1	**a**	Inner Mast	1	1
1	504066700	Stubshaft	4	4
2	**a**	Chain	1	1
3	504301785	Chain Guard	1	2
4	504281796	Chain Sheave Assembly	1	1
4	504281799	Chain Sheave	2	2
4	500343914	Snap Ring	1	1
4	520040899	Ball Bearing	1	1
5	580055742	Capscrew	1	2
6	580056005	Washer	5	6
7	449034054	Roll Pin	1	2
8	500227910	Snap Ring	2	2
9	500227907	Snap Ring	2	2
10	504281795	Crosshead	1	1
11	**a**	Cylinder Assy (☞P22008 [Page 12-16])	1	1
12	580024920	Bracket	1	1
13	580056001	Nut	4	4
14	580053612	Guard	1	1
15	504233232	Shim (0.020 in.)	2	2
16	520036852	Load Roller	2	2
16	580001430	Load Roller (Optional)	2	2
17	015916300	Snap Ring	2	2
18	580090840	Capscrew	4	4
19	504075767	Chain Anchor	2	2
20	518801644	Chain Anchor	2	2
21	015415900	Cotter Pin	4	4
22	580033718	Pin	4	4
23	504064758	Ring	4	4
24	504234266	Nut	4	4
25	449025042	Cotter Pin	2	2

©2010 Yale Materials Handling Corporation

https://truckmanualshub.com/

FOOTNOTES:

a Refer to Table

©2010 Yale Materials Handling Corporation

https://truckmanualshub.com/

NOTES

©2010 Yale Materials Handling Corporation

https://truckmanualshub.com/

MAIN LIFT CYLINDER ASSEMBLY (FIGURE 12-4)
THREE STAGE FULL FREE LIFT

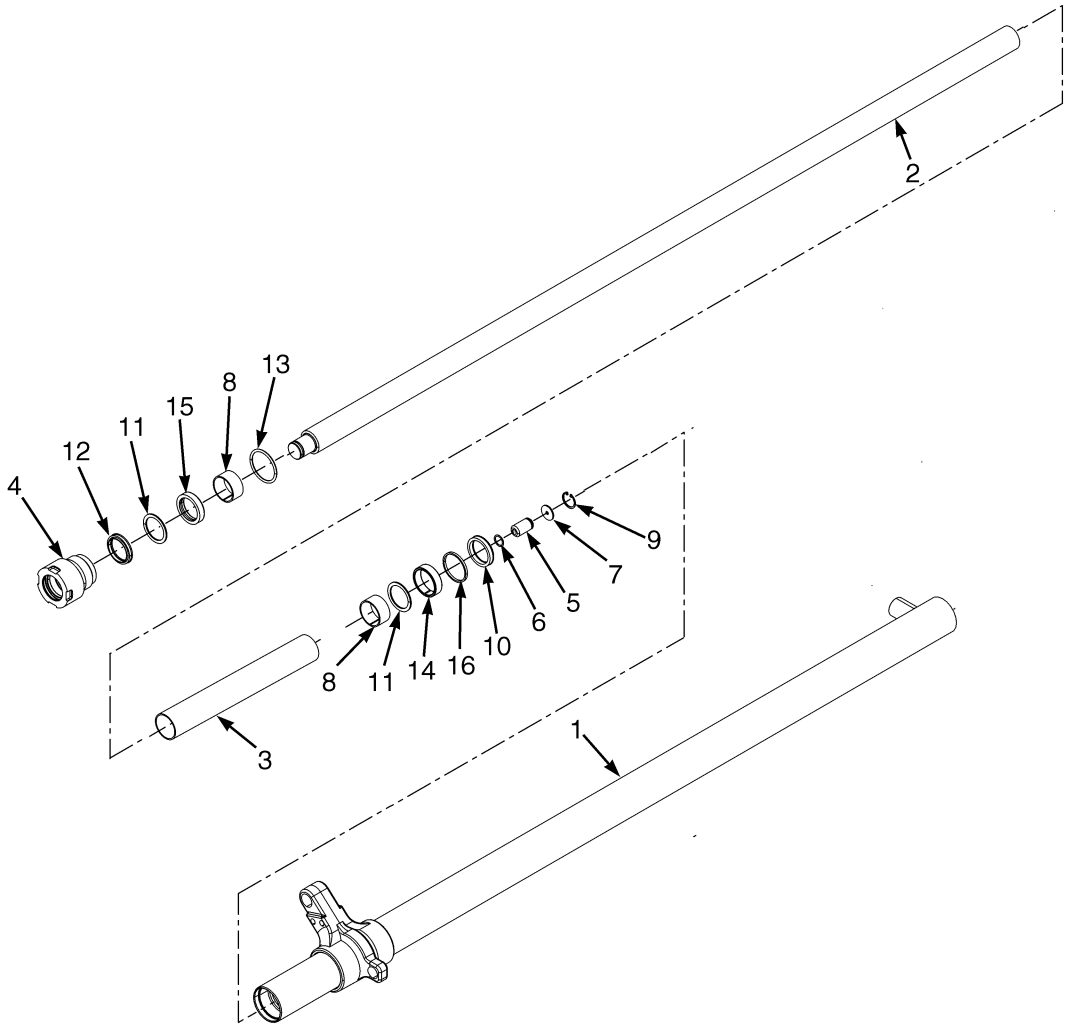

BP170151

©2010 Yale Materials Handling Corporation

https://truckmanualshub.com/

MAIN LIFT CYLINDER ASSEMBLY
THREE STAGE FULL FREE LIFT

LEFT HAND

ITEM	DESCRIPTION 1 2 3 4	LIFT HEIGHT TO BOTTOM OF FORKS		
		4285 mm (168.7 in.)	**4735 mm (186.4 in.)**	**5035 mm (198.2 in.)**
	Mast Group Number	**A698 4285**	**A698 4735**	**A698 5035**
	Cylinder Group Number	**8803211**	**8803212**	**8803213**
	Cylinder Assy	582007415	582007414	582007413
1	Tube Wldmt-Cylinder	519529638	519529639	519529640
2	Rod	519528670	519528671	519528672
3	Spacer	505657543	505657543	505657543

RIGHT HAND

ITEM	DESCRIPTION 1 2 3 4	LIFT HEIGHT TO BOTTOM OF FORKS		
		4285 mm (168.7 in.)	**4735 mm (186.4 in.)**	**5035 mm (198.2 in.)**
	Mast Group Number	**A698 4285**	**A698 4735**	**A698 5035**
	Cylinder Group Number	**8803214**	**8803215**	**8803216**
	Cylinder Assy	582007416	582007412	582007411
1	Tube Wldmt-Cylinder	519529688	519529689	519529690
2	Rod	519528670	519528671	519528672
3	Spacer	505657543	505657543	505657543

ITEM	PART NO.	DESCRIPTION	QTY
	a	Cylinder Assy	1
1	**a**	Tube Wldmt-Cylinder	1
2	**a**	Rod	1
3	**a**	Spacer	1
4	506845500	Gland	1
5	504235239	Check Valve	1
6	. . . . .	O-Ring	1
7	504148200	Washer	1
8	518794659	Wear Ring	1
9	501850904	Snap Ring	1
10	504153200	Rod Seal	1
11	504154200	Back-Up Ring	2
12	504163200	Rod Wiper	1
13	012825700	O-Ring	1
14	504024201	Wear Ring	1

©2010 Yale Materials Handling Corporation

https://truckmanualshub.com/

MAIN LIFT CYLINDER ASSEMBLY
THREE STAGE FULL FREE LIFT

ITEM	PART NO.	DESCRIPTION	QTY
15	580022502	Rod Seal	1
16	502895202	Piston Ring	1
	504234269	Lubricant	1
	505136042	Kit-Seal	1

FOOTNOTES:

a Refer to Table

©2010 Yale Materials Handling Corporation

https://truckmanualshub.com/

NOTES

©2010 Yale Materials Handling Corporation

https://truckmanualshub.com/

FREE LIFT CYLINDER ASSEMBLY (FIGURE 12-5)
THREE STAGE FULL FREE LIFT

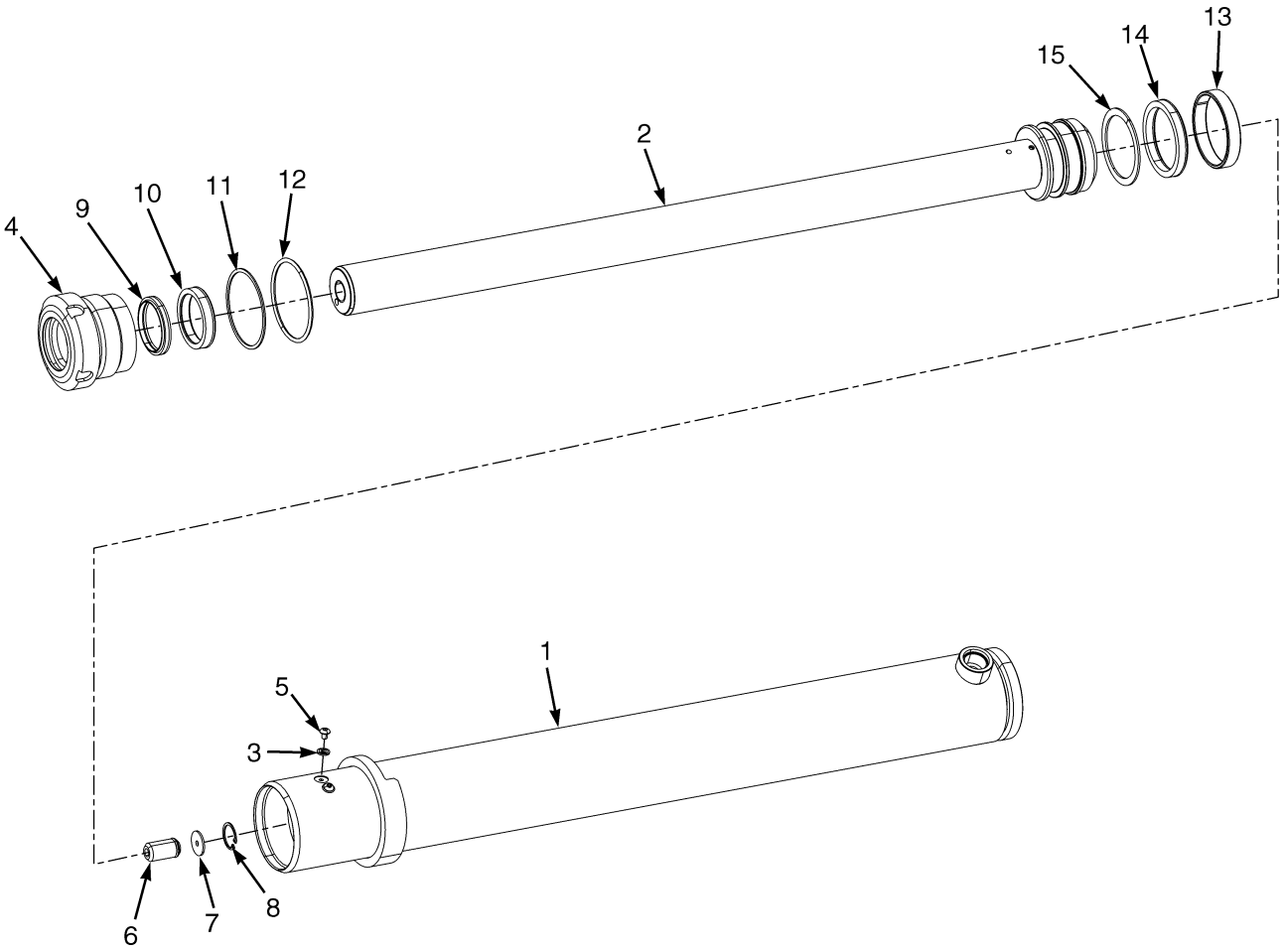

BP170170

©2010 Yale Materials Handling Corporation

https://truckmanualshub.com/

FREE LIFT CYLINDER ASSEMBLY
THREE STAGE FULL FREE LIFT

A698

ITEM	DESCRIPTION 1 2 3 4	LIFT HEIGHT TO BOTTOM OF FORKS		
		4285 mm (168.7 in.)	4735 mm (186.4 in.)	5035 mm (198.2 in.)
	Mast Group Number	A698 4285	A698 4735	A698 5035
	Cylinder Group Number	8601941	8601942	8601943
	Cylinder Assy	582007288	582007289	582007290
1	Tube Wldmt-Cylinder	519541646	519541647	519541648
2	Rod Assy	519540641	519540642	519540643

ITEM	PART NO.	DESCRIPTION	QTY
	a	Cylinder Assy	1
1	a	Tube Wldmt-Cylinder	1
2	a	Rod Assy	1
3	502687901	Sealing Ring	1
4	519537600	Gland	1
5	501753904	Screw	1
6	580067209	Check Valve	1
7	504148200	Washer	1
8	501850904	Snap Ring	1
9	580077907	Rod Wiper	1
10	582006661	Rod Seal	1
11	502011903	Back-Up Ring	1
12	015493200	O-Ring	1
13	504024207	Wear Ring	1
14	504232205	Rod Seal	1
15	504232277	Back-Up Ring	1
	504234269	Lubricant	1
	505136049	Kit-Seal	1

FOOTNOTES:

a Refer to Table

©2010 Yale Materials Handling Corporation

https://truckmanualshub.com/

HEADER HOSE AND ATTACHING PARTS (FIGURE 12-6)

3 FUNCTION

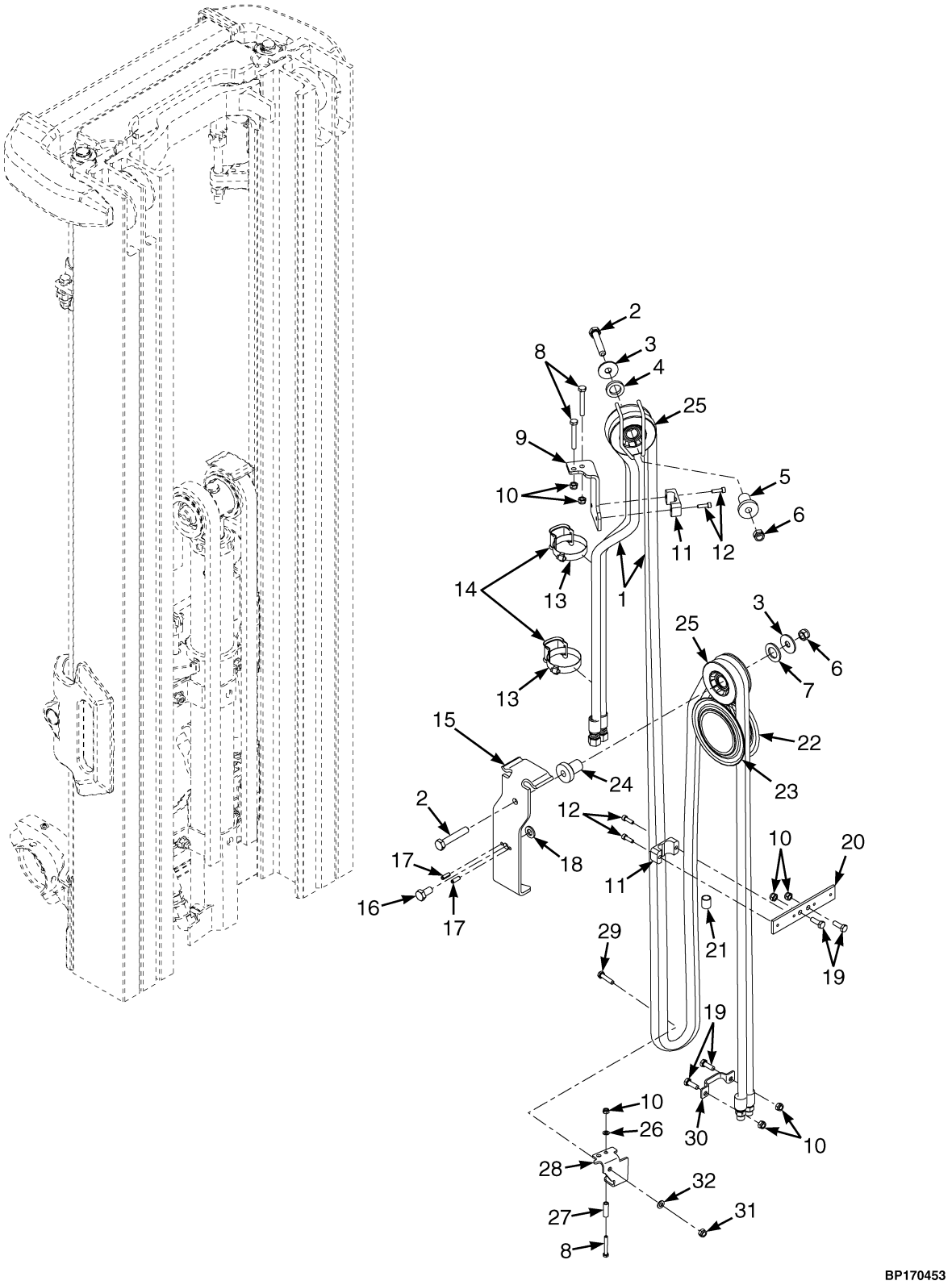

©2010 Yale Materials Handling Corporation

https://truckmanualshub.com/

HEADER HOSE AND ATTACHING PARTS

3 FUNCTION

A698

ITEM	DESCRIPTION 1 2 3 4	LIFT HEIGHT TO BOTTOM OF FORKS		
		4285 mm (168.7 in.)	4735 mm (186.4 in.)	5035 mm (198.2 in.)
	Mast Group Number	A698 4285	A698 4735	A698 5035
1	Hose	582001761	582001762	582001763

ITEM	PART NO.	DESCRIPTION	QTY
1	a	Hose	1
2	580055977	Capscrew	2
3	504070716	Washer	2
4	505962533	Spacer	1
5	504301779	Stubshaft	1
6	580056001	Nut	2
7	580055636	Washer	1
8	580055983	Capscrew	3
9	504301776	Bracket	1
10	580055651	Nut	7
11	504068794	Clamp	2
12	580055989	Capscrew	4
13	580068221	Clamp	2
14	524141696	Hose Clamp	2
15	580009288	Bracket	1
16	580055743	Capscrew	1
17	449034054	Roll Pin	2
18	580056005	Washer	1
19	580055734	Capscrew	4
20	504069740	Plate	1
21	580051876	Cap	1
22	504070756	Hose Guide	2
23	504070721	Snap Ring (Spiral Retaining Ring)	2
24	580009290	Stubshaft	1
25	580023124	Hose Sheave	2
26	580055631	Washer	1
27	582007106	Hose Guide	1
28	582006481	Bracket	1
29	580062131	Capscrew	1
30	580075519	Hose Clamp	1
31	580055652	Nut	1
32	580055632	Washer	2

FOOTNOTES:

a Refer to Table

©2010 Yale Materials Handling Corporation

https://truckmanualshub.com/

CARRIAGE (FIGURE 12-7)
THREE STAGE FULL FREE-LIFT

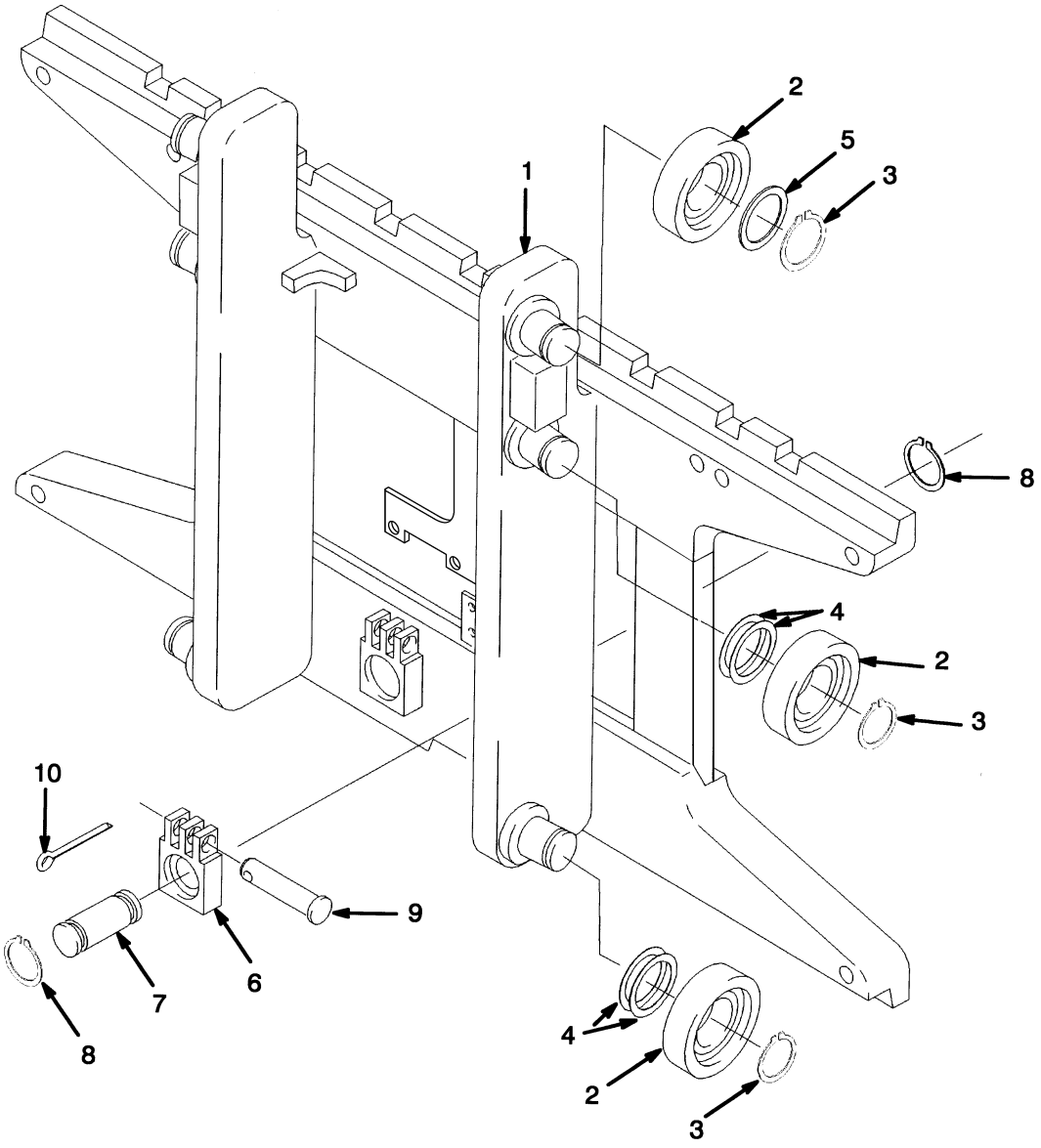

HP170506

©2010 Yale Materials Handling Corporation

https://truckmanualshub.com/

CARRIAGE

THREE STAGE FULL FREE-LIFT

ITEM	PART NO.	DESCRIPTION	QTY
	582002031	Carriage	1
1	. . . . .	Carriage Wldmt	1
1	504066700	Stubshaft	6
2	518797634	Load Roller	6
2	580001435	Load Roller	6
3	015916300	Snap Ring	6
4	504233232	Shim (0.020 in.)	AR
5	504235278	Spacer	2
6	505978544	Chain Anchor (Dual Hole)	1
6	580027878	Chain Anchor (Single Hole) (Optional)	1
7	504071702	Pin	2
8	500227907	Snap Ring	4
9	580033718	Pin (Chain Anchor)	2
10	015415900	Cotter Pin	2

©2010 Yale Materials Handling Corporation

https://truckmanualshub.com/

NOTES

©2010 Yale Materials Handling Corporation

https://truckmanualshub.com/

13 OPTIONS

https://truckmanualshub.com/

https://truckmanualshub.com/

SECTION 13
OPTIONS

DESCRIPTION	PAGE
AUDIBLE BACKUP ALARM	13-3
FIRE EXTINGUISHER	13-4
INTEGRAL SIDE-SHIFT CARRIAGE THREE STAGE FULL FREE-LIFT	13-6
INTEGRAL SIDE-SHIFT CYLINDER	13-10
INTEGRAL SIDE-SHIFT HYDRAULIC HOSES THREE STAGE FULL FREE-LIFT	13-8
MIRRORS	13-2

©2010 Yale Materials Handling Corporation

https://truckmanualshub.com/

MIRRORS (FIGURE 13-1)

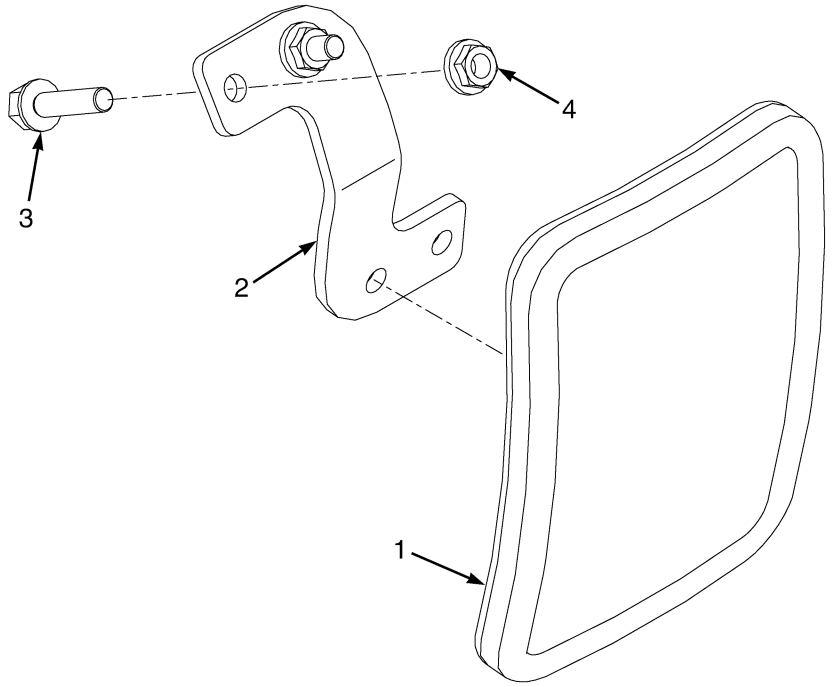

BP000540

ITEM	PART NO.	DESCRIPTION	QTY
1	582003281	Mirror	2
2	580080920	Bracket (LH)	1
2	580080919	Bracket (RH)	1
3	580058269	Capscrew	4
4	580058190	Nut	4

©2010 Yale Materials Handling Corporation

https://truckmanualshub.com/

AUDIBLE BACKUP ALARM (FIGURE 13-2)

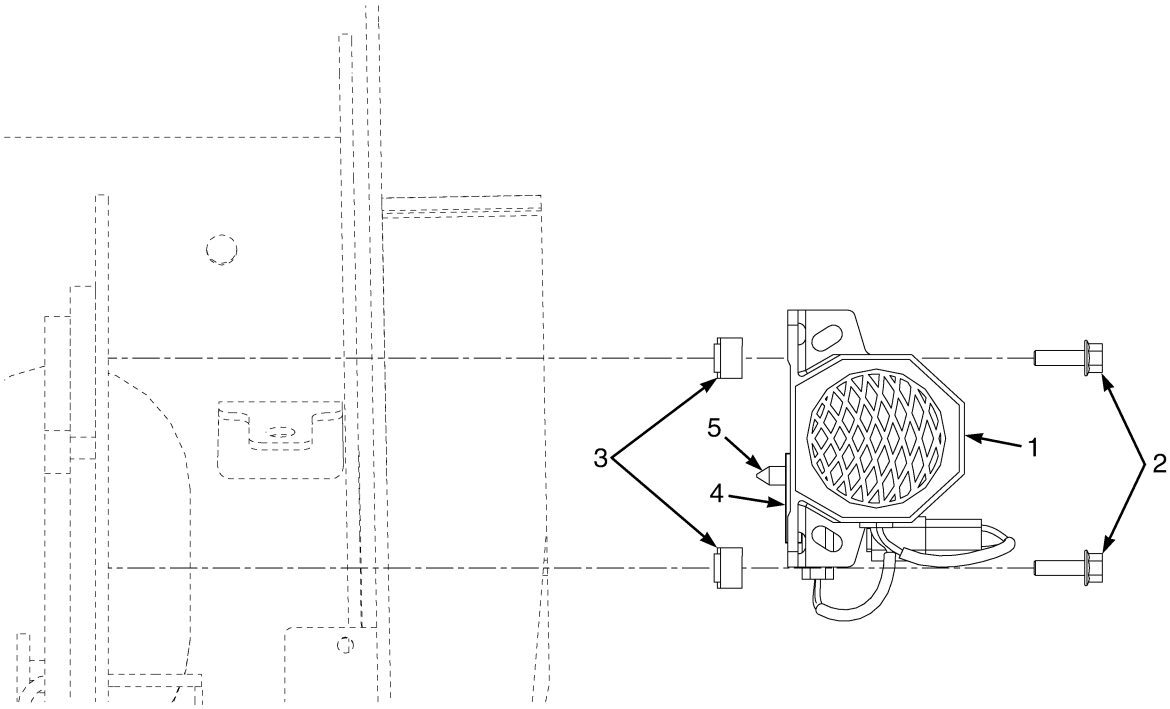

BP000541

ITEM	PART NO.	DESCRIPTION	QTY
1	580045132	Back-Up Alarm (82-102 dbA)	1
2	580039438	Capscrew	2
3	505970526	Nut	2
4	580026812	Clip	1
5	580056613	Fastener	1

©2010 Yale Materials Handling Corporation

https://truckmanualshub.com/

FIRE EXTINGUISHER (FIGURE 13-3)

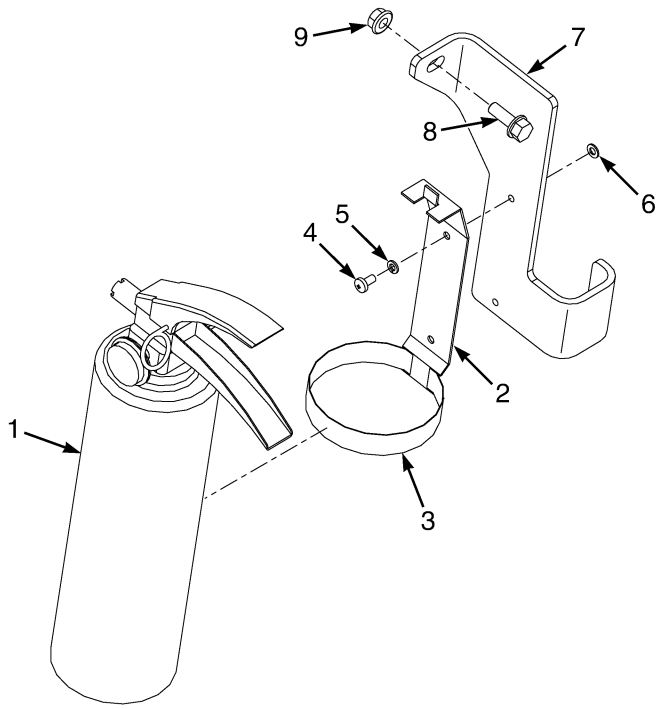

BP000543

ITEM	PART NO.	DESCRIPTION	QTY
1	504061719	Fire Extinguisher	1
2	580049526	Bracket	1
3	. . . . .	Clamp	1
4	580027621	Screw	2
5	449021002	Washer	2
6	449022021	Washer	2
7	580056229	Bracket	1
8	580056815	Capscrew	1
9	580027573	Nut (Flange)	1

©2010 Yale Materials Handling Corporation

https://truckmanualshub.com/

NOTES

©2010 Yale Materials Handling Corporation

https://truckmanualshub.com/

INTEGRAL SIDE-SHIFT CARRIAGE (FIGURE 13-4)

THREE STAGE FULL FREE-LIFT

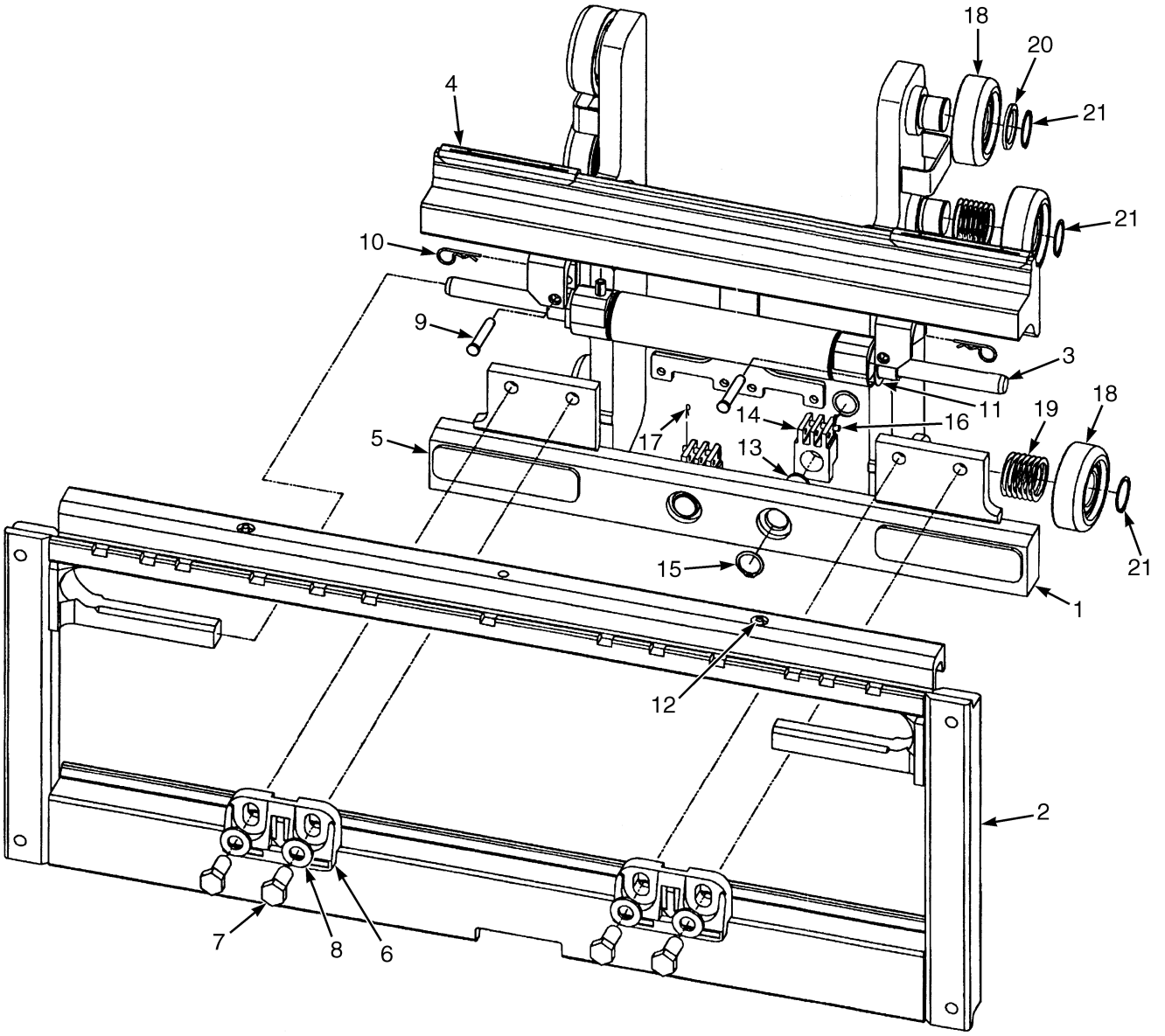

BP000250

©2010 Yale Materials Handling Corporation

https://truckmanualshub.com/

INTEGRAL SIDE-SHIFT CARRIAGE

THREE STAGE FULL FREE-LIFT

ITEM	PART NO.	DESCRIPTION	QTY
	582002033	Side-Shift Carriage	1
1	580023800	Carriage Wldmt (Outer) (42 in.)	1
2	582010067	Carriage Wldmt	1
3	580020708	Sideshift Cylinder Assembly (☞P22053 [Page 13-10])	1
4	580020724	Bearing (Upper)	2
5	580020726	Bearing (Lower)	2
6	580020723	Hook (Lower)	2
7	580055980	Capscrew	4
8	580056008	Washer	4
9	580026721	Pin	2
10	580026723	Cotter Pin	2
11	580026720	Shim	AR
12	015628700	Grease Fitting	2
13	504071702	Pin	2
14	505978544	Chain Anchor (Dual Hole)	2
14	580027878	Chain Anchor (Single Hole)	2
15	500227907	Snap Ring	4
16	580033718	Pin	2
17	015415900	Cotter Pin	2
18	518797634	Load Roller	6
18	580001435	Load Roller (Optional)	6
19	504233232	Shim (0.020 in.)	28
20	504235278	Spacer	6
21	015916300	Snap Ring	6

©2010 Yale Materials Handling Corporation

https://truckmanualshub.com/

INTEGRAL SIDE-SHIFT HYDRAULIC HOSES (FIGURE 13-5)

THREE STAGE FULL FREE-LIFT

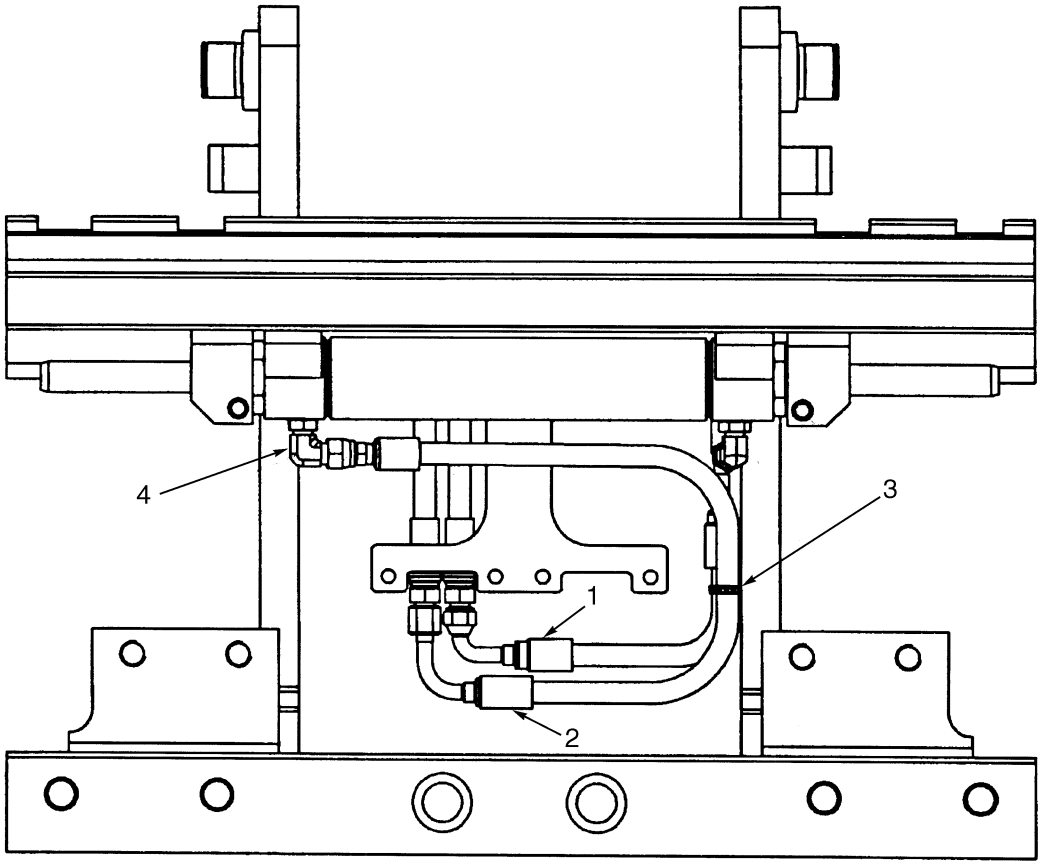

BP000003

ITEM	PART NO.	DESCRIPTION	QTY
1	580046149	Hose Assy	1
2	580046145	Hose Assy	1
3	312850042	Strap Clamp	1
4	580019865	Fitting	2
4	052645200	O-Ring	1

©2010 Yale Materials Handling Corporation

https://truckmanualshub.com/

NOTES

©2010 Yale Materials Handling Corporation

https://truckmanualshub.com/

INTEGRAL SIDE-SHIFT CYLINDER (FIGURE 13-6)

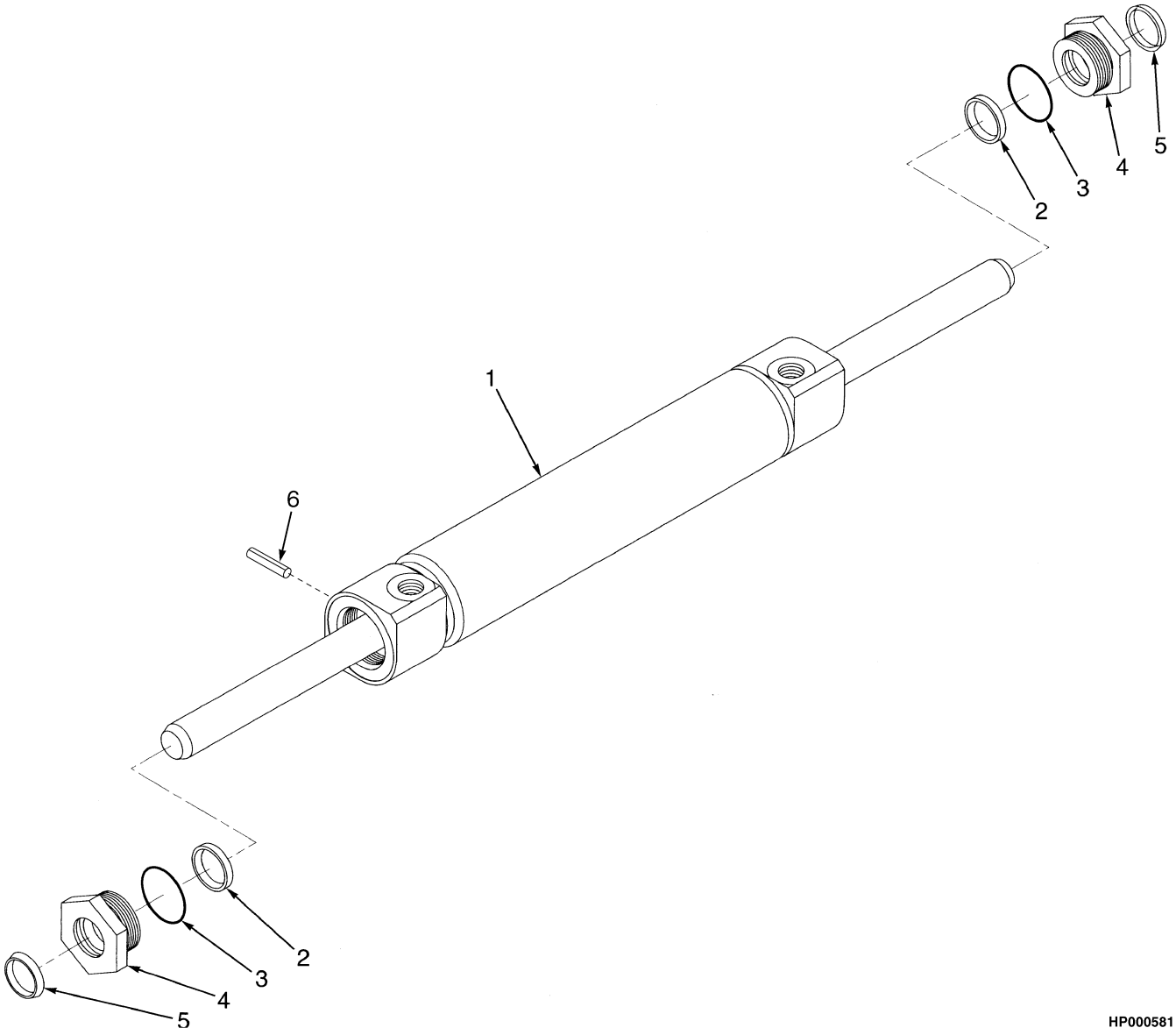

©2010 Yale Materials Handling Corporation

https://truckmanualshub.com/

INTEGRAL SIDE-SHIFT CYLINDER

ITEM	PART NO.	DESCRIPTION	QTY
	580020708	Sideshift Cylinder Assembly (S40-55FT)	1
1	. . . . .	Cylinder	1
2	580020721	Rod Seal	2
3	580020719	O-Ring	2
4	580026724	Retainer	2
5	580020741	Rod Wiper	2
6	580026725	Roll Pin	1
	580027520	Kit-Seal	1

©2010 Yale Materials Handling Corporation

https://truckmanualshub.com/

NOTES

©2010 Yale Materials Handling Corporation

https://truckmanualshub.com/

14 NUMERICAL INDEX

https://truckmanualshub.com/

https://truckmanualshub.com/

SECTION 14
NUMERICAL INDEX

PART NO.	PAGE	ITEM
012823500	7-7	29
012824300	12-3	5
	12-5	7
012825700	12-13	13
013392600	5-7	10
014936600	11-22	2
015125800	7-7	14
	7-13	21
	7-15	21
015415900	12-5	21
	12-9	21
	12-21	10
	13-7	17
015421600	9-7	18
015493200	12-17	12
015493400	11-13	7
015628700	11-11	3
	13-7	12
015630900	11-11	12
015631500	9-7	12
015916300	12-3	2
	12-5	2
	12-9	17
	12-21	3
	13-7	21
015918200	9-7	2
016103500	1-19	21
019299600	5-7	11
019930000	5-7	17
023021000	1-19	24
	1-21	15
031206200	7-7	25
052229600	12-6	30
052643500	12-6	40
052645200	13-8	4
052645300	11-9	2
052645400	7-3	8
	7-3	9
052645700	11-3	20
052645900	11-3	12
052674100	9-8	4
056623800	5-7	8
057092500	3-3	11
	3-5	11
059695400	9-7	25
061278200	1-5	4
062151600	1-21	21
062159500	7-3	2
064570300	7-7	22
080437000	8-3	12
150121835	6-17	14
203142800	1-21	20
258979300	1-9	9
272478100	6-18	1
278131700	6-18	1
311207098	1-21	9
311321035	8-3	14
311323023	9-7	28
312850042	5-7	19
	13-8	3
315976062	7-11	27
315976070	7-11	26
316448036	7-3	8
449001015	7-7	27
449001028	8-5	13
449001048	7-5	7
449001138	2-3	5
449001204	11-7	8
449001241	4-3	19
449001268	5-7	23
449001406	1-7	6
449001412	1-19	20
	7-7	8
	7-11	31
449001415	8-3	26
	8-5	6
449001418	11-3	17
449015011	8-7	8
449015014	10-5	22
449015098	1-19	11
449015112	10-5	19
449021001	1-13	4
449021002	5-7	22
	13-4	5
449021006	9-7	34
449021019	7-5	3
	7-5	4
449022013	2-3	6
	7-7	28
449022016	7-11	18
	8-3	27
	8-5	7
449022017	3-3	16
	3-5	16
	7-5	6
	9-11	7
449022018	7-7	9
449022021	7-7	36
	13-4	6
449022041	7-5	4
	8-7	7
449025042	12-9	25
449034011	5-19	8
449034054	12-9	7
	12-19	17
449058011	8-3	8
500025905	7-7	23
500136904	1-9	14
500154904	11-3	5
500227907	12-5	8
	12-9	9
	12-21	8
	13-7	15
500227910	12-6	43
	12-9	8
500343914	12-9	4
500390901	7-11	15
500505908	7-7	19
500583902	11-15	10
501702901	2-3	
	7-8	
501702902	10-5	
501702903	7-5	
501749901	1-5	2
501753904	12-17	5
501801901	12-6	31
501802901	7-7	20
501850904	12-13	9
	12-17	8
501884906	4-3	10
501904907	1-27	5
502011903	12-17	11
502011914	11-13	9
502056903	4-3	7
	11-3	1
502097909	1-19	15
	1-21	11
502565903	8-3	35
502566901	4-3	20
502566902	2-3	13
502566903	8-3	36
502566904	7-8	2
	11-3	16
502604901	7-11	10
502635907	11-19	6
	11-21	2
502637902	11-13	2
502687901	12-17	3
502895202	12-14	16
504024201	12-13	14
504024207	12-17	13
504060776	9-11	1
504061719	13-4	1
504064729	12-6	33
504064739	12-5	13
504064740	12-6	32
504064742	12-6	39
504064745	12-9	2
504064758	12-5	18
	12-9	23
504064767	12-5	9
504064769	12-5	10
504064781	12-5	16
504064782	12-5	24
504066700	12-3	1
	12-5	1
	12-9	1
	12-21	1
504068794	12-19	11
504069702	12-5	10
504069740	12-19	20
504069791	12-5	10
504070716	12-19	3
504070721	12-19	23
504070732	12-5	23
504070754	12-5	1
504070756	12-19	22
504071702	12-21	7
	13-7	13
504071785	1-10	3
504073748	12-5	1
504073759	12-9	1
504073788	12-9	1
504075721	12-9	2
504075764	12-3	7
	12-5	6
504075767	12-9	19
504075776	12-6	34
504111202	1-2	1
504111203	1-2	1
504148200	12-13	7
	12-17	7
504153200	12-13	10
504154200	12-13	11
504163200	12-13	12
504225242	9-8	5

©2010 Yale Materials Handling Corporation

https://truckmanualshub.com/

NUMERICAL INDEX (continued)

PART NO.	PAGE	ITEM
504226218	7-8	
504229225	11-11	9
504230207	11-19	13
504230236	11-19	10
	11-21	8
504230271	1-21	25
504231215	1-27	1
504231226	10-5	14
504231248	1-27	8
504231252	1-29	2
504231270	11-7	10
504231296	1-27	2
504232205	12-17	14
504232277	12-17	15
504232297	6-7	14
504233232	12-3	4
	12-5	4
	12-9	15
	12-21	4
	13-7	19
504233271	1-5	3
504234265	12-3	6
	12-5	5
504234266	12-5	17
	12-9	24
504234269	11-13	
	12-14	
	12-17	
504235239	12-13	5
504235278	12-21	5
	13-7	20
504236253	12-6	35
504236262	9-8	6
504240712	6-8	12
504256775	2-18	9
504258725	2-21	21
504258732	2-21	31
504258737	2-21	19
504259745	2-15	10
504259748	2-15	9
504259749	2-15	8
504259763	2-13	
504259764	2-9	26
504281794	12-5	22
504281795	12-9	10
504281796	12-9	4
504281799	12-9	4
504288730	6-11	2
	6-16	2
504288731	6-11	11
504288732	6-11	11
504288733	6-11	1
	6-11	2
	6-11	11
	6-17	12
	6-18	2
504288740	6-12	25
504288741	6-11	3
	6-12	28
504288749	6-12	35
504301776	12-19	9
504301779	12-19	5
504301785	12-9	3
504305701	9-8	7
	11-13	4
505136042	12-14	
505136049	12-17	
505657543	12-13	3
	12-13	3
	12-13	3
	12-13	3
	12-13	3
	12-13	3
505959522	5-13	23
	5-15	2
505959558	2-21	10
505960503	2-15	12
505960516	2-9	11
505960520	2-22	3
505960521	2-21	34
505960531	2-21	36
505960536	2-15	6
505960538	2-13	12
505960545	2-21	7
505960548	2-15	11
505960550	2-21	33
505960578	1-5	2
505960594	2-13	6
505962533	12-19	4
505963547	5-13	22
505966522	6-12	32
505966595	4-3	12
505967516	5-4	1
505967534	7-7	12
505967544	8-5	15
505967551	7-7	4
	11-15	12
505967586	5-7	1
505967598	7-7	11
505968505	6-11	1
	6-17	12
505968511	6-12	32
505968514	1-9	17
	6-17	13
505968540	1-9	17
505968566	6-11	6
	6-17	14
505968568	6-11	5
	6-13	40
	6-13	43
	6-13	45
	6-15	8
	6-15	11
	6-16	9
	6-16	11
505969521	9-7	6
505969551	9-7	11
505970524	5-3	5
505970526	13-3	3
505970529	6-5	3
505970544	9-7	24
505970592	4-3	10
505971512	9-7	8
505971513	9-7	16
505971519	8-7	3
505971538	9-7	7
505971543	8-7	4
505971590	9-7	22
505971656	8-7	
	9-11	
505972563	4-3	3
505972565	9-7	5
505972589	6-17	14
505972590	9-7	4
505975518	7-7	37
	7-11	32
505976530	1-27	5
	1-27	16
505976537	6-5	14
505976545	1-29	9
505976556	1-29	8
505977565	1-27	11
505977584	1-27	16
505978544	12-21	6
	13-7	14
506002500	11-13	5
506845500	12-13	4
506986116	11-13	6
507353800	1-13	4
514454800	7-7	6
	7-11	12
516987808	5-13	18
518791631	12-5	16
518794659	12-13	8
518797634	12-21	2
	13-7	18
518798654	5-13	3
518801644	12-5	19
	12-9	20
518803677	1-21	19
518805618	8-3	21
	8-3	29
518805632	1-17	14
518806645	1-29	10
518806660	12-5	27
518807683	5-16	6
518852600	11-13	11
519244814	8-3	6
519528670	12-13	2
	12-13	2
519528671	12-13	2
	12-13	2
519528672	12-13	2
	12-13	2
519529638	12-13	1
519529639	12-13	1
519529640	12-13	1
519529688	12-13	1
519529689	12-13	1
519529690	12-13	1
519537600	12-17	4
519540641	12-17	2
519540642	12-17	2
519540643	12-17	2
519541646	12-17	1
519541647	12-17	1
519541648	12-17	1
520036852	12-3	3
	12-5	3
	12-9	16
520037898	6-11	8
520038855	6-15	4
	6-16	5
520040899	12-9	4
520042831	8-5	
	11-3	
520044819	6-11	7
520045069	6-18	2
520045074	6-18	2
520045672	6-15	13
	6-16	4
520045804	6-12	26
	6-16	2
520045805	6-12	26

©2010 Yale Materials Handling Corporation

https://truckmanualshub.com/

NUMERICAL INDEX (continued)

PART NO.	PAGE	ITEM
	6-16	2
520045874	6-12	34
520051893	12-3	13
520052851	6-5	27
520082877	1-19	13
	1-21	13
520202601	6-12	27
524141696	11-9	16
	12-19	14
524141846	12-6	38
524162256	1-27	7
524172607	11-13	1
524177725	1-13	43
524177726	1-13	40
524179205	9-7	32
524188740	1-13	27
524188745	1-13	37
524195752	1-13	4
524197919	12-3	8
524199303	1-3	1
524208880	1-27	9
524208883	1-9	8
524232141	1-27	6
524240422	1-9	1
524240692	1-9	10
524242078	2-21	25
524253576	2-21	4
524255979	1-17	4
524259220	7-13	6
	7-15	6
524264678	2-25	
524264688	2-21	23
524264690	2-21	32
524281279	1-19	10
524310196	1-5	1
524310197	1-5	1
524310789	1-27	10
524319552	2-15	1
550005006	1-7	2
550007449	1-10	2
550015378	1-17	1
550015595	1-17	
550016119	1-27	18
550020335	7-11	7
580000037	6-7	9
580000727	2-21	
580000868	10-5	28
580001430	12-3	3
	12-5	3
	12-9	16
580001435	12-21	2
	13-7	18
580001734	5-16	3
580001826	2-25	4
580001828	2-25	1
580001829	2-25	10
580002019	1-7	4
580002046	9-7	31
580002885	4-3	14
580003145	11-15	11
580003427	5-4	5
580004592	1-17	8
	1-17	29
	5-19	6
580004656	5-16	5
580006553	6-5	5
	6-5	16
580006764	5-13	10
580006842	1-3	4
580006843	1-3	3
580006844	1-3	2
580006976	11-19	5
	11-21	11
580006977	11-19	3
	11-21	12
580008064	1-27	4
580008524	5-3	13
580009288	12-19	15
580009290	12-19	24
580010912	12-6	29
580011108	7-11	22
580011625	7-3	9
580011639	6-15	10
580012159	11-5	
580012323	6-11	12
580012324	6-11	13
580012987	1-13	35
	3-5	21
	11-3	11
580014465	1-21	
580017034	5-7	21
580018614	1-19	9
580018642	1-25	4
580018643	1-25	6
580019119	6-15	9
	6-16	8
580019245	6-15	15
580019246	6-15	15
580019808	11-7	2
580019810	11-9	13
580019817	11-3	22
580019838	12-6	37
580019860	11-9	5
580019865	13-8	4
580019871	11-3	24
	11-9	19
580020060	3-3	15
	3-5	15
580020468	11-9	4
580020708	13-7	3
	13-11	
580020719	13-11	3
580020721	13-11	2
580020723	13-7	6
580020724	13-7	4
580020726	13-7	5
580020741	13-11	5
580021087	6-13	40
	6-13	43
	6-13	45
	6-15	8
	6-16	9
	6-16	11
580021088	6-13	40
	6-13	43
	6-13	45
	6-15	8
	6-16	9
	6-17	11
580022121	6-11	11
	6-11	12
580022502	12-14	15
580022505	11-13	8
580022514	11-13	10
580022859	6-11	5
580022893	1-9	17
580022997	6-12	37
580023008	1-17	21
580023124	12-19	25
580023586	6-12	37
580023800	13-7	1
580023845	6-11	1
	6-11	2
	6-17	12
	6-18	2
580023854	6-5	22
580023924	6-16	2
580024032	6-13	48
	6-13	50
580024166	2-25	8
580024167	2-25	20
580024168	2-21	3
580024169	2-21	35
580024213	2-15	5
580024214	2-15	5
580024215	2-15	5
580024321	6-12	39
580024707	11-9	10
580024920	12-9	12
580025559	6-15	5
580025560	6-15	3
580025799	6-12	30
	6-13	49
580026621	1-13	21
	6-3	13
	6-5	7
	7-3	5
	11-7	6
580026649	6-12	30
	6-13	49
580026720	13-7	11
580026721	13-7	9
580026723	13-7	10
580026724	13-11	4
580026725	13-11	6
580026749	1-2	4
580026809	6-15	6
580026812	1-9	15
	6-3	8
	13-3	4
580026813	6-11	5
580026816	6-17	13
580026933	1-29	4
580027066	11-3	7
580027270	11-3	7
580027520	13-11	
580027572	1-17	22
	3-3	6
	3-5	6
580027573	5-15	12
	6-5	11
	13-4	9
580027621	13-4	4
580027766	5-7	13
580027878	12-21	6
	13-7	14
580027945	2-5	3
580028333	6-11	12
580030876	6-11	4
580030878	6-13	42
	6-16	7
580030966	1-10	1
	3-5	20
	5-5	2

©2010 Yale Materials Handling Corporation

https://truckmanualshub.com/

NUMERICAL INDEX (continued)

PART NO.	PAGE	ITEM
580030968	3-3	9
	3-5	9
580030969	11-3	9
580030970	5-7	4
	11-11	1
580030975	10-5	2
580032011	2-3	4
	9-3	6
580032974	8-5	14
580032975	8-5	8
580033315	8-5	20
580033339	8-3	39
580033391	8-3	44
	9-7	29
580033512	2-9	23
580033718	12-5	20
	12-9	22
	12-21	9
	13-7	16
580034310	8-5	24
580034311	8-5	26
580034312	8-5	28
580034313	8-5	21
580034357	6-12	33
580034509	6-11	1
	6-11	2
	6-17	12
580034643	8-3	18
580034658	6-11	1
	6-16	2
580034754	8-5	5
580034889	8-5	19
580034999	1-2	2
580035000	1-2	5
580035001	1-2	3
580035002	1-2	
580035034	6-12	29
580035137	8-5	34
580035540	8-5	33
580035708	7-11	6
580035770	9-7	27
580035771	9-7	10
580035774	9-7	1
580035775	9-7	23
580035777	9-7	
580035778	9-7	19
580036023	7-7	7
580036340	9-7	26
	9-8	
580036619	8-3	4
580036620	8-3	6
580036680	4-3	3
580036946	8-3	5
580036981	6-15	9
580036986	6-15	9
580037008	5-7	18
580037013	7-11	28
580037180	5-5	4
	6-3	5
	6-5	9
	10-5	20
	10-7	6
580037207	6-7	1
580037209	6-7	2
580037237	8-3	3
580037270	11-17	1
580037325	4-3	2
580037700	5-19	5
580037836	8-5	10
580037838	5-7	1
580037904	6-8	10
580038024	1-13	42
580038033	1-13	23
580038063	5-19	3
580038303	6-12	37
580038355	6-9	4
580038661	6-15	16
580038861	4-3	8
580039142	3-3	7
580039158	6-12	25
	6-12	35
	6-15	16
580039194	6-15	11
580039250	6-13	47
580039251	6-12	22
580039252	6-12	21
580039254	6-12	24
580039282	6-12	20
580039349	11-7	11
580039365	11-9	3
580039386	11-9	2
580039425	11-9	
580039438	13-3	2
580039499	6-16	8
580039500	6-16	8
580039513	6-15	9
	6-15	15
	6-16	8
580039584	9-8	1
580039586	9-8	9
580039602	6-12	36
580039640	10-5	10
580039757	9-8	3
580039758	9-8	
580039799	6-15	12
	6-16	1
580039800	4-3	3
580039846	6-8	9
580039890	5-3	3
580039900	1-17	10
	2-3	8
	6-5	20
580039908	10-5	6
580039912	11-3	6
580040032	9-8	8
580040128	10-5	23
580040318	9-7	15
580040319	9-7	9
580040374	6-5	17
580040456	6-12	29
	6-18	1
580040489	11-11	2
580040786	7-13	14
580040787	7-13	16
	7-15	16
580040796	7-13	20
	7-15	19
580040820	6-11	6
580040821	6-11	6
580040822	6-17	14
580040823	6-17	14
580040850	6-7	7
580040912	11-3	4
580041002	5-3	7
	5-4	
580041132	4-3	11
580041195	6-7	12
580041208	11-9	18
580041360	6-7	20
580041518	6-12	26
580041704	1-9	12
	1-13	3
	11-9	11
580041711	1-13	9
580041768	6-5	26
580041817	2-17	7
	5-8	2
580042194	7-8	3
580042529	7-15	14
580042533	7-13	
	7-15	
580042794	10-5	8
580042842	10-5	9
580042963	1-13	31
	10-5	12
580043014	8-7	1
580043015	9-11	1
580043016	8-7	1
580043144	10-7	1
580043866	5-19	11
580044129	11-15	15
580044131	6-11	9
580044373	8-3	15
580044783	10-7	2
580044852	6-13	41
	6-13	44
580044854	6-13	41
	6-13	44
580044859	1-13	11
	1-13	17
	6-7	17
580044860	1-17	26
	1-17	32
	4-3	4
	5-3	10
580044861	1-9	6
580044908	6-15	2
	6-16	3
580045064	7-7	32
580045072	7-7	30
580045132	13-3	1
580045192	1-13	25
580045195	8-3	40
580045323	11-9	15
580045338	9-3	1
580045523	2-22	1
	5-8	4
580045558	11-7	5
580046138	1-13	12
580046139	1-13	15
	1-13	19
580046145	13-8	2
580046149	13-8	1
580046263	6-5	24
580046273	7-7	33
580046274	7-11	20
580046396	1-19	22
580046399	9-3	1
580046412	5-3	8
580046451	2-3	10
	7-11	14
580046577	11-9	1
580046640	8-3	10
	10-3	

©2010 Yale Materials Handling Corporation

https://truckmanualshub.com/

NUMERICAL INDEX (continued)

PART NO.	PAGE	ITEM
580046641	8-3	30
	10-3	
580046642	10-3	29
580046643	10-3	29
580046873	2-9	5
580046878	2-11	15
580046879	2-11	1
580046885	2-13	4
580046886	2-13	2
580046887	2-13	3
580046889	2-15	7
580046909	2-17	2
580046981	2-21	6
580047025	7-8	1
580047049	6-8	2
	6-8	8
580047200	6-3	3
	6-8	4
	6-8	11
580047454	11-9	6
580047714	5-3	11
	5-19	4
	6-3	12
	6-5	6
	6-8	5
	7-3	6
	10-5	15
	11-7	7
580047728	8-7	2
580047741	9-11	2
580047742	10-5	21
580047792	6-5	8
580047919	8-3	23
	10-5	3
580047941	11-9	
580048123	2-3	1
580048458	2-5	4
580048561	1-13	8
580048576	5-3	1
580048590	5-13	1
	5-15	18
580048610	5-15	1
580048664	5-13	6
580048719	6-12	23
580048721	6-13	46
580048738	7-7	21
580048839	5-4	3
580048840	5-4	2
580048841	5-4	4
580049011	1-17	18
	5-11	11
	5-13	24
	5-15	11
580049224	6-7	21
580049225	6-7	6
580049229	1-17	25
	10-5	13
580049231	1-17	6
	6-5	23
580049294	11-19	7
	11-21	14
580049331	9-7	30
580049522	6-12	31
580049526	13-4	2
580049758	1-17	33
580049806	9-5	13
580049807	9-5	17
580049808	9-5	21
580049810	9-5	4
580049811	9-5	5
580049812	9-5	8
580049814	7-3	4
580049840	8-3	24
580049860	1-3	
580049861	1-3	5
580049884	1-21	7
580049892	1-19	2
580049893	1-19	7
580049906	1-19	1
580049915	1-17	28
	1-17	28
580050042	2-3	7
	7-11	13
580050293	6-5	4
580050478	1-13	30
580050627	6-11	6
580050641	11-3	18
580050644	6-5	1
580050773	1-13	41
580050847	6-18	1
580050933	6-8	3
580050959	1-9	17
580050978	11-15	6
580051159	6-7	13
580051168	6-7	3
580051185	1-7	1
580051383	2-5	5
580051384	2-5	6
580051670	7-5	2
580051703	6-15	11
580051704	6-15	10
580051747	1-9	17
580051779	1-27	13
580051780	1-27	14
580051790	1-27	15
580051796	7-11	25
580051813	8-3	42
580051814	8-3	41
580051832	1-17	23
580051876	12-19	21
580051941	1-9	2
580052019	6-5	15
580052203	1-27	15
580052279	10-5	31
580052297	11-17	8
580052324	11-3	20
580052360	9-7	3
580052409	1-13	20
580052661	5-19	7
580052864	8-5	23
580052865	8-5	22
580052866	8-5	25
580052867	8-5	27
580052910	1-13	20
580052931	10-5	30
580052974	1-13	24
580052993	1-14	45
580053000	5-7	7
580053146	1-13	18
580053154	2-7	2
	2-11	
580053173	2-15	4
580053175	2-15	4
580053177	2-15	4
580053400	2-21	18
580053508	2-17	5
	2-21	8
580053612	12-9	14
580053803	2-17	6
580054026	11-5	5
580054027	11-5	11
580054028	11-5	12
580054029	11-5	6
580054044	11-19	16
	11-21	5
580054046	11-22	4
580054052	11-19	1
	11-21	13
580054053	11-21	3
580054062	11-17	4
	11-22	1
580054063	11-19	18
580054064	11-19	18
580054070	1-13	36
580054196	1-17	5
580054201	1-17	3
580054462	11-19	2
580054465	11-19	4
580054672	11-19	24
580054684	11-22	10
580054689	11-21	4
580054710	1-13	44
580054869	11-19	15
	11-21	6
580054992	11-3	4
580055166	11-22	2
580055193	7-13	8
	7-15	8
580055195	7-13	9
	7-15	9
580055196	7-13	10
	7-15	10
580055203	7-13	18
	7-15	18
580055204	7-13	7
	7-15	7
580055213	7-13	2
	7-15	2
580055216	7-13	17
	7-15	17
580055312	1-29	5
580055342	6-13	51
580055343	6-13	51
580055585	11-9	14
580055594	11-5	4
580055595	11-5	
580055631	12-19	26
580055632	12-19	32
580055636	12-19	7
580055651	12-3	17
	12-6	42
	12-19	10
580055652	1-10	3
	12-19	31
580055698	1-13	22
580055733	12-3	16
580055734	12-19	19
580055736	12-6	41
580055742	12-9	5
580055743	12-19	16
580055804	11-9	2
580055976	12-5	11
580055977	12-19	2
580055980	13-7	7

©2010 Yale Materials Handling Corporation

https://truckmanualshub.com/

NUMERICAL INDEX (continued)

PART NO.	PAGE	ITEM
580055983	12-19	8
580055989	12-19	12
580056000	11-11	8
580056001	12-5	14
	12-9	13
	12-19	6
580056003	1-13	34
580056004	6-7	11
580056005	1-19	14
	1-21	12
	11-11	7
	12-3	11
	12-5	12
	12-9	6
	12-19	18
580056006	6-7	10
580056008	13-7	8
580056022	11-19	17
	11-21	7
580056023	11-19	11
	11-21	9
580056024	11-19	12
580056224	1-13	39
580056229	13-4	7
580056336	11-3	10
580056337	11-3	8
580056381	3-3	1
	3-5	1
580056430	1-27	17
580056439	2-3	11
580056440	2-3	14
580056441	2-3	12
580056444	2-5	7
580056459	5-19	10
580056460	5-19	9
580056526	1-9	4
580056528	1-9	3
580056531	1-13	24
580056613	1-9	16
	6-3	7
	13-3	5
580056624	10-5	27
580056627	10-5	7
580056664	1-17	27
	1-17	27
580056666	11-15	14
580056667	1-9	2
580056679	6-12	36
580056730	6-5	21
580056815	1-9	5
	1-10	1
	1-13	26
	1-17	31
	4-3	5
	5-3	9
	11-15	5
	13-4	8
580056839	5-19	13
580056840	11-15	9
580056844	11-15	4
580056877	11-19	14
580056926	1-19	8
580057260	1-25	9
580057266	1-25	11
580057307	1-25	7
	1-25	10
580057351	5-5	
	8-5	
580057451	1-21	10
580057831	10-5	24
580057842	3-3	4
	3-5	4
580057863	8-3	34
580058009	11-11	10
580058078	9-3	2
580058135	1-17	15
580058137	1-17	34
580058188	6-7	16
580058190	13-2	4
580058212	1-9	11
	1-13	7
	6-7	18
580058269	11-15	13
	13-2	3
580058314	6-7	15
580058356	1-29	7
580058357	1-29	7
580058383	1-17	9
580058447	1-9	17
580058734	1-13	4
580058821	1-29	1
580058890	3-3	10
	3-5	10
580059631	7-11	
580060018	1-19	23
580060225	8-5	36
580060232	8-5	35
580060289	8-5	37
580060321	10-3	
580060322	10-3	
580060323	10-3	15
580060576	10-5	32
580060600	2-5	1
580060601	2-5	1
580060755	7-13	
	7-15	
580061341	9-8	2
580061342	9-7	20
580061343	9-7	14
580061352	11-11	6
	12-3	12
580061814	1-13	4
580061815	1-13	4
580062078	1-19	10
580062090	8-5	38
580062118	6-12	29
580062131	12-19	29
580062938	11-19	9
	11-21	10
580063390	1-9	13
580063616	6-5	18
580063617	6-5	13
580063618	6-5	2
580063697	6-13	41
	6-13	44
580063751	6-13	41
	6-13	44
580064014	5-15	8
	5-15	20
	5-16	8
580064311	2-3	12
580064483	1-10	4
580064907	1-17	16
580064978	9-11	8
580065002	9-3	3
580065386	1-17	17
580065388	1-17	13
580065405	1-17	12
580067185	5-11	3
580067209	12-17	6
580068221	11-9	17
	12-19	13
580068404	8-3	25
580069181	5-3	6
580070353	7-7	2
580070914	2-3	9
580071011	11-3	12
580071066	6-16	10
580072689	4-3	13
580072982	7-11	7
580073345	7-7	3
580073413	3-3	14
	3-5	14
580073415	3-3	12
	3-5	12
580073416	3-3	12
	3-5	12
580073429	5-3	12
580073519	6-5	12
580073520	6-5	1
580074044	5-7	24
580074432	6-5	28
580074778	5-3	4
580074876	5-3	2
580074878	6-5	12
580074879	1-10	3
580074887	7-11	5
580075004	6-5	25
580075200	8-3	22
580075365	6-12	27
580075519	12-19	30
580076313	6-5	27
580076450	6-5	1
580076561	9-11	5
580076563	8-7	5
580076752	6-3	16
580077907	12-17	9
580077954	5-13	5
580078218	5-13	7
580078219	5-13	19
580078220	5-8	10
	5-13	13
580078221	5-13	11
580078222	5-13	12
580078223	5-13	15
580078224	5-8	1
	5-13	2
580078226	5-13	4
580078227	5-13	9
580078228	5-11	13
	5-13	16
580078229	5-15	19
580078232	5-15	9
580078233	5-15	14
580078235	5-15	3
580078236	5-15	5
580078238	5-15	13
580078239	5-15	16
580078244	5-16	
580078245	5-11	2
580078246	5-11	1
580078248	5-8	11
	5-11	5
580078250	5-8	9

©2010 Yale Materials Handling Corporation

https://truckmanualshub.com/

NUMERICAL INDEX (continued)

PART NO.	PAGE	ITEM
	5-8	12
	5-11	9
580078251	5-11	7
580078255	5-11	14
580078257	5-11	6
580078285	5-13	14
580078287	5-8	5
	5-13	17
580078288	5-8	3
	5-13	8
580078294	6-9	3
580078329	5-15	15
580078690	9-5	1
580078922	2-7	1
	2-9	
	2-11	
	2-13	
	2-15	
	2-21	
	2-25	
580078950	2-22	4
580078951	2-17	9
580078965	2-22	2
580079545	5-11	12
580079546	5-11	10
	5-15	17
580079547	5-15	10
580079615	6-7	8
580079982	7-11	23
580080021	5-19	2
580080022	5-19	1
580080025	6-11	7
580080026	6-11	8
580080031	6-12	30
	6-13	49
580080032	6-12	38
580080171	1-7	3
580080338	6-9	2
580080654	8-3	
580080753	7-11	21
580080919	13-2	2
580080920	13-2	2
580081787	9-3	5
	9-5	
580082329	6-12	36
580082531	6-7	5
580082532	6-7	4
580082533	6-7	4
580082534	6-7	4
580082537	7-11	24
580083020	1-13	13
580083423	11-15	8
580083460	11-3	21
	11-5	
580083733	4-3	15
580083939	10-5	17
	10-7	3
580084411	11-15	1
580084412	11-15	2
580084413	11-15	3
580084478	1-17	7
580084480	1-17	2
580084483	1-17	24
580084626	10-7	2
580084956	1-21	17
580085082	11-15	7
580085134	11-17	7
580085142	11-21	
580085146	11-19	8
580085165	11-17	3
	11-21	1
580085970	1-17	20
580086071	5-15	8
580086211	1-19	10
580086232	6-15	14
580086342	1-17	30
580086666	4-3	21
580086874	9-3	2
580086875	9-3	2
580086876	9-3	2
580087164	1-17	11
580087184	1-13	38
580087185	1-13	28
580087194	7-11	9
	7-13	
580087195	7-11	8
	7-15	
580087219	7-7	26
580087365	8-5	12
580087579	11-10	7
580087580	11-10	1
580087581	11-10	
580087582	11-10	2
580087583	11-10	3
580087631	11-9	12
580087650	3-3	13
	3-5	13
580087651	3-3	17
	3-5	17
580087659	1-19	12
	1-21	26
580088461	5-13	20
580088462	5-13	21
	5-15	7
580088718	11-17	6
580088730	8-5	31
580089318	7-7	24
580089541	2-17	4
	2-22	4
580090094	7-11	3
580090191	7-7	13
580090374	5-7	16
580090387	5-7	16
580090439	11-15	16
	11-17	
580090449	11-17	2
580090679	1-19	3
580090840	12-9	18
580090887	1-9	7
580091165	7-3	1
580091885	1-17	19
580091916	6-5	12
580092732	1-19	19
	1-21	22
580092936	1-13	6
580092937	1-13	10
580092987	1-19	16
	1-21	24
580093615	5-15	4
580093693	7-5	1
580093953	3-3	3
	3-5	3
580094353	6-16	6
580094544	6-15	1
	6-15	19
580094546	6-15	1
	6-15	19
580094703	7-3	7
580094751	7-3	3
580094784	5-8	6
	5-15	6
	5-16	
580094879	7-11	2
580094880	7-11	16
580094926	11-17	5
	11-19	
580094950	7-7	10
580095332	7-7	5
580095460	1-21	
	1-25	8
580095461	1-21	
	1-25	1
580095462	1-21	4
580095463	1-21	5
580095465	1-21	
580095474	1-21	2
580095475	1-21	3
580095476	1-21	1
580095477	1-21	6
580095974	10-5	25
580096406	1-13	32
580096474	6-3	4
580096475	6-3	6
580096514	7-11	17
580096539	6-12	28
580096655	10-5	
	10-7	
580096725	11-7	9
580096833	11-3	2
580096884	10-5	29
580097531	1-19	4
580097537	3-3	5
	3-5	5
582000157	3-3	8
	3-5	8
582000718	10-5	4
582000813	1-19	5
582001179	8-3	1
582001248	8-5	3
582001249	8-5	16
582001250	8-5	17
582001466	8-5	30
582001467	8-3	19
	8-5	
582001468	8-3	28
582001469	8-3	20
582001483	9-7	33
582001484	11-13	
582001645	12-5	26
582001646	12-5	26
582001647	12-5	26
582001684	3-3	18
	3-5	18
582001685	5-8	7
582001761	12-19	1
582001762	12-19	1
582001763	12-19	1
582001796	11-11	5
582001797	11-11	4
582001885	1-13	2
582001890	1-13	1
582001891	1-13	16
582001947	11-7	4
582001948	11-7	3

©2010 Yale Materials Handling Corporation

https://truckmanualshub.com/

NUMERICAL INDEX (continued)

PART NO.	PAGE	ITEM
582001957	11-11	11
582001972	10-5	16
582002031	12-21	
582002033	13-7	
582002078	9-7	25
582002292	5-7	14
582002509	5-8	8
	6-9	1
582002534	1-21	14
582002535	1-21	18
582002614	7-13	3
	7-15	3
582002615	7-13	19
	7-15	20
582002621	1-19	17
582002667	6-11	7
582002867	6-11	1
582002868	6-17	12
582002869	6-11	2
582002870	6-7	22
582002952	11-10	
582002989	5-7	20
	6-18	
582003174	6-11	3
582003214	6-3	10
582003281	13-2	1
582003495	4-3	9
582003496	6-3	2
	6-15	
	6-16	
582003497	6-7	19
582003502	7-11	29
582003574	1-19	
582003582	1-21	
582003678	7-5	8
582003822	6-3	9
582003870	7-7	18
582003951	6-5	19
582004126	1-21	8
582004169	10-5	18
	10-7	5
582004373	6-8	6
582004374	6-8	7
582004384	6-8	1
582004500	1-13	33
582004516	1-17	28
582004571	1-17	27
582004818	7-7	34
582005028	1-19	6
	1-21	7
582005075	5-7	2
582005114	10-5	11
582005136	6-8	13
582005302	5-7	3
582005336	11-3	15
582005468	6-3	1
	6-11	
582005520	11-3	14
582005523	11-10	6
582005706	5-16	1
582005712	11-9	7
582005713	11-9	9
582005714	11-9	8
582005715	11-9	20
582005777	5-11	8
582005778	5-11	15
582005779	5-11	4
582005785	2-21	38
582005862	4-3	6
582005921	12-3	9
582005953	2-3	15
582006405	7-11	1
582006406	7-7	1
582006407	7-7	31
582006408	7-7	15
582006481	12-19	28
582006484	11-3	19
582006499	5-8	5
582006502	3-5	19
582006503	3-5	19
582006504	3-5	7
582006514	11-3	13
582006520	6-3	11
582006614	1-29	3
582006661	12-17	10
582006709	8-3	13
582006711	8-3	
582006737	12-3	10
582006766	12-3	15
582006769	8-3	16
582006770	8-3	17
582006862	7-11	17
582007106	12-19	27
582007251	12-3	1
582007252	12-3	1
582007253	12-3	1
582007263	12-3	
	12-5	
	12-9	
582007265	12-3	
	12-5	
	12-9	
582007267	12-3	
	12-5	
	12-9	
582007288	12-9	11
	12-17	
582007289	12-9	11
	12-17	
582007290	12-9	11
	12-17	
582007293	7-11	17
582007346	12-5	1
582007411	12-5	25
	12-13	
582007412	12-5	25
	12-13	
582007413	12-5	15
	12-13	
582007414	12-5	15
	12-13	
582007415	12-5	15
	12-13	
582007416	12-5	25
	12-13	
582007601	12-6	36
582008126	7-7	
	7-11	
582008181	11-3	23
582008292	7-7	17
582008293	7-7	16
582008319	7-7	35
582009792	5-7	5
582009793	5-7	9
582009794	5-7	12
582010050	1-13	29
582010067	13-7	2
582010093	4-3	1
582010094	12-9	1
582010095	8-5	18
582010096	7-11	30
582010310	7-11	17
582010311	7-11	17
640032905	1-27	16
900001230	4-3	16
900001231	4-3	17
900002253	12-9	2
900002259	12-5	23
900002264	12-5	16
900003213	12-6	28
900003231	8-3	34
900003260	4-3	18
900003277	12-3	14
900094826	10-3	16
900094842	10-3	28
900281819	2-11	13
900281820	2-11	3
900291803	2-25	5
900291804	2-25	6
900526819	2-21	22
900529808	2-17	10
900542813	2-11	2
900542824	2-17	8
900543845	2-13	17
900559852	2-13	8
	2-17	1
	2-21	1
900870815	10-3	27
901015826	2-11	4
901084817	2-17	7
901085825	2-17	11
901085837	2-9	24
901096876	2-21	30
901270802	2-9	16
901270814	2-9	7
901270815	2-9	8
901271803	2-25	2
901271816	2-11	10
901271817	2-9	19
	2-11	6
901272802	2-13	18
901272820	2-13	19
901274801	2-9	17
901276803	2-18	4
901276809	2-18	6
901282833	2-25	19
901282846	2-21	5
901290803	2-9	20
901290804	2-9	21
901290806	2-9	22
901290808	2-9	2
901290811	2-9	4
901290816	2-9	28
901290818	2-9	6
901290825	2-9	12
	2-13	1
901290828	2-7	3
	2-18	1
	2-21	12
901290829	2-9	27
901290831	2-9	18
901290832	2-9	14
901290834	2-9	1
901290836	2-9	13

©2010 Yale Materials Handling Corporation

https://truckmanualshub.com/

NUMERICAL INDEX (continued)

PART NO.	PAGE	ITEM
901290837	2-9	17
901290838	2-9	15
901290842	2-9	25
901290843	2-9	10
901291801	2-11	7
901291803	2-11	5
901291804	2-11	8
901291807	2-11	12
901291813	2-11	9
901291814	2-11	11
901292803	2-13	16
901292811	2-13	4
	2-25	3
901292812	2-13	10
901292814	2-13	11
901292816	2-13	5
901292819	2-13	7
	2-21	14
	2-25	21
901292831	2-13	9
901292832	2-13	15
901293811	2-15	3
901293812	2-15	3
901293813	2-15	3
901293814	2-15	3
901293825	2-15	2
901293861	2-15	13
901293862	2-15	13
901293863	2-15	13
901293864	2-15	13
901295811	2-17	3
901296804	2-18	8
901296805	2-18	3
901296806	2-18	5
901296807	2-18	2
901300827	2-7	5
901301802	2-25	17
901301815	2-25	15
901301818	2-25	18
901301821	2-25	7
901301822	2-25	14
901301823	2-25	13
901302814	2-21	2
901302821	2-21	15
901302834	2-21	13
901302839	2-21	37
901302840	2-21	29
901574814	2-11	14
901575808	2-13	21
901575820	2-13	13
901575824	2-13	22
901575826	2-13	20
901578809	2-25	9
901578811	2-25	11
901578812	2-25	12
901578816	2-25	16
901579802	2-21	27
901579803	2-21	28
901579804	2-21	26
901579805	2-21	24
901579806	2-21	11
901579811	2-21	17
901579818	2-21	9
901579827	2-21	20
901579833	2-21	16
901848826	2-9	3
902136802	9-11	3
902136803	9-11	4
902194801	10-3	1
902194802	10-3	1
902194803	10-3	21
902194804	10-3	3
902194805	10-3	6
902194806	10-3	6
902194808	10-3	8
902194809	10-3	9
902194810	10-3	10
902194811	10-3	20
902194840	10-3	22
904165100	10-3	
906085100	8-3	32
906196100	8-5	18
906268100	9-11	6
906646100	8-7	6
908076100	8-3	11
	8-5	32
909267300	5-7	15
909882404	9-7	35
909882405	1-5	5
909904403	1-13	14
909932401	8-5	2
909932405	9-7	14
909932406	9-7	13
909932409	8-3	8
910065119	6-15	7
910983100	2-7	4
911378400	2-13	14
912189300	2-18	7
	3-3	2
	3-5	2
912514300	5-7	6
919921300	8-3	31
920802300	8-3	9
921949300	8-3	7
922100300	10-5	1
922102300	10-5	1
922363300	9-7	17
922627300	10-5	5
924234401	8-5	9
924307401	10-3	
924307402	10-3	
925776402	1-13	5
929150300	10-3	
929151300	10-3	
930903905	2-3	3
931013907	7-11	19
	8-3	43
931014906	8-3	2
	8-5	29
931017917	7-5	5
931017918	2-5	2
	8-3	37
932200902	8-5	4
934403300	10-5	1
934404300	10-5	1
936301301	10-3	
937100904	10-5	26
940102909	2-3	2
940400905	1-19	18
	1-21	23
940600906	5-19	12
	10-7	4
940600908	6-5	10
940800907	8-3	33
950409907	7-11	11
950513905	8-5	11
950517907	9-7	13
952405902	6-15	17
	6-15	18
952408901	6-15	17
	6-15	18
955400911	1-7	5
958506995	9-7	21

©2010 Yale Materials Handling Corporation

https://truckmanualshub.com/

NUMERICAL INDEX (continued)

NOTES

©2010 Yale Materials Handling Corporation

https://truckmanualshub.com/

15 USER SUPPORT INFORMATION

https://truckmanualshub.com/

https://truckmanualshub.com/

SECTION 15
USER SUPPORT INFORMATION

DESCRIPTION	PAGE
SERVICE PARTS ORDERING INSTRUCTIONS	15-2
TECHNICAL SERVICE PUBLICATIONS	15-2
OPERATOR TRAINING	15-2
SERVICE TRAINING COURSE	15-2
SERVICE TRAINING MATERIALS	15-2

©2010 Yale Materials Handling Corporation

https://truckmanualshub.com/

Your investment in a Yale Industrial Truck is important to you and to your Yale Dealer. You measure the return on that investment through the performance of these trucks and the drivers who operate and the mechanics who service them safely and efficiency. The following information is intended to help you to achieve your investments objectives:

SERVICE PARTS ORDERING INSTRUCTIONS

HOW TO ORDER SERVICE PARTS

In order to prevent delay, too much communication and to have your orders filled correctly, quickly, and at the least possible cost, the following is the correct procedure to use to order replacement parts.

WHEN ORDERING PARTS

Contact your authorized Yale Industrial Truck Dealer giving them the following information:

1. Your Purchase order number.
2. Complete addresses for sending the invoice and parts.
3. Tell us how you want your parts sent. If we do not get this information, we will send the parts using the lowest priced method.
4. Correct part number(s) and description(s). Use your parts manual as a reference.
5. Model and serial number of the truck.

TECHNICAL SERVICE PUBLICATIONS

Technical literature, with detailed information, is available at a nominal fee to assist users to effectively maintain Yale Industrial Trucks in a safe, useful condition. Part Manuals with complete replacement parts identification, Service Maintenance Manuals which provide service and overhaul procedures and additional copies of the Operating Manual can be obtained from your Yale Industrial Truck Dealer.

To provide instructions for safely operating and servicing Yale Industrial Trucks, each truck is equipped with an operators manual. It describes various operating techniques and safety warnings to the operator. It contains a guide to safe maintenance practices and recommended schedules for maintenance. if the operators manual is missing from any Yale Industrial Truck, it should be replaced. Replacement copies are available for a nominal fee from your Yale Dealer.

OPERATOR TRAINING

The Yale "Basic Operator Training" program helps industrial truck users increase their materials handling production and safety through correct lift truck operation, training, and motivation. The Yale program is based upon real life experience – not theoretical concepts. We developed a "complete" program that is totally self-contained – incorporating the most modern instructional techniques including elements of self-study, audio-visual support (both video and slides), and classroom study.

SERVICE TRAINING COURSE

Operators and Yale dealer service technicians can improve their technical ability for maintaining and repairing Yale Industrial Trucks, which decreases repair time and cost, by taking Yale Service Training courses. Different types of mechanical, electric, and electronic subjects are available. Courses can be held at customer or Dealer locations in addition to regularly scheduled courses which are held at Yale Corporate Headquarters in Greenville, NC.

SERVICE TRAINING MATERIALS

Your own service training can be supported through a complete line of Yale Service Training materials. An Index is available from your Yale Dealer which lists textbooks, audio-visual programs and films. These materials will provide your training staff with everything necessary for training your group.

For additional information or assistance in obtaining these user support publications and programs, contact:

Yale Materials Handling Corporation
1400 Sullivan Drive
Caller No. 12011
Greenville, NC 27834-2011

©2010 Yale Materials Handling Corporation

https://truckmanualshub.com/

https://truckmanualshub.com/

Yale Materials Handling Corporation
1400 Sullivan Drive
Caller No. 12011
Greenville, NC 27834-2011

550013968
©Yale Corp.
09/2010