https://truckmanualshub.com/

SECTION 00 – GENERAL INFORMATION

CONTENTS

Section	Description	Page
	Introduction	00-2
	About Improvements	00-2
	Company Policy	00-3
	Parts and Accessories	00-3
	Model Codes	00-3
	Precautionary Statements	00-4
	Safety Precaution Information	00-5
	General Safety Information	00-7
	Machine Model and Serial Number Location	00-9
	Engine Model and Serial Number Location	00-9
	Hardware Torque Specifications	00-10
	Installation of Adjustable Fittings in Straight Thread O Ring Bosses	00-12
	Standard Torque Data for Hydraulic Tubes and Fittings	00-12
	Pipe Thread Fitting Torque	00-13
	Lubricants and Coolants	00-13
	Sealants	00-13
	Properly Support a Raised Machine	00-14
	Properly Support Boom on Boom Lock Pins	00-14
	Raising Boom Without Hydraulic Oil Flow	00-14
	Raising Boom Without Battery Voltage (12V)	00-16
	Reattaching Cylinders After Repair with Boom Resting on Boom Lock Pins	00-17
	Major Unit Overhaul	00-18
	Cab and Boom Tilt Procedure	00-19
	Craning the Skid Steer	00-25
	Special Tools	00-28
	Specifications	00-29
	Dimensions	00-35

https://truckmanualshub.com/

INTRODUCTION

This service manual provides the technical information needed to properly service and maintain the Models LS160 and LS170 skid steers. Use it in conjunction with the operator's manual which is supplied with the skid steer. Keep both manuals available for ready reference.

The L160 and L170 have many similarities with the major differences being engine horsepower and lifting capacity.

Whenever working on New Holland equipment, left and right sides of the machine are determined by standing behind the unit, looking in the direction of travel.

The easiest and least time-consuming removal, disassembly, and reassembly procedures are detailed in the manual. Modifying these procedures is not recommended.

New Holland skid steers are designed with emphasis on safety for operator protection. However, careless and negligent operation can still result in serious injury to persons or damage to property. Be sure to read and follow all safety instructions in this manual.

Your New Holland dealer is interested in your obtaining the most from your investment and will be glad to answer any questions you may have about your skid steer. When major service is required, your dealer's staff of trained service technicians is ready to serve you.

When in need of parts, always order genuine New Holland service parts from your New Holland dealer. Be prepared to give your dealer the model and serial number of the engine and skid steer (the location of these numbers is described later in this section). Record the serial numbers here.

Skid Steer Model _____

Skid Steer Serial Number _____

Engine Model _____

Engine Serial Number _____

CAUTION

This symbol is used throughout this book whenever your own personal safety is involved. Take time to be careful!

ABOUT IMPROVEMENTS

New Holland is continually striving to improve its products. We must, therefore, reserve the right to make improvements or changes when it becomes practical and possible to do so, without incurring any obligation to make changes or additions to the equipment sold previously.

ALL SPECIFICATIONS ARE SUBJECT TO CHANGE WITHOUT NOTICE.

https://truckmanualshub.com/

COMPANY POLICY

Company policy, which is one of continuous improvement, reserves the right to make changes in design and specifications at any time without notice and without obligation to modify units previously built.

All data given in this book is subject to production variations. Dimensions and weights are approximate only and the illustrations do not necessarily show skid steers in standard condition.

PARTS AND ACCESSORIES

Genuine NEW HOLLAND parts and accessories have been specifically designed for HEW HOLLAND MACHINES.

We would like to point out that “NON-GENUINE” parts and accessories have not been examined and released by NEW HOLLAND. The installation and or use of such products could have negative effects upon the design characteristics of your machine and thereby affect its safety. NEW HOLLAND is not liable for any damage caused by the use of “NON-GENUINE” NEW HOLLAND parts and accessories.

MODEL CODES

The range of Skid Steers described in this manual is identified in the text by the engine horsepower Pferdestarke. (PS). The skid steers listed below may not be available in all countries or markets.

ENGINE	PS	MODEL
N844	40	LS160
N844T	50	LS170

https://truckmanualshub.com/

PRECAUTIONARY STATEMENTS

PERSONAL SAFETY

Throughout this manual and on machine decals, you will find precautionary statements ("**CAUTION**", "**WARNING**", and "**DANGER**") followed by specific instructions. These precautions are intended for the personal safety of you and those working with you. Please take the time to read them.

CAUTION

The word "CAUTION" is used where a safe behavioral practice according to operating and maintenance instructions and common safety practices will protect the operator and others from accident involvement.

WARNING

The word "WARNING" denotes a potential or hidden hazard which has a potential for serious injury. It is used to warn operators and others to exercise every appropriate means to avoid a surprise involvement with machinery.

DANGER

The word "DANGER" denotes a forbidden practice in connection with a serious hazard.

Failure to follow the "**CAUTION**", "**WARNING**", and "**DANGER**" instructions may result in serious bodily injury or death.

MACHINE SAFETY

Additional precautionary statement ("**IMPORTANT**") is followed by specific instructions. This statement is intended for machine safety.

IMPORTANT: *The word "IMPORTANT" is used to inform the reader of something he needs to know to prevent minor machine damage if a certain procedure is not followed.*

https://truckmanualshub.com/

SAFETY PRECAUTIONS

CAUTION

Unsafe operating practices and improper use of the skid steer and its attachments on the part of the operator can result in injuries. Observe the following safety precautions at all times:

1. **For servicing, the skid steer should be on level terrain, engine stopped with the wheels blocked or the entire skid steer solidly supported with the wheels off the ground before servicing any component of the drivetrain.**
2. **For servicing under the operator's seat, raise the seat and pan assembly up to the raised latched position and securely latch.**
3. **Do not operate the skid steer unless the seat is latched in the operate position.**
4. **Do not service the skid steer with a raised boom unless the boom is resting on the boom lock pins.**
5. **Do not service the skid steer with the engine running unless the skid steer is properly and securely supported with all four wheels off the ground.**
6. **Use caution when servicing the unit around moving parts.**
7. **Do not tilt the boom and cab without proper instruction.**
8. **Do not tilt the boom and cab without using the proper cab tilting tool.**
9. **Reinstall all shields removed for service.**
10. **Never loosen any hydraulic connections before relieving the pressure in the hydraulic system.**
11. **Wear eye protection such as goggles, etc.**
12. **Wear ear protection such as ear plugs, etc. When you feel the noise level is uncomfortable.**
13. **If any servicing or adjustments require the battery to be disconnected, disconnect the (–) negative ground cable.**
14. **When servicing electrical components, disconnect the (–) negative ground cable.**
15. **If the electronic instrument cluster (eic) requires removal from the dash area or the skid steer, disconnect the (–) negative ground battery cable. This will shut off power to the eic and prevent damage to the eic board or blowing the 5-amp fuses if the board is accidentally grounded.**
16. **If welding is required on the skid steer, disconnect the (–) negative ground cable. failure to disconnect the battery may result in damage to the EIC (Electronic Instrument Cluster) monitoring system and other electrical components.**
17. **If welding is required on an attachment, remove the attachment from the skid steer.**
18. **Give complete and undivided attention to the job at hand so that complete control of the skid steer is maintained at all times.**
19. **Drive slowly over rough ground and on slopes; keep alert for holes, ditches and other irregularities that may cause the skid steer to overturn.**
20. **Avoid steep hillside operation which could cause the skid steer to overturn.**
21. **Never transport a loaded bucket at full height. Operate the skid steer with the load as low as possible until it becomes necessary to raise the boom to discharge the load into a truck, container, etc.**
22. **Reduce speed when turning so there is no danger of the skid steer overturning.**
23. **Never drive up or back up a hill or incline with a raised boom or the skid steer could over turn.**
24. **Always look behind you before backing the skid steer.**
25. **Maintain proper transmission oil level to prevent loss of hydrostatic braking.**
26. **Do not allow passengers to ride on the skid steer at any time.**
27. **Do not allow children to operate the skid steer or ride on the skid steer at any time.**
28. **Do not allow anyone to operate the skid steer without proper instruction. OSHA requires that all operators be instructed on the proper operation of the machine before they operate the unit.**
29. **Do not operate the skid steer in any position other than while in the operator's seat with the seat belt securely fastened.**

https://truckmanualshub.com/

30. Before starting the engine, be sure that all operating controls are in neutral and the parking brake is engaged.

31. Never operate the skid steer engine in a closed building without adequate ventilation.

32. Refuel the skid steer outdoors with the engine shut off. Replace the fuel cap securely. Use an approved fuel container. Do not smoke when handling fuel. Avoid spilling fuel.

33. After operating the engine, never touch the muffler, exhaust pipe, engine or radiator until they have had time to cool.

34. Dress appropriately - wear relatively tight-fitting clothing when operating the skid steer. Loose or torn clothing can catch in moving parts or controls.

35. Before servicing the skid steer or any of its attached equipment, be sure that the attachments are lowered to the ground or that the boom arms are supported by the boom lock pins.

36. Do not work under overhangs, electric wires, or where there is danger of a slide.

37. Wear an approved safety hat when operating the machine and while in any work area.

38. When driving the skid steer on a road or highway, use warning lights or warning devices as may be required by local or state government regulations. Headlights, warning lights and smv signs are available through your new holland dealer.

39. Keep the skid steer clean. Do not allow trash, debris or other articles to accumulate in the cab, floor or foot control pedal area that may hinder safe machine operation.

40. Never operate the skid steer with any of the shielding removed.

41. Never operate the skid steer without windows and/or screens in place.

42. Never extend any part of the body outside of the operator's area.

43. Always properly tie down the skid steer to a truck or trailer before transport.

44. Make sure all bystanders are at a safe distance away from the skid steer before starting the engine.

45. Do not allow anyone near the skid steer while the engine is running and the skid steer is operational.

46. When using the skid steer to crane objects, do not allow any person to ride on objects being craned.

47. Do not use the skid steer as a work platform for supporting materials.

48. Do not lift personnel or allow personnel to work while standing in the bucket or on other attachments. This is not a man-lift.

OSHA requirements now make it the employer's responsibility to fully instruct each operator in the proper and safe operation of all operative equipment. Both employer and employee should thoroughly familiarize themselves with the following sections.

CAUTION

Some pictures in this manual show safety shields removed or open to show parts being serviced or for clarity. All shields should be closed or replaced prior to operating the machine.

DANGER

Fasten seat belt before starting engine!

This skid steer is a very stable unit but it can be upset if stopped suddenly when the bucket is raised and loaded.

Therefore, do not start the engine before securely fastening the seat belt, and carry the load low.

https://truckmanualshub.com/

GENERAL SAFETY INFORMATION

HANDLE FLUIDS SAFELY

When you work around fuel or other flammable material, do not smoke, work near heaters or other fire hazards.

Do not store flammable material in open containers.

Store flammable fluids away from fire hazards.

Do not incinerate or puncture pressurized containers.

Make sure machine is clean of trash, grease, oil, and debris.

Do not store oily rags; they can ignite and burn spontaneously.

Keep a first aid kit and fire extinguisher handy.

Keep emergency numbers for doctors, ambulance service, hospital, and fire department near your telephone.

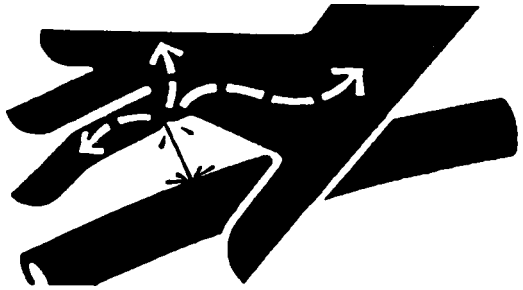

USE CARE AROUND HIGH-PRESSURE FLUID LINES

Escaping fluid under pressure can penetrate the skin causing serious injury.

Avoid the hazard by relieving pressure before disconnecting hydraulic or other lines.

Tighten all line connections before applying pressure.

Check for leaks with a piece of cardboard.

Protect hands and body from high-pressure fluids.

If an accident occurs, see a doctor immediately. Any fluid injected into the skin must be surgically removed within a few hours or gangrene may result. Doctors unfamiliar with this type of injury should reference a knowledgeable medical source.

AVOID HEATING NEAR PRESSURIZED FLUID LINES

Flammable spray can be generated by heating near pressurized fluid lines, resulting in severe burns to yourself and bystanders.

Do not heat by welding, soldering, or using a torch near pressurized fluid lines.

Pressurized lines can be accidentally cut or damaged when heat goes beyond the immediate flame area.

USE CARE IN HANDLING AND SERVICING BATTERIES

Prevent Battery Explosions

Keep sparks, lighted matches, and open flame away from the top of the battery. Battery gas can explode.

Never check battery charge by placing a metal object across the posts. Use a voltmeter or hydrometer.

Do not charge a frozen battery; it may explode. Warm the battery to 60° F (16° C).

WARNING

If any servicing or adjustments require the battery to be disconnected, or welding is required on the skid steer, disconnect the (–) negative ground cable. Failure to disconnect the battery may result in damage to the eic (electronic instrument cluster) monitoring system and other electrical components.

WARNING

If welding on an attachment is required, first remove the attachment from the skid steer boom attaching plate.

https://truckmanualshub.com/

WARNING

Engine starting with a booster battery requires extreme care as batteries produce explosive gases. The slightest spark can cause an explosion.

Follow these safety tips:

1. **Always shield your eyes when charging or working near a battery. Always provide good ventilation.**
2. **Cover the battery with a piece of carpet or other heavy material. Do not remove the battery vent caps.**
3. **Connect one cable to the (+) positive terminal of the weak battery. Connect the other end of the cable to the (+) positive terminal of the stronger battery.**
4. **Connect the second cable to the (–) negative terminal of the stronger battery.**
5. **Connect the remaining (–) negative cable end to the engine block or starter ground terminal.**
6. **Reverse this procedure when disconnecting the booster.**

USE SAFE SERVICE PROCEDURES

Wear Protective Clothing

Do not wear loose clothing.

Wear close-fitting clothing.

Wear safety glasses or face shield as required.

Wear other safety equipment appropriate to the job.

Wear earplugs or earmuffs as required.

SERVICE MACHINES SAFELY

Use caution when working around moving parts.

If servicing requires the boom to be in the raised position, support the boom on the boom locks and remove any attachment from the boom mounting plate. If servicing requires the complete skid steer to be in the supported position, support all four wheels off the ground using adequate jack stands or blocks.

If servicing requires the engine to be operated, raise the machine and properly support the unit with adequate jack stands or blocking with all four wheels off the ground.

CAUTION

Before servicing the skid steer or any of its attached equipment, be sure that the attachments are lowered to the ground or the boom arms are supported by the boom lock pins.

USE PROPER TOOLS

Use tools appropriate for the job.

If tilting of the cab is required, use the proper tools and follow the procedure for tilting the cab in Section 1 of this manual.

REVIEW SAFETY EQUIPMENT, SIGNS AND SHIELDS

Replace missing or damaged safety decals.

Reinstall all shielding removed for servicing.

Replace any damaged or missing shielding.

CONTROLS

Operate unit and check machine functions for proper operation.

Check seat belt for proper operation, wear, and damage - Replace as needed.

Check operator restraint system - EIC for proper operation.

Check boom and bucket spool locks for proper operation.

Check mechanical boom locks for proper operation.

Check parking brake for proper operation and adjustment.

https://truckmanualshub.com/

MACHINE MODEL AND SERIAL NUMBER LOCATION

The skid steer model and serial number tag is located on the right front interior of the operator's cab at 1.

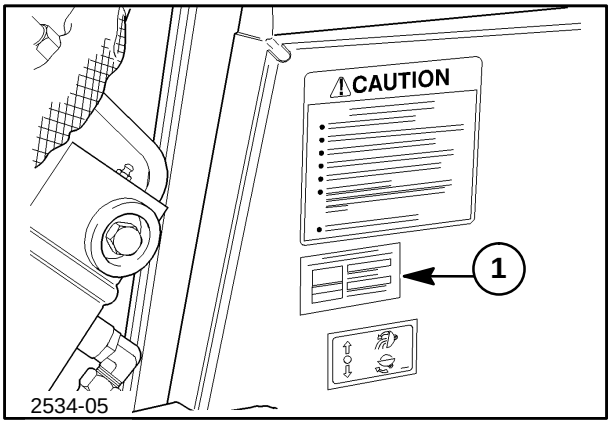

1

ENGINE MODEL AND SERIAL NUMBER LOCATION

The engine model and serial number is located on the left side of the block at 1.

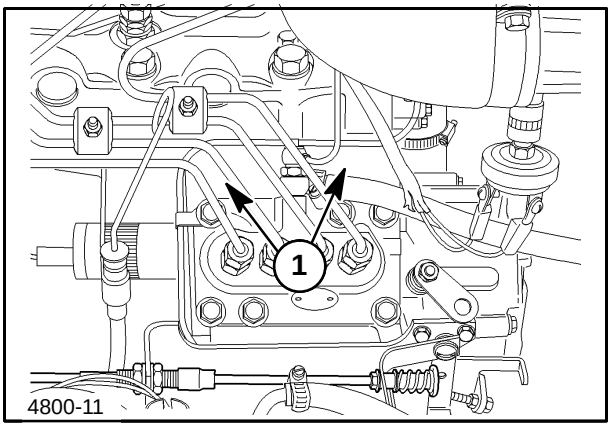

2

For the tightening torques for reassembly, use the following hardware torque chart unless the torque is specified in the instructions.

https://truckmanualshub.com/

MINIMUM HARDWARE TIGHTENING TORQUES

IN FOOT POUNDS (NEWTON-METERS) FOR NORMAL ASSEMBLY APPLICATIONS

INCH HARDWARE AND LOCKNUTS

	SAE GRADE 2		SAE GRADE 5		SAE GRADE 8		LOCKNUTS		
NOMINAL SIZE	UNPLATED or PLATED SILVER	PLATED W/ZnCr GOLD	UNPLATED or PLATED SILVER	PLATED W/ZnCr GOLD	UNPLATED or PLATED SILVER	PLATED W/ZnCr GOLD	GR.B w/GR5 BOLT	GR.C w/GR8 BOLT	NOMINAL SIZE
1/4	55* (6.2)	72* (8.1)	86* (9.7)	112* (13)	121* (14)	157* (18)	61* (6.9)	86* (9.8)	1/4
5/16	115* (13)	149* (17)	178* (20)	229* (26)	250* (28)	324* (37)	125* (14)	176* (20)	5/16
3/8	17 (23)	22 (30)	26 (35)	34 (46)	37 (50)	48 (65)	19 (26)	26 (35)	3/8
7/16	27 (37)	35 (47)	42 (57)	54 (73)	59 (80)	77 (104)	30 (41)	42 (57)	7/16
1/2	42 (57)	54 (73)	64 (87)	83 (113)	91 (123)	117 (159)	45 (61)	64 (88)	1/2
9/16	60 (81)	77 (104)	92 (125)	120 (163)	130 (176)	169 (229)	65 (88)	92 (125)	9/16
5/8	83 (112)	107 (145)	128 (174)	165 (224)	180 (244)	233 (316)	90 (122)	127 (172)	5/8
3/4	146 (198)	189 (256)	226 (306)	293 (397)	319 (432)	413 (560)	160 (217)	226 (306)	3/4
7/8	142 (193)	183 (248)	365 (495)	473 (641)	515 (698)	667 (904)	258 (350)	364 (494)	7/8
1	213 (289)	275 (373)	547 (742)	708 (960)	773 (1048)	1000 (1356)	386 (523)	545 (739)	1

NOTE: Torque values shown with * are inch pounds.

IDENTIFICATION
CAP SCREWS AND CARRIAGE BOLTS

SAE GRADE 2

SAE GRADE 5

SAE GRADE 8

REGULAR NUTS

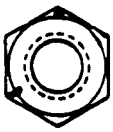

SAE GRADE 5 HEX NUTS

SAE GRADE 8 HEX NUTS

LOCKNUTS

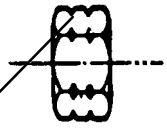

GRADE IDENTIFICATION

GRADE A NO NOTCHES

GRADE B ONE CIRCUMFERENTIAL NOTCH

GRADE C TWO CIRCUMFERENTIAL NOTCHES

GRADE IDENTIFICATION

GRADE A NO MARKS

GRADE B THREE MARKS

GRADE C SIX MARKS

MARKS NEED NOT BE LOCATED AT CORNERS

GRADE IDENTIFICATION

GRADE A NO MARKS
GRADE B LETTER B
GRADE C LETTER C

https://truckmanualshub.com/

MINIMUM HARDWARE TIGHTENING TORQUES

IN FOOT POUNDS (NEWTON-METERS) FOR NORMAL ASSEMBLY APPLICATIONS

METRIC HARDWARE AND LOCKNUTS

NOMINAL SIZE	CLASS 5.8		CLASS 8.8		CLASS 10.9		LOCKNUT CL.8 W/CL8.8 BOLT
	UNPLATED	PLATED W/ZnCr	UNPLATED	PLATED W/ZnCr	UNPLATED	PLATED W/ZnCr	
M4	15* (1.7)	19* (2.2)	23* (2.6)	30* (3.4)	33* (3.7)	42* (4.8)	16* (1.8)
M6	51* (5.8)	67* (7.6)	79* (8.9)	102* (12)	115* (13)	150* (17)	56* (6.3)
M8	124* (14)	159* (18)	195* (22)	248* (28)	274* (31)	354* (40)	133* (15)
M10	21 (28)	27 (36)	32 (43)	41 (56)	45 (61)	58 (79)	22 (30)
M12	36 (49)	46 (63)	55 (75)	72 (97)	79 (107)	102 (138)	39 (53)
M16	89 (121)	117 (158)	137 (186)	177 (240)	196 (266)	254 (344)	97 (131)
M20	175 (237)	226 (307)	277 (375)	358 (485)	383 (519)	495 (671)	195 (265)
M24	303 (411)	392 (531)	478 (648)	619 (839)	662 (897)	855 (1160)	338 (458)

NOTE: Torque values shown with * are inch pounds.

IDENTIFICATION
HEX CAP SCREW AND CARRIAGE BOLTS
CLASSES 5.6 AND UP

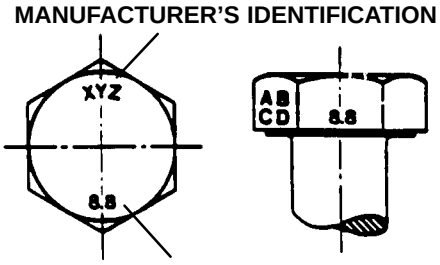

PROPERTY CLASS

HEX NUTS AND LOCKNUTS
CLASSES 05 AND UP

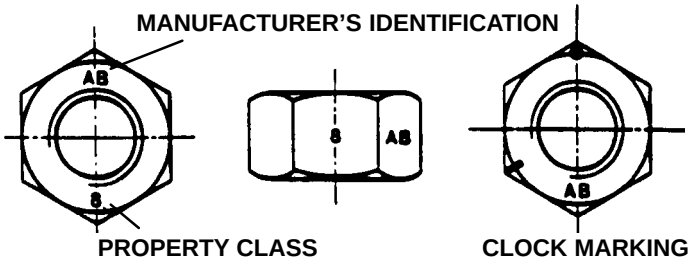

PROPERTY CLASS CLOCK MARKING

https://truckmanualshub.com/

INSTALLATION OF ADJUSTABLE FITTINGS IN STRAIGHT THREAD O RING BOSSES

1. Lubricate the O ring by coating it with a light oil or petroleum. Install the O ring in the groove adjacent to the metal backup washer which is assembled at the extreme end of the groove, 4.
2. Install the fitting into the SAE straight thread boss until the metal backup washer contacts the face of the boss, 5.

NOTE: *Do not over tighten and distort the metal backup washer.*

3. Position the fitting by turning out (counterclockwise) up to a maximum of one turn. Holding the pad of the fitting with a wrench, tighten the locknut and washer against the face of the boss, 6.

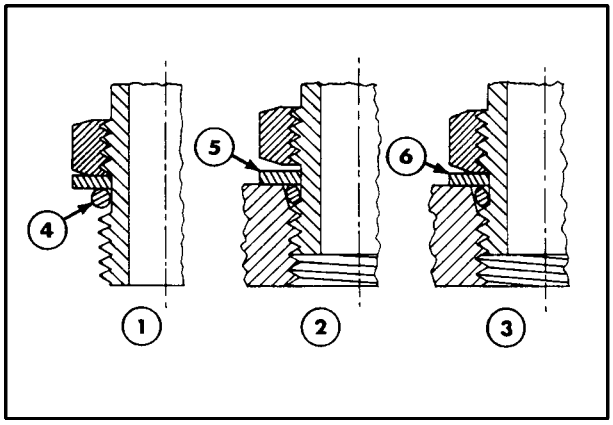

3

STANDARD TORQUE DATA FOR HYDRAULIC TUBES AND FITTINGS

TUBE NUTS FOR 37° FLARED FITTINGS								O RING BOSS PLUGS ADJUSTABLE FITTING LOCKNUTS, SWIVEL JIC - 37° SEATS			
				TORQUE				TORQUE			
SIZE	TUBING OD		THREAD SIZE	NEWTON METERS		FOOT POUNDS		NEWTON METERS		FOOT POUNDS	
	mm	In.		Min.	Max.	Min.	Max.	Min.	Max.	Min.	Max.
4	6.4	1/4	7/16-20	12	16	9	12	8	14	6	10
5	7.9	5/16	1/2-20	16	20	12	15	14	20	10	15
6	9.5	3/8	9/16-18	29	33	21	24	20	27	15	20
8	12.7	1/2	3/4-18	47	54	35	40	34	41	25	30
10	15.9	5/8	7/8-14	72	79	53	53	47	54	35	40
12	19.1	3/4	1-1/16-12	104	111	77	82	81	95	60	70
14	22.2	7/8	1-3/16-12	122	136	90	100	95	109	70	80
16	25.4	1	1-5/16-12	149	163	110	120	108	122	80	90
20	31.8	1-1/4	1-5/8-12	190	204	140	150	129	158	95	115
24	38.1	1-1/2	1-7/8-12	217	237	160	175	163	190	120	140
32	50.8	2	2-1/2-12	305	325	225	240	339	407	250	300

These torques are not recommended for tubes of 12.7 mm (1/2″) OD and larger with wall thickness of 0.889 mm (0.035″) or less. The torque is specified for 0.889 mm (0.035″) wall tubes on each application individually.

Before installing and torquing 37° flared fittings, clean the face of the flare and threads with a clean solvent or Loctite cleaner and apply hydraulic sealant Loctite no. 569 to the 37° flare and the threads.

Install fitting and torque to specified torque, loosen fitting and retorque to specifications.

https://truckmanualshub.com/

PIPE THREAD FITTING TORQUE

Thread Size	Torque (Maximum)
1/8″ – 27	13 N·m (10 ft. lbs.)
1/4″ – 18	16 N·m (12 ft. lbs.)
3/8″ – 14	22 N·m (16 ft. lbs.)
1/2″ – 14	41 N·m (30 ft. lbs.)
3/4″ – 14	54 N·m (40 ft. lbs.)

Before installing and tightening pipe fittings, clean the threads with a clean solvent or Loctite cleaner and apply sealant Loctite no. 567 for all fittings including stainless steel or no. 565 for most metal fittings. For high filtration/zero contamination systems use no. 545.

LUBRICANTS AND COOLANTS

Application	New Holland Part Number	Specification
Gearboxes	1 qt – #9613295 2.5 gal – #9613294 4 L – #9613375	SAE 80W-90
Final Drive chain case	1 qt – #9613313 2.5 gal – #9613314 1 L – #9613358 20 L – #9613360	API Service SH–CG4 10W-30
Hydraulic/Transmission	1 qt – #9613313 2.5 gal – #9613314 1 L – #9613358 20 L – #9613360	API Service SH–CG4 10W-30
All lubrication fittings	Tube – #9613310	High viscosity lithium base grease
Engine	1 qt – #9613313 2.5 gal – #9613314 1 L – #9613358 20 L – #9613360	API Service SH-CG4 10W-30 Refer to Operator's Manual for Temperature/Oil Usage Chart
Cooling System	1 gal – #FGCC2701DS	Antitreeze/Water 50/50 Mixture (Ethylene Glycol)

SEALANTS

Description	New Holland Part Number	Typical Applications	Strength	Color
Thread Lock	L22200 (222) L24231 (242) L29000 (290) L26231 (262)	Small Screws/Hardware Nuts and Bolts Wicking Type Nuts and Bolts	Low Medium Medium High	Purple Blue Green Red
Thread Sealants	L54531 (545) L56531 (565) L56747 (567)	Hydraulic/Pneumatic Pipe Sealant Pipe Sealant	Non-Fouling Controlled Strength High Temperature	
Silicones	L81724 (3.5 oz. tube) L58775 (10.2 oz. cartridge) L82180 (3.35 oz. tube) L59875 (10.2 oz. cartridge)	Ultra Blue RTV Gasket Ultra Blue RTV Gasket Ultra Blue RTV Gasket Ultra Blue RTV Gasket	Non-corrosive Non-corrosive Non-corrosive Non-corrosive	Blue Blue Black Black

https://truckmanualshub.com/

PROPERLY SUPPORT A RAISED MACHINE

If servicing neutral adjustment, final drive adjustment or repairs requiring the machine to be raised, securely support the machine with adequate jack stands or blocks as shown.

Support the machine at 1 to the front of the final drive cases and to the rear at 2, making sure the supports are on the flat area of the final drive cases.

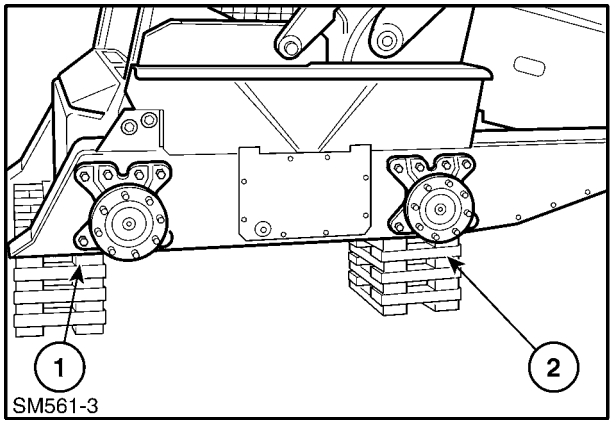

4

PROPERLY SUPPORT BOOM ON BOOM LOCK PINS

Before servicing the machine or any of its attached equipment, be sure that the attachments are lowered to the ground or the boom arms are supported by the boom lock pins, 1.

If the boom is to be raised on the boom lock pins, remove any attachment. Opening a hydraulic line could cause a mounted attachment to dump over unexpectedly.

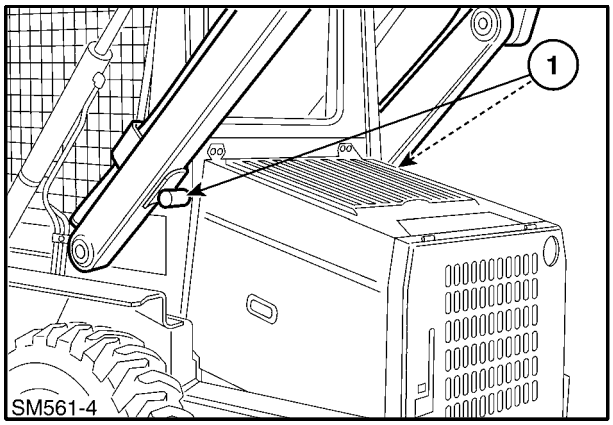

5

RAISING BOOM WITHOUT HYDRAULIC OIL FLOW

(Engine or Hydraulic System not functioning)

1. Remove any attachment from the boom mounting plate.
2. Block the rear of the skid steer under the rear of the final drive cases, 1, as shown. This will prevent the front wheels from raising during boom lifting.

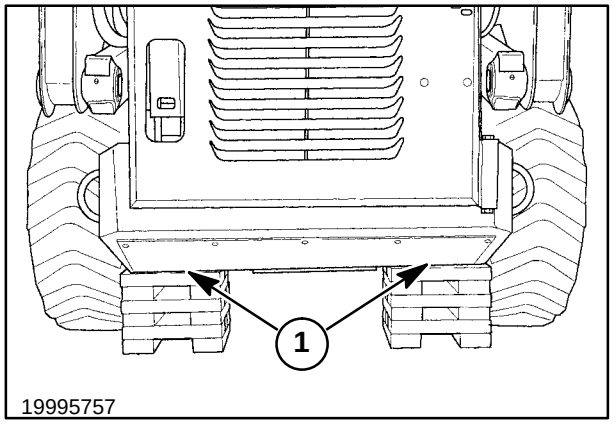

6

https://truckmanualshub.com/

3. Attach a chain or strap, 1, to the main boom, 2, and lifting device, 3. Attach chain or strap securely to prevent unhooking during boom lifting.

CAUTION

Attach suitable chains or straps capable of handling the weight of the boom, 454 kg (1000 lbs). Attach chains securely to prevent them from coming loose during lifting of the boom.

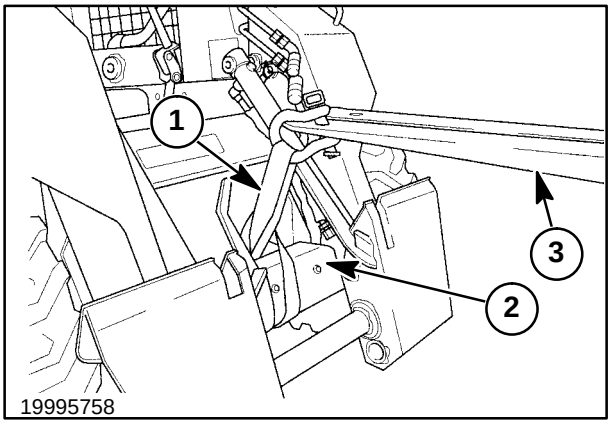

7

4. With an Operator sitting in the Operator's seat with the seat belt buckled.
5. Turn the ignition key to the "ON" position. Foot controls, press the toe of the left foot pedal, boom control, or hand controls, pivot the left hand control lever down, into the boom float position.
6. Slowly raise the boom above the boom lock pins, 1.
7. Operator sitting in seat, engage the boom lock pins, 1.
8. Lower the boom and rest on the boom lock pins, 1.
9. Return the boom control to the "NEUTRAL" position.
10. Turn the ignition key to the "OFF" position.

CAUTION

The operator must not leave the operator's seat until the boom is resting solidly on the boom lock pins. The boom could drop suddenly if lifting devices should fail.

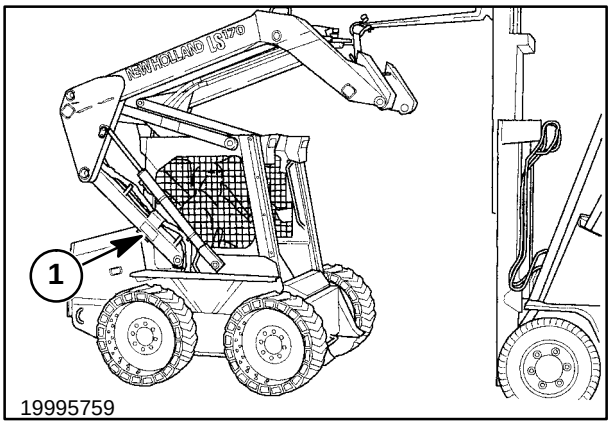

8

https://truckmanualshub.com/

RAISING BOOM WITHOUT BATTERY VOLTAGE (12 VOLTS)

1. Remove any attachment from the boom mounting plate.
2. Block the rear of the skid steer under the rear of the final drive cases, 1, as shown. This will prevent the front wheels from raising during boom lifting.

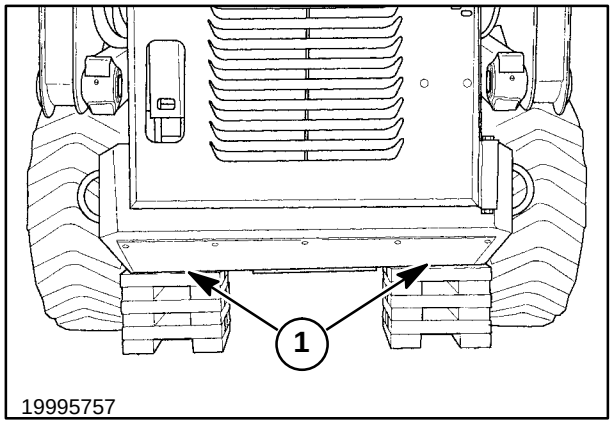

9

3. Attach a chain or strap, 1, to the main boom, 2, and lifting device, 3. Attach chain or strap securely to prevent unhooking during boom lifting.

CAUTION

Attach suitable chains or straps capable of handling the weight of the boom, 454 kg (1000 lbs). Attach chains securely to prevent them from coming loose during lifting of the boom.

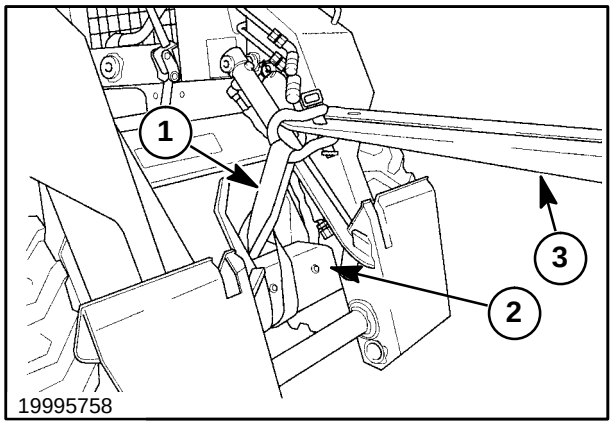

10

4. Remove the rod end (top) pivot pins, 1, from both cylinders by removing the retaining hardware, 2, from pivot pin and boom.

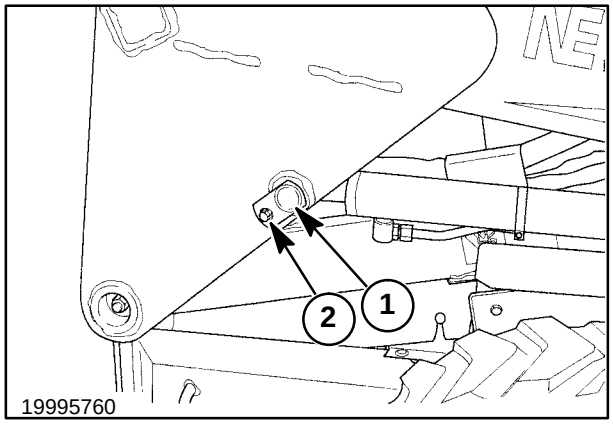

11

https://truckmanualshub.com/

5. Support the cylinders on the fenders, 1, as shown.

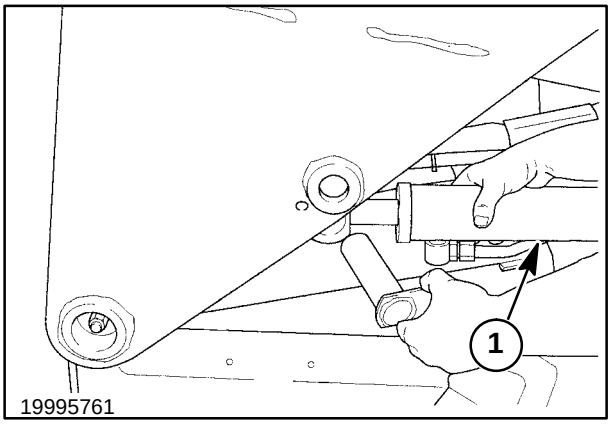

12

6. With an Operator sitting in the Operator's seat with the seat belt buckled, slowly raise the boom above the boom lock pins, 1.
7. Operator (sitting in the seat) engages the boom lock pins, 1.
8. Lower the boom and rest on the boom lock pins, 1.

CAUTION

The operator must not leave the operator's seat until the boom is resting solidly on the boom lock pins. The boom could drop suddenly if lifting devices should fail.

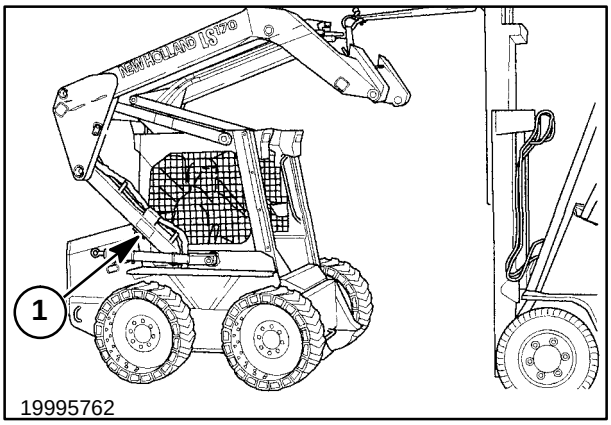

13

REATTACHING CYLINDERS AFTER REPAIR WITH BOOM RESTING ON BOOM LOCK PINS

1. Support the rod end of cylinders, 1, off the boom upper links, 2, to align with main boom cylinder pivot pin holes, 3.

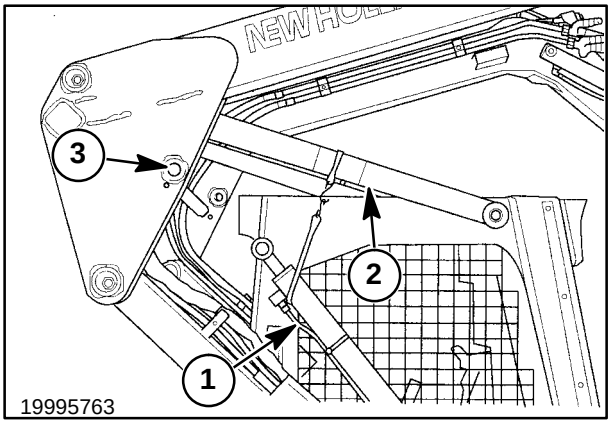

14

https://truckmanualshub.com/

2. With operator sitting in the Operator's seat with seat belt buckled, start the engine and hydraulically extend cylinder rods to align cylinder with pivot pin, 1. Stop engine.
3. Turn the ignition key to the "ON" position. Move the boom control into "DETENT" (float) position with the left foot pedal (press toe down) or left hand control (push control lever down). Turn the ignition key to the "OFF" position.
4. If cylinder and boom are not properly aligned, use a pry bar to align cylinder and boom.
5. Install pivot pin, 1, and secure with retaining hardware, 2. Torque bolts to 38 N·m (28 ft. lbs.).
6. Start the engine and hydraulically extend the second cylinder rod to align cylinder with pivot pin. Stop engine.
7. If cylinder and boom are not properly aligned, sit in the operator's seat with seat buckled, turn the ignition key to the "ON" position. Move the boom control to the "DETENT (float) position and turn the ignition key to the "OFF" position.
8. Use a pry bar and align cylinder with boom and install pivot pin, 1, and retaining hardware, 2, and torque to 38 N·m (28 ft. lbs.).

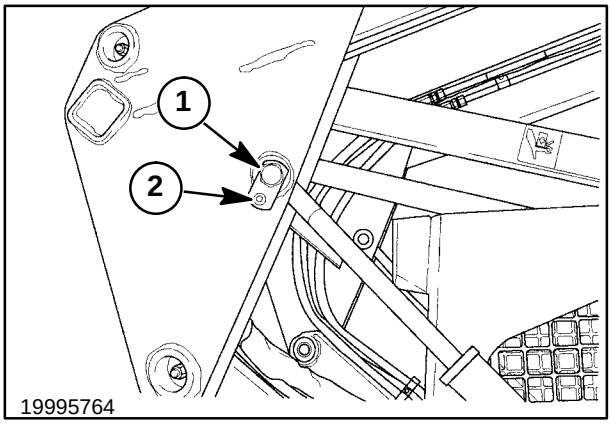

15

MAJOR UNIT OVERHAUL

For a major hydrostatic component or engine repair, the skid steer cab and boom assembly can be tilted forward for easier access to the components area. The figure shows the skid steer properly supported and the cab tilted forward.

WARNING

Never attempt to tilt the skid steer cab without using the proper tool and instructions. See more detail later in this section of the manual and/or contact your new holland dealer.

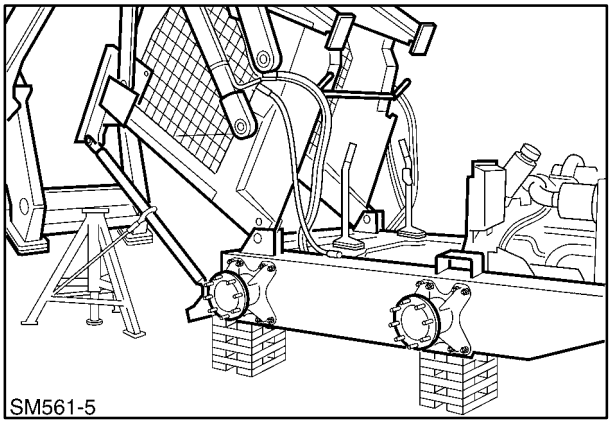

16

https://truckmanualshub.com/

CAB AND BOOM TILT PROCEDURE

The cab and boom assembly can be tilted forward for easier access to the major skid steer hydrostatic transmission or engine components. To tilt the cab, the proper cab tilting tool must be used to ensure safety and to prevent damage to the skid steer frame, cab, and boom structure. Contact your New Holland dealer for major service or repairs of the skid steer. Using the proper cab tilting tool and following these steps, the cab and boom can be tilted forward.

1. Remove any attachment, bucket, etc. from the boom quick-attach plate.

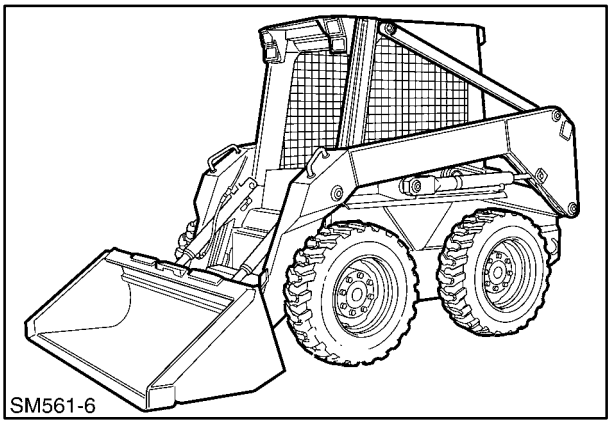

17

Cab tilting jack and support brackets:

1 Jack and screw assembly

2 Lower support

3 Upper support

4 Spacer top link

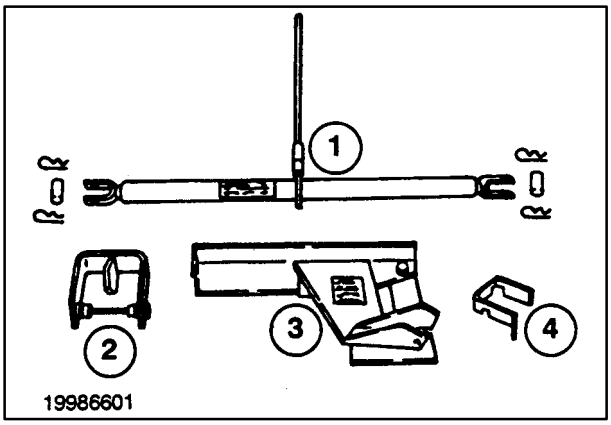

18

2. Raise the boom and lower onto boom lock pins, 1.
   - Raise boom above boom lock pins.
   - Engage boom lock pins.
   - Stop engine, ignition key off position.
   - Turn ignition key to the on position.
   - Lower boom onto boom lock pins.
   - Turn the ignition key to the “OFF” position.

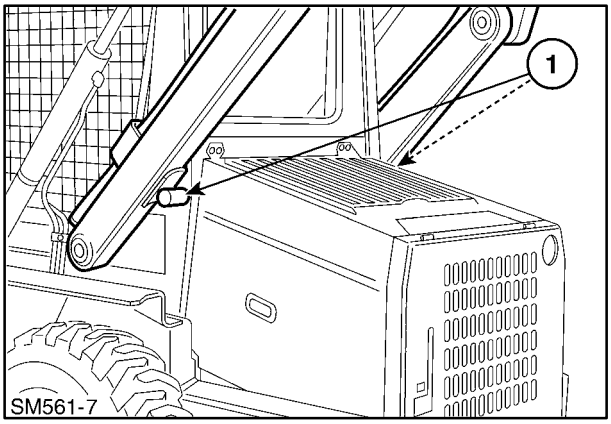

19

https://truckmanualshub.com/

3. Jack up the skid steer and block it securely with all four wheels off the ground, as shown. Position the front blocks, 1, to the front of the final drive housings and the rear blocks, 2, to the rear of the flat area of the final drive housings.

WARNING

Never attempt to tilt the skid steer cab over unless the skid steer is securely supported.

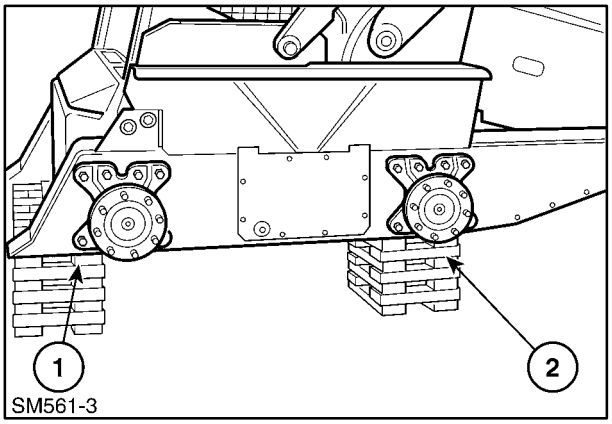

20

4. Open the rear door, 1. Raise the top engine shield, 2, and latch in the raised position.
5. Remove engine side covers, 3.

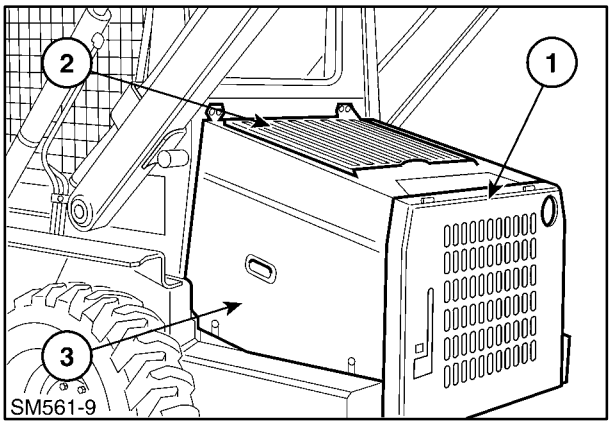

21

6. Disconnect the battery negative (-) cable, 1.

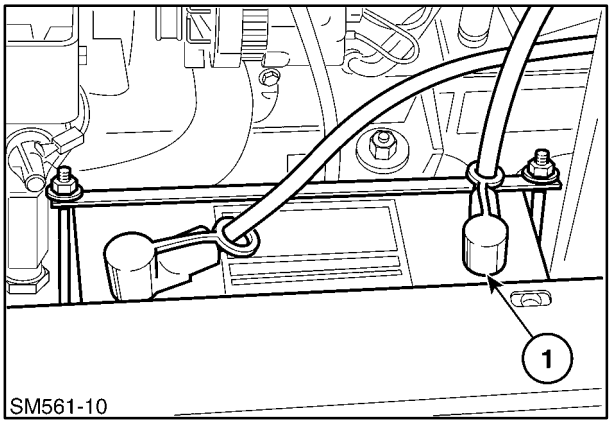

22

https://truckmanualshub.com/

7. Remove fenders, 1, right and left sides.
8. Remove foam material, 2, from both sides.
9. Remove the rear fender supports, 3, right and left sides.

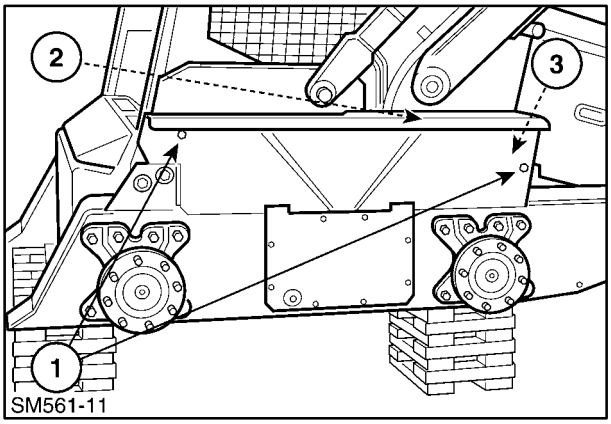

23

10. Raise the seat and lock in the up position, 1. Make sure the seat pan assembly is latched securely.

CAUTION

Do not work under the seat and pan unless it is properly latched in the raised position.

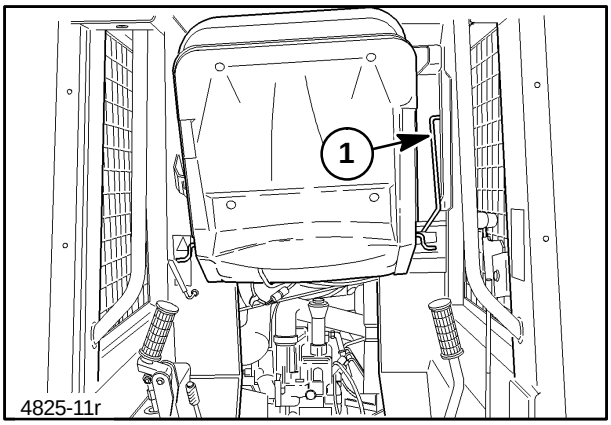

24

11. Remove the front step shield, 1.

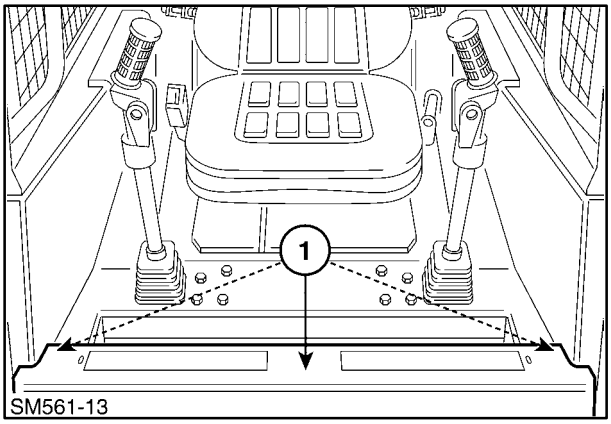

25

https://truckmanualshub.com/

12. Remove the cotter pins from the parking brake linkage at 1, unhook link rod, 2, and raise the parking brake lever, 3, to the engaged position.

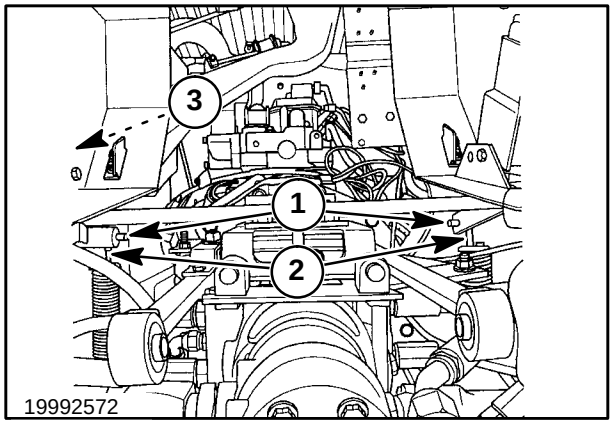

26

13. Install the lower cab jack support, 1. Hook the support over the end of the front left final drive housing and attach with a 1/2″ x 8″ cap screw, two spacers, one each side of housing at 2, and 1/2″ nut.

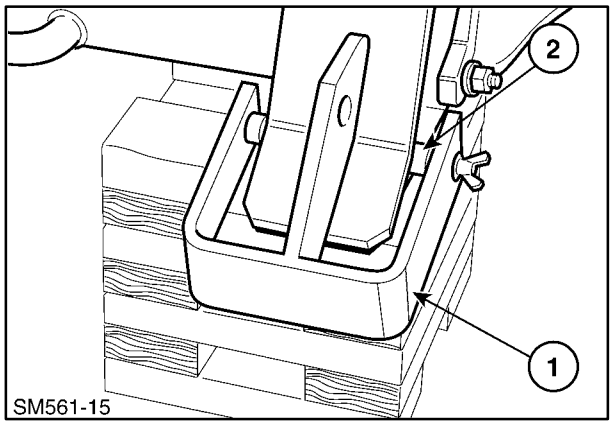

27

14. Install the upper cab jack support, 1. The spacer channel, 2, is used for the LS160 and LS170 models. Pivot the retaining plate, 3, up behind the boom top link and secure with 1/2″ x 1-1/4″ carriage bolt and 1/2″ wing nut. Install retaining bolt, 4, 1/2″ x 2-1/2″ cap screw through side of cab with a large 1/2″ flat washer, 1/2″ wing nut to the inside of cab and tighten.

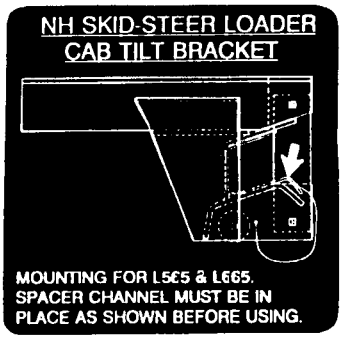

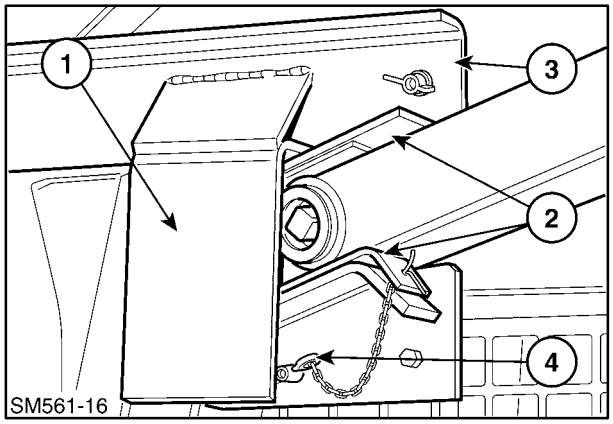

28

https://truckmanualshub.com/

15. Install the jack assembly, 1, between the upper and lower supports using two pins and retaining clips.
16. Loosen the front cab mounting bolts, 2, only enough to allow the bolt to rotate in post. Remove the rear front cab bolts, 3.

CAUTION

Never remove the front cab bolts, 2, as these are the pivot bolts during the cab tilting procedure. Removal of these bolts could cause the cab to fall and may cause injury and machine damage.

17. Remove the four rear cab post bolts, 4. Note the number and position of washers for reassembly.

CAUTION

Never loosen or remove any cab retaining hardware before the jack assembly is installed.

18. Jack cab and boom assembly over with the skid steer properly supported off the ground. Support the boom at 1 to prevent tipping of the skid steer when heavy components, engine, hydrostatic pumps, etc. are removed from the lower frame. Jack travel or length of hydraulic hoses will limit the travel of the cab assembly when tilting. Be sure all wire harnesses, hydraulic hoses, and throttle cable clear any obstructions during cab tilting.

WARNING

Never attempt to tilt the skid steer cab without proper instructions and without using the proper tool.

CAUTION

Never attempt to operate or move the skid steer without first installing and properly tightening all cab retaining hardware.

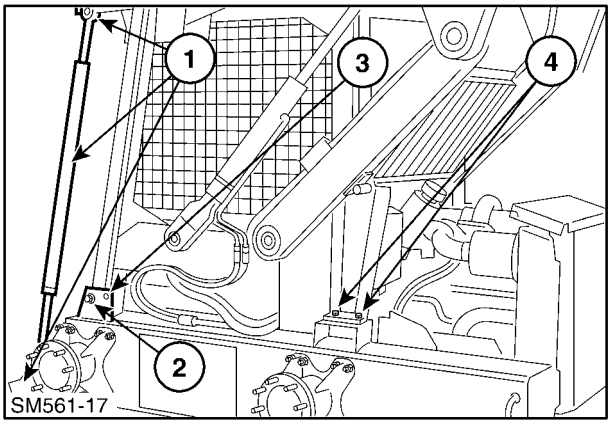

29

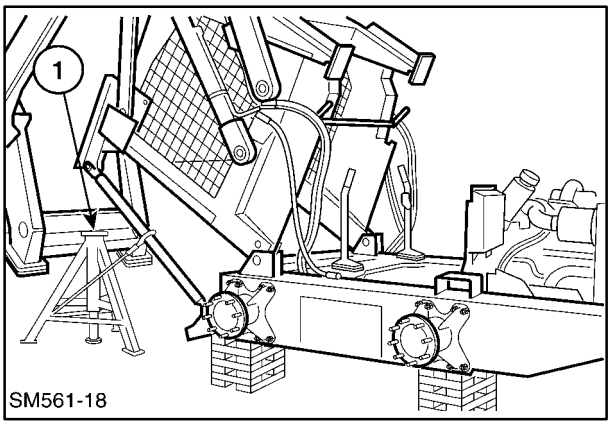

30

https://truckmanualshub.com/

To jack the cab and boom assembly back into position:

1. Pull the hydrostat control handles forward and hold in this position with rubber tie straps from the handle to the front cab post.
2. Jack the cab and boom back into position.
3. Keep the wire harness, 1, and throttle cable, 2, in position to prevent damage from setting the cab on them.
4. Pull the wire harness through the loop, 3.

CAUTION

Keep the wire harness from being damaged. A damaged wire harness could result in damage to the skid steer electrical components.

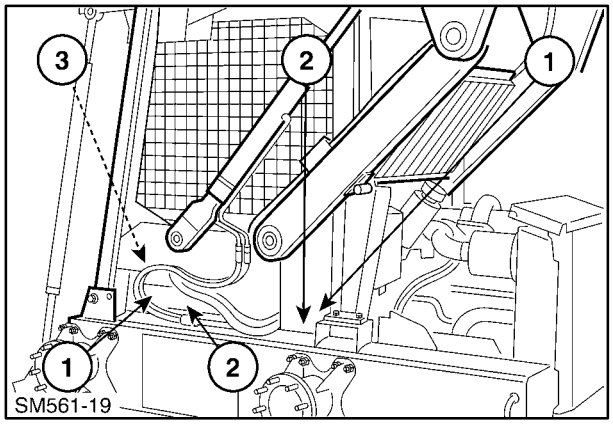

31

5. Remove rubber tie straps from the hydrostatic control handles.
6. Reinstall all cab support bolts front and rear.

   Torque the rear bolts, 1, to 108 N·m (80 ft. lbs.). Make sure the spacers are reinstalled.

NOTE: *If spacers were installed under the rear cab support bolts, 1, the spacers must be reinstalled for proper bolt torquing.*

7. Reinstall the parking brake linkage, 2.
8. Position the throttle cable, 3, inside frame.
9. Reinstall the rear fender supports, 4. Do not tighten hardware at this time.

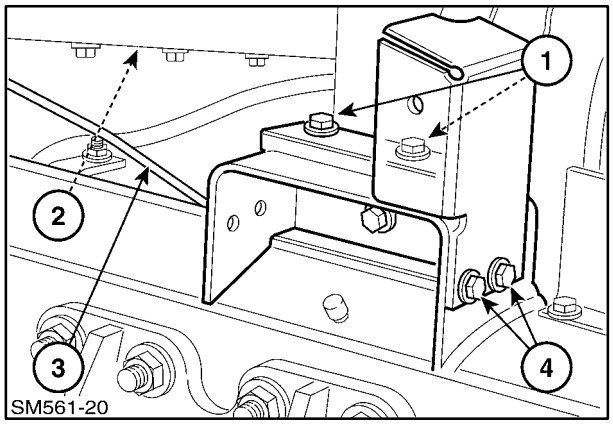

32

10. Torque the front bolts, 1, to 217 N·m (160 ft. lbs.).
11. Reinstall the foam, 2; fenders, 3; and front step shield, 4.
12. Tighten the rear fender supports, 5, at this time.
13. Remove jack and supports.
14. Reconnect the battery cable.

WARNING

Never attempt to operate or move the skid steer without first installing and properly tightening all cab retaining hardware.

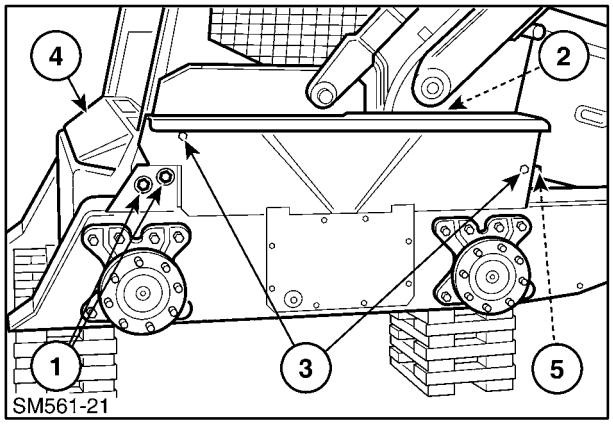

33

https://truckmanualshub.com/

CRANING THE SKID STEER

If the skid steer is inoperative and located in an area where it cannot be loaded onto a truck or trailer, the unit may be craned to load the unit.

To crane the skid steer, only use chain or cable with a rated capacity to handle the weight of the model skid steer being craned. Refer to “Specifications” in this manual for the operating weight of the model skid steer being craned. Use three chains minimum of 3.66 m (12′) long to prevent sharp angles and damage to the skid steer cab, boom, and lifting chains.

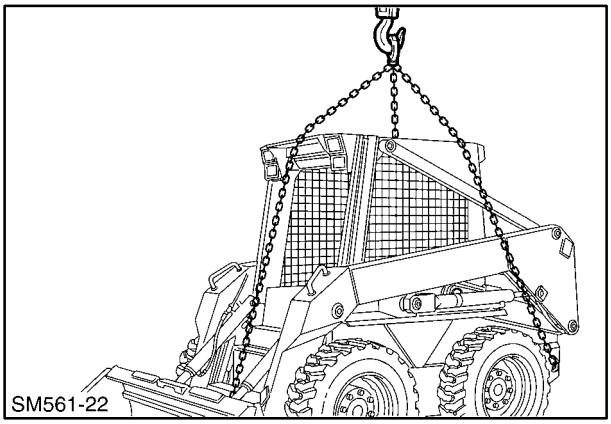

34

Remove any attachment except a standard bucket from the skid steer boom attaching plate.

CAUTION

Do not lift any attachments on the skid steer mounting plate that weigh 272 kg (600 lbs.) or more. Lift such attachments separately.

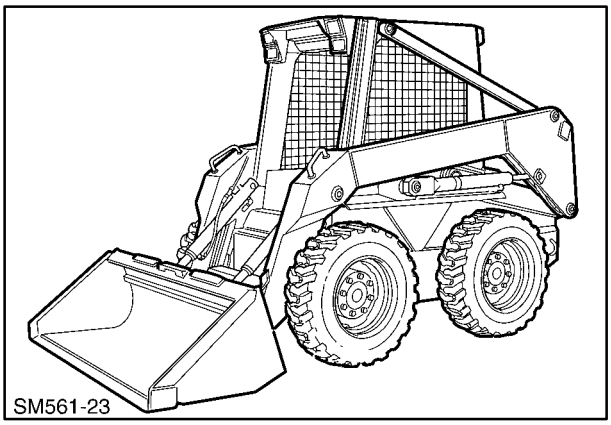

35

The lifting points at the rear of the skid steer, 1.

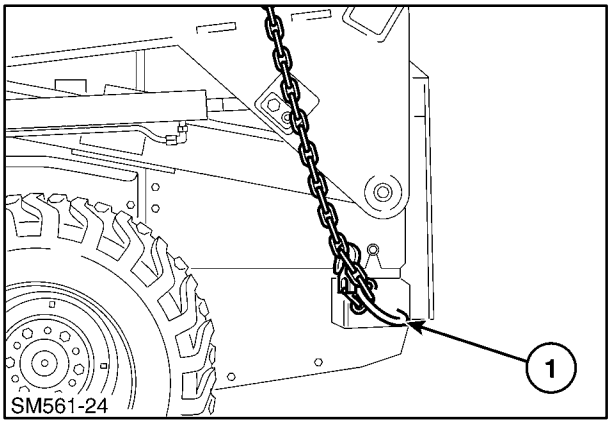

36

https://truckmanualshub.com/

The front lifting point is in the center of the main frame, 1.

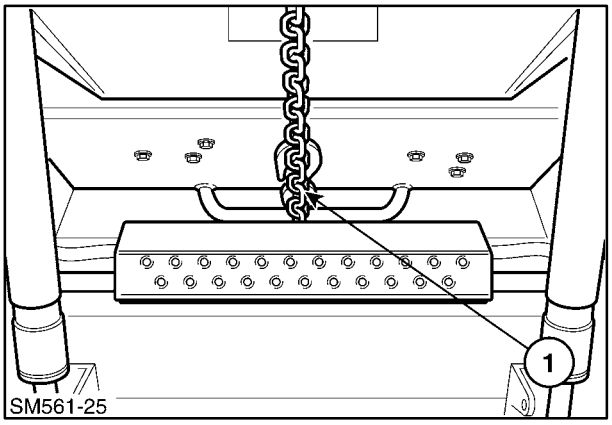

37

The lifting chains or cables must be minimum of 3.66 m (12′). The lifting hook point must be minimum of 1.9 m (75″) above the cab, 1, to prevent the chains or cables from damaging the skid steer frame or cab.

⚠ WARNING ⚠

Always use properly rated lifting devices to prevent personal injury or damage to the skid steer.

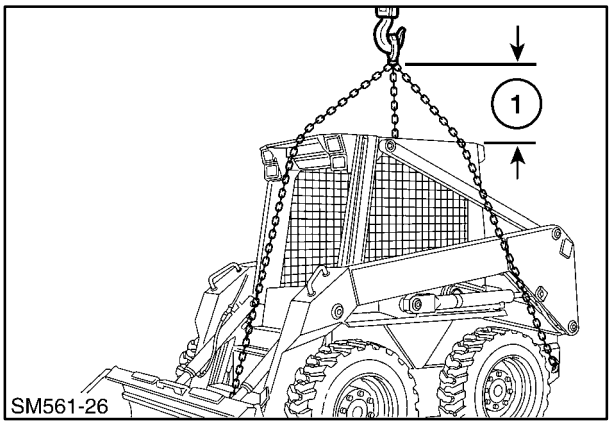

38

https://truckmanualshub.com/

When craning (lifting or lowering) a skid steer, observe these “CAUTIONS.”

CAUTION

1. **No riders (including the operator) in or on the machine while lifting or lowering.**
2. **Do not lift any attachments on the skid steer mounting plate that weigh 272 kg (600 lbs.) or more. Lift such attachments separately.**
3. **Always use a chain or cable capable of safely hoisting the weight of the skid steer.**
4. **Before hoisting the skid steer, always inspect the lifting chain or cable and the lifting points on the skid steer main frame to insure they are in good condition. If worn or damaged, do not use.**
5. **Do not lift the skid steer with any frame-mounted attachments such as a backhoe or rear stabilizers.**
6. **Do not attach lifting devices to the skid steer boom or attachments on the skid steer.**
7. **Make sure the skid steer boom is in the completely lowered position.**
8. **Make sure that any attachment to be lifted on the skid steer is securely fastened to the skid steer mounting plate with the over-center handles and pins fully engaged. Pivot the attachment fully back.**
9. **Make sure that the engine is off and the parking brake is engaged before lifting.**
10. **Keep bystanders away from the machine a safe distance while lifting.**

https://truckmanualshub.com/

SPECIAL TOOLS

Tilting Cab				
Tool Number	**Order From**	**Description**	**LS160**	**LS170**
86590084	New Holland	Cab Tilting Tool	***	***

Engine				
Tool Number	**Order From**	**Description**	**LS160**	**LS170**
NH00011	OTC	Oil pressure adapter	***	***
NH00120	OTC	Compression test adapter	***	***
NH00117	OTC	Oil pump port block installer	***	***
NH11097	OTC	Oil pump port block remover	***	***

Hydraulic System				
Tool Number	**Order From**	**Description**	**LS160**	**LS170**
238 Bar (3500 PSI) Test Gauge	OTC	Main system pressure	***	***
Flow meter	OTC	Main system/Hydrostatic pumps	***	***
3/4″—16 UNF O ring fitting	Local	Main system at Boom cylinder	***	***
1/2″ Quick coupler	New Holland	Main system at Auxiliary boom couplers	*	*
FNH22ESS95	OTC	Hydraulic tank pressuring tool	*	*

*Recommend Tool

***Essential Tool

https://truckmanualshub.com/

SPECIFICATIONS

MODEL	**LS160**
ENGINE MANUFACTURER	NEW HOLLAND
MODEL	N844 Diesel
CYLINDERS	4
ASPIRATION	NATURAL
CYCLE	4 STROKE
BORE AND STROKE	84 × 90 mm (3.31″ × 3.54″)
DISPLACEMENT	1995 cu. cm (121.7 cu. in.)
COMPRESSION RATIO	22 to 1
SPEEDS	
-FAST (no load)	3130 to 3180 RPM
-IDLE (no load)	900 to 1000 RPM
HORSEPOWER	
(SAE GROSS)	42.5 @2900 RPM
(SAE NET)	40.0 @2900 RPM
TORQUE - (mfg. rating) Gross	126 N·m (93 ft. lbs.)
VALVE CLEARANCE	
-Intake (cold)	0.2 mm (0.008 in.)
-Exhaust (cold).	0.2 mm (0.008 in.)
FIRING ORDER	1-3-4-2
FUEL CONSUMPTION (approximate at continuous full load)	9.5 LPH (2.5 GPH)
IGNITION TYPE	Compression
GRADEABILITY (Intermittent duty)	30 Degrees All Directions
AIR CLEANER - Dry type dual element	
Primary element	NH #86504145
Safety element	NH #86504143
FUEL SYSTEM	
Type of fuel	Diesel
Injection type	Indirect
Cleaning system	Inline filter replaceable NH#9611973 Inline water trap NH#86504140
CAPACITIES	
Cooling system	10.3 L (10.8 qt.)
Cooling system pressure	Radiator cap 48.3 kPa (7 psi)
Fuel tank	52.9 L (14 gal.)
Hydraulic reservoir	14.8 L (3.9 gal.)
Chain case (final drive - per side)	6.8 L (1.8 gal.)
Gearbox (per box)	0.95 L (1 qt.)

https://truckmanualshub.com/

MODEL	**LS160**
ENGINE OIL	
Oil type	API SH/CG4 SAE 10W-30
Filter part #	NH #86546618
Engine crankcase capacity w/filter	8.3 L (8.8 qt.)
Dipstick length	367 mm (14.4″)
ELECTRICAL SYSTEM	
Battery	BCI PC31 - 12V 650 amps @ 0°F (–18°C)
Alternator capacity	40 amps
Starter switch	Key start and relay
Ignition system protection	Fuse 15 amps
Headlights (work)	NH #86533429
Taillights (work)	NH #86533429
Taillights (road)	86505510
Amber flasher	NH #529068
HYDRAULIC SYSTEM	
Pump - Type	Gear pump
Output	
Standard Flow	15.5 GPM (58.7 LPM) @3155 RPM-@1000 PSI
Optional High Flow	24 GPM (90.8 LPM) @3155 RPM-@2300 PSI
Hydraulic system Capacity	32.6 L (8.6 gal.)
Hydraulic Fluid	SAE 10W-30 - API SH/CG4
Control Valve	3 Spool Open Center
Main system relief	170 - 177 bar (2500 - 2600 PSI)
Circuit relief - boom	238 bar (3500 PSI)
Filter Spin-on canister	NH #9842392
BOOM CYLINDERS	
Double-acting	35.1 mm (2.5″) dia. bore 470.0 mm (18.5″) stroke
Cycle time	
Raise	3.0 seconds
Lower	3.0 seconds
BUCKET CYLINDERS	
Double-acting	31.8 mm (2.25″) dia. bore 450.8 mm (17.88″) stroke
Cycle time	
Dump	2.0 seconds
Curl	1.7 seconds
HYDROSTATIC TRANSMISSIONS	
Pump	Variable displacement piston type
Motor	Fixed displacement piston type
Charge Pressure	11.0 bar (160 PSI)
Relief Pressure (Transmission)	238 bar (3500 PSI)
Oil Type	SAE 10W-30 API SH/CG4
TRAVEL SPEEDS - 10.00 × 16.5 Tires	
Forward	11.75 KPH (7.3 MPH)
Reverse	11.75 PPH (7.3 MPH)

https://truckmanualshub.com/

MODEL **LS160**

TIRE SIZES AND INFLATION

Tire	**Tire Pressure**
7.00 × 15 - CHEVRON TREAD	414 kPa (60 PSI)
7.50 × 15 - HST-HOLLOW SEGMENTED TIRES	N/A
10.00 × 16.5 - R4 CLEAT TREAD	345 kPa (50 PSI)
10.00 × 16.5 HD 2000	345 kPa (50 PSI)
10.00 × 16.5 - HST-HOLLOW SEGMENTED	N/A
31 × 15.5 × 15 - G1 Flotation	276 kPA (40 PSI)

BASIC WEIGHT - With 157 cm (66″) Dirt & Foundry bucket, 79 kg (175-lb.) operator, full fuel tank, battery, and 10.00 × 16.5 tires . . . . . 2210 kg (5534 lbs)

OPERATING CAPACITY
SAE Operating load capacity per SAE J732, J818, J742 Standard. . . . . 680 kg (1500 lbs.) (mfg. rating)
770.4 kg (1750 lbs.) (SAE rating)*

*SAE operating load rating per J818 specifications.

https://truckmanualshub.com/

SPECIFICATIONS

MODEL	**LS170**
ENGINE MANUFACTURER	NEW HOLLAND
MODEL	N844T Diesel
CYLINDERS	4
ASPIRATION	NATURAL
CYCLE	4 STROKE
BORE AND STROKE	84 × 90 mm (3.31″ × 3.54″)
DISPLACEMENT 1995 cu. cm (121.7 cu. in.)	1995 cu. cm (121.7 cu. in.)
COMPRESSION RATIO	22 to 1
SPEEDS	
-FAST (no load)	3130 to 3180 RPM
-IDLE (no load)	900 to 1000 RPM
HORSEPOWER	
(SAE GROSS)	52.0 @2900 RPM
(SAE NET)	50.0 @2900 RPM
TORQUE - (mfg. rating) Gross	153 N·m (113 ft. lbs.)
VALVE CLEARANCE	
-Intake (cold)	0.2 mm (0.008 in.)
-Exhaust (cold).	0.2 mm (0.008 in.)
FIRING ORDER	1-3-4-2
FUEL CONSUMPTION (approximate at continuous full load)	12.1 LPH (3.2 GPH)
IGNITION TYPE	Compression
GRADEABILITY (Intermittent duty)	30 Degrees All Directions
AIR CLEANER - Dry type dual element	
Primary element	NH #86504145
Safety element	NH #86504143
FUEL SYSTEM	
Type of fuel	Diesel
Injection type	Indirect
Cleaning system	Inline filter replaceable NH#9611973 Inline water trap NH#86504140
CAPACITIES	
Cooling system	10.3 L (10.8 qt.)
Cooling system pressure	Radiator cap 48.3 kPa (7 psi)
Fuel tank	52.9 L (14 gal.)
Hydraulic reservoir	14.8 L (3.9 gal.)
Chain case (final drive - per side)	6.8 L (1.8 gal.)
Gearbox (per box)	0.95 L (1 qt.)

https://truckmanualshub.com/

MODEL	**LS170**
ENGINE OIL	
Oil type	API SH/CG4 SAE 10W-30
Filter part #	NH #86546618
Engine crankcase capacity w/filter	8.3 L (8.8 qt.)
Dipstick length	367 mm (14.4″)
ELECTRICAL SYSTEM	
Battery	BCI PC31 - 12V 650 amps @ 0°F (–18°C)
Alternator capacity	40 amps
Starter switch	Key start and relay
Ignition system protection	Fuse 15 amps
Headlights (work)	NH #86533429
Taillights (work)	NH #86533429
Taillights (road)	86505510
Amber flasher	NH #529068
HYDRAULIC SYSTEM	
Pump - Type	Gear pump
Output	
Standard Flow	17.7 GPM (67 LPM) @3155 RPM-@1000 PSI
Optional High Flow	26.2 GPM (99.2 LPM) @3155 RPM-@2300 PSI
Hydraulic system Capacity	32.6 L (8.6 gal.)
Hydraulic Fluid	SAE 10W-30 - API SH/CG4
Control Valve	3 Spool Open Center
Main system relief	170 - 177 bar (2500 - 2600 PSI)
Circuit relief - boom	238 bar (3500 PSI)
Filter Spin-on canister	NH #9842392
BOOM CYLINDERS	
Double-acting	35.1 mm (2.5″) dia. bore 470.0 mm (18.5″) stroke
Cycle time	
Raise	2.7 seconds
Lower	2.3 seconds
BUCKET CYLINDERS	
Double-acting	31.8 mm (2.25″) dia. bore 450.8 mm (17.88″) stroke
Cycle time	
Dump	1.7 seconds
Curl	1.5 seconds
HYDROSTATIC TRANSMISSIONS	
Pump	Variable displacement piston type
Motor	Fixed displacement piston type
Charge Pressure	11.0 bar (160 PSI)
Relief Pressure (Transmission)	238 bar (3500 PSI)
Oil Type	SAE 10W-30 API SH/CG4
TRAVEL SPEEDS - 10.00 × 16.5 Tires	
Forward	11.75 KPH (7.3 MPH)
Reverse	11.75 PPH (7.3 MPH)

https://truckmanualshub.com/

MODEL **LS170**

TIRE SIZES AND INFLATION

Tire	**Tire Pressure**
7.00 × 15 - CHEVRON TREAD	414 kPa (60 PSI)
7.50 × 15 - HST-HOLLOW SEGMENTED TIRES	N/A
10.00 × 16.5 - R4 CLEAT TREAD	345 kPa (50 PSI)
10.00 × 16.5 HD 2000	345 kPa (50 PSI)
10.00 × 16.5 - HST-HOLLOW SEGMENTED	N/A
31 × 15.5 × 15 - G1 Flotation	276 kPA (40 PSI)

BASIC WEIGHT - With 157 cm (66″) Dirt & Foundry bucket, 79 kg (175-lb.) operator, full fuel tank, battery, and 10.00 × 16.5 tires . . . . . 2513 kg (5540 lbs)

OPERATING CAPACITY
SAE Operating load capacity per SAE J732, J818, J742 Standard. . . . . 771 kg (1700 lbs.) (mfg. rating)
800.6 kg (1765 lbs.) (SAE rating)*

*SAE operating load rating per J818 specifications.

https://truckmanualshub.com/

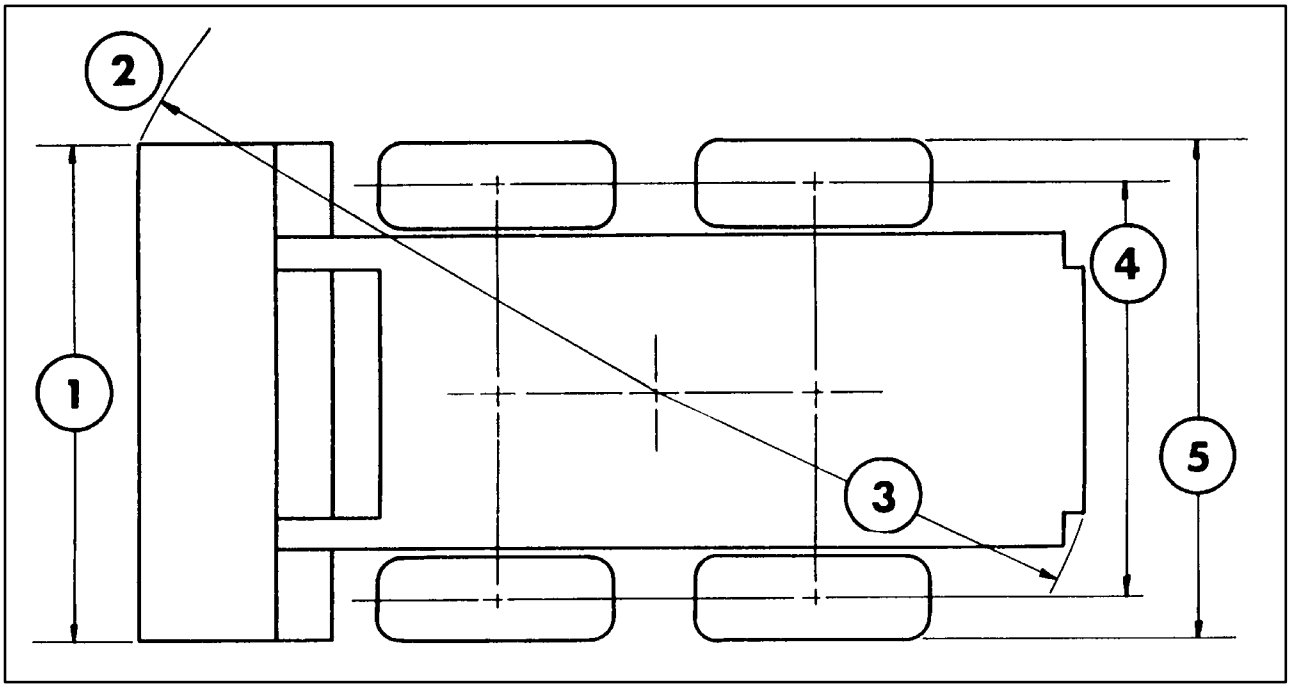

39

DIMENSIONS - LS160 AND LS170 WITH 66″ DIRT AND FOUNDRY BUCKET AND 10 X 16.5 TIRES - CM (IN.)

1 - OVERALL WIDTH w/BUCKET . . . . . 166.6 cm (65.6″)

2 - TURNING RADIUS - FRONT . . . . . 189.2 cm (74″)

3 - TURNING RADIUS - REAR . . . . . 152.4 cm (60″)

4 - WHEEL TREAD w/10 X 16.5 TIRES . . . . . 138.5 cm (56″)

5 - OVERALL WIDTH w/10 X 16.5 TIRES . . . . . 166.7 cm (65.6″)

https://truckmanualshub.com/

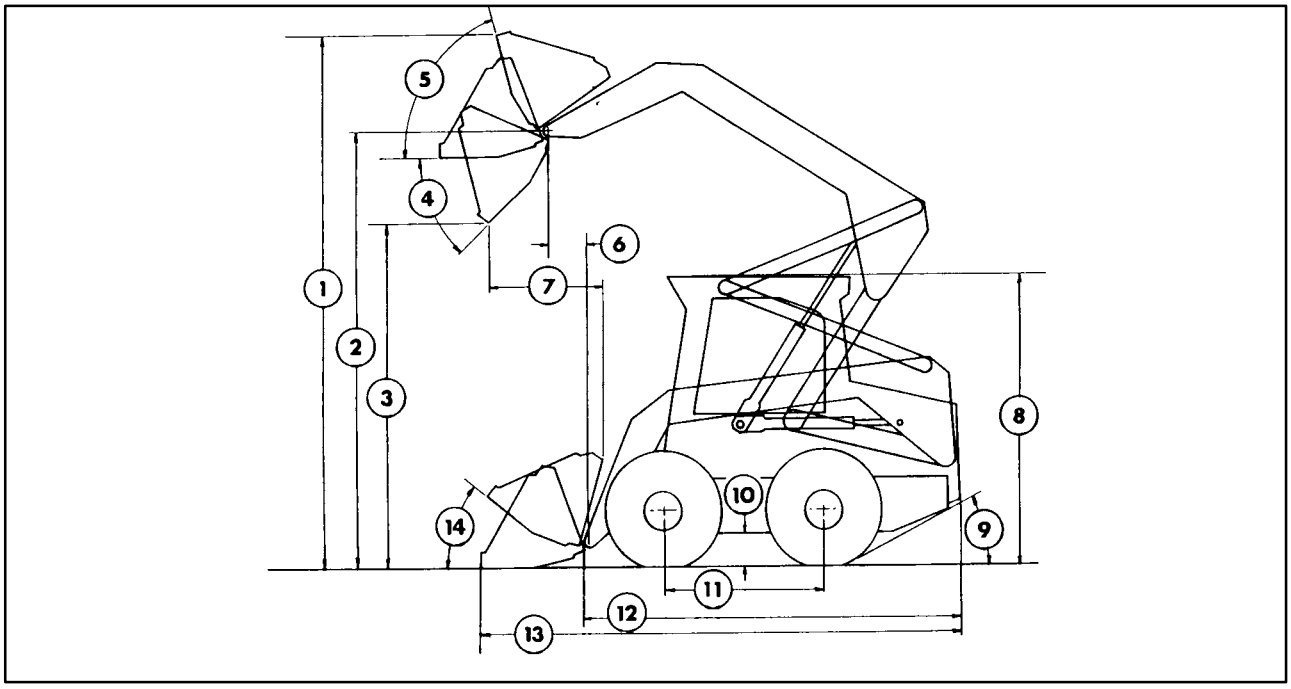

40

DIMENSIONS - LS160 AND LS170 WITH 66″ DIRT AND FOUNDRY BUCKET AND10 X 16.5 TIRES - CM (IN.)

1 - MAXIMUM OPERATING HEIGHT . . . . . 355.7 cm (140.0″)

2 - HEIGHT TO HINGE PIN . . . . . 293.4 cm (115.5″)

3 - DUMP HEIGHT . . . . . 229.6 cm (90.4″)

4 - DUMP ANGLE (MAX.) . . . . . 46°

5 - ROLLBACK FULLY RAISED . . . . . 83°

6 - BOOM REACH TO PIVOT PIN (At max. reach) . . . . . 37.0 cm (14.56″)

7 - DUMP REACH @ MAXIMUM HEIGHT . . . . . 70.5 cm (27.75″)

8 - OVERALL HEIGHT . . . . . 189.9 cm (74.75″)

9 - ANGLE OF DEPARTURE . . . . . 23°

10- GROUND CLEARANCE
(CHAIN CASE) . . . . . 19.6 cm (7.7″)
(BELLY PAN) . . . . . 22.9 cm (9″)

11- WHEELBASE . . . . . 108 cm (42.5″)

12- OVERALL LENGTH LESS BUCKET . . . . . 257.8 cm (101.5″)

13- OVERALL LENGTH w/BUCKET . . . . . 322.0 cm (126.75″)

14- ROLL BACK ANGLE (BOOM DOWN) . . . . . 36°

https://truckmanualshub.com/

SECTION 10 – ENGINE

Chapter 1 – LS160 - N844, LS170 - N844T

CONTENTS

Section	Description	Page
10 000	General Engine Information	10-3
	General Description	10-3
	Engine Component Descriptions	10-3
	Engine Model and Serial Number Location	10-5
	Turbocharger Lubrication	10-5
	Safety Precautions	10-6
	General Engine Specifications	10-7
	Troubleshooting	10-11
	LS170 - Excessive Oil Consumption	10-15
	Specifications - Service Standards	10-17
	Torque Specifications	10-21
	Engine Components Electrical Diagram	10-22
10 001 10	Engine Removal	10-23
10 001 53	Engine Disassembly Sequence	10-28
	Engine Component Maintenance	10-36
10 101 55	Valve Seat	10-39
10 101 56	Cylinder Block	10-41
10 105 22	Piston and Piston Rings	10-42
	Connecting Rod	10-45
10 103 10	Bearing Holder	10-47
	Front Crankshaft Bearing (Bushing)	10-48
10 103 30	Crankshaft	10-50
10 103 76	Flywheel and Ring Gear	10-52
10 106 40	Camshaft Assembly	10-52
10 106 66	Camshaft Gear and Bearing Assembly	10-53
	Timing Gear	10-54
10 304 41	Oil Pump	10-54
10 304 10	Oil Filter	10-55
10 402 28	Water Pump Assembly and Thermostat Housing	10-55
10 402 30	Thermostat	10-55
10 230 24	Governor	10-57
	Governor Operation	10-59

https://truckmanualshub.com/

10 304 38	Engine Reassembly Sequence	10-61
	Crankshaft and Bearing Holder Assembly	10-62
	Rear Oil Seal	10-63
	Backplate/Flywheel Housing	10-63
	Flywheel	10-63
	Piston and Connecting Rod	10-64
	Oil Intake and Oil Strainer	10-64
	Oil Sump	10-64
	Dipstick and Tube	10-64
	Front Plate	10-64
	Idler Gear and Oil Pump Assembly	10-66
	Timing Gear Case Installation	10-66
	Crankshaft Pulley	10-66
	Injection Pump Installation	10-66
	Adjusting the Fuel Injection Timing	10-67
	Spill Timing Procedure	10-68
29 100 50	Reinstallation of Engine into Skid Steer Frame	10-75
	How to Operate the Engine After Overhaul	10-77
	Cooling System	10-78
	Cooling System Operation	10-78
	Water Pump Assembly and Thermostat Housing	10-79
	Radiator	10-80
	Fuel System	10-82
	Fuel Specifications	10-82
	Diesel Fuel	10-82
	Diesel Fuel Storage	10-82
	Fuel System Components	10-83
	Fuel Guage	10-84
	Cold Start Aid	10-85
	Fuel Filter System	10-85
	Priming the Fuel System	10-86
	Fuel System Testing	10-87
	Fuel System Components	10-90
10 236 08	Fuel Injection Timing	10-96
	Turbocharger - LS170 N844T Engine	10-101
10 250 30	Turbocharger Removal	10-103
	Miscellaneous Engine Electrical	10-116
10 223 10	Shut-off Solenoid	10-117
	Special Tools	10-119
	Labor Guide	10-120

https://truckmanualshub.com/

Op. 10 000

GENERAL ENGINE INFORMATION

New Holland engines, N844 used in the model LS160 skid steer and N844T turbocharger engine used in the model LS170 skid steer.

GENERAL DESCRIPTION

The N844, N844T Series are four-cylinder stroke, liquid-cooled, compression ignition engines, designed for durability, low weight and compactness. The engines are IDI (In Direct Injection). The linerless cylinder block, three-piece helical gear train, and flange-mounted fuel injection pump on the engine cam, reduce frictional power loss and engine weight. The special direct-injection or swirl chamber, along with the small bore multi-cylinder design, offers good fuel consumption, low noise, and excellent start-ability.

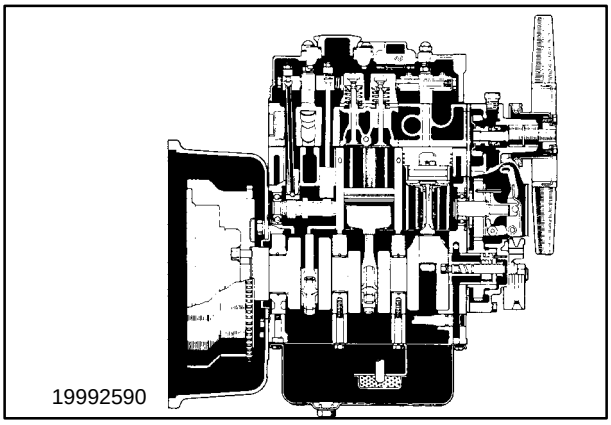

1

ENGINE COMPONENT DESCRIPTIONS

CYLINDER BLOCK

The cylinder block is made from high-grade cast iron with copper and chrome additives and is integral with the crankcase. The crankcase features five main bearings of the tunnel block design, with crankcase walls extending well below the crankshaft centerline for strength and rigidity. The cylinder's bores are plateau honed for oil retention and extended ring life. The non-machined surfaces are sealed to ensure cleanliness.

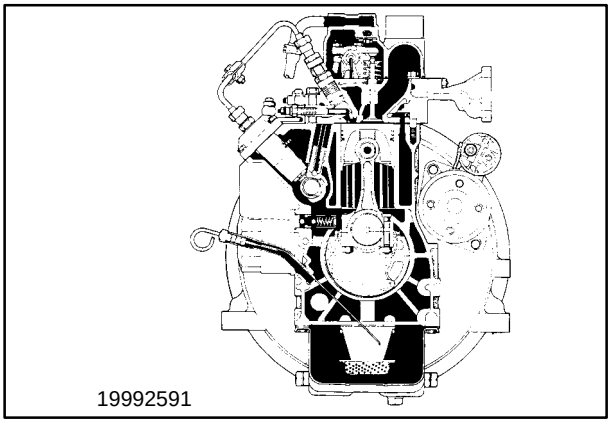

2

CRANKSHAFT

The crankshaft is a chrome-molybdenum steel forging, fully machined, static, and dynamically balanced with integral counterweights. All bearing surfaces are induction hardened. The axial location is by thrust washers at the number five main bearing. The five main journals run in replaceable steel-backed cast copper/lead alloy bearings. The front of the crankshaft is keyed.

https://truckmanualshub.com/

PISTONS AND CONNECTING RODS

Pistons are cast from high silicon aluminum alloy and are heat-treated for low weight with high strength and good thermal conductivity. The piston is fitted with three rings; two cast iron, chrome-faced compression rings and one steel, chrome-faced controlled oil ring. The fully floating gudgeon pin (wrist pin) is made of chrome molybdenum steel alloy hardened by carburizing and retained by the conventional retaining ring method. The connecting rods are machined from high-strength forged steel. The big end bearings are renewable steel-backed, copper/lead alloy overlay with tin plating. The small end bearings are a press fit plain bushing of tin-backed lead/bronze.

CAMSHAFT

The camshaft is made of forged steel and is induction hardened. Three or four additional lobes at the front operate the fuel injection pump. At the rear, a fuel lift pump eccentric is machined. The camshaft is supported by roller and needle bearings and lubricated by splash feed. The nose of the camshaft supports the cam gear, governor weight cage, and governor slider assembly.

CYLINDER HEAD

The cylinder head is made of high grade copper chrome cast iron, and incorporates replaceable heat-resistant alloy steel valve seats. Inlet and exhaust valves are made of high grade heat-resistant alloy steel with tuftrided stems and induction hardened heads. Each stem is fitted with a chrome molybdenum steel cap for long life.

The valves are operated by cold drawn seamless tube push rods with hardened steel ball and forged cup ends. Flat-based tappets are made from case carburized chrome molybdenum steel operating in machined bores in the cylinder block. The rocker shaft is an induction hardened hollow steel tube. Valve clearances are adjusted by hardened ball-ended screws and locknuts.

ROCKER COVER AND INLET MANIFOLD

The cover is made of cast aluminum with an air intake, oil filler, and crankcase breather. It is located in position by rocker pillar studs and secured by cap nuts.

GEAR TRAIN

The gear train consists of three helical gears – the crankshaft gear located by a woodruff key, the idler gear houses the lube oil pump, and the cam gear incorporates the governor weight cage.

FUEL SYSTEM

A flange-mounted, Bosch-type fuel injection pump is mounted in the cylinder block and operated by lobes machined on the engine cam.

LUBRICATING SYSTEM

A trochoid lobe oil pump located in the center of the idler gear sends lubricating oil to the main oil galley via a relief valve through a spin-on bypass oil filter to the main oil gallery. The rockers are pressure fed via an externally mounted oil pipe from the main oil gallery to the cylinder head.

COOLING SYSTEM

A belt-driven centrifugal water pump circulates coolant via the internal water passages. The coolant is radiator cooled and temperature controlled by a conventional thermostat.

https://truckmanualshub.com/

ENGINE MODEL AND SERIAL NUMBER LOCATION

The engine model number is located on the right side of the engine block at 1. The engine serial number is located at 2.

Throughout this manual, whenever the left- or right-hand side of the engine is referred to, it is that side of the engine when viewed from the flywheel end.

This publication is produced by New Holland North America, Inc. Every endeavor is made to ensure the information contained in this manual is correct at the date of publication, but due to continuous development, New Holland reserves the right to alter specifications without notice.

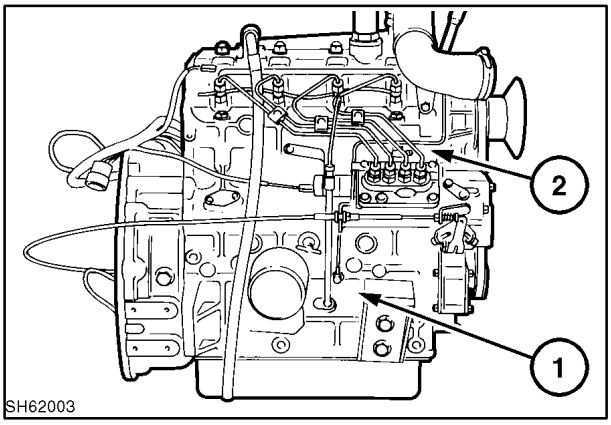

3

TURBOCHARGER LUBRICATION

The turbocharger used on the LS170 diesel engine may not receive adequate lubrication on cool/cold weather (below 5°C, 40°F) start-up, leading to turbocharger bearing failure.

The following procedure must be used to ensure adequate lubrication oil is supplied to the turbocharger bearings before high-speed engine operation:

1. Set the engine throttle at 1/3 speed.
2. Turn the ignition switch and allow the automatic glow plug timer to preheat the engine until the EIC “beep” is heard.
3. Start the engine, but DO NOT OPERATE ABOVE 1,500 RPM for three minutes to allow for adequate oil flow at the turbocharger.

After full load operation, allow the engine to run at low idle for one minute before engine shutdown.

https://truckmanualshub.com/

SAFETY PRECAUTIONS

These safety precautions are most important:

CAUTION

Do not change the specification of the engine.

Do not smoke when you put fuel in the tank.

Clean away any fuel which has spilled and move material which has fuel contamination to a safe place.

Do not put fuel in the tank during engine operation.

Never clean, lubricate or adjust the engine during operation unless otherwise specified in this manual. Use extreme caution when working around moving parts to prevent injury.

Do not make any adjustments you do not understand.

Ensure the engine is not in a position to cause a concentration of toxic emissions.

Persons in the area must be kept clear during engine and equipment or vehicle operation.

Do not permit loose clothing or long hair near parts which move.

Keep away from parts which turn during operation. Note that fans cannot be seen clearly while the engine is running.

Do not run the engine with any safety guards removed.

Do not remove the radiator cap while the engine is hot and the coolant is under pressure, as dangerous hot coolant can be discharged.

Do not use salt water in the fresh water cooling system or any other coolant which can cause corrosion.

Keep sparks or fire away from batteries (especially while charging) or combustion can occur. The battery fluid can burn and is also dangerous to the skin and especially the eyes.

Disconnect the battery terminals before you make a repair to the electrical system.

Only one person must be in control of the engine.

Ensure the engine is only operated from the control panel or operator's position.

If your skin comes into contact with high-pressure fuel, get medical assistance immediately.

Diesel fuel and used engine oils can cause skin damage to some persons. Use protection on the hands (gloves or special skin protection solutions).

Do not move equipment unless the brakes are in good condition.

Be sure that the transmission drive control is in "Neutral" position before the engine is started.

Do not use ether to start these engines.

https://truckmanualshub.com/

GENERAL ENGINE SPECIFICATIONS

LOADER MODEL	LS160
Engine Model	N844
Type	Vertical in-line 4-stroke naturally aspirated
Basic Thread and Size	
Bore	84 mm (3.31″)
Stroke	90 mm (3.54″)
Combustion System	IDI (Indirect Injection/Special Swirl)
Compression Ratio	22:1
Swept Volume Liter (inch^3)	1,995 (121.7)
Firing Order	1-3-4-2
Rotation	Counterclockwise viewed from flywheel
Low Idle	900 - 1000 RPM
High Idle (Full Throttle)	3130 - 3180 RPM
Injection Pump	Flange-mounted, Bosch-type plunger and barrel
Injectors	Bosch-type throttle
Injector Setting	
Kilograms/sq. cm (kgf/cm^2)	147 - 157
Pounds per sq. inch (PSI)	2132 - 2277
Turbo	NO
Governor	Mechanical all speed
Cooling System	Liquid with water pump and radiator
Industrial Cooling System Capacity (less radiator) Liters	3.3
Thermostat Operating Temperature degrees	180°/203° F (82°/95° C)
Oil Pressure Relief	35 - 50 PSI (2.5 - 3.5 kgf/cm^2)
Oil Pressure Switch	4.3 PSI
Electrical System	
Starter	12V
Alternator	12V
Battery (625 CCA)	12V
Weight, Bare Engine (Industrial)	191 kg (421 lbs.)
Height	767 mm (30.2″)
Length	686 mm (27.0″)
Width	428 mm (16.8″)

https://truckmanualshub.com/

LOADER MODEL	**LS160**
Recommended Engine Fluids	
Coolant	Clean soft water. Maximum antifreeze concentration 50% (ethanediol base-ethylene glycol with corrosion inhibitor to BS 6850:1985 or ASTM D3306-74 or AS 2108-1977)
Fuel	Cetane number-45 minimum, Viscosity -2.5/4.5 centistokes at 104° F (40° C). Density-0.835/0.855 kg/liter, Sulfur-0.5% of mass maximum. Distillation 85% at 662° F (350° C). (Aviation fuel JP4 is not recommended; however, JP5 and JET-A are acceptable, providing 5% spindle oil is added).
Lubricating System	
System	Pressure feed with Trochoid pump
Oil Type	API SH/CG4 SAE 10W-30 (SAE 5W30 for extended cold weather operation)
Filter Part #	NH #86546618
Engine Crankcase Capacity w/Filter	7.6 L (8 qt.)
Dipstick Length	367 mm (14.4″)

https://truckmanualshub.com/

GENERAL ENGINE SPECIFICATIONS

LOADER MODEL	LS170
Engine Model	N844T
Type	Vertical in-line 4-stroke naturally aspirated
Basic Thread and Size	
Bore	84 mm (3.31″)
Stroke	90 mm (3.54″)
Combustion System	IDI (Indirect Injection/Special Swirl)
Compression Ratio	22:1
Swept Volume Liter (inch^3)	1,995 (121.7)
Firing Order	1-3-4-2
Rotation	Counterclockwise viewed from flywheel
Low Idle	900 - 1000 RPM
High Idle (Full Throttle)	3130 - 3180 RPM
Injection Pump	Flange-mounted, Bosch-type plunger and barrel
Injectors	Bosch-type throttle
Injector Setting	
Kilograms/sq. cm (kgf/cm^2)	147 - 157
Pounds per sq. inch (PSI)	2132 - 2277
Turbo	YES
Governor	Mechanical all speed
Cooling System	Liquid with water pump and radiator
Industrial Cooling System Capacity (less radiator) Liters	3.6
Thermostat Operating Temperature degrees	160°/180° F (71°/82° C)
Oil Pressure Relief	50 - 64 PSI (3.5 - 4.5 kgf/cm^2)
Oil Pressure Switch	4.3 PSI
Electrical System	
Starter	12V
Alternator	12V
Battery (625 CCA)	12V
Weight, Bare Engine (Industrial)	206 kg (454 lbs.)
Height	789 mm (31.1″)
Length	666 mm (26.2″)
Width	482 mm (19.0″)

https://truckmanualshub.com/

LOADER MODEL	**LS170**
Recommended Engine Fluids	
Coolant	Clean soft water. Maximum antifreeze concentration 50% (ethanediol base-ethylene glycol with corrosion inhibitor to BS 6850:1985 or ASTM D3306-74 or AS 2108-1977)
Fuel	Cetane number-45 minimum, Viscosity -2.5/4.5 centistokes at 104° F (40° C). Density-0.835/0.855 kg/liter, Sulfur-0.5% of mass maximum. Distillation 85% at 662° F (350° C). (Aviation fuel JP4 is not recommended; however, JP5 and JET-A are acceptable, providing 5% spindle oil is added).
Lubricating System	
System	Pressure feed with Trochoid pump
Oil Type	API SH/CG4 SAE 10W-30 (SAE 5W30 for extended cold weather operation)
Filter Part #	NH #86546618
Engine Crankcase Capacity w/Filter	7.6 L (8 qt.)
Dipstick Length	367 mm (14.4″)

https://truckmanualshub.com/

TROUBLESHOOTING

ENGINE WILL CRANK BUT DOES NOT START

CAUSE	CORRECTION
Faulty key switch	Correct the connection and/or replace switch
Blown 5-amp electronic ignition fuse (cab fuse panel)	Replace fuse
Fuel solenoid not operating	Check solenoid for battery voltage and correct
Insufficient charging or complete discharging of the battery	Charge or replace battery
Lack of fuel	Fill fuel tank
Air mixed in the fuel system	Bleed the air
Clogged fuel filter	Replace
Irregular and faulty fuel supply (electric fuel pump)	Check power supply; check fuse in fuse panel; check for corroded internal components (replace pump and in-line filter if corroded)
Irregular and faulty fuel supply (injection pump trouble)	Repair in an authorized service shop
Glow plug not heating	Failure of the glow plug; replace
Improper viscosity of the lubricating oil	Inspect and replace
Clogged air cleaner	Clean or replace
No compression	Repair in a service shop

ENGINE WILL NOT CRANK OR START

CAUSE	CORRECTION
Seat belt not fastened	Buckle seat belt
Faulty key switch	Correct the connection and/or replace switch
Insufficient charging or complete discharging of the battery	Charge or replace battery
Blown 5-amp electronic battery fuse (engine fuse panel)	Replace fuse
Blown 15-amp key main fuse (engine fuse panel)	Replace fuse
Open in W/O (white-orange) wire between the seat/seat belt connector and start interlock relay	Check and repair as required
Faulty start interlock relay	Check and repair as required

IRREGULAR RUNNING OF THE ENGINE

CAUSE	CORRECTION
Air mixed in the fuel system	Bleed the air from the system
Uneven fuel injection (faulty fuel injection pump)	Repair at authorized shop
Clogged fuel filter	Replace
Defective governor	Check and correct
Engine itself defective	Repair in a service shop

https://truckmanualshub.com/

ENGINE STOPS DURING OPERATION

CAUSE	CORRECTION
EIC (Electronic Instrument Cluster) shows fault with hydrostatic charge pressure	Check and repair hydrostatic charge pressure
EIC (Electronic Instrument Cluster) shows fault with engine crankcase oil pressure	Check oil level and/or repair engine crankcase oil pressure
Lack of fuel in the tank	Fill fuel tank and bleed air
Clogged fuel filter	Replace
Air mixed in the fuel system	Bleed the air
Faulty function of the engine	Repair in a service shop

OVERHEAT OF THE ENGINE

CAUSE	CORRECTION
Lack of cooling water	Supply water, inspect for leakage and correct
Loose or slipping fan belt	Remove oil, dust, etc. and tighten
Damaged fan belt	Replace
Clogged radiator	Flush the radiator
Clogged radiator fin	Clean
Dust or scale clogged in the cooling water passage	Flush the system
Faulty function of the thermostat	Inspect or replace thermostat
Lack of lubricating oil	Add oil
Overloading	Decrease the load

FAULTY CHARGING

CAUSE	CORRECTION
Loose fan belt	Correct belt tension
Faulty wiring	Inspect and correct
Faulty battery	Repair
Worn out alternator brush	Replace

STARTER MOTOR DOES NOT RUN

CAUSE	CORRECTION
Loose or disconnected wiring	Inspect and tighten
Blown 5-amp electronic battery fuse (engine fuse panel)	Replace fuse
Blown 15-amp key main fuse (engine fuse panel)	Replace fuse
Low voltage of the battery	Charge the battery
Damaged starter motor	Repair in a service shop

https://truckmanualshub.com/

OIL PRESSURE LAMP NOT TURNED ON (KEY SWITCH "ON" WITH ENGINE NOT STARTED)

CAUSE	CORRECTION
Broken lamp bulb	Replace bulb
Broken wire between battery to the lamp	Correct it

OIL PRESSURE LAMP NOT TURNED OFF

CAUSE	CORRECTION
Lack of engine oil	Fill oil to the specified level
Fault in the pressure switch	Replace the switch
Oil leakage from the lubricating system	Inspect and retighten
Clogged oil filter	Replace with new one
Short-circuit between EIC panel and oil pressure switch	Repair

EXCESSIVE SMOKE/ENGINE MISS

CONDITION	CAUSE	CORRECTION
Good power, but misses or smokes at top engine speed	Top engine speed too high	Adjust top engine speed to factory limit
	Timing off	Check and adjust engine timing (refer to Tech Com Video #9701)
White or blue exhaust smoke during all operating conditions	Excess engine oil	Check and correct the level
	Engine oil viscosity too low	Check and replace oil
	Faulty/late injection timing	Correct timing
Blue smoke on cold engine startup	Low combustion temperature	Check fuel injection timing, adjust inlet and exhaust valves, and test the cylinder compression
	Normal warm-up	May be difficult to stop blue smoke on startup completely
Dark exhaust smoke	Fuel cetane rating not optimal	Use only fuel with a cetane rating of 50 or higher
	Excess injection	Inspect and adjust (in service shop)
	Faulty function of the engine	Repair in service
	Overloading	Reduce the load
	Clogged air cleaner	Clean
	Leaks	Seal off all leaks
	Valve cover vent hose kinked or clogged	Shorten hose to 460 mm (18.1″)

https://truckmanualshub.com/

ENGINE RUNS - NO POWER TO TRANSMISSION

CAUSE	CORRECTION
Flex plate failure due to rivets shearing	Replace with new design flex plate part #86521866
Flex plate failure due to inadequate lubrication	Replace flex plate (part #86521866) and input shaft, applying Never-Seize on splines

LS170 TURBOCHARGER BEARING FAILURES

CAUSE	CORRECTION
Lack of lubrication during cold weather startup	Warm up below 1500 RPM for three minutes on start-up and allow to run at low idle for one minute before shutdown

LS170 ENGINE NOISE/WHISTLING

CAUSE	CORRECTION
Internal muffler restriction	Replace muffler
Turbocharger worn	Inspect turbocharger components

EXCESSIVE OIL CONSUMPTION (OR OIL SMOKE FROM EXHAUST)

CAUSE	CORRECTION
Leaks	Seal all leak sources
Valve cover vent hose kinked or clogged	Shorten hose to 460 mm (18.1″)

NOTE: *See LS170 Oil Consumption below for more extensive troubleshooting procedures.*

https://truckmanualshub.com/

LS170 - EXCESSIVE OIL CONSUMPTION

The maximum allowable oil consumption for the turbocharged diesel engine is 0.8%, as measured using a log of fuel consumption to oil consumption.

If a customer complains about excessive engine oil consumption on the Model LS160 or LS170 skid steer, the following steps must be taken. If a cause is found, stop and correct the problem. If a cause is not found, continue to the next step.

1. Examine engine for signs of external oil leaks.
   - Check gaskets: oil pan, timing gear case, head, head cover, injection pump, oil gallery, and dipstick.
   - Oil seals: crankshaft, front and rear.
   - Steel tubing and fittings that supply oil to the turbocharger and upper engine.
   - Tubing, hose, and fittings for turbocharger oil drain to block.
   - Damage to oil pan and drain plug.
   - Crankcase breather hose (open and not kinked) preventing proper crankcase breathing.
2. Examine turbocharger area.
   - Remove the hose between the turbocharger inlet and the air cleaner. Examine for signs of dirt in the hose and inlet to the turbocharger blower.

   If carbon, oil, and dust are found, check:

   - Air cleaner assembly for tightness of filter elements.
   - Hose between air cleaner and turbocharger for damage or looseness of clamps.

   If oil residue is evident on the clean air turbine, it might not be due to failed turbocharger bearings.

   NOTE: *A film of oil on the clean air side of the turbocharger to the intake manifold is normal for skid steer operation.*

   Check the air filter and air intake hose for signs of oil residue.

   Check the exhaust area for leaks:
   - Exhaust manifold gasket and hardware.
   - Turbocharger gasket and hardware, if equipped.
   - Muffler gasket and hardware.
   - Muffler failure (cracks, misalignment).

   Remove the hose between the turbocharger outlet and the intake manifold. Check for dirt in the hose, turbocharger outlet, and the air intake manifold.

   If there is no dirt at the turbocharger inlet but there is a deposit at the turbocharger blower outlet (which is not due to signs of dirt in the hose and inlet to the turbocharger blower), it may be leakage from the turbocharger seals.

   Check turbocharger shaft specifications:

   Axial movement: maximum 0.09 mm (0.0035″)
   Radial movement: maximum 0.17 mm (0.0067″)
3. Check the blowby hose (valve cover vent hose) for signs of blockage. If the hose is kinked or the end is blocked by debris, correct by cutting off the end of the hose so it is just below the bottom of the engine oil filter.
4. If there is no problem found in the 1, 2, and 3 checking points, then go to the next step to log oil consumption.
5. The customer must log oil consumption using the following procedure:
   - Change the engine oil and filter. Use the oil specified in the loader operator’s manual.
   - Run the engine for two minutes.
   - Check the dipstick and add oil, if required, so the level is at the full mark.
   - Fill the fuel tank with fuel.
   - Record fuel consumption (in gallons), oil added (in quarts), and hour reading. Record fuel and oil use for 100 hours of operation, which is the recommended oil change interval. Check the dipstick before running the engine each day.

https://truckmanualshub.com/

The maximum allowable oil consumption is 0.8%. The following table give examples.

Fuel Consumption, Gallons	Oil Consumption, Quarts
50	1.6
100	3.2
200	6.4

A log example is shown in the following table. The hour level is the EIC (Electronic Instrumentation Cluster) reading when fuel is added. Dealer must file oil consumption log with customer file.

Fuel	Oil	Hour Level
Full	Full	100
XX Gallons	X Quart	150
XX Gallons	X Quart	200

6. If the oil consumption is greater than 0.8% of the fuel consumption, oil usage is excessive. A sample calculation for oil consumption follows:

   $$\% \text{ Consumption} = \frac{(\text{quarts oil}/4) \times 100}{\text{gallons fuel}}$$

   Assume one quart oil is added for 50 gallons fuel.

   $$\% \text{ Consumption} = \frac{(1/4) \times 100}{50} = 0.5\%$$

7. The New Holland dealer must check compression on all four cylinders and record.

   The compression specifications are as follows:

Standard Value	To Be Repaired
More than 429 PSI (29.5 bar) at 200 - 250 engine cranking RPM	Less than 356 PSI (24.5 bar)

Compression testing can be performed using a special adaptor (see “Special Tools” in the Additional Information Section) through the glow plug ports. Remove all glow plugs and test each cylinder.

This should be a “dry” compression check (do not put any oil in the cylinder).

If compression is low, recheck the air intake system for signs of dirt ingestion.

https://truckmanualshub.com/

SPECIFICATIONS

SERVICE STANDARDS

Inspection Item	Standard Dimension	Standard Value	To Be Repaired	Allowable Limit	Remarks
CYLINDER HEAD					
Compression pressure of cylinder		More than 426.6 PSI (30 kg/cm^2)	Less than 355.5 PSI (25 kg/cm^2)		
Tigtening torque of cylinder head		72.3 - 75.9 ft. lbs. (98 - 103 N·m)			
Distortion of face of cylinder head		0.002″ max. (0.05 mm)	0.0047″ (0.12 mm)		
Valve seat depth (Both intake and exhaust) Width Recess Valve Seat		0.026″ - 0.037″ (0.65 - 0.95 mm)	0.063″ (1.6 mm)		Valve seat angle 45°
Valve seat width (intake)		0.06″-0.08″ (1.5 - 2.0 mm)	0.1″ (2.5 mm)		
Valve seat width (exhaust)		0.076″-0.085″ (1.94 - 2.16 mm)	0.1″ (2.5 mm)		
CYLINDER BLOCK					
Type		Dry type (Unit type)			
Bore	3.307″ (84 mm)	3.307″ - 3.308″ (84 - 84.019 mm)	3.315″ (84.2 mm)	3.354″ (85.2 mm)	Oversize 0.02/.04″ (0.5, 1.0 mm)
Cylinder block type surface warpage		0.002″ max. (0.05 mm)	0.0047″ (0.12 mm)		
PISTON					
Skirt long-diameter size	3.307″ (84 mm)	3.3050″ - 3.3056″ (83.948 - 83.963)		3.295″ (83.7 mm)	Oversize 0.02/.04″ (0.5, 1.0 mm)
Clearance with cylinder		0.0015″ - 0.0028″ (0.038 - 0.072 mm)		0.01″ (0.25 mm)	68° F (20° C)
Piston pin hole inside diameter	1.1024″ (28 mm)	1.1023″ - 1.1025″ (27.999 - 28.003)			
Piston pin hole to pin clearance		-0.00004″ ± .00028″ (0.001 ± 0.007 mm)		0.0008″ (0.02 mm)	

https://truckmanualshub.com/

Inspection Item		Standard Dimension	Standard Value	To Be Repaired	Allowable Limit	Remarks
PISTON PIN						
Pin outside diameter		1.1024″ (28 mm)	1.1022″ - 1.1024″ (27.996 - 28.0)		1.1016″ (27.98 mm)	
Rod small end bushing to pin clearance			0.0004″-0.00098″ (0.010-0.025 mm)		0.004″ (0.1 mm)	Oil clearance
PISTON RING						
Piston ring groove to ring clearance						
	1st ring		0.0028″-0.0043″ (0.07 -0.11 mm)		0.0098″ max. (0.25 mm)	
	2nd ring		0.0016″-0.0031″ (0.04-0.08 mm)			
	Oil ring		0.0008″-0.0024″ (0.02-0.06 mm)		0.006″max (0.15 mm)	
Ring width						
	1st ring	0.1378″ (3.5 mm)	0.1339″-0.1417″ (3.4-3.6 mm)			
	2nd ring	0.1417″ (3.6 mm)	0.1378″-0.1457″ (3.5-3.7 mm)			
	Oil ring	0.0984″ (2.5 mm)	0.0906″-0.1063″ (2.3-2.7 mm)			
Piston ring end gap						
	1st ring		0.0079″-0.0138″ (0.2-0.35 mm)		0.0394″ (1.0 mm)	
	2nd ring		0.0079″-0.0157″ (0.2-0.4 mm)			
	Oil ring		0.0079″ - 0.0157″ (0.2 - 0.4 mm)			

Inspection Item	Standard Dimension	Standard Value	To Be Repaired	Allowable Limit	Remarks
CONNECTING ROD					
Twist between small and large end holes (per 100 mm)		0.0031″ max. (0.08 mm)		0.0079″ (0.2 mm)	
Straightness at 100mm between small and large end hole		0.0020″max. (0.05 mm)		0.0059″ (0.15 mm)	
Front-to-rear clearance between connecting rod and crank pin		0.004″-0.012″ (0.1-0.3 mm)		0.0276″ (0.7 mm)	
Connecting rod bearing-to-crank pin clearance		0.0014″-0.0033″ (0.035-0.085)		0.0079″ (0.2 mm)	Oil clearance
Crush height of large end bearing		1.0833″-1.0849″ (27.517-27.557)			
Connecting rod bearing (inner diameter x width)	2.1654″ x 0.779″ (55 x 19.8 mm)	2.1654″ x 0.779″ (55 x 19.8 mm)			
Connecting rod bolt torque		36.2-39.8 ft. lbs. (49-54 N·m)			
Weight difference with piston assembly		less than 0.022 lbs. (10 g)			

https://truckmanualshub.com/

Inspection Item		Standard Dimension	Standard Value	To Be Repaired	Allowable Limit	Remarks
CRANKSHAFT						
Diameter of journal		2.677″ (68 mm)	2.6755″-2.6760″ (67.957-67.970)		2.654″ (67.4 mm)	Undersize 0.01″, 0.02″ (0.25, 0.5)
Diameter of pin		2.047″ (52 mm)	2.0458″-2.0463″ (51.964-51.975)		2.024″ (51.4 mm)	Undersize 0.01″, 0.02″ (0.25, 0.5)
Roughness, main journal & crank pin		1.6Z				
Cranshaft deflection			0.0012″ max. (0.03 mm)		0.0024″ (0.06 mm)	
Axial play of crankshaft			0.004″-0.016″ (0.1-0.4 mm)			
Thickness of thrust washer			0.116″-0.118″ (2.95-3.0 mm)		0.110″ (2.8 mm)	
O.D. x I.D. of bushing (journal bearing)		2.8346″ x 2.6772″ (72 x 68 mm)	2.8346″ x 2.6772″ (72 x 68 mm)			
Clearance between crankshaft journal bushing			0.0017″-0.0046″ (0.044-0.116)		0.008″ (0.2 mm)	Oil clearance
O.D. x I.D. of center bearing		2.8346″ x 2.6772″ (72 x 68 mm)	2.8346″ x 2.6772″ (72 x 68 mm)			
Clearance between crankshaft journal and center bearing			0.0017″-0.0040″ (0.044-0.102)		0.008″ (0.2 mm)	Oil clearance
CAMSHAFT						
Height	For intake/exhaust		1.3411″-1.3433″ (34.065-34.12)		1.3268″ (33.7 mm)	
	For injection pump		1.6512″-1.6559″ (41.94-42.06)		1.6457″ (41.8 mm)	
	For feed pump		1.2559″-1.2598″ (31.9-32.0 mm)		1.1811″ (30.0 mm)	
Camshaft deflection			0.0012″ max. (0.03 mm)		0.004″ (0.1 mm)	
Cam gear backlash			0.00315″ (0.08 mm)		0.01″ (0.25 mm)	
VALVE						
Diameter of intake valve stem		0.2744″ (6.97 mm)	0.2738″-0.2744″ (6.955-6.97 mm)		0.2713″ (6.89 mm)	
Diameter of exhaust valve stem		0.2736″ (6.95 mm)	0.2732″-0.2736″ (6.94-6.95 mm)		0.2693″ (6.84 mm)	
Clearance between valve stem and valve guide	Inlet		0.0012″-0.0024″ (0.03-0.06 mm)		0.008″ (0.2 mm)	
	Exhaust		0.002″-0.003″ (0.05-0.075 mm)		0.01″ (0.25 mm)	
Valve thickness Thickness			0.0364″-0.0423″ (0.925-1.075)		0.02″ (0.5 mm)	
Valve clearance (intake & exhaust)			0.008″ (0.2 mm)	0.02″ (0.5 mm)		Cold
Valve spring	Spring force at 1.2″ (30.4 mm)		17.86 lbs. (8.2 kg)		15.43 lbs. (7 kg)	
	Free height		1.378″ (35 mm)		1.319″ (33.5 mm)	
	Squareness		0.047″ max. (1.2 mm)		0.079″ (2.0 mm)	
Intake valve	Opening angle BTDC	13°				
	Closing angle ABDC	43°				
Exhaust valve	Opening angle BBDC	43°				
	Closing angle ABDC	13°				

https://truckmanualshub.com/

Inspection Item		Standard Dimension	Standard Value	To Be Repaired	Allowable Limit	Remarks
PUSHROD						
Overall length			8.075″-8.106″ (205.1-205.9)			
Outside diameter			0.244″-0.252″ (6.2-6.4 mm)			
ROCKER ARM						
Rocker arm shaft OD			0.5886″-0.5894″ (14.95-14.97)		0.5854″ (14.87 mm)	
Rocker arm to shaft clearance			0.0012″-0.0037″ (0.030-0.093)		0.008″ (0.2 mm)	Oil Clearance
OIL PUMP						
Oil pressure switch actuating pressure		4.266 PSI (0.3 kg/cm^2)	2.844-5.688 PSI (0.2-0.4 kg/cm^2)			
Relief valve opening pressure		45.5 PSI (3.2 kg/cm^2)				
Tip clearance (rotor to vane gap)			0.0004″-0.006″ (0.01-0.15 mm)		0.0098″ (0.25 mm)	
Axial clearance (rotor to cover)			0.004″-0.006″ (0.1-0.15 mm)		0.008″ (0.2 mm)	
INJECTION PUMP						
Pump plunger diameter		0.217″ (5.5 mm)				
Pump plunger stroke		0.276″ (7.0 mm)				
Injection timing	Before top dead center	N844 22° N844T 21°	N844 21°-23° N844 T 20°-22°			
	Piston displacement (BTDC) - N844	0.1743″ (4.426 mm)	0.1533″-0.1837″ (3.895-4.655 mm)			
	Piston displacement (BTDC) - N844T	0.1533″ (3.895 mm)	0.1393″-0.1734″ (3.539-4.426 mm)			
INJECTION NOZZLE						
Injection pressure		2205 PSI (152 kg/cm^2)	2132-2277 PSI (147-157 kg/cm^2)	1849 PSI (130)		
COOLING						
Cooling system		Water cooled forced circulation				
Cooling water quantity (1) (Without radiator)		3.3				
Thermostat opening temperature		180° F (82° C)				
Thermostat full open temperature		203° F (95° C)				
V-belt (fan) slack - 0.2″ (5 kg) at center		0.2″ (5 kg)				
STARTER MOTOR						
Type		NIPPON DENSO (12V-2kw Reduction)				
Pinion gear # teeth		11				
Pinion gear shift system		Magnetic shift				
Commutator diameter wear		1.38″ (35 mm)			1.34″ (34 mm)	
Commutator diameter eccentric wear			0.0008″ (0.02 mm)		0.002″ (0.05 mm)	
Armature shaft bending				0.002″ (0.05 mm)		
Brush length		0.59″ (15 mm)			0.35″ (9 mm)	
Brush spring pressure .		5.9-7.8 lbs. (2.7-3.6 kg)			4.7 lbs. (2.2 kg)	

https://truckmanualshub.com/

Inspection Item	Standard Dimension	Standard Value	To Be Repaired	Allowable Limit	Remarks
ALTERNATOR					
Type	MITSUBISHI (12V-40A)				
Rotor shaft bending			0.0028″ (0.07 mm)		
Slip rings					
Diameter	0.894″ (22.7 mm)		0.871″ (22.1 mm)		
Diameter eccentric wear			0.002″ (0.05 mm)	0.08″ (0.02 mm)	
Surface condition			If dirty or damaged correct with emery cloth.		
Brush length	0.728″ (18.5 mm)			2.0″ (5.0 mm)	
Brush spring pressure	1.169 lbs. (530 g)	1.036-1.300 (470-590 g)		0.60 lbs. (270 g)	

TORQUE SPECIFICATIONS

COMPONENT	Setting/Remarks
Bearing holder bolts- hex hole type	18-22 ft. lbs. (24-30 N·m)
- hex bolt type	36-40 ft. lbs. (49-54 N·m)
Rear plate bolts	10-13 ft. lbs. (14-18 N·m)
Flywheel housing bolts	18-21 ft. lbs. (24-28 N·m)
Flywheel bolts	43-51 ft. lbs. (58-69 N·m)
Connecting rod nuts	36-40 ft. lbs. (49-54 N·m)
Suction filter bolt	7-9 ft. lbs. (9-12 N·m)
Sump bolts	7-9 ft. lbs. (9-12 N·m)
Crankshaft pulley nut	203-246 ft. lbs. (275-333 N·m)
Cylinder head bolts	72-76 ft. lbs. (98-103 N·m)/oiled
Injection pump bolts	7-9 ft. lbs. (9-12 N·m)
Injection pump nuts	7-9 ft. lbs. (9-12 N·m)
Rocker arm nuts	20-29 ft. lbs. (27-39 N·m)/4-cylinder engines
Head cover nuts	9-12 ft. lbs. (12-16 N·m)/4-cylinder engines
Cooling fan bolts	7-9 ft. lbs. (9-12 N·m)
Oil pipe banjo bolts	7-9 ft. lbs. (9-12 N·m)
Oil sump drain bolt	22-29 ft. lbs. (30-39 N·m)
Injection nozzle	43-51 ft. lbs. (58-69 N·m) IDI engines
Injection pipe	11-18 ft. lbs. (15-24 N·m)
Thermo switch	18-22 ft. lbs. (24-30 N·m)
Oil pressure switch	11-15 ft. lbs. (15-20 N·m)
Glow plug	11-15 ft. lbs. (15-20 N·m)
Stop solenoid	11-15 ft. lbs. (15-20 N·m)
Oil relief valve	44-51 ft. lbs. (60-69 N·m)
Smokeset nut (max fuel)	15-19 ft. lbs. (20-26 N·m)
Adjusting screw nuts	9-12 ft. lbs. (12-16 N·m)

https://truckmanualshub.com/

ENGINE COMPONENTS ELECTRICAL DIAGRAM

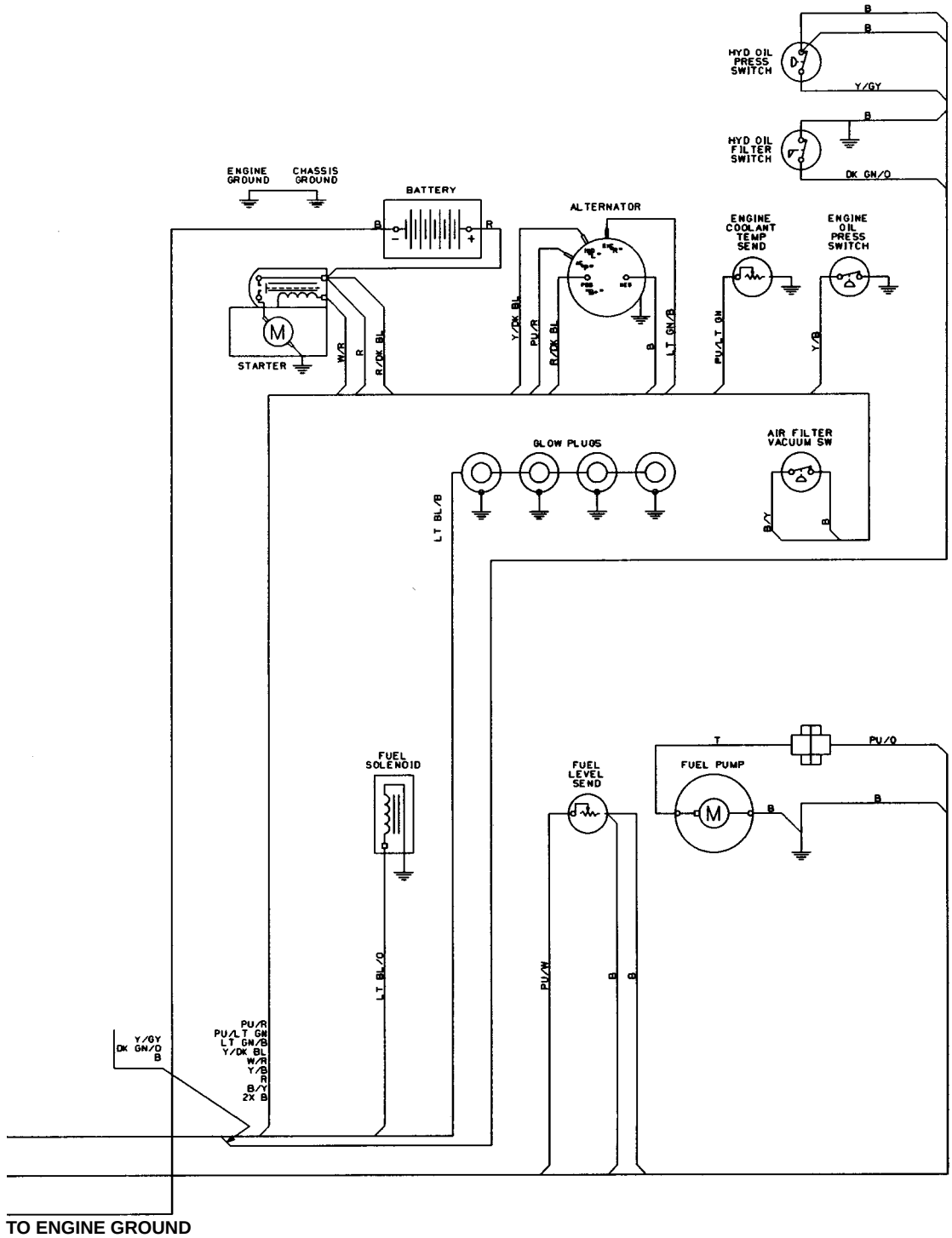

19992596

4

https://truckmanualshub.com/

Op. 10 001 10

ENGINE REMOVAL

The engine can be removed from the loader by two methods:

Method 1: Removing the rear door, radiator, oil cooler, and support as an assembly.

Method 2: Tilting the cab and boom forward to gain access.

For either method, raise and support the boom on the boom lock pins, 1, to access the engine area.

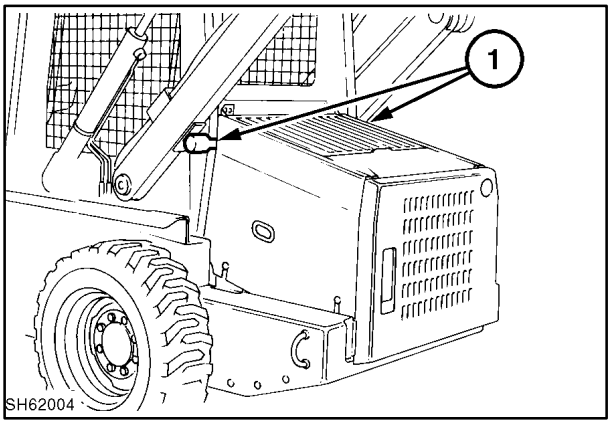

5

METHOD 1

(Without Tilting Cab)

1. Open rear door, 1. Remove the top engine hood, 2, and both the right and left engine side covers.
2. Remove the battery.
3. Drain the cooling system, radiator, and engine block, 3.
4. Remove the upper and lower radiator hoses from the engine block and plug the hoses with plastic plugs.

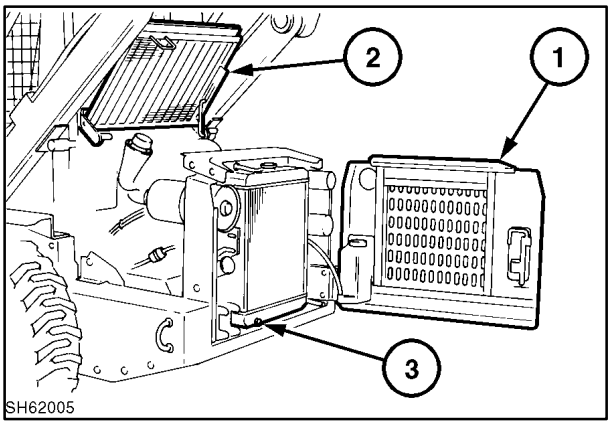

6

5. Remove the air cleaner hose, 1, from the intake manifold and cap.
6. Unplug the engine wire harness from the main harness, 2, and ground wires from the engine bellhousing, 3.
7. Unhook the control valve hydraulic oil return line at the oil cooler and cap, 4.

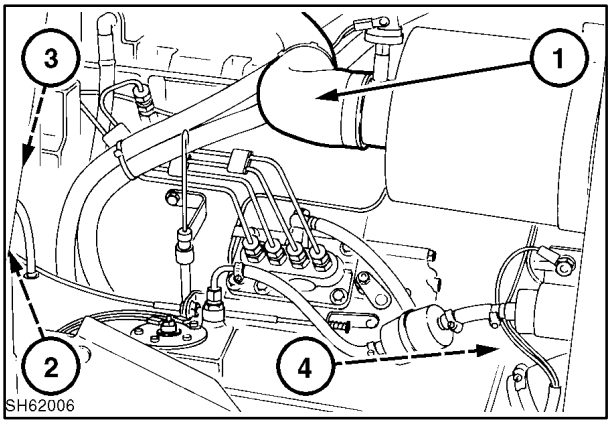

7

https://truckmanualshub.com/

8. Unhook the hydraulic oil return line, 1, from the charge check valve and cap.

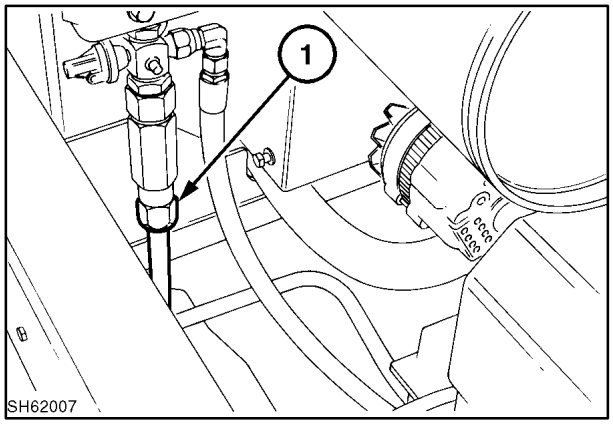

8

9. Remove the eight 1/2″ cap screws from the support at 1, both sides, and remove the radiator and oil cooler assembly.

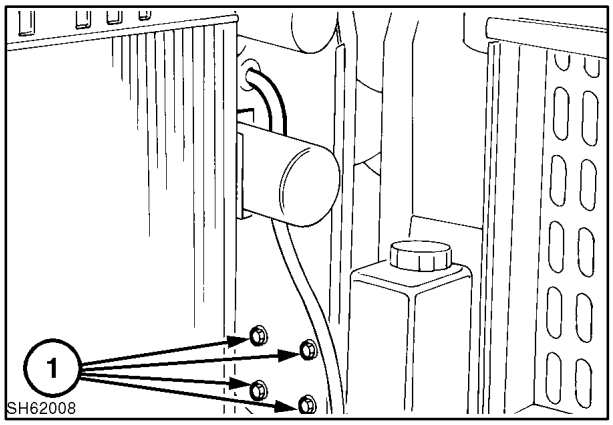

9

The support is shown removed with the air cleaner, radiator, oil cooler, oil filter, and fuel pump attached.

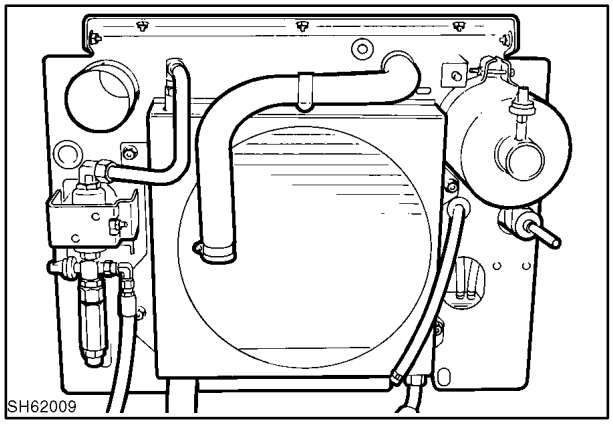

10

https://truckmanualshub.com/

10. Raise the seat to the raised latched position, 1, to access the hydrostatic pumps and engine bellhousing. Remove the neutralizer plate return spring and hardware, 2, from the bellhousing and remove plate.

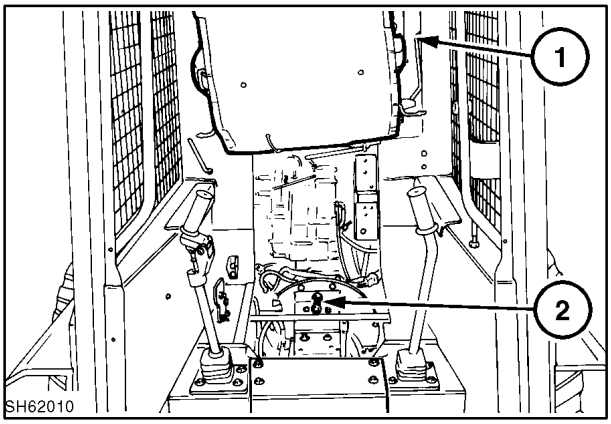

11

Remove the hydrostatic pump to bellhousing and pump support retaining hardware at 1 and 2.

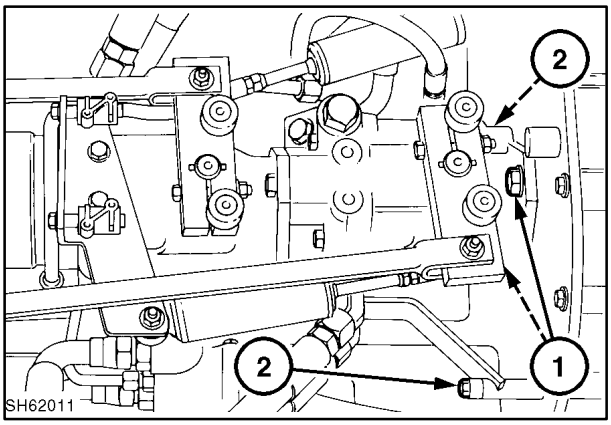

12

11. Attach lifting chains to the engine lift eyes at 1, and hook to the lifting device to support the engine.
12. Remove the engine motor mount hardware and slide the engine to the rear to uncouple the hydrostatic pump assembly from the engine bellhousing. Lift the engine assembly from the skid steer frame.

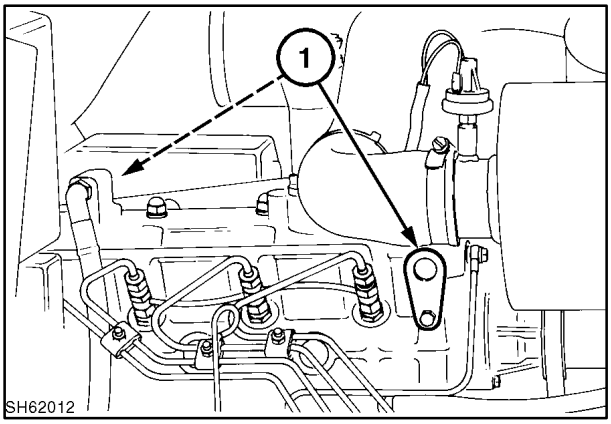

13

https://truckmanualshub.com/

METHOD 2

(Tilting Cab and Boom Forward)
Follow the cab tilting procedure in Section 00 of this manual for proper instructions.

1. Remove the muffler from the exhaust manifold, 1.
2. Remove the battery.

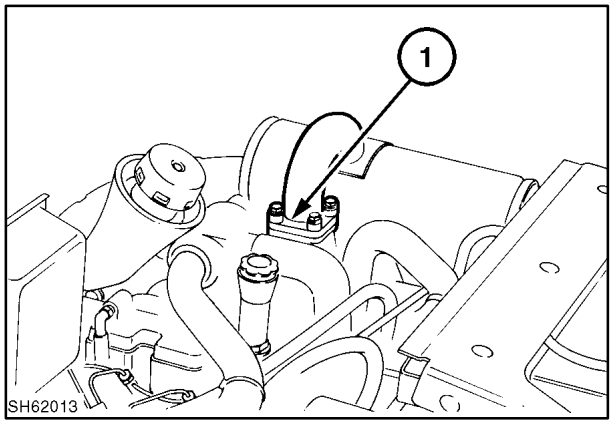

14

3. Drain the cooling system, radiator and engine block, raise handles, 1, moving the radiator to the rear and drain the cooling system from drain plug, 2.
4. Remove the upper and lower radiator hoses from the engine block and plug the hoses with plastic plugs.

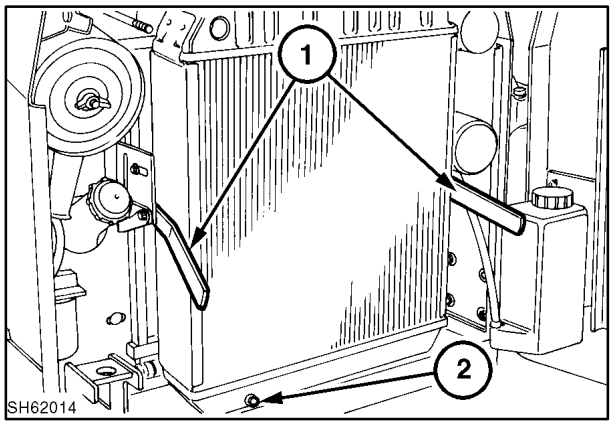

15

5. Remove the air cleaner hose, 1, from the intake manifold and cap.
6. Unplug the engine wire harness, 2, from the main harness and ground wires, 3, from the engine bellhousing.
7. Unhook the control valve hydraulic oil return line at the oil cooler and cap at 4.

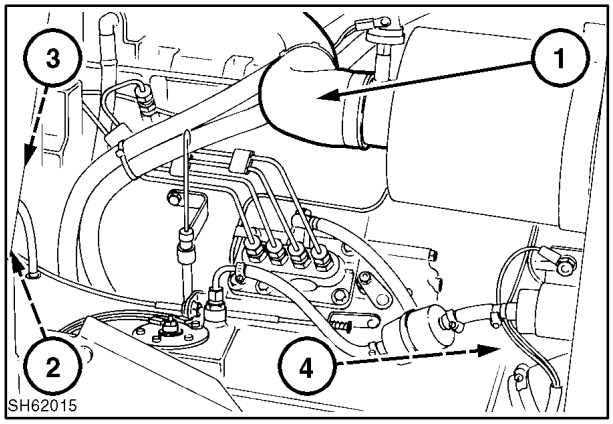

16

https://truckmanualshub.com/

8. Unhook the hydraulic oil return line, 1, from the charge check valve and cap.
9. Remove the fan from the water pump shaft.

NOTE: *The LS160 N844 engine fan is equipped with a cover over the center of the fan.*

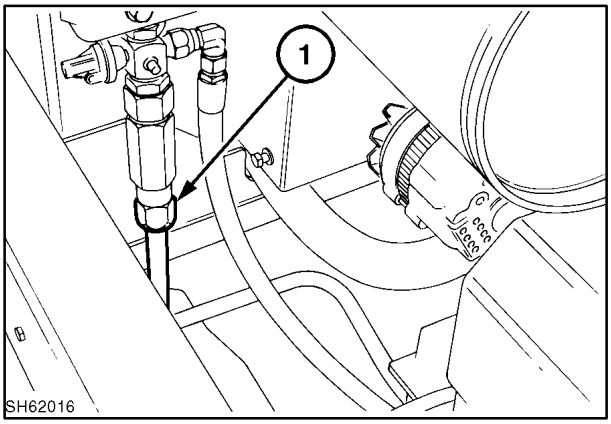

17

10. Remove the neutralizer plate return spring and hardware, 1, from the bellhousing and remove plate, 2.

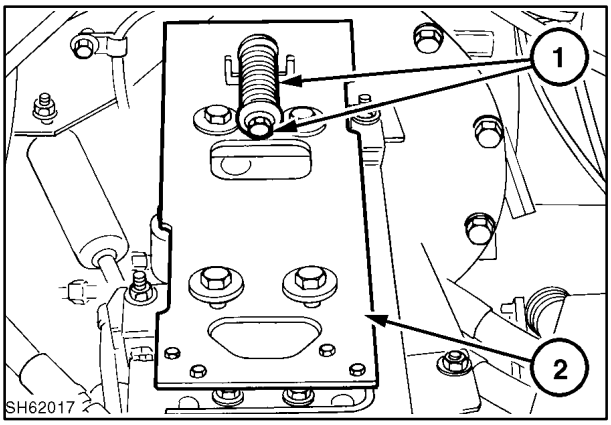

18

11. Remove the hydrostatic pump to bellhousing and pump support retaining hardware at 1 and 2.

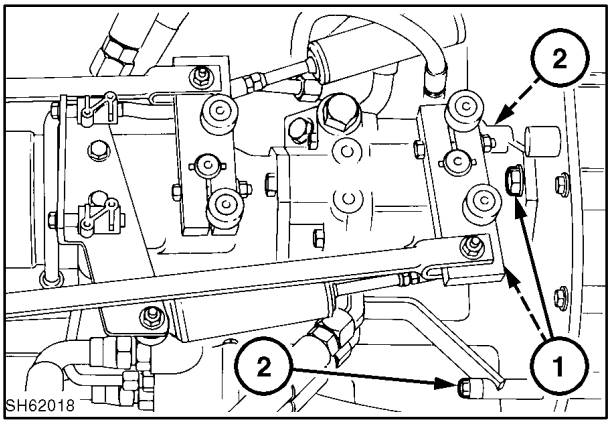

19

https://truckmanualshub.com/

12. Attach lifting chains to the engine lift eyes at 1, and hook to the lifting device to support the engine.
13. Remove the fuse panel support hardware and move the panel for clearance.
14. Remove the engine motor mount hardware and slide the engine to the rear to uncouple the hydrostatic pump assembly from the engine bellhousing. Lift the engine assembly from the skid steer frame.

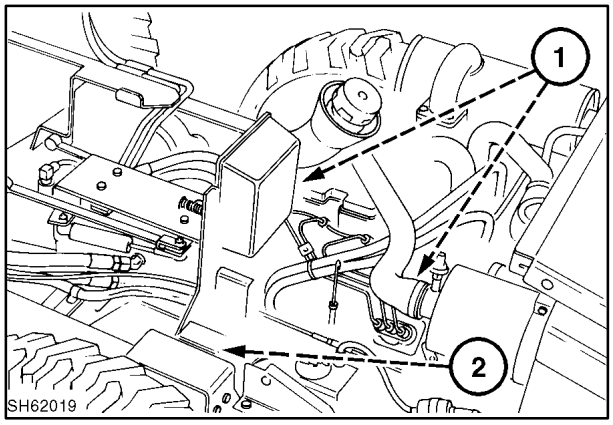

20

Op. 10 001 53

ENGINE DISASSEMBLY SEQUENCE

Op. 55 301 10

ALTERNATOR

Disconnect the alternator wire harness and wires, 1.

Remove the alternator pivot and adjusting bracket, hardware, 2.

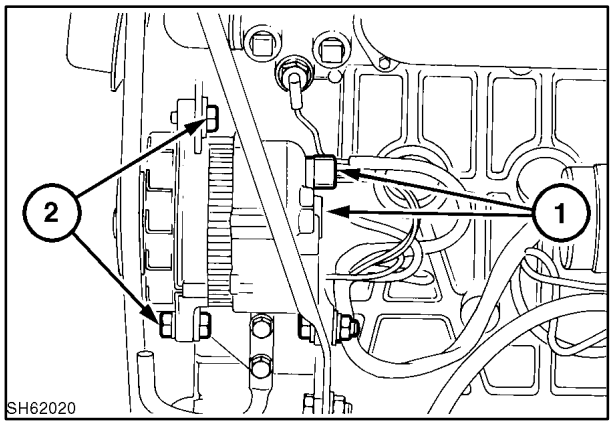

21

Op. 10 104 14

REMOVE COOLING FAN AND PULLEY

Remove the fan retaining hardware and spacers. The LS160 N844 engine fan is equipped with a cover, 1, over the center of the fan.

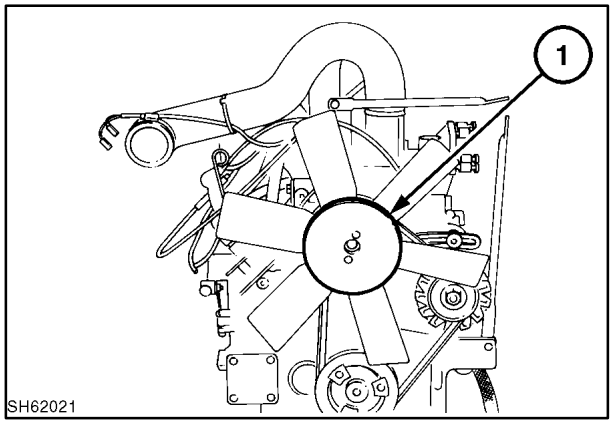

22

https://truckmanualshub.com/

Op. 10 218 18

FUEL INJECTION PIPE

1. Loosen the fuel pipe nuts from the fuel injection pump and injectors, 1. Remove the pipes as an assembly.
2. Remove the spring clamp and fuel return hose, 2.

Op. 10 218 30

INJECTOR ASSEMBLY

Loosen and remove the securing nuts, 3. Remove the leak-off rail, 4. Remove the aluminum washers and discard. Remove the injectors tagging or marking with the cylinder they were removed from.

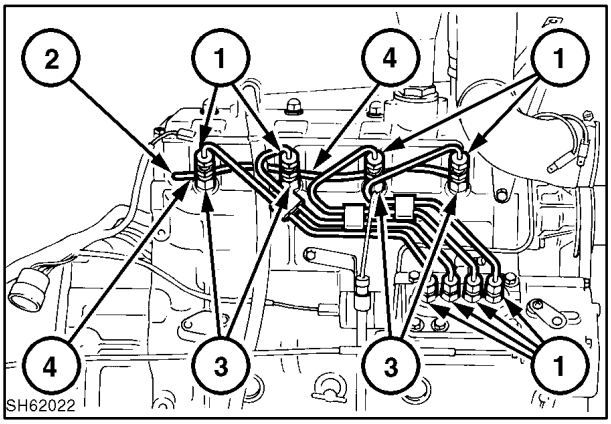

23

Op. 10 402 10

WATER PUMP ASSEMBLY

Loosen the securing bolts and remove the water pump assembly, 1, and set plate, 2.

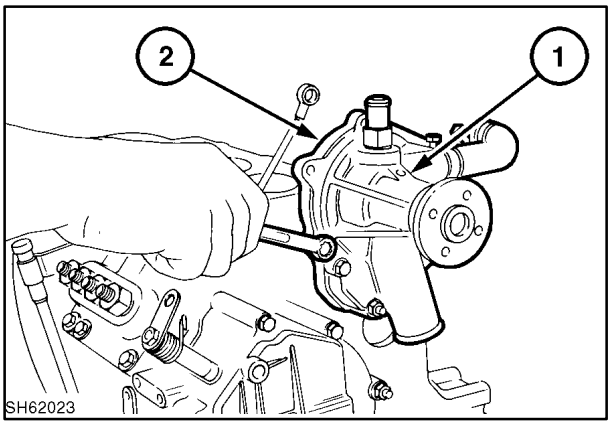

24

Op. 10 101 10

ROCKER COVER

Op. 10 254 12

INLET MANIFOLD

Op. 10 254 14

EXHAUST MANIFOLD

Remove the inlet manifold, 1, spacer, 2, and exhaust manifold, 3.

For the N844T turbocharged engine, refer to the turbocharger section of the manual for removal and replacement.

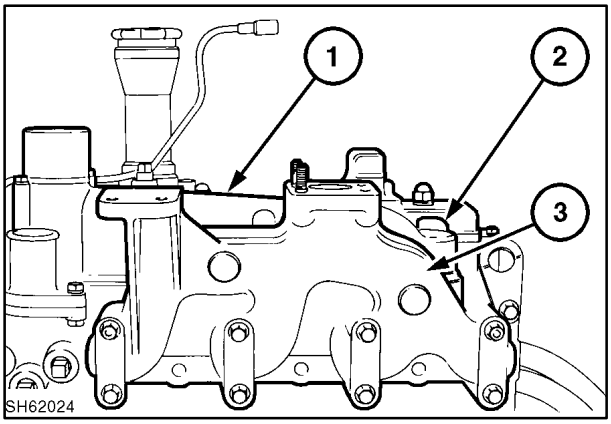

25

https://truckmanualshub.com/

Remove the breather hose, 1. Loosen and remove four cap nuts with washers. Remove the rocker cover assembly, 2.

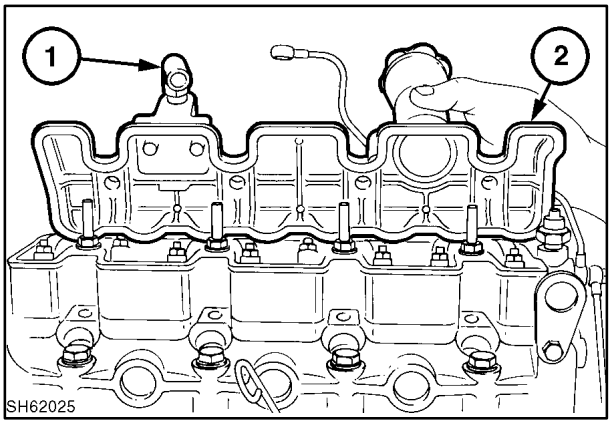

26

Op. 10 250 16

EXTERNAL OIL PIPE (LS160)

1. Loosen and remove the two banjo bolts at the cylinder block main oil gallery and cylinder head assembly.
2. Remove the clamp from the fuel injection pump.

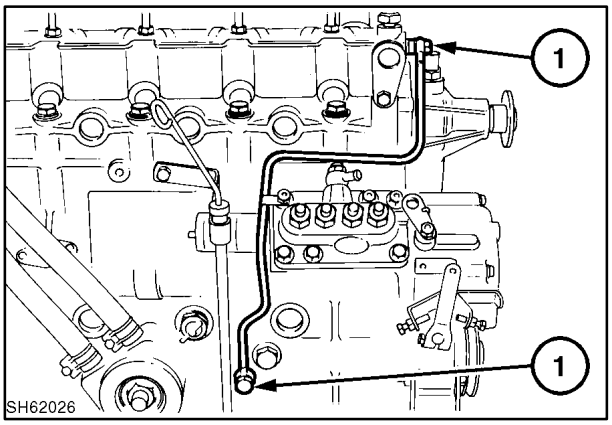

27

Op. 10 250 16/ Op. 10 250 18

EXTERNAL OIL PIPE (LS170)

Loosen and remove the banjo bolts at the turbocharger and the cylinder head assembly.

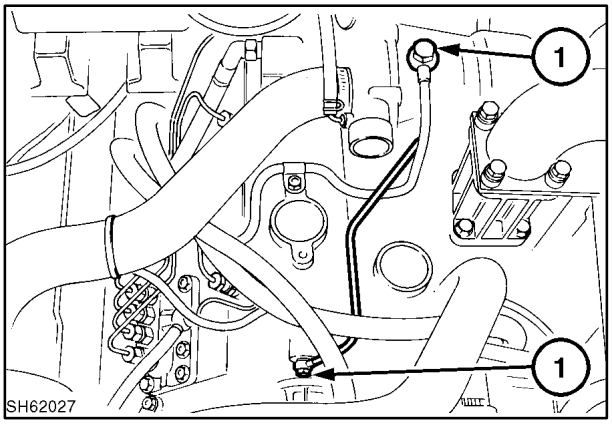

28

https://truckmanualshub.com/

Op. 10 106 20

ROCKER ASSEMBLY

1. Loosen and remove nuts, lock washers, and flat washers from the rocker pillar stud, 1. Lift the rocker assembly, 2.
2. Remove the push rods, 3, and valve stem caps, 4.

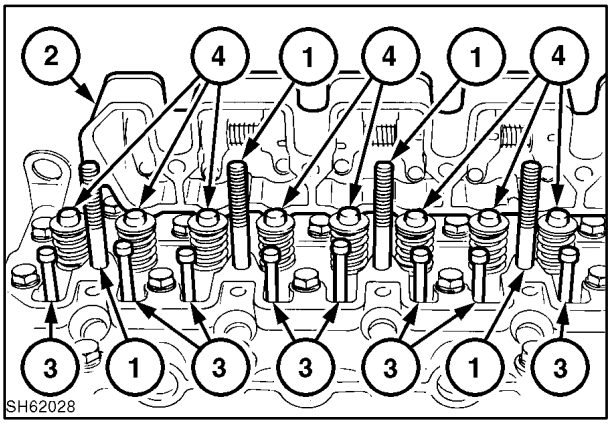

29

Op. 10 101 20

CYLINDER HEAD ASSEMBLY

Loosen the cylinder head bolts, starting from the center, in a circular pattern, using several steps of equal torque. Remove the head.

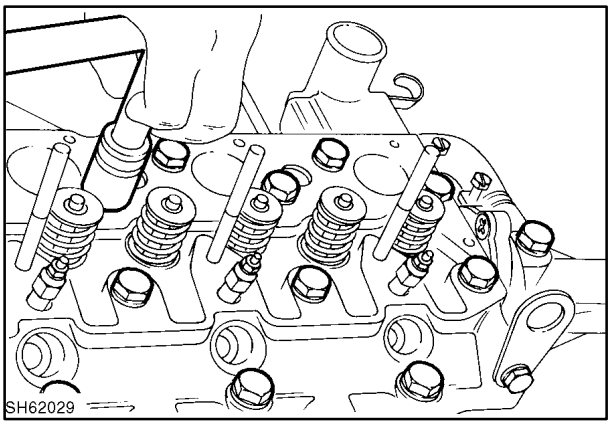

30

TAPPETS

Pull the tappets from the machined bore in the cylinder block.

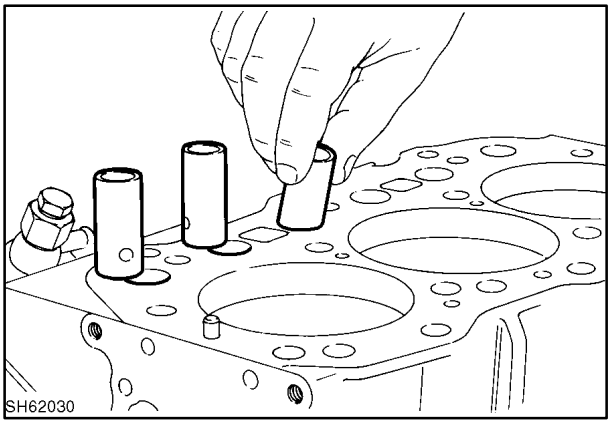

31

https://truckmanualshub.com/

Op. 10 223 10

STOP SOLENOID
Unscrew the stop solenoid, if fitted.

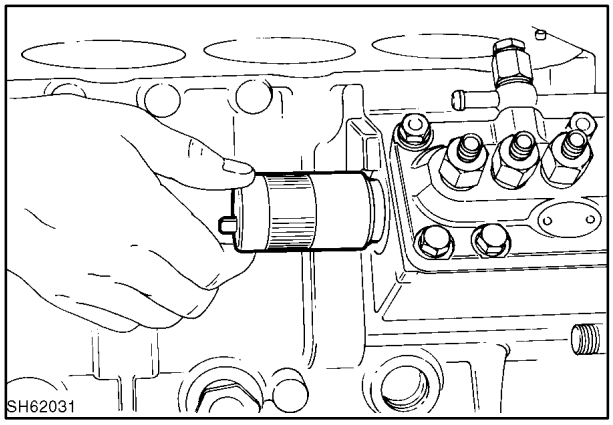

32

Op. 10 236 10

FUEL INJECTION PUMP

1. Remove the bolts and nuts securing the fuel injection pump to the cylinder block. Slowly lift and position the fuel injection pump until access to the link snap pin is gained.
2. Remove the snap pin and remove the link from the control rack. Remove the fuel injection pump and shim pack.

NOTE: *Injection timing is determined by the shim pack between the fuel injection pump flange and cylinder block mounting face. The thickness and number of shims should be checked and recorded to aid reassembly.*

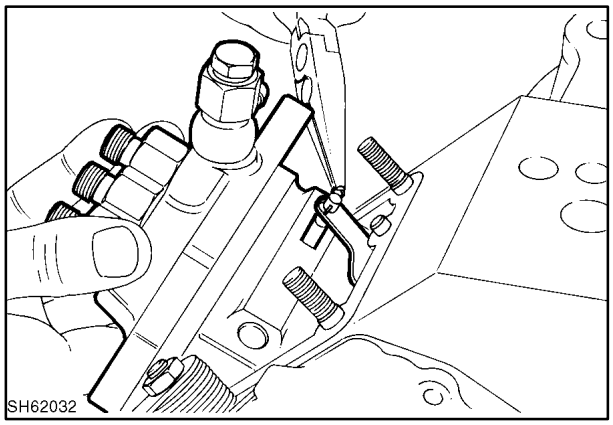

33

Op. 10 414 30

CRANK PULLEY
Loosen the pulley nut, 1, and remove the pulley, 2.

Op. 10 304 10

OIL FILTER
Remove the spin-on type oil filter and discard.

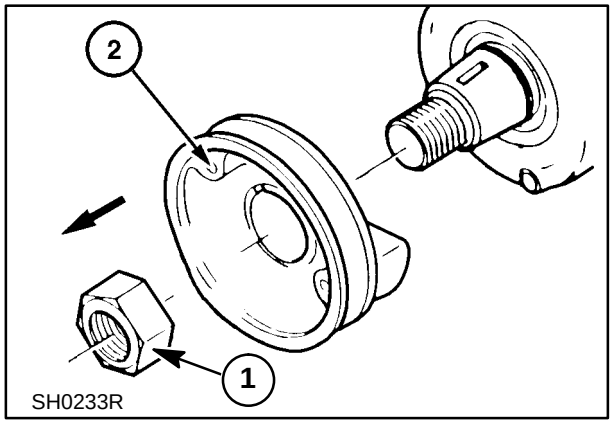

34

https://truckmanualshub.com/

Op. 10 230 24

GEAR COVER AND GOVERNOR ASSEMBLY
Remove the securing bolts and lift the cover assembly off the locating dowels.

NOTE: *Remove the fuel injection pump first.*

IDLER GEAR AND OIL PUMP ASSEMBLY
Remove the retaining ring. Remove the entire assembly.

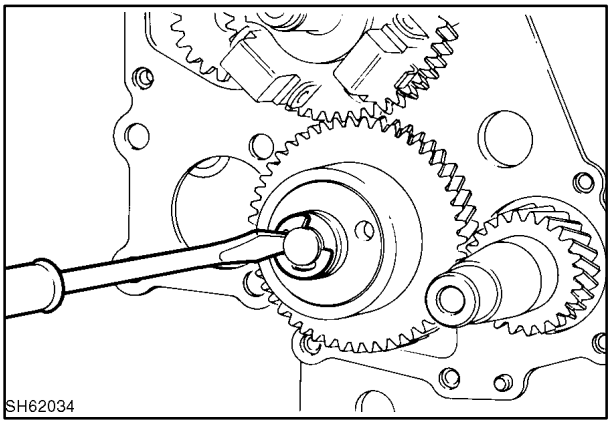

35

Op. 10 230 20

CAMSHAFT ASSEMBLY, TACHOMETER DRIVE

1. Using the access hole in the cam gear, remove the keeper plate, 1.
2. Slide the cam shaft, 2, with the flyweight retainer out of the camshaft bore.
3. Pull the tachometer drive shaft, 3, from its bore.

NOTE: *The tachometer drive is not used for the EIC Board Tach.*

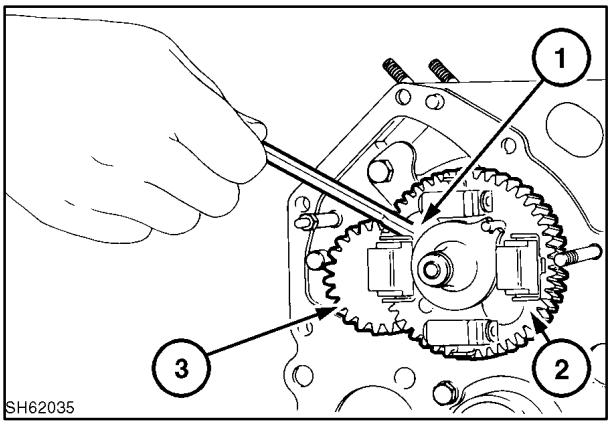

36

Op. 10 102 46

FRONT END PLATE ASSEMBLY
Remove the retaining bolts and lift the front plate off its locating dowels. Remove the gasket and discard.

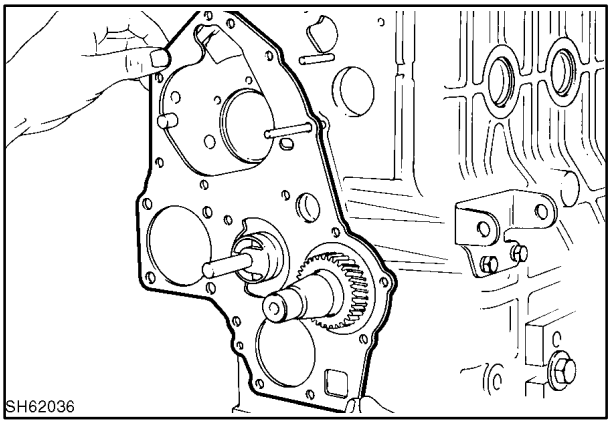

37

https://truckmanualshub.com/

Op. 10 304 06

DIPSTICK ASSEMBLY
Loosen the retaining bolts and remove the assembly.

Op. 10 304 44

OIL SUMP
Remove all bolts, lower sump, and discard the gasket.

SUCTION PIPE AND STRAINER
Remove two securing bolts. Rotate the suction pipe out of its bore.

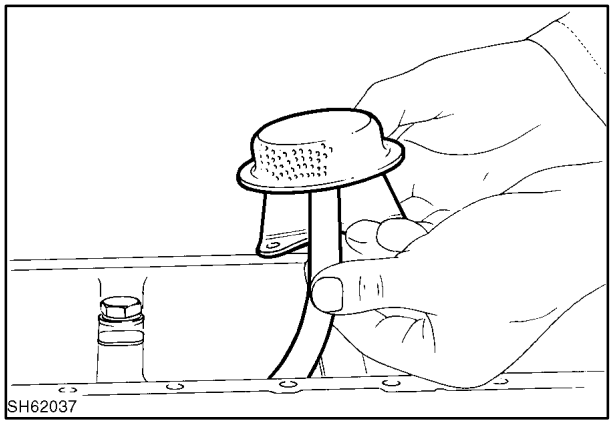

38

Op. 10 105 10

CONNECTING ROD AND PISTON

1. Loosen the connecting rod nuts and remove the rod cap.
2. Remove carbon from the cylinder bore. Push the piston and connecting rod through the cylinder block. Replace the rod cap to the piston assembly. Keep together in cylinder sequence.

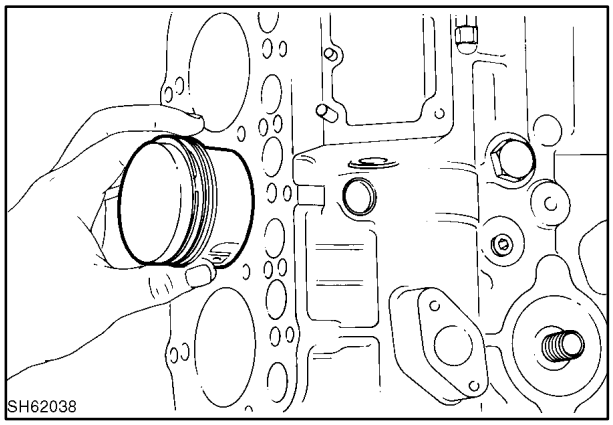

39

Op. 10 103 70

FLYWHEEL
Loosen the bolts and remove the flywheel.

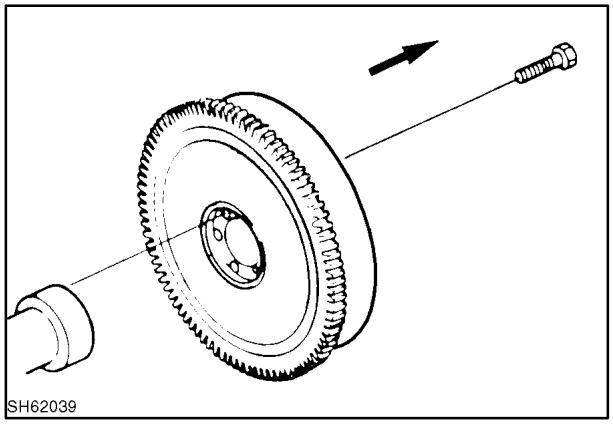

40

https://truckmanualshub.com/

Op. 10 103

BACKPLATE AND REAR OIL SEAL

1. Loosen the two starter retaining nuts and remove the starter.
2. Loosen the backplate retaining bolts and remove the backplate.
3. Remove the oil seal.

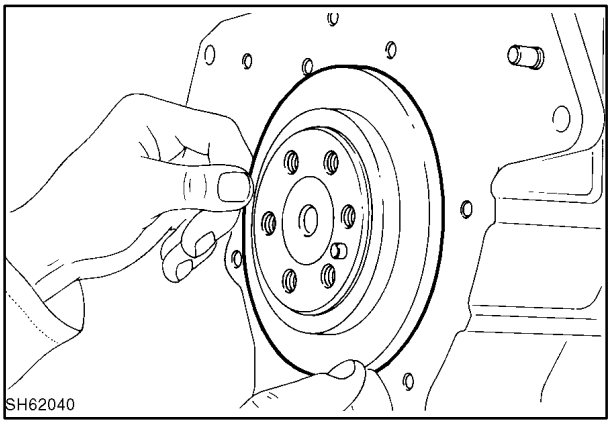

41

Op. 10 103 10

CRANKSHAFT AND MAIN BEARING

1. Remove the retaining bolts, 1, through the crankcase cross members.
2. Slide out the crankshaft and main bearing assembly.

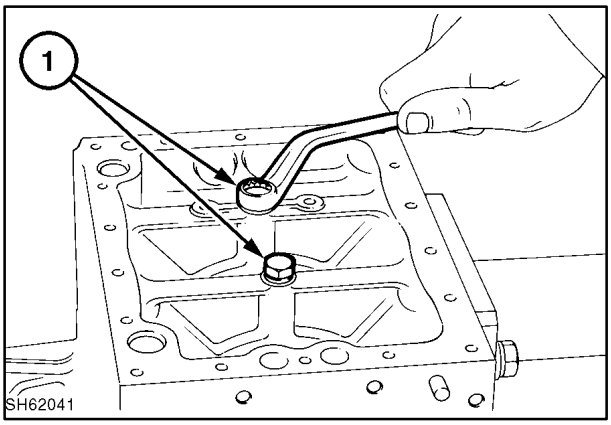

42

Op. 10 304 38

3. Remove the relief valve assembly.

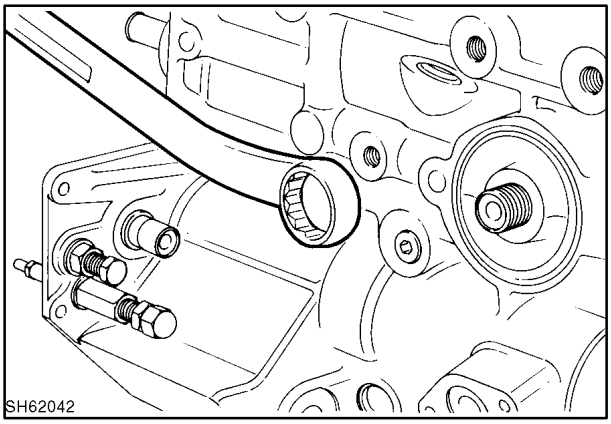

43

https://truckmanualshub.com/

ENGINE COMPONENT MAINTENANCE

Op. 10 106 20

ROCKER ASSEMBLY

Disassembly

1. Loosen the M8 bolt at the rocker arm shaft end, if fitted.
2. Remove the screw located in the No. 1 cylinder rocker arm bracket, if fitted.
3. Pull out the rocker arm shaft, 1, springs, 2, and rocker arms, 3.

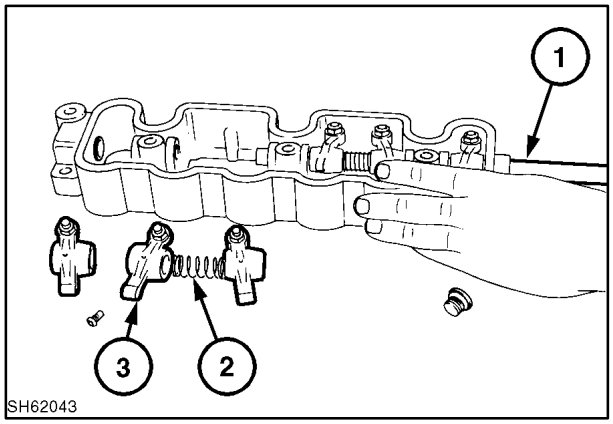

44

Inspection and Correction

1. Wear of Rocker Arm Shaft

   Using a micrometer, check the outside diameter of the rocker arm shaft. If the rocker arm shaft is worn beyond the allowable limit, replace.

   Standard dimension: 0.588″ - 0.589″ (14.95 mm - 14.97 mm)

   Allowable Limit: 0.585″ max. (14.87 mm)

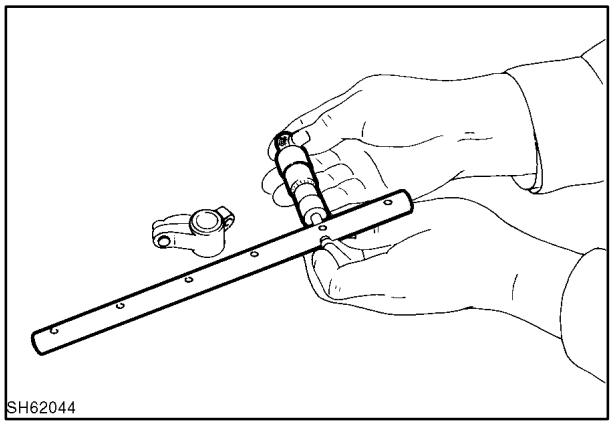

45

2. Rocker Arm-to-Shaft Clearance

   Measure the inside diameter of the rocker arm. Calculate the clearance at, 1, between the rocker arm, 2, and the rocker arm shaft, 3. If the clearance is excessive, replace.

   Standard Clearance: 0.0012″ - .0037″ (0.030 mm - 0.093 mm)

   Allowable Limit: 0.008″ (0.2 mm)

3. Wear on valve stem contacts face of the rocker arm.

   Check the face for step wear or score. Slight wear may be corrected using an oil stone.

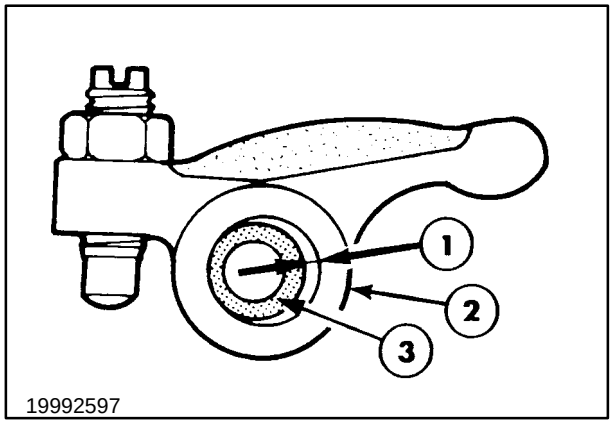

46

https://truckmanualshub.com/

Op. 10 101 21

CYLINDER HEAD ASSEMBLY

1. Using a valve spring replacer, compress the valve spring to remove the valve keepers, 1; retainer, 2; spring, 3; and valve, 4.
2. Remove the valve guide seals and glow plugs.

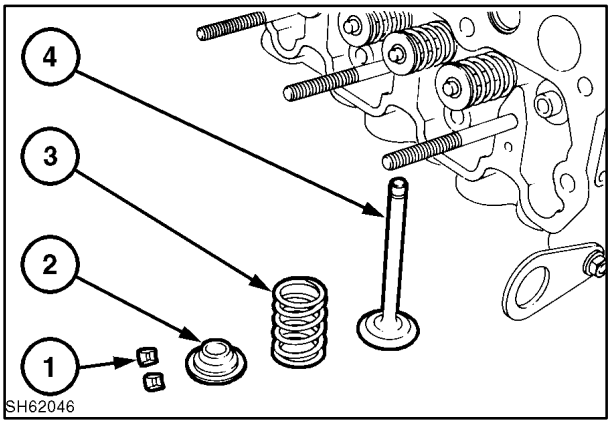

47

Inspection and Correction

Op. 10 101 21

Cylinder Head

With a straightedge and a thickness gauge, check for warping of the cylinder head lower face.

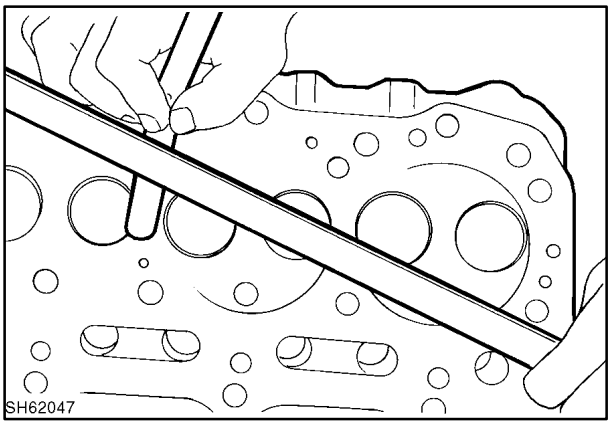

48

Check six positions (1 to 6 lines, as shown) for warping. If found to be warped excessively, correct with a surface grinder.

Standard Value: 0.002″ (0.05 mm or less)

Allowable Limit: 0.005″ (0.12 mm)

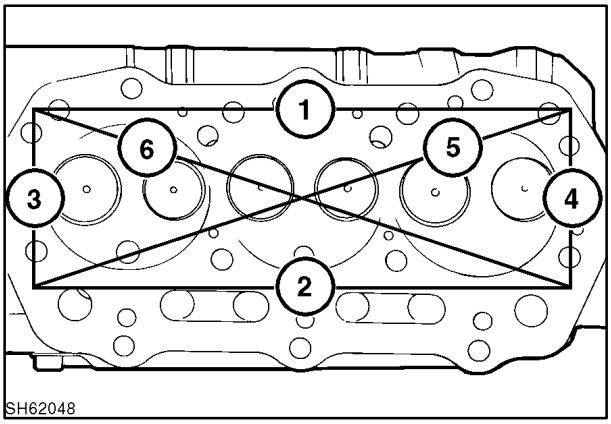

49

https://truckmanualshub.com/

Op. 10 101 32

Valve Guide and Valve Stem

1. Check the valve stem for excessive wear or damage. If found to be excessively damaged, replace.
2. Check the valve stem diameters at positions 1, 2, and 3 with a micrometer. If the diameter is less than the allowable limit, replace.

   Intake Valve

   Standard Diameter: 0.2738″ - 0.2744″ (6.955 mm - 6.97 mm)

   Allowable Limit: 0.271″ (6.89 mm)

   Exhaust Valve

   Standard Diameter: 0.2732″ - 0.2736″ (6.94 mm - 6.95 mm)

   Allowable Limit: 0.269″ (6.84 mm)

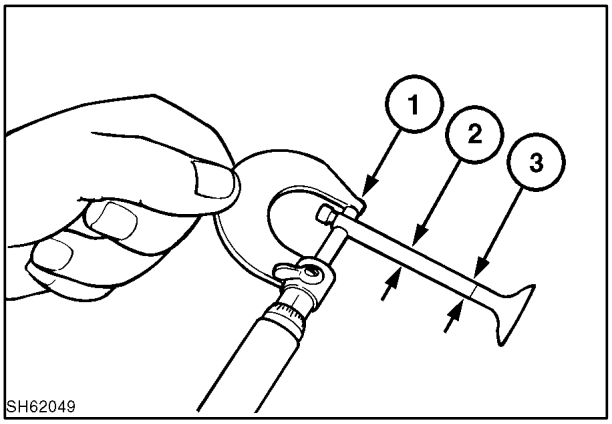

50

Thickness of Valve Head

If valve head thickness at 1 is less than the allowable limit, replace the valve.

All Engines

Standard Thickness: 0.036″ - 0 .042″ (0.925 mm - 1.075 mm)

Allowable Limit: 0.020″ (0.5 mm)

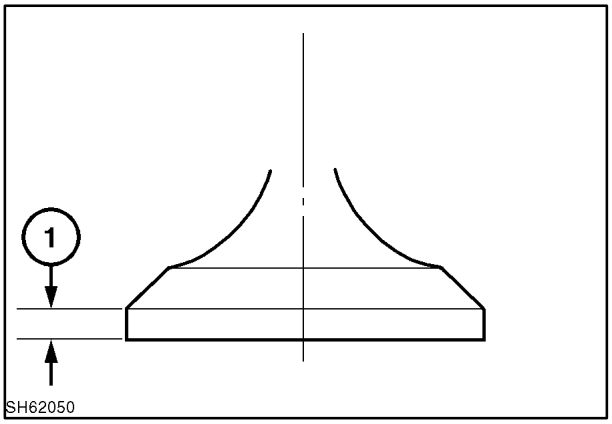

51

Valve to Valve Guide Clearance

Check the clearance at 1 between the valve and valve guide. If the clearance exceeds the allowable limit, replace.

Intake Valve - All Engines

Standard Clearance: 0.0012″ - 0.0024″ (0.03 mm - 0.06 mm)

Allowable Limit: Max. 0.008″ (0.2 mm)

Exhaust Valve - All Engines

Standard Clearance: 0.002″ - 0.003″ (0.05 mm - 0.075 mm)

Allowable Limit: Max. 0.010″ (0.25 mm)

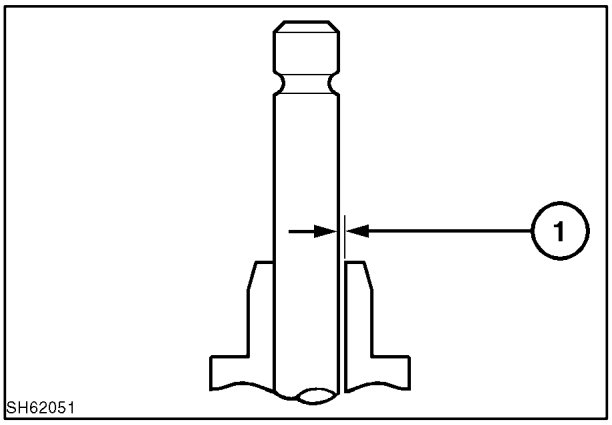

52

https://truckmanualshub.com/

Op. 10 101 55

VALVE SEAT

Valve Seat Contact Width

If the contact width at 1 of the valve seat is more than the allowable width, check the wear condition of the valve guide first.

Using the seat cutters of 15°, 45°, and 75°, correct the seat.

Intake

Standard Width: 0.06″ - 0.08″ (1.5 mm - 2.0 mm)

Allowable Limit: 0.098″ max. (2.5 mm)

Exhaust

Standard Width: 0.076″ - 0.085″ (1.94 mm - 2.16 mm)

Allowable Limit: 0.098″ max. (2.5 mm)

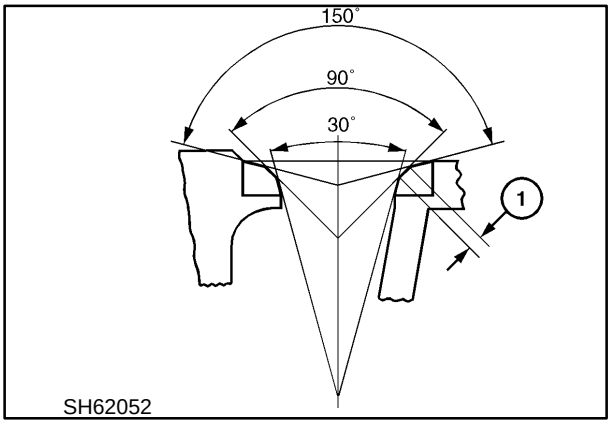

53

Valve Seat Recess

If the recess depth, 1, is more than the allowable limit, replace the valve seat (if fitted).

Standard Recess: 0.026″ - 0.037″ (0.65 mm - 0.95 mm)

Allowable Limit: 0.063″ max. (1.6 mm)

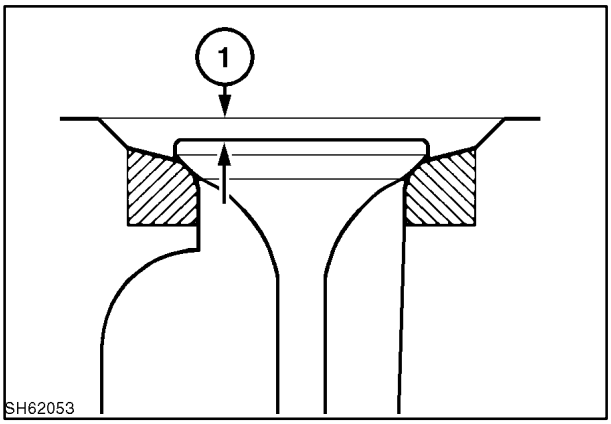

54

Replacement of valve seat insert (where fitted:)

Method 1: Using a gas burner, 1300° F to 1475° F (700° C to 800° C), heat diagonally across the valve seat insert. Leave in air for three to five minutes and remove the valve seat insert by light tapping (ensuring the head is not damaged).

Method 2: Machine the insert out, taking care not to damage the head.

Clean up the insert bore and fit a new insert, using a press 7,200 lbs. - 10,850 lbs. (1,000 kgf - 1,500 kgf) and a suitable smooth surface tool. To assist the process, chill the valve seat insert with liquid nitrogen, etc., or heat the head to between 140° F to 212° F (60° C and 100° C).

https://truckmanualshub.com/

Lapping of Contact Face of the Valve Seat
Correct valve seat contact using a valve lapper and lapping compound.

When using a new cylinder head, obtain correct seat contact width and seat recess using the seat cutter, and then carry out lapping.

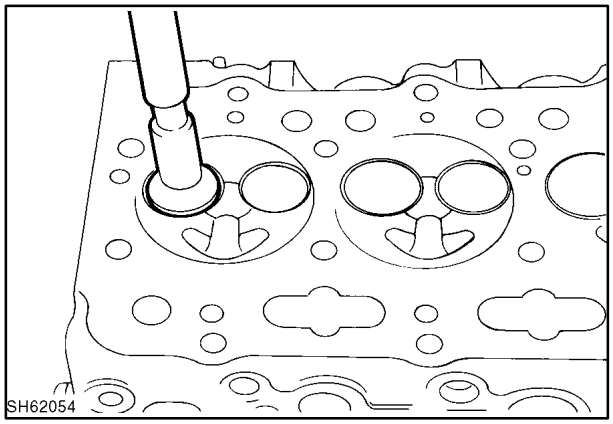

55

Valve Spring
Visually inspect the valve spring for damage.

Position the valve spring on a flat surface and check the squareness of it by using a square at 1, as shown. If it exceeds the allowable limit, replace the spring.

Using a spring tester, check spring force and free length.

Replace, if found to be beyond the allowable limit.

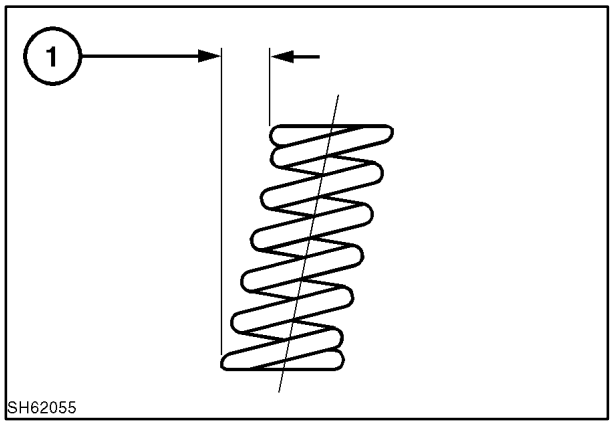

56

Standard Value

Squareness : 0.047″ (1.2 mm)

Free length: 1.378″ (35 mm)

Spring force when compressed to 1.197″ (30.4 mm): 17.9 ft. lbs. (8.1 kg)

Allowable Limit

Squareness: 0.079″ (2.0 mm)

Free length: 1.319″ (33.5 mm)

Spring force when compressed to 1.197″ (30.4 mm): 15.4 ft. lbs (7 kg)

Inner face of combustion chamber. Check and clean the combustion chamber.

Reassembly
Reassemble the parts in the reverse order of disassembly.

NOTE: *When assembling the valve spring, retainer, and keepers, take care not to damage the valve guide seal.*

Tighten glow plugs to 11 ft. lbs. - 15 ft. lbs. (15 N·m - 20 N·m).

https://truckmanualshub.com/

Op. 10 101 56

CYLINDER BLOCK

Inspection and Correction

Cylinder Block Top Face

Inspect the cylinder block top face for cracks, damage, and warping in the same way as for the cylinder head.

If outside the limit, replace the cylinder block.

Standard Value: Less than 0.002″ (0.05 mm)

Allowable Limit: 0.005″ (0.12 mm)

Cylinder Bore

1. Visually inspect the cylinder bore. There should be no scoring, rust, or corrosion.
2. Measure the cylinder bore at the upper, middle, and lower areas (piston ring contact area) in the direction of the crankshaft (1 direction) and at right angle to the crankshaft (2 direction).

   The upper area described above corresponds to the top ring when the piston is at the T.D.C. (about 0.40″ [10 mm] below the cylinder block top surface). The lower area corresponds to the piston oil ring when the piston is at the B.D.C. (about 3.94″ [100 mm] from top face).

   Check the bore using a cylinder gauge.

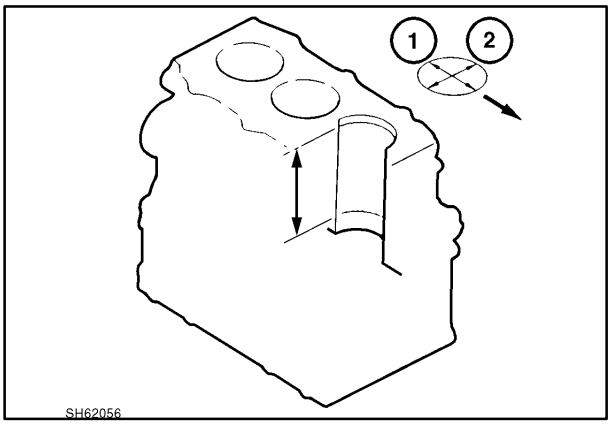

57

3. If the bore is found to be outside the allowable limit, re-bore to the oversize dimension as shown.

   Grinding stone size: 100 L x 4 W
   Speed: 162 RPM
   Feed (shaft direction): 13 m/min.

   Gauge pressure: 15 kg/cm^2 (5 kg/cm^2 - finish)
   213 PSI [71 PSI - finish]

   Finish stroke: 9

   Honing depth: 0.0016″ (0.04 mm) (diameter)

   Cross hatch angle: 40°

   Surface roughness: 2-4 micron

https://truckmanualshub.com/

Bore Specifications

Standard Bore: 3.307″ - 3.308″ (84 mm - 84.019 mm)

Allowable Limit: 3.315″ (84.2 mm)

First Re-bore: 0.02″ (0.5 mm)

New Standard Bore: 3.327″ - 3.328″ (84.5 mm - 84.519 mm)

Allowable Limit: 3.335″ (84.7 mm)

Second Re-bore: 0.02″ (0.5 mm)

New Standard Bore: 3.346″ - 3.347″ (85 mm - 85.019 mm)

Allowable Limit: 3.354″ (85.2 mm)

Replace the Block

Op. 10 105 22

PISTON AND PISTON RINGS

Disassembly

1. Remove piston rings, 1, using a piston ring tool.
2. Remove the retaining ring and remove the piston pin, 2.

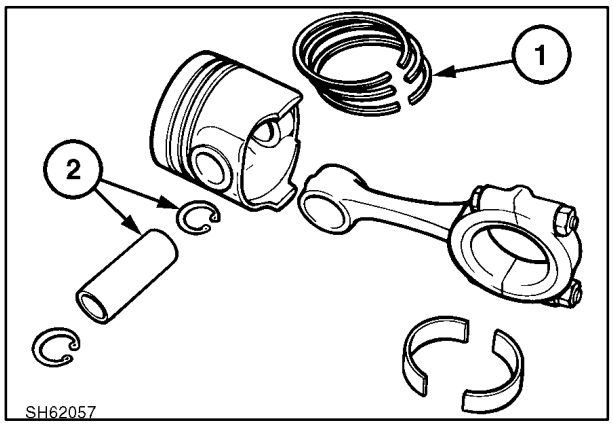

58

Inspection

Piston
If the outer surface of the piston is excessively damaged (cracked, scored, burning, etc.), replace.

Piston Skirt
Check the larger diameter of the piston skirt 0.40″ (10 mm from bottom), and check diameter (thrust direction) of the cylinder. Calculate the clearance between the cylinder and piston. If this clearance is more than allowable, or piston diameter is less than the allowable limit, replace the piston.

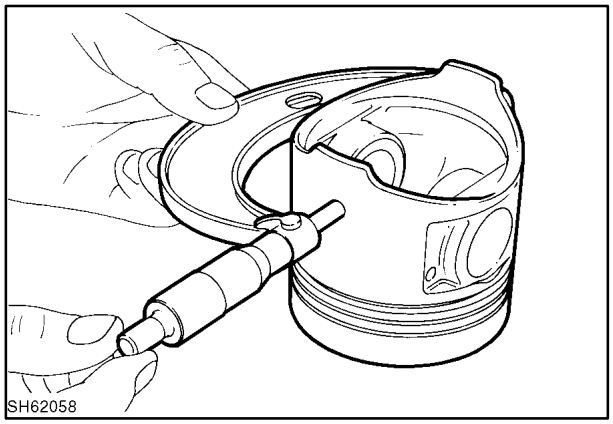

59

https://truckmanualshub.com/

Oversized Piston
When the cylinder is oversized, be sure that an oversized piston is used.

Standard Clearance: 0.0015″ - 0.0028″ (0.038 mm - 0.072 mm)

Allowable Limit: 0.010″ max. (0.25 mm)

Standard Diameter (Piston): 3.3050″ - 3.3056″ (83.948 mm - 83.963 mm)

Allowable Limit: 3.2953″ min. (83.7 mm)

Large Diameter of Piston Skirt:

Standard: 3.3050″ - 3.3056″ (83.948 - 83.963 mm)

0.0197″ (0.5 mm) Oversize: 3.3247″ - 3.3253″ (84.448 - 84.463 mm)

0.039″ (1.0 mm) Oversize: 3.3444″ - 3.3450″ (84.948 - 84.963 mm)

Clearance between wrist pin hole and wrist pin.

Check the inside diameter of the wrist pin hole and the outside diameter of the wrist pin, and calculate the clearance between them.

If the clearance is more than the allowable limit, replace.

Standard Clearance: -0.000039″ to + 0.00028″ (-0.001 mm to + 0.007 mm)

Allowable Limit: 0.0008″ (0.02 mm)

Piston Ring
If the piston ring is worn or damaged, replace it.

Piston Ring Gap
Insert the rings into the cylinder at a right angle to the cylinder bore and measure the gaps with a thickness gauge. If the gap is more than the allowable limit, replace.

#1 Ring

Standard Gap: 0.008″ - 0.014″ (0.20 mm - 0.35 mm)

Allowable Limit: 0.039″ (1.0 mm)

#2 Ring

Standard Gap: 0.008″ - 0.016″ (0.20 mm - 0.40 mm)

Allowable Limit: 0.039″ (1.0 mm)

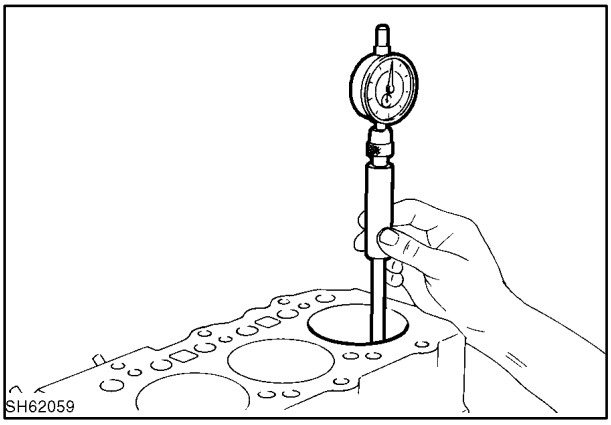

60

https://truckmanualshub.com/

Oil Ring

Standard Clearance: 0.008″ - 0 .016″ (0.20 mm - 0.40 mm)

Allowable Limit: 0.039″ (1.0 mm)

Measure the clearance between the piston ring groove and ring. If the clearance exceeds the allowable limit, replace the ring.

#1 Ring

Standard Clearance: 0.0028″ - 0.0043″ (0.07 mm - 0.11 mm)

Allowable Limit: 0.0098″ (0.25 mm)

#2 Ring

Standard Clearance: 0.0016″ - 0.0032″ (0.04 mm - 0.08 mm)

Allowable Limit: 0.0098″ (0.25 mm)

Oil Ring

Standard Clearance: 0.0007″ - 0.002″ (0.02 mm - 0.06 mm)

Allowable Limit: 0.0059″ (0.15 mm)

Oversize Piston Ring

If the cylinder is oversized, an oversized piston ring set should be installed.

Mounting Position of the Piston Ring

Confirm the third piston ring is set, as shown here.

IMPORTANT: *Fit the third ring as follows:*

Put the expander, 1, into position in its groove. Ensure the ends of the expander do not overlap.

Fit the upper side rail, 2, on top of the expander. Insert the end of the side rail into the groove and hold it in position with the thumb. Slide the rail into position with the other thumb.

Fit the lower side rail, 3, in a similar manner.

Ensure the side rails are free to move in both directions and the gaps of the expander and the side rails are in the correct positions.

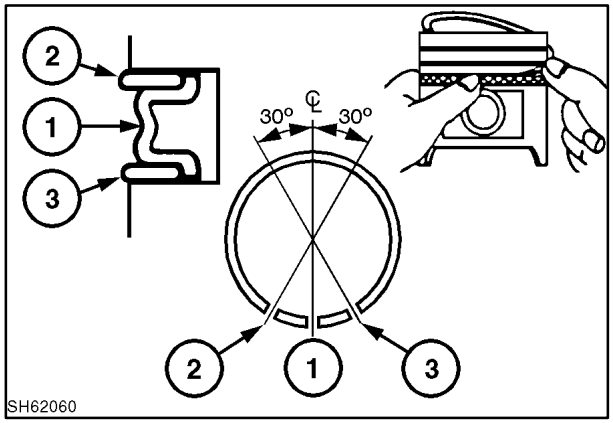

61

Standard OD: 1.1022″ - 1.1024″ (27.996 mm - 28.0 mm)

Allowable Limit: 1.1016″ min. (27.98 mm)

Piston Pin

Check the outside diameter of the piston pin. If it is less than the allowable limit, replace.

https://truckmanualshub.com/

CONNECTING ROD

Inspection

Distortion or damage
Check the connecting rod for distortion between the large and small ends of the connecting rod with a connecting rod aligner. If the result exceeds the allowable limit, replace.

Distortion –3.937″ (100 mm)

Standard Value: Less than 0.003″ (0.08 mm)

Allowable Limit: 0.0078″ (0.2 mm)

Parallel –3.937″ (100 mm)

Standard Value: Less than 0.0019″ (0.05 mm)

Allowable Limit: 0.0059″ (0.15 mm)

1. Gauge
2. Piston pin
3. Distortion
4. Flat surface of the aligner
5. Pin

Clearance between the small end bushing and the piston pin
Measure the inside diameter of the connecting rod small end bushing.

If the clearance exceeds the allowable limit, replace.

Standard Clearance: 0.0004″ - 0.001″ (0.010 mm - 0.025 mm)

Allowable Limit: 0.003″ (0.08 mm)

Play between the connecting rod and the crankshaft
Assemble the connecting rod to the crankshaft and measure the play in shaft direction. If the play is more than the allowable limit, replace the connecting rod.

Standard Play: 0.0039″ - 0.0118″ (0.1 mm - 0.3 mm)

Allowable Limit: 0.0275″ (0.7 mm)

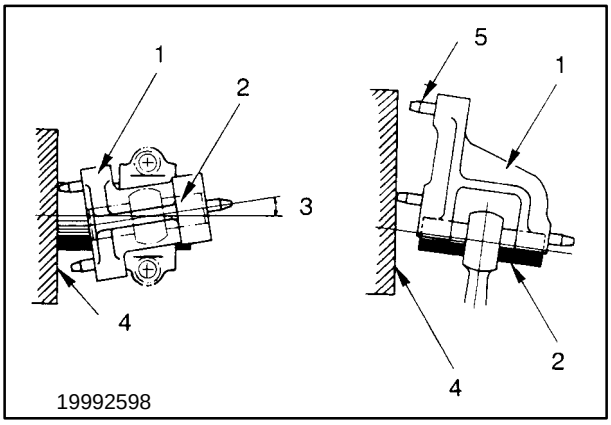

62

https://truckmanualshub.com/

Oil Clearance

Using the plasti-gauge, check the oil clearance as follows:

Remove oil or foreign matter from the bearing and crankshaft.

Cut the plasti-gauge to the same width as the bearing. Place it on the crankshaft at 1. Avoid the oil hole.

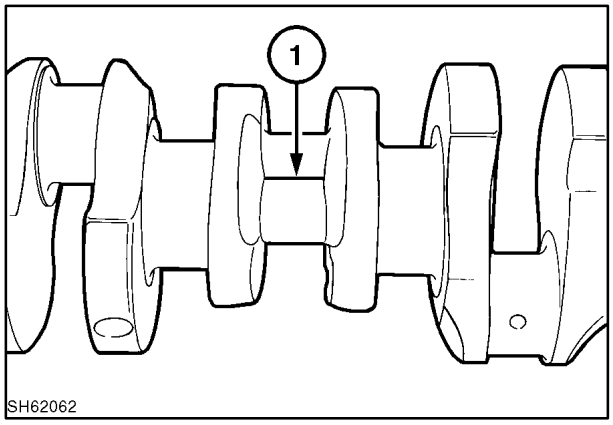

63

Assemble the connecting rod and connecting rod cap and tighten to the specified torque. All engines 36 ft. lbs. - 40 ft. lbs. (49 N·m - 54 N·m).

NOTE: *Never rotate the connecting rod.*

Remove the connecting rod cap. Measure the oil clearance (plasti-gauge) with the scale printed on the gauge bag.

NOTE: *Measure the widest area.*

Standard Play: 0.001″ - 0.003″ (0.035 mm - 0.085 mm)

Allowable Limit: 0.0078″ (0.2 mm)

If the oil clearance exceeds the allowable limit, replace the bearing or grind the crankshaft and use an oversize bearing.

NOTE: *When grinding the outside diameter of the crankshaft, be sure that the oil clearance is correct before reassembly.*

Crankshaft Pin O.D. Dimension (mm)

S.T.D.: 2.0458″ - 2.0463″ (51.964 mm - 51.975 mm)

0.010″ (0.25 mm): 2.0360″ - 2.0364″ (51.714 mm - 51.725 mm)

0.020″ (0.50 mm): 2.0261″ - 2.0266″ (51.464 mm - 51.475 mm)

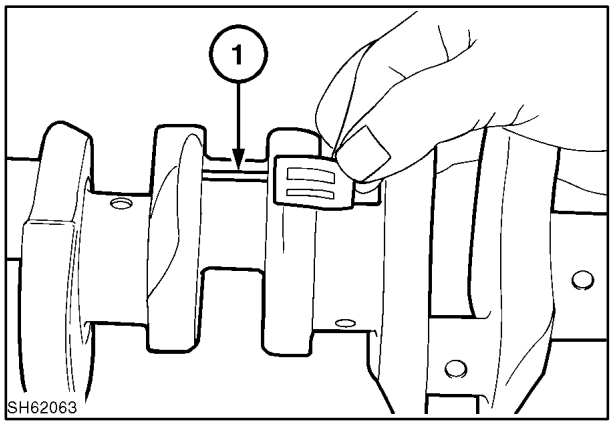

64

https://truckmanualshub.com/

Reassembly

1. Reassemble the piston on the connecting rod as follows.
2. With a piston heater or the like, heat the piston to approximately 212° F (100° C). Assemble the piston to the connecting rod by aligning the set marks.
3. Set the “SHIBAURA” marks, or other mark, 1, as shown. Align the set marks on the connecting rod.
4. Replace the piston ring on the piston. Position the scribe mark uppermost.
5. When the connecting rod or piston/piston pin has been replaced, the difference in the weight of the assembly (connecting rod plus piston rings) should not exceed 10 grams between cylinders.

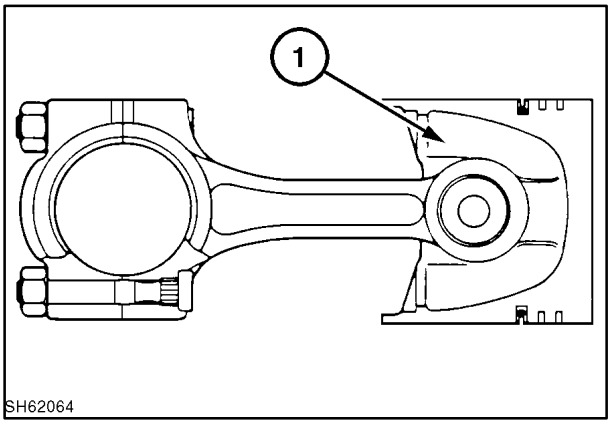

65

Op. 10 103 10

BEARING HOLDER

Disassembly and Inspection

Center Bearing

1. Remove the bearing holder and check it for peeling, melting, stepped wear, and other damage. If it is excessively damaged, replace.
2. Using the plasti-gauge, measure the oil clearance between the crankshaft center journal and the bearing.

   If the oil clearance is more than the allowable limit, replace the bearing or grind the crankshaft center journal and use an undersized bearing (refer to “Crankshaft”).

   Standard Oil Clearance: 0.0017″ - 0 .0040″ (0.044 mm - 0.102 mm)

   Allowable Limit: 0.0078″ (0.2 mm)

   Crankshaft Center Journal Diameter (mm)

   S.T.D.: 2.6755″ - 2.6760″ (67.957 mm - 67.970 mm)

   0.010″ (0.25 mm): 2.6656″ - 2.6661″ (67.707 mm - 67.720 mm)

   0.020″ (0.50 mm): 2.6558″ - 2.6563″ (67.457 mm - 67.470 mm)

https://truckmanualshub.com/

Thrust Clearance
Check the thrust washer for wear, poor contact, burning, or other defects. Defective washers must be replaced.

Standard Thickness: 0.116″ - 0.118″ (2.95 mm - 3.0 mm)

Allowable Limit: 0.11″ (2.8 mm)

Reassembly
Reassemble the bearing holder, center bearing, and thrust washer as follows:

1. Face the chamfered part, 1, of the bearing holder toward the front. Install the bearing holder which has a notch, 2. Install the bearing holder on which the thrust washer is to be mounted at the flywheel side.
2. Install the thrust washer, 5. Face its oil groove toward the thrust face of the crankshaft.

   Tightening torque of the bearing holder: 36 - 40 ft. lbs. (49 - 54 N·m).
3. Set the bearing with the oil groove, 3, to the upper part, 4, while setting the bearing without the groove to the lower part.

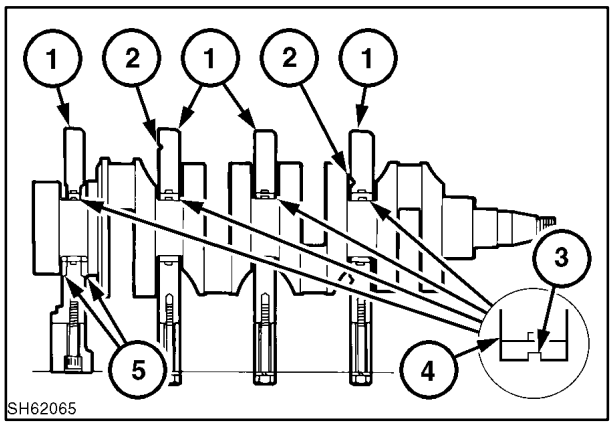

66

CRANKSHAFT BEARING (BUSHING)

Inspection
Check the bearing (bushing) for peeling, melting, seizure, or poor contact. If found to be defective, replace.

Using a cylinder gauge and micrometer, measure the oil clearance between the bearing (bushing) and the crankshaft journal.

Measure the inside diameters at positions 1 and 2. At each position, measure in both directions 3 and 4. The oil clearance can be obtained by subtracting this value from the maximum crankshaft journal diameter.

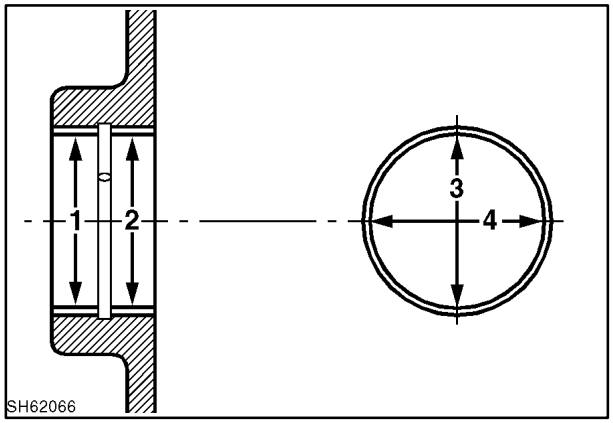

67

https://truckmanualshub.com/

Standard Oil Clearance: 0.0017″ - 0.0046″ (0.044 mm - 0.116 mm)

Allowable Limit: 0.0078″ (0.2 mm)

If the oil clearance exceeds the allowable limit, replace the bearing (bushing) or grind the crankshaft journal. In this case, use an undersized bearing (bushing).

When replacing the crankshaft journal (bushing), use a press to install.

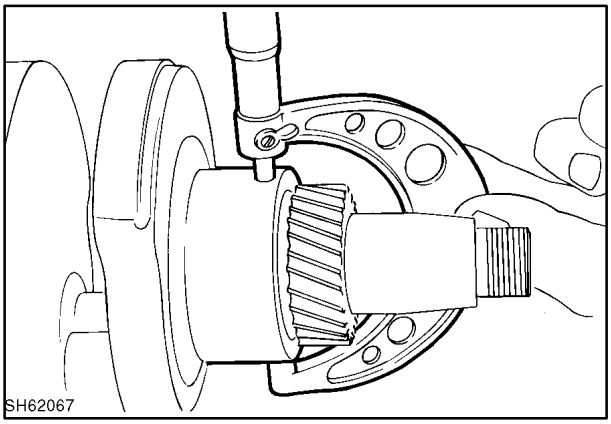

68

Crankshaft Journal (bushing)

Outside Diameter

Standard: 2.6755″ - 2.6760″ (67.957 mm - 67.970 mm)

0.0098″ (0.25 mm): 2.6656″ - 2.6661″ (67.707 mm - 67.720 mm)

0.0196″ (0.50 mm): 2.6558″ - 2.6563″ (67.457 mm - 67.470 mm)

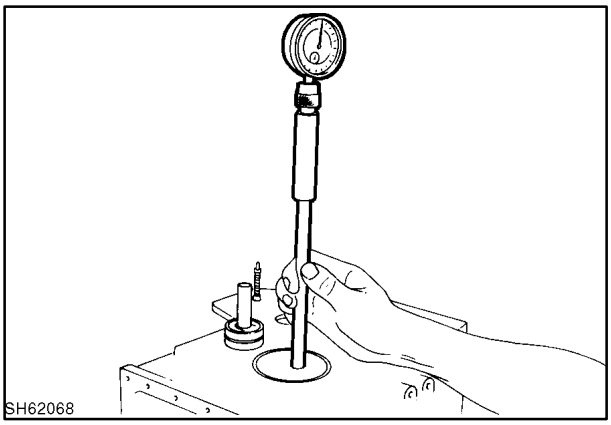

69

Crankshaft Bushing Replacement

Bushing Removal

Remove the bushing from the housing (cylinder block) using a bushing driving tool to prevent damage.

Press-fitting the bushing

1. Prior to installing the bushing, inspect the bushing housing for marks, scratches, etc.
2. The bushing should be smoothly pressed in to the correct depth by using a bushing driving tool, adjusting the oil hole and direction of bushing.
   – Press in the bushing to the cylinder block from the engine front side.

NOTE: *Do not press in the bushing to the cylinder block from the opposite side.*

The correct pressing side is chamfered, etc., to allow smooth operation.

https://truckmanualshub.com/

- Align the oil hole, 1, of the housing and bushing.
- Install the bushing, confirming the mark and oil groove (hole).
- Lubricate at the outer surface of the bushing.
- Press in the bushing to the housing until correct depth, by using a bushing driving tool.

3. Confirm after installation.

   Confirm the alignment of the oil hole of the housing and the bushing. Also make sure the inner diameter is within tolerance.

After grinding the crankshaft journal, check the oil clearance.

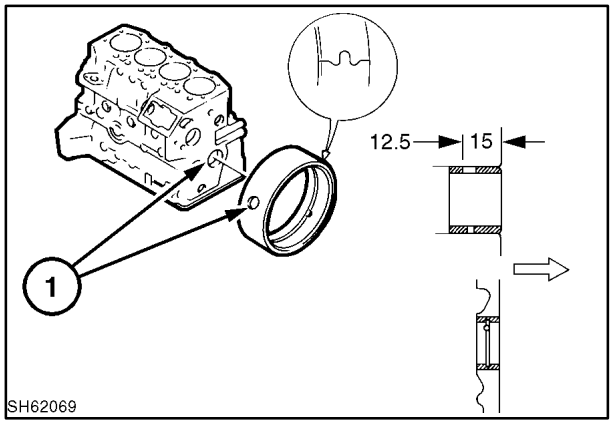

70

Op. 10 103 30

CRANKSHAFT

Inspection

Crankshaft Deflection

Support the crankshaft with V-block. Position a dial gauge on the crankshaft center journal and turn the crankshaft gradually by one full turn. If the gauge reading is more than the allowable limit, correction or replacement of the crankshaft is needed.

Standard Deflection: 0.0011″ (0.03 mm or less)

Allowable Limit: 0.0023″ (0.06 mm)

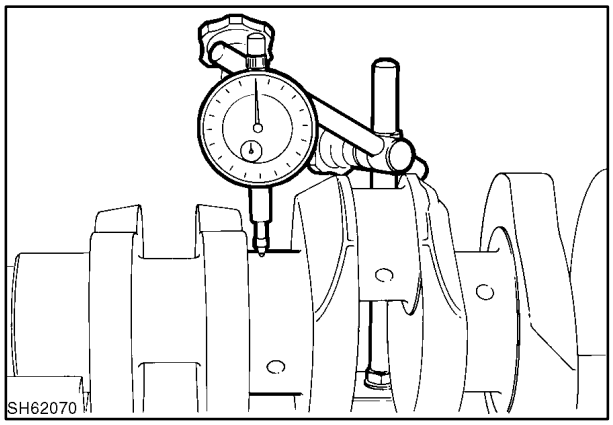

71

Oil Seal Contact Face and Oil Holes

Check the oil seal contact face for damage or wear. Check oil holes for clogging.

https://truckmanualshub.com/

Check Crankshaft Journal, 3, and Pin, 4, for stepped wear

Take four measurements (AA and BB diameters at positions 1 and 2, Figure 73). If the maximum difference between the measurements is more than the allowable limit, correction is required.

Allowable Difference (stepped wear): 0.0019″ (0.05 mm)

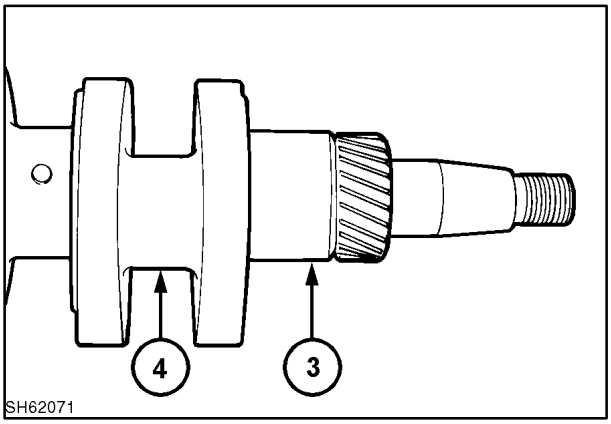

72

Crankshaft Pin Diameter

Standard Diameter

Standard: 2.0458″ - 2.0463″ (51.964 mm - 51.975 mm)

0.01″ (0.25 mm): 2.0360″ - 2.0364″ (51.714 mm - 51.725 mm)

0.02″ (0.50 mm): 2.0261″ - 2.0266″ (51.464 mm - 51.475 mm)

Allowable Limit

Standard: 2.0433″ (51.90 mm)

0.01″ (0.25 mm): 2.0335″ (51.65 mm)

0.02″ (0.50 mm): 2.0236″ (51.4 mm)

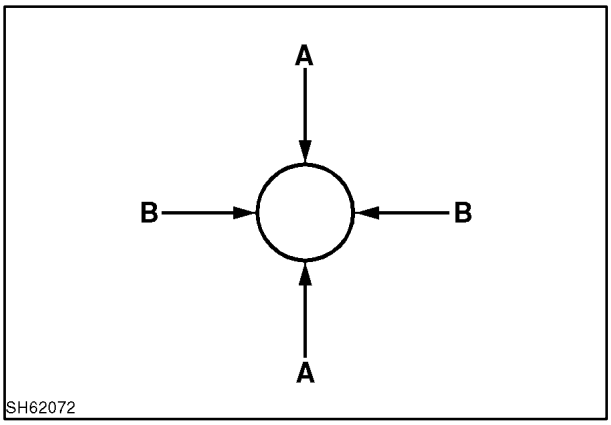

73

Crankshaft Journal Shaft Diameter

Standard Diameter

Standard: 2.6755″ - 2.6760″ (67.957 mm - 67.970 mm)

0.01″ (0.25 mm): 2.6656″ - 2.6661″ (67.707 mm - 67.720 mm)

0.02″ (0.50 mm): 2.6558 - 2.6563″ (67.457 mm - 67.470 mm)

Allowable Limit

Standard: 2.6732″ (67.90 mm)

0.01″ (0.25 mm): 2.6634″ (67.65 mm)

0.02″ (0.50 mm): 2.6535″ (67.40 mm)

https://truckmanualshub.com/

NOTE: When grinding the crankshaft, work with the following specifications:

1. Radius at pin/journal: 0.118″ ± 0.0078″ (3 mm ± 0.2 mm)
2. Finish precision: 1.6Z
3. Radius around oil hole: 0.0787″ (2 mm) maximum 0.196″ (5 mm) minimum

   Use No. 400 emery cloth for final polishing.

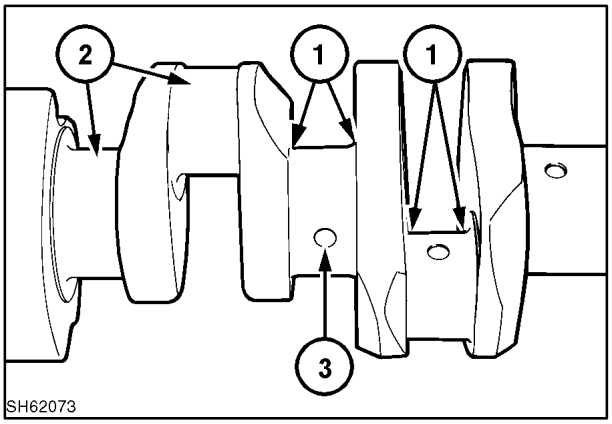

74

Op. 10 103 76

FLYWHEEL AND RING GEAR

Inspection

Check the ring gear. If it is excessively damaged or worn, replace it.

When wear is not excessive, remove the ring gear and reinstall 90° from original position. To install, preheat the ring gear up to 248° F - 300° F (120° C - 150° C).

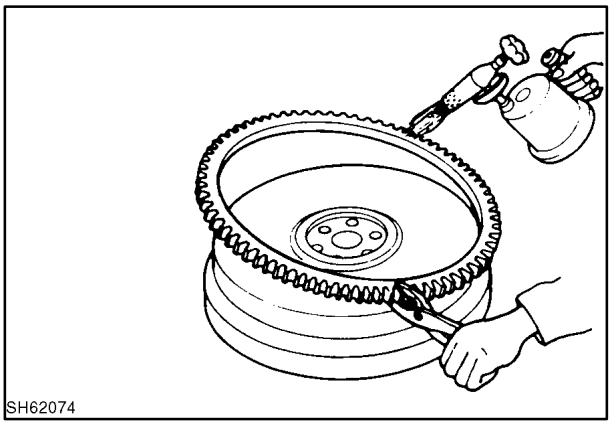

75

Op. 10 106 40

CAMSHAFT ASSEMBLY

Inspection

Check the journals and cams for wear and damage. Replace if the allowable limit is exceeded.

Correct uneven wear or small scratches on the cam surface with oil stone.

Cam Height (intake and exhaust cams)

Standard Value: 1.3411″ - 1.3433″ (34.065 mm - 34.12 mm)

Allowable Limit: 1.3268″ (33.7 mm)

Height of Cam for Injection Pump

Standard Value: 1.6512″ - 1.6559″ (41.94 mm - 42.06 mm)

Allowable Limit: 1.6457″ (41.8 mm)

Height of Cam for Fuel Feed Pump

Standard Height: 1.2559″ - 1.2598″ (31.9 mm - 32.0 mm)

Allowable Limit: 1.1811″ (30.0 mm)

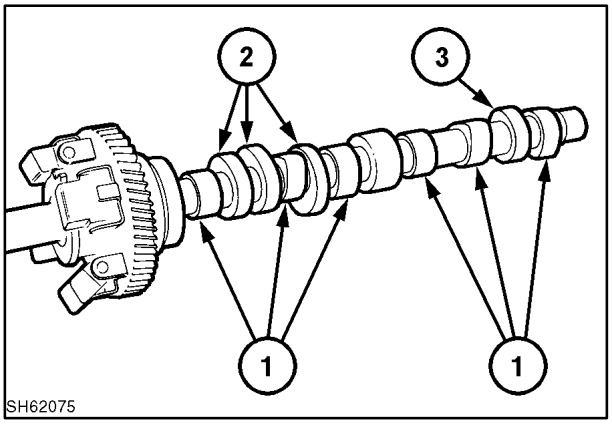

76

https://truckmanualshub.com/

Op. 10 106 66

CAMSHAFT GEAR AND BEARING ASSEMBLY

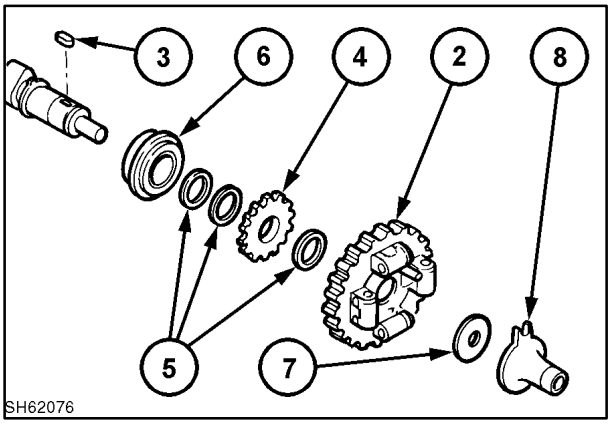

77

2 Camshaft gear

3 Camshaft

4 Tachometer gear

5 Spacer

6 Roller bearing

8 Slider

If these items have been replaced, it is essential that the spacers, shims, etc. are assembled in the order illustrated here.

To replace the camshaft gear assembly, the assembly will require pressing off and on.

TIMING GEAR

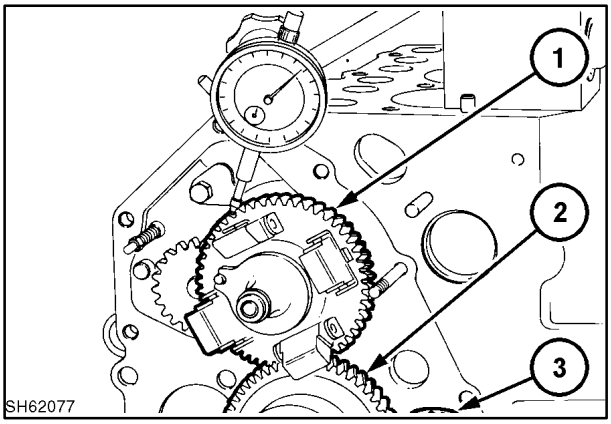

78

Inspection

Check the timing gears for wear and damage on the contact area. Replace if any defect is found.

Measure the backlash of gears with a thickness gauge or dial gauge. If the allowable limit is exceeded, replace all timing gears.

1 Camshaft gear

2 Idler gear

3 Crankshaft gear

Standard Backlash: 0.003″ (0.08 mm)

Allowable Limit: 0.010″ (0.25 mm)

https://truckmanualshub.com/

Op. 10 304 41

OIL PUMP

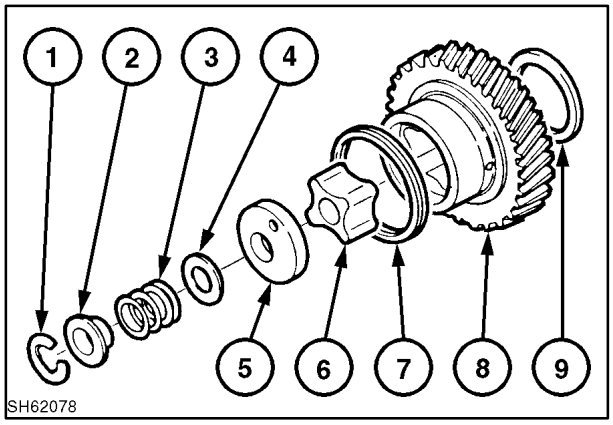

79

Disassembly

Remove the snap ring.

Take out the collar spring and shim.

Remove the idler gear vane and oil pump cover together.

Pull out the rotor and thrust washer.

Pull out the oil pump cover from the idler gear.

Remove the spring from the idler gear.

1 Snap ring

2 Collar

3 Spring

4 Shim

5 Oil pump cover

6 Rotor

7 Spring

8 Idler gear

9 Thrust washer

Inspection

Check the oil pump cover, rotor, and vane for wear. If excessively worn or damaged, replace.

Check the clearance at 1 between the rotor and the vane.

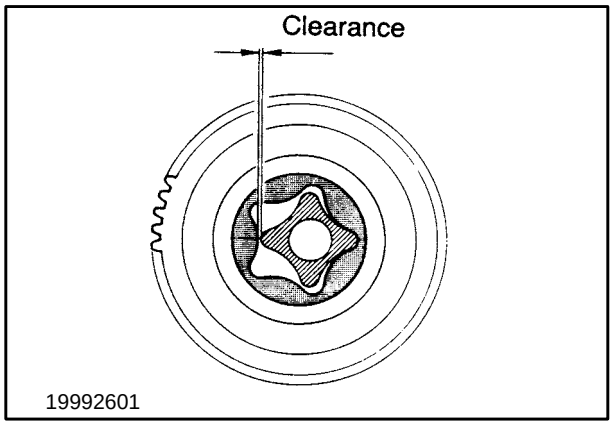

80

Reassembly (see Idler Gear)

Reassemble the oil pump in the reverse order of disassembly.

Align the set marks on the crankshaft gear and idler gear to reassemble.

Make sure the tip clearance at 1, between the rotor and the vane is 0.0004″ to 0.006″ (0.01 mm to 0.15 mm) . Allowable limit is 0.009″ (0.25 mm) .

https://truckmanualshub.com/

Op. 10 304 10

OIL FILTER

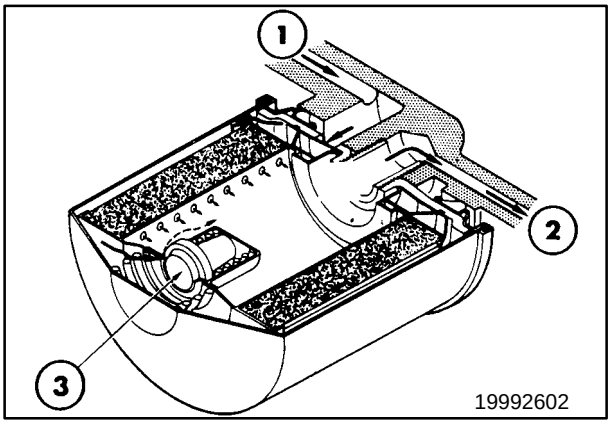

81

Construction and Function

This engine employs a cartridge-type filter.

Pressurized oil from the pump enters from 1 and is filtered by a full flow filter before discharge through 2.

When the full flow filter is clogged, the safety valve, 3, opens to bypass the oil.

Maintenance

The oil filter must be replaced every 100 hours of operation.

When installing a new filter, coat its mounting face with clean oil. Hand-tighten only.

Op. 10 402 28

WATER PUMP ASSEMBLY AND THERMOSTAT HOUSING

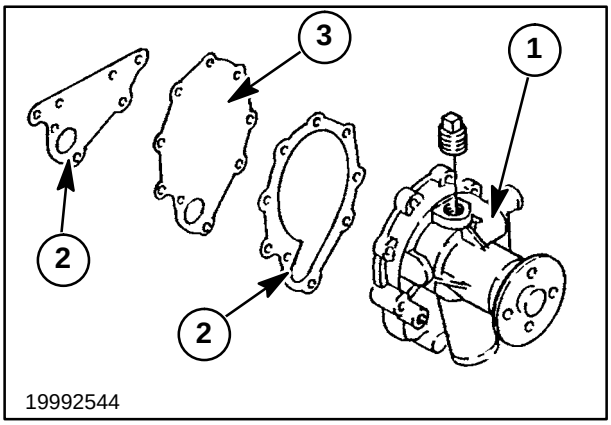

82

Disassembly

Remove the backplate and gaskets.

Remove the thermostat and spring from the thermostat housing.

1 Water pump

2 Gaskets

3 Set plate

Inspection

Op. 10 402 30

THERMOSTAT REMOVAL

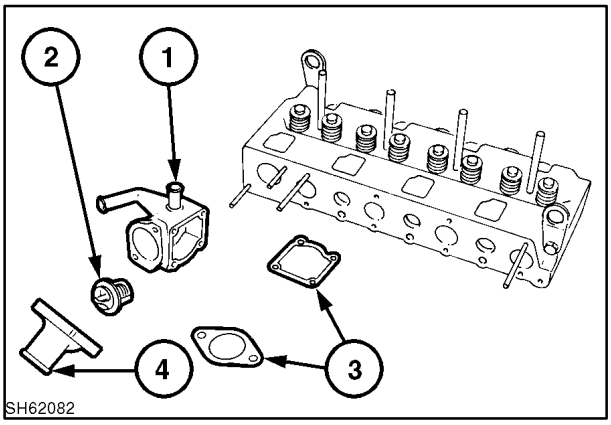

83

Replace the thermostat if the valve opens at ambient temperature.

Place the thermostat into water. Raise the water temperature gradually and inspect the valve opening temperature and valve lift. (Standard values are as described in the “Specifications” section.)

NOTE: *Three to five minutes will be required before the valve starts operating.*

https://truckmanualshub.com/

	N844	N844T
Type	Wax Pellet Type	Wax Pellet Type
Temperature when starting to open	176° - 183° F (80° - 84° C)	156° - 163° F (69° - 73° C)
Temperature when fully open	203° F (95° C)	180° F (82° C)
Valve lift fully open	0.315″ (8.0 mm)	0.315″ (8.0 mm)

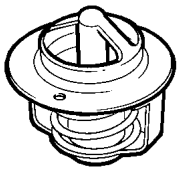

84

Water Pump
Check for cracks, wear, leaks, bearing roughness, or damage. If defective, replace assembly.

Reassembly
Assemble the thermostat and spring in the housing. Install the gasket and backplate on the water pump.

Rotate the fan holder to confirm there is no obstruction or interference.

https://truckmanualshub.com/

Op. 10 230 24

GOVERNOR

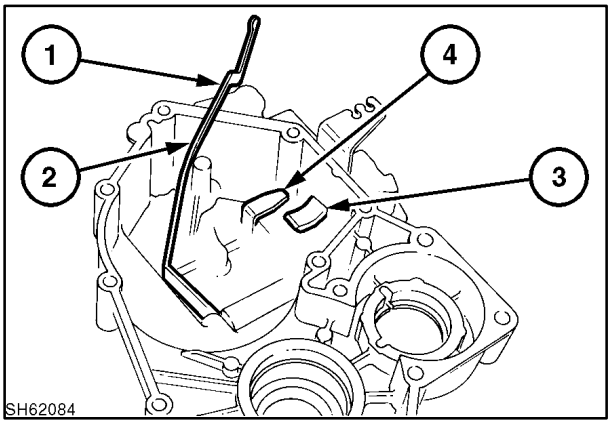

85

Construction/Function

A mechanical all-speed governor is used. It is housed in the gear case.

A flyweight assembly is mounted on the camshaft. The movement of the flyweight is transmitted to the injection pump control rack by way of the slider, control lever, and link, 1. A spring which is hooked to the arm, 3, and tension lever, 4, regulates the movement of the flyweight.

By changing the set angle of the governor lever, tension on this spring is changed. Thus, the engine speed can be regulated by the governor lever.

Maximum Speed Set Bolt

The set bolt is mounted on the cylinder block. This bolt limits the movement of the arm and has been adjusted and sealed at the factory.

Maximum Fuel and Start Spring

These are built into the cylinder block to regulate fuel injection at high speed. Regulation of fuel injection in the middle speed range is by torque spring to realize higher torque.

A start spring, 2, is placed between the gear case and link. This spring automatically functions to increase fuel during the start mode.

An idling spring at the gear case stabilizes engine idling speed.

The maximum fuel has been adjusted at the factory and sealed.

https://truckmanualshub.com/

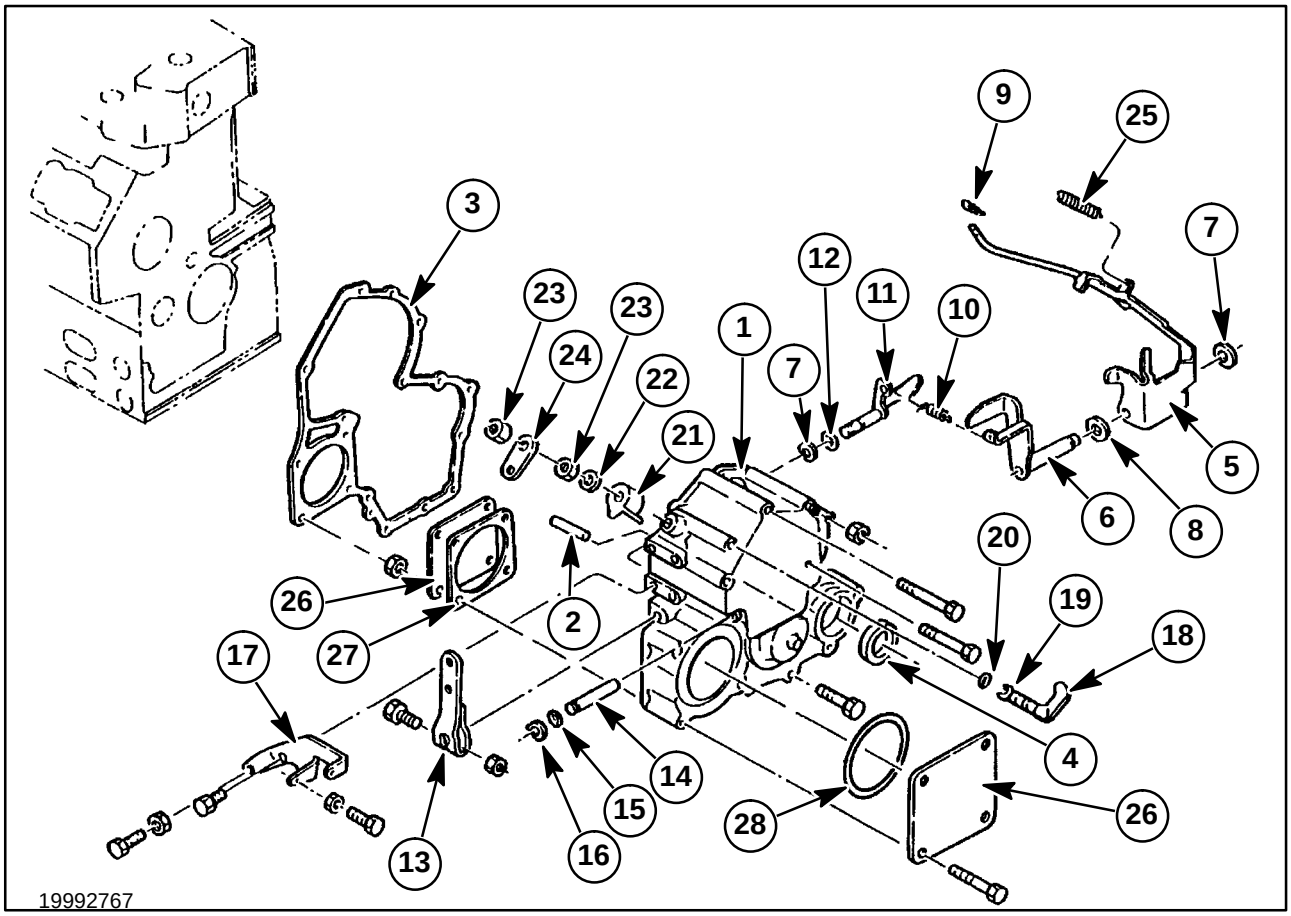

86

1. Timing Gear Cover	8. Washer	15. O Ring	22. Washer
2. Pin	9. Snap Pin	16. Snap Ring	23. Nut
3. Gasket	10. Governor Spring	17. Throttle Stay	24. Stop Lever
4. Oil Seal	11. Throttle Arm	18. Shutoff Arm	25. Dampener Spring
5. Arm Assembly	12. O Ring	19. Snap Ring	26. Cover
6. Spring Holder Arm	13. Throttle Lever	20. O Ring	27. Gasket
7. Snap Ring	14. Pivot Shaft	21. Return Spring	28. O Ring

Reassembly

Precautions Before Assembling
Wash parts before assembling (especially oil gallery, bearings, pistons, and cylinder bores should be washed thoroughly).

Apply new oil to sliding and rotating surfaces of cylinder bores, pistons, and bearings, etc.

Replace gasket, packing, etc. Use liquid gasket to prevent oil leakage where necessary.

Never over-tighten bolts and nuts used on aluminum alloy. Tighten to specified tightening torques.

https://truckmanualshub.com/

GOVERNOR OPERATION

As the engine speed increases, the throttle arm, 1, contacts the fuel screw adjuster at contact point A, and the high-speed idle stop screw at B. During the engine speed increase, tension is placed on the governor spring, 2.

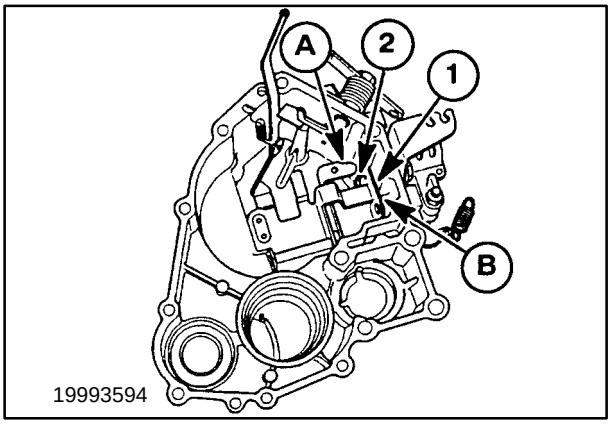

87

As the engine speed increases, the four governor weights, 1, pivot outward and push on the slider cone, 2. The weights and slider cone are located on the end of the camshaft.

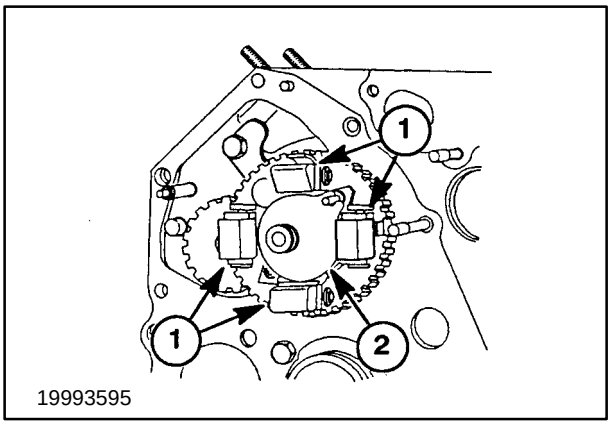

88

The slider cone, 2, Figure 88, contacts the governor linkage arm, 1, at contact pad, C. As the cone moves forward, it pushes the linkage arm, 1, forward, which is connected to the injection pump rack assembly. When the injection pump rack moves forward, the fuel delivery is decreased and the engine speed decreases.

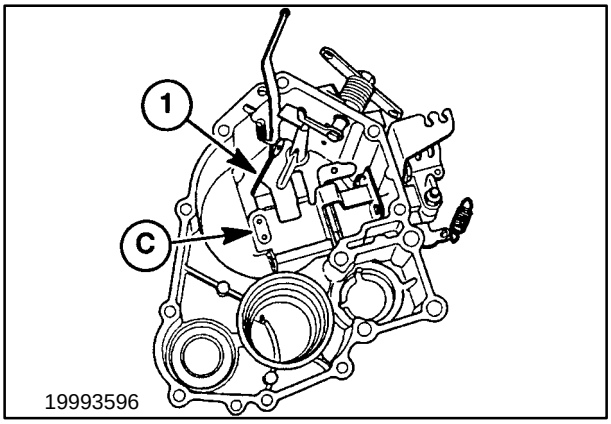

89

https://truckmanualshub.com/

As the engine speed decreases, the governor weights, 1, pivot inward allowing the slider cone, 2, to move rearward.

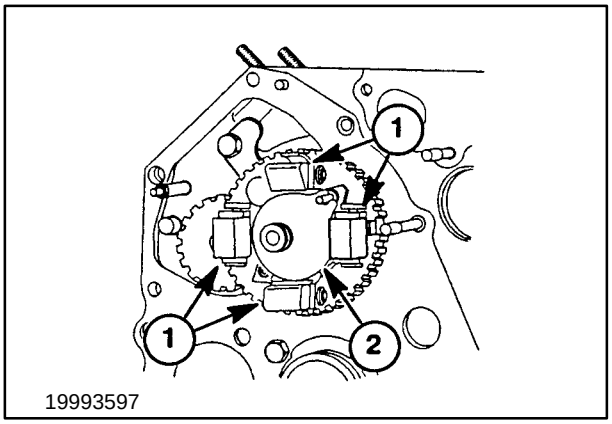

90

As the slider cone, 2, Figure 90, moves rearward, the governor linkage arm, 1, allows the fuel injection pump rack to move rearward to the full fuel position and the engine speed increases.

Engine speed depends upon several factors: the throttle setting determined by governor spring tension; the pressure exerted by the slider cone on the governor linkage; and, positioning of the injection pump rack.

All the governor linkage parts are located inside the engine timing gear cover. To inspect or replace any of the governor linkage parts, the timing gear case and injection pump must be removed from the engine.

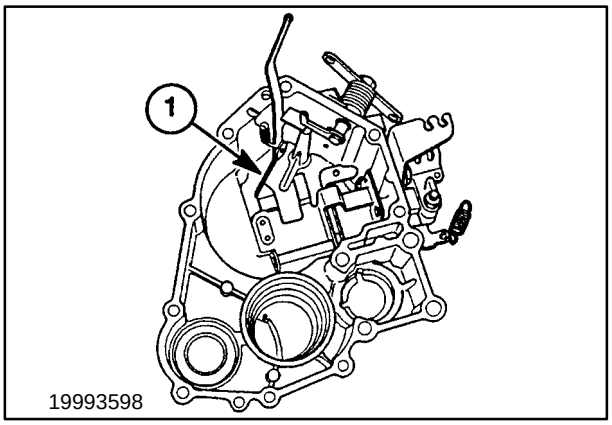

91

https://truckmanualshub.com/

ENGINE REASSEMBLY SEQUENCE

PRECAUTIONS

Thoroughly wash parts before reassembly. Ensure oil galleys are clean and unobstructed.

Lubricate all rotating and sliding components before assembly.

Clean all gasket surfaces, using care not to scratch mating surfaces. Use special care on aluminum parts. Discard and replace all removed gaskets. Use liquid gasket where necessary.

Never over-tighten threaded fasteners used on aluminum parts. Tighten only to specified torque values.

ENGINE REASSEMBLY SEQUENCE

Op. 10 304 38

OIL PRESSURE RELIEF VALVE ASSEMBLY
Install an O ring on the relief valve assembly.

Relief valve tightening torque: 43 ft. lbs. to 50 ft. lbs. (58 N·m - 68 N·m)

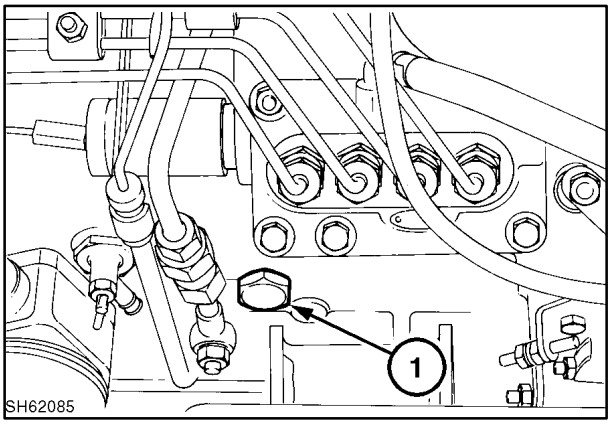

92

https://truckmanualshub.com/

CRANKSHAFT AND BEARING HOLDER ASSEMBLY

1. Install the bearing holders on the crankshaft. Insert this in the bushing at the front end of the cylinder block.
2. Align the bolt hole at the lower part of the cylinder block with thread hole on the bearing holder and tighten with bolts. For flywheel end, use two special bolts, hex recess in its head.

   Bearing holder tightening torque:

   Hex hole bolts - 18 - 22 ft. lbs. (24 - 30 N·m)
   Hex bolts - 36 - 40 ft. lbs. (49 - 54 N·m)

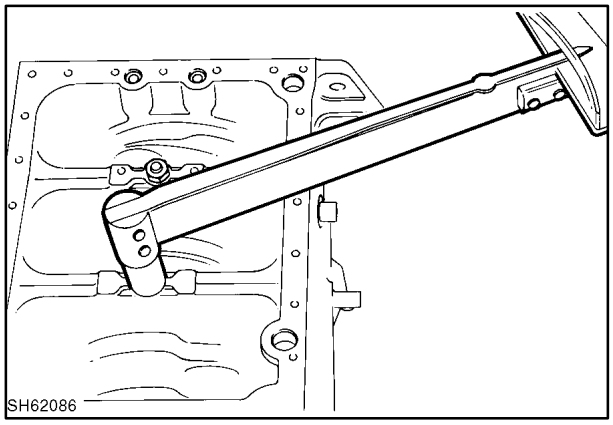

93

3. Measure crankshaft end float.

   Standard Play: 0.004″ - 0.016″ (0.1 mm - 0.4 mm)

   Allowable Limit: 0.020″ (0.5 mm)

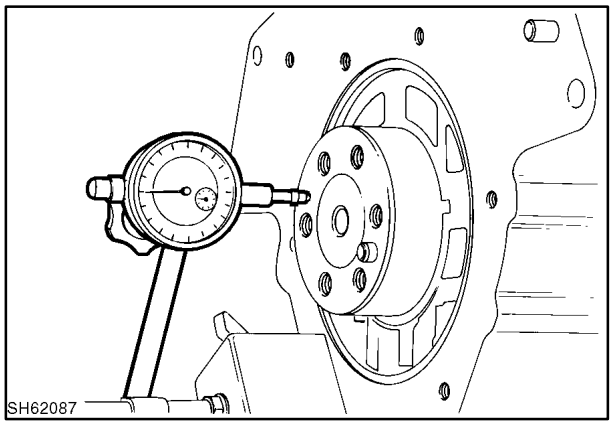

94

REAR OIL SEAL

This is a press-fit, retained by the backplate.

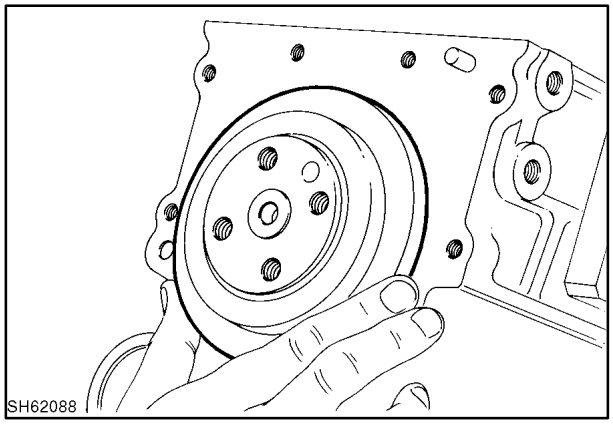

95

https://truckmanualshub.com/

BACK PLATE/FLYWHEEL HOUSING
Coat the area around the M8 threaded holes with liquid packing solvent-based sealant and fix the backplate with bolts.

Backplate tightening torque: 10 - 13 ft. lbs. (14 - 18 N·m)

Housing tightening torque: 18 - 21 ft. lbs. (24 - 28 N·m)

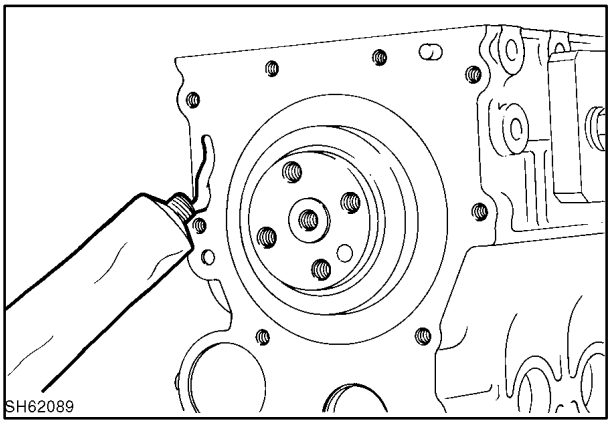

96

FLYWHEEL
Fit the flywheel. Note the location of the spring pin.

Flywheel tightening torque: 43 - 50 ft. lbs. (58 - 68 N·m)

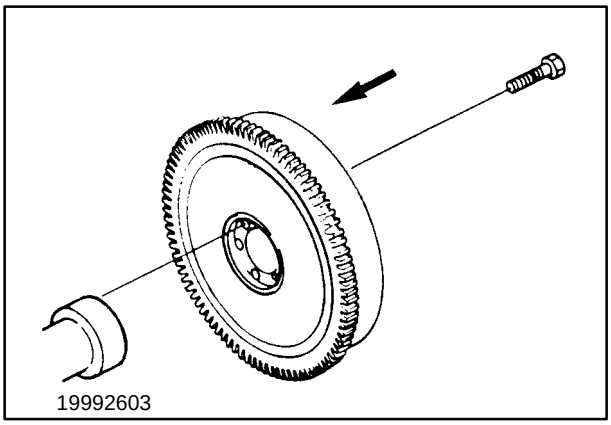

97

PISTON AND CONNECTING ROD
Coat the bearing face, piston, and piston ring with clean engine oil.

Slide the piston ring to permit a sufficient amount of oil to be applied in the groove. Set the piston ring gaps 90° apart from each other. However, do not position these gaps toward the piston pin or the right angle of the pin.

Insert the piston using a ring compressor. Face the reference mark, 1, on the piston toward the injection pump side, 2, as indicated. Also face the connecting rod mark towards the fuel pump side.

NOTE: *Install pistons from the front in ascending order.*

Tighten the connecting rod cap to the specified torque.

Connecting rod tightening torque: 36 - 40 ft. lbs. (49 - 54 N·m)

NOTE: *After installation, ensure the crankshaft moves freely. Ensure the axial play of 0.004″ to 0.012″(0.1 mm to 0.3 mm) is provided.*

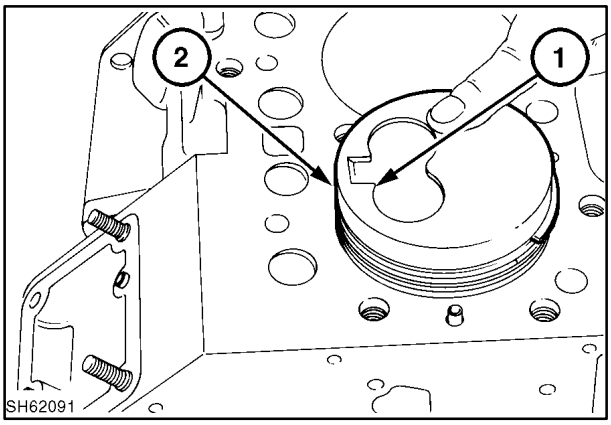

98

https://truckmanualshub.com/

OIL INTAKE AND OIL STRAINER
Fix an O ring on the suction pipe and insert the pipe into the cylinder block.

Fit the end of the suction pipe to the oil strainer and fix the oil strainer.

Suction filter tightening torque: 6.5 - 9.5 ft. lbs. (8.8 - 12.9 N·m)

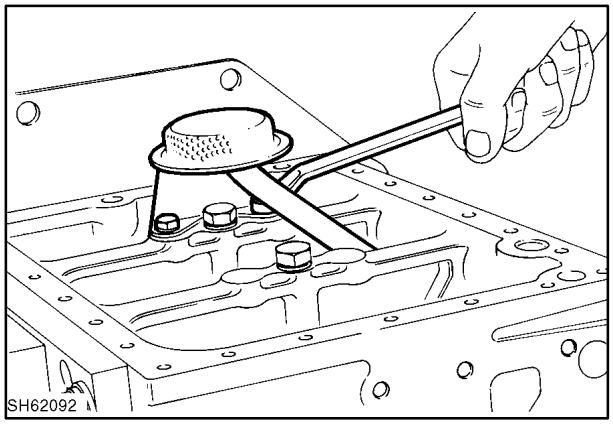

99

OIL SUMP
Tighten the bolts diagonally and evenly.

DIPSTICK AND TUBE
Install the dipstick and tube using two O rings.

FRONT PLATE

Camshaft Assembly, Tachometer, and Plate

1. Install the tachometer shaft.
2. Install the camshaft assembly. Avoid damaging bearings.
3. Fix the tachometer shaft and camshaft with the retaining plate.

   Plate tightening torque: 6.5 - 9.5 ft. lbs. (8.8 - 12.9 N·m)

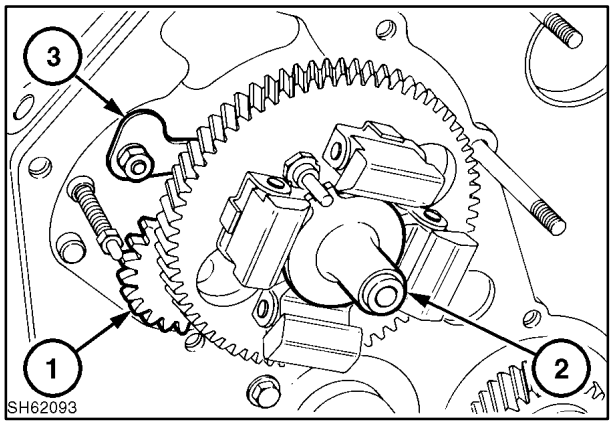

100

IDLER GEAR AND OIL PUMP ASSEMBLY (SEE SECTION IV OIL PUMP)
Install the thrust washer on the idler gear shaft.

Assemble the vane, knock pin, and spring on the idler gear.

1 Snap ring

2 Collar

3 Spring

4 Shim

5 Oil pump cover

6 Rotor

7 Spring

8 Idler gear

9 Thrust washer

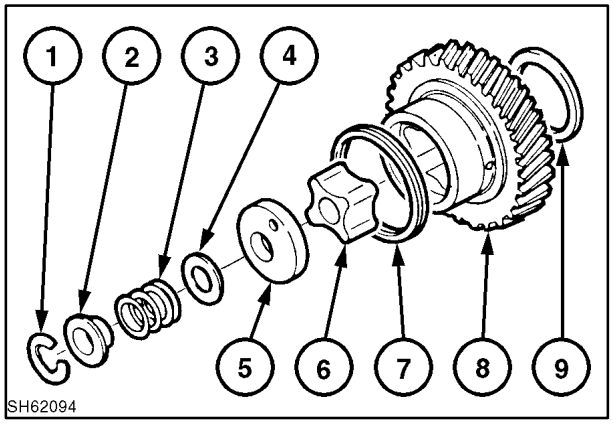

101

https://truckmanualshub.com/

Align set marks on the idler gear, crankshaft gear, and camshaft gear, and assemble on the idler gear shaft.

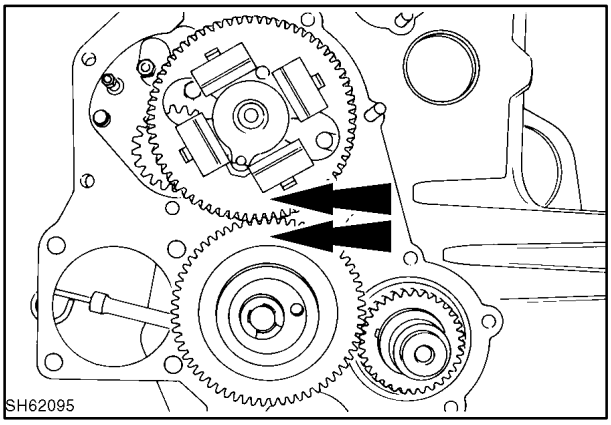

102

Install the rotor.

Install the oil pump cover, shim, spring, and collar. Fix them with the retaining ring.

Adjust with shim 0.1, 0.15, 0.2, 0.5 mm so the axial clearance of the oil pump, rotor, and vane is in the range of 0.004″ - 0.006″ (0.1 mm to 0.15 mm). The allowable limit is 0.008″ (0.2 mm) .

NOTE: *Coat both faces of the rotor and vane with grease for assembly.*

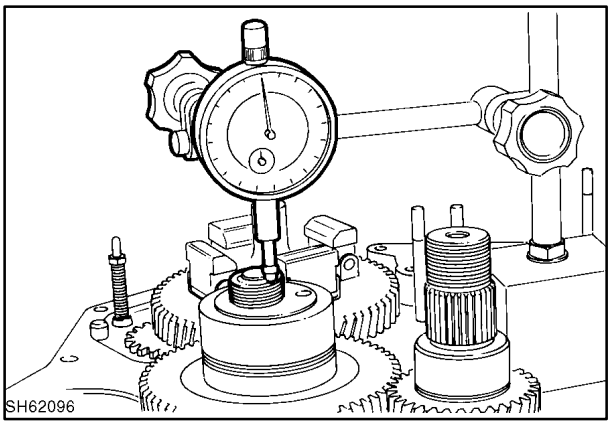

103

NOTE: *NEVER TURN the crankshaft until the timing gear case is fitted.*

By turning the oil pump cover to either direction, set the spring pin insert hole to the middle position and fit the gear case.

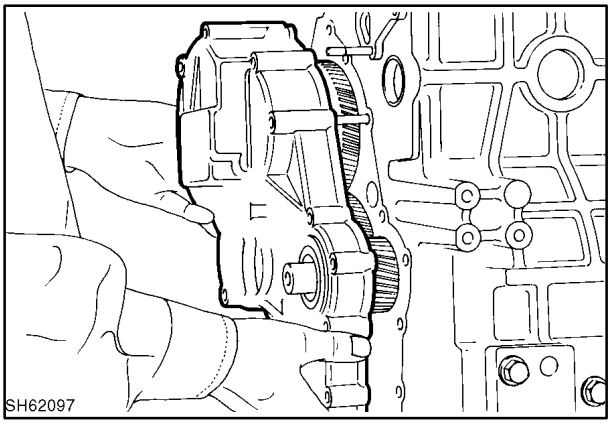

104

https://truckmanualshub.com/

TIMING GEAR CASE

Install the start spring.

Insert the link through the hole in the cylinder block. Rotate the oil pump cover to the position spring pin hole to the center position. Install the cover locating pin in the oil pump cover plate (PB094).

NOTE: *Do not damage the oil seal when fitting. Turn the mechanical stop lever clockwise to assist assembly.*

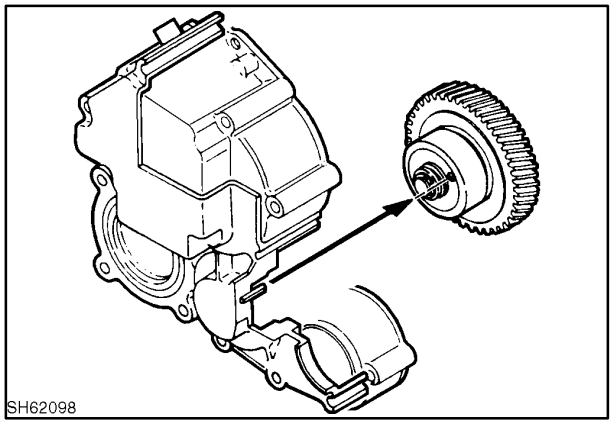

105

CRANKSHAFT PULLEY

Align the keyway and key on the crankshaft pulley and crankshaft and assemble them.

Crankshaft pulley tightening torque: 203 - 246 ft. lbs. (275 - 333 N·m)

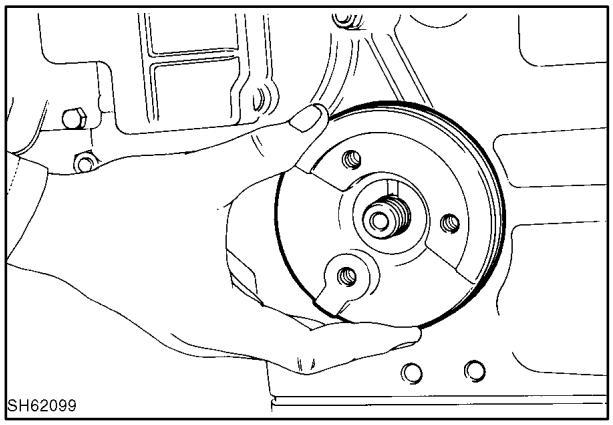

106

INJECTION PUMP INSTALLATION

Reinstall the shim, 1. Connect the control rack of the injection pump with the link, 2, and fix with the snap pin.

Tighten the injection pump bolts and nuts.

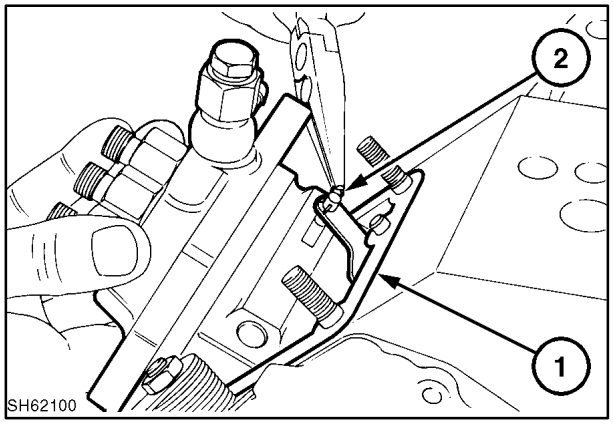

107

https://truckmanualshub.com/

ADJUSTING THE FUEL INJECTION TIMING

Normally, this procedure provides correct injection timing. However, when the new injection pump, camshaft assembly, or cylinder block is used, fuel injection timing should be adjusted as explained below.

Reassemble the injection pump according to the procedures above. Use the shim of 0.5 mm thickness.

Remove the delivery valve holder at the front side (radiator side) of the injection pump.

INJECTION TIMING AND CRANKSHAFT POSITIONS

Engine Model	Degrees Crank BTDC			
	X	Y	Z	Injection Timing
N844T	21	20	22	20 - 22
N844	22	21	23	21 - 23

Pull out the delivery valve, 1, (IN), and reinstall the spring, 2, and delivery valve holder, 3.

NOTE: *When reassembling the delivery holder, adjust the location of the delivery valve (OUT) to correct position using a wire, 4.*

Move the governor control lever to “Maximum Fuel” position and send fuel with the No. 1 piston at around “X” degrees BTDC in its compression stroke. At this time, fuel flows from the delivery holder.

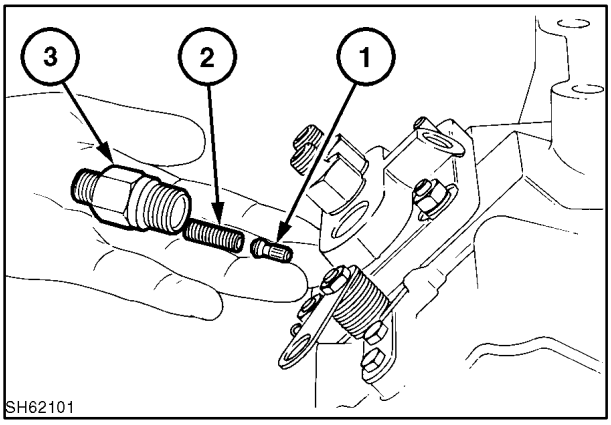

108

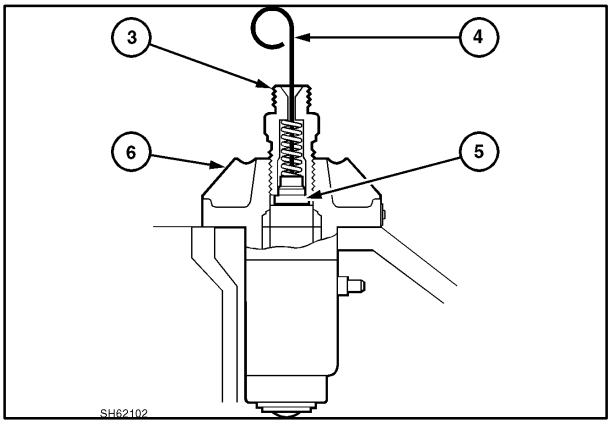

109

https://truckmanualshub.com/

Piston Position in Relation to the Crankshaft Angle (BTDC)

N844, N844T

Crankshaft Angle (BTDC)	Position
13	0.0594″ (1.510 mm)
14	0.0689″ (1.749 mm)
15	0.0789″ (2.005 mm)
16	0.0897″ (2.278 mm)
17	0.1011″ (2.569 mm)
18	0.1132″ (2.875 mm)
19	0.1259″ (3.199 mm)
20	0.1393″ (3.539 mm)
21	0.1533″ (3.895 mm)
22	0.1680″ (4.267 mm)
23	0.1833″ (4.655 mm)
24	0.1991″ (5.058 mm)
25	0.2156″ (5.477 mm)
26	0.2328″ (5.912 mm)

Slowly turn the crankshaft clockwise until flowing fuel from the delivery holder is stopped. Check the piston position at this point. If the position is later than “Y” BTDC, use a thinner shim. If the position exceeds “Z” BTDC, use a thicker shim.

Changing the shim thickness by 0.004″ (0.1 mm) will change the timing approximately one degree. Adding shims decreases the angle, while subtracting shims increases the angle.

NOTE: *When the shim is not needed, assemble by coating, using liquid sealant.*

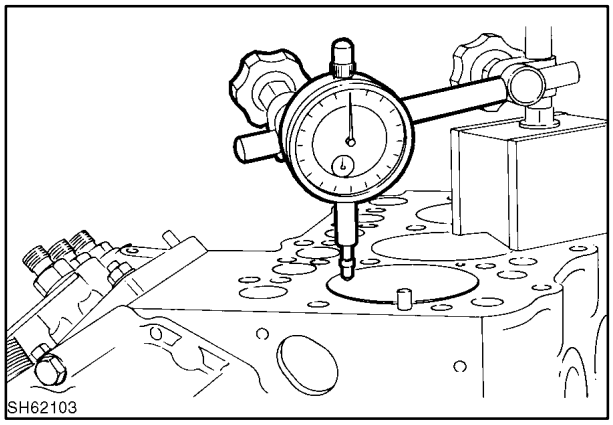

110

SPILL-TIMING PROCEDURE

1. Verify that the timing mark on the crankshaft pulley is in line with the “TOP” mark on the timing scale. If the mark on the crankshaft pulley is not in line with the “TOP” mark, verify piston top-dead center with a dial indicator. If the pulley mark is slightly off, re-mark the pulley and proceed.

NOTE: *Color the timing mark on the crankshaft pulley and appropriate marks on the timing scale to increase visibility.*

2. Reinstall the valve spring, keepers, rocker arm assembly, and valve cover.
3. Shut off the fuel supply to the injection pump at the fuel filter.

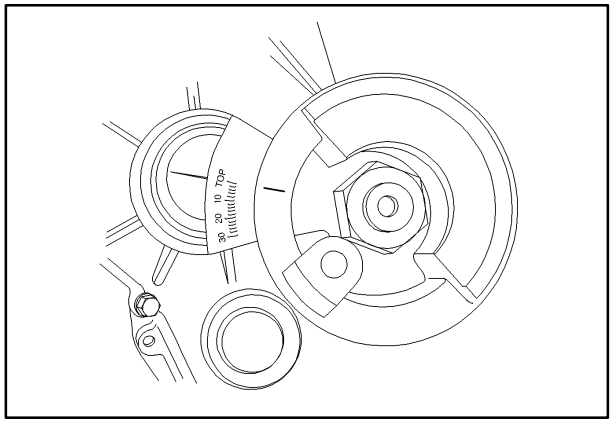

111

https://truckmanualshub.com/

4. Remove the No. 1 injection line from the No. 1 injector, 1.
5. Remove the lock screw, 2, and remove the injector locking plate, 3.

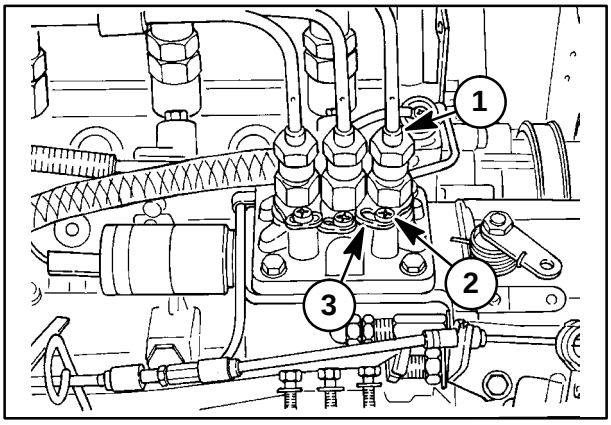

112

6. Remove the delivery valve piston, 1, from the No. 1 delivery valve.

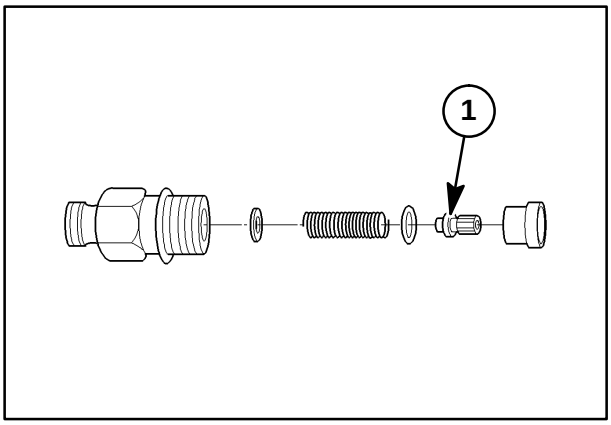

113

7. Reinstall the spring and holder, 1, into the injection pump and tighten securely.

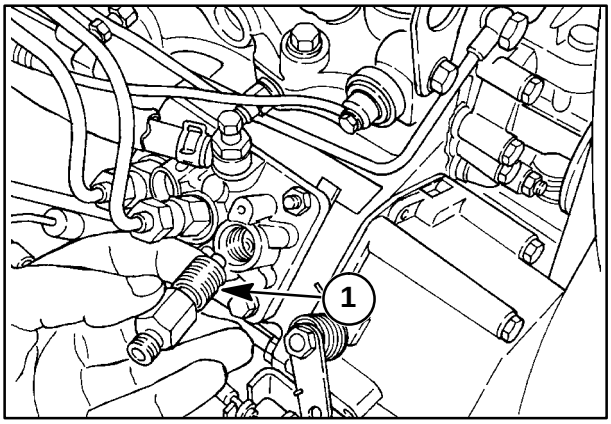

114

https://truckmanualshub.com/

8. Fabricate a spill tube, 1, from a discarded injection line and install the tube on the No. 1 port on the injection pump.
9. Remove the fuel shut-off solenoid from the injection pump.

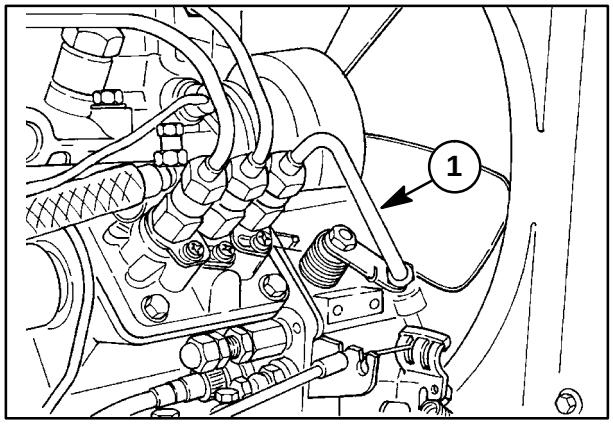

115

10. Rotate the crankshaft counterclockwise (viewed from the front of the engine) approximately 40°.
11. Turn on the fuel supply to the injection pump. Fuel should flow out of the spill tube on the No. 1 cylinder port.

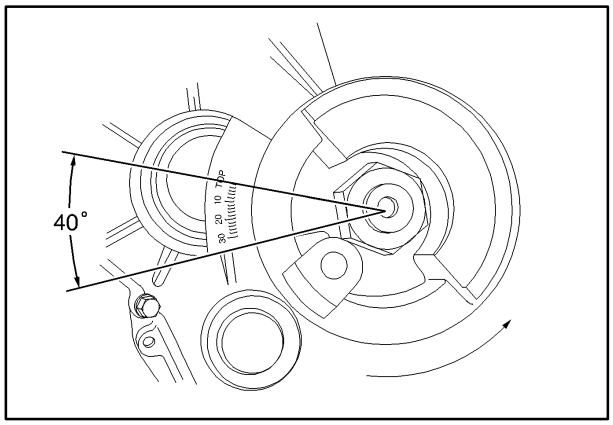

116

12. Rotate the crankshaft clockwise. When the timing mark on the crankshaft pulley, 1, is in line with the 21° (N844T) or 22° (N844) mark on the scale, 2, fuel should stop flowing from the spill tube.
13. If fuel does not stop flowing at the appropriate timing mark, the injection pump timing must be adjusted by adding or removing shims located between the injection pump and the engine block.
14. Adding shims will retard the pump timing and removing shims will advance the pump timing.

NOTE: *A shim thickness of 0.1 mm (0.004 in.) will change the pump timing by approximately 1°.*

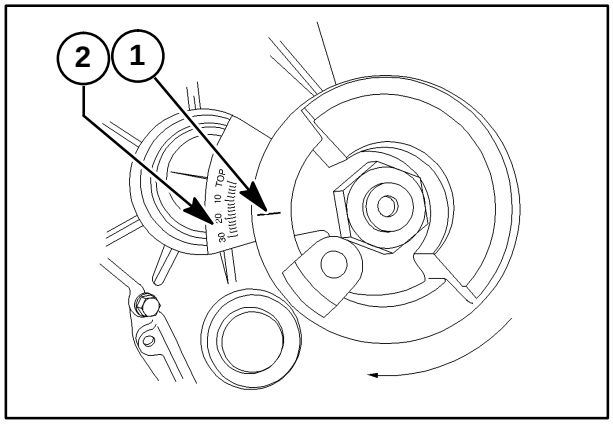

117

15. Assemble the components that were removed from the engine and fuel system.

https://truckmanualshub.com/

Assemble the delivery valve (IN).

NOTE: *Delivery holder tightening torques: 29 - 33 ft. lbs. (39 - 45 N·m).*

Oil Filter
Coat the mounting face with a thin film of oil, and then hand-tighten.

Feed Pump
Insert using securing bolts.

Tappet
Coat the tappet with oil, and then assemble.

Cylinder Head
Set the piston to the top, dead center, and measure the amount of protrusion above the cylinder block with a depth gauge or a dial gauge.

NOTE: *Take measurement by pressing the piston lightly.*

Measure the protrusions for 4 cylinders. Use the highest reading as a reference.

Ensure the cylinder head gasket meets the tolerance levels.

N844, N844T

Measurement	Gasket No.	Tightened Thickness
0.019 - 0.023″ (0.5 - 0.6 mm)	111147510	t=0.047″ (t=1.2 mm)
0.023 - 0.031″ (0.6 - 0.8 mm)	111147520	t=0.051″ (t=1.3 mm)

NOTE: *The last four digits of code numbers are stamped on the head gasket. Install the head gasket with code numbers at the top.*

https://truckmanualshub.com/

Tighten the cylinder head in 3-step procedures, in the order shown in the illustration. Finally, tighten with specified torque.

Specified torque: 72 - 76 ft. lbs. (98 - 103 N·m)

NOTE: *Spring pin is used for positioning.*

Coat threads of bolts with grease based with molybdenum disulfide.

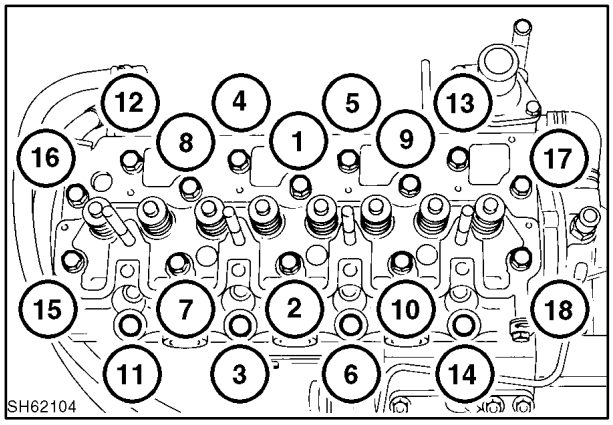

118

Oil Pipe
Eyebolt tightening torque: 7 - 9 ft. lbs. (9 - 12 N·m)

LS160 N844 engine - the oil pipe, 1, will be connected to the block.

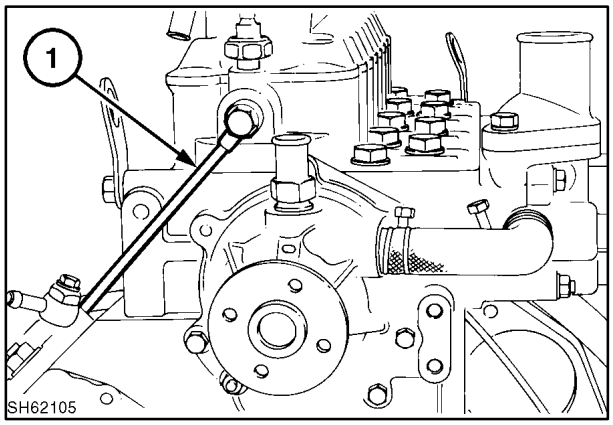

119

LS170 N844T engine - the oil pipe will be connected to the turbocharger.

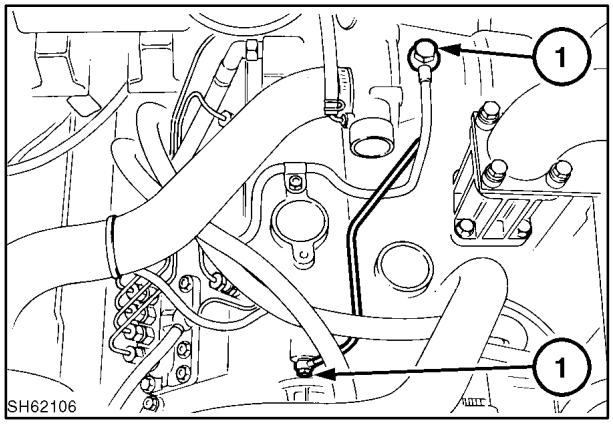

120

https://truckmanualshub.com/

Cap, Push Rod, and Rocker Arm Assembly
Install the caps, 1, on the end of the valve stem.

Install the push rods, 2, and rocker arm assembly, 3.

Rocker arm assembly tightening torque: 20 - 29 ft. lbs. (27 - 39 N·m) 4-cylinder engines.

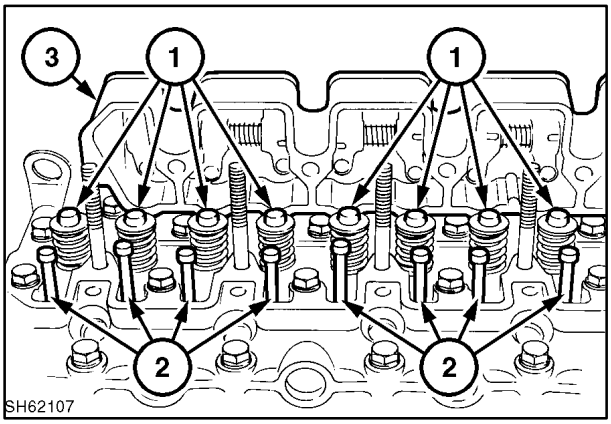

121

Valve Clearance Adjustment
Loosen the nut and adjust the clearance of both the intake and exhaust valves to 0.2 mm (0.0078″) with the adjust screw.

NOTE: *Adjust when the engine is cold. Set the No. 1 piston to TDC of compression stroke and adjust the No. 1 cylinder intake, exhaust valves, No. 2 cylinder intake valve, and No. 3 cylinder exhaust valve. Turn the crankshaft 360° in a clockwise direction, viewed from the front, and adjust the remaining valves.*

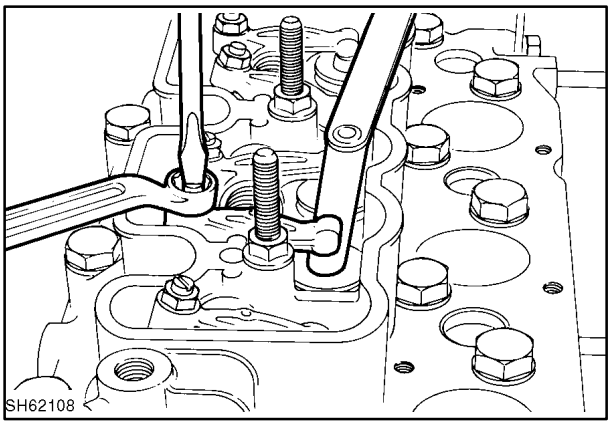

122

Cylinder Head Cover
Evenly tighten the cylinder head cover. Ensure the oil ring gasket remains in location.

Cylinder head cover tightening torque: 9 - 12 ft. lbs. (12 - 16 N·m)

Water Pump Assembly and Thermostat Housing
Install in the sequence of the gasket, plate, gasket and water pump assembly.

1 Gasket

2 Plate

3 Gasket

4 Water pump

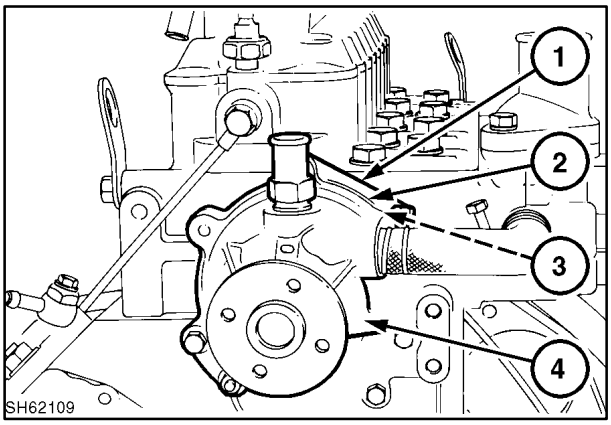

123

https://truckmanualshub.com/

Connect the thermostat housing and hoses.

1 Thermostat housing

2 Thermostat

3 Gasket

4 Adapter

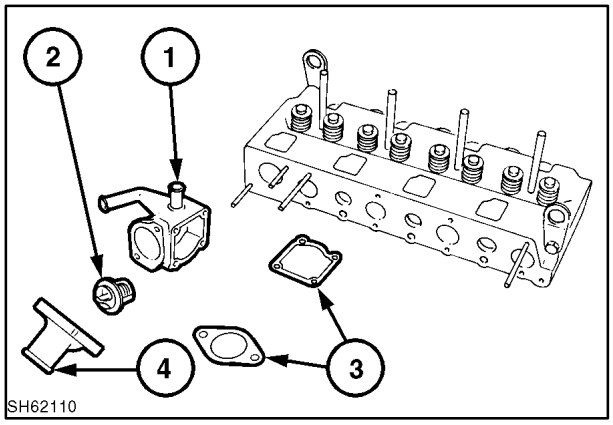

124

Glow Plug and Connector
Glow plug tightening torque: 11 - 14.5 ft. lbs. (15 - 20 N·m)

Oil Pressure Switch
Oil pressure switch tightening torque: 11 - 14.5 ft. lbs. (15 - 20 N·m)

Nozzle/Holder Assembly
Install the nozzle and holder assembly with a socket for the nozzle holder. Install the return pipe.

Nozzle/holder tightening torque: 44 - 51 ft. lbs. (60 - 69 N·m)

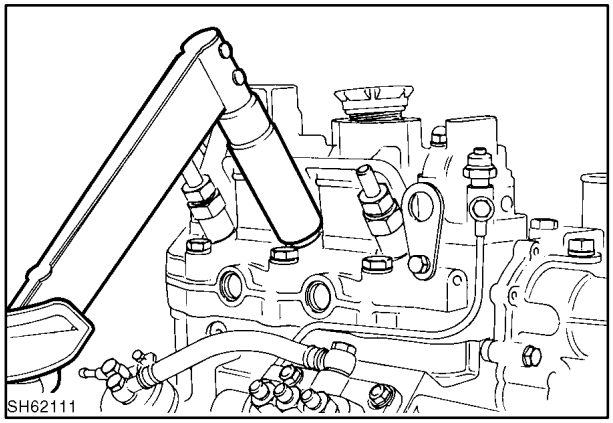

125

Return Pipe and Injection Pipe
After installing the return pipe, 1, install injection pipes, 2.

Injection pipe tightening torque: 11 - 18 ft. lbs. (15 - 24 N·m)

Alternator Assembly
Install the assembly, and check the belt groove alignment.

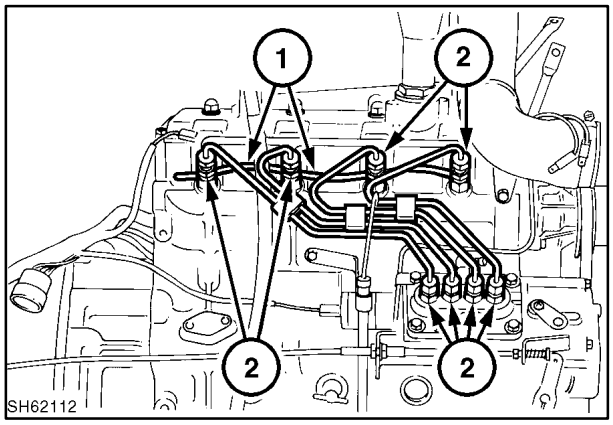

126

https://truckmanualshub.com/

V-Belt, Fan Pulley and Cooling Fan
After mounting the fan pulley, cooling fan, spacers, and cover plate on the N844 LS160 engines, install the V belt.

Depress the belt at the center between the crankshaft pulley and the alternator pulley, with a force of approximately 5 kg (2.27 ft. lbs.). The fan belt tension should be adjusted so the deflection becomes 0.2″ (5 mm) upon the above check.

Cooling fan tightening torque: 6.5 - 9.5 ft. lbs. (8.8 - 13 N·m)

The Model LS160 N844 engine fans are equipped with a cover plate, 1, over the center of the fan assembly.

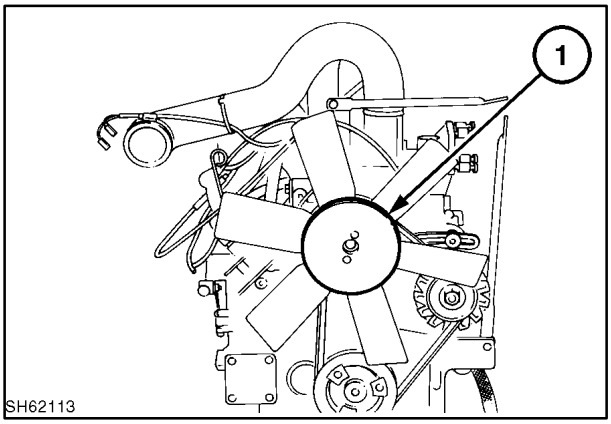

127

Intake/Exhaust Manifolds
Install in sequence of gasket, 1; spacer, 2; gasket, 3; and intake manifold, 4.

Install exhaust manifold, 5.

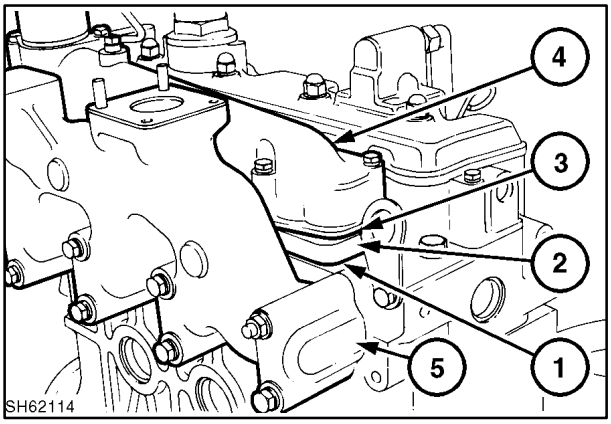

128

Op. 29 100 50

REINSTALLATION OF ENGINE INTO SKID STEER FRAME

NOTE: *Inspect the splines, 1, on the hydrostatic pump flex plate and the splines on the input shaft. If flex plate is damaged, replace.*

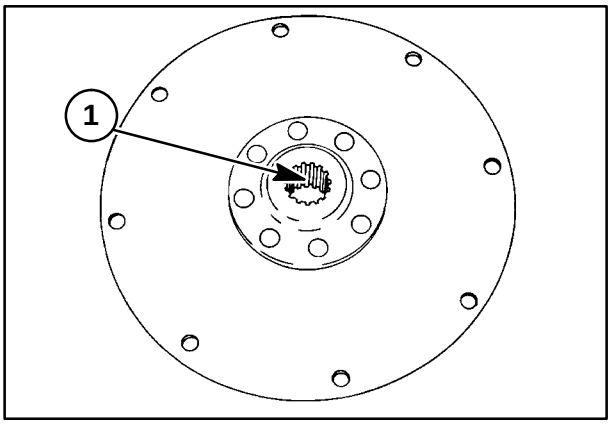

129

https://truckmanualshub.com/

1. Reinstall the hydrostatic pump flex plate to the engine flywheel, 1, using eight 5/16″ x 3/4″ G5 cap screws and eight M8 lock washers. Torque to 20 ft. lbs. (26 N·m).

   Reinstall the flex plate with the center hub of the plate away from the flywheel, 2.

2. When reconnecting the ground wires at 3, place the largest wire (battery ground cable, 4) next to the ground surface. Then stack the remaining ground wires according to size (smallest to largest wires) and secure.
3. When the engine is reinstalled, make sure the ground strap, 5, between the engine block and loader main frame is reinstalled to prevent engine bearing damage.

NOTE: *Lubricate the splines of the drive plate and hydrostatic pump shaft with never seize or moly coat lubricant.*

4. Check the condition and reinstall or replace the engine isolator mounts. Examine the condition of the rubber mount, 1, and replace the mount if it shows signs of deterioration.
5. Proper assembly of the engine isolator mount.
   1 Isolator mount
   2 Mount retaining hardware
   3 Mount cover
   4 Retaining bolt
   5 Large flat washer (lower)
   6 Small flat washer (upper)
   7 Nut

   Torque the mount retaining hardware, 2, to 26 ft. lbs. (35 N·m).

   Torque the engine block retaining bolt, 4, to 83 ft. lbs. (112 N·m).

6. Attach the hydrostatic pump and support to the engine bellhousing as previously removed.

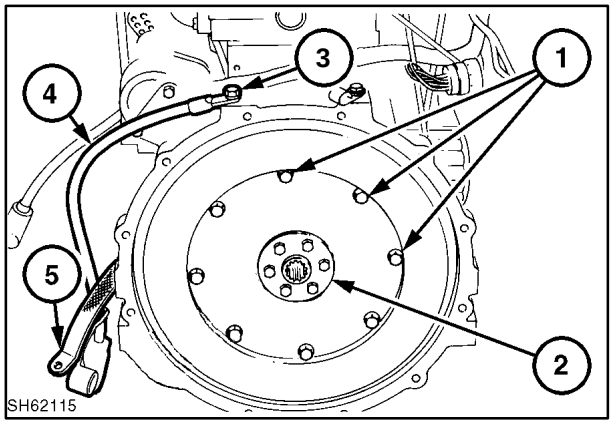

130

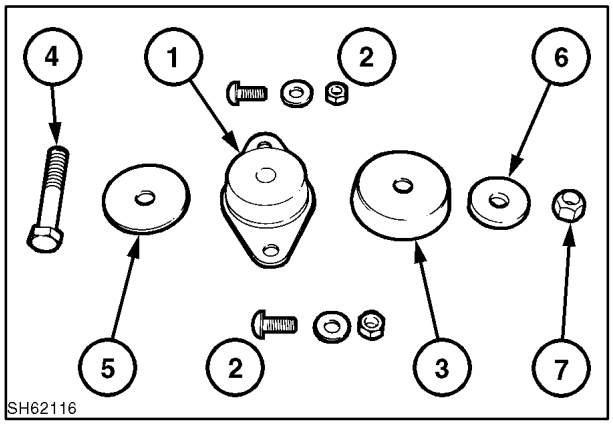

131

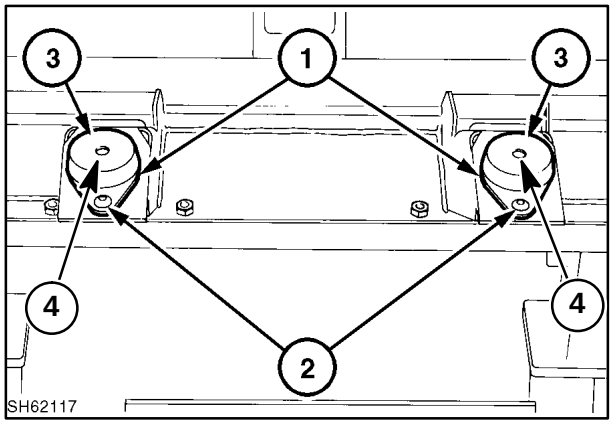

132

https://truckmanualshub.com/

7. Reconnect the battery making sure the positive (+) battery cable, 1, on LS170 models routes away from the turbocharger hose, 2, and the hose clamp, 3.
8. Reverse the clamp, 3, to avoid unnecessary wear on cables and hoses.

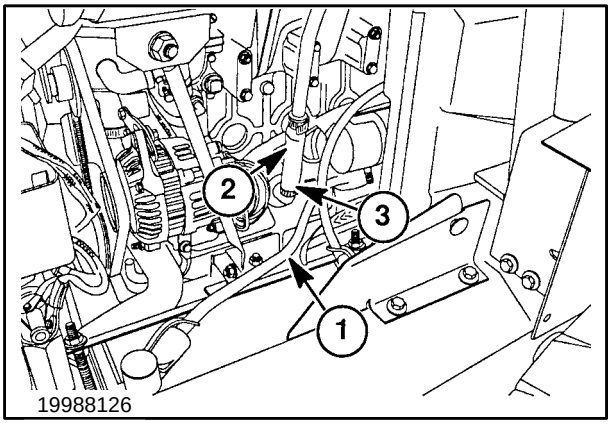

133

HOW TO OPERATE THE ENGINE AFTER OVERHAUL

1. Check the quantity of the coolant, engine oil, and fuel.
2. Disconnect the wiring harness connector at the engine stop solenoid.
3. Move the hand throttle lever to the low, 1/3-throttle position.
4. Turn the key switch to the start position (rotate the starting motor) until the oil pressure lamp goes off (about 20 - 30 seconds).
5. Connect the wiring harness connector at the engine stop solenoid.
6. Move the hand throttle lever to the 1/3 - to 1/2-throttle position, start the engine, and operate at no more than 1500 RPM.
7. Adjust the low speed 1500 RPM with the engine running and warm up for 30 minutes. At the same time:
   - Check for abnormal sound
   - Check for temperature coolant
   - Check temperature of engine oil
   - Check leak of engine oil, coolant, and fuel
   - Check color of exhaust gas

   A gradual running-in of the overhauled engine is necessary for delivery of the lubricating oil to the bearings, etc.
8. Refer to the turbocharger section of this manual for information on operating a turbocharged engine after overhaul.

https://truckmanualshub.com/

COOLING SYSTEM

SPECIFICATIONS

Capacity - 10.8 qts. (10.3 L)

Mixture - 50/50 antifreeze/water

Radiator cap - 7 PSI (48.3 kPa)

THERMOSTAT

Opening
180° F (82° C)

Fully Open
203° F (95° C)

EIC starts reading degrees at 113° F (45° C) or 32° F (0° C)

EIC signals an overheat condition at 216° F (102° C)

OPERATION

The EIC (Electronic Instrument Cluster) monitors the engine coolant temperature during operation and will signal the operator should an overheat condition occur.

The EIC will read COLD at start-up and will start reading in degrees at 113° F (45° C) or 32° F (0° C). The EIC will default from any other monitored function to the coolant function when a overheat condition occurs at 216° F (102° C).

The cooling system has a recovery tank, 1, for coolant expansion.

The radiator can easily be cleaned by raising up the two handles, 2, to slide the radiator to the rear and separate it from the oil cooler for cleaning.

IMPORTANT: *Always reposition the radiator before closing the rear door; damage to the radiator or expansion tank may occur.*

The cooling system must be filled with a 50/50 mixture of antifreeze and water for winter and summer protection.

IMPORTANT: *Always top off the cooling system with a 50/50 antifreeze/water mixture. Always refill a drained cooling system with a 50/50 antifreeze/water mixture.*

Add coolant to the recovery tank, not the radiator.

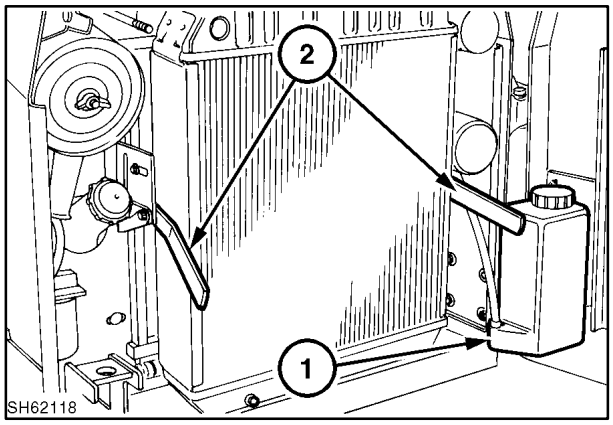

134

https://truckmanualshub.com/

DANGER

Allow the engine and cooling system to cool off before adding coolant to the cooling system.

Always allow the engine and cooling system to cool off before draining the cooling system.

Op. 10 402 28

WATER PUMP ASSEMBLY AND THERMOSTAT HOUSING

Disassembly
Remove the backplate and gaskets.

Take out the thermostat and spring from the thermostat housing.

1 Water pump

2 Gaskets

3 Set plate

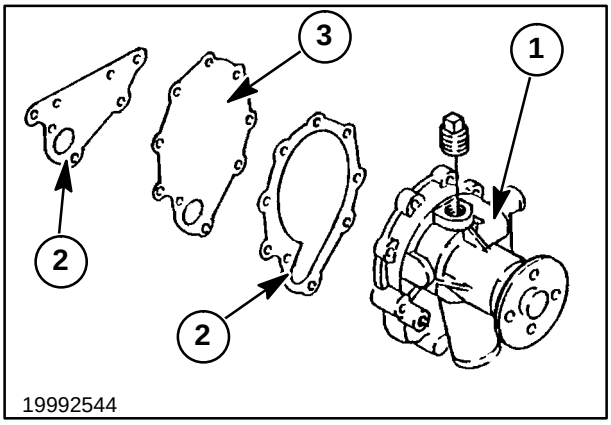

135

Op. 104 02 30

THERMOSTAT

Inspection
Replace the thermostat if the valve opens at ambient temperature.

Place the thermostat into water. Raise the water temperature gradually and inspect the valve opening temperature and valve lift. (Standard values are as described in the “Specifications” section.)

NOTE: *Three to five minutes will be required before the valve starts operating.*

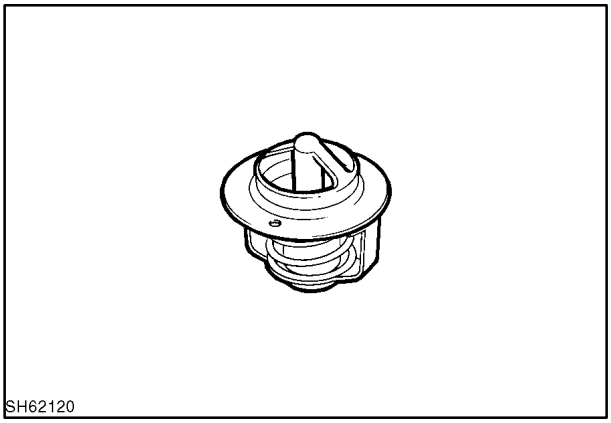

136

	N844	N844T
Type	Wax Pellet Type	Wax Pellet Type
Temperature when starting to open	176° - 183° F (80° - 84° C)	156° - 163° F (69° - 73° C)
Temperature when fully open	203° F (95° C)	180° F (82° C)
Valve lift fully open	0.315″ (8.0 mm)	0.315″ (8.0 mm)

Op. 104 02 28

Water Pump
Check for cracks, wear, leaks, bearing roughness, or damage. If defective, replace assembly.

Reassembly
Assemble the thermostat and spring in the housing. Install the gasket and set plate on the water pump.

Rotate the fan holder to confirm there is no obstruction or interference.

https://truckmanualshub.com/

RADIATOR

Op. 10 406 02

Radiator Cap

A pressure-type radiator cap 7 PSI (48.3 kPa) is employed to obtain higher cooling efficiency. When the coolant pressure builds up to the range of 0.8 ± 0.15 kg/cm2 (6.5 ft. lbs. to 10.8 ft. lbs.), excessive pressure is relieved from the overflow pipe (shown by white arrow).

When coolant temperature falls, coolant pressure may become less than atmospheric pressure. As this may fracture the radiator, the vacuum relief valve opens at 0.04 to 0.05 kg/cm2 (2.9 ft. lbs. to 3.6 ft. lbs.) to protect the radiator (black arrow).

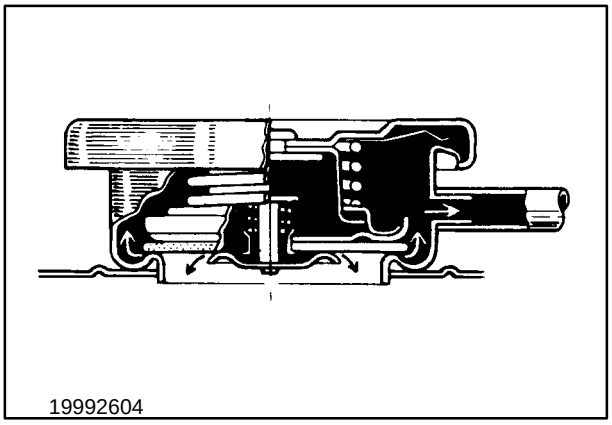

137

Inspection

1. Check the radiator for water leaks. If there are water leaks, repair or replace the radiator.
2. Check radiator fins for clogging by mud and/or other foreign matter. If clogged, clean the fins.
3. Check the pressure cap and vacuum pressure relief cap for operating pressure or contacting condition. Replace if defective.
4. Check the radiator hoses; replace if damaged.

Op. 10 406 10

Radiator Removal

Drain the radiator and cooling system by raising up on handles, 1, moving the radiator to the rear. Remove the drain plug, 2, and drain the coolant into a clean container.

Remove the upper and lower radiator hoses.

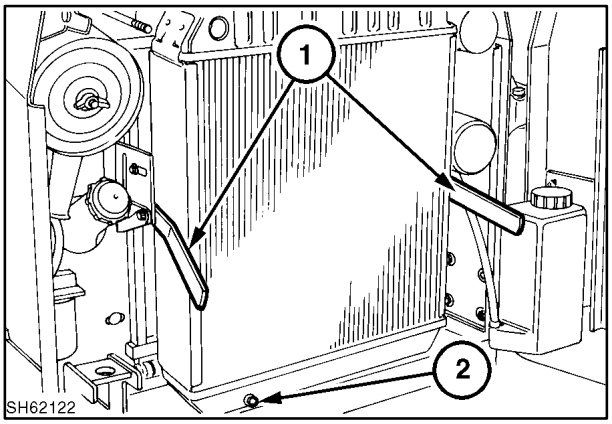

138

https://truckmanualshub.com/

Remove the radiator support hardware and handles, 1, from both sides of the radiator. Remove the overflow hose, 2, from the radiator at the cap.

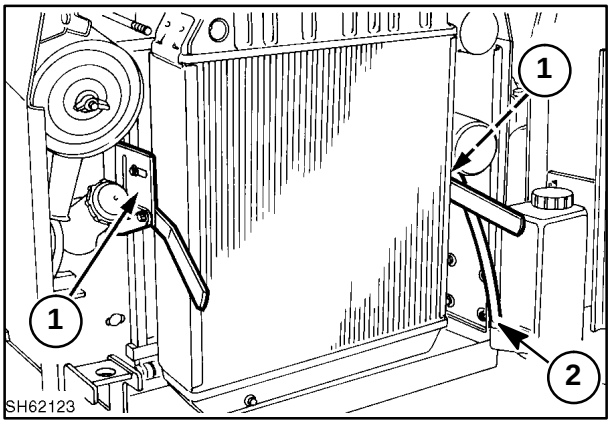

139

https://truckmanualshub.com/

FUEL SYSTEM

FUEL SPECIFICATIONS

Fuel tank capacity is 14.3 U.S. gal. (54 L).

DIESEL FUEL

Use clean, quality No.1-D or No. 2-D fuel (ASTM D975).

Use No. 1-D if the ambient temperature is expected to be less than 40° F (4° C) or if the loader is to be used at an altitude exceeding 5000 ft. (1524 m).

The sulfur content of the fuel should be no more than 0.5%.

The sediment and water content should not exceed 0.05%.

To prevent fuel flow problems in cold weather, use No. 1-2 diesel fuel with a pour point of at least 10° F below the expected ambient temperature.

Minimum cetane number is 40. Low temperature or high altitude operation may require the use of fuel with a higher cetane number.

In most areas, diesel fuel is properly blended for summer and winter grades as ambient temperatures change. In winter, use winter grade diesel fuel only. Otherwise, the fuel may cloud and block the fuel system. When temperatures are extremely cold, use properly mixed winter fuel.

Use New Holland diesel fuel conditioner part #251202 to mix with the diesel fuel. Follow the directions for use as indicated on the container.

DIESEL FUEL STORAGE

NOTE: *Diesel fuels stored for a long time may form gum and plug filters.*

Keep fuel in a clean container in a protected area. Water and sediment must be removed before fuel gets to the engine. Do not use deicers to remove water from fuel. Do not depend on fuel filters to remove water. If possible, remove water and sediment at the storage tank outlet.

IMPORTANT*: Do not store diesel fuel in galvanized containers. Diesel fuel stored in galvanized containers reacts with the zinc coating of the container to form zinc flakes. If fuel contains any water, a zinc gel may also form. The gel and flakes will quickly plug fuel filters and may damage the injector pump and injectors.*

https://truckmanualshub.com/

FUEL SYSTEM COMPONENTS

The fuel system contains a fuel tank located in the left side of the engine compartment at 1. Fuel tank pickup tube, 2; fuel tank sending unit, 3; in-line fuel filter, 4; electric fuel pump, 5; injection pump, 6; and return fuel line, 7, from the injector bleed off to the tank. The fuel flow is controlled by an electronic fuel solenoid, 8, which is controlled by the EIC (Electronic Instrument Cluster).

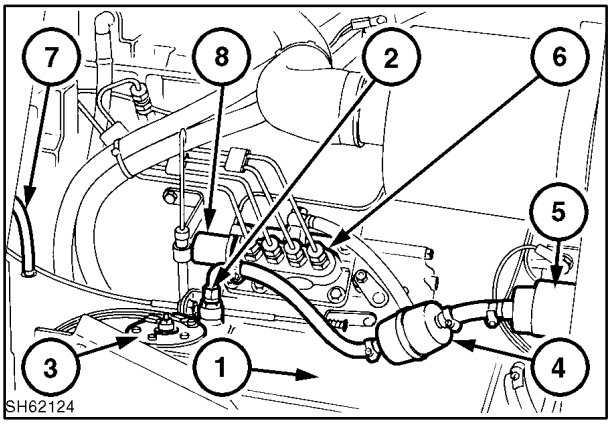

140

Located between the electric fuel pump and the injector pump is an additional fuel filter (water trap), 1. The fuel tank cap, 2, is a vented style.

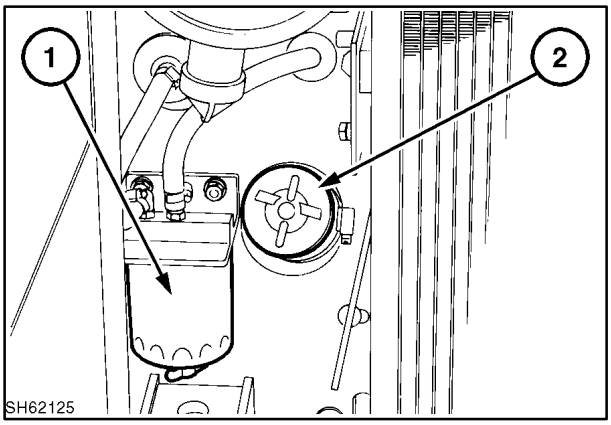

141

WARNING

Refuel the loader outdoors with the engine shut off. Replace the fuel cap securely. Use an approved fuel container. Do not smoke when handling fuel. Avoid spilling fuel.

Filling the Tank

The fuel tank filler cap, 2, is located at the rear of the skid steer behind the rear door. Wipe the dust and dirt from around the cap before removing the cap to prevent trash from falling into the tank while filling it. Use an approved fuel container and keep it clean. **The fuel tank capacity is 14.3 U.S. gal. (54 L).**

NOTE: *The fuel cap is the vented type. Use only a vented cap to prevent fuel system related problems.*

https://truckmanualshub.com/

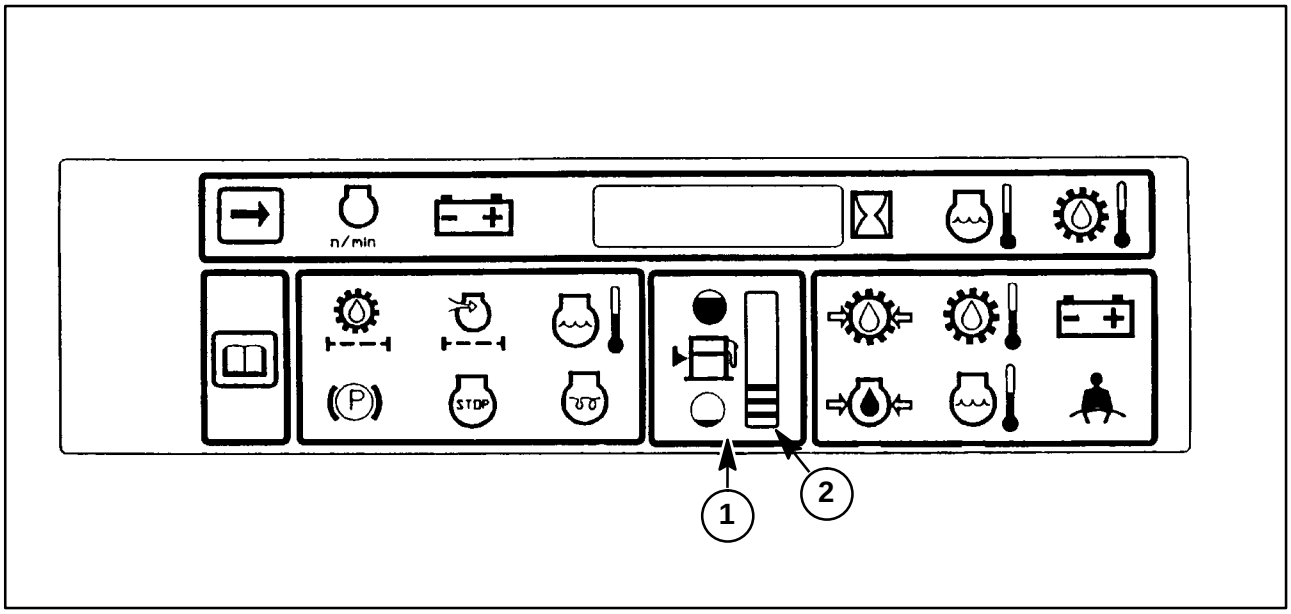

142

FUEL GAUGE

In the center of the EIC panel is the fuel gauge, 1, implemented as a vertical 10-segment green LED bar graph. The lowest segments will flash when the fuel level is low. An audible alarm will accompany the flashing light for about 5 seconds. When the fuel level reaches three bars, 2, the segments will flash.

When the fuel level reaches two bars, the EIC will signal the operator again, with the segments flashing and another five–second audible alarm.

https://truckmanualshub.com/

COLD START AID

The EIC controls a timed preheat cold start to assist in cold weather starting. The timed period will vary from 0 to 15 seconds depending on model engine and engine temperature.

STARTING A COLD ENGINE

Move the engine speed control ahead to 1/3 position, maximum 1500 RPM.

Turn the ignition key, 1, to the “RUN” position. The EIC will automatically activate the engine preheat system and the preheat light, 2, will be on, also at this time the character display, 3, will read the seconds remaining to heat. When the light goes off and the display is 0, turn the ignition key to the “START” position. After the engine starts, allow the key to return to the “RUN” position.

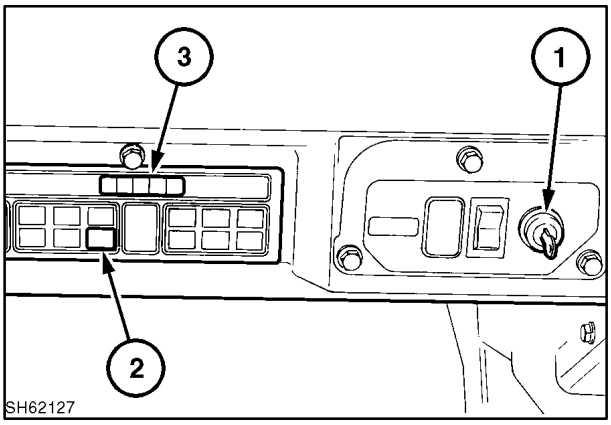

143

The engine must start within 30 seconds; if the engine does not start preheat again. Allow the starter to cool for one minute before engaging the starter motor. To start the preheat sequence again, turn the ignition key off and then on again.

Always allow the engine to operate at a maximum of 1500 RPM to warm up before applying a load.

NOTE: *Following the above starting procedures is very important for any engine but especially a turbocharged engine to insure the turbocharger is lubricated properly.*

FUEL FILTER SYSTEM

The unit is equipped with a fuel filter water trap, 1. Drain the water trap filter every 100 hours of operation, or sooner if water is found in the fuel supply. To drain the water trap, turn the drain cock, 2, on the bottom of the cartridge and allow the water to drain. Replace the filter every 500 hours.

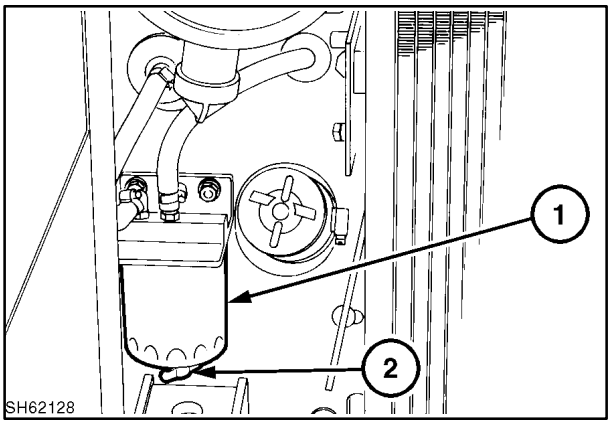

144

https://truckmanualshub.com/

Replace the in-line filter, 1, every 250 hours of operation. To remove the filter, remove the two hose clamps, 2, and remove the hoses from the filter. Install a new filter, hoses, clamps and tighten.

WARNING

All service should be performed with the engine shut down. If servicing the loader with the boom in the raised position, be sure the boom arms are supported by the boom lock pins.

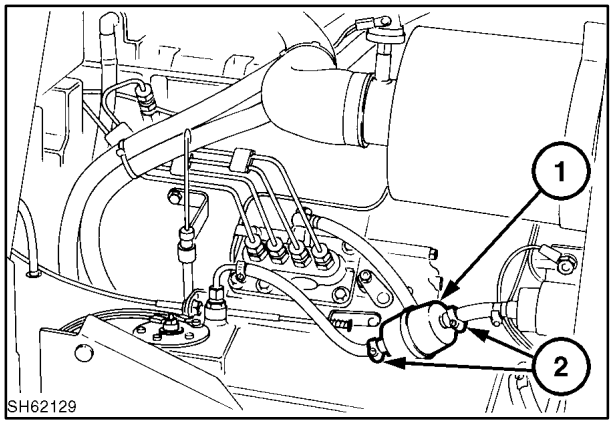

145

PRIMING THE FUEL SYSTEM

The skid steer loader is equipped with an electric fuel pump, 1. If the engine has been run out of fuel, add a minimum of 5 gallons (18.9 L) fuel to the tank.

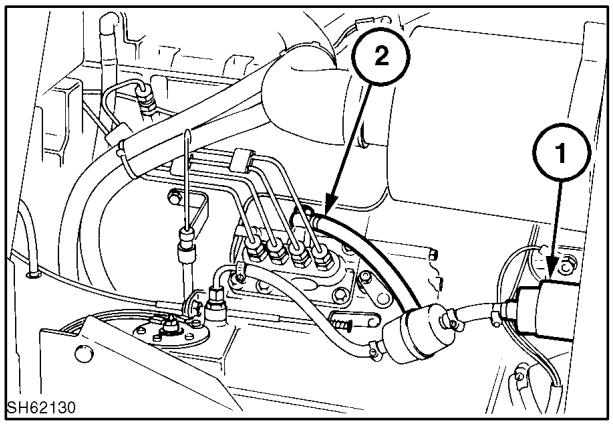

146

Put the Service/Run switch, 1, in the SERVICE position. Remove the fuel line, 2, Figure 148, at the injector pump.

Turn the ignition switch to the RUN position and allow the electric fuel pump to pump fuel until a full stream of fuel (no air) flows at 2, Figure 148. Reinstall the fuel line. Now start the engine and allow the engine to run until the injection pump self bleeds the air from the pump.

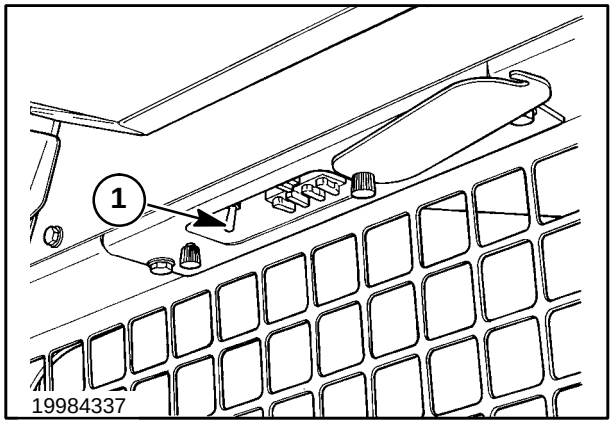

147

https://truckmanualshub.com/

FUEL SYSTEM TESTING

ELECTRIC FUEL PUMP

STEP	PRETEST INSTRUCTIONS	TEST	RESULT	PROBABLE CAUSE AND CORRECTION
1	Loader on level with parking brake engaged, key “OFF” position	Fuel level in tank	NO YES	Add fuel and bleed system Go to next step
2	Key “ON” position	Fuel pump operating	NO YES	Check power supply (5-amp fuse in cab panel) If OK, replace pump Go to next step
3	Key “ON” position	Fuel pump operating but not pumping fuel	NO YES	Check line to tank, air leak, fuel level, tank pickup tube. If OK, replace pump Go to next step
4	Key “ON” position	Fuel pump operating and pumping fuel	NO YES	Replace pump Remove fuel line at injector pump and bleed system, if OK go to next step
5	Key “ON” position	Fuel pump operating and pumping fuel	YES	Check fuel shutoff solenoid for operation

NOTE: *Always check fuel level in tank. Always check fuel filters.*

FUEL SHUTOFF SOLENOID

STEP	PRETEST INSTRUCTIONS	TEST	RESULT	PROBABLE CAUSE AND CORRECTION
1	Loader on level with parking brake engaged, key “ON” position, service “RUN” switch in “RUN” position	Battery voltage to solenoid	NO YES	Check power wire from EIC to solenoid for open, if OK go to next step Replace solenoid
2	Key “ON” position, service “RUN” switch in “SERVICE” position	Battery voltage to solenoid	NO YES	Check power wire from service run switch to fuel solenoid, if OK go to next step Replace solenoid
3	Key “ON” position, service “RUN” switch in “RUN” position	Check EIC board operation	NO YES	Check power to EIC board Replace EIC board

https://truckmanualshub.com/

FUEL TANK SENDING UNIT(Fuel level)

STEP	PRETEST INSTRUCTIONS	TEST	RESULT	PROBABLE CAUSE AND CORRECTION
1	Loader on level with parking brake engaged, key “ON” position	EIC gauge and sender operation	NO (bars light up)	Check wires from sender to EIC board, if OK, replace EIC board
		jumper wire from one terminal to other at sender	YES (bars light up)	Replace sender

https://truckmanualshub.com/

FUEL FLOW

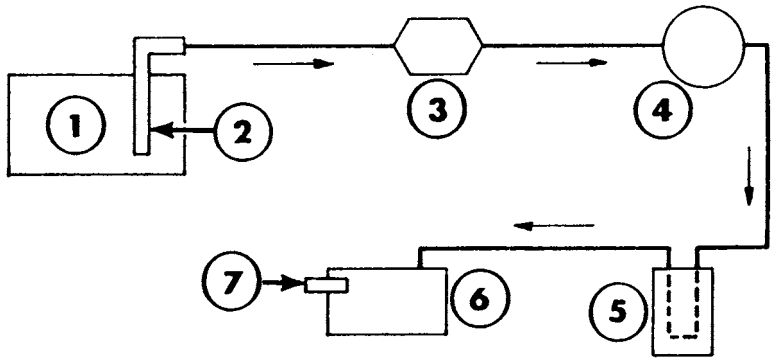

19992606

148

1 Fuel tank
2 Tank pick-up
3 In-line fuel filter
4 Electric fuel pump
5 Filter (water trap)
6 Injection pump
7 Fuel shut-off solenoid

FUEL SYSTEM ELECTRICAL DIAGRAM

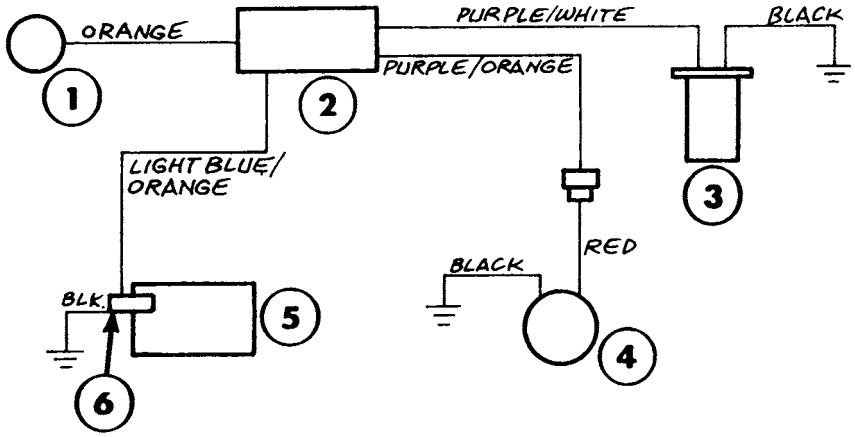

19992607

149

1 Key switch
2 EIC board
3 Fuel level sender
4 Electric fuel pump
5 Injector pump
6 Fuel shut-off solenoid

https://truckmanualshub.com/

FUEL SYSTEM COMPONENTS

Op. 10 216 10

FUEL TANK

Remove and Replace

1. Raise the boom, extend the boom lock pins, 1, and lower the boom down on the lock pins.
2. Stop the engine, turn the ignition key to the “ON” position and operate the boom and bucket control pedals to relieve pressure in the cylinders, turn the key “OFF.”
3. Jack and securely support the loader up off the ground approximately 20″ (508 mm).
4. Remove the engine area belly pan, 2.
5. Remove the left fender, 3.

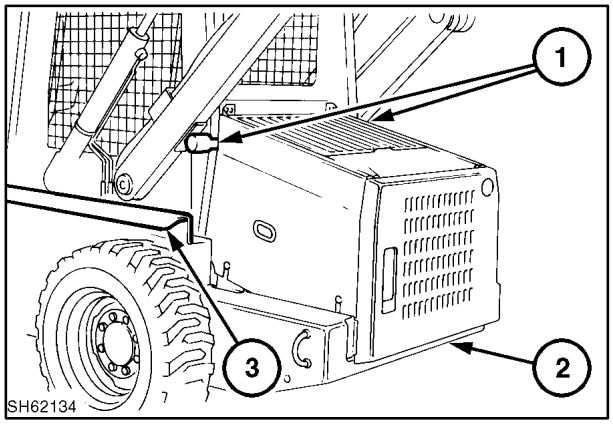

150

6. Open rear door, 1, raise the top shield, 2, and remove the left side shield.
7. Remove the fill neck retaining hose clamp or screw at the tank and remove fill neck, 3.
8. Unhook the suction fuel line, 4, and return fuel line, 5.
9. Remove the wires from the fuel level sender, 6.
10. Remove the lower engine fuse panel support hardware, 7, and move the panel up.

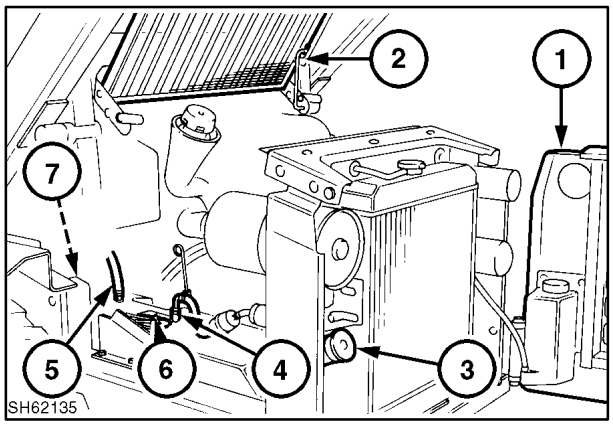

151

11. Remove the connecting hose, 1, and drain the fuel tank into a clean container.
12. Remove the front, 2, and rear, 3, tank support hardware.
13. Remove the fuel tank from the bottom of the engine compartment.

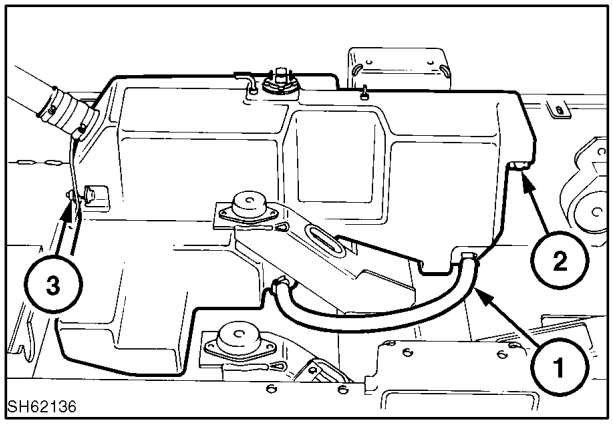

152

https://truckmanualshub.com/

Op. 55 410 80

FUEL LEVEL SENDER

1. Support the boom on the boom lock pins.
2. Open the rear door and remove the left engine side shield.
3. Unhook the wires from the sender, 1.
4. Remove the sender retaining screws, 2, and remove the sender, 3, assembly from the tank.

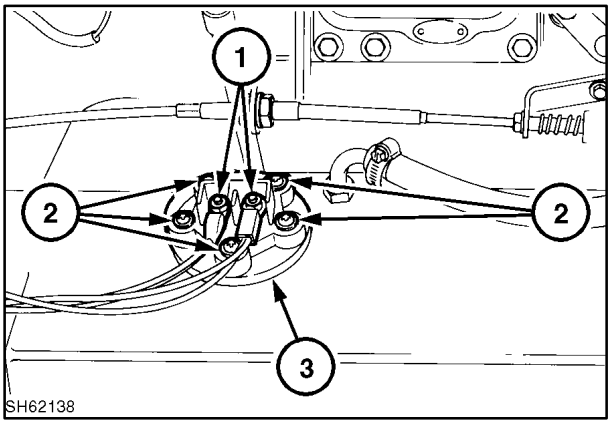

153

Op. 10 214 12

FUEL TANK PICKUP TUBE

1. Support the boom on the boom lock pins.
2. Open the rear door and remove the left engine side shield.
3. Remove the suction line from the pickup tube, 1.
4. Unthread the tube, 2, from the tank.

   Upon reinstallation of the tube, seal the threads with thread sealer.

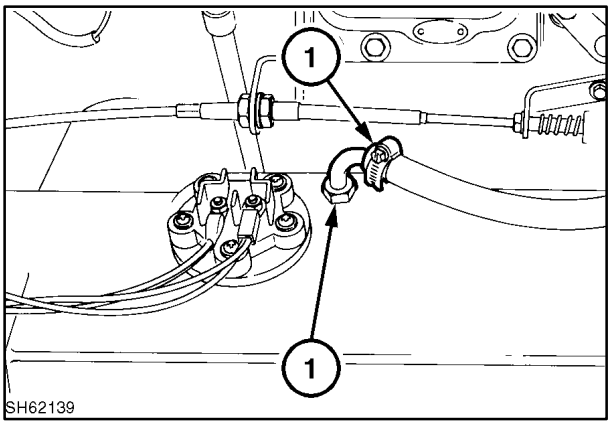

154

Op. 10 210 21

ELECTRIC FUEL PUMP

1. Support the boom on the boom lock pins.
2. Open the rear door and remove the left engine side shield.
3. Remove the hose clamps, 1, from the pump and hoses.
4. Remove the pump support hardware, 2, ground wire, and unplug the power wire.
5. Upon reinstallation of the pump, make sure the pump wires are placed to prevent damage. Make sure the ground wire is making good contact.

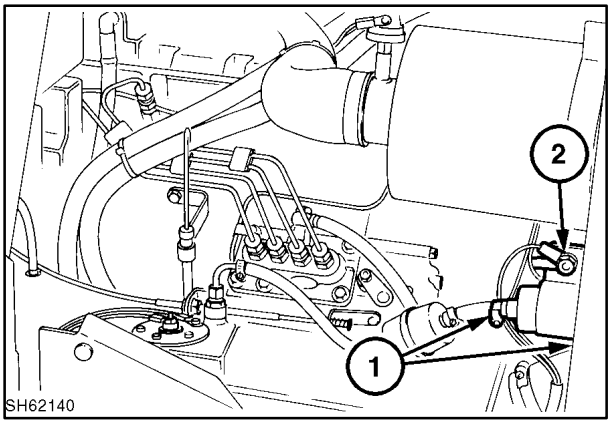

155

https://truckmanualshub.com/

Op. 10 230 24

GOVERNOR

Construction/Function
A mechanical all-speed governor is used. It is housed in the gear case.

A flyweight assembly is mounted on the camshaft. The movement of the flyweight is transmitted to the injection pump control rack by way of the slider, control lever, and link, 1. A spring which is hooked to the arm, 3, and tension lever, 4, regulates the movement of the flyweight.

By changing the set angle of the governor lever, tension on this spring is changed. Thus, the engine speed can be regulated by the governor lever.

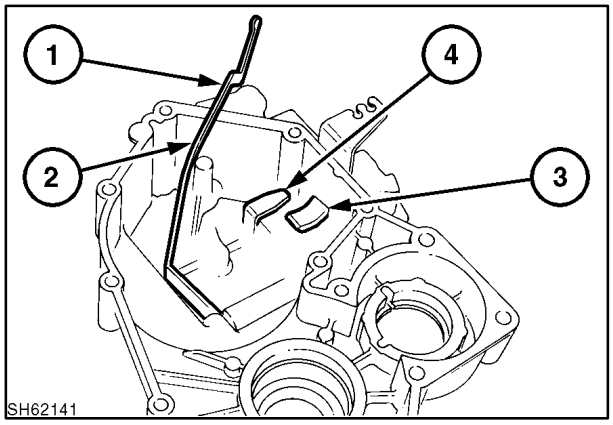

156

Maximum Speed Set Bolt
The set bolt is mounted on the cylinder block. This bolt limits the movement of the arm and has been adjusted and sealed at the factory.

Maximum Fuel and Start Spring
These are built into the cylinder block to regulate fuel injection at high speed. Regulation of fuel injection in the middle speed range is by torque spring to realize higher torque.

A start spring, 2, is placed between the gear case and link. This spring automatically functions to increase fuel during the start mode.

An idling spring at the gear case stabilizes engine idling speed.

The maximum fuel has been adjusted at the factory and sealed.

GOVERNOR OPERATION

As the engine speed increases, the throttle arm, 1, contacts the fuel screw adjuster at contact point A, and the high-speed idle stop screw at B. During the engine speed increase, tension is placed on the governor spring, 2.

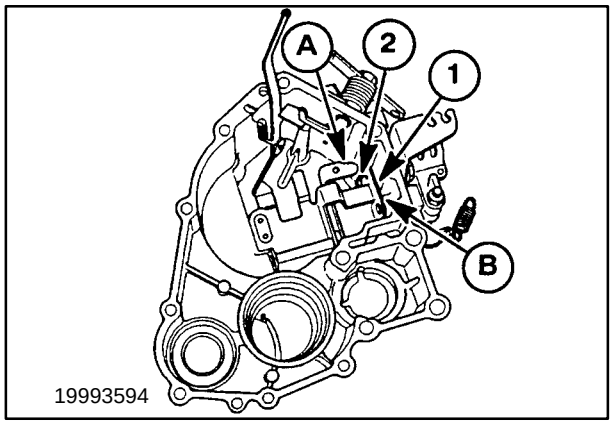

157

https://truckmanualshub.com/

As the engine speed increases, the four governor weights, 1, pivot outward and push on the slider cone, 2. The weights and slider cone are located on the end of the camshaft.

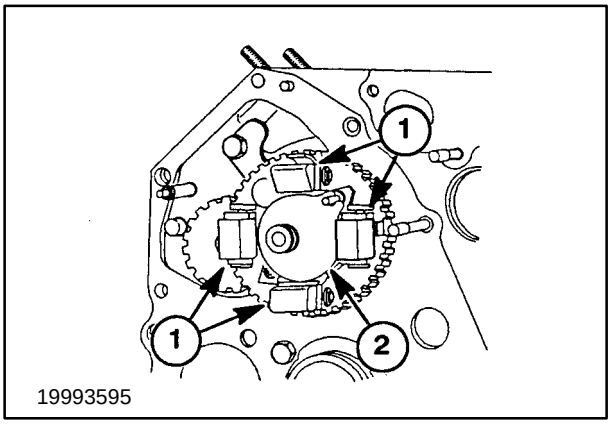

158

The slider cone, 2, Figure 160, contacts the governor linkage arm, 1, at contact pad, C. As the cone moves forward, it pushes the linkage arm, 1, forward, which is connected to the injection pump rack assembly. When the injection pump rack moves forward, the fuel delivery is decreased and the engine speed decreases.

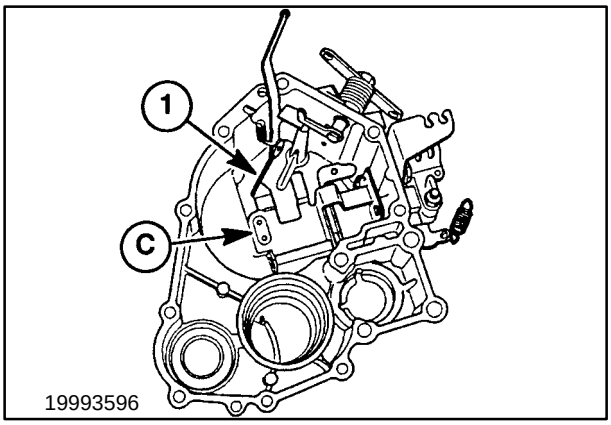

159

As the engine speed decreases, the governor weights, 1, pivot inward allowing the slider cone, 2, to move rearward.

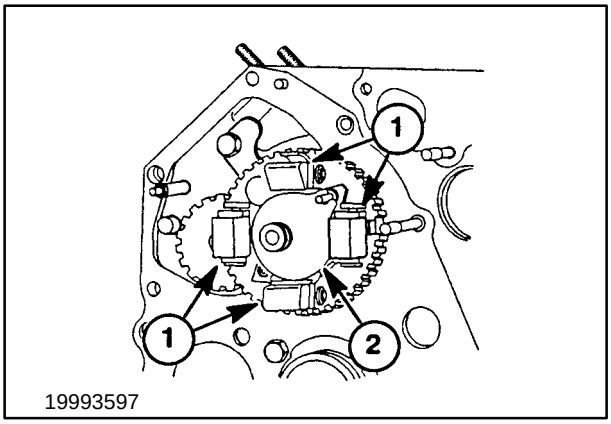

160

https://truckmanualshub.com/

As the slider cone, 2, Figure 162, moves rearward, the governor linkage arm, 1, allows the fuel injection pump rack to move rearward to the full fuel position and the engine speed increases.

Engine speed depends upon several factors: the throttle setting determined by governor spring tension; the pressure exerted by the slider cone on the governor linkage; and, positioning of the injection pump rack.

All the governor linkage parts are located inside the engine timing gear cover. To inspect or replace any of the governor linkage parts, the timing gear case and injection pump must be removed from the engine.

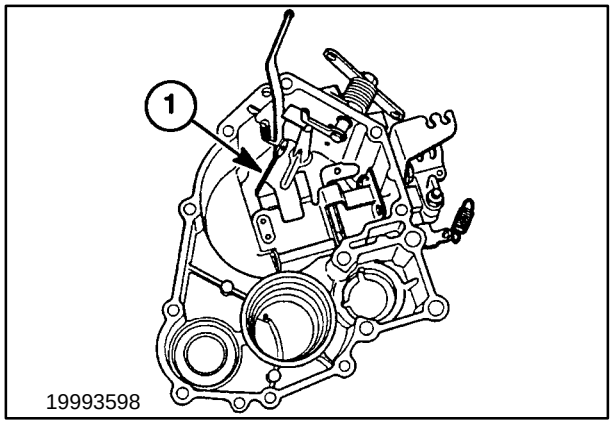

161

Op. 10 218 34

NOZZLE AND HOLDER

Specification

Nozzle type: Throttle type

Needle valve diameter: 0.16″ (4 mm)

Pintle diameter: 0.04″ (1 mm)

Valve setting pressure: 155 - 165 kg/cm^2 (153 - 163 atm)

Spraying angle: 4°

Construction/Function

The nozzle has been machined to inject fuel which is pressure-fed from the injection pump to the combustion chamber. Fuel is pressure-fed from the oil hole of the nozzle holder to the nozzle body and sprayed from the nozzle compressing the spring when the pressure exceeds the specified value. Some fuel lubricates and cools the nozzle and nozzle body and returns via the return pipe.

Throttle-Type Nozzle

1 Valve closed
2 Valve open
3 Full opening (main jet)

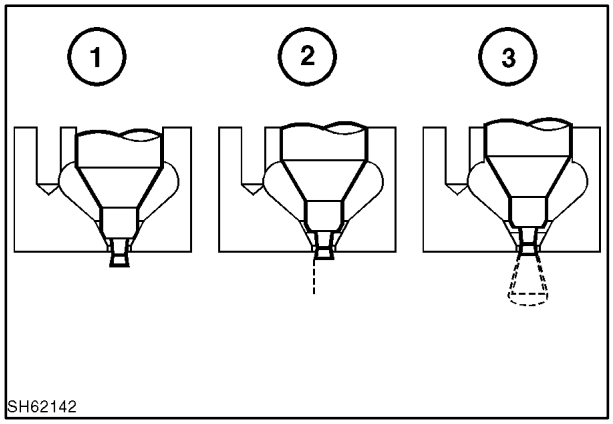

162

https://truckmanualshub.com/

Disassembly/Inspection

1. Place the nozzle holder (body) in a vise and turn the nozzle nut to disassemble.

NOTE: *Care should be taken so the needle valves do not fall when the nozzle is removed.*

2. Wash the nozzle body and needle valve and inspect the nozzle for seizure, sticking, and fuel leakage on the seat surface. If fuel leakage is detected, replace the nozzle.
3. Inspect the upper and lower contact surfaces of the distance piece and correct so that positive contact can be obtained.
4. Check the nozzle needle valve-contact surface on the push rod for wear and spring seat for cracks.

Reassembly/Adjustment

1. Before fitting a new nozzle assembly, soak it in heated light oil 120° F -140° F (50° C - 60° C) to remove the anticorrosive agent from the nozzle. Slide the body on the needle valve so they slide smoothly.
2. Turn the nozzle body upside down, fit the shim, spring, rod, spacer and nozzle in this order, and tighten with a nozzle nut.

Throttle-Type Nozzle

1 Gasket
2 Nozzle nut
3 Nozzle
4 Spacer
5 Rod
6 Spring
7 Shims
8 Body tighten torque 22 ft. lbs. - 36 ft. lbs. (30 N·m - 49 N·m)
9 Nut tighten torque 18 ft. lbs. - 22 ft. lbs. (24 N·m - 30 N·m).

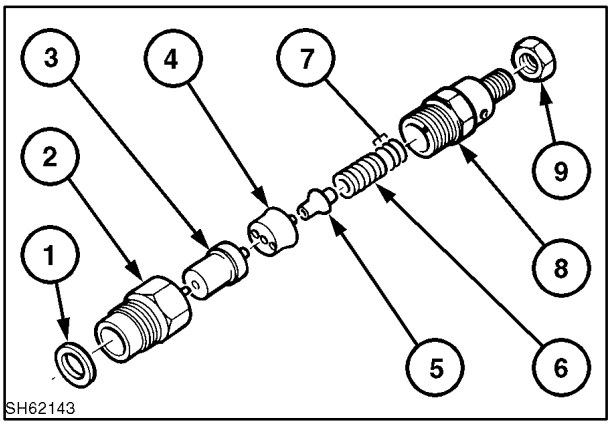

163

https://truckmanualshub.com/

3. After reassembly, inspect the injection pressure of the nozzle.

   Adjust the pressure with adjusting shims, using a nozzle tester so the injection starts at 150 kg/cm^2 (throttle type) and 210 kg/cm^2 (hole type). (The pressure increases or decreases about 10 kg/cm^2, 142 PSI, 9.7 atm with a shim of 0.1 mm thick).

4. Spray Condition
   - Fuel drops should not be mixed in the spray pattern.
   - Fuel should be sprayed in conical shape with respect to the nozzle axis.
   - Be sure the fuel is sprayed in a circular shape when tested.
   - Hold the pressure at 130 kg/cm^2, lower by 20 kg/cm^2, 20 atm than specified (150 kg/cm^2) and check that no test oil drops from the nozzle tip.

FUEL INJECTION PUMP

If trouble has been traced to this pump, disassembly, inspection, assembly, and testing/setting must only be carried out by fuel equipment specialists.

AIR CLEANER

Construction/Function

The cyclonic air cleaner houses a paper element which removes dirt or dust from air drawn in.

Inspection/Replacement

1. When the EIC signals to service the air cleaner, take out the outer element and clean it by blowing compressed air (pressure lower than 100 PSI).

   Do not remove the inner safety element.

2. When operating the machine in a dusty environment, increase service frequency.
3. After cleaning the element, put a light inside the element and check it for cracks, holes, or wear.

   If damage is found or the gasket is broken, replace the element.

4. When the inner safety element is dirty, do not clean. Replace the element.

Op. 10 236 08

FUEL INJECTION TIMING

Engine Model	Degrees Crank BTDC			
	X	Y	Z	Injection Timing
N844T	21	20	22	20 - 22
N844	22	21	23	21 - 23

https://truckmanualshub.com/

1. Pull out the delivery valve, 1, (IN), and reinstall the spring, 2, and delivery valve holder, 3.

NOTE: *When reassembling the delivery holder, adjust the location of the delivery valve (OUT) to the correct position using a wire, 4.*

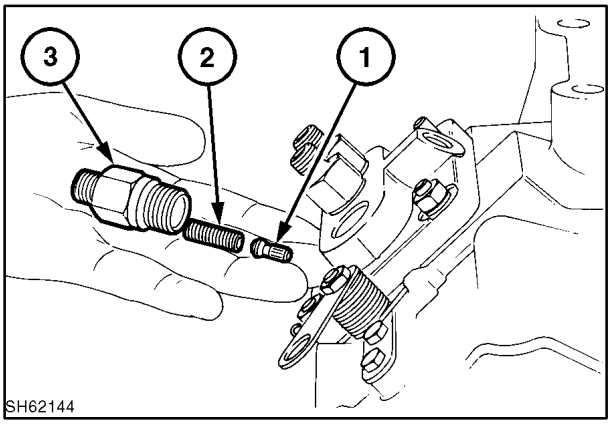

164

2. Move the governor control lever to “Maximum Fuel” position and send fuel with the No. 1 piston at around “X” degrees BTDC in its compression stroke. At this time, fuel flows from the delivery holder.

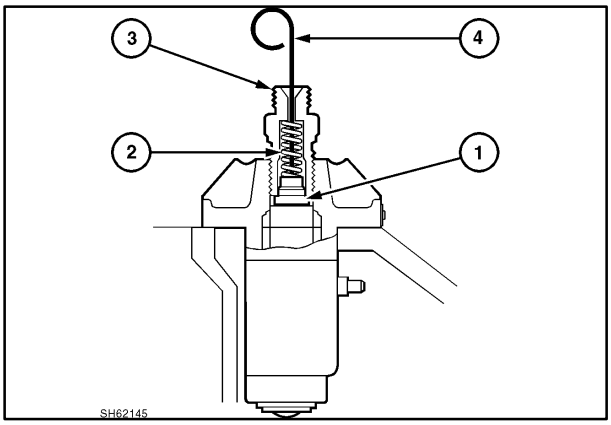

165

N844, N844T

Crankshaft Angle (BTDC)	Position
13	0.0594″ (1.510 mm)
14	0.0689″ (1.749 mm)
15	0.0789″ (2.005 mm)
16	0.0897″ (2.278 mm)
17	0.1011″ (2.569 mm)
18	0.1132″ (2.875 mm)
19	0.1259″ (3.199 mm)
20	0.1393″ (3.539 mm)
21	0.1533″ (3.895 mm)
22	0.1680″ (4.267 mm)
23	0.1833″ (4.655 mm)
24	0.1991″ (5.058 mm)
25	0.2156″ (5.477 mm)
26	0.2328″ (5.912 mm)

3. Slowly turn the crankshaft clockwise until flowing fuel from the delivery holder is stopped. Check the piston position at this point. If the position is later than “Y” BTDC, use a thinner shim. If the position exceeds “Z” BTDC, use a thicker shim.

   Changing the shim thickness by 0.004″ (0.1 mm) will change the timing approximately one degree. Adding shims decreases the angle, while subtracting shims increases the angle.

NOTE: *When the shim is not needed, assemble by coating, using liquid sealant.*

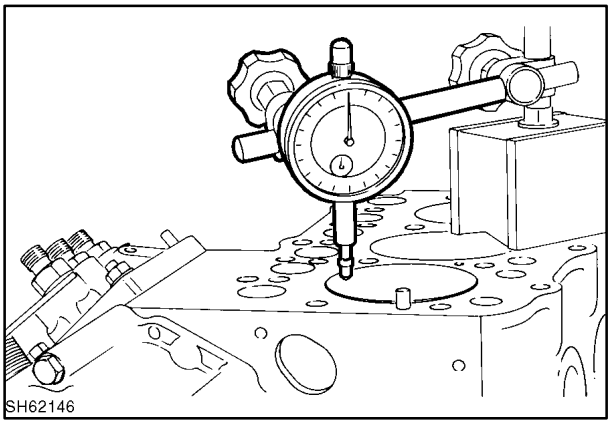

166

https://truckmanualshub.com/

4. Verify that the timing mark on the crankshaft pulley is in line with the “TOP” mark on the timing scale. If the mark on the crankshaft pulley is not in line with the “TOP” mark, verify piston top-dead center with a dial indicator. If the pulley mark is slightly off, re-mark the pulley and proceed.

NOTE: *Color the timing mark on the crankshaft pulley and appropriate marks on the timing scale to increase visibility.*

5. Reinstall the valve spring, keepers, rocker arm assembly, and valve cover.
6. Shut off the fuel supply to the injection pump at the fuel filter.

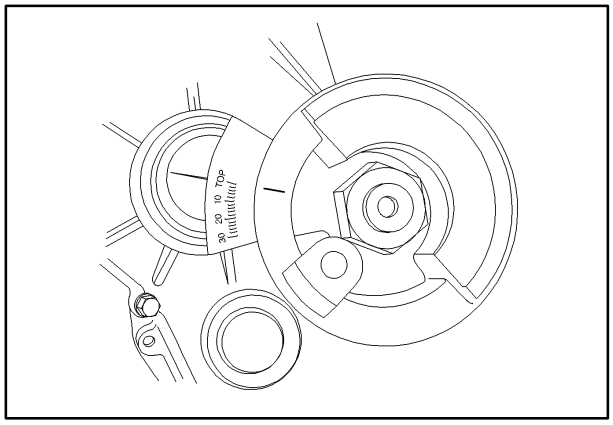

167

7. Remove the No. 1 injection line from the No. 1 injector, 1.
8. Remove the lock screw, 2, and remove the injector locking plate, 3.

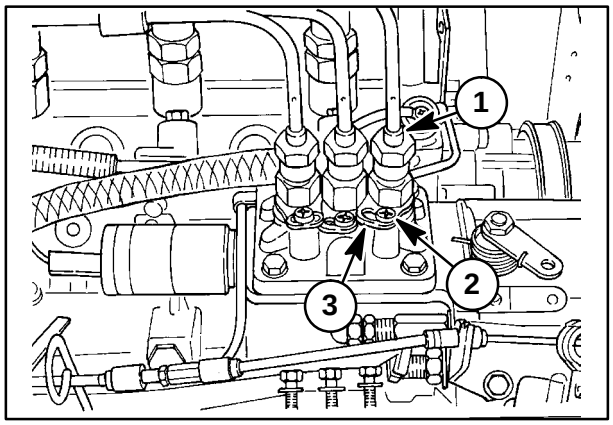

168

9. Remove the delivery valve piston, 1, from the No. 1 delivery valve.

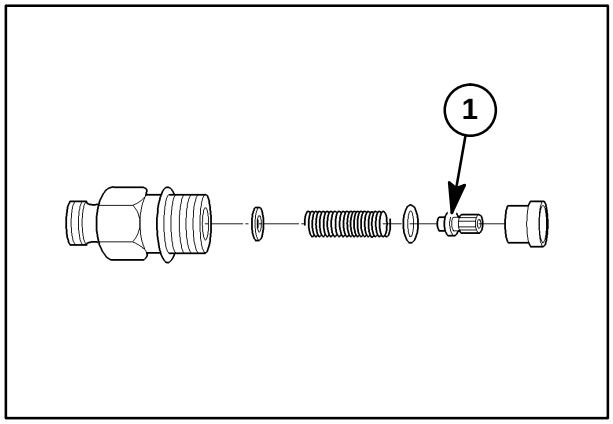

169

https://truckmanualshub.com/

10. Reinstall the spring and holder, 1, into the injection pump and tighten securely.

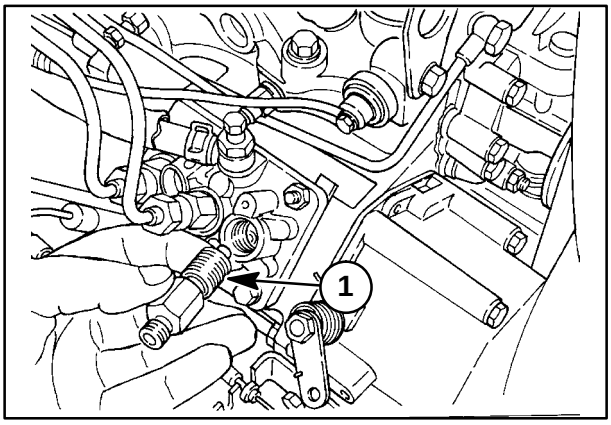

170

11. Fabricate a spill tube, 1, from a discarded injection line and install the tube on the No. 1 port on the injection pump.
12. Remove the fuel shut-off solenoid from the injection pump.

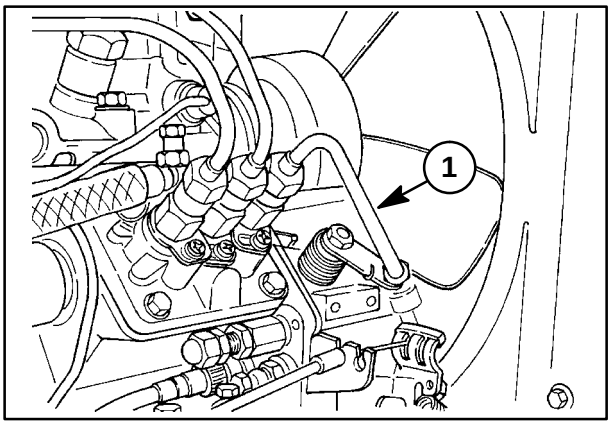

171

13. Rotate the crankshaft counterclockwise (viewed from the front of the engine) approximately 40°.
14. Turn on the fuel supply to the injection pump. Fuel should flow out of the spill tube on the No. 1 cylinder port.

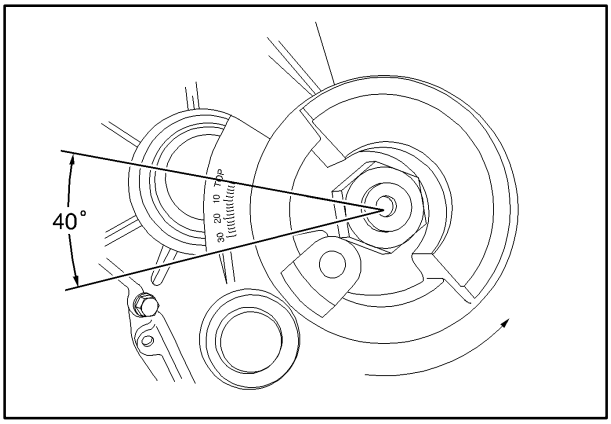

172

https://truckmanualshub.com/

15. Rotate the crankshaft clockwise. When the timing mark on the crankshaft pulley, 1, is in line with the 21° (N844T) or 22° (N844) mark on the scale, 2, fuel should stop flowing from the spill tube.
16. If fuel does not stop flowing at the appropriate timing mark, the injection pump timing must be adjusted by adding or removing shims located between the injection pump and the engine block.
17. Adding shims will retard the pump timing and removing shims will advance the pump timing.

NOTE: *A shim thickness of 0.1 mm (0.004 in.) will change the pump timing by approximately 1 °.*

18. Assemble the components that were removed from the engine and fuel system.

NOTE: *Delivery holder tightening torques: 29 - 33 ft. lbs. (39 - 45 N·m)*

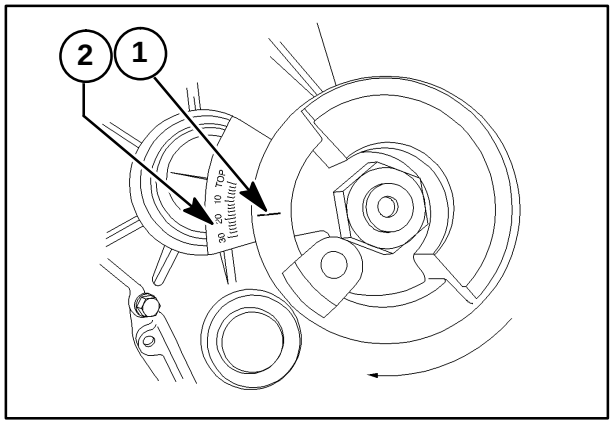

173

https://truckmanualshub.com/

TURBOCHARGER - LS170 N844T ENGINE

The LS170 skid steer is equipped with the N844T turbocharged engine.

Specifications

ITEM	DESCRIPTION	SPECIFICATIONS
Turbocharger	Lubrication	Pressure-fed from external source
Turbine	Axial-flow turbine max. continuous permissible speed (RPM)	180000
Blower	Centrifugal blower dry weight lbs. (kg)	7.0 lbs. (3.2 kg)

TROUBLESHOOTING

TURBOCHARGER IS SLUGGISH IN PICKING UP SPEED

POSSIBLE CAUSE	CORRECTION
The sealed part of turbine wheel is heavily carboned, causing the rotor to offer much resistance to turning.	Change oil (engine oil) Disassemble and clean
Incomplete fuel combustion in the engine, due to a faulty condition in the fuel injection system.	Disassemble and clean Check the injection system for cause, and repair
Lack of lubrication during cold weather startup	Warm up below 1500 RPM for three minutes on startup and allow to run at low idle for one minute before shutdown

EXCESSIVE OR ABNORMAL VIBRATION

POSSIBLE CAUSE	CORRECTION
A loose pipe connection at the turbine or blower side or at the bearing	Tighten and repair
Bearing failure causing the rotor to run rough	Disassemble and repair
Turbine wheel or blower wheel has broken vanes caused by entry of metal or solid objects	Disassemble and repair damaged parts
Loss of dynamic balance in the rotor	Disassemble and repair damaged parts

https://truckmanualshub.com/

DIRTY EXHAUST SMOKE

POSSIBLE CAUSE	CORRECTION
Not enough intake air	A clogged element in the air cleaner, clean or replace element
	Closed air intake inlet, open inlet
	Air leakage from a connection, check and repair
The turbocharger is not running	Gum or sludge formation in the turbine-side seal, causing the turbine to resist turning, Check the oil quality and change Disassemble and clean
	Seized bearings, disassemble and clean Disassemble and repair
	Oil temperature too high, change engine oil
	Dynamic imbalance in the rotor, clean and/or replace rotor parts
	Turbine wheel or blower wheel rubbing or broken, disassemble and repair(remove foreign matter, if any, and check air cleaner and engine to locate the cause).
Not enough gas pressure	Gas leakage through a connection on upstream side of turbine, check and repair A large constriction in the exhaust line, due to distorted gas passages, check and repair

WHITE EXHAUST SMOKE

POSSIBLE CAUSE	CORRECTION
Oil return pipe is clogged or distorted, causing the lube oil to leak into turbine and blower	Repair or replace the pipe
Seal rings are abnormally worn or broken due to worn-down bearings	Disassemble and repair

ABNORMALLY HIGH OIL CONSUMPTION

POSSIBLE CAUSE	CORRECTION
Seal rings are abnormally worn or broken due to worn-down bearings	Disassemble and repair

ENGINE LACKS OUTPUT POWER

POSSIBLE CAUSE	CORRECTION
Gas leakage in the exhaust line	Check and repair
Air leakage in the blower outlet side, resulting in reduced boost pressure	Check and repair
A clogged element in the air cleaner	Clean or replace
The turbocharger is internally fouled with foreign matter or its running parts are damaged	Disassemble and repair or replace damaged parts

https://truckmanualshub.com/

ABNORMAL RUNNING NOISE

POSSIBLE CAUSE	CORRECTION
Restrictions in exhaust gas passage, particularly due to the nozzle ring approaching a clogged condition	Disassemble and clean
Restrictions in the air outlet side of the blower, causing the air to surge at the blower wheel when the engine accelerates	Disassemble and clean
The casing is being rubbed by turbine wheel or blower wheel	Disassemble and repair or replace damaged parts

Turbocharger Lubrication

The turbocharger used on the Lx665 diesel engine may not receive adequate lubrication on cool/cold weather (below 5°C, 40°F) start-up, leading to turbocharger bearing failure.

The following procedure must be used to ensure adequate lubrication oil is supplied to the turbocharger bearings before high-speed engine operation:

1. Set the engine throttle at 1/3 speed.
2. Turn the ignition switch and allow the automatic glow plug timer to preheat the engine until the EIC “beep” is heard.
3. Start the engine, but DO NOT OPERATE ABOVE 1,500 RPM for three minutes to allow for adequate oil flow at the turbocharger.

After full load operation, allow the engine to run at low idle for one minute before engine shutdown.

Op. 10 250 30

TURBOCHARGER REMOVAL

1. To remove the turbocharger, first remove the muffler from the turbo adapter assembly at 1.

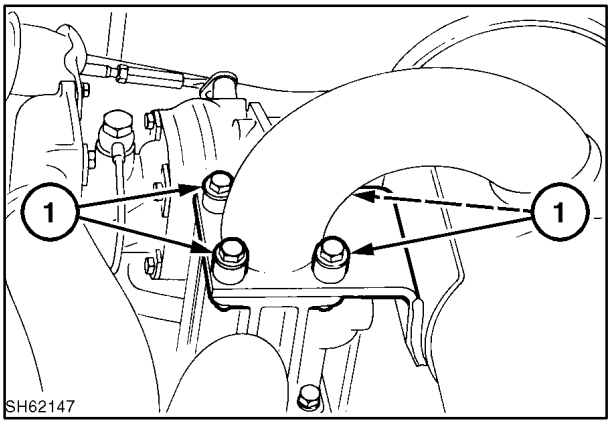

174

https://truckmanualshub.com/

2. Remove the turbocharger oil pressure line, 1, at the block and at the turbo housing.

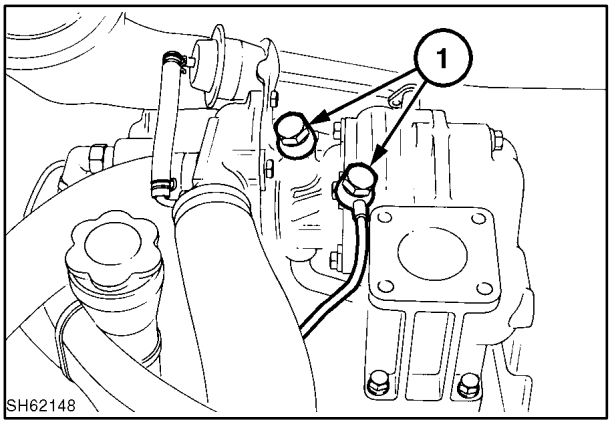

175

3. Remove the turbocharger oil return line, 1, at the top hose clamp, 2, and from the turbo assembly at 3.

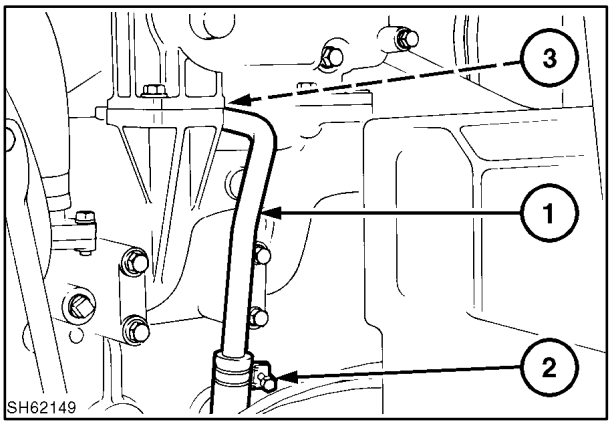

176

4. Remove the turbocharger assembly and adapter from the exhaust manifold, 1, and support, 2.

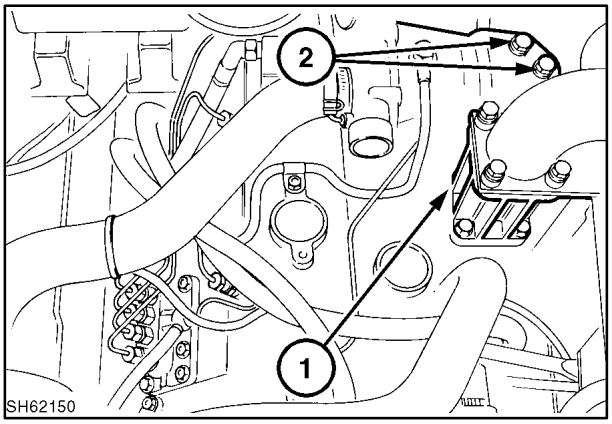

177

https://truckmanualshub.com/

Inspection Before Disassembly

Visually check the running clearances of the turbine and blower wheels for evidence of contact between the vanes and casing. Spin the rotor by hand to see if it rotates smoothly.

Check for turbine fin and housing clearance, intake and exhaust.

Check to ensure the rotor and shaft turns smoothly with no bearing roughness or binding.

Using a dial indicator, measure the end play movement of the turbine and shaft,1, by placing a dial indicator on the end of the shaft at 2.

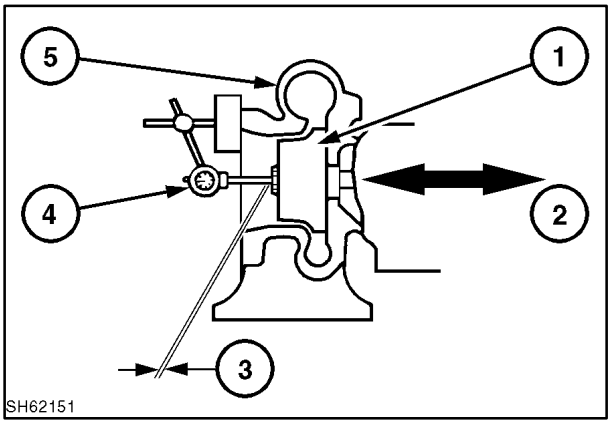

178

End Play Movement

Standard: 0.001″ - 0.002″ (0.03 mm - 0.06 mm)

Allowable Limit: 0.0035″ (0.09 mm)

Check the radial movement in the turbine shaft by placing a dial indicator through the oil outlet in the turbo housing at, 1. Move the right and left side of the turbine shaft toward the radial, 2, simultaneously and take a reading.

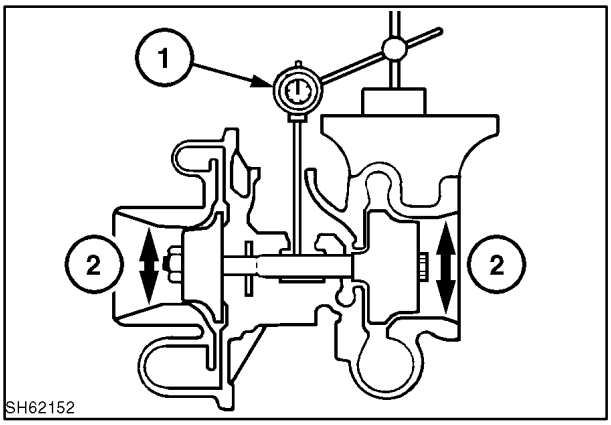

179

Radial Movement

Standard: 0.003″ - 0.005″ (0.08 mm - 0.13 mm)

Allowable Limit: 0.0067″ (0.17 mm)

Disassembly

NOTE: *Before separating the casings (turbine, bearing and blower), be sure to mark across each component and seam so they will be joined together in proper sequence.*

1. Remove the waste gate controller assembly, 1. This can be accomplished with compressed air of about 14 PSI (1 kgf/cm) applied to the control air inlet at 2.

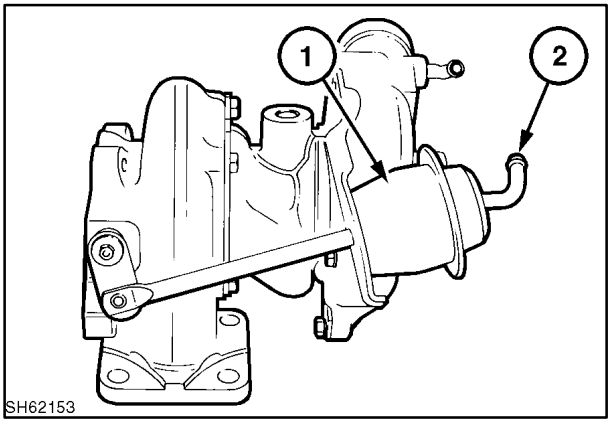

180

https://truckmanualshub.com/

2. Separate the blower housing, 1.

NOTE: *Remove the housing carefully and be sure not to damage the blower vanes.*

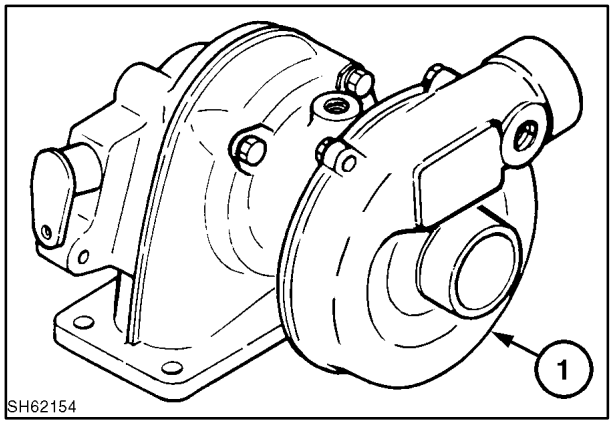

181

3. Remove the blower wheel, 1, by removing the shaft end nut, 2.

NOTE: *The shaft end nut has left-hand screw threads; loosen it by turning clockwise.*

4. Separate the turbine housing, 3.

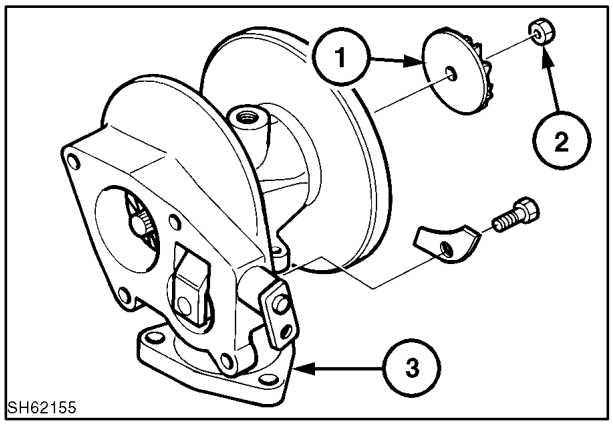

182

5. Pull out the turbine shaft, 1.

NOTE: *If the shaft will not come off easily, you may drive on the shaft end with a wooden mallet; be sure to lightly tap on the end of the shaft.*

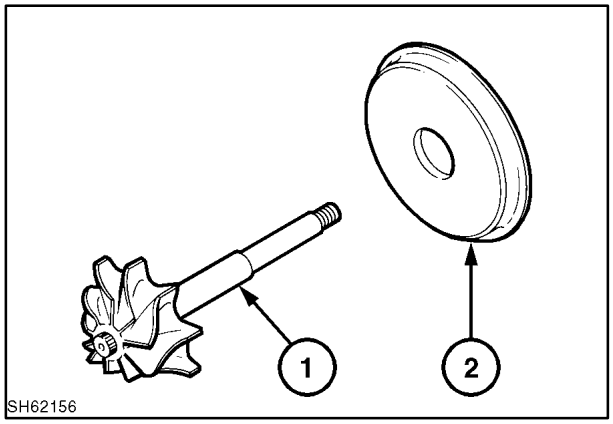

183

https://truckmanualshub.com/

6. Remove the seal plate, 1.

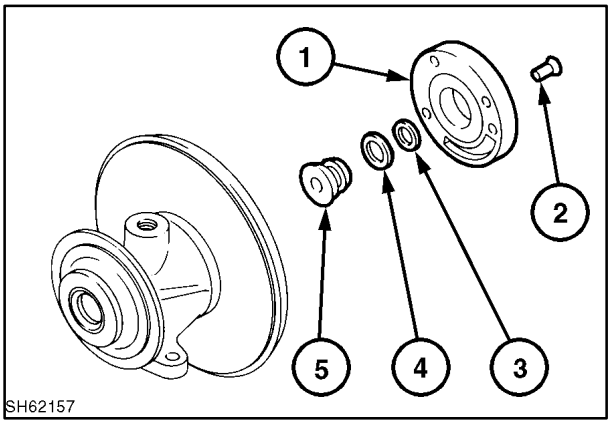

184

7. Remove the thrust bearing, 1, and bushing, 2.
8. Remove the floating bearings, 3.

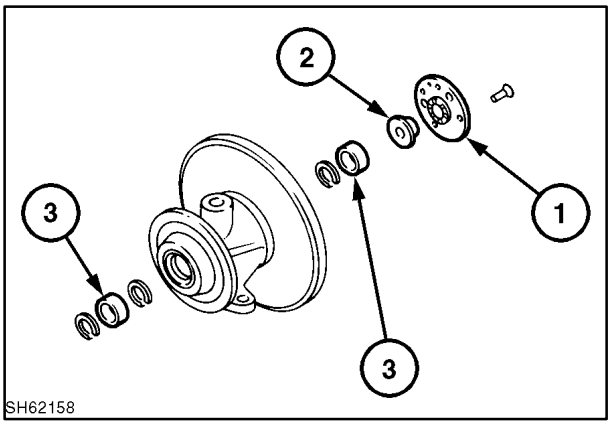

185

9. Remove the seal rings, 1, from the turbine shaft, 2, and oil slinger, 3.

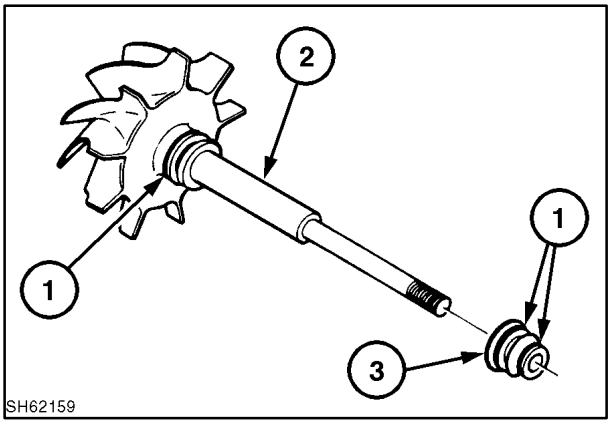

186

https://truckmanualshub.com/

Inspection

Before washing the disassembled parts clean, visually inspect each part thoroughly:

1. For carbon deposit.
   - Turbine shaft, turbine-side seal ring , and back of turbine wheel, 1.
   - Bearing casing, mating face of shield plate, and bearing casing bore, 2.

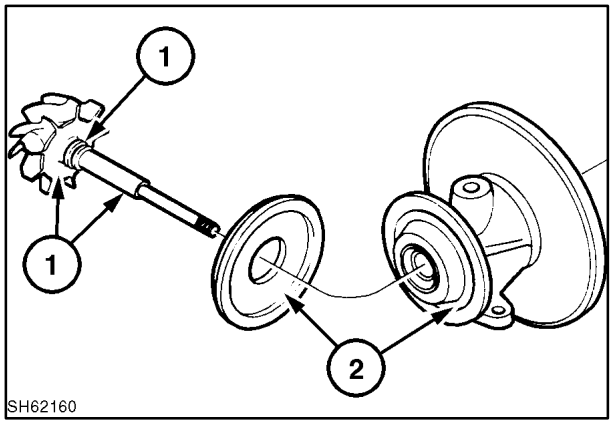

187

2. For effects of lubrication (wear, burning, sign of seizure).
   - Shaft journal, thrust bushing, and oil slinger, 1.
   - Floating bearings and thrust bearing, 2.
   - Those portions of bearing casing bore holding the floating bearings, 3.

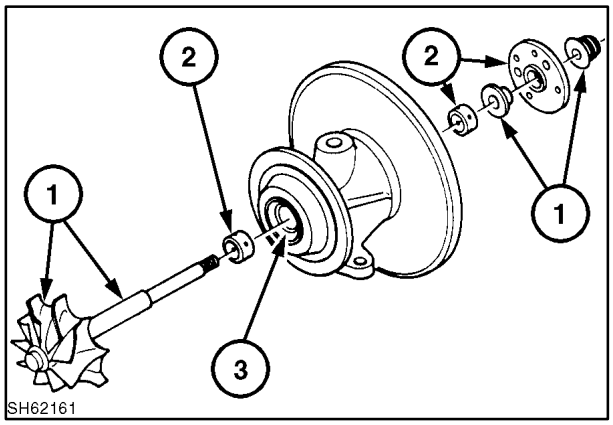

188

3. For oil leakage.
   - Inner walls of turbine casing.
   - Outer surface of bearing casing and mating face of shield plate.
   - Seal-ring part of rotor shaft at turbine side, and back of turbine wheel.
   - Back of blower wheel.
   - Inner walls off blower casing.
   - Seal plate surface and hole (for admitting seal rings).

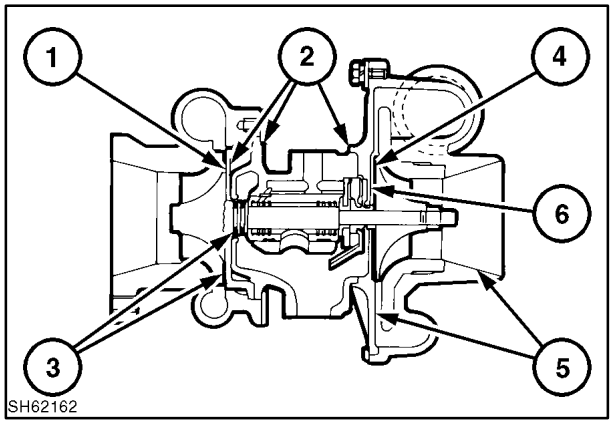

189

https://truckmanualshub.com/

Turbine Shaft

Item	Standard Value	Service Limit
1. Journal OD	0.3146″-0.3149″ (7.99-8.00 mm)	0.3142″ (7.98 mm)
2. Groove width in turbine-side seal ring	0.0492″-0.0504″ (1.25-1.28 mm)	0.0508″ (1.29 mm)
3. Sealing groove width, blower side	0.0480″-0.0484″ (1.22-1.23 mm)	0.0516″ (1.31 mm)
4. Groove width in blower-side seal ring	0.0402″-0.0405″ (1.02-1.03 mm)	0.0437″ (1.11 mm)
5. Shaft deflection	0.0″-0.0004″ (0.0-0.01 mm)	0.00043″ (0.011 mm)

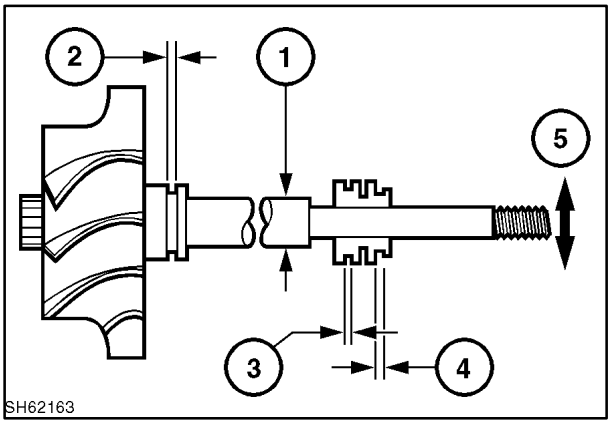

190

Bearings and Associated Parts

Item	Standard Value	Service Limit
1. Floating bearing ID	0.315″-0.316″ (8.01-8.03 mm)	0.3165″ (8.04 mm)
2. Floating bearing OD	0.485″-0.4854″ (12.32-12.33 mm)	0.4846″ (12.31 mm)
3. Bearing casing boredia-meter	0.488″-0.4886″ (12.40-12.41 mm)	0.48898″ (12.42 mm)

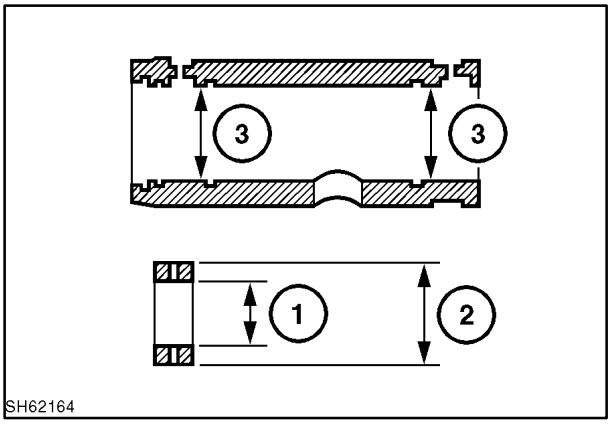

191

Thrust Bearing

Item	Standard Value	Service Limit
1. Thrust bearing width	0.157″-0.1578″ (3.99-4.01 mm)	0.1567″ (3.98 mm)
2. Groove width in thrust bushing	0.159″-0.1594″ (4.04-4.05 mm)	0.160″ (4.07 mm)

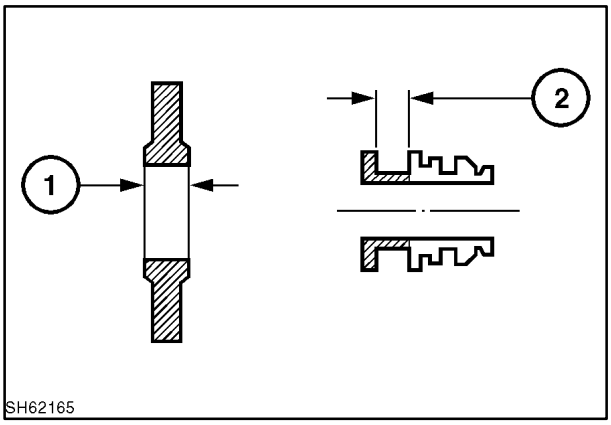

192

https://truckmanualshub.com/

Holes for Admitting Seal Ring

Item	Standard Value	Service Limit
1. Turbine-side hole diameter (bearing casing)	0.590″-0.591″ (15.00-15.02 mm)	0.5925″ (15.05 mm)
2. Blower-side hole diameter (in seal plate)	0.488″-0.4889″ (12.40-12.42 mm)	0.4901″ (12.45 mm)
3. Blower-side hole diameter (in seal plate)	0.3937″-0.3945″ (10.00-10.02 mm)	0.3957″ (10.05 mm)

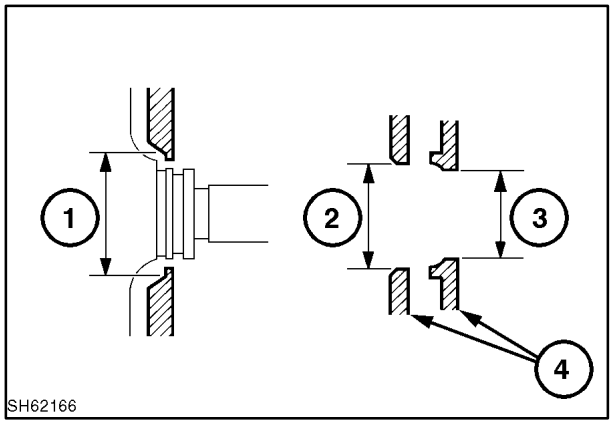

193

Turbocharger Reassembly

Installing the Floating Bearings
Fit the R-shaped round snap ring to the bore in bearing casing, and then the floating bearing.

NOTE: *When fitting the R-shaped snap ring, be sure to locate its ring gap in the manner shown.*

Bring the rounded-edge side of the snap ring to the bearing side.

Oil the bearing just before fitting it, use engine oil.

Align the snap rings in relation to the lube oil inlet, 1. For the ring closest to the turbine, 2, match the ring end as shown, 3. For the other snap rings, align as shown, 4.

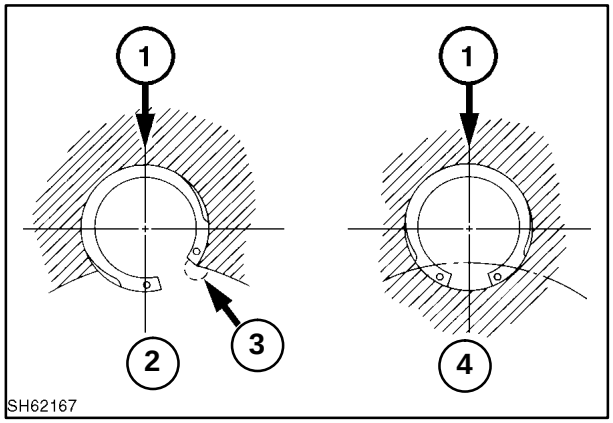

194

Inserting the Shaft Into Bearing Casing
Insert the seal ring into the turbine shaft.

Attach the shield plate to the bearing casing.

Oil the shaft journal, and insert the shaft into the bearing casing.

NOTE: *Insert the shaft slowly, taking care not to damage the floating bearings in the bore.*

When installing the seal ring, align it to the shaft and insert it with its gap meeting the lube oil inlet.

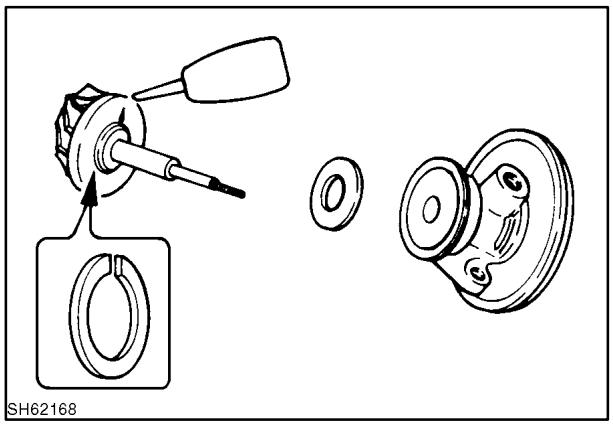

195

https://truckmanualshub.com/

Installing the Thrust Bearing
Run the thrust bushing onto the turbine shaft.

Oil the thrust bearing, and fit it to the bearing casing, securing it by tightening its retaining bolts to 87 - 94 ft. lbs. (118 - 127 N·m) torque.

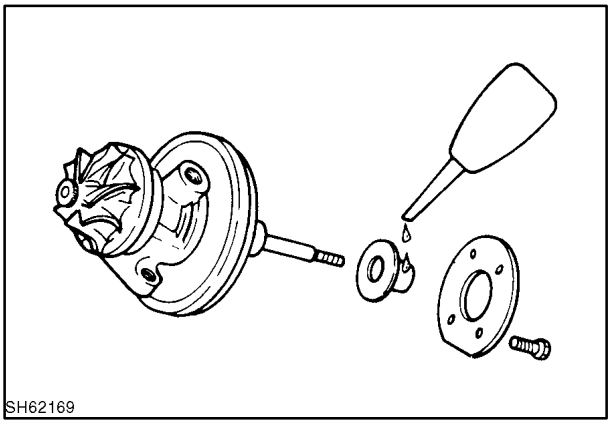

196

Installing the Seal Plate
Insert seal rings, 1, into the oil slinger. The figure shows the seal rings as seen from the front end.

NOTE: *Be sure to stagger the gaps of the seal rings relative to the position of the lube oil inlet, 2.*

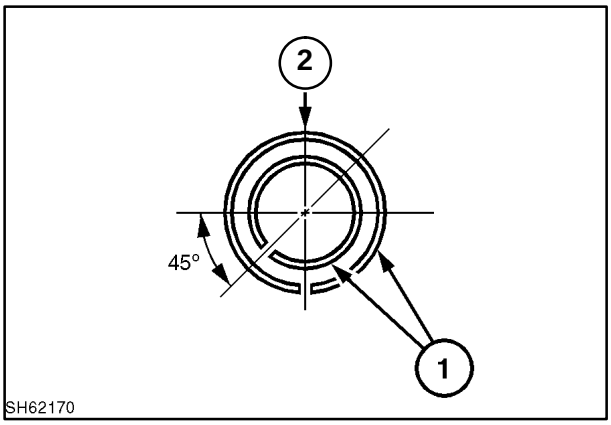

197

Apply the liquid gasket (THREE BOND) to the blower side face of the bearing casing on which the seal plate is to seat. Apply liquid gasket, 1, in a thickness of 0.2 mm (0.01″). Keep the inner bore, 2, free of liquid gasket.

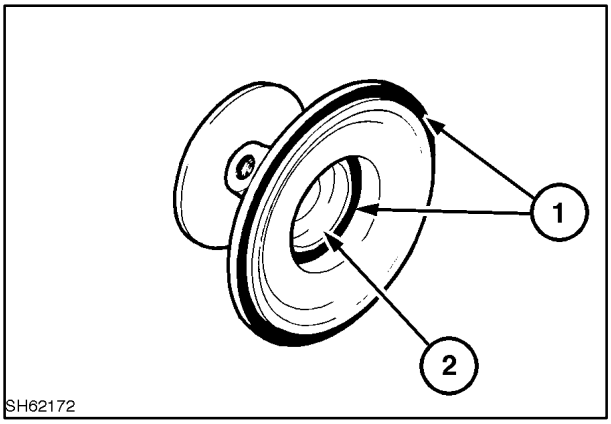

198

https://truckmanualshub.com/

Insert the oil slinger,1, into the seal plate, 2. Fit the bearing case, 3, to the seal plate and secure with the retaining hardware. Tighten to 87 - 94 ft. lbs. (118 - 127 N·m).

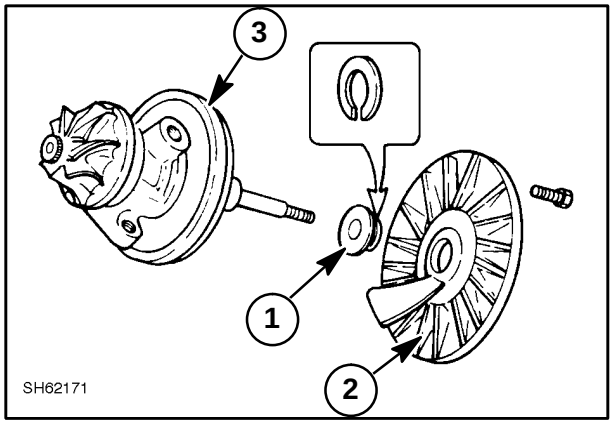

199

Installing the Blower Wheel

Slide the wheel onto the turbine shaft, and retain it by running the shaft-end nut down the shaft end. Torque nut, 1, to 130 - 159 ft. lbs. (176 - 216 N·m).

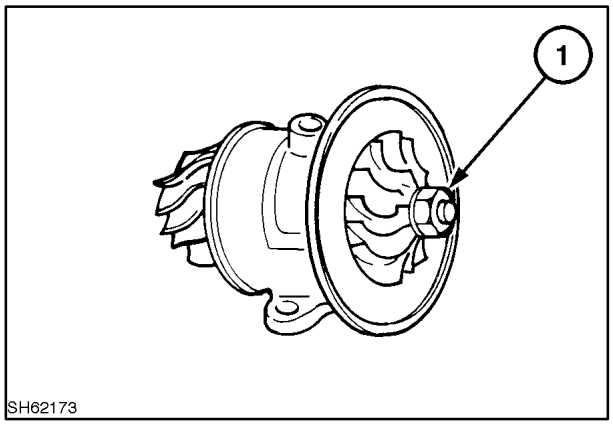

200

Securing the Turbine Casing

Fit the turbine casing, 1, to the support, 2, bringing the previous aligning marks into alignment, and tighten the securing bolts to 91 - 99.8 in. lbs. (10.3 - 11.3 N·m) torque.

NOTE: *Apply the antiseize compound to the thread of each hex-head bolt before installing into the casing.*

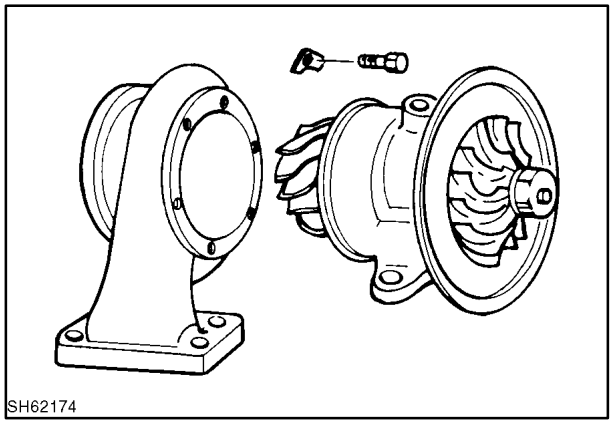

201

https://truckmanualshub.com/

Securing the Blower Casing to the Bearing Casing

Fit the blower casing in the original angular position by aligning the marks, and secure it in place by tightening the bolts to 34.7 - 43.4 in. lbs. (3.9 - 4.9 N·m) torque.

NOTE: *Apply the liquid gasket (THREE BOND) to the mating face, 1, of the bearing casing just before fitting the blower casing to it. The coat thickness of liquid gasket should be 0.004″- 0.008″(0.1 mm - 0.2 mm).*

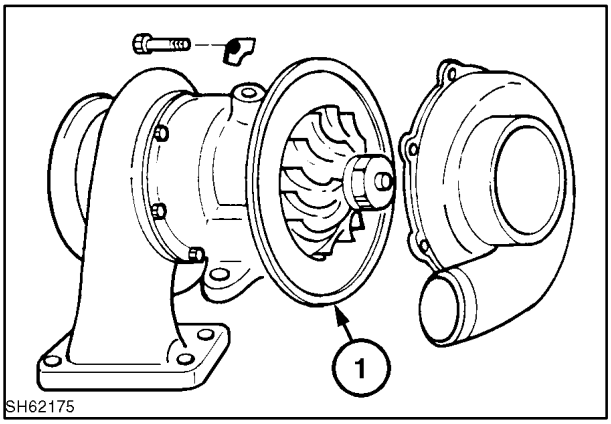

202

Installing the Waste Gate Controller Assembly

Install the assembly while applying compressed air of about 14 PSI(1kgf/cm) to the controller air inlet, 1.

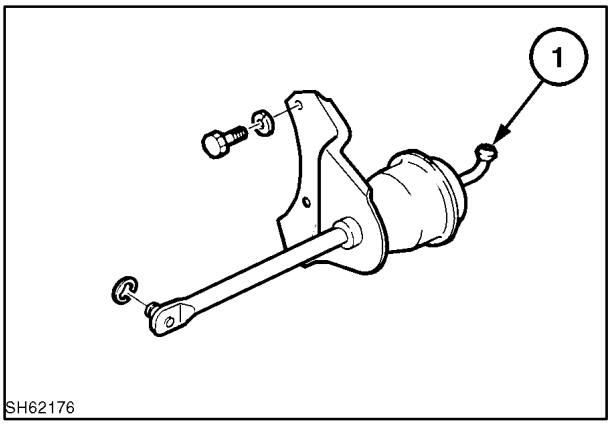

203

Checking the Rotor for Movement

Measure the axial (end movement) and radial (up and down movement) of the rotor in the reassembled turbocharger, as described earlier in “Inspection Before Disassembly.”

Make sure the movement readings are within the following specifications:

Axial movement of rotor - 0.001″ - 0.0023″ (0.03 mm - 0.06 mm).

Radial movement of rotor - 0.003″ - 0.005″ (0.08 mm - 0.13 mm).

NOTE: *A movement reading not coming into the above specification means the turbocharger has been reassembled improperly and must be broken apart and rebuilt again.*

Preliminary steps for installing the turbocharger on the engine:

Attach the turbocharger and adapter assembly to the exhaust manifold and support with the hardware previously removed.

https://truckmanualshub.com/

Turbocharger Lubrication System
Oil the lubricated parts by pouring clean engine oil into the oil inlet and by rotating the turbine shaft by hand. This will wet the journal, floating bearings, thrust bearing, and other surfaces.

Thoroughly clean the oil inlet pipe and outlet pipe by flushing, making sure the pipes are absolutely free of foreign particles. Be sure the pipes have no restrictions due to denting or bending.

When installing the pipes between the turbocharger and engine, be sure to make each connection leak free.

Intake air system
Clean the parts conveying the intake air, making sure each part is absolutely free of foreign particles.

When connecting the turbocharger to the air cleaner and air duct tube, be sure that each joint is leak free.

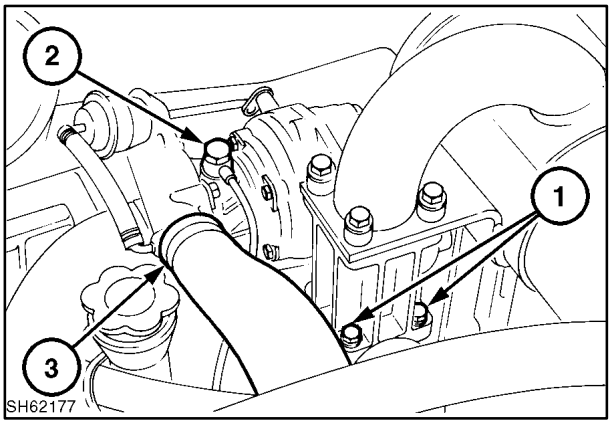

204

https://truckmanualshub.com/

After Turbocharger Service, Check the Exhaust System

1. Make sure the exhaust gas passages are perfectly clean and free of foreign particles.
2. The bolts and nuts used on the joints of the exhaust line are of heat-resistant material; never use ordinary bolts and nuts instead of the heat-resistant hardware. Apply the antiseize compound to the threads of bolts and nuts just before installing them.

Secure each connection good and tight, making it perfectly leak free.

Starting the turbocharger for the first time after reinstallation on the engine

1. Disconnect the wire to the fuel stop solenoid to insure that the engine will not start. Prime the lubrication circuit of the turbocharger by cranking the engine with the starting motor for ten seconds at a time. After the first ten seconds of cranking, pause for thirty seconds and then crank the engine again. Repeat the process until the oil warning lamp goes out.

NOTE: *Cranking the engine longer than ten seconds at a time is very hard on the battery and may cause damage to the starter motor. Limit each cranking to ten seconds, and pause at least thirty seconds after each cranking to allow the starter motor to cool down.*

2. Reconnect wire to the fuel stop solenoid. Move the hand throttle lever to the low, 1/3- throttle position.
3. Operate the engine at no more than 1500 RPM for two to three minutes to insure lubrication oil is getting to the turbo.

NOTE: *Listen to the turbocharger to be sure that it is running smoothly without making any abnormal noise.*

4. Inspect the oil pipes and connections for any sign of oil leakage.
5. Operate the engine normally.
6. Stopping the engine, move the engine speed control lever to the low idle position. After full load operation, idle the engine for one minute to allow components to cool.

CAUTION

Never stop the engine when it is running at high speed. Doing so may cause serious engine damage.

The high operating speed of the turbocharger makes it essential that adequate lubrication is ensured when the engine is started.

https://truckmanualshub.com/

MISCELLANEOUS ENGINE ELECTRICAL

Op. 55 201 76

GLOW PLUG

A sheathed-type glow plus is employed and provides excellent starting.

Specifications: 11 V; 9.0 A

1 Heat wire	5 Nut
2 Sheath	6 Magnesium oxide powder
3 Asbestos	7 Insulation bushing
4 Body	8 Core

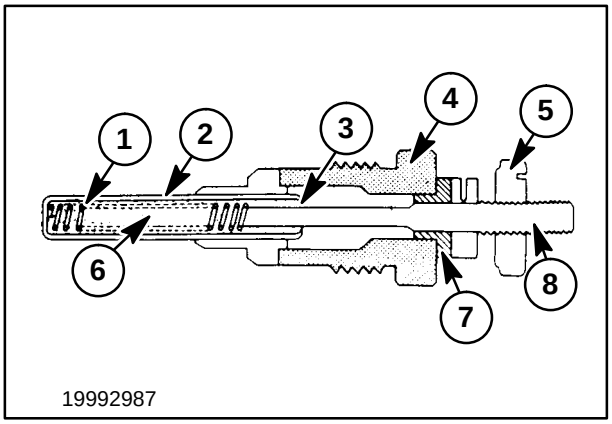

205

Structure

Coiled thin heat wire is placed in the sintered magnesium oxide powder enclosed by stainless sheath. One end of the heat wire is welded to the sheath end and the other end to the central electrode. By setting the key switch to the run position, the glow plug preheats the air in the combustion chamber.

Disconnection of the Glow Plug

The glow plug operates even when any one of the plugs is disconnected because it is connected in parallel. However, when disconnected, preheating time of the glow signal is extremely extended.

Testing a Glow Plug

Check/remove the connector and check the continuity between each plug terminal and body ground. If continuity is not observed, it shows disconnection and the glow plug should be replaced.

The glow plug is of a simple structure and a short circuit is rarely caused. However, if the central electrode, body, sheath, etc. come in contact, wiring of the preheating circuit is burnt during start-up.

Correction: Remove the connector and measure the resistance of each plug terminal and ground with a tester. The tester reading should be 1.0 ± 0.1.

Resistance of 0 indicates a short circuit.

https://truckmanualshub.com/

Op. 55 414 12

OIL PRESSURE SWITCH

Oil Pressure Switch Operating Range:
2.8 PSI - 5.7 PSI (0.2 to 0.4 kg/cm^2)

The oil pressure switch, 1, is a warning device to inform of low engine lubricating oil pressure. When oil pressure becomes less than specified, the warning light is activated.

This pressure switch houses a diaphragm and contact points (max. current draw is 0.42 amps).

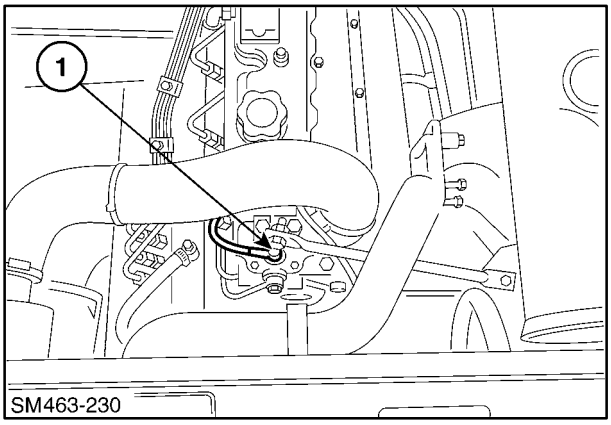

206

Op. 10 223 10

FUEL SHUT-OFF SLOENOID

Engine stop solenoid is in the normal state if the plunger is drawn into the main body when one terminal is connected to battery +, 1, and the other terminal to the main body, 2.

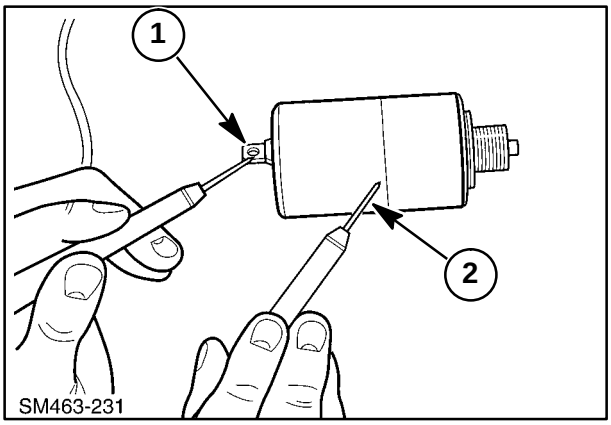

207

https://truckmanualshub.com/

MAXIMUM CIRCUIT RESISTANCE

RESISTANCE OF BATTERY CABLES 1, 2, & 3 NOT TO EXCEED 0.0018 OHM

Circuit	Cable No.	Circuit Current	Maximum Circuit Resistance	Maximum Circuit Volt Drop	Rewards
Alternator Charging	4 7,11	35 Amp	0.0143 OHM	0.5 Volt	See Glow Plugs Circuit
Starting Motor Solenoid	4 5 6	15.75 Amp	0.04 OHM	0.63 Volt	See Glow Plugs Circuit See Glow Plugs Circuit
Glow Plugs (Via Glow Signal)	4,5,8,9,10	27 Amp 36 Amp	0.0185 OHM 0.0139 OHM	0.5 Volt 0.5 Volt	3 cyl Engines 4 cyl Engines

19992989

208

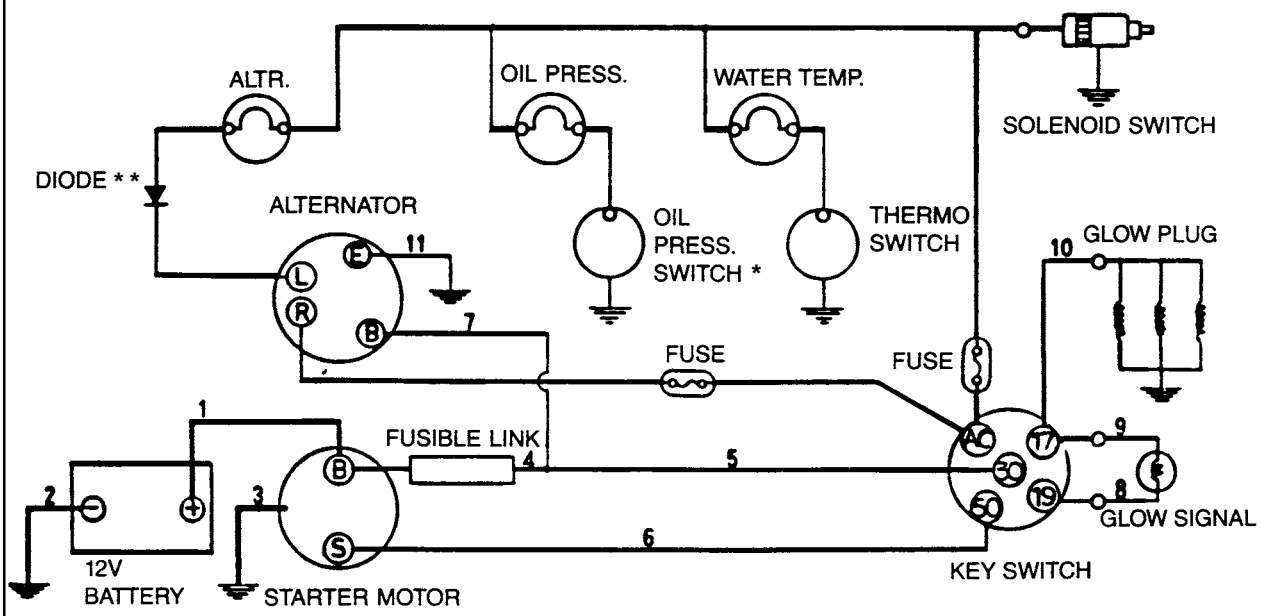

209

*Maximum current draw for oil pressure switch is 0.42 amps (5-watt max. bulb).

**Diode capacity: Current 3 amp. Reverse voltage 600 volt.

https://truckmanualshub.com/

SPECIAL TOOLS

ENGINE

– FNH 00011 - Fitting - 1/8 BSPT x 7/16-20 UNF

  Used to test engine oil pressure. Screws in in place of the engine oil pressure sender. Fits normal pressure test line connection.

– FNH 00120 - Compression Test Adapter

  Used to test engine compression. Screws into the glow plug hole, allows compression testing without removing injectors. Use with FNH 02020 Diesel Compression test kit or equivalent.

– FNH 00122 - Compression Test Adapter

  Right angle quick disconnect coupling. Use with FNH 00120 and FNH 02020.

– FNH 00117 - Oil Pump Port Block Installer

  Installs engine oil pump port block. Ensures part is installed straight, to the proper depth, with correct oil passage orientation and without damage.

– FNH 11097 - Oil Pump Port Block Remover

  Removes engine oil pump port block without removing oil pan.

  All of these tools are currently used on various Compact Tractors and may already be in dealerships.

https://truckmanualshub.com/

LABOR GUIDE

The following labor amounts are listed as a guide only. Working conditions and experience will vary the amount of time it actually takes to complete a job.

Op. 10 001 10

ENGINE REMOVAL FROM SKID STEER

Without tilting cab and boom forward. (3.0)
Includes removal of the oil cooler, radiator, oil filter, and air filter as an assembly.

Tilting cab and boom forward. (3.5)
Includes fan removal and loosening of the engine fuse and relay panel.

Remove and replace. (0.5)
Includes draining cooling system, removal of hydrostatic pump attaching hardware. Unplugging electrical wire harness.

ENGINE OVERHAUL

MAJOR OVERHAUL (20.30)

Steam clean and completely dismantle, clean all parts, flush all oil and water passages and replace plugs, check crankshaft for size and wear and inspect all parts.

Hone or replace liners or re-bore as required.

Replace or repair pistons with new rings.

Replace or repair where necessary camshaft and auxiliary drive bushings, main and big end bearings and thrust washers.

Inspect and replace timing gears as necessary. Inspect and repair as required water pump, oil pump, turbocharger, and any cylinder head components.

Reassemble engine completely using new gaskets and seals and tighten to specifications. Set valve clearances. Run engine and check for leaks. Retighten head and reset valve clearances.

MINOR OVERHAUL (14.30)

Steam clean engine, dismantle, clean and inspect parts.

Replace or repair pistons and check height. Hone liners, fit new main and big end bearings and thrust washers.

Check and rework/repair valves as necessary.

Completely reassemble and tighten to specification using new gaskets and seals.

Run engine and check for leaks.

Retighten head and reset valve clearances.

TOP OVERHAUL (CYLINDER HEAD OR GASKET)

Remove cylinder head and gasket.

Remove all traces of jointing compound and old gasket.

Check cylinder head and reseat valves.

Fit new gasket and replace head. (Do not use gasket cement with dry-type gasket).

Check injectors and service as necessary.

Tighten head and set valve clearances.

Run engine, check for leaks.

Retighten head and reset valve clearances.

Additional time - turbocharged engine.

OIL CONSUMPTION RECTIFICATION (7.30)

Remove cylinder head, lub. oil sump and oil pump.

Remove all pistons and connecting rods.

Deglaze all cylinder bores using “Flexihone” or similar tool (C.I. liners and bores only).

Clean and check pistons for wear, repairing as necessary and replace all piston rings.

Strip and clean cylinder head.

Reseat valves and service injectors.

Check condition of oil pump and repair if necessary.

Reassemble all parts using new gaskets and seals. Set valve clearances and tighten head to specification.

Run engine and check for leaks.

Retighten head and reset valve clearances.

Additional time - turbocharged engine.

https://truckmanualshub.com/

CYLINDER BLOCK

REPLACE BARE BLOCK (7.00)

Steam clean complete engine, dismantle, clean and inspect all parts.

Reassemble engine complete into new bare blocks with same or new pistons, using new rings, main and big-end bearings and thrust washers, gaskets and seals, and tighten to correct specifications.

Run engine and check for leaks.

Retighten head and reset valve clearances.

Additional time - turbocharged engine.

Replace rear main lip-seals. (0.25)

(Additional operations may be added when justified).

CYLINDER HEAD

CYLINDER HEAD/COVER/CAMSHAFT COVER

Remove and replace. (0.10)

Additional time - turbocharged engine.

ROCKER SHAFT ASSEMBLY

Remove and replace. (1.10)
Includes remove and replace cylinder head cover/camshaft cover.

Dismantle and clean, fitting new levers where necessary. (2.10)
Includes remove and replace rockershaft assembly.

Check/adjust valve clearances. (0.40)
Includes remove and replace cylinder head cover/camshaft cover.

CYLINDER HEAD

Remove and replace, fitting new gasket(s). (2.30)
Includes remove and replace rocker shaft assembly and check/adjust valve clearances.

Additional time - turbocharged engine.

Remove, and either reseat and replace, or repair all valves. (3.30)
Includes remove and replace cylinder head, fitting new gaskets

Additional time - cut one valve seat. (0.10)

Additional time - turbocharged engine.

Additional time - replace each valve seat insert as necessary. (0.10)

VALVE SPRING

Change one-head not removed except for “B” engines, includes C6. (0.30)
Includes remove and replace cylinder head cover/camshaft cover.

Change complete set of valve springs-head not removed except for “B” engines, includes C6. (1.20)
Includes remove and replace cylinder head cover/camshaft cover.

PISTON ASSEMBLY

CONNECTING ROD

Replace one. (3.30)
Includes remove and replace cylinder head, fitting new gaskets, and sump and strainer, remove, clean and reassemble with new gaskets and replace.

Additional time - turbocharged engine.

SMALL END BUSHING

Remove, replace and ream one. (3.40)
Includes remove and replace connecting rod.

Additional time - turbocharged engine.

PISTON

Replace one, checking piston height. (3.30)
Includes remove and replace cylinder head, fitting new gaskets, and sump and strainer, remove, clean and reassemble with new gaskets and replace.

Additional time - turbocharged engine.

Replace all pistons, checking heights. (3.40)
Includes remove and replace cylinder head, fitting new gaskets, and sump and strainer, remove, clean and reassemble with new gaskets and replace.

Additional time - turbocharged engine.

Re-ring all pistons. (5.00)
Includes replace all pistons, checking heights, remove and replace cylinder head, fitting new gaskets, and sump and strainer, remove, clean and reassemble with new gaskets and replace.

Additional time - turbocharged engine.

https://truckmanualshub.com/

CRANKSHAFT ASSEMBLY

REPLACE CRANKSHAFT (4.30)

Includes replace rear main lip seal, replace damper and pulley, replace thrust washers, sump and strainer, remove, clean and reassemble with new gaskets and replace, and remove and replace flywheel and flywheel housing.

Replace damper and pulley, as a separate operation from crankshaft replacement. (0.10)

THRUST WASHERS (3.50)

Replace.
Includes remove sump and strainer, remove, clean and reassemble with new gaskets and replace.

CAMSHAFT, TIMING CASE AND GEAR ASSEMBLY

CAMSHAFT

Remove and replace. (1.10)
Includes remove and replace rocker shaft assembly, check/adjust valve clearances, remove sump and strainer, remove, clean and reassemble with new gaskets and replace.
Includes C24 and C5/1 on “B” engines.

TAPPETS

Remove and replace all. (2.40)
(includes G1, F5 on engine types E, G, H, L, T and Z).
(includes C6 on engine types C and J).
(includes F5 on “B” engines).

TIMING GEAR COVER

Remove and replace. (0.30)
Includes remove and replace damper and pulley.

TIMING CASE FRONT SEAL

Remove and replace. (0.15)
Additional to remove and replace timing gear cover.

VALVE TIMING CHECK (1.15)

Remove cylinder head cover. Set No. 1 inlet valve to specified clearance).
Turn engine to “nip” push rod. Reset valve clearance.
Refit top cover.
Run engine and test.
“Pin check” only on “B” engines.

SUMP ASSEMBLY

SUMP AND STRAINER (0.30)

Remove, clean and reassemble with new gaskets and corks and replace.

SUCTION PIPE (0.20)

Remove and replace (oil pump on bench).

OIL PUMP (1.10)

Remove and replace
Includes remove, clean and reassemble with new gaskets and corks and replace
(includes H3, F13 and F18 on “B” engines).

RELIEF VALVE (0.10)

Strip, check, clean and reassemble.
(oil pump on bench).

FUEL SYSTEM

INJECTION PUMP (0.40)

Remove and replace.
Includes check and adjust fuel pump timing, and remove and replace high-pressure pipes.

INJECTION PUMP TIMING (1.10)

Check and adjust.

GOVERNOR (0.40)

Adjust on running engine.

LEFT PUMP (ELECTRIC PUMP) (0.15)

Remove and replace.

HIGH-PRESSURE PIPES

Remove and replace one. (0.05)
Remove and replace set. (0.20)
Bleed fuel system. (0.15)

https://truckmanualshub.com/

INJECTOR

Remove and replace one. (0.10)
Includes remove and replace one high-pressure pipe.

Remove, test and replace all. (0.40)
Includes remove and replace set of high- pressure pipes.

Dismantle and clean one injector. (0.20)
Includes remove and replace one injector.

Dismantle and clean all injectors. (1.20)
Includes remove, test and replace all injectors.

FUEL FILTER ELEMENT (0.10)

Change.
Includes bleed the fuel system.

IN-LINE FUEL FILTER

Remove and replace. (0.10)

FUEL PUMP STOP SOLENOID (0.10)

Remove and replace.

FUEL TANK (1.0)

Remove and replace.

FUEL LEVEL SENDER (TANK) (0.5)

Remove and replace.

FUEL PICKUP TUBE (0.5)

Remove and replace.

FUEL LINES COMPLETE (0.5)

Remove and replace.

AUXILIARY EQUIPMENT

OIL FILTER (0.10)

Remove and replace.

FLYWHEEL AND FLYWHEEL HOUSING (0.35)

Remove, replace and align.
Includes removal of engine from loader or hydrostatic pump removal.

THERMOSTAT UNIT (0.20)

Remove, check and replace.

TURBOCHARGER (0.25)

Remove and replace.

STARTER RING (0.15)

Remove and replace.
Includes remove and replace flywheel and flywheel housing.

GLOW PLUGS (0.40)

Remove and replace set.

STARTER SOLENOID (0.15)

Remove and replace.

FAN (0.10)

Remove and replace.

FAN BELT (0.10)

Remove and replace.

WATER PUMP (FRESH) (0.30)

Remove and replace.

WATER PUMP (1.00)

Dismantle, clean, recondition and reassemble.
Includes water pump removal and replacement.

RADIATOR (0.45)

Remove and replace.

https://truckmanualshub.com/

https://truckmanualshub.com/

SECTION 27 – REAR DRIVE AXLE (GEARBOXES)

Chapter 1 – Gearboxes

CONTENTS

Section	Description	Page
27 000	General Information	27-2
	Specifications	27-4
	Troubleshooting	27-5
	Testing	27-7
27 126	Gearboxes	27-8
27 126 40	Gearbox Removal and Inspection	27-8
27 126 48	Gearbox Disassembly	27-12
	Gearbox Parts Inspection	27-13
	Gearbox Resassembly	27-14
27 126 40	Gearbox Resinstallation	27-16
	Labor Guide	27-19

https://truckmanualshub.com/

Op. 27 000

GENERAL INFORMATION

The power is transmitted to the final drive from the engine which is connected to the hydrostatic pumps, 1, with a flex plate drive coupler. The hydrostatic pumps then transmit hydraulic power to the hydrostatic motors, 2, which are connected to gearboxes, 3, located on the inside of the final drive cases. The left and right drives are separate from each other and are operated independently.

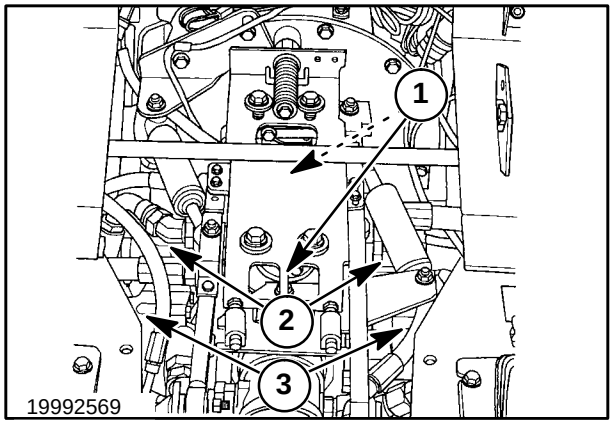

1

The power is then transmitted through gears to a double drive sprocket, 1, in the final drive case. The drive sprocket is connected to the axle sprockets, 2, with chains, 3, one endless chain to the front axle and one endless chain to the rear axle.

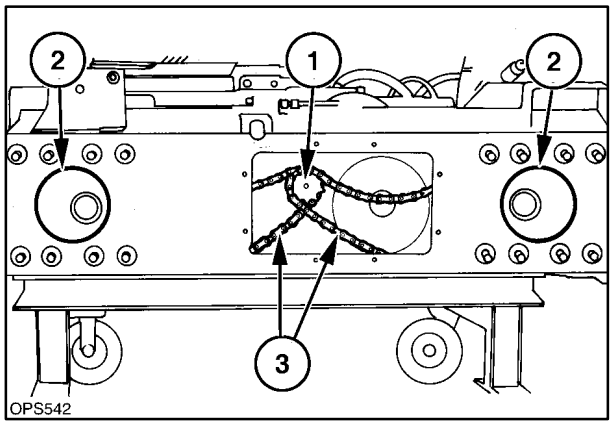

2

The axle sprocket, 1, is splined to the axle shaft and hub assembly, 2. A large O ring, 3, seals the assembly to the frame.

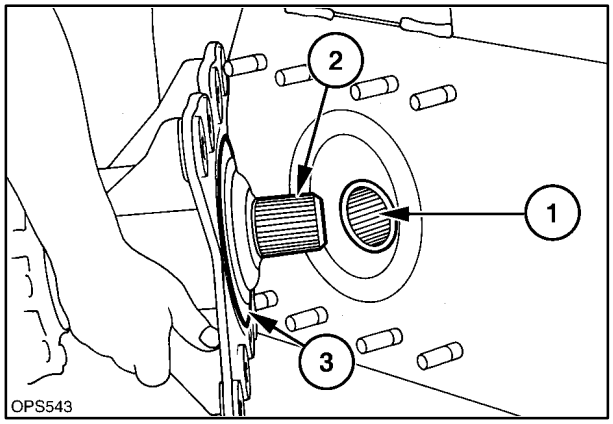

3

https://truckmanualshub.com/

The parking brake discs are connected to the hydrostatic motor coupler shafts at 1. The parking brake is made up of two discs, actuator shaft, pads, and control linkage. The hydrostatic system is the primary braking system, and the parking brake is used when the unit is stopped.

CAUTION

Always engage the parking brake before exiting the loader.

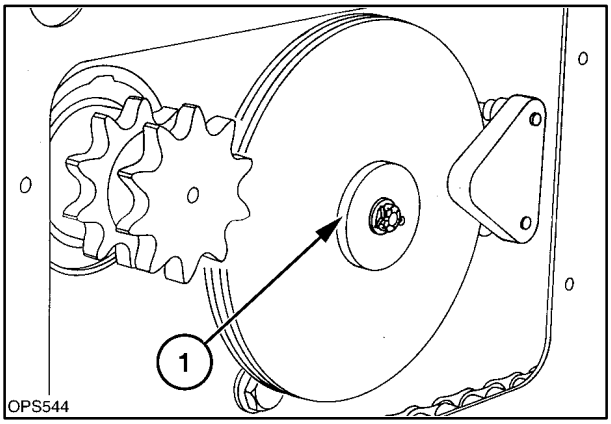

4

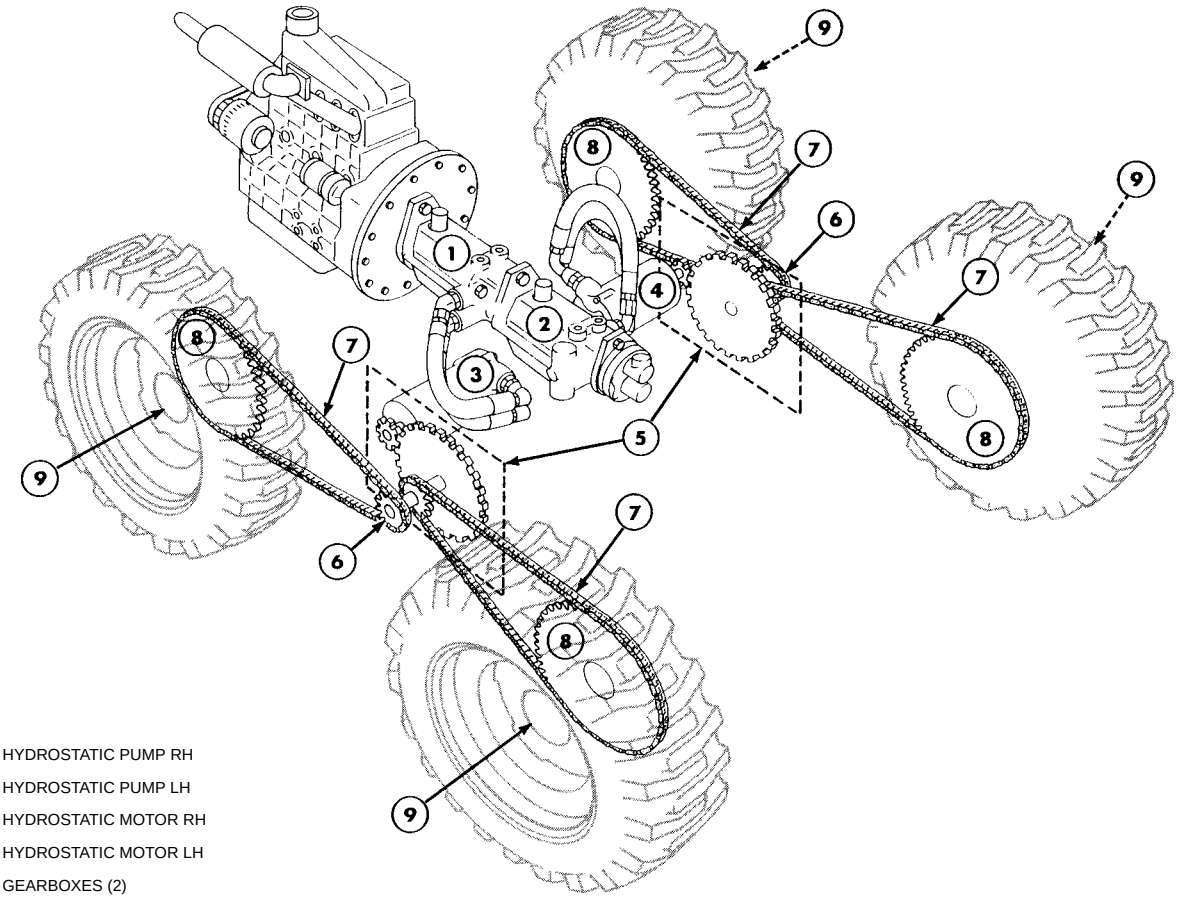

1 - HYDROSTATIC PUMP RH
2 - HYDROSTATIC PUMP LH
3 - HYDROSTATIC MOTOR RH
4 - HYDROSTATIC MOTOR LH
5 - GEARBOXES (2)
6 - FINAL DRIVE SPROCKET ASSEMBLIES (2)
7 - DRIVE CHAINS(FRONT AND REAR)(4)
8 - AXLE DRIVE SPROCKETS(4)
9 - AXLES ASSEMBLIES(4)

5

https://truckmanualshub.com/

SPECIFICATIONS

Chain Case

Side Cover Bolt Torque	15 N·m (11 ft. lbs.)
Brake Caliper Mounting Bolt (center) Torque	20 N·m (15 ft. lbs.)
Brake Caliper Mounting Bolts (outer) Torque	70 N·m (52 ft. lbs.)
Drive Chain	#80
Front Chain Length (68 pitches)	1727.2 mm (68″)
Rear Chain Length (66 pitches)	1676.4 mm (66″)
Chain Tension	0 – 6 mm (0 - 1/4″) movement at tire tread
Lubrication	7.6 liters (2 gal.) each side - 10W-30API service SG-CE Oil

Gearbox

Mounting Bolt Torque	170 N·m (125 ft. lbs.)
Drive Motor Mounting Bolt Torque	85 N·m (63 ft. lbs.)
Brake Disc to Gearbox Shaft Bolt Torque	35 N·m (26 ft. lbs.)
Front Cover Plate Bolt Torque	20 N·m (15 ft. lbs.)
Lubrication	1.9 liters (2 qts.) each side - 80W-90 API Service GL-5 Gear Oil

Other Materials

Description	Use
Ultra/Blue Silicone sealer	Gearbox mounting bolts Axle housing bolts Chain case cover and bolts Gearbox to chain case Brake caliper bolts Gearbox cover and bolts
Sealing Material	NH Ultra Blue silicone sealer NH #L81724 - 3.35-oz. tube (cord) NH #L82519DS - 8-oz. tube NH #L58775 - 10.2-oz. cartridge
Hydraulic Oil	SAE10W-30 motor oil-API Service SG-CE NH #9613313 - 1 qt. NH #9613314 - 2 1/2 gal. NH #9613358 - 1 L NH #9613360 - 20 L
Gear Oil	80W-90 API Service GL-5 Gear Oil NH #9613295 - 1 qt. NH #9613294 - 5 gal. NH #9613375 - 4 L
Grease	High viscosity lithium base NH #9613310 tube

NOTE: *Always use a noncorrosive silicone sealer to seal where required to prevent corrosion during the silicone curing process.*

https://truckmanualshub.com/

TROUBLESHOOTING

FINAL DRIVE SYSTEM

Before servicing or adjusting on the final drive system, the skid-steer loader should be jacked up with the wheels off the ground.

Remove any attachment from the skid-steer loader boom, bucket, etc. Lower the boom to the lowered position or, if servicing requires the boom to be in the raise position, support the boom on the boom locks.

Raise the boom and lower onto boom lock pins, 1.

1. Raise boom above boom lock pins.
2. Engage boom lock pins.
3. Stop engine, ignition key “OFF” position.
4. Turn ignition key to the “ON” position.
5. Lower boom onto boom lock pins.
6. Turn the ignition key to the “OFF” position.

CAUTION

Never exit the loader with the boom in the raised position unless the boom is supported on the boom lock pins.

Never work under a raised boom unless it is properly supported by the boom lock pins.

Never work under a raised boom with an attachment mounted. always remove the attachment from the loader.

Jack up the loader and support the loader with the wheels off the ground using adequate jack stands or blocks to securely support the loader.

Support the loader at the front of the final drive cases at 1, and at the rear at 2.

CAUTION

Never service a raised loader unless it is securely supported with adequate jack stands or blocks.

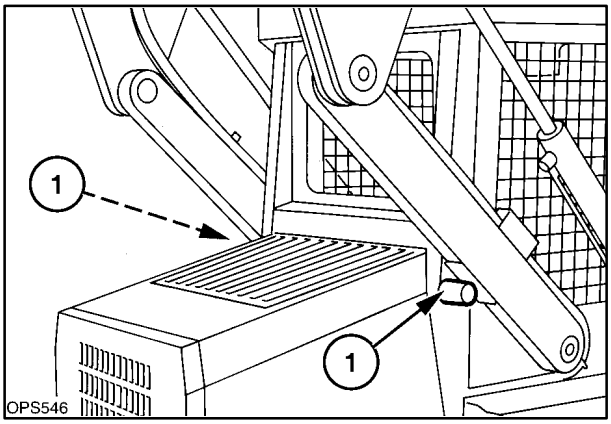

6

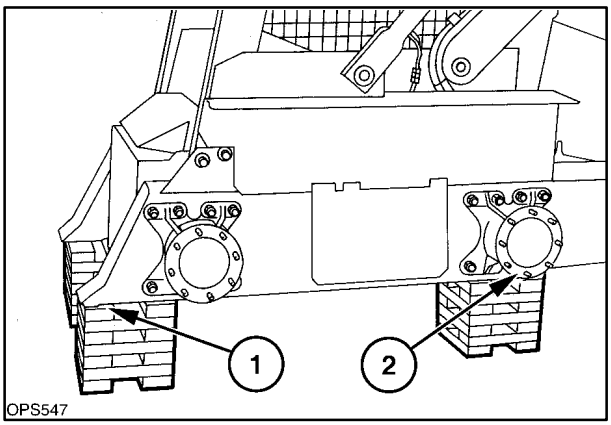

7

https://truckmanualshub.com/

FINAL DRIVE SYSTEM

PROBLEM	POSSIBLE CAUSES	CORRECTION
Both drive wheels on one side not powered	No hydrostatic motor shaft rotation No gearbox output drive Broken drive chains	Check for pump to motor oil flow and repair Check gearbox shaft rotation and repair Check chains and repair
One drive wheel not powered	Broken drive chain Axle or drive sprocket splines worn	Check chain and repair Check axle and sprocket, replace
Chain case noise	Loose drive chains No oil in final drive Worn drive sprockets Bearing failure	Check and adjust chains Check oil level Check sprockets and repair Check axle and gearbox bearings and repair
Excessive axle play	Bearing failure on axle shaft Snap ring failure on axle shaft	Check bearings and repair Check axle bearing pre-load, repair
Noise in gearbox	No or low oil in gearbox Bearing failure Bearing or shaft failure in drive motor Gears in gearbox worn	Check oil level Check shafts and bearings, repair Check drive motor and repair Check and replace
Axle outer bearing failure	Prolonged operation in liquid or semi-liquid material	Decrease lubrication interval to every 500 hours

https://truckmanualshub.com/

TESTING

Pre-test instructions:

* Operator in seat with seat belt buckled.

* Engine running at high idle (full throttle).

* Park brake disengaged position.

STEP	TEST	RESULT	PROBABLE CAUSE AND CORRECTION
1	Push both drive controls forward equally and loader should move in a straight line.	YES NO	Drive system OK. Engine stalls, wheels appear locked, check parking brake for engaged. If OK go to step 2. Slow or no power, Refer to hydrostatic drive section.
2			Check final drive chain, broken repair.
3	Pull both drive controls rearward equally and loader should move in a straight line.	YES NO	Drive system OK. Engine stalls, wheels appear locked, go to step 1. Wheels rotate slow or no power, go to step 1. One side of loader drags, go to step 2.

Pre-test instructions:

* Lower boom and attachment to the ground.

* Stop engine.

* Jack loader with wheels off the ground.

* Release parking brake.

STEP	TEST	RESULT	PROBABLE CAUSE AND CORRECTION
1	Rotate each tire by hand, tires move less than 1/4″ at tread.	YES NO	Drive system OK. Tires move more than 1/4″ at tread, check chain tension.
2			One tire rotates freely, broken chain, or axle spline worn.
3			Both tires on one side rotate freely together, inspect drive gearboxes. If OK, check drive motor.
4	Tires rotate but are noisy.	YES NO	Check drive chains, axle bearings. Drive system OK.

https://truckmanualshub.com/

Op. 27 126

GEARBOXES

Op. 27 126 40

REMOVAL AND INSPECTION

The hydrostatic motor is connected to the gearbox and the gears in the gearbox transmit power to the final drive chains.

The boom and cab may be tilted forward for gearbox access. Refer to Section 00 of this manual for the “Tilting the Cab and Boom Procedure.”

Gearbox Removal Without Tilting the Cab

The seat will need to be raised, step shield and hydrostatic control lever assemblies removed. The axle housing assemblies will require loosening and the final drive case cover will need to be removed to access the gearboxes.

1. Lower the boom and attachment to the ground.
2. If the work is going to be done with the boom in the raised position, remove the attachment and raise the boom and rest on the boom lock pins, 1.

CAUTION

Never work under a raised boom unless it is properly supported by the boom lock pins.

Never work under a raised boom with an attachment. Always remove the attachment from the loader.

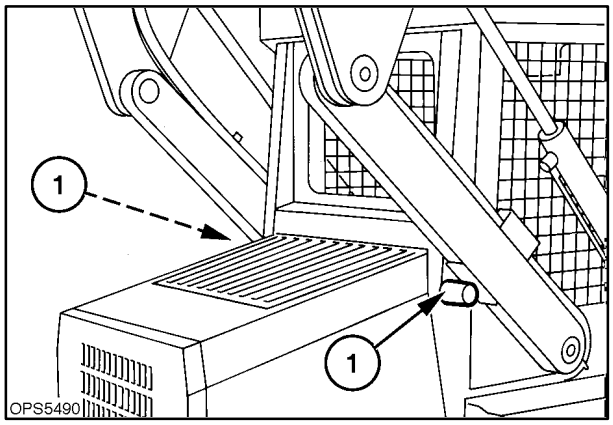

8

3. Securely block the skid-steer loader with all four wheels off the ground. Refer to Section 1 for more detailed information on properly supporting the skid-steer loader. Support the loader at the front of the final drive cases at 1, and at the rear at 2.

CAUTION

Failure to securely support the skid steer could result in movement of the loader causing serious injury or damage to the equipment.

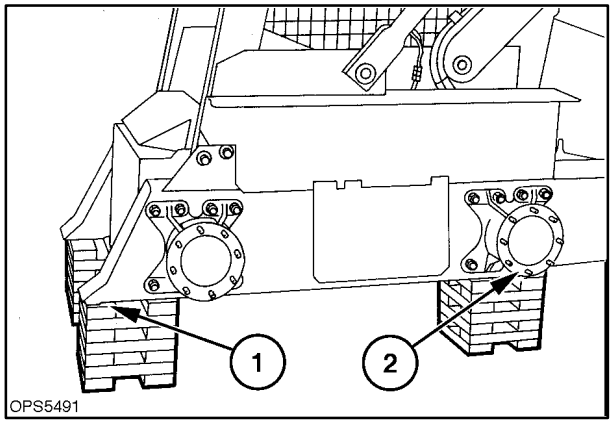

9

https://truckmanualshub.com/

4. Slide the seat to the rearmost position, unlatch the seat pan, and raise the seat and pan assembly to the raised latched position, 1.

CAUTION

Before working under a raised seat make sure it is securely latched in the raised position.

5. Remove the step shield, 2.

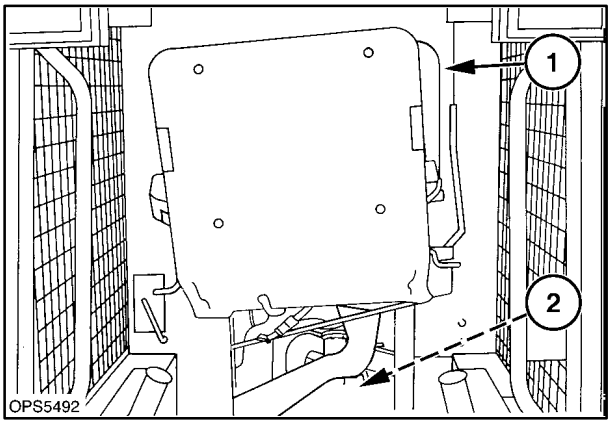

10

6. Remove the hydrostatic control lever assemblies, 1, to access the gearboxes.
   - Remove the linkage at 2.
   - Unhook electrical wires, horn, high flow switch, etc.
   - Unhook control linkage to the auxiliary or boom and bucket control at 3.
   - Remove the support retaining hardware, 4, and lift the control lever assemblies from the loader.

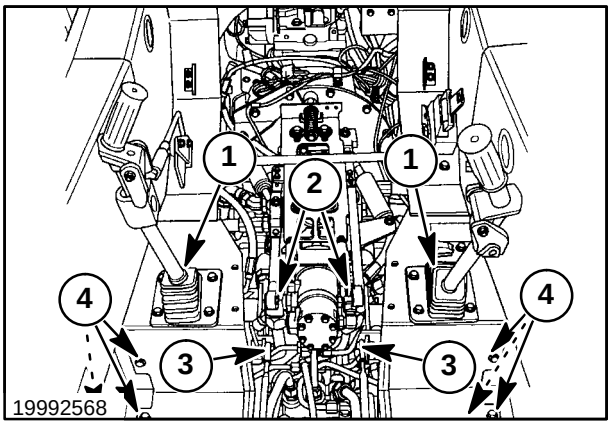

11

7. Remove the tires and wheels from the final drive being serviced.
8. Clean the axle and final drive area to prevent debris from entering the final drive case.
9. Loosen the axle retaining hardware, 1, and remove the axles.
10. Remove the fender and retaining bolts, 2.
11. Remove final drive inspection cover, 3.

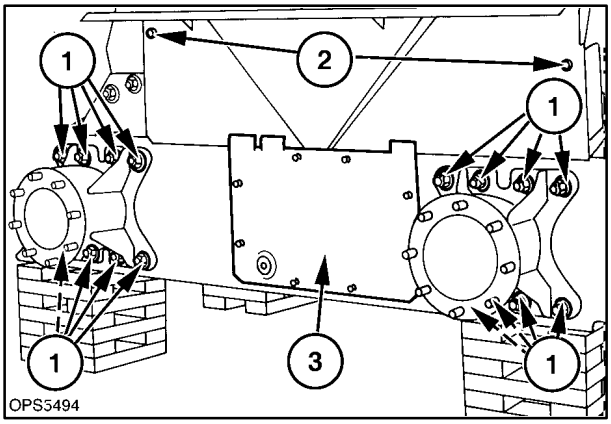

12

https://truckmanualshub.com/

12. Remove the drive chains from the double drive sprocket, 1.
13. Parking brake engaged, remove the brake disc retaining bolt and washer, 2.
14. Release the parking brake.
15. Loosen the caliper retaining hardware, 3, from the inside of the cab. Thread the two bolts from the outside caliper assembly, 4. DO NOT remove bolts from caliper support at this time.
16. Remove the outside disc, 5.

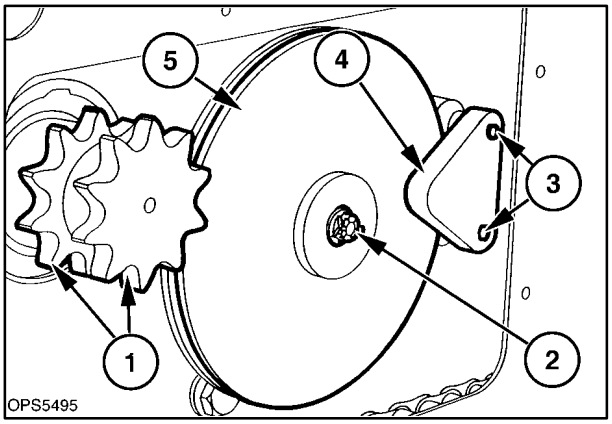

13

17. Remove center section of caliper, 1, spacers, 2, and now remove the retaining bolts.
18. Remove inside disc, 3.

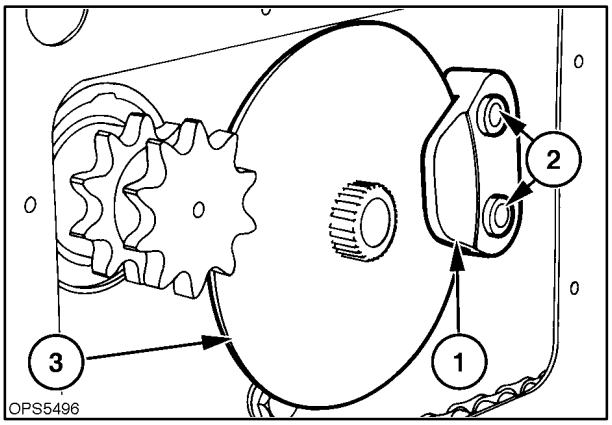

14

19. Remove brake friction puck, 1, and spacer plate, 2.

NOTE: *The spacer plate is thinner than the friction puck and must be inserted into brake caliper first upon reassembly.*

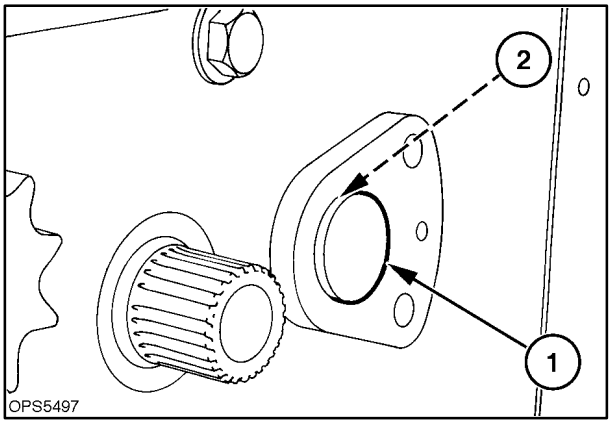

15

https://truckmanualshub.com/

20. Remove the hydrostatic motor retaining hardware, 1.

NOTE: *For clearance, the high pressure lines may require removal. If lines are removed, cap lines and fittings to prevent loss of oil and contamination of the hydrostatic system.*

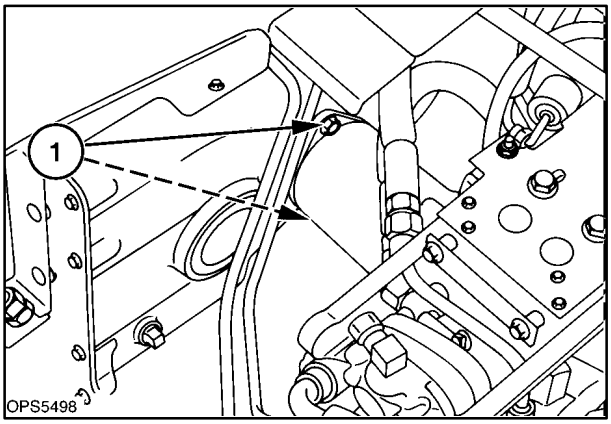

16

21. Install a flat bearing puller in the groove in the motor coupler at 1. Install a bolt in the end of the motor shaft at 2. Attach another puller to the flat puller and push the hydrostatic motor loose from the coupler. Remove the motor from the gearbox.

NOTE: *The motor shaft and the coupler have tapered splines.*

IMPORTANT: *DO NOT drive on the motor shaft with a hammer to remove the motor from the coupler or internal damage to the motor may occur.*

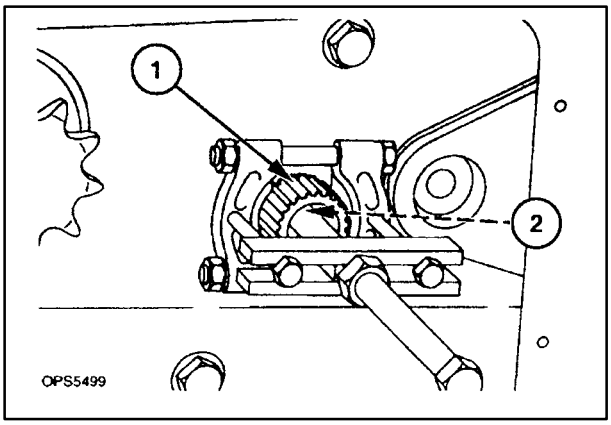

17

22. Remove the gearbox mounting hardware, 1; this will allow the gearbox oil to drain into the final drive case. Remove the remaining bolts, 2, from the final drive case and gearbox.
23. With a suitable hoist, lift the gearbox from the loader.

CAUTION

The gearbox is heavy and a suitable hoist/lift should be used.

The gearbox is heavy and a suitable hoist/lift should be used.

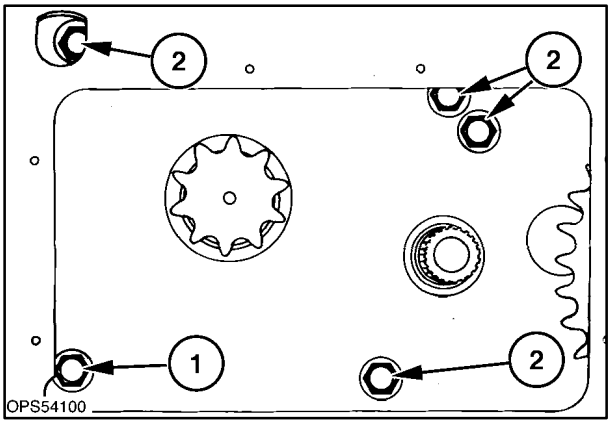

18

https://truckmanualshub.com/

Op. 27 126 48

DISASSEMBLY

1. Thoroughly clean the gearbox.
2. Remove the cover, 1.
3. Remove the shaft cover, 2, by prying it from the gearbox housing.
4. Remove the gearbox breather, 3.

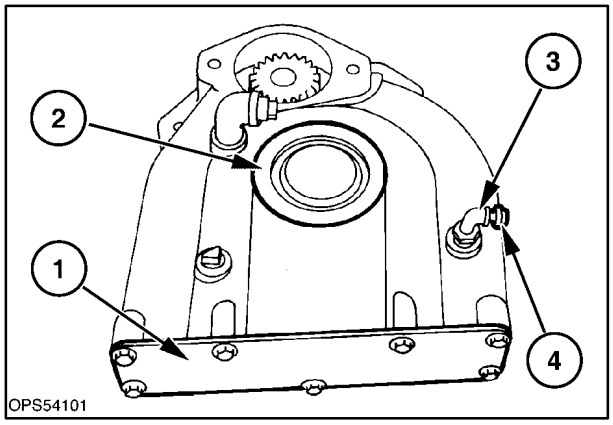

19

5. Remove the external snap ring, 1.

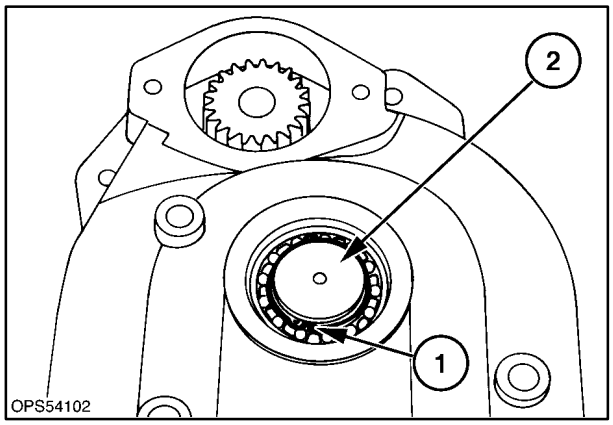

20

6. Place the gearbox in a press, support the gearbox housing next to the sprocket and shaft assembly at 1 as close as possible and press the shaft assembly, 2, from the snap ring side of gearbox and shaft.

   The shaft sprocket and sealed bearing, 3, will come from the gearbox as an assembly.
7. Remove the two bearings from the housing.
8. Remove the spacer.
9. Remove the large gear, 4, from the housing.
10. Remove the small gear and shaft assembly from the gearbox.

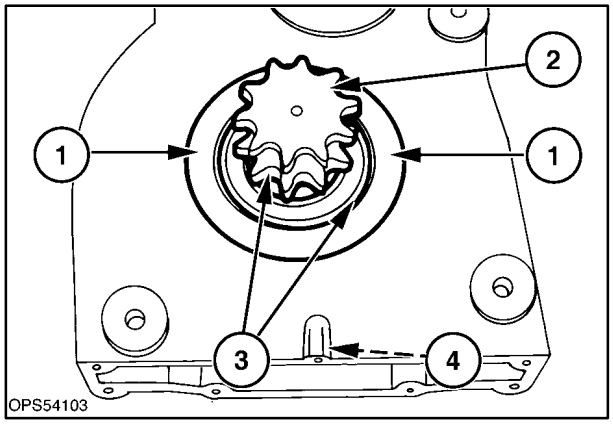

21

https://truckmanualshub.com/

11. Remove the external snap ring, 1, from the shaft. With a bearing separator puller, remove the small sealed bearing, 2, from the shaft.
12. With a bearing separator puller, remove the large sealed bearing, 3, from the shaft and sprocket assembly.

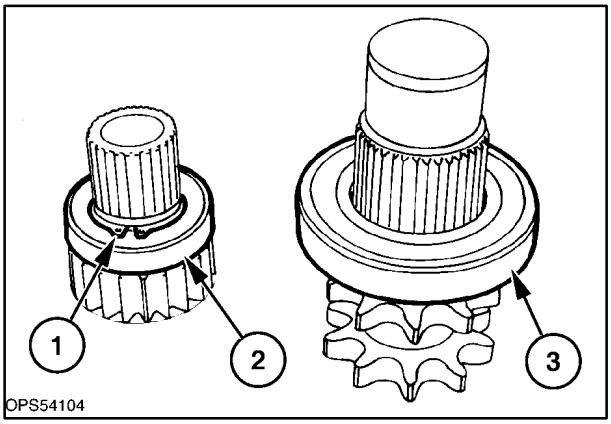

22

Gearbox and Related Parts

Ref.	Description
1	Gearbox housing
2	Small gear and shaft
3	Small sealed bearing
4	Retaining ring
5	Drive sprocket and shaft assembly
6	Large sealed bearing
7	Spacer
8	Bearing (no seals)
9	Retaining ring
10	Cover
11	Breather
12	Gear
13	Cover
14	Fill and check plug

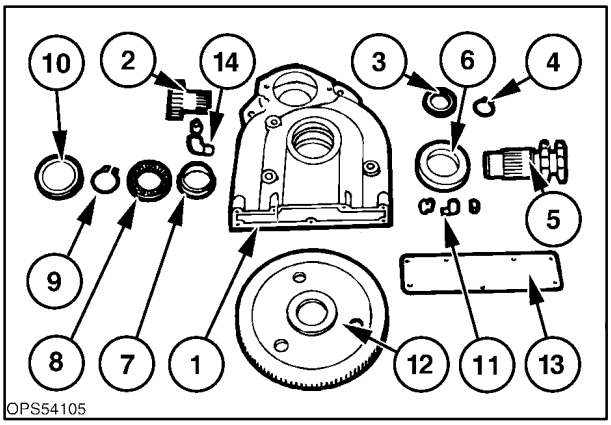

23

PARTS INSPECTION

1. Thoroughly clean all parts of old sealant, oil, etc., before inspection.
2. Examine the shaft bearing surfaces for wear.
3. Check the shaft splines for wear.
4. Check the operation of the gearbox breather.
5. Check the gearbox housing for any cracks, etc., as a result of pressing shaft out.

https://truckmanualshub.com/

6. Inspect the gearbox housing bearing areas for severe wear.

NOTE: *The bearings, 1, are a hand press fit into the housing, not an interference fit.*

7. Examine the mounting bolt threads for damage to prevent secure gearbox retention.

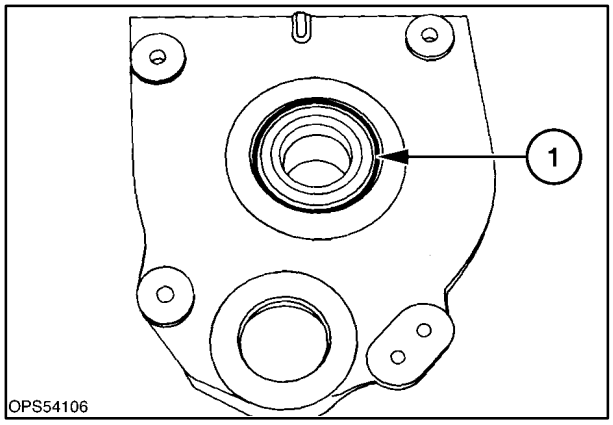

24

REASSEMBLY

1. Press the small sealed bearing, 1, onto shaft and gear assembly.
2. Install external snap ring, 2, making sure it is seated properly in groove.
3. Press the large sealed bearing, 3, onto sprocket and shaft assembly.

NOTE: *The bearings are sealed on both sides, so bearings can be installed with either side up.*

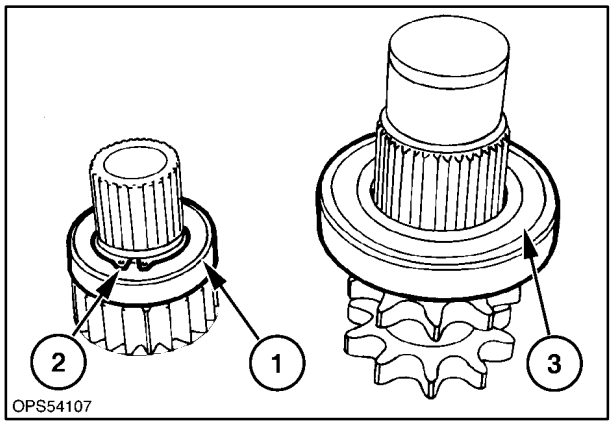

25

4. Place the motor coupler shaft and gear assembly, 1, into housing.

   Thoroughly clean the bearing surface, 2, and outer surface of the large sealed bearing with Loctite cleaner.

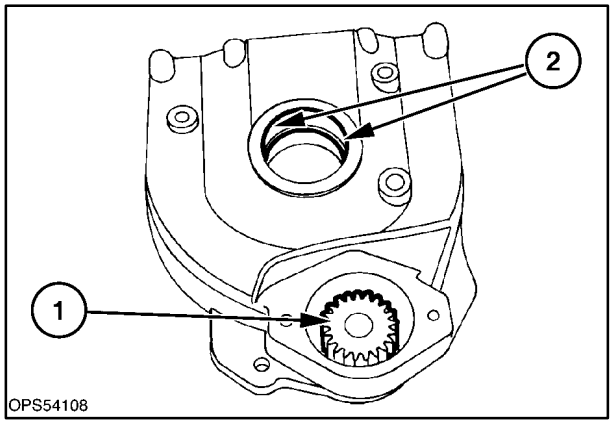

26

https://truckmanualshub.com/

5. Insert the large gear, 1, into the gearbox; note the gear will fit only one way.
6. Put a bead of medium-strength Loctite around the outer surface of the bearing at 1, between the bearing race and gearbox surface.
7. Slide the sprocket, shaft and bearing assembly, 3, into the gearbox, aligning shaft splines with gear splines.

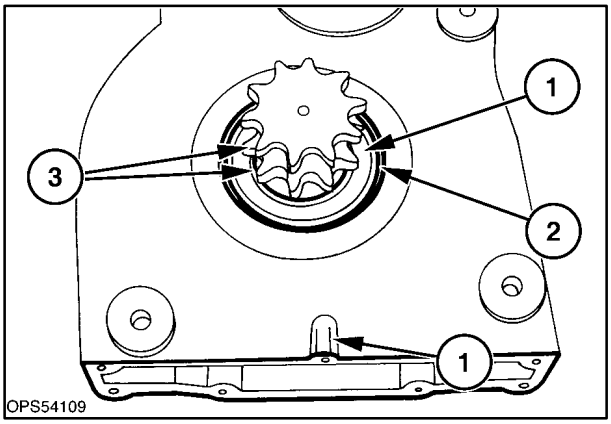

27

8. Place the shaft spacer, 1, recess side towards the gear. Place the spacer over the end of the splines on the shaft. The tapered side of the spacer, 2, should be to the outside of the gearbox housing.

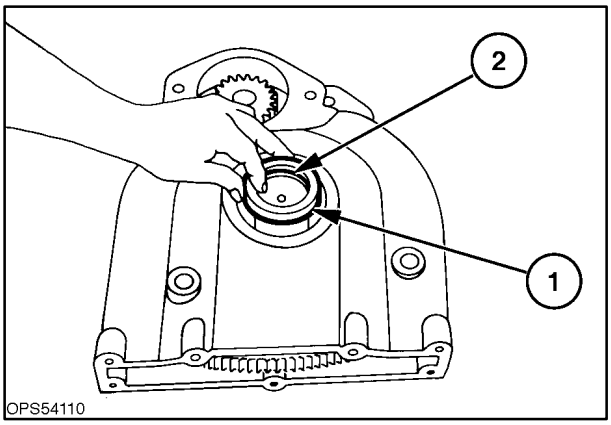

28

9. Place the unsealed bearing, 1, over the end of the shaft.
10. Install the large external snap ring, 2, in groove on shaft, making sure it is properly seated into the groove.

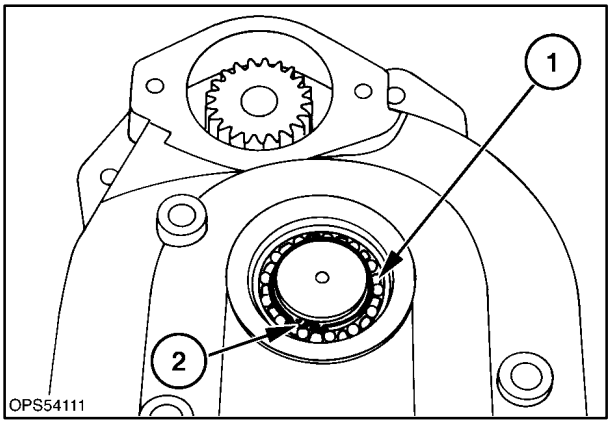

29

https://truckmanualshub.com/

11. Put a bead of noncorrosive silicone sealer around the outer lip of the shaft cover, 2, and place the cover in the gearbox on the unsealed bearing side of the gearbox. Tap the cover with a hammer to seat in the gearbox.
12. Put a bead of noncorrosive silicone sealer around the end of the gearbox and install the cover, 1. Tighten hardware to 20 N·m (15 ft. lbs.).
13. Reinstall the gearbox breather, 3, if removed.

NOTE: *The breather, 4, must be a breather with a spring-loaded center pin, part #572820.*

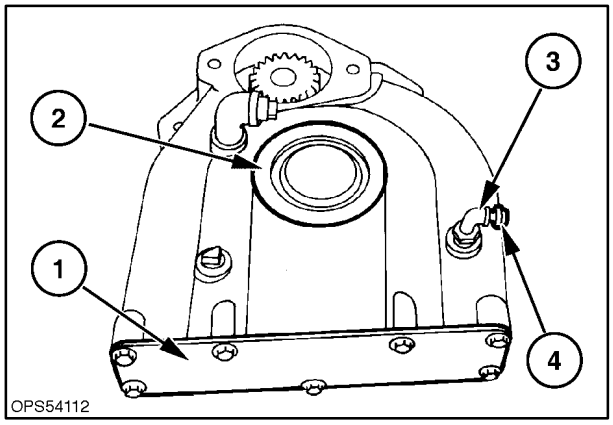

30

Op. 27 126 40

REINSTALLATION

1. Clean the mating surfaces of the final drive case and hydrostatic motor. Clean the oil, etc., from the final drive case.
2. Put a bead of noncorrosive silicone sealer around the bearings at 1 and the mounting holes, 2.
3. Using a hoist, place the gearbox assembly back into the loader.

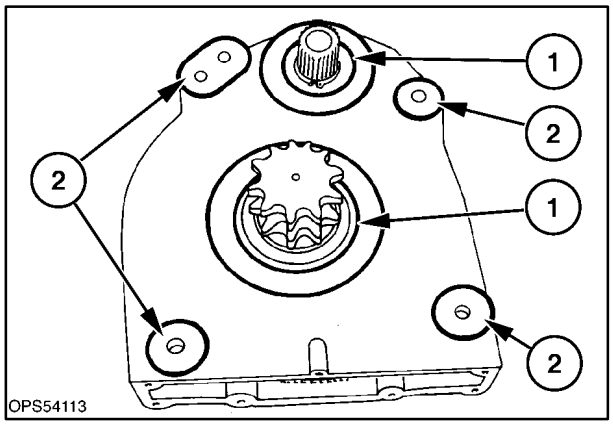

31

4. Position the gearbox against the final drive case, put a bead of noncorrosive silicone sealer around the heads and the threads of the retaining bolts, 1. Install the retaining bolts and torque to 170 N·m (125 ft. lbs.).

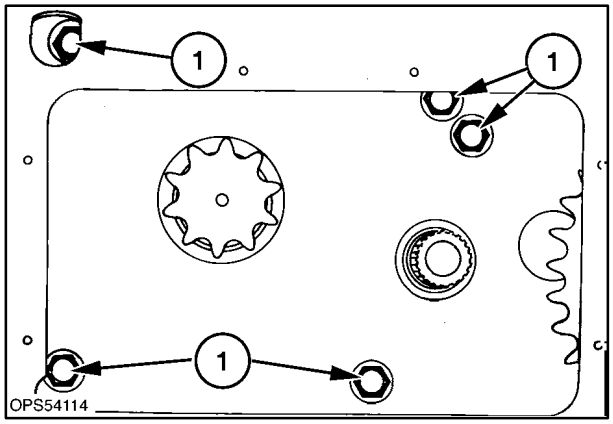

32

https://truckmanualshub.com/

5. Put a bead of noncorrosive silicone sealer around the flange of the hydrostatic motor. Align the motor splines with coupler splines and place motor shaft into coupler. Install the motor retaining bolts, 1, and torque to 85 N·m (63 ft. lbs.).

***IMPORTANT**: DO NOT force the hydrostatic motor shaft into the coupler. If the splines are not aligned, damage to the motor housing may occur.*

6. Reconnect the high pressure lines, if removed.
7. Fill the gearboxes with 80/90 gear oil to the proper level at check plug, 2.

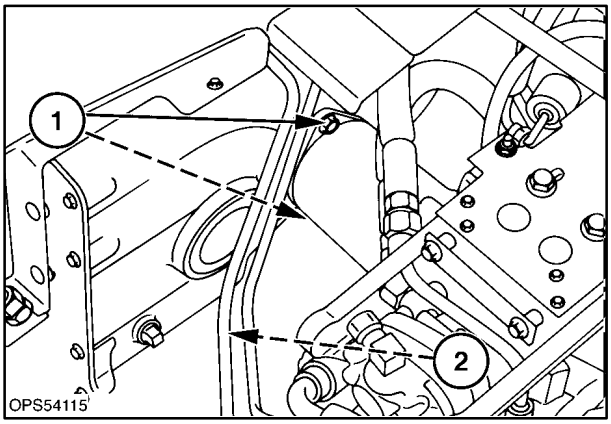

33

8. Reinstall the hydrostatic control assemblies, 1, and connect all linkages, 2 and 3, and electrical connections removed. Tighten the support retaining hardware, 4, securely.

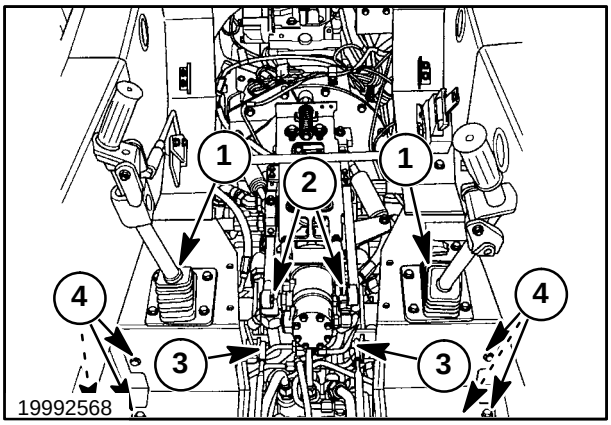

34

Reassemble the Parking Brake

9. Install the spacer plate, 2, next to the end of shaft, then the brake friction puck, 1.

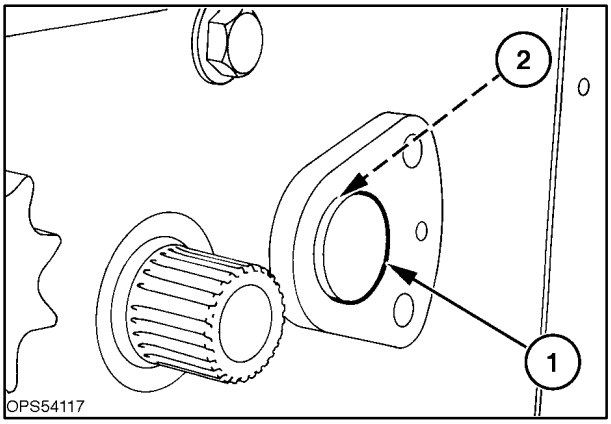

35

https://truckmanualshub.com/

10. Install the inside brake disc, 1, onto splined motor coupler shaft.
11. Put a bead of silicone sealer around the caliper retaining bolts and insert in support.
12. Slide the spacers, 2, and center of caliper, 3, over bolts.

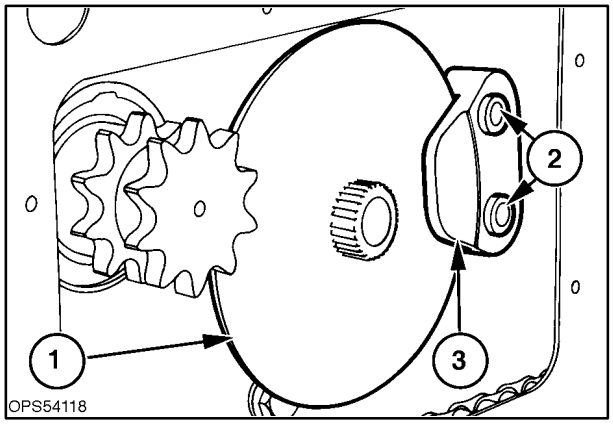

36

13. Install outer brake disc, 5, on motor shaft.
14. Thread caliper retaining bolts, 3, into outer section, 4, of caliper and tighten to 70 N·m (52 ft. lbs.). Check the center section of the caliper to insure it is free to move.
15. Put a bead of sealer on end of motor coupler. Install the brake disc retaining bolt and large flat washer at 2. Tighten to 35 N·m (26 ft. lbs.).
16. Reinstall the drive chains over the drive sprocket, 1.

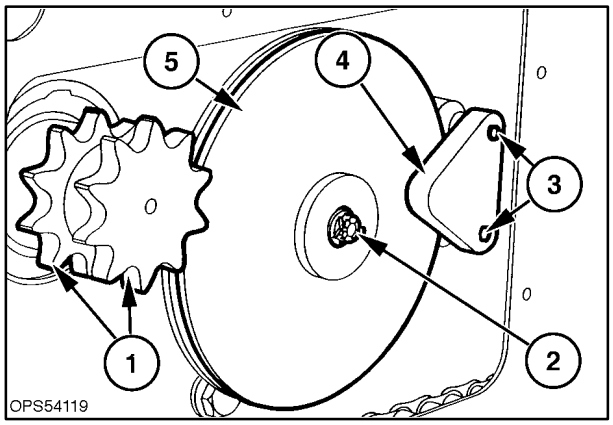

37

17. Install the final drive axles. Slide each axle assembly to tighten the drive chain to obtain a movement of 0 - 6 mm (0 - 1/4″) movement at the outer tire tread.

    Tighten the retaining bolts, 1, to 190 N·m (140 ft. lbs.).
18. Reseal and install the final drive cover, 2.
19. Check the final drive case oil level at 3, and add as required.
20. Reinstall all shields (step, fenders, tires, etc.) removed for the repair.
21. Remove the loader from the blocking.

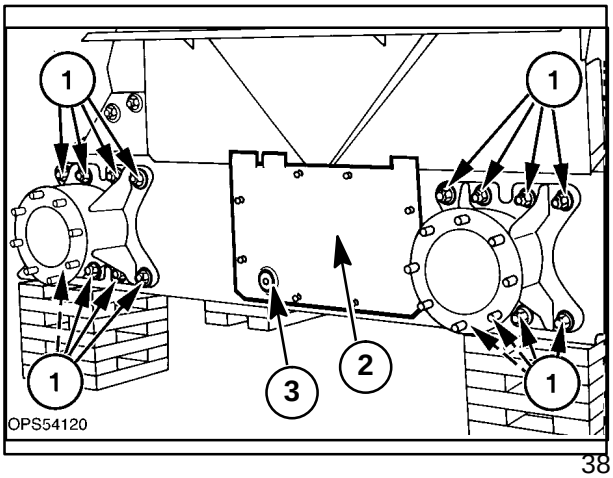

38

https://truckmanualshub.com/

LABOR GUIDE

The following labor amounts are listed as a guide only. Working conditions and experience will vary the time the job actually takes to complete each job.

Job Description	Hours
Gearbox	
Remove and replace	2.0 hrs.
Rebuild	1.5 hrs.

https://truckmanualshub.com/

https://truckmanualshub.com/

SECTION 29 - HYDROSTATIC TRANSMISSION

Chapter 1 - Neutralizer, Pumps, Motors

CONTENTS

Section	Description	Page
29 100	General Information	29-3
	Operation	29-3
	Specifications	29-5
29 100 01	Troubleshooting	29-6
	Hydrostatic Drive System Testing	29-8
	Hydrostatic System Oil Flow	29-11
	Hydrostatic Charge System Pressure Test	29-14
	Hydrostatic Pump Case Drain Test	29-15
	Hydrostatic Pump High Pressure Test	29-18
	Hydrostatic Pump Efficiency Test	29-20
	Hydrostatic Motor Case Drain Test	29-22
	Hydrostatic Motor Efficiency Test	29-23
	Hydraulic, Hydrostatic System Air Ingress Test	29-25
	Hydrostatic Pumps	29-27
29 100 40	Hydrostatic Pump Removal	29-27
29 100 46	Hydrostatic Pump Disassembly	29-31
	Hydrostatic Pump Parts Inspection	29-36
	Hydrostatic Pump Reassembly	29-41
	Hydraulic System Pump Installation (Without High Flow)	29-47
	Hydraulic System Pump/High Flow Pump Installation	29-49
	Hydrostatic Pump Reinstallation	29-54
	Hydrostatic Motor	29-58
29 100 60	Hydrostatic Motor Removal	29-58
29 100 66	Hydrostatic Motor Disassembly	29-62
	Hydrostatic Motor Parts Inspection	29-67
	Hydrostatic Motor Reassembly	29-70
	Hydrostatic Motor Reinstallation	29-79
	Hydraulic System Cleaning Procedure	29-85
	Start-up Procedure After Rebuild (After Pump or Motor Replacement)	29-88
	Charge Check Valve	29-90
29 100 36	Charge Check Valve Removal and Replacement	29-90

https://truckmanualshub.com/

29 100	Steering System	29-91
	Hydrostatic System Controls	29-91
29 130 30	Neutralizer Assembly	29-93
	Left Control Handle With No Boom Hand Control	29-97
29 100 10	Left Control Handle With No Boom Hand Control Removal	29-97
29 100 10	Left Control Handle With No Boom Hand Control Disassembly	29-97
	Left Control Handle With No Boom Hand Control Inspection	29-98
	Left Control Handle With No Boom Hand Control Reassembly	29-98
	Left Control Handle With No Boom Hand Control Reinstallation	29-98
29 100 11	Left Control Handle With Boom Hand Control	29-100
	Left Control Handle With Boom Hand Control Removal	29-100
29 100 10	Left Control Handle With Boom Hand Control Disassembly	29-101
	Left Control Handle With Boom Hand Control Inspection	29-102
	Left Control Handle With Boom Hand Control Reassembly	29-103
	Left Control Handle With Boom Hand Control Reinstallation	29-104
	Right Control Handle With Auxiliary or Bucket Control	29-106
29 100 15	Right Control Handle With Auxiliary or Bucket Control Removal	29-106
29 100 15	Right Control Handle With Auxiliary or Bucket Control Disassembly	29-107
	Right Control Handle With Auxiliary or Bucket Control Inspection	29-109
	Right Control Handle With Auxiliary or Bucket Control Reassembly	29-110
	Right Control Handle With Auxiliary or Bucket Control Reinstallation	29-113
29 130 06	Drive Control Adjustment Procedure	29-115
29 130 06	Neutral Adjustment	29-116
	Labor Guide	29-118

https://truckmanualshub.com/

Op. 29 100

GENERAL INFORMATION

The hydrostatic system provides a means to transfer power from the engine to the final drive for the wheels. It provides infinitely variable speed forward and reverse and steering of the skid steer.

The hydrostatic pumps receive power from the engine through a flex plate drive. The pumps transfer hydraulic power to the motors and then through gearboxes to the final drives, axles, and wheels.

The hydrostatic pumps are controlled separately from each other and power each side independently.

OPERATION

The hydrostatic system is a closed loop fluid power system that provides smooth transition of power from the engine to the wheels. The hydrostatic system is made up of two piston pumps, 1, and two piston motors, 2. The hydrostatic charge system is a back pressure valve in the hydraulic system return line located in the engine compartment. This provides replenishing oil for the oil that is lost due to leakage for lubrication and cooling purposes.

Steering is controlled by two hand levers, 3, located in the operators cab. These hand levers control direction forward and reverse and amount of oil flow for speed of the skid steer by rotation of the pump cam plates in the individual pumps. The further the control levers are pushed from neutral the greater the cam plate angle. More oil is pumped to the motors increasing the wheel speed. The greatest wheel torque is when the control levers are closer to neutral. When operating the skid steer, more power (torque) is available by destroking the control levers, thus increasing the loader efficiency.

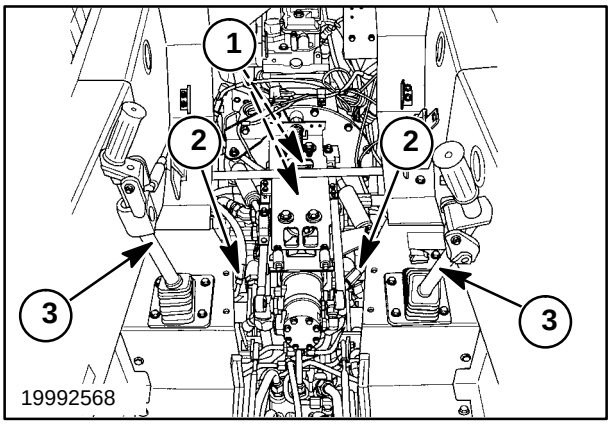

1

https://truckmanualshub.com/

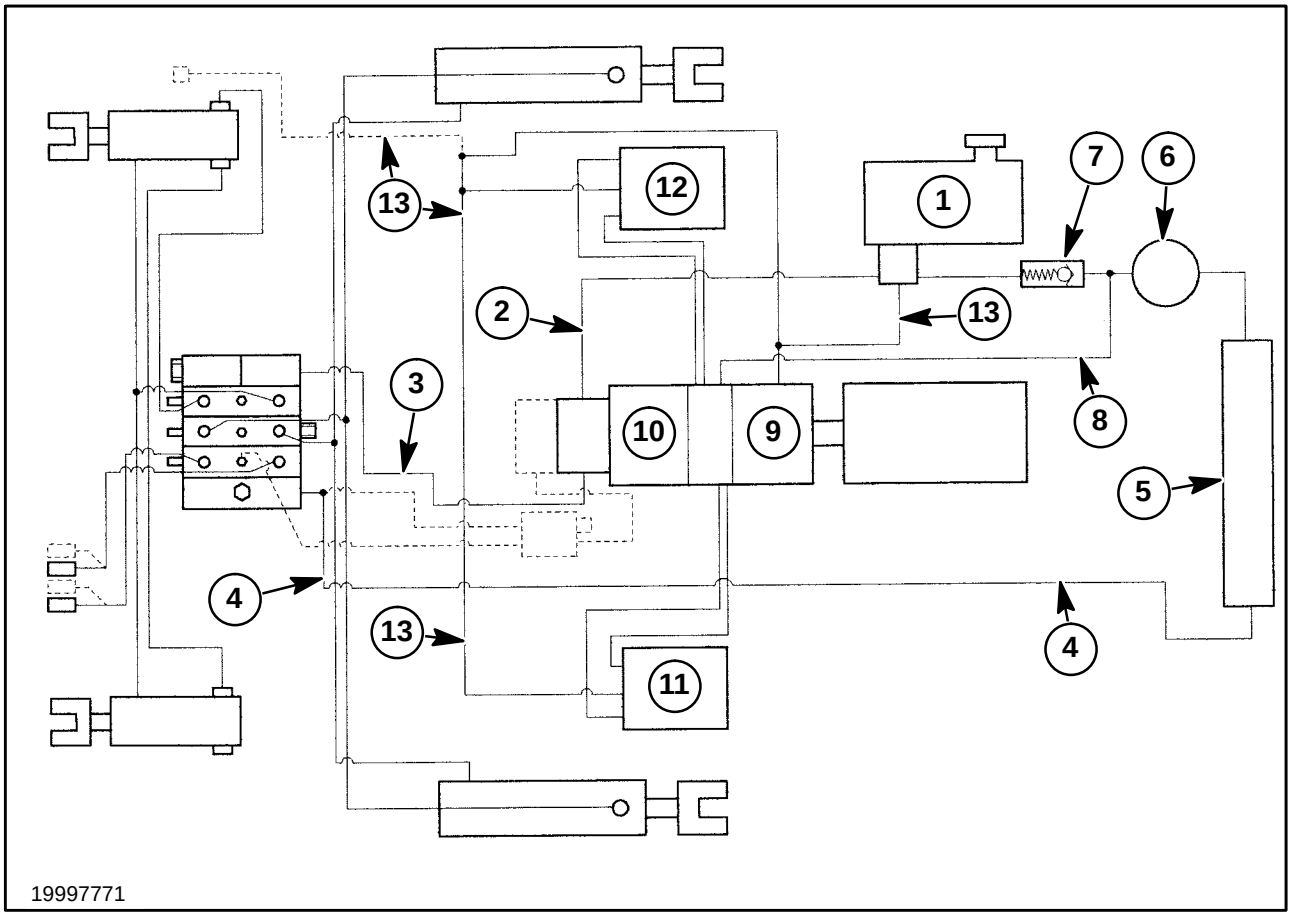

2

The hydrostatic system consists of the following components:

1. Hydraulic reservoir - Right front of engine compartment
2. Suction line - From reservoir to the gear pump under the operator's seat.
3. Pressure line - From the gear pump to the control valve under the operator's seat.
4. Return line - From control valve to oil cooler.
5. Oil cooler - Engine side of radiator in engine compartment.
6. Oil filter - After the oil cooler engine compartment rear door.
7. Charge check valve - In return line between oil filter and reservoir.
8. Hydrostatic transmission charge line - From the charge check valve to the hydrostatic pumps under the operator's seat.
9. Hydrostatic pump for left drive - Under operator's seat.
10. Hydrostatic pump for right drive - Under operator's seat.
11. Hydrostatic motor for left drive - Under operator's seat.
12. Hydrostatic motor for right drive - Under operator's seat.
13. Hydrostatic system case drain line - From pumps and motors to the hydraulic reservoir.

https://truckmanualshub.com/

SPECIFICATIONS

HYDROSTATIC PUMPS

Type	Variable Displacement Piston Pump
Displacement	82.3 L/min (21.47 GPM) @ 2000 RPM
Pressure Relief Setting	238 bar (3500 PSI)
Minimum Pump Efficiency	80%
Maximum Pump Case Drain	5.7 L/min (1.5 GPM) per pump
Maximum Pump Case Pressure	1.7 bar (25 PSI)

HYDROSTATIC MOTORS

Type	High Torque Axial Piston Motors
Minimum Motor Efficiency	80%
Maximum Motor Case Drain	5.7 L/min (1.5 GPM) per motor
Maximum Motor Case Pressure	1.7 bar (25 PSI)

CHARGE PRESSURE SYSTEM

Back Pressure Valve Setting	11.0 - 11.7 bar (160 - 170 PSI)

OIL REQUIREMENTS

Type and Specification	SAE SH/CG4 10W-30

TORQUE SPECIFICATIONS

Pump Seal Cover Screws	5 N·m (48 in. lbs.)
Pump Relief Valve Caps	135 N·m (100 ft. lbs.)
Pump Valve Plate Cap Screws	39 N·m (29 ft. lbs.)
Pump to Pump Cap Screws	77 N·m (57 ft. lbs.)
Motor Mounting Cap Screws	101 N·m (75 ft. lbs.)
Motor Valve Plate Cap Screws	23 N·m (17 ft. lbs.)
Flywheel Cover Plate	61 N·m (45 ft. lbs.)

OTHER MATERIALS

Sealing Material	NH Ultra Blue silicone sealer NH #L81724 - 3.35 oz. tube (cord) NH #L82519DS - 8 oz. tube NH #L58775 - 10.2 oz. cartridge
Hydraulic Oil	SAE10W-30 motor oil-API Service SH/CG4 NH #9613313 - 1 qt. NH #9613314 - 2 1/2 gal. NH #9613358 - 1 L NH #9613360 - 20 L

NOTE: *Always use a noncorrosive silicone sealer to prevent damage to the components being sealed during the silicone curing process.*

https://truckmanualshub.com/

Op. 29 100 01

TROUBLESHOOTING

When performing tests on the hydrostatic system, use the proper test procedures and test equipment.

Before testing, lower the attachment to the ground or remove attachment from the loader.

If testing is to be performed with a raised boom, make sure the boom is raised above and resting on the boom lock pins, attachment removed.

Before opening the hydraulic system, clean the area thoroughly to prevent contaminating the system.

Before opening the hydraulic system, relieve all pressure from the system.

Before testing the hydrostatic system, check the hydraulic oil level.

Before testing the hydrostatic system, the oil must be at normal operating temperature.

If testing requires the skid steer to be raised, use adequate blocking and/or jack stands to securely support the loader.

CAUTION

When connecting test equipment into the hydrostatic system, relieve the pressure in the system. Stop the engine, with seat belt fastened turn the ignition switch to the “on” position and operate all hydraulic control valve circuits to relieve pressure. Turn the ignition switch to the “off” position.

WARNING

Gauges, gauge fittings, and hoses must have operating pressure ratings of at least 25% higher than the highest pressures of the system.

Never adjust or replace the relief valves to get higher pressures than those specified by the equipment manufacturer.

Fluid under pressure can have sufficient force to penetrate the skin, causing serious personal injury. Always protect the skin and eyes from escaping fluid under pressure.

Before disconnecting lines or fittings, be sure to turn off the skid loader engine and relieve all pressure. Before applying pressure to the system, be sure all connections are tight and that lines, pipes, and hoses are not damaged.

If injured by escaping fluid, obtain medical assistance at once. Serious infection or reaction can develop if medical treatment is not administered immediately.

Remove any attachment from the mounting plate before loosening or disconnecting any hydraulic lines.

CAUTION

Use adequate blocking and/or jack stands to insure that the loader is safely supported with all four wheels off the ground.

https://truckmanualshub.com/

PROBLEM	POSSIBLE CAUSE	CORRECTION
Machine will not move either direction	Parking brake engaged	Release parking brake
	Engine to hydrostatic drive coupler	Check and repair or replace
	Low hydraulic oil	Check oil level
	Low charge pressure	Check charge pressure/repair
	Incorrect oil	Drain and replenish with proper oil
	Air in system	Purge air and repair system
	Water in system	Drain, clean, and replace oil
	Output pressure too low	Check pressure/replace relief valve
	Internal pump or motor damaged	Check pump/motor case drain flow
	Linkages loose or broken	Check and repair
One side moves, other side does not	Relief valve stuck open	Check and repair
	Internal pump or motor damaged	Check pump/motor case drain flow
	Brake engaged on one side	Check parking brake system and repair
	Linkage loose or broken	Check and repair
	Broken drive chain	Check and repair
	Gearbox damaged	Check and repair
Noisy pump or motor	Air in system	Purge air and repair system
	Wrong kind of oil	Drain, clean system and replace oil
	Water in system	Drain, clean, and replace oil
	Internal pump or motor damaged	Check pump/motor case drain flow
	Linkage loose or broken	Check and repair
	Parking brake engaged	Release parking brake
Low power	Low hydraulic oil	Check oil level
	Low charge pressure	Check charge pressure/repair
	Relief valve stuck open	Check and repair
	Air in system	Purge air and repair system
	Output pressure too low	Check pressure replace relief valve
	Internal pump or motor damaged	Check pump/motor case drain flow
Sluggish response to changes in speed	Relief valve stuck open	Check and repair
	Air in system	Purge air and repair system
	Output pressure too low	Check pressure/replace relief valve
	Linkage loose or broken	Check and repair
	Oil to heavy, cold weather	Allow unit to warm up before operating
	Wrong kind of oil	Drain, clean system and replace oil

https://truckmanualshub.com/

HYDROSTATIC DRIVE SYSTEM TESTING

Hand controls - forward and reverse

Pretest instructions:

*Operator in seat
*Seat belt buckled
*Service/Run switch in “RUN” position
*Key switch in the “OFF” position

STEP	TEST	RESULT	PROBABLE CAUSE AND CORRECTION
1	Levers should move freely	NO YES	Check control linkage from levers to the pumps. System OK
2	Stroke both levers forward or reverse, the levers should return to neutral position	YES NO	System OK Check neutralizer system for binding or adjustment.
3	Stroke both levers forward or reverse and release one lever, both levers should stay in direction stroked	YES NO	System OK Check neutralizer system for binding or adjustment

Hand controls - forward and reverse

Pretest instructions:
*Operator in seat
*Seat belt buckled
*Service/Run switch in “RUN” position
*Parking brake disengaged
*Key switch in the “RUN” position
*Engine operating at low idle speed

STEP	TEST	RESULT	PROBABLE CAUSE AND CORRECTION
1	Control levers in neutral, unit should not move	YES NO	System OK Check and adjust for neutral
2	Stroke both levers forward or reverse, unit should accelerate smoothly	YES NO	System OK Check for loose or damaged control linkage, if OK go to next step.
3			Check hydraulic oil level and add as required, if OK go to next step.
4			Check hydrostatic hoses, tubing, and connections for leaks, if OK go to next step.
5			Check parking brake for being engaged or adjustment, if OK go to next step.
6			Check hydrostatic charge pressure, if OK go to next step.
7			Check forward or reverse relief valve operation and pressure settings.
8	Control levers in neutral park brake engaged, pumps should be quiet	YES NO	Control System OK Check and adjust for neutral, if OK go to next step.
9			Check for loose or damaged control linkage, if OK go to next step.
10	Control levers in full forward, machine should go in straight line	YES NO	Control System OK Reset control lever stops

https://truckmanualshub.com/

Before performing any hydraulic test, operate the skid steer to get the hydraulic oil to operating temperature (about 38°C or 100° F above ambient temperature).

For access to hydrostatic testing, remove any attachment from the loader attaching face plate and support the boom on the lockpins.

1. Raise the boom, extend the boom lockpins, 1, and lower the boom down on the lockpins.

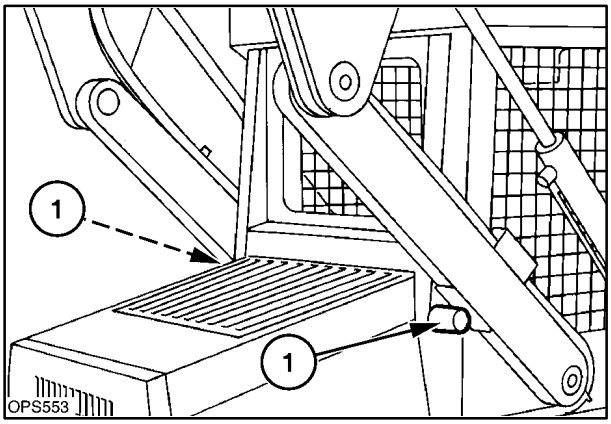

3

2. Stop the engine, turn the ignition key to the run position, and operate the boom and bucket control pedals to relieve pressure in the cylinders. Turn off the key.
3. Raise and support the skid steer with all four wheels off the ground. Support the front of the loader at 1 to the front of the final drive case and at 2 to the rear of the case.

CAUTION

Failure to securely support the skid steer could result in movement of the loader during testing causing serious injury or damage to the equipment.

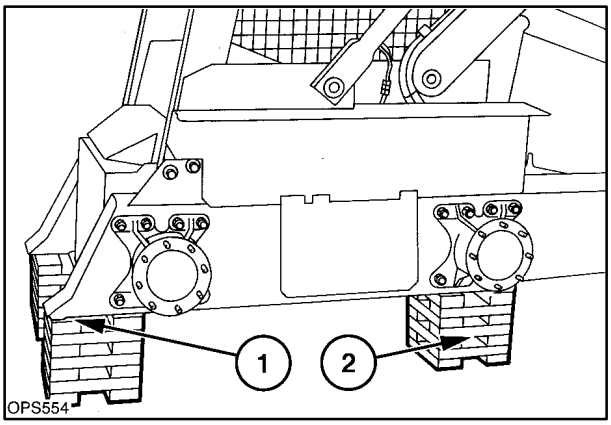

4

4. Put the “SERVICE/RUN” switch, 1, in the “SERVICE” position.

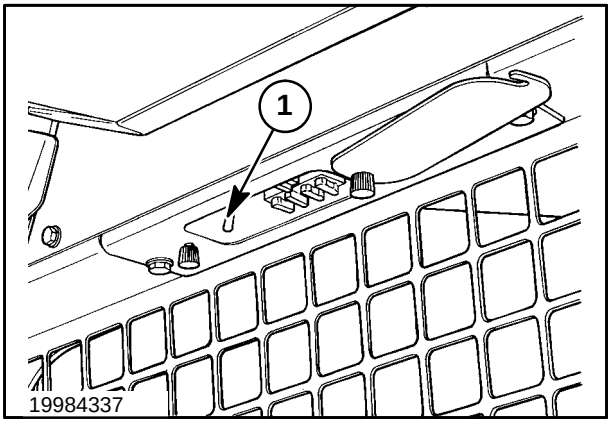

5

https://truckmanualshub.com/

5. Raise the operator's seat and latch in the raised position, 1.

CAUTION

Never work under a raised seat unless it is securely latched in the raised position.

6. Check the hydraulic oil level and add, if required, to proper level.

WARNING

Gauges, gauge fittings, and hoses must have operating pressure ratings of at least 25% higher than the highest pressures of the system.

Never adjust or replace the relief valves to get higher pressures than those specified by the equipment manufacturer.

Fluid under pressure can have sufficient force to penetrate the skin, causing serious personal injury. Always protect the skin and eyes from escaping fluid under pressure.

Before disconnecting lines or fittings, be sure to turn off the skid loader engine and relieve all pressure. Before applying pressure to the system, be sure all connections are tight and that lines, pipes, and hoses are not damaged.

If injured by escaping fluid, obtain medical assistance at once. Serious infection or reaction can develop if medical treatment is not administered immediately.

Remove any attachment from the mounting plate before loosening or disconnecting any hydraulic lines.

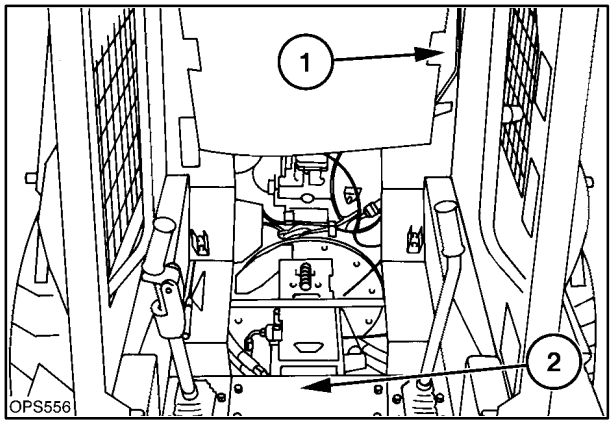

6

https://truckmanualshub.com/

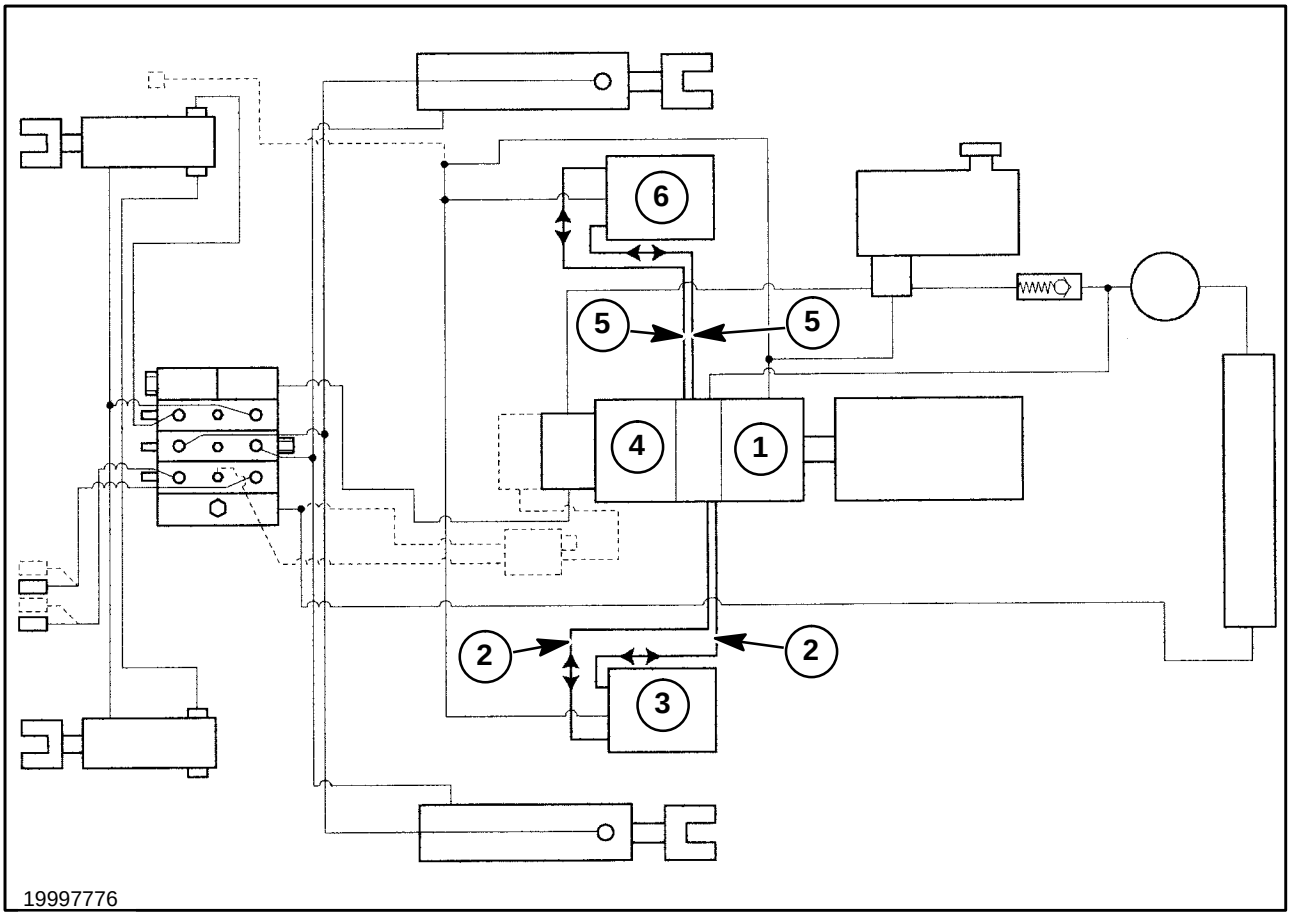

7

HYDROSTATIC SYSTEM OIL FLOW

Hydrostatic Pumps and Motors High- Pressure Flow

The hydrostatic pumps are driven by the engine through a flex plate drive coupler.

The rear hydrostatic pump, 1, supplies high-pressure oil through high-pressure lines, 2, to the left hydrostatic motor, 3, when the left forward/reverse control lever is stroked in either direction.

The front hydrostatic pump, 4, supplies high-pressure oil through high-pressure lines, 5, to the right hydrostatic motor, 6, when the right forward/reverse control lever is stroked in either direction.

The hydrostatic system is protected by four high-pressure relief valves, two each pump, one for forward and one for reverse. All four high- pressure relief valves are the same and factory set at 238 bar (3500 PSI). Do not try changing the pressure setting of these relief valves. If during testing the relief valves are found to be incorrectly set, replace the complete valve cartridge.

https://truckmanualshub.com/

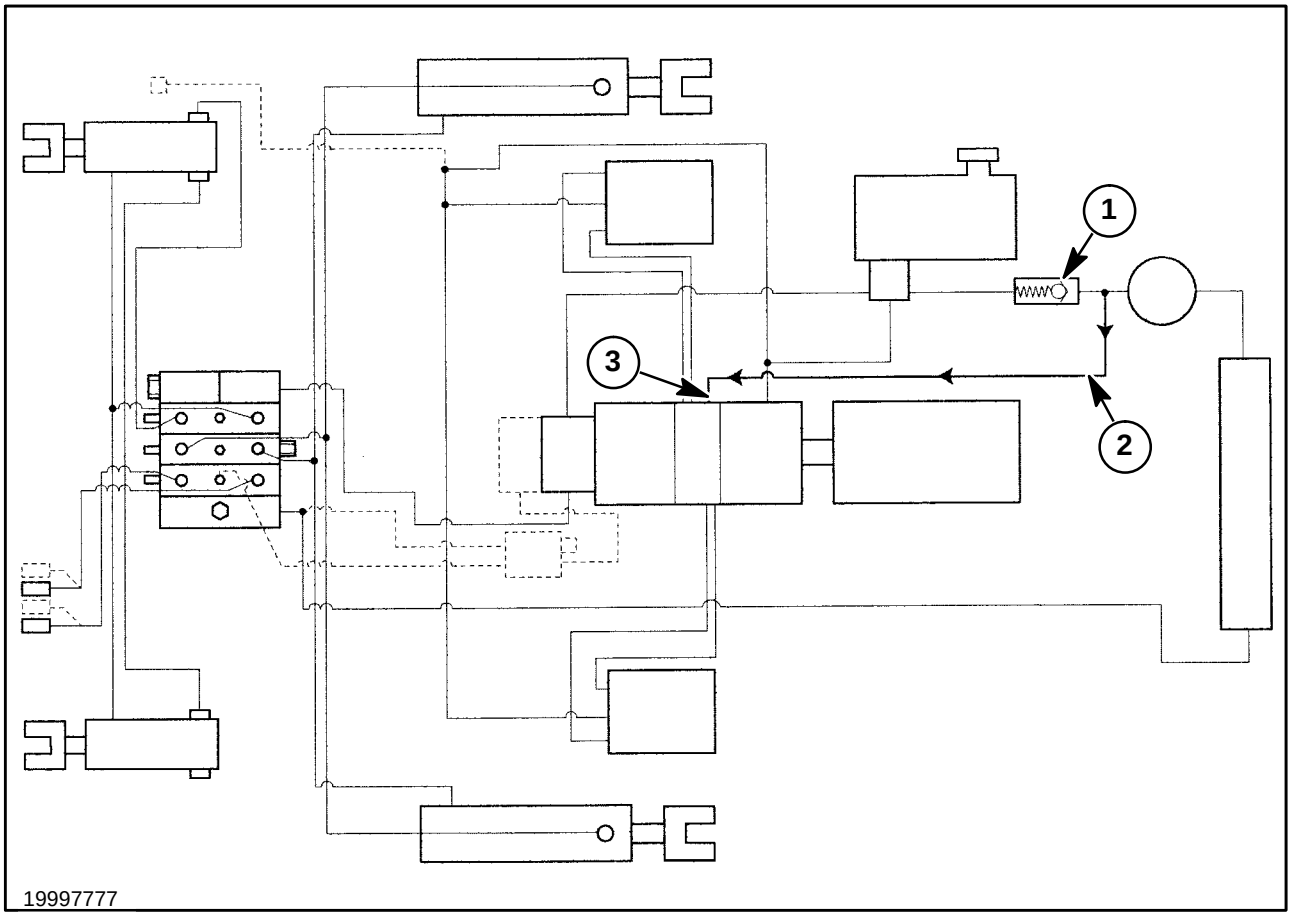

8

Hydrostatic Pump and Motor Charge Pressure Oil Flow

During the operation of the hydrostatic pumps and motors, oil from the high-pressure system is used for lubrication of the internal rotating parts of the pumps and motors. The lubrication oil drains into the pump and motor housings.

A charge check valve in the return line after the filter at 1, builds backpressure in the return circuit and forces oil through the charge line, 2, into the hydrostatic pump back plate at 3. This charge oil provides replacement oil in the high-pressure circuits that was used for lubrication purposes.

https://truckmanualshub.com/

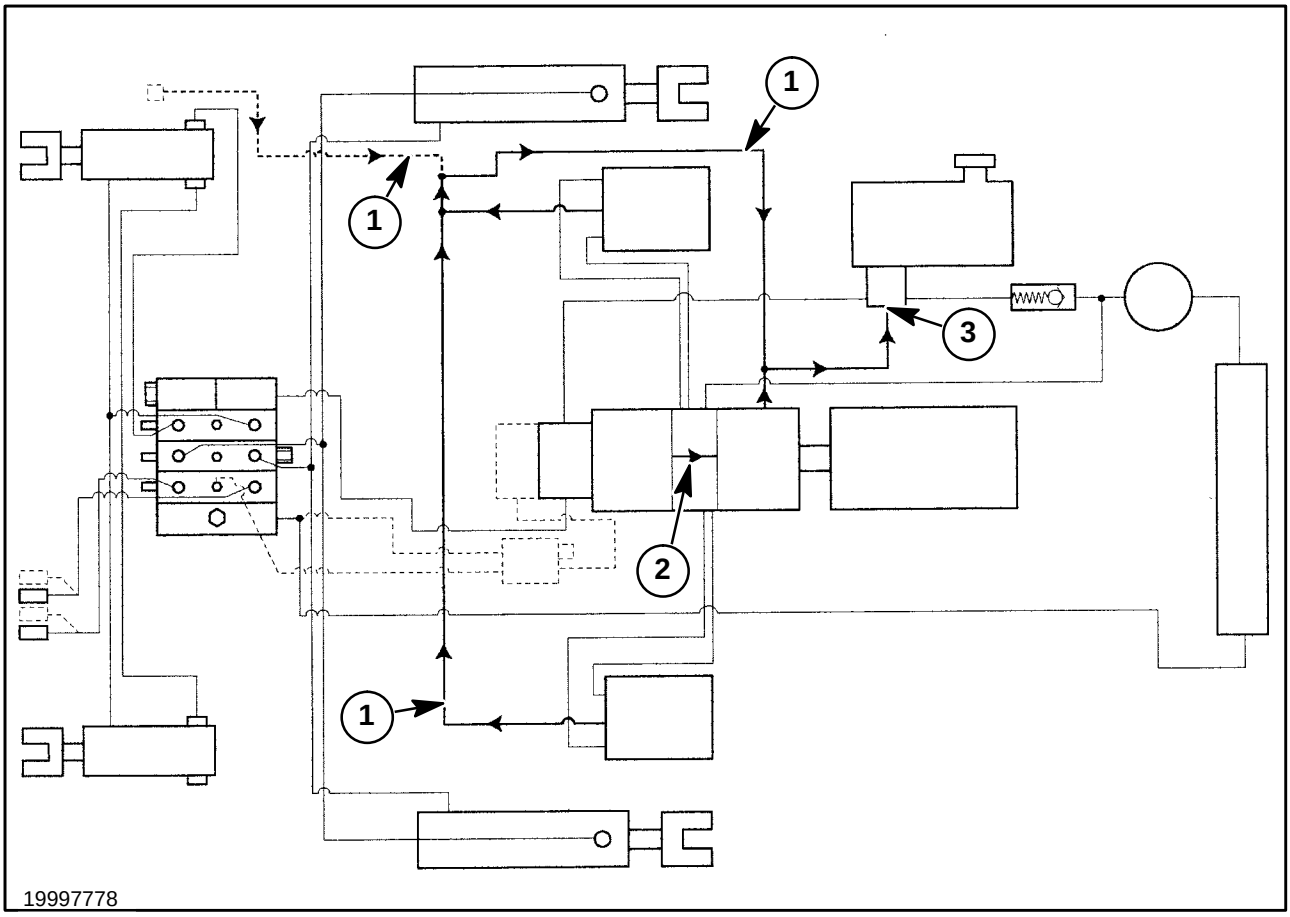

9

Hydrostatic Pump and Motor Case Drain Flow

During operation of the hydrostatic pumps and motors, oil from the high-pressure circuit used for lubrication oil drains into the pump and motor housings.

The lubrication oil will fill the housings approximately half full. This oil then becomes cooling oil and will drain from the pumps and motor housings (cases) through drain lines, 1.

The front hydrostatic pump drains internally to the rear pump at 2. The oil will drain from the rear pump and tees into the drain line from the motors. The case drain oil returns to the hydraulic reservoir, 3.

https://truckmanualshub.com/

HYDROSTATIC CHARGE SYSTEM PRESSURE TEST

Hydrostatic charge pressure oil is the return oil from the boom, bucket, and auxiliary hydraulic circuits from the return side of the control valve. This oil is required for replenishing oil to the hydrostatic system for lubrication and cooling of the hydrostatic pumps and motors.

IMPORTANT: *Do not change the route of the return oil from the main control valve or the hydrostatic system may be damaged.*

The charge pressure can be checked at the test port, 1, near the charge check valve, 2.

The charge system pressure is factory set. Changes to the settings should not be necessary. The charge check relief valve is located at 2. If there is some reason to suspect incorrect pressure, check the pressure as follows:

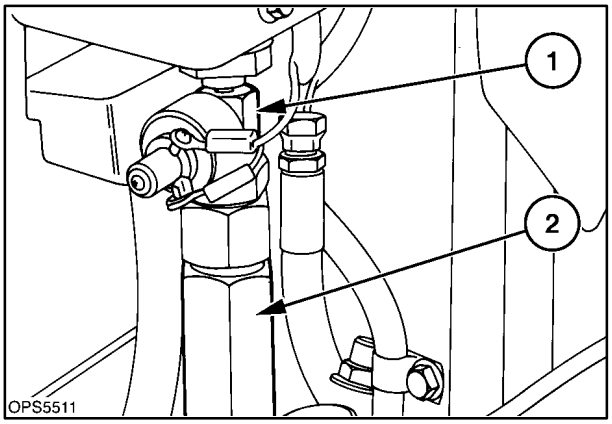

10

Checking Charge System Pressure

Fittings and gauge required:

1. 22 bar (300 PSI) gauge (minimum)
2. 1/8″ pipe to gauge

Test Procedure

1. Raise the boom and rest on the boom locks.
2. Put the “SERVICE/RUN” switch in the “SERVICE” position.
3. Disengage the parking brake.
4. Securely block the skid steer with all four wheels off the ground. Support the front of the loader at 1, to the front of the final drive case and at 2, to the rear of the case.

CAUTION

Failure to securely support the skid steer could result in movement of the loader during testing causing serious injury or damage to the equipment.

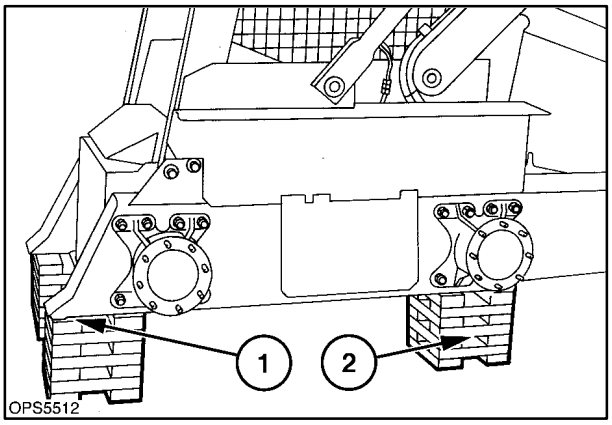

11

https://truckmanualshub.com/

5. Remove the right engine side shield to access the charge check valve and test port.
6. Install the pressure test gauge in the test port at 1.

IMPORTANT: *Check the hydraulic oil level and add if required to insure sufficient oil for the test.*

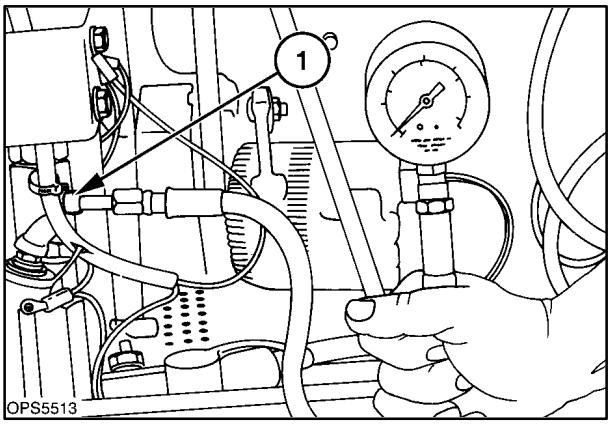

12

7. Start the engine and run it at full throttle (3070 - 3150 RPM) and take a pressure reading,11.0 - 11.7 bar (160 - 170 PSI).
8. Operate the hydrostatic control levers in forward and reverse until the system bypasses and take a pressure reading. Return the controls to neutral. The pressure should be 10.3 - 11.7 bar (150 - 170 PSI).

CAUTION

Always stay clear of moving parts during testing or serious injury could occur.

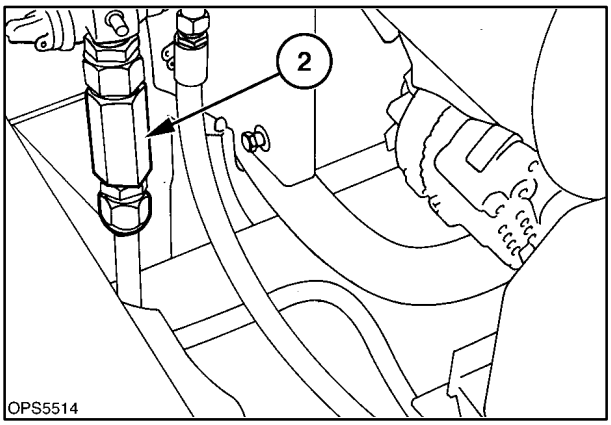

13

9. The check valve is not adjustable. Replace the check valve, 2, if the pressure is not within specifications in step 7. If the pressure is not correct in step 8, further testing is required, refer to pump case drain testing.

HYDROSTATIC PUMP CASE DRAIN TEST

The hydrostatic pump drain oil can be checked by a pressure test and/or oil flow drain test.

Pump Case Pressure Test Procedure

1. Raise the boom and rest on the boom locks.
2. Put the Service/Run switch in the “SERVICE” position.
3. Engage the parking brake.
4. Securely block the skid steer with all four wheels off the ground.

CAUTION

Failure to securely support the skid steer could result in movement of the loader during testing causing serious injury or damage to the equipment.

https://truckmanualshub.com/

5. Raise the operator's seat and latch in the raised position, 1.

CAUTION

Never work under a raised seat unless it is securely latched in the raised position.

6. Remove the step shield to access the hydrostatic pumps and motors.

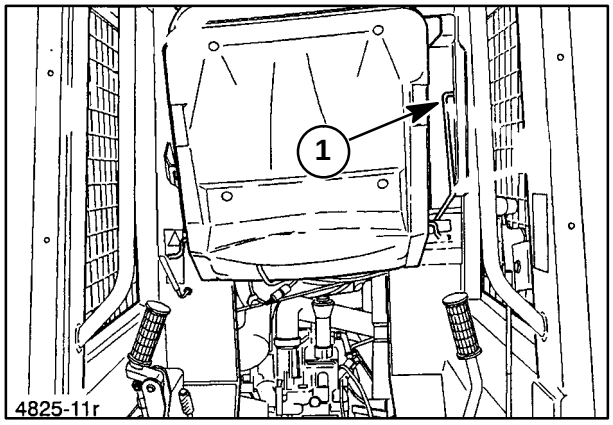

14

7. To check the pump case pressure, tee in a 7 bar (100 PSI) gauge at the pump drain line, 1. The tee must be at the drain port of the pump housing not in the combined line from the motors.

NOTE: *The front pump drains internally to the rear pump so the oil from this pump drain line will be oil from both pumps.*

IMPORTANT: *Check the hydraulic oil level and add if required to insure sufficient oil for the test.*

8. Start the engine and run it at full throttle (3070 - 3150 RPM) and take a reading, 0 - 41.2 kPa (0 - 6 PSI) allowable range.
9. Stroke the hydrostatic control levers forward and reverse and take a pressure reading in both directions; the pressure should not exceed 172 kPa (25 PSI). If the pressure exceeds 172 kPa (25 PSI) there is excessive leakage from the forward and/or reverse high pressure loops. If the pressure is within specifications, the problem may be in the motors.

CAUTION

Always stay clear of moving parts during testing or serious injury could occur.

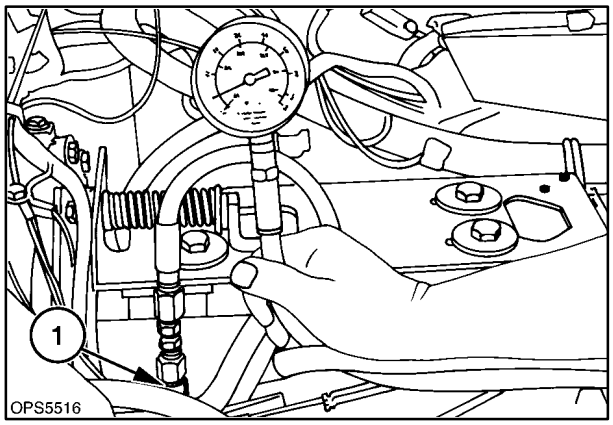

15

https://truckmanualshub.com/

Pump Case Drain (Oil Flow) Test Procedure

1. Raise the boom and rest on the boom locks.
2. Put the Service/Run switch in the “SERVICE” position.
3. Engage the parking brake.
4. Securely block the skid steer with all four wheels off the ground.

CAUTION

Failure to securely support the skid steer could result in movement of the loader during testing causing serious injury or damage to the equipment.

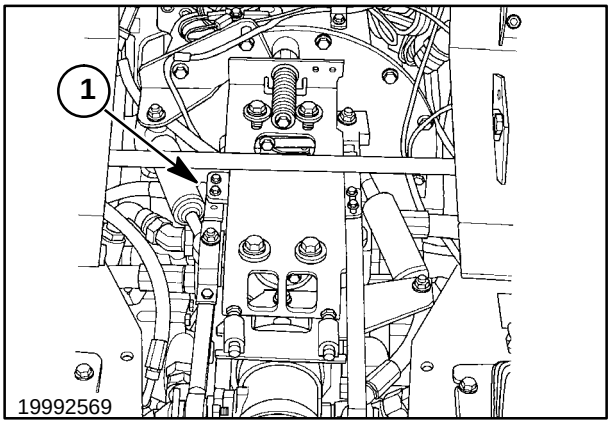

16

5. Raise the operator’s seat and latch in the raised position.
6. Remove the step shield.
7. Remove the pump case drain line at 1, from the pump housing and cap. Connect a hose into the pump housing and run into a container.

IMPORTANT: *Check the hydraulic oil level and add if required to insure sufficient oil for the test.*

NOTE: *The front pump drains internally to the rear pump so the oil from this pump drain line will be oil from both pumps.*

8. Hold the hose, or hoses, over a container, 1, and start the engine and run it at full throttle (3070 - 3150 RPM). Take a flow reading, maximum 1.5 GPM each pump, 3 GPM total from both pumps.
9. Stroke the hydrostatic control levers forward and reverse and take a flow reading in both directions. If the flow exceeds the maximum 1.5 GPM per pump, there is excessive leakage from the forward and/or reverse high pressure loops. If the pressure is within specifications, the problem may be in the motors.

CAUTION

Always stay clear of moving parts during testing or serious injury could occur.

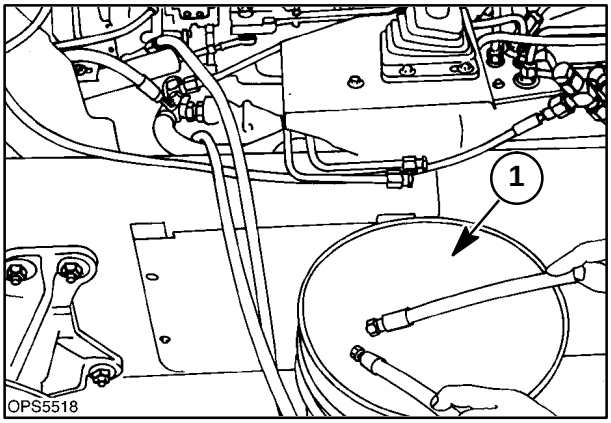

17

https://truckmanualshub.com/

HYDROSTATIC PUMP HIGH-PRESSURE TEST

The hydrostatic drive system has a high-pressure relief valve for forward and reverse, two relief valves per pump or side. The relief valves, 1, for both pumps and for forward and reverse are the same and the same setting, 238 bar (3500 PSI).

If one relief valve is in question, the valve can be switched with a known good valve; if the problem follows the switched valve, replace the suspect valve. Switching forward and reverse relief valves on the same pump should reverse the problem if a relief valve is the problem. If the problem remains, the problem is most likely internally in the pump or motor. Refer to the pump case drain test for further testing to locate the problem.

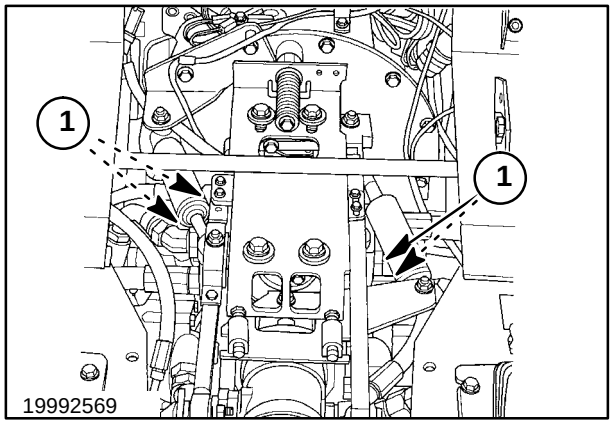

18

Relief Valve Test Procedure

1. Raise the boom and rest on the boom locks.
2. Put the Service/Run switch in the “SERVICE” position.
3. Engage the parking brake.
4. Securely block the skid steer with all four wheels off the ground.

CAUTION

Failure to securely support the skid steer could result in movement of the loader during testing causing serious injury or damage to the equipment.

5. Raise the operator’s seat and latch in the raised position.
6. Remove the step shield.
7. Install a tee fitting in the high-pressure loop being tested as shown at 1, motor fitting and install a 340 bar (5000 PSI) pressure gauge.

***IMPORTANT**: Check the hydraulic oil level and add if required to insure sufficient oil for the test.*

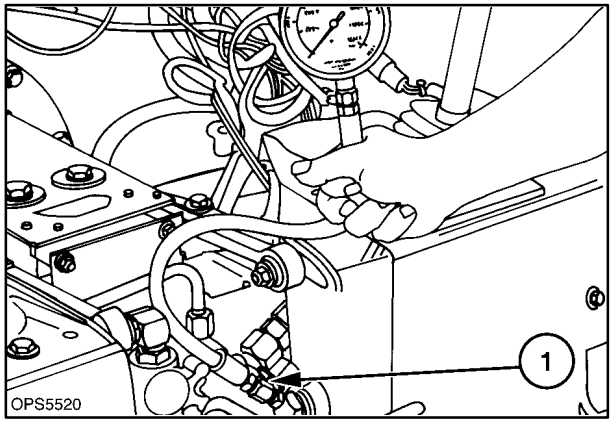

19

https://truckmanualshub.com/

The following pump relief valves protect the direction of motor (tire) rotation forward or reverse.

Front pump controls right motor:

1 - Forward (bottom)

2 - Reverse (top)

Rear pump controls left motor:

3 - Forward (bottom)

4 - Reverse (top)

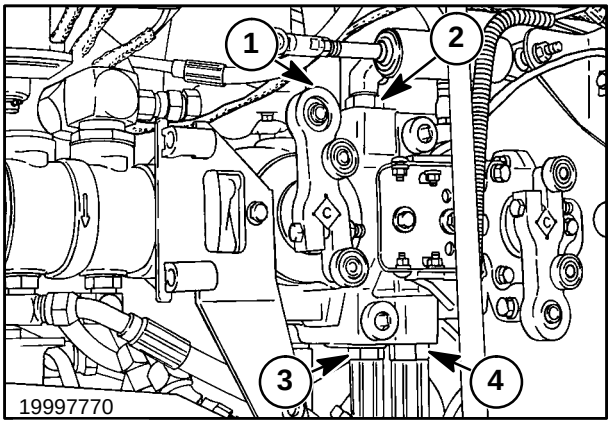

20

8. Start the engine and run it at full throttle (3070 - 3150 RPM).
9. Stroke the hydrostatic control lever on the side being tested and in the direction being tested and take a pressure reading, the pressure should be 238 bar (3500 PSI). If the pressure is not at specification, 238 bar (3500 PSI), replace the suspect relief valve.

NOTE: *All four directional relief valves can be tested in this manner.*

If the pressure is within specification, refer to the pump/motor case drain test for further testing to locate the problem.

CAUTION

Always stay clear of moving parts during testing or serious injury could occur.

https://truckmanualshub.com/

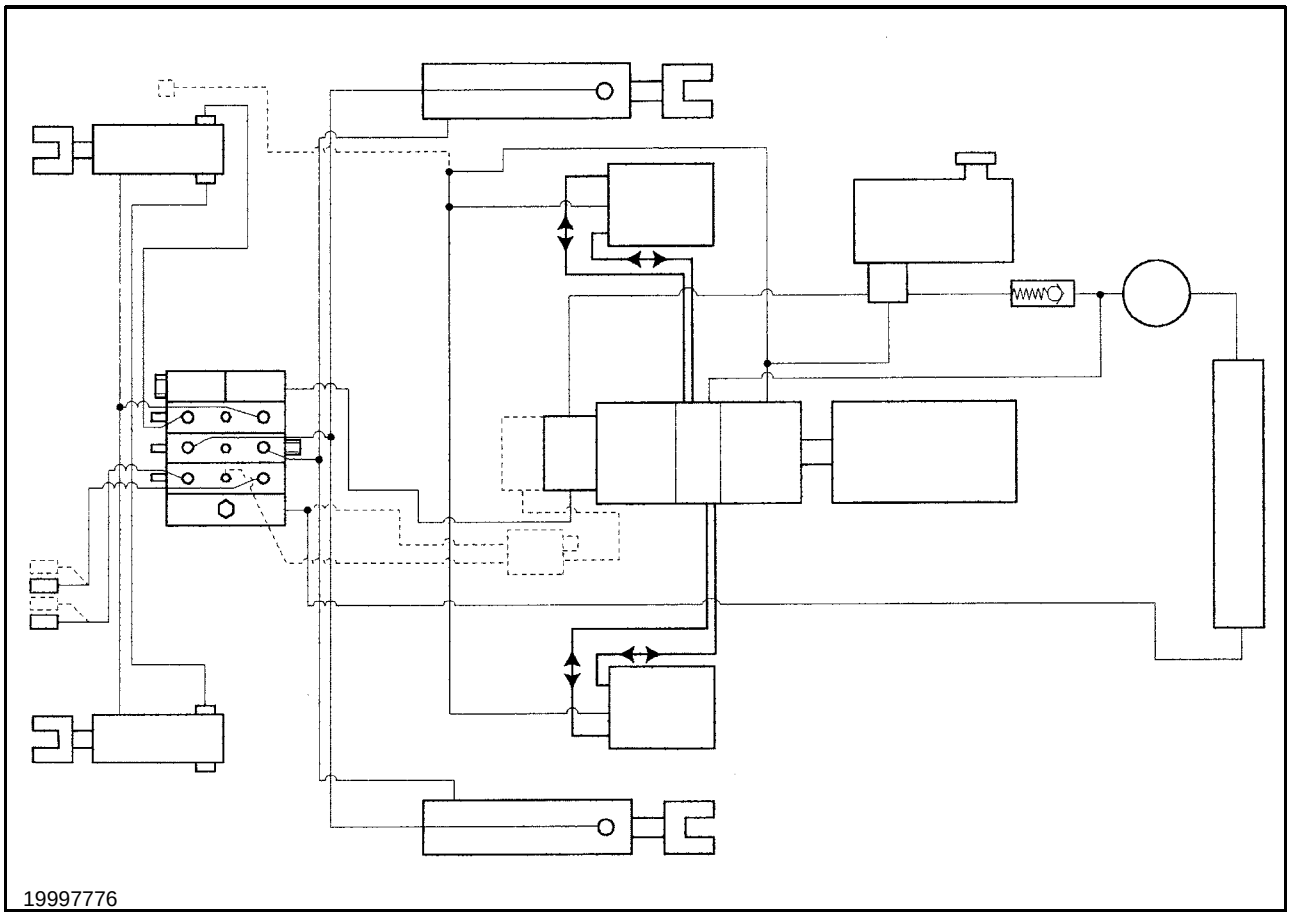

21

HYDROSTATIC PUMP EFFICIENCY TEST

This test can be used to check the operating efficiency of the pump.

IMPORTANT: *When connecting a flowmeter into the pump circuit, make sure the meter is connected properly and the control lever is stroked in the direction being tested. If not, the hydrostatic system and/or flowmeter may be damaged.*

Efficiency Test Procedure

1. Raise the boom and rest on the boom locks.
2. Put the Service/Run switch in the “SERVICE” position.
3. Disengage the parking brake.
4. Securely block the skid steer with all four wheels off the ground.

CAUTION

Failure to securely support the skid steer could result in movement of the loader during testing causing serious injury or damage to the equipment.

5. Raise the operator’s seat and latch in the raised position.
6. Remove the step shield.
7. Remove the high-pressure line from the pump, for the direction to be tested.
8. Connect the test hose from the fitting on the pump to the inlet side of the flowmeter and the line from the motor to the outlet side of the flowmeter. Turn the pressure regulator valve out on the flowmeter to zero pressure.

https://truckmanualshub.com/

The following pump ports control direction of motor (tire) rotation forward or reverse.

Front pump controls right motor:

1 - Forward (bottom)
2 - Reverse (top)

Rear pump controls left motor:

3 - Forward (bottom)
4 - Reverse (top)

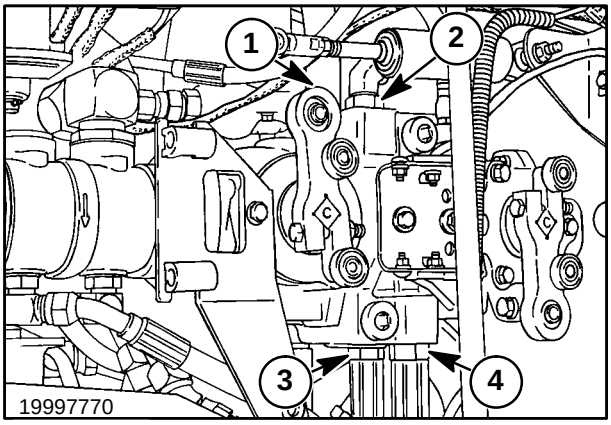

22

***IMPORTANT**: Check and make sure the flowmeter is connected properly, so when the pump is stroked the flow from the pump goes to the inlet side of the flowmeter.*

***IMPORTANT:** Check the hydraulic oil level and add if required to insure sufficient oil for the test.*

9. Using the EIC or a photo tach, set the engine speed to 2900 RPM.
10. With the flowmeter regulator valve completely opened, 1, stroke the control lever for the direction to be tested and take a free flow reading and record. The pump free flow is at “0” pressure.

CAUTION

Always stay clear of moving parts during testing or serious injury could occur.

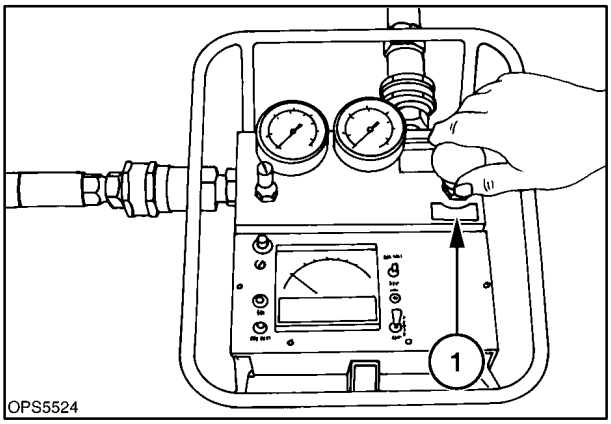

23

11. Turn the pressure regulator valve, 1, in on the flowmeter until a pressure reading of 136 bar (2000 PSI) is obtained and record.
12. Pump efficiency specifications:

    When figuring the pump efficiency it should not be less than 80%. The pump free flow should not be less than 81 LPM (21.2 GPM).

    a. Pump flow recorded at 136 bar (2000 PSI) divided by the free flow reading at zero pressure will determine the pump efficiency.

    EXAMPLE:

    Pump free flow - 23.5
    Pump flow at 2000 PSI - 22.4

    Pump efficiency: $\frac{22.4}{23.5} = 0.95$ or 95%

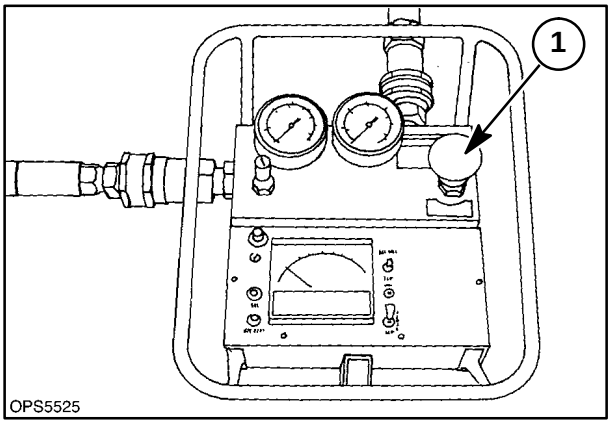

24

https://truckmanualshub.com/

HYDROSTATIC MOTOR CASE DRAIN TEST

The motors can be checked for excessive internal leakage which will cause a unit to be weak in the ground drive. The excessive leakage is caused by damage to the motor rotating group or camp plate to allow high-pressure oil to leak into the case.

Motor Case Drain Test Procedure

1. Raise the boom and rest it on the boom locks.
2. Put the Service/Run switch in the “SERVICE” position.
3. Engage the parking brake.
4. Securely block the skid steer with all four wheels off the ground.
5. Raise the seat to the raised latched position.
6. Remove the step shield to access the hydrostatic motor.
7. Unhook the case drain line from the motor being tested at 1 and cap the line.
8. Connect another line in the port of the motor and allow the hose to drain into a suitable container.

***IMPORTANT**: Check the hydraulic oil level and add if required to ensure sufficient oil for the test.*

9. Start the engine and set engine speed at 2900 RPM using the EIC or a photo tach.
10. Stroke the control lever for the side being tested, forward and reverse and take a flow reading, MAXIMUM 1.5 GPM.

CAUTION

Always stay clear of moving parts during testing or serious injury could occur.

11. Return control lever to neutral and stop the engine.
12. If the test results are within specification, the problem may be in the pump. If the results are over the specification, remove and repair or replace the motor.

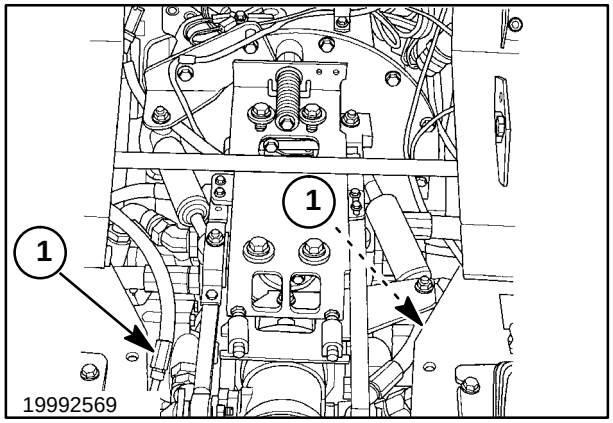

25

https://truckmanualshub.com/

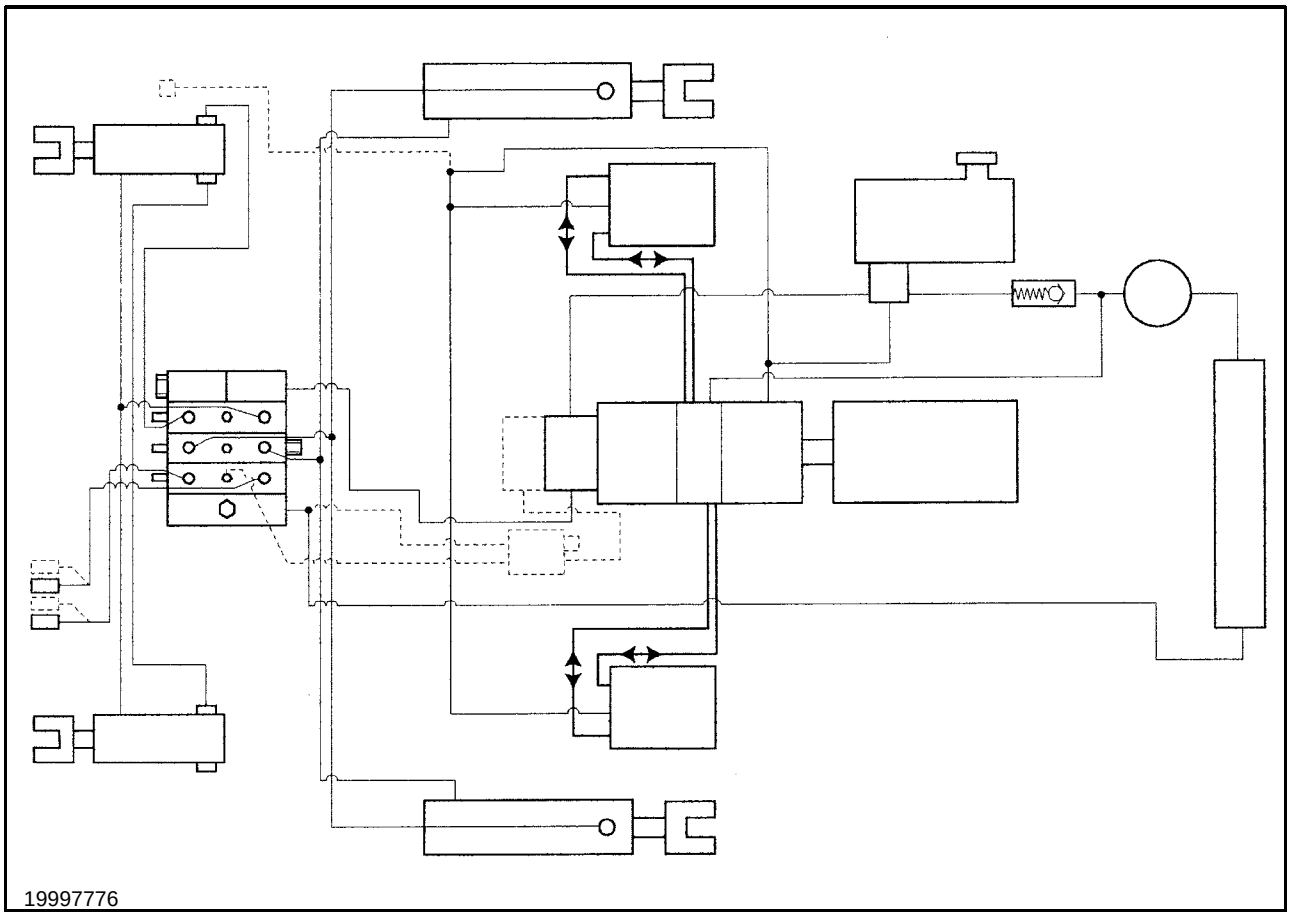

26

HYDROSTATIC MOTOR EFFICIENCY TEST

This test can be used to check the operating efficiency of the motor.

IMPORTANT: *When connecting a flowmeter into the pump/motor circuit, make sure the meter is connected properly and the control lever is stroked in the direction being tested. If not, the hydrostatic system and/or flowmeter may be damaged.*

Efficiency Test Procedure

1. Raise the boom and rest on the boom locks.
2. Put the Service/Run switch in the “SERVICE” position.
3. Disengage the parking brake.
4. Securely block the skid steer with all four wheels off the ground.

CAUTION

Failure to securely support the skid steer could result in movement of the loader during testing causing serious injury or damage to the equipment.

5. Raise the operator’s seat and latch in the raised position.
6. Remove the step shield to access the hydrostatic motors.
7. Remove the high-pressure line from the pump for the direction to be tested.
8. Connect the test hose from the fitting on the pump to the outlet side of the flowmeter and the line from the motor to the inlet side of the flowmeter. Turn the pressure regulator valve on the flowmeter to zero pressure.

https://truckmanualshub.com/

The following pump ports control direction of motor (tire) rotation forward or reverse.

Front pump controls right motor:

1 - Forward (bottom)
2 - Reverse (top)

Rear pump controls left motor:

3 - Forward (bottom)
4 - Reverse (top)

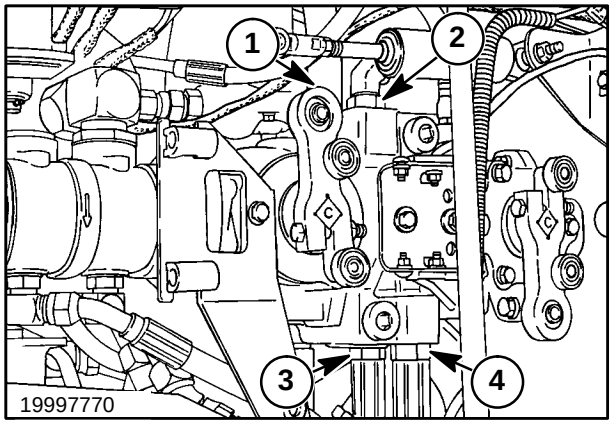

27

***IMPORTANT**: Check and make sure the flowmeter is connected properly, so when the pump is stroked the flow from the pump goes to the motor and to the inlet side of the flowmeter.*

***IMPORTANT**: Check the hydraulic oil level and add if required to insure sufficient oil for the test.*

9. Using the EIC or a photo tach, set the engine speed to 2900 RPM.
10. Stroke the control lever for the direction to be tested and take a free flow pressure reading and record.

CAUTION

Always stay clear of moving parts during testing or serious injury could occur.

11. Turn the pressure regulator valve, 1, in on the flowmeter until a pressure reading of 136 bar (2000 PSI) is obtained and record.
12. Motor efficiency specifications:

    When figuring the motor efficiency, it should not be less than 80%. The motor free flow should not be less than 81 LPM (21.2 GPM).

    a. Motor flow recorded at 136 bar (2000 PSI) divided by the free flow reading at zero pressure will determine the motor efficiency.

    EXAMPLE:

    Motor free flow - 25.5
    Motor flow at 2000 PSI - 22.6

    Pump efficiency: $\frac{22.6}{25.5} = 0.886$ or 89%

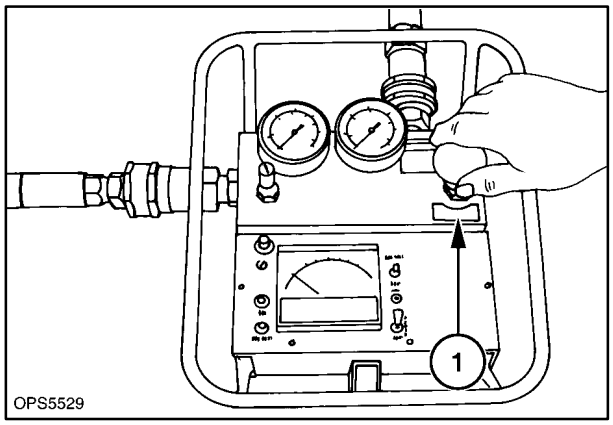

28

https://truckmanualshub.com/

HYDRAULIC, HYDROSTATIC SYSTEM AIR INGRESS TEST

Hydraulic system air ingress, causing oil aeration, can affect performance of the hydraulic oil. This may be evident on a machine by jerky or uneven movement of the loader boom or bucket.

To assist in testing and finding leaks, a tool has been developed (part #FNH22ESS95). This tool comprises a cap which replaces the reservoir filler breather for testing purposes, a pressure gauge and a relief valve. The cap has fittings for air pressure to be applied to the hydraulic reservoir.

CAUTION

Do not start the engine with the test tool installed, as the hydraulic system must be able to breathe.

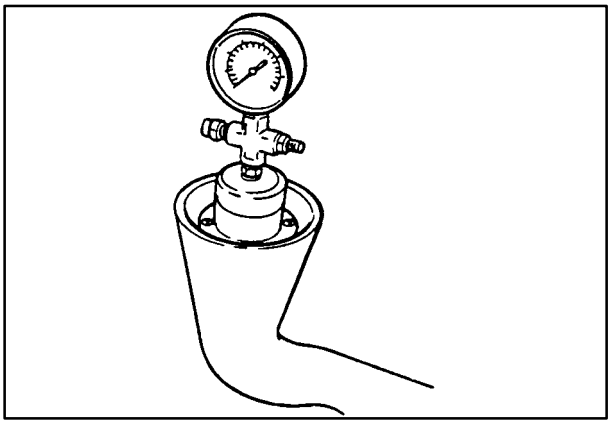

29

Test Procedure:

1. Remove the filler/breather cap.
2. Remove the self-tapping screws around the cap base and screen assembly.
3. Remove the base, screen and gasket assembly, clean all sealing surfaces.
4. Re-install new gaskets and base, taking care not to overtighten the screws.
5. Make sure the tank has 10W-30 oil visible.
6. Pressurize the tank using an air pressure line. The tool is equipped with a 3 PSI relief valve and a pressure gauge. The reservoir should not be pressurized beyond 4 PSI.

https://truckmanualshub.com/

The following checks should then be performed to trace the source of the air ingress.

- Examine the suction tubes and fittings to the hydraulic gear pump and the return tubes from the filter to the reservoir.
- Examine the transmission case drain tubes/hoses and fittings from the hydraulic motors and pumps to the suction side of the hydraulic pump. Also check the cam plate shaft seals and the pump and motor casing gaskets.
- Potential leakage areas could also be input shaft seals in the engine bell housing, gearbox or output shaft seals in motors and gearboxes and the chain case.
- It may be necessary in some instances (where leakage is occurring on shaft seals into gearboxes or bell housing), to pressurize the reservoir for 2 - 4 hours and monitor the oil level in the gearboxes.
- If the prior checks do not locate the source of the leak, it may be necessary to pressurize each hydrostatic component individually.

  To do this it will be necessary to disconnect each case drain line in turn and pressurize using an air line to a maximum pressure of 10 PSI.

NOTE: *A check valve can be installed in the case drain tube which maintains a 5 PSI pressure in the pump and motor cases. This helps prevent air ingress into the system.*

https://truckmanualshub.com/

HYDROSTATIC PUMPS

Op. 29 100 40

REMOVAL

The hydrostatic pump assembly can be removed from the top and front or the cab and boom can be tilted forward for more access, refer to Section 00 for the cab tilting procedure.

To remove the hydrostatic pump assembly without tilting the cab forward:

1. Lower the boom and bucket to the lowered position, resting on the ground or remove any attachment and raise the boom and rest on the boom lock pins, 1.

CAUTION

Never work under a raised boom unless it is properly supported by the boom lock pins.

Never work under a raised boom with an attachment. Always remove the attachment from the loader.

2. Stop the engine, turn the ignition key to the run position and operate the boom and bucket control pedals to relieve pressure in the boom and bucket circuits. Turn off the key.
3. Put the Service/Run switch in the “SERVICE” position.
4. Engage the parking brake.
5. Securely block the skid steer at 1 and 2, with all four wheels off the ground. Refer to Section 00 for more detailed information on properly supporting a skid steer.

CAUTION

Failure to securely support the skid steer could result in movement of the loader causing serious injury or damage to the equipment.

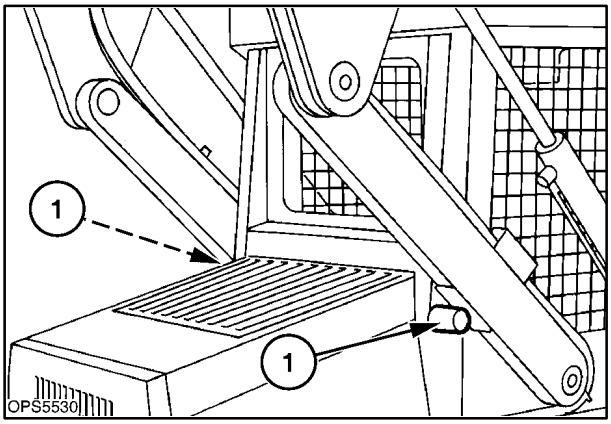

30

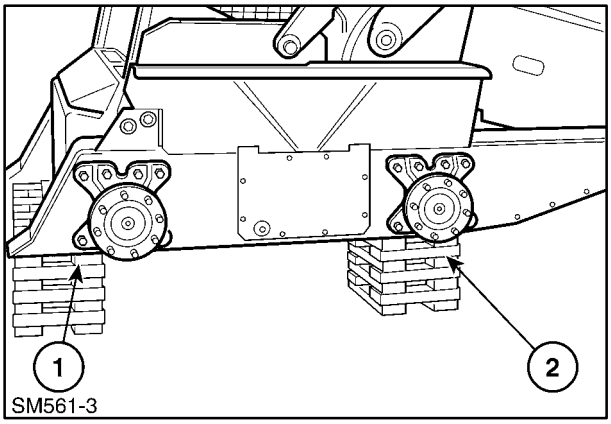

31

https://truckmanualshub.com/

6. Raise the operator's seat and latch in the raised position, 1.

CAUTION

Never work under a raised seat unless it is securely latched in the raised position.

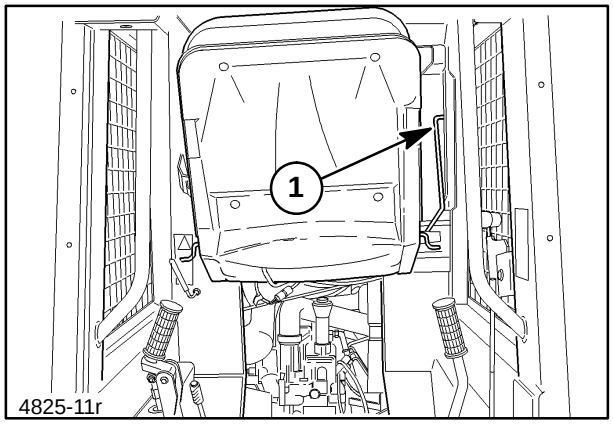

32

7. Remove the step shield to access the hydrostatic pump area. For more access, remove the right and left hydrostatic control handle assembly.
8. Relieve all pressure in the hydraulic and hydrostatic systems.

CAUTION

Never loosen any hydraulic lines without first relieving all pressure in the systems to avoid serious injury.

Draining the hydraulic oil reservoir is not required if the suction and return lines are capped to prevent loss of oil unless the hydraulic system requires cleaning.

9. Drain the hydraulic reservoir.
   – Loosen the return line clamp, 1.
   – Remove the return line at 2, and rotate the line into a suitable drain pan.

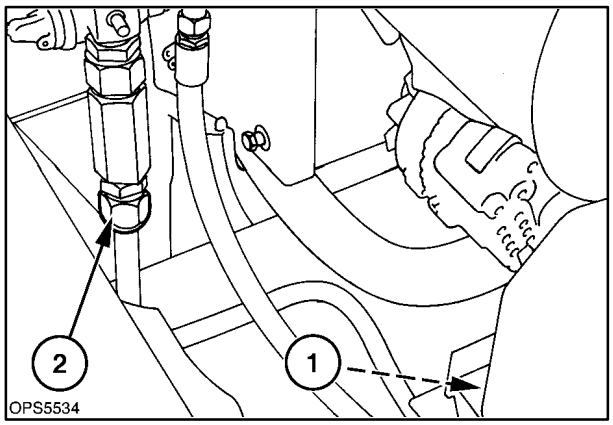

33

10. Remove the inspection plate, 1, from under the center of the loader frame to access the front hydrostatic pump support.
11. Remove the two hydrostatic pump support bolts from the main frame and the pump support plate.

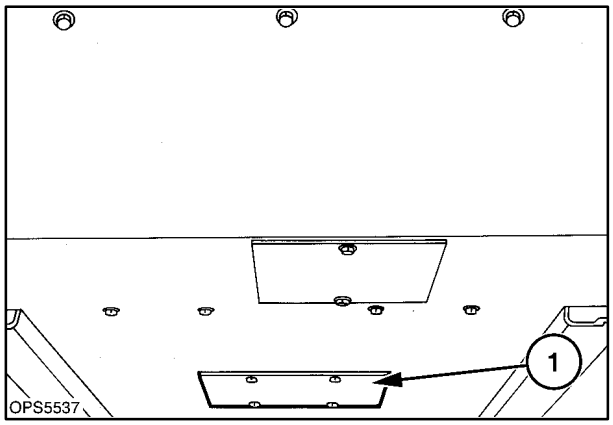

34

https://truckmanualshub.com/

12. Remove the two pin retaining nuts, 1, securing the pins, 2, to the front of the neutralizer plate.
13. Remove the centering spring retaining bolt, 3, and spring from the engine bellhousing. When removing the retaining bolt the spring will be under slight pressure. Lift the plate from the unit.
14. Remove the control link hardware, 4, at the control handles.
15. Remove the link and dampener hardware, 5, at the pintle arms.
16. Remove the left dampener hardware, 6, at the support bracket.

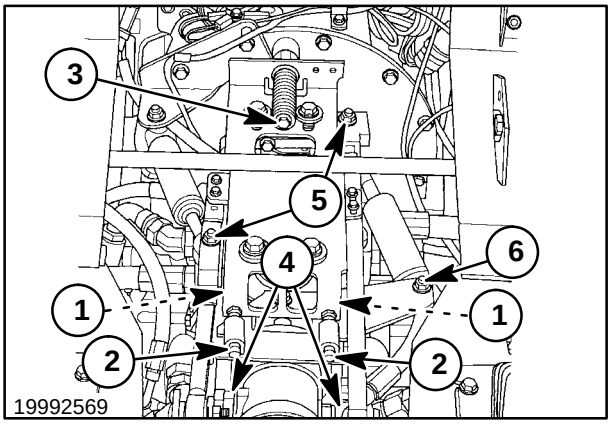

35

17. On units equipped with high flow, loosen and remove the boom circuit hydraulic lines, 1 and 2, and the high flow supply line, 3.

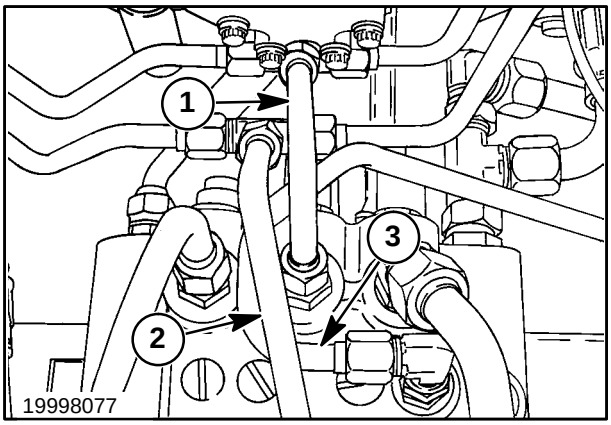

36

18. Remove the cam arm securing hardware, 1, and remove the arms from the trunnion shafts.
19. Remove the plastic guides, 2, from the support bracket.
20. Mark all hydraulic hoses and lines, 3, to identify them for proper installation. Remove the hoses from the gear pumps and hydrostatic pumps.
21. Remove the pump mounting bolts, 4, and remove the pump assembly from the unit.

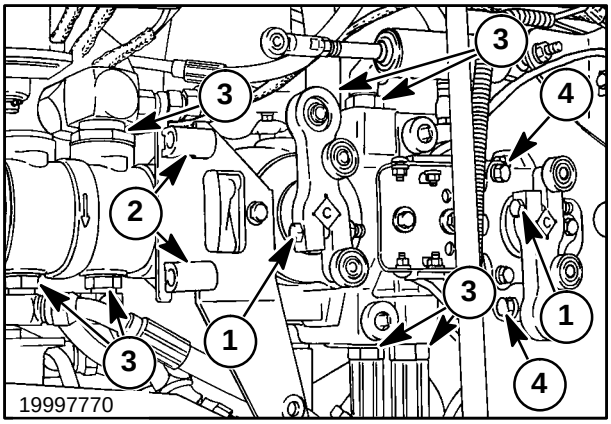

37

https://truckmanualshub.com/

22. Note the model and serial number markings, 1, on the rear pump housing. The model number for pump assemblies without high flow is 78364–RAV; with high flow it is 78364–RAW.

NOTE: *Dealer warranty requests for any hydrostatic component repair must include the machine model, serial numbers, transmission model number, and date codes. These codes are stamped into the flange of the pump housing, 1.*

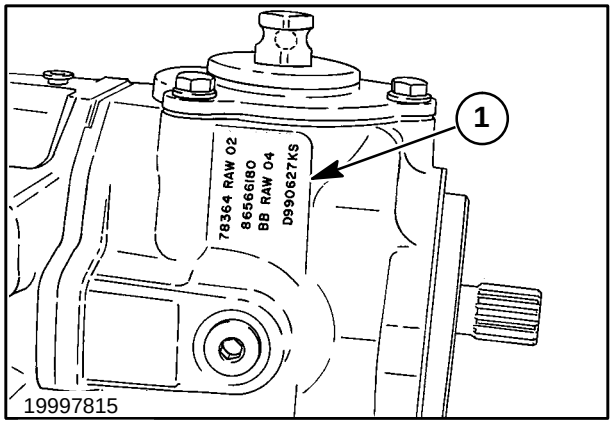

38

23. Remove the side/top support bracket hardware, 1, and remove the bracket.

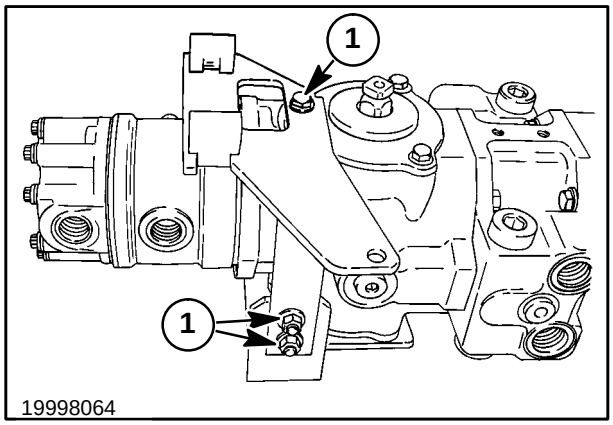

39

24. Remove the O ring, 1, and dust shield, 2, from each hydrostatic pump control arm.

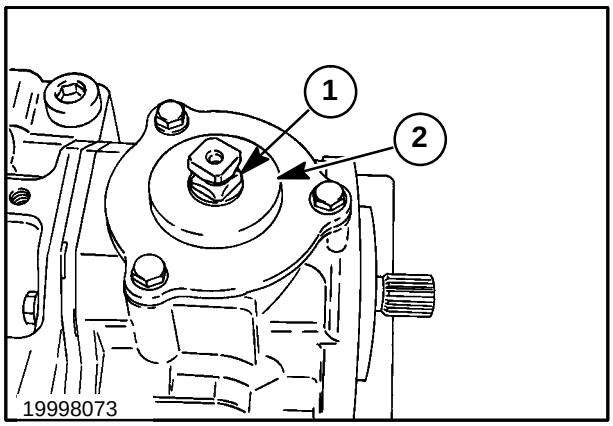

40

https://truckmanualshub.com/

Op. 29 100 46

DISASSEMBLY

1. Remove the port fittings and plug all the ports to prevent dirt or solvent from entering the pump body. Thoroughly clean the complete pump assembly before disassembly.
2. To ensure proper reassembly, use a marker to mark lines across the pump housing and backplates. Also mark the location of the control shafts for proper assembly.

   Without High Flow - The hydrostatic pump assembly consists of:

   1 Left side pump (rear)

   2 Dual back plate

   3 Right side pump (front)

   4 Hydraulic gear pump

   The back plate carries high pressure oil from the pumps to the motors through the high pressure hoses. The low pressure return oil from the motors flows back to the pump through the back plates to complete the closed loop circuit.

3. Remove the gear pump mounting bolts, 5, and tap the pump body with a plastic or rubber mallet to separate the pump from the hydrostatic pump. Try not to disturb the internal gear pump seal at 6.
4. Remove the front pump mounting bolts, 7, and tap the housings with a plastic or rubber mallet to separate the pump from the dual backplate.

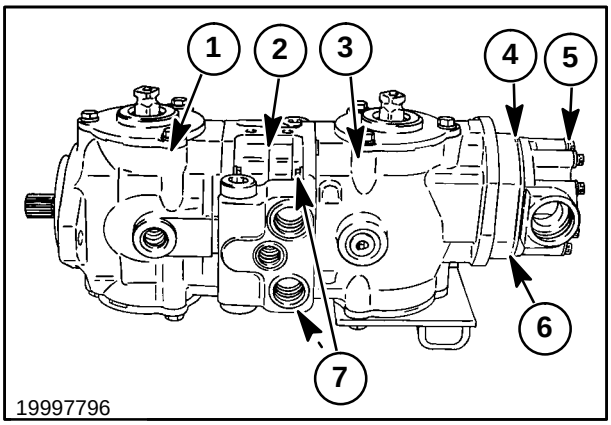

41

https://truckmanualshub.com/

High Flow - The complete high flow pump assembly consists of:

1 Left side pump (rear)

2 Dual back plate

3 Right side pump (front)

4 Hydraulic gear pump

5 High flow pump

The back plate carries high pressure oil from the pumps to the motors through the high pressure hoses. The low pressure return oil from the motors flows back to the pump through the back plates to complete the closed loop circuit.

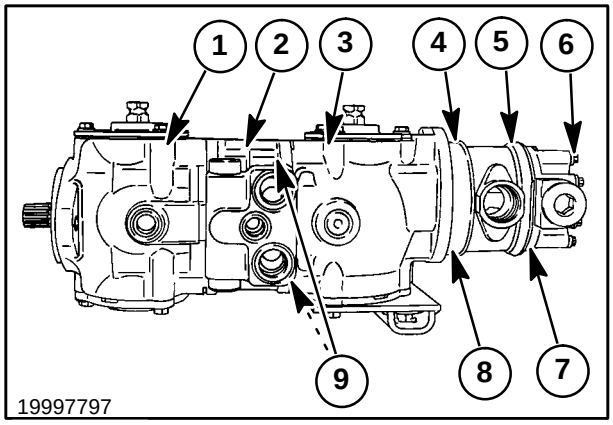

42

5. Remove the gear pump mounting bolts, 6, and tap the high flow pump body with a plastic or rubber mallet to separate the pump from the hydraulic system pump. Try not to disturb the internal gear pump seal at 7. Tap the hydraulic system pump body with a plastic or rubber mallet to separate the pump from the hydrostatic pump. Try not to disturb the internal gear pump seal at 8.
6. Remove the front pump mounting bolts, 9, and tap the housings with a plastic or rubber mallet to separate the pump from the dual backplate.
7. Discard the gasket, 1, and note the two alignment dowel pins, 2, on each side of the backplate.
8. Remove the replaceable bearing plate, 3, from the backplate. The two bearing plates in this assembly are not identical; the metering slots point in opposite directions. The slots toward the front pump point clockwise.
9. Remove the rear pump mounting bolts, 4, and tap the housings with a plastic or rubber mallet to separate the pump from the dual backplate.

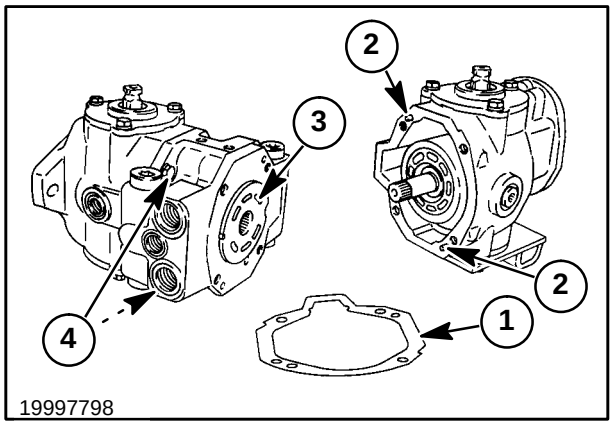

43

https://truckmanualshub.com/

10. Discard the gasket, 1, and note the two alignment dowel pins, 2, on each side of the backplate.
11. Remove the replaceable bearing plate, 3, from the backplate. The two bearing plates in this assembly are not identical; the metering slots point in opposite directions. The slots toward the rear pump point counterclockwise.

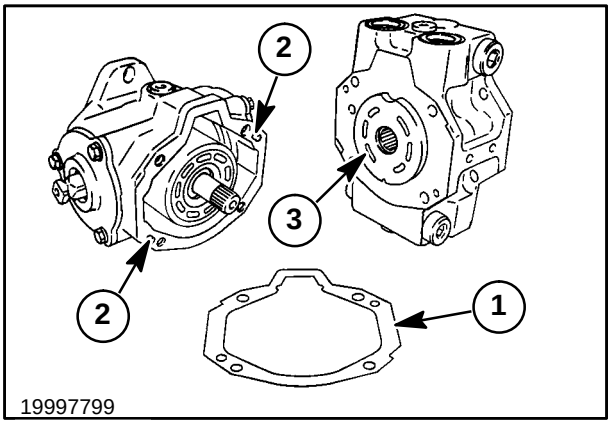

44

12. Hold the rotating piston block, 1, in one hand and tilt the open end of the housing down. Turn the rotating piston block and pull it out as a complete unit without scratching or burring the parts.

NOTE: *Keep the rotating group as an assembly until the piston positions are properly marked.*

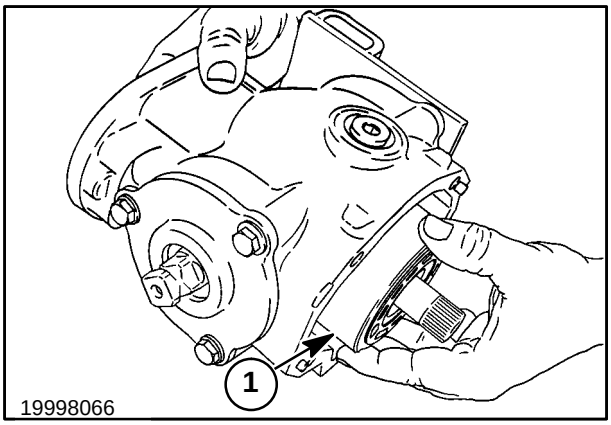

45

13. Mark the piston, 1, and hole, 2, positions with a soft marker (do not scratch any surface) so the pistons and holes can be inspected and reassembled in the same configuration.
14. Lift the rotating group, 3, out of the pump piston block, 4, and carefully set the pistons on cardboard to avoid scratches.

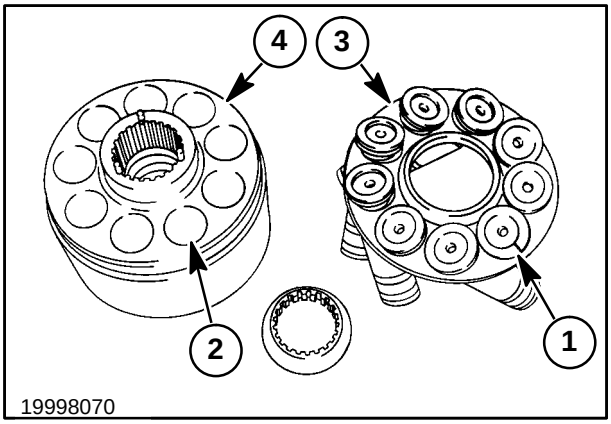

46

https://truckmanualshub.com/

15. Remove the front pump drive shaft, 1, by pulling it out of the pump housing bearings.

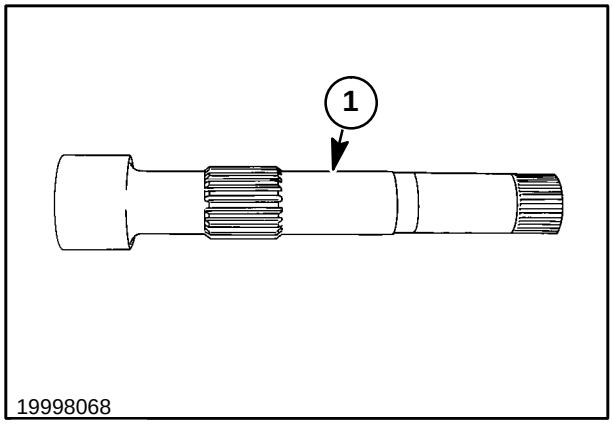

47

16. Remove the rear pump drive shaft, 1, by removing the large snap ring, 2. The pump shaft seal, 3, should be replaced any time the shaft is removed. Tap the other end of the shaft to remove the shaft, seal, and seal thrust washer from the housing.

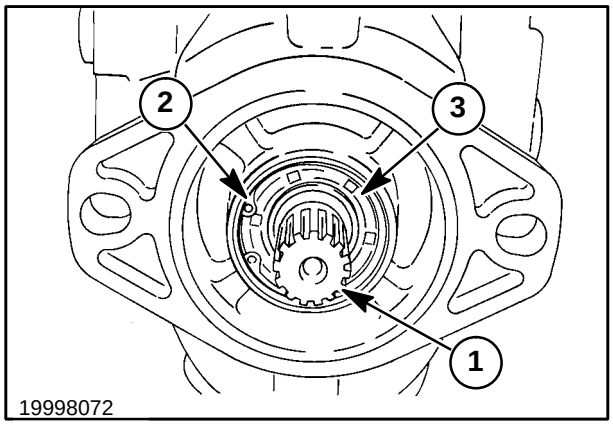

48

17. Remove the retaining rings, 1, to remove the thrust washers, 2, and needle thrust bearing, 3.

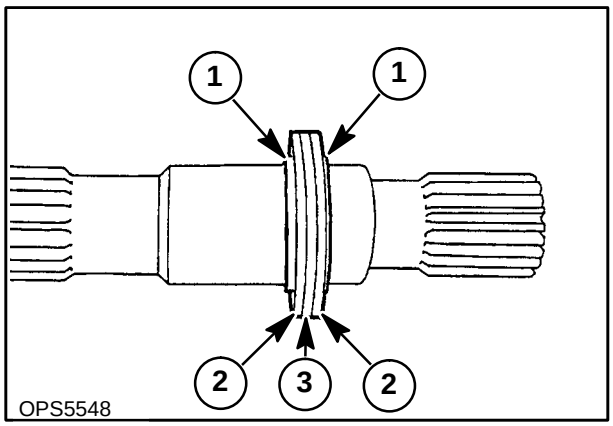

49

https://truckmanualshub.com/

18. Remove the trunnion bearing cover, 1, and support bracket, 2, by removing the three capscrews, 3. Pry the cover off by inserting screwdrivers in the notches on the side of the cover.

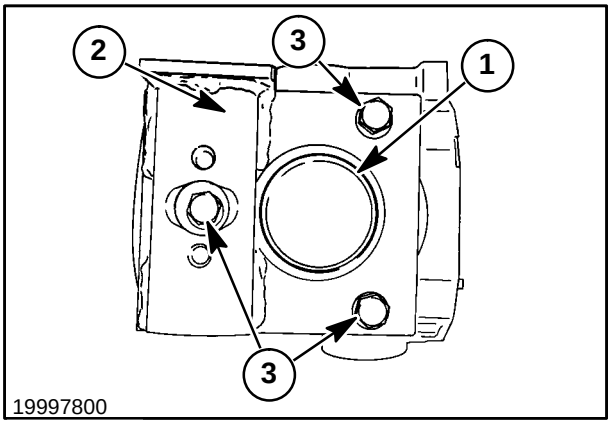

50

19. Remove the O ring, 1, and discard. The tapered bearing, 2, and the bearing race, 3, on this side are press fit and are not removed unless damaged.

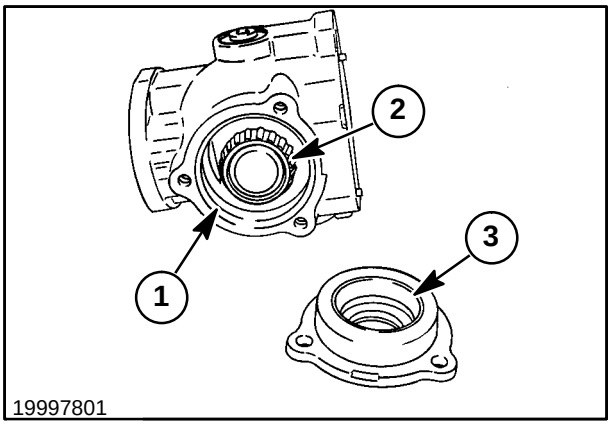

51

20. Remove the control arm side bearing cover, 1, by removing the three capscrews, 2. Pry the cover off by inserting screwdrivers in the notches on the side of the cover.

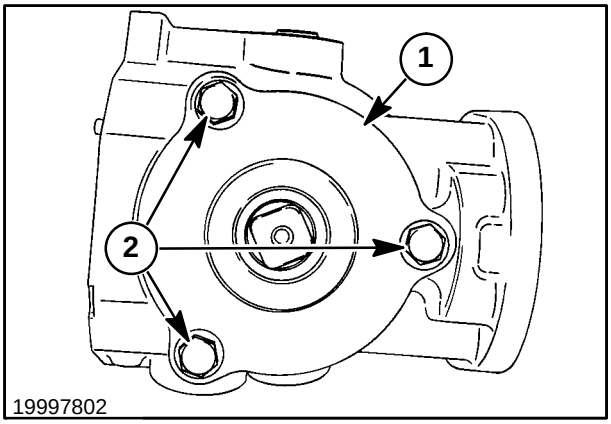

52

https://truckmanualshub.com/

21. Remove the bearing race, 1, and crush ring, 2, from the bearing cover. Discard the crush ring. Remove and discard the control arm seal, 3.

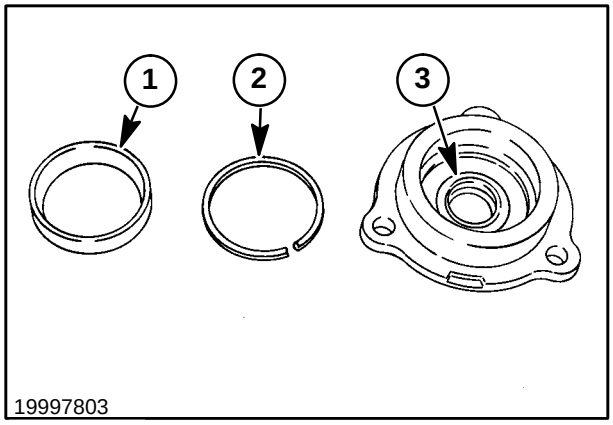

53

22. Remove the camplate, 1, from the housing by sliding the short end out first.

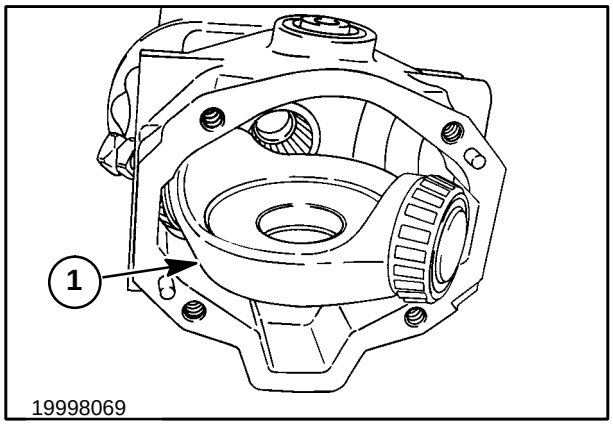

54

PARTS INSPECTION

Pump Housings

1. Inspect the front pump housing for any obvious damage. Inspect the shaft needle bearing, 1, for a loose fit, and for missing or loose needles.
2. The shaft needle bearing is a tight fit in the housing. If the pump shaft needle bearing needs to be replaced, use a puller to pull the bearing toward the inside of the pump body.
3. Make sure the needle bearing is installed with the numbered end to the inside of the pump body.
4. All oil seals and O rings should be replaced during reassembly.

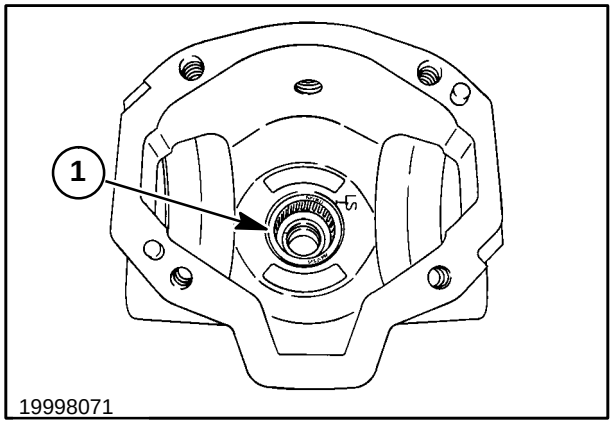

55

https://truckmanualshub.com/

5. Inspect the rear pump housing for any obvious damage. Inspect the shaft needle bearing, 1, for a loose fit, and for missing or loose needles.
6. The shaft needle bearing is a tight fit in the housing. If the pump shaft needle bearing needs to be replaced, press the bearing from the inside after the camplate is removed.
7. Make sure the needle bearing is installed with the numbered end to the outside seal of the pump shaft.

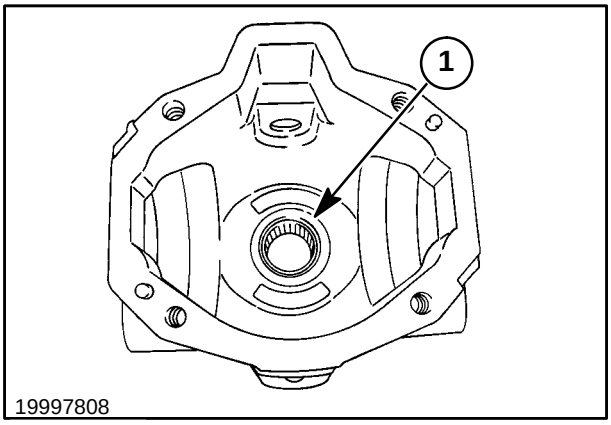

56

Pump Shafts

1. Check the rear pump shaft areas contacting the needle roller bearings, 1, for wear and a rough bearing.
2. Check for a bent or worn shaft.
3. Check the spline areas, 2, for wear or twist.
4. Check the thrust bearing, 3, races, 4, and retaining rings, 5, and grooves, 6. If bearing or races show wear or roughness, they must be replaced.

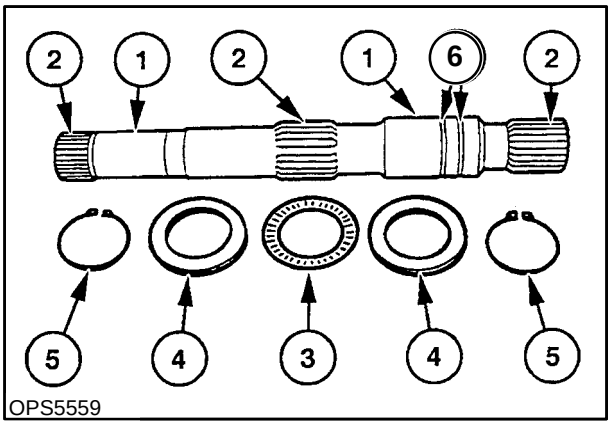

57

5. Check the front pump shaft areas contacting the needle roller bearings, 1, for wear and a rough bearing.
6. Check for a bent or worn shaft.
7. Check the spline areas, 2, for wear or twist.

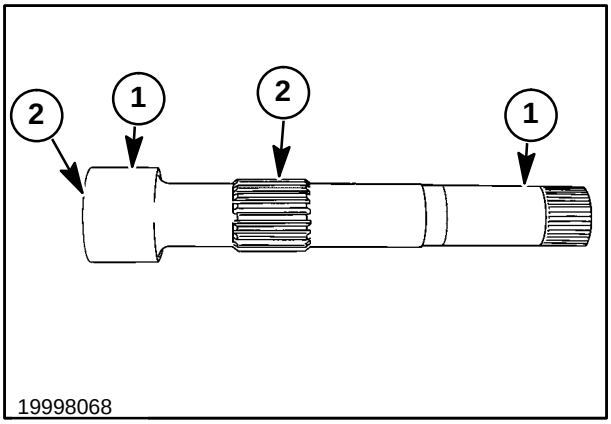

58

https://truckmanualshub.com/

Cam Plates

1. Shoes of the pump pistons rotate at high speeds against the camplate wear plate surface, 1. The surface must be smooth with no metal flaked away and no scoring. Circular scratches centered on this machined surface are due to contamination. If scratches can be felt with a fingernail, replace the camplate wear plate.
2. Check the camplate wear plate surface for smearing. This surface must be smooth, bright, and even with no discoloration or brass smearing.
3. Inspect the bearings, 2, for wear, looseness or roughness; replace if damaged.

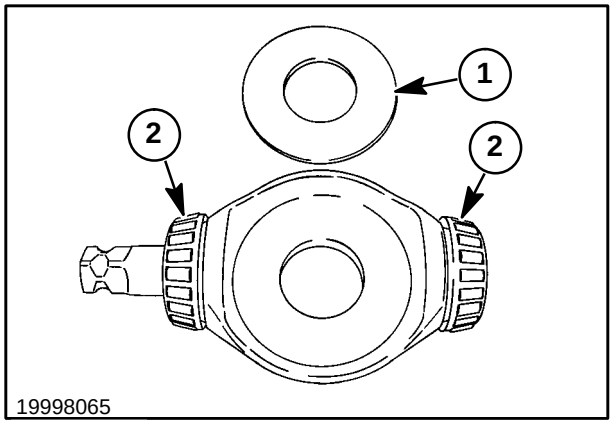

59

Piston and Shoe Assemblies - replace the rotating group if:

1. The piston skirt area, 1, shows signs of scratches or wear.
2. The edges of the shoes, 2, are worn (shoe roll) from contact with the camplate.
3. There is wear on the underside of the slipper between the slipper and shoe plate, 3.
4. The shoes are a loose, sloppy fit on the ball end of the piston at 4.
5. The flat surfaces of the shoes, 5, show metal flaking or are deeply scratched. Light or shallow scratches in the shoes will not cause excessive wear. Do not lap the shoes.

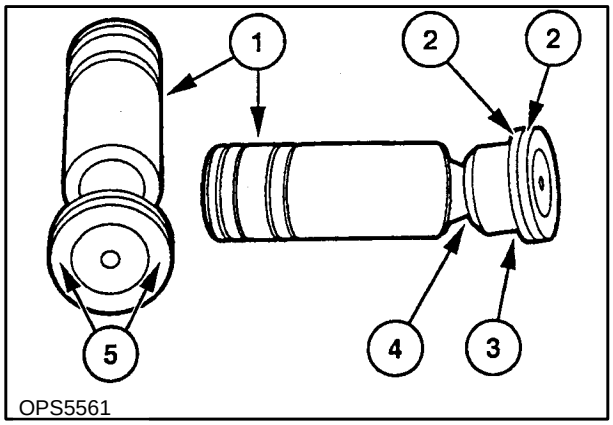

60

Rotating Group

1. Check for cracks at the holes, 1, for the spherical washer and shoes. The shoe plate is only available as part of the rotating group.
2. Check for wear in the area of the slippers, 2. This area should be flat, smooth, and have no grooves.
3. Check the internal splines of the piston block, 3, for wear.
4. Check for wear on the top surface of the spherical washer, 4, where the shoe plate fits. The spherical washer is only available as part of the rotating group. Check the side curved area for cracks.

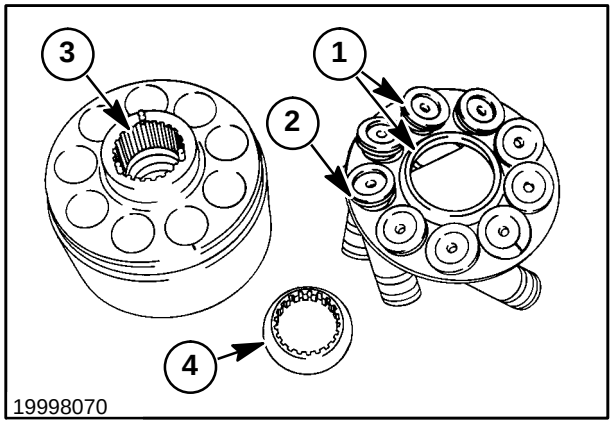

61

https://truckmanualshub.com/

Piston Block - replace the rotating group if:

1. The cylinders, 1, are worn or scored so the pistons do not move freely. The pistons do have side play in the piston block.
2. The surface, 2, is worn or grooved or shows metal buildup. Nicks must not extend from the cylinders to the edge of the raised area, 3.

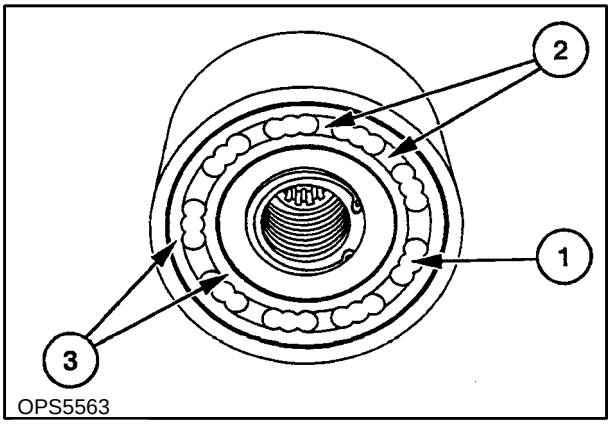

62

3. The loading pins, 1, are spring loaded, held in place by the pin keeper (split bushing), 2.
4. Make sure that the pins are the same height, the pins are seated in their special grooves, and the head of the pins are seated between the washer and block.

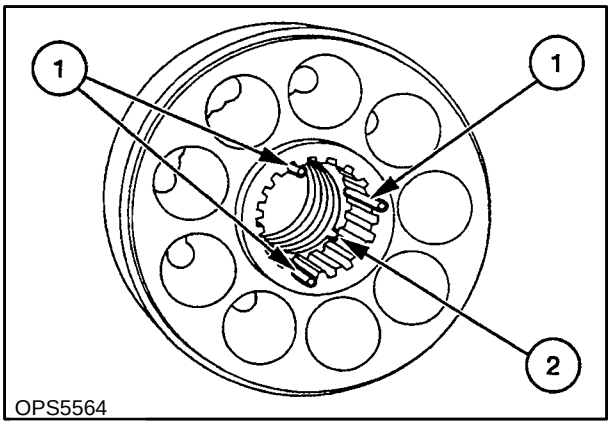

63

Replaceable Bearing Plate

1. Check the plate for overall flatness.
2. Check for scratches on the brass side of the plate, extending across the area where the piston block contacts the plate at 1.
3. Check for scratches between lubrication holes, 2, and metering slots, 3.

NOTE: *The two bearing plates in this assembly are not identical; the metering slots point in opposite directions. The slots on the front pump plate point clockwise and the slots on the rear pump plate point counterclockwise.*

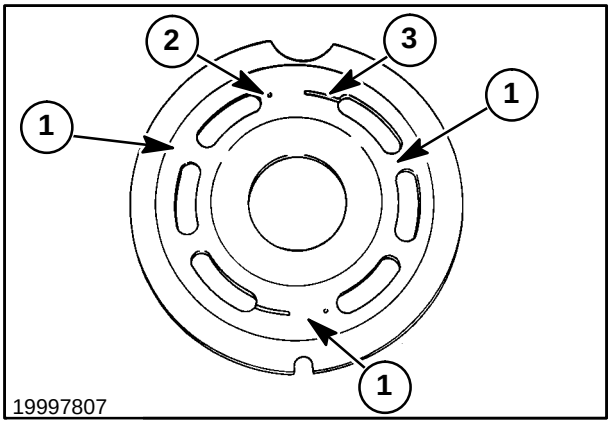

64

https://truckmanualshub.com/

Back Plate

1. Check the needle bearings for wear, 1. These bearings are pressed into the back plate with the bearing numbers facing out.
2. Check the backplate for flatness along perpendicular lines, 2.

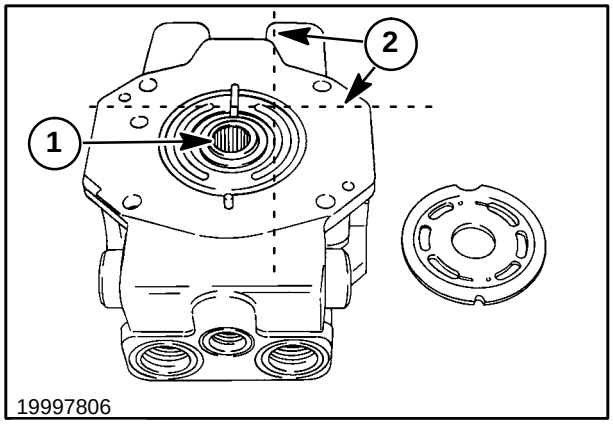

65

3. Two directional relief valves, 1, in each pump limit the maximum system pressure to 238 bar (3500 PSI). Relief valve pressure is factory set and should never be readjusted. The factory set relief pressures are marked on the side of the cartridge.

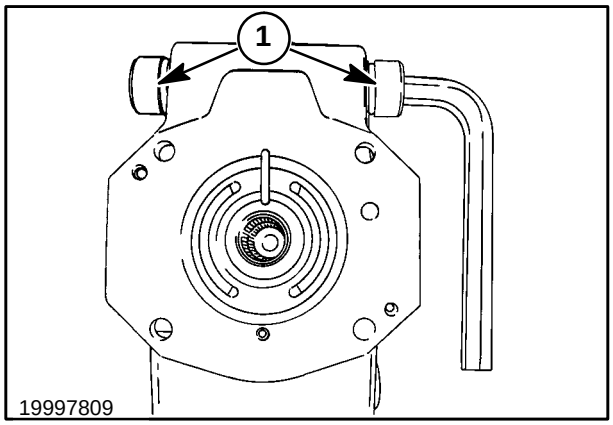

66

4. Check the relief valves for scratches in the seat areas, 1. Check for broken springs, 2. The springs should all be the same length.
5. Check the seat area, 3, in the backplate for scratches that will prevent the relief valves from sealing properly.

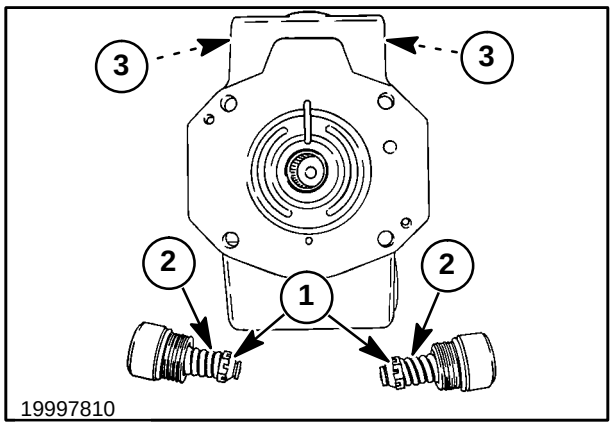

67

https://truckmanualshub.com/

REASSEMBLY

1. Use a suitable solvent to thoroughly clean all parts. Lay the parts on clean cardboard and air dry.

IMPORTANT: *Due to tight tolerances and the finish of the pump internal surfaces, it is very important to maintain absolute cleanliness during reassembly.*

2. Use clean SAE 10W-30 SH/CG4 oil to lubricate all moving parts as they are reassembled. Fill the transmission cases with oil through the case drain hole after completing assembly of the component.

IMPORTANT: *Lubrication of the pump components during assembly is required to ensure lubrication oil for start-up.*

3. Use the new gaskets, O rings, seals, and snap rings included in the repair kit.

4. Place the camplate wear plate, 1, over the machined camplate surface.

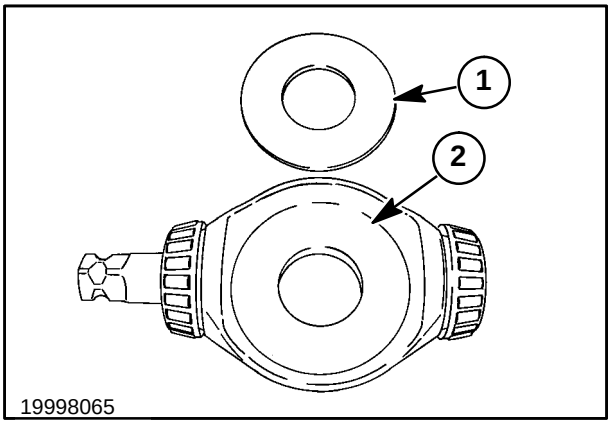

68

5. Place the camplate, 1, into the housing with the control arm, 2, toward the boss as marked at the beginning of disassembly.

NOTE: *The machined surface of the camplate and wear plate, 3, face the open end of the housing.*

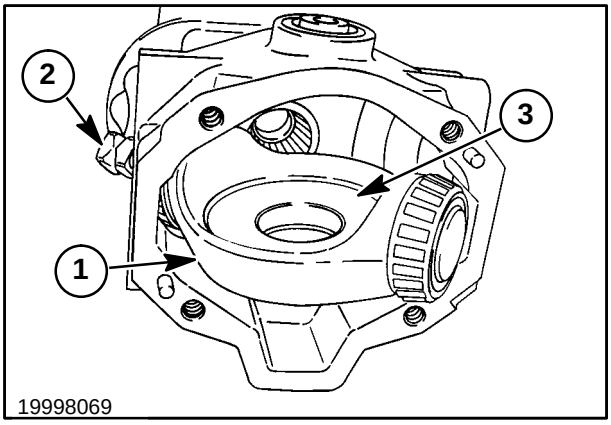

69

https://truckmanualshub.com/

6. Install a new O ring, 1, and place the trunnion bearing cover, 2, on the pump housing.

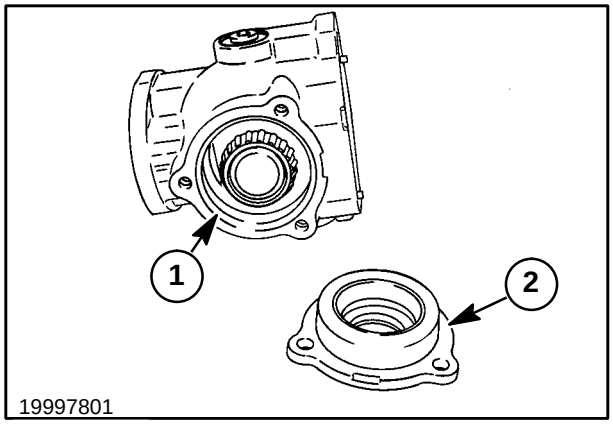

70

7. Attach the trunnion bearing cover, 1, and support bracket, 2, with the three capscrews, 3, and washers removed during disassembly. Tighten the capscrews to 40 N·m (30 ft. lbs.).

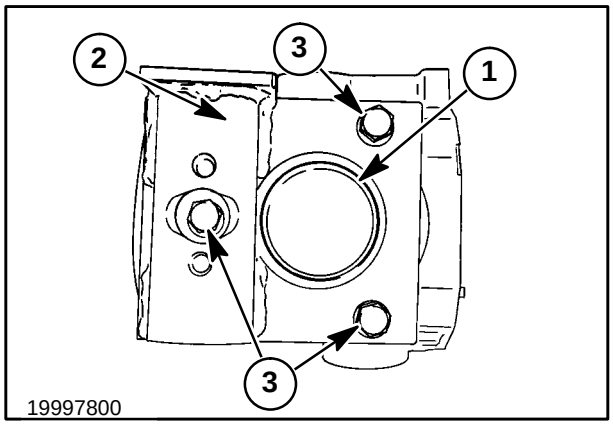

71

8. Install a new O ring, 1, on the control shaft side of the housing.

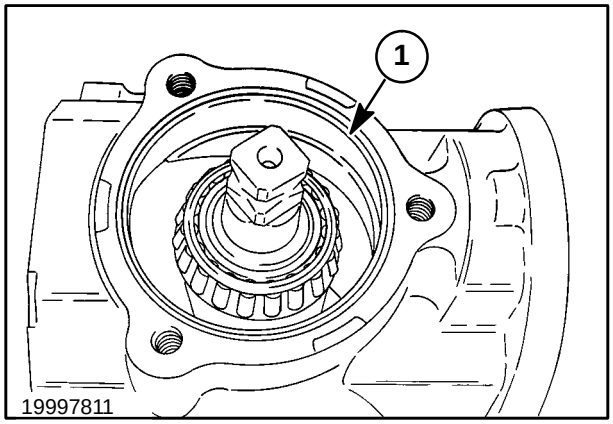

72

https://truckmanualshub.com/

9. Install a new camplate arm seal, 1, in the bearing cover, 2. Install a new crush ring, 3, into the bearing cover, 2. Place the bearing race, 4, over the crush ring in the bearing cover.

NOTE: *A new crush ring, 3, must be used for proper camplate bearing pre-load.*

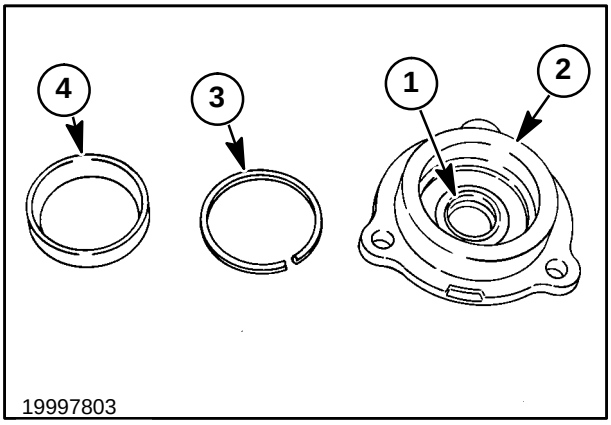

73

10. Attach the control arm bearing cover, 1, with the three capscrews, 2, and washers removed during disassembly. Tighten the capscrews to 40 N·m (30 ft. lbs.).

NOTE: *Tightening the cover capscrews to the specified torque will crush ring, 3, Figure 73, and set the proper camplate bearing pre-load.*

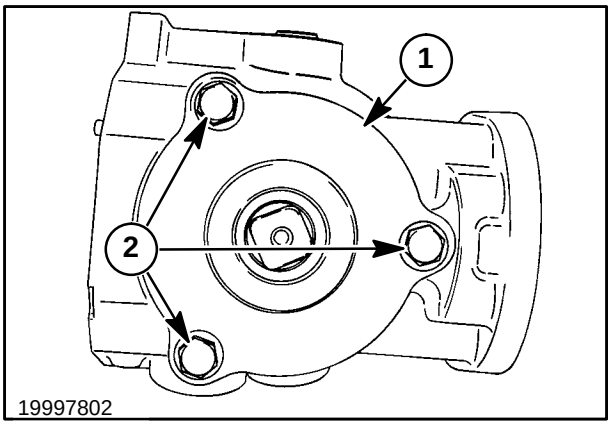

74

11. Install a retaining ring, 1, on the pump drive shaft. Install one thrust washer, 2, the thrust bearing, 3, and the second thrust washer, 4. Secure the washers and bearing with the second retaining ring, 5.

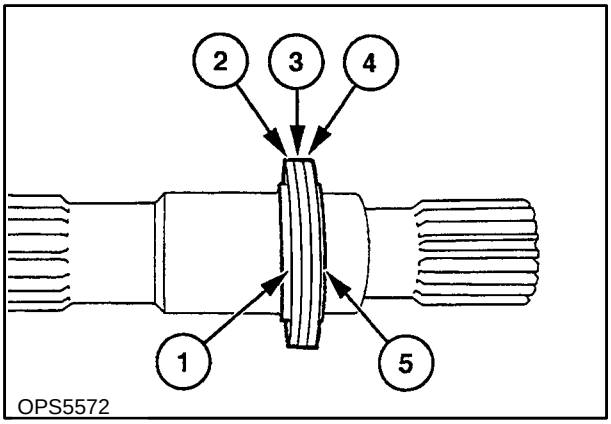

75

https://truckmanualshub.com/

12. Install the shaft and bearing assembly, 1, into the housing. Install the seal thrust washer and new shaft seal, 2. Tap the seal to seat the washer and seal in the pump housing. Secure the seal with the retaining ring, 3.

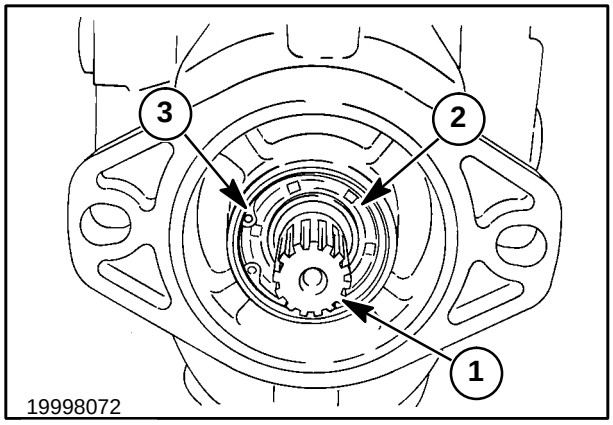

76

13. Check the three piston block loading pins, 1. Make sure the pins are seated properly in the oversize grooves in the splines and held in place with the retaining ring, 2.

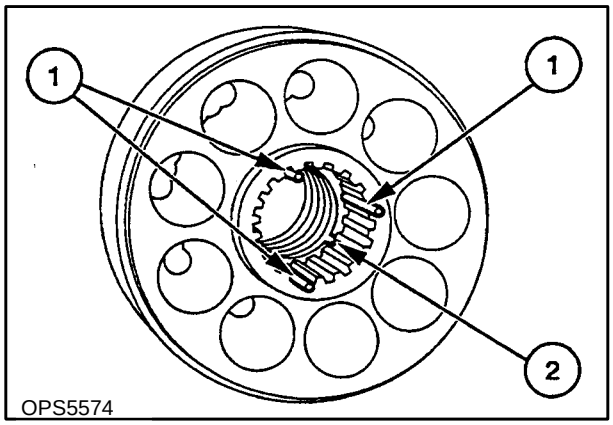

77

14. Install the pistons with plate, 1, and pivot, 2, into the piston block. Make sure the pivot rests on the loading pins, 3. Use the reference marks made during disassembly to place the pistons in their previous spots.

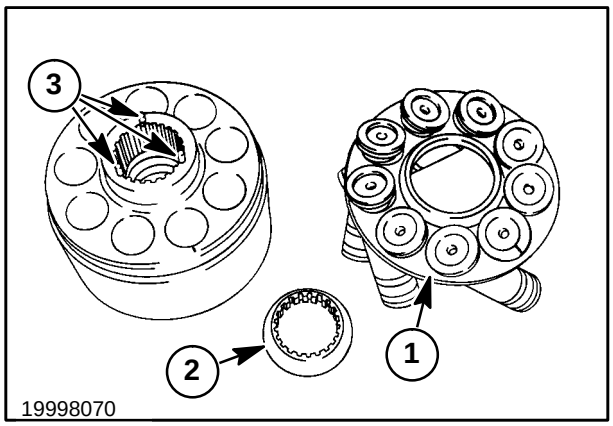

78

https://truckmanualshub.com/

15. Invert the housing and insert the rotating group assembly, 1, into the housing. In the front pump, it may be easier to install the drive shaft, 2, and rotating group together.

NOTE: *Piston shoes must contact the camplate. Make sure all parts are in their proper position before proceeding.*

NOTE: *If the rotating group does not slide over the splined shaft easily, DO NOT FORCE. One or more of the three loading pins may be out of their groove or pin head is not seated properly between the washer and block. Forcing the rotating group may cause pin failure and early transmission failure.*

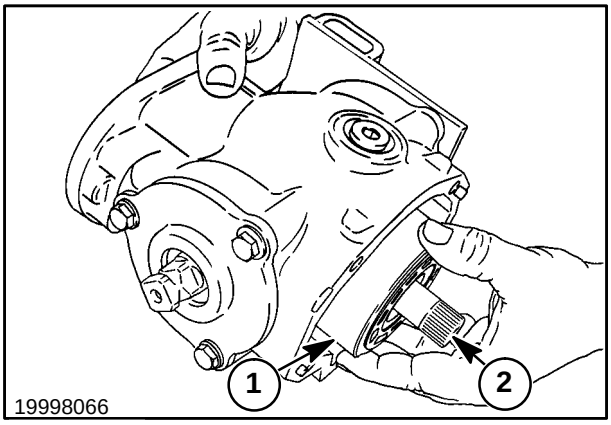

79

IMPORTANT: *Make sure all mating surfaces are well lubricated with SAE SH/CG4 10W-30 motor oil to ensure proper lubrication for start-up.*

16. Install new O rings on the relief valve caps, 1, and install the valves into the valve plate with springs and caps. Tighten to 135 N·m (100 ft. lbs.).

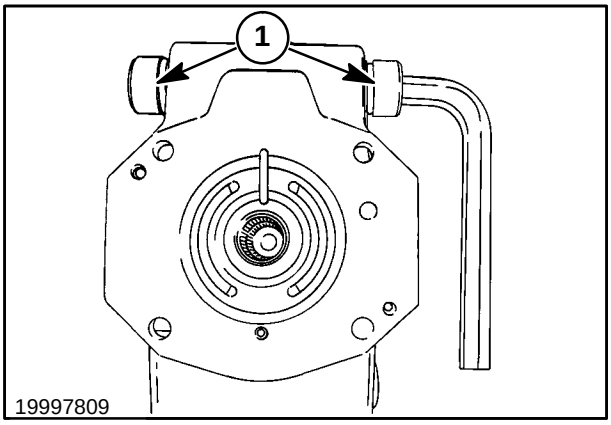

80

17. Install a new bearing, 1, in the backplate if the bearing is damaged or loose. Install the bearing with the numbers facing out, pressing the bearing down to 2.38 mm (3/32″) above the plate, 2. The bearing is a pilot for the bearing plate during assembly.

NOTE: *When installing bearings in the plate or housing, be careful not to damage the outer bearing race. If the outer race is damaged, early bearing and shaft failure could result.*

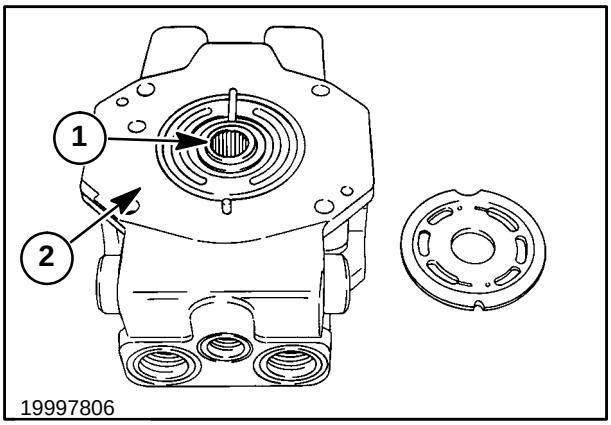

81

https://truckmanualshub.com/

18. Lubricate the replaceable valve plate, 1, and place the steel side to the back plate, aligning the small groove with pin, 2. The metering slots, 3, must face out.

NOTE: *The two bearing plates in this assembly are not identical; the metering slots point in opposite directions. The slots on the front pump plate point clockwise and the slots on the rear pump plate (shown here) point counterclockwise.*

19. Install a new gasket, 4, between the plate and housing.

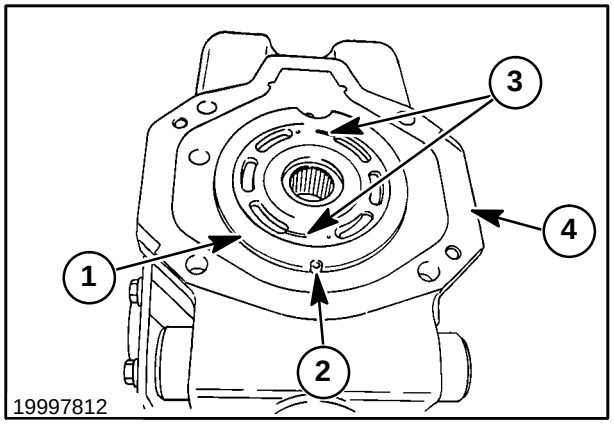

82

20. Attach the pump housings to the back plate, 1, making sure the replaceable plates stay in position; a small amount of Vaseline between the plate and backplate will hold it in place.
21. Install the four capscrews for each pump and tighten to 37 - 42 N·m (27 - 31 ft. lbs.).

NOTE: *When the backplate assembly is in place before tightening the capscrews, a small gap (about 1/8″) between the housing gasket and valve plate is normal. Tightening the bolts brings the housing against the rotating group spring, resulting in the internal spring load to the valve plate and the piston slippers. After tightening the housing bolts, the shaft should turn easily using 8″ pliers. The shaft should have some rolling resistance but should not be tight, locked down, or rotate freely. If one of these conditions occurs, the pump is assembled incorrectly and must be reassembled.*

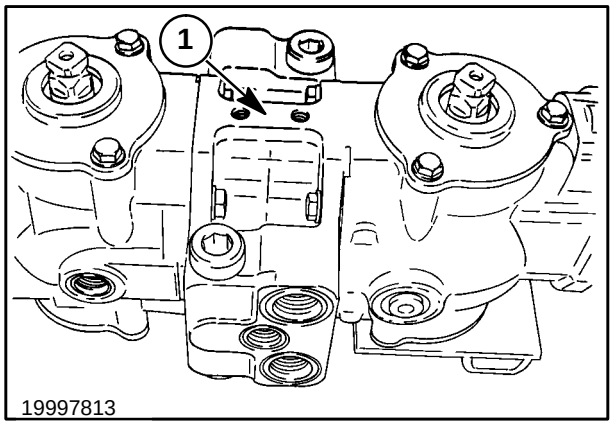

83

https://truckmanualshub.com/

HYDRAULIC SYSTEM PUMP INSTALLATION (WITHOUT HIGH FLOW)

1. Remove the through bolts and separate the gear assemblies and wear plate from the pump body by removing the drive gear, 1, and idler gear, 2. Do not disturb the seal between the pump body and the backplate.

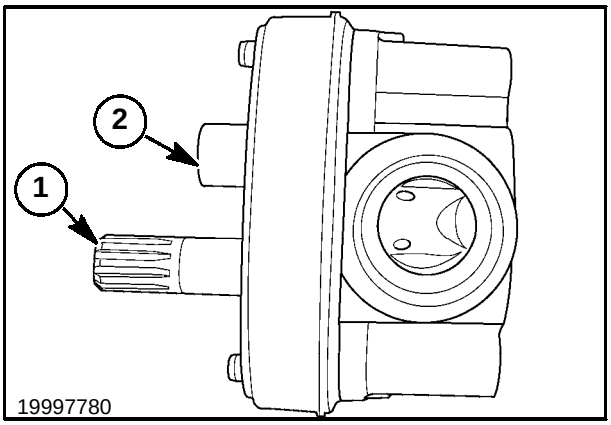

84

The hydraulic system gear pump consists of:

1 Wear plate assembly

2 Idler gear assembly

3 Drive gear assembly

4 Pump body

5 Pump back plate

Coat all parts with a thin coat of petroleum jelly or oil to aid in reassembly.

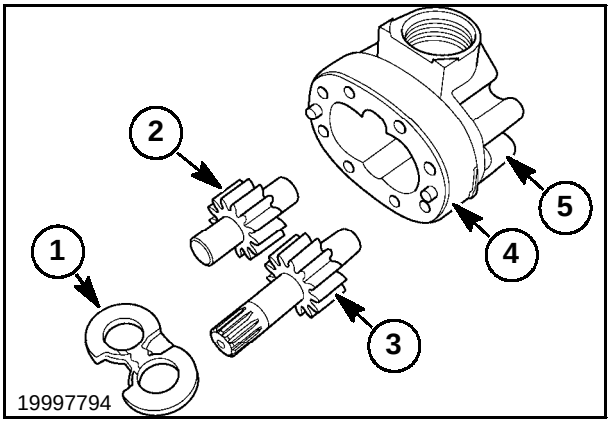

85

2. Clean the mounting plate surface and hydrostatic pump housing thoroughly and install a new O ring, 1.

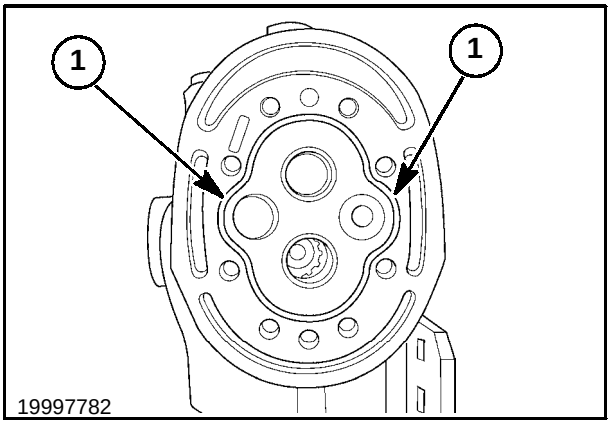

86

https://truckmanualshub.com/

3. Install the wear plate assembly, 1, with the gasket/seal side towards the pump mounting plate with the mid section cut away on the suction side, 2, of the pump.

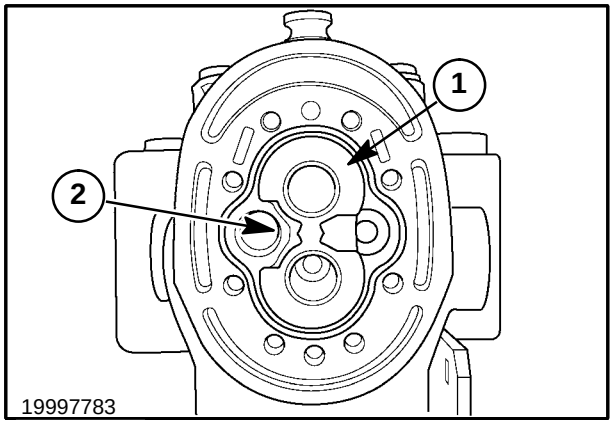

87

4. Install the drive shaft, 1, making sure to engage the splines inside the hydrostatic pump. Install the idler gear assembly, 2, into the bushing. Rotate the gears to help slide the idler gear into place.

NOTE: *The drive shaft and gear, 1, must be properly seated into the hydrostatic pump drive shaft splines with the end of the gear teeth against the wear plate.*

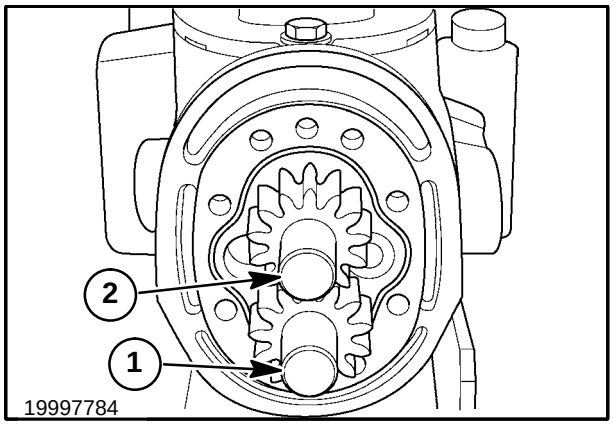

88

5. Install the pump backplate, 1, and center section together over the gear shafts.
6. Install the housing hardware with the eight bolts, 2, and sealing washers. Tighten the bolts evenly in a criss-cross pattern to 34 - 38 N·m (25 - 28 ft. lbs.).

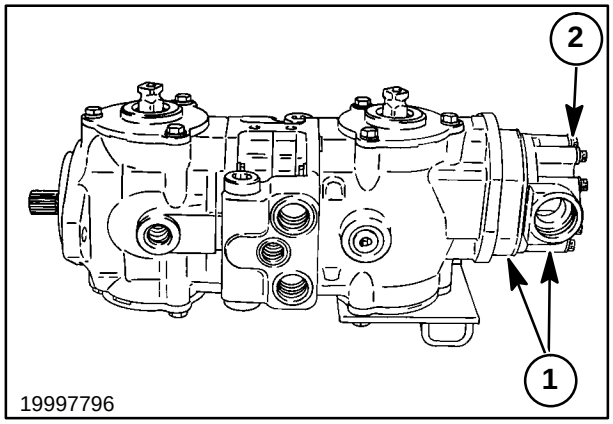

89

https://truckmanualshub.com/

HYDRAULIC SYSTEM PUMP / HIGH FLOW PUMP INSTALLATION

1. Remove the through bolts, 1, and washers.
2. Separate the pumps at 2, taking care not to disturb the seals between the pump bodies and backplates.

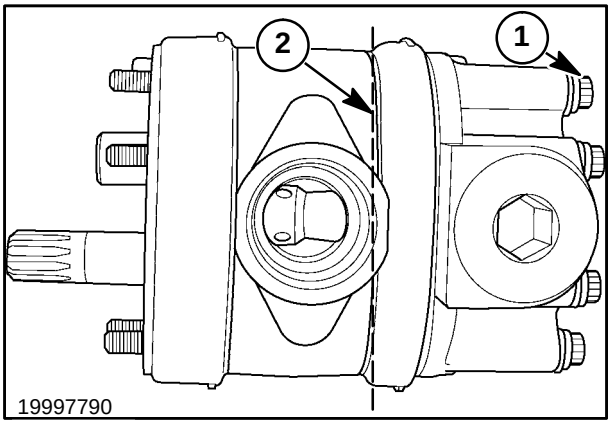

90

3. Remove the small round drive key, 1, from the pump drive shaft, 2, and remove the drive gears, idler gears, and wear plates from the pumps, taking care not to disturb the seals between the pump body and backplate.

IMPORTANT: *The small round key must be removed to remove drive shaft from pump center sections. Do not lose drive key.*

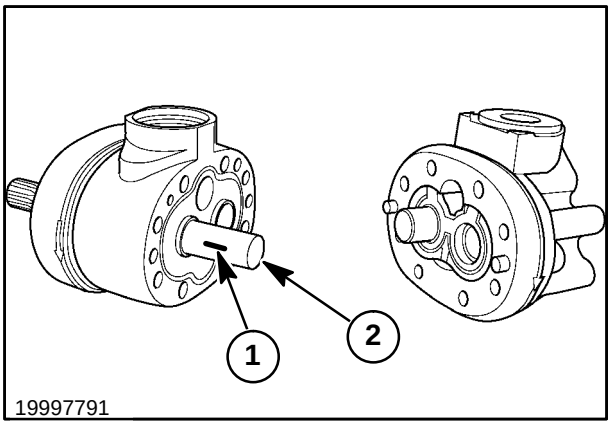

91

https://truckmanualshub.com/

The hydraulic system pump consists of:

1 Wear plate assembly

2 Idler gear assembly

3 Drive gear assembly

4 Key

5 Pump body

6 Pump back plate

Coat all parts with a thin coat of petroleum jelly or oil to aid in reassembly.

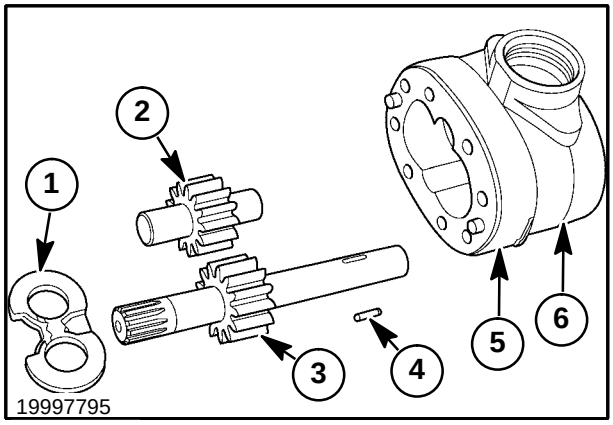

92

The high flow pump consists of:

1 Wear plate assembly

2 Idler gear assembly

3 Drive gear

4 Key (Figure 92)

5 Pump body

6 Pump back plate

Coat all parts with a thin coat of petroleum jelly or oil to aid in reassembly.

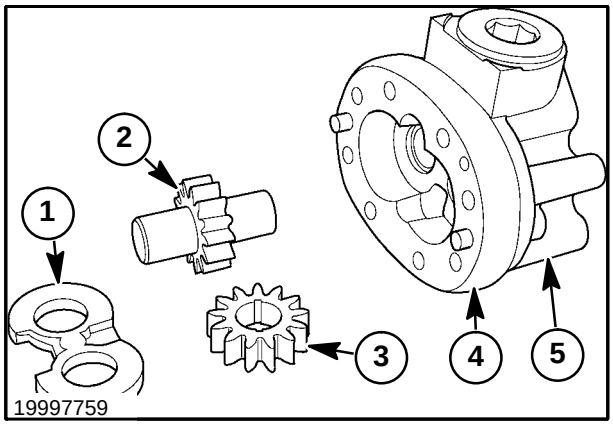

93

4. Clean the mounting plate surface and hydrostatic pump housing thoroughly and install a new O ring, 1.

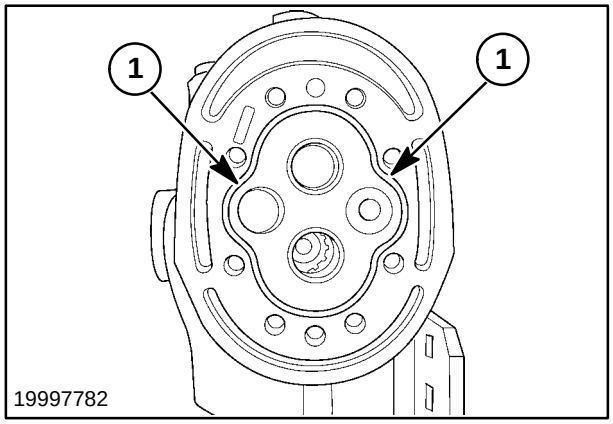

94

https://truckmanualshub.com/

Install the wear plate assembly, 1, with the gasket/seal side towards the pump mounting plate with the mid section cut away on the suction side, 2, of the pump.

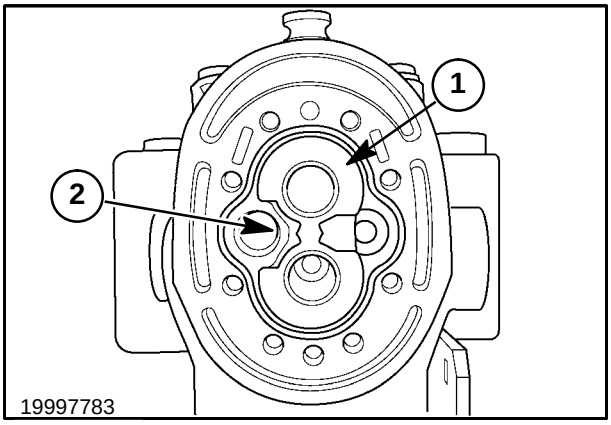

95

5. Install the drive shaft, 1, making sure to engage the splines inside the hydrostatic pump. Install the idler gear assembly, 2, into the bushing. Rotate the gears to help slide the idler gear into place.

NOTE: *The drive shaft and gear, 1, must be properly seated into the hydrostatic pump drive shaft splines with the end of gear teeth against the wear plate. Position the key slot, 3, up.*

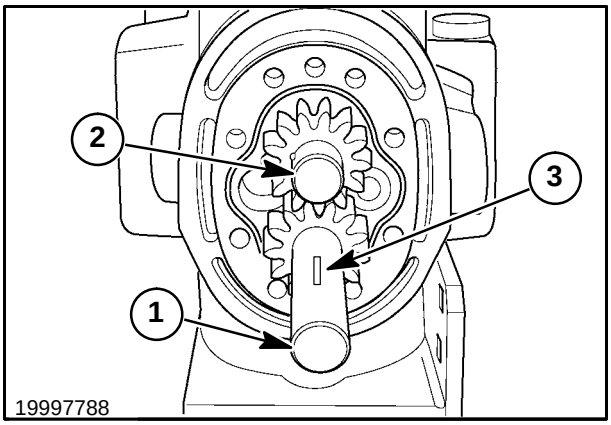

96

6. Install the pump body and back plate together, 1, over the gear shafts, taking care not to disturb the seals between the pump body and backplate.

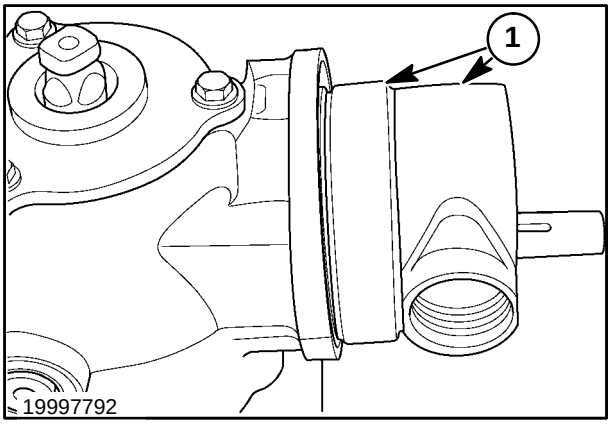

97

https://truckmanualshub.com/

7. Clean the mounting plate surface thoroughly and install a new O ring, 2. Install the shaft key, 3, in the drive shaft.

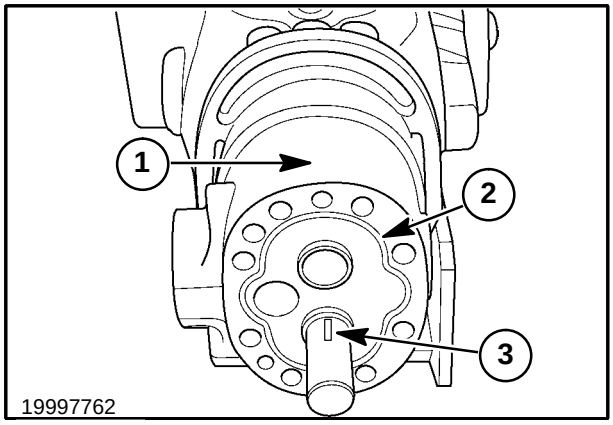

98

8. Install the wear plate assembly, 1, with the gasket/seal side towards the pump mounting plate with the mid section cut away on the suction side, 2, of the pump.

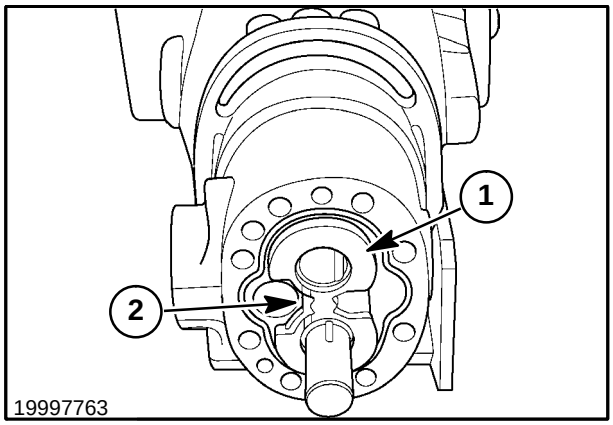

99

9. Install the drive gear, 1, on the drive shaft, slipping the groove over the shaft key, 2. Install the idler gear assembly, 3, into the bushing. Rotate the gears to help slide the idler gear into place.

NOTE: *When installing drive gear, 1, on to the shaft, be careful not the knock the round drive key, 2, from the shaft.*

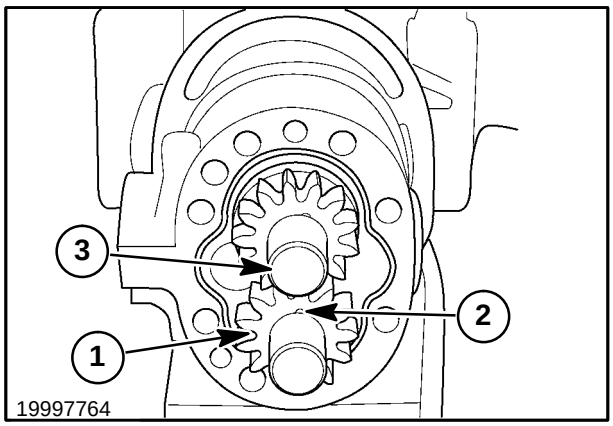

100

https://truckmanualshub.com/

10. Install the high flow pump body and end plate together, 1, taking care not to disturb the seals between the pump body and backplate. Make sure there are no gaps between the pump bodies and plates.

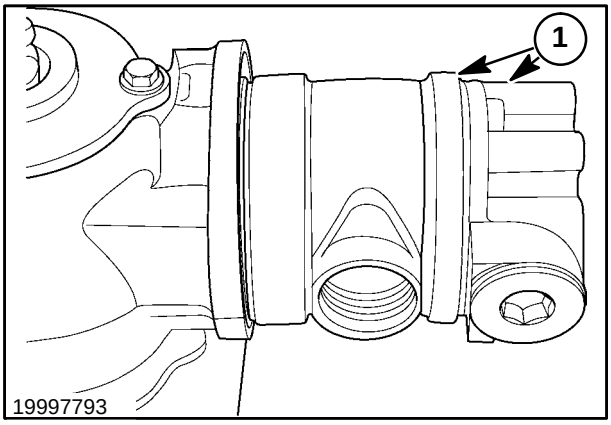

101

11. Install the housing hardware with the eight bolts, 1, and sealing washers. Tighten the bolts evenly in a criss-cross pattern to 34 - 38 N·m (25 - 28 ft. lbs.).

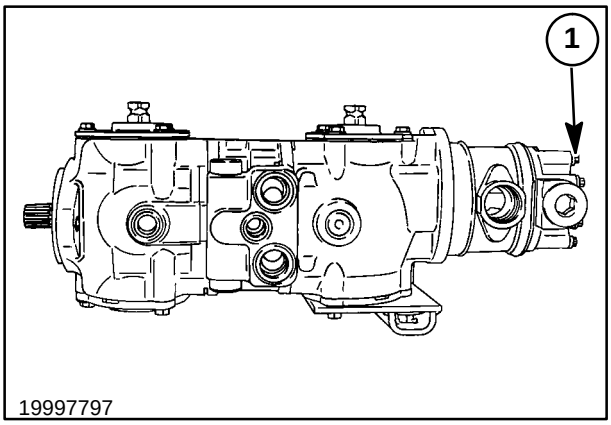

102

https://truckmanualshub.com/

REINSTALLATION

1. Install the side/top support bracket, 1, with the capscrews, 2, and washers removed during disassembly.

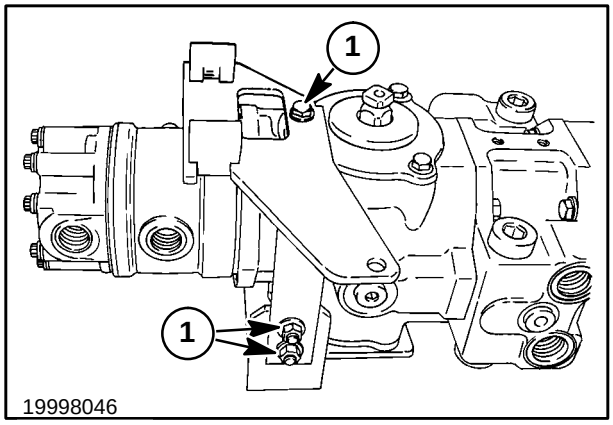

103

2. Install the dust shields, 1, and new O rings, 2, around each hydrostatic pump control arm.

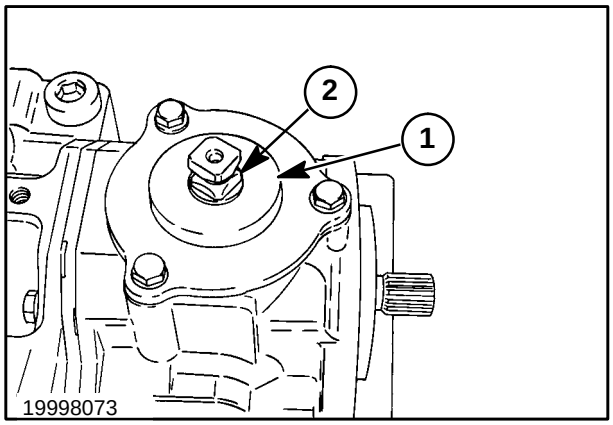

104

3. Install the neutralizer cam arms, 1, over the trunnion shafts, with the bearings facing the rear of the unit. Secure the arms with the 3/8″ Grade 8 bolts, 3, lockwashers and nuts removed during disassembly. Tighten to 65 N·m (48 ft. lbs.).
4. Fill the pump assembly with oil through the case drain port. Install all the port fittings, but do not tighten the fitting nuts at this time as aligning hoses and fittings will be required.

   Refer to the “Hydraulic System Cleaning After a Rebuild” section of this manual before installing the pump assembly in the loader.

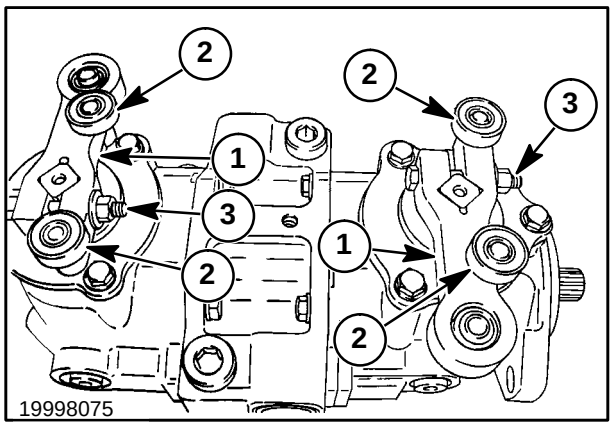

105

https://truckmanualshub.com/

5. Lubricate the engine flex plate splines and pump shaft splines with MOLY COATE GN PASTE or NEVER SEIZE. Lower the pump assembly into the unit and align the pump shaft with the drive coupler. Do not force the shaft into the drive coupler. Secure the assembly with two 1/2″ x 1-1/4″ capscrews, 1. Tighten to 61 N·m (45 ft. lbs.).
6. Install the four pump mounting bolts under the pump, securing the pump support bracket to the frame. Tighten the bolts to 40 N·m (30 ft. lbs.).
7. Install the plastic guides, 2, on the support bracket.

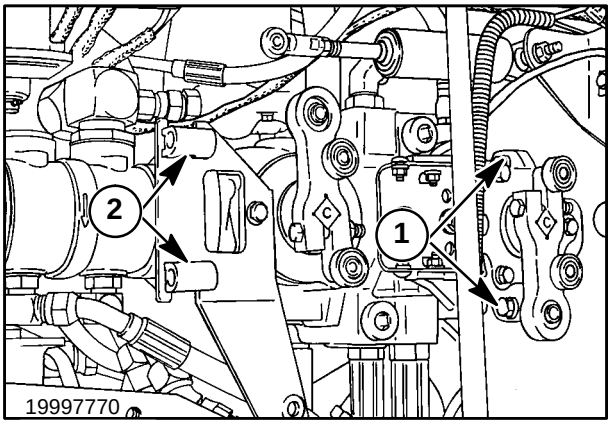

106

8. Right Motor - Reattach all the hydraulic hoses to the pumps. The pump to motor connections are top-to-top and bottom-to-bottom. The top hose, 1, from the motor routes under the motor to the top port of the motor, 2. The bottom hose from the motor, 3, routes over the motor. The case drain line, 4, also routes over the motor.

   When tightening fittings, first align hoses and tubes for clearance, then tighten to seat the fittings. After seated, loosen and retighten.

NOTE: *Make sure that the hoses are connected to the correct ports. If the hoses are reversed at the pump or motor, the wheels will turn opposite the control handle direction.*

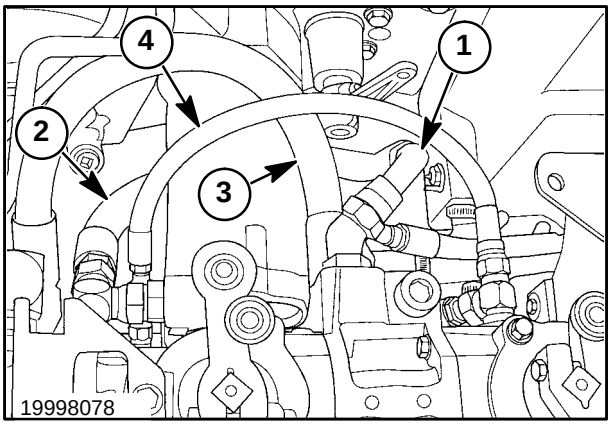

107

9. Left Motor - Reattach all the hydraulic hoses to the pumps. The pump to motor connections are top-to-top and bottom-to-bottom, and both hoses route over the motor. The hose from the top pump port, 1, goes to the top motor port, 2. The hose from the bottom motor port, 3, goes to the bottom motor port, 4. The case drain line, 5, routes under the hydraulic pumps.

   When tightening fittings, first align hoses and tubes for clearance, then tighten to seat the fittings. After seated, loosen and retighten.

NOTE: *Make sure that the hoses are connected to the correct ports. If the hoses are reversed at the pump or motor, the wheels will turn opposite the control handle direction.*

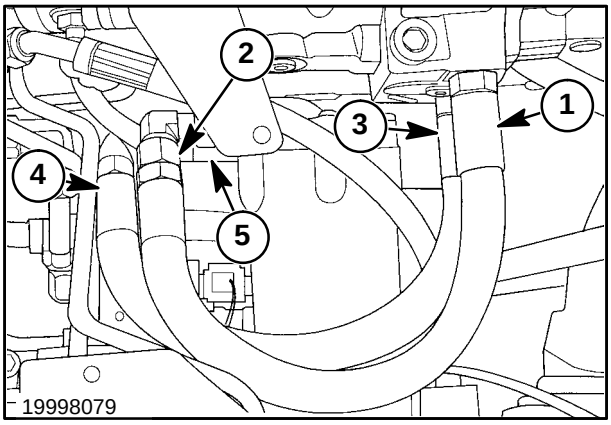

108

https://truckmanualshub.com/

10. Install the high pressure port fitting, 1, and the high pressure line, 2. Tighten the high pressure line connections securely.
11. Install the suction tube port fitting, 3, and turn the fitting up. Add SH/CG4 10W-30 oil to fill the bottom of the hydraulic pump.

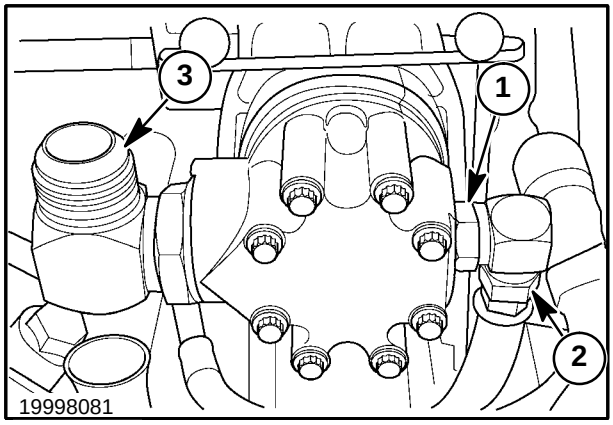

109

12. Install the high pressure port fittings, 1, and the high pressure lines, 2. Tighten the high pressure line connections securely.
13. Install the suction tube port fitting, 3, and turn the fitting up. Add SH/CG4 10W-30 oil to fill the bottom of the hydraulic pump.
14. Turn the suction tube fitting down and install the suction tube, 4. TIghten all hydraulic connections securely.

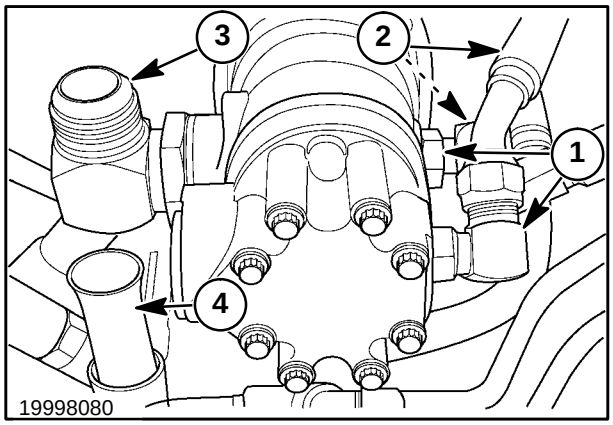

110

15. Turn the suction tube fitting, 1, down and install the suction tube, 2. TIghten all hydraulic connections securely.

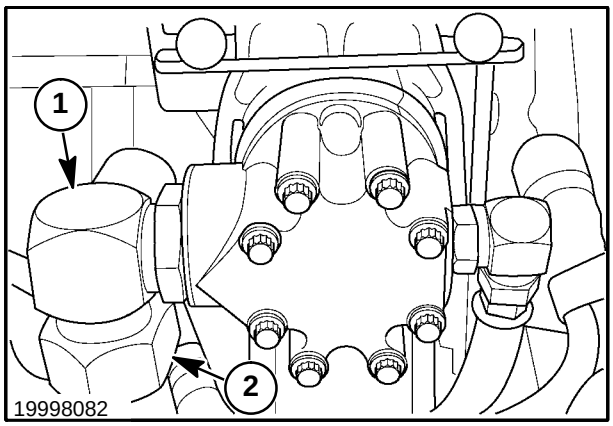

111

https://truckmanualshub.com/

16. Install the left dampener hardware, 1, at the support bracket.
17. Install the link and dampener hardware, 2, at the pintle arms.
18. Install the control link hardware, 3, at the control handles.
19. Install the centering spring retaining bolt, 4, and spring into the engine bellhousing. When removing the retaining bolt the spring will be under slight pressure.
20. Install the two pin retaining nuts, 5, and lockwashers securing the pins, 6, to the front of the neutralizer plate.
21. Refer to the Operator's Manual for neutral adjustment procedures.

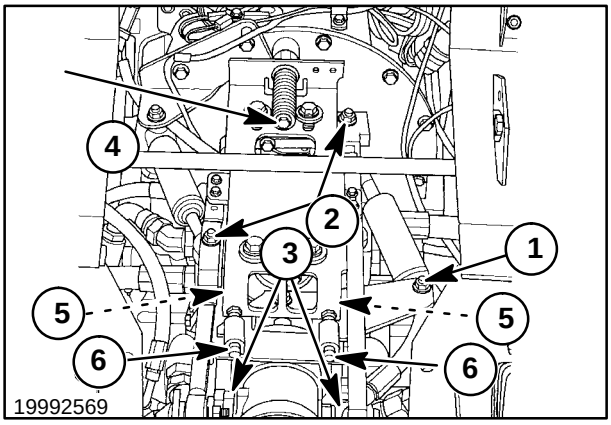

112

22. On units equipped with high flow, reinstall the boom circuit hydraulic lines, 1 and 2, and the high flow supply line, 3.
23. Refer to "Start-Up Procedure After a Rebuild" section of this manual for the start-up procedure.
24. Switch the Service/Run switch to the SERVICE position.
25. Operate the unit and check for oil leaks and repair as necessary.

CAUTION

Securely support the skid-steer loader with all four wheels off the ground, or movement of the loader may cause serious injury or damage to the equipment.

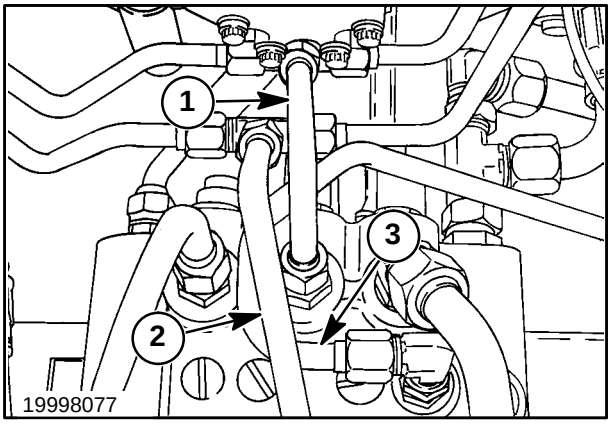

113

26. Reinstall the step shield, fenders, etc. removed for the repair.
27. Fill the hydraulic reservoir with SAE SH/CG4 10W-30 oil.

https://truckmanualshub.com/

HYDROSTATIC MOTOR

Op. 29 100 60

REMOVAL

The hydrostatic motor assembly can be removed from the top and front or the cab and boom can be tilted forward for more access, refer to Section 1 for the cab tilting procedure.

To remove the hydrostatic motor assembly without tilting the cab forward:

1. Lower the boom and bucket to the lowered position, resting on the ground or remove any attachment and raise the boom and rest on the boom lock pins, 1.

CAUTION

Never work under a raised boom unless it is properly supported by the boom lock pins.

Never work under a raised boom with an attachment. Always remove the attachment from the loader.

2. Stop the engine, turn the ignition key to the run position and operate the boom and bucket control pedals to relieve pressure in the boom and bucket circuits. Turn off the key.
3. Put the Service/Run switch, 1, in the “SERVICE” position.
4. Engage the parking brake.
5. Securely block the skid steer with all four wheels off the ground. Refer to Section 00 for more information on properly supporting a skid steer.

CAUTION

Failure to securely support the skid steer could result in movement of the loader causing serious injury or damage to the equipment.

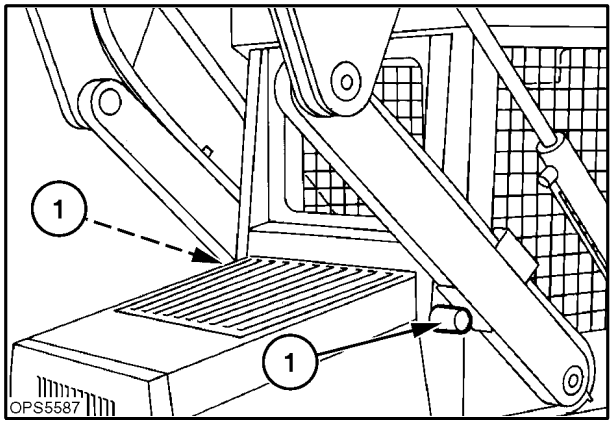

114

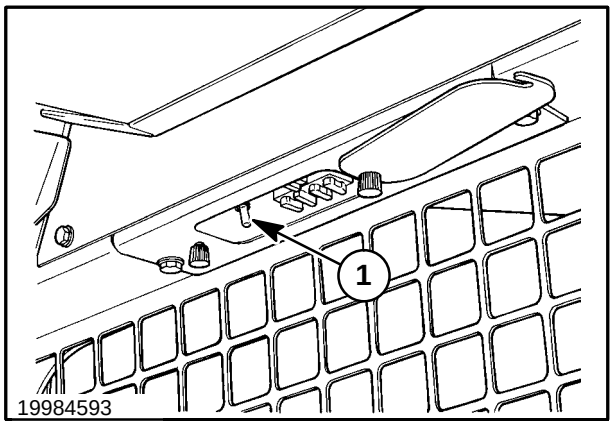

115

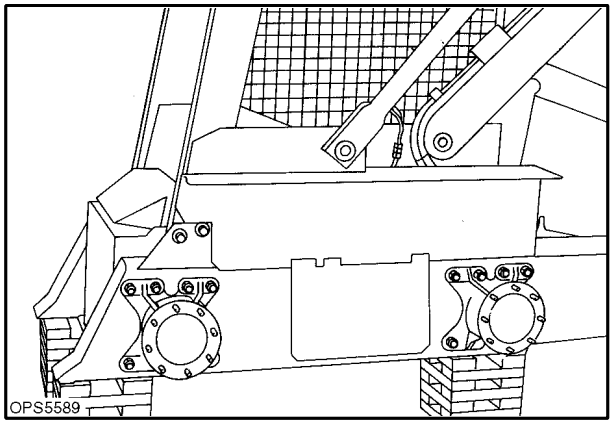

116

https://truckmanualshub.com/

6. Raise the operator's seat and latch in the raised position, 1.

CAUTION

Never work under a raised seat unless it is securely latched in the raised position.

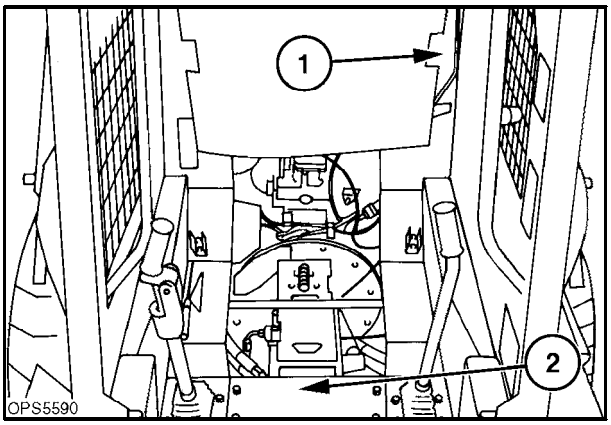

117

7. Remove the step shield, 1, to access the hydrostatic pump and motor area. For more access, remove the right or left hydrostatic control handle assembly, 1 or 2.
8. Relieve all pressure in the hydraulic and hydrostatic systems.

CAUTION

Never loosen any hydraulic lines without first relieving all pressure in the systems to avoid serious injury.

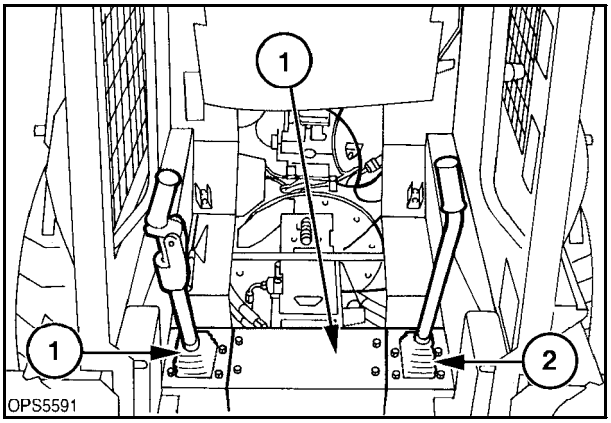

118

Draining the hydraulic oil reservoir is not required if the suction and return lines are capped to prevent loss of oil. Drain the hydraulic oil if the hydraulic system requires cleaning.

9. Remove the rear engine belly pan hardware, 1, and remove the belly pan.

CAUTION

Use a floor jack to support the belly pan to prevent serious injury.

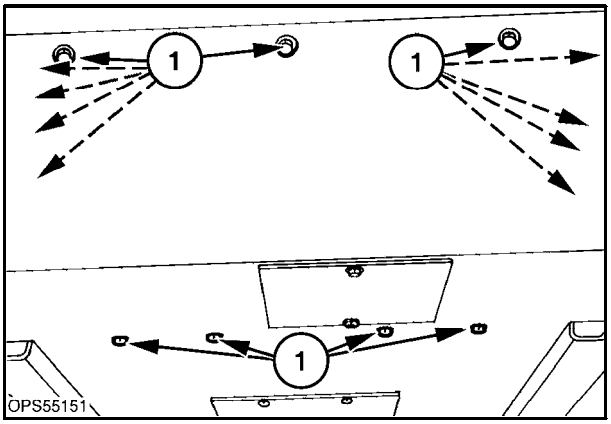

119

https://truckmanualshub.com/

10. Drain the hydraulic reservoir.
    - Loosen the return line clamp, 1.
    - Remove the return line at 2, and rotate the line into a suitable drain pan.

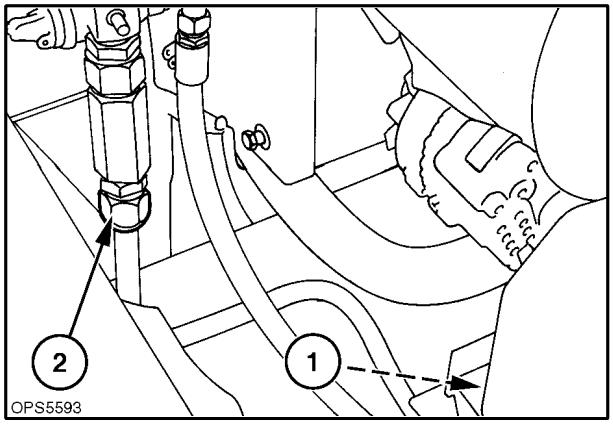

120

11. Remove the fender, 1, on the side the motor is being removed from. Remove the final drive cover, 2, to access the parking brake. Engage the parking brake.

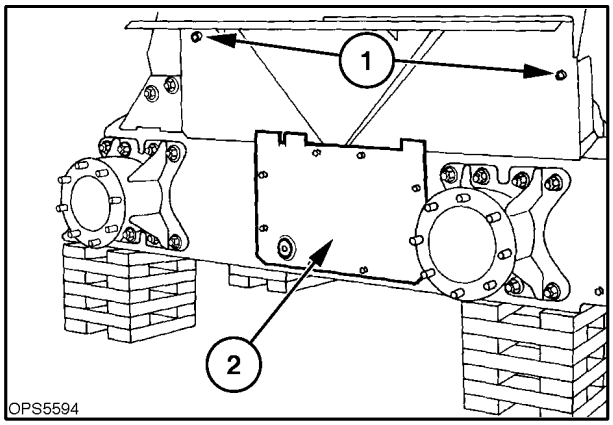

121

12. For more access to the final drive, remove the tires and loosen the rear axle retaining hardware. Slide the axle to the center to loosen the drive chain. Loosen the brake disk retaining bolt, 3.

    Disengage the parking brake at this time.

13. Remove the brake caliper bolts, 2, from inside the unit and remove the disk from the splined coupler.

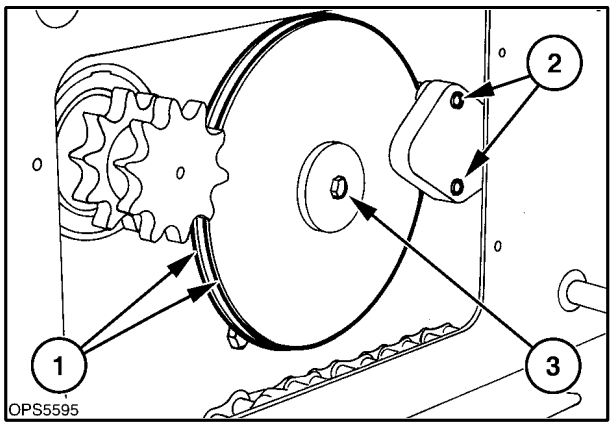

122

https://truckmanualshub.com/

14. Right Motor – Remove the high-pressure and case drain lines from the motor and cap to prevent loss of oil. Remove the two motor retaining bolts, 1.

NOTE: *The large fittings may need to be removed for clearance.*

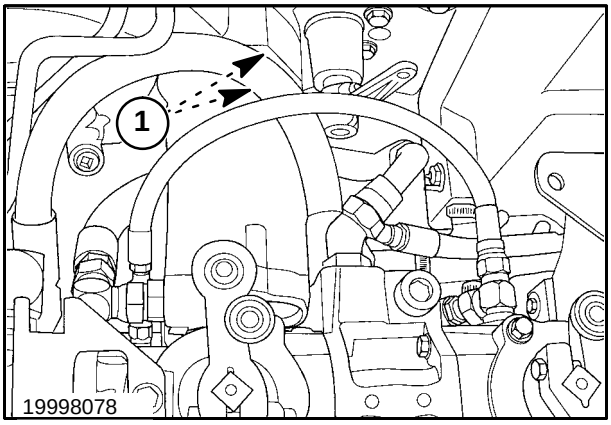

123

15. Left Motor – Remove the high-pressure and case drain lines from the motor and cap to prevent loss of oil. Remove the two motor retaining bolts, 1.

NOTE: *The large fittings may need to be removed for clearance.*

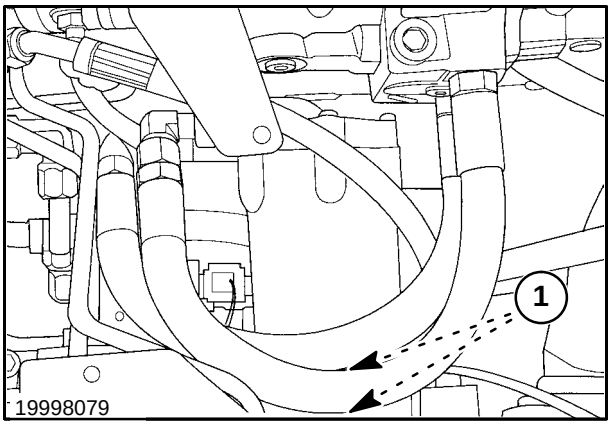

124

16. With the brake disc removed from the coupler, locate a groove, 1, in the coupler and place a flat bearing puller in the groove. Place a nut or heavy flat washer inside the coupler next to the end of the motor shaft at 2. Insert a second puller into the coupler and hook over the flat puller. Now tighten the puller and push the motor shaft free of the coupler.

CAUTION

Do not use a hammer and drive on the motor shaft to remove from the coupler. Severe damage to the motor may occur.

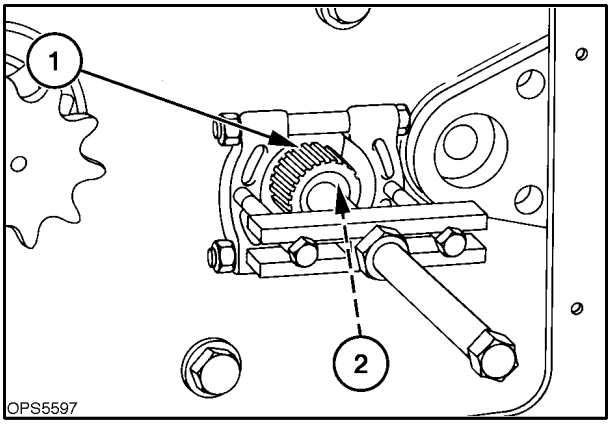

125

https://truckmanualshub.com/

17. Remove the motor from the loader. Thoroughly clean the motor before disassembly.

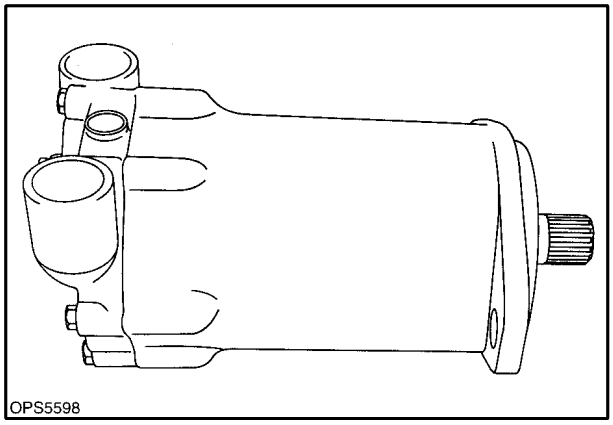

126

Op. 29 100 66

DISASSEMBLY

This section describes the basic overhaul information for the high torque motor. This motor consists of one rotating block with pistons on either end that travel on replaceable cam plates. This motor must be shimmed on rebuilding to insure proper hydrostatic braking of the loader.

NOTE: *Dealer adjustment requests for oil leak repairs, other repairs, or overhaul of the transmission motor must include the model number of the transmission motor and the date code. These are stamped in the flange of the motor housing, 1.*

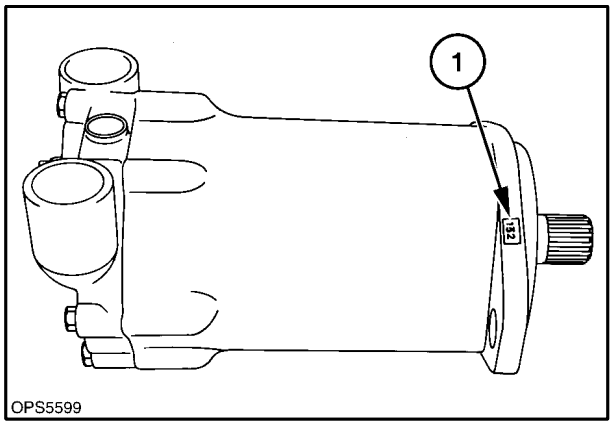

127

1. Thoroughly clean the outside of the motor housing before disassembly. Plug the ports to prevent dirt and solvent from entering the motor housing.
2. Remove the snap ring, 1, from the housing, and remove the seal, 2; the seal will be damaged upon removal.

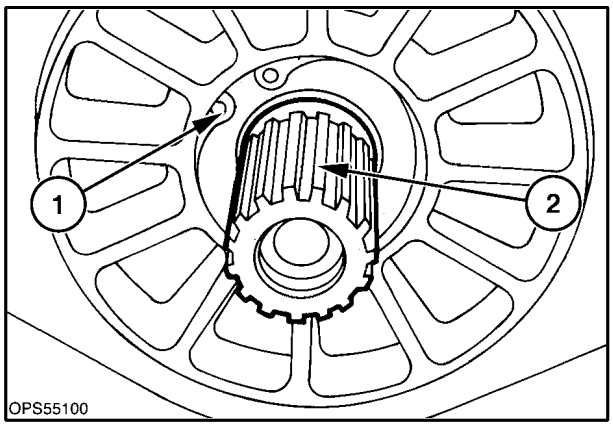

128

https://truckmanualshub.com/

3. Mark the motor housing, as indicated at 1, for proper reassembly of the motor. Clamp the motor in a vise, as shown, on the housing flange.
4. Remove the cap screws, 2, from the back plate assembly, and lift the plate straight from the housing to prevent damage to the shaft and bearings.

NOTE: *The back plate assembly should pop up with the removal of the six cap screws. If the plate does not pop up, use a plastic mallet and tap on the ports to remove the back plate assembly.*

IMPORTANT: *The motor housing is aluminum and can be easily damaged. Do not use sharp objects to pry the back plate from the housing or damage to the machined surfaces may occur.*

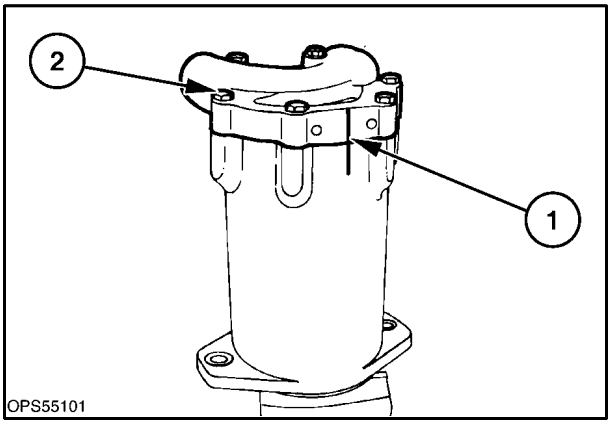

129

5. After the back plate is removed, there is a shim washer, thrust bearing, 1, and two races, 2, on the end of the shaft. The shim washer, bearing, and one race may remain in the back plate as shown at 1.

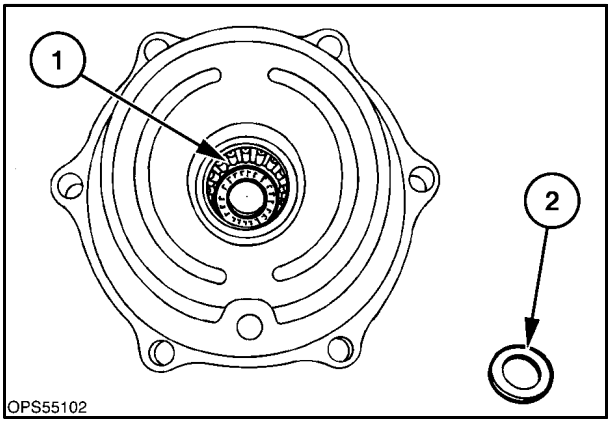

130

6. Remove connector plate, 1, after noting how it is installed in the spider assembly, raised area, 2, towards the back plate and flat side towards the pistons.

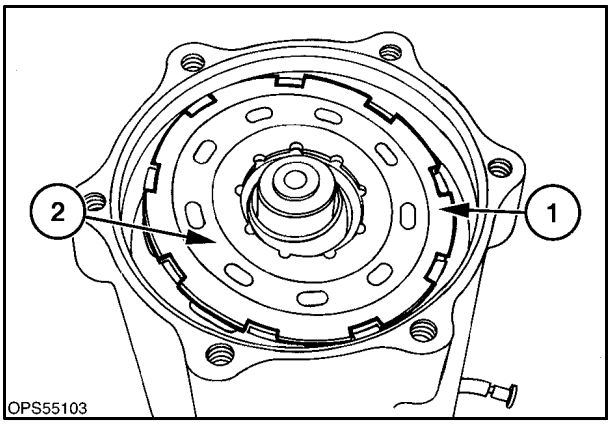

131

https://truckmanualshub.com/

7. Remove two pistons noting the holes they are from, then remove the spider and remaining piston assembly. Be sure to lay all parts being removed from the motor on clean cardboard to prevent contamination. Do not drop any parts on removal or reassembly, as the parts may be damaged.

NOTE: *When reassembling, the piston must be reinstalled in the same holes due to fit and wear.*

IMPORTANT: *Do not drop any parts from the motor or damage may occur.*

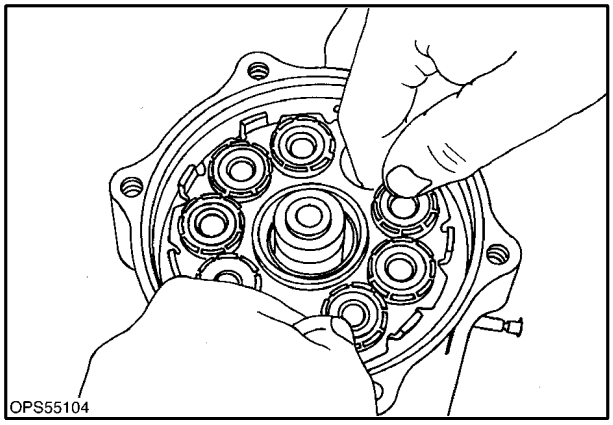

132

8. Remove the pilot assembly, 1.
9. Remove the pivot assembly, 2.
10. Remove any shim washers, 3, and spring, 4.
11. Remove snap ring collar, 5.

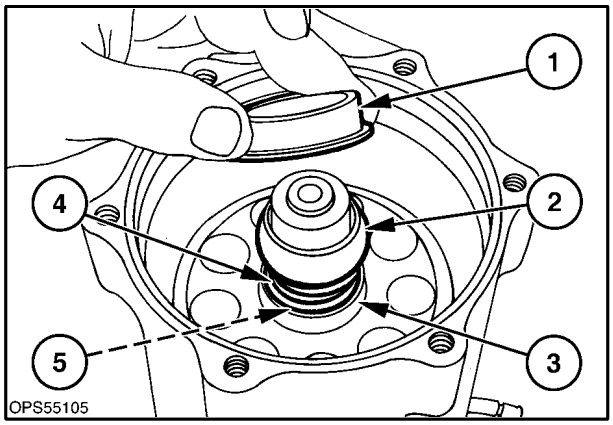

133

12. Remove the motor assembly from the vise and position a hand around the shaft, as shown. This will prevent the solid pistons remaining in the rotating block from sliding out when the block is turned.

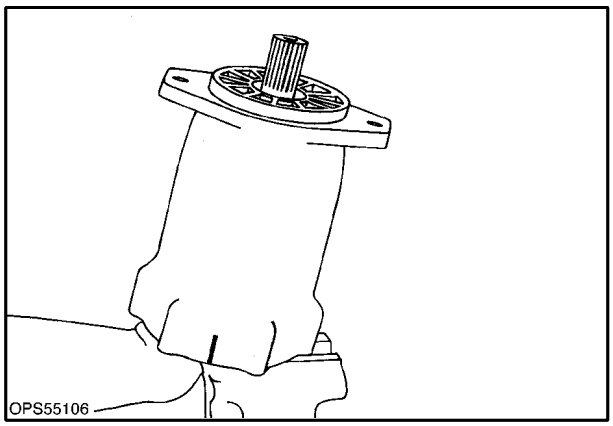

134

https://truckmanualshub.com/

13. Pull the case straight up and remove it from the shaft. The heavy thrust bearing, 1, and piston race, 2, can now be removed.

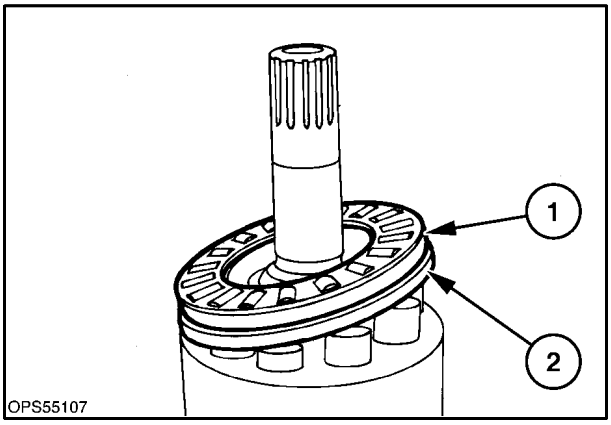

135

14. A replaceable bearing race, 1, is installed in the housing assembly and will normally remain in the housing when other parts are removed. This race should be checked for any signs of scoring or turning in the housing. Replace the race as necessary. Be sure to clean the case thoroughly for reassembly.

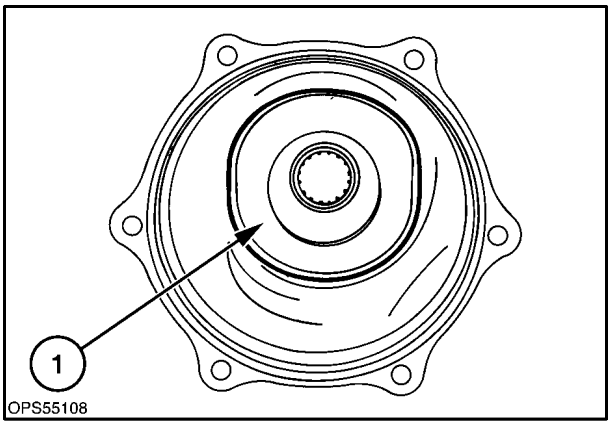

136

15. Remove pivot, 1, and spacer, 2.
16. The nine solid pistons, 3, can now be removed. Remove the pistons from the snap ring end of the piston block. Note that the tapered end of the piston faces the bearing race previously removed.

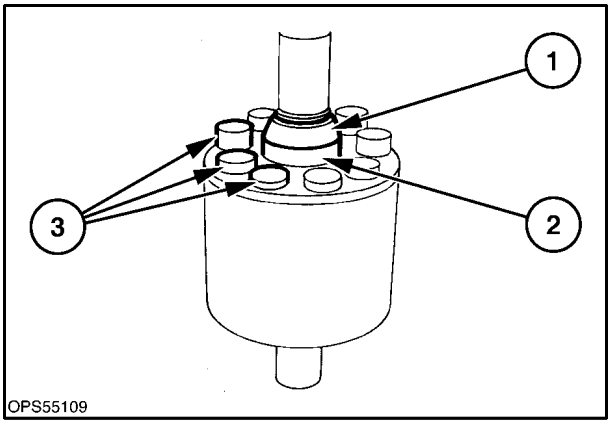

137

https://truckmanualshub.com/

IMPORTANT: *There is a burr around the holes in the piston block at 1; this is normal, do not remove. DO NOT place the piston block on the ends or the burr around the holes may be damaged, causing a piston to stick during operation.*

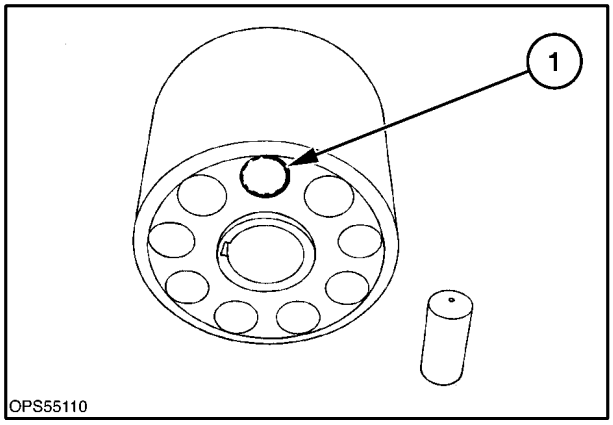

138

17. The piston block can be removed from shaft, 1. The block is keyed onto the shaft with a long, square key, 2. Remove the snap ring, 3, from the shaft if it requires replacement.

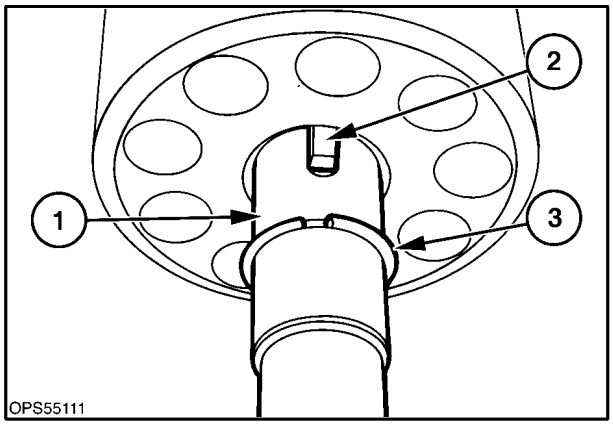

139

18. A complete layout of the parts used in the hydrostatic motor is shown.

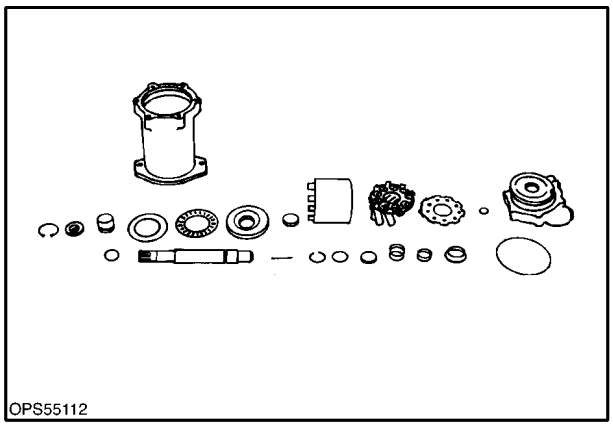

140

https://truckmanualshub.com/

PARTS INSPECTION

Clean all parts in a suitable solvent and air dry prior to inspection.

IMPORTANT: *Due to close tolerances and finish of motor internal surfaces, it is important to maintain absolute cleanliness during inspection and reassembly or damage to the components may occur.*

1. Examine the needle bearing in the housing assembly and the back plate assembly, 1, for excessive play in the needles. If the needles are free from excessive play and remain in the bearing case, there is no need to replace the bearing. Inspect the thrust bearing, 2, and races, 3, for scratches and wear.
2. Inspect the flat surface of the back plate around the kidney ports for scratches. Inspect the area between the kidney ports, 4; there should be no scratches that you can catch a fingernail in. Wear in this area will cause loss of hydraulic power to the wheels.

   When a back plate assembly must be replaced, the connector plate should also be replaced.
3. Inspect the shaft for any wear in the bearing or seal areas, 1. If wear is noted, the shaft should be replaced. Also check the shaft splines, 2, and key, 3, areas for wear.

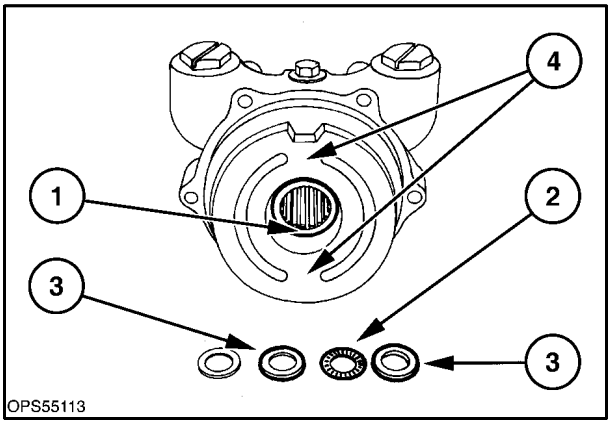

141

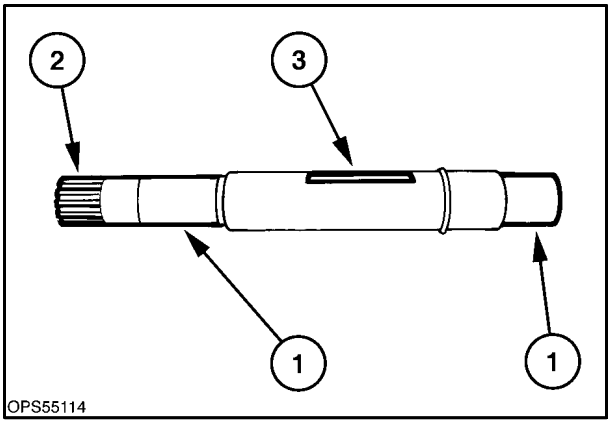

142

https://truckmanualshub.com/

4. Inspect the piston block for any wear in the key or shaft area, 1.
5. The hollow pistons with slippers must be installed into the piston block holes on the side of the block with the tapered shaft opening, 2. Examine the holes in the block for scoring and wear. If the pistons' skirts show scoring, the corresponding holes in the block will be worn.
6. The pistons should be free to move in the block bore. Check each individual piston in a block hole to be sure it moves freely when well lubricated. If it does not move freely, check the piston for scoring or block bore for wear or contamination.

NOTE: *There is a burr around each hole at 3; be careful not to damage the burr.*

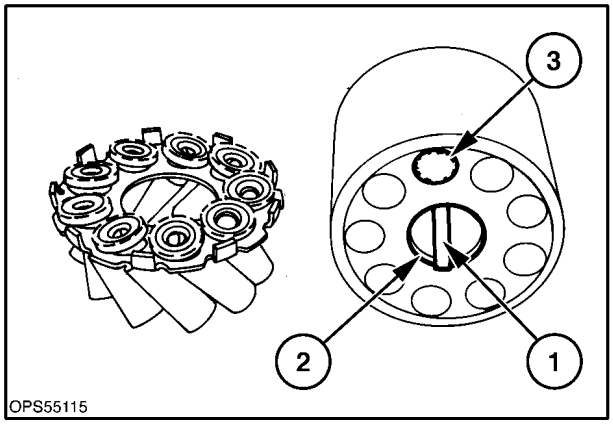

143

7. The outside of the pistons, 1, should not show any deep scratches or wear. It is normal to see minor scratches, such as brush marks, that cannot be felt with a fingernail. The piston shoes, 2, should fit snugly on the ball end, 3, of the piston. There should not be any wear to the outside edge of the shoe at 5, which can be noted by a rolled edge. If necessary, replace the piston assemblies.

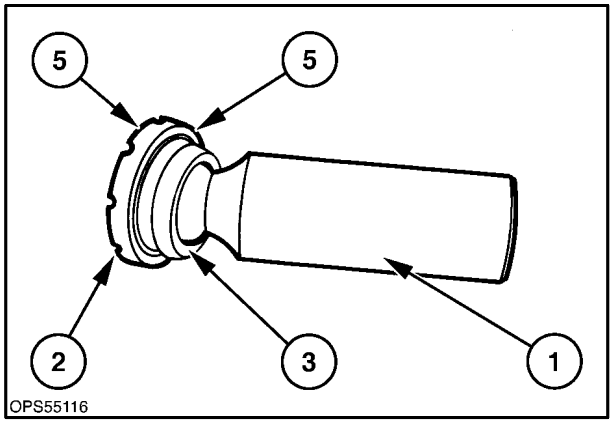

144

8. Check the internal opening in each piston to be sure it is open for oil flow, 1. The flat surface of the piston shoe should be smooth and not show any scratches, 2.

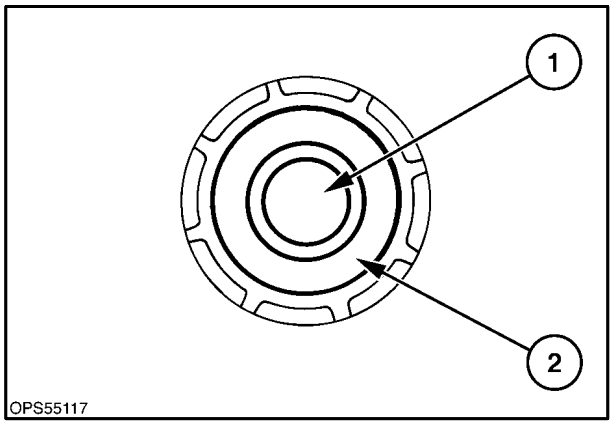

145

https://truckmanualshub.com/

9. The solid piston assemblies should be individually checked in the block bores to be sure they move freely when lubricated. The solid pistons go in the end of the block with the shoulder, 1. Install the solid pistons from the tapered end of the block, 2, with the tapered end of the piston, 3, towards the shoulder end of block, 1. Check the tapered end of the piston and the piston race for wear. If the pistons do not move freely in the bores, replace the pistons or block as needed.

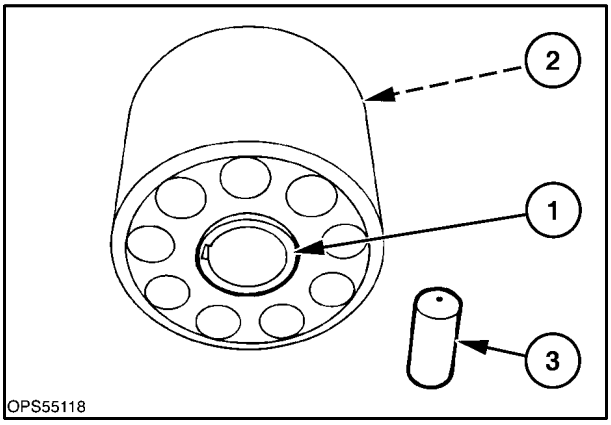

146

10. Check the connecter plate for wear in the band area, 1, or any connecting scratches between the kidney ports, 2.

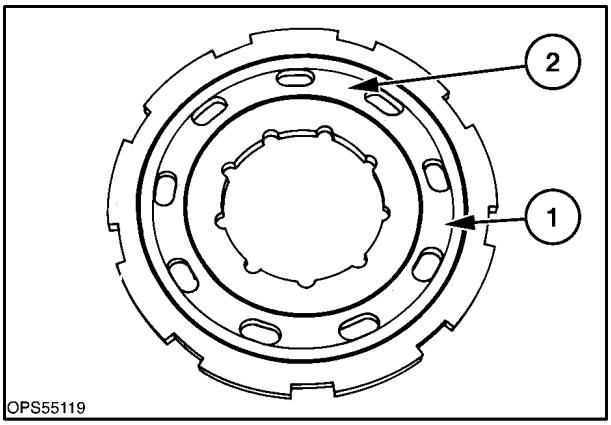

147

11. Check the bearing races and bearing for scratches or damage to the bearings or the flat surfaces. A race failure due to a sticking solid piston will result in a broken race. Check the solid piston for interference with the piston block. This type failure is normally caused by contamination in the hydrostatic system.

    If the bearing race, 1, is removed and is in two or three pieces, it will require replacement.

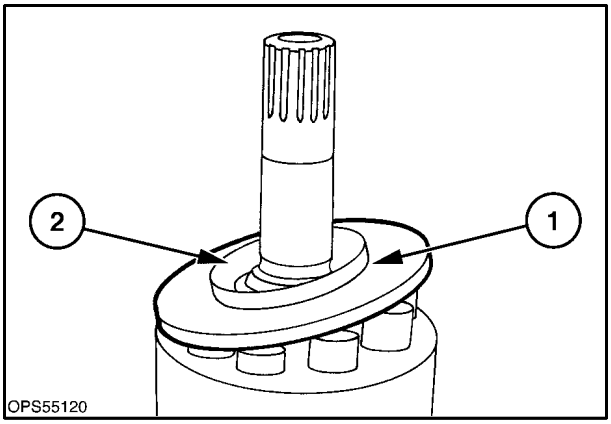

148

https://truckmanualshub.com/

REASSEMBLY

IMPORTANT: *Due to close tolerances and finish of motor internal surfaces, it is important to maintain absolute cleanliness during inspection and reassembly or damage to the components may occur.*

Be sure all parts are clean and air-dried before reassembly. Prior to assembling the motor, dip all parts in the oil, SH/CG4 10W-30, that will be used in the hydraulic reservoir. This motor must be shimmed during reassembly. The shim kit gauge block used to determine the shim pack is included in the seal kit for the motor assembly.

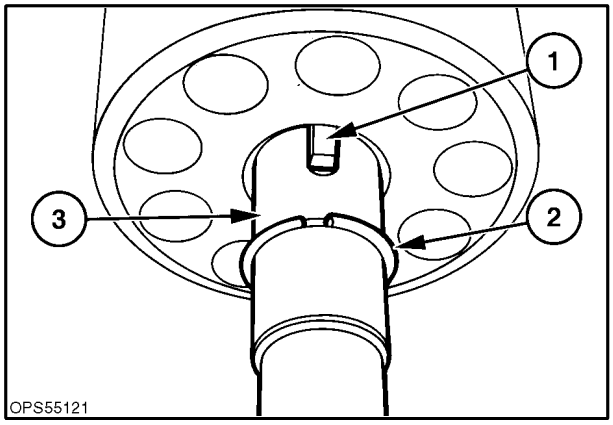

149

1. Install the key, 1, in the shaft and the round retaining ring, 2, in the groove.

   Slide the piston block on the shaft with the 45° chamfer, 3, in the inside diameter of the piston block toward the round retaining ring, 2, on the shaft.

2. Lubricate the solid pistons, 1, with system oil and install them in the piston block bores from the tapered end of the block, 2, with the tapered ends facing outward. Be sure each piston moves freely in its bore. It is suggested that the assembly be held with one hand, as shown, so the pistons do not fall completely through the block.

IMPORTANT: *Do not damage the burr around the piston holes in the block.*

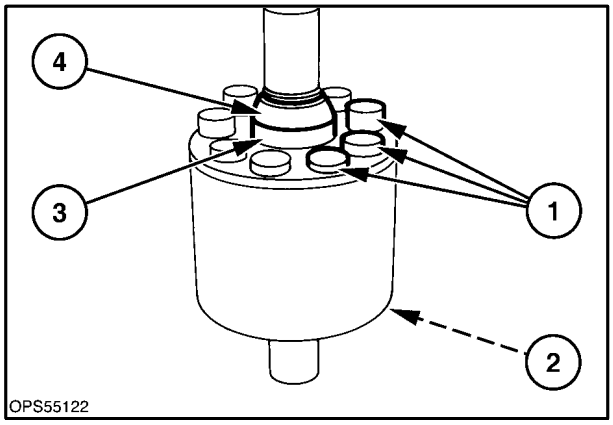

150

3. Slide spacer, 3, and pivot, 4, over the shoulder on the shaft. Be sure the block assembly is resting on the snap ring on the opposite end of the shaft.

NOTE: *If the spacer and pivot assembly are not completely down over the shoulder on the shaft as a result of the block being off the snap ring, the shimming procedure and motor operation will be incorrect.*

https://truckmanualshub.com/

4. Lubricate the piston race assembly, 1, and place it on the pivot, as shown, with the bearing locating ring, 2, up.

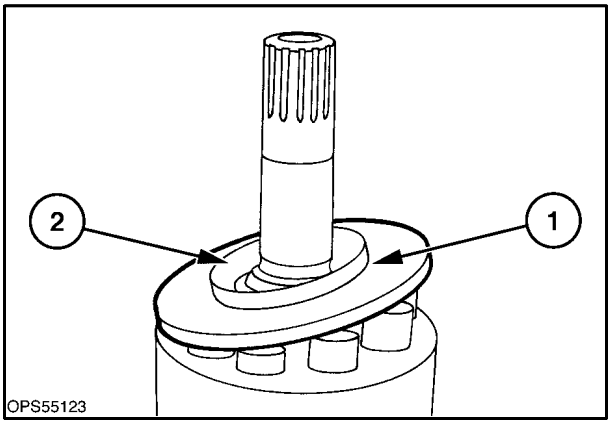

151

5. Lubricate the thrust bearing, 1, and install it over the bearing race at 2.

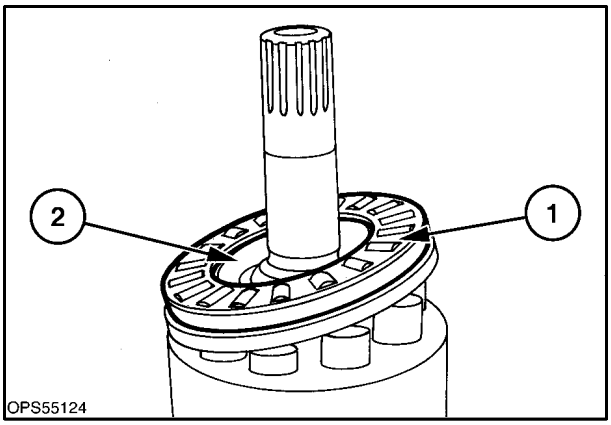

152

6. Insert the outer bearing race into the housing, 1. The bearing race must be inserted squarely into the recess in the housing.

NOTE: *The dull or unfinished side of the bearing race MUST be inserted into the housing first.*

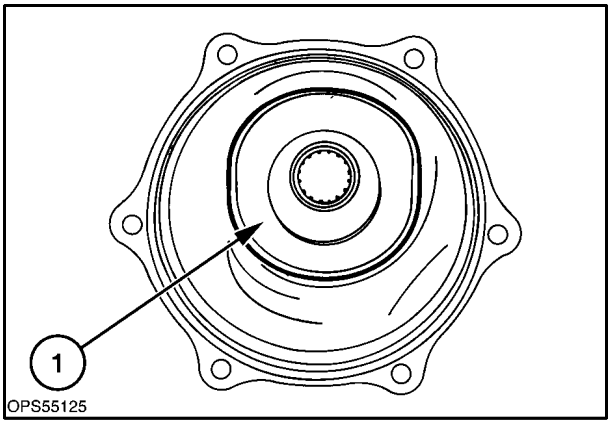

153

https://truckmanualshub.com/

Slide the housing down over the complete shaft assembly. Be sure the shaft extends through the housing approximately 38 mm (1-1/2″). If the shaft does not protrude through the housing the distance shown, the spacer and/or pivot is installed incorrectly.

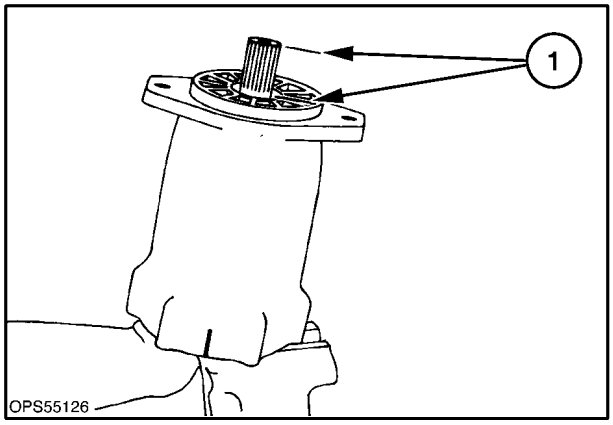

154

7. Turn over the housing and clamp it in a vise on the flanged end of the housing.

   Inspect the piston block and the retaining ring to be sure they are seated properly in the taper of the block at 1.

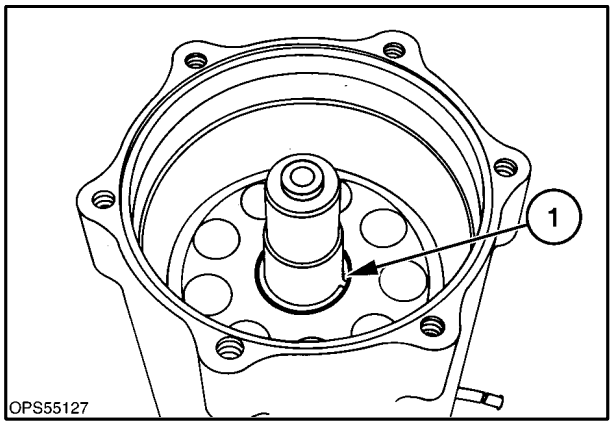

155

Motor Shimming Procedure

1. Place a spring collar over the shaft and snap ring at 1. Place the gauge block, 2, marked XDB-1756 or 74600-624 over the shaft and next to the collar previously installed.

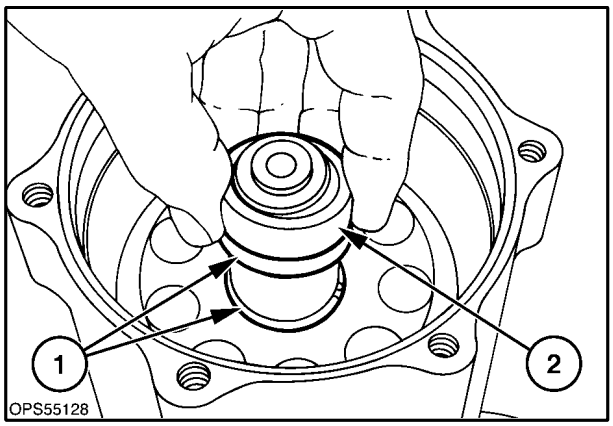

156

https://truckmanualshub.com/

Install spring, 1, over the shaft. Lubricate pivot, 2, with STP, and make sure it slides easily over the shoulder on the shaft, 3. Install pilot, 4, over the pivot assembly.

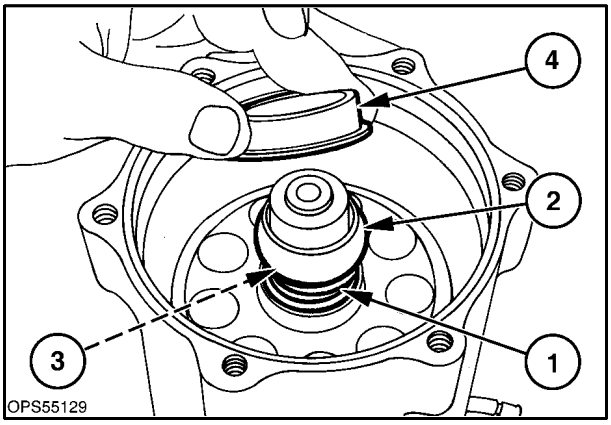

157

2. Lubricate the pistons with SAE SH/CG4 10W-30 oil and install the pistons and spider assembly, 1, making sure the spider plate is properly positioned over the pivot support, 2.

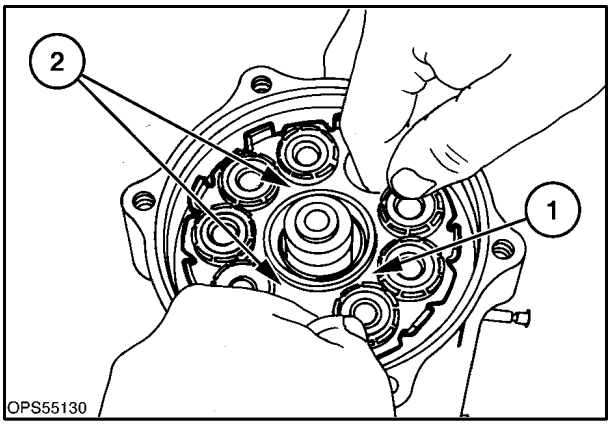

158

3. Lubricate both sides of the connector plate and install it as shown with the flat side next to the pistons and the raised side up.

NOTE: *Be sure the connector plate sits inside the locators on the spider at 1.*

4. Set the connector plate and spider, 2, at the angle to match the fixed angle of the back plate. Center the connector plate, spider, and pivot around the shaft at 3.

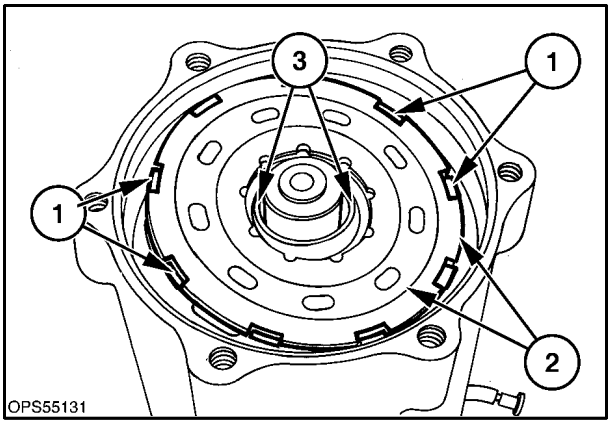

159

https://truckmanualshub.com/

5. Lubricate the small thrust bearing and races with a thin coating of STP and stack race, 2; bearing, 3; race, 4; and thin shim washer, 5, on the end of the shaft at 1.

NOTE: *Reinstall the thin shim washer at 5, if one was previously removed.*

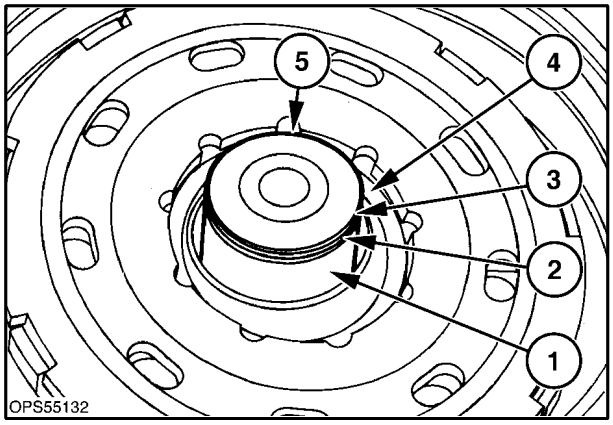

160

6. Install the back plate assembly and pull down evenly with two hands until the pivot is felt to move over the shoulder of the shaft. This will enable the back plate to move within approximately 3 mm (1/8″) of the housing assembly at 1. If there is more than 3 mm (1/8″) clearance, remove the back plate and check the assembly.

IMPORTANT: *DO NOT force; damage to the pivot, pilot, or spider plate may occur.*

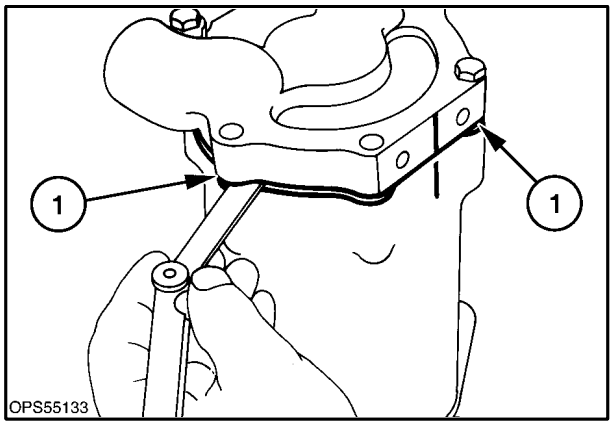

161

7. While holding the back plate assembly against the spring load, install two bolts opposite each other as shown at 1. Torque these two cap screws evenly to 3.5 N·m (20 in. lbs.).

NOTE: *The 3.5 N·m (20 in. lb.) torque must be accurately gauged for the correct shim pack to be installed.*

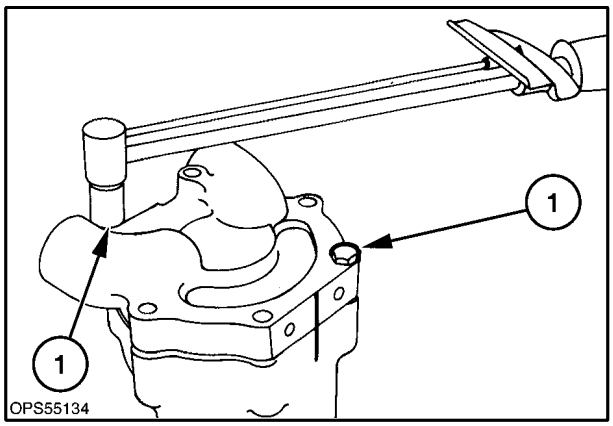

162

https://truckmanualshub.com/

8. With a feeler gauge, measure the gap between the two opposite pads, 1. If either gap is over 5 mm (0.200″), the motor has been incorrectly assembled and must be disassembled before further shimming.
9. Shim pack calculation:

   Add the two feeler gauge figures obtained in step 8.

Example:	0.155″	3.94 mm
	+ 0.145″	+ 3.68 mm
	0.300″	7.62 mm

   Divide the total by 2.

   Example: $\frac{0.300''}{2} = 0.150''$

   $\frac{7.62 \text{ mm}}{2} = 3.8 \text{ mm}$

   A constant of 7.14 mm (0.281″) is used to complete the calculation. Subtract the total from 7.14 mm (0.281″) to determine the correct shim pack.

Example:	0.281″	7.14 mm
	- 0.150″	- 3.81 mm
	0.131″	3.33 mm

   The shim kit includes two 1.91 mm (0.075″) shims and four 0.38 mm (0.015″) shims. Use a combination of these shims to obtain the shim pack calculated.

NOTE: *Shim pack specifications are ± 0.25 mm (± 0.010″). When possible, shim to the +0.25 mm (+0.010″) side of the shim pack calculated.*

Example: To obtain the 3.3 mm (0.131″) dimension calculated in the example, use one 1.91 mm (0.075″) shim and four 0.38 mm (0.015″) shims.

0.075″	1.91 mm
0.015″	0.38 mm
0.015″	0.38 mm
0.015″	0.38 mm
0.015″	0.38 mm
0.135″	3.43 mm

https://truckmanualshub.com/

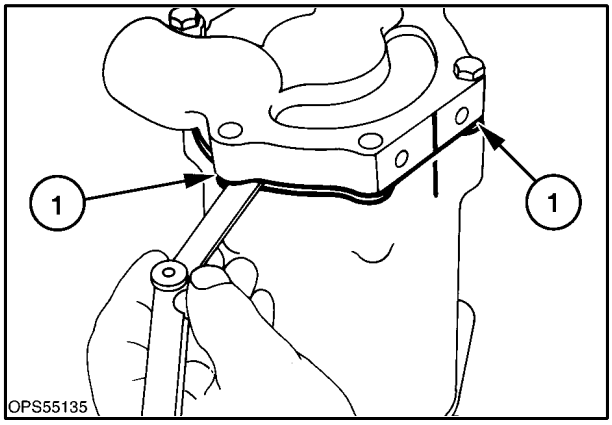

163

https://truckmanualshub.com/

10. Disassemble and replace the shim gauge block, 1, with the required number of shims from the seal kit. When two 1.91 mm (0.075″) shims are used, the 0.38 mm (0.015″) shims must be placed between them. When only one 1.91 mm (0.075″) shim is used, place the 1.91 mm (0.075″) shim against the spring, as shown.
11. Complete reassembly of the motor by checking the snap ring and piston block are properly seated at 2. Install the collar, 3, over the snap ring. Install shims at 1, spring, 4.

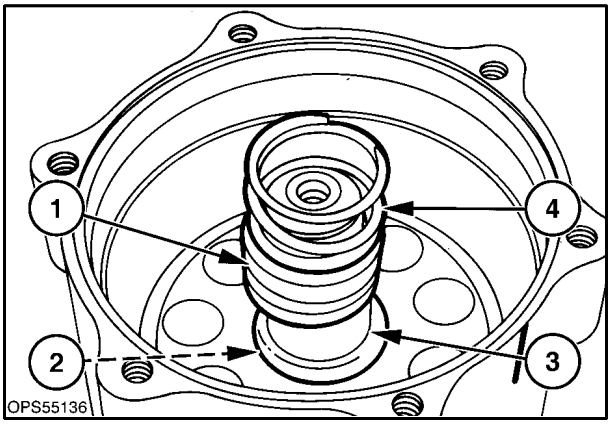

164

12. Install the pivot, 1, and the pilot, 2.

IMPORTANT: *Lubrication of the motor components during assembly is required to insure lubrication oil for start-up.*

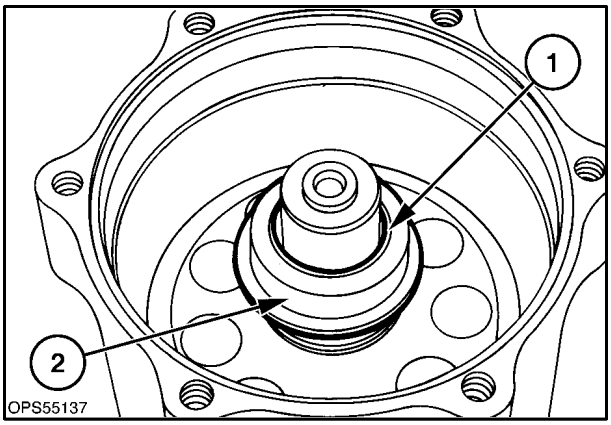

165

13. Install the spider and piston assembly as shown, making sure the spider is seated over the pivot as shown at 1. Lubricate the piston slippers with a thin coating of STP for a good sliding surface.

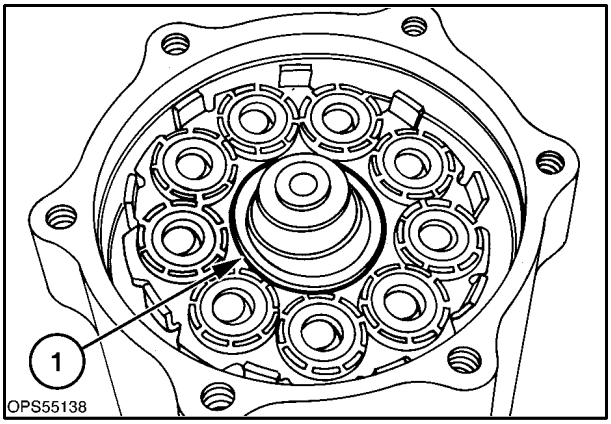

166

https://truckmanualshub.com/

14. Install the connector plate, 1, and lubricate both sides with a thin coating of STP. Install it as shown with the flat side next to the pistons and the raised side up. Check the connector plate and make sure it is seated over the locating tabs, 2, on the spider plate.
15. Set the connector plate and spider, 1, at the angle to match the fixed angle of the back plate. Center the connector plate, spider, and pivot around the shaft at 3.

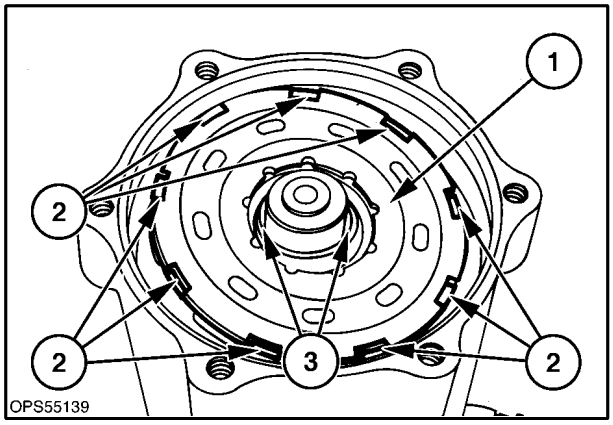

167

16. Lubricate the small thrust bearings and races with a thin coating of STP and stack race, 2; bearing, 3; race, 4; and thin shim washer, 5, on the end of the shaft, 1.

NOTE: *Reinstall the thin shim washer at 5 if one was previously removed.*

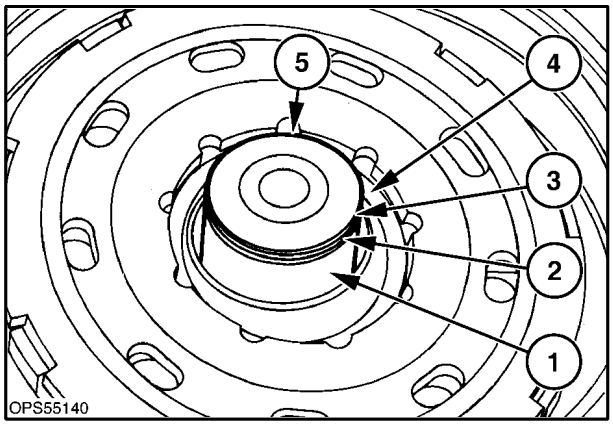

168

17. Install the back plate assembly with a new O ring. Tighten the six bolts, 1, down evenly using opposite bolts and torque to 23 N·m (17 ft. lbs.). Use caution not to disturb the thrust bearing. Align the marks on the back plate and housing to ensure correct assembly.

NOTE: *Push the back plate by hand to make sure the pivot seats over the shoulder on the shaft properly; DO NOT force.*

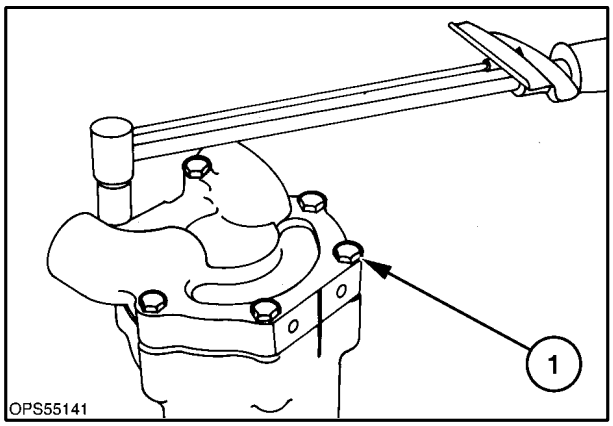

169

https://truckmanualshub.com/

18. Install a bolt in the drive end of the motor shaft and use an inch pound torque wrench to check the rolling torque of the motor shaft. If the rolling torque exceeds 6.8 N·m (5 ft. lbs.) or 10.5 N·m (60 in. lbs.), the motor is too tight; the assembly and shimming procedure must be rechecked and recalculated.

NOTE: *Check the spider, connector plate, and pivot for proper assembly if the motor is too tight.*

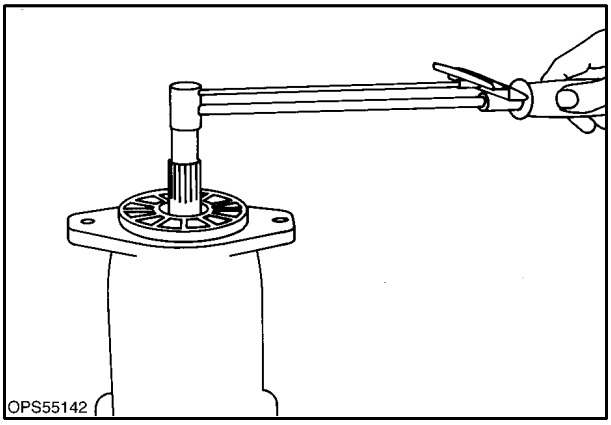

170

19. Install a new seal, 1, and snap ring, 2, in the housing at 3. Fill the motor housing with SH/CG410W-30 oil to the case drain level to ensure lubrication oil on start-up.

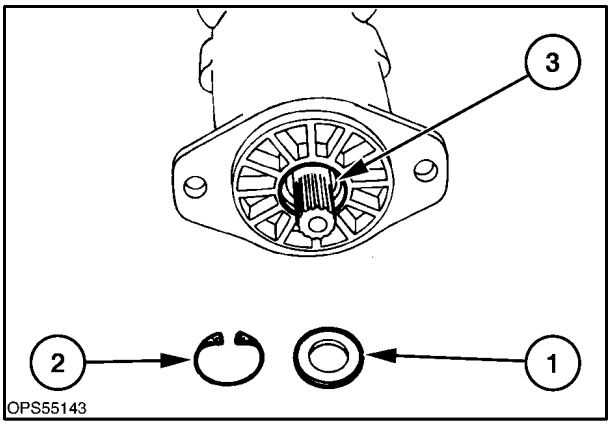

171

20. Using a dial indicator, check the end movement of the motor shaft, 1. If the end movement is over 1.02 mm (0.040″), add a shim washer on the end of the shaft at 5, Figure 168, between the back plate and thrust bearing race.

    The motor assembly is now ready for installation in the loader.

    Refer to the “Hydraulic System Cleaning Procedure After Transmission Overhaul” section of this manual before installing the motor assembly in the loader.

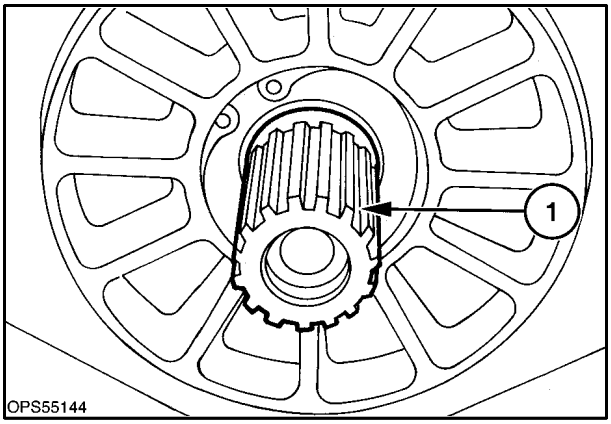

172

https://truckmanualshub.com/

RENSTALLATION

1. Clean all previously sealed surfaces, motor to gearbox, final drive cover, brake disk retaining bolt and washer.

   When resealing, use a noncorrosive silicone sealer to prevent rust and corrosion of parts after assembled.

2. Place a bead of New Holland Ultra-Blue silicone sealer around the face of the motor housing.
3. Align the motor assembly tapered splines with the coupler splines in the gearbox and slide the motor shaft into the coupler. Install two 1/2″ x 1-1/2″ cap screws and washers, torque to 101 N·m (75 ft. lbs.).

IMPORTANT: *The motor shaft and coupler splines are tapered. Use caution to insure that the splines mate properly during assembly. DO NOT FORCE or damage could occur to the motor housing.*

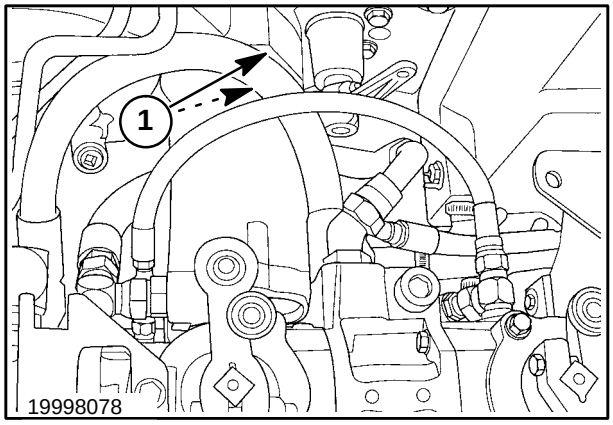

173

4. Reinstall the motor fittings if removed.
5. Reinstall the brake disc, 1, and caliper, 2.
6. Put a bead of silicone sealer around the end of the coupler and install the retaining bolt and washer, 3. Engage the parking brake and check the retaining bolt, torque to 44 N·m (33 ft. lbs.).
7. Reinstall the drive chain on the drive sprocket if removed.

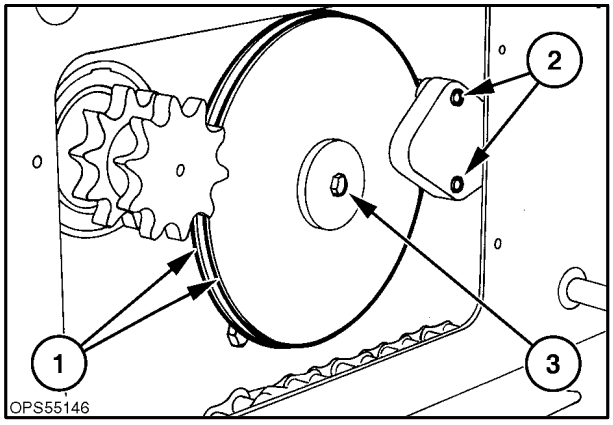

174

8. Slide the axle assembly to the rear and tighten the drive chain, and torque the axle retaining hardware, 1, to 190 N·m (140 ft. lbs.).
9. Reseal the final drive cover plate, 2, and install.
10. Check the final drive oil level with check plugs, 3, and add SAE 10W-30 oil as required.

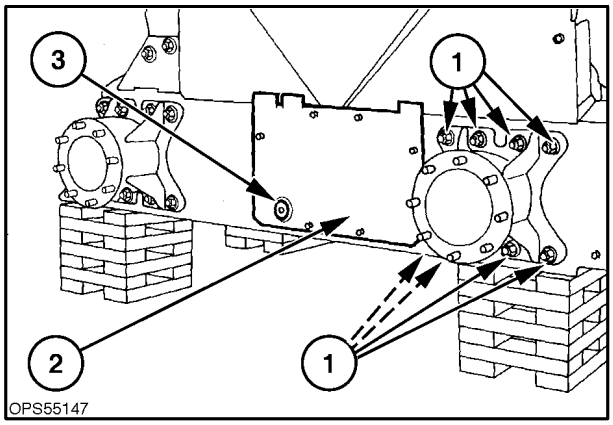

175

https://truckmanualshub.com/

11. Right Motor – Reinstall the motor high-pressure hoses and case drain line. The hoses connect the pump and motor parts top-to-top and bottom-to-bottom. The top motor hose, 1, from the top pump port, 2, routes under the motor. The bottom motor hose, 3, routes over the motor. The case drain line, 4, routes over the motor. Tighten the connections to seat the fittings, then loosen and retorque.

NOTE: *Make sure that the hoses are connected to the correct ports. If the hoses are reversed at the pump or motor, the wheels will turn opposite the control handle direction.*

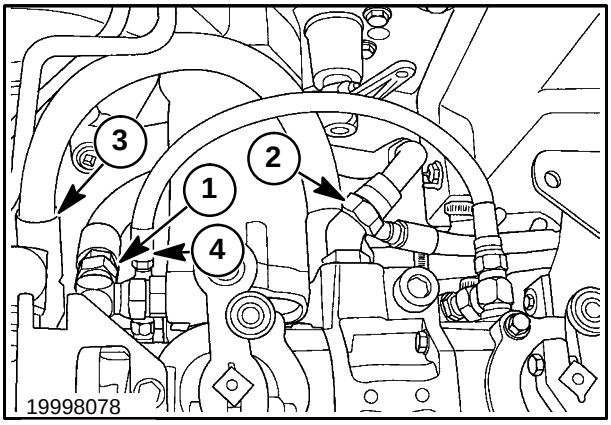

176

12. Left Motor – Reinstall the motor high-pressure hoses and case drain line. Both hoses are completely on top of the motor. The hose from the top pump port, 1, goes to the top motor port, 2. The hose from the bottom pump port, 3, goes to the bottom motor port, 4. Tighten the connections to seat the fittings, then loosen and retorque.

NOTE: *Make sure that the hoses are connected to the correct ports. If the hoses are reversed at the pump or motor, the wheels will turn opposite the control handle direction.*

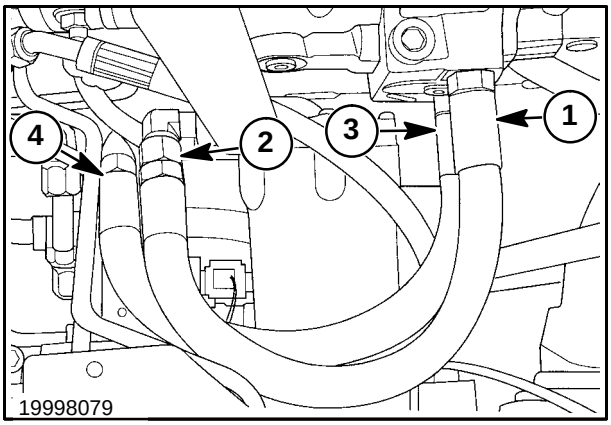

177

13. Reinstall the hydrostatic control lever that was removed. Reconnect all control linkage. Refer to the operator's manual for neutral adjustment procedures.
14. Refer to the "Start-Up Procedure After Rebuild" section of this manual for the start-up procedure.
15. Put the Service/Run switch in the "SERVICE" position.
16. Operate the unit and check for oil leaks and repair.

CAUTION

Securely support the skid steer with all four wheels off the ground, or movement of the loader may cause serious injury or damage to the equipment.

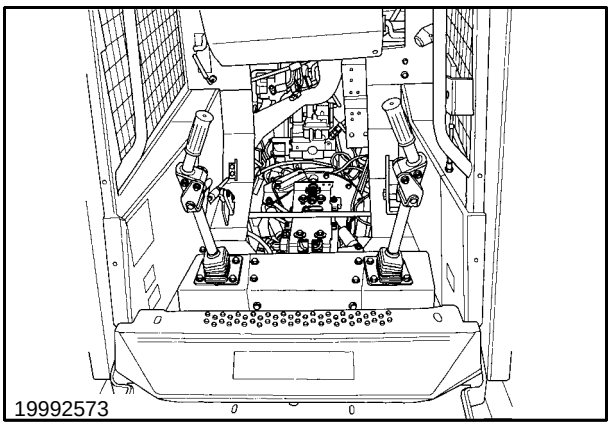

178

https://truckmanualshub.com/

17. Return the cab and boom to the operating position if the cab was tilted.
18. Install the step shield and fender.
19. Check and refill the hydraulic system to the proper oil level.

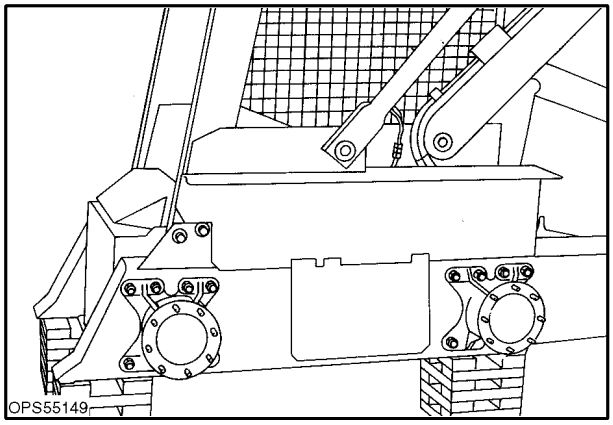

179

Hydraulic System Cleaning Procedure After a Hydraulic System or Transmission Overhaul

The hydraulic/hydrostatic system must be cleaned if during repair the cause was from contamination and the transmissions show wear on the pistons and shoes, rotating piston blocks, valve plate or cam plate.

IMPORTANT: *Do not use the gear pump and charge pump to flush the system with solvent. The solvent will not provide enough lubrication to protect moving parts inside the transmissions or gear pump.*

1. Drain all remaining oil from the hydraulic system.
2. Remove fill cap, 1, and screen by removing the six retaining screws, 2, from the reservoir fill. Thoroughly clean the screen and fill breather cap in solvent.

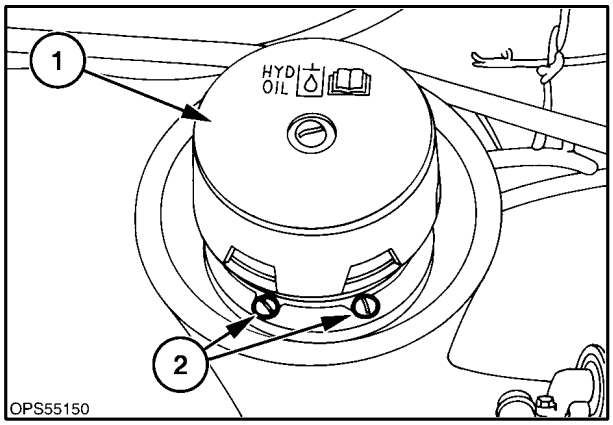

180

3. Drain and flush the hydraulic oil reservoir.

   Remove the rear engine belly pan, hardware, 1, and belly pan.

CAUTION

Use a floor jack to support the belly pan to prevent serious injury.

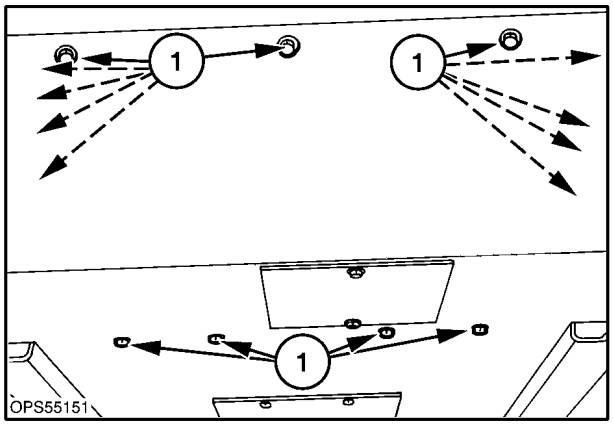

181

https://truckmanualshub.com/

Loosen the return line clamp, 1.

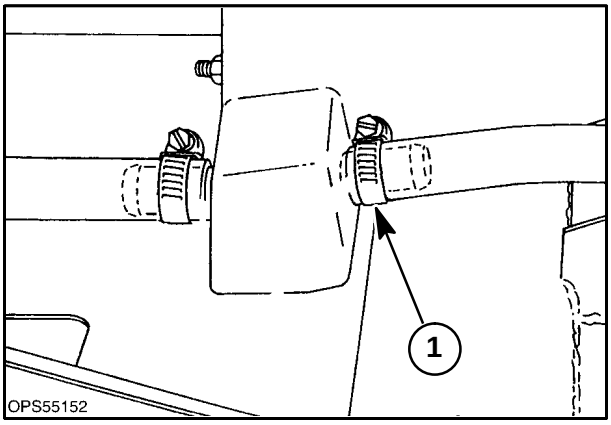

182

Remove the return line at 1, and rotate the line into a suitable drain pan. Thoroughly flush the reservoir with a suitable clean solvent or clean 10W-30 oil.

4. Remove the charge check valve, 2, and thoroughly flush the oil cooler with solvent by forcing the solvent through the cooler.

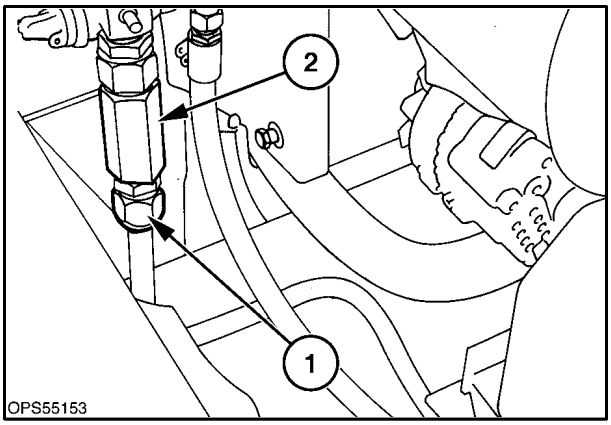

183

5. Disassemble the check valve by removing the snap ring, 1; washer, 2; spring, 3; and plunger, 4. Clean the check valve parts thoroughly.

NOTE: *The spring in the check valve will be slightly compressed, use caution when removing the snap ring.*

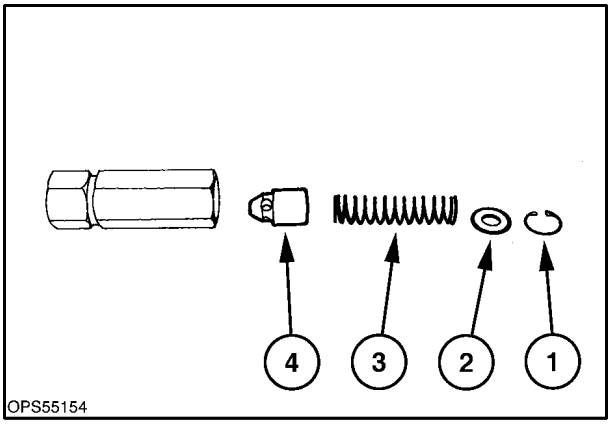

184

https://truckmanualshub.com/

6. Remove the filter and base, clean the base, and check the bypass valve, 1, for operation.
7. Clean and flush all hydraulic lines. If the failure was hydrostatic, be sure to flush and clean the high-pressure hoses from the pumps to the motors.

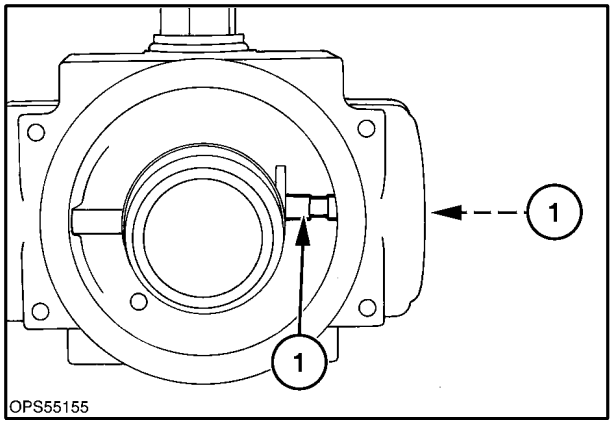

185

8. After the system is cleaned, thoroughly flush the solvent used to clean the system with fresh clean SAE SH/CG4 10W-30 oil.
9. Reconnect all lines removed for cleaning.
10. Install a new oil filter, 1.
11. Before start-up, fill the hydraulic system, pumps, motors, etc., as full as the case drain lines permit with system oil, SAE SH/CG4 10W-30 oil.
12. Fill the hydraulic reservoir with SAE 10W-30 oil.

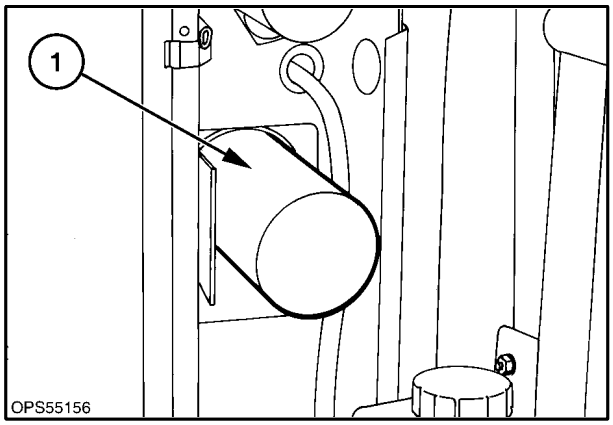

186

Start-up Procedure After Rebuild (Pump or Motor Replacement)

1. Fill the reservoir with SAE SH/CG4 10W-30 oil to the proper level.
2. Install a 21 bar (300 PSI) gauge in charge pressure test port, 1.

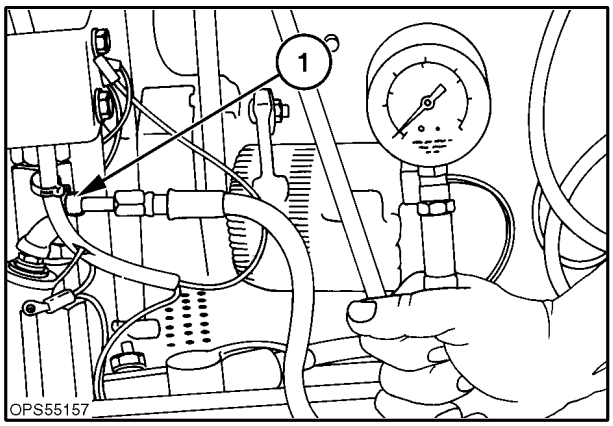

187

https://truckmanualshub.com/

3. Remove the fuel solenoid power wire, 1, to prevent the engine from starting.

CAUTION

Never crank the starter for more than 30 seconds or damage to the starter may occur. Crank the starter for 30 seconds and cool 1 minute.

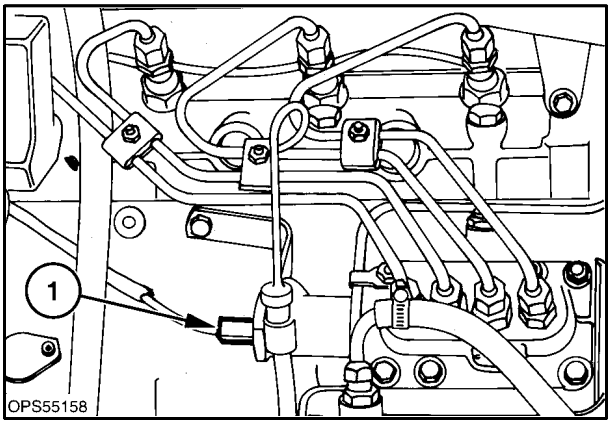

188

4. Put the Service/Run switch, 1, in the “SERVICE” position.
5. Put the steering levers in the neutral position.
6. Turn the ignition key to the start position and allow the engine to crank for 30 seconds at a time until the pressure gauge starts to move. If after trying three times and the gauge does not move, loosen the gear pump pressure line at the control valve to bleed the air from the hydraulic system.

   Re-crank the engine until the gauge moves. After the gauge moves, stop cranking and reconnect the fuel solenoid.

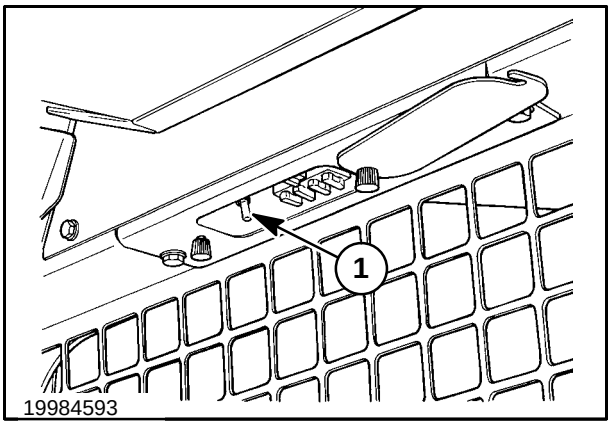

189

7. Start the engine and monitor the charge pressure gauge to ensure charge oil for the hydrostatic system; the pressure reading should be 6.8 - 8.2 bar (100 - 120 PSI).

IMPORTANT: *If charge pressure remains below 3.4 bar (50 PSI) for more than 10 seconds, stop the engine and locate the cause. If the unit is operated with low or no charge pressure, severe damage will occur to the hydrostatic system.*

   Do not stroke the hydrostatic controls or operate the boom and bucket control at this time.

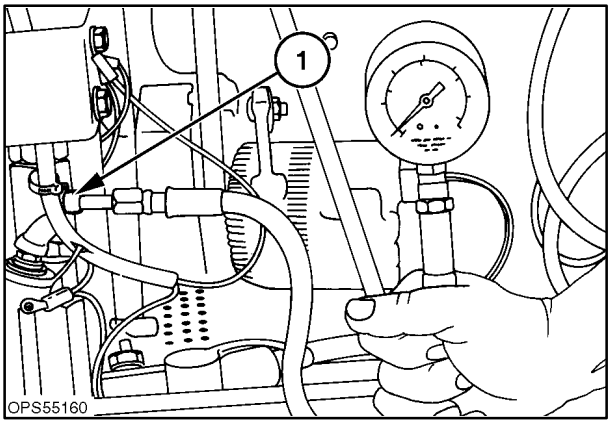

190

8. Allow the engine to operate at 1500 RPM for about 30 minutes. Stop the engine; check the oil level and fill as required.
9. Start the engine and operate at 1500 RPM and slowly operate the hydrostatic system to remove air, monitor the charge pressure. Operate the boom and bucket for a few cycles to remove the air from the hydraulic system.
10. Stop the engine; recheck the hydraulic system oil level and add as required.
11. Remove the charge pressure test gauge.

https://truckmanualshub.com/

12. Adjust the neutral system if required; refer to the operator's manual for procedures.
13. Run the engine at 1500 RPM for an additional 30 minutes to filter the oil. Stop the engine and change the oil filter.
14. Check for oil leaks and repair as required.
15. Reinstall all shields removed for repair.
16. Lower the skid steer to the ground and operate.

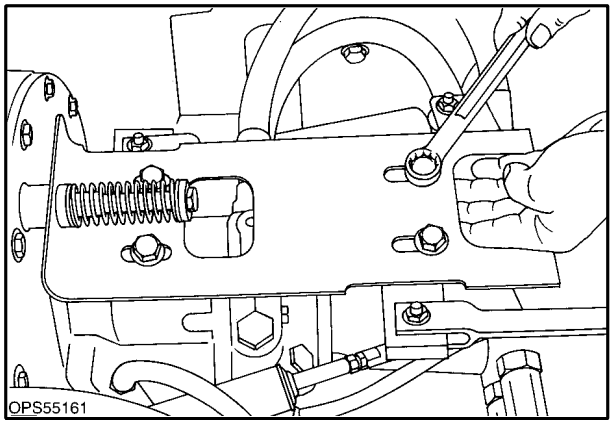

191

HYDRAULIC SYSTEM CLEANING PROCEDURE

After A Hydraulic System Or Transmission Overhaul

The hydraulic/hydrostatic system must be cleaned if during repair the cause was from contamination and the transmissions show wear on the pistons and shoes, rotating piston blocks, valve plate or cam plate.

IMPORTANT: *Do not use the gear pump and charge pump to flush the system with solvent. The solvent will not provide enough lubrication to protect moving parts inside the transmissions or gear pump.*

1. Drain all remaining oil from the hydraulic system.
2. Remove fill cap, 1, and screen by removing the six retaining screws, 2, from the reservoir fill. Thoroughly clean the screen and fill breather cap in solvent.

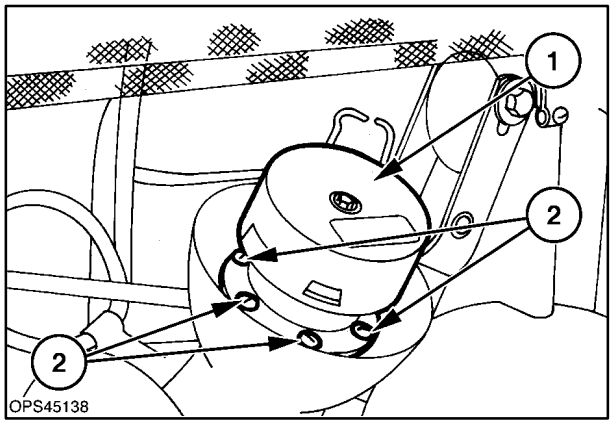

192

3. Drain and flush the hydraulic oil reservoir.
   a. Remove the rear engine belly pan hardware, 1, and remove the belly pan.

CAUTION

Use a floor jack to support the belly pan to prevent serious injury.

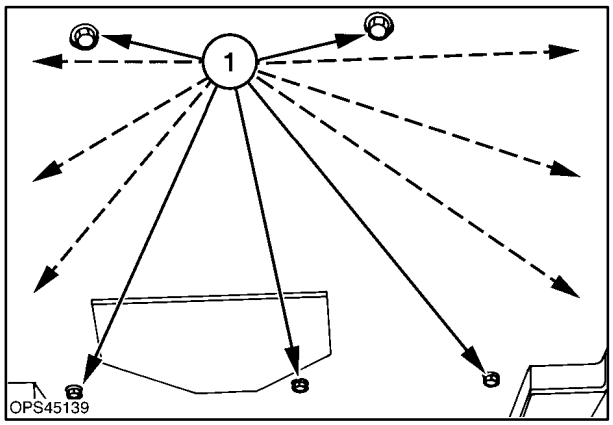

193

https://truckmanualshub.com/

b. Loosen the return line clamp, 1.

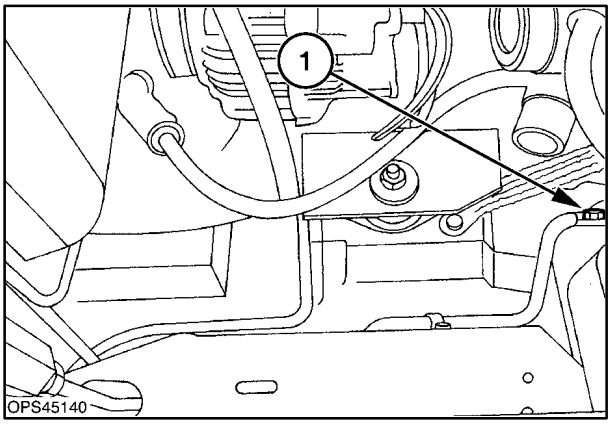

194

c. Remove the return line at 1, and rotate the line into a suitable drain pan. Thoroughly flush the reservoir with a suitable clean solvent or clean 10W-30 oil.

4. Remove the charge check valve, 2.

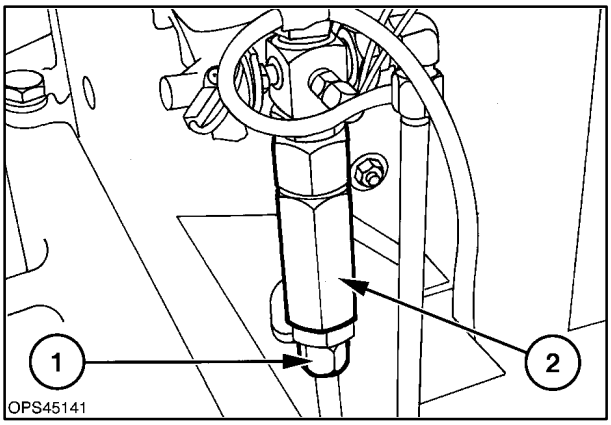

195

5. Disassemble the check valve by removing the snap ring, 1; washer, 2; spring, 3; and plunger, 4. Clean the check valve parts thoroughly.

NOTE: NOTE: *The spring in the check valve will be slightly compressed, use caution when removing the snap ring.*

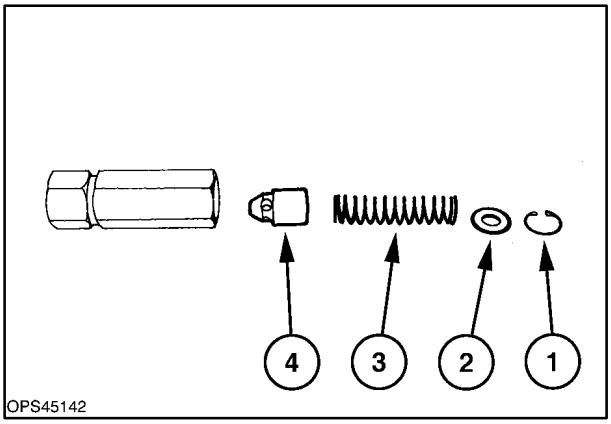

196

https://truckmanualshub.com/

6. Remove the filter and base, clean the base, and check the bypass valve, 1, for operation.

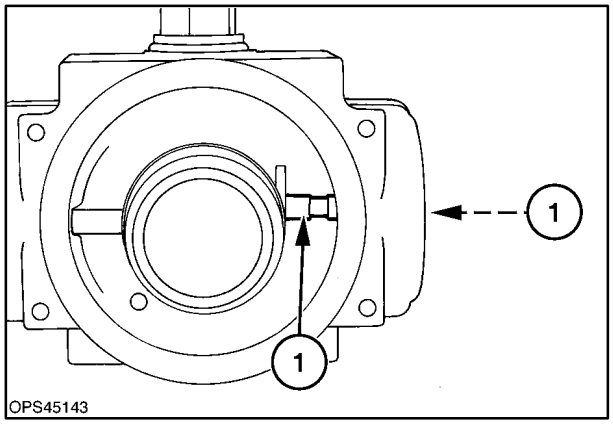

197

7. Remove tube, 1, between the top of the oil cooler and the inlet to the hydraulic filter base. Also disconnect the tube at the inlet to the oil cooler. Thoroughly flush the oil cooler with solvent by forcing the solvent through the cooler.
8. Clean and flush all hydraulic lines. If the failure was hydrostatic, be sure to flush and clean the high pressure hoses from the pumps to the motors.

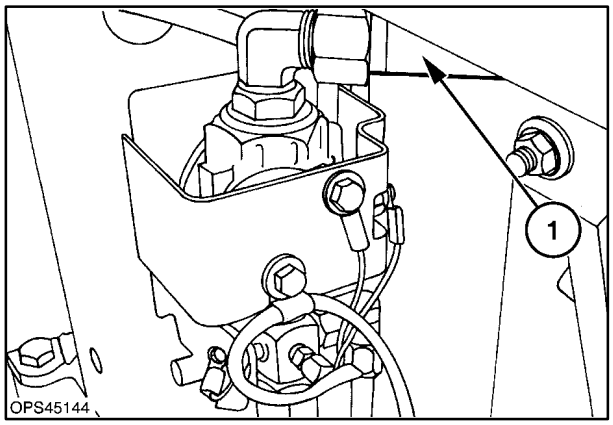

198

9. After the system is cleaned, thoroughly flush the solvent used to clean the system with fresh clean SAE 10W-30 oil.
10. Reconnect all lines removed for cleaning.
11. Install a new oil filter, 1.
12. Before start-up, fill the hydraulic system, pumps, motors, etc., as full as the case drain lines permit with system oil, SAE 10W-30 oil.
13. Fill the hydraulic reservoir with SAE 10W-30 oil.

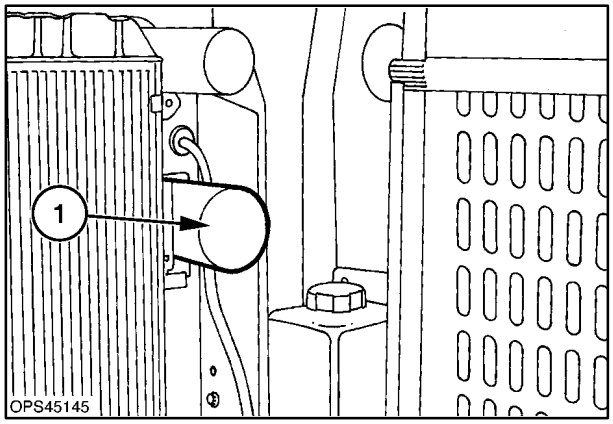

199

https://truckmanualshub.com/

START-UP PROCEDURE AFTER REBUILD (AFTER PUMP OR MOTOR REPLACEMENT)

1. Fill the reservoir with SAE 10W-30 oil to the proper level.
2. Install a 21 bar (300 PSI) gauge in charge pressure test port, 1.

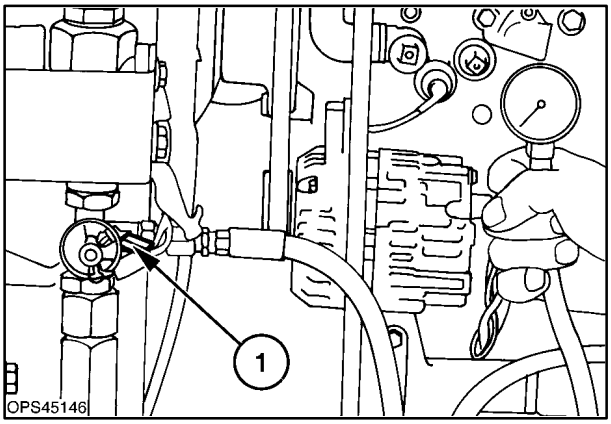

200

3. Remove the fuel solenoid power wire, 1, to prevent the engine from starting.

CAUTION

Do not crank the starter for more than 30 seconds or damage to the starter may occur. Crank the starter for 30 seconds and cool 1 minute.

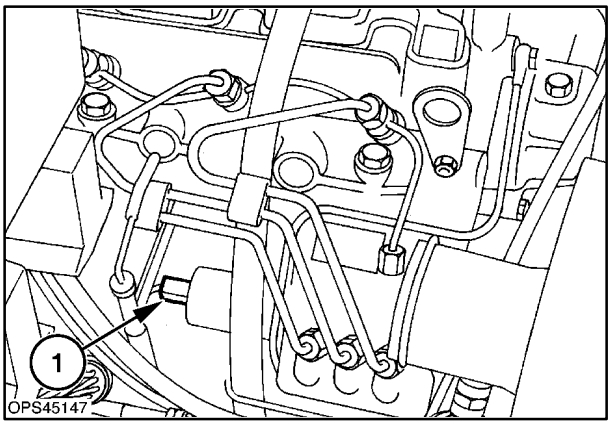

201

4. Put the Service/Run switch, 1, in the “SERVICE” position.
5. Put the steering levers in the neutral position.
6. Turn the ignition key, 2, to the start position and allow the engine to crank for 30 seconds at a time until the pressure gauge starts to move. If after trying three times and the gauge does not move, loosen the gear pump pressure line at the control valve to bleed the air from the hydraulic system.

   Re-crank the engine until the gauge moves. After the gauge moves, stop cranking and reconnect the fuel solenoid.

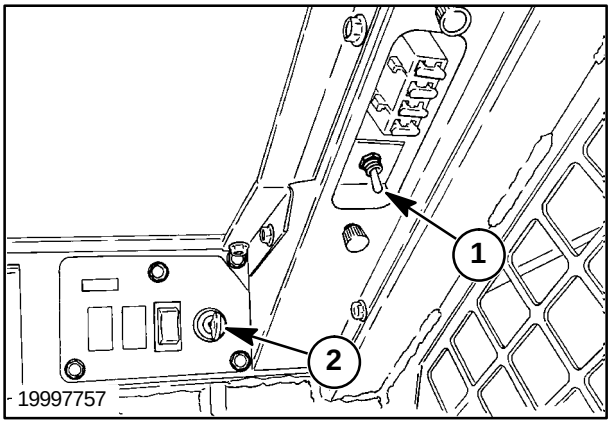

202

https://truckmanualshub.com/

7. Start the engine and monitor the charge pressure gauge to ensure charge oil for the hydrostatic system; the pressure reading should be 6.8 - 8.2 bar (100 - 120 PSI).

IMPORTANT: *If charge pressure remains below 3.4 bar (50 PSI) for more than 10 seconds, stop the engine and locate the cause. If the unit is operated with low or no charge pressure, severe damage will occur to the hydrostatic system.*

Do not stroke the hydrostatic controls or operate the boom and bucket control at this time.

8. Allow the engine to operate at 1500 RPM for about 30 minutes. Stop the engine; check the oil level and fill as required.
9. Start the engine and operate at 1500 RPM and slowly operate the hydrostatic system to remove air, monitor the charge pressure. Operate the boom and bucket for a few cycles to remove the air from the hydraulic system.
10. Stop the engine; recheck the hydraulic system oil level and add as required.
11. Remove the charge pressure test gauge.
12. Adjust the neutral system if required; refer to the operator's manual for procedures.
13. Run the engine at 1500 RPM for an additional 30 minutes to filter the oil. Stop the engine and change the oil filter.
14. Check for oil leaks and repair as required.
15. Reinstall all shields removed for repair.
16. Lower the skid-steer loader to the ground and operate.

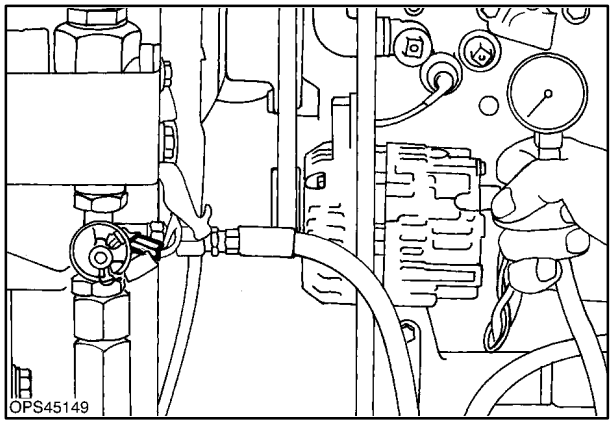

203

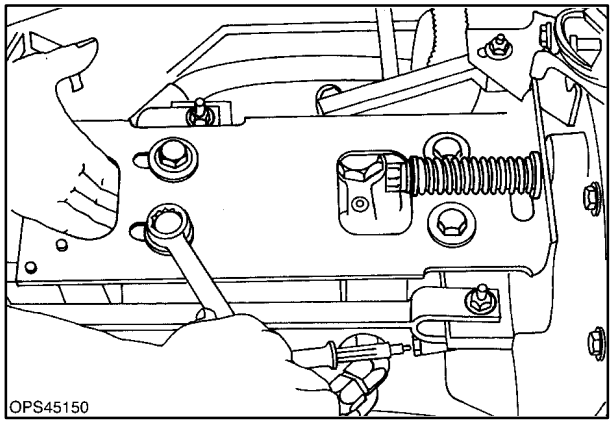

204

https://truckmanualshub.com/

CHARGE CHECK VALVE

Op. 29 100 36

REMOVAL AND REPLACEMENT

1. Lower the boom and bucket to the lowered position, resting on the ground, or remove any attachment and raise the boom and rest on the boom lock pins, 1.

CAUTION

Never work under a raised boom unless it is properly supported by the boom lock pins.

Never work under a raised boom with an attachment. Always remove the attachment from the loader.

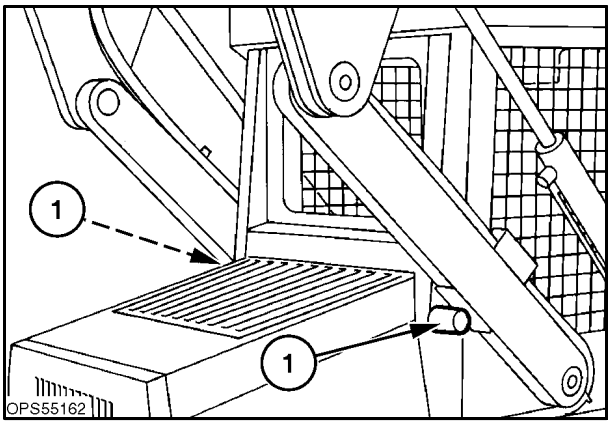

205

2. Stop the engine, turn the ignition key to the run position and operate the boom and bucket control pedals to relieve pressure in the boom and bucket circuits. Turn off the key.
3. Put the Service/Run switch, 1, in the “SERVICE” position.
4. Engage the parking brake.

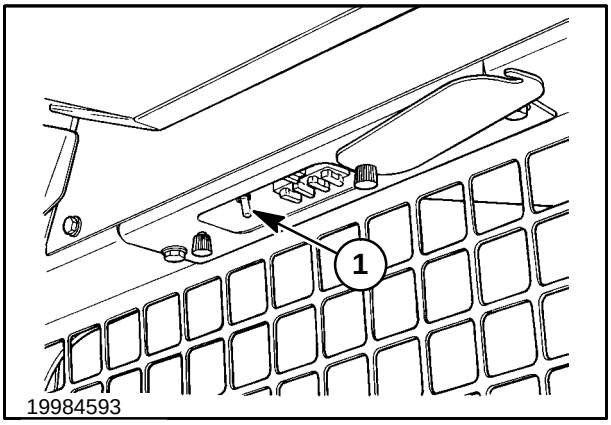

206

5. Securely block the skid steer at 1 and 2 with all four wheels off the ground. Refer to Section 1 for more information on properly supporting a skid steer.

CAUTION

Failure to securely support the skid steer could result in movement of the loader causing serious injury or damage to the equipment.

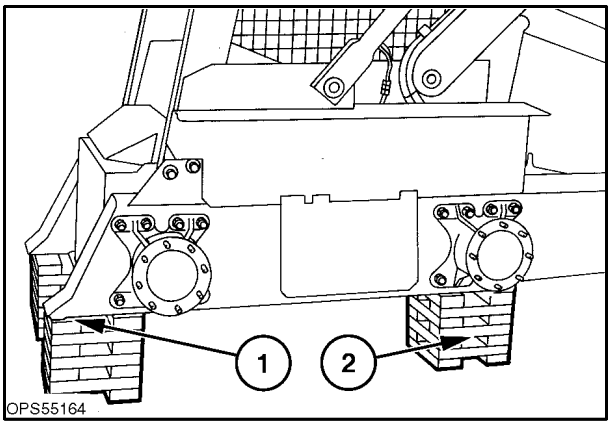

207

https://truckmanualshub.com/

6. Remove the right engine side shield to access the check valve, 1.
7. Remove the return line at 2, and cap to prevent the loss of oil.
8. Remove the check valve from the oil filter base at 3.

   The charge check valve is nonadjustable and not serviceable. If the valve does not operate, it will need to be replaced. The only procedure you can perform on the valve is to clean the valve assembly.

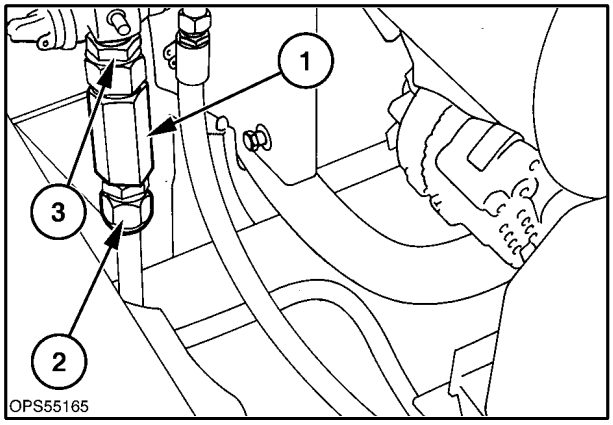

208

9. Remove the snap ring, 1. Disassemble and clean the check valve.
10. The check valve is marked for oil flow for installation.

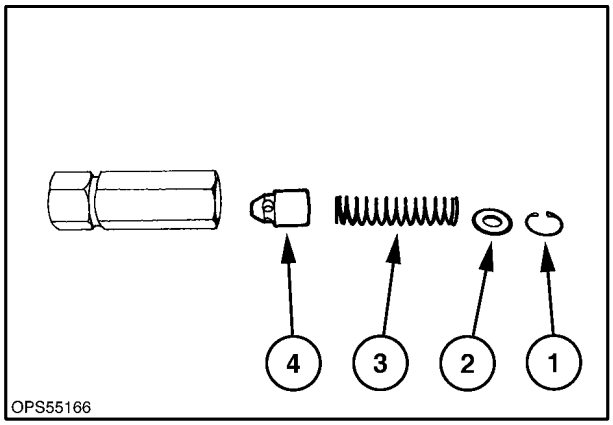

209

Op. 29 100

STEERING SYSTEM

HYDROSTATIC SYSTEM CONTROLS

Before any control linkage adjustments or repairs are made to the skid steer, do the following:

1. Lower the boom and bucket to the lowered position, resting on the ground, or remove any attachment and raise the boom and rest on the boom lock pins, 1.

CAUTION

Never work under a raised boom unless it is properly supported by the boom lock pins.

Never work under a raised boom with an attachment. Always remove the attachment from the loader.

2. Stop the engine, turn the ignition key to the run position and operate the boom and bucket control pedals to relieve pressure in the boom and bucket circuits. Turn off the key.

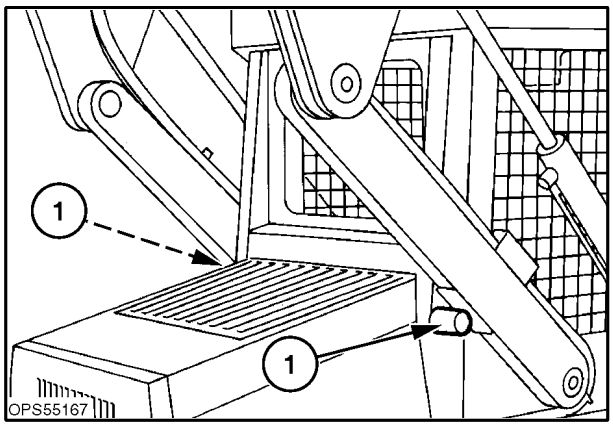

210

https://truckmanualshub.com/

3. Put the Service/Run switch, 1, in the “SERVICE” position.
4. Engage the parking brake.

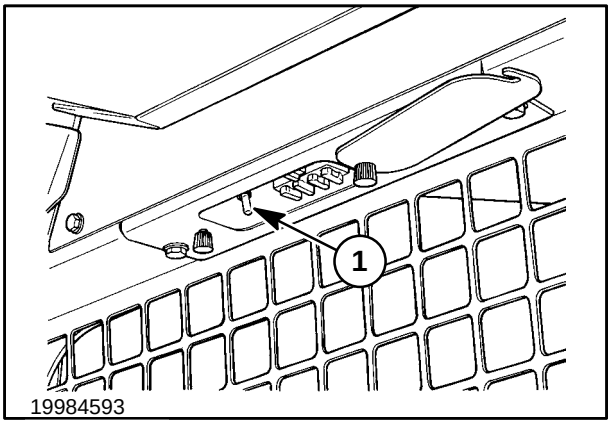

211

5. Securely block the skid steer at 1 and 2 with all four wheels off the ground. Refer to Section 1 for more information on properly supporting a skid steer.

CAUTION

Failure to securely support the skid steer could result in movement of the loader causing serious injury or damage to the equipment.

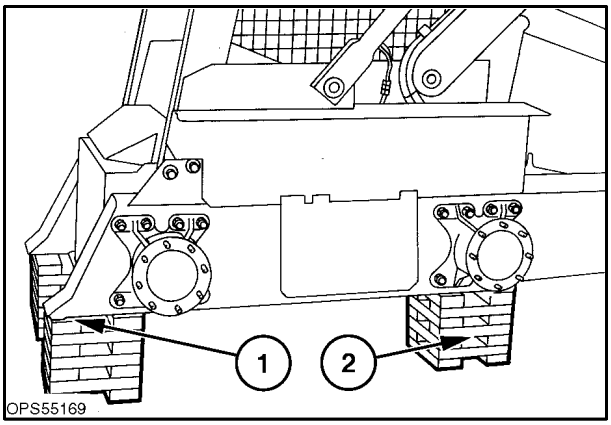

212

6. Raise the operator’s seat and latch in the raised position, 1.

CAUTION

Never work under a raised seat unless it is securely latched in the raised position.

7. Remove the step shield to access the control linkages.

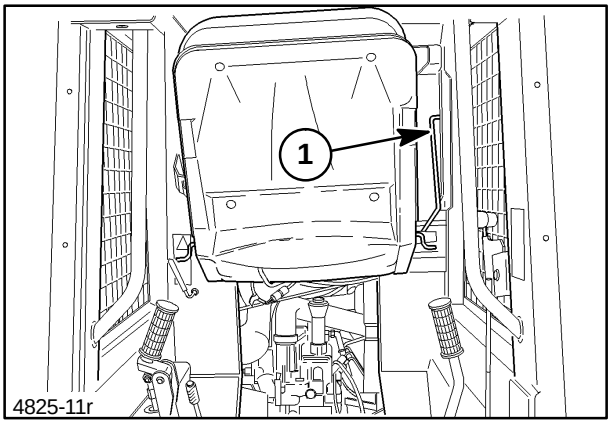

213

https://truckmanualshub.com/

NEUTRALIZER ASSEMBLY

Op. 29 130 10

Neutralizer Removal

1. Remove the two retaining nuts, 1, securing the pins to the front of the neutralizer plate.
2. Remove the centering spring, 2, from the engine bellhousing. When removing the retaining bolt, 3, the spring will be under slight pressure. Lift the plate from the unit.

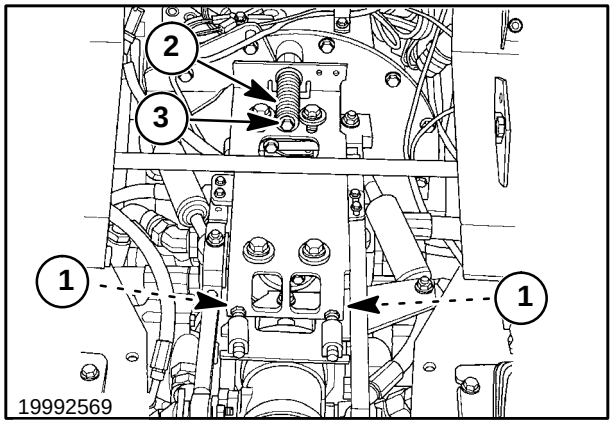

214

Neutralizer Parts Inspection

1. Inspect the plastic guides, 1, for breaks or wear. If worn or damaged, replace.
2. Inspect the guide pins, 2, for excessive wear. If worn, replace.
3. Inspect the cam blocks, 3, for wear in the area the cam arm bearings contact. If worn, rotate the blocks to the unused side.
4. Inspect the neutralizer plate for wear in the centering bolt area, 4. If worn, replace the plate.
5. Inspect the spring, 5, for proper free length: 114.3 ±2.4 mm (4.5″ ±3/32″). If not within specification, replace the spring.
6. Inspect the spring guides, 6, and the bolt, 7, in the guide area; if worn, replace.

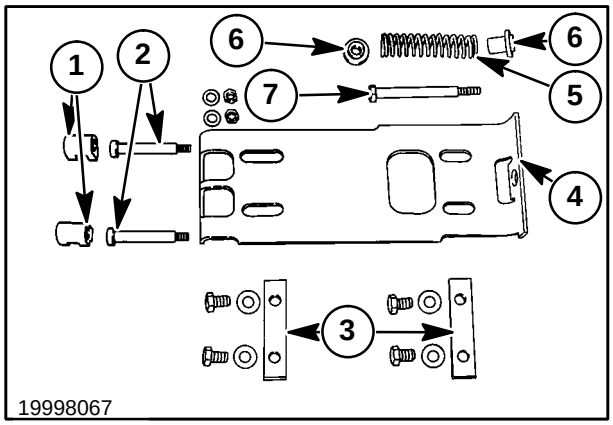

215

Op. 29 130 30

Control Linkage Removal

1. Remove the two pin retaining nuts, 1, securing the pins, 2, to the front of the neutralizer plate.
2. Remove the centering spring retaining bolt, 3, and spring from the engine bellhousing. When removing the retaining bolt the spring will be under slight pressure. Lift the plate from the unit.
3. Remove the control link hardware, 4, at the control handles.
4. Note the number and position of the spacers and washers for the dampener mounting hardware at 5 and 6. Remove the link and dampener hardware, 5, at the pintle arms. Remove the dampener hardware, 6, at the support brackets.

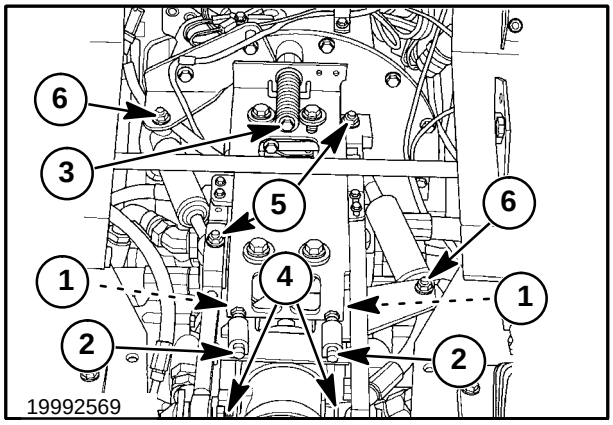

216

https://truckmanualshub.com/

5. Remove the cam arm securing hardware, 1, and remove the arms.

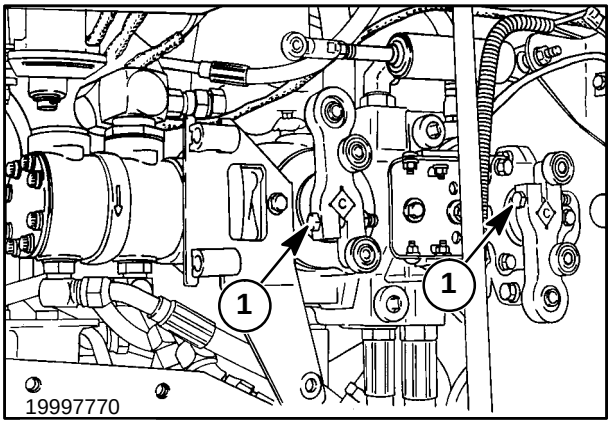

217

Control Linkage Parts Inspection

1. Inspect the bushings, 1, in the control links; replace if worn, loose, or damaged.
2. Inspect the dampeners, 2, for unequal pressures, leaks, or binding shafts. If damaged, replace.

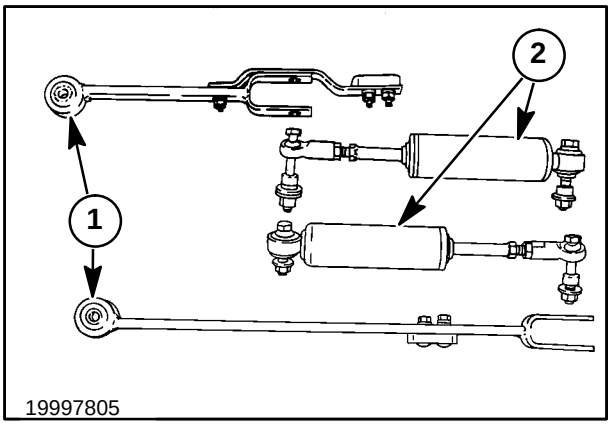

218

3. Inspect the rubber bushings, 1, in the cam arms; if loose or worn, replace. Inspect the arms in the clamping area, 2, for damage. Check that the bearings, 3, are not damaged and can move freely.

NOTE: *Bearings are a press fit and replaceable separately; however, cam arms come from parts with bearings already installed. To replace bearings, use a puller to remove the old bearing.*

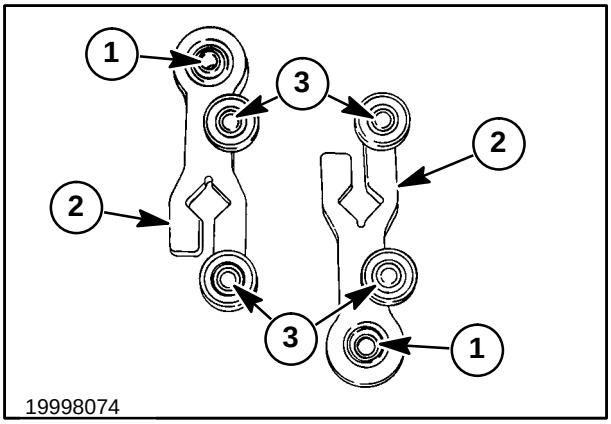

219

https://truckmanualshub.com/

4. Inspect the blocks, 1, that the bearings ride on. If worn, turn the blocks around for a new surface.

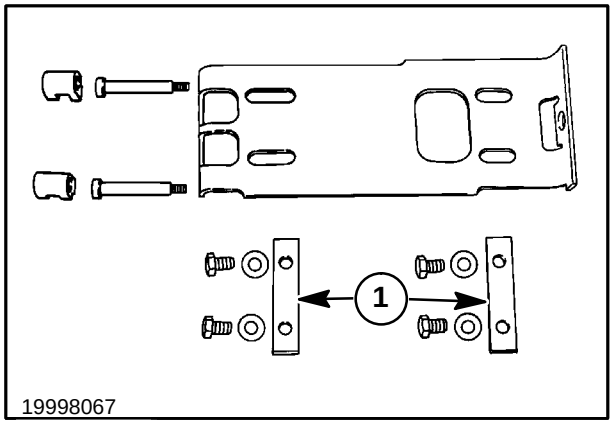

220

Op. 29 130 06

Control Linkage and Neutralizer Reassembly and Adjustment

1. Install a new O ring, 1, around each cam plate shaft.

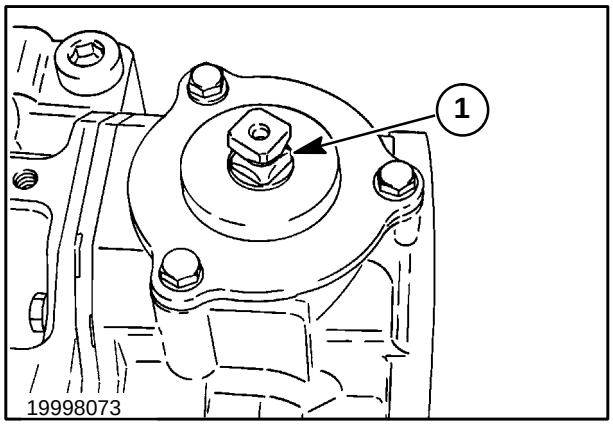

221

2. Slide the cam arms, 1, onto the cam plate shafts. The bearings, 2, should be toward the engine side of the cam arms. Install 3/8″ x 2-1/2″ Grade 8 bolts, 3, and locknuts. Tighten to 65 N·m (48 ft. lbs.).

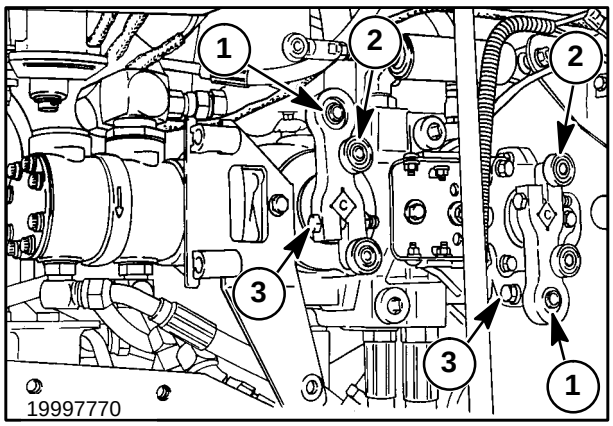

222

https://truckmanualshub.com/

3. Loosely install the blocks, 1, to the neutralizer plate with 1/2″ x 3/4″ capscrews, 2, and large 1/12″ flat washers.

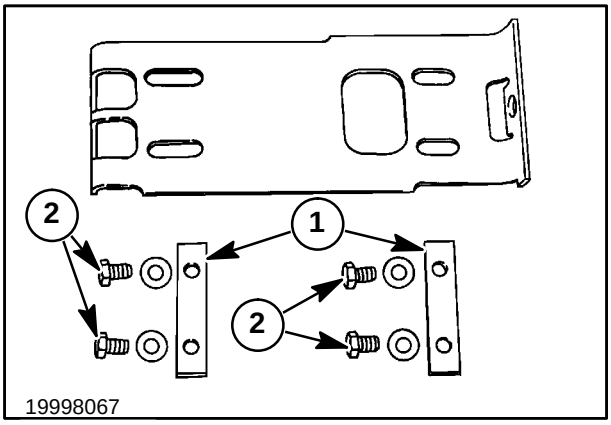

223

4. Install the dampener hardware, 1, at the support brackets with the bolts, washers and spacers removed during disassembly. Install the link and dampener hardware, 2, at the pintle arms. Tighten the hardware securely.
5. Install the control link hardware, 3, at the control handles.
6. Install the neutral return spring assembly with the long bolt, 4. Slide the short spring retainer over the shoulder bolt first. Slide the spring on the bolt, and then slide the longer retainer on the bolt. Install the bolt into the bellhousing cover, compressing the spring by hand. Screw the bolt into the housing until it bottoms, and then tighten to 55 N·m (40 ft. lbs.).
7. Install the two pin retaining nuts, 5, securing the pins, 6, to the front of the neutralizer plate.

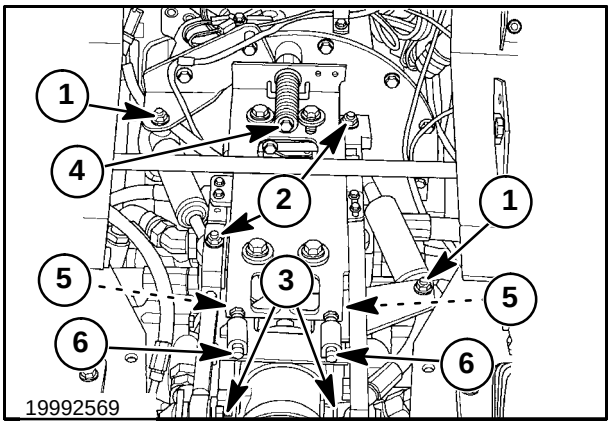

224

https://truckmanualshub.com/

LEFT CONTROL HANDLE WITH NO BOOM HAND CONTROL

Op. 29 100 10

REMOVAL

1. Securely latch the seat in the raised and latched position. Remove the step shield and front step cover to access the control handle, linkage and valve area.
2. Disconnect the hydrostatic pump control link, 1.

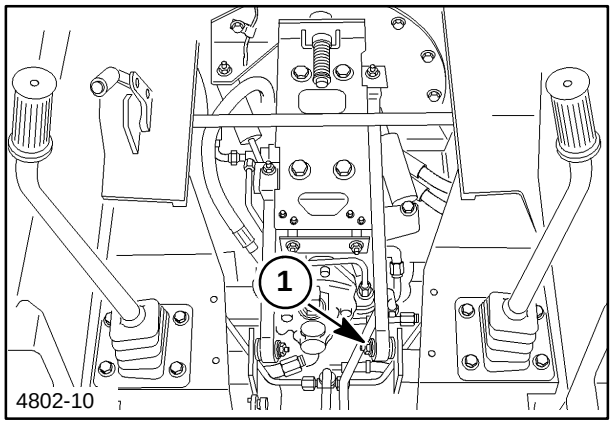

225

3. Remove the handle mounting bolts, 1, and remove the handle assembly from the unit.

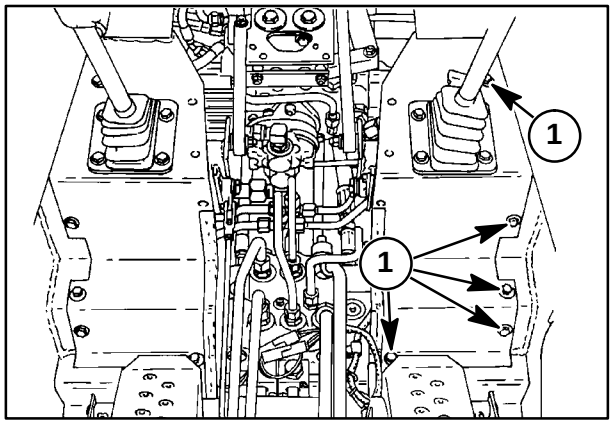

226

DISASSEMBLY

1. Loosen the boot securing bolts, 1, and slide the boot, 2, off the handle.
2. Remove the roll pin, 3, and shim washers, 4. Take note of the number and position of all shim washers for reassembly.
3. Remove the bearings, 5, from the handle, retaining any shim washers at 6.
4. Slide the handle sideways and remove from the stub shafts.

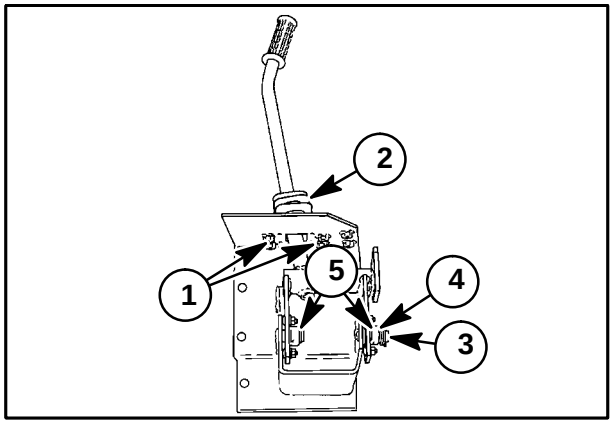

227

https://truckmanualshub.com/

INSPECTION

1. Inspect the handle pivot bearings, 1; replace if worn or damaged.
2. Inspect the control handle for excessive wear or bends in the bearing mounting plates, 2, and pivot stub shafts, 3.

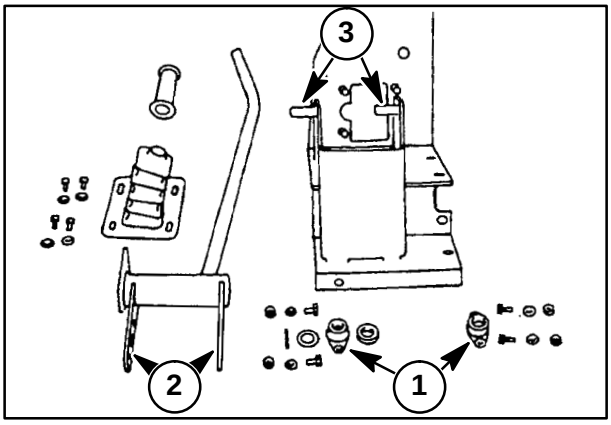

228

REASSEMBLY

1. Slide the handle sideways over the stub shafts.
2. Install the bearings, 1, on the handle. Install shim washers, 2, to center the handle in the slot, 3.
3. Install shim washers, 4, to reduce side play on the stub shafts. Retain the shims on the stubs shaft with a roll pin, 5.
4. Slide the boot, 6, over the handle and tighten the boot securing bolts.
5. Install a new hand grip, 7, if grip is worn.

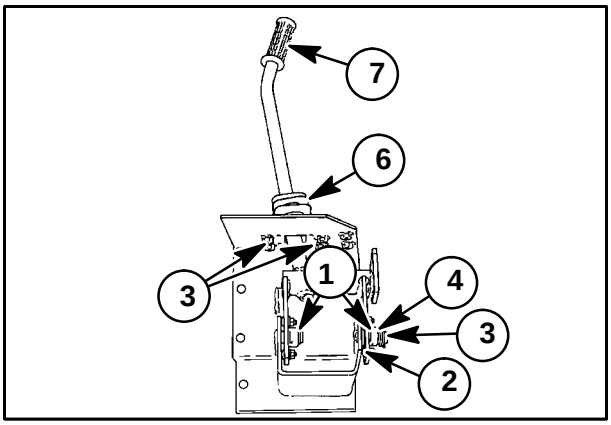

229

REINSTALLATION

1. Place the handle assembly in the unit and install the five handle mounting bolts, 1, and tighten securely.

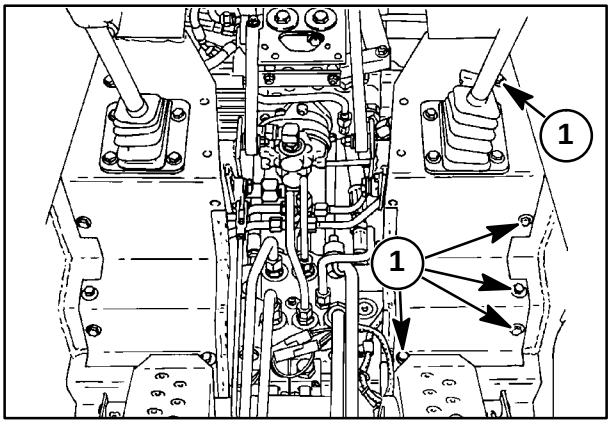

230

https://truckmanualshub.com/

2. Connect the hydrostatic pump control link, 1.
3. Reinstall all shields removed for the repair.

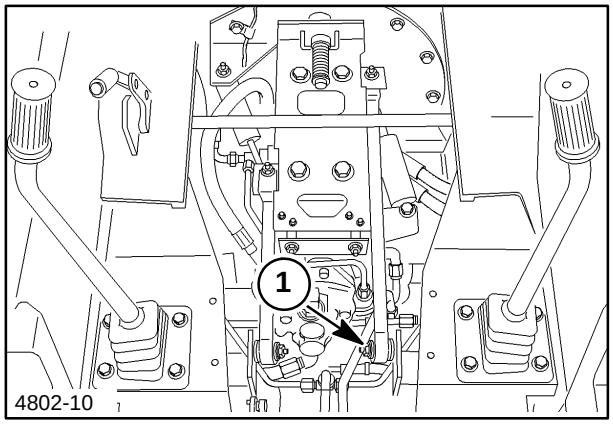

231

https://truckmanualshub.com/

LEFT CONTROL HANDLE WITH BOOM HAND CONTROL

Op. 29 100 11

REMOVAL

1. Securely latch the seat in the raised and latched position. Remove the step shield and front step cover to access the control handle, linkage and valve area.
2. Disconnect the hydrostatic pump control link, 1.

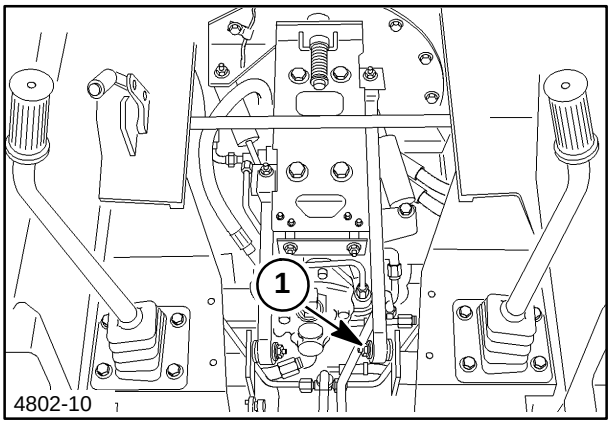

232

3. Remove the boom control rod, 1, from the left control handle arm, 2.

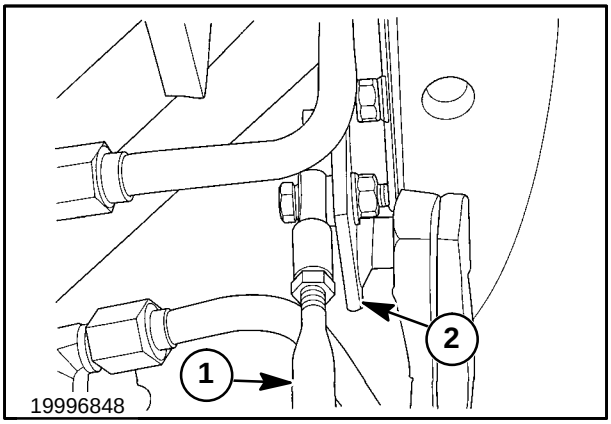

233

4. Remove the four handle mounting bolts, 1, and remove the handle assembly from the unit.

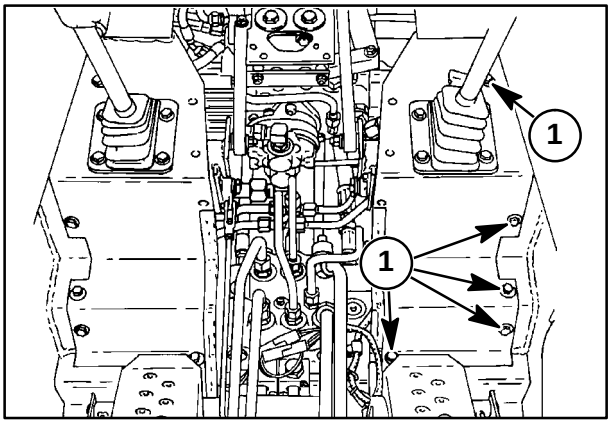

234

https://truckmanualshub.com/

DISASSEMBLY

1. Take note of the number and position of all shim washers for reassembly.
2. Remove the bolt, 1, securing the ball end to the control arm.
3. Remove the jam nut, 2, and ball end, 3, from the rod, 4.
4. Remove the groove pin, 5, from the arm, 6.
5. Loosen the set screw, 7, on the set collar. Remove the cotter pins, 8, and shim washers, 9, taking note of the number of shim washers for reassembly.
6. Remove the bearings, 10, from the control handle and the bearings, 11, from the handle mounting plates. Slide the handle sideways and remove from the stub shafts.

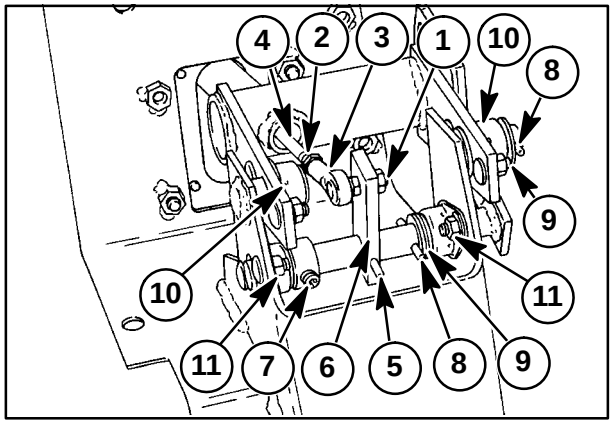

235

7. Remove the nuts, 1, lock washers, and carriage bolts securing the handle support to the handle tube. Remove the handle support, 2, and control rod, 3, from the handle tube, 4.

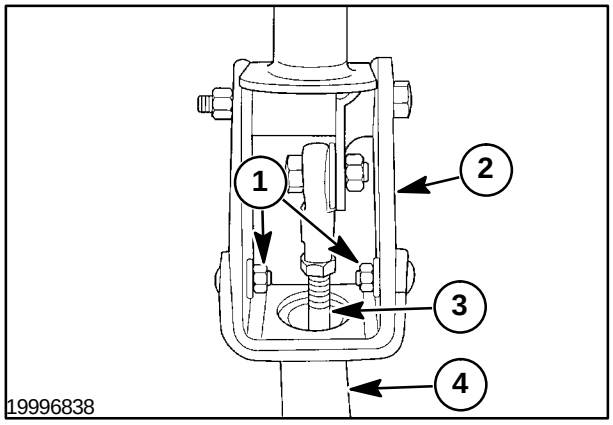

236

8. Remove the locknut, 1, and bolt to separate the handle from the handle support.
9. Remove the ball end, 2, from the handle by removing the capscrew, 3, flat washer and locknut. Remove the ball end, 2, and jam nut, 4, from the rod, 5.

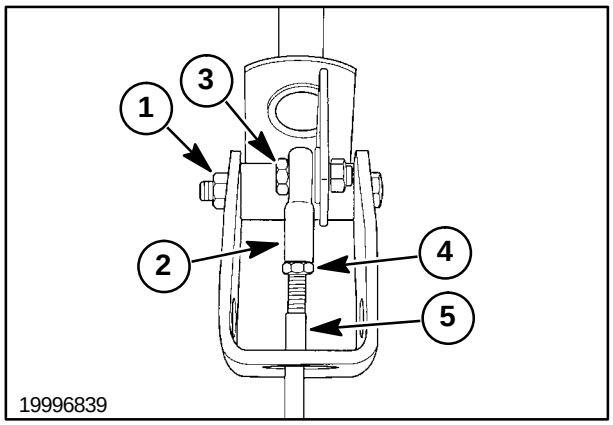

237

https://truckmanualshub.com/

10. Loosen the boot securing bolts, 1, and slide the boot, 2, off the handle.

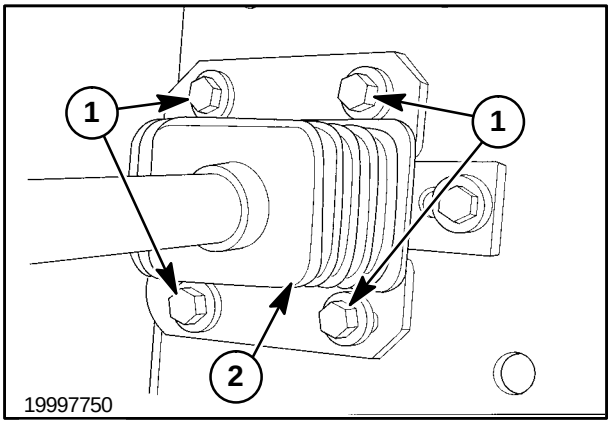

238

INSPECTION

1. Inspect the handle pivot bearings, 1; replace if worn or damaged.
2. Inspect the pivot stub shafts, 2, for any obvious bends or deformation.
3. Inspect the control handle for excessive wear or bends in the bearing mounting plates, 3.

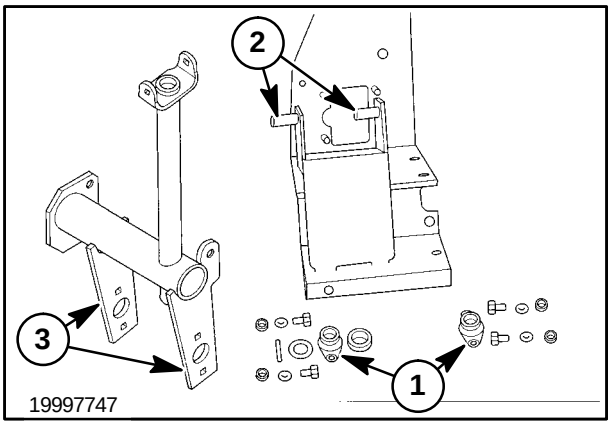

239

4. Inspect the pivot handle linkage for looseness in the ball joints, 1; replace if worn.
5. Inspect the pivot handle, 2, and handle support, 3, for damage or deformation. Replace as necessary.

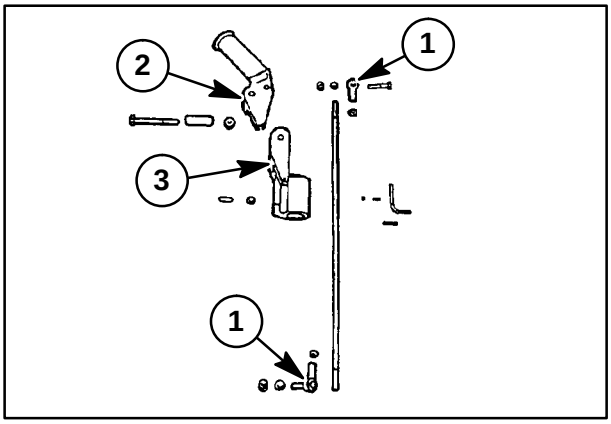

240

https://truckmanualshub.com/

REASSEMBLY

1. Install a new hand grip on the top of the handle, 1, if grip is worn.
2. Attach the ball end, 2, and jam nut, 3, to the rod, 4. Fasten the ball end to the handle, 5, with the capscrew, 6, flat washer and locknut. Position the flat washer between the ball end and handle. Do not tighten the jam nut at this time.
3. Attach the handle assembly to the handle support, 7, with the long bolt, 8, and locknut, 9.
4. Tighten the locknut to remove any movement between the handle assembly and support, but do not overtighten. The support should be loose enough to allow the handle to pivot without binding.

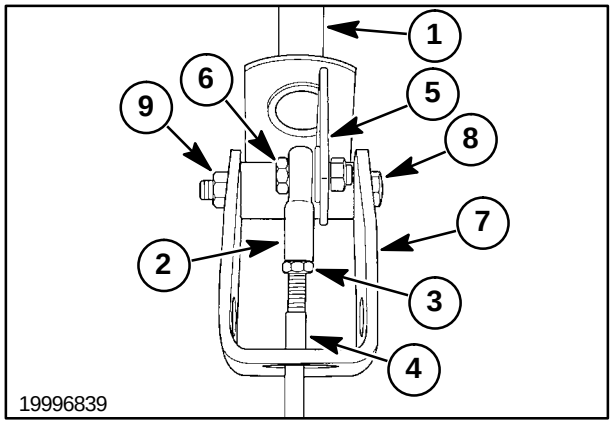

241

5. Slide the handle tube up through the slot, 1, in the handle support base.
6. Slide the handle sideways over the stub shafts.
7. Install the bearings, 2, on the handle, install shim washers, 3, to center the handle in the slot, 1. Fasten each bearing with two 5/16″ x 3/4″ carriage bolts, lock washers, and nuts at 4.
8. Install shim washers, 5, to reduce side play on the stub shafts. Retain the shims on the stubs shaft with a roll pin, 6.
9. Slide the rubber boot, 7, down over the end of the control handle, one side at a time, and secure with the the hardware removed during disassembly.

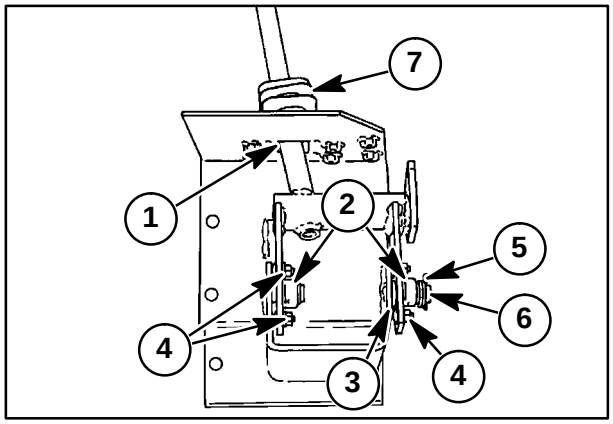

242

10. Attach the handle and rod assembly, 1, to the control handle by first sliding the rod down through the control handle tube, 2.
11. Attach the handle assembly to the handle tube arms, 3, with the short carriage bolts, 4, lock washers, 5, and nuts, 6. Tighten securely.

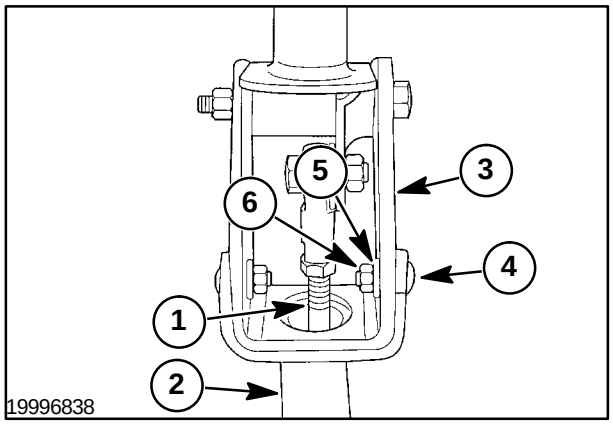

243

https://truckmanualshub.com/

12. Assemble the pivot shaft, 1, shim washers, 2, arm, 3, set collar, 4, and bearings, 5, into the control arm housing. Fasten each bearing with two 5/16″ x 3/4″ carriage bolts, lock washers, and nuts at 6.
13. Rotate the pivot shaft, 1, to position the arm upward as shown at 7.
14. Note the position of the arm, 3, on the shaft in relation to the arm at 7. Insert groove pin, 8, through arm, 3, and into shaft just far enough to position the arm. Do not hammer into place at this time.

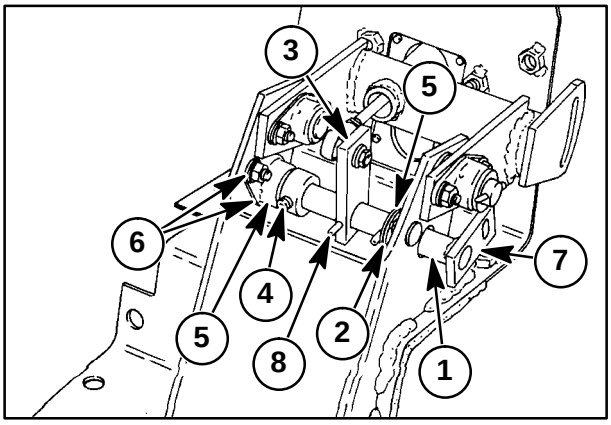

244

15. Attach the ball end and jam nut, 1, onto rod, 2. Install spacer, 12, (OD - 7/16″; length - 15/32″) between the ball end and arm, 3. Secure with a 5/16″ x 1-3/4″ bolt, lock washer, and nut at 4.
16. Install shim washers at 5, between the cotter pin, 6, and bearing, 7, to center rod, 2, in the control handle tube at 8. Secure the cotter pin and slide the set collar, 9, against the opposite bearing to remove any side movement of the shaft and tighten the setscrew.
17. Drive the groove pin, 12, in the arm completely into place.
18. With the handle in the neutral position angle, adjust the length of the rod, 2, so the ball stud at the arm, 3, aligns with the pivot bearings at 10. This will also set the pivot arm, 11, in a vertical position.
19. Rotate the handle to make sure the rod, 2, does not interfere at the top or bottom of the control handle tube. Move the control handle back and forth (forward and reverse) and make sure the control arm, 3, does not move. When there is no movement, tighten the jam nuts at both ends of the rod.

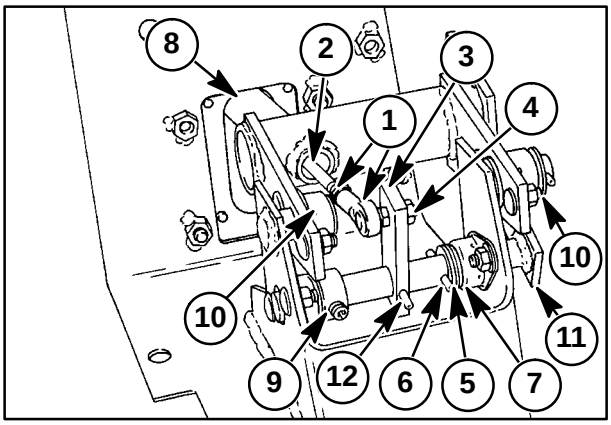

245

REINSTALLATION

1. Place the handle assembly, 1, in the unit and install the handle mounting bolts, 2.

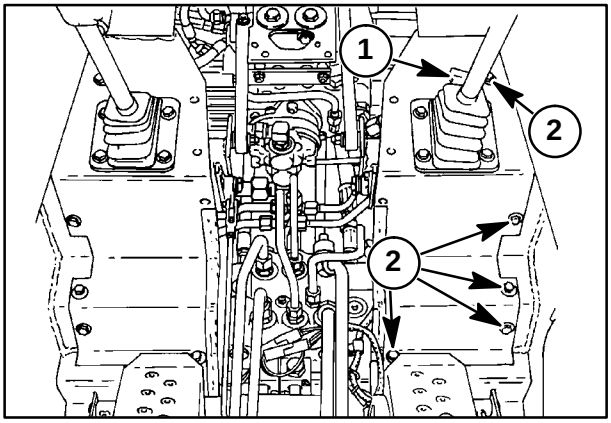

246

https://truckmanualshub.com/

2. Install the boom control rod, 1, on the left control handle arm, 2.

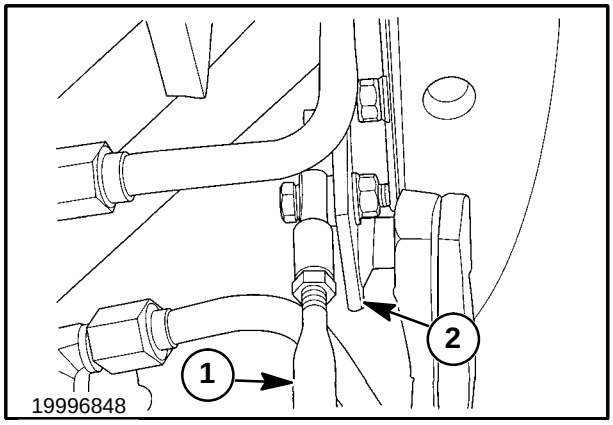

247

3. Connect the hydrostatic pump control link, 1.
4. Reinstall all shields removed for the repair.

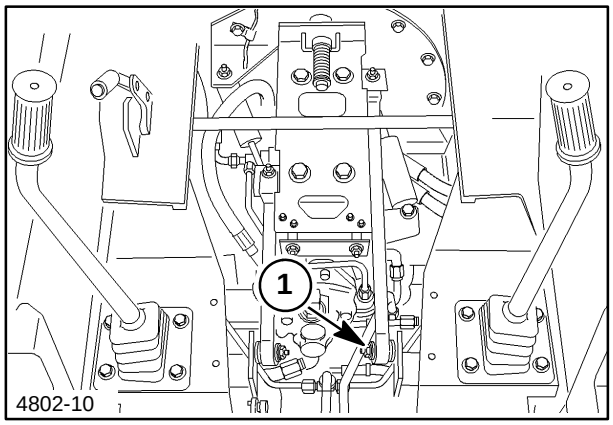

248

https://truckmanualshub.com/

RIGHT CONTROL HANDLE WITH AUXILIARY OR BUCKET CONTROL

Op. 29 100 15

REMOVAL

1. Securely latch the seat in the raised and latched position. Remove the step shield and front step cover to access the control handle, linkage and valve area.
2. Disconnect the hydrostatic pump control link, 1.

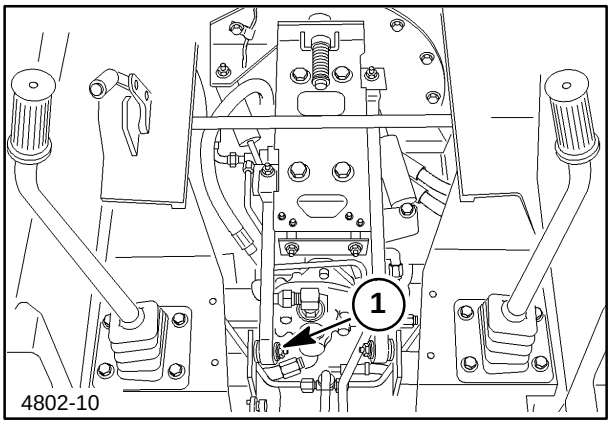

249

3. Remove the auxiliary hydraulic control or bucket control rod, 1, from the right control handle arm, 2.

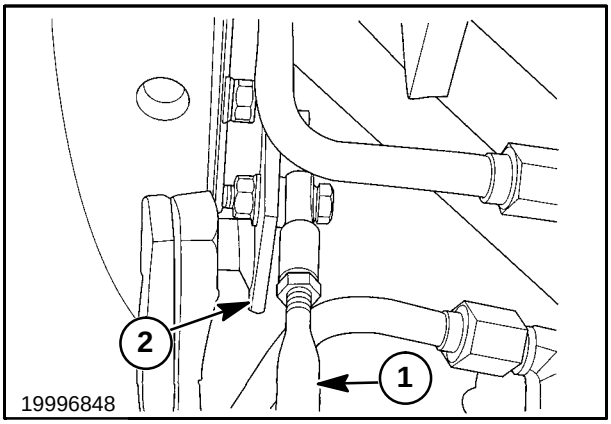

250

4. Remove the five handle mounting bolts, 1, and remove the handle assembly from the unit.

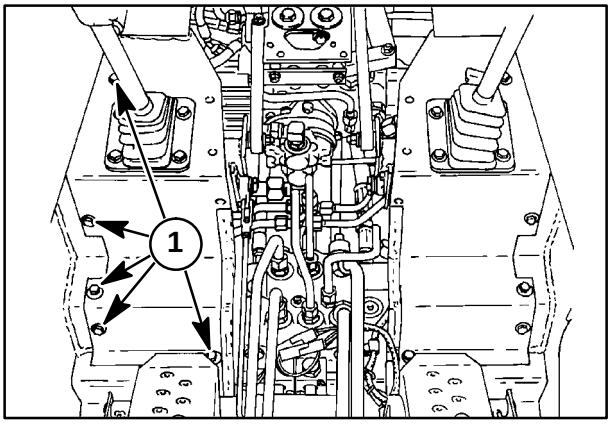

251

https://truckmanualshub.com/

DISASSEMBLY

1. Take note of the number and position of all shim washers for reassembly.
2. Remove the bolt, 1, securing the ball end to the control arm.
3. Remove the jam nut, 2, and ball end, 3, from the rod, 4.
4. Remove the groove pin, 5, from the arm, 6.
5. Loosen the set screw, 7, on the set collar.
6. Remove the cotter pins, 8, and shim washers, 9, taking note of the number of shim washers for reassembly.
7. Remove the bearings, 10, from the control handle and the bearings, 11, from the handle mounting plates. Slide the handle sideways and remove from the stub shafts.

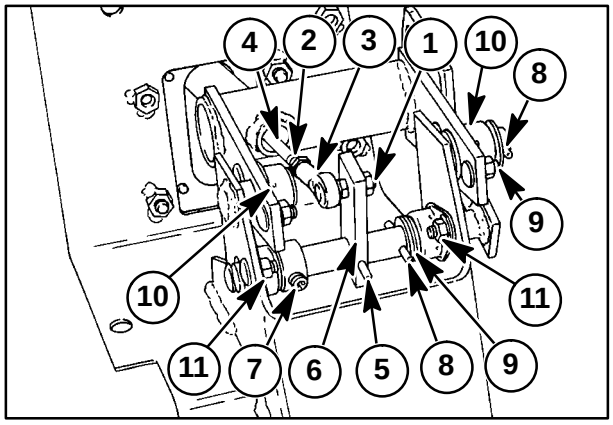

252

Op 29 100 15

Auxiliary Boom Control Handle (Only)

8. Boom hydraulics control - Remove the setscrew, 1, and remove the handle support, 2, and control rod, 3, from the handle tube, 4.

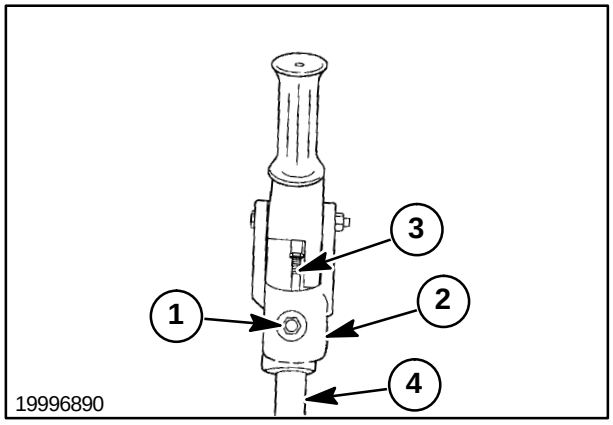

253

9. Boom hydraulics control - Remove the roll pin, 1, the L-pin, 2, and the spring and ball at 3.

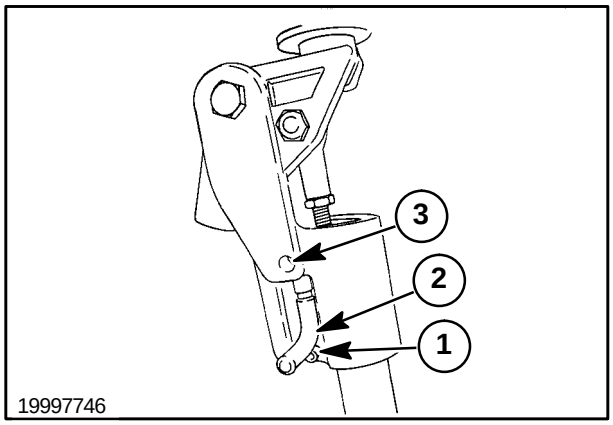

254

https://truckmanualshub.com/

10. Boom hydraulics control - Remove the locknut, 1, and bolt, 2, to separate the handle, 3, from the handle support, 4. Retain the bushing and capscrew. Remove the ball end, 5, from the handle by removing the capscrew, 6, flat washer and locknut. Remove the ball end, 5, and jam nut, 7, from the rod.

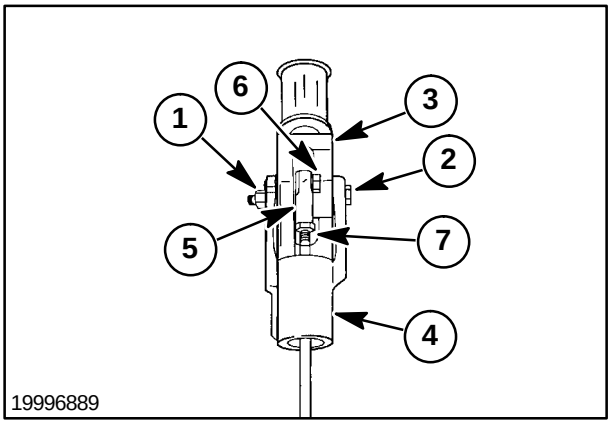

255

Bucket Control Handle

11. Bucket control - Remove the nuts, 1, lock washers, and carriage bolts securing the handle support to the handle tube. Remove the handle support, 2, and control rod, 3, from the handle tube, 4.

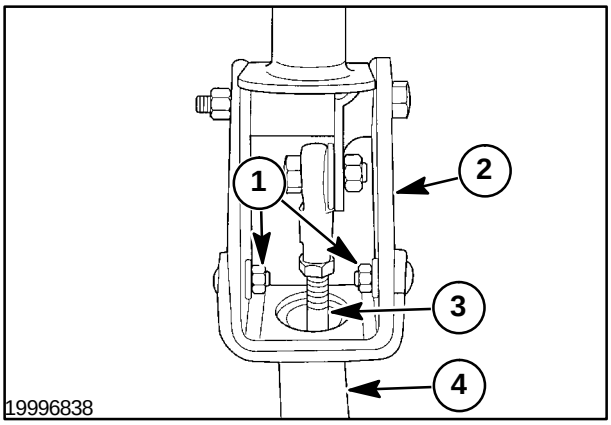

256

12. Bucket control - Remove the locknut, 1, and bolt to separate the handle from the handle support. Remove the ball end, 2, from the handle by removing the capscrew, 3, flat washer and locknut. Remove the ball end, 2, and jam nut, 4, from the rod, 5.

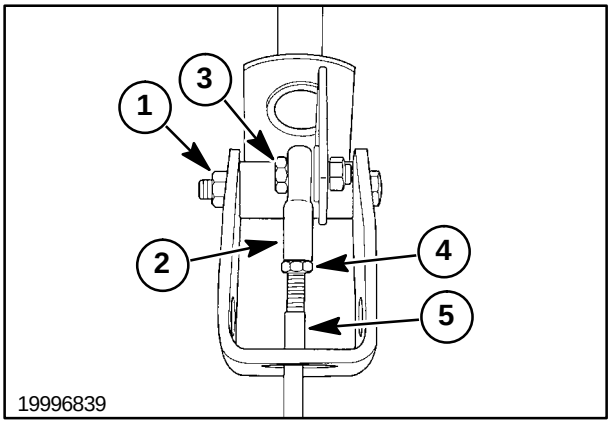

257

https://truckmanualshub.com/

13. Loosen the boot securing bolts, 1, and slide the boot, 2, off the handle.

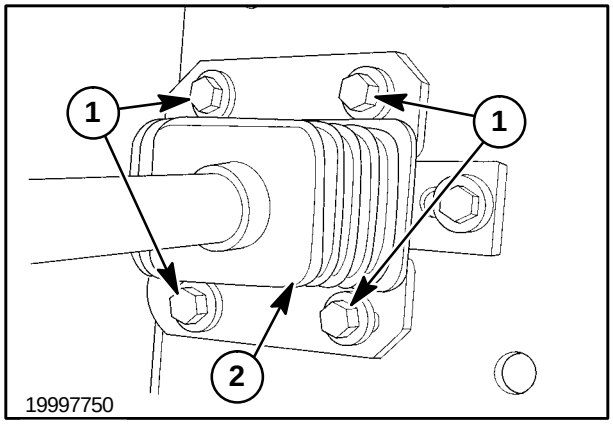

258

INSPECTION

1. Inspect the handle pivot bearings, 1; replace if worn or damaged.
2. Inspect the pivot stub shafts, 2, for any obvious bends or deformation.
3. Inspect the control handle for excessive wear or bends in the bearing mounting plates, 3.

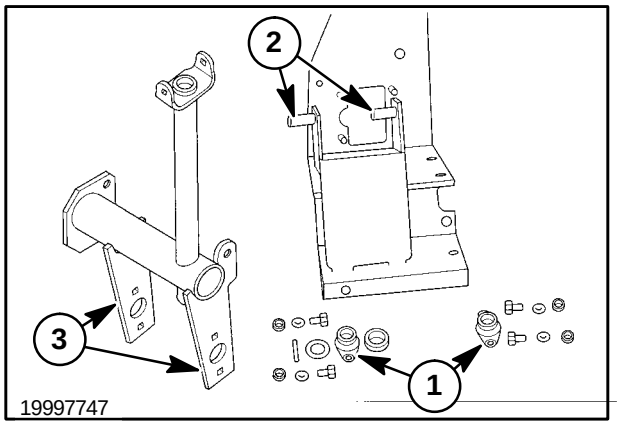

259

4. Bucket control - Inspect the pivot handle linkage for looseness in the ball joints, 1; replace if worn.
5. Bucket control - Inspect the pivot handle, 2, and handle support, 3, for damage or deformation. Replace as necessary.

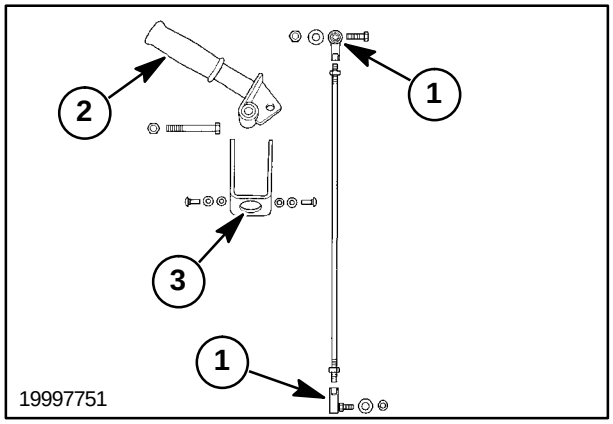

260

https://truckmanualshub.com/

6. Boom Hydraulics Control - Inspect the pivot handle linkage for looseness in the ball joints, 1; replace if worn.
7. Boom Hydraulics Control - Inspect the pivot handle, 2, and handle support, 3, for damage or deformation. Replace as necessary.
8. Boom Hydraulics Control - Inspect the handle lock components, 4. Replace the spring if bent or broken.

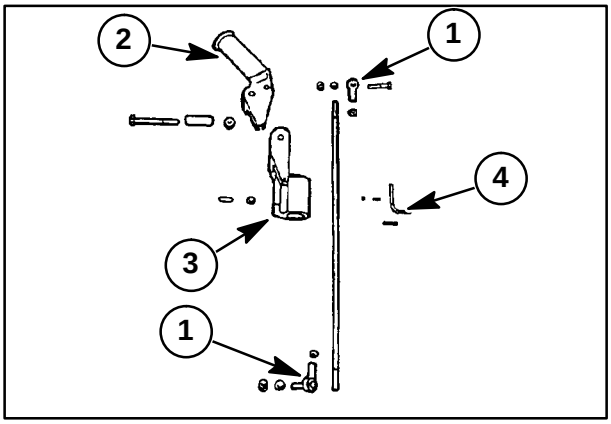

261

REASSEMBLY

1. Bucket control - Install a new hand grip on the top of the handle, 1, if grip is worn.
2. Bucket control - Attach the ball end, 2, and jam nut, 3, to the rod, 4, and fasten to the handle, 5, with the capscrew, 6, flat washer and locknut. Position the flat washer between the ball end and handle. Do not tighten the jam nut at this time.
3. Bucket control - Attach the handle assembly to the handle support, 7, with the long bolt, 8, and locknut, 9.
4. Bucket control - Tighten the locknut to remove any movement between the handle assembly and support, but should be loose enough to all the handle to pivot without binding.

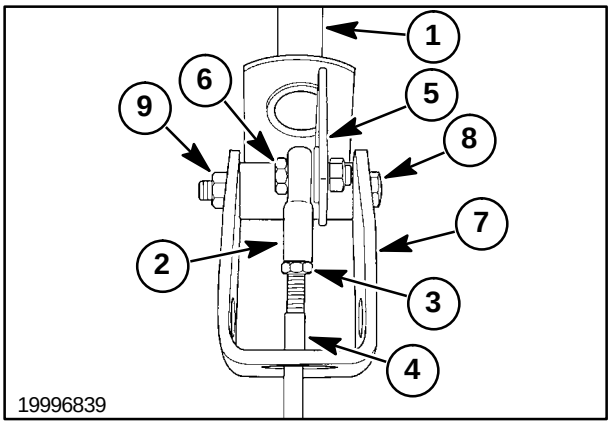

262

5. Bucket control - Slide the handle tube up through the slot, 1, in the handle support base.
6. Bucket control - Slide the handle sideways over the stub shafts.
7. Bucket control - Install the bearings, 2, on the handle, install shim washers, 3, to center the handle in the slot, 1. Fasten each bearing with two 5/16″ x 3/4″ carriage bolts, lock washers, and nuts at 4.
8. Bucket control - Install shim washers, 5, to reduce side play on the stub shafts. Retain the shims on the stubs shaft with a roll pin, 6.
9. Bucket control - Slide the rubber boot, 1, down over the end of the control handle, one side at a time, and secure with the the hardware, 2, removed during disassembly.

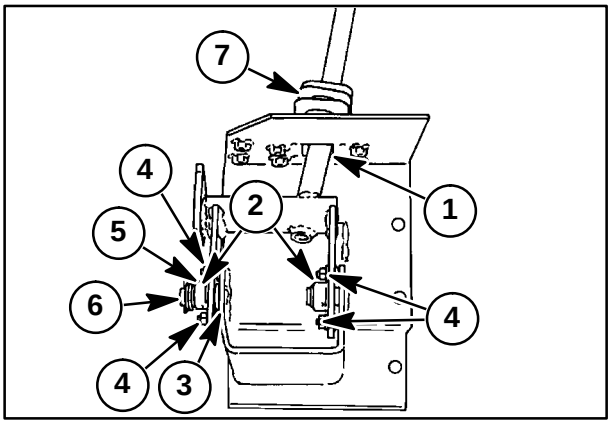

263

https://truckmanualshub.com/

10. Bucket control - Attach the handle and rod assembly, 1, to the control handle by first sliding the rod down through the control handle tube, 2.
11. Bucket control - Attach the handle assembly to the handle tube arms, 3, with the short carriage bolts, 4, lock washers, 5, and nuts, 6. Tighten securely.

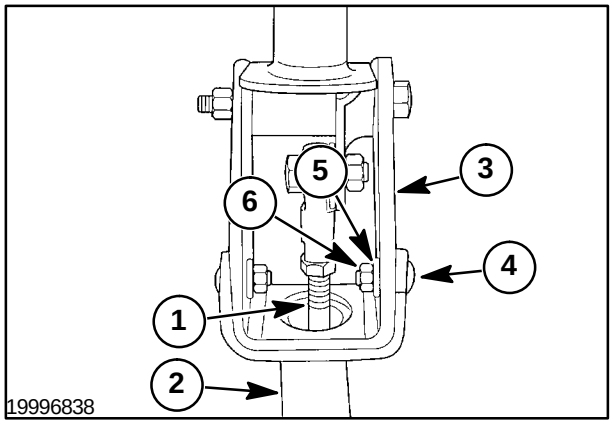

264

12. Boom hydraulics control - Install a new hand grip on the top of the handle, 1, if grip is worn.
13. Boom hydraulics control - Attach the ball end, 2, and jam nut, 3, to the rod, 4, and fasten to the handle, 5, with a 5/16″ x 1-1/4″ capscrew, 6, flat washer and locknut. Position the flat washer between the ball end and handle. Do not tighten the jam nut at this time.
14. Boom hydraulics control - Attach the handle assembly to the handle support, 8, with the long bushing, 3/8″ x 3-1/4″ capscrew and locknut at 9.
15. Boom hydraulics control - Tighten the locknut to remove any movement between the handle assembly and support, but should be loose enough to all the handle to pivot without binding.

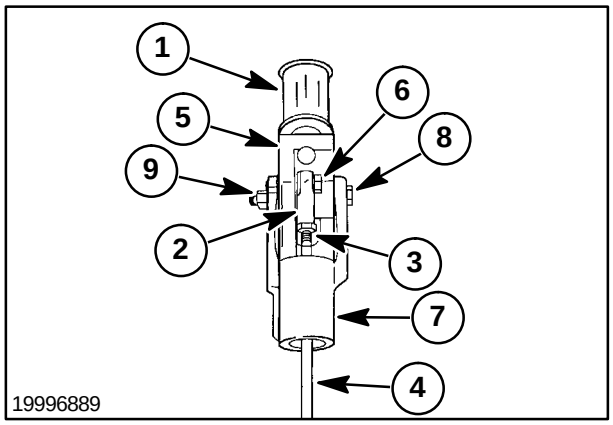

265

16. Boom hydraulics control - Slide the handle tube up through the slot, 1, in the handle support base.
17. Boom hydraulics control - Slide the handle sideways over the stub shafts.
18. Boom hydraulics control - Install the bearings, 2, on the handle, install shim washers, 3, to center the handle in the slot, 1. Fasten each bearing with two 5/16″ x 3/4″ carriage bolts, lock washers, and nuts, 4.
19. Boom hydraulics control - Install shim washers, 5, to reduce side play on the stub shafts. Retain the shims on the stubs shaft with a roll pin, 6.
20. Boom hydraulics control - Slide the rubber boot, 7, down over the end of the control handle and secure with the the hardware removed during disassembly.

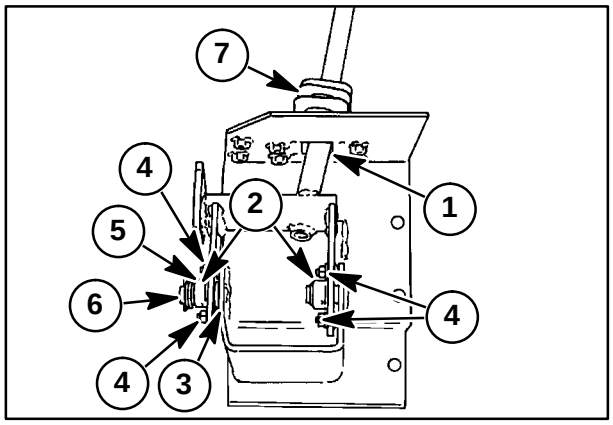

266

https://truckmanualshub.com/

21. Boom hydraulics control - Attach the handle and rod assembly, 1, to the control handle, 2, by first sliding the rod, 3, down through the control handle tube.
22. Boom hydraulics control - Position the handle support on the tube by aligning the setscrew, 4, with the drilled hole in the tube. Tighten the setscrew and locknut.

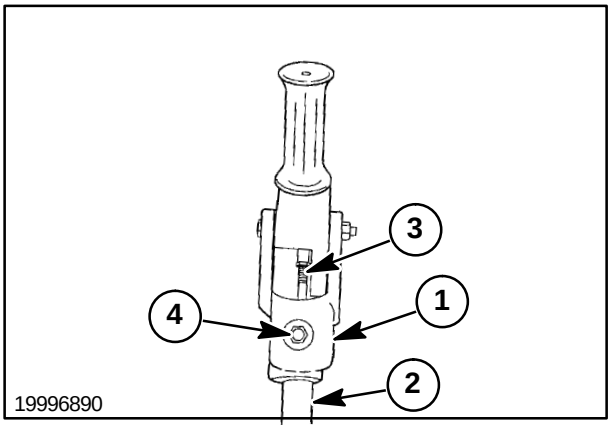

267

23. Boom hydraulics control - Insert the spring and ball at 1. Insert the L-pin, 2, and drive the roll pin, 3, in flush to retain the L-pin.

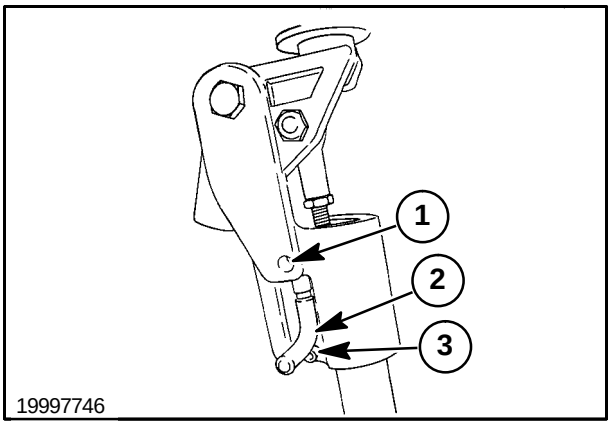

268

24. Assemble the pivot shaft, 1, shim washers, 2, arm, 3, set collar, 4, and bearings, 5, into the control arm housing. Fasten each bearing with two 5/16″ x 3/4″ carriage bolts, lock washers, and nuts at 6.
25. Rotate the pivot shaft, 1, to position the arm upward as shown at 7.
26. Note the position of the arm, 3, on the shaft, 1, in relation to the arm at 7. Insert groove pin, 8, through arm, 3, and into shaft, 1, just far enough to position the arm. Do not hammer into place at this time.

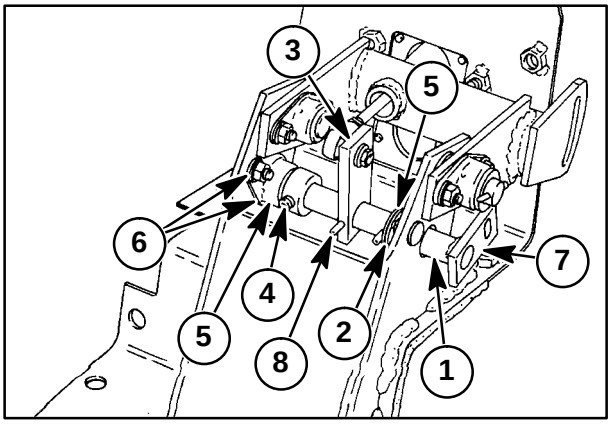

269

https://truckmanualshub.com/

27. Attach the ball end and jam nut, 1, onto rod, 2. Install spacer, 12, (OD - 7/16″; length - 15/32″) between the ball end and arm, 3. Secure with a 5/16″ x 1-3/4″ bolt, lock washer, and nut at 4.
28. Install shim washers at 5, between the cotter pin, 6, and bearing, 7, to center rod, 2, in the control handle tube at 8. Secure the cotter pin and slide the set collar, 9, against the opposite bearing to remove any side movement of the shaft and tighten the setscrew.
29. Drive the groove pin, 12, in the arm completely into place.
30. With the handle in the neutral position angle, adjust the length of the rod, 2, so the ball stud at the arm, 3, aligns with the pivot bearings at 10. This will also set the pivot arm, 11, in a vertical position.
31. Rotate the handle to make sure the rod, 2, does not interfere at the top or bottom of the control handle tube. Move the control handle back and forth (forward and reverse) and make sure the control arm, 3, does not move. When there is no movement, tighten the jam nuts at both ends of the rod.

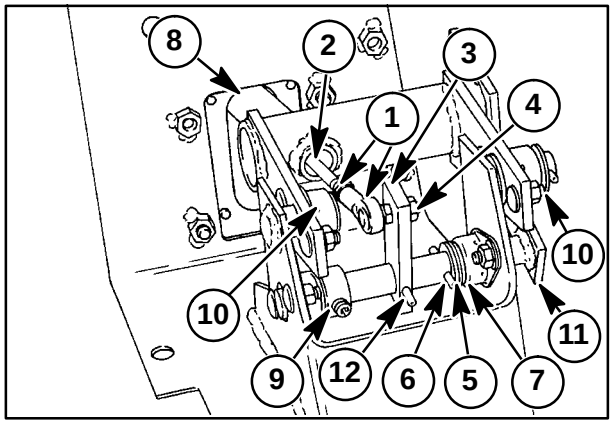

270

REINSTALLATION

1. Place the handle assembly in the unit, install the handle mounting bolts, 1, and tighten securely.

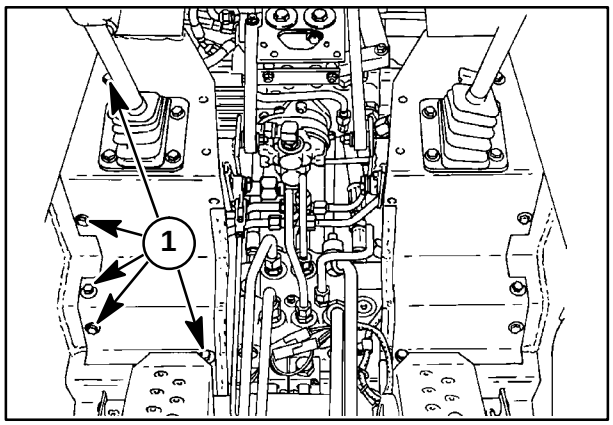

271

2. Install the auxiliary hydraulic control or bucket control rod, 1, on the right control handle arm, 2.

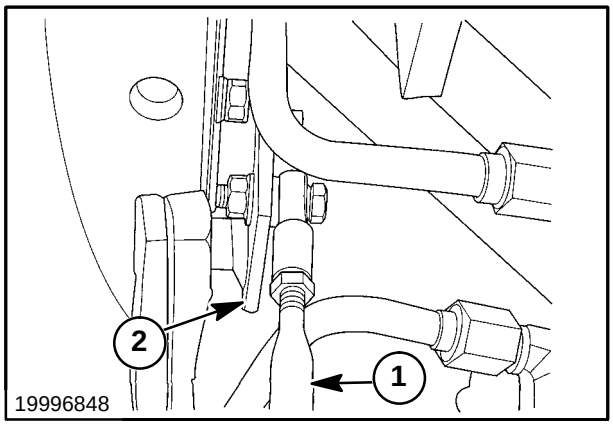

272

https://truckmanualshub.com/

3. Connect the hydrostatic pump control link, 1.
4. Reinstall all shields removed for the repair.

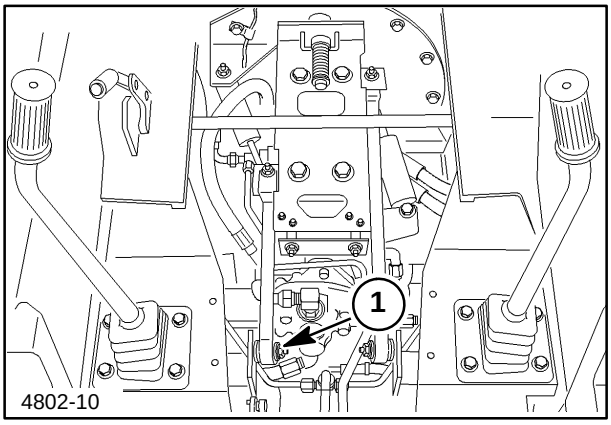

273

https://truckmanualshub.com/

Op. 29 130 06

DRIVE CONTROL ADJUSTMENT PROCEDURE

If the machine creeps (tires rotate slowly with steering control in neutral) and the transmissions make a noise indicating they are being slightly stroked, a neutralizing adjustment is required.

CAUTION

To make a neutralizer adjustment, block the machine off the ground so that the wheels turn freely. Raise the boom and place it on the boom lockpins. When the engine is running, stay clear of the rotating wheels.

To make any transmission control linkage adjustments, first block the loader off the ground with the boom in the raised position resting on the boom lockpins. Unlatch the seat and raise it to the up locked position to access the transmission area.

CAUTION

Never work under a raised seat unless it is securely latched in the raised position.

Control lever, 1; link, 2; and arm, 3, control the right side. Control lever, 4; link, 5; and arm, 6 control the left side. There are shock absorbers, 7, connected to the steering linkage to dampen the hydraulic vibration from the control levers and the operator's hands. The neutralizer plate, 8, is spring loaded to return the arms, 3 and 6, to their neutral position.

When the operator strokes both control levers in the same direction, the operator can release one lever and the unit will still run straight until the levers are stroked differently to change direction or both levers are released and then the unit will neutralize.

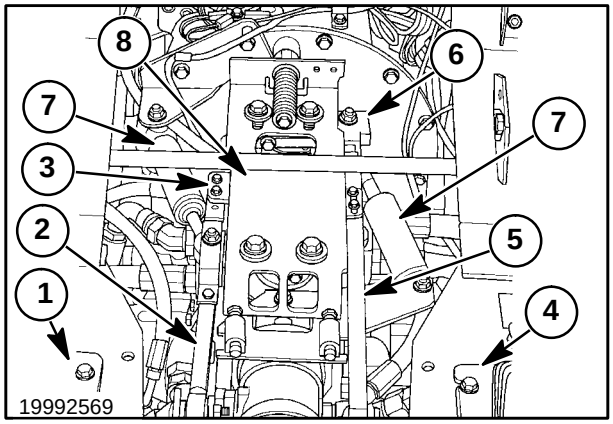

274

https://truckmanualshub.com/

Op. 29 130 06

NEUTRAL ADJUSTMENT

Before making any adjustments, make sure there is no binding in the control linkage, shock absorbers or neutralizer plate. The neutralizer plate, 1, should be free to move on the spring retaining bolt at the engine bell housing, 2, and on the front slides, 3. The neutralizer plate should be against the stop on the engine bell housing at 4.

The skid steer must be raised and supported with the tires off the ground. Use adequate blocking or jack stands to securely support the skid steer.

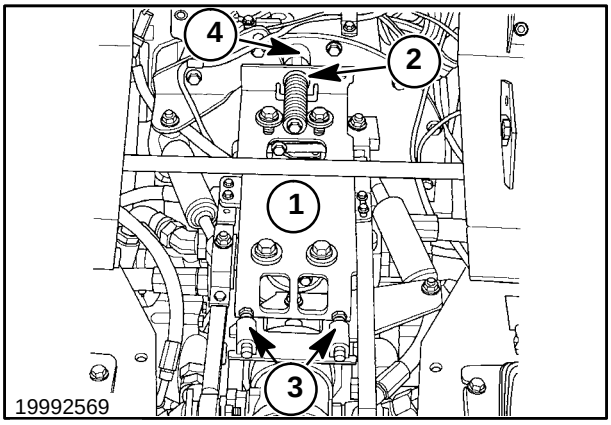

275

The engine must be started and running to make neutral adjustments. Place the “Service/Run” Switch, 1, in the “SERVICE” position to allow the engine to be started and to prevent movement of the boom and bucket.

To access the “Service/Run” switch located under the fuse panel cover, 2, loosen the two thumbscrews, 3, and rotate the cover to the side.

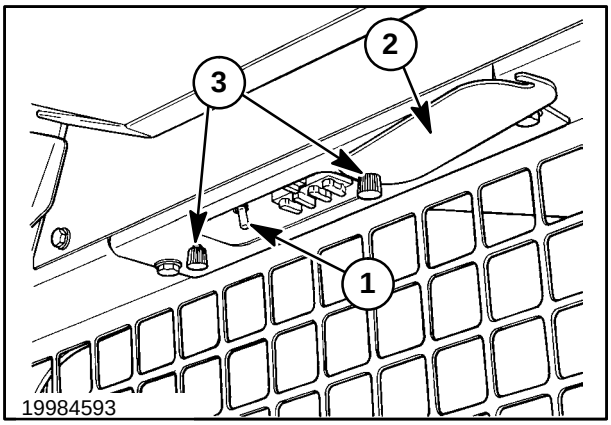

276

To adjust the right side, loosen the block retaining bolts, 1, slightly and move the control arm, 2, to stop wheel rotation. Now move the block so it contacts both cams on arm, 2, and tighten the retaining bolts, 1.

To adjust the left side, loosen the block retaining bolts, 3, slightly and move the control arm, 4, to stop wheel rotation. Now move the block so it contacts the cams on arm, 4, and tighten the retaining bolts, 3.

Stop the engine after adjustments are made and recheck hardware torque.

NOTE: *The blocks must be set square and firmly contact both cams on the arms. If the block is not square against both cams on the arms, the unit may creep after neutral adjustments are made.*

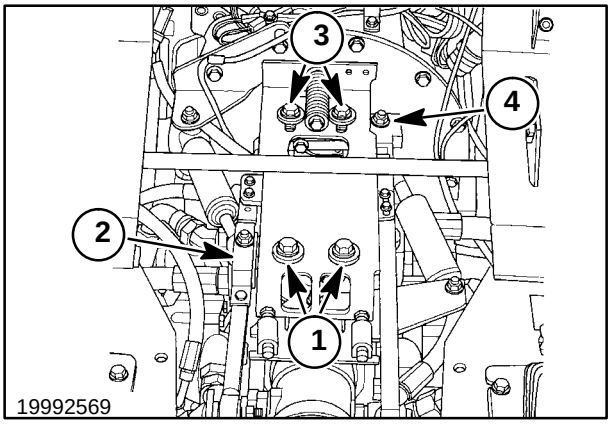

277

https://truckmanualshub.com/

Control Lever Parallel Adjustment

The control levers, 1 and 2, are set at the factory at 9 degrees to the front. The levers can be adjusted so the two levers are parallel. To adjust the levers, loosen bolts, 3, and move the levers to the desired position and retighten the hardware. Moving the control levers too far one direction will change maximum speeds.

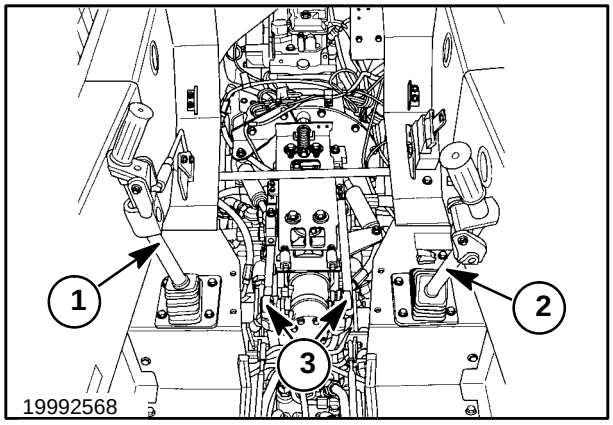

278

Control Lever Stop Adjustment

If the control lever location has been changed for any reason, the control lever stops will require adjustment. The control lever stops must be adjusted properly to prevent damage to the linkage and internal transmission components. The lever stops are the lower control lever boot assembly, 1.

To adjust the stops, follow these steps:

1. Loosen the four cap screws, 2, each lever stop.
2. Pull the control lever forward until the internal transmission stop is felt and hold the linkage against the internal stop.
3. Slide the boot stop assembly to the rear to contact the control lever and then push the stop and lever another 1 mm (1/32″). This will ensure that when the control levers are fully stroked, the lever will contact the external stop and not the internal transmission stop.
4. Check wheel speed using a hand tach from side to side and slow down the faster side by moving the boot stop and lever to the rear on the fast side.

CAUTION

The skid steer must be raised and supported with the tires off the ground. Use adequate blocking or jack stands to securely support the skid steer.

5. Check and tighten all control lever linkage hardware.

IMPORTANT: *If the external control lever stops are not adjusted properly, the control linkage and transmission may be damaged.*

6. Return the “Service/Run” switch to the “RUN” position.

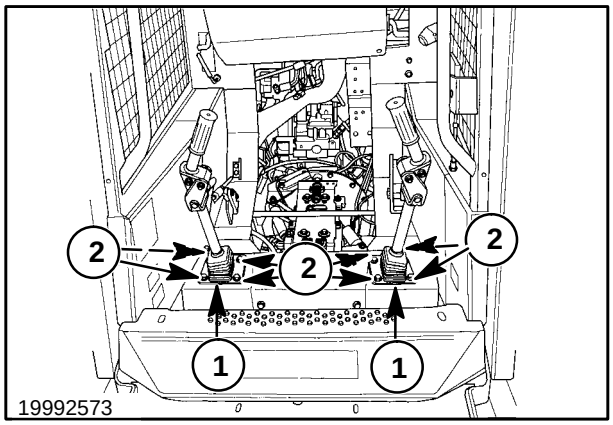

279

https://truckmanualshub.com/

LABOR GUIDE

HYDROSTATIC SYSTEM AND STEERING SYSTEM

The following labor amounts are listed as a guide only. Working conditions and experience will vary the time it actually takes to complete each job.

Job	Hours
Hydrostatic pump - RH & LH assembly - remove/replace	4 hrs.
Hydrostatic pump - repair	1 hr.
Hydrostatic motor RH - remove/replace	3 hrs.
Hydrostatic motor LH - remove/replace	3 hrs.
Hydrostatic motor - repair	1 hr.
Charge check valve - remove/replace	0.5 hr.
Neutralizer plate assembly - remove/replace	0.5 hr.
Hydrostatic control handle assembly - remove/replace one assembly	0.25 hr.
Hydrostatic control handle assembly - repair	0.5 hr.
Neutral adjustment	0.5 hr.
Time required to tilt cab and boom	1 hr.

https://truckmanualshub.com/

SECTION 33 – BRAKES AND CONTROLS

Chapter 1 – Parking Brake

CONTENTS

Section	Description	Page
33 000	General Information	33-2
	Specifications	33-4
	Troubleshooting	33-5
	Testing	33-7
33 110	Parking Brake	33-8
	Parking Brake Removal and Inspection	33-9
	Labor Guide	33-22

https://truckmanualshub.com/

Op. 33 000

GENERAL INFORMATION

The power is transmitted to the final drive from the engine which is connected to the hydrostatic pumps, 1, with a flex plate drive coupler. The hydrostatic pumps then transmit hydraulic power to the hydrostatic motors, 2, which are connected to gearboxes, 3, located on the inside of the final drive cases. The left and right drives are separate from each other and are operated independently.

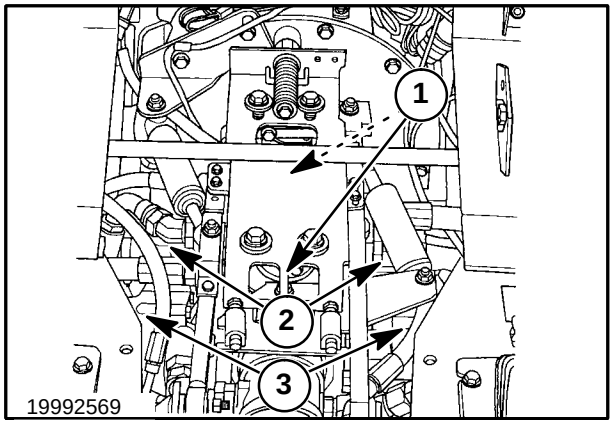

1

The power is then transmitted through gears to a double drive sprocket, 1, in the final drive case. The drive sprocket is connected to the axle sprockets, 2, with chains, 3, one endless chain to the front axle and one endless chain to the rear axle.

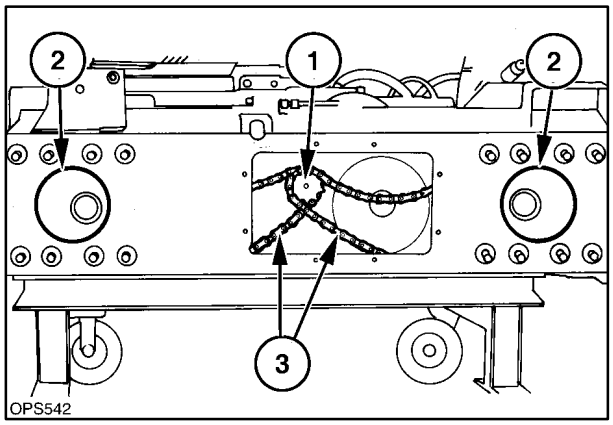

2

The axle sprocket, 1, is splined to the axle shaft and hub assembly, 2. A large O ring, 3, seals the assembly to the frame.

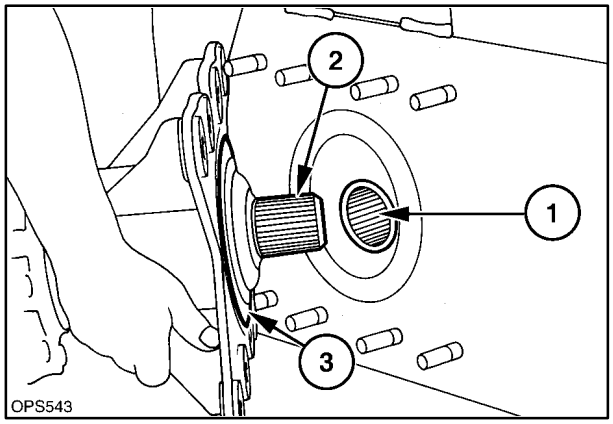

3

https://truckmanualshub.com/

The parking brake discs are connected to the hydrostatic motor coupler shafts at 1. The parking brake is made up of two discs, actuator shaft, pads, and control linkage. The hydrostatic system is the primary braking system, and the parking brake is used when the unit is stopped.

CAUTION

Always engage the parking brake before exiting the loader.

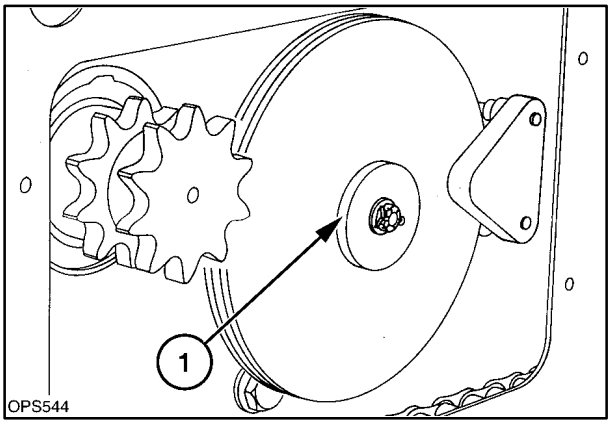

4

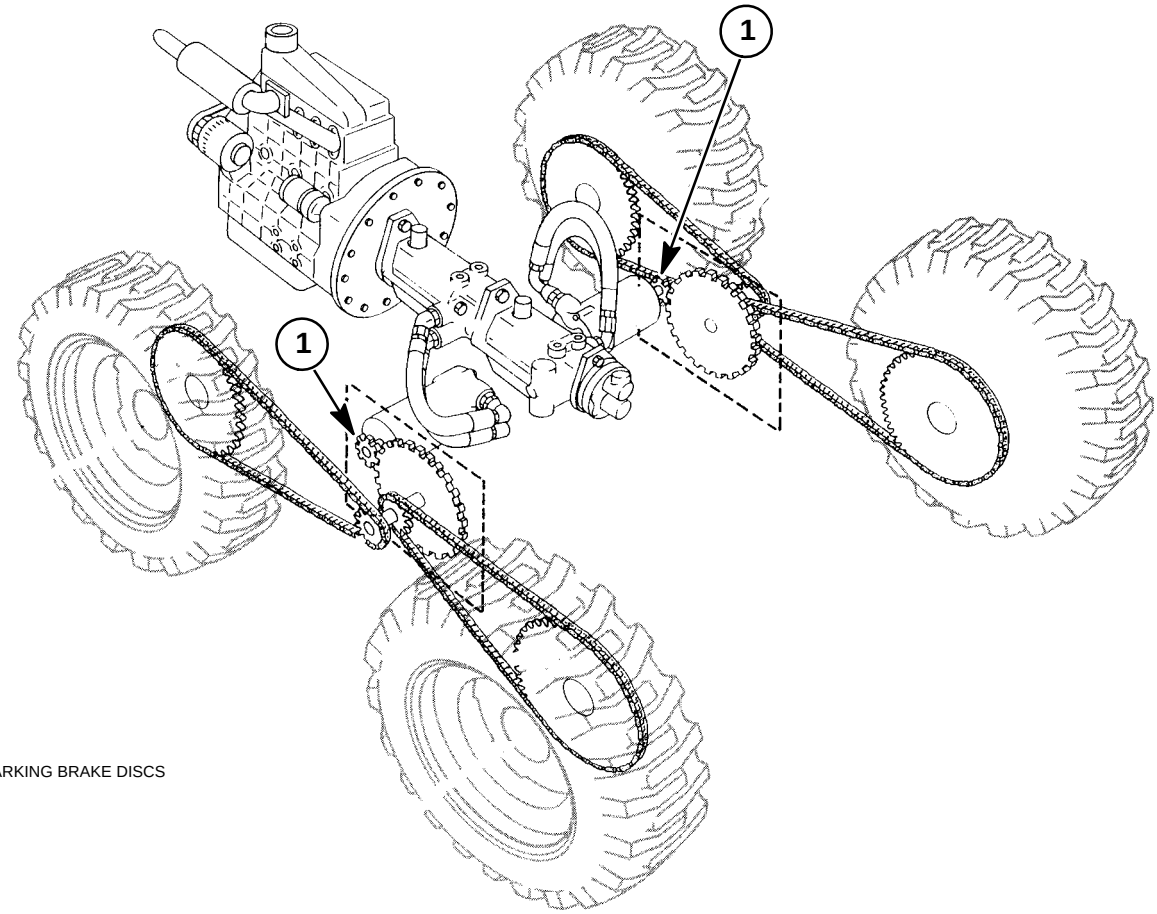

1 - PARKING BRAKE DISCS

5

https://truckmanualshub.com/

SPECIFICATIONS

Chain Case

Side Cover Bolt Torque	15 N·m (11 ft. lbs.)
Brake Caliper Mounting Bolt (center) Torque	20 N·m (15 ft. lbs.)
Brake Caliper Mounting Bolts (outer) Torque	70 N·m (52 ft. lbs.)
Drive Chain	#80
Front Chain Length (68 pitches)	1727.2 mm (68″)
Rear Chain Length (66 pitches)	1676.4 mm (66″)
Chain Tension	0 – 6 mm (0 - 1/4″) movement at tire tread
Lubrication	7.6 liters (2 gal.) each side - 10W-30API service SG-CE Oil

Other Materials

Description	Use
Ultra/Blue Silicone sealer	Gearbox mounting bolts Axle housing bolts Chain case cover and bolts Gearbox to chain case Brake caliper bolts Gearbox cover and bolts
Sealing Material	NH Ultra Blue silicone sealer NH #L81724 - 3.35-oz. tube (cord) NH #L82519DS - 8-oz. tube NH #L58775 - 10.2-oz. cartridge
Hydraulic Oil	SAE10W-30 motor oil-API Service SG-CE NH #9613313 - 1 qt. NH #9613314 - 2 1/2 gal. NH #9613358 - 1 L NH #9613360 - 20 L
Gear Oil	80W-90 API Service GL-5 Gear Oil NH #9613295 - 1 qt. NH #9613294 - 5 gal. NH #9613375 - 4 L
Grease	High viscosity lithium base NH #9613310 tube

NOTE: *Always use a noncorrosive silicone sealer to seal where required to prevent corrosion during the silicone curing process.*

https://truckmanualshub.com/

TROUBLESHOOTING

FINAL DRIVE/PARKING BRAKE SYSTEM

Before servicing or adjusting on the final drive/parking brake system, the skid-steer loader should be jacked up with the wheels off the ground.

Remove any attachment from the skid-steer loader boom, bucket, etc. Lower the boom to the lowered position or, if servicing requires the boom to be in the raise position, support the boom on the boom locks.

Raise the boom and lower onto boom lock pins, 1.

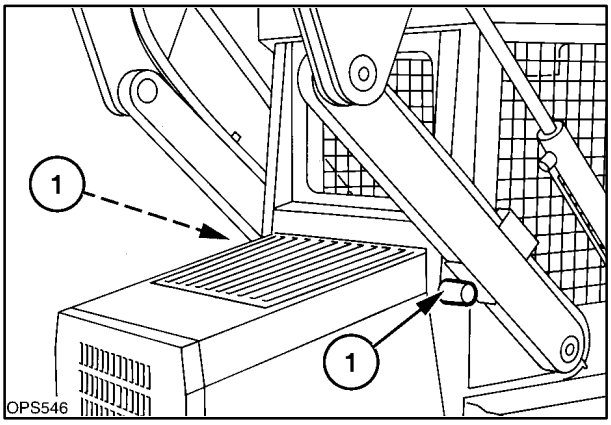

6

1. Raise boom above boom lock pins.
2. Engage boom lock pins.
3. Stop engine, ignition key “OFF” position.
4. Turn ignition key to the “ON” position.
5. Lower boom onto boom lock pins.
6. Turn the ignition key to the “OFF” position.

CAUTION

Never exit the loader with the boom in the raised position unless the boom is supported on the boom lock pins.

Never work under a raised boom unless it is properly supported by the boom lock pins.

Never work under a raised boom with an attachment mounted. Always remove the attachment from the loader.

Jack up the loader and support the loader with the wheels off the ground using adequate jack stands or blocks to securely support the loader.

Support the loader at the front of the final drive cases at 1, and at the rear at 2.

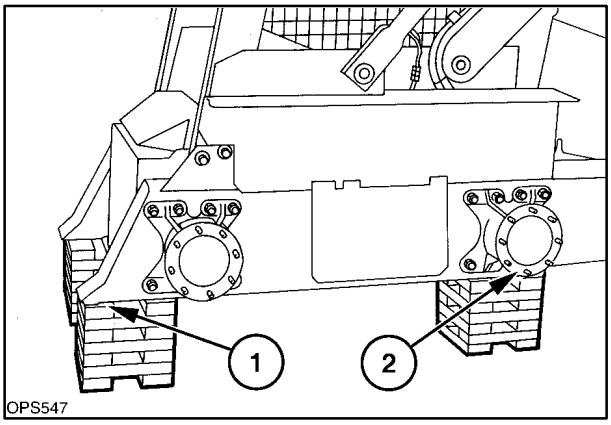

7

CAUTION

Never service a raised loader unless it is securely supported with adequate jack stands or blocks.

https://truckmanualshub.com/

TROUBLESHOOTING

PARKING BRAKE SYSTEM

PROBLEM	POSSIBLE CAUSES	CORRECTION
Parking brake will not hold loader	Park brake not engaged	Engage parking brake
	Brake not adjusted properly	Adjust parking brake
	Handle not operating or latching	Check handle components repair or replace
	Loose brake linkage	Inspect and repair linkage
	Worn brake pad	Inspect and repair brake pad
Parking brake will not release	Brake not adjusted properly	Adjust parking brake
	Handle not operating properly	Check handle components repair or replace
	Brake caliper not releasing	Check brake caliper and repair
Parking brake handle will not move or release	Handle not operating properly	Check handle components repair or replace
	Control linkage not moving	Check and repair linkage
	Brake caliper not releasing	Check brake caliper and repair
Grinding noise when operating	Handle not releasing properly	Check handle components repair or replace
	Brake not adjusted properly	Adjust parking brake
	Brake caliper not releasing	Check brake caliper and repair

https://truckmanualshub.com/

TESTING

PARKING BRAKE

Pre-test instructions:

* Operator in seat with seat belt buckled.

* Engine running at 1500 RPM.

* Park brake disengaged position.

STEP	TEST	RESULT	PROBABLE CAUSE AND CORRECTION
1	Push both drive controls forward equally and loader should move without restriction.	YES NO	Brake system OK. Parking brake not releasing, check control handle. If OK go to next step.
2			Parking brake linkage not free, check for loosen or binding linkage. If OK go to next step.
3			Parking brake not releasing check caliper and brake pad and repair.

Pre-test instructions:

* Operator in seat with seat belt buckled.

* Engine running at 1500 RPM.

* Park brake engaged position.

STEP	TEST	RESULT	PROBABLE CAUSE AND CORRECTION
1	Push both drive controls forward equally and loader should not move.	NO YES	Parking brake OK. Parking brake not adjusted properly. If OK go to next step.
2			Parking brake linkage loose or broken. If OK go to next step.
3			Parking brake caliper not operating properly. Check and repair.

https://truckmanualshub.com/

Op. 33 110

PARKING BRAKE

OPERATION

The parking brake system is a mechanically activated double disc brake system. The brake discs are attached to the hydrostatic motor shafts, 1, with a separate system located in each final drive case. Both brake systems are activated by a single control lever.

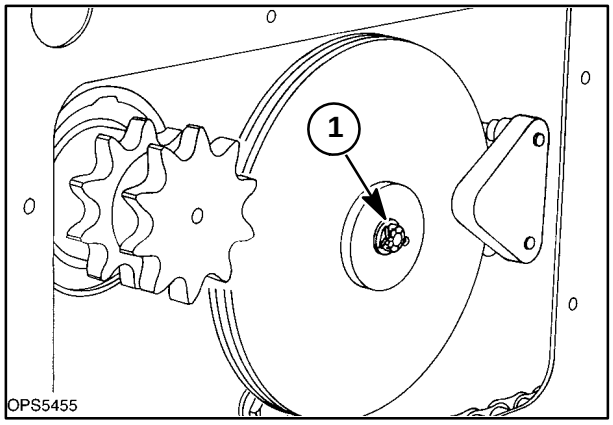

8

The parking brake control lever, 1, is located to the right of the operator's seat. When the lever is in the lower unlatched position, the brake is disengaged. When the lever is in the raised latched position, the brake is engaged.

When the parking brake is engaged and the hydrostatic control levers are stroked, the skid-steer loader should not move if the brake is adjusted properly.

The hydrostatic system is the primary brake for the skid-steer loader when the unit is in operation. The parking brake system is only for a stopped machine, to hold the unit in place and prevent rolling or creeping when parked.

The parking brake should always be engaged before exiting the skid-steer loader.

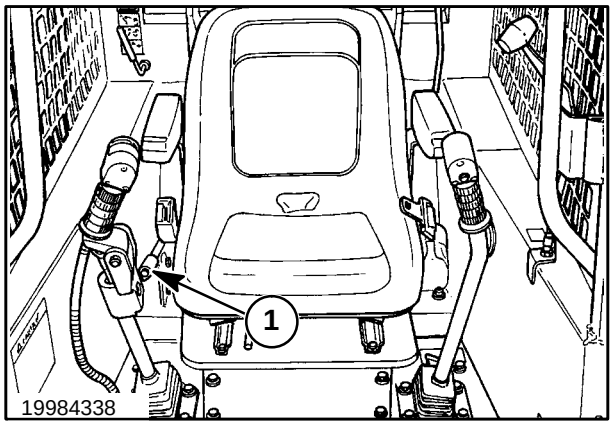

9

CAUTION

Always activate the parking brake before leaving the operator station. Never operate the skid-steer loader unless the brake is released.

https://truckmanualshub.com/

REMOVAL AND INSPECTION

To access and remove the parking brake control linkage, the seat can be raised and latched in the raised position. To access the brake disc and caliper assembly, the final drive inspection cover will need to be removed.

Op. 33 110 48

Removal

1. Lower the boom and attachment to the ground.
2. If the work is going to be done with the boom in the raised position, remove the attachment and raise the boom and rest on the boom lock pins, 1.

CAUTION

Never work under a raised boom unless it is properly supported by the boom lock pins.

Never work under a raised boom with an attachment. Always remove the attachment from the loader.

3. Securely block the skid-steer loader with all four wheels off the ground. Refer to Section 1 for more detailed information on properly supporting the skid-steer loader.

   Support the loader at the front of the drive cases at 1, and at the rear at 2.

CAUTION

Failure to securely support the skid-steer loader could result in movement of the loader causing serious injury or damage to the equipment.

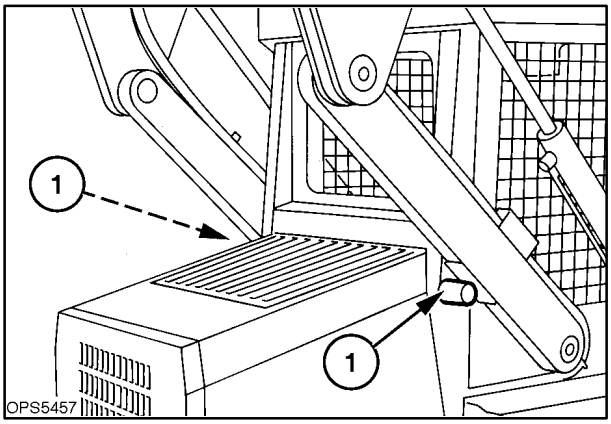

10

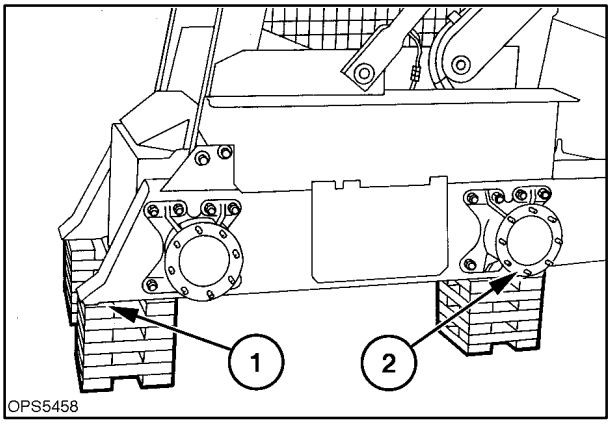

11

https://truckmanualshub.com/

4. Slide the seat to the most rear position and unlatch the seat pan and raise the seat and pan assembly to the raised latched position.

CAUTION

Before working under a raised seat make sure it is securely latched at 1, in the raised position.

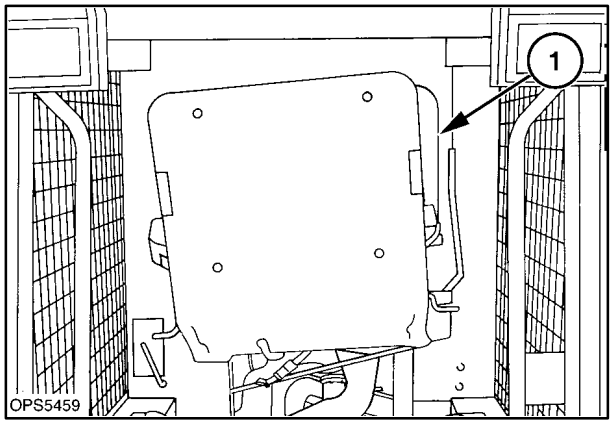

12

5. Remove the rear tire and wheel from the final drive and brake being serviced.
6. Clean the rear axle and final drive area to prevent debris from entering the final drive case.
7. Loosen the eight axle housing retaining nuts and washers, 1, on the rear axle and slide the axle forward to loosen the drive chain.
8. Remove the fender retaining hardware at 2, and remove the fender to access the spring and linkage.
9. Remove the final drive case center cover, 3.

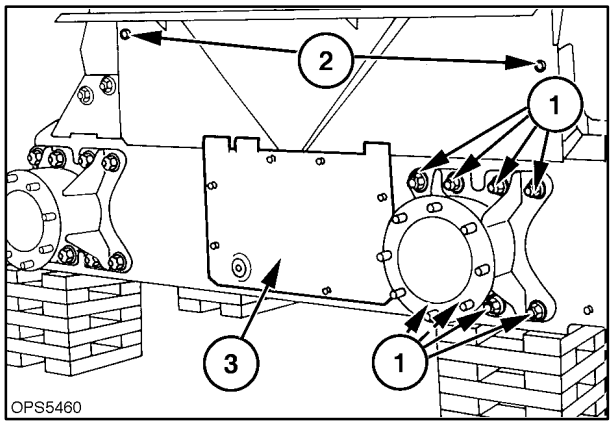

13

Op. 33 110 14

Brake Control Linkage Removal

1. Remove the handle retaining bolts, 1, slide the handle, button and spring, and latch plate assembly, 2, from the link, 3.

   Note the positioning of the internal latch plate for reassembly.

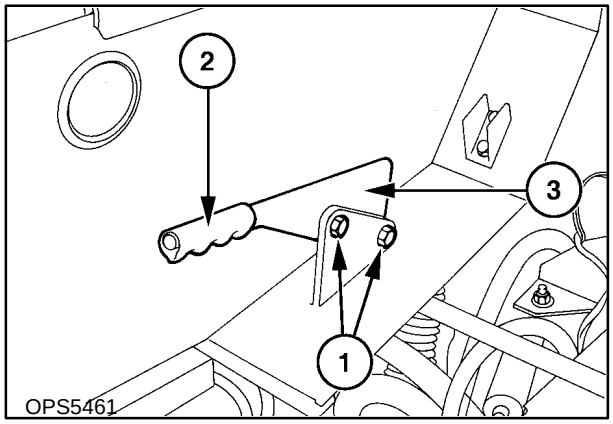

14

https://truckmanualshub.com/

Op. 33 110 30

2. To remove the control rod assembly, 1, remove the cotter pins from the spring links, 2.
3. Remove the left support bracket and hardware, 3, then pivot the rod assembly down and slide the control rod from the right support bracket.

   Remove the pivot bushings from supports and friction pad from rod.

4. Remove the lower cotter pin, 4, and remove the spring assemblies, 5, from the brake caliper actuator arm, 6.

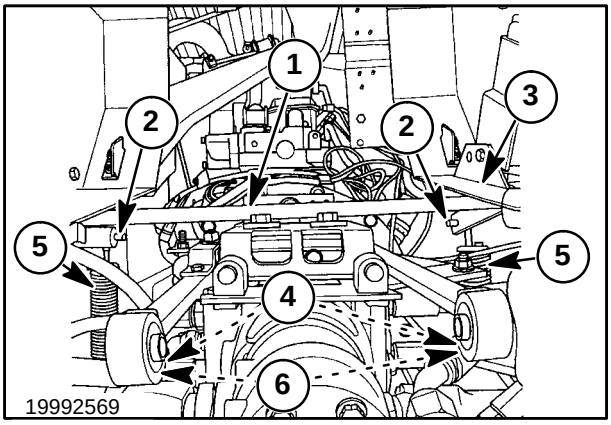

15

Parking Brake Control Linkage and Related Parts

Ref.	Description
1	Control handle and related parts
2	Control shaft, bearings, support
3	Spring assembly
	a. Spring
	b. Spring links (2)
4	Arm
5	Friction pad

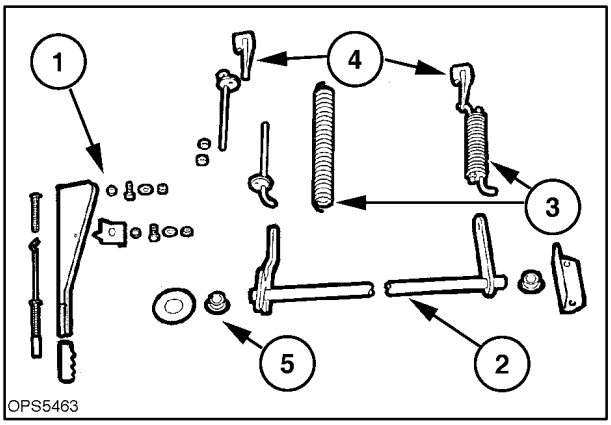

16

Spring Disassembly

1. Compress spring plate and spring, 1, to expose enough shaft to clamp vise grips, 2.
2. Remove roll pin, 3.

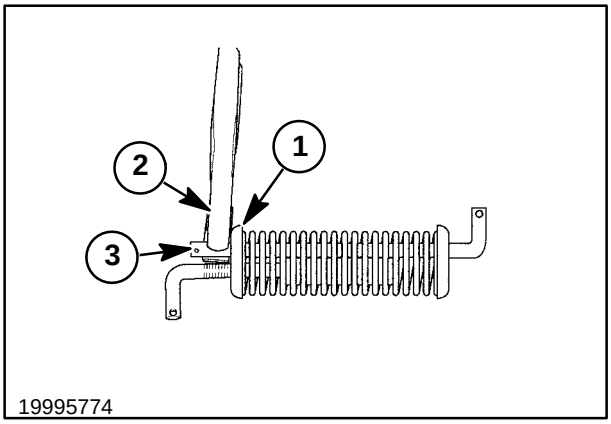

17

https://truckmanualshub.com/

Spring Brake Assembly Parts

1. Shaft Weld Assembly
2. Roll Pin
3. Spring Plate
4. Threaded Rod
5. Spring

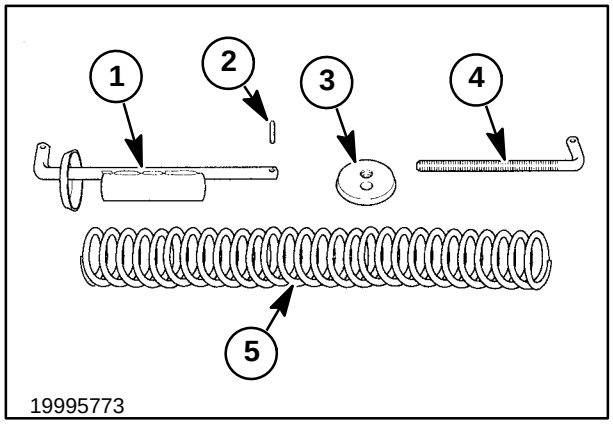

18

Inspection of Control Linkage Parts

1. Examine the latch plate, 1, and tab, 2, for bends or damage. If the latch plate looks like 1, replace with a new latch plate, 2, part #9844477.
2. Inspect the spring, 3, for correct free spring length, 66.7 ± 3.2 mm (2-5/8 ± 1/8″), 4. Replace if not within specification.
3. Inspect the button and rod assembly, 5. If worn in the hook area of the rod, replace.
4. Inspect the latch plate pivot bushing, 6. Replace if worn.

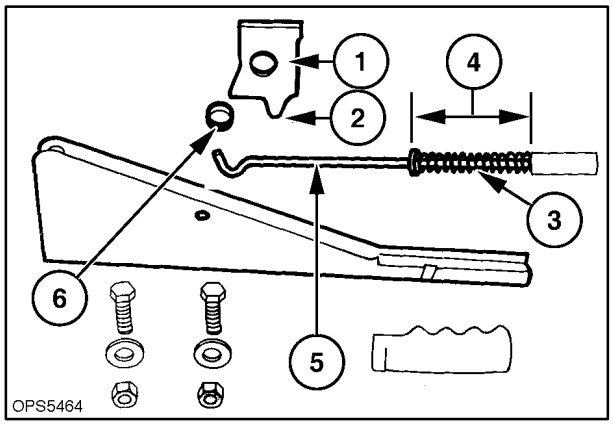

19

5. Inspect the control rod assembly, 1, friction pad, 2, and pivot bushings, 3, for wear. If worn, replace.
6. Inspect the spring assembly and check the spring free length, 1, 335.0 ± 12.7 mm (13-3/16 ± 1/2″). Replace if not within specification.

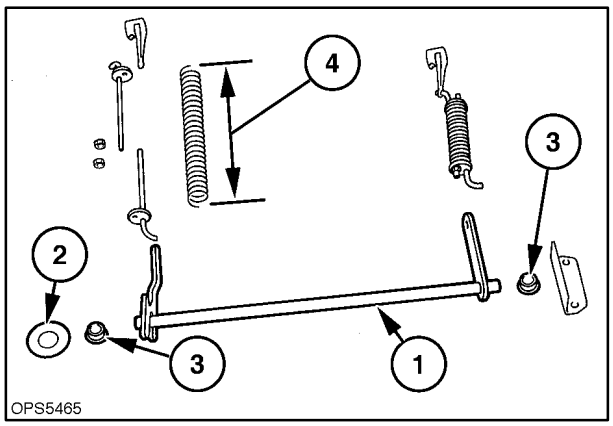

20

https://truckmanualshub.com/

Installation of Brake Control Linkage

1. Install the control rod assembly, 1, friction pad, 2, on right end of rod. Insert pivot bushing, 3, into supports, and slide the right end into support and pivot link, 3, up and install the left support, 4.

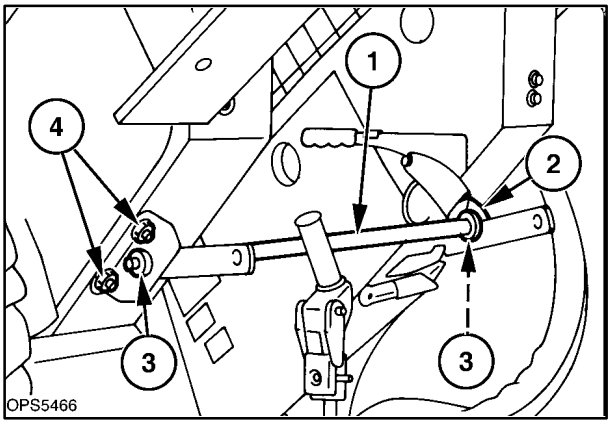

21

2. Insert the button rod, 1; spring, 2; and flat washer, 3, into lever at 4.
3. Insert the latch plate, 5, and bushing, 6, with the extended area, 7, as shown to the rear (engine side) of lever and position the button rod so the hook is back of the latch plate at 8. Reinstall the two retaining bolts, nuts and washers, through the lever assembly and the control rod.

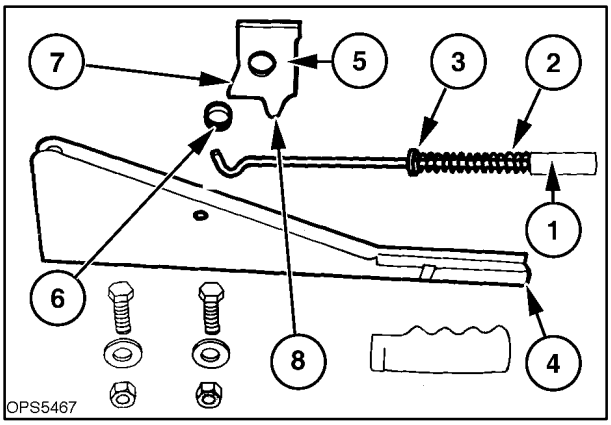

22

Spring Reassembly

1. Reassemble the spring, 1, rod weld assembly, 2, and spring plate, 3.
2. Compress spring, 1, and plate, 3, enough to clamp vise grips onto end of rod weld assembly at 4, to install roll pin, 5.
3. Install roll pin, 5.
4. Thread rod assembly, 6, into rod weld assembly.

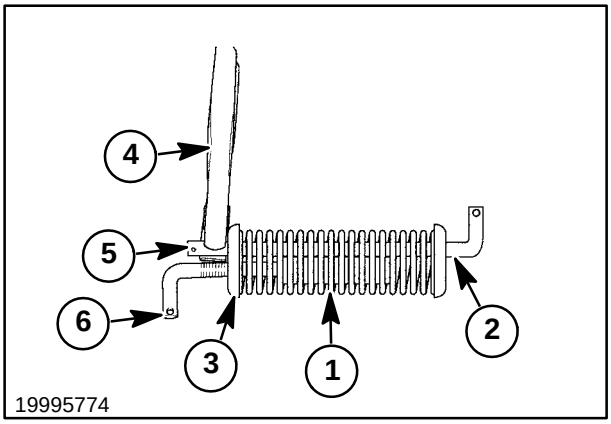

23

https://truckmanualshub.com/

5. Adjust the spring assembly length by threading rod, 1, in or out to obtain an overall length of 8-5/8″ at 2.

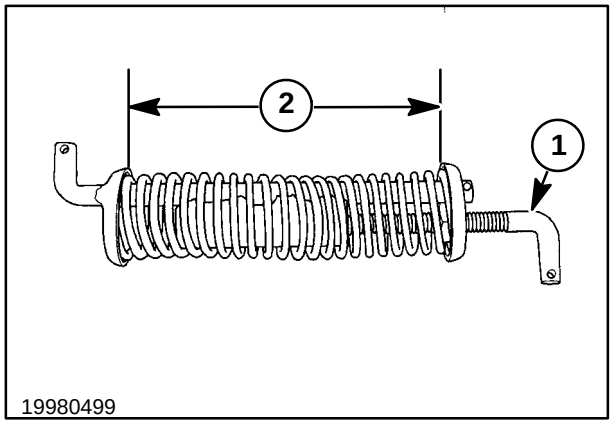

24

Op. 33 110 48

Brake Caliper and Disc Removal
The loader must be properly supported with all four wheels off the ground.

1. Remove the rear axle assembly.
2. Remove the rear drive chain from the drive sprocket and push chain to the rear.
3. Engage the parking brake.
4. Remove the center brake disc retaining bolt and washer, 1.
5. Disengage the parking brake.
6. Loosen the caliper retaining hardware, 2, from the inside of cab. Thread the two bolts from the outside caliper assembly, 3. DO NOT remove bolts from caliper support at this time.
7. Remove the outside disc, 4.
8. Remove center section of caliper, 1, spacers, 2, and now remove the retaining bolts.
9. Remove inside disc, 3.

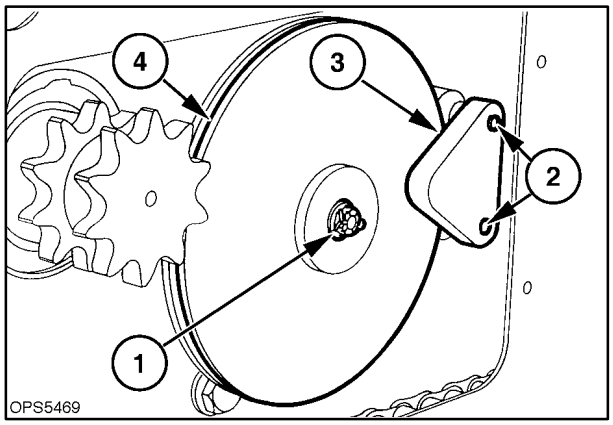

25

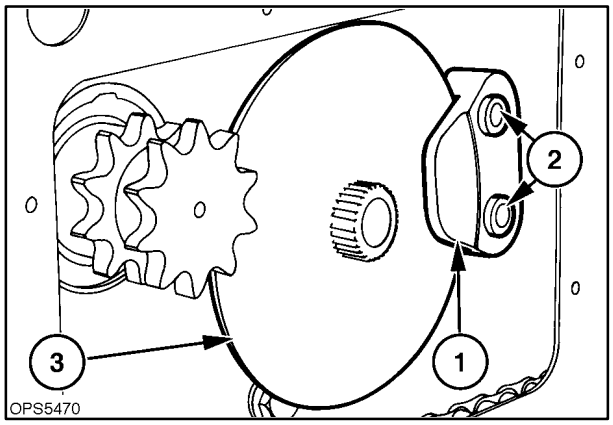

26

https://truckmanualshub.com/

10. Remove brake friction puck, 1, and spacer plate, 2.

NOTE: *The spacer plate is thinner than the friction puck and must be inserted into brake caliper first upon reassembly.*

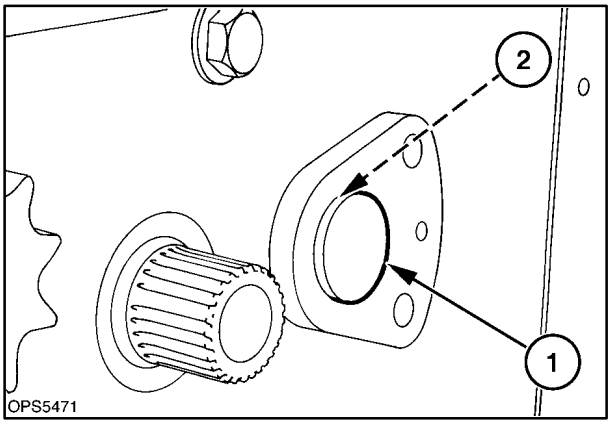

27

11. Remove the caliper support retaining bolt, 1, and remove the support from the loader.
12. Remove the setscrew, 2, from the arm, 3, and slide the arm from the shaft, 4.
13. Rotate the caliper shaft, 4, from the support.

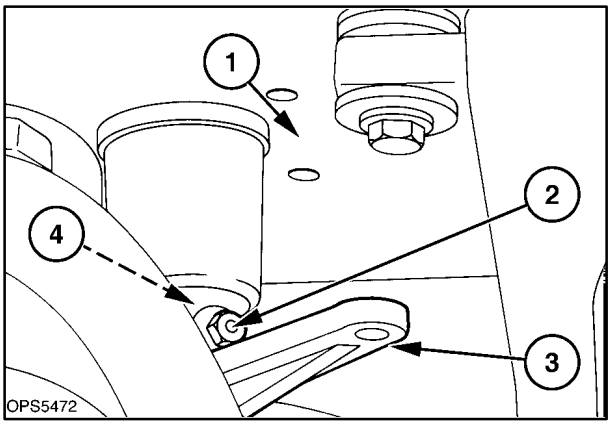

28

Brake Caliper and Disc Parts Inspection
Thoroughly clean all parts of sealing material etc. before inspection.

Brake caliper and related parts

Ref.	Description
1	Brake disc retaining hardware
2	Brake disc (2)
3	Brake puck (1)
4	Spacer plate (1)
5	Caliper support and hardware
6	Shaft
7	Center caliper plate
8	Bushings and hardware
9	Outer caliper section

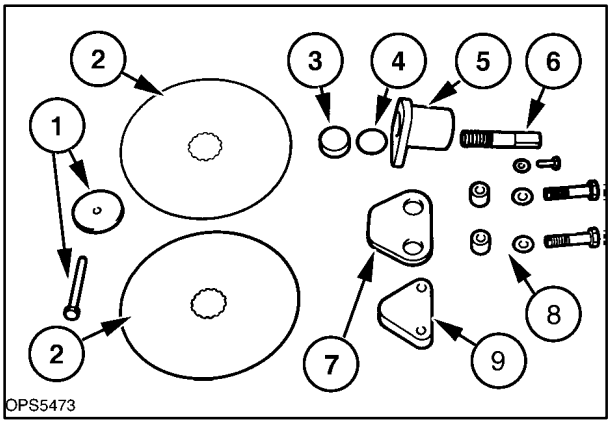

29

https://truckmanualshub.com/

1. Inspect the brake disc for wear in the clamp area, 1, and splines, 2. The disc should also be flat. If worn severely or bent, replace.

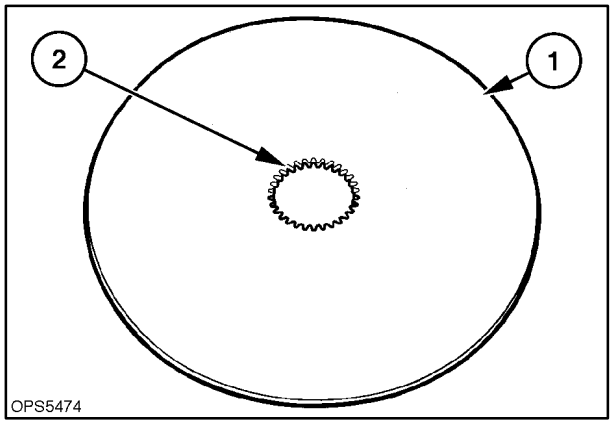

30

2. Inspect the brake friction puck, 1. If worn severely, replace.
3. The spacer plate, 2, will show a small amount of wear in the center next to the shaft at 3. This is normal.

NOTE: *The spacer plate, 2, must be installed into the caliper support, 4, first during reassembly.*

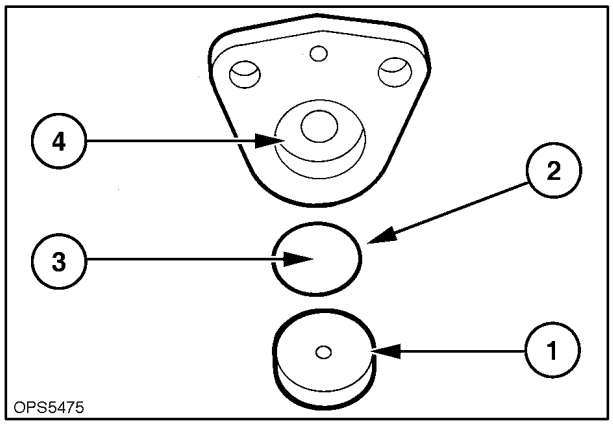

31

4. Inspect the caliper center plate, 1, and bushings, 2, for wear. Replace if worn.

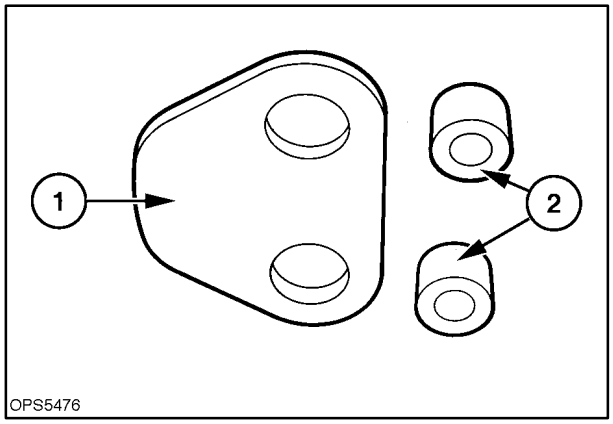

32

https://truckmanualshub.com/

Inspect the caliper outer plate for wear. Replace if worn.

Inspect the thread area, 2, and if damaged, replace outer plate.

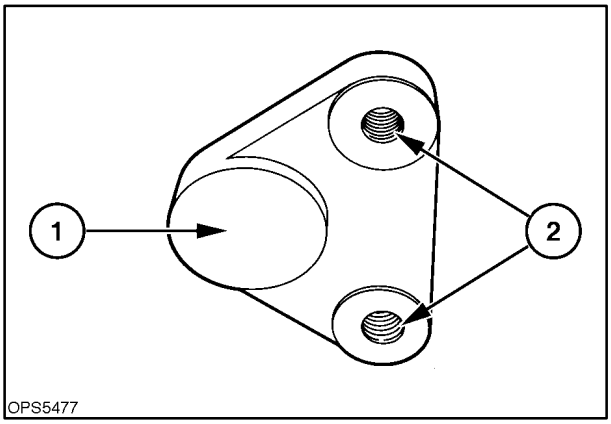

33

5. Inspect the caliper support, 1, and shaft thread area, 2. If damaged and shaft rotates hard in support, replace the damaged part. Inspect the shaft seal, 3; replace if damaged. Inspect the control arm, 4, for damaged splines; replace as required.

NOTE: *The brake caliper support and shaft will be right or left thread depending which side of machine it is from. The right threaded assembly is for the right side of unit; the left threaded assembly is for the left.*

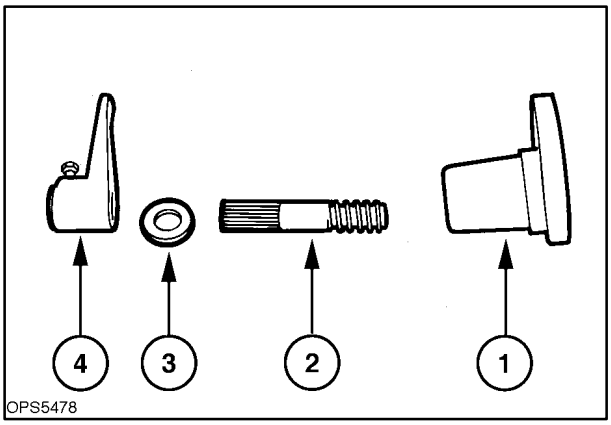

34

Brake Caliper and Disc Reassembly

1. Install a new seal, 1, in support at 2, if required. Apply a coating of never-seize lubricant on the threads of the shaft, 3, and in the support and thread the shaft into the support at 2. Put a bead of noncorrosive silicone sealer around the end of support at 4.

NOTE: *The brake caliper support and shaft will be right or left thread depending which side of machine it is from. The right threaded assembly is for the right side of unit; the left threaded assembly is for the left.*

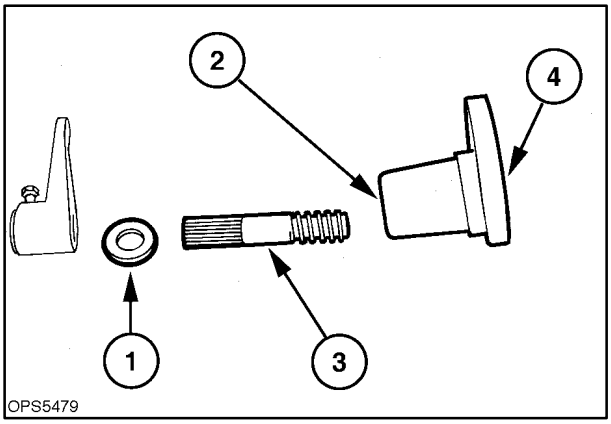

35

https://truckmanualshub.com/

2. Install the correct, right or left, caliper support, 1, in the final drive case. Position and install retaining bolt, 2, and tighten to 12 N·m (9 ft. lbs.).

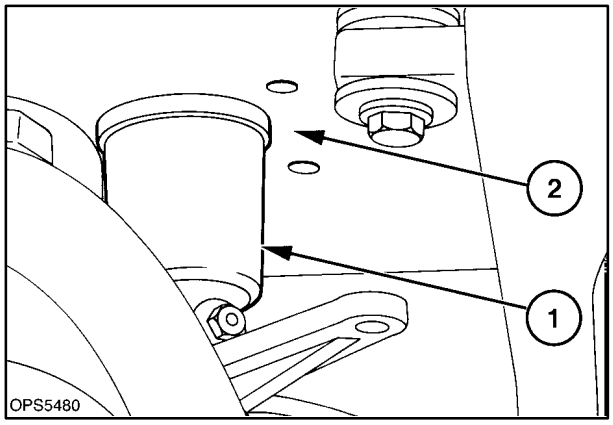

36

3. Install the spacer plate, 2, next to the end of shaft, then the brake friction puck, 1.

NOTE: *The thin spacer plate must be inserted into the caliper support first, then the friction puck, to insure proper brake operation.*

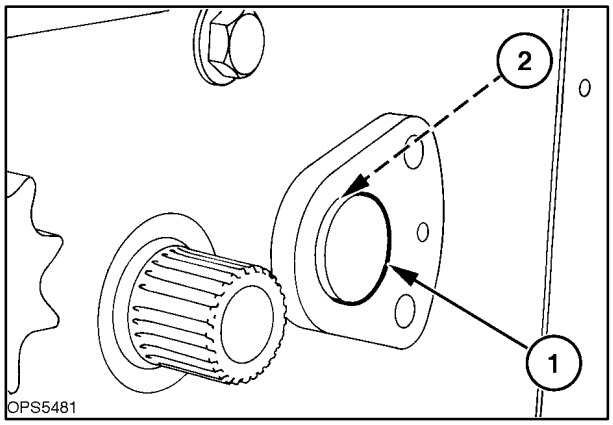

37

4. Install the inside brake disc, 1, onto splined motor coupler shaft.
5. Put a bead of silicone sealer around the caliper retaining bolts and insert in support.
6. Slide the spacers, 2, and center of caliper, 3, over bolts.

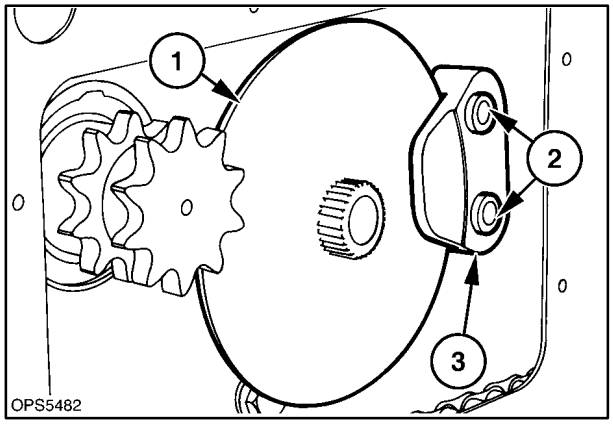

38

https://truckmanualshub.com/

7. Install outer brake disc, 1, on motor shaft.
8. Thread caliper retaining bolts into outer section of caliper, 2, and tighten to 70 N·m (52 ft. lbs.). Check the center section of the caliper, 3, to make sure it is free to move.

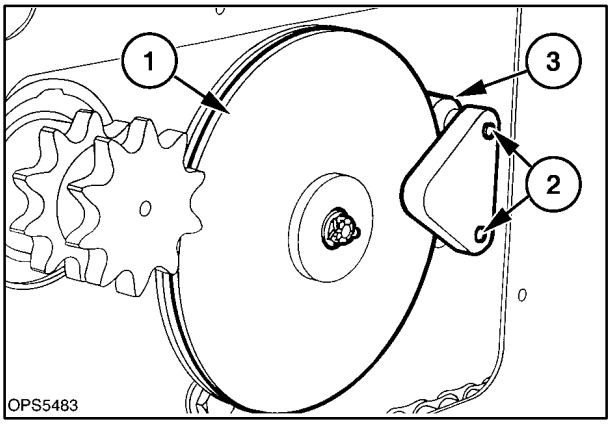

39

9. Put a bead of sealer on end of motor coupler and install the brake disc retaining bolt and large flat washer, 1. Tighten to 35 N·m (26 ft. lbs.).

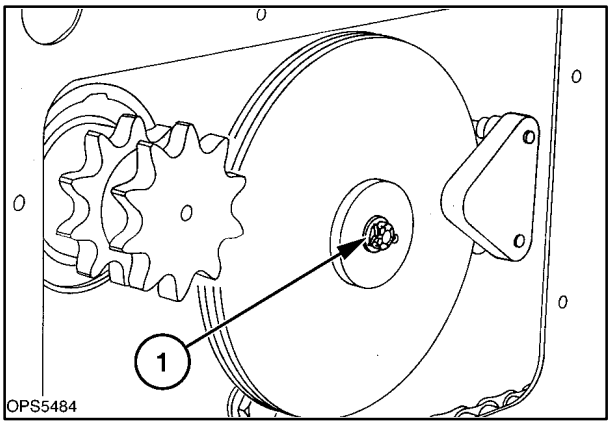

40

10. Thread the shaft, 1, into the support, 2, to remove all play in brake caliper and disc.
11. Rotate and position the control arm, 3, so the spring link can be reconnected at 4.
    - Then slide the control arm onto the shaft.
    - Position the control arm on the shaft for clearance between arm and other components when the brake is engaged and disengaged.
    - Tighten the retaining screw, 5, in the control arm.
    - Install cotter pin in spring link at 4.

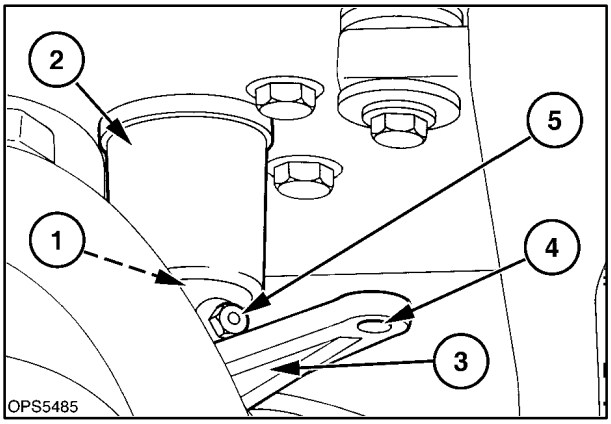

41

https://truckmanualshub.com/

12. Reinstall the drive chain over the drive sprocket at 1.

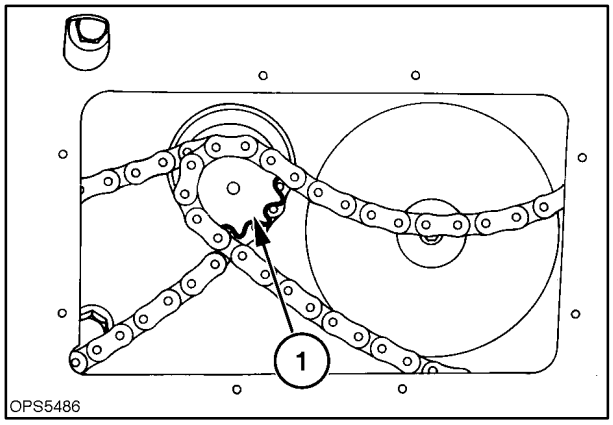

42

13. Install the rear axle assembly. Slide the axle assembly to the rear and tighten the drive chain to obtain a movement of 0 - 6 mm (0 - 1/4″) movement at the outer tire tread.

    Tighten the retaining bolts, 1, to 190 N·m (140 ft. lbs.).

14. Reseal and install the final drive cover, 3.
15. Check the final drive case oil level and add as required, 4.
16. Reinstall fender, 5, and all other shields removed for the repair.

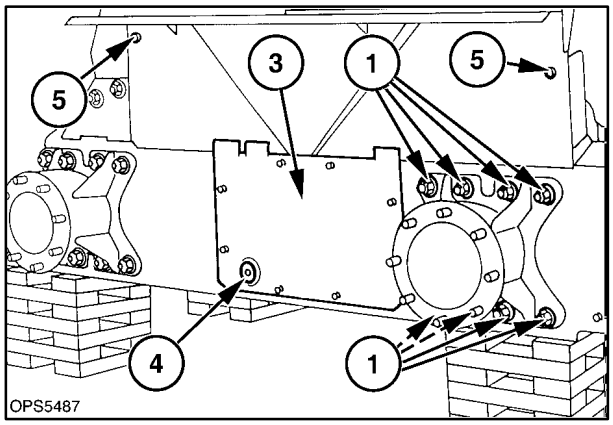

43

Parking Brake and Linkage Adjustment
When the parking brake is properly adjusted and engaged it will hold a powered loader.

Spring Adjustment
Parking brake in the disengaged position.

1. Measure the spring length from the top to the bottom of the spring retainer at 1.
2. Adjust the spring assembly by threading rod, 2, in or out to obtain an overall length of 8-5/8″ at 1.

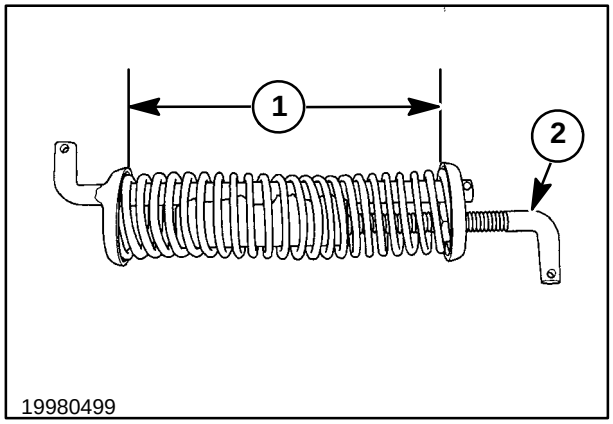

44

https://truckmanualshub.com/

Caliper Adjustment

Parking brake in the disengaged position.

1. Unhook the lower pin of the spring assembly, 1, from the control arm at 3.
2. Push the arm, 2, down to turn the shaft into the caliper support to remove any play in caliper and disc.
3. Loosen the setscrew in arm at 4, and slide arm off the shaft.
4. Rotate the arm up so the spring can be rehooked and slide the arm on the corresponding shaft splines.
5. Position the control arm on the shaft for clearance between arm and other components when the brake is engaged and disengaged.
6. Tighten the retaining screw in the control arm.
7. Connect the spring to the arm and install cotter pin in spring link at 3.

NOTE: *The parking brake control lever must be in the lower (disengaged position) for parking brake adjustment.*

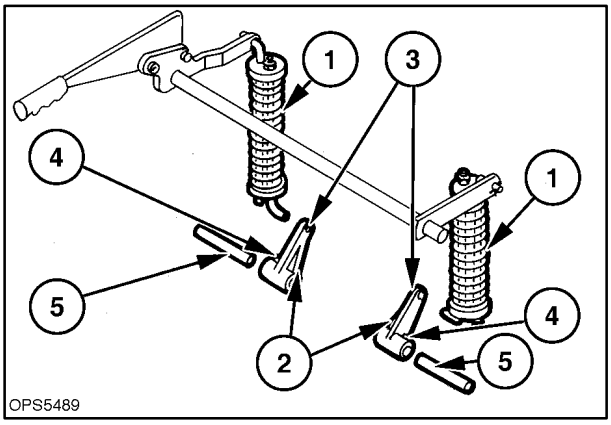

45

https://truckmanualshub.com/

LABOR GUIDE

The following labor amounts are listed as a guide only. Working conditions and experience will vary the time the job actually takes to complete each job.

Job Description	Hours
Brake	
Handle - remove, rebuild, replace	1.0 hr.
Spring - remove, rebuild, replace	0.5 hr.
Disc - remove and replace	1.0 hr.
Caliper - remove and replace	1.5 hr.
Friction Disc (puck) - remove and replace	1.0 hr.
Adjust parking brake	0.5 hr.

https://truckmanualshub.com/

SECTION 35 - HYDRAULIC SYSTEM

Chapter 1 - Valves, Gear Pump, Cylinders, and Pedal Controls

CONTENTS

Section	Description	Page
35 000	General Information	35-3
	Hydraulic System Compatibility	35-4
	Boom Cylinder Pivot Pins	35-6
	Boom Cylinder Pivot Pin Location and Machine Usage	35-6
	Control Valve Power Beyond	35-7
	Specifications	35-8
	Troubleshooting	35-12
	Auxiliary Boom Hydraulics Troubleshooting	35-16
	Hydraulic System Testing	35-18
	Hydraulic System Oil Flow	35-24
	Control Valve - Bucket Spool Shifted	35-25
	Control Valve - Boom Spool Shifted	35-26
	Control Valve - Auxiliary Spool Shifted	35-27
35 710 02	Main System Pressure Tests	35-28
	Checking Main System Pressure at Boom Cylinders	35-30
	Checking Main System Pressure at Bucket Cylinders	35-31
	Checking Main System Pressure at Auxiliary Boom Hydraulic Quick Couplers	35-32
	Boom Circuit Relief Valve Test	35-33
	Gear Pump Flow Efficiency Test	35-35
	Boom and Bucket Spool Lock Solenoid Test	35-39
	Hydraulic, Hydrostatic System Air Ingress Test	35-41
	Control Valve Specifications	35-43
35 724 50	Control Valve Removal	35-44
35 724 54	Control Valve Disassembly and Inspection	35-45
	Control Valve Parts Inspection	35-49
	Control Valve Reassembly	35-50
	Control Valve Reinstallation	35-53
	Hydraulic Pump Specifications	35-54
35 710 10	Hydraulic Pump Removal	35-55
35 710 20	Hydraulic System Pump Removal/Disassembly (Without High Flow)	35-56
35 710 20	Hydraulic System Pump and High Flow Removal/Disassembly	35-56
	High Flow Pump Parts Inspection	35-58

https://truckmanualshub.com/

	Hydraulic System Pump Parts Inspection	35-59
	Hydraulic System Pump Reassembly/Installation (Without High Flow)	35-61
	Hydraulic System Pump and High Flow Pump Reassembly/Installation	35-64
	New Hydraulic System Pump Installation (Without High Flow)	35-70
	New Hydraulic System Pump/High Flow Pump Installation	35-72
	Gear Pump Start-Up Procedure	35-78
	Cylinders, Boom and Bucket	35-79
35 710 10	Boom Cylinder Removal	35-81
35 730 18	Boom Cylinder Disassembly	35-83
	Boom Cylinder Parts Inspection	35-84
	Boom Cylinder Reassembly	35-85
	Boom Cylinder Reinstallation	35-87
35 730 10	Bucket Cylinder Removal	35-87
35 730 13	Bucket Cylinder Disassembly	35-88
	Bucket Cylinder Parts Inspection	35-89
	Bucket Cylinder Reassembly	35-90
	Bucket Cylinder Reinstallation	35-92
	Pedal Controls	35-93
35 724 16	Pedal Removal (With Boom and Bucket Pedal Controls)	35-93
	Pedal Inspection (With Boom and Bucket Pedal Controls)	35-93
	Pedal Reinstallation (With Boom and Bucket Pedal Controls)	35-95
35 724 16	Pedal Removal (With Boom and Bucket Hand Controls)	35-98
	Pedal Inspection (With Boom and Bucket Hand Controls)	35-99
	Pedal Reinstallation (With Boom and Bucket Hand Controls)	35-100
35 300	Hydraulic Cooling, Filter, Reservoir System	35-103
35 705	Filter System	35-104
35 705 04	Filter Removal	35-104
35 705 05	Base Removal	35-104
	Reassembly	35-105
	Oil Cooler	35-105
35 300 10	Oil Cooler Removal	35-105
	Oil Cooler Reassembly	35-106
35 300	Oil Reservoir	35-106
35 300 10	Oil Reservoir Removal	35-107
	Oil Reservoir Reinstallation	35-108
	Adapting Attachments	35-109
	Labor Guide	35-110

https://truckmanualshub.com/

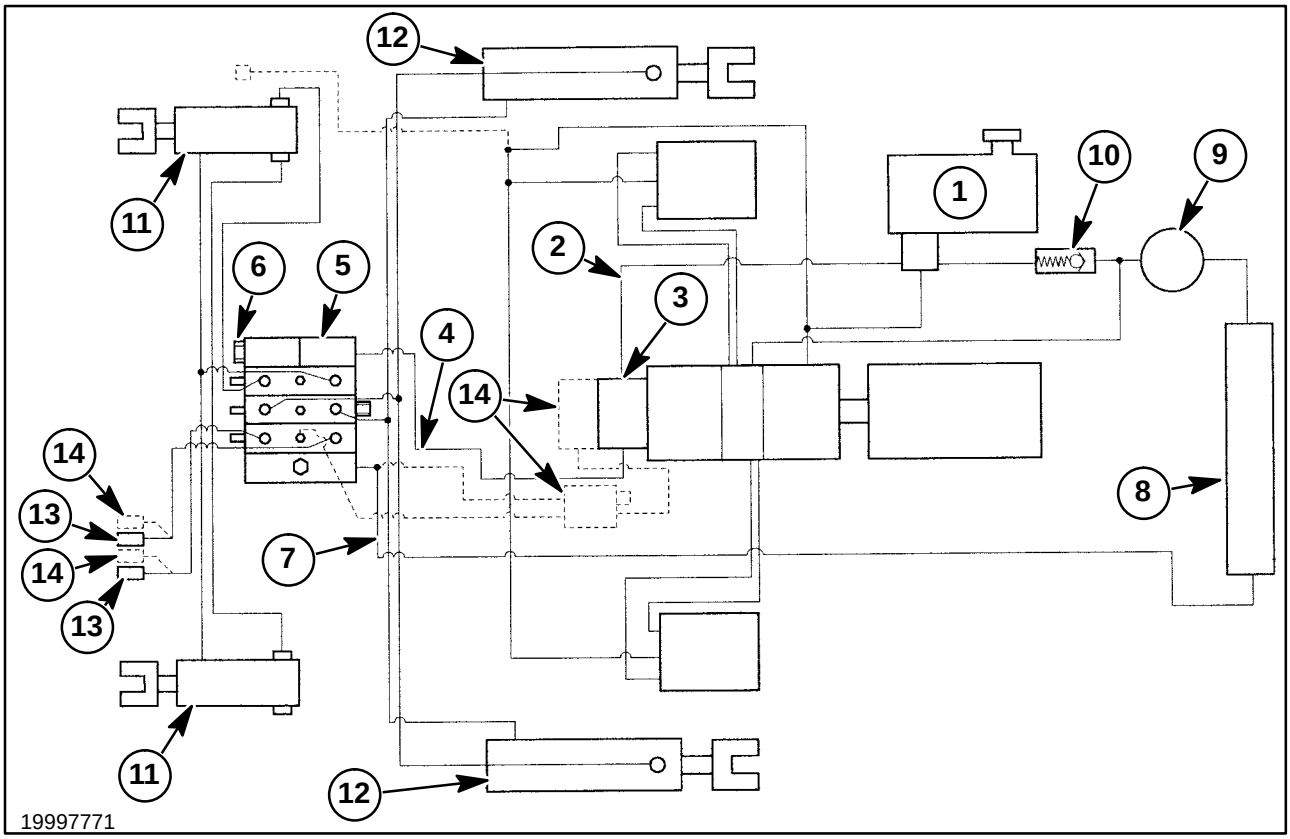

1

Op. 35 000

GENERAL INFORMATION

The hydraulic system provides hydraulic oil to the boom and bucket, and the return oil provides charge oil for the hydrostatic drive system. On skid steers equipped with the auxiliary boom hydraulic kit, system oil will be provided to quick couplers at the front of the boom to operate hydraulic attachments. The hydraulic system is an open center type system. The gear pump provides continuous oil flow through the system to the boom, bucket circuits, auxiliary boom circuit, if equipped, and the hydrostatic drive charge circuit.

A open center system means the first control valve function has priority over the next function in line.

NOTE: *The return oil must follow the normal return path from the control valve to the oil cooler/filter and back to the hydrostatic charge pressure inlet on the transmissions or severe damage to the hydrostatic system may occur.*

Figure 1 shows the hydraulic circuit and components for the LS160 and LS170 skid steers.

The hydraulic system is built with the following components and their location.

1. Hydraulic reservoir - Right front of engine compartment
2. Suction line - From reservoir to the gear pump under operator's seat
3. Gear pump - Under the operator's seat
4. Pressure line - From gear pump to control valve
5. Control valve (three spool) - Under operator's step shield
6. Main system relief valve - In control valve
7. Return line - From control valve to oil cooler
8. Oil cooler - Engine side of radiator in engine compartment
9. Filter - Right rear of engine compartment through rear door
10. Charge check valve - After filter and before the reservoir
11. Bucket cylinders
12. Boom cylinders
13. Auxiliary boom hydraulics
14. Optional high flow kit - Dealer installed kit - Refer to Section 88 - "Accessories" for more information.

https://truckmanualshub.com/

HYDRAULIC SYSTEM COMPATIBILITY

There are six questions that must be answered before adapting attachments that require hydraulic oil power.

1. What is the hydraulic pressure requirement, minimum and maximum? Are they higher than the maximum pressure of the model?

Model	Maximum Pressure
LS160 and LS170	170-176 bar (2500 - 2600 PSI)

2. What is the hydraulic oil flow requirement? Is it more than the highest total flow rate of the skid-steer loader model?

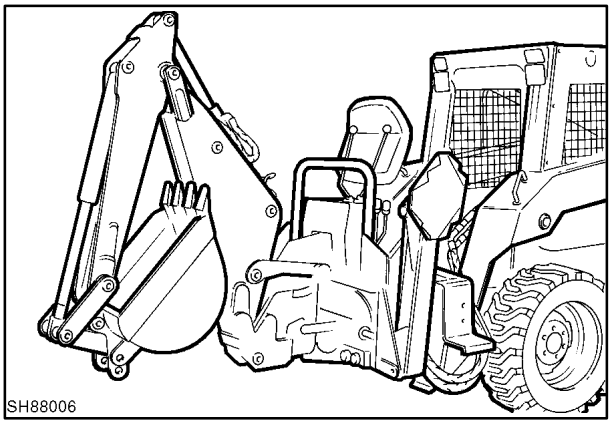

2

Model	Standard Hydraulics	High Flow Hydraulics
LS160	15.5 GPM (58.7 l/min.) @2900 RPM @1000 PSI (68 bar)	24.0 GPM (90.8 l/min.) @2900 RPM @1000 PSI (68 bar)
LS170	17.7 GPM (67.0 l/min.) @2900 RPM @1000 PSI (68 bar)	26.2 GPM (99.2 l/min.) @2900 RPM @1000 PSI (68 bar)

NOTE: *When using the High-Flow system, 3/4″ quick couplers must be used or high system backpressure may result.*

3. Will the attachment accept oil flow in both directions?

   If “YES”, nothing is required.

   If “NO”, install a check valve or cross into the attachment return line to prevent reverse oil flow to the attachment.

   Examples: Backhoes and trees spades with a separate control valve do not accept oil flow in both directions.

4. Must the attachment “Free Wheel” to a STOP?

   If “YES”, a crossover relief connection must be installed on the attachment side to allow the attachment to free wheel to a stop after the skid-steer loader hydraulics is turned off.

   If “NO”, nothing is required.
   Example: Snow blowers must free wheel to a stop.

5. Will the attachment accept hydraulic system backpressure?

   If “YES”, nothing is required.

   If “NO”, the attachment will not function properly on a New Holland skid-steer loader. Normal backpressure for New Holland skid-steer skid steers is between 200 - 250 PSI.

   Examples: Post drivers, some breakers, and some hand held hydraulic tools do not accept system backpressure.

   If all the skid-steer loader oil flow is not required to operate an attachment (e.g., shaver post driver), a flow divider can be installed into the hydraulic oil circuit on the attachment. The flow divider sends the required oil flow to the attachment and the remainder back to the normal skid-steer loader hydraulic circuits.

   Model LS160 and LS170 skid steers must have a minimum of 22.7 l/min. (6 GPM) returning through the main hydraulic system at all times, required to charge the hydrostatic system.

https://truckmanualshub.com/

6. Does the attachment have a separate case drain oil line?

   If “NO”, nothing is required.

   If “YES”, install a separate case drain line to return the attachment case drain oil directly to the hydraulic oil reservoir.

   Example: Cold planners have a separate case drain oil line.

NOTE: *Most attachment case drains will not accept backpressure and must drain directly into the reservoir.*

NOTE: *Skid steers equipped with High Flow Hydraulics have a separate case drain coupler and return line attached to the right boom arm.*

7. Does the attachment require circuit relief in the bucket circuit?

   If “NO”, nothing is required.

   If “YES”, install a bucket circuit relief valve on front of the control valve.

   Example: Some mini-backhoes attach like a bucket, and require a bucket circuit relief.

https://truckmanualshub.com/

BOOM CYLINDER PIVOT PINS

When the main boom, upper and lower boom links and cylinders are removed, the figure and chart here may be used for proper pin placement.

The figure and chart show the boom and cylinder tapered and straight pivot pins, location/description, quantity used, and part number.

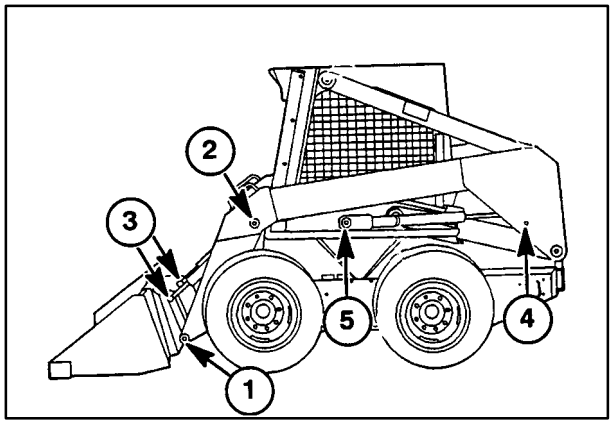

3

BOOM AND CYLINDER PIVOT PIN LOCATION AND MACHINE USAGE

Ref.#	Description	Qty.	Part Number
1	Mounting Plate Pivot	2	86501434
2	Upper Bucket Cylinder Pivot	2	86501430
3	Lower Bucket Cylinder Pivot	2	9614349
4	Upper Boom Cylinder Pivot	2	86521982
5	Lower Boom Cylinder Pivot	2	86504316

https://truckmanualshub.com/

CONTROL VALVE POWER BEYOND

Control valve, used on all skid-steer skid steers, has a plugged power-beyond port, 1. This port is not normally used with New Holland-supplied attachments, as these can be operated through the auxiliary boom hydraulics (the third control valve spool), 2.

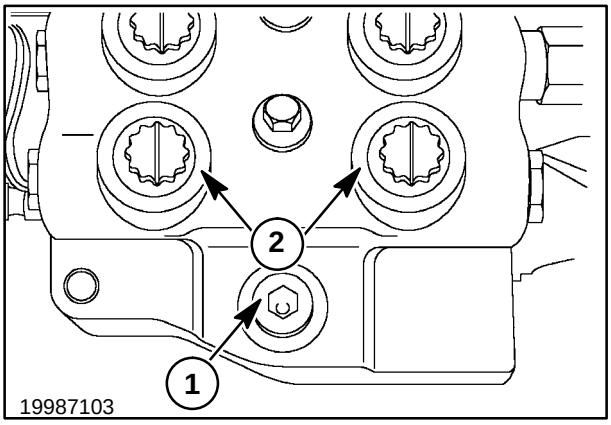

4

To use the power-beyond port for a second oil supply to additional attachments, remove the factory power-beyond plug to access inner hole, 1. This hole must be plugged to divert oil to the power beyond instead of normal oil flow to the out port.

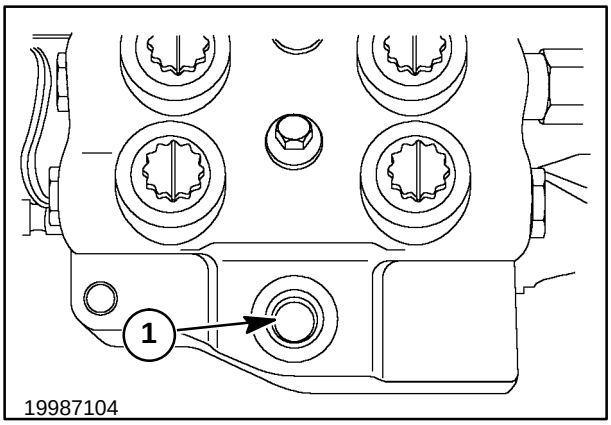

5

Install part #236622 allen head type pipe plug in the inner port, 1. Tighten the plug securely. A regular O ring type fitting can now be inserted in the power-beyond port.

IMPORTANT: *Once the power-beyond fitting and plug is installed, oil must be constantly returned from the attachment valve into the return line, 2. If oil is blocked at the power-beyond port, hydraulic system overheating and component damage could occur. Also, engine horsepower requirements will increase. A tee fitting can be inserted in the return line at 2, for attachment oil return.*

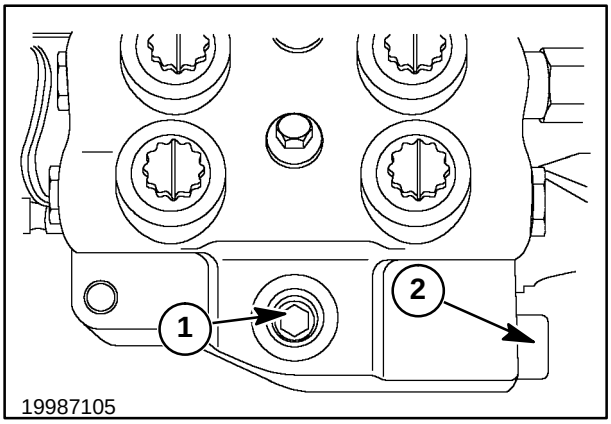

6

https://truckmanualshub.com/

SPECIFICATIONS

SKID STEER MODEL **LS160**

MAIN CONTROL VALVE

Type . . . . . 3-spool open center

Relief Valve . . . . . 170 - 177 bar (2500 - 2600 PSI) Nonadjustable

Circuit Relief (boom) . . . . . 238 bar (3500 PSI) Nonadjustable

Electrical solenoid boom and bucket spool locks (controlled by the EIC) will lock the control valve spools when the operator is out of the seat or the ignition key is in the “OFF” position with the spools in the neutral position.

HYDRAULIC PUMP

Type . . . . . Gear pump

Output @ 2900 RPM - @ 1000 PSI . . . . . 15.5 GPM (58.7 LPM)

BOOM CYLINDERS

Type . . . . . Double Acting

Bore Diameter . . . . . 63.5 mm (2.5″)

Stroke . . . . . 470.15 mm (18.51″)

Cycle Times (Seconds)
- Raise 3.5
- Lower 3.5

BUCKET CYLINDERS

Type . . . . . Double Acting

Bore Diameter . . . . . 57.15 mm (2.25″)

Stroke . . . . . 454.15 mm (17.88″)

Cycle Times (Seconds)
- Curl back 2.2
- Curl down (dump) 2.8

RESERVOIR

Capacity . . . . . 6 gal. (22.7 L)

Fluid Type . . . . . SAE 10W-30 API Service SH/CG4 motor oil

Filter Spin-on Canister . . . . . 10 micron

https://truckmanualshub.com/

TORQUE SPECIFICATIONS

SKID STEER MODEL **LS160**

Control Valve

Control Valve Retaining Hardware	24 N·m (18 ft. lbs.)
Control Valve Plugs (large)	38 N·m (28 ft. lbs.)
Control Valve Plugs (small)	31 N·m (23 ft. lbs.)
Circuit Relief Valve (boom)	38 N·m (28 ft. lbs.)
Spool Lock Solenoids	15 N·m (11 ft. lbs.)
Solenoid Mounting Block Hardware	16 N·m (12 ft. lbs.)
Main System Relief Valve	51 N·m (38 ft. lbs.)
Spool Cap Assembly Hardware	16 N·m (12 ft. lbs.)
Plug, BYD Port	38 N·m (28 ft. lbs.)

Boom Cylinders

Piston Locknut Torque	230 N·m (170 ft. lbs.)
Cylinder Gland Torque	306 N·m (225 ft. lbs.)
Lower Pivot Pin Hardware	338 N·m (250 ft. lbs.)
Upper Pivot Pin Hardware	38 N·m (28 ft. lbs.)

Bucket Cylinders

Piston Cap Screw Torque	386 N·m (285 ft. lbs.)
Cylinder Head Torque	285 N·m (210 ft. lbs.)
Lower Pivot Pin Hardware	38 N·m (28 ft. lbs.)
Upper Pivot Pin Hardware	108 N·m (80 ft. lbs.)

Gear Pump

Pump Mounting Hardware	39 N·m (29 ft. lbs.)
Pump Body Hardware	35 N·m (26 ft. lbs.)

OTHER MATERIALS

Sealing Material	NH Ultra Blue silicone sealer NH #L81724 - 3.35 oz. tube (cord) NH #L82519DS - 8 oz. tube NH #L58775 - 10.2 oz. cartridge
Hydraulic Oil	SAE10W-30 motor oil-API Service SH/CG4 NH #9613313 - 1 qt. NH #9613314 - 2 1/2 gal. NH #9613358 - 1 L NH #9613360 - 20 L

NOTE: *Always use a noncorrosive silicone sealer to prevent damage to the components being sealed during the silicone curing process.*

https://truckmanualshub.com/

SPECIFICATIONS

SKID STEER MODEL **LS170**

MAIN CONTROL VALVE

Type . . . . . 3-spool open center

Relief Valve . . . . . 170 - 177 bar (2500 - 2600 PSI) Nonadjustable

Circuit Relief (boom) . . . . . 238 bar (3500 PSI) Nonadjustable

Electrical solenoid boom and bucket spool locks (controlled by the EIC) will lock the control valve spools when the operator is out of the seat or the ignition key is in the “OFF” position with the spools in the neutral position.

HYDRAULIC PUMP

Type . . . . . Gear pump

Output @ 2900 RPM - @ 1000 PSI . . . . . 17.7 GPM (67.0 LPM)

BOOM CYLINDERS

Type . . . . . Double Acting

Bore Diameter . . . . . 63.5 mm (2.5″)

Stroke . . . . . 470.15 mm (18.51″)

Cycle Times (Seconds)
- Raise 2.7
- Lower 2.3

BUCKET CYLINDERS

Type . . . . . Double Acting

Bore Diameter . . . . . 57.15 mm (2.25″)

Stroke . . . . . 454.15 mm (17.88″)

Cycle Times (Seconds)
- Curl back 1.54
- Curl down (dump) 1.75

RESERVOIR

Capacity . . . . . 6 gal. (22.7 L)

Fluid Type . . . . . SAE 10W-30 API Service SH/CG4 motor oil

Filter Spin-on Canister . . . . . 10 micron

https://truckmanualshub.com/

TORQUE SPECIFICATIONS

SKID STEER MODEL **LS170**

Control Valve

Control Valve Retaining Hardware	24 N·m (18 ft. lbs.)
Control Valve Plugs (large)	38 N·m (28 ft. lbs.)
Control Valve Plugs (small)	31 N·m (23 ft. lbs.)
Circuit Relief Valve (boom)	38 N·m (28 ft. lbs.)
Spool Lock Solenoids	15 N·m (11 ft. lbs.)
Solenoid Mounting Block Hardware	16 N·m (12 ft. lbs.)
Main System Relief Valve	51 N·m (38 ft. lbs.)
Spool Cap Assembly Hardware	16 N·m (12 ft. lbs.)
Plug, BYD Port	38 N·m (28 ft. lbs.)

Boom Cylinders

Piston Locknut Torque	230 N·m (170 ft. lbs.)
Cylinder Gland Torque	306 N·m (225 ft. lbs.)
Lower Pivot Pin Hardware	338 N·m (250 ft. lbs.)
Upper Pivot Pin Hardware	38 N·m (28 ft. lbs.)

Bucket Cylinders

Piston Cap Screw Torque	386 N·m (285 ft. lbs.)
Cylinder Head Torque	285 N·m (210 ft. lbs.)
Lower Pivot Pin Hardware	38 N·m (28 ft. lbs.)
Upper Pivot Pin Hardware	108 N·m (80 ft. lbs.)

Gear Pump

Pump Mounting Hardware	39 N·m (29 ft. lbs.)
Pump Body Hardware	35 N·m (26 ft. lbs.)

OTHER MATERIALS

Sealing Material	NH Ultra Blue silicone sealer NH #L81724 - 3.35 oz. tube (cord) NH #L82519DS - 8 oz. tube NH #L58775 - 10.2 oz. cartridge
Hydraulic Oil	SAE10W-30 motor oil-API Service SH/CG4 NH #9613313 - 1 qt. NH #9613314 - 2 1/2 gal. NH #9613358 - 1 L NH #9613360 - 20 L

NOTE: *Always use a noncorrosive silicone sealer to prevent damage to the components being sealed during the silicone curing process.*

https://truckmanualshub.com/

TROUBLESHOOTING

When performing a test on the hydraulic system, use the proper test procedures and test equipment.

Before testing, lower the attachment to the ground or remove the attachment from the loader.

If testing is to be performed with a raised boom, make sure the boom is raised above and resting on the boom lock pins.

Before opening the hydraulic system, clean the area thoroughly to prevent contaminating the system.

Before opening the hydraulic system, relieve all pressure from the system.

Before testing the hydraulic system, check the hydraulic oil level.

Before testing the hydraulic system, the oil must be at normal operating temperature.

If testing requires the skid-steer loader to be raised, use adequate blocking and/or jack stands to securely support the loader.

CAUTION

When connecting test equipment into the hydraulic system, relieve the pressure in the system. stop the engine, turn the ignition switch to the “ON” Position and operate all hydraulic control valve circuits to relieve pressure. Turn the ignition switch to the “OFF” Position.

WARNING

Gauges, gauge fittings, and hoses must have operating pressure ratings of at least 25% higher than the highest pressures of the system.

Never adjust or replace the relief valves to get higher pressures than those specified by the equipment manufacturer.

Fluid under pressure can have sufficient force to penetrate the skin, causing serious personal injury. Always protect the skin and eyes from escaping fluid under pressure.

Before disconnecting lines or fittings, be sure to turn off the skid steer engine and relieve all pressure. Before applying pressure to the system, be sure all connections are tight and that lines, pipes, and hoses are not damaged.

If injured by escaping fluid, obtain medical assistance at once. Serious infection or reaction can develop if medical treatment is not administered immediately.

Remove any attachment from the mounting plate before loosening or disconnecting any hydraulic lines.

CAUTION

Use adequate blocking and/or jack stands to insure that the loader is safely supported with all four wheels off the ground.

https://truckmanualshub.com/

PROBLEM	POSSIBLE CAUSE	CORRECTION
Noisy system pump	Oil level too low	Add proper oil and amount
	Oil of incorrect viscosity	Replace oil and filter
	Suction line plugged	Clean or replace line
	Reservoir air vent plugged	Clean reservoir cap
	Air leaks at pump inlet line fittings	Tighten or replace line and fittings
		Check for air leak in hydrostatic pump case drain line from hydrostatic pumps to section side of gear pump
Hydraulic reservoir oil foaming/milky	Air or water in system	Check for air leak on suction side of pump and check reservoir fill neck for leak to allow water to enter system
		Check for air leak in hydrostatic pump case drain line from hydrostatic pumps to section side of gear pump
Low system pump oil flow, under pressure	Plugged inlet line	Clean or replace line
	Low oil level in reservoir	Add proper oil and amount
	Air leaks at pump inlet line and fittings	Tighten or replace line and fittings
		Check for air leak in hydrostatic pump case drain line from hydrostatic pumps to section side of gear pump
	Worn pump body	Replace body if ID of body exceeds acceptable limits. Refer to service manual.
No system pressure	Inoperative relief valve	Replace valve
	Plugged inlet line	Clean or replace inlet line
	Worn hydraulic pump	Rebuild or replace pump
	Pump shaft broken	Replace relief valve and replace or repair pump
	Internal leakage in control valve or cylinders	Rebuild components
Boom and bucket will not function	Service/Run switch in the service position	Put Service/Run switch in the run position
	Boom and bucket solenoids malfunctioning	Check solenoid operation
	Pump shaft broken	Replace relief valve and replace or repair pump

https://truckmanualshub.com/

PROBLEM	POSSIBLE CAUSE	CORRECTION
Boom arms will not raise or raise slowly	Low oil flow from pump	Plugged inlet line or worn pump
	Low relief valve pressure	Check pressure, replace valve if pressure is not correct
	Control linkage binding	Free linkage
	Boom solenoid malfunctioning	Check solenoid operation
	Boom and bucket overloaded	Reduce load
	Cylinder shafts are bent	Rebuild or replace cylinders
	Boom arms are binding at pivots	Remove binding and lubricate linkage
	Boom circuit relief valve malfunctioning	Check circuit relief valve pressure setting
	Bucket tilt valve spool is not returning to center position, binding	Correct binding, spool centering spring damaged.
	Auxiliary hydraulic handle locked in detent position	Return handle to neutral position
Boom or bucket leaks down or low pressure	Control valve O rings leaking on plugs or circuit relief valve	Repair control valve with seal kit and replace O rings and back-up rings
Boom and/or bucket will not move smoothly, jerky.	Air leaks at pump line and fittings	Tighten or replace line and fittings
Bucket will not tilt back, tilts back slowly or tilts forward slowly	Low oil flow from pump	Plugged inlet line, clean or replace line
	Worn or damaged pump	Check pump flow, rebuild or replace pump as necessary
	Valve spool is not in correct position, spool binding	Free control linkage, centering spring damaged
	Bucket solenoid malfunctioning	Check solenoid operation
	Cylinder shafts are bent	Rebuild or replace cylinders
	Cylinder seals are leaking	Rebuild cylinders
	Bucket is overloaded	Reduce load
	Auxiliary hydraulic handle locked in detent position	Return handle neutral
Bucket cylinder pin will not take grease	Pin drilled incorrectly	Replace with new pin

https://truckmanualshub.com/

PROBLEM	POSSIBLE CAUSE	CORRECTION
Hydraulic system hot	Low oil flow pump	Plugged inlet line, clean or replace line
	Main control valve linkage or spool binding or damaged	Check and correct linkage
	Auxiliary boom hydraulic control not in neutral	Lock handle in neutral when not in use
	Hydraulic oil cooler restricted	Clean oil cooler
	Leaking cylinder packing	Repair cylinders
	Main system relief valve low pressure	Check main system pressure
	Hydraulic attachment being over used	Back off and let system cool down, DO NOT operate at or close to relief pressure
Oil filter indicator light stays on	Oil filter clogged	Change filter
	Incomplete circuit	Check the DkGn/O wire and connections
	Undersize tubes, hoses, or fittings	Replace any undersize tubes, hoses, or fittings
	Filter base	Replace if pressure differential across filter is over 40 PSI

https://truckmanualshub.com/

AUXILIARY BOOM HYDRAULICS TROUBLESHOOTING

PROBLEM	POSSIBLE CAUSES	CORRECTION
No oil flow to quick couplers	Broken control linkage	Check and repair linkage
	Inoperative quick coupler	Repair or replace
	Plugged supply line	Clean or replace
	Control valve plugs leaking oil to return	Check O ring and back-up washer on plugs
	Inoperative gear pump	Check and repair
Control will not hold in detent position	Loose linkage	Repair
	Misadjusted linkage	Repair
	Inoperative control valve spool (binding)	Check and repair
	Inoperative control valve detent cap	Check and repair
Hydraulic system overheats when auxiliary hydraulics is in use	Restriction in return line	Check and repair
	Inoperative quick coupler	Repair or replace
	Restriction in attachment	Check and repair
	Operating at, or close to, relief pressure	Operate at lesser loads
	Relief pressure to low	Check operating pressure
	Plugged oil cooler not allowing cooling air to pass through	Clean oil cooler
Hydraulic system overheats when auxiliary hydraulics is not in use	Control handle shifted slightly	Return control to neutral and lock
	Control linkage not adjusted properly	Adjust linkage
	Control valve spool binding	Check and repair

https://truckmanualshub.com/

Adjustments Control Handle Locked, 1, In Neutral

Adjust the length of rod, 2, by threading the ball joints, 3, on or off, at both ends of the rod to set the link, 4, vertical. Check adjustment by shifting the hydrostatic control lever forward and reverse. If the rod length is set correctly, there should be no movement in the link, 4, as the rod, 5, moves.

With the control handle locked in neutral and the control valve spool centered in the neutral position, adjust the length of rod, 6, with yoke, 7, to allow the installation of the yoke pin.

When the loader is operated, there should be no noise in the hydraulic system when in neutral.

NOTE: *When using a hydraulic attachment, all oil must be returned through the standard return system to provide charge oil to the hydrostatic system.*

IMPORTANT: *If sufficient oil is not provided for the hydrostatic system, severe damage to the hydrostatic system will occur.*

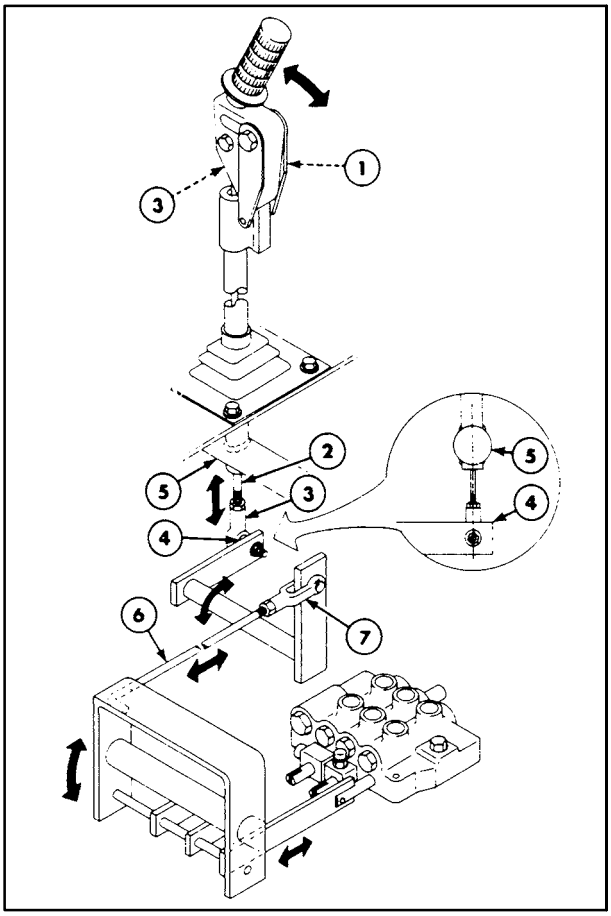

7

https://truckmanualshub.com/

HYDRAULIC SYSTEM TESTING

Foot or hand controls and control valve spool locks:

Pretest instructions:
* Hydraulic oil reservoir oil at proper oil level
* Operator in seat
* Service/Run switch in “RUN” position
* Seat belt fastened
* Ignition switch in the “OFF” position

STEP	TEST	RESULT	PROBABLE CAUSE AND CORRECTION
1	Foot and/or hand controls, (boom and bucket) Controls should not move	NO YES	System OK Check linkage to control valve spools, if OK go to next step.
2			Check control valve spools for centering, if OK go to next step.
3			Check for bent control valve spools, if OK go to next step.
4			Check spool lockout solenoid operation, if not OK refer to solenoid testing

Foot or hand controls and control valve spool locks:

Pretest instructions:
* Hydraulic oil reservoir oil at proper oil level
* Operator in seat
* Service/Run switch in “RUN” position
* Seat belt fastened
* Ignition switch in the “ON” position

STEP	TEST	RESULT	PROBABLE CAUSE AND CORRECTION
1	Foot and/or hand controls, (boom and bucket) Controls should move	YES NO	System OK Check linkage to control valve spools, if OK go to next step.
2			Check control valve spools for centering, if OK go to next step.
3			Check for bent control valve spools, if OK go to next step.
4			Check spool lockout solenoid operation, if not OK refer to solenoid testing

https://truckmanualshub.com/

Foot or hand control and control valve spool lock solenoids:

Pretest instructions:
* Hydraulic oil reservoir oil at proper oil level
* Operator in seat
* Service/Run switch in “RUN” position
* Seat belt fastened
* Ignition switch in the “ON” position

STEP	TEST	RESULT	PROBABLE CAUSE AND CORRECTION
1	Solenoid Solenoid plunger should move from valve spool.	YES NO	System OK Check for battery voltage at solenoid wire connection, if OK replace solenoid. If not OK go to next step.
			Set in seat and buckle seat belt in sequence, if not OK check operation of seat belt buckle. If OK go to next step.
			Check wires from solenoid to EIC board, if OK go to next step.
			Check EIC board operation

Electronic instrument cluster (EIC) hydraulic oil temperature light:

Pretest instructions:
* Hydraulic oil reservoir oil at proper oil level
* Operator in seat
* Service/Run switch in “RUN” position
* Seat belt fastened
* Ignition switch in the “ON” position
* Engine running half throttle, 1500 RPM

STEP	TEST	RESULT	PROBABLE CAUSE AND CORRECTION
1	Electronic instrument cluster (EIC) Hydraulic oil temperature light should be off	YES NO	System OK Check hydraulic oil temperature, if OK go to step 3. If not OK go to next step.
2			Check oil cooler and radiator for restricted air flow.
3			Check oil temperature sender for proper operation.

https://truckmanualshub.com/

Electronic instrument cluster (EIC) hydraulic oil filter light:

Pretest instructions:
* Hydraulic oil reservoir oil at proper oil level
* Operator in seat
* Service/Run switch in “RUN” position
* Seat belt fastened
* Ignition switch in the “ON” position
* Engine running half throttle, 1500 RPM

STEP	TEST	RESULT	PROBABLE CAUSE AND CORRECTION
1	Electronic instrument cluster (EIC) Hydraulic oil filter light should be off.	YES NO	System OK Replace oil filter, if problem still exists go to next step.
2			Check filter sender and wires.

Boom operation:

Pretest instructions:
* Operator in seat
* Service/Run switch in “RUN” position
* Seat belt fastened
* Ignition switch in the “ON” position
* Engine running half throttle, 1500 RPM

STEP	TEST	RESULT	PROBABLE CAUSE AND CORRECTION
1	Boom movement Boom should move freely through full range when the foot or hand controls are moved.	YES NO	System OK Check for binding in boom linkage, if OK go to next step.
2			Check for bent cylinders, if OK go to next step.
3			Check hydraulic system oil flow and pressure, if OK go to next step.
4			Check cylinders for internal damage.
5	Boom movement Boom should raise smoothly with no jerking	YES NO	System OK Check for air in the hydraulic system. Check, tighten, or replace suction line and fittings. Check for air leak in hydrostatic pump case drain line from the hydrostatic pumps to the suction side of gear pump.

https://truckmanualshub.com/

Boom lift check test:

Pretest instructions:
* Operator in seat
* Service/Run switch in “RUN” position
* Seat belt fastened
* Ignition switch in the “ON” position
* Engine running half throttle, 1500 RPM

STEP	TEST	RESULT	PROBABLE CAUSE AND CORRECTION
1	Boom stopped midrange and restarted, the boom should start raising without dropping first	YES NO	System OK Check for a leaking lift check valve, broken spring, or scored plunger and/or seat. If OK go to next step.
2			Check cylinders for leaking packing.
3			Check O ring and backup washer on circuit relief valve and O ring on front plug in control valve.

Boom drift down test:

Pretest instructions:
* Operator in seat
* Service/Run switch in “RUN” position
* Seat belt fastened
* Ignition switch in the “ON” position
* Engine running half throttle, 1500 RPM

STEP	TEST	RESULT	PROBABLE CAUSE AND CORRECTION
1	Boom stopped midrange should hold in position with no visual movement	YES NO	System OK Check control valve spool for centering, if OK go to next step.
2			Check for leaking packing on cylinders, if OK go to next step.
3			Check boom circuit relief valve, if OK go to next step.
4			Check control valve for leakage.
5			Check O ring and backup washer on circuit relief valve and O ring on front plug in control valve.

https://truckmanualshub.com/

Bucket operation:

Pretest instructions:
* Operator in seat
* Service/Run switch in “RUN” position
* Seat belt fastened
* Ignition switch in the “ON” position
* Engine running half throttle, 1500 RPM

STEP	TEST	RESULT	PROBABLE CAUSE AND CORRECTION
1	Bucket movement Bucket should move freely through full range when the foot or hand controls are moved.	YES NO	System OK Check for binding in the bucket pivots, if OK go to next step.
2			Check for bent cylinders, if OK go to next step.
3			Check hydraulic system oil flow and pressure, if OK go to next step.
4			Check cylinders for internal damage.
5	Boom movement Boom should raise smoothly with no jerking	YES NO	System OK Check for air in the hydraulic system. Check, tighten, or replace suction line and fittings. Check for air leak in hydrostatic pump case drain line from the hydrostatic pumps to the suction side of gear pump.

Bucket lift check test:

Pretest instructions:
* Operator in seat
* Service/Run switch in “RUN” position
* Seat belt fastened
* Ignition switch in the “ON” position
* Engine running half throttle, 1500 RPM

STEP	TEST	RESULT	PROBABLE CAUSE AND CORRECTION
1	Bucket stopped midrange and restarted, the bucket should not drop first	YES NO	System OK Check for a leaking lift check valve, broken spring, or scored plunger and/or seat. If OK go to next step.
2			Check cylinders for leaking packing.
3			Check O ring and backup washer on front and rear plug in control valve.

https://truckmanualshub.com/

Bucket drift down test:

Pretest instructions:
* Operator in seat
* Service/Run switch in “RUN” position
* Seat belt fastened
* Ignition switch in the “ON” position
* Engine running half throttle, 1500 RPM

STEP	TEST	RESULT	PROBABLE CAUSE AND CORRECTION
1	Bucket stopped midrange should hold in position with no visual movement	YES NO	System OK Check control valve spool for centering, if OK go to next step.
2			Check for leaking packing on cylinders, if OK go to next step.
3			Check boom circuit relief valve, if OK go to next step.
4			Check control valve for leakage.
5			Check O ring and backup washer on front and rear plug in control valve.

Spool lock solenoid test:

Pretest instructions:
* Operator in seat
* Service/Run switch in “RUN” position
* Seat belt fastened
* Ignition switch in the “ON” position

STEP	TEST	RESULT	PROBABLE CAUSE AND CORRECTION
1	Battery voltage at solenoid	YES NO	System OK, go to step 5. Check seat belt operation, if OK go to next step.
2			Check wires to the solenoid valves for open circuit, if OK go to next step.
3			Check EIC board operation, if OK go to next step.
4			Check EIC board operation, if not OK refer to ELECTRICAL SECTION of the SERVICE MANUAL.
5			Remove solenoid coil and check operation, if OK go to next step.
6			Check control valve spools for centering, binding, and binding between solenoid and block, if OK replace solenoid valve.

https://truckmanualshub.com/

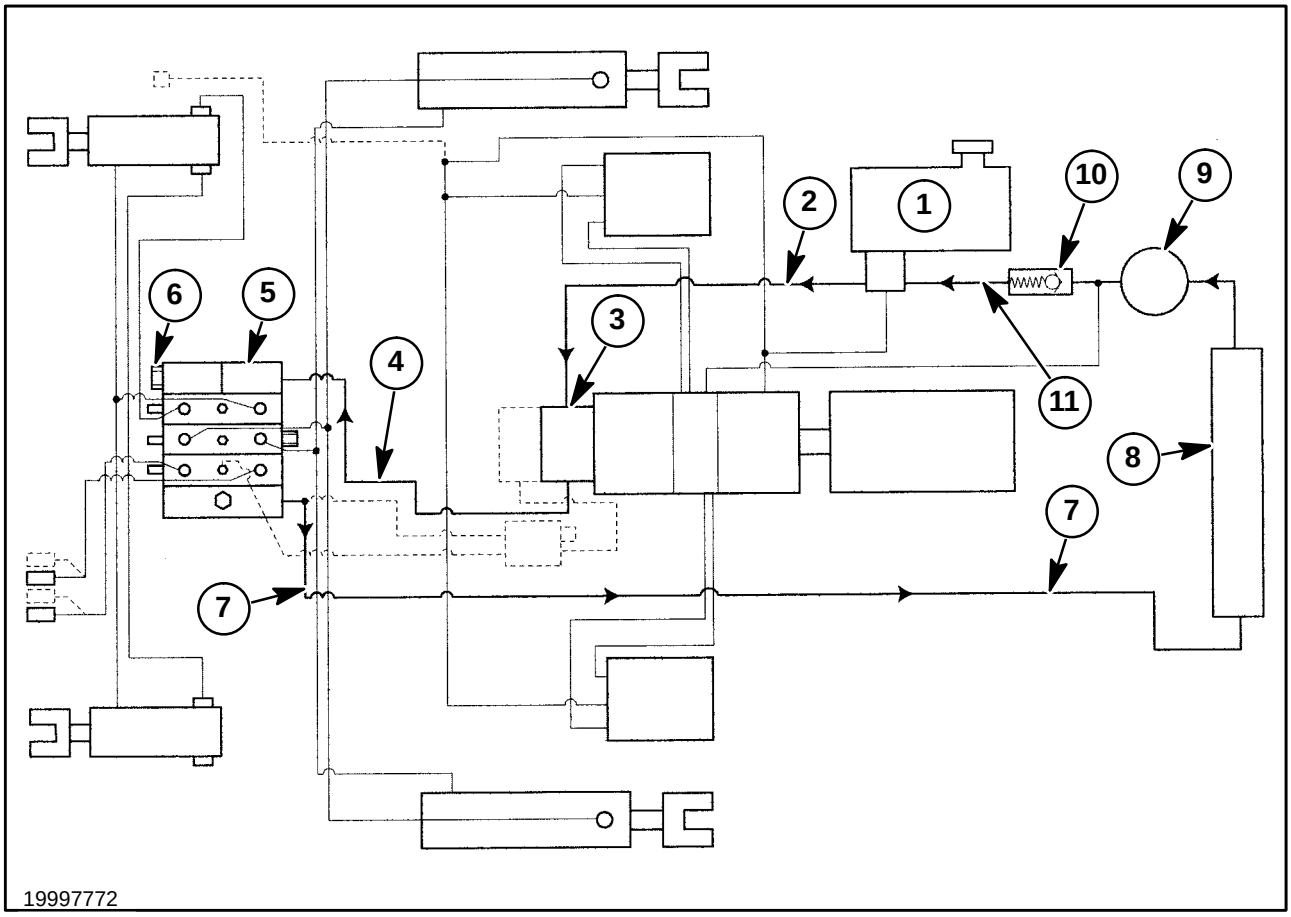

8

HYDRAULIC SYSTEM OIL FLOW

Control Valve - Spools in Neutral Position

1. Hydraulic oil reservoir, 1, storage for system oil.
2. Oil flows through suction line, 2, from reservoir, 1, to gear pump, 3.
3. Oil flows from gear pump, 3, through pressure line, 4, to control valve, 5.
4. Control valve, 5, is equipped with a system relief valve, 6.
5. With the control valve spools in neutral position, the oil flows through center of control valve, 5, to return line, 7.
6. The oil flows through return line, 7, to oil cooler, 8.
7. Oil passes through the oil cooler, 8, being cooled with the air blast from engine fan through the cooler.
8. Oil flows from the oil cooler, 8, through filter, 9, and check valve, 10, to return line, 11, and reservoir, 1.

https://truckmanualshub.com/

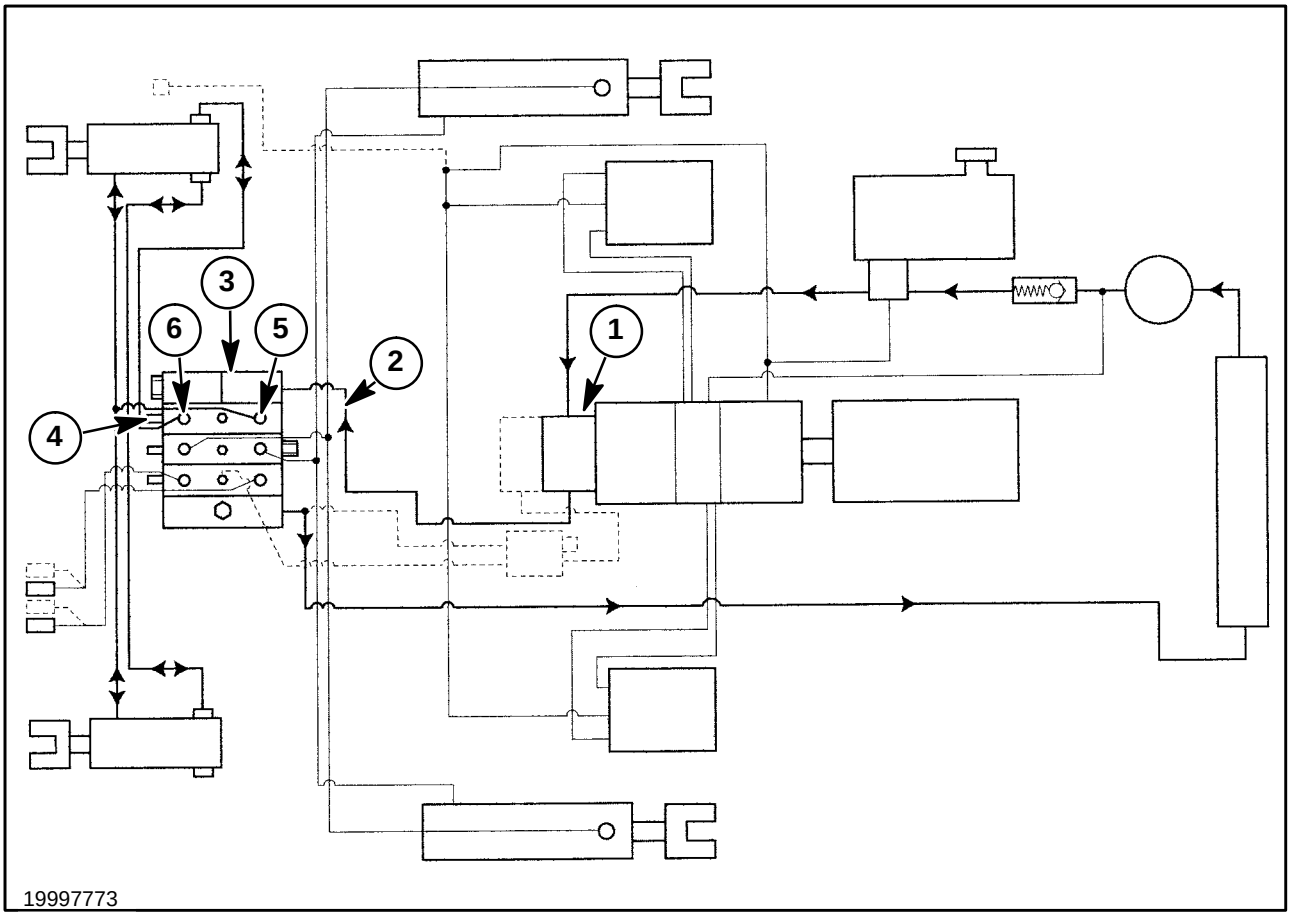

9

CONTROL VALVE - BUCKET SPOOL SHIFTED

Bucket Control Operation

Foot Controls

When the toe of the control pedal is pushed down, it will shift the control valve spool in, dumping the bucket. When the heel of the control pedal is pushed down, it will shift the control valve spool out curling the bucket back.

Hand Controls

When the right control handle is pivoted up it will shift the control valve spool in, dumping the bucket. When the right control handle is pivoted down it will shift the control valve spool out, curling the bucket back.

1. Oil flows from the gear pump, 1, through pressure line, 2, to control valve, 3.
2. When the bucket valve spool, 4, is pulled out, the oil flows from the rear work port, 5, to the shaft side of the bucket cylinder to curl the bucket back.
3. When the bucket valve spool, 4, is pushed in, the oil flows from the front work port, 6, to the base (piston) end of bucket cylinder to dump the bucket.
4. When the bucket circuit is operated to maximum pressure or cylinders are bottomed, the main system relief valve will relieve the high pressure oil into the return oil galley in the control valve, returning the oil to the reservoir.
5. The return oil from the opposite side of the cylinder being pressured will return through the control valve to the reservoir.

https://truckmanualshub.com/

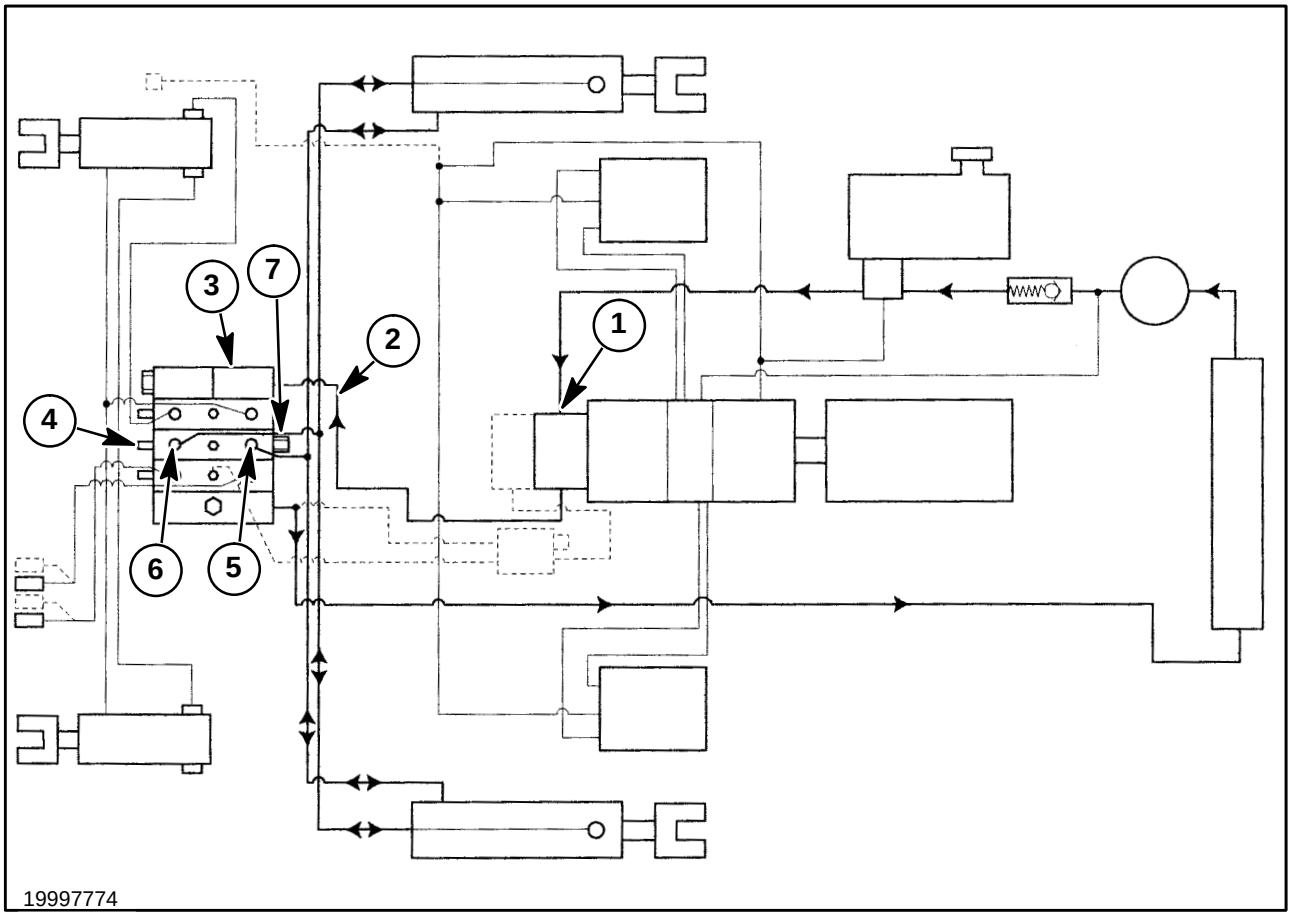

10

CONTROL VALVE - BOOM SPOOL SHIFTED

Boom Control Operation

Foot Controls

When the toe of the control pedal is pushed down, it will shift the control valve spool in, lowering the boom. When the heel of the control pedal is pushed down it will shift the control valve spool out, raising the boom.

Hand Controls

When the left control handle is pivoted down, it will shift the control valve spool in, lowering the boom. When the left control handle is pivoted up, it will shift the control valve spool out, raising the boom.

1. Oil flows from the gear pump, 1, through pressure line, 2, to control valve, 3.
2. When the boom valve spool, 4, is pulled out, the oil flows from the rear work port, 5, to the base (piston) end of the boom cylinder raising the boom.
3. When the boom valve spool, 4, is pushed in, the oil flows from the front port, 6, to the shaft end of boom cylinders, to lower the boom.
4. When the boom circuit is operated to maximum pressure or cylinders are bottomed, the main system relief valve will relieve the high pressure oil into the return oil valley in the control valve, returning the oil to the reservoir.
5. The return oil from the opposite side of cylinders being pressured will return through the control valve to the reservoir.
6. When the boom cylinders are extended, the boom control valve spool is in neutral, and a load is put on the boom cylinders causing them to retract the circuit. Relief valve, 7, will relieve the pressure in the base (piston) side of cylinders protecting the cylinder and lines. The oil relieved from the circuit relief valve enters the return oil galley in the control valve and returns to the reservoir.
7. When the boom valve spool, 4, is pushed in all the way, it will put the spool into detent position, holding the spool, opening both work ports 5 and 6 to the return allowing the boom to float.

https://truckmanualshub.com/

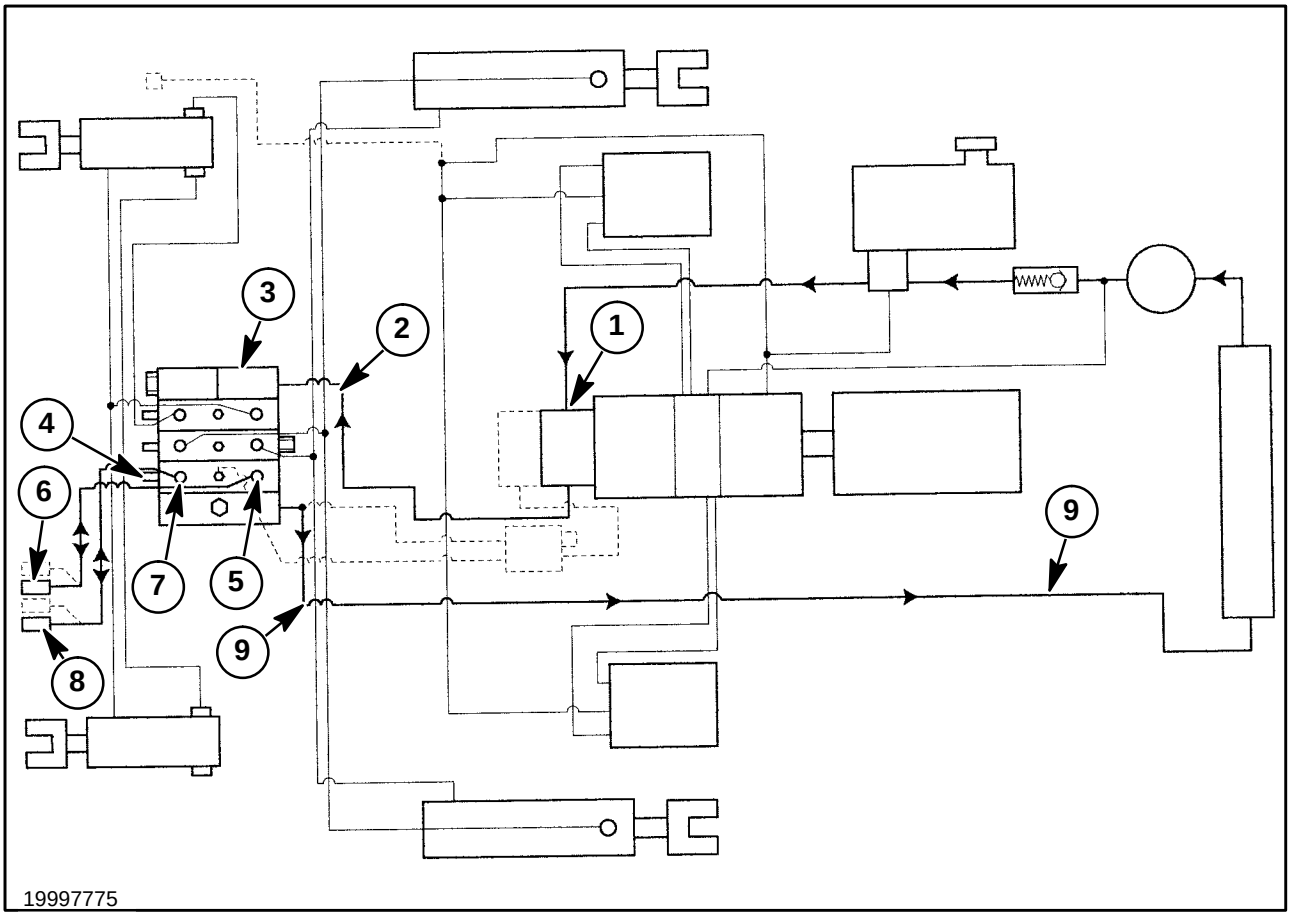

11

CONTROL VALVE - AUXILIARY SPOOL SHIFTED

Auxiliary Control Operation

Hand Controls

When the right control handle is pivoted down, it will shift the control valve spool in, supplying oil to the male quick coupler. When the right control handle is pivoted up, it will shift the control valve spool out, supplying oil to the female quick coupler.

Foot Control

When the toe of the control pedal is pushed down, it will shift the control valve spool in, supplying oil to the male quick coupler. When the heel of the control pedal is pushed down, it will shift the control valve spool out, supplying oil to the female quick coupler.

1. Oil flows from the gear pump, 1, through pressure line, 2, to control valve, 3.
2. When the auxiliary valve spool, 4, is pulled out, the oil flows from the rear work port, 5, and supplies oil to the female quick coupler, 6, at the front of the boom.
3. When the auxiliary valve spool, 4, is pushed in, the oil flows from the front work port, 7, and supplies oil to the male quick coupler, 8, at the front of the boom.
4. When the auxiliary circuit is operated to maximum pressure, the main system relief valve will relieve the high pressure oil into the return oil galley in the control valve, returning the oil to the reservoir.
5. The return oil from the opposite quick coupler being pressured will return through the control valve to the reservoir.

NOTE: *The return oil from the quick couplers must be returned through the normal return line, 9, to replenish the hydrostatic system; hydrostatic charge oil is required for lubrication of the hydrostatic pumps and motors.*

6. When the auxiliary valve spool, 4, is pushed in all the way, it will put the spool into detent position, holding the spool for continuous oil flow to the male quick coupler.

https://truckmanualshub.com/

Op. 35 710 02

MAIN SYSTEM PRESSURE TESTS

Check the main system pressure to insure the main relief valve is within specifications to provide adequate working pressure to the hydraulic system.

The main system pressure can be checked at the base end of the boom cylinders at 1.

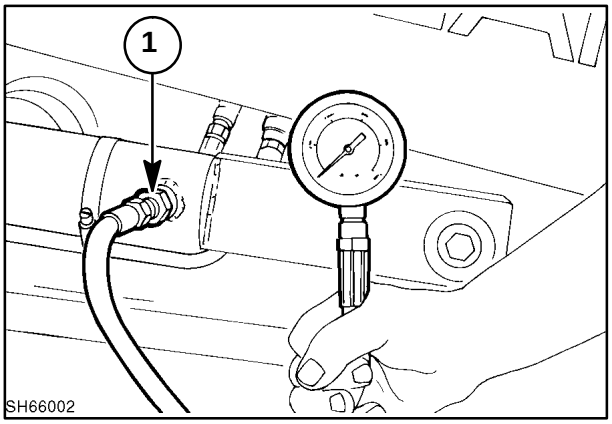

12

The main system pressure can also be checked at the base end of the left bucket cylinder at 1 or at the auxiliary boom hydraulic quick couplers, 2, if equipped.

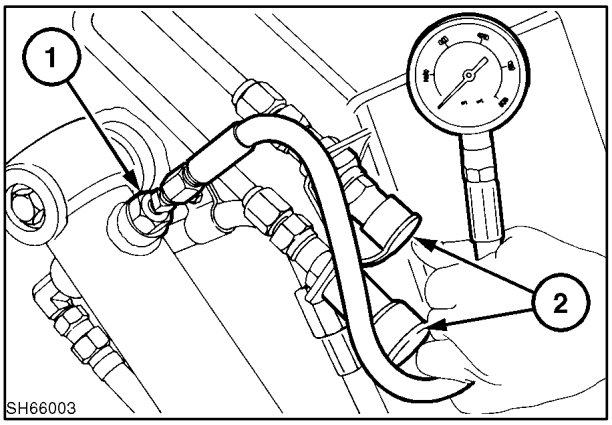

13

To check main system pressure at the boom cylinders, the boom must be up and resting on the boom lockpins, 1.

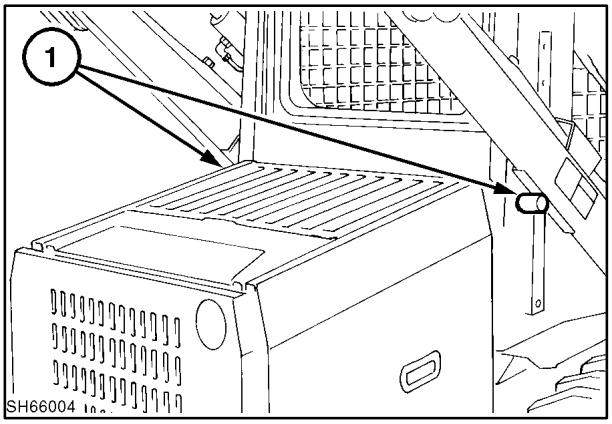

14

https://truckmanualshub.com/

The hydraulic system pressures are factory set. Changes to the settings should not be necessary.

To access the control and relief valve area, remove the step shield, 1.

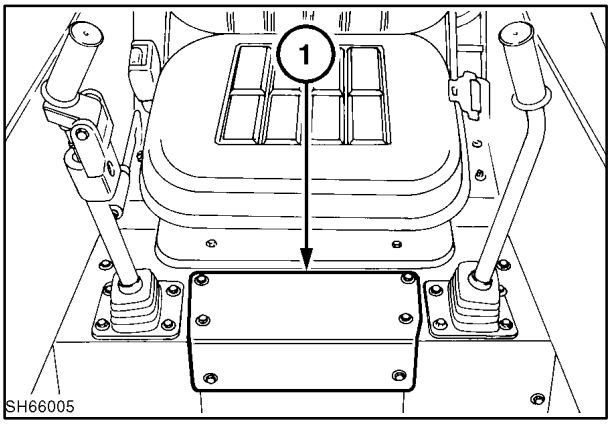

15

Raise the seat and seat pan to the raised latched position, 1. Be sure the seat support rod is latched securely at 2, before working under a raised seat.

CAUTION

Do not work under raised seat unless securely latched in the raised position.

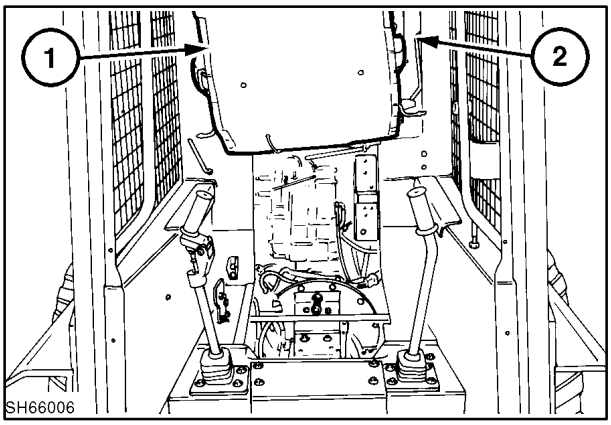

16

https://truckmanualshub.com/

The main system relief valve, 1, is located in the control valve. If there is some reason to suspect incorrect pressure, check the pressures as follows:

WARNING

Gauges, gauge fittings, and hoses must have operating pressure ratings of at least 25% higher than the highest pressures of the system.

Never adjust or replace the relief valves to get higher pressures than those specified by the equipment manufacturer.

Fluid under pressure can have sufficient force to penetrate the skin, causing serious personal injury. Always protect the skin and eyes from escaping fluid under pressure.

Before disconnecting lines or fittings, be sure to turn off the skid steer engine and relieve all pressure. Before applying pressure to the system, be sure all connections are tight and that lines, pipes, and hoses are not damaged.

If injured by escaping fluid, obtain medical assistance at once. Serious infection or reaction can develop if medical treatment is not administered immediately.

Remove any attachment from the mounting plate before loosening or disconnecting any hydraulic lines.

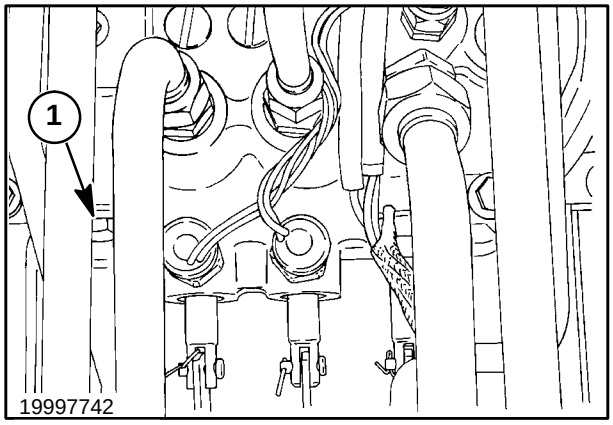

17

CHECKING MAIN SYSTEM PRESSURE AT BOOM CYLINDERS

NOTE: *Before performing any hydraulic test, operate the skid-steer loader to get the hydraulic oil to operating temperature (about 55°C [100°F] above ambient temperature).*

Fittings and gauge required:

1. 238 bar (3500 PSI) gauge (minimum)
2. 3/4″ - 16 UNF O ring fitting

Test Procedure

1. Raise the boom, extend the boom lockpins, 1, and lower the boom down on the lockpins.
2. Stop the engine, turn the ignition key to the run position, and operate the boom and bucket control pedals to relieve pressure in the cylinders. Turn off the key.

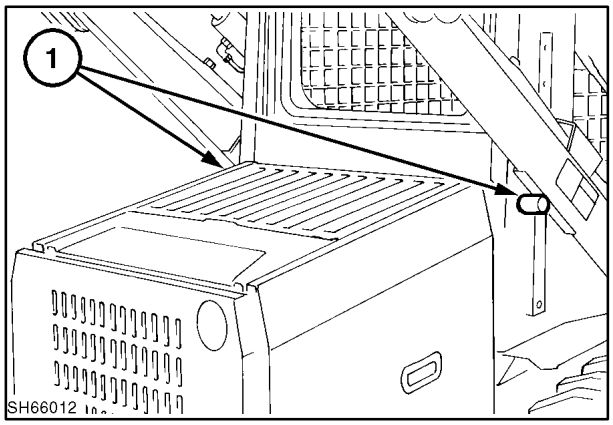

18

https://truckmanualshub.com/

3. Install the pressure test gauge in the boom cylinder at 1.
4. Start the engine and run it at full throttle (3070 - 3150 RPM) to bring the hydraulic oil to operating temperature.
5. Operate the boom control to raise the boom to the fully raised position until the system bypasses and take a pressure reading. Lower the boom down to the boom lockpins and relieve pressure in the system.
6. The pressure should be from 177 - 190 bar (2600 - 2800 PSI) when the hydraulic oil is at operating temperature.

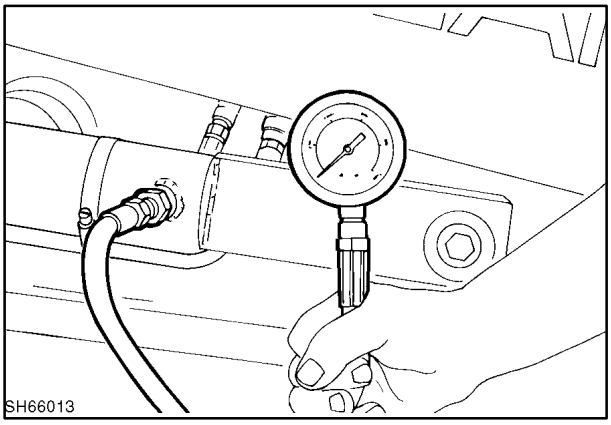

19

7. The relief valve is a cartridge type and is not adjustable. Replace the relief valve cartridge, 1, if the pressure is not within specifications.

CAUTION

Do not attempt to change the pressure setting or alter the pressure to a higher setting as the hydraulic components, hoses, tubes, and cylinders may be damaged and could cause injury.

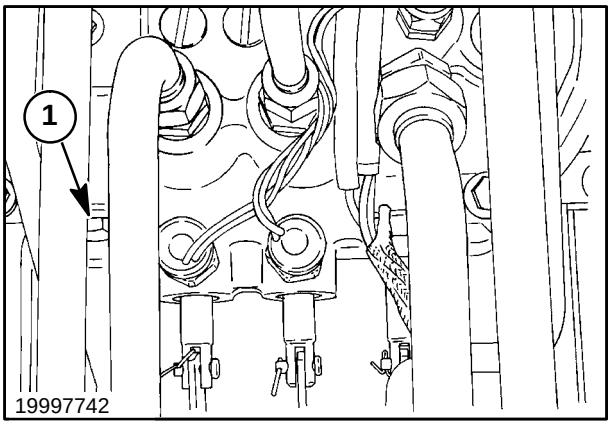

20

CHECKING MAIN SYSTEM PRESSURE AT BUCKET CYLINDERS, 1

Fittings and gauge required:

1. 238 bar (3500 PSI) gauge (minimum)
2. 3/4″ - 16 UNF O ring fitting

Test Procedure

1. Lower the boom and attachment to the ground.
2. Stop the engine, turn the ignition key to the run position and operate the boom and bucket control pedals to relieve pressure in the cylinders. Turn off the key.

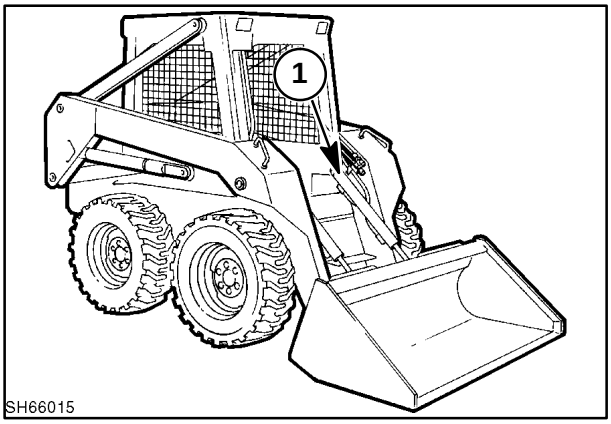

21

https://truckmanualshub.com/

3. Install the pressure test gauge in the left bucket cylinder at 1.
4. Start the engine and run it at full throttle (3070 - 3150 RPM).
5. Operate the bucket control to dump the bucket to the fully dumped position until the system by-passes and take a pressure reading. Curl the bucket back to relieve pressure in the system.
6. The pressure should be from 177 - 190 bar (2600 - 2800 PSI) when the hydraulic oil is at operating temperature.

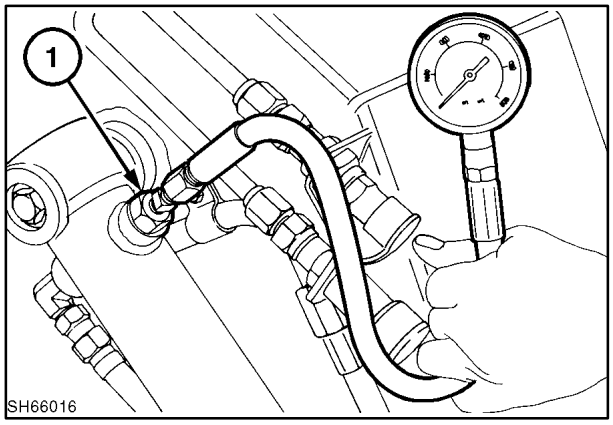

22

7. The relief valve is a cartridge type and is not adjustable. Replace the relief valve cartridge, 1, if the pressure is not within specifications.

CAUTION

Do not attempt to change the pressure setting or alter the pressure to a higher setting as the hydraulic components, hoses, tubes, and cylinders may be damaged and could cause injury.

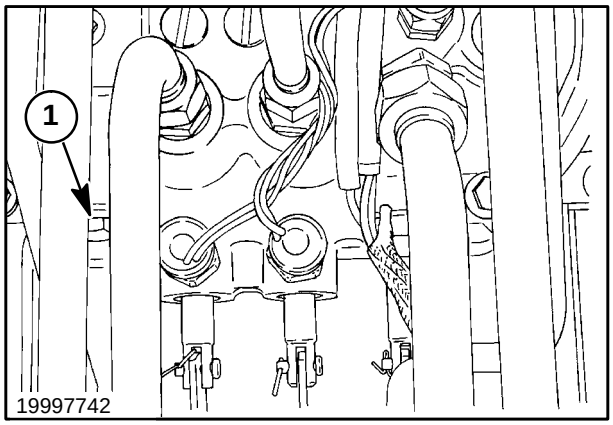

23

CHECKING MAIN SYSTEM PRESSURE AT AUXILIARY BOOM HYDRAULIC QUICK COUPLERS, 1

Fittings and gauge required:

1. 238 bar (3500 PSI) gauge (minimum)
2. 1/2″ quick coupler fitting

Test Procedure

1. Lower the boom and attachment to the ground.
2. Stop the engine, turn the ignition key to the run position and operate the boom, bucket, and auxiliary controls to relieve pressure in the systems. Turn off the key.

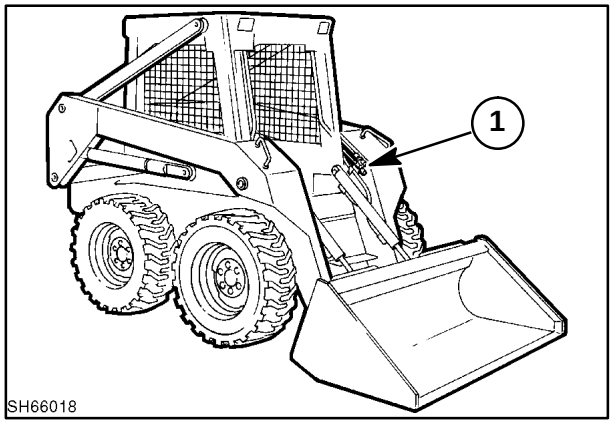

24

https://truckmanualshub.com/

3. Install the pressure test gauge in one of the quick couplers at 2.
4. Start the engine and run it at full throttle (3070 - 3150 RPM).
5. Operate the auxiliary control to pressurize the auxiliary circuit until the system bypasses and take a pressure reading. Move the control handle in the opposite direction to relieve pressure in the system.

NOTE: *Pivoting the control handle down supplies oil to the male quick coupler.*

6. The pressure should be from 177 - 190 bar (260 - 2800 PSI) when the hydraulic oil is at operating temperature.
7. The relief valve is a cartridge type and is not adjustable. Replace the relief valve cartridge, 1, if the pressure is not within specifications.

CAUTION

Do not attempt to change the pressure setting or alter the pressure to a higher setting as the hydraulic components, hoses, tubes, and cylinders may be damaged and could cause injury.

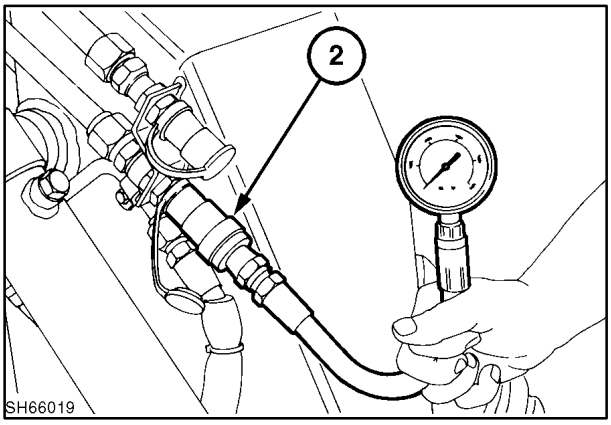

25

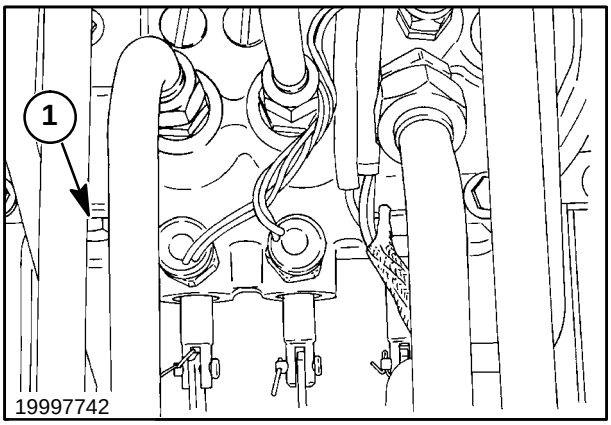

26

BOOM CIRCUIT RELIEF VALVE TEST

The boom circuit is equipped with a circuit relief valve, 1, located in the boom control valve. This valve will protect the cylinders and lines when the control valve spool is in the neutral (centered) position.

Fittings and gauge required:

1. 238 bar (3500 PSI) gauge (minimum)
2. 3/4″ - 16 UNF O ring fitting
3. Hydraulic hand pump

NOTE: *The relief valve is factory set at 241 ± 3 bar (3500 ± 50 PSI). The boom circuit relief valve is not adjustable. All replacement valves are set at 3500 PSI.*

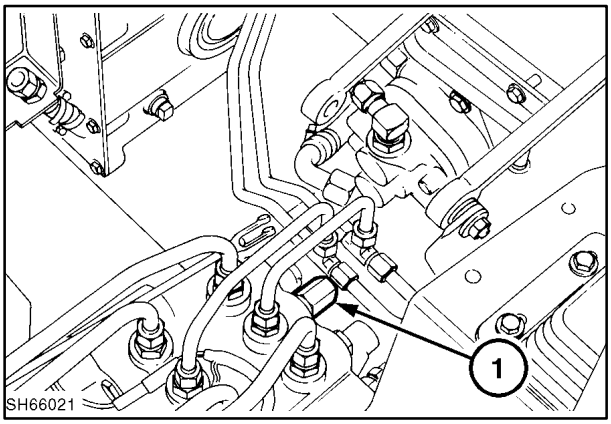

27

https://truckmanualshub.com/

Test Procedure

1. Lower the boom and attachment to the ground.
2. Stop engine, turn ignition key to the run position and operate the boom and bucket control pedals to relieve pressure in the cylinders. Turn off the key.
3. Remove the step shield, 1, to access the control valve and circuit relief valve area.

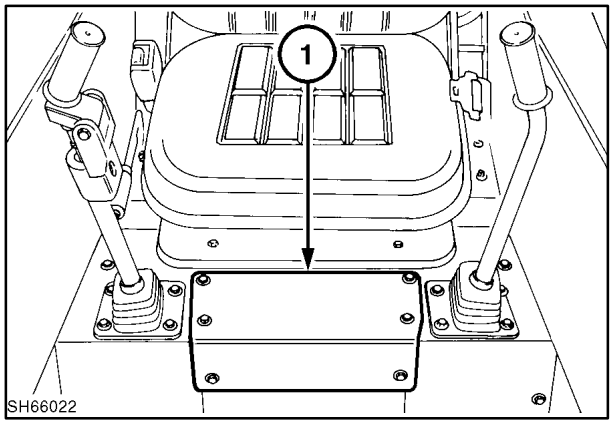

28

4. Boom control valve spool in the neutral (centered) position.
5. Remove the rear boom hydraulic line, 1, and cap the line. Install the hydraulic hand pump and pressure gauge to the rear port in the control valve.
6. Using the hand pump, build pressure against the circuit relief valve and monitor the pressure gauge to read the pressure at the point the relief valve starts to open.

CAUTION

Do not increase pressure over 3800 psi. If the relief valve does not open when pressure reaches 3600 psi, discontinue the test and replace the valve.

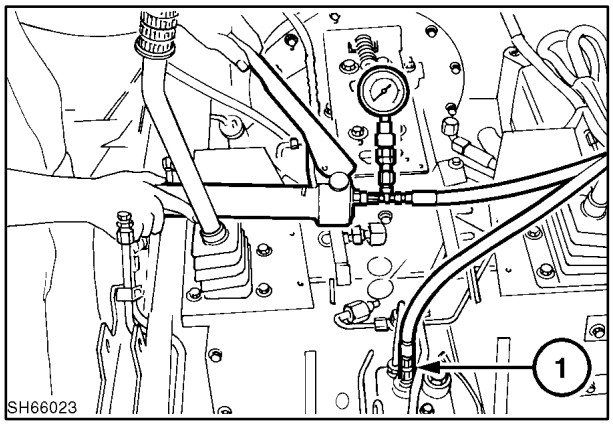

29

7. If there is an operational complaint and the boom circuit relief valve releases pressure under 235 bar (3400 PSI), replace the valve, 1. If the valve does not release pressure by 248 bar (3600 PSI), also replace the valve. All replacement boom circuit relief valves are set at 241 bar (3500 PSI) and are not adjustable.

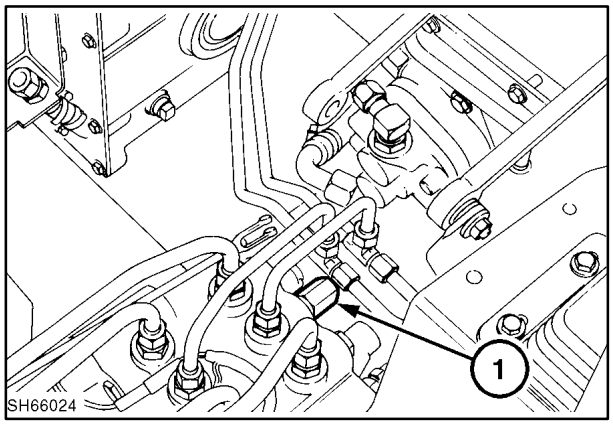

30

https://truckmanualshub.com/

GEAR PUMP FLOW EFFICIENCY TEST

Fittings and gauges required:

1. Hydraulic flow tester (30 GPM capacity).
2. Male and female 1/2″ quick couplers for units equipped with auxiliary boom hydraulics.
3. Two male 3/4″ UNF 37 flare-to-tester fittings for units without auxiliary boom hydraulics.

Test Procedure

Gear pump flow test with units equipped with auxiliary boom hydraulics.

1. Lower the boom and bucket to the lowered position, resting on the ground.
2. Stop engine, turn ignition key to the run position and operate the boom and bucket control pedals to relieve pressure in the cylinders. Turn off the key.
3. Attach the pressure (inlet) hose from the flow tester with the female quick coupler to the male half on the loader at 1.
4. Attach the return (outlet) hose from the flow tester with the male coupler to the female half on the loader at 2.

IMPORTANT: *Make sure the flow tester is connected into the hydraulic system properly for proper oil flow through the tester to prevent damage to the hydraulic test equipment or hydraulic system.*

CAUTION

Never position tester between the gear pump and control valve as the system relief valve will be out of the test circuit, and pump over pressure may cause a pump failure by splitting the center section or twisting off the input shaft.

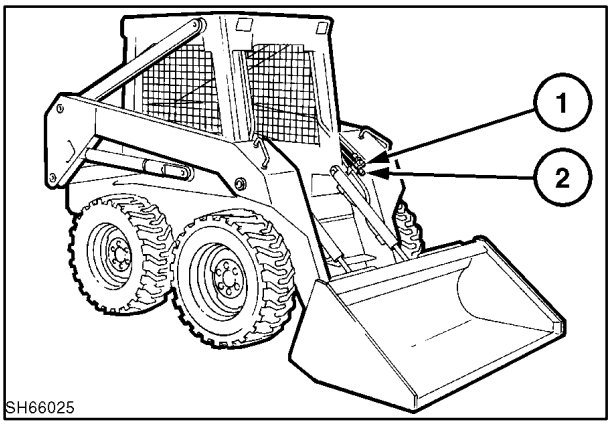

31

https://truckmanualshub.com/

5. Turn the resistance valve on tester to “O” setting.
6. Start the engine and run it at full throttle (2900 RPM).
7. Operate the auxiliary control handle by pivoting down to pressurize the male quick coupler and inlet hose to tester.
8. Take a free flow and pressure reading and record it. The flow at this time is oil flow through the hydraulic system and the pressure reading at this point is force required to pump the oil through the system. The pressure is called back pressure.
9. Turn the resistance valve, 1, on the tester to apply resistance in the hydraulic system to obtain the following specifications:

   LS160 - 2900 RPM (engine) 68 bar (1000 PSI) - 15.5 GPM (58.7 LPM) Maximum without high flow

   L170 - 2900 RPM (engine) 68 bar (1000 PSI) - 17.7 GPM (67.0 LPM) Maximum without high flow

If the gear pump flow in step 9 is not at least 80% of the pump flow in step 8, remove and repair or replace the pump.

EXAMPLE:

16 GPM free flow Step 8.

12.5 GPM flow Step 9.

80% of 16 GPM = 12.8 GPM

The pump is not at least 80% of free flow. Repair or replace pump.

NOTE: *The oil must be at operating temperature before any hydraulic testing.*

If the pressure cannot be obtained, replace the main system relief valve.

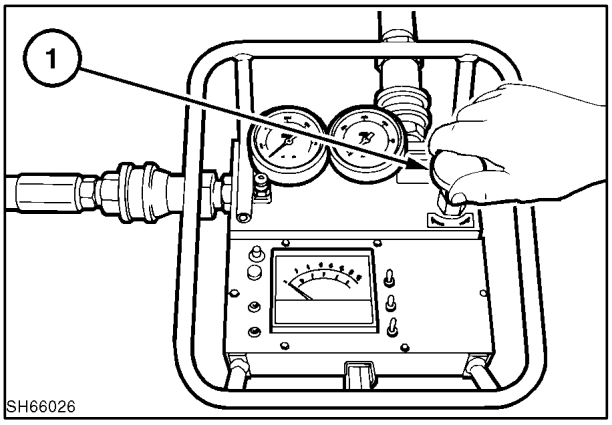

32

https://truckmanualshub.com/

Test Procedure

Gear pump flow test with units NOT equipped with auxiliary boom hydraulics.

1. Lower the boom and bucket to the lowered position, resting on the ground.
2. Stop the engine, turn the ignition key to the run position and operate the boom and bucket control pedals to relieve pressure in the cylinders. Turn off the key.
3. Unhook line, 1, from the base end of the bucket cylinder, cap cylinder port.
4. Attach the pressure (inlet) hose from the flow tester to line, 1, with 3/4″ UNF 37 flare fitting to tester.
5. Unhook line, 2, and cap the hose fitting.
6. Attach the return (outlet) hose from the flow to line, 2, with 3/4″ UNF 37 flare fitting to tester.

IMPORTANT: *Make sure the flow tester is connected into the hydraulic system properly for proper oil flow through the tester to prevent damage to the hydraulic test equipment or hydraulic system. Refer to the test equipment manufacturer's Operator's Manual.*

7. Turn the resistance valve, 1, on the tester to "O" setting.
8. Start the engine and run it at full throttle (2900 RPM).
9. Operate the bucket control to dump the bucket for proper oil flow to the inlet hose and tester.
10. Take a free flow and pressure reading and record it. The flow at this time is oil flow through the hydraulic system and the pressure reading at this point is force required to pump the oil through the system. The pressure is called back pressure.

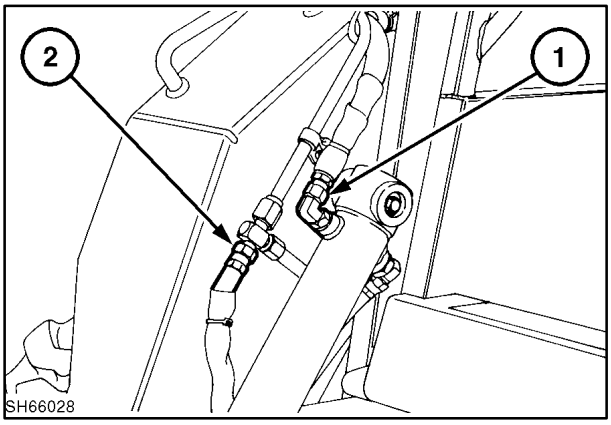

33

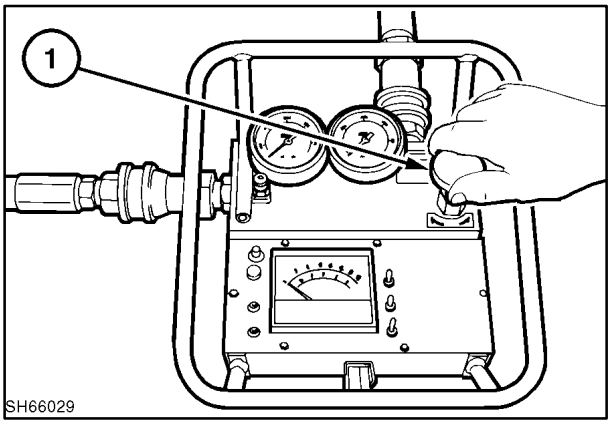

34

https://truckmanualshub.com/

11. Turn the resistance valve on the tester to apply resistance in the hydraulic system to obtain the following specifications:

    LS160 - 2900 RPM (engine) 68 bar (1000 PSI) - 15.5 GPM (58.7 LPM) Maximum without high flow

    LS170 - 2900 RPM (engine) 68 bar (1000 PSI) - 17.7 GPM (67.0 LPM) Maximum without high flow

If the gear pump flow in step 11 is not at least 80% of the pump flow in step 10, remove and repair or replace the pump.

EXAMPLE:

16 GPM free flow Step 10.

12.5 GPM flow Step 11.

80% of 16 GPM = 12.5 GPM

The pump is not at least 80% of free flow. Repair or replace pump.

NOTE: *The oil must be at operating temperature before any hydraulic testing.*

If the pressure cannot be obtained, replace the main system relief valve.

https://truckmanualshub.com/

BOOM AND BUCKET SPOOL LOCK SOLENOID TEST

The boom and bucket control valve solenoid spool locks are controlled by the EIC (Electronic Instrument Cluster). The operator must be in the operator's seat with the seat belt buckled for the EIC to unlock the control valve spool lock solenoids.

Operational check procedure:

1. Service/Run switch, 1, in "RUN" position.
2. Sit in seat.
3. Turn ignition key switch, 2, to the "ON" position.
4. Attempt to move boom and bucket foot or hand controls. The controls should not move the control valve spools from the neutral position.
5. Fasten the seat belt.
6. Attempt to move boom and bucket foot or hand controls. The controls should move the control valve spools from the neutral position.

NOTE: *If the EIC shows an FOA fault in the readout display, this is an indication of a shorted/open circuit to the solenoid locks.*

Electrical test procedure:

1. Lower the boom and attachment to the ground or rest the boom on the boom lock pins, 1; remove attachment if on boom locks.

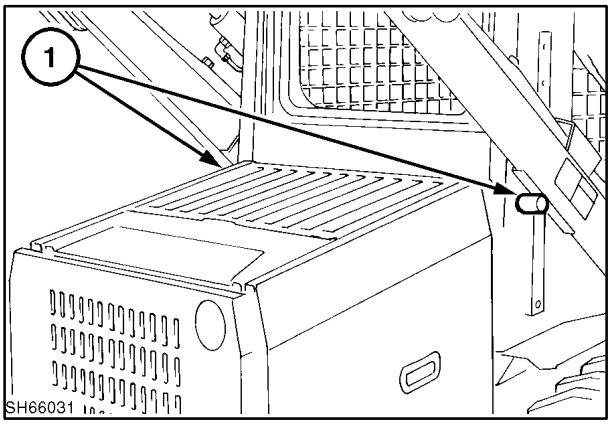

35

https://truckmanualshub.com/

2. Raise the seat and latch securely in the raised latch position, 1. Remove the step shield, 2, from over the control valve to access the solenoid locks.

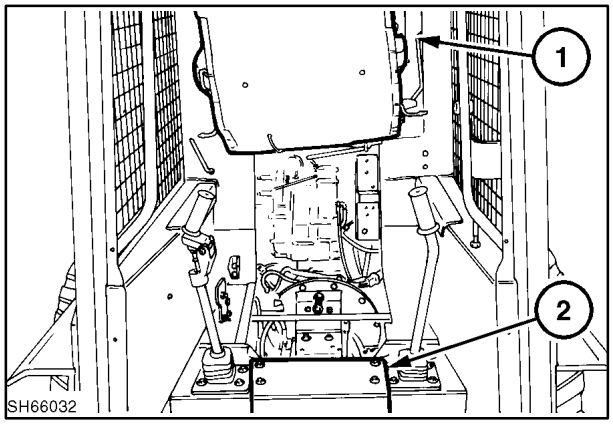

36

3. Unplug one solenoid, 1, at a time and check for battery voltage at the main wire harness plugs, pink/light-blue and black wires. The operator must be in the seat with the seat belt buckled and the ignition key in the “ON” position.

NOTE: *If both solenoids are unplugged, the EIC will show an FOA fault and there will be no voltage from the EIC to the solenoids.*

4. If there is battery voltage at the solenoids, remove the coils and check their operation. If the plunger moves in when power is applied, check for binding when the coil is threaded into the body. Check for spool centering to allow the coil plunger to seat into the groove in the spool.

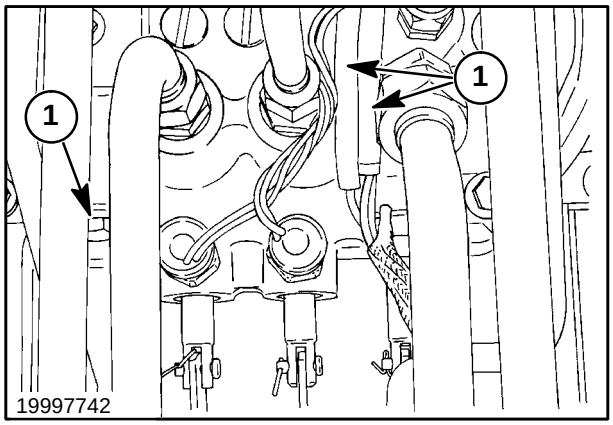

37

⚠ DANGER ⚠

If the lockout solenoids are loosened or removed from the control valve body, the pedal(s) are no longer locked. Pedal or hand control movement will result in spool movement and boom/bucket movement.

https://truckmanualshub.com/

HYDRAULIC, HYDROSTATIC SYSTEM AIR INGRESS TEST

Hydraulic system air ingress, causing oil aeration, can affect performance of the hydraulic oil. This may be evident on a machine by jerky or uneven movement of the loader boom or bucket.

To assist in testing and finding leaks, a tool has been developed (part #FNH22ESS95). This tool comprises of a cap which replaces the reservoir filler breather for testing purposes, a pressure gauge and a relief valve. The cap has fittings for air pressure to be applied to the hydraulic reservoir.

CAUTION

Do not start the engine with the test tool installed, as the hydraulic system must be able to breathe.

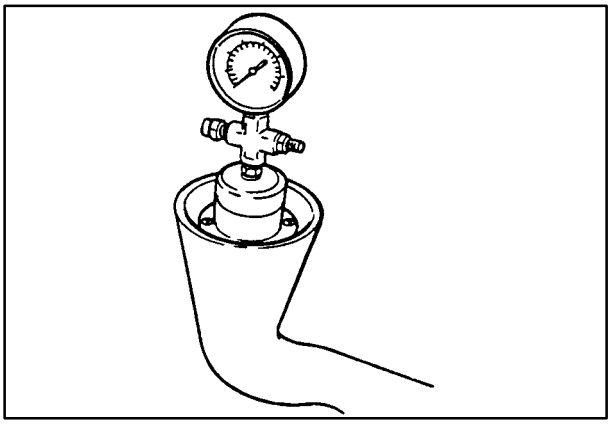

38

Test Procedure:

1. Remove the filler/breather cap.
2. Remove the self-tapping screws around the cap base and screen assembly.
3. Remove the base, screen and gasket assembly. Clean all sealing surfaces.
4. Re-install new gaskets and base, taking care not to overtighten the screws.
5. Make sure the tank has 10W-30 oil visible.
6. Pressurize the tank using an air pressure line. The tool is equipped with a 3 PSI relief valve and a pressure gauge. The reservoir should not be pressurized beyond 4 PSI.

https://truckmanualshub.com/

The following checks should then be performed to trace the source of the air ingress.

- Examine the suction tubes and fittings to the hydraulic gear pump and the return tubes from the filter to the reservoir.
- Examine the transmission case drain tubes/hoses and fittings from the hydraulic motors and pumps to the suction side of the hydraulic pump. Also check the cam plate shaft seals and the pump and motor casing gaskets.
- Potential leakage areas could also be input shaft seals in the engine bell housing, gearbox or output shaft seals in motors and gearboxes and the chain case.
- It may be necessary in some instances (where leakage is occurring on shaft seals into gearboxes or bell housing) to pressurize the reservoir for 2 - 4 hours and monitor the oil level in the gearboxes.
- If the prior checks do not locate the source of the leak, it may be necessary to pressurize each hydrostatic component individually. To do this it will be necessary to disconnect each case drain line in turn and pressurize using an air line to a maximum pressure of 10 PSI.

NOTE: *A check valve can be installed in the case drain tube which maintains a 5 PSI pressure in the pump and motor cases. This helps prevent air ingress into the system.*

https://truckmanualshub.com/

CONTROL VALVE

SPECIFICATIONS

Type	3-spool open center
Relief Valve	170-177 bar (2500-2600 PSI) Nonadjustable
Circuit Relief (boom)	241 bar (3500 PSI)
Electrical Solenoid Spool Locks	Bucket and Boom

Torque Specifications

Control Valve Retaining Hardware	24 N·m (18 ft. lbs.)
Control Valve Plugs (large)	38 N·m (28 ft. lbs.)
Control Valve Plugs (small)	31 N·m (23 ft. lbs.)
Circuit Relief Valve (boom)	38 N·m (28 ft. lbs.)
Spool Lock Solenoids	15 N·m (11 ft. lbs.)
Main System Relief Valve	51 N·m (38 ft. lbs.)
Spool Cap Assembly Hardware	16 N·m (12 ft. lbs.)
Plugs, BYD Port	38 N·m (28 ft. lbs.)

Labor Required

Remove and Replace	1.5 hours
Repair	1.0 hour

https://truckmanualshub.com/

CONTROL VALVE

Op. 35 724 50

REMOVAL

1. Lower the boom and bucket to the lowered position (resting on the ground), or remove any attachment and raise the boom and rest on the boom lock pins, 1. Roll the attachment plate to the fully “DUMPED” position.
2. Stop the engine, turn the ignition key to the run position and operate the boom and bucket control pedals to relieve pressure in the boom and bucket circuits. Turn off the key.

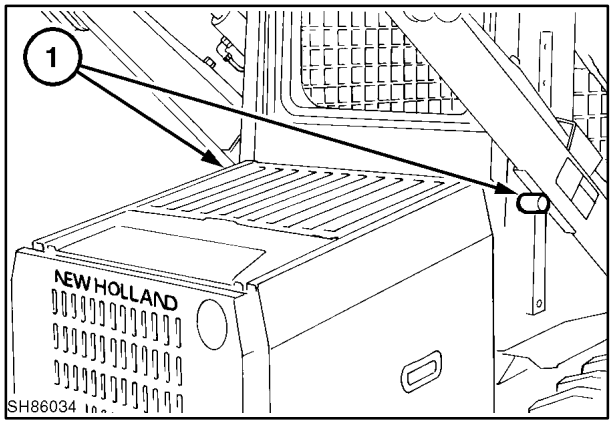

39

3. Raise the seat and seat pan to the raised latched position, 1.
4. Remove the step shield, 2, to access the gear pump area. For more access, remove the right or left hydrostatic control handle assembly, 3 or 4.

CAUTION

Do not work under a raised seat unless it is securely latched in the raised latched position.

Never work under a raised boom unless it is properly supported by the boom lock pins.

Never work under a raised boom with an attachment. Always remove the attachment from the loader.

Never loosen any hydraulic lines without first relieving all pressure in the system.

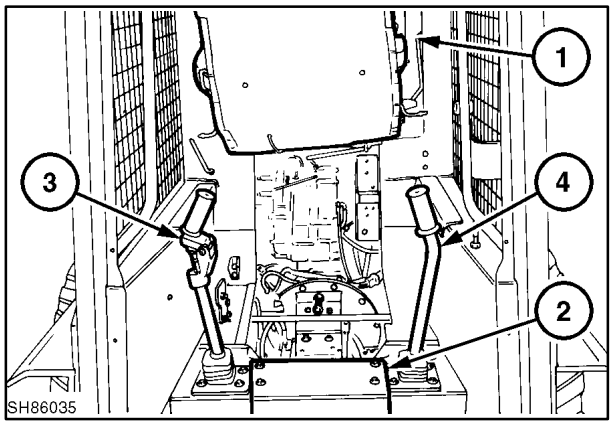

40

Draining the hydraulic oil reservoir is not required if the suction and return lines are capped to prevent loss of oil. Drain the reservoir when the hydraulic system requires cleaning.

5. To drain the system, remove the small access door, 1, at the front right corner of the engine belly pan by removing the two rear bolts, 2, loosening the front two bolts, 3, and sliding the door rearward.

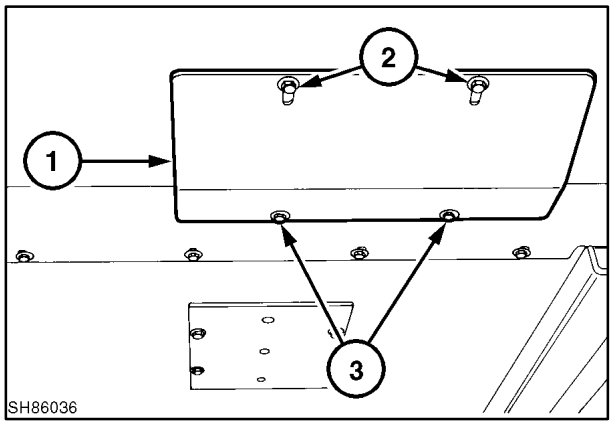

41

https://truckmanualshub.com/

6. Drain the hydraulic reservoir by disconnecting the return line, 1, at tee, 2, and drain the oil into a suitable container.

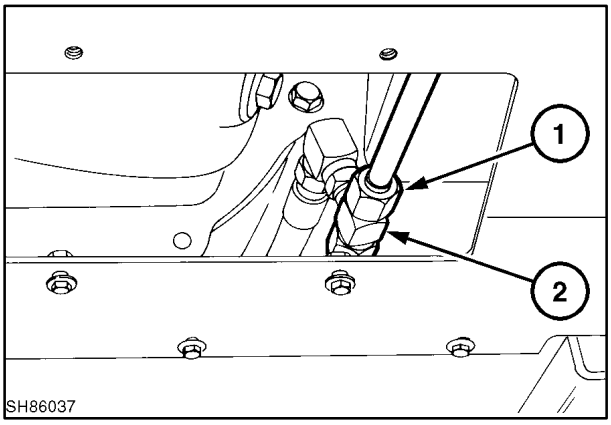

42

7. Unplug the spool lock solenoids, 1.
8. Remove the pressure line, 2, and return line, 3; cap both lines to prevent loss of oil and contamination from entering the hydraulic system.
9. Remove the hydraulic lines connected to the work ports of the control valve, 4, four or six lines, if unit is equipped with auxiliary boom hydraulics and cap.
10. Remove the line from the power beyond port, 5, if equipped with auxiliary hydraulics and cap.
11. Unhook the control linkage from the control valve spools at 6.
12. Remove the control valve retaining hardware, 7. Lift the control valve assembly from the loader.

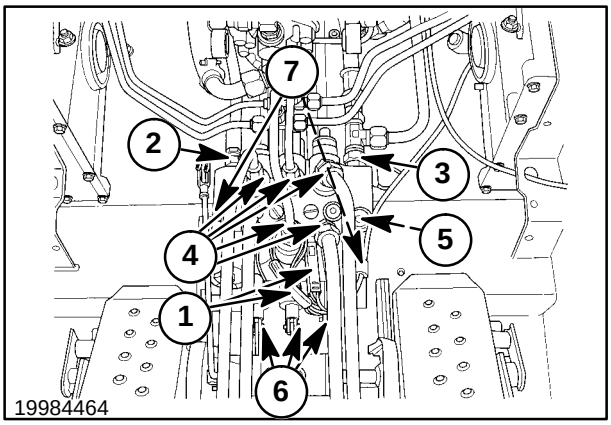

43

Op. 35 724 54

DISASSEMBLY AND INSPECTION

Main System Relief Valve

The non-serviceable, non-adjustable, cartridge- type main system relief valve, 1, is set at 170 - 177 bar (2500 - 2600 PSI). The relief valve should not be replaced with a valve of a higher pressure setting, as structural damage to the boom and/or main frame or internal damage to hydraulic system may occur.

CAUTION

Component failure from high hydraulic pressure could result in injury.

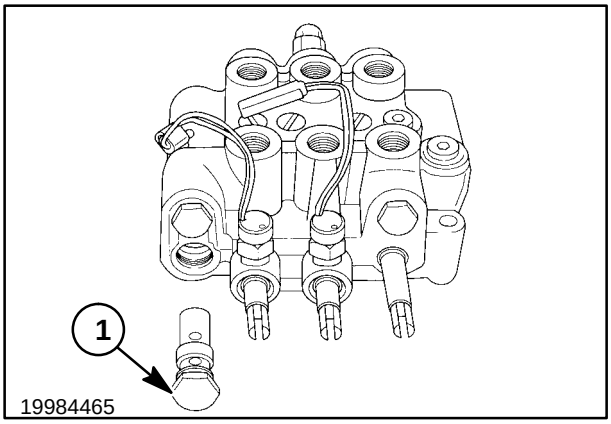

44

https://truckmanualshub.com/

Lift Check Valves

There is a check valve in each circuit - bucket, boom, and auxiliary.

The only time the check valves serve a function is after the control spools have been shifted. If the valves are operating properly, they prevent any movement of either the boom or bucket until pressure opens the lift checks.

Inspect the lift check components for damage to the seat, 1, spring, 2, or cap, 3.

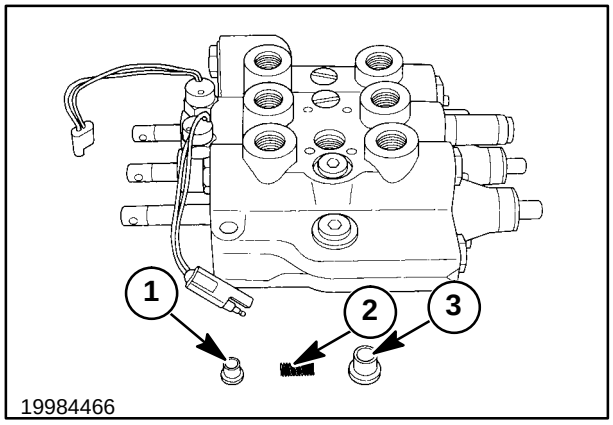

45

Op. 35 724 90

Spool Locks (Boom and Bucket)

Remove the solenoid plunger assemblies, 1, from the ports, 2, over the control spool ends.

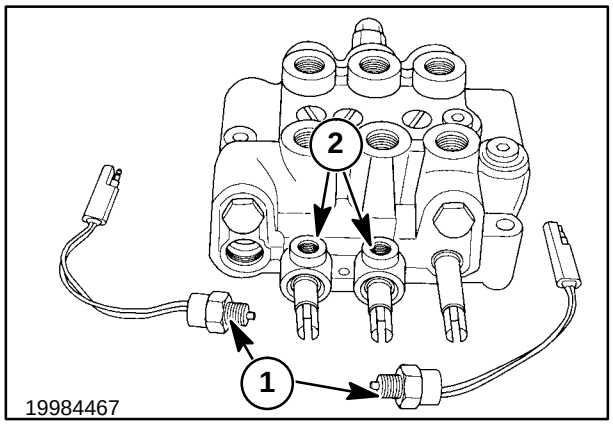

46

Remove the boom circuit relief valve, 1, from the valve body.

NOTE: *The boom circuit relief valve protects the lift circuit against high pressure related damage caused by external forces acting against the boom. The valve is factory set at 241 bar (3500 PSI), is nonadjustable, and must be replaced if malfunctioning.*

Remove the plugs, 2, over the bucket and auxiliary spool caps.

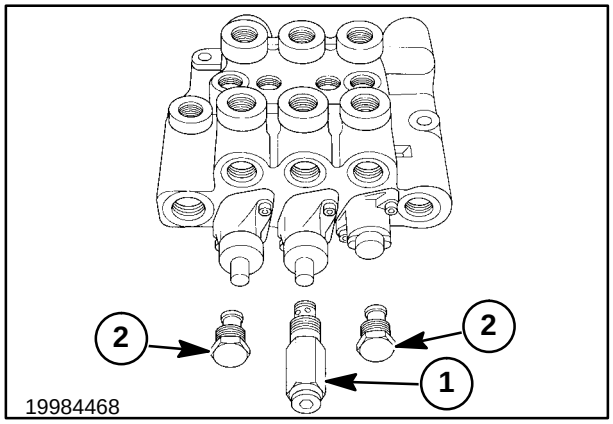

47

https://truckmanualshub.com/

Remove the plug, 1, from the port, 2, over the main relief valve port. Remove the plug, 3, from the port, 4, over the auxiliary control spool.

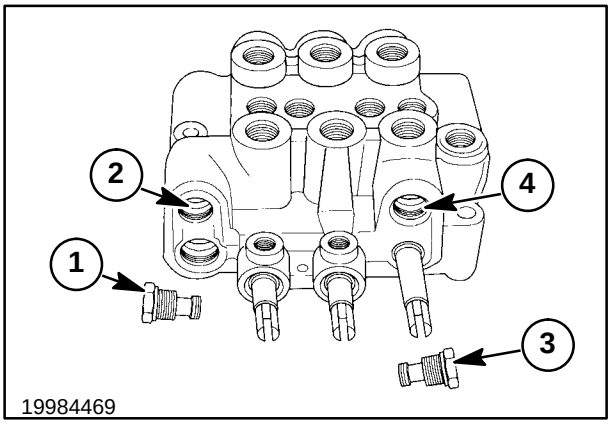

48

Spools, Caps, and O Rings

Oil is directed through the housing to the different ports by way of the spools: the bucket spool, 1, the boom spool, 2, and the auxiliary spool, 3.

Some oil circulates around the spools for lubrication and smooth operation. If an oil leak appears on the outside of the valve and all lines connected to the ports are tight, check the O rings on each end of the spools. The spools can be pulled from the control valve housing while the valve is still in the loader by disconnecting the control linkage and removing the spool caps.

CAUTION

If removing spool caps on the tractor, make sure all system pressure has been relieved first.

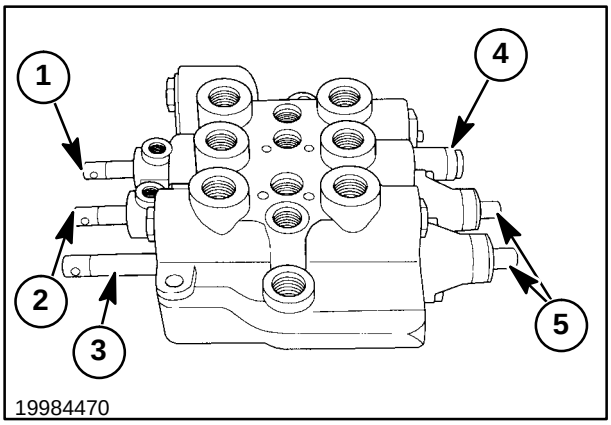

49

Notice that the bucket spool has a plain cap, 4. The boom spool and auxiliary spools have detent caps, 5, to hold the spools in position for float position boom circuit or continuous flow auxiliary circuit operation.

1. Thoroughly clean the control valve and unscrew the allen head capscrews, 1, on the caps.
2. Remove the caps, 2, from the rear of the valve body.

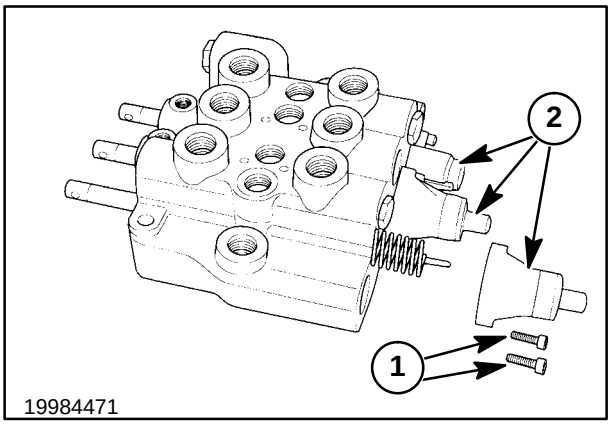

50

https://truckmanualshub.com/

NOTE: *Before removing the spools, make sure the exposed portion of the spool is free from any paint or corrosion which could damage the internal porting of the valve.*

3. Remove the spools, 1, from the valve body.

NOTE: *Each spool is different. Make sure to replace the correct spool in the correct part of the valve body.*

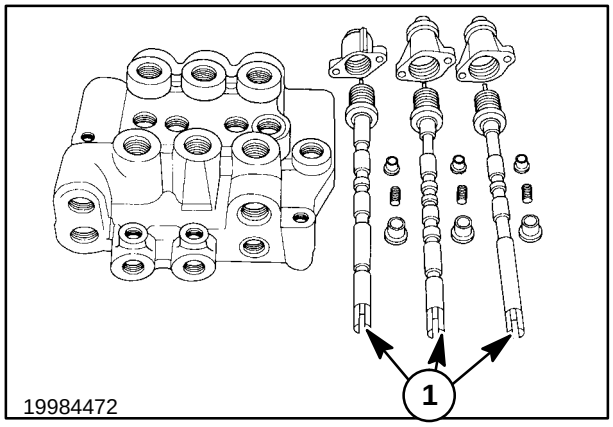

51

4. Remove the O rings from the spool ports. Inspect the O ring seating area for burrs, and remove them before installing new O rings.

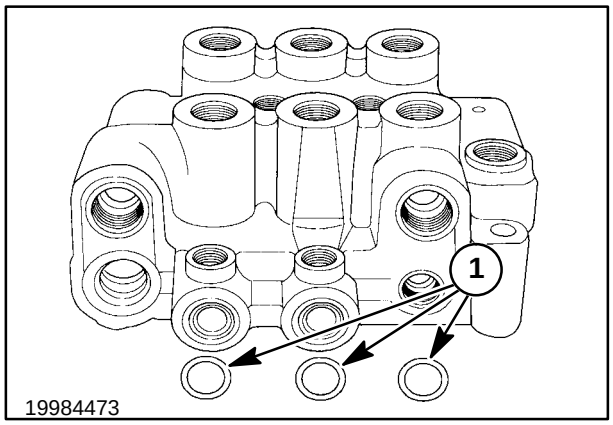

52

5. The complete control valve components include:
   1. Main system relief valve
   2. Boom circuit relief valve
   3. Plugs
   4. Caps
   5. Plain control spool cap
   6. Detent control spool caps
   7. Centering springs and hardware
   8. Bucket control spool
   9. Boom control spool
   10. Auxiliary control spool
   11. Lift check, springs, and caps
   12. Bucket and boom solenoids
   13. Boom lower circuit orifice plate

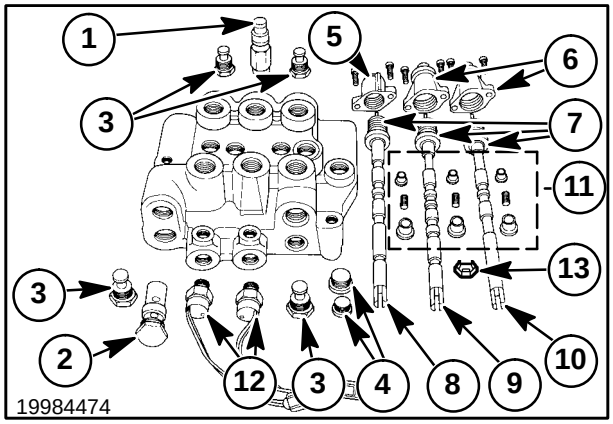

53

https://truckmanualshub.com/

PARTS INSPECTION

Inspect the control valve components thoroughly for scratches or nicks, weak centering springs, weak lift check springs, and scored lift checks or valve seats.

Valve Body, 1

- Check for cracks in casting that allow an oil leak.
- Check the lift check seats, 2.
- Check O ring seating surfaces.
- Damaged fitting thread areas.

Control Spools, 3

- Check the spool lands for scratches.
- Check spool straightness.

***IMPORTANT**: The spools are matched to the control valve body. If excessively worn or damaged, replace the control valve assembly.*

***NOTE:** The three spools are different. Do not mix spools and return spring assemblies during reassembly.*

Detent Caps, 3

- Check the detent pins and springs for proper operation. All pins should move freely and return to position with spring pressure.
- Clean the caps thoroughly and lubricate the pins with a light grease.

Lift Checks, 4

- Check the lift check seat surface for wear or scratches.
- Check the lift check springs.
- Check the caps to ensure free movement of lift checks into the caps.

Orifice Plate, 5 (Boom Lower Circuit)

- Check the flat surface for scratches.
- Check the hole in the plate for dirt and clean.

Solenoid Spool Locks

- Check solenoid operation

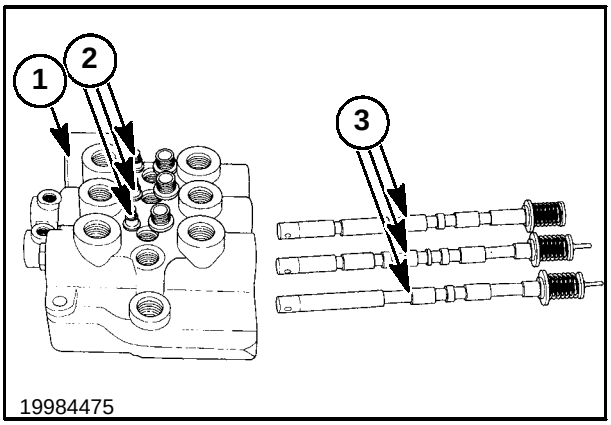

54

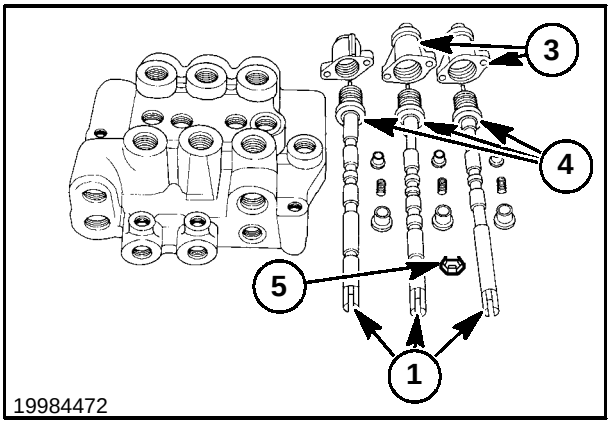

55

https://truckmanualshub.com/

REASSEMBLY

1. Install O rings, 1, in the boom control spool ports, the bucket control spool ports, and auxiliary control spool ports.

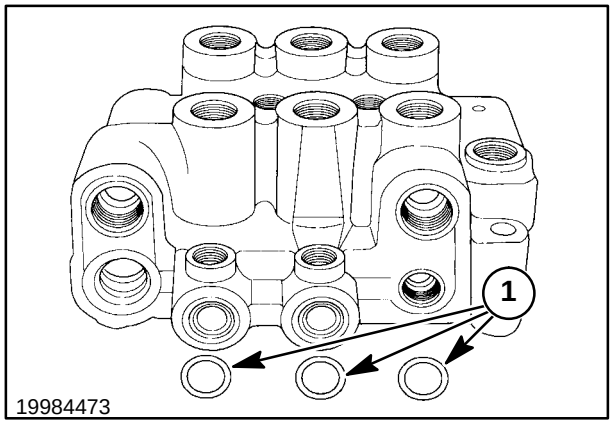

56

2. Install the O ring seals, 1, on the boom circuit relief valve, 2, and all the plugs, 3.
3. Install small O rings, 4, and backup rings, 5, on the relief valve and plugs.

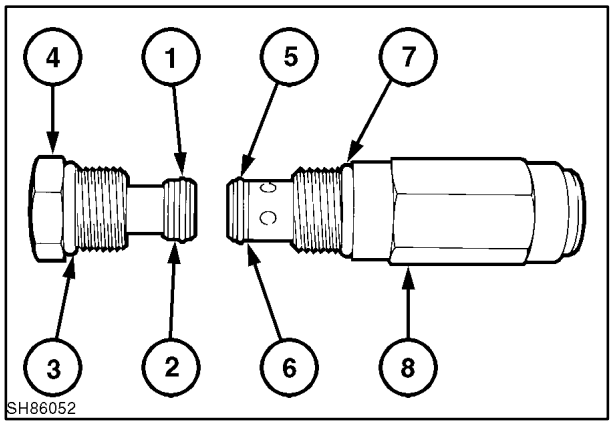

57

4. Install the boom circuit relief valve, 1, into the valve body.
5. Install the plugs, 2, over the bucket and auxiliary spool caps.

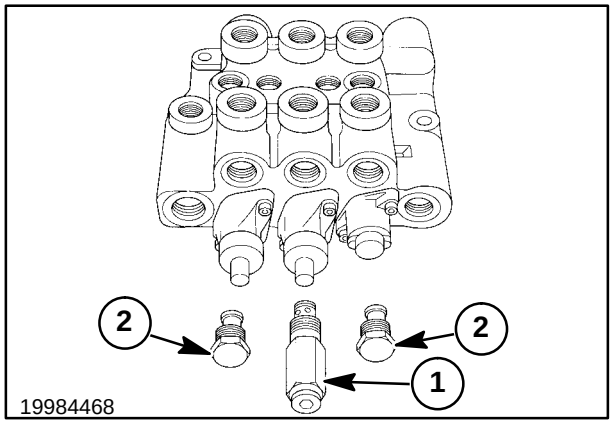

58

https://truckmanualshub.com/

6. Install the plug, 1, into the port, 2, over the main relief valve port. Install the plug, 3, into the port, 4, over the auxiliary control spool.

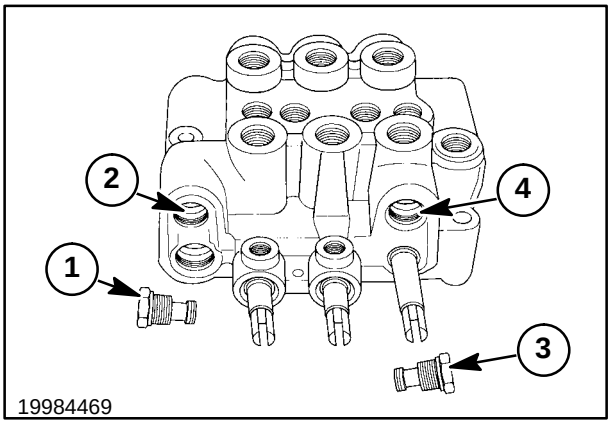

59

7. Install new O rings, 1, on the spools.
8. Install the washers, 2, spring retaining plate with small hole, 3, centering spring, 4, spring plate with large hole, 5, and end screw, 6, on each spool.

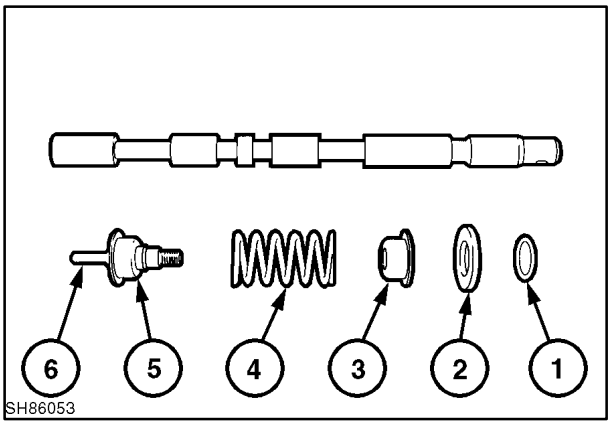

60

NOTE: *The spring retaining plate with the small hole must go next to the valve. The plate with the large hole, 5, must be over the end pin, 6, for proper spool.*

9. Tighten the end screw, 6, securely.

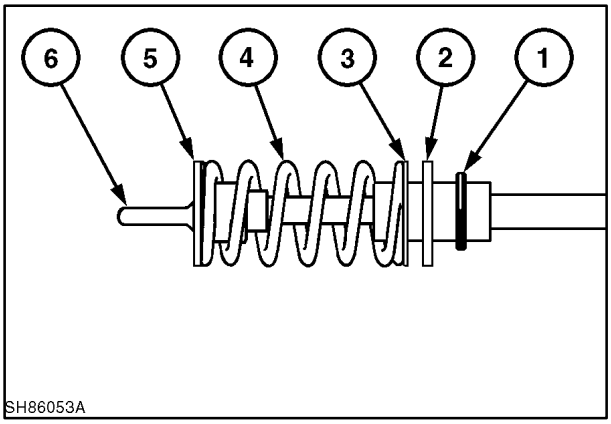

61

https://truckmanualshub.com/

10. Install the control spools into the valve body - bucket, 1, boom, 2, auxiliary, 3.
11. Reinstall the boom lower orifice plate, 4, with the slot towards the fitting in port, 5.

NOTE: *The three spools are different. Do not mix spools and return spring assemblies during reassembly.*

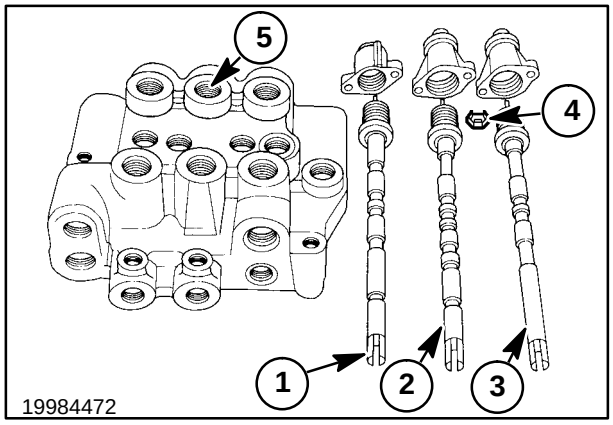

62

12. Install the plain cap, 1, over the bucket control spool and the detent caps, 2, over the boom and auxiliary control spools. Tighten the allen head screws, 3, securely.

NOTE: *If any spool binds in the housing, rotate the spool 180° and check it. If the spool still binds, check the end caps for proper alignment. If a spool still binds, the complete control valve must be replaced.*

NOTE: *On the tractor, binding can be caused by mounting hardware that is too tight (valve to main frame).*

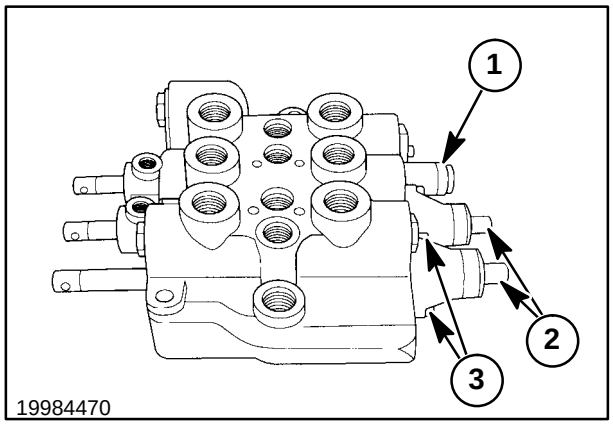

63

13. Install the solenoid plunger assemblies, 1, into the ports, 2, over the control spool ends.

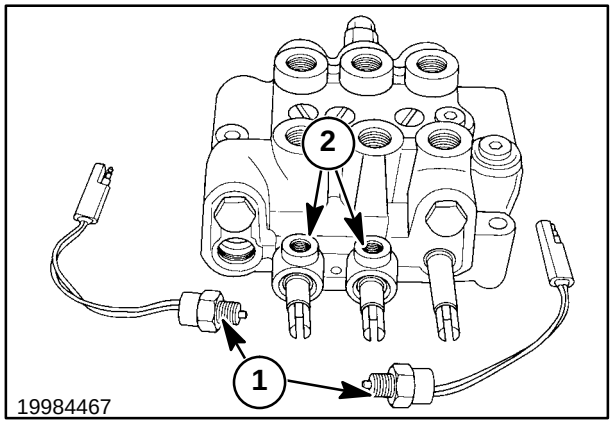

64

https://truckmanualshub.com/

14. Add O rings to the lift check valve caps, 1. Install the lift checks, 2, springs, 3, and caps.
15. Install the two caps, 4, with O rings into the valve body.

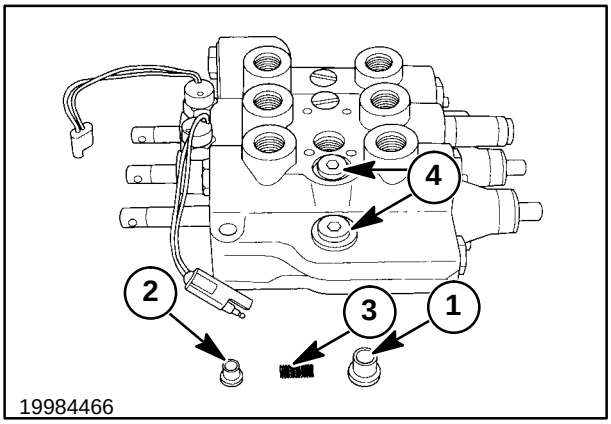

65

16. Install an O ring on the main system relief valve, 1, and install into the valve body.

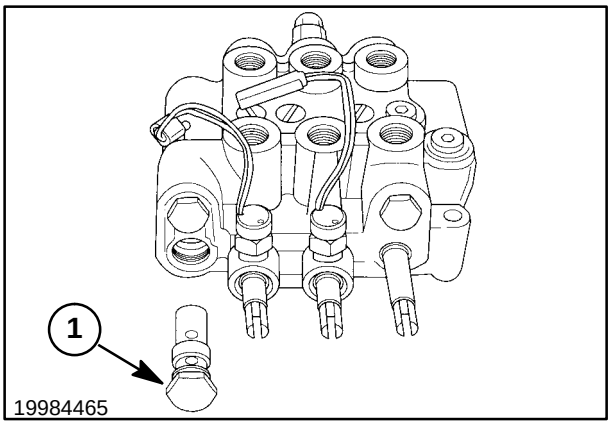

66

REINSTALLATION

1. Place the rubber isolation mount, 1, in place under the control valve space.
2. Reinstall the control valve into the loader with the retaining hardware previously removed. Align the valve with the control linkage and torque the valve retaining hardware to 24 N·m (18 ft. lbs.).
3. Reconnect the control linkage and wiring harness to the lockout solenoids.
4. Reinstall the hydraulic lines and tighten to seat the fittings, then loosen the lines and retorque.
5. Refill the hydraulic reservoir with 10W-30 oil.
6. With the unit supported off the ground, start the unit and check for any oil leaks and repair.
7. Reinstall the step shield and belly pan.
8. Recheck the hydraulic oil level and add as required.

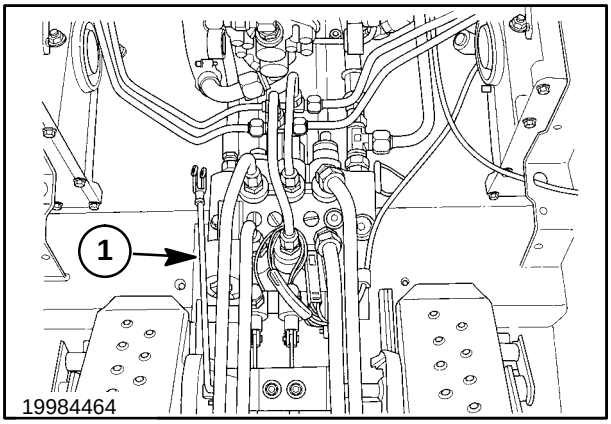

67

https://truckmanualshub.com/

HYDRAULIC PUMP

Specifications	**26000 Series**
Type	Gear Pump
LS160 Output @2900 RPM - 69 bar (1000 PSI)	58.7 L/min (15.5 GPM)
LS170 Output @2900 RPM - 69 bar (1000 PSI)	67.0 L/min (17.7 GPM)
Rotation (Viewed from shaft end)	Clockwise
Gear teeth	13 per gear
Wear plate	Black, powdered metal with Teflon coating
Bushings	Teflon coated
Internal lubrication system	Inlet (suction) side
Labor Required	
R&R Pump	1.5 hrs.
Disassembly, Inspection and Reassembly	0.5 hrs.

https://truckmanualshub.com/

Op. 35 710 10

PUMP REMOVAL

1. Lower the boom and bucket to the lowered position (resting on the ground), or remove any attachment and raise the boom and rest on the boom lock pins.
2. Stop the engine, turn the ignition key to the run position and operate the boom and bucket control pedals to relieve pressure in the boom and bucket circuits. Turn off the key.
3. Raise the seat and seat pan to the raised latched position.
4. Remove the step shield, 1, to access the gear pump area. For more access remove the right or left hydrostatic control handle assembly.

CAUTION

Do not work under a raised seat unless it is securely latched in the raised latched position.

Never work under a raised boom unless it is properly supported by the boom lock pins.

Never work under a raised boom with an attachment. Always remove the attachment from the loader.

Never loosen any hydraulic lines without first relieving all pressure in the system.

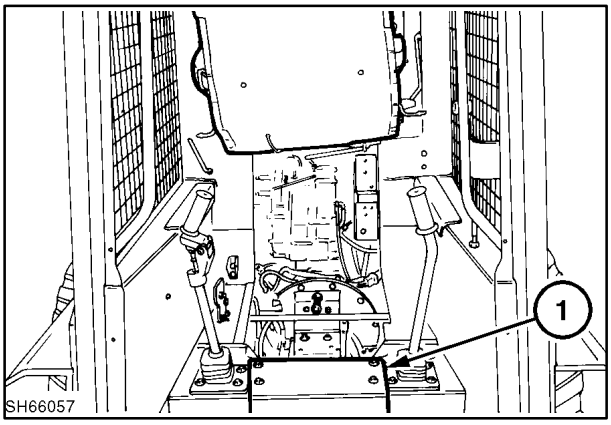

68

https://truckmanualshub.com/

Op. 35 710 20

HYDRAULIC SYSTEM PUMP REMOVAL/ DISASSEMBLY (WITHOUT HIGH FLOW)

1. Remove the suction tube, 1, from the gear pump port fitting, 2, and cap the tube to prevent oil loss. Remove the fitting from the housing.
2. Remove the high pressure hose, 3, from the pump fitting, 4, and cap the tube. Remove the fitting from the housing.
3. Clean the pump thoroughly and mark the pump assembly, 5, to ensure proper reassembly.
4. Remove the pump housing hardware, 6, and separate the end plate and body sections.

IMPORTANT: *The pump body is aluminum and can be easily damaged. BE CAREFUL not to damage machined surfaces. DO NOT use a screwdriver or other hard, sharp objects to pry the pump from the plate.*

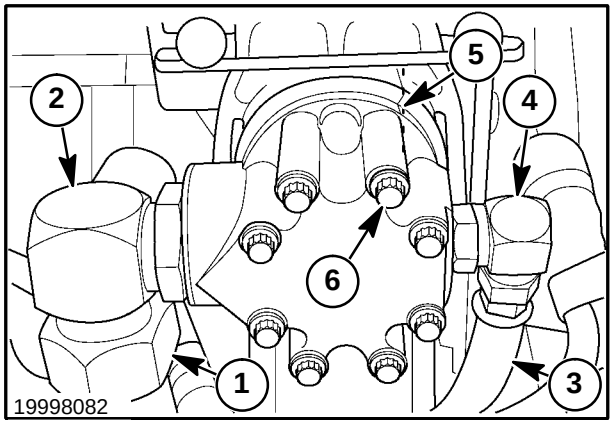

69

The hydraulic system gear pump consists of:

1. Wear plate assembly
2. Idler gear assembly
3. Drive gear assembly
4. Pump body
5. Pump back plate

Separate the hydraulic system pump end plate and body sections.

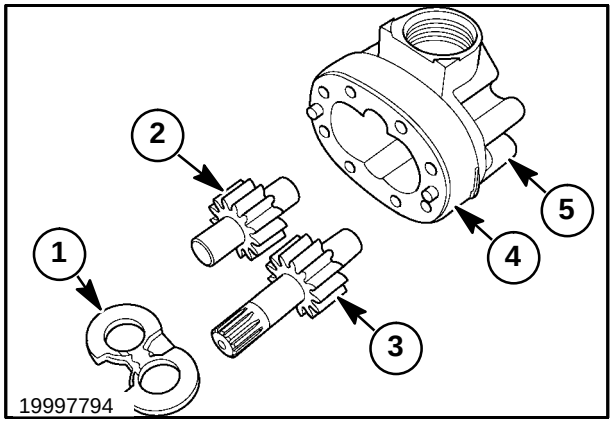

70

Op. 35 710 20

HYDRAULIC SYSTEM PUMP AND HIGH FLOW PUMP REMOVAL/DISASSEMBLY

1. On units equipped with high flow, loosen and remove the boom circuit hydraulic lines, 1 and 2, and the high flow supply line, 3.

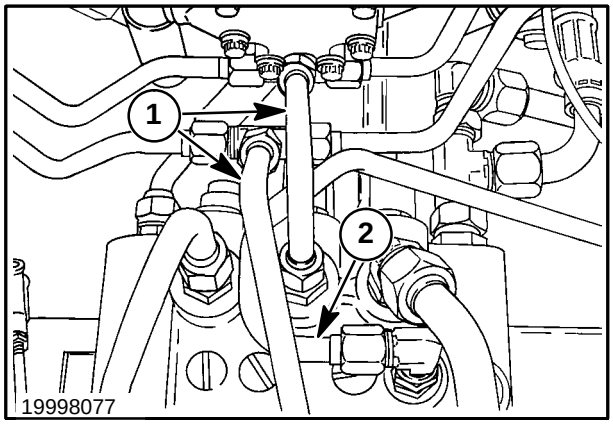

71

https://truckmanualshub.com/

2. Remove the suction tube, 1, from the gear pump port fitting, 2, and cap the tube to prevent oil loss. Remove the fitting from the housing.
3. Remove the high pressure hoses, 3, from the pump fittings, 4, and cap the tubes. Remove the fittings from the housing.
4. Clean the pump thoroughly and mark the pump assembly, 5, to ensure proper reassembly.
5. Remove the pump housing hardware, 6, and separate the end plate and body sections.

***IMPORTANT**: The pump body is aluminum and can be easily damaged. BE CAREFUL not to damage machined surfaces. DO NOT use a screwdriver or other hard, sharp objects to pry the pump from the plate.*

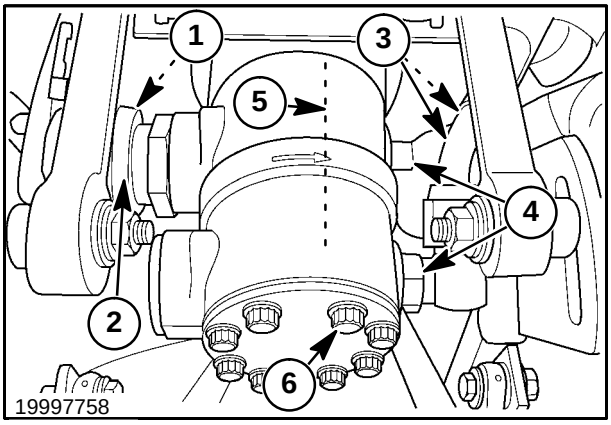

72

The high flow gear pump consists of:

1. Wear plate assembly
2. Idler gear assembly
3. Drive gear
4. Pump body
5. Pump back plate

Separate the high flow pump body, 4, and back plate, 5, sections.

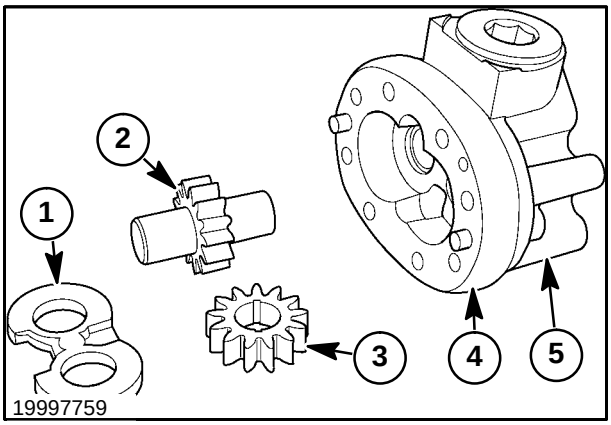

73

The hydraulic system pump consists of:

1. Wear plate assembly
2. Idler gear assembly
3. Drive gear assembly
4. Key
5. Pump body
6. Pump back plate

Separate the hydraulic system pump backplate and body sections.

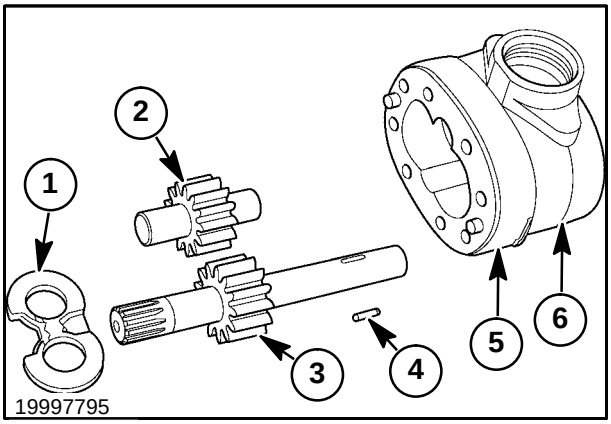

74

https://truckmanualshub.com/

HIGH FLOW PUMP PARTS INSPECTION

1. Inspect the pump back plate for excessive wear. The oil grooves in the back plate bushings, 1, should be at approximately 37° to the pressure side. If the bushing oil grooves are not positioned as noted, the bushings have turned in the plate. The plate should be replaced under this condition.

   The bushings in the plate should be 3.20 mm (0.126″) below the surface of the plate. Replace the back plate if the I.D. of a bushing exceeds 19.2 mm (0.755″).

   Check for scoring on the face of the back plate, 2. Replace the back plate if wear exceeds 0.038 mm (0.0015″).

2. Inspect the pump body, 3, for excessive wear. Check the pump body inside the gear pockets for excessive scoring or wear.

   Replace the pump body if the I.D. of gear pockets, 4, exceed 43.7 mm (1.719″).

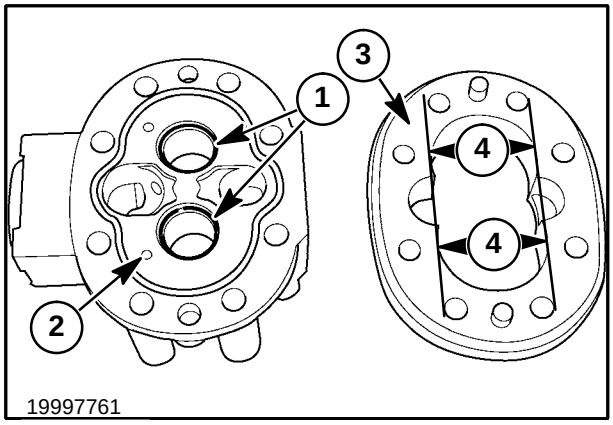

75

3. The wear plate, 1, seal, 2, and backup gasket, 3, should be replaced when the pump is rebuilt. Inspect for damage, such as nicks and tears, to determine if any problem existed. The flat Teflon–coated surface towards the gears and should not show any scratches or grooves that can be caught with a fingernail.

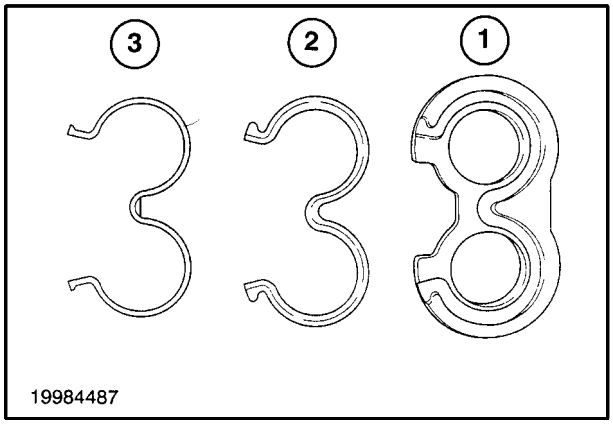

76

4. Inspect the pump gear teeth, 1, for excessive wear. Inspect the drive gear key, 2, to ensure it is not sheared.

   The idler gear shaft should measure greater than or equal to 0.748″ (19.0 mm) in the bushing area, 3. Both gears should be at least 12.95 mm (0.51″) wide. If the assemblies measure less than specified, replace both gears.

NOTE: *If replacement of the gear assemblies is necessary, the gear assemblies should be replaced in pairs.*

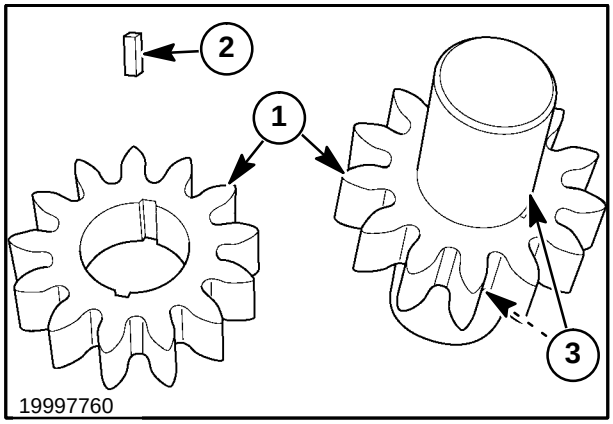

77

https://truckmanualshub.com/

HYDRAULIC SYSTEM PUMP PARTS INSPECTION

1. Inspect the pump mounting plate for excessive wear. The oil grooves in the bushings, 1, should be line up with the dowel pin holes and be approximately 180° apart. If the bushing oil grooves are not positioned as noted, the bushings have turned in the plate - the plate should be replaced.

   The bushings in the plate should be 3.20 mm (0.126″) above the surface of the plate. Replace the plate if the I.D. of the idler gear bushing exceeds 19.2 mm (0.755″).

2. Check the seal areas, 2, for scratches or damage that could prevent a good seal.

3. With High Flow - Inspect the pump back plate for excessive wear. The oil grooves in the back plate bushings, 1, should be at approximately 37° to the pressure side. If the bushing oil grooves are not positioned as noted, the bushings have turned in the plate. The plate should be replaced under this condition.

   The bushings in the plate should be 3.20 mm (0.126″) below the surface of the plate. Replace the back plate if the I.D. of a bushing exceeds 19.2 mm (0.755″).

   Check for scoring on the face of the back plate, 2. Replace the back plate if wear exceeds 0.038 mm (0.0015″).

4. Without High Flow - Inspect the pump back plate for excessive wear. The oil grooves in the back plate bushings, 1, should be at approximately 37° to the pressure side. If the bushing oil grooves are not positioned as noted, the bushings have turned in the plate. The plate should be replaced under this condition.

   The bushings in the plate should be 3.20 mm (0.126″) below the surface of the plate. Replace the back plate if the I.D. of a bushing exceeds 19.2 mm (0.755″).

   Check for scoring on the face of the back plate, 2. Replace the back plate if wear exceeds 0.038 mm (0.0015″).

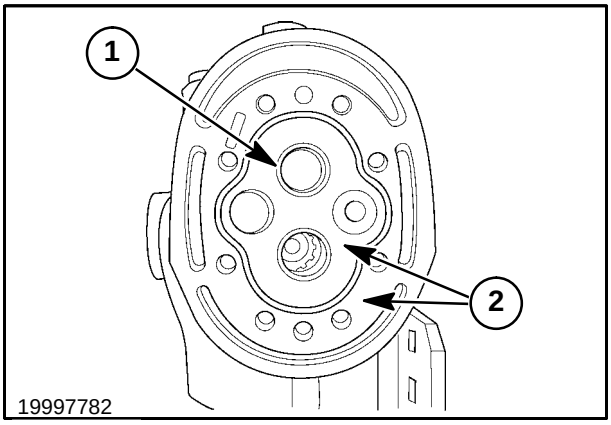

78

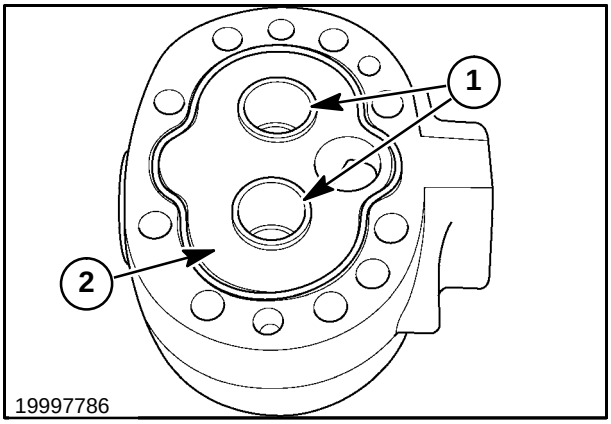

79

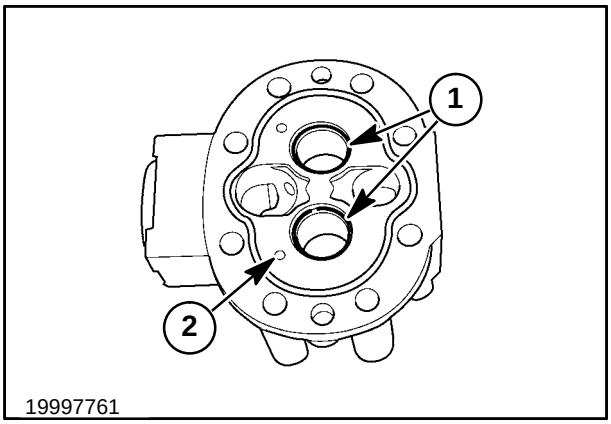

80

https://truckmanualshub.com/

5. Inspect the pump body, 1, for excessive wear. Check the pump body inside the gear pockets for excessive scoring or wear.

   Replace the pump body if the I.D. of gear pockets, 2, exceed 43.7 mm (1.7195″).

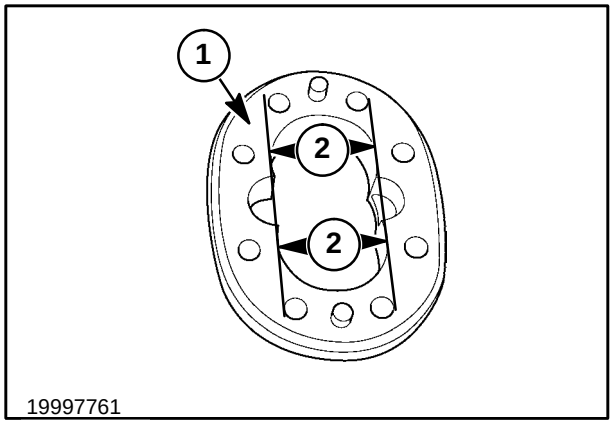

81

6. The wear plate, 1, seal, 2, and backup gasket, 3, should be replaced when the pump is rebuilt. Inspect for damage, such as nicks and tears, to determine if any problem existed. The flat Teflon-coated surface towards the gears and should not show any scratches or grooves that can be caught with a fingernail.

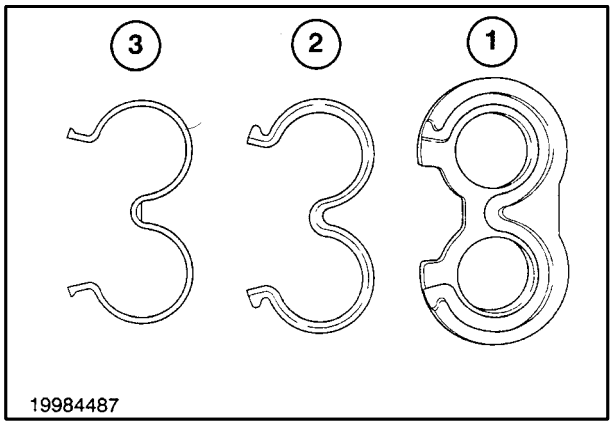

82

7. With High Flow - Inspect the pump gear teeth, 1, for excessive wear.

   The gear shaft assemblies should measure greater than or equal to 0.7485″ (19.0 mm) in the bushing area, 2. LS160 gears should be at least 22.56 mm (0.888″) wide. LS170 gears should be at least 22.76 mm (1.014″) wide. Replace the gears if they do not meet specifications.

NOTE: *If replacement of the gear assemblies is necessary, the gear assemblies should be replaced in pairs.*

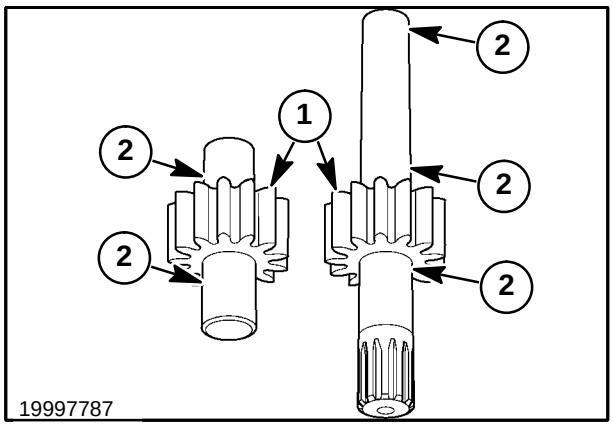

83

https://truckmanualshub.com/

8. Without High Flow - Inspect the pump gear teeth, 1, for excessive wear.

   The gear shaft assemblies should measure greater than or equal to 0.748″ (19.0 mm) in the bushing area, 2. LS160 gear should be at least 22.56 mm (0.888″) wide. LS170 gears should be at least 22.76 mm (1.014″) wide. Replace the gears if they do not meet specifications.

NOTE: *If replacement of the gear assemblies is necessary, the gear assemblies should be replaced in pairs.*

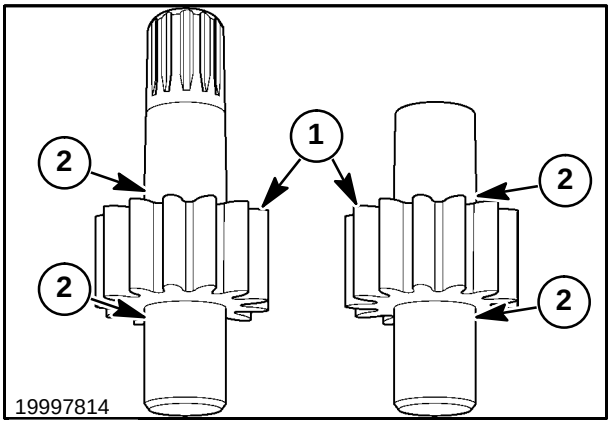

84

HYDRAULIC SYSTEM PUMP REASSEMBLY/ INSTALLATION (WITHOUT HIGH FLOW)

NOTE: *If installing a new pump, refer to "New Hydraulic System Pump Installation (Without High Flow)" below.*

1. Coat all parts with a thin coat of petroleum jelly or oil to aid in reassembly.
2. Clean the mounting plate surface and hydrostatic pump housing thoroughly and install a new O ring, 1.

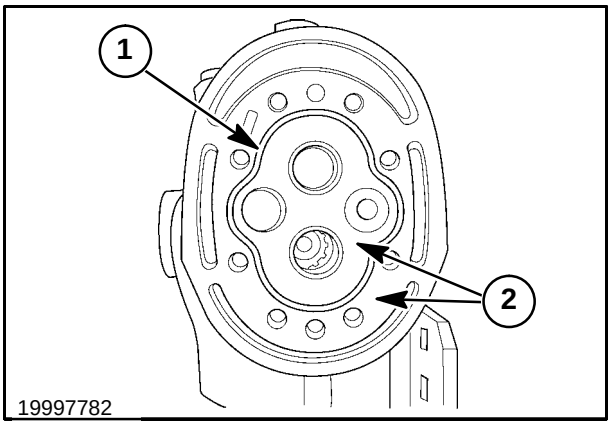

85

3. Install the seal, 1, and backup gasket 2, on the wear plate, 3. BE SURE that the flat area, 4, on the gasket AND seal, 5, are properly aligned and lay flat when installed in the wear plate.

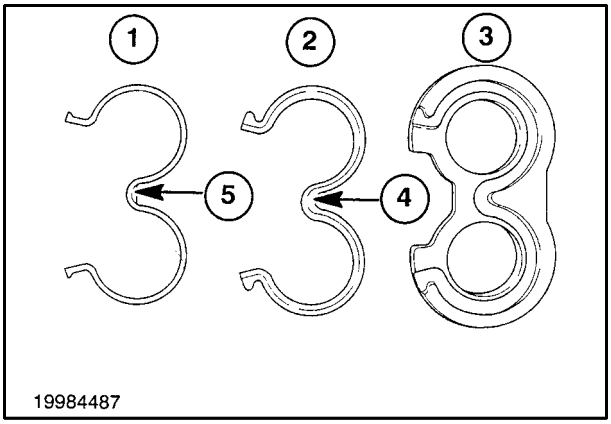

86

https://truckmanualshub.com/

NOTE: *The gasket AND seal must align and lay flat when installed in the wear plate.*

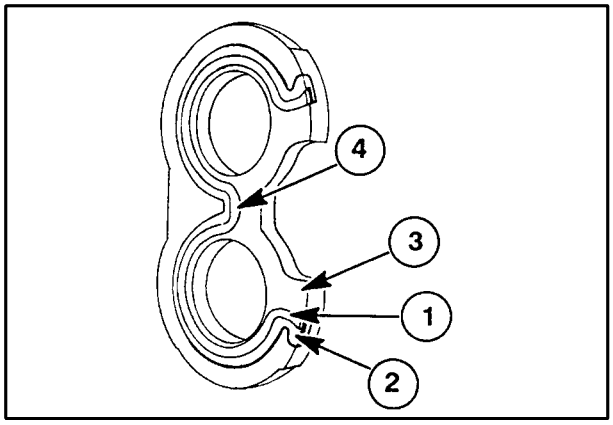

87

4. Install the wear plate assembly, 1, with the gasket/seal side towards the pump mounting plate with the mid section cut away on the suction side, 2, of the pump.

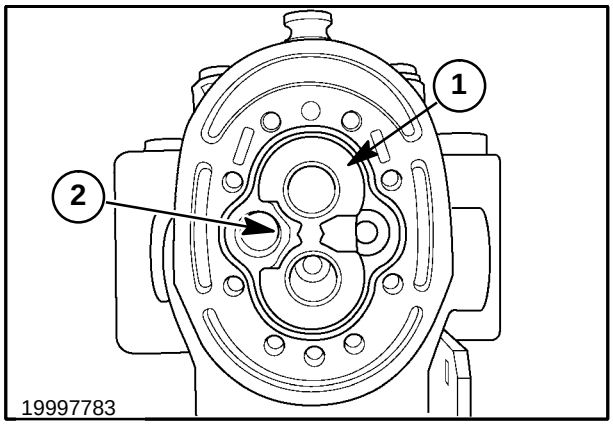

88

5. Install the drive shaft, 1, making sure to engage the splines inside the hydrostatic pump. Install the idler gear assembly, 2, into the bushing. Rotate the gears to help slide the idler gear into place.

NOTE: *The drive shaft and gear, 1, must be properly seated into the hydrostatic pump drive shaft splines with the end of gear teeth against the wear plate.*

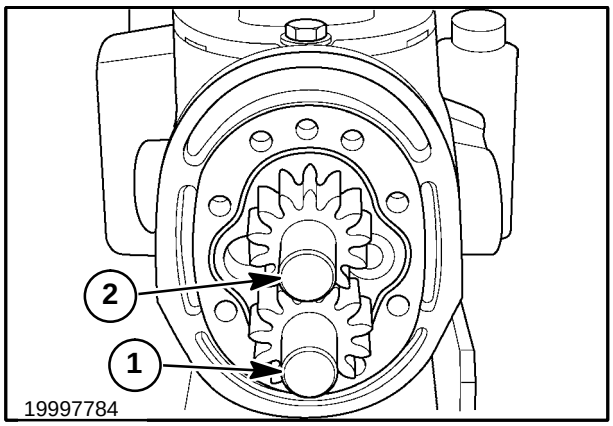

89

https://truckmanualshub.com/

6. Make sure the dowel pins, 1, are in place and install the body on the plate with the half-moon cavities, 2, in the body facing out away from the plate. Check that the reference marks made during disassembly align correctly.

NOTE: *The small half-moon cavity, 2, must be on the pressure side of the pump.*

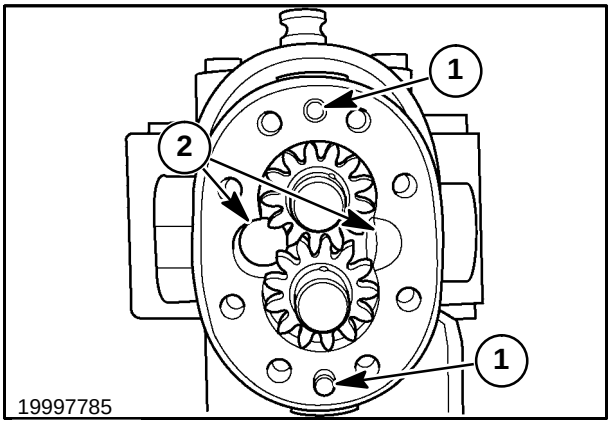

90

7. Install a new O ring, 1, in the back plate.

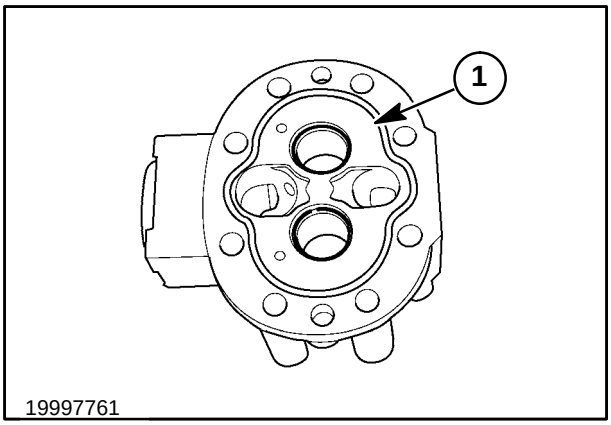

91

8. Install the pump back plate, 1, over the gear shafts. Check that the reference marks made during disassembly align correctly.
9. Install the housing hardware with the eight bolts, 2, and sealing washers. Tighten the bolts evenly in a criss-cross pattern to 34 - 38 N·m (25 - 28 ft. lbs.).
10. Install the high pressure port fitting, 3, and the high pressure line, 4. Tighten the high pressure line connections securely.
11. Install the suction tube port fitting, 5, and turn the fitting up. Add SH/CG4 10W-30 oil to fill the bottom of the hydraulic pump.

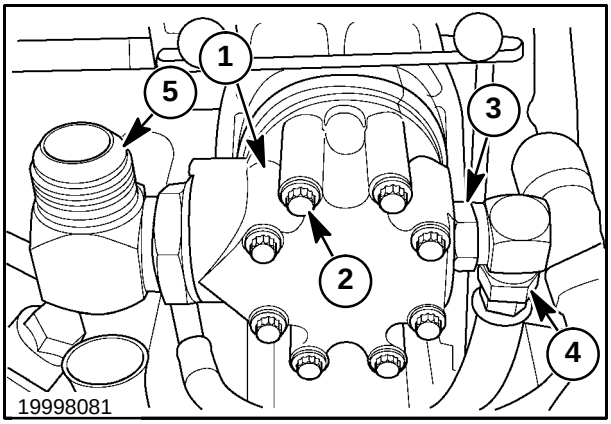

92

https://truckmanualshub.com/

12. Turn the suction tube fitting, 1, down and install the suction tube, 2. Tighten all hydraulic connections securely.

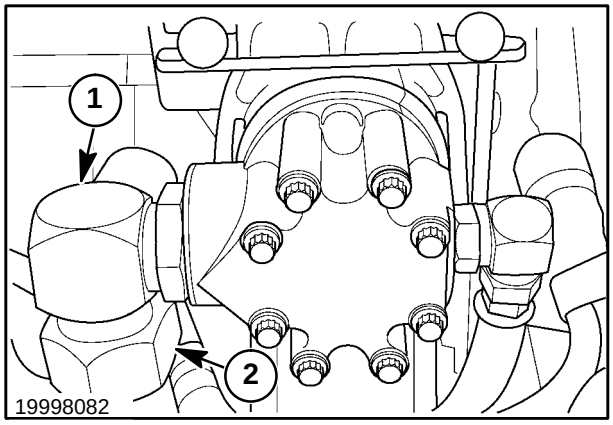

93

HYDRAULIC SYSTEM PUMP AND HIGH FLOW PUMP REASSEMBLY/ INSTALLATION

NOTE: *If installing a new pump assembly, refer to "New Hydraulic System Pump / High Flow Pump Installation" below.*

1. Coat all parts with a thin coat of petroleum jelly or oil to aid in reassembly.
2. Clean the mounting plate surface and hydrostatic pump housing thoroughly and install a new O ring, 1.

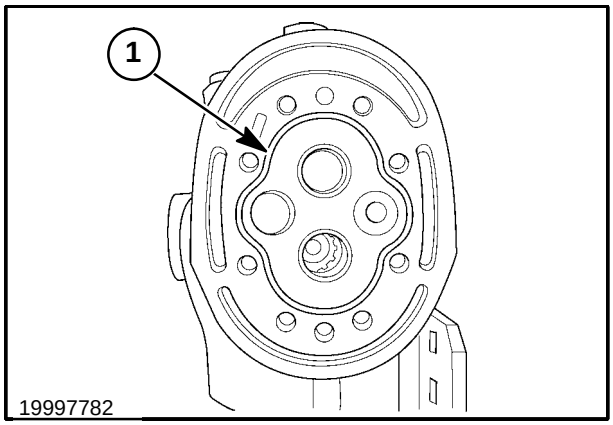

94

3. Install the seal, 1, and backup gasket 2, on the wear plate, 3. BE SURE that the flat area, 4, on the gasket AND seal, 5, are properly aligned and lay flat when installed in the wear plate.

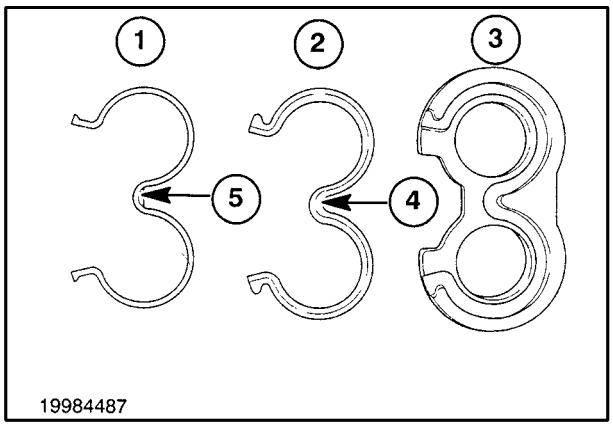

95

https://truckmanualshub.com/

NOTE: *The gasket AND seal must align and lay flat when installed in the wear plate.*

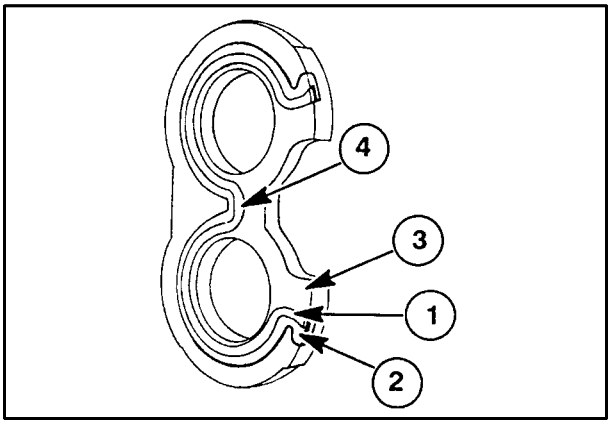

96

4. Install the wear plate assembly, 1, with the gasket/seal side towards the pump mounting plate with the mid section cut away on the suction side, 2, of the pump.

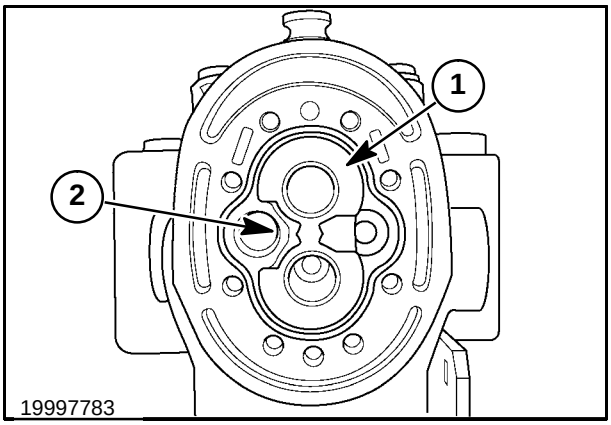

97

5. Install the drive shaft, 1, making sure to engage the splines inside the hydrostatic pump. Install the idler gear assembly, 2, into the bushing. Rotate the gears to help slide the idler gear into place.

NOTE: *The drive shaft and gear, 1, must tbe properly seated into the hydrostatic pump drive shaft splines with the end of gear teeth against the wear plate. Position the keyway, 3, up.*

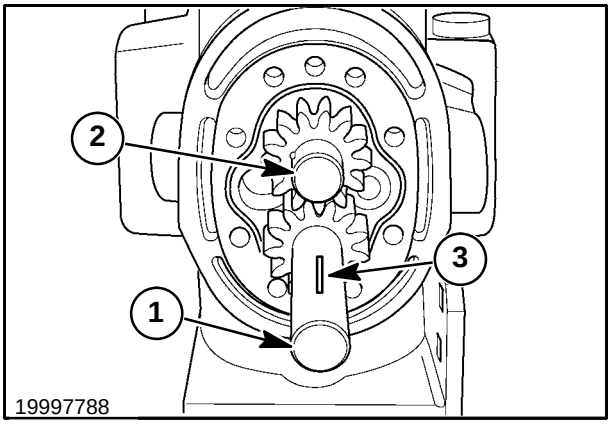

98

https://truckmanualshub.com/

6. Make sure the dowel pins, 1, are in place and install the body, 2, on the plate with the half-moon cavities, 3, in the body facing out away from the plate. Check that the reference marks made during disassembly align correctly.

NOTE: *The small half-moon cavity, 3, must be on the pressure side of the pump.*

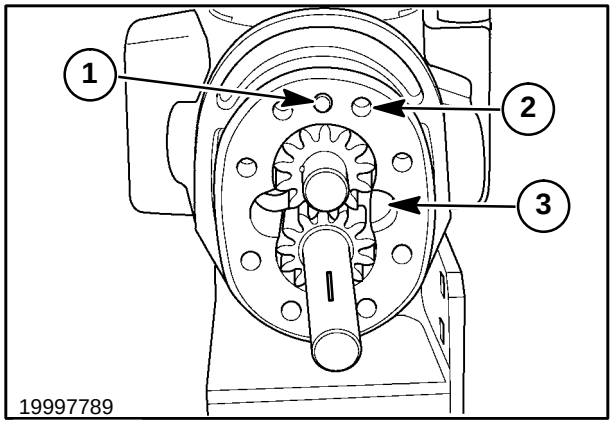

99

7. Install a new O ring, 1, in the back plate.

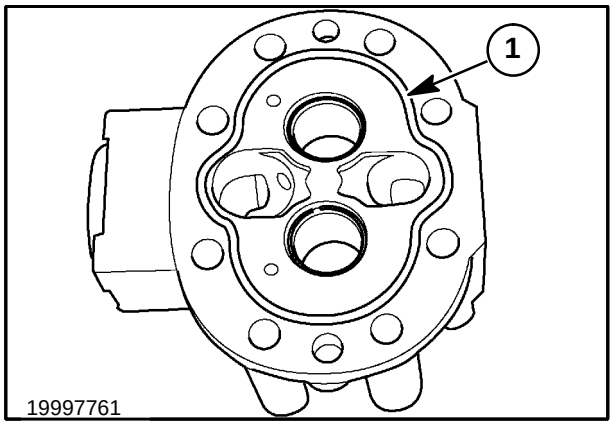

100

8. Install the pump back plate, 1, over the gear shafts. Check that the reference marks made during disassembly align correctly.
9. Clean the mounting plate surface thoroughly and install a new O ring, 2. Install the shaft key, 3, in the drive shaft.

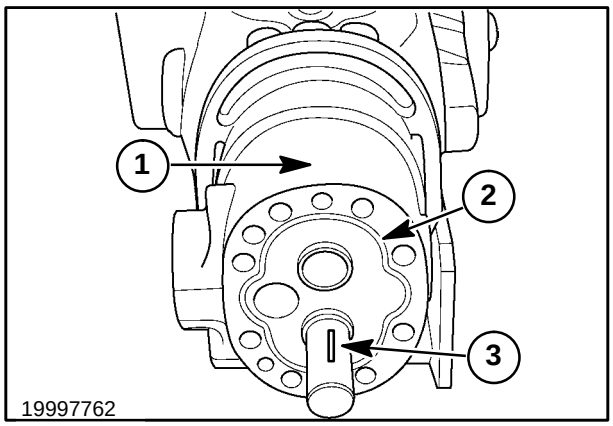

101

https://truckmanualshub.com/

10. Install the seal, 1, and backup gasket 2, on the wear plate, 3. BE SURE that the flat area, 4, on the gasket AND seal, 5, are properly aligned and lay flat when installed in the wear plate.

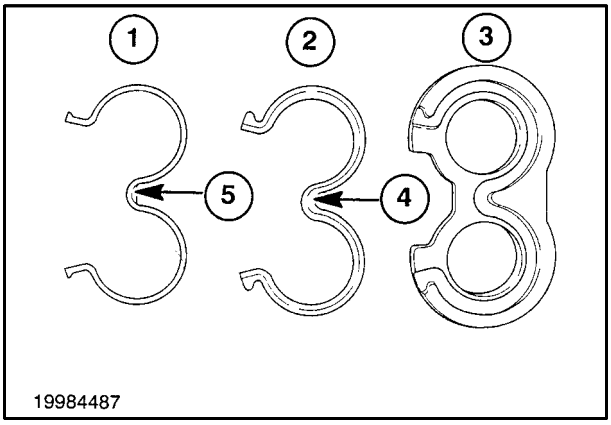

102

NOTE: *The gasket AND seal must align and lay flat when installed in the wear plate.*

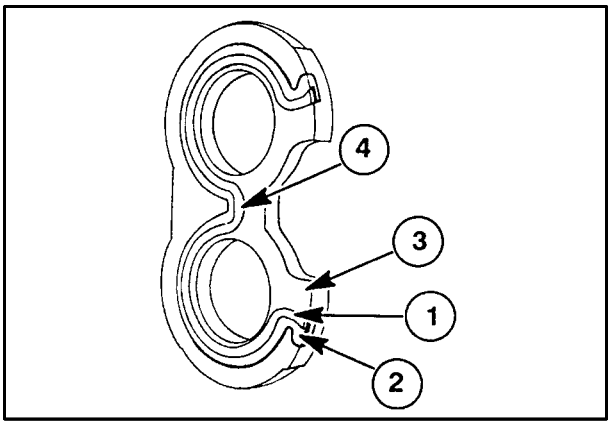

103

11. Install the wear plate assembly, 1, with the gasket/seal side towards the pump mounting plate with the mid section cut away on the suction side, 2, of the pump.

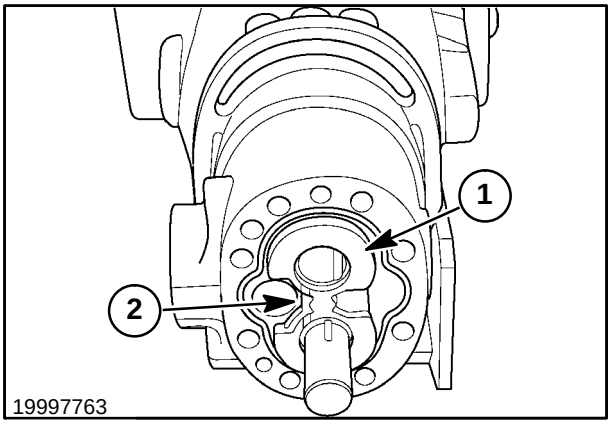

104

https://truckmanualshub.com/

12. Install the drive gear, 1, on the drive shaft, slipping the groove over the shaft key, 2. Install the idler gear assembly, 3, into the bushing. Rotate the gears to help slide the idler gear into place.

NOTE: *When installing drive gear, 1, onto the shaft, be careful not to knock the round key, 2, from the shaft.*

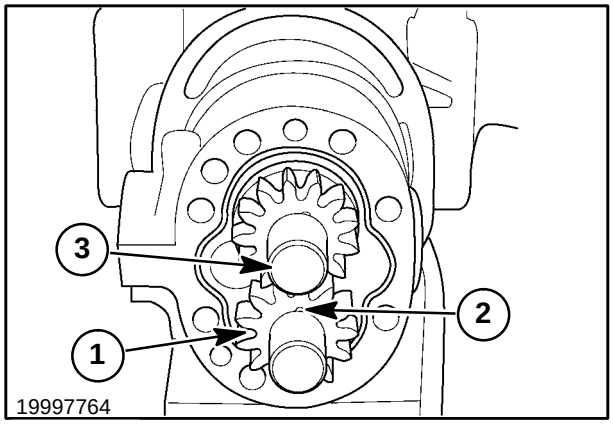

105

13. Make sure the dowel pins, 1, are in place and install the body, 2, on the plate with the half-moon cavities, 3, in the body facing out away from the plate. Check that the reference marks made during disassembly align correctly.

NOTE: *The small half-moon cavity, 3, must be on the pressure side of the pump.*

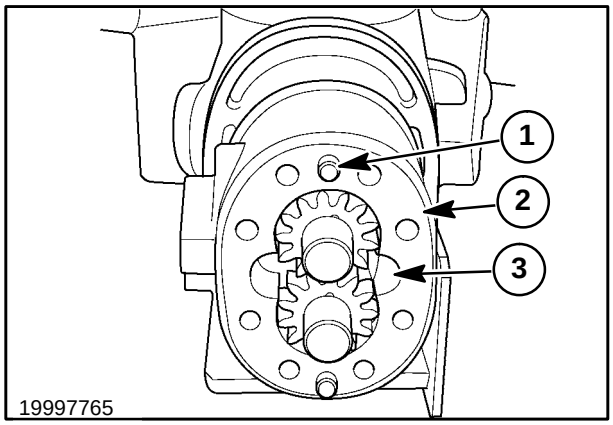

106

14. Install a new O ring, 1, in the back plate.

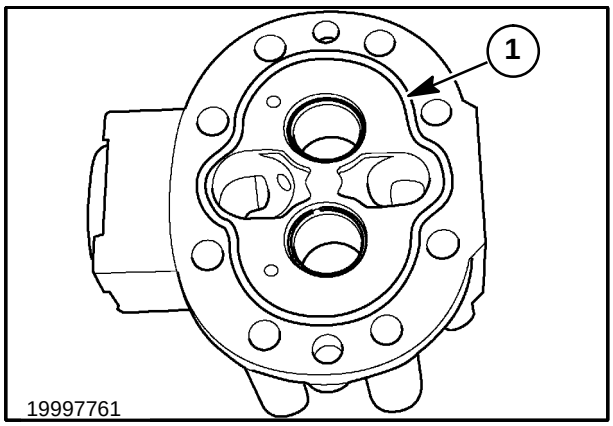

107

https://truckmanualshub.com/

15. Install the pump backplate, 1, over the gear shafts. Check that the reference marks made during disassembly align correctly.
16. Install the housing hardware with the eight bolts, 2, and sealing washers. Tighten the bolts evenly in a criss-cross pattern to 34 - 38 N·m (25 - 28 ft. lbs.).
17. Install the high pressure port fittings, 3, and the high pressure lines, 4. Tighten the high pressure line connections securely.
18. Install the suction tube port fitting, 5, and turn the fitting up. Add SH/CG4 10W-30 oil to fill the bottom of the hydraulic pump.

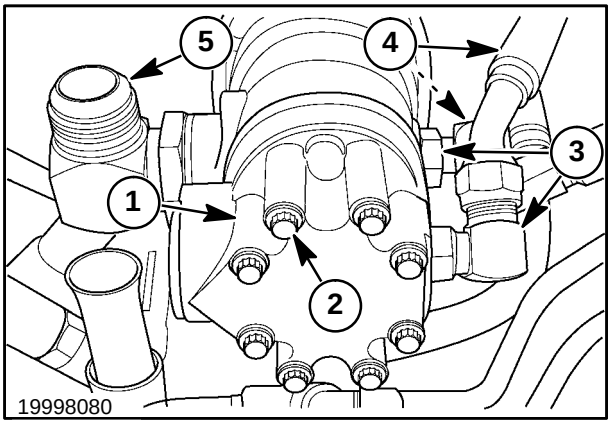

108

19. Turn the suction tube fitting, 1, down and install the suction tube, 2. Tighten all hydraulic connections securely.

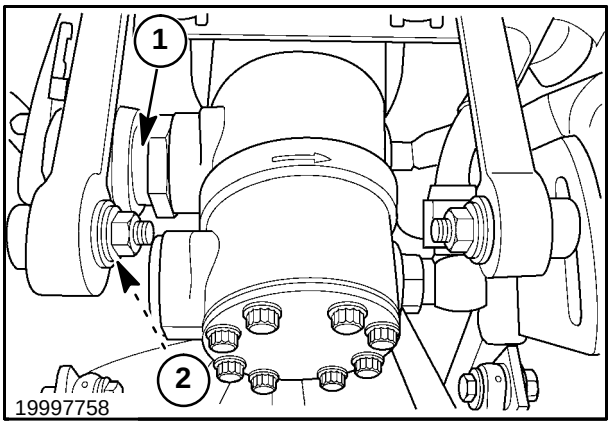

109

20. Reinstall the boom circuit hydraulic lines, 1, and high flow line, 2, and tighten securely.

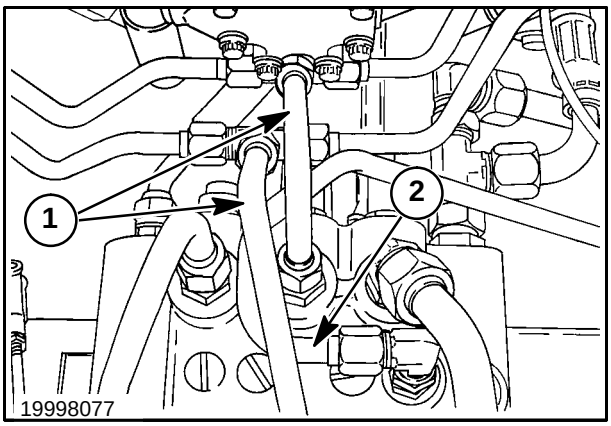

110

https://truckmanualshub.com/

NEW HYDRAULIC SYSTEM PUMP INSTALLATION (WITHOUT HIGH FLOW)

1. Remove the through bolts and separate the gear assemblies and wear plate from the pump body by removing the drive gear, 1, and idler gear, 2. Do not disturb the seal between the pump body and the backplate.

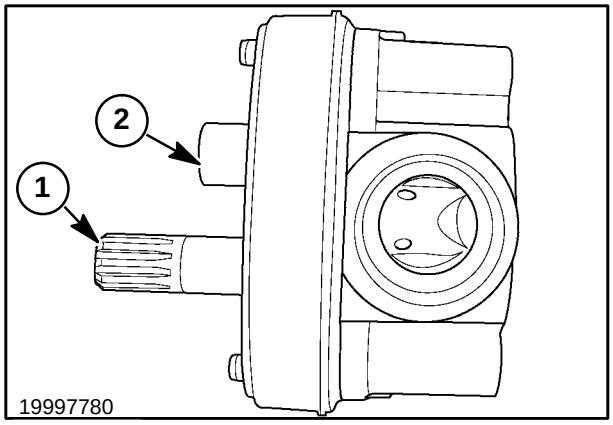

111

The hydraulic system gear pump consists of:

1 Wear plate assembly
2 Idler gear assembly
3 Drive gear assembly
4 Pump body
5 Pump back plate

Coat all parts with a thin coat of petroleum jelly or oil to aid in reassembly.

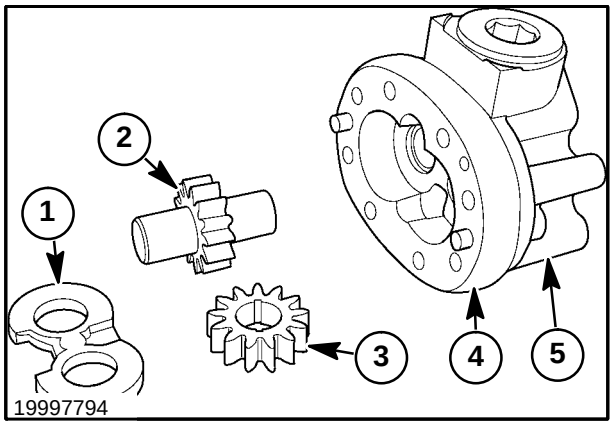

112

2. Clean the mounting plate surface thoroughly and install a new O ring, 1.

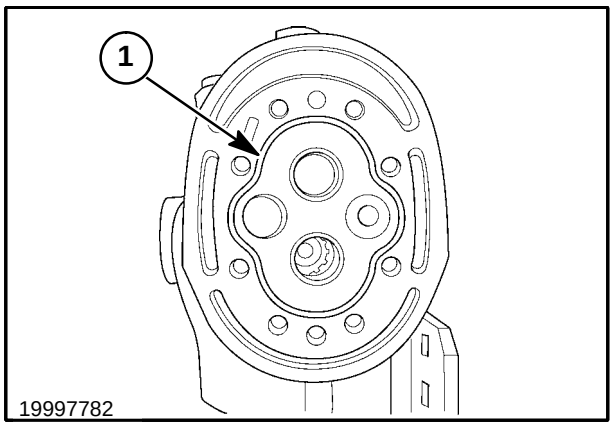

113

https://truckmanualshub.com/

3. Install the wear plate assembly, 1, with the gasket/seal side towards the pump mounting plate with the mid section cut away on the suction side, 2, of the pump.

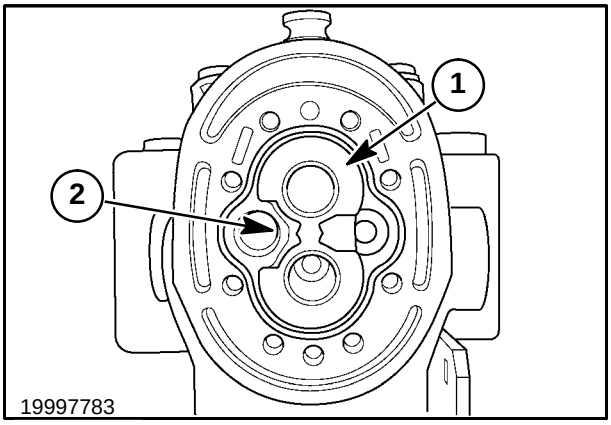

114

4. Install the drive shaft, 1, making sure to engage the splines inside the hydrostatic pump. Install the idler gear assembly, 2, into the bushing. Rotate the gears to help slide the idler gear into place.

NOTE: *The drive shaft and gear, 1, must be properly seated into the hydrostatic pump drive shaft splines with the end of gear teeth against the bearing plate.*

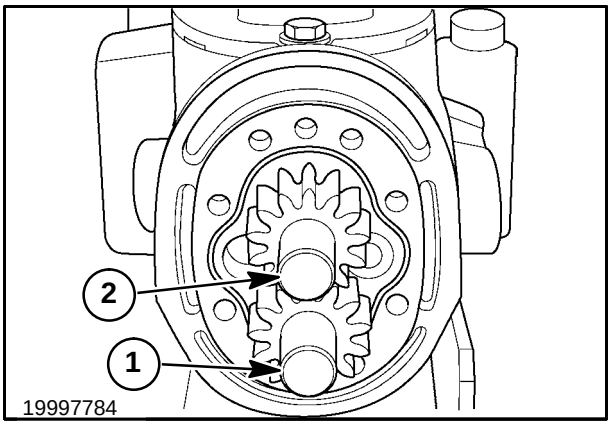

115

5. Install the pump backplate, 1, and body together over the gear shafts.
6. Install the housing hardware with the eight bolts, 2, and sealing washers. Tighten the bolts evenly in a criss-cross pattern to 34 - 38 N·m (25 - 28 ft. lbs.).
7. Install the high pressure port fitting, 3, and the high pressure line, 4. Tighten the high pressure line connections securely.
8. Install the suction tube port fitting, 5, and turn the fitting up. Add SH/CG4 10W-30 oil to fill the bottom of the hydraulic pump.

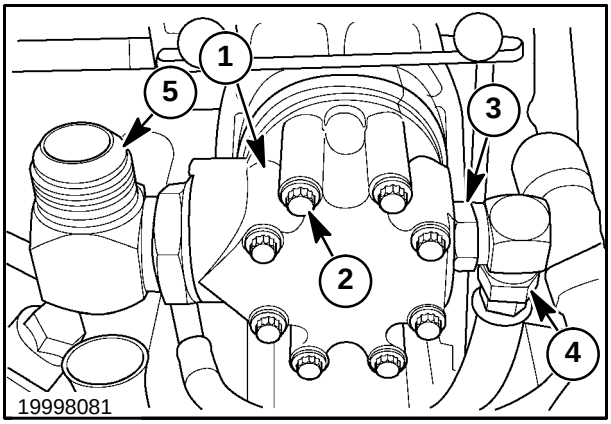

116

https://truckmanualshub.com/

9. Turn the suction tube fitting, 1, down and install the suction tube, 2. Tighten all hydraulic connections securely.

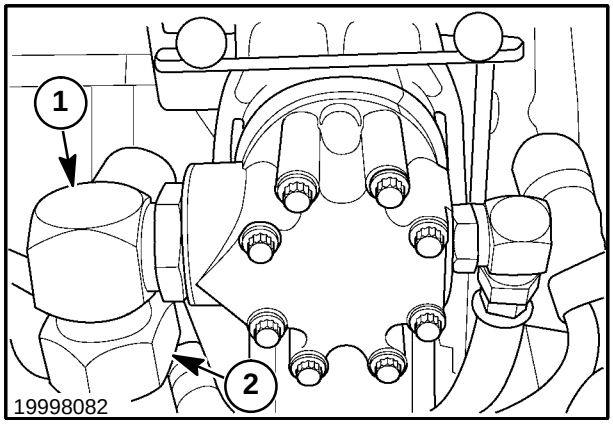

117

NEW HYDRAULIC SYSTEM PUMP / HIGH FLOW PUMP INSTALLATION

1. Remove the through bolts, 1, and washers.
2. Separate the pumps at 2, taking care not to disturb the seals between the pump bodies and backplates.

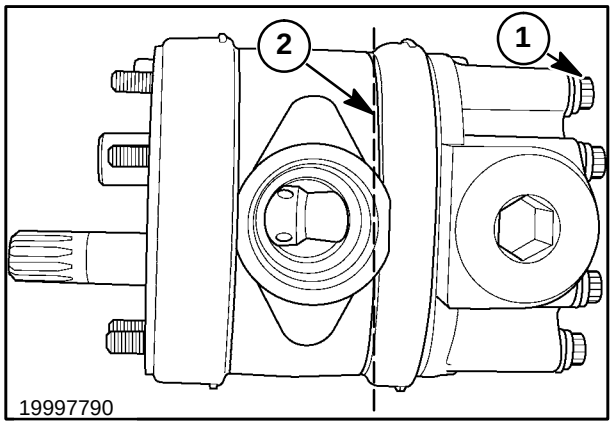

118

3. Remove the small round drive key, 1, from the pump shaft, 2, and remove the drive gears, idler gears, and wear plates from the pumps, taking care not to disturb the seals between the pump body and backplate.

IMPORTANT: *The small round key must be removed to remove drive shaft from center section. Do not lose key.*

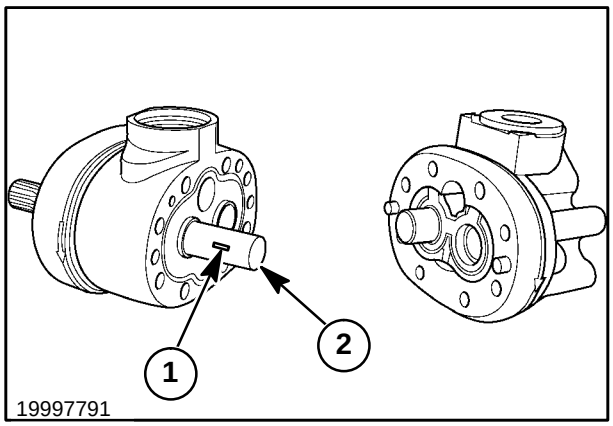

119

https://truckmanualshub.com/

The hydraulic system pump consists of:

1 Wear plate assembly
2 Idler gear assembly
3 Drive gear assembly
4 Key
5 Pump body
6 Pump back plate

Coat all parts with a thin coat of petroleum jelly or oil to aid in reassembly.

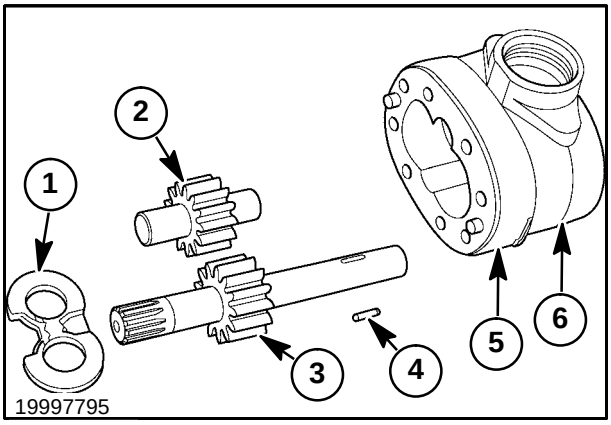

120

The high flow pump consists of:

1 Wear plate assembly
2 Idler gear assembly
3 Drive gear assembly
4 Key (Figure 120)
5 Pump body
6 Pump back plate

Coat all parts with a thin coat of petroleum jelly or oil to aid in reassembly.

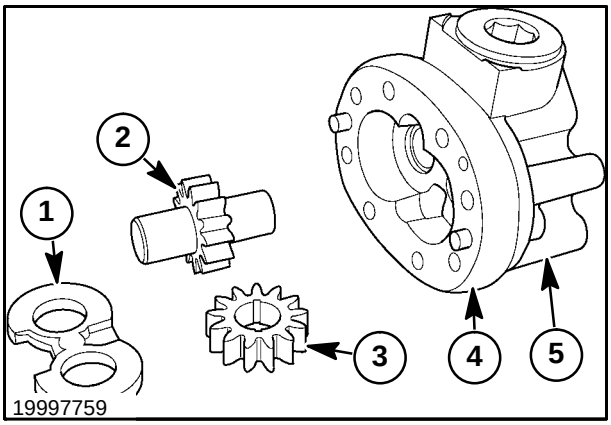

121

4. Clean the mounting plate surface thoroughly and install a new O ring, 1.

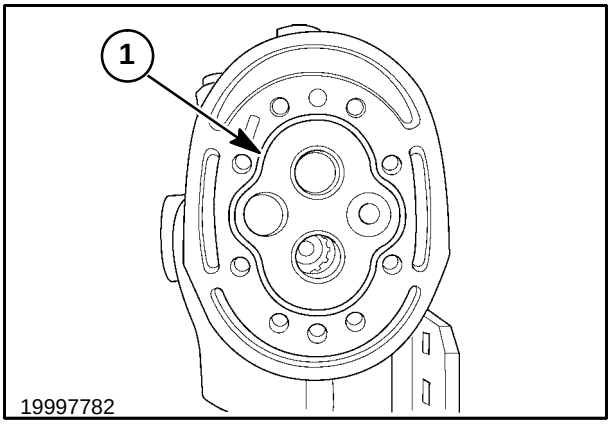

122

https://truckmanualshub.com/

Install the wear plate assembly, 1, with the gasket/seal side towards the pump mounting plate with the mid section cut away on the suction side, 2, of the pump.

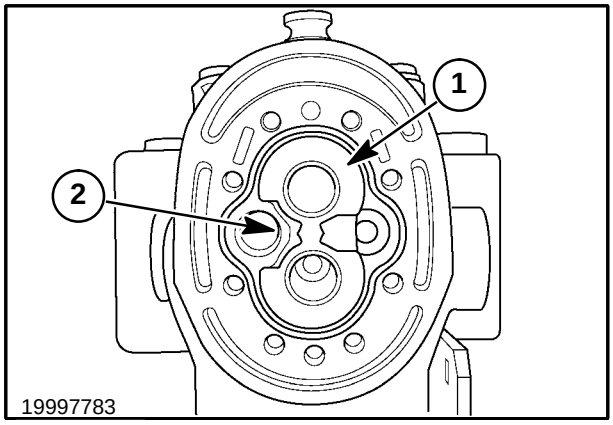

123

5. Install the drive shaft, 1, making sure to engage the splines inside the hydrostatic pump. Install the idler gear assembly, 2, into the bushing. Rotate the gears to help slide the idler gear into place.

NOTE: *The drive shaft and gear, 1, must tbe properly seated on the hydrostatic pump drive shaft splines with the end of gear teeth against the wear plate. Position the keyway, 3, up.*

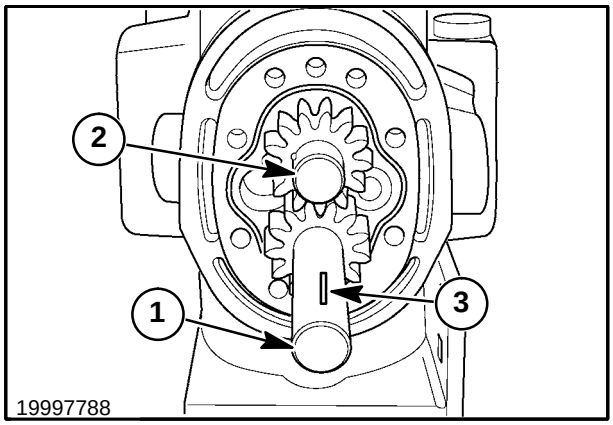

124

6. Install the pump body and back plate together, 1, over the gear shafts, taking care not to disturb the seals between the pump body and backplate.

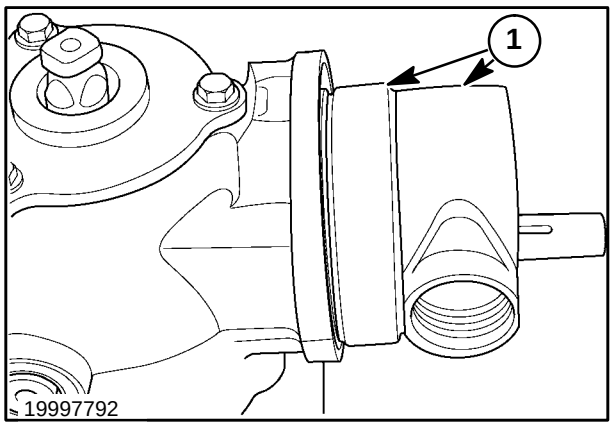

125

https://truckmanualshub.com/

7. Clean the mounting plate surface thoroughly and install a new O ring, 2. Install the shaft key, 3, in the drive shaft.

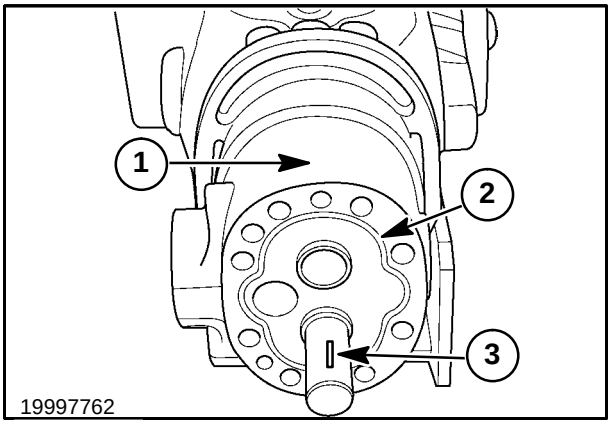

126

8. Install the wear plate assembly, 1, with the gasket/seal side towards the pump mounting plate with the mid section cut away on the suction side, 2, of the pump.

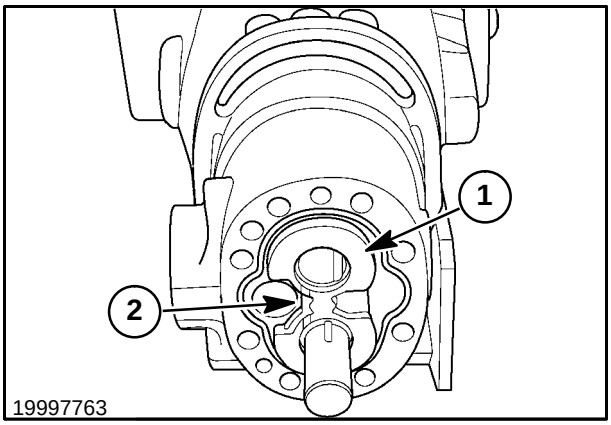

127

9. Install the drive gear, 1, on the drive shaft, slipping the groove over the shaft key, 2. Install the idler gear assembly, 3, into the bushing. Rotate the gears to help slide the idler gear into place.

NOTE: *When installing drive gear, 1, onto shaft, be careful not to knock the round drive key, 2, from the shaft.*

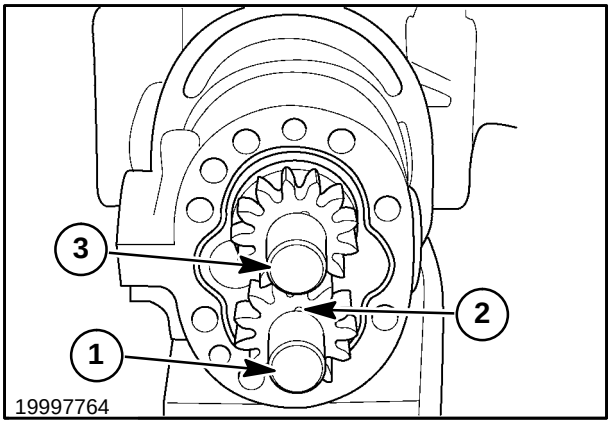

128

https://truckmanualshub.com/

10. Install the high flow pump body and end plate together, 1, taking care not to disturb the seals between the pump body and backplate. Make sure there are no gaps between the pump bodies and plates.

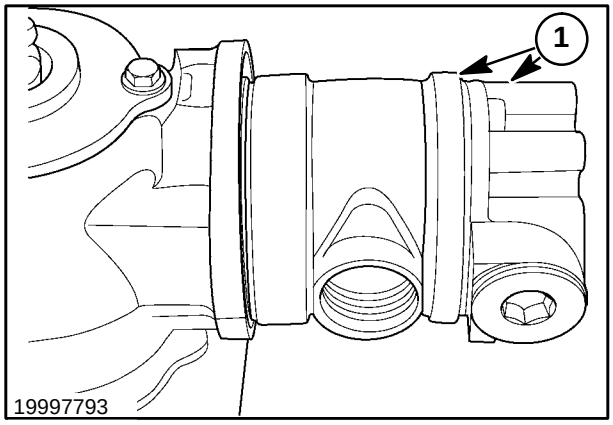

129

11. Install the housing hardware with the eight bolts, 1, and sealing washers. Tighten the bolts evenly in a criss-cross pattern to 34 - 38 N·m (25 - 28 ft. lbs.).
12. Install the high pressure port fittings, 2, and the high pressure lines, 3. Tighten the high pressure line connections securely.
13. Install the suction tube port fitting, 4, and turn the fitting up. Add SH/CG4 10W-30 oil to fill the bottom of the hydraulic pump.

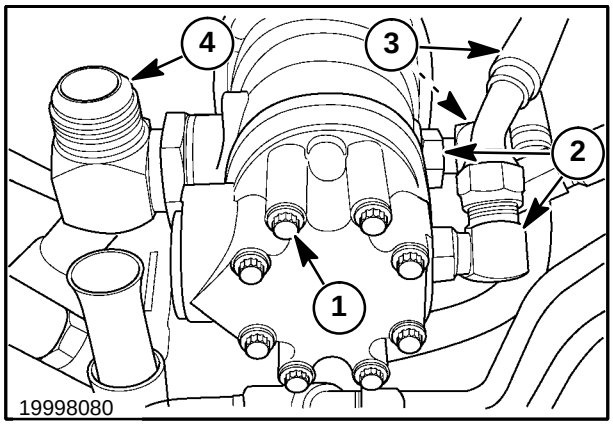

130

14. Turn the suction tube fitting, 1, down and install the suction tube, 2. Tighten all hydraulic connections securely.

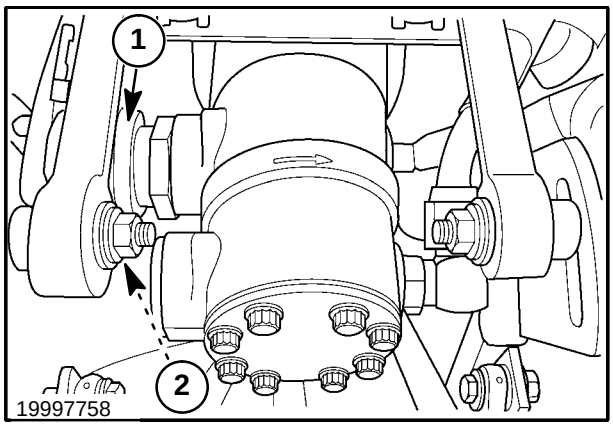

131

https://truckmanualshub.com/

15. Reinstall the boom circuit hydraulic lines, 1, and high flow line, 2, and tighten securely.

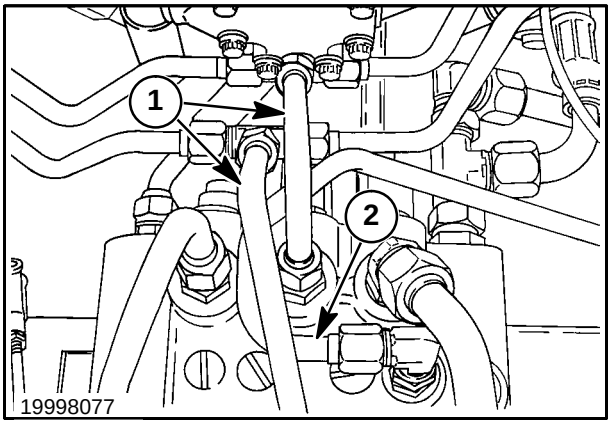

132

https://truckmanualshub.com/

GEAR PUMP START-UP PROCEDURE

This procedure must be performed if the gear pump has been removed for repair purposes or any gear pump hydraulic lines have been removed.

1. Fill the reservoir with SAE SH/CG4 10W-30 oil to the proper level.
2. Loosen suction line, 1, at the gear pump. When oil flows from the connection, tighten the connection.
3. Start the engine and run it at 1500 RPM. Operate all hydraulic controls to remove remaining air from the system.
4. Check reservoir level and add oil as necessary.

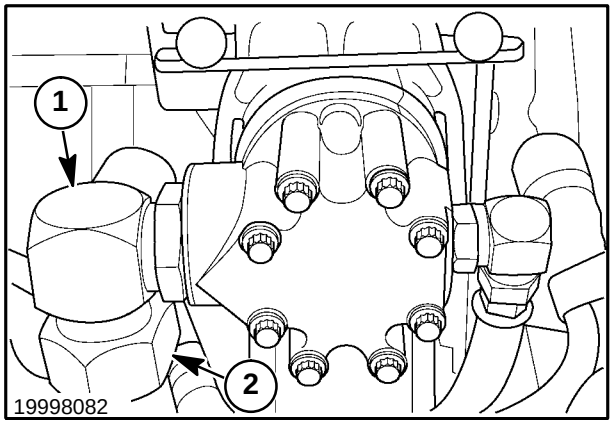

133

https://truckmanualshub.com/

CYLINDERS, BOOM AND BUCKET

BOOM CYLINDERS - LS160
Specifications

Bore Diameter . . . . . 63.5 mm (2.5″)

Stroke . . . . . 470.15 mm (18.51″)

Rod Diameter . . . . . 38.1 mm (1.5″)

Cycle Times (seconds)
- Raise 3.5
- Lower 3.5

Torque

Piston Locknut Torque . . . . . 230 N·m (170 ft. lbs.)

Cylinder Head (gland) . . . . . 306 N·m (225 ft. lbs.)

Lower Pivot Pin Hardware . . . . . 338 N·m (250 ft. lbs.)

Upper Pivot Pin Hardware . . . . . 38 N·m (28 ft. lbs.)

Labor Required

Remove and Replace (1) . . . . . 0.5 hour

Repair (1) . . . . . 0.5 hour

BUCKET CYLINDERS - LS160
Specifications

Bore Diameter . . . . . 57.15 mm (2.25″)

Stroke . . . . . 454.15 mm (17.88″)

Rod Diameter . . . . . 31.8 mm (1.25″)

Cycle Times (seconds)
- Curl Back 2.2
- Curl Down (dump) 2.8

Torque

Piston Cap Screw . . . . . 386 N·m (285 ft. lbs.)

Cylinder Head (gland) . . . . . 285 N·m (210 ft. lbs.)

Lower Pivot Pin Hardware . . . . . 38 N·m (28 ft. lbs.)

Upper Pivot Pin Hardware . . . . . 108 N·m (80 ft. lbs.)

Labor Required

Remove and Replace (1) . . . . . 0.5 hour

Repair (1) . . . . . 0.5 hour

https://truckmanualshub.com/

BOOM CYLINDERS - LS170
Specifications

Bore Diameter	63.5 mm (2.5″)
Stroke	470.15 mm (18.51″)
Rod Diameter	38.1 mm (1.5″)
Cycle Times (seconds)	
Raise	2.7
Lower	2.3

Torque

Piston Locknut Torque	230 N·m (170 ft. lbs.)
Cylinder Head (gland)	306 N·m (225 ft. lbs.)
Lower Pivot Pin Hardware	338 N·m (250 ft. lbs.)
Upper Pivot Pin Hardware	38 N·m (28 ft. lbs.)

Labor Required

Remove and Replace (1)	0.5 hour
Repair (1)	0.5 hour

BUCKET CYLINDERS - LS170
Specifications

Bore Diameter	57.15 mm (2.25″)
Stroke	454.15 mm (17.88″)
Rod Diameter	31.8 mm (1.25″)
Cycle Times (seconds)	
Curl Back	1.54
Curl Down (dump)	1.75

Torque

Piston Cap Screw	386 N·m (285 ft. lbs.)
Cylinder Head (gland)	285 N·m (210 ft. lbs.)
Lower Pivot Pin Hardware	38 N·m (28 ft. lbs.)
Upper Pivot Pin Hardware	108 N·m (80 ft. lbs.)

Labor Required

Remove and Replace (1)	0.5 hour
Repair (1)	0.5 hour

https://truckmanualshub.com/

BOOM CYLINDER

Op. 35 710 10

REMOVAL

CAUTION

Before removing the boom cylinders, the boom must be in the up, locked position supported by the boom lock pins.

Never loosen any hydraulic lines without first relieving all pressure in the system.

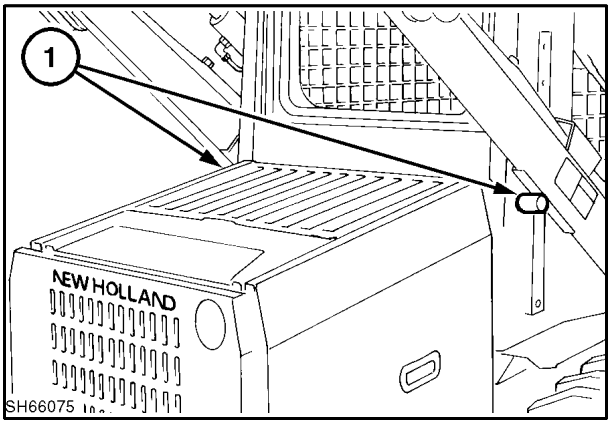

134

1. Remove any attachment from the loader boom attaching plate, bucket, etc.
2. Raise the boom above the boom lock pins, extend the boom lock pins, and lower the boom on the boom lock pins, 1.
3. After stopping the engine and before removing the seat belt and dismounting from the loader, turn the ignition switch to the “RUN” position.
4. Push both the boom and bucket pedals to relieve all residual hydraulic pressure in both hydraulic circuits.
5. Turn off the ignition switch.
6. Disconnect both the upper, 1, and lower, 2, boom hydraulic hoses from the cylinder.

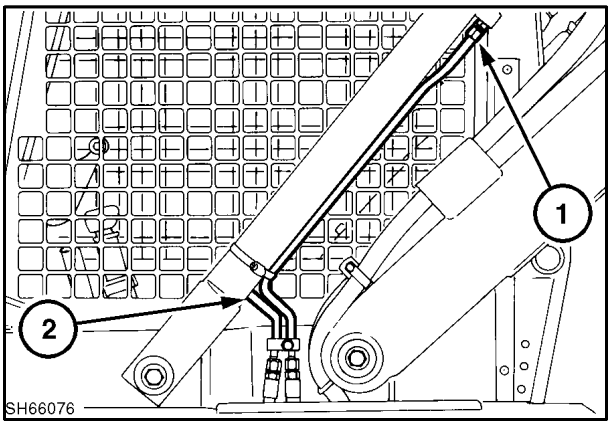

135

7. Using a screwdriver, remove the plastic plug, 1, from inside the cab to access the lower cylinder pivot retaining hardware.
8. Loosen the LOWER boom pin retaining hardware.

NOTE: *DO NOT remove the retaining hardware at this time.*

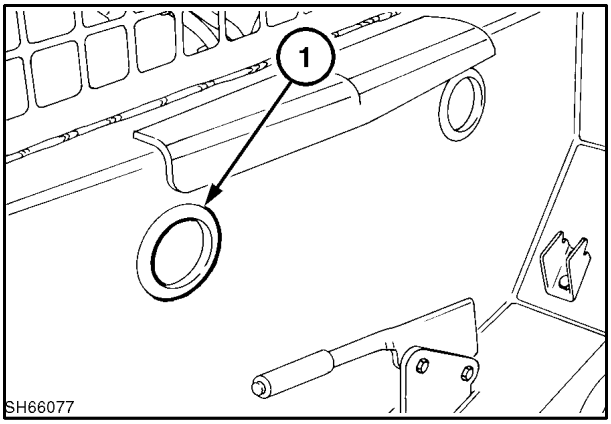

136

https://truckmanualshub.com/

9. Support the cylinder and with a hammer strike the cylinder at the base area, 1, to loosen the tapered pivot pin from the loader main frame.

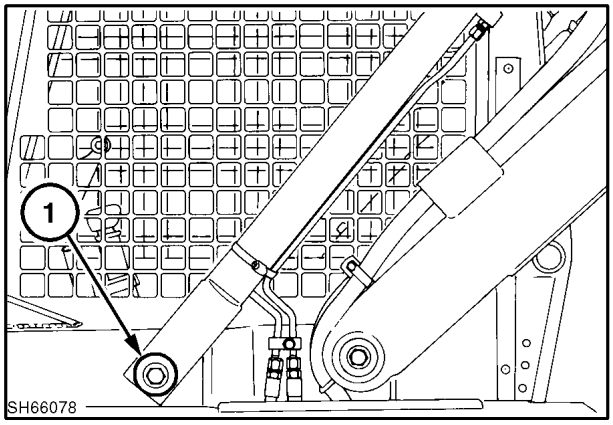

137

10. Remove the UPPER boom pin retaining bolt, 1, and boom pin, 2.
11. Remove the cylinder.

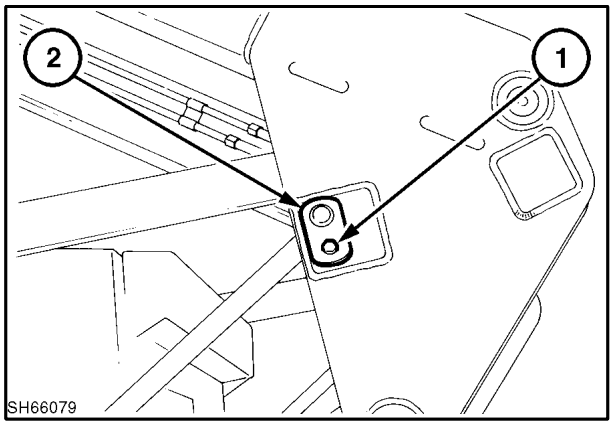

138

12. Shown here is the boom cylinder, 1, lower tapered pivot pin and hardware, 2, and the upper pivot pin and retaining hardware, 3.

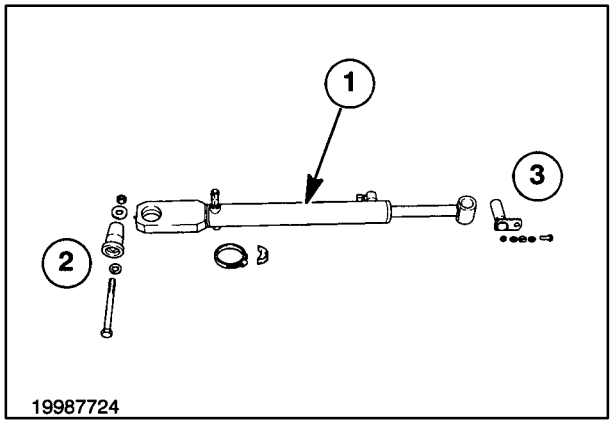

139

https://truckmanualshub.com/

Op. 35 730 18

DISASSEMBLY

1. Thoroughly clean the outside of the cylinder.
2. Pull the piston rod out slowly, and drain the oil from the barrel into a suitable container.
3. Clamp the base of the cylinder in a vise at 1, and unscrew the cylinder head (gland), 2.

NOTE: *Do not clamp the cylinder barrel in the vise to unscrew the cylinder head. Flattening of the barrel will cause damage to the piston and piston seals.*

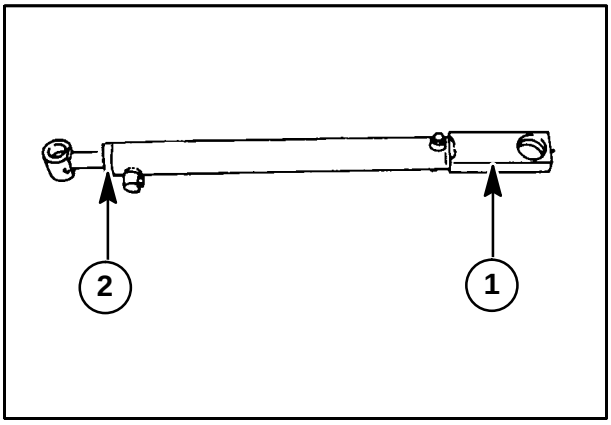

140

4. Remove the piston rod assembly, 1, from the barrel, 2.

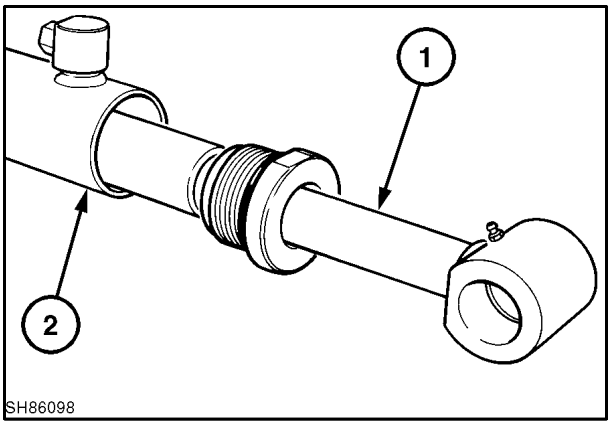

141

5. Remove the piston retaining nut, 1; the piston, 2; spacer, 3; and cylinder head (gland), 4, from the piston rod, 5.

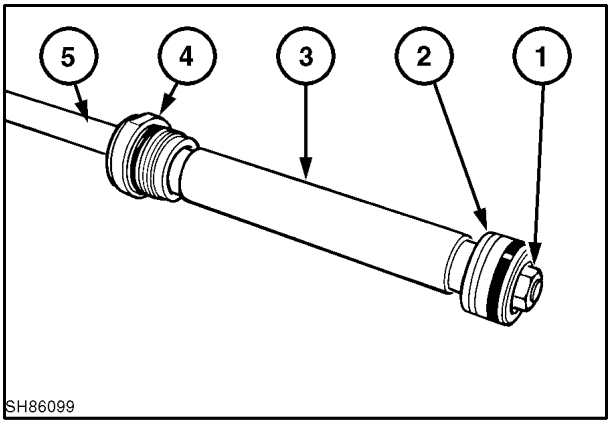

142

https://truckmanualshub.com/

6. Remove the wiper seal, 1; O ring and backup washer, 2; and inner seal and wear ring, 3, from the cylinder head (gland), 4.

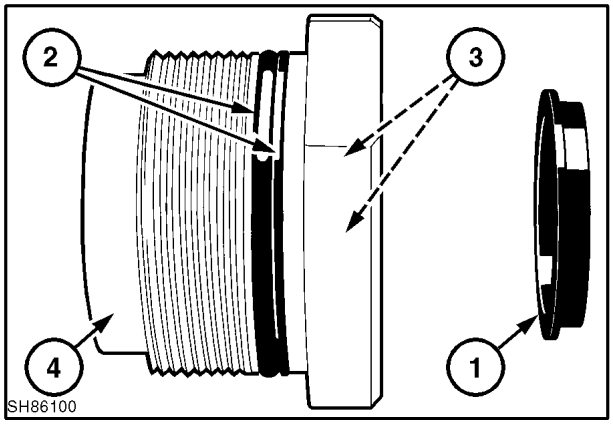

143

7. Remove the wear ring, 1, and seal, 2, from the piston, 3.

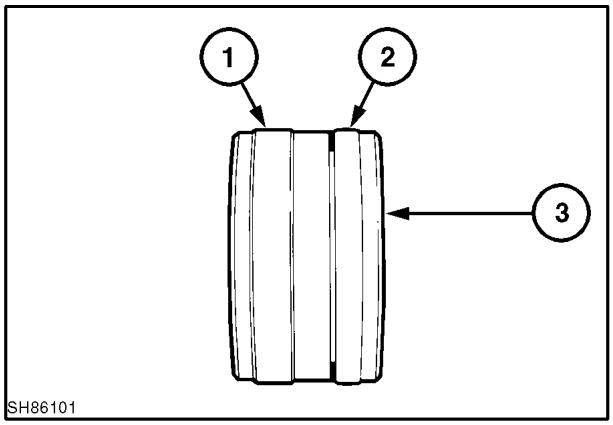

144

PARTS INSPECTION

1. Thoroughly clean all parts and remove any nicks or burrs with a fine emery cloth.
2. Inspect the inner diameter of the barrel, 1, for excessive wear or scoring.
3. Inspect the threaded area of the barrel, 2, for damaged threads that would prevent proper tightening of the cylinder head.
4. Inspect the O ring seal area, 3, and remove any burrs or nicks that could damage or prevent the O ring from sealing properly.

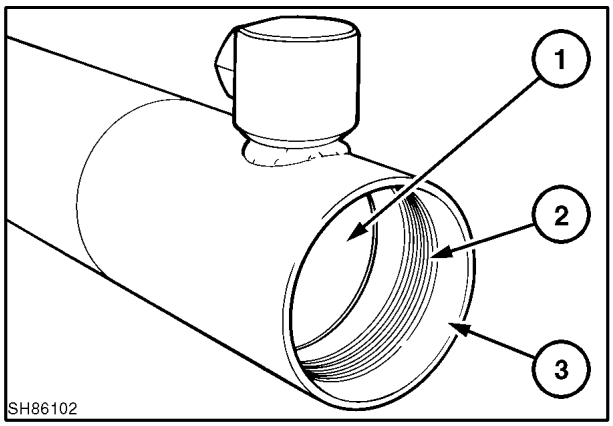

145

https://truckmanualshub.com/

5. Inspect the outer diameter of the piston, 1, for excessive wear or scoring. If the piston is damaged, the inner surface of the barrel will also most likely be damaged. Inspect the barrel thoroughly. If the piston is not damaged, do not replace.

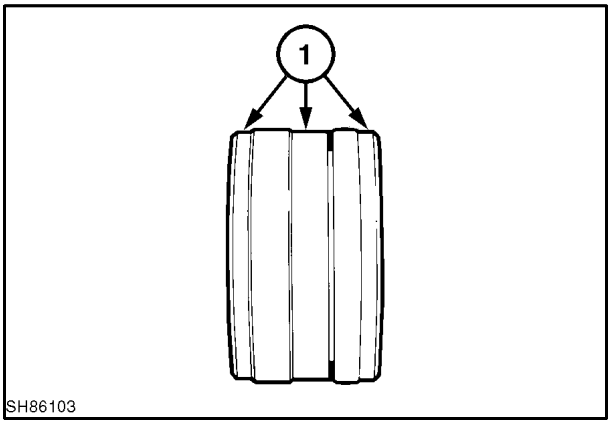

146

6. Inspect the cylinder head (gland) inner and outer seal areas, 1 and 2, for sharp edges and scoring. Inspect the threaded area of the gland, 3, for damaged threads that would prevent proper tightening of the retaining nut. Replace the gland if necessary. All seals should be replaced during reassembly.

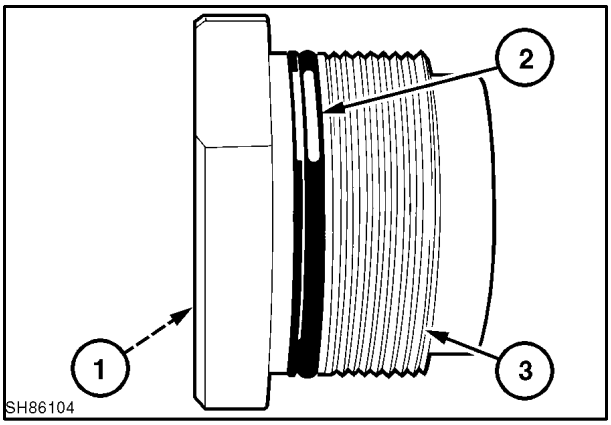

147

REASSEMBLY

1. Clean and dry all parts. The metal parts should be lightly oiled prior to assembly.
2. Install a new O ring, 1, and backup washer, 2, in the outer groove of the cylinder head, 3. Install a new shaft seal, 4, and wear ring, 5, in the inner grooves.

NOTE: *Install the shaft oil seal, 4, with the lip of the seal facing the piston.*

3. Install a new shaft wiper seal, 6, into the cylinder head. The seal lip should face outward.

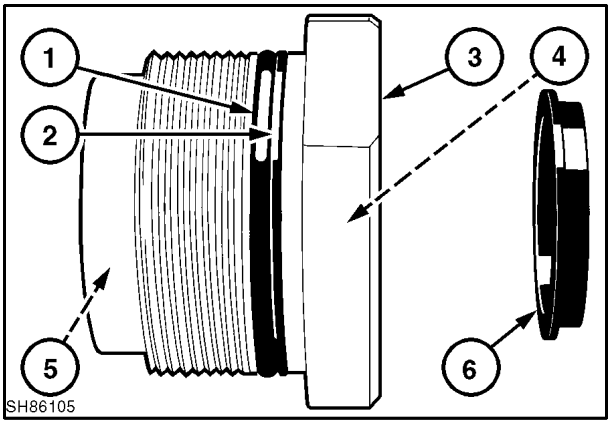

148

https://truckmanualshub.com/

4. Examine the piston assembly prior to installation. Replace the wear ring, 1, and T-seal, 2, making sure they are firmly in their groove and snug against the piston. Insert the L shaped back-up rings, 3, on both sides of the T-seal with the short leg of the L shaped back-up rings towards the T-seal as shown.

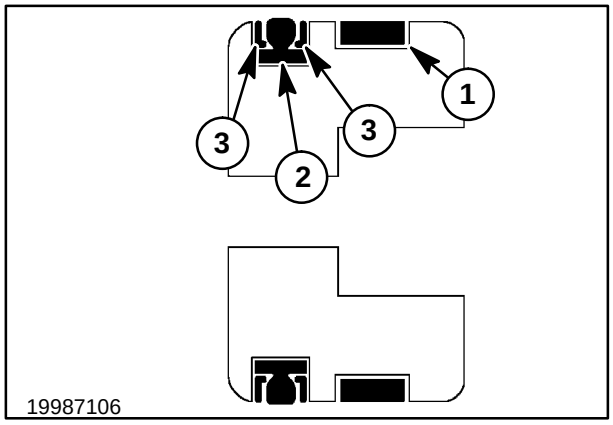

149

5. Install the cylinder head assembly, 1, and spacer, 2, onto the piston rod, 3.
6. Prior to installing the piston, clean and apply a bead of hydraulic sealant between the piston and piston rod at 4. Install the piston assembly, 5, and new locknut, 6. The wear ring on the piston should be toward the threaded end of the rod.

NOTE: *The flat side of the piston must face the spacer, and the recessed side must face toward the end of the rod. The effective length of the piston rod must be maintained, with the locknut fitting into the recessed area of the piston.*

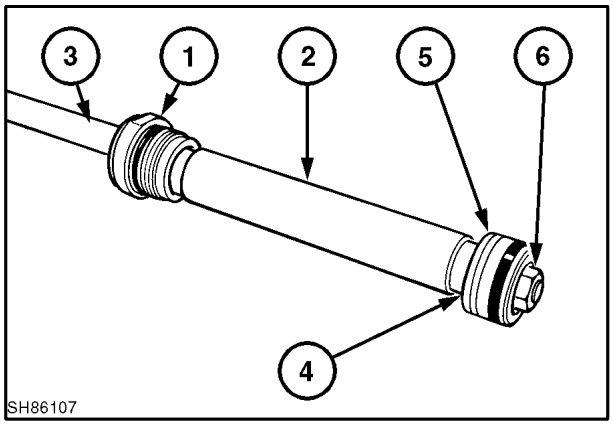

150

7. Torque the locknut to 230 N·m (170 ft. lbs.).
8. Lubricate the piston and cylinder head assemblies with 10W-30 oil and install the piston rod assembly, 1, into the barrel, 2.
9. Prior to threading the cylinder head into the barrel, apply a coat of grease around the cylinder head, in the area between the backup washer and the cylinder head flange at 3.
10. Torque the cylinder head assembly to 338 N·m (250 ft. lbs.).

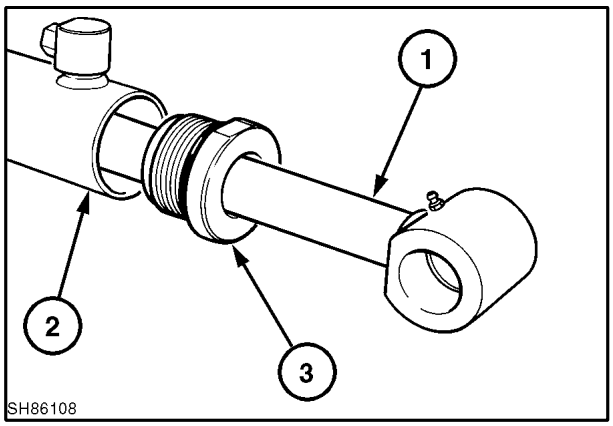

151

https://truckmanualshub.com/

REINSTALLATION

1. Lubricate the boom pivot pins, 1, with an anti-seize-type lubricant.
2. Install the cylinder onto the loader.

NOTE: *Refer to Service Bulletins 5/96 - I6 and 7/96 - I6 for updated pivot pin support information and proper pin, spacer, and bolt part numbers.*

3. Install a 3/8″ bolt, 2; flat washer, 3; and spacer, 4, through the pivot pin retaining strap and boom side plate. Secure with flat washer, 5, and lock-nut, 6.
4. Torque the upper pivot pin hardware to 38 N·m (28 ft. lbs.).
5. Torque the lower pivot pin hardware, 1, to 338 N·m (250 ft. lbs.).
6. With a six-pound hammer and using a piece of 2 x 4 hardwood to protect the pin, hit the pivot pin and retaining hardware to properly seat the tapered pin and retorque to 338 N·m (250 ft. lbs.).
7. Reinstall lines, 2, and position to prevent contact with other components, fenders, etc. at 3.
8. Reinstall the plastic plug into the cap inner shell.
9. Cycle the boom several times to remove the air from the system and check the cylinder for leaks.

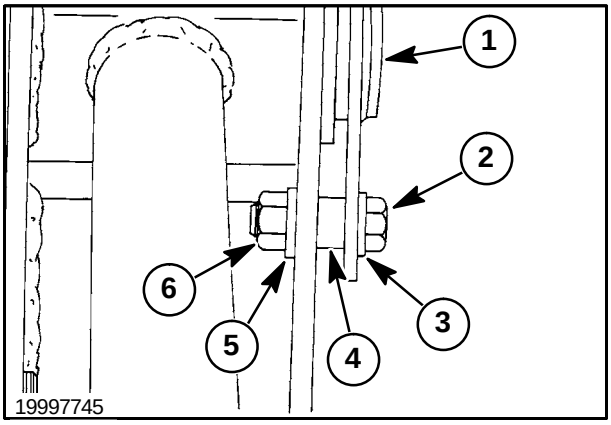

152

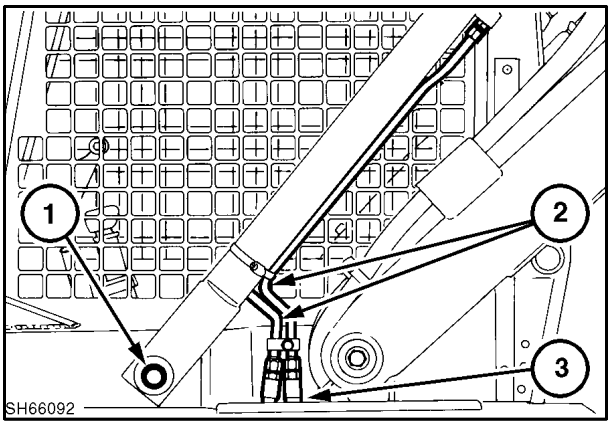

153

BUCKET CYLINDER

Op. 35 710 10

REMOVAL

⚠ CAUTION ⚠

Never loosen any hydraulic lines without first relieving all pressure in the system.

1. Remove any attachment, bucket, etc. from the boom attaching plate and lower the boom to the lowered position.
2. Extend the cylinders, 1, to the fully extended position.
3. After stopping the engine and before removing the seat belt and dismounting from the loader, turn the ignition switch to the “RUN” position.
4. Push both the boom and bucket pedals to relieve all residual hydraulic pressure in both circuits.
5. Turn off the ignition switch.

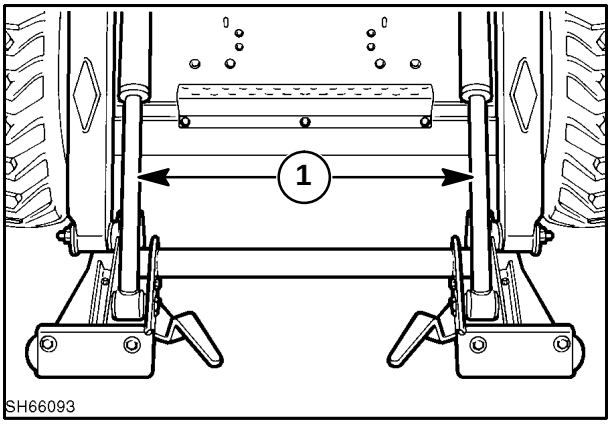

154

https://truckmanualshub.com/

6. Remove the hydraulic hoses from both ends of the cylinder, 1, and cap the lines to prevent loss of oil.
7. Remove the retaining bolt and pin, 2, from the lower end of the cylinder.
8. Loosen the upper tapered pivot pin retaining hardware, 3.
9. Support the cylinder and, with a hammer, strike the cylinder at the base area, 4, to loosen the tapered pivot pin.
10. Remove the cylinder.

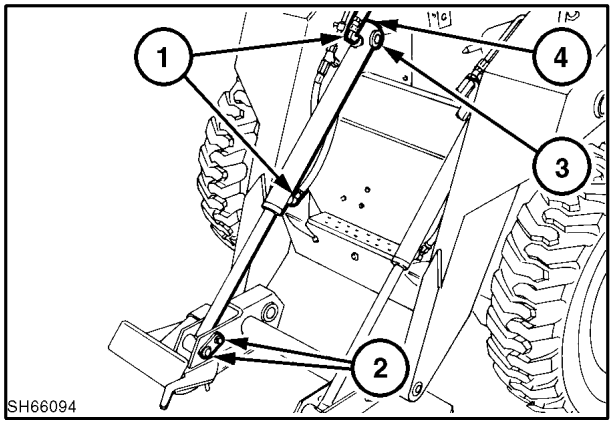

155

11. Shown here is the bucket cylinder,1, with the upper tapered pivot pin, 2, and hardware.

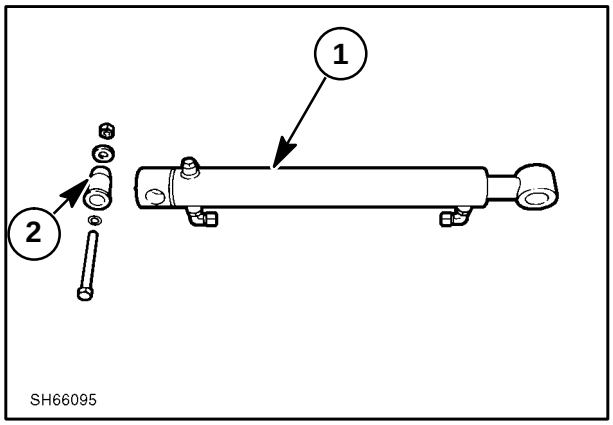

156

Op. 35 730 13

DISASSEMBLY

There are two designs of bucket cylinders, and the parts are not interchangeable between designs. The piston rods are a different length, and a different seal repair kit is required.

1. Clean the outside of the cylinder and clamp the cylinder base, 1, in a vise.
2. Use a spanner wrench to remove the cylinder gland, 2. The gland is threaded into the cylinder.
3. Pull the cylinder rod assembly from the barrel.

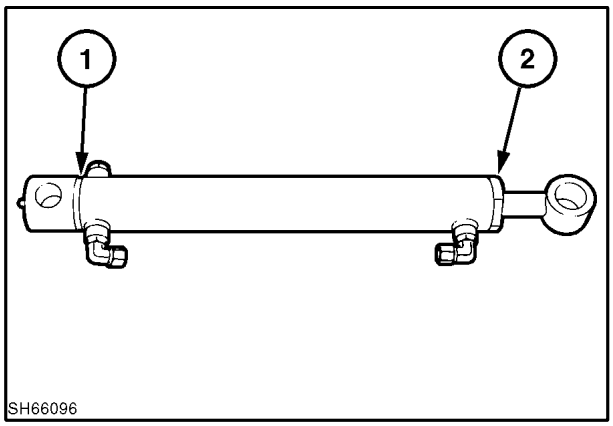

157

https://truckmanualshub.com/

4. Remove piston retaining stud, 1, from the cylinder rod, piston, 2, and gland, 3, from the piston rod.

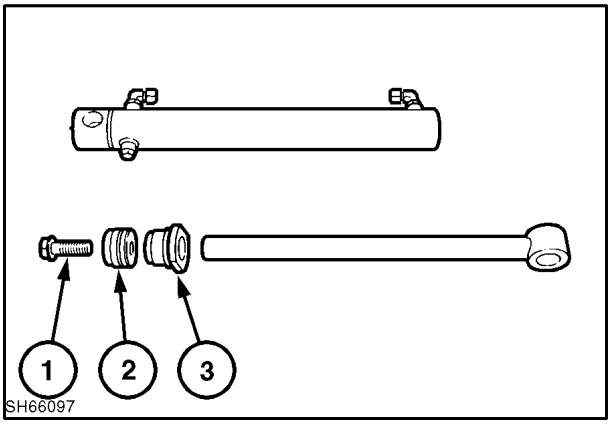

158

5. Remove seals from the gland, the outer O ring seal and backup ring, 1, the inner shaft seal, 2, and the wiper seal, 3.

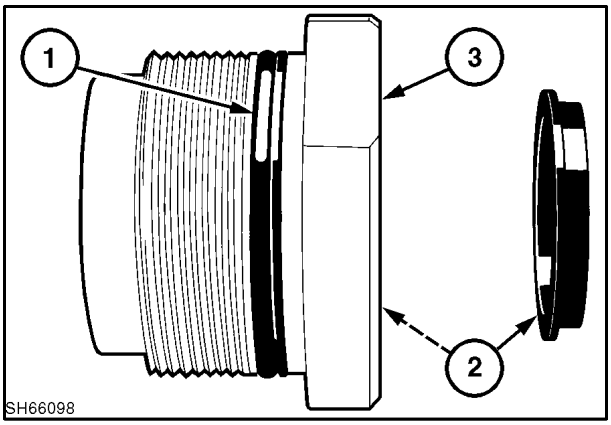

159

PARTS INSPECTION

1. Thoroughly clean all parts and remove all nicks and burrs with a fine emery cloth.
2. Inspect the inner diameter of the barrel for excessive wear or scoring.
3. Inspect the gland thread area, 1, for damaged threads that would prevent proper tightening of the gland.
4. Inspect the O ring seal area, 2, and remove burrs or nicks that would prevent the O ring from sealing properly.

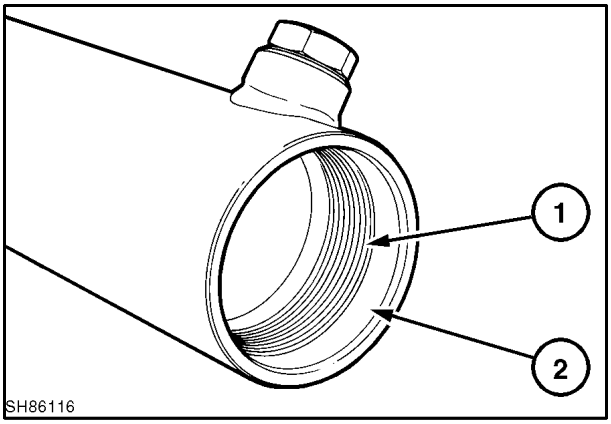

160

https://truckmanualshub.com/

5. Inspect the outer diameter of the piston, 1, for excessive wear or scoring. If the piston is damaged, the inner surface of the barrel will also most likely be damaged. Inspect the barrel thoroughly. If the piston is not damaged, do not replace.

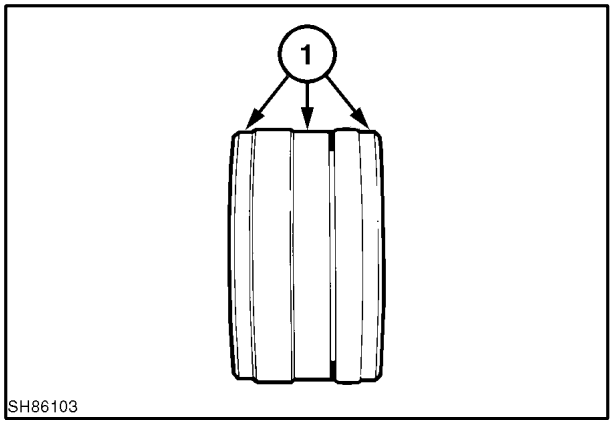

161

6. Inspect the cylinder head (gland) inner and outer seal areas, 1 and 2, for sharp edges and scoring. Inspect the threaded area of the gland, 3, for damaged threads that would prevent proper tightening of the retaining nut. Replace the gland if necessary. All seals should be replaced during reassembly.

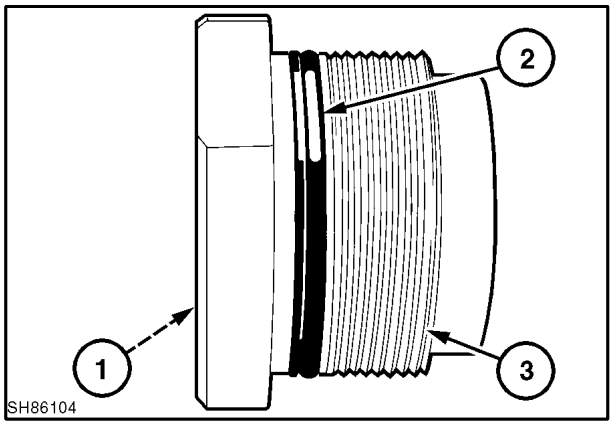

162

REASSEMBLY

1. Clean and dry all parts. The metal parts should be lightly oiled prior to assembly.
2. Examine the piston assembly prior to installation. Replace the wear ring, 1, and T-seal, 2, making sure they are firmly in their groove and snug against the piston. Insert the L shaped back-up rings, 3, on both sides of the T-seal with the short leg of the L shaped back-up rings towards the T-seal as shown.

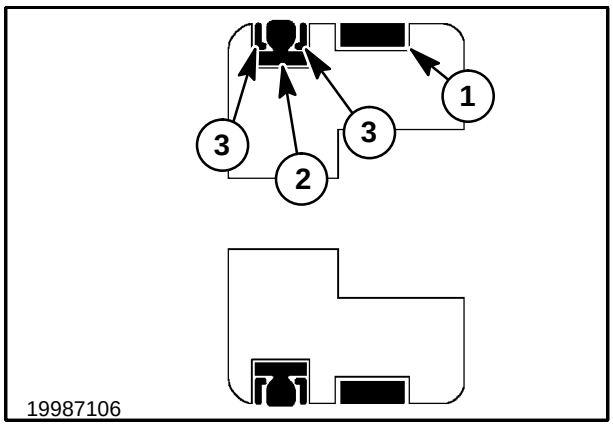

163

https://truckmanualshub.com/

3. Install a new shaft seal, 1.
4. Install a wiper seal, 2.

NOTE: *Install shaft wiper seal, 1, with the lip of the seal facing the piston.*

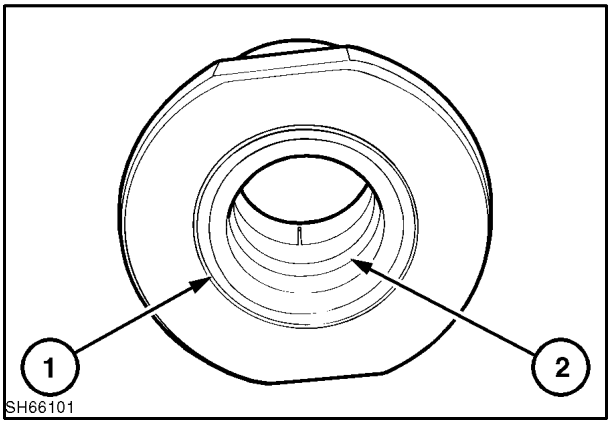

164

5. Install O ring, 1, and backup washer, 2, on the cylinder gland.

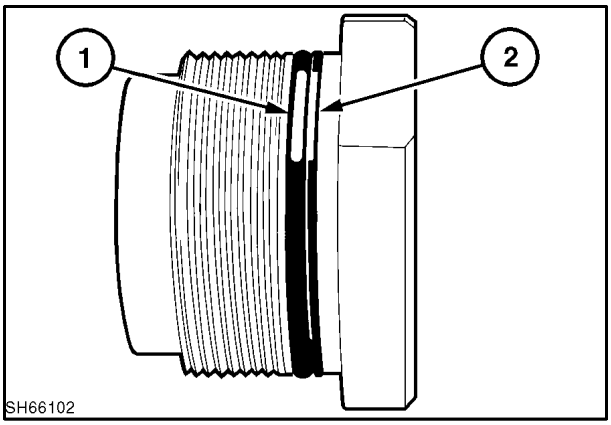

165

6. Slide cylinder gland, 1, and new piston with seals installed, 2, onto the piston rod.

NOTE: *The piston recess must be positioned over the end of the rod, with the locknut inside the recess.*

NOTE: *Seals, 3, should be clamped with a ring compressor and chilled before being installed in the barrel.*

7. Use a hydraulic sealant to seal the piston and rod. Install piston retaining locknut, 4, with medium-strength 242 Loctite® and torque to 386 N·m (285 ft. lbs.).

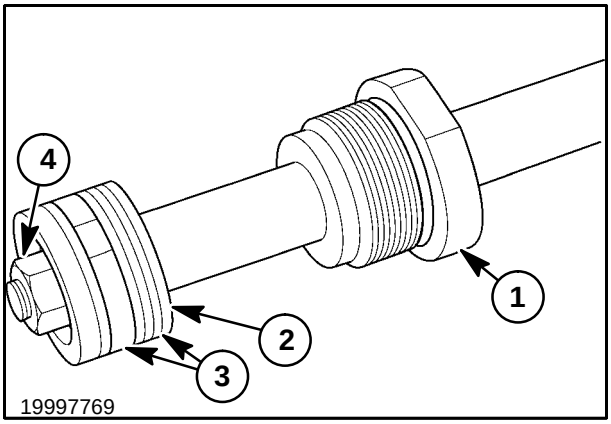

166

https://truckmanualshub.com/

8. Liberally oil the piston and place it inside the barrel, being careful not to damage the seals.
9. Thread the cylinder gland into the barrel, 1, and torque to 285 N·m (210 ft. lbs.).

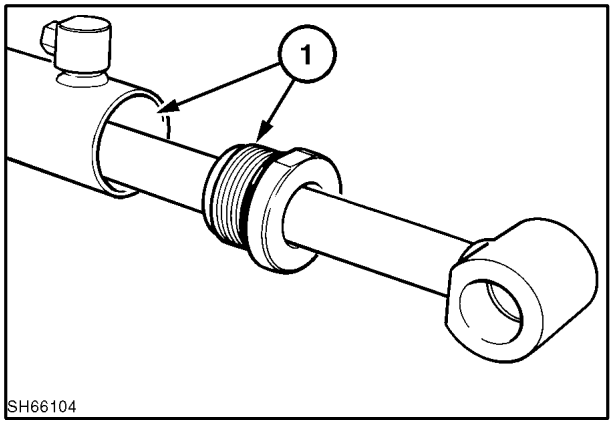

167

REINSTALLATION

1. Lubricate the pivot pins with a never seize type lubricant.
2. Install the cylinder on the loader.
3. Torque the upper pivot pin hardware to 108 N·m (80 ft. lbs.).
4. With a hammer and using a piece of 2 x 4 hardwood to protect the pin, hit the pivot pin and retaining hardware at 1, to properly seat the tapered pin and retorque to 108 N·m (80 ft. lbs.).
5. Torque the lower pivot pin hardware to 38 N·m (28 ft. lbs.).
6. Cycle the boom several times to remove the air from the system and check the cylinder for leaks.
7. Check the hydraulic oil level and add 10W-30 oil as required.

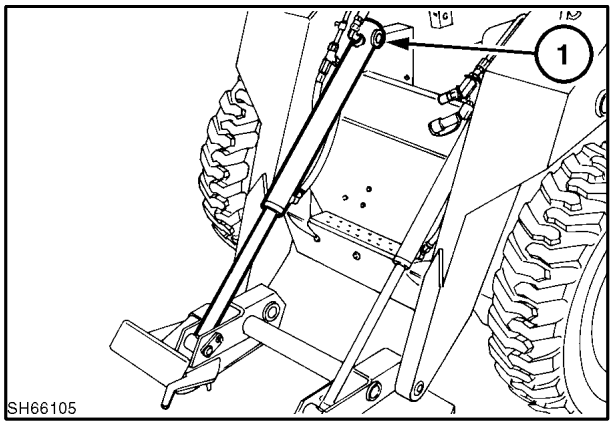

168

https://truckmanualshub.com/

PEDAL CONTROLS

Op. 35 724 16

REMOVAL

With Boom and Bucket Pedal Controls

1. Remove the step shield hardware and step shield.
2. Remove the bolt, 1, washer, lock washer, and nut, that connects the control rod, 2, to the pedal hub arm.

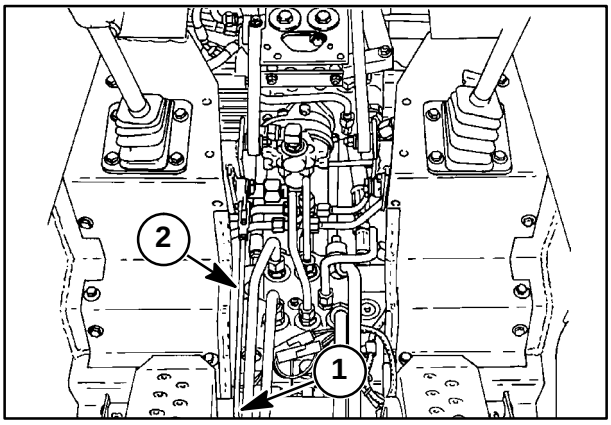

169

3. Remove the bolts, 1, connecting the two bracket halves.
4. Disconnect the control valve links, 2, at the control valve.
5. Remove the pedal mounting bolts, 3, and remove both pedals from the loader.

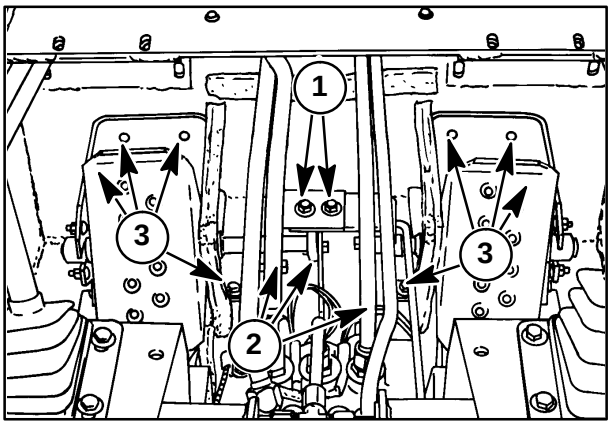

170

PEDAL INSPECTION

With Boom and Bucket Pedal Controls

1. Remove the control valve links, 1, from the hub control arms, 2.

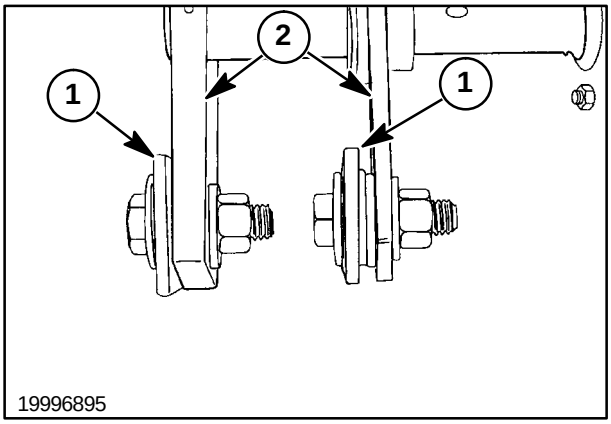

171

https://truckmanualshub.com/

2. Inspect the control valve links for any obvious damage, bends or twisting.

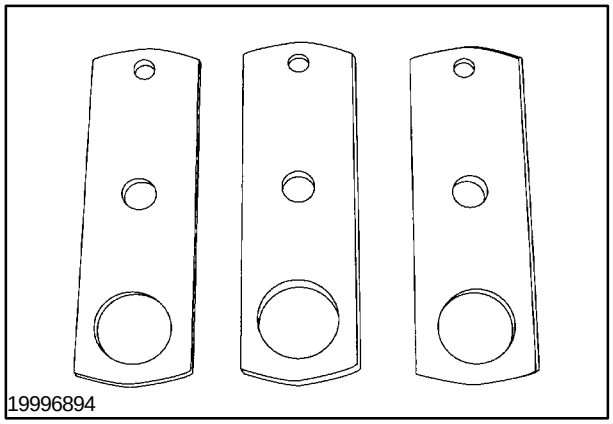

172

3. Inspect the auxiliary hydraulic hub arm, 1, the boom hub arm, 2, and the bucket hub arm, 3, for any deformation or cracks.
4. To disassemble hub arms, remove the roll pins, 4, from the hub arms and control shaft.
5. Inspect the control shafts, 5, for any obvious damage or bends.

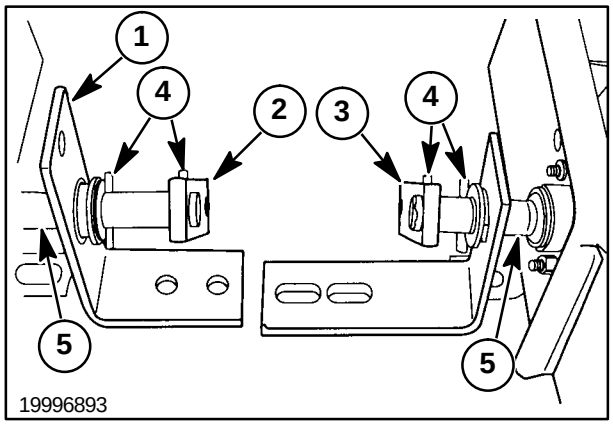

173

6. To remove control shafts, remove bolt, 1, securing shaft arm to pedal. Take note of the position and number of any spacer washers or shims. Remove the nuts, 2, holding the bearings on the pedal support. Separate the shaft from the pedal and bearing.

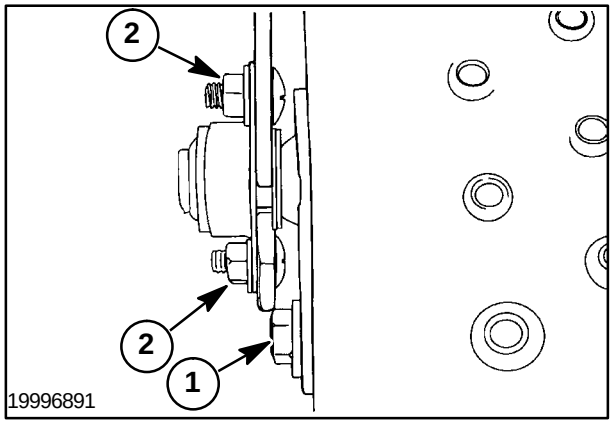

174

https://truckmanualshub.com/

7. Inspect the shaft bearings, 1, for excessive wear. If bearings do not move easily, replace.

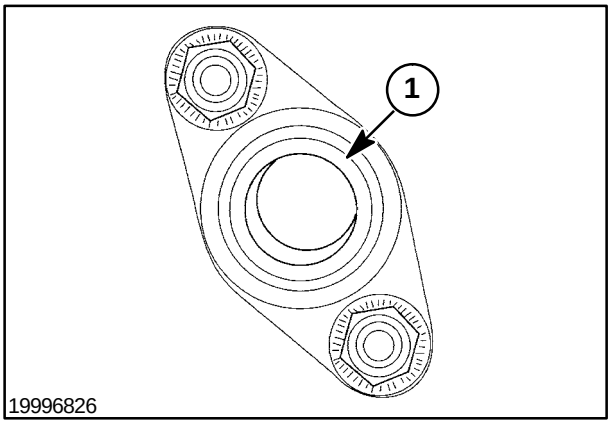

175

8. Inspect the pedals, 1, and pedal supports, 2, for any excessive wear or deformation.

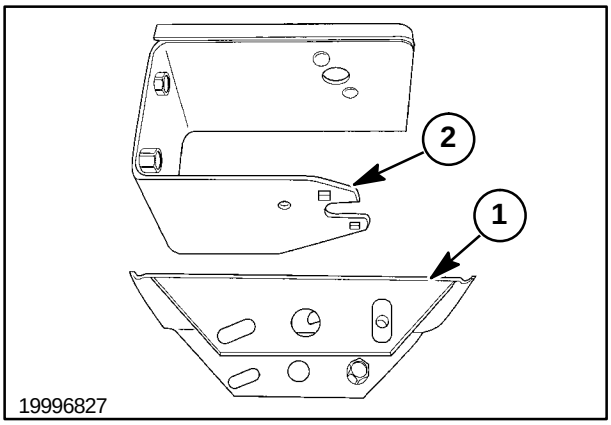

176

PEDAL REINSTALLATION

With Boom and Bucket Pedal Controls

1. Reinstall the bearings, 1, shafts, 2, brackets, 3, and control arms, 4, using the same number and position of washers or shims.

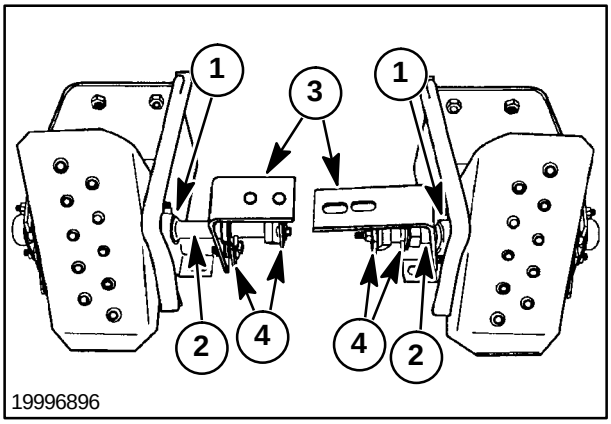

177

https://truckmanualshub.com/

2. Install the left pedal assembly, 1, and attach the front plate with hardware, 2, previously removed. Do not tighten the hardware at this time.

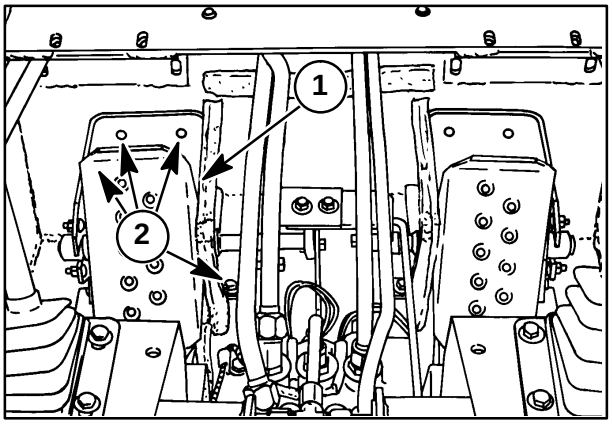

178

3. Slide the pedal assembly to align the auxiliary boom hydraulic hub arm and boom hub arm as shown. Align the inside edge of each hub arm, 1, with the slot in the control valve spool, 2. Tighten the pedal mounting hardware.

4. Recheck the alignment of the hub arm and spool.

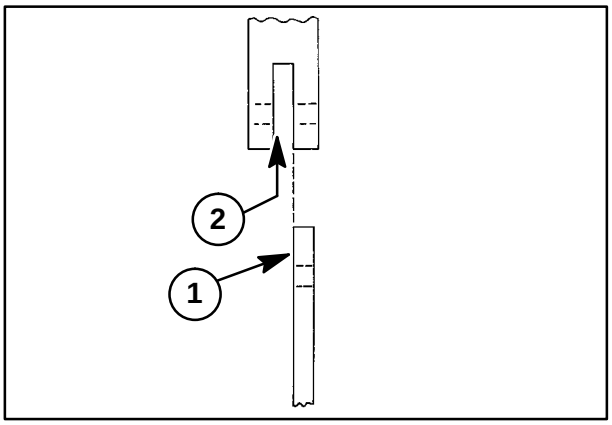

179

5. Install the right pedal, 1, adding shim washers as necessary so pedal mounting holes line up correctly. Check that the inside edge of the bucket hub arm aligns with the slot in the control valve spool as described above. Install the pedal with hardware, 2, previously removed, and tighten securely. Connect the two-piece bracket with the two bolts, 3, washers and nuts.

6. Check for free operation of the foot pedals and hub control arm assemblies. If any components are binding, adjust or reshim the pedal assemblies.

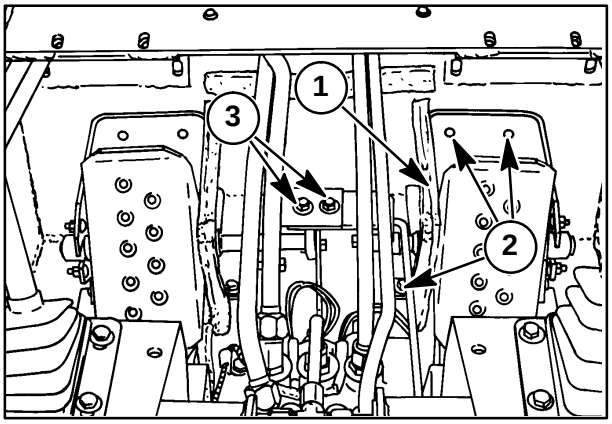

180

https://truckmanualshub.com/

7. Install the control spool links, 1, with clevis pins, 2, and cotter pins, 3.
8. Attach each link to each hub arm with 3/8″ hex head bolts, 4, flat washer, 5, two link washers, 6, lock washer, 7, and nut, 8.

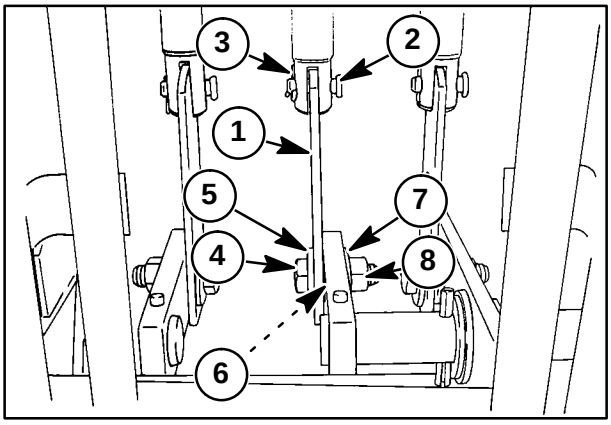

181

9. Connect the auxiliary hydraulic control rod, 1, to the pedal hub arm, 2, with the bolt, washer, lock washer, and nut.
10. Install the step shield and hardware.

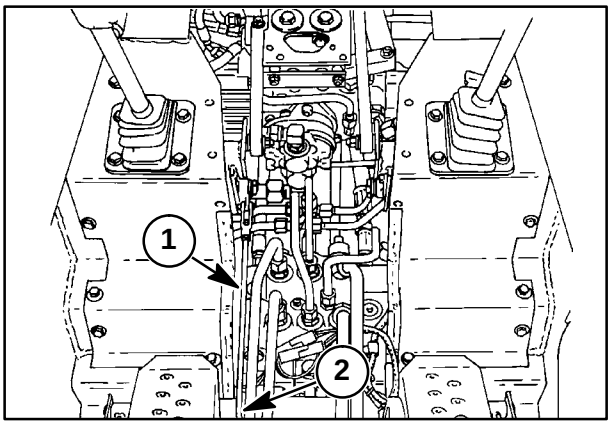

182

https://truckmanualshub.com/

Op. 35 724 16

PEDAL REMOVAL

With Boom and Bucket Hand Controls

1. Remove the step shield hardware and step shield.
2. Remove the bolts, 1, washers, lock washers, and nuts, that connect the control rods, 2, to the pedal hub arms.

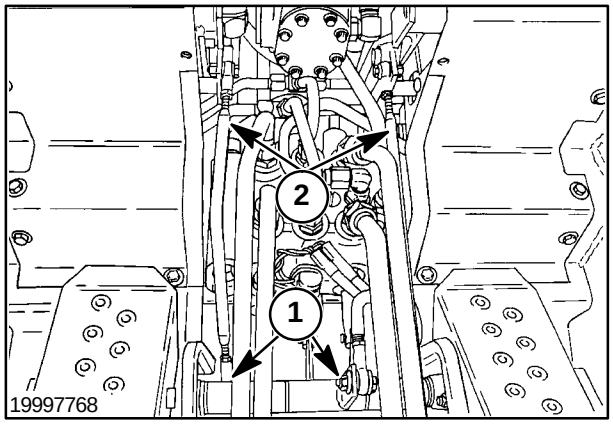

183

3. Disconnect the control valve links, 1, from the control valve spools by removing the cotter pins, 2, and clevis pins, 3.
4. Disconnect the control valve links, 1, from the control hub arms by removing the bolts, 4, washers, lockwashers, and nuts.

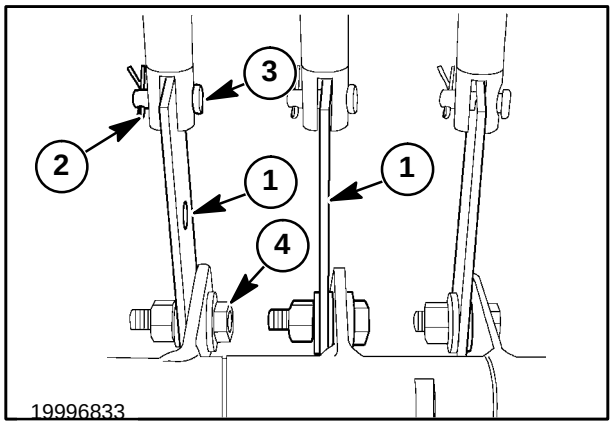

184

5. Remove the right pedal mounting bolts, 1, and remove the right pedal, 2.
6. Remove the left pedal mounting bolts, 3, and remove the left pedal, 4.

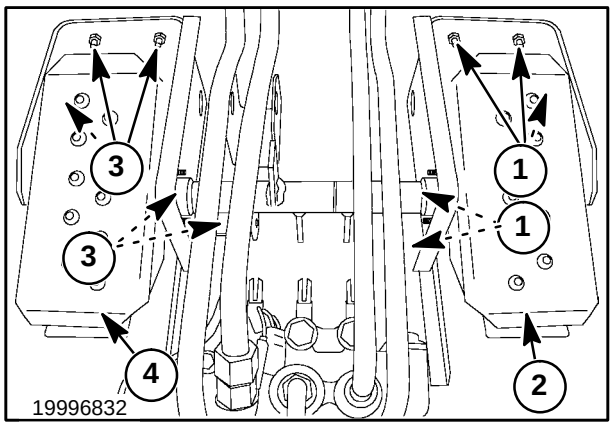

185

https://truckmanualshub.com/

PEDAL INSPECTION

With Boom and Bucket Hand Controls

1. Remove the bucket hub arm assembly, 1, and the boom hub arm assembly, 2. Inspect the hub arm assemblies for any deformation or cracks.

2. Inspect the control shaft, 3, for any obvious damage or bends. To remove control shafts, remove the two allen screws, 4, securing the auxiliary hydraulic hub, 2, to the control shaft. Then remove the bolt, 5, securing shaft arm to pedal. Take note of the position and number of any spacer washers or shims.

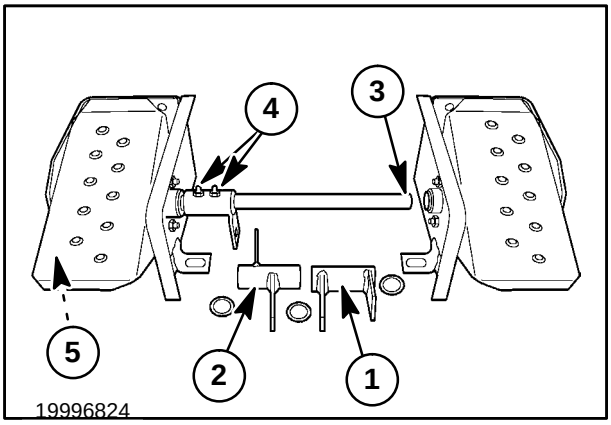

186

3. Remove the two allen screws, 1, securing the boom hydraulics hub, 2, to the control shaft. Inspect the boom hydraulics hub for any deformation or cracks.

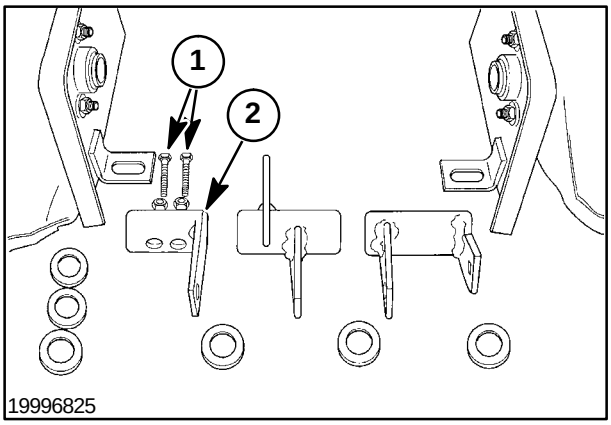

187

4. Inspect the shaft bearings, 1, for excessive wear. If bearings do not move freely, replace.

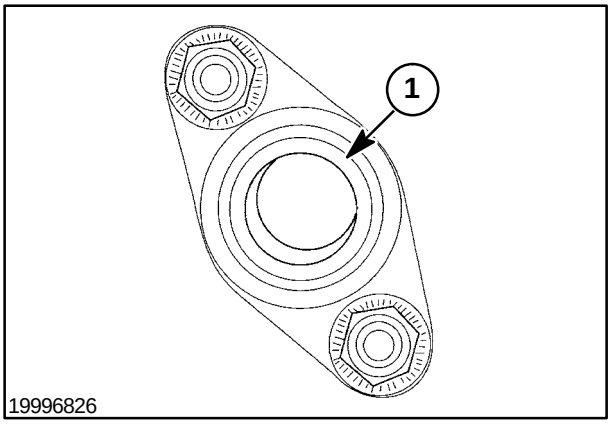

188

https://truckmanualshub.com/

5. Inspect the pedals, 1, and pedal supports, 2, for any excessive wear or deformation.

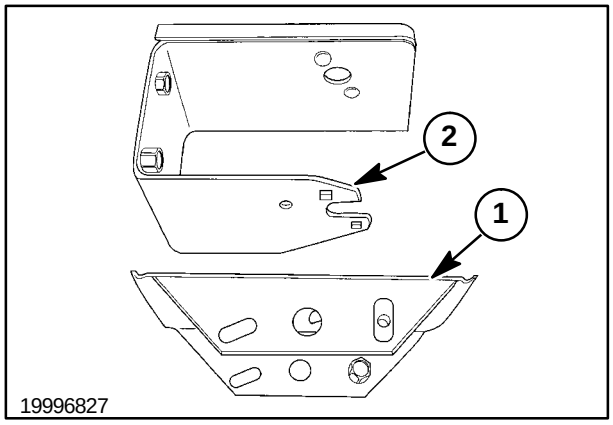

189

6. Inspect the control valve spool links, 1, for bends or excessive wear.

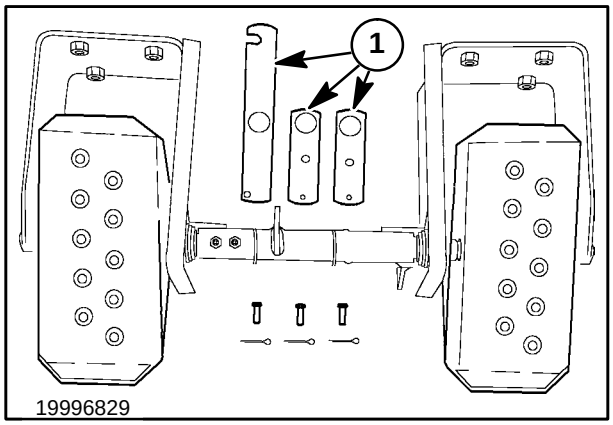

190

PEDAL REINSTALLATION

With Boom and Bucket Hand Controls

1. Insert the control shaft, 1, through the left pedal, 2, and left pedal support, 3, fitting three washers, 4, between the pedal and support.

2. Slide the auxiliary boom hydraulic hub assembly, 5, onto the control shaft and secure with allen screws, 6.

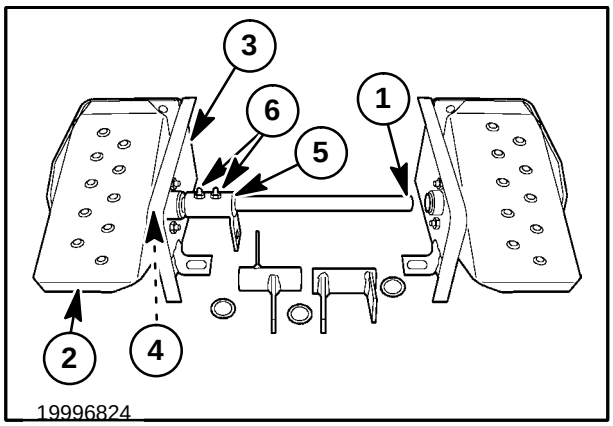

191

https://truckmanualshub.com/

3. Install the left pedal assembly, 1, and attach the front plate with hardware, 2, previously removed. Do not tighten the hardware at this time.
4. Install the boom hub assembly, 3, and bucket hub assembly, 4, onto the pivot shaft, 5.

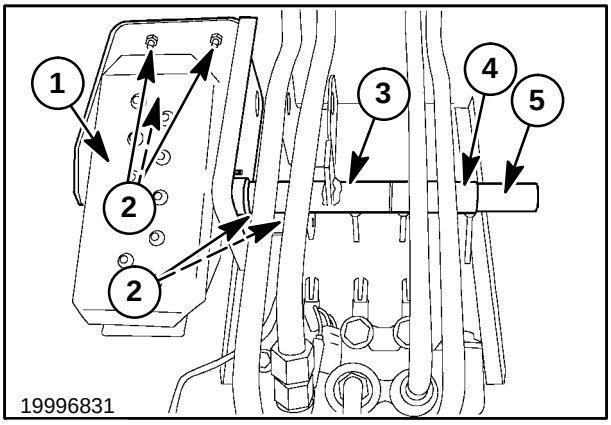

192

5. Slide the pedal assembly to align the auxiliary hydraulic hub arm as shown. Align the inside edge of the hydraulic hub arm, 1, with the slot in the control valve spool, 2. Tighten the pedal mounting hardware.
6. Recheck the alignment of the hub arm and spool.
7. Check the alignment between the hub arms and control valve spools. Add shim washers if necessary to correct alignment.

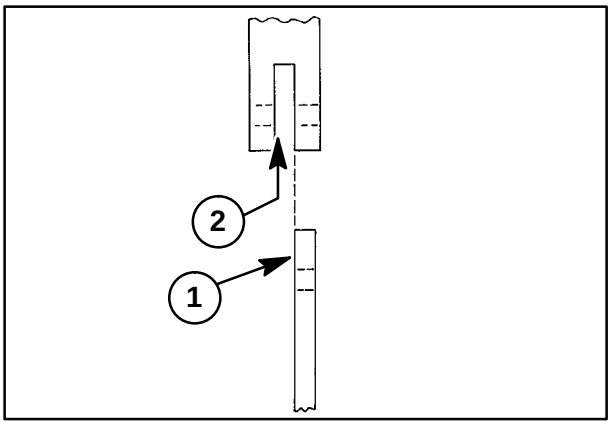

193

8. Install the right pedal, 1, adding shim washers as necessary at 2, fitting inside the bearing, 3, so pedal mounting holes line up correctly. Install the pedal with hardware, 4, previously removed, and tighten securely.
9. Check for free operation of the foot pedals and hub assemblies. If any components are binding, adjust or reshim the right pedal assembly.

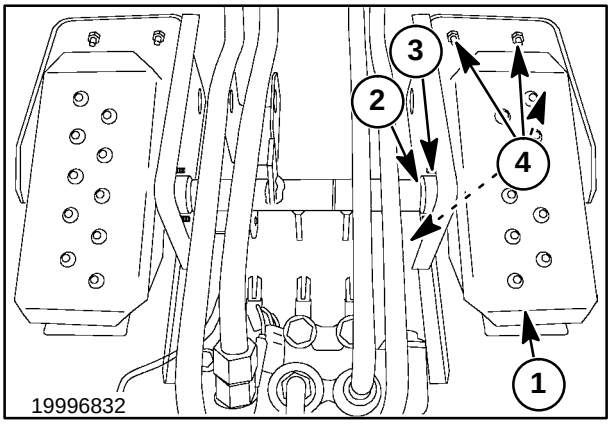

194

https://truckmanualshub.com/

10. Install the control spool links, 1, with clevis pins, 2, and cotter pins, 3.
11. Link the boom valve link and the bucket valve link to the hub arms with 3/8″ hex head bolts, 4, flat washer, 5, thick link washer, 6, lock washer, 7, and nut, 8.
12. Install the auxiliary hydraulic link with 3/8″ hex head bolts, flat washer, two flat washers, 9, lock washer, and nut.

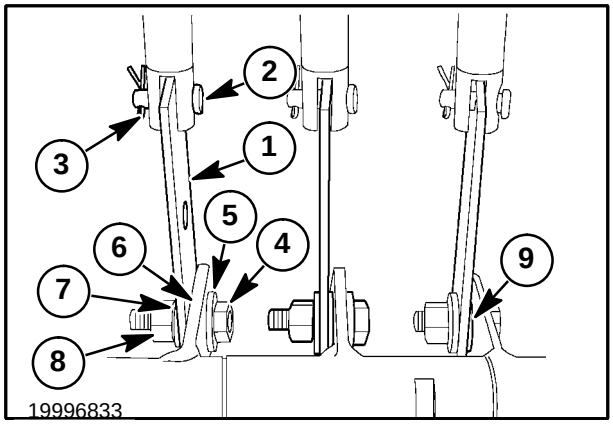

195

13. Install control rods, 1, to the pedal hub arms, 2, with the bolts, washers, lock washers and nuts removed during pedal removal.
14. Install the step shield and step shield hardware.

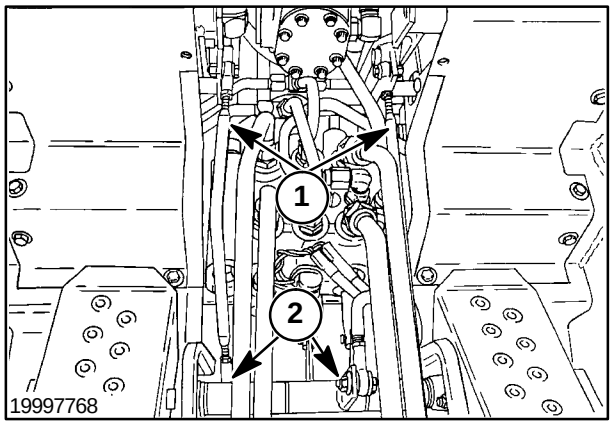

196

https://truckmanualshub.com/

HYDRAULIC COOLING, FILTER, RESERVOIR SYSTEM

Specifications

Filter (spin-on canister) . . . . . 10 micron

Reservoir (filter screen at fill cap) capacity . . . . . 22.7 L (6 gal.)

Labor Required

Remove and replace oil filter . . . . . 0.5 hour

Remove and replace filter and base . . . . . 1.0 hour

Remove and replace oil cooler . . . . . 2.0 hours

Remove and replace reservoir . . . . . 2.5 hours

https://truckmanualshub.com/

Op. 35 705

FILTER SYSTEM

The skid-steer loader is equipped with a single spin-on filter canister type located at 1, to the right of the engine radiator. The filter is a 10-micron element.

NOTE: *Allow the hydraulic oil to cool before changing the filter.*

CAUTION

The hydraulic oil filter will be under pressure when the oil is at operating temperature.

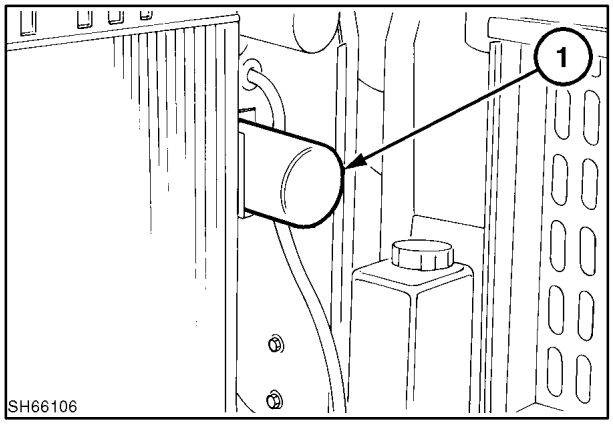

197

The filter base is equipped with a bypass valve, 1, to allow cold oil to bypass the filter without damaging the filter or starving the hydrostatic system of lubrication oil during cold weather start-ups.

In cold weather start-ups, allow the hydraulic oil to warm up before operating the boom, bucket, or the hydrostatic ground drive system, to prevent possible damage to the systems.

The filter base is also equipped with a pressure sensor that is monitored by the EIC (Electronic Instrument Cluster) to signal the operator of a plugged oil filter.

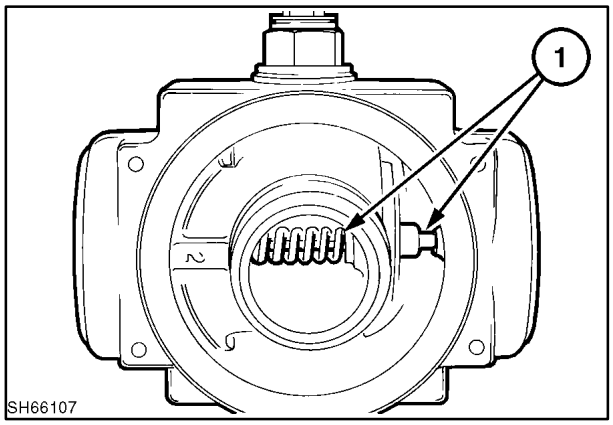

198

Op. 35 705 04

FILTER REMOVAL

Op. 35 705 05

BASE REMOVAL

The filter base can be removed by opening the rear door and removing the right engine side panel.

1. Remove the sensor wires, 1.
2. Remove the inlet, 2, and outlet, 3, oil lines and cap to prevent loss of oil.
3. Remove the filter base mounting hardware, 4.
4. Remove the filter assembly from the unit.

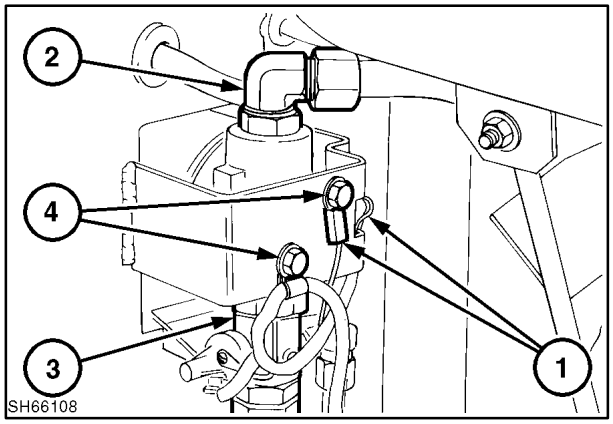

199

https://truckmanualshub.com/

REASSEMBLY

1. Reinstall the filter base with the hardware previously removed and reconnect the ground wire, 1. Torque the mounting hardware to 20 N·m (15 ft. lbs.).
2. Reinstall the hydraulic lines, tighten the lines to seat line on fittings and loosen and retorque.
3. Reinstall the filter sensor and connect the sensor wires, 2.
4. Reinstall a new filter, coat the filter seal ring with 10W-30 oil, and tighten the filter unit until it contacts the base, and then tighten another half to three-quarter turn.

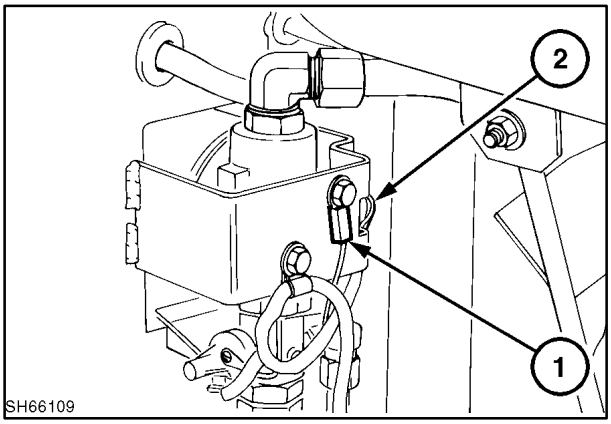

200

OIL COOLER

The hydraulic oil cooler is located to the inside of the radiator next to the engine cooling fan.

To access the cooler for cleaning, move the radiator to the rear by lifting up on the two handles, 1, to gain clearance between the radiator and cooler at 2.

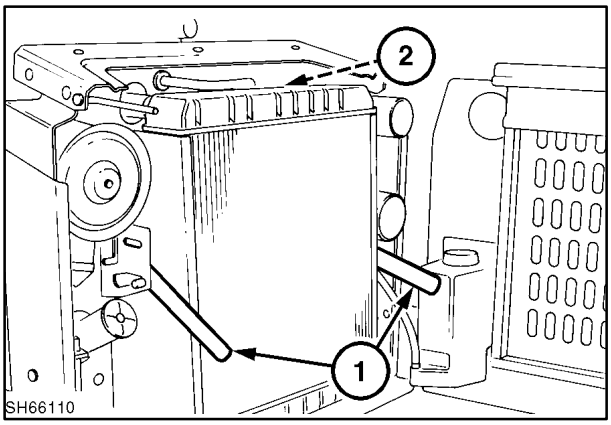

201

Op. 35 300 10

OIL COOLER REMOVAL

1. Drain the engine cooling system.
2. Unhook the inlet line to the reservoir and cap to prevent loss of oil.
3. Unhook the return (outlet) line and cap to prevent loss of oil.
4. Remove the radiator to engine hoses.
5. Remove the filter sender wires.
6. Remove the radiator overflow hose, 1, to the overflow tank.
7. Remove the eight bolts from the support at 2, four bolts each side, and lift the radiator and cooler assembly from the loader frame.

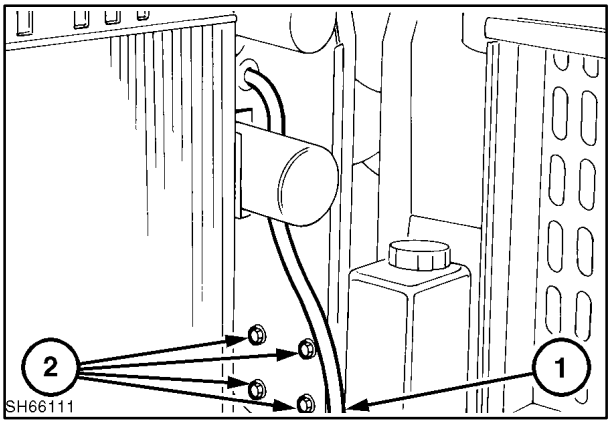

202

https://truckmanualshub.com/

8. Remove the fan shroud retaining hardware, 1, to access the oil cooler.
9. Remove the oil cooler, 2, retaining hardware to separate the cooler from the radiator.

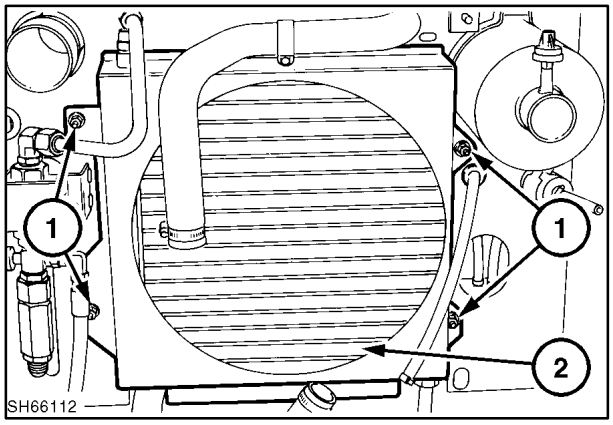

203

REASSEMBLY

1. Reattach the oil cooler to the support with the previously removed hardware.
2. Reinstall the support with the oil cooler and radiator attached into the frame.
3. Position the support square with the loader frame at 1, and install retaining hardware and tighten securely.
4. Reconnect the hydraulic lines to the cooler. Tighten the lines to seat to fittings, then loosen lines and retorque.
5. Reconnect the radiator lines and refill cooling system with 50/50 water-antifreeze mixture.
6. Reconnect the filter hydraulic lines. Tighten the lines to seat to fittings, then loosen lines and retorque.
7. Reconnect the filter sensor wires.
8. Check hydraulic oil level and add 10W-30 oil if required.
9. Start the unit, operate the hydraulic system, check for oil leaks and coolant leaks, and repair as required.
10. Check the oil level and engine coolant level and add as required.

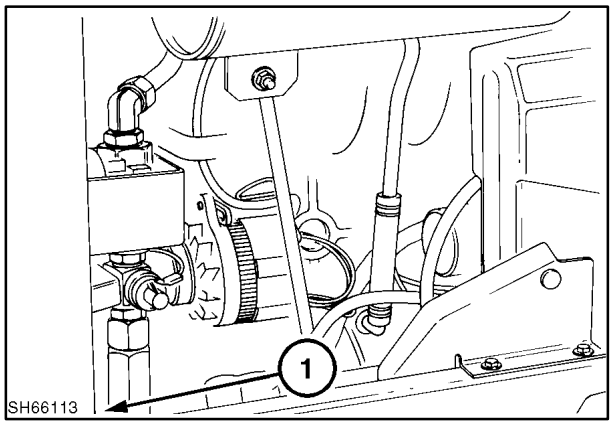

204

Op. 35 300

OIL RESERVOIR

The hydraulic oil reservoir fill is accessed through the top engine shield. The fill cap assembly is the hydraulic system breather and is equipped with a screen to help prevent contamination into the system.

Op. 35 300 28

Filter/Breather Cap Cleaning

To clean the breather cap, 1, remove the cap from the reservoir and back flush the cap assembly with a clean solvent. Blow dry with low- pressure air.

To clean the fill screen, remove the six screws and washers, 2, and lift the screen assembly from the reservoir neck.

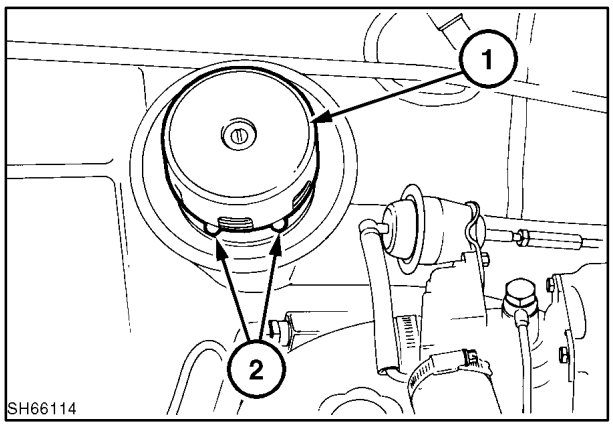

205

https://truckmanualshub.com/

Back flush the screen, 1, with a clean solvent and blow dry with low-pressure air.

Reinstall the screen assembly making sure the screen is sealed between the screen and reservoir neck with gaskets, 2. Use a silicone sealer with gaskets to seal between the screen and reservoir is recommended.

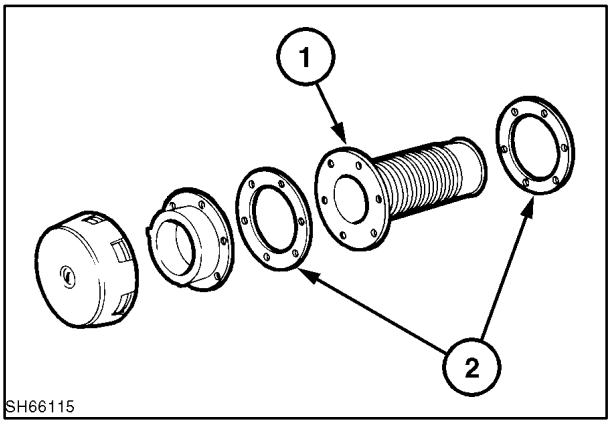

206

The hydraulic reservoir is equipped with a temperature sender, 1, which allows the EIC (Electronic Instrument Cluster) to monitor the hydraulic oil temperature and signal the operator of an oil overheat condition.

IMPORTANT: *Do not over tighten the sender or damage to the reservoir may occur.*

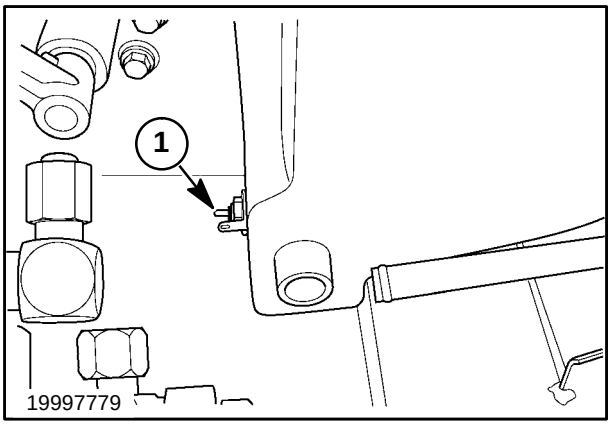

207

Op. 35 300 10

OIL RESERVOIR REMOVAL

To access the reservoir, open the rear door and remove the right engine side shield.

To remove the reservoir from the loader, the cab and boom must be tilted forward. Refer to “Section 00” For the cab tilting procedure.

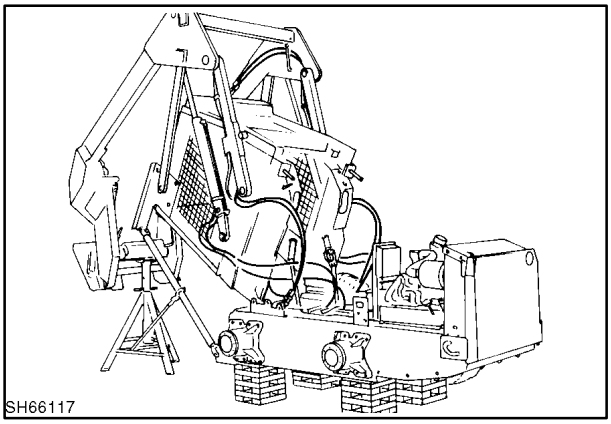

208

https://truckmanualshub.com/

With the cab tilted forward:

1. Drain the reservoir by lowering the engine belly pan, removing the return line from the charge check valve and rotating the line into a container. Allow the oil to drain.
2. Remove the hydraulic oil temperature sender wires, 1.
3. Remove the suction and return lines from the reservoir at 2.
4. Remove the front and rear mounting hardware, 3.
5. Lift the reservoir from the loader.

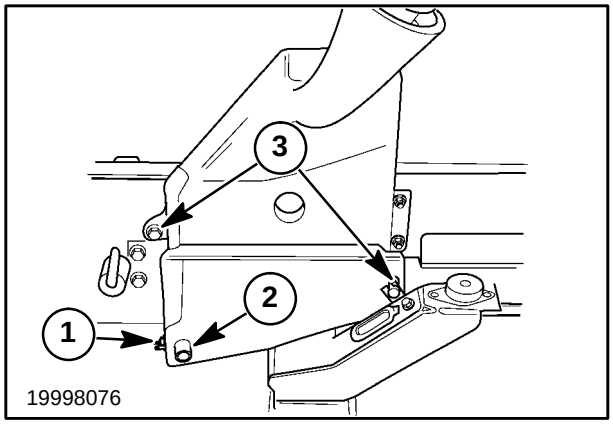

209

NOTE: *If the reservoir tank should leak due to a hole or crack, DO NOT repair. Replace the tank, as the type of material used in the molded tank is not reliably fixed.*

REINSTALLATION

1. Reinstall the reservoir into the loader frame, position and reinstall the tank retaining hardware.
2. Reattach the suction, 1, and return, 2, lines and tighten the hose clamps securely.
3. Refill the reservoir with 10W-30 oil and operate the hydraulic system to remove all air from the system. Check for oil leaks, repair as required.
4. Check the oil level, fill as required.
5. Reinstall the engine belly pan.
6. Tilt the cab and boom back into operating position.
7. Reinstall all shields previously removed.

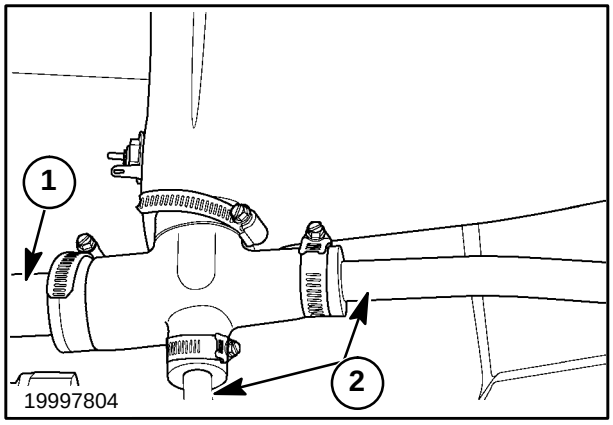

210

https://truckmanualshub.com/

ADAPTING ATTACHMENTS WITH PREVIOUS-STYLE NH-SUPPLIED BALL/PIN COUPLERS TO FLAT-FACED COUPLERS

If the attachment to be used has the 1/2″ ball/pin-type couplers, adaptors, 1 and 2, can be used to attach to the loader flat-faced couplers.

Part Number	Description	Item#
86539404	1/2″ male flat-faced/ 1/2″ female ball/pin-type	1
86539403	1/2″ female flat-faced/ 1/2″ male ball/pin-type	2

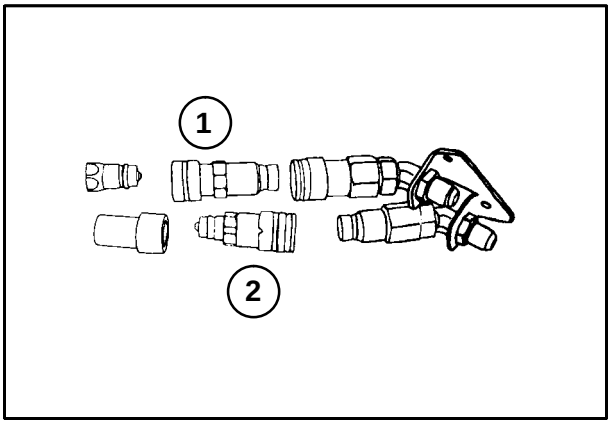

211

NOTE: *These adaptors are useful for occasionally adapting attachments; however, they significantly lengthen the coupler assembly and make assembly more likely to be damaged in usage. It is preferred for heavy attachment usage to convert the attachment quick couplers or loader quick couplers to the flat-faced style.*

https://truckmanualshub.com/

LABOR GUIDE

HYDRAULIC SYSTEM

The following labor amounts are listed as a guide only. Working conditions and experience will vary the time it actually takes to complete each job.

Job	Hours
Remove and replace control valve	1.5 hr.
Repair control valve	1.0 hr.
Remove and replace gear pump	1.0 hr.
Repair gear pump	0.5 hr.
Remove and replace one boom cylinder	0.5 hr.
Repair one boom cylinder	1.0 hr.
Remove and replace one bucket cylinder	0.5 hr.
Repair one bucket cylinder	0.5 hr.
Remove and replace pedal controls	1.0 hr.
Repair one pedal	0.5 hr.
Remove and replace oil filter	0.5 hr.
Remove and replace filter and base	1.0 hr.
Remove and replace oil cooler	3.0 hrs.
Remove and replace hydraulic reservoir	2.5 hrs.

https://truckmanualshub.com/

SECTION 37 – TOWING HOOKS AND BALLASTING

Chapter 1 – Rear Counterweights

CONTENTS

Section	Description	Page
37 140 10	Rear Counterweights	37-2
37 140 12	Rear Counterweight Support Removal	37-2

https://truckmanualshub.com/

Op. 37 140 10

REAR COUNTERWEIGHTS

Counterweights can be installed to improve the stability of the loader when handling heavy loads or when operating the skid-steer loader with a heavy front-mounted attachment.

Four 27.2 kg (60.0 lbs.) weights, 1, (two per side) may be added to the rear of the loader as shown.

The rear counterweights should be removed when not required. Operating the skid-steer loader with rear counterweights installed and with light front loads, may cause uneven tire wear.

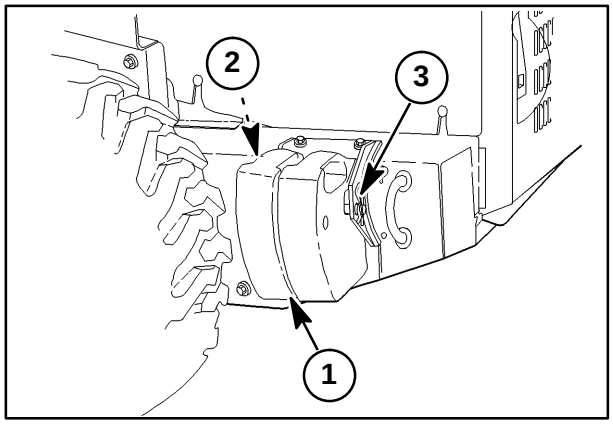

1

Weight Removal

1. To remove weights, remove cotter pin at 2, and remove pin, 3, from the weights and support bracket.
2. Lift the weights from support by pivoting the bottom of weights out at bottom and then lift straight up.

Op. 37 140 12

REAR COUNTERWEIGHT SUPPORT REMOVAL

https://truckmanualshub.com/

SECTION 39 – FRAMES

Chapter 1 – Lower Main, ROPS

CONTENTS

Section	Description	Page
	General Information	39-2
	ROPS	39-2
	ROPS Frame	39-2
90 152 46	ROPS Removal	39-2
	ROPS Reinstallation	39-8
	Labor Guide	39-11

https://truckmanualshub.com/

GENERAL INFORMATION

ROPS

The ROPS is a welded frame structure to provide rollover protection for the operator and pivot point locations for the boom assembly.

Shown here is the loader and ROPS with the inner shell removed.

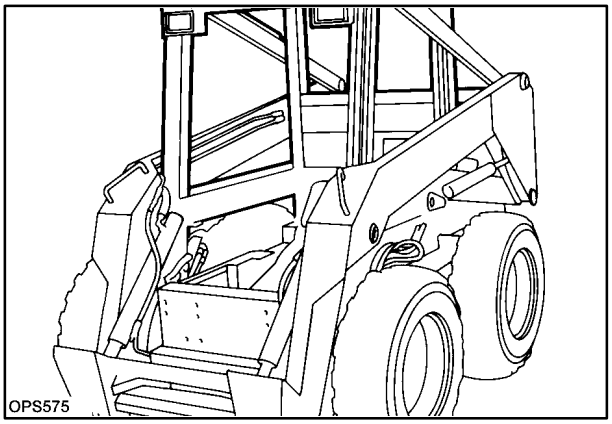

1

ROPS FRAME

Op. 90 152 46

REMOVAL
The ROPS can be removed from the lower frame with the cab inner shell and boom attached in place or removed.

To remove the ROPS with the inner shell and boom removed:
Follow the instructions for “Cab Inner Shell Removal” (refer to Section 90 of this manual) and “Boom, Upper and Lower Link Removal” (refer to Section 82 of this manual).

1. Remove the rear attaching bolts, 1, left and right sides. If there are washer spacers under the bolt heads, make sure to replace them on installation for proper torquing.
2. Support the ROPS with a suitable lifting device and remove the front attaching bolts, 1, two each side.
3. Lift the ROPS frame from the lower main frame and move to a level area. Lower the ROPS to the floor.

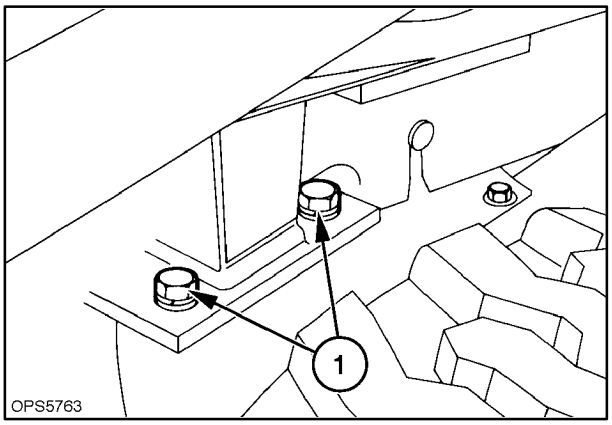

2

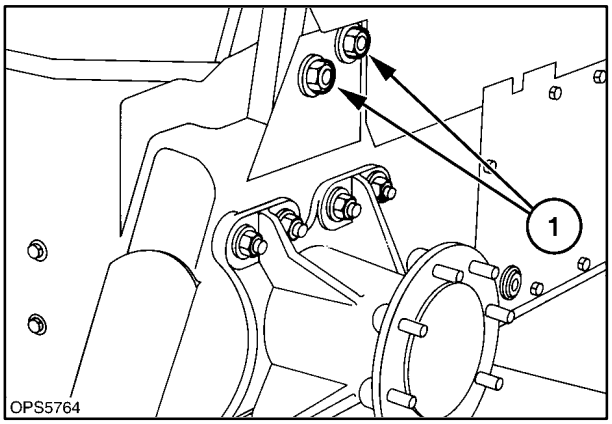

3

https://truckmanualshub.com/

To remove the ROPS with the cab inner shell and boom attached:

1. Remove any attachment from the loader mounting plate, raise the boom and rest on the boom lock pins.

CAUTION

Never work under a raised boom unless it is properly supported by the boom lock pins.

Never work under a raised boom with an attachment. Always remove the attachment from the loader.

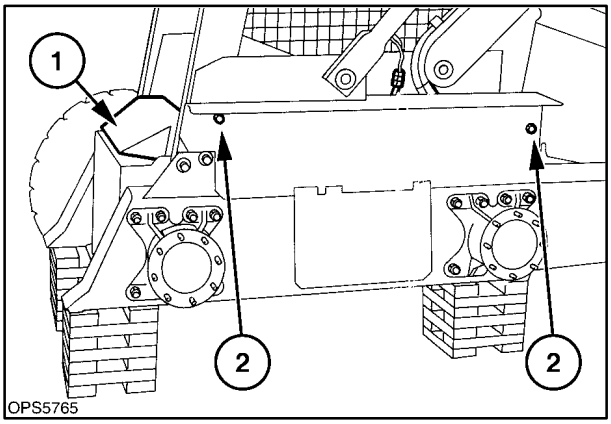

4

2. Remove the front step shield, 1.
3. Remove the right and left fenders, 2.
4. Lower the boom to the lowered position and turn the ignition (key) switch to the “OFF” position. Do not unbuckle the seat belt and exit the loader.
5. Relieve the hydraulic pressure from the boom and bucket circuits.
   - Turn the ignition (key) switch to the “ON” position.
   - Operate the boom and bucket controls relieving all pressure in the system.
   - Turn the ignition switch “OFF” and exit the loader.

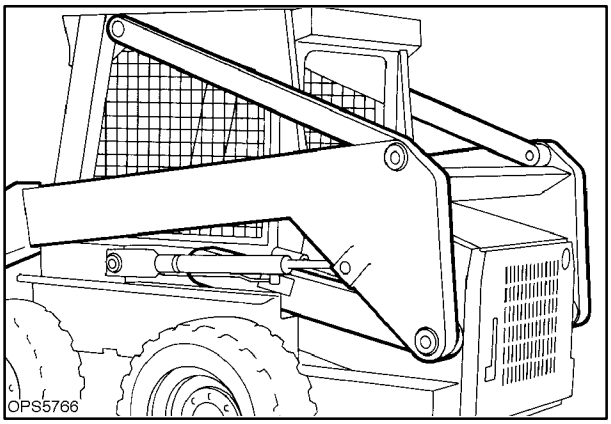

5

6. Raise the operator’s seat/seat pan support to the raised latched position.

CAUTION

Do not work under a raised seat unless it is securely latched in the raised position.

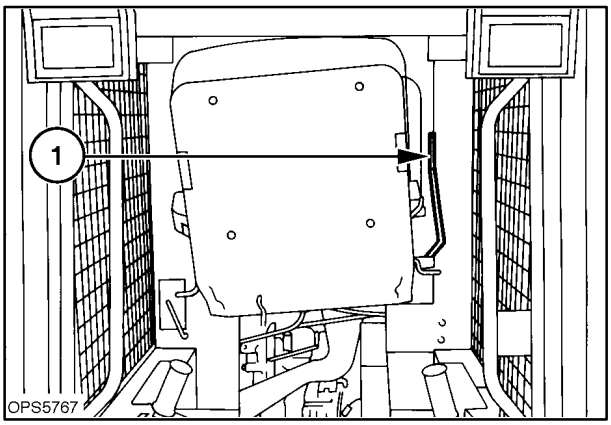

6

https://truckmanualshub.com/

7. Disconnect the parking brake linkage at 1.
8. Raise the parking brake control lever to the raised engaged position.

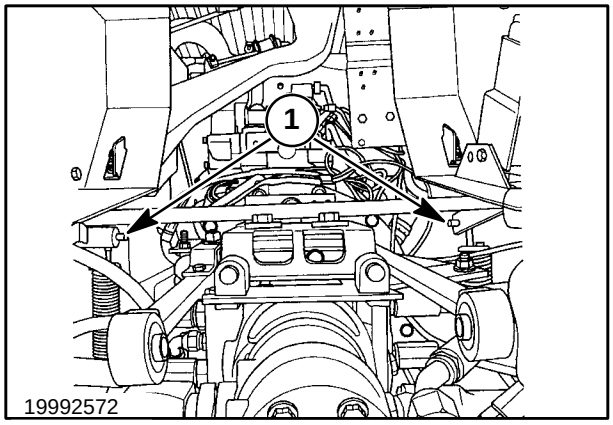

7

9. Remove the engine side panels, 1, and top engine screen, 2.
10. Disconnect the (-) negative ground battery cable.

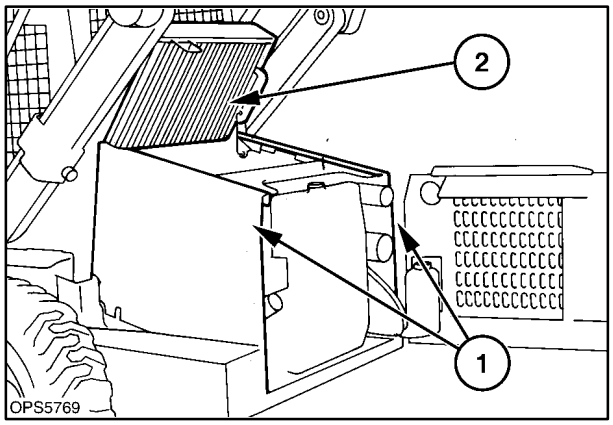

8

11. Unplug the engine wire harness from the main harness, 1.
12. Remove the ground wires from the engine bell housing, 2.
13. Remove the wires from the electric fuel pump and wire harness from along the fuel tank on the left side of the engine.
14. Remove the wires from the hydrostatic charge pressure sender, oil filter sensor, and remove the wire harness from the right side of the engine.

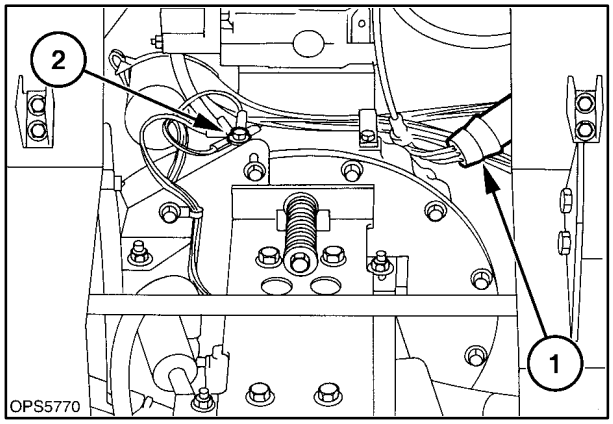

9

https://truckmanualshub.com/

15. Remove the wire harness clamps and plastic ties along the left side of the lower frame at 1, 2, and 3.

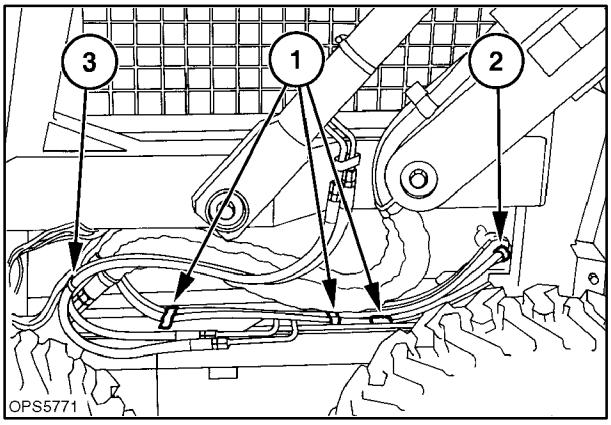

10

16. Remove the ground strap, 1, from the cab inner shell and lower main frame.

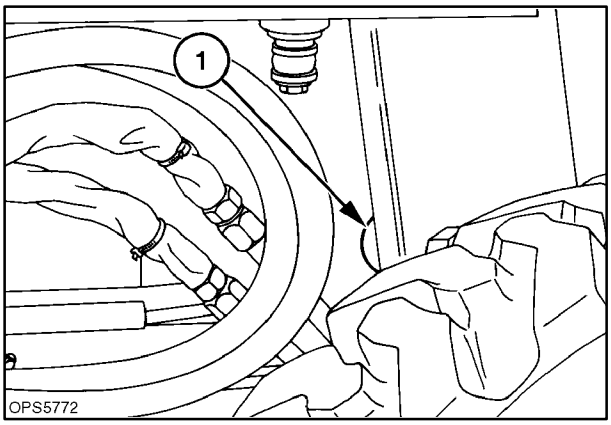

11

17. Remove the engine fuse/relay panel support hardware, 1, and raise and tie the panel assembly to the back of the cab assembly.

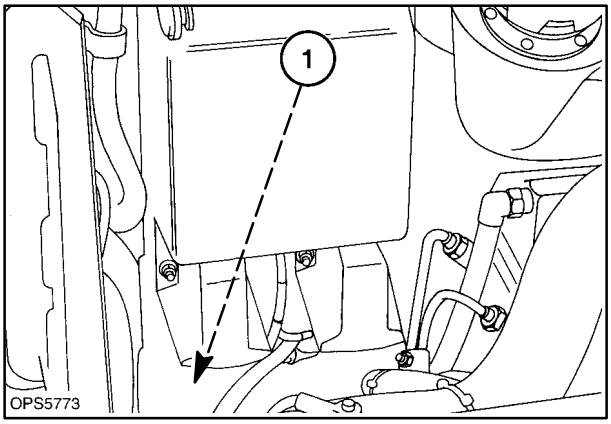

12

https://truckmanualshub.com/

18. Remove the throttle control cable, 1, from the control lever at 2. Remove the cable retaining nut, 3, and slide the cable down through the right side shield at 4.

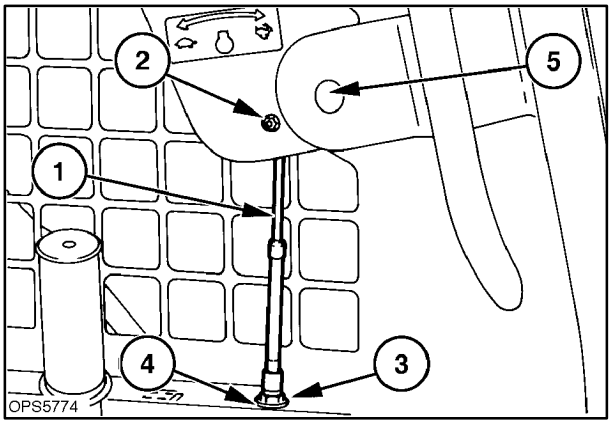

13

19. With the boom in the lowered position and the hydraulic pressure relieved in the boom and bucket circuits, disconnect the boom, bucket, and auxiliary boom hydraulics hose connections, 1, and cap all connections.

CAUTION

Never loosen any hydraulic lines without first relieving all pressure in the system.

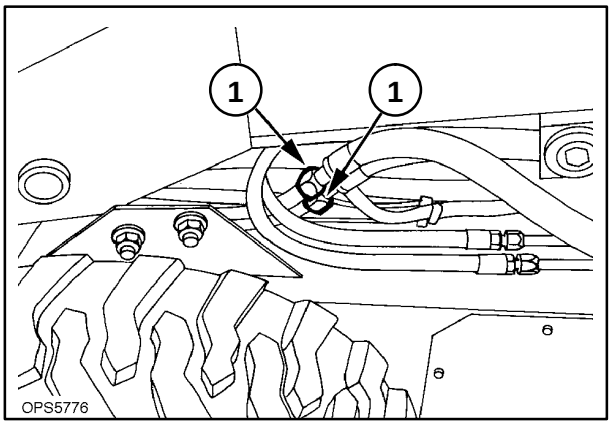

14

20. Rotate the boom lock pin control lever, 1, to extend (engage) the boom lock pins.

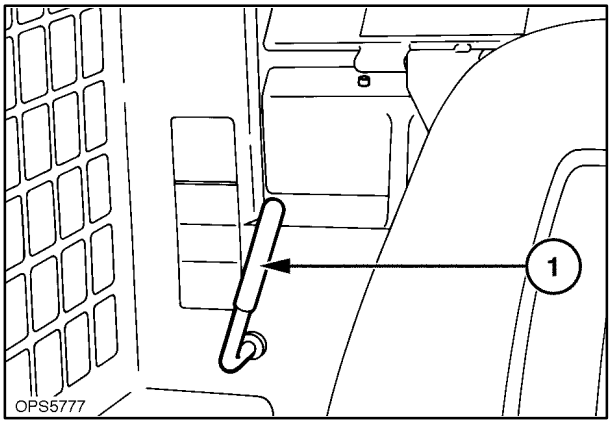

15

https://truckmanualshub.com/

21. Remove the left and right rear attaching hardware, 1. If there are washer spacers under the bolt heads, make sure to replace them on installation for proper torquing.

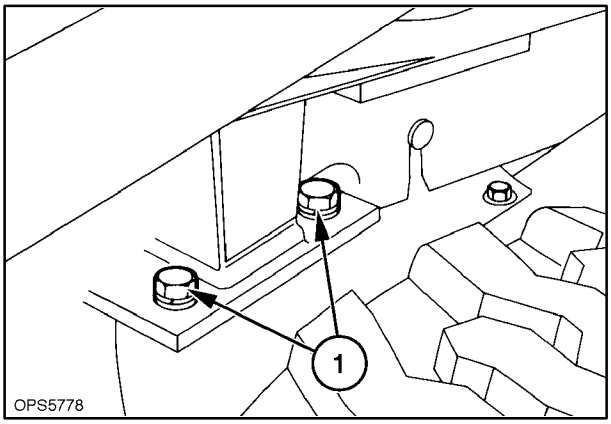

16

22. With a suitable lifting device support the boom at the rear.

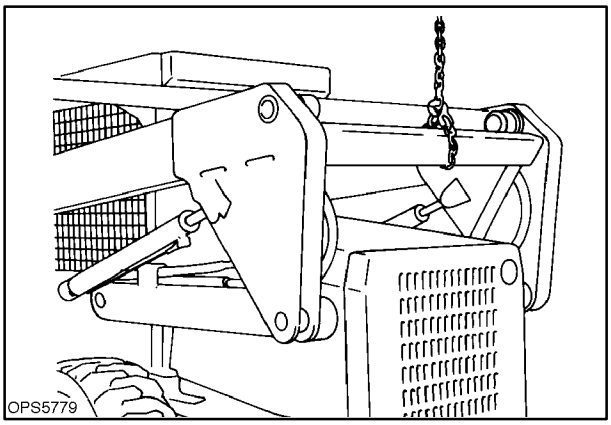

17

23. With a suitable lifting device support the boom at the front as shown, and raise the boom assembly up, from both front and rear, until it contacts the boom lock pins at 2.

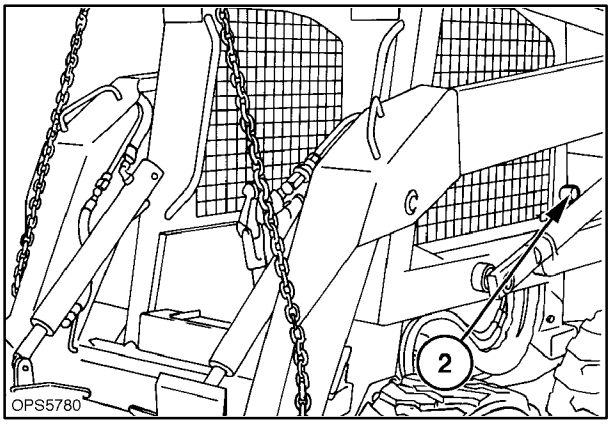

18

https://truckmanualshub.com/

24. Remove the right and left front retaining bolts, 1.
25. Lift the ROPS and boom assembly from the lower main frame and move to a level area. Rest the assembly on the floor, lowering the boom to the floor.

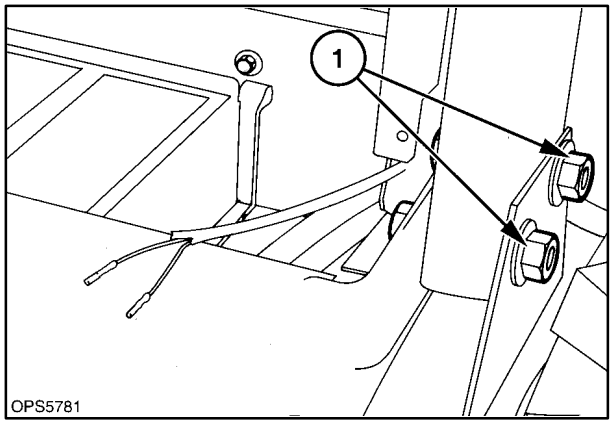

19

REINSTALLATION

1. Lift the ROPS and boom assembly onto the lower frame, resting the rear ROPS post on the lower frame pads. Supporting the front of the ROPS install the front retaining hardware. With the front hardware installed, align the rear ROPS posts and install the rear hardware.
2. Torque the front hardware, 1, to 217 N·m (160 ft. lbs.).

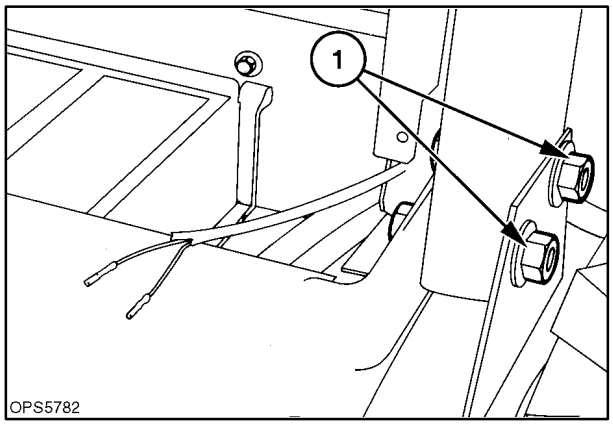

20

3. Torque the rear hardware, 1, to 108 N·m (80 ft. lbs.). Replace any washers used for proper spacing.
4. With the ROPS and boom securely attached to the lower frame and the boom in the lowered position, remove the lifting device from the ROPS.

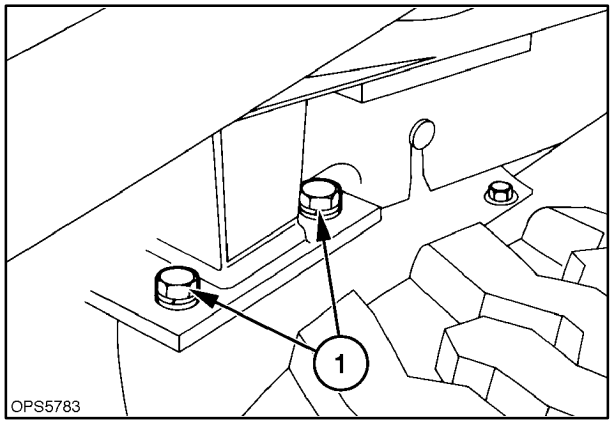

21

https://truckmanualshub.com/

5. Reinstall the wire harness along the main frame and attach the engine fuse/relay panel.
6. Reconnect the main harness to the engine harness, re-route the wire harness along the fuel tank and the right side of the engine installing all clamps and ties previously removed at 1, 2, and 3.

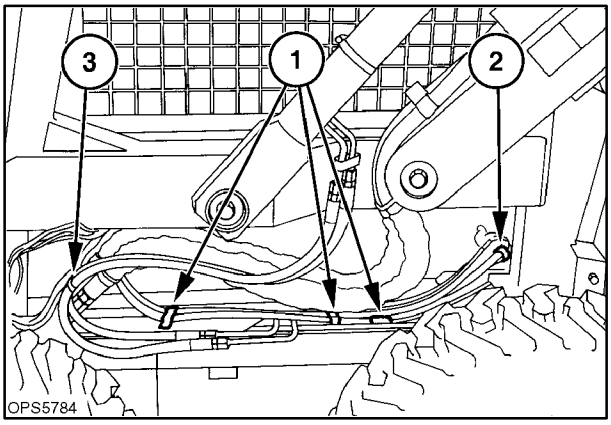

22

7. Reconnect the ground wires to the bell housing at 1. Place the largest wire next to the ground surface, stacking the remaining wire by size, largest to smallest, to ensure proper grounding. Reconnect the main wiring harness connector, 2.

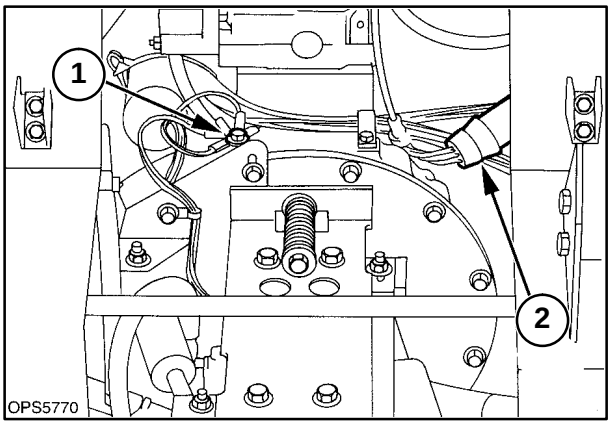

23

8. Reconnect all hydraulic lines, 1, and position for clearances between other components. Install any hose clamps removed.

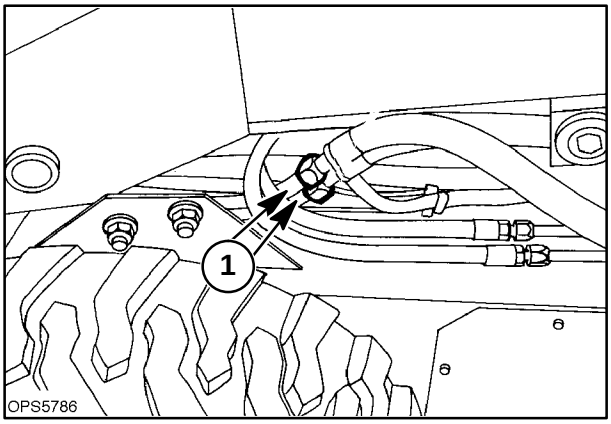

24

https://truckmanualshub.com/

9. Slide the throttle cable up through the hole in the left cab panel and secure with retaining nut at 1. Attach the control lever, 2, to the cab panel at 3, with 3/8″ x 1-1/2″ cap screw; friction disc, 4; spring, 5; 3/8″ flat washer; and locknut. Tighten the pivot hardware to hold the control lever in set position. Over tightening will require more effort to set the throttle.

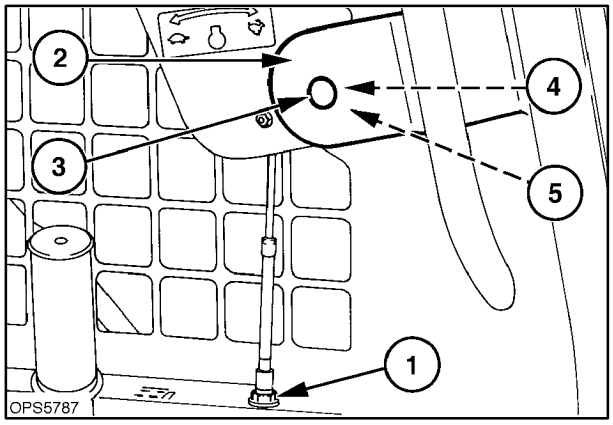

25

10. Reconnect the parking brake spring links, 1, to the control rod at 2, and install the cotter pins.
11. Reconnect the (-) negative ground battery cable.

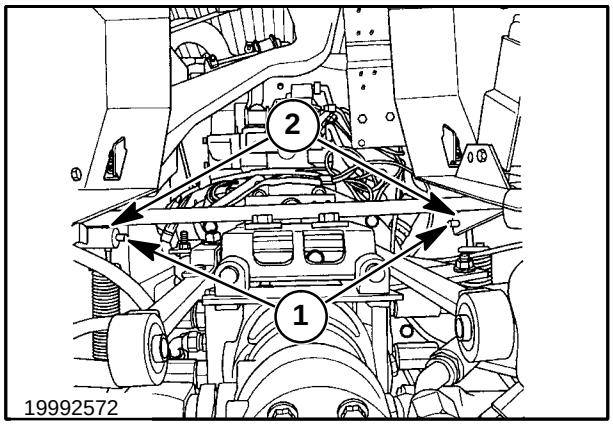

26

12. After all wires and hydraulic hoses are connected, start the unit, raising the boom checking for oil leaks.

NOTE: *The boom and bucket hydraulic circuits may require cycling several times to purge the air from the hydraulic system.*

13. Reinstall all fenders, shields, etc., removed; including the front step shield, 1. Tighten the fender hardware, 2, securely.
14. After the fenders are reinstalled, raise and lower the boom and recheck the hoses and tubes for clearance at 3. Readjust the hoses and tubes if they contact the fenders.

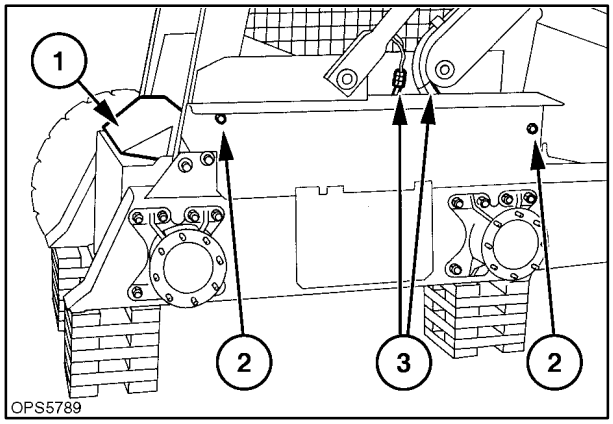

27

https://truckmanualshub.com/

LABOR GUIDE

The following labor amounts are listed as a guide only. Working conditions and experience will vary the time it actually takes to complete each job.

Job Description	Hours
Remove and replace ROPS frame (Includes seat, boom lock linkage, boom removal, inner shell)	18.5 hrs.

https://truckmanualshub.com/

https://truckmanualshub.com/

SECTION 44 – AXLES AND WHEELS

Chapter 1 – Axles

CONTENTS

Section	Description	Page
44 100	General Information	44-2
	Specifications	44-4
	Troubleshooting	44-5
	Testing	44-7
44 106	Axles	44-8
44 106 10	Axle Housing Assembly Removal	44-8
44 106 16	Axle Disassembly	44-9
	Axle Parts Inspection	44-11
	Axle Reassembly	44-12
	Axle Housing Reinstallation	44-14
	Final Drive	44-15
44 106 48	Drive Chain and Sprocket Removal	44-15
	Final Drive Parts Inspection	44-19
	Final Drive Reassembly	44-20
44 511	Tires/Wheels	44-22
	Tire and Track Installation	44-23
	Labor Guide	44-24

https://truckmanualshub.com/

Op. 44 100

GENERAL INFORMATION

The power is transmitted to the final drive from the engine which is connected to the hydrostatic pumps, 1, with a flex plate drive coupler. The hydrostatic pumps then transmit hydraulic power to the hydrostatic motors, 2, which are connected to gearboxes, 3, located on the inside of the final drive cases. The left and right drives are separate from each other and are operated independently.

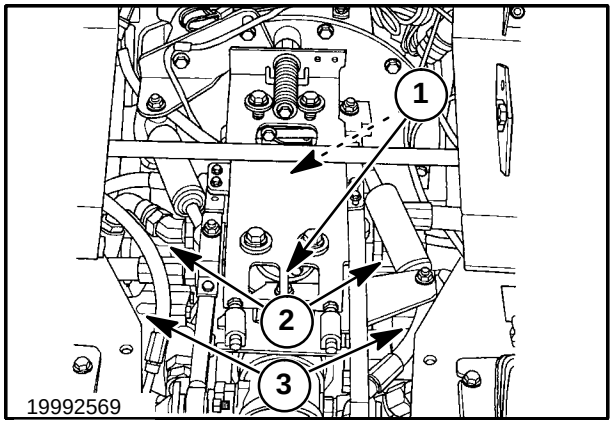

1

The power is then transmitted through gears to a double drive sprocket, 1, in the final drive case. The drive sprocket is connected to the axle sprockets, 2, with chains, 3, one endless chain to the front axle and one endless chain to the rear axle.

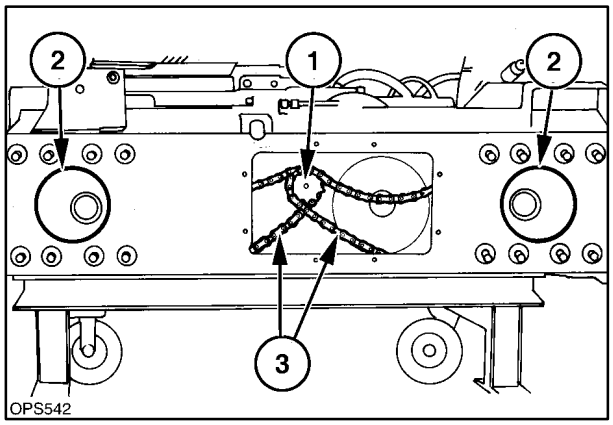

2

The axle sprocket, 1, is splined to the axle shaft and hub assembly, 2. A large O ring, 3, seals the assembly to the frame.

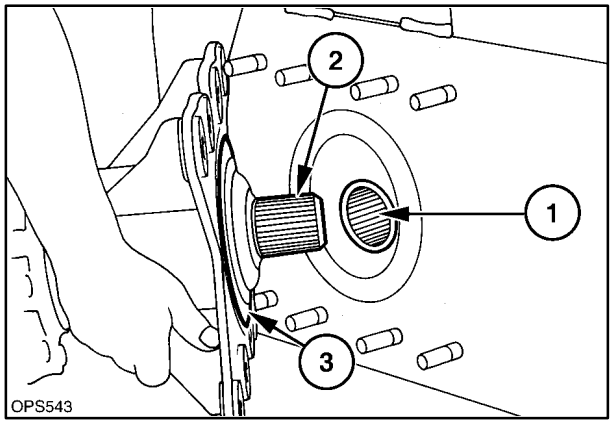

3

https://truckmanualshub.com/

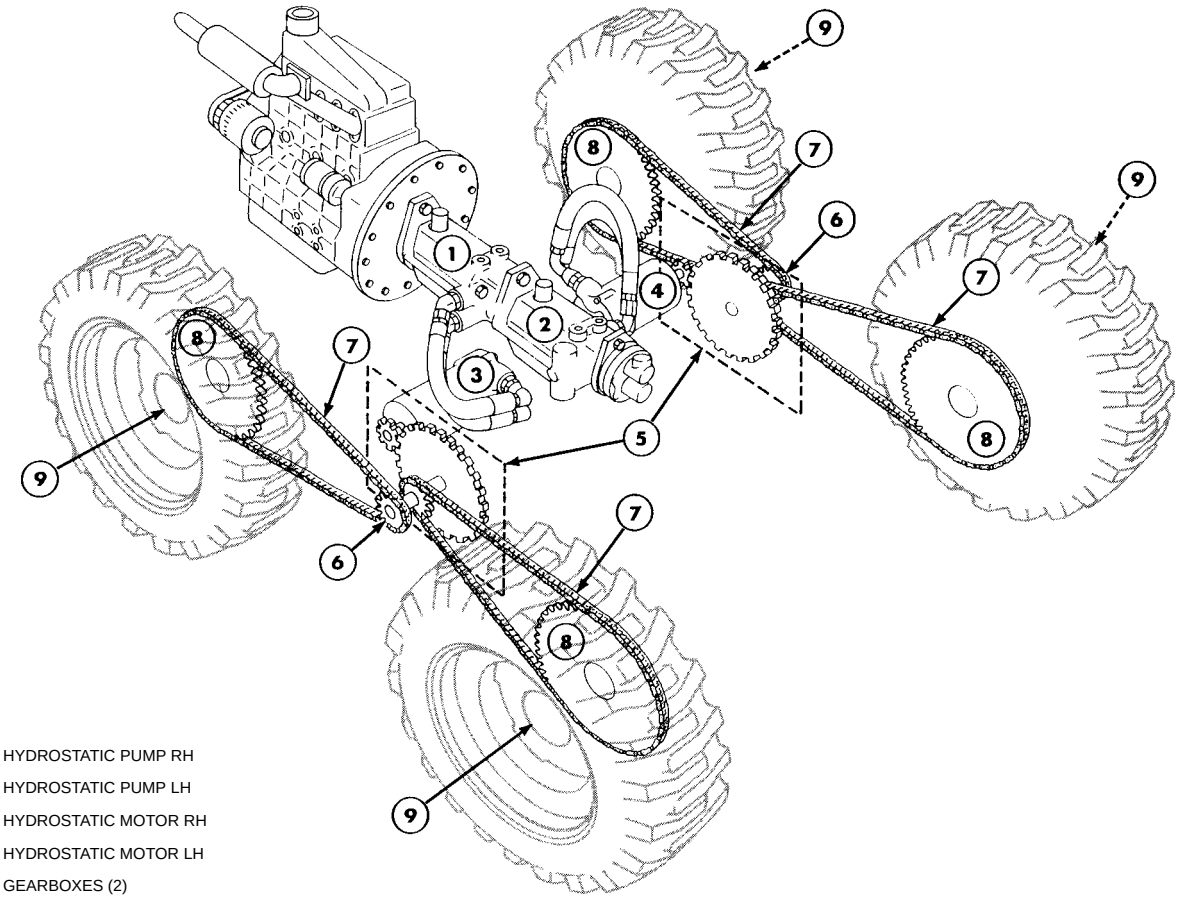

1 - HYDROSTATIC PUMP RH

2 - HYDROSTATIC PUMP LH

3 - HYDROSTATIC MOTOR RH

4 - HYDROSTATIC MOTOR LH

5 - GEARBOXES (2)

6 - FINAL DRIVE SPROCKET ASSEMBLIES (2)

7 - DRIVE CHAINS(FRONT AND REAR)(4)

8 - AXLE DRIVE SPROCKETS(4)

9 - AXLES ASSEMBLIES(4)

4

https://truckmanualshub.com/

SPECIFICATIONS

Drive Axles

Wheel Nut Torque	170 N·m (125 ft. lbs.)
Mounting Bolt Torque (Axle housing to case)	190 N·m (140 ft. lbs.)
Lubrication	High temperature lithium grease

Chain Case

Side Cover Bolt Torque	15 N·m (11 ft. lbs.)
Brake Caliper Mounting Bolt (center) Torque	20 N·m (15 ft. lbs.)
Brake Caliper Mounting Bolts (outer) Torque	70 N·m (52 ft. lbs.)
Drive Chain	#80
Front Chain Length (68 pitches)	1727.2 mm (68″)
Rear Chain Length (66 pitches)	1676.4 mm (66″)
Chain Tension	0 – 6 mm (0 - 1/4″) movement at tire tread
Lubrication	7.6 liters (2 gal.) each side - 10W-30API service SH/CG4 Oil

Other Materials

Description	Use
Ultra/Blue Silicone sealer	Gearbox mounting bolts Axle housing bolts Chain case cover and bolts Gearbox to chain case Brake caliper bolts Gearbox cover and bolts
Sealing Material	NH Ultra Blue silicone sealer NH #L81724 - 3.35-oz. tube (cord) NH #L82519DS - 8-oz. tube NH #L58775 - 10.2-oz. cartridge
Hydraulic Oil	SAE10W-30 motor oil-API Service SH/CG4 NH #9613313 - 1 qt. NH #9613314 - 2 1/2 gal. NH #9613358 - 1 L NH #9613360 - 20 L
Gear Oil	80W-90 API Service GL-5 Gear Oil NH #9613295 - 1 qt. NH #9613294 - 5 gal. NH #9613375 - 4 L
Grease	High viscosity lithium base NH #9613310 tube

NOTE: *Always use a noncorrosive silicone sealer to seal where required to prevent corrosion during the silicone curing process.*

https://truckmanualshub.com/

TROUBLESHOOTING

FINAL DRIVE SYSTEM

Before servicing or adjusting on the final drive system, the skid-steer loader should be jacked up with the wheels off the ground.

Remove any attachment from the skid-steer loader boom, bucket, etc. Lower the boom to the lowered position or, if servicing requires the boom to be in the raise position, support the boom on the boom locks.

Raise the boom and lower onto boom lock pins, 1.

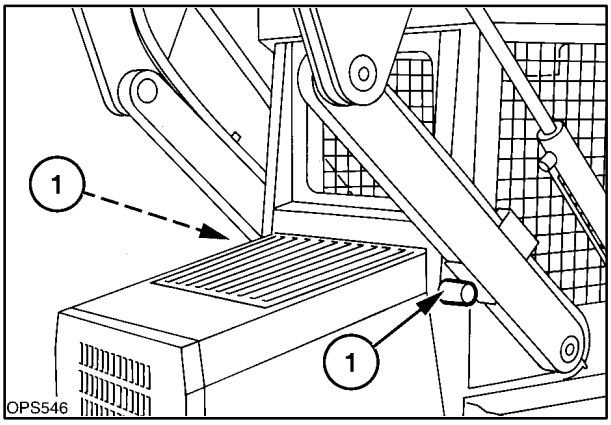

5

1. Raise boom above boom lock pins.
2. Engage boom lock pins.
3. Stop engine, ignition key “OFF” position.
4. Turn ignition key to the “ON” position.
5. Lower boom onto boom lock pins.
6. Turn the ignition key to the “OFF” position.

CAUTION

Never exit the loader with the boom in the raised position unless the boom is supported on the boom lock pins.

Never work under a raised boom unless it is properly supported by the boom lock pins.

Never work under a raised boom with an attachment mounted. Always remove the attachment from the loader.

Jack up the loader and support the loader with the wheels off the ground using adequate jack stands or blocks to securely support the loader.

Support the loader at the front of the final drive cases at 1, and at the rear at 2.

CAUTION

Never service a raised loader unless it is securely supported with adequate jack stands or blocks.

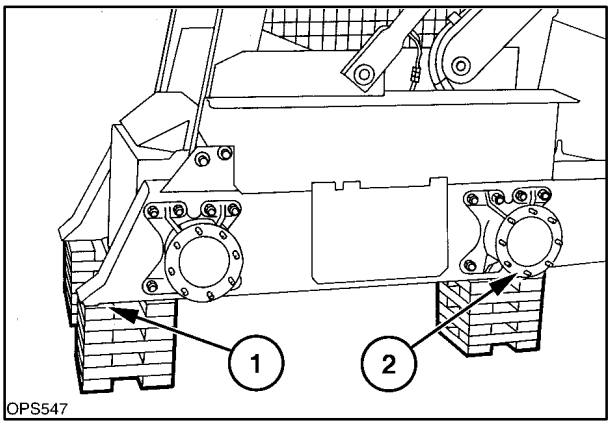

6

https://truckmanualshub.com/

PROBLEM	POSSIBLE CAUSES	CORRECTION
Both drive wheels on one side not powered	No hydrostatic motor shaft rotation	Check for pump to motor oil flow and repair
	No gearbox output drive	Check gearbox shaft rotation and repair
	Broken drive chains	Check chains and repair
One drive wheel not powered	Broken drive chain	Check chain and repair
	Axle or drive sprocket splines worn	Check axle and sprocket, replace
Chain case noise	Loose drive chains	Check and adjust chains
	No oil in final drive	Check oil level
	Worn drive sprockets	Check sprockets and repair
	Bearing failure	Check axle and gearbox bearings and repair
Excessive axle play	Bearing failure on axle shaft	Check bearings and repair
	Snap ring failure on axle shaft	Check axle bearing pre-load, repair
Noise in gearbox	No or low oil in gearbox	Check oil level
	Bearing failure	Check shafts and bearings, repair
	Bearing or shaft failure in drive motor	Check drive motor and repair
	Gears in gearbox worn	Check and replace
Axle outer bearing failure	Prolonged operation in liquid or semi-liquid material	Decrease lubrication interval to every 500 hours

https://truckmanualshub.com/

TESTING

FINAL DRIVE

Pre-test instructions:

* Operator in seat with seat belt buckled.

* Engine running at high idle (full throttle).

* Park brake disengaged position.

STEP	TEST	RESULT	PROBABLE CAUSE AND CORRECTION
1	Push both drive controls forward equally and loader should move in a straight line.	YES NO	Drive system OK. Engine stalls, wheels appear locked, check parking brake for engaged. If OK go to step 2. Slow or no power, Refer to hydrostatic drive section.
2			Check final drive chain, broken repair.
3	Pull both drive controls rearward equally and loader should move in a straight line.	YES NO	Drive system OK. Engine stalls, wheels appear locked, go to step 1. Wheels rotate slow or no power, go to step 1. One side of loader drags, go to step 2.

Pre-test instructions:

* Lower boom and attachment to the ground.

* Stop engine.

* Jack loader with wheels off the ground.

* Release parking brake.

STEP	TEST	RESULT	PROBABLE CAUSE AND CORRECTION
1	Rotate each tire by hand, tires move less than 1/4″ at tread.	YES NO	Drive system OK. Tires move more than 1/4″ at tread, check chain tension.
2			One tire rotates freely, broken chain, or axle spline worn.
3			Both tires on one side rotate freely together, inspect drive gearboxes. If OK, check drive motor.
4	Tires rotate but are noisy.	YES NO	Check drive chains, axle bearings. Drive system OK.

https://truckmanualshub.com/

Op. 44 106

AXLES

Op. 44 106 10

AXLE HOUSING ASSEMBLY REMOVAL

The axle housings must be removed to service axle seals, axle bearings, drive chains, drive sprockets, and axle housing mounting bolts.

NOTE: *The axle housings may be removed without removing the final drive side cover or draining the case oil.*

1. Lower the boom and attachment to the ground.
2. If the work is going to be done with the boom in the raised position, remove the attachment, raise the boom, and rest on the boom lock pins, 1.

CAUTION

Never work under a raised boom unless it is properly supported by the boom lock pins.

Never work under a raised boom with an attachment. Always remove the attachment from the loader.

3. Securely block the skid-steer loader with all four wheels off the ground, refer to Section 1 for more information on properly supporting a skid-steer loader.

CAUTION

Failure to securely support the skid-steer loader could result in movement of the loader causing serious injury or damage to the equipment.

NOTE: *When repairing a rear axle, the front of the unit should be supported slightly higher than the rear for easier rear axle assembly reinstallation.*

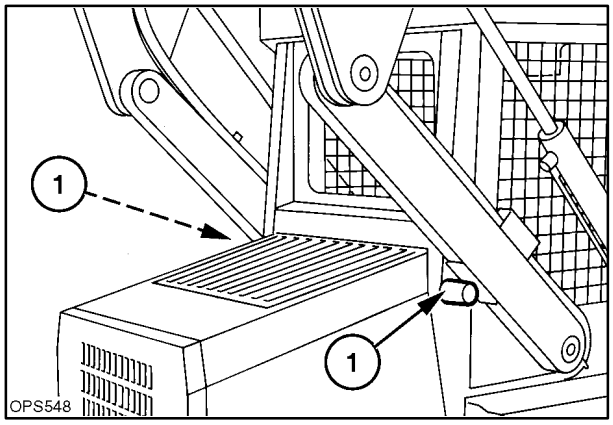

7

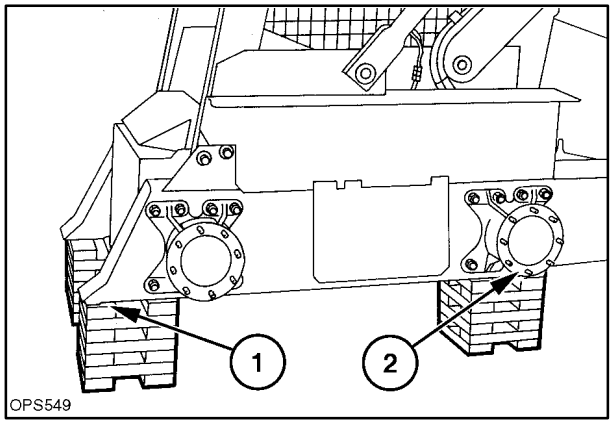

8

https://truckmanualshub.com/

4. Remove the tire and wheel from the axle being serviced.
5. Clean the axle and final drive area to prevent debris from entering the final drive case.
6. Remove the eight axle housing retaining nuts and washers, 1.
7. Slide the axle housing from the retaining studs and lift the assembly from the final drive case.

CAUTION

Axle assembly is heavy and may require two persons to adequately support if handling manually.

NOTE: *When the axle assembly is removed, the drive sprocket and chain will drop slightly to the bottom of the case.*

8. There is a large O ring at 1 that seals the axle housing to the side of the final drive case. Remove the O ring from the case or the axle housing.

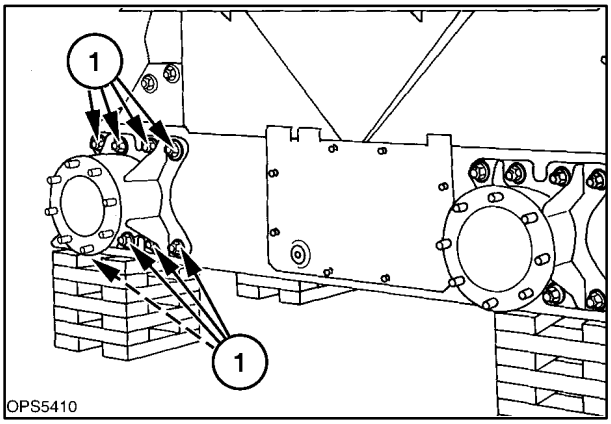

9

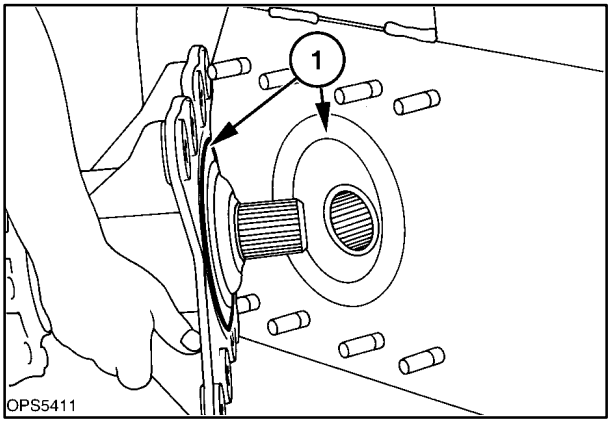

10

Op. 44 106 16

DISASSEMBLY

NOTE: *A press is required to remove the axle shaft and hub assembly from the housing.*

1. Remove the retaining ring, 1, from the axle shaft.
2. Remove the shims, 2. Note the thickness and number of shims.
3. Place the housing assembly in a press, support the housing as close to the center housing as possible to prevent damage to the housing.
4. Press the axle and hub assembly, 3, from the housing.

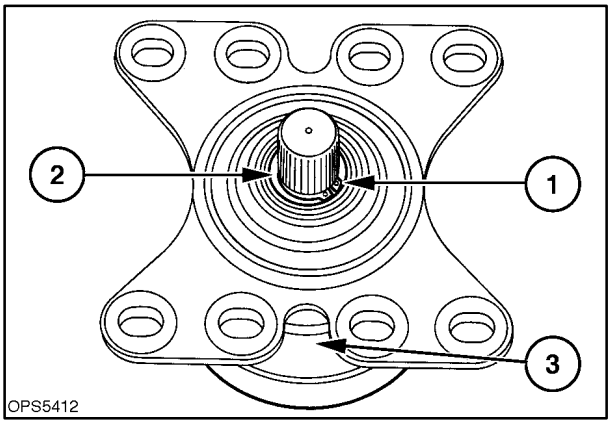

11

https://truckmanualshub.com/

5. The outer axle seal, 1, may be replaced at this time without further disassembly. The seal can be replaced without removing the bearing, 2.
6. Install a bearing separator/puller and remove the outer axle bearing, 2.

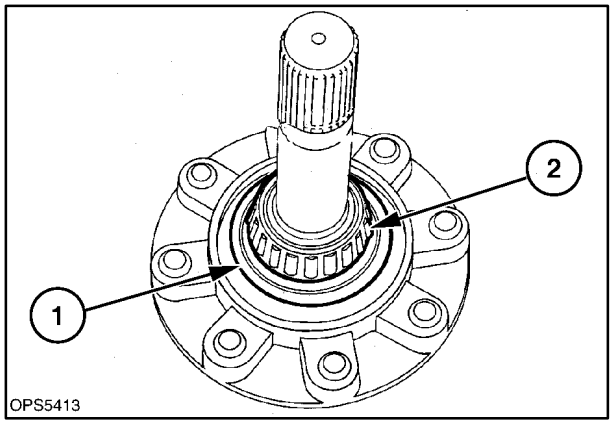

12

7. Remove the inner bearing race, 1, by driving it from the housing with a suitable hammer and driver.

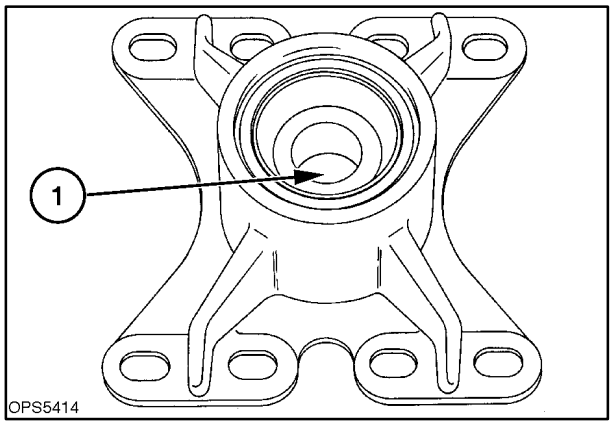

13

8. Remove the outer replaceable seal sleeve, 1, by prying it from the axle housing.
9. Remove the outer bearing race, 2, and seal, 3, by driving them from the housing with a suitable hammer and driver.

   Note the positioning of the oil seal before removal, as the replacement seal should be located in the same position.

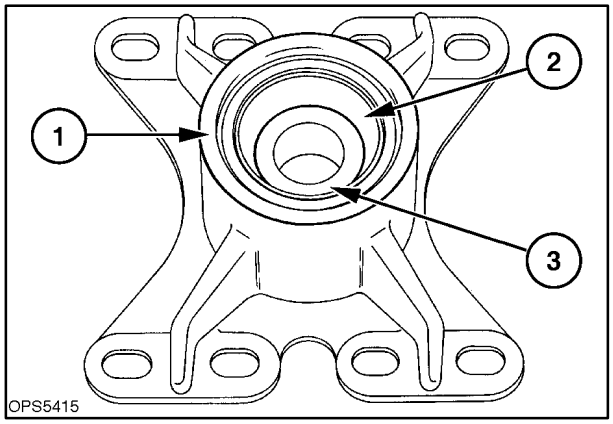

14

https://truckmanualshub.com/

10. The axle hub wheel studs, 1, can be removed from the hub, by pressing them from the hub.

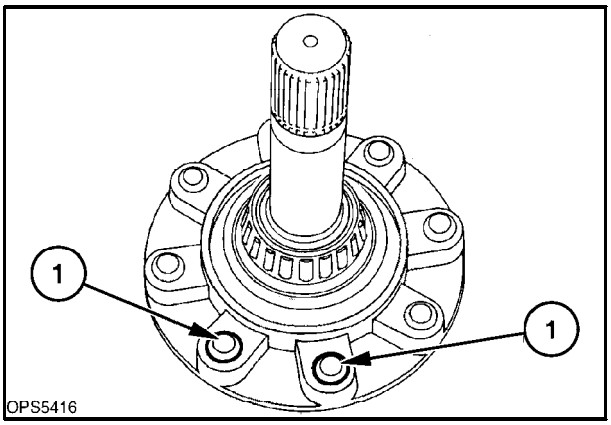

15

11. Shown here are the related parts used in the axle assembly.

Ref.	Description
1	Housing
2	Axle and hub assembly
3	Outer seal
4	Outer bearing assembly
5	Inner bearing assembly
6	Shims
7	Retaining ring
8	Inner seal
9	Outer seal sleeve
10	O ring

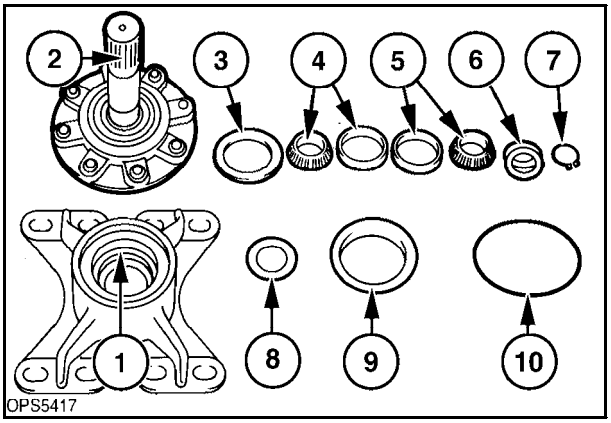

16

PARTS INSPECTION

Thoroughly clean all parts before inspection.

1. Inspect the housing flange, 1, and bearing race areas, 2. Replace the seals and replaceable seal sleeve if worn or damaged.

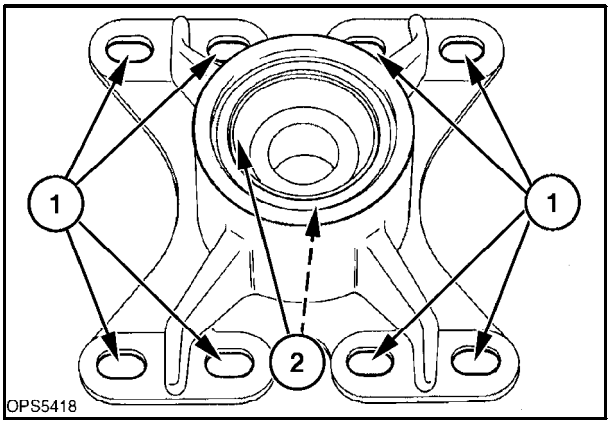

17

https://truckmanualshub.com/

2. Inspect the axle shaft and hub assembly.
   - Inspect the bearing areas, 1, for wear.
   - Inspect the splines, 2, and retaining groove, 3, for wear.
   - Inspect the seal area.
   - Inspect the wheel lug studs for damaged threads or looseness in the hub, replace studs if required.

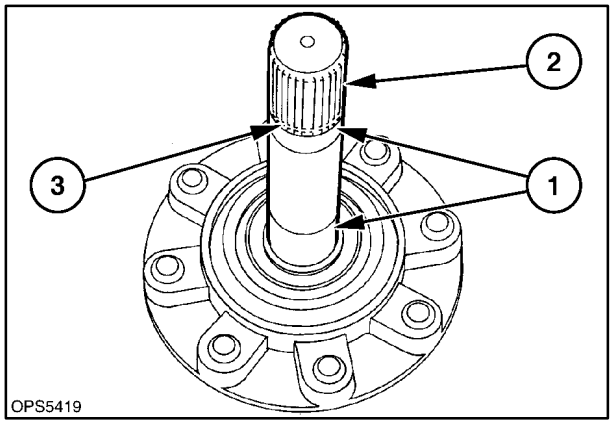

18

REASSEMBLY

1. Install the outer seal, 1, as shown, on the axle-hub assembly. Fill the grooves in the seal with grease.
2. Pack the bearing with grease and install the outer bearing, 2, with a suitable bearing driver.
3. Wrap the axle in the retaining ring groove area, 3, with a single layer of plastic tape to prevent damage to the seal during assembly.

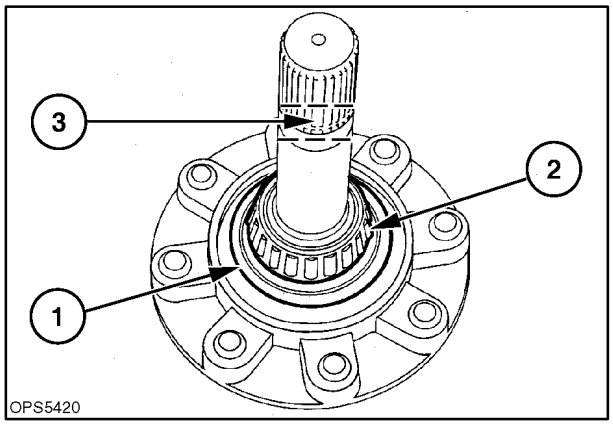

19

4. Install inner seal, 1, in housing as shown with the flat side of seal to the center of housing and retainer and lip of seal to the outside.
5. Install bearing race, 2.
6. Install replaceable seal sleeve, 3, in housing.

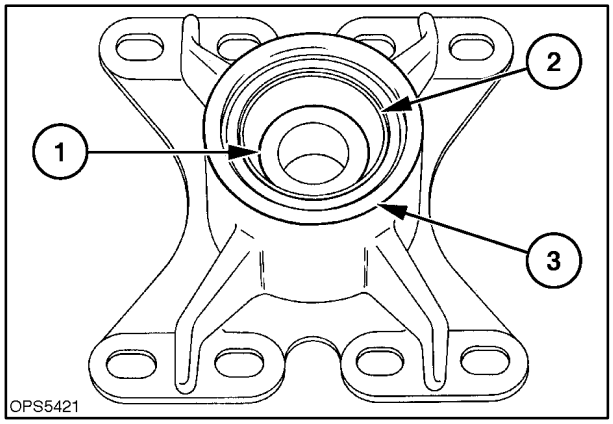

20

https://truckmanualshub.com/

7. Place the housing over the axle and hub assembly making sure the outer bearing is seated in race properly.
8. Remove tape from axle shaft.
9. Install the inner bearing race, 1, into housing.

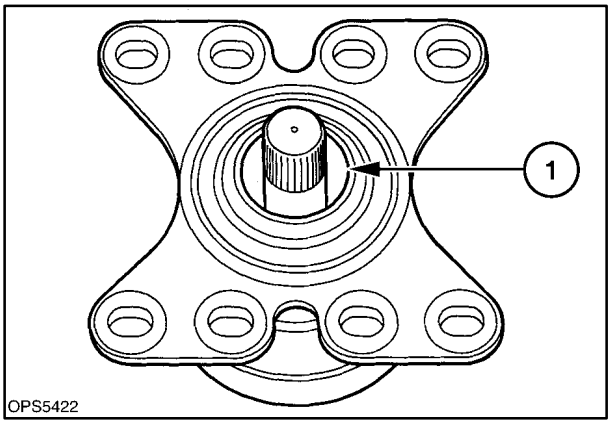

21

10. Pack the bearing with grease and install the inner bearing, 1.

    Press the inner bearing on axle shaft and into the housing to obtain housing rolling torque of 4 - 7 kg (9 - 15 lbs.).

NOTE: *To check housing rolling torque, hook a spring scale in one of the housing flange slots, 2, and pull on the scale to rotate the housing.*

11. Add shims to fill the space between the bearing race, 3, and retaining ring, 4.
12. Install the retaining ring in groove, 5.

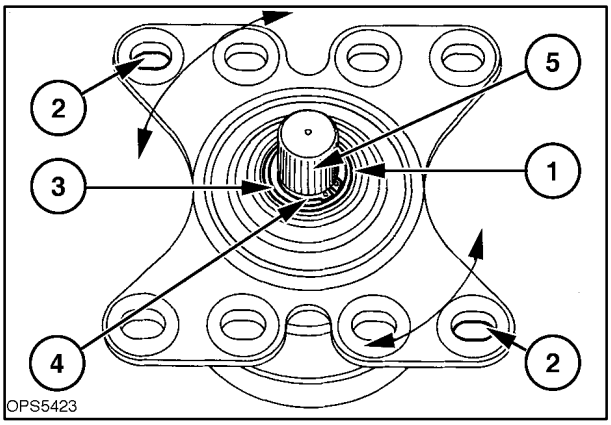

22

13. Fill the outer seal area with grease until the grease appears around the hub at 1; spin the axle housing while adding grease.

NOTE: *If bearing failed because of contamination, use green Loctite 609 on the seal housing to axle shoulder press-fit joint. If the axle shoulder is worn from previous seal rotation, use a new axle, seal, and loctite in place. When reinstalling the axle into the axle housing, be sure both bearings are packed with grease. The cavity in between the triple lip seal and axle seal, where the outer bearing is positioned, must be full of grease. If any old/hardened grease is in a housing that will be reused, be sure to clean the housing and fill it with new grease.*

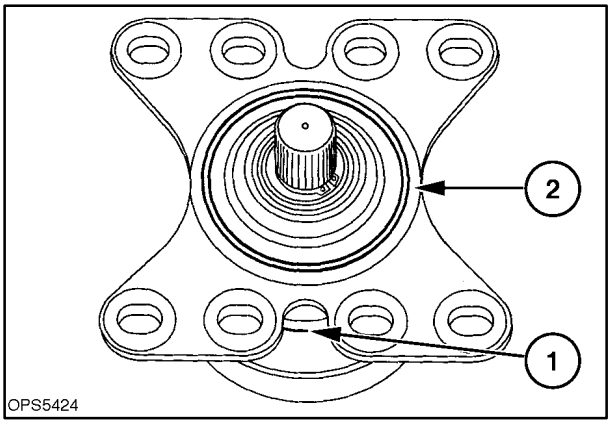

23

14. Install the O ring in the groove in the axle housing flange at 2, wipe a layer of grease over the O ring to help hold the O ring in place during assembly.

https://truckmanualshub.com/

REINSTALLATION

1. Clean the final drive case.
2. Inspect the axle opening in the case to insure it is flat for a good seal between the case and axle housing. To check surface flatness, lay a straightedge across the axle opening in the horizontal and vertical planes, 1. Straighten if required.
3. Inspect the axle assembly retaining bolts, 2, and replace if damaged.
   - To replace a stud, the old stud can be driven out with a hammer and suitable driver.
   - Thoroughly clean the inside and outside of case in stud area.
   - Wipe the new stud with a wicking-type sealant. The new stud can be installed into case, using 3/4″ thick spacer over the stud and then use the nut and a flat washer to pull the stud in place.
   - Wipe around the stud with a wicking-type sealant to insure an oiltight seal.

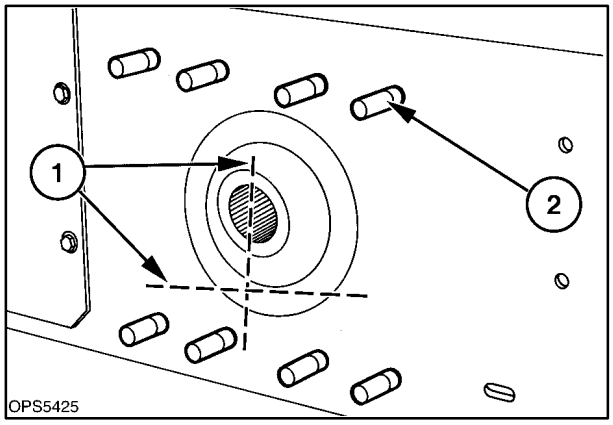

24

4. The axle shaft pivots inside a pilot plate, 1. Inspect for damage.

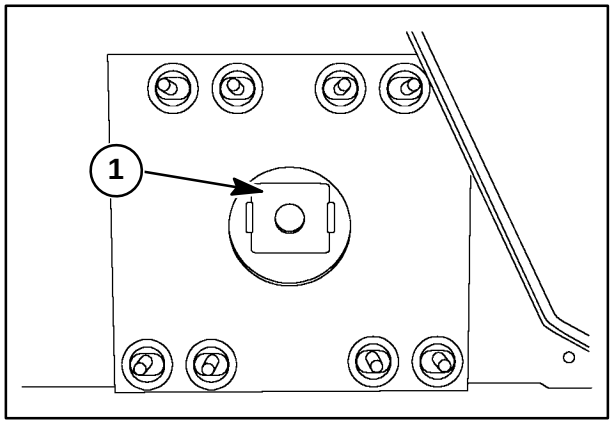

25

5. Position the drive sprocket, 1, in the axle opening. Make sure the drive sprocket is placed in the drive chain properly.
6. Lift the axle housing assembly and mate the splines on the axle shaft, 2, and the drive sprocket and slide together. Lifting the axle housing assembly over the retaining studs pilot the center of the housing, 3, into the hole in the case and slide housing tight against the case.

NOTE: *When installing the final drive axle, the axle housing must lay flat against the frame and the pilot must rest on the edge of the frame opening.*

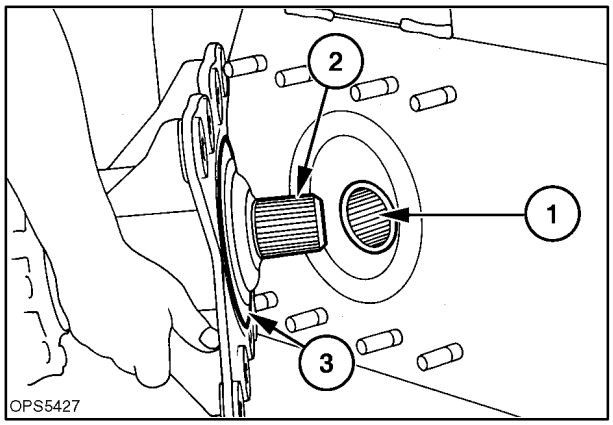

26

https://truckmanualshub.com/

7. With the axle housing, 1, tight against the case, install the retaining nuts and flat washers, 2, to hold the housing against the case.
8. Slide the axle housing assembly to tighten the drive chains.

NOTE: *The chains are properly tensioned when there is 0 - 6 mm (0 - 1/4″) movement at the outer edge of tire tread.*

9. Torque the axle retaining hardware to 190 N·m (140 ft. lbs.).

CAUTION

When tightening the axle retaining hardware, the axle housing must be tight against the case at 1, or damage to the case may occur.

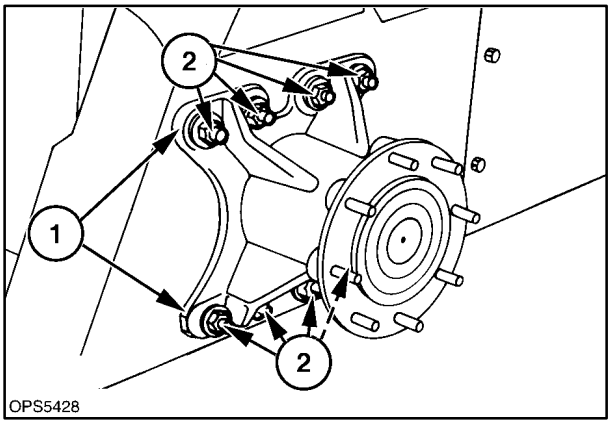

27

10. Check the final drive case oil level at check plug, 1; add SAE 10W-30 oil as required.

    Replace any shields that were removed for the repair.

    The skid-steer loader can now be lower to the ground.

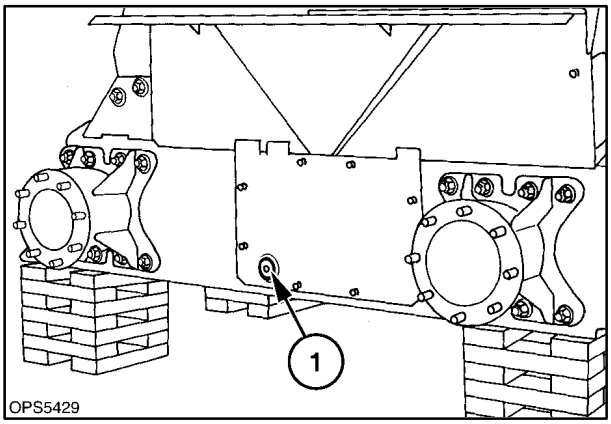

28

FINAL DRIVE

Op. 44 106 48

DRIVE CHAIN AND SPROCKET REMOVAL

The axle housing assemblies and final drive case cover will need to be removed to access the drive chains and drive sprockets.

The four final drive chains are an endless design, with no connector link.

1. Lower the boom and attachment to the ground.
2. If the work is going to be done with the boom in the raised position, remove the attachment and raise the boom and rest on the boom lock pins, 1.

CAUTION

Never work under a raised boom unless it is properly supported by the boom lock pins.

Never work under a raised boom with an attachment. Always remove the attachment from the loader.

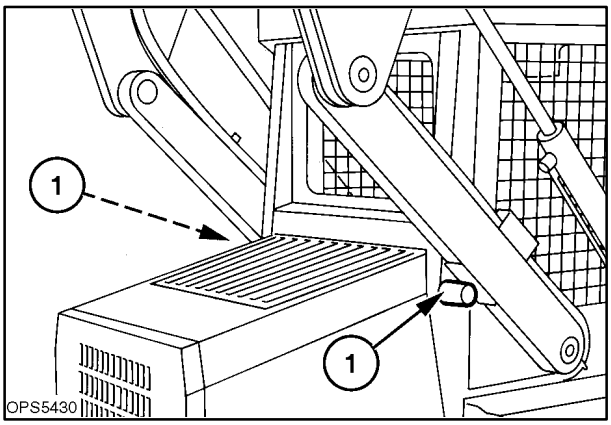

29

https://truckmanualshub.com/

3. Securely block the skid-steer loader with all four wheels off the ground. Refer to Section 00 for more detail information on properly supporting a skid-steer loader.

   Support the loader at the front of the final drive cases at 1, and at the rear at 2.

CAUTION

Failure to securely support the skid-steer loader could result in movement of the loader causing serious injury or damage to the equipment.

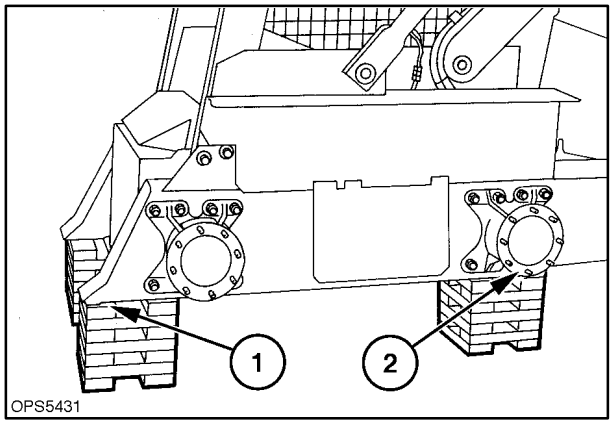

30

4. Remove the tires and wheels from the final drive being serviced.
5. Clean the axle and final drive area to prevent debris from entering the final drive case.
6. Remove the eight axle housing retaining nuts and washers, 1, from each axle.
7. Slide the axle housing from the retaining studs and lift the assembly from the final drive case.

NOTE: *When the axle assembly is removed, the drive sprocket and chain will drop slightly to the bottom of the case.*

8. Remove the final drive cover, 2.

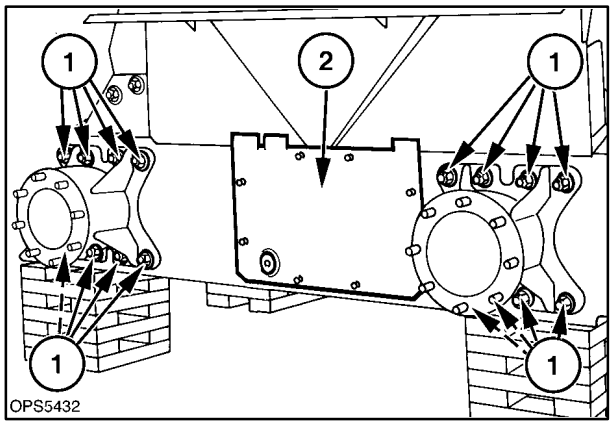

31

9. There is a large O ring that seals the axle housing to the side of the final drive case, 1. Remove the O ring from the case or the axle housing.

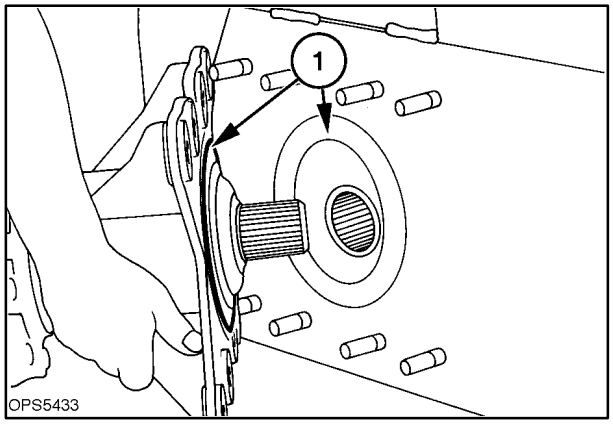

32

https://truckmanualshub.com/

Drive Chain And Sprocket Removal

10. Remove the drive chains from the drive sprocket, 1.

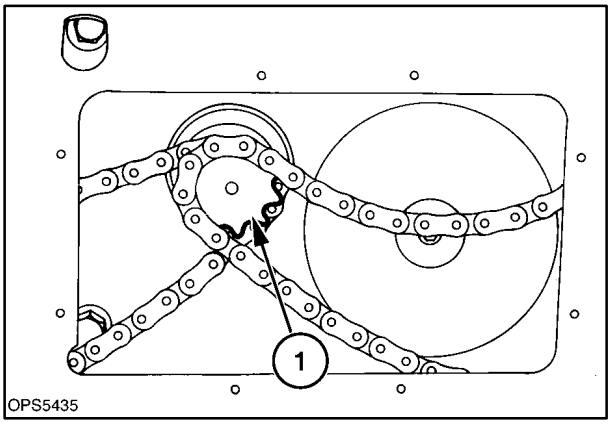

33

Rear Drive Sprocket and Chain

11. To remove the rear chain and sprocket, the parking brake disc and caliper will need to be removed first.

Brake Disc Removal

- Engage the parking brake.
- Remove the center brake disc retaining bolt and washer, 1.
- Disengage the parking brake.
- Remove the caliper retaining hardware, 2, from the inside of cab. Thread the two bolts from the outside caliper, 3.
- Remove the outside disc, 4.
- Remove center section of caliper, 1, spacers, 2, and retaining bolts.
- Remove inside disc, 3.

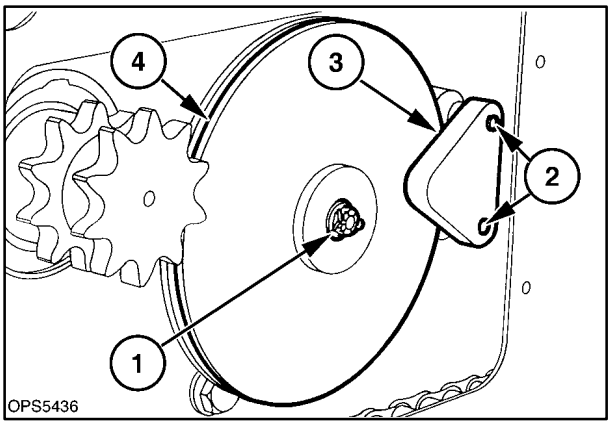

34

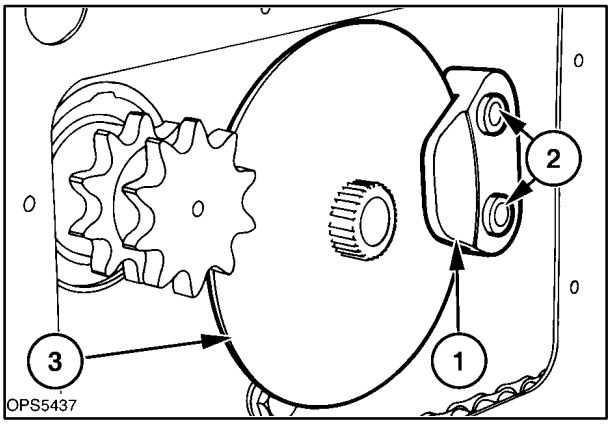

35

https://truckmanualshub.com/

– Remove brake friction puck, 1, and spacer plate, 2.

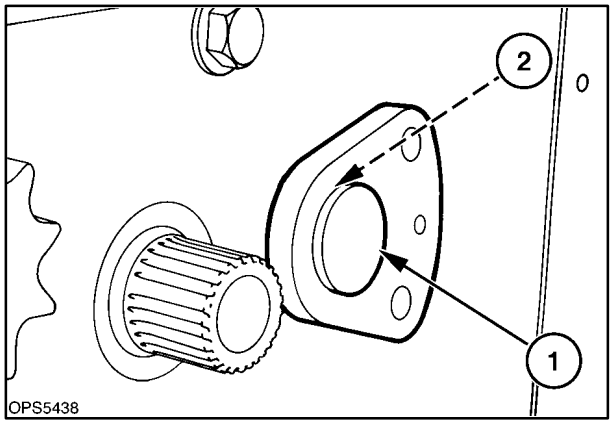

36

12. Slide the rear chain and sprocket to the case opening and remove the chain from the sprocket and the case.
13. Remove the drive sprocket and note the position of the center hub, 1 (long or short shoulder in or out).

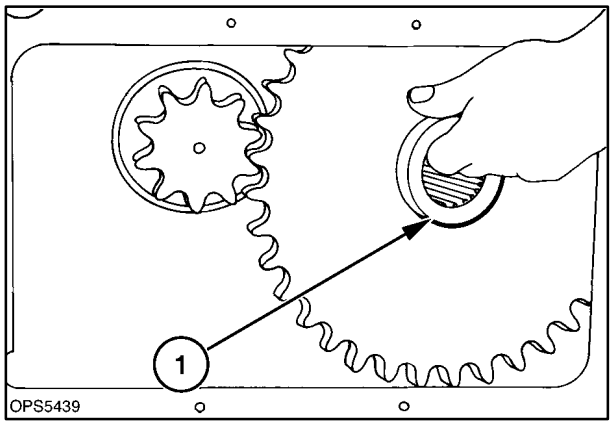

37

Front Drive Sprocket and Chain

14. Remove the front chain from the drive sprocket.
15. Slide the chain and sprocket to the center case opening. Remove the chain from the sprocket and remove the chain from the case.
16. Remove the sprocket from the case and note the position of the center hub, 1 (long - short shoulder in or out).

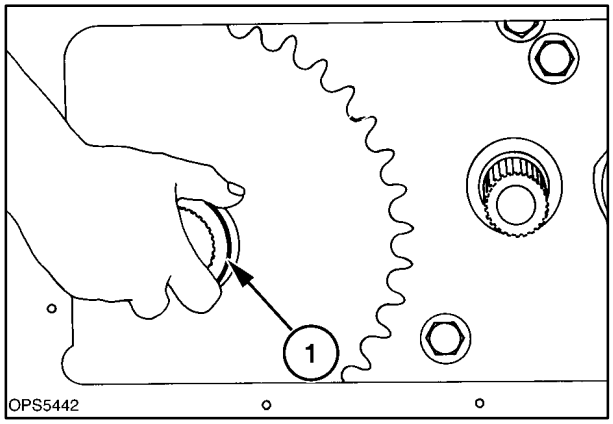

38

https://truckmanualshub.com/

17. Shown here are the final drive components.

Ref.	Description
1	Drive sprockets (2 each side)
2	Front drive chain
3	Rear drive chain

NOTE: *The front drive chain is 68 links and the rear chain is 66 links.*

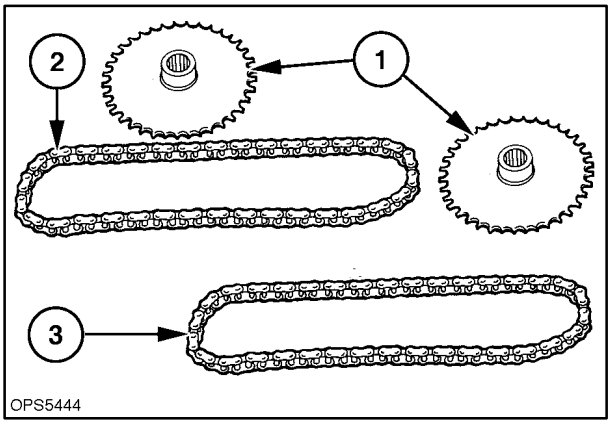

39

PARTS INSPECTION

Thoroughly clean all parts before inspection.

1. Inspect the drive sprockets in the center spline area, 1, for excessive wear and the tooth area, 2, for wear.

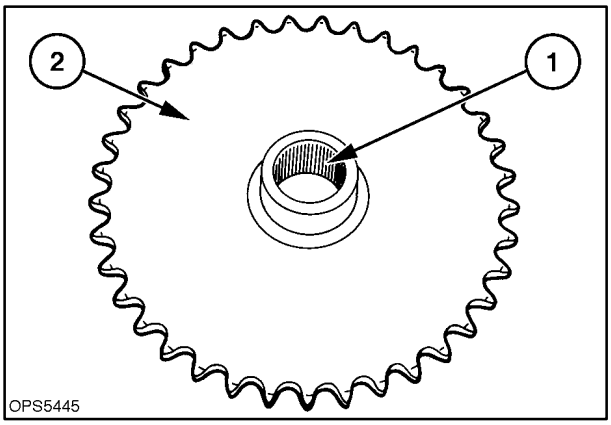

40

2. Inspect the drive chains for broken or cracked rollers, 1.
3. Inspect the drive chains for cracked or broken side bars, 2.
4. Inspect the side bar to pin wear or looseness at 3.
5. Inspect the drive chains for excessive stretch (bushing wear).

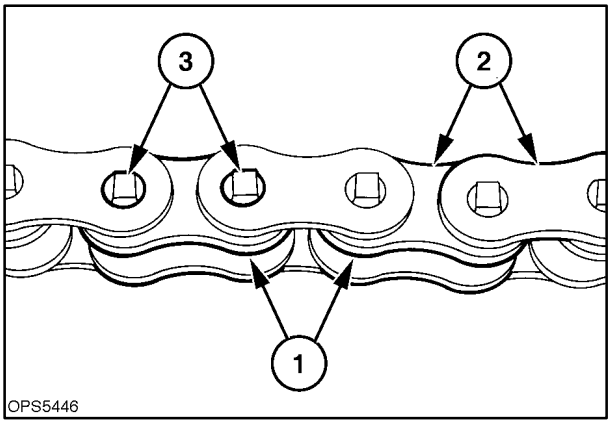

41

https://truckmanualshub.com/

REASSEMBLY

1. Clean all surfaces of old silicone sealer, dirt, etc. that will require resealing.
2. If the oil requires replacement, the oil will have to be syphoned from the case. Thoroughly clean the inside of the case to remove all debris.
3. Install the front drive sprocket with the longer center hub, 1, to the outside of the case.

NOTE: *The drive sprockets are not centered on the splined hub. The front sprocket is installed with the longer center hub, 1, to the outside and rear is installed with the longer center hub to the inside of case.*

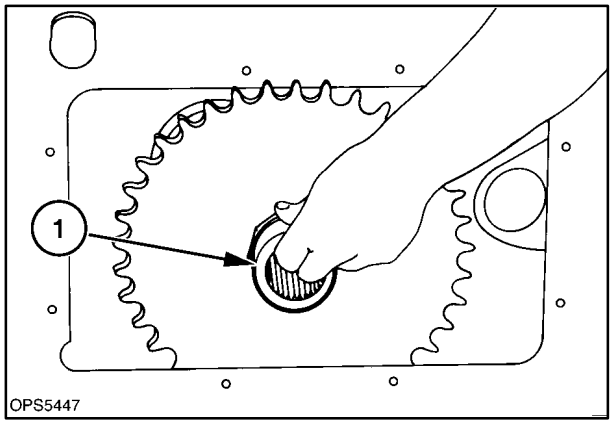

42

4. Install the front drive chain, 1.

NOTE: *The front drive chain is longer than the rear drive chain.*

5. Place the chain over the inside drive sprocket, 2.

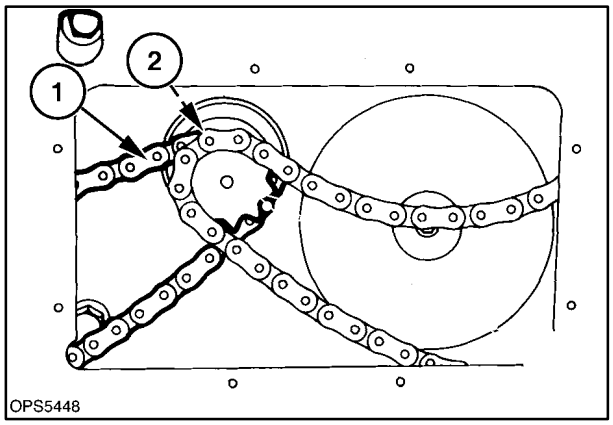

43

6. Install the rear drive sprocket, with the long center hub to the inside of the case, and the short hub to the outside as shown at 1.
7. Install the rear drive chain, the shorter chain, over the sprocket and slide the chain and sprocket to the rear.
8. Place the drive chain over the outside drive sprocket.

NOTE: *If the hydrostatic motor and coupler was moved to gain clearance, the motor will require repositioning.*

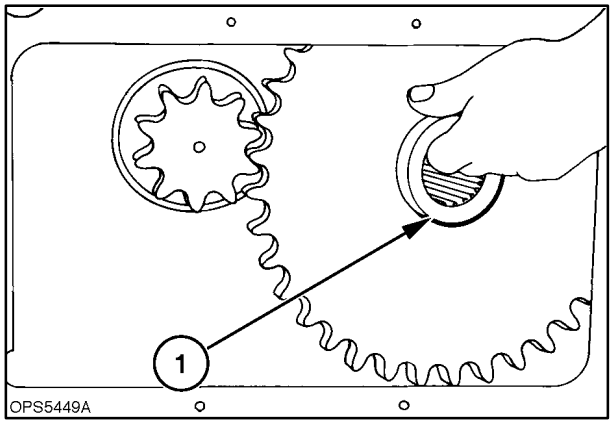

44

https://truckmanualshub.com/

9. Reassemble the parking brake:
   - Clean the old sealant from the brake hardware.
   - Install the spacer plate, 2, and brake friction puck, 1, into caliper at 3.

NOTE: *The spacer plate is thinner than the brake friction puck and must be inserted into the caliper first.*

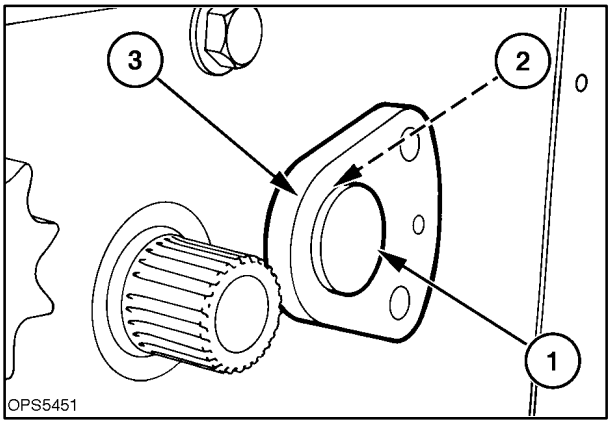

45

- Install the inside brake disc, 1.
- Put a bead of noncorrosive sealant around the head of the caliper bolts and install from the inside of loader.
- Install spacers, 2, on bolts and center section of caliper, 3.
- Install outer brake disc, 4.

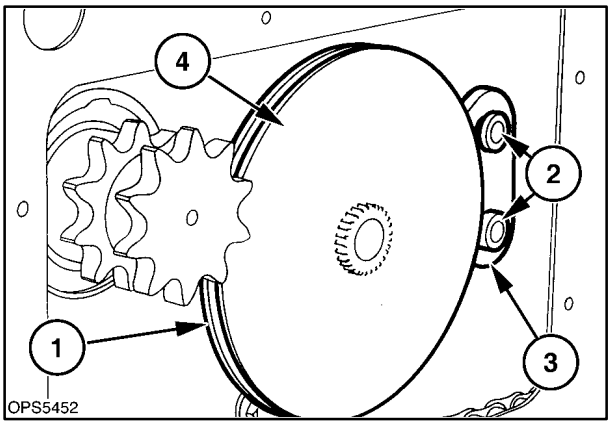

46

- Install outer section of caliper, 1, and attach with hardware previously installed and tighten to 70 N·m (52 ft. lbs.).
- Put a bead of sealer around the end of the motor coupler and install the brake disc retaining bolt and flat washer, 2, and tighten.
- Engage the parking brake and torque the retaining bolt to 35 N·m (26 ft. lbs.).

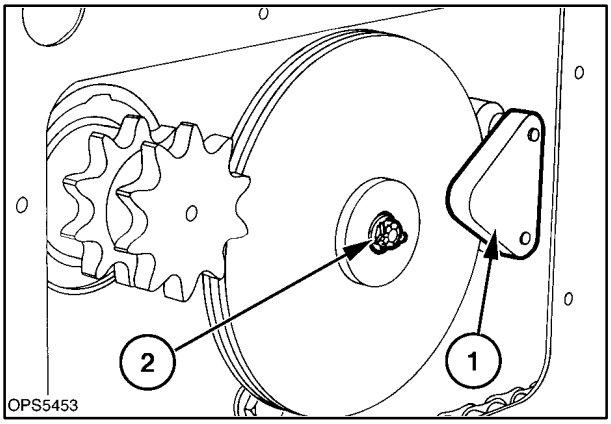

47

https://truckmanualshub.com/

10. Install the axle housings, 1, and tighten the drive chains. Refer to the “Axle Housing” section of this manual for details.
11. Put a bead of sealer around the cover hole in final drive case and install the cover, 2.
12. Check the final drive oil level at the check plug, 3, and add SAE 10W-30 oil as required.
13. Reinstall all shields removed for the repair.
14. Lower the loader to the ground.

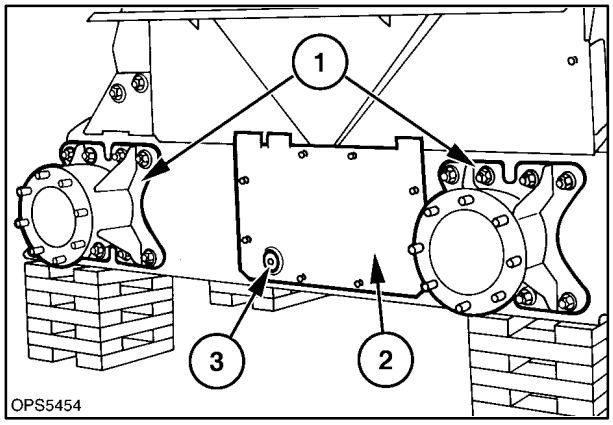

48

Op. 44 511

TIRES/WHEELS

TIRE OPTIONS

1. 7.50 x 15 HST-Hollow segmented
2. 10.00 x 16.5 HST-Hollow segmented
3. 10.00 x 16.5 PHD- Premium heavy-duty
4. 10.00 x 16.5 R4-Cleat tread
5. 7.00 x 15 Chevron tread
6. 31.0 x 15.5-15 G1 Cleat tread

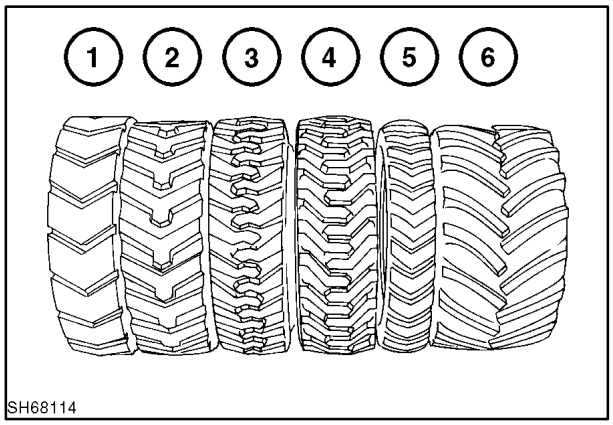

49

Tire Pressures

Tire	Pressure
7.00 x 15 Chevron tread	60 PSI (414 kPa)
7.50 x 15 HST-Hollow segmented	N/A
10.00 x 16.5 R4-Cleat tread	50 PSI (345 kPa)
10.00 x 16.5 PHD- Premium heavy-duty	50 PSI (345 kPa)
10.00 x 16.5 HST-Hollow segmented	N/A
31.0 x 15.5-15 G1 Flotation	40 PSI (276 kPa)

MAINTAIN PROPER TIRE INFLATION!

NOTE: *Iatco “Air Boss” segmented tires are approved for all new generation New Holland loader models. These tires must be mounted with the wheel dish “in” to the frame (narrowest wheel tread position). Reversing the wheels with the dish “out” is not recommended, as increased axle and frame loading occurs, which may lead to eventual axle bearing and/or main frame failure.*

https://truckmanualshub.com/

TIRE AND TRACK INSTALLATION

Tire Installation on Loader

The 7.50 x 15 HST-Hollow segmented and the 10.00 x 16.5 HST-Hollow segmented tires must be mounted with the wheel dish “IN” to the frame (narrowest wheel tread position). Reversing the wheels with the dish “OUT” is not recommended, as increased axle and frame loading occurs. This may lead to eventual axle bearing and/or main frame failures.

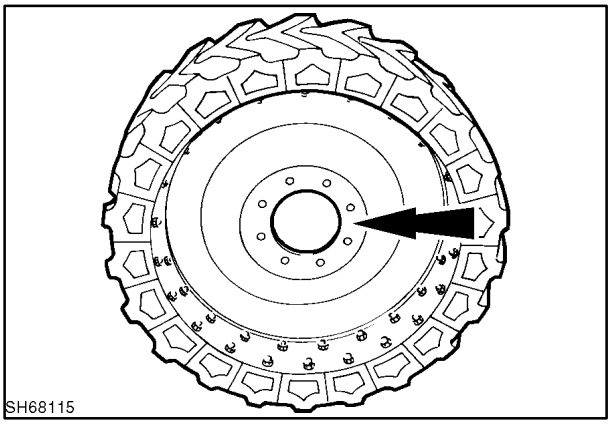

50

Op. 44 511 28

When replacing the sections of the hollow segmented tires, torque the section hardware to 13.6 N·m (10 ft. lbs.).

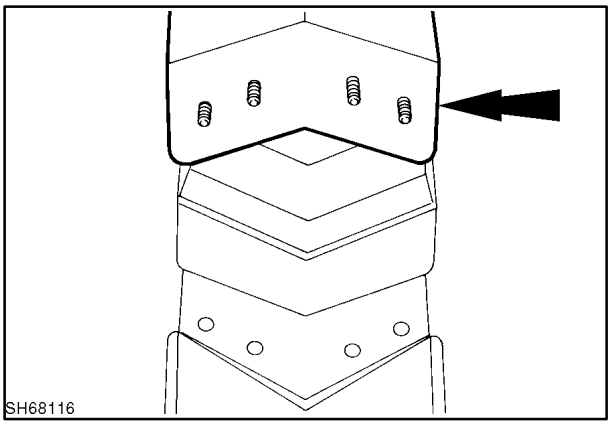

51

Track Installation on Loader

Correct tire/track combinations are important to prevent damage to the tracks, tires/wheels, and loader main frame.

Installing tracks on skid-steer loaders equipped with segmented tires, solid tires, foam-filled tires, or any hard-type non-pneumatic tires is not recommended. If these tire combinations are used with steel tracks, track or loader main frame damage may occur.

These tires **do not** provide a cushion when debris comes between the track and tire. A pneumatic tire will absorb this type of stress and, in severe cases, may deflate before damage to the loader or track occurs.

New Holland only recommends pneumatic tires be installed with tracks.

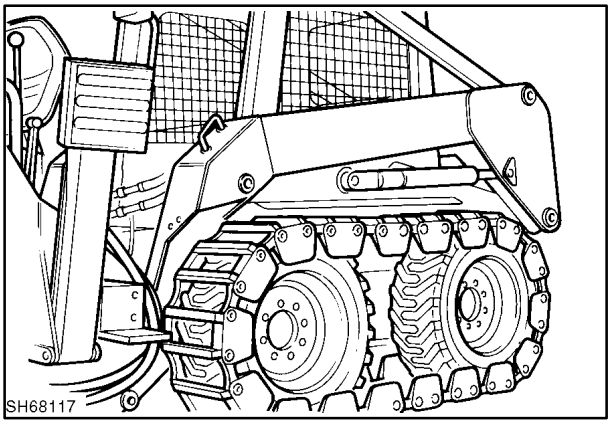

52

https://truckmanualshub.com/

LABOR GUIDE

The following labor amounts are listed as a guide only. Working conditions and experience will vary the time the job actually takes to complete each job.

Job Description	Hours
Axle	
Remove and replace	0.5 hr.
Rebuild	1.0 hr.
Final Drive	
Drive chain, sprocket (front) - replace	1.5 hrs.
Drive chain, sprocket (rear) - replace	3.0 hrs.

https://truckmanualshub.com/

SECTION 50 – CAB CLIMATE CONTROL

Chapter 1 – Heater/Defroster

CONTENTS

Section	Description	Page
50 100	Heater/Defroster (Cab)	50-2
	Labor Guide	50-8

https://truckmanualshub.com/

Op. 50 100

HEATER/DEFROSTER (CAB)

Switch and Control Panel

1. Disconnect the negative (–) battery cable to prevent possible shorting of the electrical system.
2. Remove the retaining hardware, 1, and pull the panel from the rear support, 2.
3. Disconnect the switch wires and control cable.

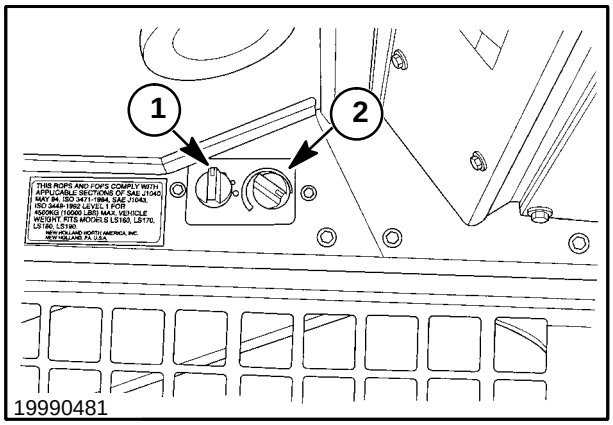

1

Switch Wiring

The heater switch, 1, has four terminals marked, L, M, H, and B, that the wire harness must be connected to.

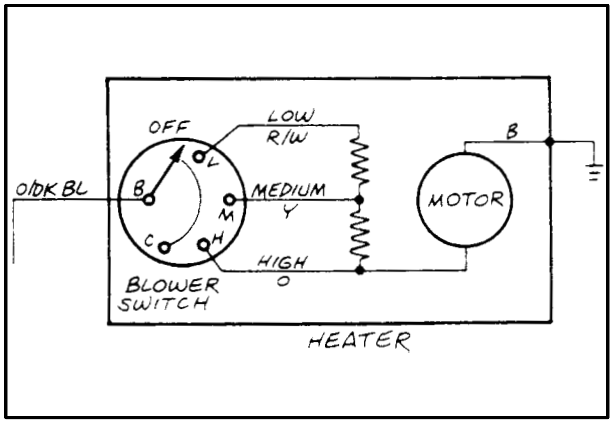

2

Relay and Fuse Block

1 - Fuse block - 20 amp

2 - Relay

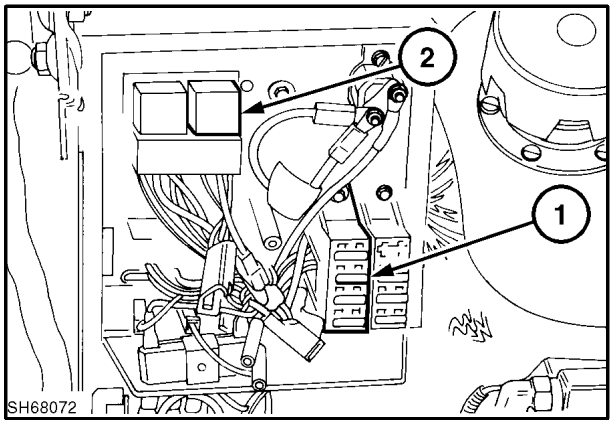

3

https://truckmanualshub.com/

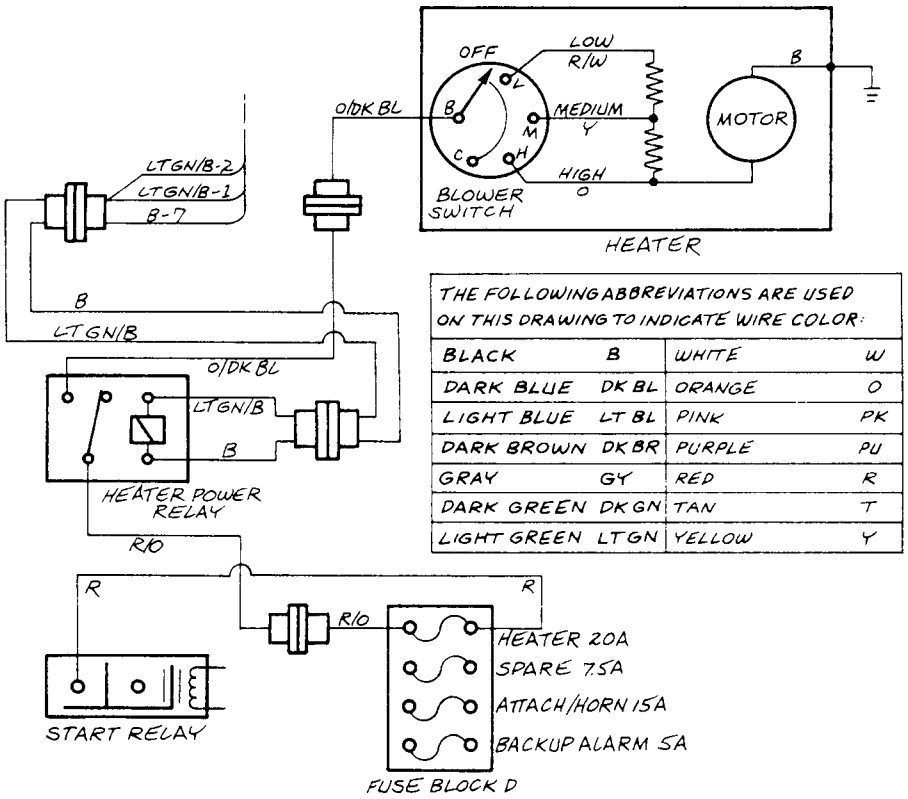

THE FOLLOWING ABBREVIATIONS ARE USED ON THIS DRAWING TO INDICATE WIRE COLOR:

BLACK	B	WHITE	W
DARK BLUE	DK BL	ORANGE	O
LIGHT BLUE	LT BL	PINK	PK
DARK BROWN	DK BR	PURPLE	PU
GRAY	GY	RED	R
DARK GREEN	DK GN	TAN	T
LIGHT GREEN	LT GN	YELLOW	Y

Heater Wiring Diagram

4

Louver Replacement

1. To remove the louver, use a small flat screwdriver and pry the louver from the support base at 1.
2. Remove the two #6 self-tapping screws from the base and remove the base from the headliner.

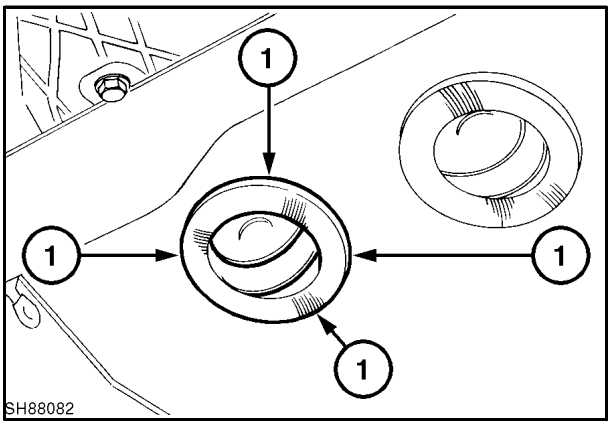

5

https://truckmanualshub.com/

Heater Core, Shutoff Valve and Fan Assembly Access

To access the heater core and/or fan assembly, the rear light bar, 1, (if equipped with lights) and top heater cover, 2, must be removed. Remove the heater cover mounting screws, 3, to remove the cover and light bar together.

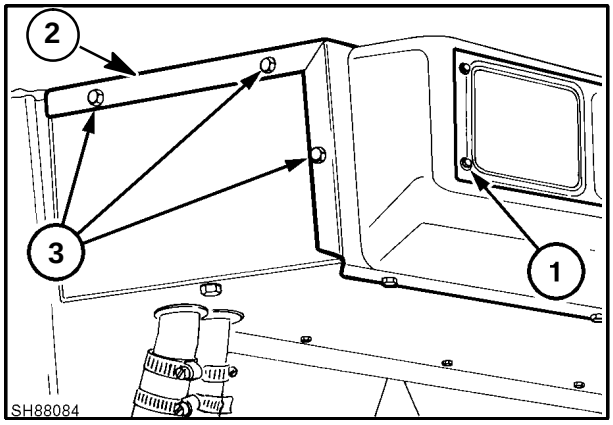

6

Op. 50 104 24

Heater Core Replacement

1. Drain the cooling system enough to drain the coolant from the core, about 2 liters (2 quarts).
2. Remove the heater hose clamps, 1, from the heater core, remove the hoses from the core and cap hoses.
3. Remove the heater core retaining hardware, 2, and remove the core from the heater support.

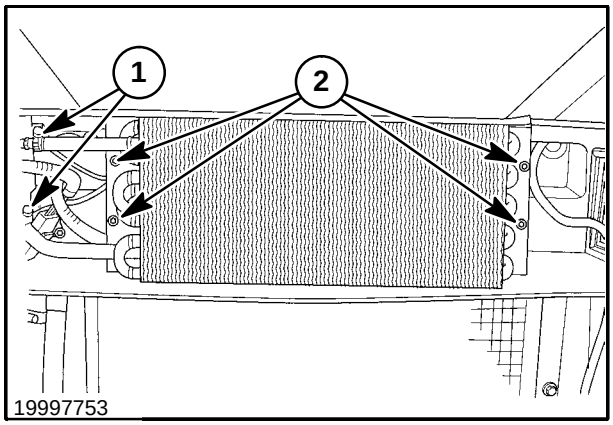

7

Op. 50 104 23

Heater Shutoff Valve Replacement

1. Drain the cooling system enough to drain the coolant from the core, about 2 liters (2 quarts).
2. Remove the electrical connector,1.
3. Remove the heater hose clamps, 2, from the heater shutoff valve and remove the hoses from the valve and cap hoses.
4. Remove the heater shutoff valve securing hardware, 3, and remove the valve.

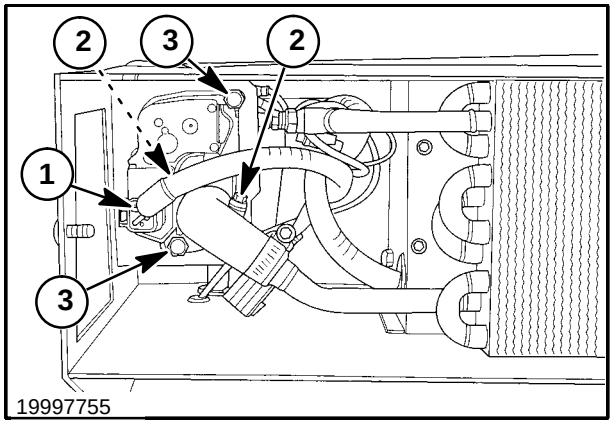

8

https://truckmanualshub.com/

Op. 50 104 20

Heater Fan Assembly Replacement

1. Remove the heater core retaining hardware and pivot the core away from the fan support.
2. Disconnect the fan power wire, 1.
3. Remove the retaining hardware for the fan and motor assembly, 2.

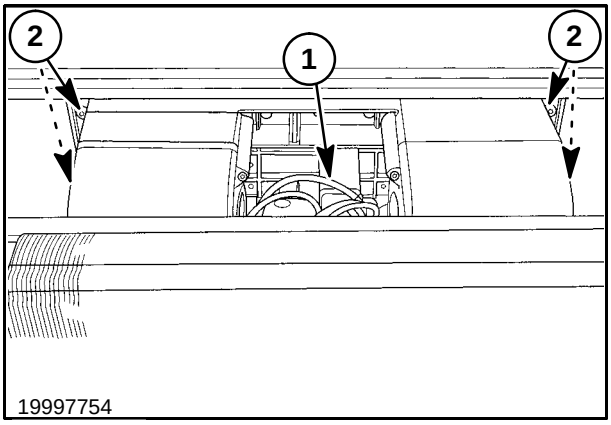

9

Op. 50 100 10

Heater Hose to Engine Connections

1. Heater hose from the heater core to the front plug, 1.

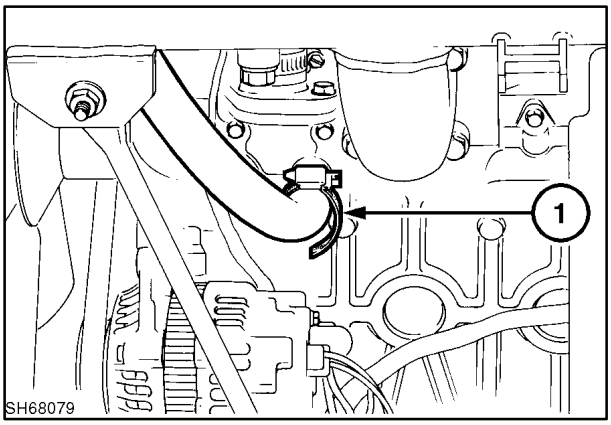

10

2. Heater hose from the heater shutoff valve to the plug in the top of the water pump at 1.

NOTE: *If the heater is installed on an LS170 turbo-charged loader, this hose will be at the tee at 2.*

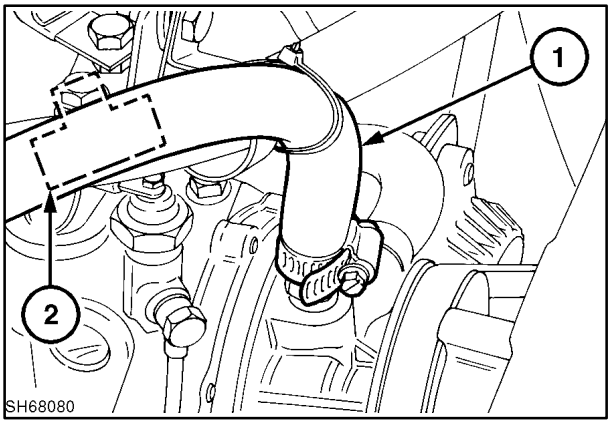

11

https://truckmanualshub.com/

Op. 50 100 10

Heater Core Connections
Connect the pressure hose to the left side hose, 1, and the return hose, 2, to the right side. Secure with hose clamps. The hoses from the engine will have to be cut to length for proper fit.

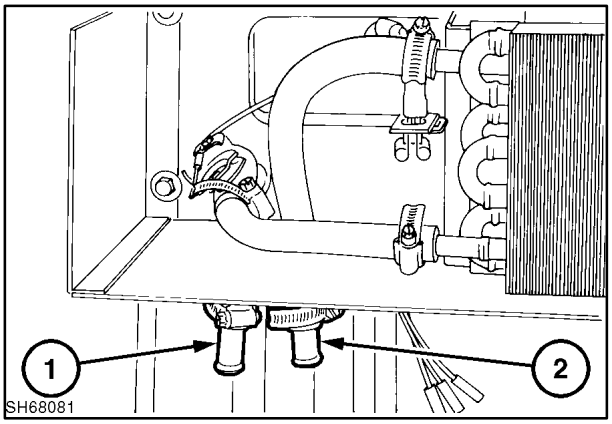

12

Op. 50 104 10

Filter
Replacement filter #86504784

The heater contains an air filter element in the rear right side at 1.

Remove cover plate, 2, by removing two self- tapping screws, 3.

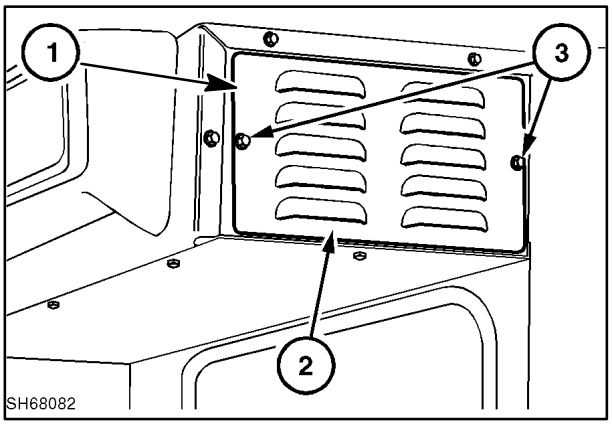

13

Check the filter element, 1, periodically, especially if running in dirty applications and using the fresh air ventilation. The element can be blown off with a **low-pressure** air gun and reused or replaced. The element must be placed with the rubber seal toward the heater core. Be sure the seal is behind the top clamp, 2, and lower screw, 3.

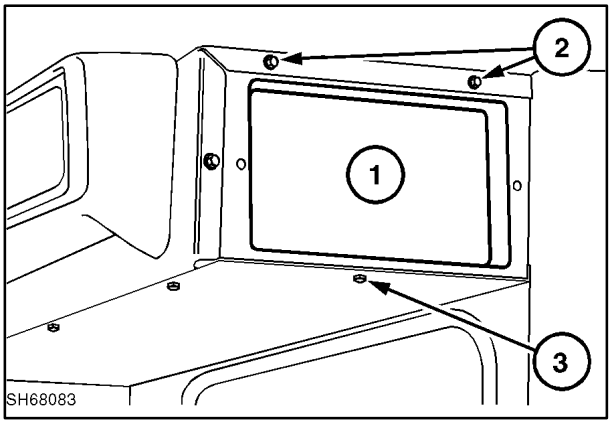

14

https://truckmanualshub.com/

Bleeding Air from Heater (LS170)

The LS170 utilizes an engine crankcase oil cooler which is teed into the water pump supply side of the cab heater.

To completely bleed air from the heater lines and heater core:

1. After component installation is completed, refill the coolant system, per the installation instructions.
2. Leave the radiator cap off and run the loader engine, circulating coolant. Stop the engine and refill the radiator.
3. Temporarily “pinch off” the oil cooler supply hose at the new tee to force coolant through the heater hoses and heater core.

CAUTION

Stop the engine while working around these hoses.

4. Start and run the engine. When the system is completely bled, remove the “pinch off” device.
5. Finish system filling, per the installation instructions.

NOTE: *Do not install a shut-off valve or orifice in the oil cooler supply hose. Restricting coolant flow to the engine oil cooler may result in overheating and engine failure. Should this type of overheating cause a failure, it is NOT covered by warranty.*

https://truckmanualshub.com/

LABOR GUIDE

The following labor amounts are listed as a guide only. Working conditions and experience will vary the time it actually takes to complete each job.

Job Description	Hours
Heater/Defroster	
Remove and replace electrical switch	0.25 hrs.
Remove and replace water shutoff switch	1.5 hrs.
Remove and replace heater core	1.5 hrs.
Remove and replace heater fan assembly	1.5 hrs.
Remove and replace heater hoses (1)	0.5 hrs.

https://truckmanualshub.com/

SECTION 55 – ELECTRICAL SYSTEM

Chapter 1 – Advanced Warning System, Circuits, Alternator, and Starter

CONTENTS

Section	Description	Page
55 000	General Electrical Information	55-6
	Definition of Terms	55-7
	Adapting Attachments Requiring 12V Electrical Power	55-9
	Specifications	55-12
	Electrical Diagram	55-15
55 418	Advanced Warning System	55-19
	Electronic Instrument Cluster (EIC)	55-19
	(EIC) Electronic Instrument Cluster Front Panel	55-20
	EIC Functional Groups	55-21
	Engine Preheat	55-26
	Automatic Shutdown	55-26
	Operating Mode	55-27
	Broken Alternator/Water Pump Belt Warning	55-29
	Fuel Level	55-30
	EIC Interlocks	55-30
	EIC Lock Mode	55-31
	EIC Engine Preheat	55-32
	Troubleshooting	55-33
	Advanced Warning System (AWS)	55-36
	EIC Board Self Test	55-37
	Diagnostic and Setup Modes	55-38
	Arrow, Open Book, and Audible Alarm Test	55-40
	Diagnostic Mode EIC Circuit Tests	55-40
	EIC Setup Mode	55-44
	Electronic Instrument Cluster (EIC) and Starter Circuits	55-52
	Blown Fuse Symptom and Testing	55-52
	Testing Other EIC Functions	55-54
	EIC Board Reading Accuracy	55-57
	EIC Board Claims Warranty	55-59
	Electrical Circuits	55-60
	Seat Switch Circuit to EIC Board	55-61
	Seat Belt Switch Circuit to EIC Board	55-62

https://truckmanualshub.com/

	Ignition Switch Circuit to EIC Board	55-63
	Cranking Circuit (Starter Motor)	55-64
	“Service/Run” Switch in the “Run” Position	55-65
	Cranking Circuit Ground	55-66
	Operating Conditions “Service/Run” Switch in the “Service” position	55-66
	Service/Run” Switch in the “Service” position	55-67
	Cranking Circuit Ground	55-68
	Start Relay Operation	55-68
	Start Relay Circuit	55-69
	Start Relay Ground Circuit	55-70
	Start Interlock Relay Operation	55-70
	Start Interlock Circuit	55-71
	Start Interlock Ground Circuit	55-72
	Start Circuit	55-72
55 100	Removal, Installation and Wiring of Electrical Components	55-73
	Battery	55-74
55 301 40	Battery Removal	55-74
	Battery Installation	55-74
55 418 10	EIC (Electronic Instrument Cluster) Board Removal	55-75
	EIC (Electronic Instrument Cluster) Wiring	55-76
	EIC (Electronic Instrument Cluster) Board Installation	55-77
	Ignition (Key) Switch Wiring	55-78
55 201 10	Ignition (Key) Switch Removal	55-78
	Ignition (Key) Switch Installation	55-78
	Cab Fuse Panel Wiring	55-79
	Cab Fuse Block and Panel Removal	55-80
	Cab Fuse Block and Panel Installation	55-80
	Service/Run Switch Wiring	55-81
	Service/Run Switch - Service Position	55-81
	Service/Run Switch - Run Position	55-81
55 418 30	Service/Run Switch Removal	55-82
	Service/Run Switch Installation	55-82
	Seat and Seat Belt Switch Wiring	55-83
55 201 15	Seat Switch Removal	55-83
	Seat Switch Installation	55-84
	Seat Belt Buckle and Switch Assembly Removal	55-84
	Seat Belt Buckle Installation	55-84
	Road Light and Work Light Switch Wiring	55-85
55 404 20	Road Light and Work Light Switch Removal	55-86

https://truckmanualshub.com/

	Road Light and Work Light Switch Installation	55-86
	Engine Fuse and Relay Panel	55-87
	Accessory Relay Wiring	55-88
	Accessory Relay Removal	55-88
	Accessory Relay Installation	55-88
	Preheat Circuit Breaker Wiring	55-89
55 100 24	Preheat Circuit Breaker Removal	55-89
	Preheat Circuit Breaker Installation	55-89
	Start Interlock Relay Wiring	55-90
55 100 34	Start Interlock Relay Removal	55-91
	Start Interlock Relay Installation	55-91
	Engine Fuse Panel Wiring	55-92
	Engine Fuse Block Removal	55-93
	Engine Fuse Block Installation	55-93
	Alternator Excite Resistor Wiring	55-94
55 301 16	Alternator Excite Resistor Removal	55-94
	Alternator Excite Resistor Installation	55-94
	Start Relay Wiring	55-95
55 100 34	Start Relay Removal	55-95
	Start Relay Installation	55-95
	Preheat Relay Wiring	55-96
55 100 34	Preheat Relay Removal	55-97
	Preheat Relay Installation	55-97
	Preheat Glow Plug Removal	55-98
	Preheat Glow Plug Installation	55-98
	Fuel System Components	55-99
	Electric Fuel Pump	55-101
10 210 21	Electric Fuel Pump Removal	55-102
10 223	Fuel Shutoff Solenoid	55-102
	Fuel Shutoff Solenoid Testing	55-102
10 223 10	Replacement of Fuel Shutoff Solenoid	55-103
55 414 14	Air Filter Restriction Indicator Switch Removal	55-104
	Air Filter Restriction Indicator Switch Installation	55-104
55 414 10	Engine Coolant Temperature Sender Removal	55-104
	Engine Coolant Temperature Sender Installation	55-104
55 414 12	Engine Oil Pressure Switch Removal	55-105
	Engine Oil Pressure Switch Installation	55-105
55 414 28	Hydrostatic Charge Pressure Switch Removal	55-105
	Hydrostatic Charge Pressure Switch Installation	55-105

https://truckmanualshub.com/

55 414 24	Hydraulic Oil Filter Restriction Switch Removal	55-106
	Hydraulic Oil Filter Restriction Switch Installation	55-106
55 414 20	Hydraulic Oil Temperature Sender Removal	55-106
	Hydraulic Oil Temperature Sender Installation	55-107
	Boom/Bucket Control Valve Spool Lock Solenoids	55-108
35 724 90	Boom/Bucket Control Valve Spool Lock Solenoids Removal	55-108
	Boom/Bucket Control Valve Spool Lock Solenoids Installation	55-109
	Wire Harness	55-110
55 100 74	Main Wire Harness Removal	55-110
	Main Wire Harness Installation	55-115
55 404	Road/Work Lights	55-119
55 301	Alternator (40 Amp Version)	55-123
	Charging Circuit	55-123
	Alternator Service Specifications	55-125
	Alternator System Testing and Troubleshooting	55-126
55 301 10	Alternator Removal	55-130
55 301 12	Alternator Disassembly	55-131
	Alternator Reinstallation	55-138
55 201	Starter	55-139
	Starter Motor Troubleshooting	55-139
55 201 50	Starter Motor Removal	55-141
	Starter Motor Disassembly	55-146
	Starter Inspection and Repair	55-150
	Starter Reassembly	55-155
	Starter Reinstallation	55-159
	Labor Guide	55-160

https://truckmanualshub.com/

https://truckmanualshub.com/

Op. 55 000

GENERAL ELECTRICAL INFORMATION

The electrical system is a 12-volt negative (–) ground system that provides battery voltage to the Electronic Instrument Cluster (EIC), starting circuit, and other electrical components.

The electrical system is made up of the following components:

1. Battery - Power supply and storage.
2. Alternator/Regulator - Power supply and source to maintain fully charged system.
3. Starter motor - To crank engine for starting.
4. Ignition switch - Used to control electrical circuits and direction of battery voltage.
5. Electronic Instrument Cluster (EIC)
   * Monitors engine and operator functions and signals operator of disruptions or faults in the circuits.
   * Displays monitored functions.
   * Controls engine fuel system (fuel shut off).
   * Provides engine shutdown if fault occurs in engine oil pressure or hydrostatic charge pressure circuits.
   * Provides safety interlock for the boom and bucket control valve spools.
   * Provides a diagnostic mode for checking EIC board circuits.
   * Provides an anti-theft mode to electrically lock the loader boom and bucket; the engine will start with the Service/Run switch in the “SERVICE” position.
6. Fuse blocks/ fuses/ circuit breakers, cab and engine - Used to protect the electrical circuits and glow plug circuit.
7. Fuel pump - Supplies fuel from the tank to the injection pump.
8. Glow plugs - Used to provide aid in cold engine starting.
9. Fuel solenoid - Controls fuel flow and is controlled by the EIC.
10. Switches - Used to control other electrical circuits, lights, etc.

IMPORTANT: *Do not connect any electrical circuits at the ignition key switch or cab fuse block(s) unless there are written instructions telling you to do so or damage to the EIC board may occur.*

IMPORTANT: *If any servicing or adjustments require the battery to be disconnected, or welding is required on the skid-steer loader, disconnect the negative (–) ground cable. Failure to disconnect the battery may result in damage to the EIC (electronic instrument cluster) monitoring system and other electrical components.*

IMPORTANT: *If the EIC requires removal from the dash area or the skid-steer loader, disconnect the negative (–) ground battery cable. This will shut off power to the EIC and prevent damage to the EIC board, or prevent blowing the 5-amp fuses, if the board is accidentally grounded.*

https://truckmanualshub.com/

DEFINITION OF TERMS

ALTERNATING CURRENT (A.C.) - A flow of electrons which reverses its direction of flow at regular intervals in a conductor.

AMMETER - Measures the flow of electrical current in amperes. Ammeters are connected in series with the circuit to be tested.

AMPERE - A unit of measure for the flow of current in a circuit. The ampere is used to measure electricity such as “gallons per minute” is used to measure liquid flow.

CIRCUIT - A continuous, unbroken path along a conductor through which electrical current can flow from a source, through various components, and back to the source.

CIRCUIT BREAKER - A device to protect an electrical circuit from overloads and can be reset, or will automatically reset.

COLD CRANK RATING (CCA) - The cranking load capacity of a battery at low temperatures (cold cranking amperes at 0 F).

CONTINUITY - Unbroken path along a conductor through which electrical current can flow.

CURRENT - Movement of electricity along a conductor. Current is measured in amperes.

DIODE - An electrical device that will allow current to pass through itself in one direction only.

DIODE (RESISTOR TYPE) - An electrical device that will allow current to pass through itself in one direction only and will cause resistance as the electricity passes through. The electricity coming from this type diode will be less than what is going in.

DIRECT CURRENT (D.C.) - A flow of electrons moving in the same direction along a conductor from a point of high potential to one of lower potential.

FUSE - A device to protect an electrical circuit from overloads that needs to be replaced when blown.

OHM - The standard unit for measuring resistance to flow of an electrical current.

OHMMETER - An instrument for measuring the resistance in ohms of an electrical circuit.

OPEN CIRCUIT - An open circuit occurs when a circuit is broken which interrupts the flow of current through the circuit.

RELAY - An electrical switch which opens and closes a circuit automatically when activated.

RESISTANCE - The opposing force offered by a circuit. Resistance is measured in ohms.

SHORT CIRCUIT - A part of a circuit that comes in contact with part of the same circuit or unintentionally touches a metallic object.

SOLENOID - A circular coil used for producing a magnetic field.

SWITCHES - A device used to control and direct current to circuits and will remain in this position until changed.

SWITCHES (MOMENTARY) - Momentary switches are used to direct current to circuits and these switches will return to the neutral position when released.

VOLT - A unit of electrical pressure which caused current to flow in a circuit.

VOLTAGE - The force which is generated to cause current to flow in an electrical circuit. Voltage is measured in volts.

VOLTMETER - An instrument for measuring the force in volts of electrical current. Voltmeters are connected in parallel to the points where voltage is to be measured.

https://truckmanualshub.com/

The following are common terms used in electrical diagnostics and how they may affect the circuit and electrical components.

The term “OPEN CIRCUIT” means there is no voltage getting from the control point to the operating point. This means the wire carrying the voltage is open/broken and voltage cannot continue to flow. The effect is the operating component will not function.

The term “SHORT CIRCUIT” means there is voltage being lost to another component wire or to ground. This could result in the wrong component being operated or the blowing of the circuit protection device (fuse or breaker).

The term “GROUNDED CIRCUIT” means the voltage is going directly to ground and usually results in no component operation and/or blown fuse-breaker.

To test for an “OPEN CIRCUIT,” use a volt/ohm meter and check from one end of the wire to the other. If voltage is not present, trace the circuit from control point to operating point until the open is found.

To test for a “SHORT CIRCUIT,” use a volt/ohm meter and check for very low resistance in different parts of the circuit or continuity between the circuit wire and ground.

To test for a “GROUNDED CIRCUIT,” use a volt/ohm meter and check for continuity between the circuit wire and ground.

The following chart shows the abbreviations for the various wire colors used to identify the electrical circuits.

WIRE ABBREVIATIONS TO INDICATE WIRE COLOR

WIRE COLOR	DESIGNATION	WIRE COLOR	DESIGNATION
Black	B	White	W
Dark Blue	DKBL	Orange	O
Light Blue	LTBL	Pink	PK
Dark Brown	DKBR	Purple	PU
Gray	GY	Red	R
Dark Green	DKGN	Tan	T
Light Green	LTGN	Yellow	Y

Drilling Holes In Overhead Dash, Electronic Instrument Cluster (EIC) Board, and Ignition Switch Area

Always install the rearview mirrors as shown in the mirror instruction sheet. Otherwise, you must unhook the negative battery cable and remove the EIC board panel, 1, and ignition switch panel, 2, from the overhead dash. If holes and attaching screws are installed into the dash area, 3, make sure the screws will not contact the EIC board, the ignition switch, or wiring, as electrical system damage will occur.

IMPORTANT: *Failure to unhook the negative battery cable before removal of the EIC board or switch may result in an accidental grounding, causing component damage.*

IMPORTANT: *Retaining hardware contacting the EIC board or switch may cause an electrical short, damaging the loader electrical system.*

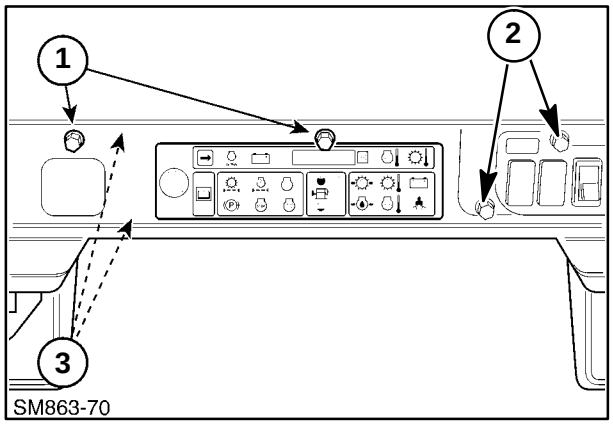

1

https://truckmanualshub.com/

ADAPTING ATTACHMENTS REQUIRING 12V ELECTRICAL POWER

There are important rules that must be followed when adapting attachments that require 12 volt electrical power. Proper wiring of electrical devices and power and ground connections is very important to prevent other electrical component damage. Attaching electrical connections to locations other than recommended may allow electric current to feed back through the EIC board, creating false EIC board readings and warnings, or causing EIC board damage or failure.

1. ALWAYS FOLLOW the instructions for New Holland kit installation to ensure proper function and operation.
2. NEVER CONNECT an electrical device to any wires, fuses, switches or grounds inside the cab area. This includes any terminals of the ignition switch, fuse panel, or ground terminal.
3. NEVER INSTALL an electrical device, music radio, two-way radio, or unapproved New Holland attachment into the cab area.
4. ONLY USE the 12-volt accessory power outlet for attachments requiring less than 10 amps. The accessory outlet is connected to the engine fuse/relay panel and protected with a 15 amp fuse.

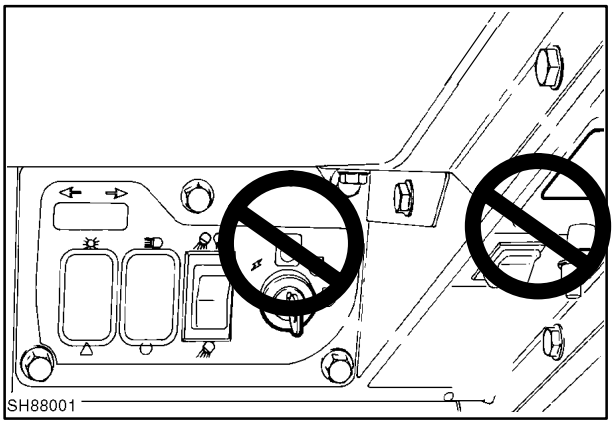

2

5. ALWAYS CONNECT new electrical attachments to the engine fuse/relay panel, 1, and connect the grounds to the engine bell housing. USE ONLY vacant connections and fuses not in use for specified attachments.

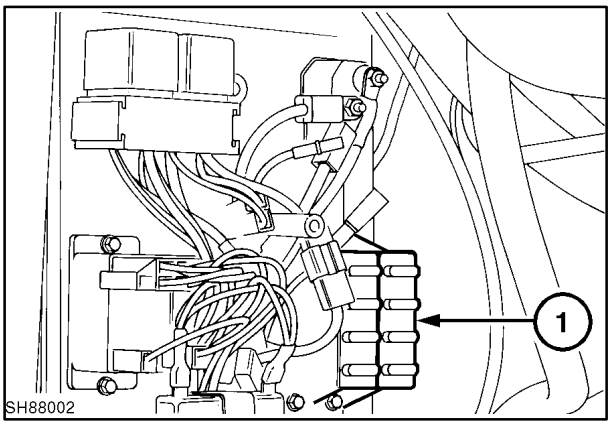

3

https://truckmanualshub.com/

Engine Fuse Panel

Wires and connections are available providing electrical attachments were not previously installed.

Ref.	Color	Destination	Fuse	Battery Voltage	Status
1	R/B	To turn signal relay	10-amp	All times	Available
2	R/GY	To accessory relay	25-amp	All times	Available
3	R/LTGN	To EIC board pin #14 P2 connector	5-amp	All times	Occupied
4	LTGN/R	To seat switch(es)	5-amp	All times	Occupied
5	R/W	To key switch (battery terminal)	15-amp	All times	Occupied
6	R	From preheat circuit breaker	50/40-amp	All times	Occupied
7	R	From start relay		All times	Occupied
8	R/O	To heater power relay	20-amp	All times	Available
9	R/T	Spare	7.5-amp	All times	Available
10	DKGN/R	To high flow, horn, power outlet	15-amp	Key “ON” position	Available
11	O/LTGN	From accessory relay		Key “ON” position	Occupied
12	O/W	To Back-up alarm switch	5-amp	Key “ON” position	Available
13	O/LTGN	From road/work light fuse (cab panel)		Key “ON” position	Occupied

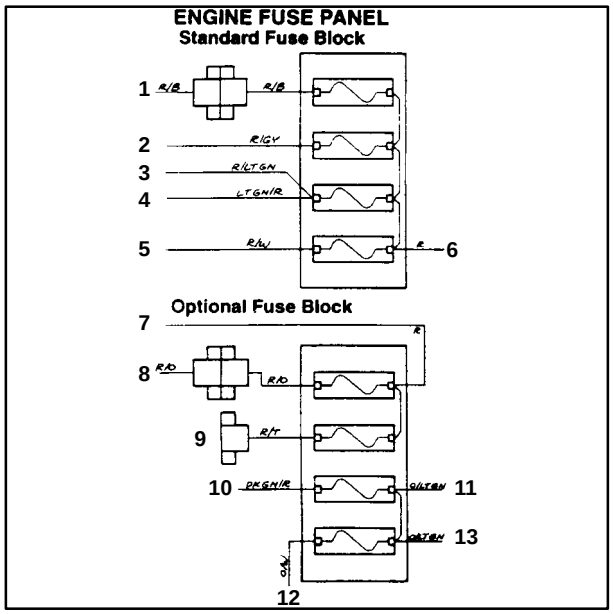

4

https://truckmanualshub.com/

A completely new auxiliary wiring circuit can be installed as shown in Figures 5 and 6, depending on electrical requirements. Mounting holes for the added circuit breakers must be drilled in the panel. Disconnect the battery before drilling and installing new wiring. Protect the panel's electrical components from drilling shavings that could cause electrical shorting of components. Figure 4 shows circuits for intermittent high current loads up to 15 amps.

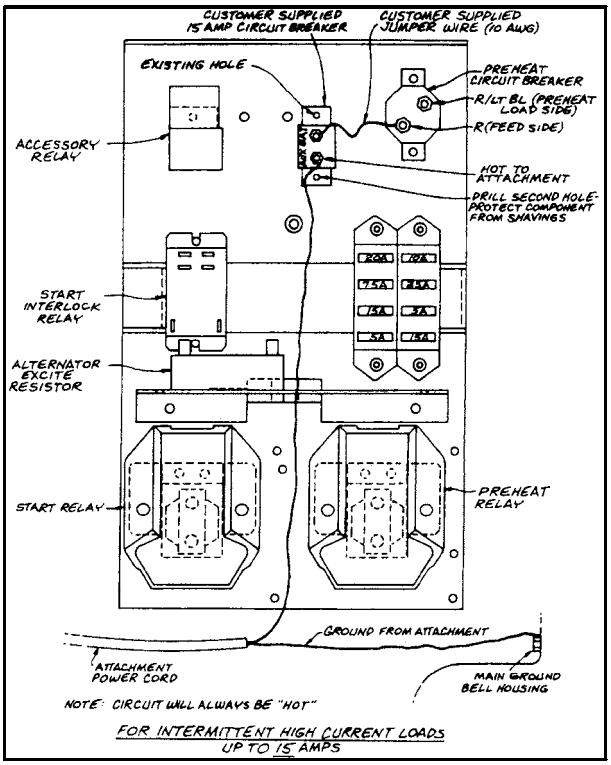

5

The Figure 6 shows the circuit for intermittent high current loads up to 30 amps.

New Holland sealed circuit breakers that can be purchased from parts.

Part Number	Capacity
9827329	15 amp
9828493	20 amp
9840279	25 amp
9840280	30 amp

When attaching ground wires, always place the heaviest ground wire next to the ground surface and then stack the remaining ground wires according to size on top of the heaviest wire.

***IMPORTANT**: Additional electrical attachments must have circuits properly connected to prevent damage to the Advanced Warning System (EIC board) and other electrical components.*

CAUTION

Always disconnect the battery before installing any electrical attachment to prevent accidental shorting of system.

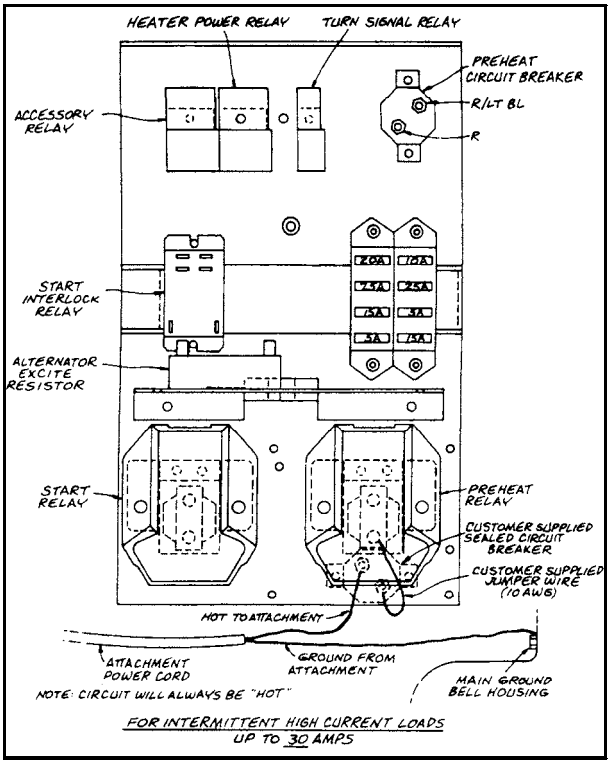

6

https://truckmanualshub.com/

SPECIFICATIONS

Alternator . . . . . 40 amp

Tachometer output (“P” terminal) . . . . . 5 to 6.5 AC Volts

Battery . . . . . SAE PC31 - 12 volt - 625 amps @ -18° C (0° F) Top stud

System Ground . . . . . Negative (–)

Protection . . . . . Fuse blocks in cab and engine areas

Cab panel (standard)
- Fuel pump 7.5A
- Electronics ignition 5A
- Wiper 7.5A
- Lights (road/work) 15A

Engine panel (standard)
- Turn signals 10A
- Accessory 25A
- Electronic (EIC) 5A
- Key main 15A

Cab panel (optional equipment)
- Beacon light 7.5A

Engine panel (optional equipment)
- Heater 20A
- Spare 7.5A
- Attach/Horn 15A
- Backup alarm 5A

Electronic Instrument Cluster (EIC)
- Low Voltage . . . . . EIC will fault at 11.9 volts (low)
- High Voltage . . . . . EIC will fault at 16.5 volts (high)

Fuel gauge sensor resistance
- Full tank . . . . . 35 ohms
- Empty tank . . . . . 240 ohms

Fuel shutoff solenoid
- Pull-in amperage . . . . . 1.5 to 1.8 amps
- Hold-in amperage . . . . . 1.3 to 1.7 amps

Engine air filter sensor . . . . . Switch is normally closed
EIC will fault at 1.6″ Mercury or 22″ Water

Engine coolant temperature sensor -
(Silver color borders) . . . . . EIC will read “COLD” until 45° C (113° F)
EIC will fault at 102° C (216° F)

Engine coolant temperature sensor -
(Gold color borders) . . . . . EIC will read “COLD” until 0° C (32° F)
EIC will fault at 102° C (216° F)

Engine coolant temperature sensor resistance . . . . . At 20° C (68° F) 2.21 - 2.69 K ohms
At 0° - 30° C (32° - 86° F) 1.65 - 5.88 K ohms

Engine crankcase oil pressure . . . . . EIC will fault at 0.3 BAR (4.3 PSI)

NOTE: *The EIC will not alarm unless coolant temperature is above 64°F or two minutes have passed since starting.*

https://truckmanualshub.com/

Hydraulic oil temperature sensor . . . . . EIC will read “COLD” until 45° C (113° F)
EIC will fault at 99° C (210° F)

Hydraulic oil temperature sensor resistance . . . . . At 20° C (68° F) 2.21-2.69 K ohms
At 0° -30° C (32° -86° F) 1.65-5.88 K ohms

Hydraulic oil filter sensor (differential between in/out) . . . . . Switch normally closed
EIC will fault at 2.7 ± 0.3 bar (40 PSI ± 4 PSI)
EIC will reset at 2.0 bar (30 PSI)

NOTE: *This alarm is locked out until the oil temperature is at 110 ° F. The switch must be open for over 5 seconds to alarm.*

Hydrostatic charge pressure . . . . . EIC will fault at 3.4 bar (50 PSI)

Glow plug resistance . . . . . 55 ohms

Solenoid (boom and bucket spool lock) resistance . . . . . 15 to 18 ohms

Starter Switch . . . . . Key start and relay

Headlights and rear work lights . . . . . 37.5 watt halogen
NH#86533429

Taillights (road) . . . . . 37.5 watt halogen
NH#86505510

Amber Flasher lights . . . . . Sealed
NH#529068

Electronic Instrument panel indicator lamp . . . . . 0.080 amp C-2F

https://truckmanualshub.com/

ALTERNATOR SERVICE SPECIFICATIONS (40 amp)

Item	How Rated	Standard Or Service Limit
Normal Output	(V - A)	12 V - 40 A
Polarity		Negative ground
Weight	(kg, lbs)	3.7 kg (8.2 lbs)
Rotational direction (viewed from the pulley)		Clockwise
Load characteristics (cold)	Terminal voltage (V)	13.5 V
	Current (A)	Min. 30 A
	Revolution (RPM)	2500 RPM
Brush length	Original (mm-in)	18.5 mm (0.728″)
	Limit (mm-in)	5.0 mm (0.20″)
Brush spring tension	Original (g-lbs)	470 - 590 g (1.36 -1.30 lbs)
	Limit (g-lbs)	270 g (0.60 lbs)
Slip ring diameter	Original (mm-in)	22.7 mm (0.0894″)
	Limit (mm-in)	22.1 mm (0.871″)
Field coil resistance	ohms at 20° C (68° F)	2.8 ohms
Adjusting voltage	(V) at 5000 RPM	14.4 - 15.0 V

STARTER MOTOR SPECIFICATIONS (12 volt)

Rated voltage	12 volts
Output	2 kw
Motor type	Four-pole series wound motor
Engaging system	Magnetic shift
Rotation	Clockwise (viewed from pinion side)
Weight	Approximate 5 kg (11 lbs)

ALTERNATOR SERVICE SPECIFICATIONS (40 amp)

Item	How Rated	Standard Or Service Limit
No Load Test	Volts (V)	11.5 V
	Current (A)	130 A Max.
	Rotating Speed (RPM)	4000 RPM Max.
Commutator	Outer dia. (mm-in.)	35 mm (1.38″)
	Service limit (mm-in.)	34 mm (1.34″)
Brush	Length (mm-in.)	15 mm (0.59″)
	Service limit (mm-in.)	9 mm (0.35″)
Brush spring	Tension (kg-lbs)	2.7 - 3.6 kg (5.9 - 7.8 lbs)
	Service limit (kg-lbs)	2.2 kg (4.7 lbs)

https://truckmanualshub.com/

ELECTRICAL DIAGRAM

https://truckmanualshub.com/

https://truckmanualshub.com/

https://truckmanualshub.com/

8

https://truckmanualshub.com/

Op. 55 418

ADVANCED WARNING SYSTEM

ELECTRONIC INSTRUMENT CLUSTER (EIC)

The Skid-Steer Loader advanced warning system, 1, monitors engine functions and operator controls and reports conditions to the operator and provides safety interlocks to the hydraulic control valve spools to the boom and bucket.

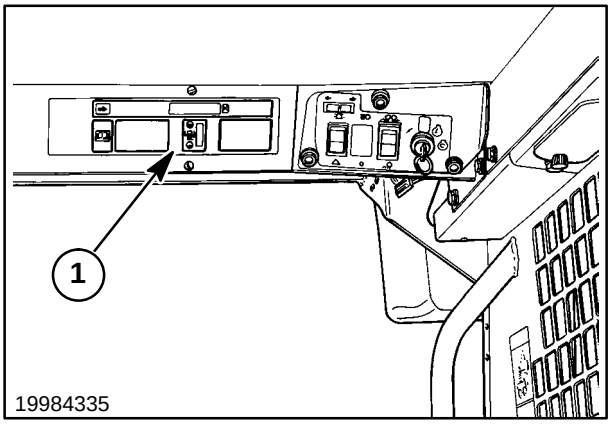

9

The instrument cluster has three kinds of visual displays: backlighted symbols, an LED character display, and a segmented bar graph.

The EIC (Electronic Instrument Cluster) board employs incandescent lamps to backlight symbols representing monitored functions. Active sensor symbols are backlighted with either yellow (WARNING) or red (FAULT). Inactive sensor symbols are visible as a dim gray outline when the backlighting is not active. An audible alarm accompanies most visual alarm lights.

The front panel of the instrument cluster has several components and display areas. Read the following paragraphs to understand each item and area.

https://truckmanualshub.com/

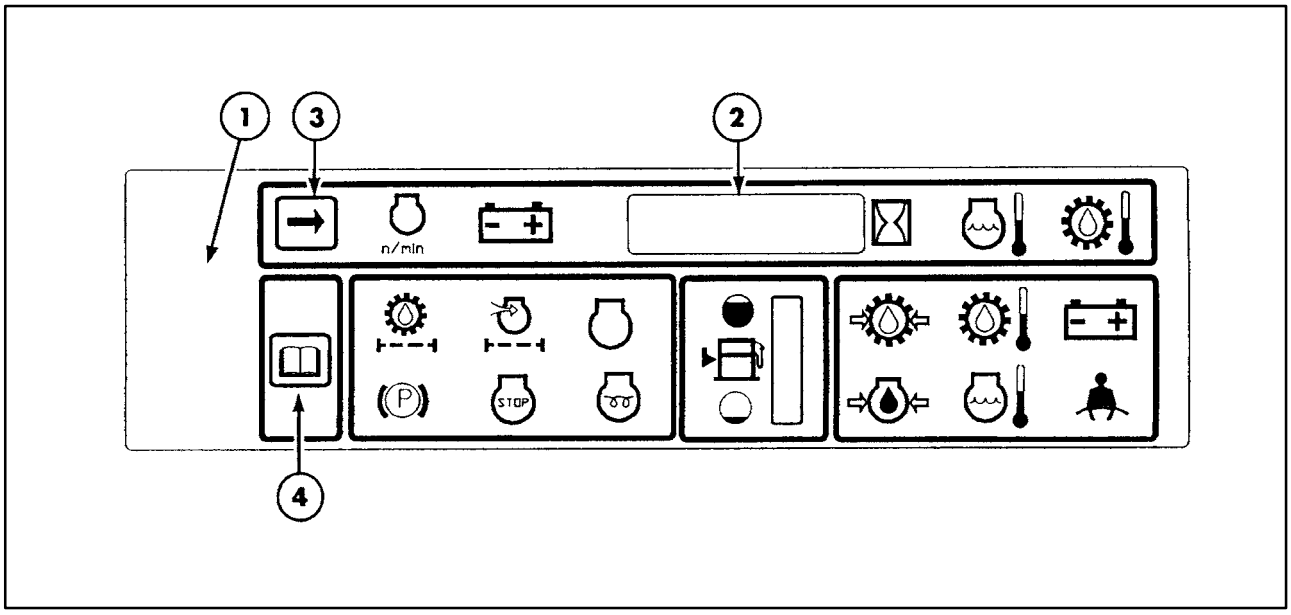

10

(EIC) ELECTRONIC INSTRUMENT CLUSTER FRONT PANEL

1. AUDIBLE ALARM

The audible alarm will sound if there is an unusual condition in any of the monitored areas. The audible alarm is located behind the front panel at 1.

2. CHARACTER DISPLAY

The character display will display the item that the operator has chosen to monitor. The display shows one function at a time. After the engine is started, the display defaults to the last function viewed at power off. Any of the other functions may be selected by the operator during operation by briefly pressing the “ARROW” selector switch, 3. When the EIC is turned off and then powered up, the display default will be the newly selected function.

3. RIGHT ARROW DISPLAY SELECTOR SWITCH

The display selector switch, covered with an “ARROW” symbol, will cause an audible “chirp” when pressed if the ignition key is in the “RUN” position. Pressing the “ARROW” symbol during operation will select the function that the operator chooses to monitor and will be displayed in the character display, 2. If a sensor causes a warning or fault, the appropriate lamp will flash, accompanied by an audible alarm. Pressing this switch also cancels any audible alarm that is sounding.

4. OPEN BOOK SELECTOR SWITCH

This selector switch covered with the symbol of an “OPEN BOOK” (instruction manual) is used to select other functional modes of the EIC panel. The “OPEN BOOK” switch has no function during normal operation.

https://truckmanualshub.com/

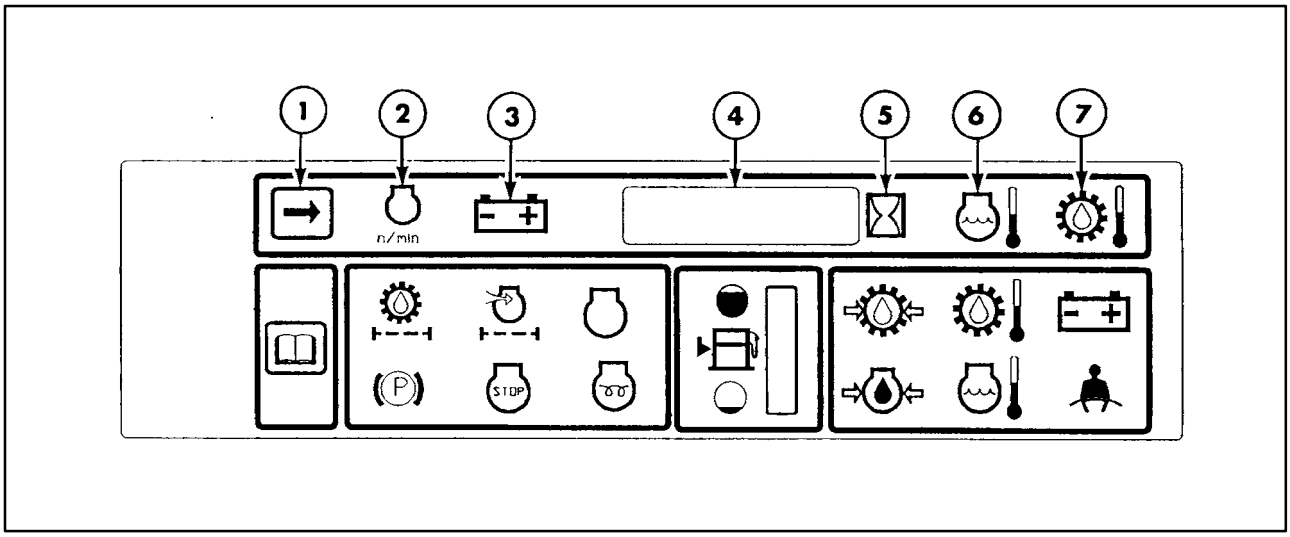

11

EIC FUNCTIONAL GROUPS

The EIC display panel is divided into four functional groups, 1 through 4.

FUNCTIONAL GROUP 1

Those symbols in display group 1, backlighted white are:

1. Right arrow display selector switch. (no light)

   This switch is used to change the displayed function.

2. Loader engine RPM, displayed in increments of 10 RPM.

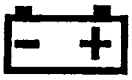

3. Battery voltage, displayed to the nearest 0.1 volt.

NOTE: *The EIC monitors battery voltage only, not alternator output.*

4. Character display.

   The character display will display the chosen function or the function with the fault within this functional group.

5. Engine hours, displayed to 0.1 hours (no light).

6. Engine coolant temperature displayed to the nearest degree, expressed as degrees Fahrenheit or degrees Celsius, depending on setting (C or F).

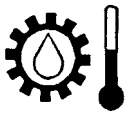

7. Transmission/hydraulic oil temperature to nearest degree, Celsius or Fahrenheit, depending on setting (C or F).

NOTE: *The monitored functions and symbols in group 1 are backlighted in white except the Engine Hours. When this function is monitored the symbol is not lit.*

NOTE: *The Engine Coolant and hydraulic oil temperatures will show “COLD” until the systems reach 0° Celsius or 32° Fahrenheit operating temperature. At that time the Character display will start reading the temperature in Celsius or Fahrenheit degrees.*

https://truckmanualshub.com/

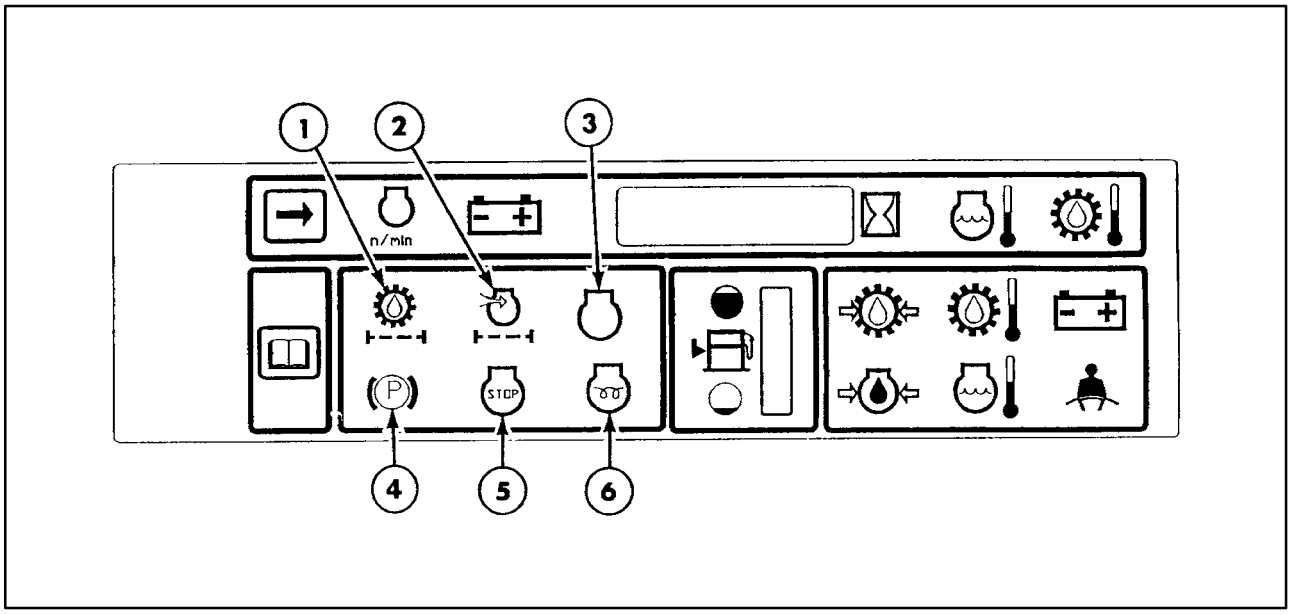

12

FUNCTIONAL GROUP 2

Those symbols in display group 2, backlighted yellow are:

1. Hydraulic oil filter condition.

   The EIC continuously monitors the condition of the oil filter. A yellow warning lamp will signal a warning when the filter becomes dirty. The lamp will flash continuously, accompanied by a 5-second audible alarm, when the filter requires replacement.

2. Air filter condition.

   When the air filter requires replacement, the lamp will flash indicating a dirty element.

3. Blank (not used).

4. Parking brake.

   Used to remind operator to engage the parking brake when exiting the loader. An audible alarm will sound when the operator begins to exit the machine with the engine running.

5. Stop engine warning.

   When this warning lamp flashes, stop the engine and determine the cause to prevent damage to the engine.

6. Engine preheat symbol (lights when engine is preheating).

   The EIC controls a timed preheat system for starting aid.

https://truckmanualshub.com/

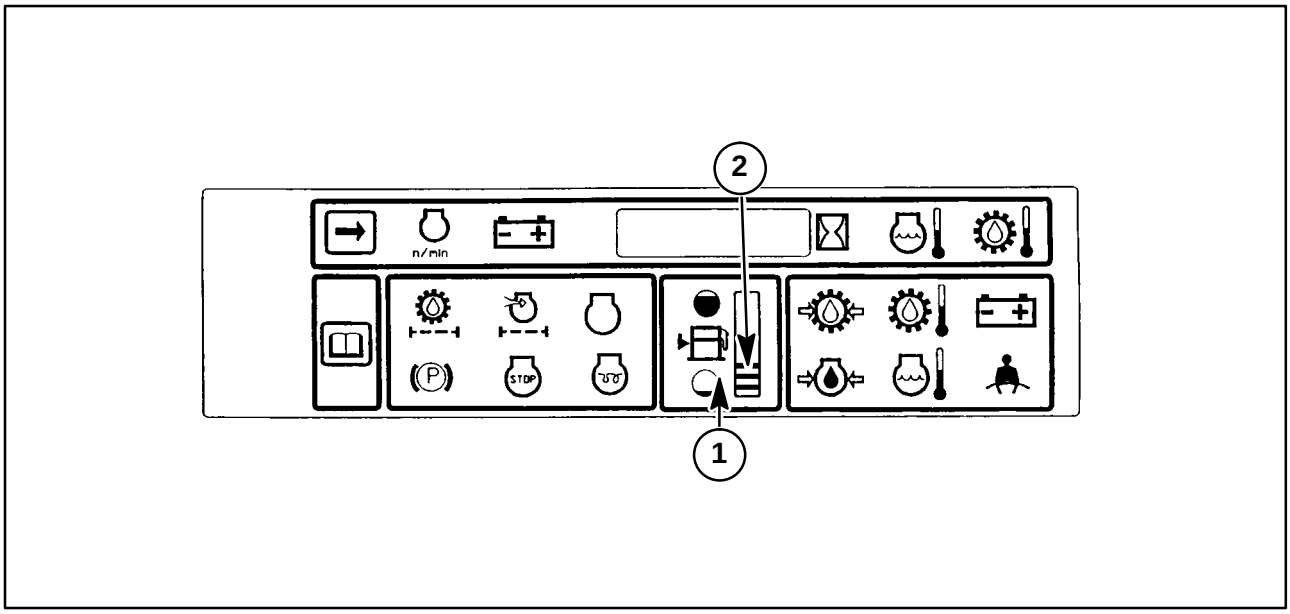

13

FUNCTIONAL GROUP 3
The symbol in display group 3 is:

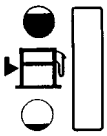

1. Fuel gauge.

   The fuel gauge, 1, is a vertical 10-segment green LED bar graph. When the fuel level reaches three bars, 2, the segments will flash accompanied by an audible alarm for about 5 seconds.

   When the fuel level reaches two bars, the EIC will signal the operator again with the segments flashing and another 5-second audible alarm.

NOTE: *The lower fuel gauge segments accurately read the lower fuel levels so an operator is less likely to run out of fuel. However, if a machine is operated on a hillside, the fuel gauge should be monitored closely to avoid running out of fuel, as the fuel can still move freely from one end of the tank to the other.*

https://truckmanualshub.com/

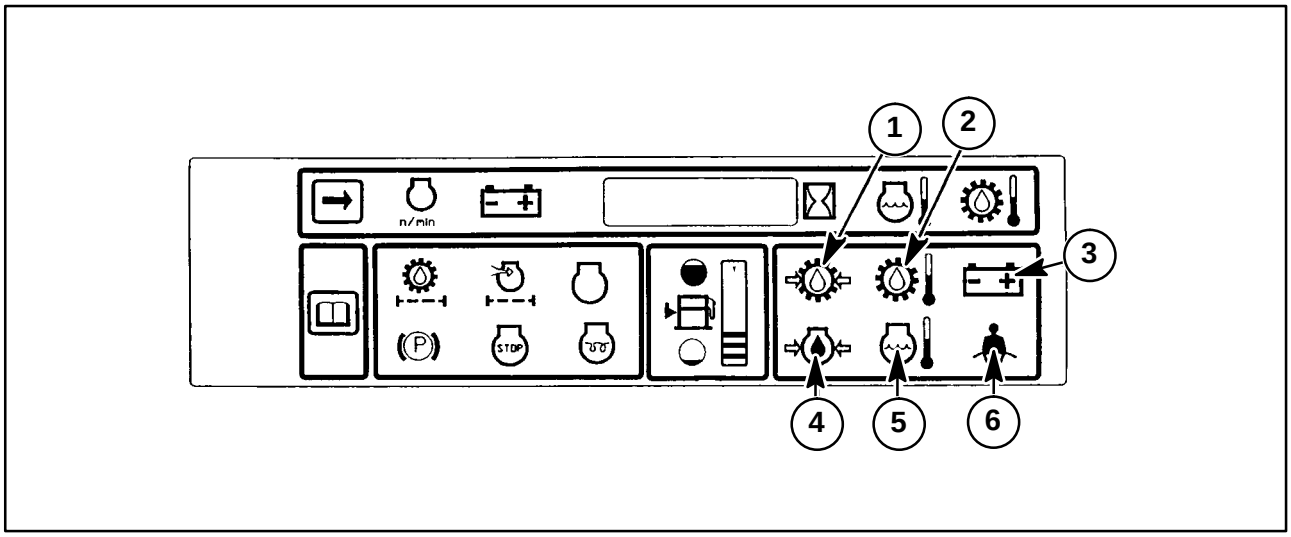

14

FUNCTIONAL GROUP 4
Symbols in display group 4 are backlighted red.

When a fault occurs, the flashing lamp is accompanied by the audible alarm.

1. Transmission charge pressure.

   When the pressure drops below normal operating pressure, the lamp will flash with a continuous alarm.

2. Transmission/Hydraulic oil temperature.

   When the oil temperature is above operating temperature of 99°C (210° F), the lamp will flash with a 5-second alarm.

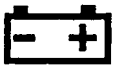

3. Battery voltage.

   When battery voltage drops below normal voltage, the lamp will flash with a 5-second alarm.

4. Engine oil pressure.

   When the engine oil pressure drops below normal pressure, the lamp will flash with a continuous alarm.

5. Coolant temperature.

   When the engine coolant temperature is above operating temperature of 102°C (216°F) the lamp will flash with a 5-second alarm.

6. Operator “FASTEN SEAT BELT” symbol.

   When the operator is in the seat, the lamp will flash until the seat belt is fastened.

   These symbols are backlighted RED and are intended to complement the audible alarm should a fault occur.

7. Alternator/water pump drive belt warning.

   If the drive belt breaks, the EIC will signal the operator with the battery symbol light, 3, flashing continuously and a 5 second audible alarm.

NOTE: *If during Skid-Steer Loader operation the Engine Coolant or Hydraulic Oil Temperatures show an overheat condition, the EIC will default to that function and read the temperature. When this happens, back off on loader operation and allow the systems to cool down to within normal operating temperature ranges. If the temperatures don’t cool down, stop operating the unit, find the cause and correct.*

https://truckmanualshub.com/

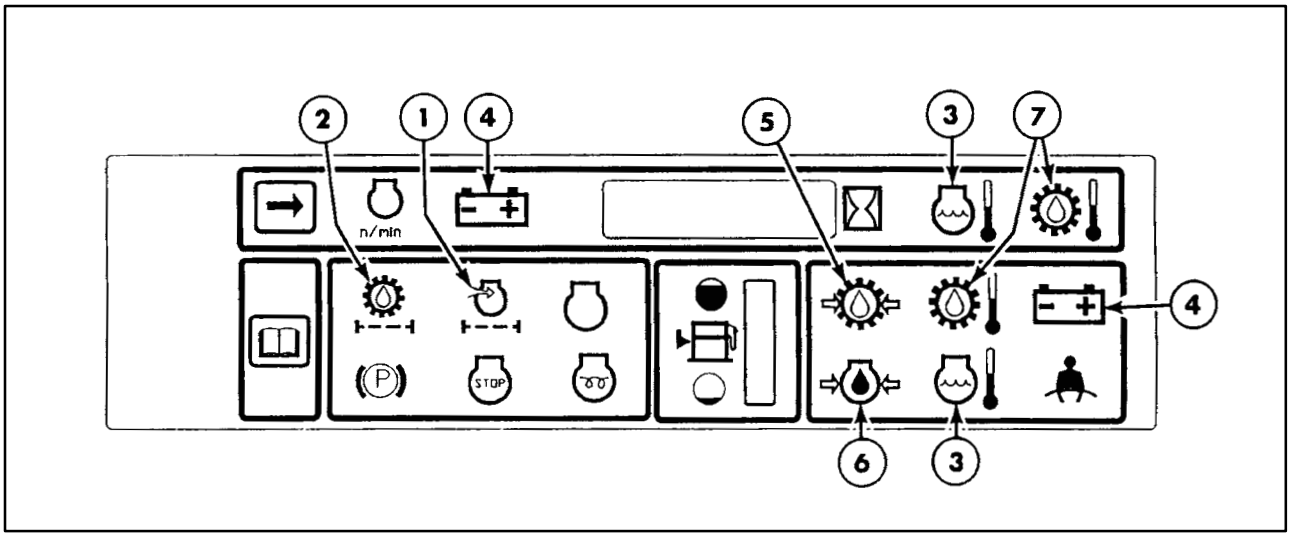

15

CONTINUOUSLY MONITORED ELEMENTS

The following machine elements are continuously monitored by the EIC:

1. Engine air filter.

   Monitors the condition of the air cleaner element and will signal when the element is dirty and requires replacement.

2. Hydraulic oil filter.

   Monitors the condition of the filter and will signal when the filter is dirty and requires replacement.

3. Engine coolant temperature.

   When the engine coolant temperature is above operating temperature of 102°C (216°F), the lamp will flash with a 5-second alarm.

4. Battery Voltage.

   When battery voltage drops below normal voltage the lamp will flash with a 5-second alarm.

5. Hydrostatic charge pressure.

   When the pressure drops below normal operating pressure the lamp will flash with a continuous alarm.

6. Engine oil pressure.

   When the engine oil pressure drops below normal pressure the lamp will flash with a continuous alarm.

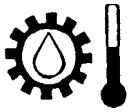

7. Transmission/Hydraulic oil temperature.

   When the oil temperature is above operating temperature of 99°C (210°F), the lamp will flash with a 5-second alarm.

   Whenever the EIC senses any unusual condition in a monitored function, the associated lamp will flash. The audible alarm will “beep” continuously for 5 seconds.

https://truckmanualshub.com/

ENGINE PREHEAT

The EIC controls a timed pre-heat cold start aid to assist in cold weather starting. The timed pre-heat cycle will vary from 0 to 40 seconds automatically based on engine coolant temperature. For additional pre-heat if the loader does not start, turn the ignition key to the “OFF” position. Then turn the ignition key back to the “RUN” position again. This will restart the preheat timed cycle.

AUTOMATIC SHUTDOWN

If either the engine oil pressure, or hydrostatic charge pressure fall below certain limits, the EIC will remove power from the fuel solenoid after 30 seconds, stopping the engine.

If this condition occurs, turn off the ignition key. Before unbuckling the seat belt, turn the ignition key to the “ON” position and lower the boom and attachment to the ground or rest the boom on the boom lockpins. Turn the ignition key to the “OFF” position.

The operator may immediately restart the engine again. Should the function remain faulted, power will again be removed from the fuel solenoid in another 30 seconds and the engine will again stop. During the 30-second alarm period, the “ENGINE STOP” symbol will flash. If this condition continues, locate the fault and repair.

IMPORTANT: *Use caution when restarting the loader because of the possibility of NO LUBRICATING OILS for the engine and/or the hydrostatic transmission. DO NOT restart the loader more than once or operate the engine at high speeds. Damage to the engine and/or transmissions may occur. Contact your New Holland dealer for assistance.*

WARNING

When the engine stop symbol flashes for the 30-second period, immediately lower the boom and move the loader to a non-traffic area for problem evaluation.

If an alarm is caused by 3, 4, or 7, the CHARACTER DISPLAY will change to show the numeric value of the function that caused the alarm.

https://truckmanualshub.com/

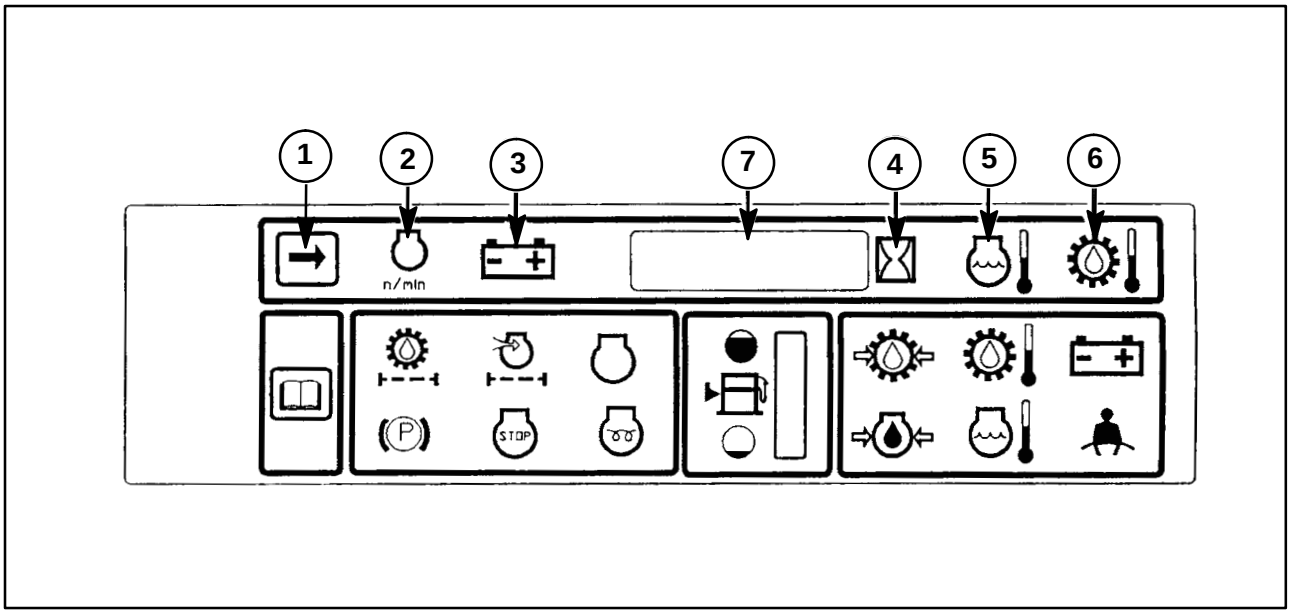

16

OPERATING MODE

By pressing and releasing the “ARROW” switch, 1, during normal skid-steer loader operation, the operator can select a function to be monitored. Only one function can be monitored and displayed at a time in the display, 7. By pressing and releasing the “ARROW” switch once, the EIC will select the next monitored function. Functional symbols are located across the top of the EIC display and will light up when selected. Note that the engine hour symbol, 4, is not illuminated.

Monitored functions are:

2. ENGINE RPM
3. BATTERY VOLTAGE
4. ENGINE HOURS (No Light)
5. ENGINE COOLANT TEMPERATURE - Reads COLD until 0°C (32°F)
6. TRANSMISSION/HYDRAULIC OIL TEMPERATURE - Reads COLD until 0°C (32°F)

If a fault occurs in the following monitored functions, the EIC will automatically show that function’s reading in the character display, accompanied by a flashing light and a five second audible alarm.

FAULT	READING
Battery Voltage (Low & High)	Battery Voltage
Engine Coolant (High)	Temperature in Degrees
Transmission/ Hydraulic Oil (High)	Temperature in Degrees

https://truckmanualshub.com/

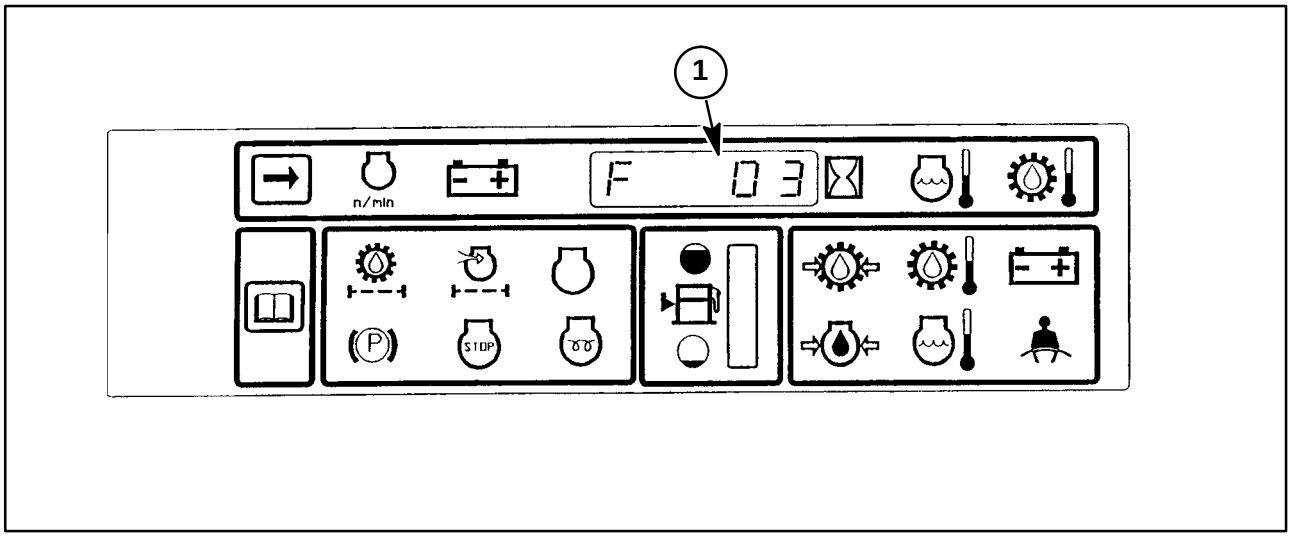

17

If a fault occurs in the following monitored functions a fault code will appear in the EIC character display, 1, accompanied by a five second audible alarm. By turning the ignition key switch to the “OFF” position the EIC will return to the normal operating mode. If when the loader is restarted and the fault still exists, the code will reappear with an alarm indicating there is an open or short in that circuit. Contact your New Holland dealer for assistance.

FAULT	CODE
Hydraulic Boom/Bucket Solenoid	(F0A)
Engine Preheat Relay Coil	(F03)
Fuel Solenoid	(F04)

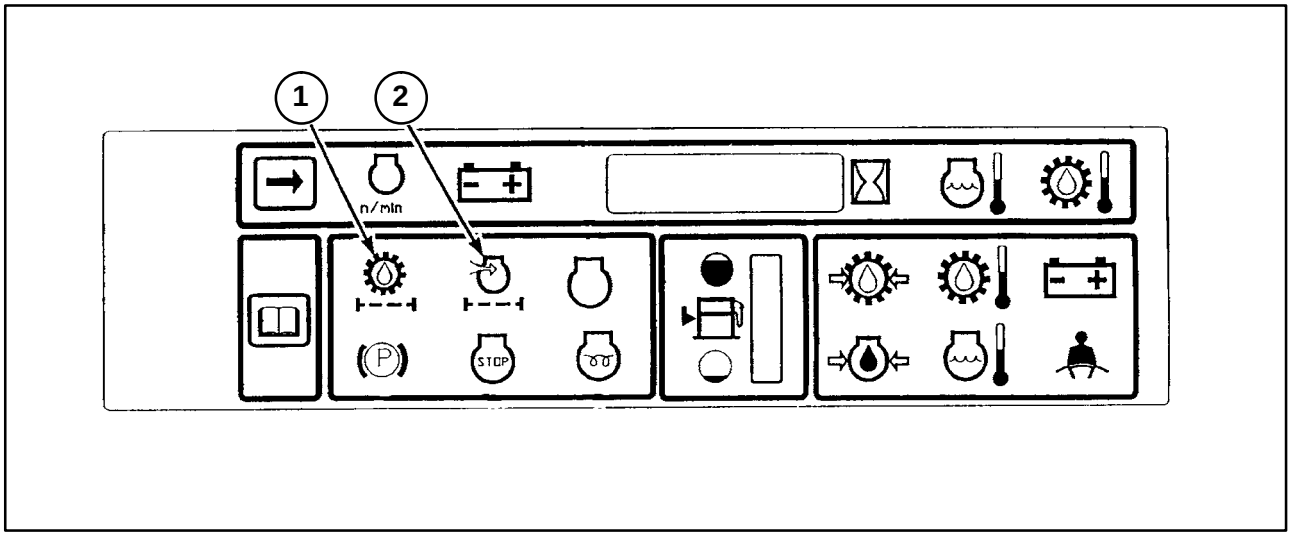

18

If a fault occurs in the following monitored functions the EIC will signal the operator with a flashing light accompanied by a five second audible alarm indicating the filter(s) require service.

FAULT

1. Hydraulic Oil Filter
2. Engine Air Cleaner

https://truckmanualshub.com/

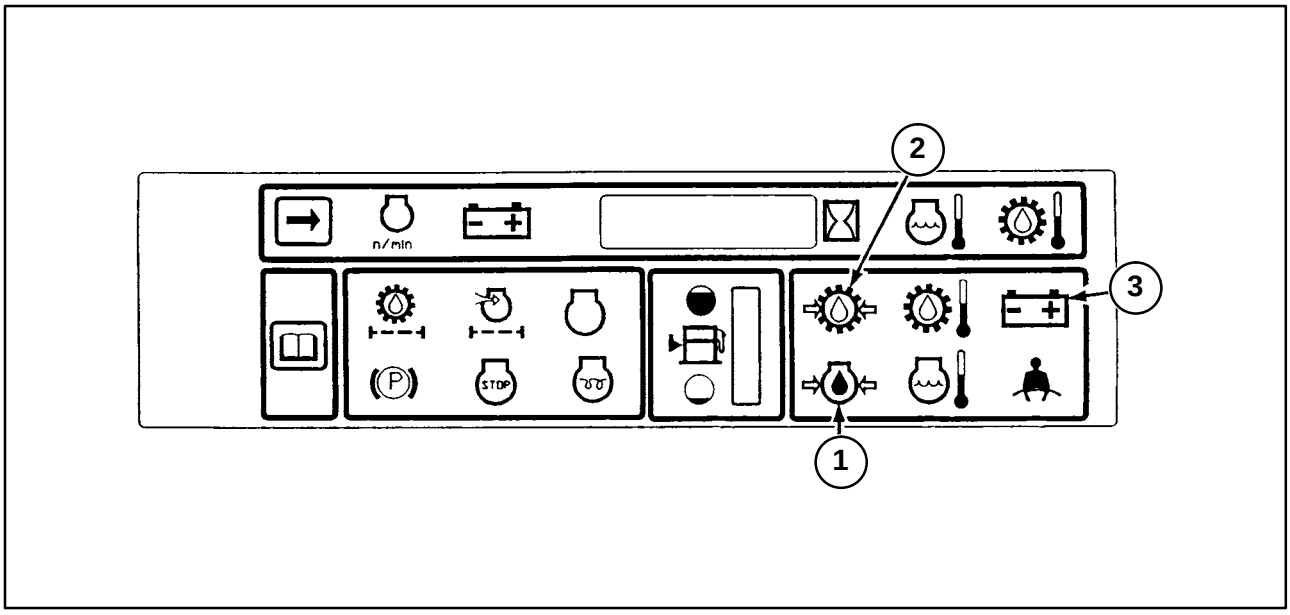

19

If a fault occurs for more than 30 seconds in the following monitored functions the EIC will signal the operator with a flashing light, a continuous audible alarm and will stop the engine after 30 seconds of operation.

FAULT

1. Engine Oil Pressure
2. Hydrostatic Transmission Charge Pressure

If a fault occurs in one of these functions, the engine can be restarted and the skid-steer loader moved to a safe inspection area with the boom resting on the boom lock pins or on the ground. If the fault still exists, the EIC will stop the engine after another 30 seconds.

IMPORTANT: *Use caution when restarting the loader because of the possibility of NO LUBRICATING OILS for the engine and/or the hydrostatic transmissions. DO NOT restart the loader more than once or operate the engine at high engine speeds. Damage to the engine and/or transmission may occur. Contact your New Holland dealer for assistance.*

BROKEN ALTERNATOR/WATER PUMP BELT WARNING, 3

If the drive belt breaks the EIC will signal the operator with the battery symbol light, 3, flashing, accompanied by an audible alarm.

NOTE: *The engine will shut down automatically. Then immediately turn the ignition key to “OFF” position to prevent engine overheating or damage.*

https://truckmanualshub.com/

FUEL LEVEL

Fuel level is shown to the operator by the fuel gauge bar lights located in the center of the EIC display at 1. The operator will be signaled when the level is at three bars and again at two bars. The bar lights, 2, will flash continuously accompanied by an audible alarm for about five seconds at each signal level.

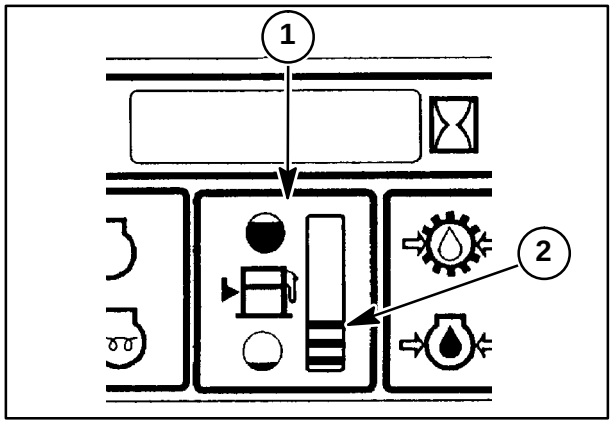

20

EIC INTERLOCKS

EIC controls the fuel solenoid circuit. The operator must be in the seat, with the seat belt fastened before the engine will start and continue to run.

The EIC will lock the boom and bucket control valve spools in neutral if the operator unfastens the seat belt, leaves the seat, or turns the ignition key off. If the operator is out of the seat for more than two seconds, the seat belt must be unfastened and refastened to enable the boom and bucket hydraulic systems to function.

The unit is equipped with a “SERVICE/RUN” switch for use during servicing and troubleshooting of the skid-steer loader. To access the Service/Run switch located under the cab fuse panel cover, 1, loosen the two thumbscrews, 2, and rotate cover, 1, to the side. When the “SERVICE/RUN” switch, 3, is in the “SERVICE” position, the engine will start but the boom and bucket hydraulic system will be inoperative.

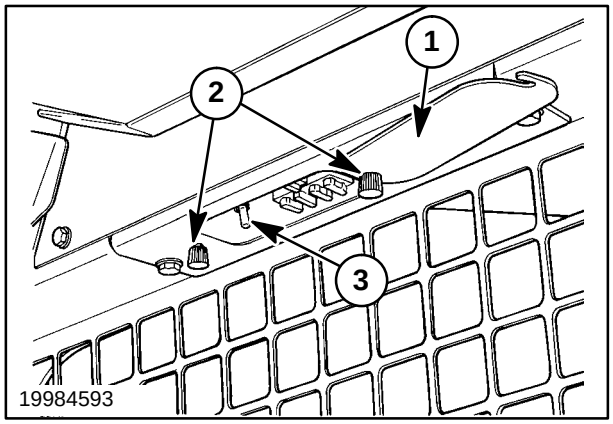

21

https://truckmanualshub.com/

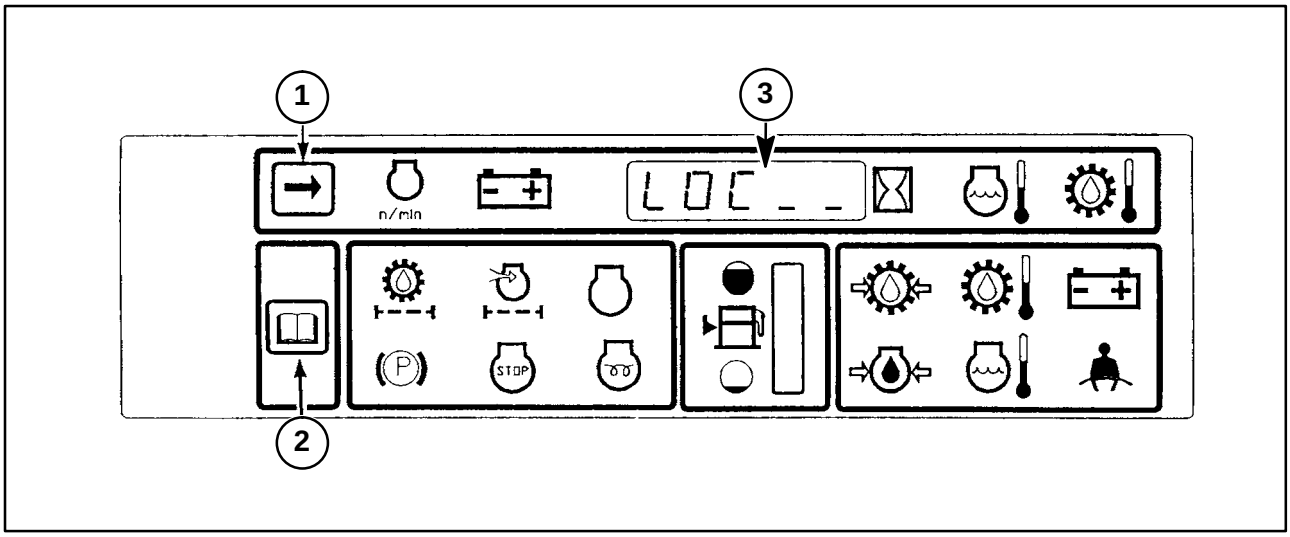

22

EIC LOCK MODE

A two digit code can be entered into the EIC which will lock the boom and bucket spool lock solenoids when the spools are in the neutral position. This will prevent movement of the boom and bucket.

The same two digit code must be reentered to unlock the solenoids and return the loader to normal operation.

To enter a security code:

1. Lower the boom and bucket to the ground and position the bucket to prevent movement of the loader.
2. Turn “OFF” the ignition key.
3. Unbuckle the seat belt, raise your weight off the seat, and wait until all EIC lights are off.
4. While out of the seat, press and hold the “OPEN BOOK” switch, 2, then sit in the seat and turn the ignition key to the “ON” position; Do Not engage the starter.
5. Display, 3, will show the program level of the EIC board (example r0100). At this time release the “OPEN BOOK” switch.
6. Display, 3, will show “LOC_ _” for lock.
7. Press and hold the “OPEN BOOK” switch until two (2) zeros appear “LOC 0 0” with the left zero flashing, then release the “OPEN BOOK” switch.
8. Press and release the “OPEN BOOK” switch and enter any number from “0” to “9” for the left digit.
9. Press and release the “ARROW” switch, 1, the right zero will start to flash.
10. Press and release the “OPEN BOOK” switch and enter any number from “1” to “9” for the right digit.
11. With the two (2) digit code entered, “01 to 99”, turn the ignition key to the “OFF” position and exit the loader, allowing all the EIC board lights to go “OFF”, locking the EIC.

    When the EIC board lights go off, the lock code will enter the EIC memory, locking the EIC until the same two digit code is reentered.

To reenter the same two (2) digit code to return the loader to normal operation:

1. Sit in the operator’s seat.
2. The EIC will display “LOC 0 0” with the left digit flashing.
3. Turn the ignition key switch to the “ON” position; Do Not engage the starter.
4. Press and release the “OPEN BOOK” switch and enter the left number of the code previously used to lock the loader.
5. Press and release the “ARROW” switch, the right zero will flash.
6. Press and release the “OPEN BOOK” switch to enter the right number of the code previously used to lock the loader.
7. Turn the ignition key to the “OFF” position and allow the EIC to return to the operating mode.
8. Buckle the seat belt and proceed with normal skid-steer loader operation.

If the two digit code is forgotten, the EIC can be unlocked by using a **(MASTER CODE).** Contact your NEW HOLLAND dealer for assistance.

The dealer will require your name, address and the skid-steer loader model and serial numbers.

https://truckmanualshub.com/

EIC ENGINE PREHEAT

The engine preheat is governed automatically by the EIC based on coolant temperature and engine code. Preheat is initiated when the ignition key is turned to the “RUN” position and the cycle time will vary from 0 to 20 seconds.

Turn the ignition key to the “RUN” position, and the EIC character display, 1, will show seconds remaining for engine preheat time. The preheat indicator light, 2, will be lit during the preheat cycle. The operator should wait until the display zeros “0”, the indicator light goes “off”, and the audible alarm sounds to start the engine. If the loader does not start, re-cycle the engine preheat timer by turning the ignition key “OFF” then “ON”. This will restart the timed preheat cycle.

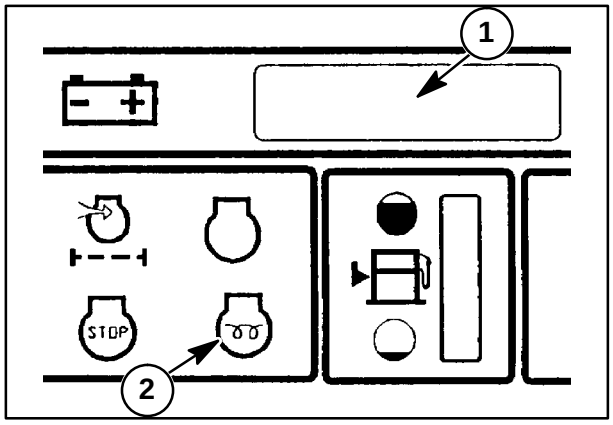

23

https://truckmanualshub.com/

TROUBLESHOOTING

ELECTRONIC INSTRUMENT CLUSTER (EIC)

PROBLEM	POSSIBLE CAUSE	CORRECTION
EIC board will not light up when operator sits in seat	Service/run switch in service position	Push switch to run position
	Faulty seat switch	Replace switch
	No battery voltage to seat switch	Blown 5-amp fuse electronic battery in engine panel, replace fuse
		Open in power wire from 5-amp fuse to seat switch, repair open in wire
		No battery voltage to 5-amp fuse from supply, check and/or replace battery
	Blown 5-amp fuse (electronic battery) in engine panel	Replace fuse
	No battery voltage from seat switch to EIC board	Open in power wire from seat switch to EIC board, repair open in wire
		Poor or no connection at EIC board, repair connection
	Battery voltage from seat switch to EIC board	If battery voltage from seat to board is OK, replace EIC board
EIC board backlighting is dim	Brightness variations due to production differences between models and/or EIC board changes	None -- overlay decal material variations cause differences in brightness
	Backlights dim when the loader worklights are activated	None -- EIC board circuitry automatically dims the backlighting when the work lights are on, to reduce board glare at night
EIC board seat belt light will not go off with seat belt buckled	Seat belt not buckled	Buckle seat belt
	Faulty seat belt buckle switch	Replace seat belt assembly
	No battery voltage from seat switch to seat belt switch	Open in wire from seat switch to seat belt switch, repair open
	No battery voltage from seat belt switch to EIC board	Open in wire from seat belt switch to EIC board, repair open
		Poor or no connection at EIC board, repair connection
	Battery voltage from seat belt switch to EIC board	If voltage OK, replace EIC board

https://truckmanualshub.com/

PROBLEM	POSSIBLE CAUSE	CORRECTION
EIC will not read correct engine RPMs, varies more than ± 50 RPMs	Incorrect engine configuration	Correct configuration
	No AC voltage at tachometer terminal at alternator	Repair alternator
	Loose or corroded connection at tachometer terminal at alternator	Repair connection
	No AC voltage at EIC board from alternator	Open in wire from alternator to EIC board, repair open
	AC voltage from alternator to EIC board	Repair loose or corroded connection at EIC board
	Wire connection from alternator to EIC board	If OK, replace EIC board
EIC will not unlock boom and bucket spool locks	Service/Run switch in “SERVICE” position	Push switch to “RUN” position
	Seat belt unbuckled	Buckle seat belt
	Faulty seat belt buckle	Replace seat belt assembly
	No battery voltage from seat belt switch to EIC	Open in power wire from seat belt switch, repair open
	No battery voltage from EIC to spool lock solenoids	Open in power wire from EIC to solenoids, repair open
	Battery voltage to lock solenoids	If OK, check inoperative solenoids, check solenoid coils, repair or replace

https://truckmanualshub.com/

PROBLEM	POSSIBLE CAUSE	CORRECTION
Engine will not start and/or run	Seat belt unbuckled	Buckle seat belt
	Incorrect engine configuration (EIC)	Correct configuration
	No battery voltage to start relay	Open in power wire from key switch “start” to relay, or through seat/seat belt circuits to relay, repair open
	No battery voltage from EIC to fuel solenoid	Open in power wire from EIC to fuel solenoid, repair open
	Open in the W/O wire from the seat/seat belt plug to the start interlock relay	Repair open in W/O wire
	Inoperative start interlock relay	Repair or replace
	Fuel solenoid inoperative	Repair or replace fuel solenoid
	Inoperative manifold heater system	Incorrect engine configuration, correct configuration
	No power to manifold heater	Manifold heater preheat relay or LTBL/B wire open, repair or replace
		Circuit breaker open, replace
	Inoperative manifold heater	Replace manifold heater
	No fuel to manifold heater	Check fuel feed tube and fuel supply from injection pump
EIC will not read monitored circuits	Incorrect engine configuration	Correct engine configuration
	Open or short in wire from sensor to EIC	Repair open/short
	Faulty sender or sensor	Repair/replace sender or sensor

https://truckmanualshub.com/

ADVANCED WARNING SYSTEM (AWS)

This skid-steer loader is equipped with an Advanced Warning System (AWS) that provides information to the operator about the operation of the skid-steer loader.

The AWS provides an interlock system with the seat and seat belt to prevent movement of the boom and bucket if the operator is out of the seat or the seat belt is unbuckled and the controls are in neutral.

The AWS provides an automatic engine preheat system to aid in cold weather starting.

The AWS provides information to the operator about the following monitored functions:

- Hydraulic Oil Filter
- Engine Air Filter
- Engine Preheat Relay Coil
- Fuel Level
- Fuel Solenoid
- Engine Coolant Temperature
- Hydrostatic Transmission Charge Pressure
- Transmission/Hydraulic Oil Temperature
- Battery Voltage
- Engine Oil Pressure
- Alternator/Water Pump Belt Breakage Warning
- Operator Seat and Seat Belt
- Hydraulic Boom/Bucket Solenoid
- Engine RPM
- Engine Hours

The AWS provides an engine shut down feature if the engine oil pressure or the hydrostatic transmission charge pressure are low.

The AWS will signal the operator if the alternator/water pump drive belt fails.

The AWS provides a security feature allowing the operator to enter a two digit security code, preventing starting of the engine and movement of the boom and bucket.

The AWS provides the following features for dealer technician use in diagnostics and troubleshooting of the monitored function circuits:

Diagnostics

- Test individual monitored circuits.

Fault/Warning History

- Fault occurrence with hour level of last occurrence.

Clear Faults

- Clear Faults to zero.

Engine Code

- Set EIC to loader engine model.

Select Displayed Temperature Units, Fahrenheit or Celsius

- Temperature displayed in Metric (Celsius) or English (Fahrenheit).

Adjust Engine RPM

- Calibrate EIC display to external RPM tach reading.

Clear Memory

- Return EIC to original factory settings.
- Engine code reset to (01).
- Hours reset to (0000.0) zero.
- Temperature displayed (Fahrenheit).
- Engine RPM calibration cleared.

Adjust skid-steer loader hours

- Change unit hours when installing a new EIC board in a loader.

https://truckmanualshub.com/

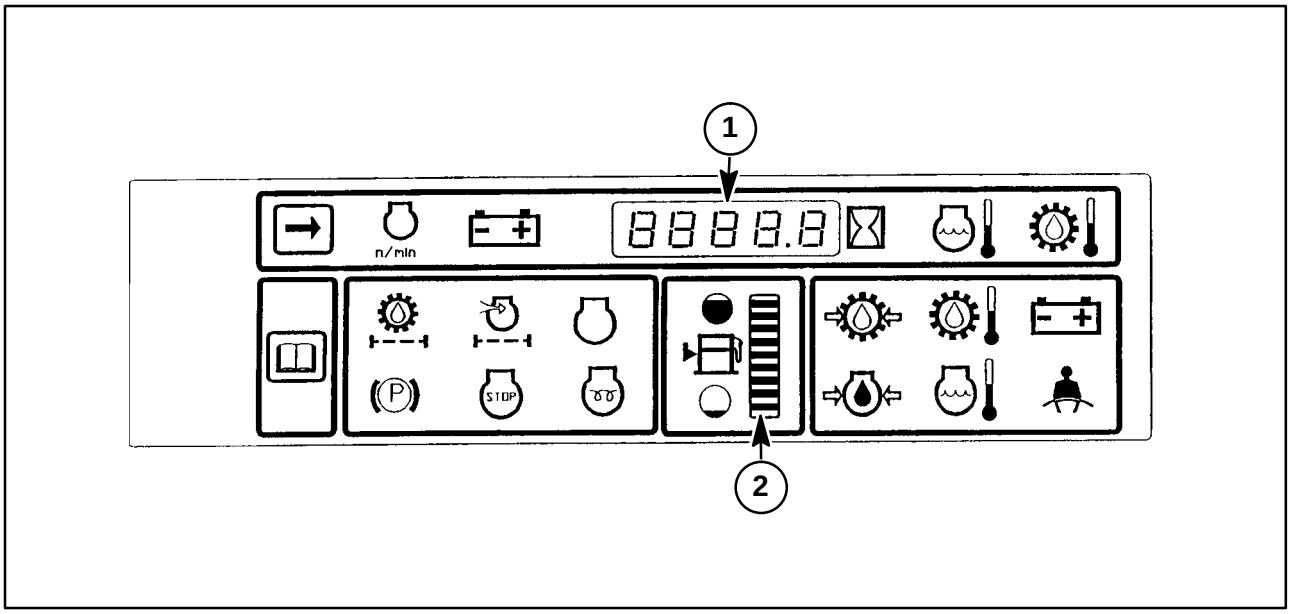

24

EIC BOARD SELF TEST

When first sitting in the operator's seat and/or before entering Diagnostics, allow the EIC board to self test. (Service/Run switch in the "RUN" position)

Sit in operator's seat.

1. The EIC board should light all symbol lights.
2. The character display should read "8888.8", 1, and the fuel gauge (light bar), 2, should light showing 9 bars.
3. The EIC will enter the normal start up mode.
4. Turning the ignition key to the "ON" position will start the automatic engine preheat system (if required).

NOTE: *The preheat times will vary from 0 to 20 seconds, depending on engine temperature.*

If the EIC does not function as described, check the seat and seat belt switches for proper operation and EIC board power and ground circuits.

https://truckmanualshub.com/

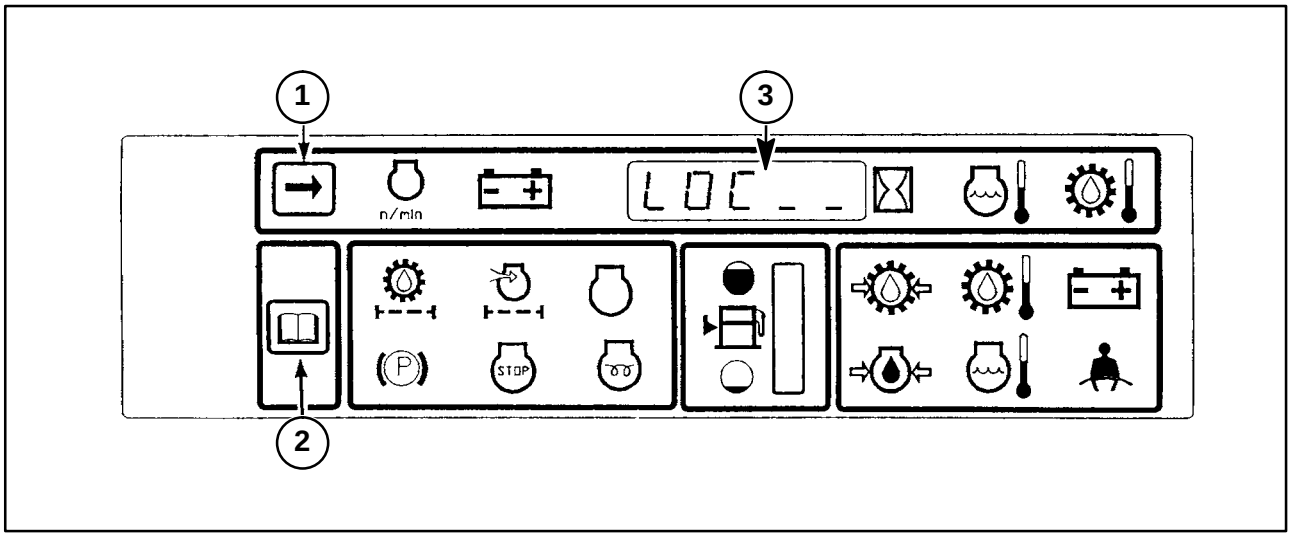

25

DIAGNOSTIC AND SETUP MODES

When in the Diagnostic Mode, the technician can test the individual monitored circuit wiring. When in the Setup Mode, the technician can make changes to the EIC and perform additional troubleshooting.

To Enter Diagnostic Or Setup Mode:

1. Lower the boom and bucket to the ground or remove any attachment and rest the boom on the boom lock pins.
2. Turn “OFF” the ignition key.
3. Unbuckle the seat belt, raise your weight off the seat, and wait until all EIC lights are off.
4. While out of the seat, press and hold the “OPEN BOOK” switch, 2, sit in the seat and turn the ignition key to the “ON” position; Do Not engage the starter.
5. Display, 3, will show the program level of the EIC board (example - r0100); at this time, release the “OPEN BOOK” switch.
6. Display will show “LOC_ _” for lock.
7. Press and release the “ARROW” switch, 1; “dIAg” (for Diagnostic) will appear in the character display.
8. Press and release the “ARROW” switch again will move to the “SEtUP” mode in the display.

Pressing and holding the “OPEN BOOK” switch when in either mode will enter the selected mode for tests or changes to the EIC.

https://truckmanualshub.com/

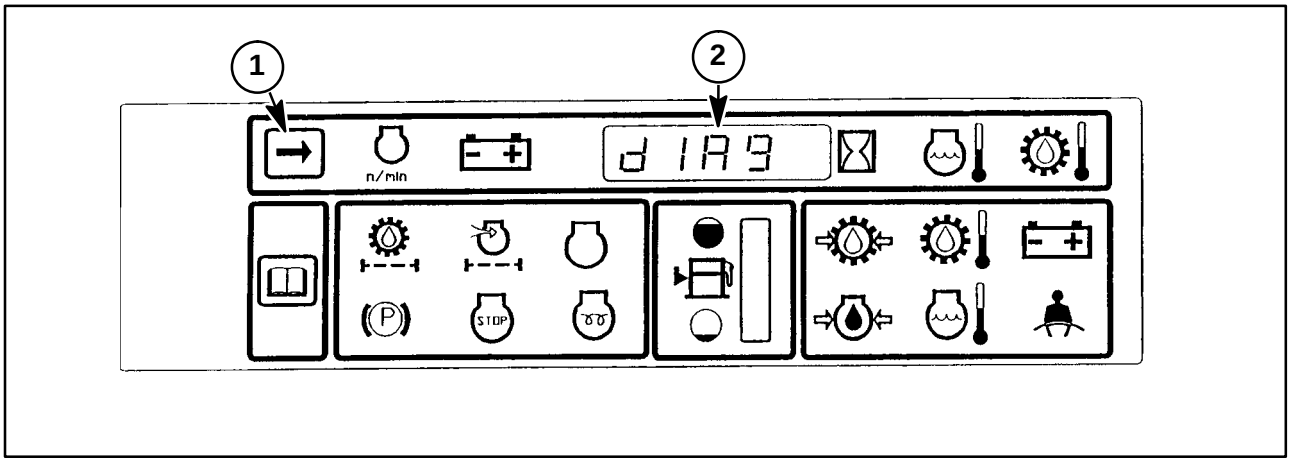

26

EIC Diagnostics and Setup Items

Diagnostics Mode
With display showing “LOC_ _” for lock.

1. Press and release the “ARROW” switch, 1; “dIAg” will appear in the character display, 2.

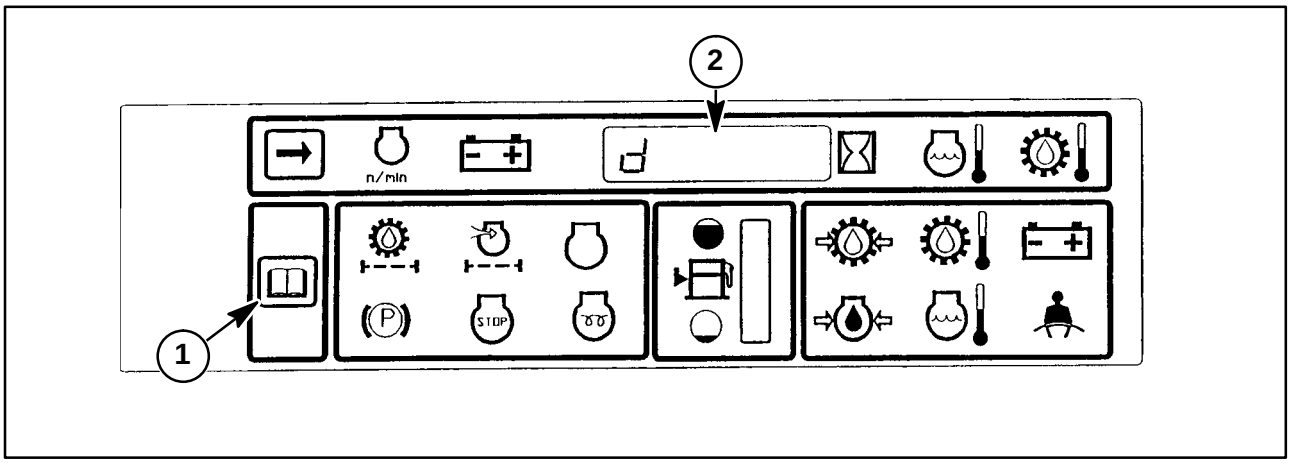

27

2. Press and hold the “OPEN BOOK” switch, 1, until a low case “d” appears in the character display, 2, release the “OPEN BOOK” switch. The EIC is now in Diagnostics.

Each individual monitored circuit can now be tested for proper operation.

When in Diagnostics and any circuit is activated the EIC board will light all lights and an audible alarm will sound.

The Diagnostic test will not verify the performance of a sensor or sender. Only the EIC board and wires to the sender or sensor are tested.

The following circuits can be tested:

1. EIC board bulbs
2. EIC board circuits
3. EIC board arrow and open book switches
4. Audible beeper
5. Engine air filter circuit
6. Hydraulic oil filter circuit
7. Hydrostatic transmission charge pressurecircuit
8. Engine oil pressure circuit
9. Engine Coolant temperature circuit
10. Transmission/hydraulic oil temperaturecircuit
11. Fuel level circuit
12. Seat switch(es) and circuit
13. Seat belt switch and circuit
14. Service/Run switch

https://truckmanualshub.com/

ARROW, OPEN BOOK, AND AUDIBLE ALARM TEST

In this mode, by pressing the “ARROW,” 1, or “OPEN BOOK,” 2, switches, all of the display segments are turned on for verification and at the same time with an audible beep. If all segments do not light the circuit bulb or wires to the switches, sensors or senders may be defective.

To check the individual EIC board circuits and circuits to the switches, sensors, and senders, perform the following “EIC CIRCUIT TESTS”.

Whenever any of the sensors or switches are toggled on or off, the EIC board will light and the audible alarm will briefly beep. This indicates that the wire to the sensor or switch is intact, but does not yield any information about the condition of the sensor.

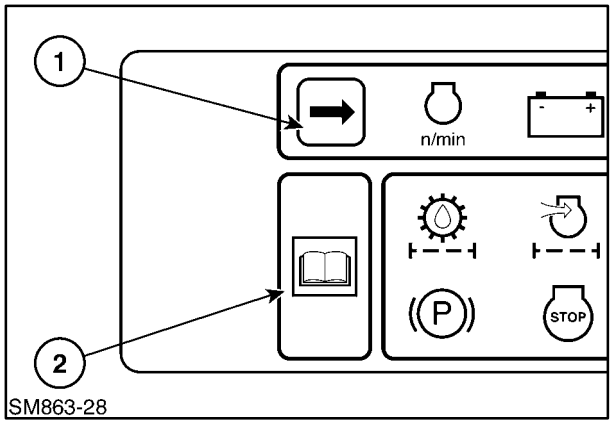

28

DIAGNOSTIC MODE EIC CIRCUIT TESTS

To simulate a fault condition while in the diagnostic mode do the following:

NOTE: *When in the diagnostic mode and a circuit is triggered, all the board lights will light up accompanied by an audible beep.*

1. Hydraulic Oil Filter Restriction Switch

Remove the DKGN/O filter sensor wire, 1, from the sender.

The EIC board lights will all light up and the board will beep when this test is performed.

If the EIC board lights and beeps, the EIC and circuit wire to the sensor is OK. The problem is in the sensor; replace the sensor. If the EIC board fails to light and beep, check the wire from the sensor to the EIC board.

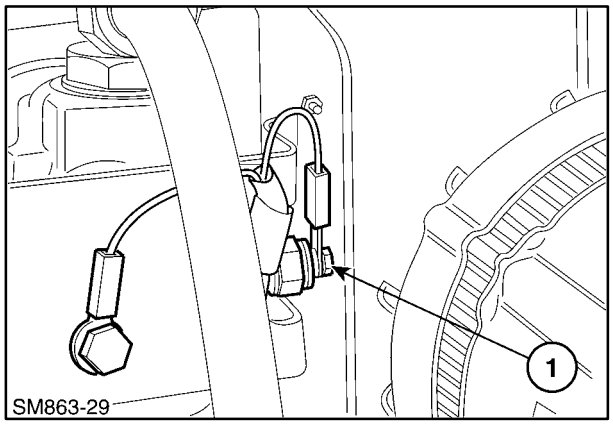

29

https://truckmanualshub.com/

2. Air Cleaner Switch

Remove one wire at a time from the sensor switch, 1, on the air cleaner canister. Remove the B wire, and the EIC board will light and beep when the wire is removed from the switch. Remove the B/Y wire, and the EIC board will light and beep.

If the EIC board lights and beeps, the EIC and circuit wire to the sensor is OK. The problem is in the sensor; replace the sensor. If the EIC board fails to light and beep, check the wires from the sensors to the EIC board.

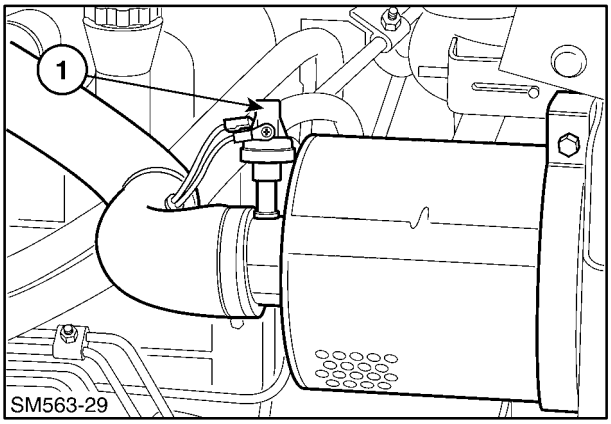

30

3. Hydrostatic Charge Pressure Switch, 1

Remove one wire at a time from the sensor switch at the charge check valve. Remove the Y/GY wire and the EIC board will light and beep. Remove the B wire and the EIC board will light and beep.

If the EIC board lights and beeps, the EIC and circuit wire to the sensor is OK. The problem is in the sensor; replace the sensor. If the EIC board fails to light and beep, check the wires from the sensor to the EIC board.

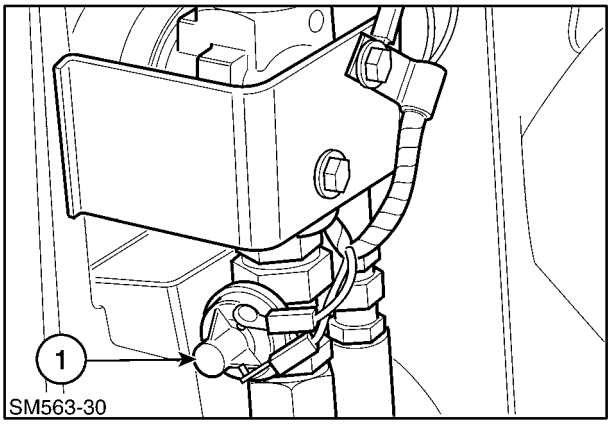

31

4. Engine Oil Pressure Sensor

Remove the Y/B wire, 1, from the sensor and the EIC board will light and beep.

If the EIC board lights and beeps, the EIC and circuit wire to the sensor is OK. The problem is in the sensor; replace the sensor. If the EIC board fails to light and beep, check the wires from the sensor to the EIC board.

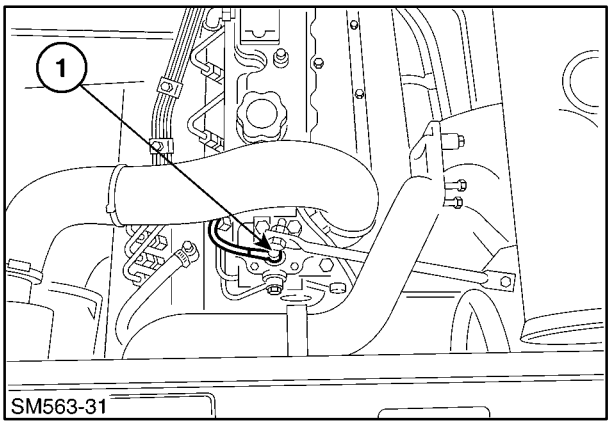

32

https://truckmanualshub.com/

5. Coolant Temperature Sensor

Remove the PU/LTGN wire, 1, from the sensor and short the wire to ground.

The EIC board will light and beep when the wire is removed from the sender and grounded.

If the EIC board lights and beeps, the EIC and circuit wire to the sensor is OK. The problem is in the sensor; replace the sensor. If the EIC board fails to light and beep, check the wires from the sensor to the EIC board.

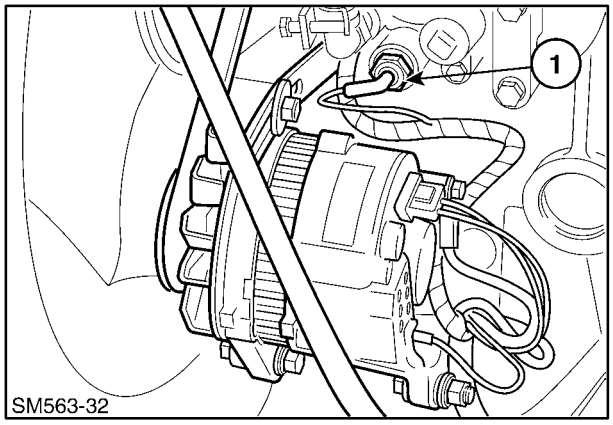

33

6. Transmission/Hydraulic Oil Temperature Sensor

Remove the PU/LTBL wire from the sensor, 1, and short the wire to ground.

The EIC board will light and beep when the wire is removed from the sender and grounded.

If the EIC board lights and beeps, the EIC and circuit wire to the sensor is OK. The problem is in the sensor; replace the sensor. If the EIC board fails to light and beep, check the wires from the sensor to the EIC board.

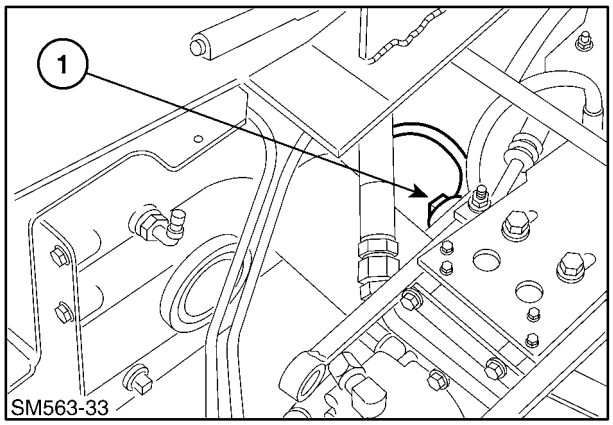

34

7. Fuel Gauge

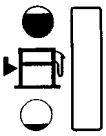

Disconnect one wire, 1, and use a jumper wire and connect sender terminal to other terminal, 2, and the EIC board will light and beep. If the EIC board lights and beeps, the EIC and circuit wires to the sender are OK. If the EIC board fails to light, check the wires to the EIC board.

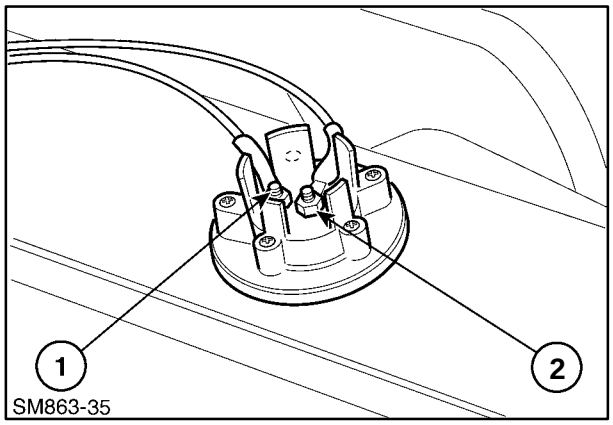

35

https://truckmanualshub.com/

8. Seat Switch and Circuit

   Raise your weight off the center of the seat and then sit back on the seat. The EIC board will light and beep. If the board lights and beeps, the switch and circuit are OK. If the board fails to light and beep, check the seat switch and circuit to the seat switch for battery voltage. If there is battery voltage to the switch, check the switch for operation and the circuit from the switch to the EIC board. If there is no battery voltage to the switch, check the circuit to the switch.

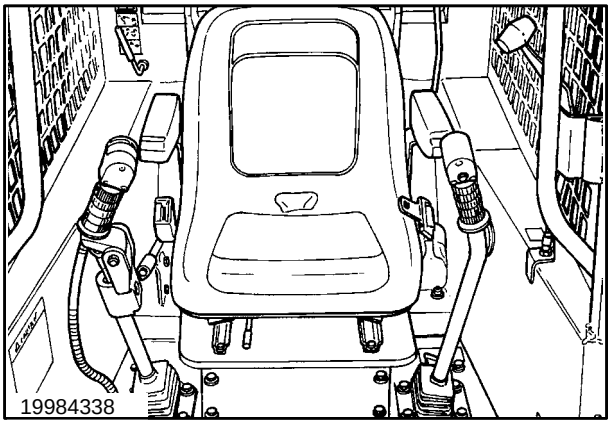

36

9. Seat Belt Switch and Circuit

   The operator must be sitting in the seat.

   Unbuckle and rebuckle the seat belt. The EIC board will light and beep. If the board lights and beeps, the switch and circuit are OK. If the board fails to light and beep, check the seat belt switch and circuit from the seat switch for battery voltage. If there is battery voltage to the switch, check the switch for operation and the circuit from the seat belt switch to the EIC board. If there is no battery voltage from the seat switch, check the seat switch for operation and the wire to the seat belt switch.

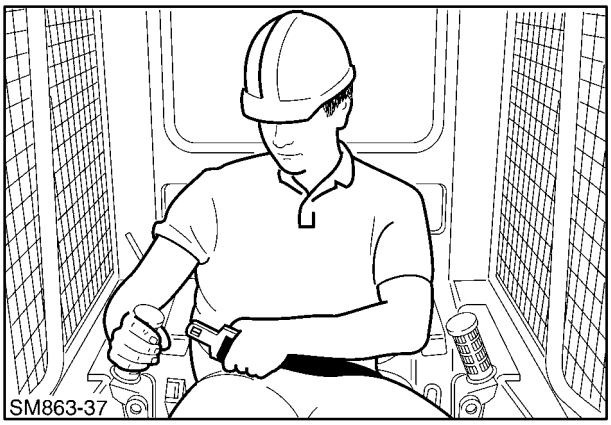

37

10. Service/Run Switch, 1

    The operator must be sitting in the seat.

    Switch between “SERVICE” and “RUN”. The EIC board will light and beep. If the board fails to light and beep, check the switch and circuit for battery voltage.

To exit Diagnostics and move to the next item, press and hold the “ARROW” switch until “dIAg” is displayed in the character display, then release the switch. Pressing the “ARROW” switch again will move the EIC to the SETUP Mode. To exit and return to the Normal Operating Mode turn the ignition key switch to the “OFF” position.

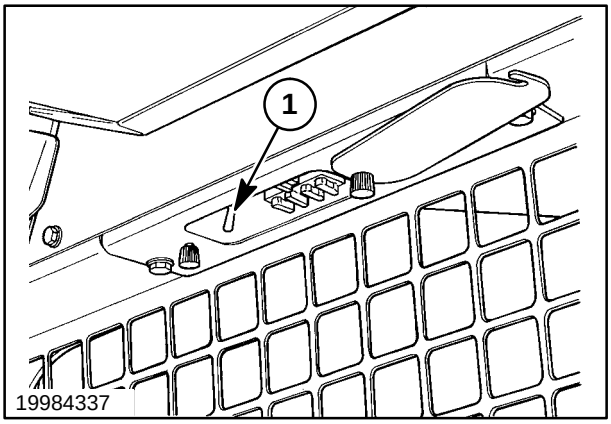

38

https://truckmanualshub.com/

EIC SETUP MODE

The EIC Setup Mode is made up of several items:

FAULt - Fault/Warning history

- Fault occurrence with hour level of last occurrence.

Eng 0 0 - Engine Code

- Set EIC to loader engine model.

Unit F or Unit C - Select Displayed Temperature Units, Fahrenheit or Celsius

- Temperature displayed in Metric (Celsius) or English (Fahrenheit).

r-CAL - Adjust Engine RPM

- Calibrate EIC display to external RPM tach reading.

CLr F - Clear Faults

- Clear Faults to zero.

HourS - Adjust skid-steer loader hours

- Change unit hours when installing a new EIC board in a loader.

CLr E - Clear Memory

- Return EIC to original factory settings.
- Engine code reset to (01).
- Hours reset to (0000.0) zero.
- Temperature displayed (Fahrenheit).
- Engine RPM calibration cleared.

https://truckmanualshub.com/

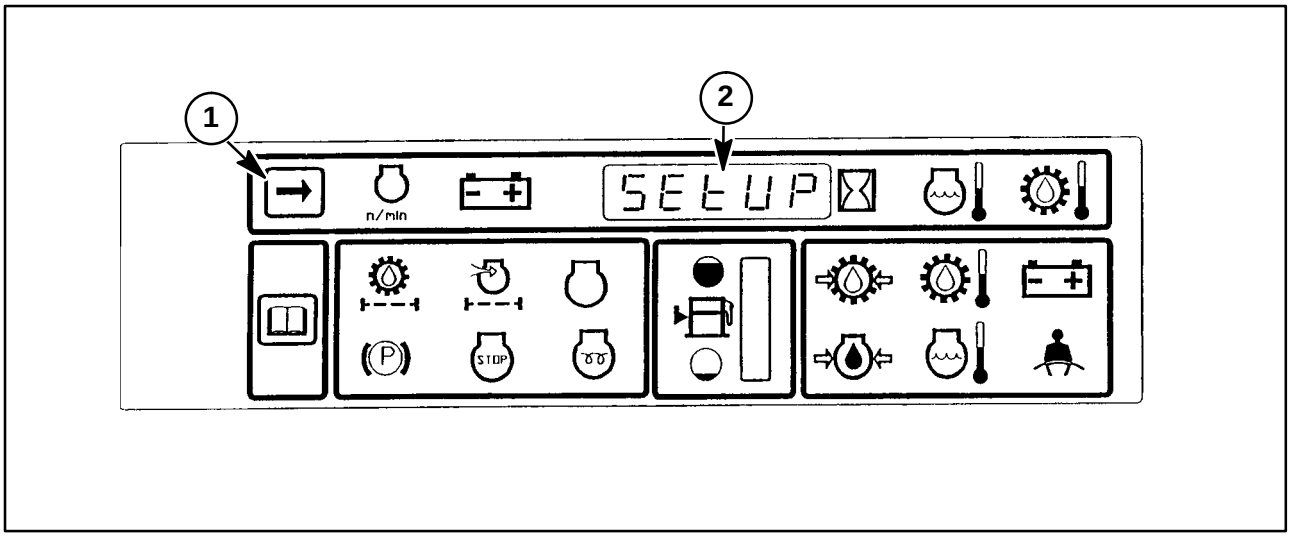

39

FAULt - Fault/Warning history
With display showing “LOC_ _” for lock.

1. Press and release the “ARROW” switch, 1; “dIAg” will appear in the character display. Then press and release the “ARROW” switch again; “SEtUP” will appear in the display, 2.

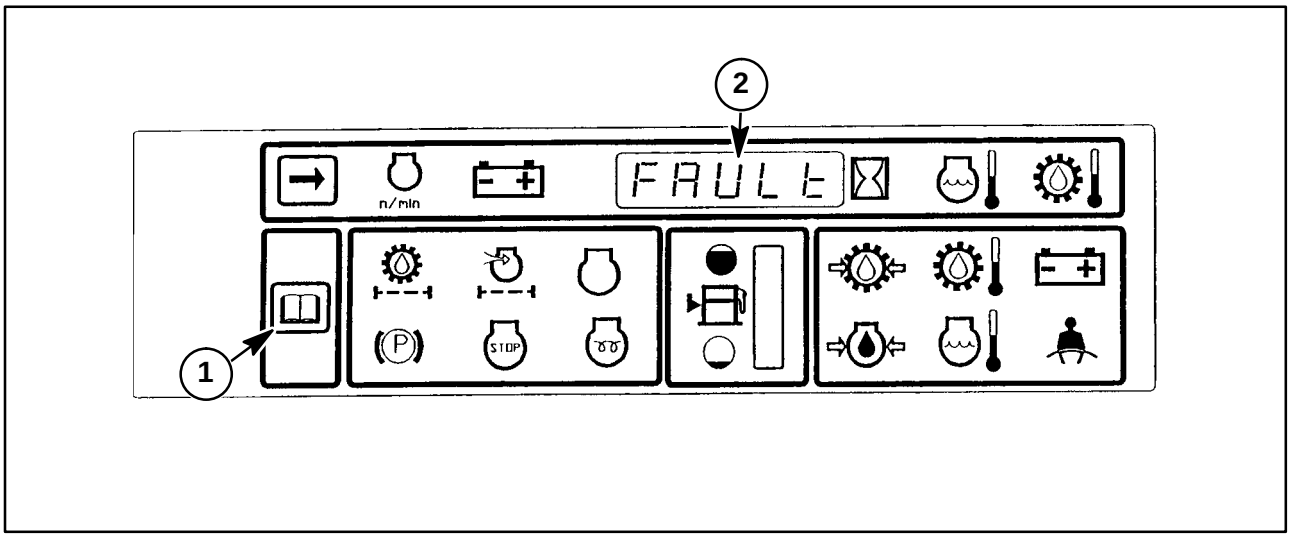

40

2. Press and hold the “OPEN BOOK” switch, 1, until “FAULt” appears in the character display, 2.

https://truckmanualshub.com/

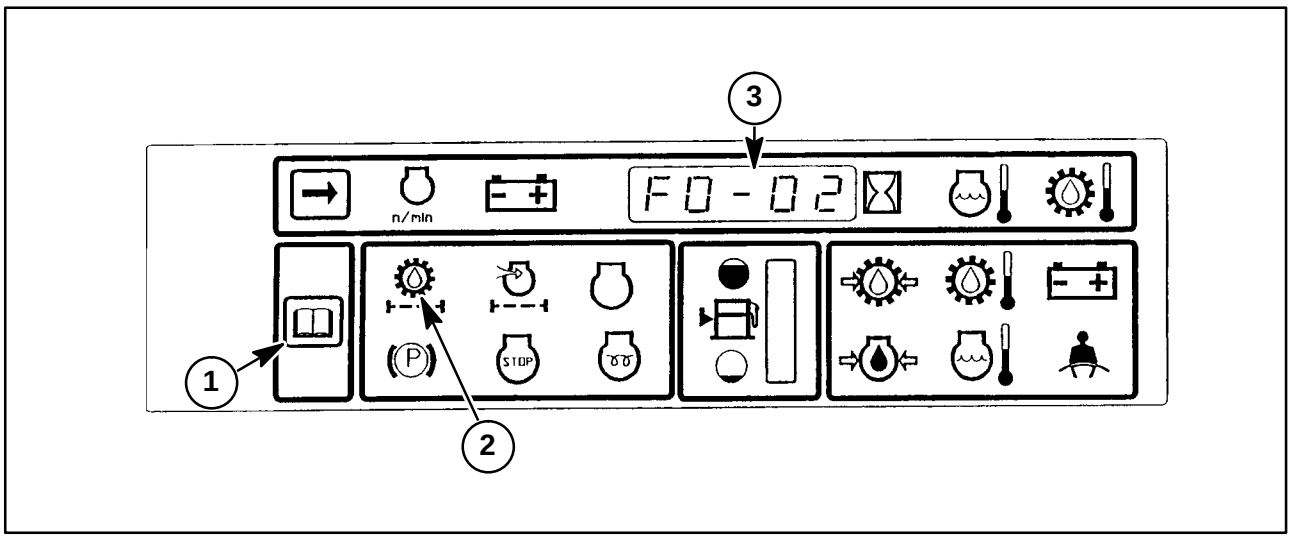

41

Press and hold the “OPEN BOOK” switch, 1, until “F0-XX” appears in the display. The “F0” is the fault and the “XX” is the number of occurrences of that fault since the fault memory was last cleared. The fault code display will be accompanied by an illuminated front panel symbol identifying the fault. Thus, “F0” is identified via the illuminated oil filter symbol, 2, example “F0-02” is showing in display, 3, F0 code with 02 occurrences.

Press and release the “OPEN BOOK” switch will display the hour of the last occurrence, for this code, example “0565.3” hours. Pressing and releasing the “OPEN BOOK” switch will return the EIC to the fault code.

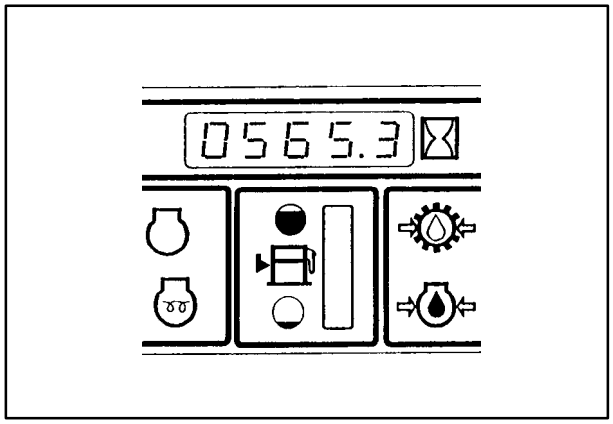

42

https://truckmanualshub.com/

Pressing and releasing the “ARROW” switch again will forward to the next fault “F1-00” and pressing and releasing the “OPEN BOOK” switch again will display the hour of the last occurrence if any fault occurrences were shown. Use this procedure to go through all the fault codes:

FAULT CODES	FAULT	SYMBOL LIGHT
F0-00	Hydraulic oil filter	Oil filter
F1-00	Engine air cleaner	Air cleaner
F2-00	Not used	Blank
F3-00	Engine preheat	Preheat
F4-00	Fuel solenoid	Fuel level bar lights
F5-00	Engine coolant temperature	Engine coolant
F6-00	Hydrostatic transmission charge pressure	Charge pressure
F7-00	Transmission/Hydraulic oil temperature	Oil temperature
F8-00	Battery voltage	Battery
F9-00	Engine oil pressure	Oil pressure
FA-00	Hydraulic boom/bucket solenoid	Seat belt

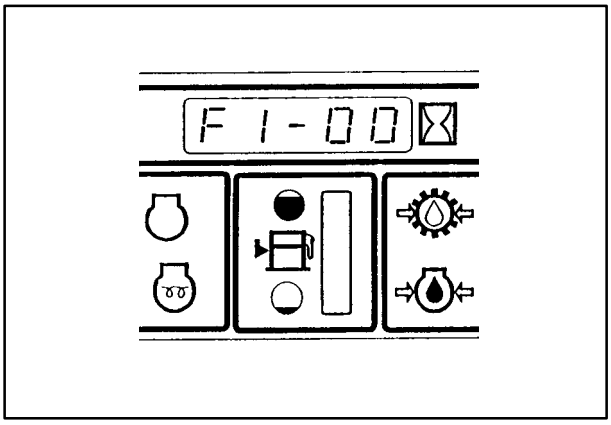

43

https://truckmanualshub.com/

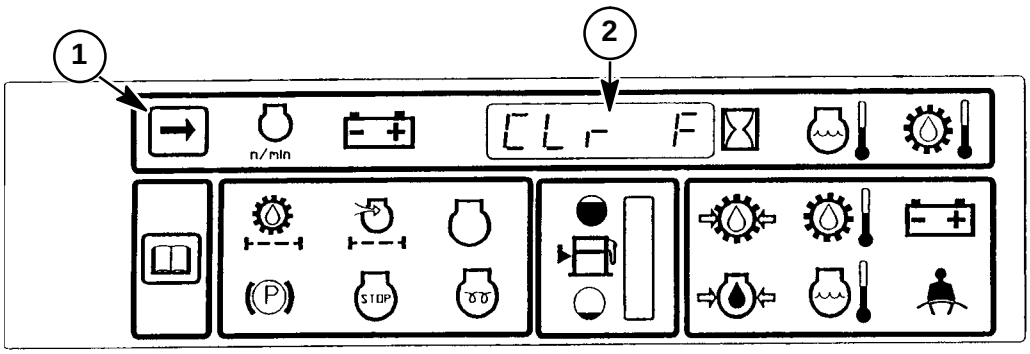

44

Once all faults have been identified, the fault history can be cleared to zero.

To return to “FAULt” and clear the faults, press and hold the “ARROW” switch, 1, until the original “FAULt” item is displayed in the character display.

Press and release the “ARROW” switch, 1, until “CLr F” appears in the character display, 2.

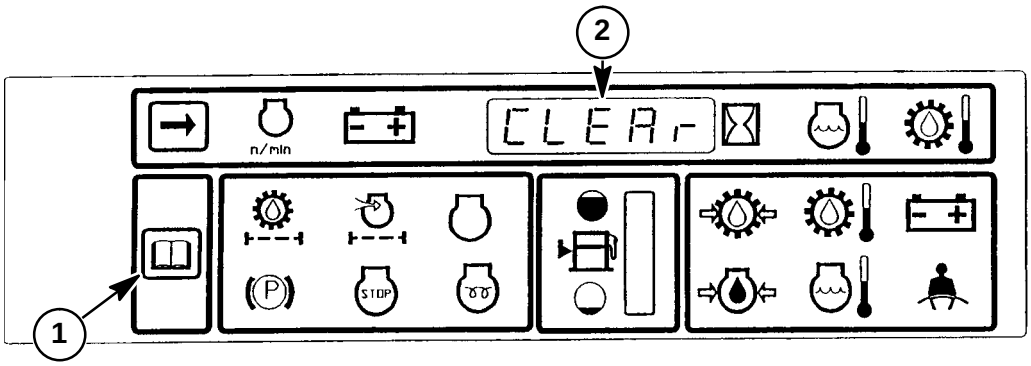

45

Press and hold the “OPEN BOOK” switch, 1, until “CLEAr” appears in the display, 2. Then release the switch to clear all fault occurrences from the fault history memory.

To exit this item, press and hold the “ARROW” switch to return to the “SEtUP” mode, or turn the ignition key switch to the “OFF” position to return the EIC to the Normal Operating Mode.

https://truckmanualshub.com/

Eng 0 0 - Engine Code
With display showing “LOC_ _” for lock:

1. Press and release the “ARROW” switch; “dIAg” will appear in the character display. Then press and release the “ARROW” switch again; “SEtUP” will appear in the display.
2. Press and hold the “OPEN BOOK” switch until “FAULt” appears in the character display; release switch.
3. Press and release the “ARROW” switch until “EngXX” (XX=current engine code) appears in the display, 1.
4. Press and hold the “OPEN BOOK” switch until the left digit starts to flash; release switch.
5. Press and release the “OPEN BOOK” to enter a zero (0) into the left digit of the engine code.
6. Press and release the “ARROW” switch; the right digit will flash.
7. Press and release the “OPEN BOOK” switch to enter the right number of the engine code (Example “Eng 01” for the LS160 and LS170 skid steers is shown in display 1).

The engine code is as follows:

01 - LS160, LS170

To exit this item, press and hold the “ARROW” switch two times to return to the “SEtUP” mode item list, or turn the ignition key switch to the “OFF” position to return the EIC to the normal operating mode.

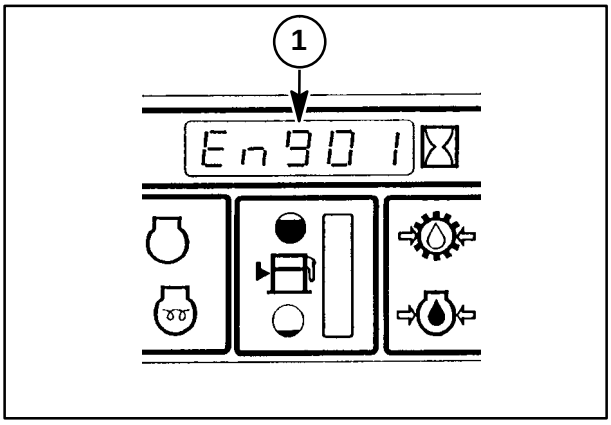

46

https://truckmanualshub.com/

Unit F or Unit C (EIC Reading Fahrenheit or Celsius)
With display showing “LOC_ _” for lock.

1. Press and release the “ARROW” switch; “dIAg” will appear in the character display. Then press and release the “ARROW” switch again; “SEtUP” will appear in the display.
2. Press and hold the “OPEN BOOK” switch until “FAULt” appears in the character display; release switch.
3. Press and release the “ARROW” switch until “Unit F” or “Unit C” appears in the character display, 1.
4. Press and hold the “OPEN BOOK” switch until the rightmost letter flashes, then release the switch.
5. Press and release the “OPEN BOOK” to change from C to F or F to C.
   - Unit F will read temperature degrees in Fahrenheit
   - Unit C will read temperature degrees in Celsius

To exit this item press and hold the “ARROW” switch two times to return to the “SEtUP” mode item list or turn the ignition key switch to the “OFF” position to return the EIC to the Normal Operating Mode.

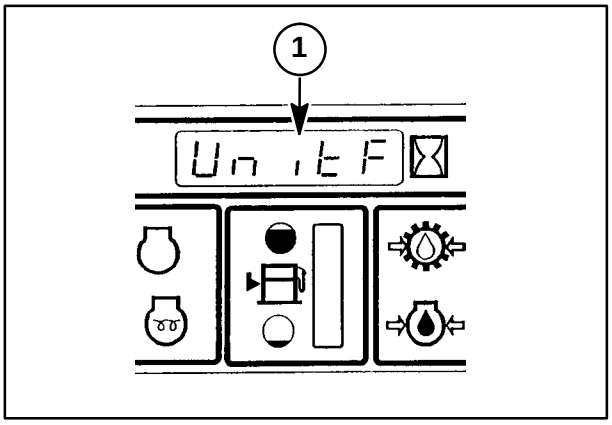

47

r-CAL - Adjust Engine RPMS
With display showing “LOC_ _” for lock.

1. Press and release the “ARROW” switch; “dIAg” will appear in the character display. Then press and release the “ARROW” switch again; “SEtUP” will appear in the display.
2. Press and hold the “OPEN BOOK” switch until “FAULt” appears in the character display, release switch.
3. Press and release the “ARROW” switch until “r-CAL” appears in the character display, 1.

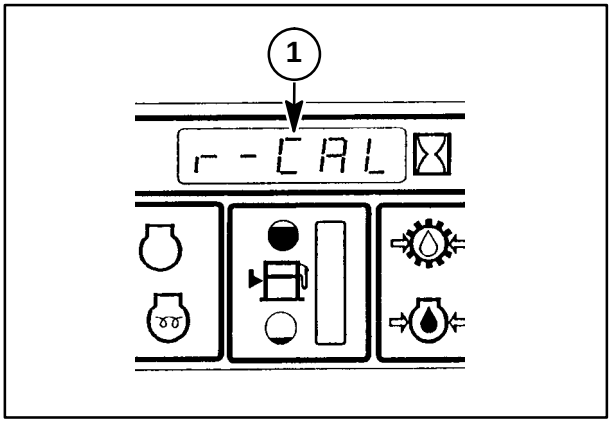

48

https://truckmanualshub.com/

4. Press and hold the “OPEN BOOK” switch until all zeros are displayed in the character display. Upon releasing of the switch only the right zero will be showing in display, 1.

5. Buckle the seat belt and start the engine. Using a hand held photo-tach or other accurate measuring device, check the engine RPM at high idle (full throttle). Compare the hand held tach reading to the EIC RPM reading.

6. Press and release the “OPEN BOOK” or “ARROW” switches to change the EIC reading to match the tach at high idle. Pressing the “OPEN BOOK” switch will decrease the reading and pressing the “ARROW” switch will increase the reading.

   For best results, RPM should be calibrated at full throttle only.

NOTE: *The “OPEN BOOK” or “ARROW” switches may have to be pressed multiple times to change the reading, this is normal. When changing the high idle reading, the low idle reading will have a slight change.*

To exit this item, turn the ignition key switch to the “OFF” position to return the EIC to the Normal Operating Mode.

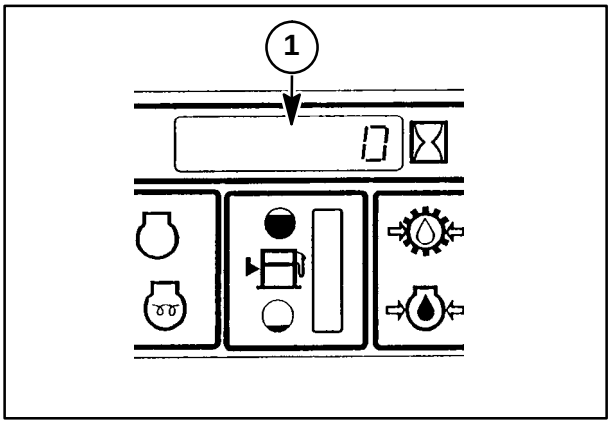

49

https://truckmanualshub.com/

ELECTRONIC INSTRUMENT CLUSTER (EIC) AND STARTER CIRCUITS:

BLOWN FUSE SYMPTOMS AND TESTING

Electronic Ignition Fuse, 1
(Cab Fuse Panel - 5A)
Service/Run Switch “Run” Position

1. Board shows self test (with operator in seat).
2. Board shows 5.2 volts.
3. Board seat belt and park brake lights will flash.
4. Board seat belt light will go off when seat belt is buckled. Park brake light will still flash.
5. Key “ON” position - board will show 5.2 volts and no preheat cycle.
6. Engine will crank but will not start.
7. Toggle Service/Run switch to “SERVICE” position - unit will start.

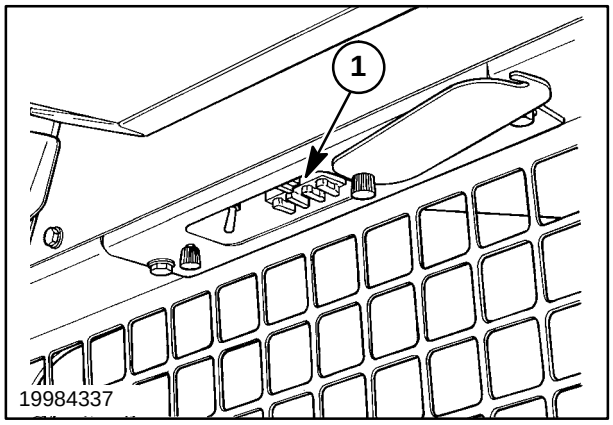

50

Electronic Battery Fuse, 1
(Engine Fuse Panel - 5A)
Service/Run Switch “Run” Position

1. When operator sits in seat, the board will not power up - no readings.
2. Unit will not crank.
3. Toggle Service/Run Switch to - “SERVICE” position - unit will crank and may start if engine is warm, NO preheat is available.

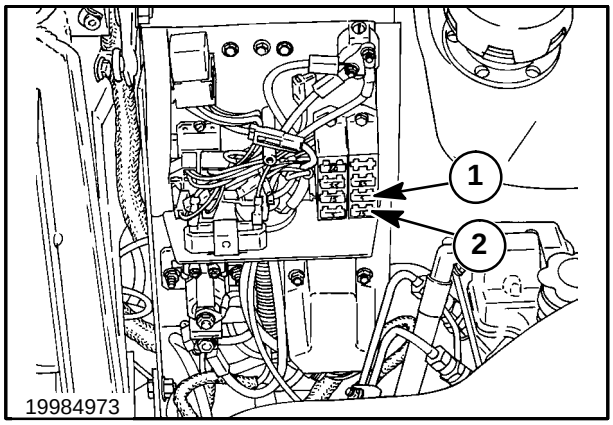

51

Key Main Fuse, 2
(Engine Fuse Panel - 15A)
Service/Run Switch “Run” Position

1. Board will power up and self test.
2. Board seat belt and park brake lights will flash.
3. Board seat belt light will go off when seat belt is buckled; the park brake light will still flash.
4. Key on - system dead.
5. Toggle Service/Run Switch to “SERVICE” position - system dead.

https://truckmanualshub.com/

IMPORTANT: *If any servicing or adjustments require the battery to be disconnected, or welding is required on the skid-steer loader, disconnect the negative (–) ground cable. Failure to disconnect the battery may result in damage to the EIC (Electronic Instrument Cluster) monitoring system and other electrical components.*

IMPORTANT: *If the EIC requires removal from the dash area or the skid-steer loader, disconnect the negative (–) ground battery cable. This will shut off power to the EIC and prevent damage to the EIC board, or prevent blowing the 5-amp fuses, if the board is accidentally grounded.*

IMPORTANT: *Do not use magnetized tools while working around the EIC board or damage to the EIC may occur.*

To test for a blown fuse, remove the fuse from the fuse block and visually examine the fuse link. If the fuse link is blown, replace the fuse.

If the fuse link appears OK, check the fuse with an ohmmeter and check for continuity across the fuse legs; if there is continuity, the fuse is OK.

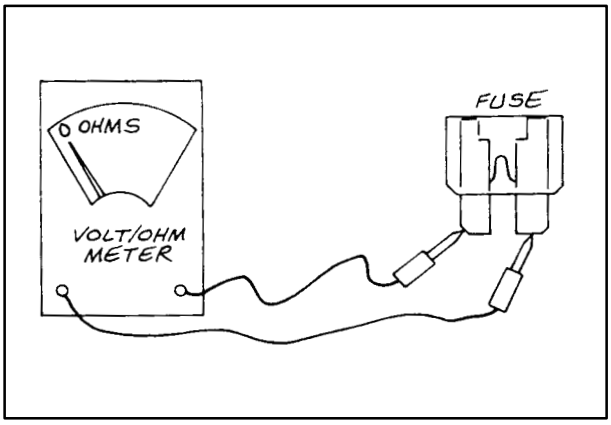

52

https://truckmanualshub.com/

TESTING OTHER EIC FUNCTIONS

NOTE: *These tests are performed with the EIC in the normal operating mode and the "SERVICE/RUN" switch in the "RUN" position.*

1. Parking Brake Light

Sit in the seat with the seat belt buckled. After the EIC board self test, the parking brake light, 1, should flash. Turn the ignition key to the "ON" position and the light should go off. If the light fails to go off, check the 5-amp fuse in the cab fuse panel.

When exiting the loader, the light should flash for about 2 seconds after the seat belt is unbuckled and the operator is out of the seat.

If the light does not flash when the seat belt is unbuckled, check operation of the seat belt switch and the seat switch.

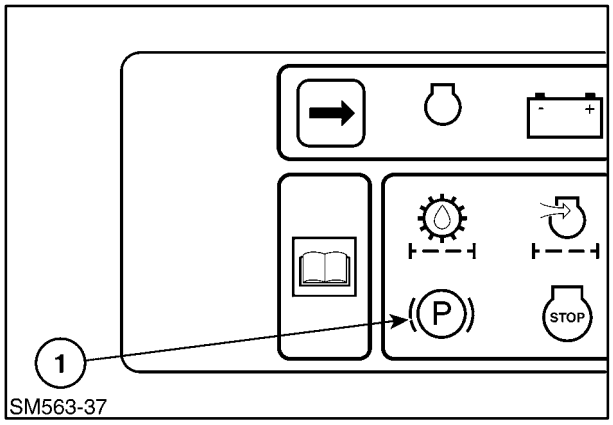

53

2. Seat Belt Light

Sit in the seat. After the EIC board self tests, the seat belt light, 1, will flash until the seat belt is buckled.

If the light continues to flash after the seat belt is buckled, check operation of the seat belt switch.

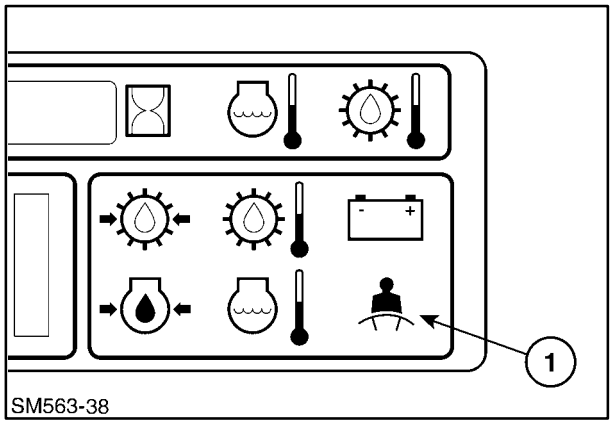

54

https://truckmanualshub.com/

3. Boom and Bucket Spool Locks, 1
(Control valve spools in neutral and boom and bucket resting on the ground)

   a. Sit in the seat. After the EIC board self tests, turn the ignition switch to the “ON” position. The boom and bucket controls should not move. If OK, go to the next step. If the controls can be moved, check the solenoids for operation and check the control linkage and valve spool centering for binding causing the spools not to center to the neutral position.

   b. Sit in the seat, buckle the seat belt and try moving the boom and bucket controls. The controls should not move. If OK, go to the next step. If the controls can be moved, check the solenoids for operation and check the control linkage and valve spool centering for binding causing the spools not to center to the neutral position.

   c. Sit in the seat, buckle the seat belt, and turn the ignition switch to the “ON” position. If the controls move allowing boom and bucket operation, go to the next step. If the controls do not move, check the solenoids for operation and for battery voltage at the solenoids.

   d. Sit in the seat, buckle the seat belt, and turn the ignition switch to the “ON” position. Move the controls and return the controls to the centered (neutral) position. Unbuckle the seat belt. Try moving the controls; they should be locked. Rebuckle the seat belt; the controls should move allowing boom and bucket movement.

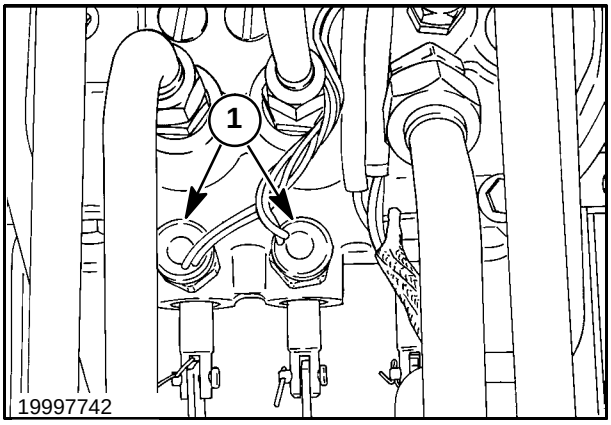

55

https://truckmanualshub.com/

4. Boom and Bucket Spool Lock Solenoid Test

(Voltage Test)

To perform the following test, the operator must be sitting in the seat, seat belt buckled, and the ignition “key” switch in the “RUN” position.

a. Unplug one solenoid at a time and check for battery voltage at the main wire harness connector, 1, between the PK/LTBL wire side of the connector and the B wire side of the connector. If there is battery voltage, proceed to checking solenoid resistance.

b. If there is no battery voltage between the PK/LTBL wire and the B wire, check for battery voltage between the PK/LTBL wire and frame ground. If there is battery voltage, check the “B” ground wire of the solenoid circuit for open circuit. If there is no battery voltage, check the PK/LTBL power wire for an open circuit.

(Ohms Test)

With the ignition “key” switch in the “OFF” position:

a. Unplug one solenoid at a time, 1, and check ohms resistance of the solenoid coils, 15 to 18 ohm range.

b. If solenoid coils are not within the ohms resistance range, 15 to 18 ohms, replace the solenoid coil.

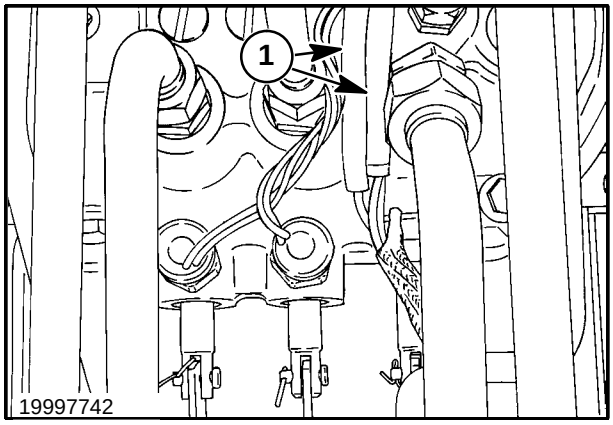

56

https://truckmanualshub.com/

EIC BOARD READING ACCURACY

EIC board readings for the digital display, including RPM, Battery Voltage, Hourmeter, Engine Coolant Temperature, or Hydraulic Oil Temperature may not be accurate or may have no reading when selected.

Complaints usually follow installation of an optional kit or customer-installed option, or complaints can arise after a machine repair such as engine overhaul or cab tilting. However, occasionally a concern on a standard machine with no modifications is reported.

If the EIC board was operating correctly before any repair or kit installation occurred, the possible cause may be improper electrical system grounding. If working on a new machine, grounding points should be checked before any replacement of components is considered.

THE ONLY ACCEPTABLE GROUND POINTS IN THE CAB AREA ARE TO THE GROUND STUD ON THE ROPS RIGHT SIDE NEAR ELECTRICAL PANEL, 1, OR TO THE AUXILIARY POWER KIT SOCKET WHICH IS WIRED TO THE BELL HOUSING GROUND. NO ACCESSORIES MAY BE GROUNDED TO THE CAB INTERLINER ON THESE skid steers BECAUSE SOME OR ALL OF THE CURRENT COULD PASS THROUGH THE EIC.

NOTE: *When attaching ground wires to the cab ground stud, always place the heaviest ground wire next to the ground surface and then stack the remaining ground wires according to wire size, largest on the bottom and smallest last.*

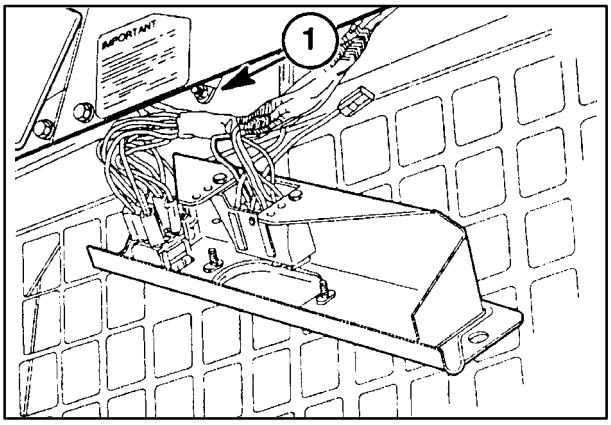

57

https://truckmanualshub.com/

All grounding locations should be checked for tight hardware and absence of paint between parts for good connecting, as follows:

1. Check the grounding strap from the engine to main frame, 1.
2. Check the wiring harness from the EIC to the bell housing.

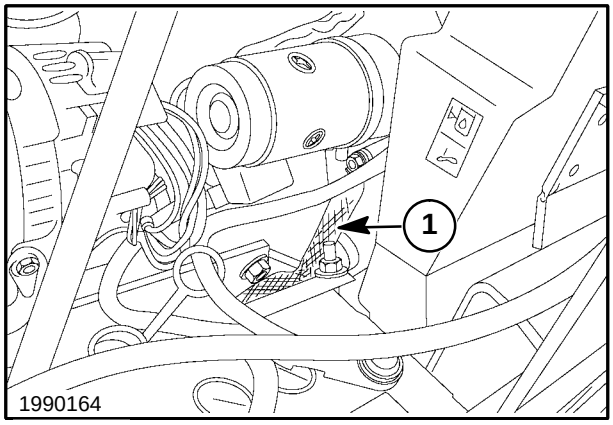

58

3. Check the grounding strap from the cab ROPS structure to main frame, 1.

   On the grounding strap from the ROPS to the main frame, be sure the strap is attached between the ROPS and the main frame (yellow lower frame). DO NOT attach the strap between the cab interliner (cab side screen sections) and the main frame, as the cab interliner on these skid steers is rubber-mounted to the ROPS and, therefore, insulated from the ROPS. However, a second strap may be added between the cab interliner and the main frame and should cause no ill effect.

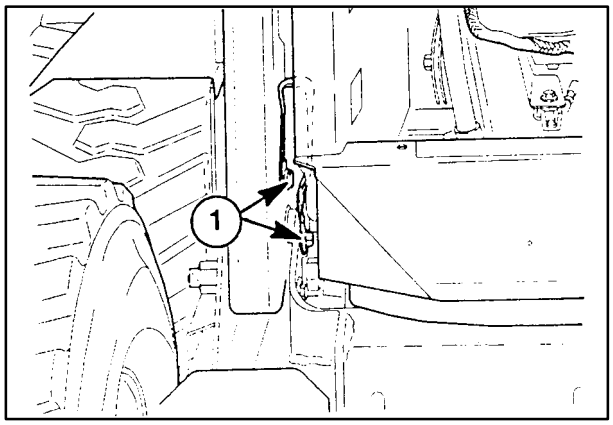

59

4. Check the wiring harness grounds to the bell housing, 1.

NOTE: *When attaching multiple ground wires, always place the heaviest ground wire (battery ground cable) next to the ground surface (bell housing). Stack the remaining ground wires according to wire size, largest on the bottom and smallest last. Two wires in a terminal are considered to be larger than a single wire of the same size.*

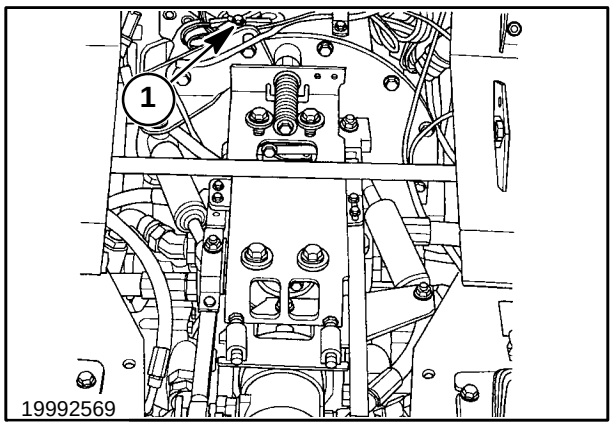

60

https://truckmanualshub.com/

EIC BOARD CLAIMS WARRANTY

When filing a warranty claim for a defective EIC (Electronic Instrument Cluster) board, include the part number and serial number on the white tag of the defective board.

The EIC board part number, 1, and this number must be used as the causal part number.

Also include the EIC board serial number located at 2, in the description of failure section of the warranty claim, along with a description of the type of EIC board failure.

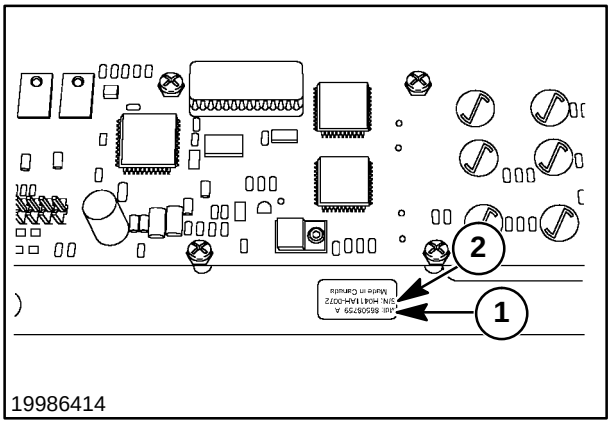

61

Handling the EIC Board

The EIC board is shipped in an anti-static bag and box. The board must be kept in this bag and box, until required for a repair, to prevent damage to the EIC board.

When returning the EIC board for warranty or repair, it must be returned in the anti-static bag and box to prevent damage.

When installing a new EIC board, always disconnect the negative battery cable to prevent damage to the board from accidental grounding.

The board versions listed below are the EIC boards used on skid steers.

DO NOT replace a prior version board unless it is defective.

Troubleshoot any problems and only replace the board if it is determined to be the problem.

Boards returned as warranty and determined not to be defective will be debited back. All EIC boards claimed as warranty must be returned for review.

https://truckmanualshub.com/

ELECTRICAL CIRCUITS

EIC (ELECTRONIC INSTRUMENT CLUSTER)

The EIC board receives power from five different points.

1. Main power circuit, 12-volt battery, from the 5-amp fuse in the engine fuse panel.
2. The ignition switch, 12-volt ignition circuit.
3. Seat switch circuit.
4. The seat belt switch circuit.
5. The ignition switch, 12-volt accessory circuit.

MAIN POWER CIRCUIT TO EIC BOARD

Battery voltage

The power originates at the battery and proceeds through the (R) battery cable to the starter solenoid. From there power continues through the (R) wire to the battery side of the start relay. The power continues through the (R) wire to the preheat circuit breaker, then through the (R) wire to the engine fuse panel (standard fuse block), battery side of the key main 15-amp fuse with a terminal bus to the battery side of the electronics 5A fuse. The power continues through the (R/LTGN) wire to pin number 14 of connector P2 (12-volt battery terminal) at the EIC board.

EIC BOARD GROUND CIRCUIT

The EIC board is grounded from connector P2 terminal 13 through the (B) wire to the engine ground at the bell housing.

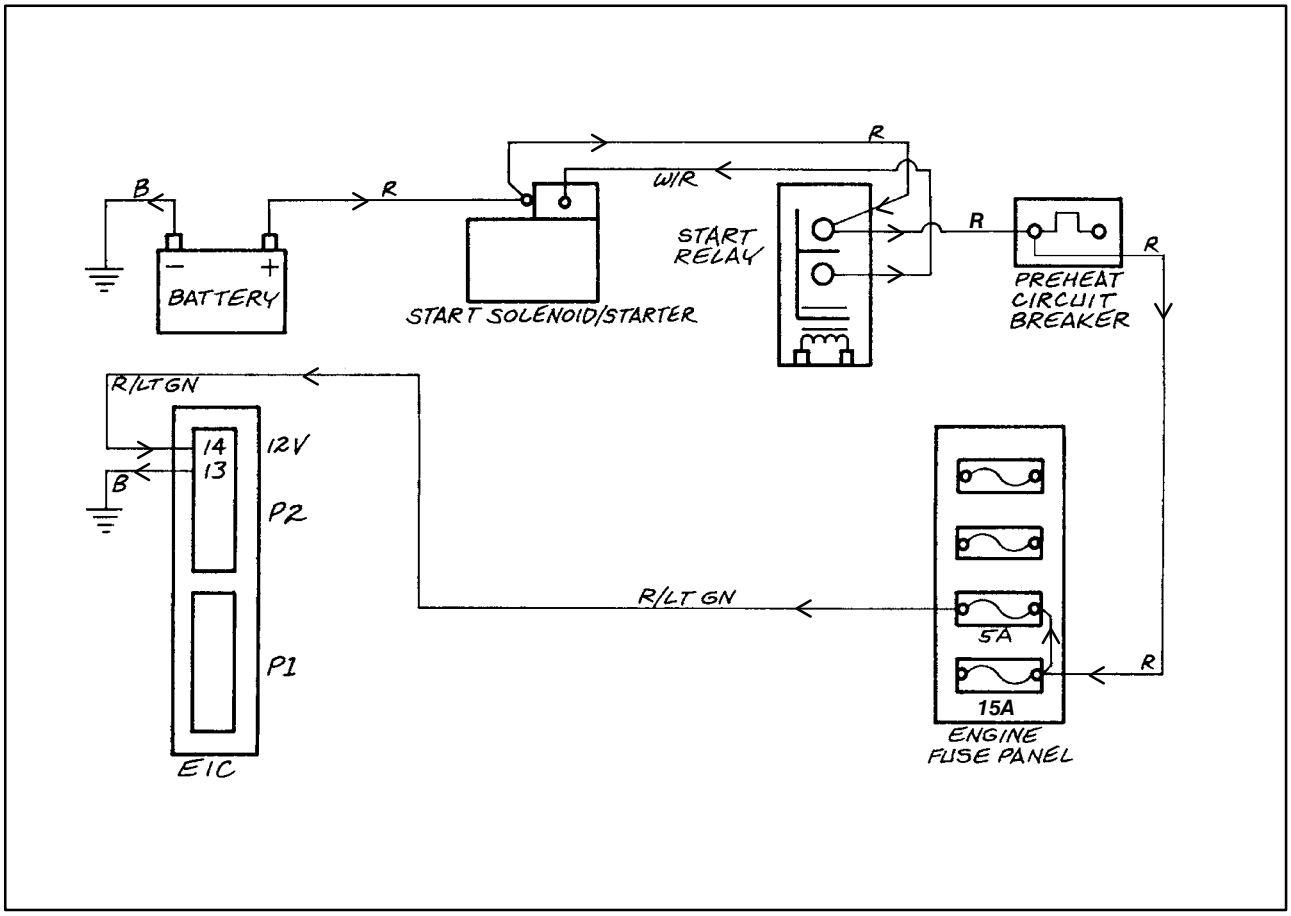

62

https://truckmanualshub.com/

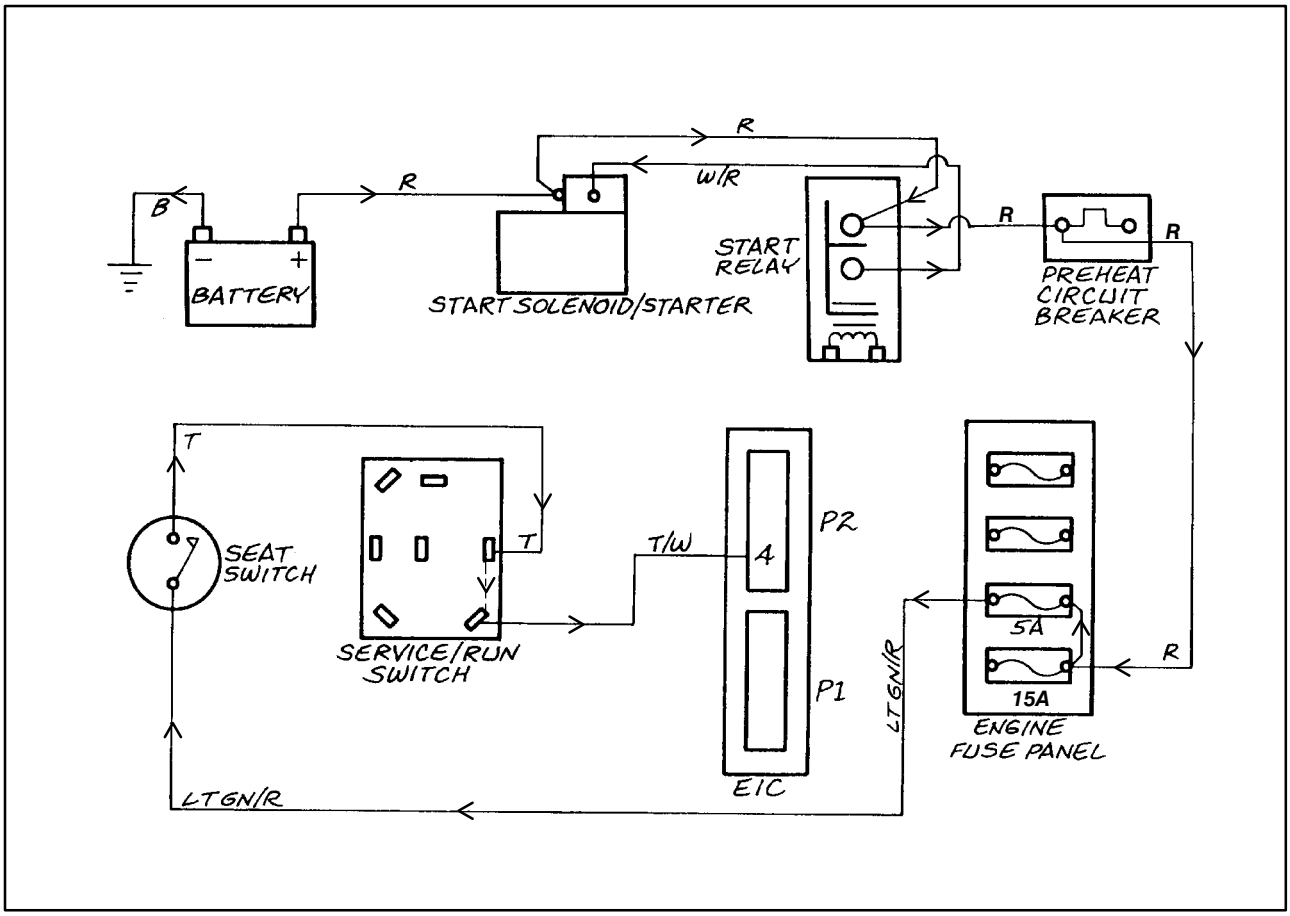

63

SEAT SWITCH CIRCUIT TO EIC BOARD

Battery voltage

The power originates at the battery and proceeds through the (R) battery cable to the starter solenoid.

From there power continues through the (R) wire to the battery side of the start relay.

The power continues through the (R) wire to the preheat circuit breaker, then through the (R) wire to the engine fuse panel (standard fuse block) battery side of the key main 15-amp fuse with a terminal bus to the battery side of the electronics 5A fuse.

The power continues through the (LTGN/R) wire to the seat switch. When one seat switch (only 1 switch needs to be closed as switches are in parallel wiring) is pressed closed, the power then continues through the (T) wire to the Service/Run switch. When the service/run switch is in the “SERVICE” position, the power stops.

With the Service/Run switch in the “RUN” position, the power continues through the (T/W) wire to the EIC board terminal 4 of connector P2.

https://truckmanualshub.com/

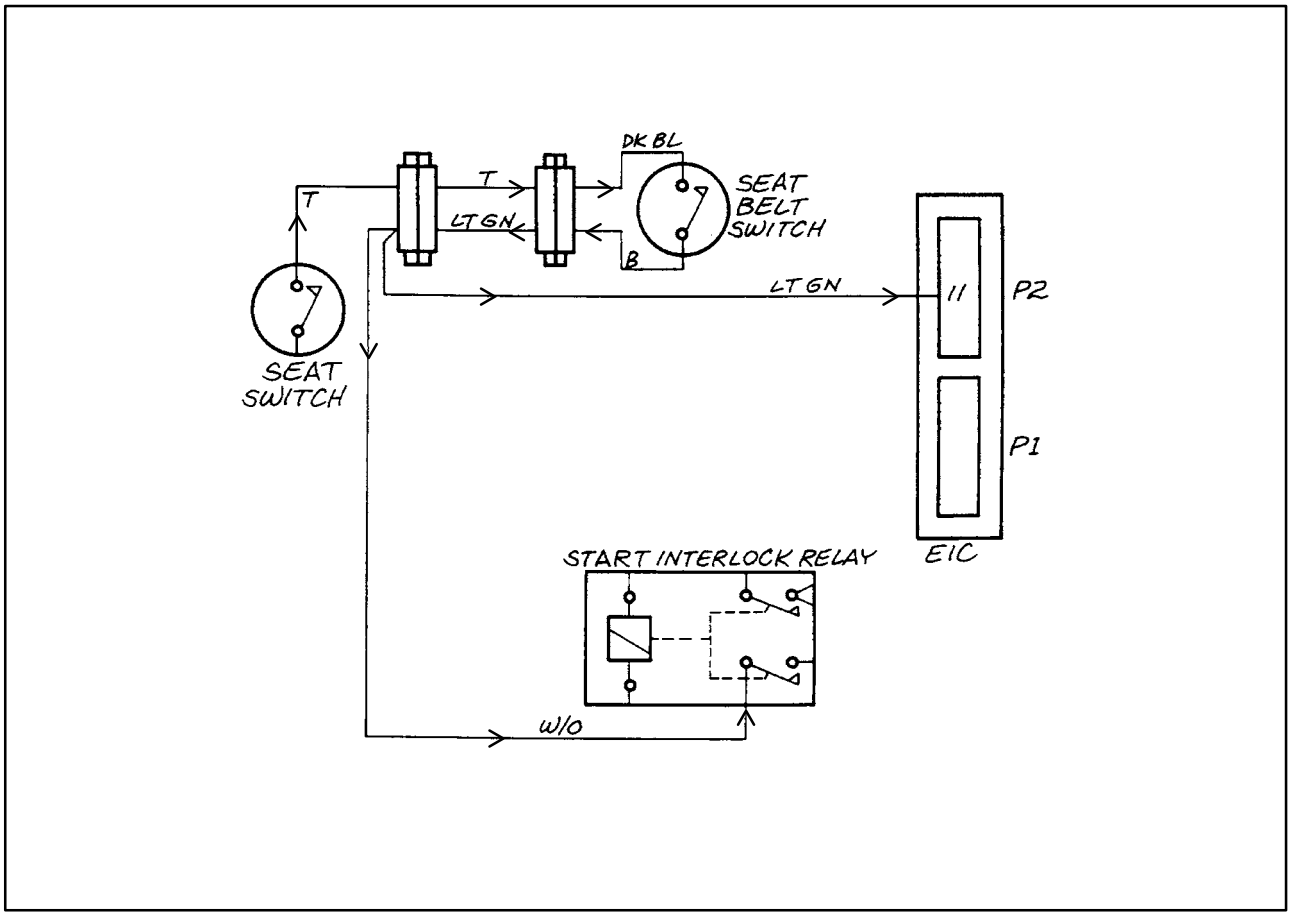

64

SEAT BELT SWITCH CIRCUIT TO EIC BOARD

Battery voltage

The power originates from the seat switch(es) through the (T) wire to the seat belt switch.

When the seat belt is buckled, the power proceeds through the (LTGN) wire to the EIC board terminal 11 of connector P2.

When the seat belt is buckled, power is sent through the (W/O) wire to the start interlock relay. This allows the unit to start when the seat belt is buckled.

https://truckmanualshub.com/

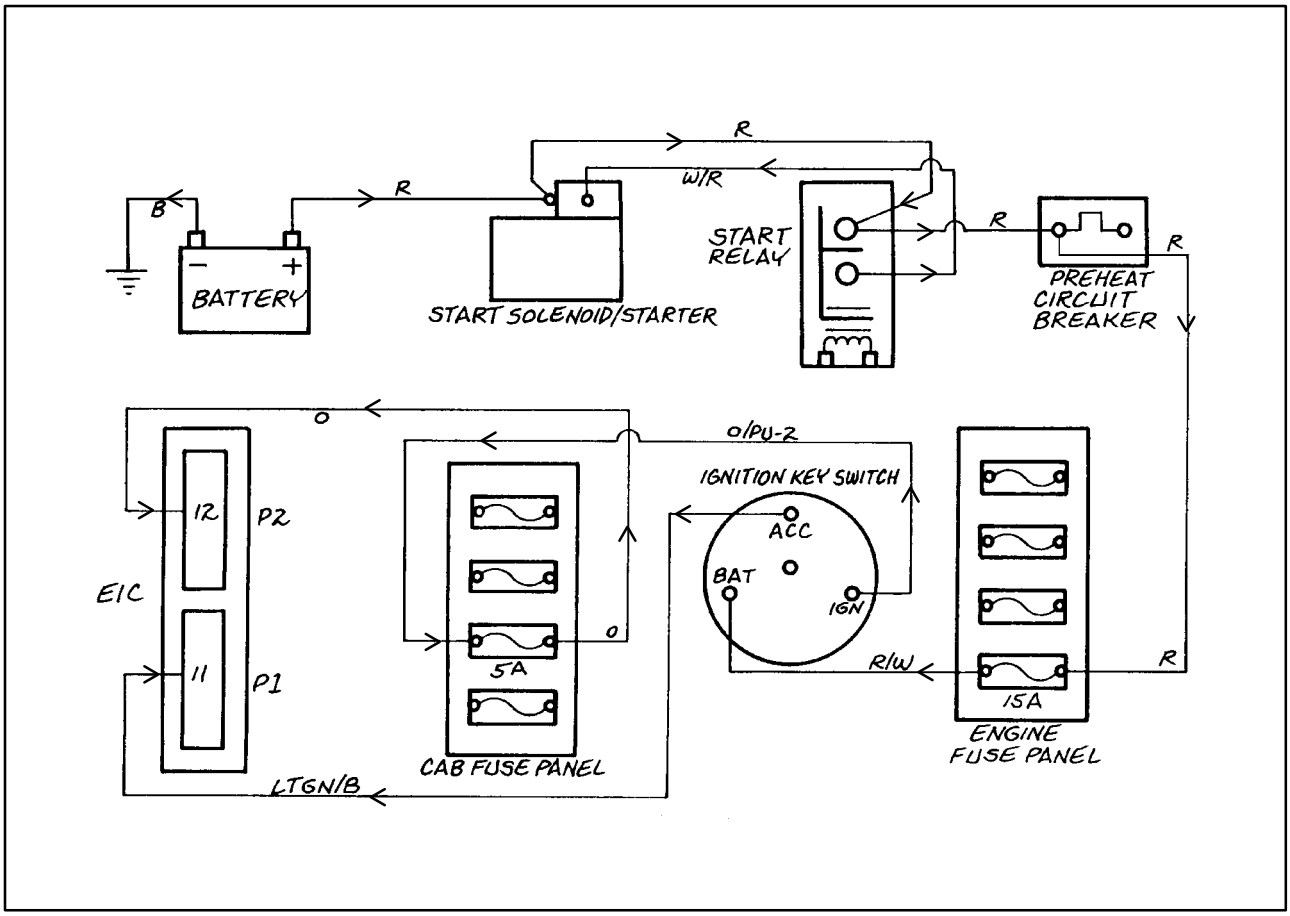

65

IGNITION SWITCH CIRCUIT TO EIC BOARD

Battery voltage

The power originates at the battery and proceeds through the (R) battery cable to the starter solenoid.

From there power continues through the (R) wire to the battery side of the start relay.

The power continues through the (R) wire to the preheat circuit breaker, then through the (R) wire to the engine fuse panel (standard fuse block) battery side of the key main 15-amp fuse.

The power continues through the (R/W) wire to the battery terminal of the ignition switch.

When the ignition key switch is turned to the “ON” position, power continues through the (O/PU-2) wire to the Electronics 5-amp fuse in the cab fuse panel.

The power continues through the (O) wire to terminal 12 of connector P2 at the EIC board.

NOTE: *Also, with Key Switch “ON” Engine “OFF,” voltage travels from the switch “ACC” terminal via the LTGN/B wire to terminal 11 of connector P1 to provide a warning of Key “ON” should the operator exit the loader.*

https://truckmanualshub.com/

CRANKING CIRCUIT (STARTER MOTOR)

Operating conditions with “SERVICE/RUN” switch in the “RUN” position:

To start the engine with the “SERVICE/RUN” switch in the “RUN” position, 1, the operator must be in the seat with the seat belt buckled. Then turn the key switch to the “START” position to activate the starter.

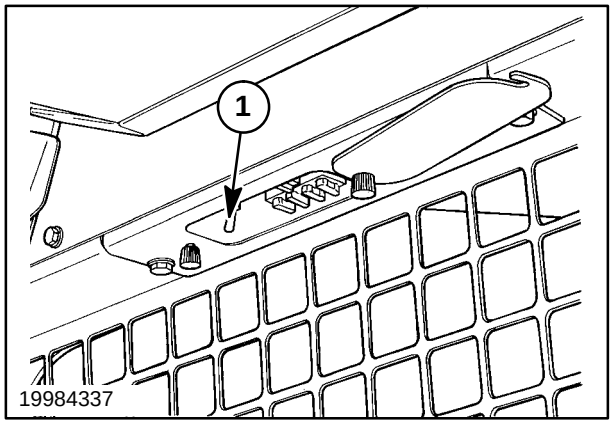

66

https://truckmanualshub.com/

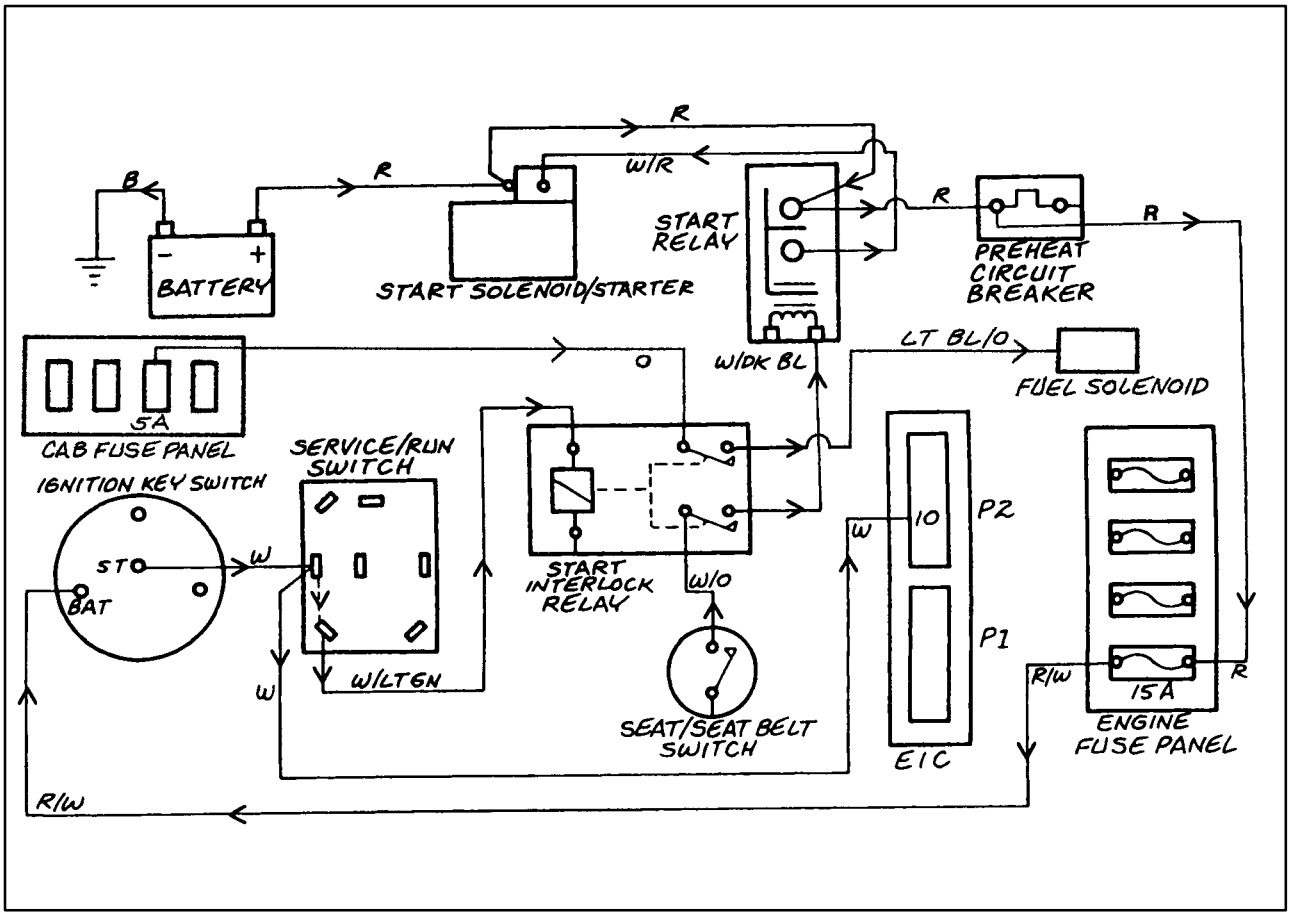

67

“SERVICE/RUN” SWITCH IN THE “RUN” POSITION

The power originates at the battery and flows through the (R) positive battery cable to the starter solenoid. From here the power flows through the (R) wire to the battery side of the start relay.

The power then flows through the (R) wire to the preheat circuit breaker and to the engine fuse panel to the 15A key main fuse.

The power then flows through the (R/W) wire to the battery terminal on the ignition key switch.

With the key switch in the “START” position, current flows through the (W) wire to the service/run switch. Power also flows through the (W) wire to connector P2 terminal 10-key start at the EIC board.

Power then flows from the service/run switch through the (W/LTGN) wire to the start interlock relay coil terminal.

With the interlock energized, the power from the seat/seat belt circuit (W/O) wire flows through the (W/DKBL) wire to the start relay to activate the relay.

Power also flows from the start interlock relay through the LTBL/O wire to the fuel solenoid to open the solenoid, allowing fuel flow to the injection pump.

When the start relay is activated, power goes through the (W/R) wire to the starter solenoid, which connects battery power to the starter motor.

https://truckmanualshub.com/

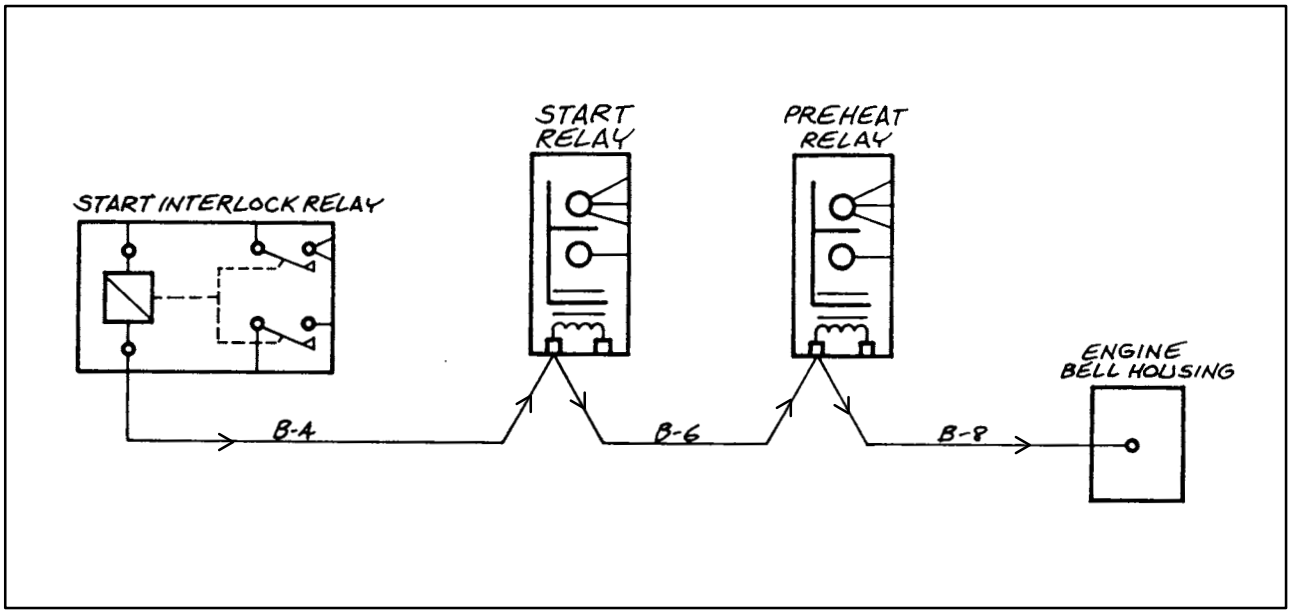

68

CRANKING CIRCUIT GROUND

The start interlock relay is grounded through the (B-4) wire to the ground terminal on the start relay. The system ground (B-6) wire then goes to the ground terminal of the preheat relay. The system ground (B-8) wire then goes to the engine ground at the bell housing.

OPERATING CONDITIONS “SERVICE/RUN” SWITCH IN THE “SERVICE” POSITION

To start the engine with the “SERVICE/RUN” switch, 1, in the “SERVICE” position, the starter will be activated any time the key switch is turned to the “START” position.

NOTE: *If manual preheat is required, the operator must be in the seat.*

NOTE: *The boom and bucket control valve spool locks will remain inoperative with the “SERVICE/RUN” switch in the “SERVICE” position.*

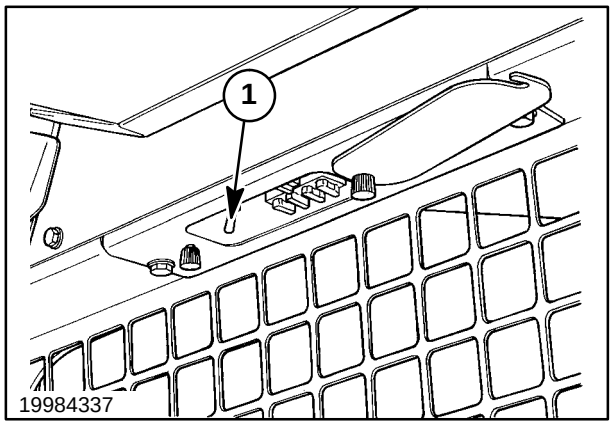

69

https://truckmanualshub.com/

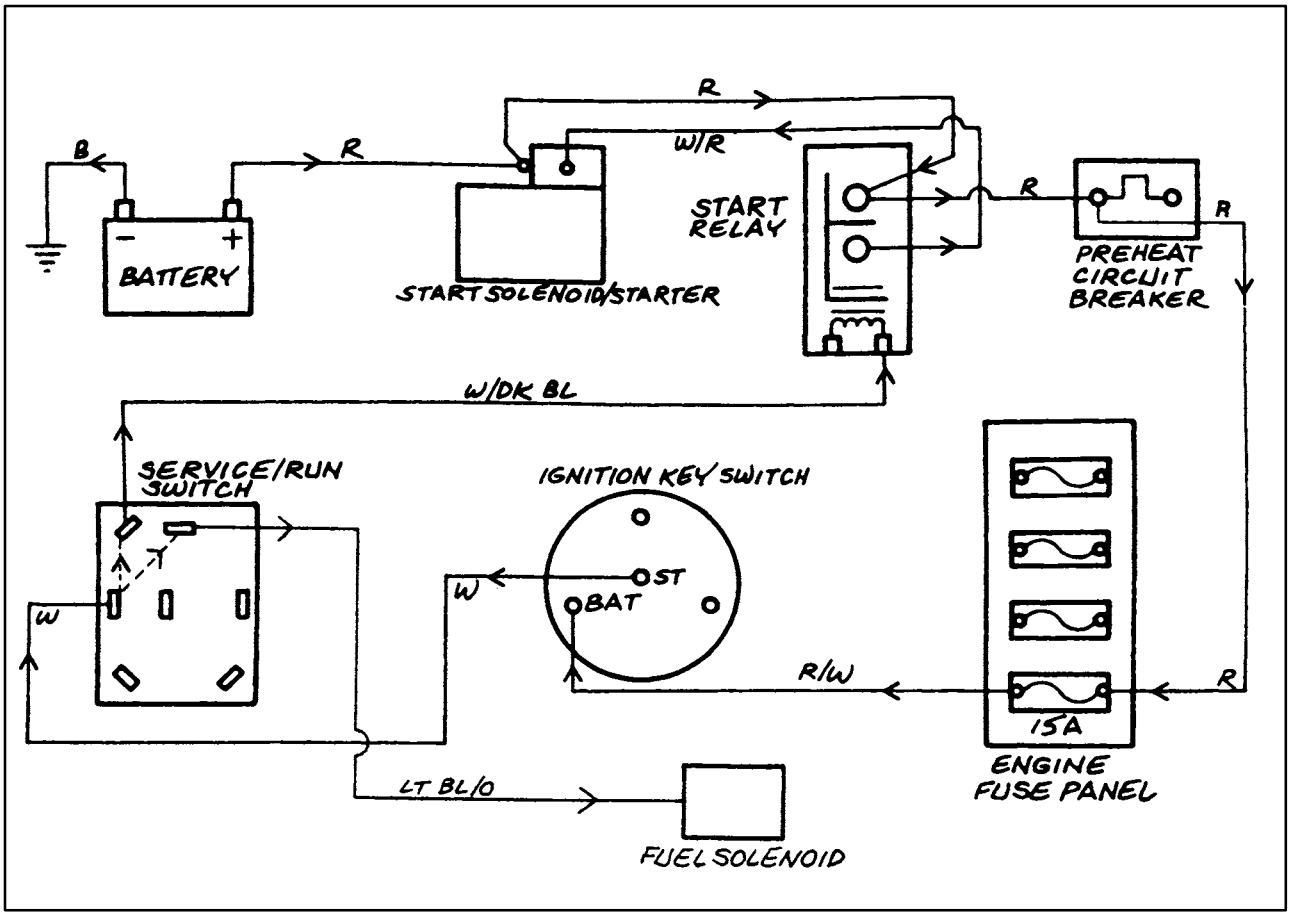

70

SERVICE/RUN SWITCH IN THE “SERVICE” POSITION

The power originates at the battery and flows through the (R) positive battery cable to the starter solenoid. From here the power flows through the (R) wire to the battery side of the start relay.

The power then flows through the (R) wire to the preheat circuit breaker and to the engine fuse panel to the 15A key main fuse.

The power then flows through the (R/W) wire to the battery terminal on the ignition key switch.

With the key switch in the “START” position, current flows through the (W) wire to the service/run switch.

With the service/run switch in the “SERVICE” position, power goes through the (W/DKBL) wire from the service/run switch to the start relay to activate the relay.

When the start relay is activated, power goes through the (W/R) wire to the starter solenoid, which connects battery power to the starter motor.

With the service/run switch in the “SERVICE” position, power goes through the LTBL/O wire from the service/run switch to the fuel solenoid, opening the solenoid to allow the engine to start.

https://truckmanualshub.com/

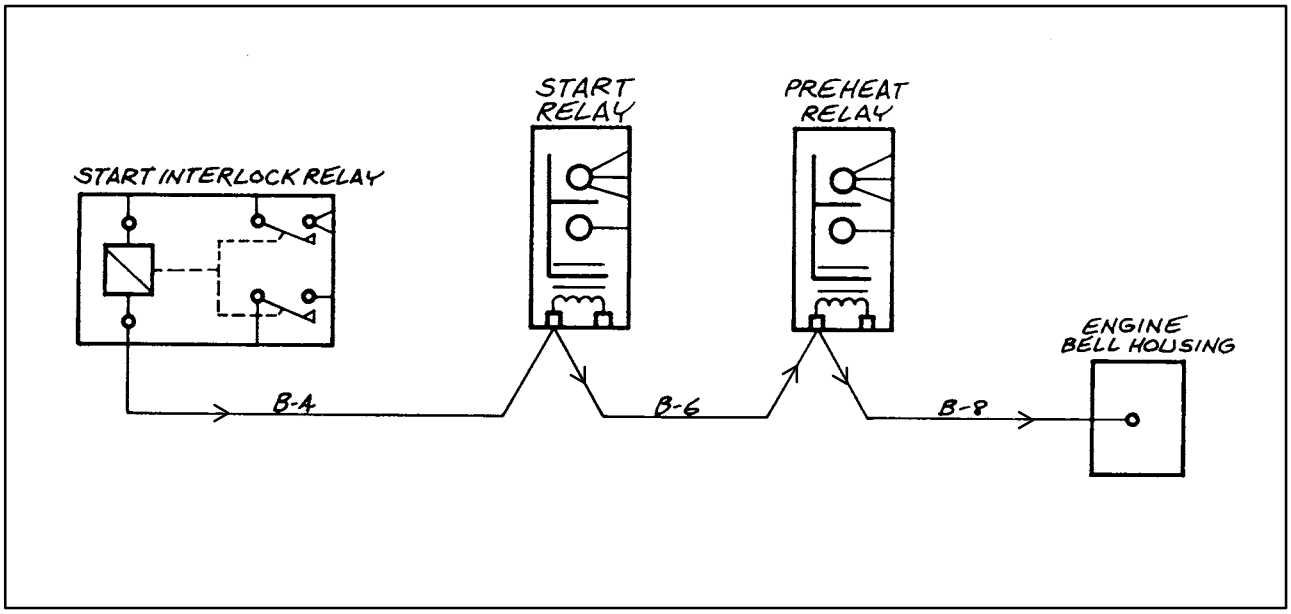

71

CRANKING CIRCUIT GROUND

The start interlock relay is grounded through the (B-4) wire to the ground terminal on the start relay. The system ground (B-6) wire then goes to the ground terminal of the preheat relay. The system ground (B-8) wire then goes to the engine ground at the bell housing.

START RELAY OPERATION

The start relay allows for smaller wires to be used in the switch circuits. The larger wires are then only used between the power supply, start relay, and starter motor. The start relay provides a short path for the high current required to pull in the starter solenoid with minimal voltage drop.

The start relay, 1, and the preheat relay, 2, may be wired in either position. Check wire colors for proper relay location.

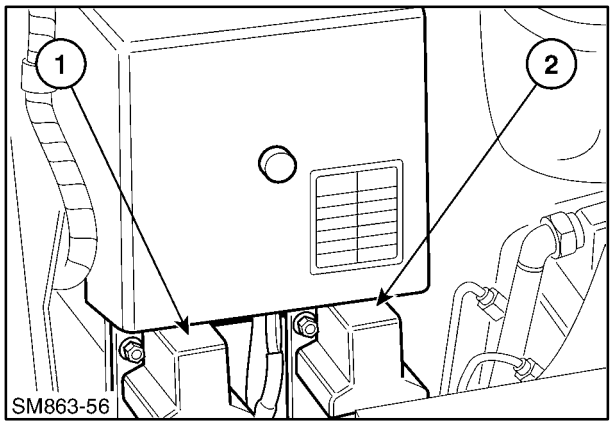

72

https://truckmanualshub.com/

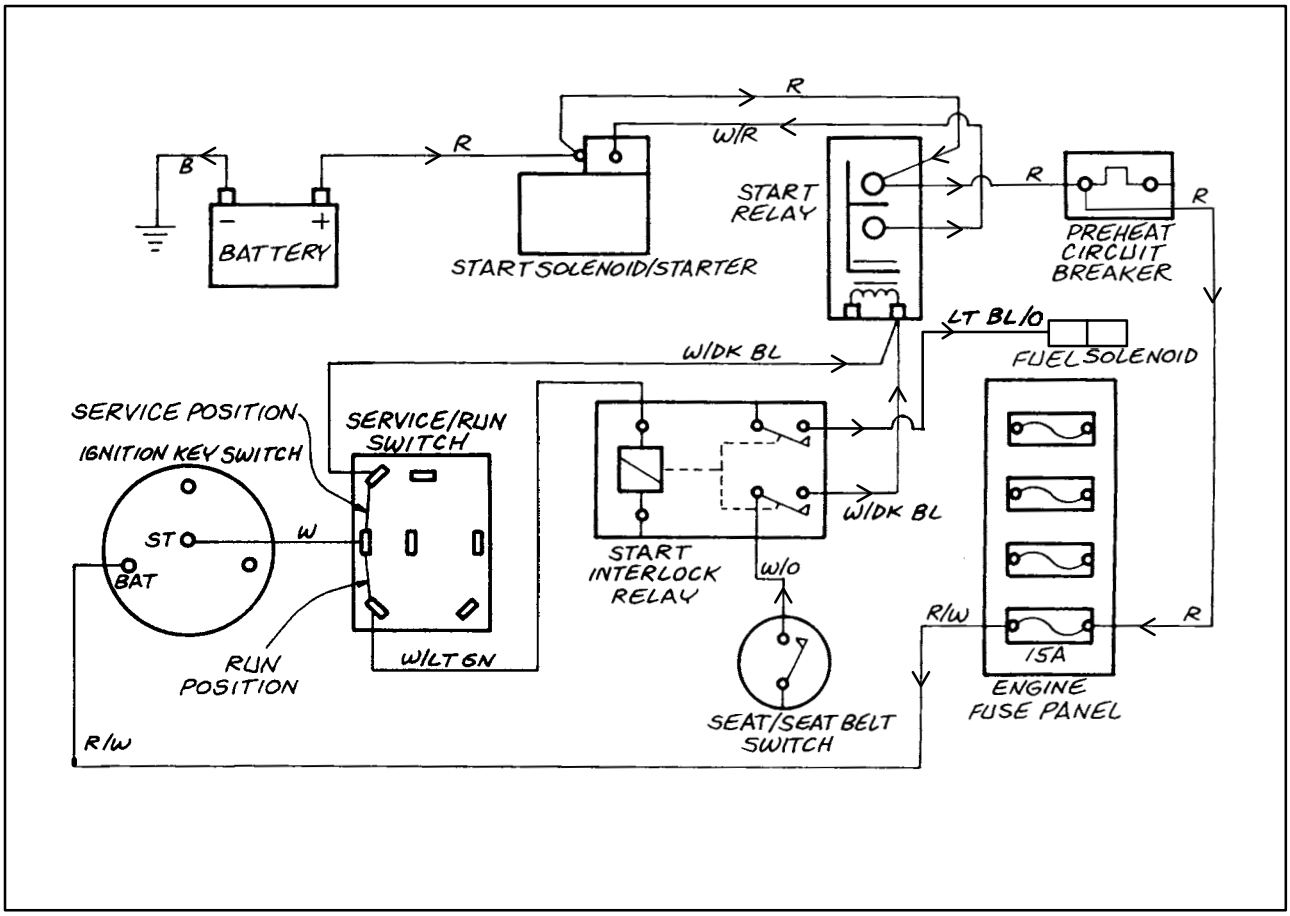

73

START RELAY CIRCUIT

The power originates at the battery and flows through the (R) positive battery cable to the starter solenoid. From here the power flows through the (R) wire to the battery side of the start relay.

The power then flows through the (R) wire to the preheat circuit breaker and to the engine fuse panel to the 15A key main fuse.

The power then flows through the (R/W) wire to the battery terminal on the ignition key switch.

When the service/run switch is in the “RUN” position, the operator is in the seat with the seat belt buckled, and the start interlock relay is energized by the W/LTGN wire from the service/run switch, the start relay receives energizing power from the seat/seat belt circuit via the W/O wire, then the (W/DKBL) wire from the start interlock relay.

When the service/run switch is in the “SERVICE” position, the start relay receives energizing power through the (W/DKBL) wire from the service/run switch.

When the start relay is activated, it connects the battery side of the relay to the start side and sends power to the starter solenoid through the (W/R) wire, activating the starter motor.

https://truckmanualshub.com/

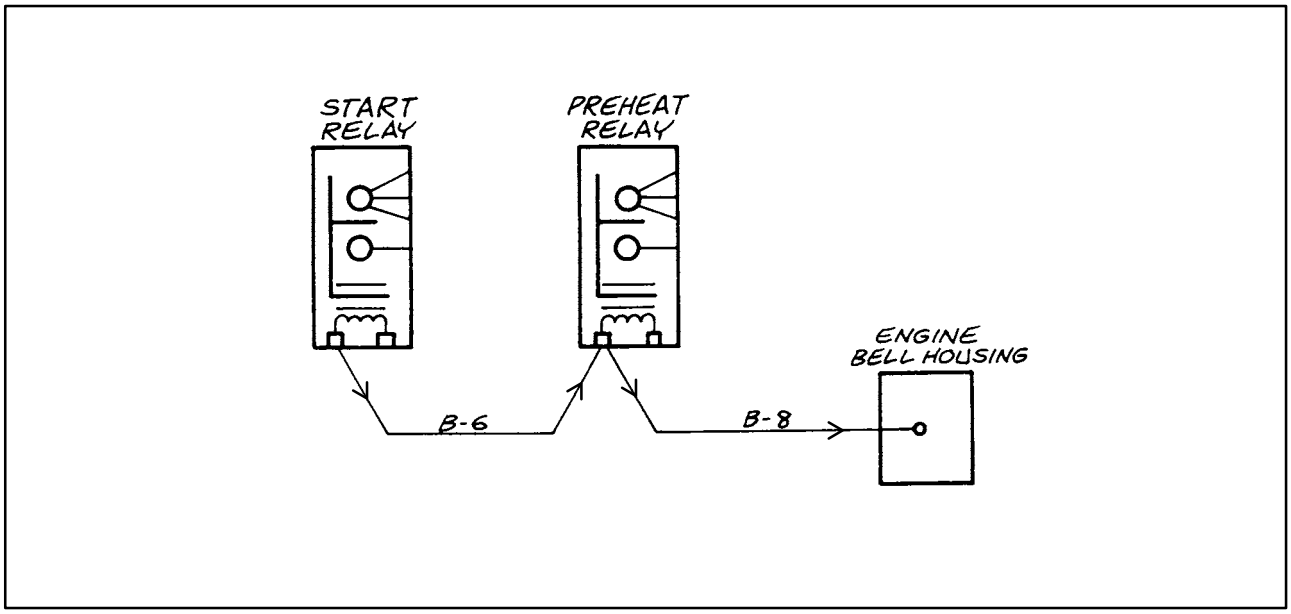

74

START RELAY GROUND CIRCUIT

The start relay is grounded through the (B-6) wire to the ground terminal on the preheat relay and then through the (B-8) wire to the engine bell housing.

START INTERLOCK RELAY OPERATION

The start interlock relay, 1, controls the starting circuit when the “SERVICE/RUN” switch is in the “RUN” position, allowing the engine to start.

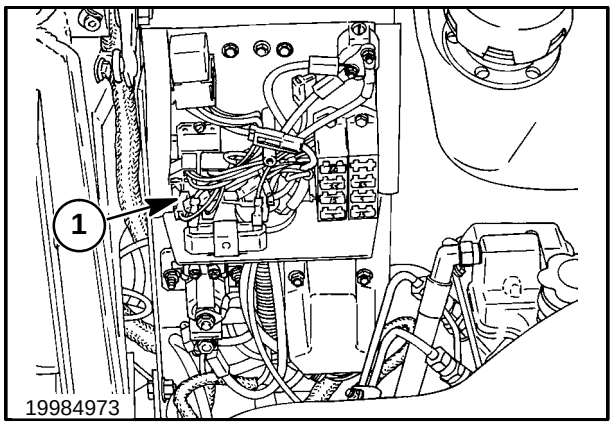

75

https://truckmanualshub.com/

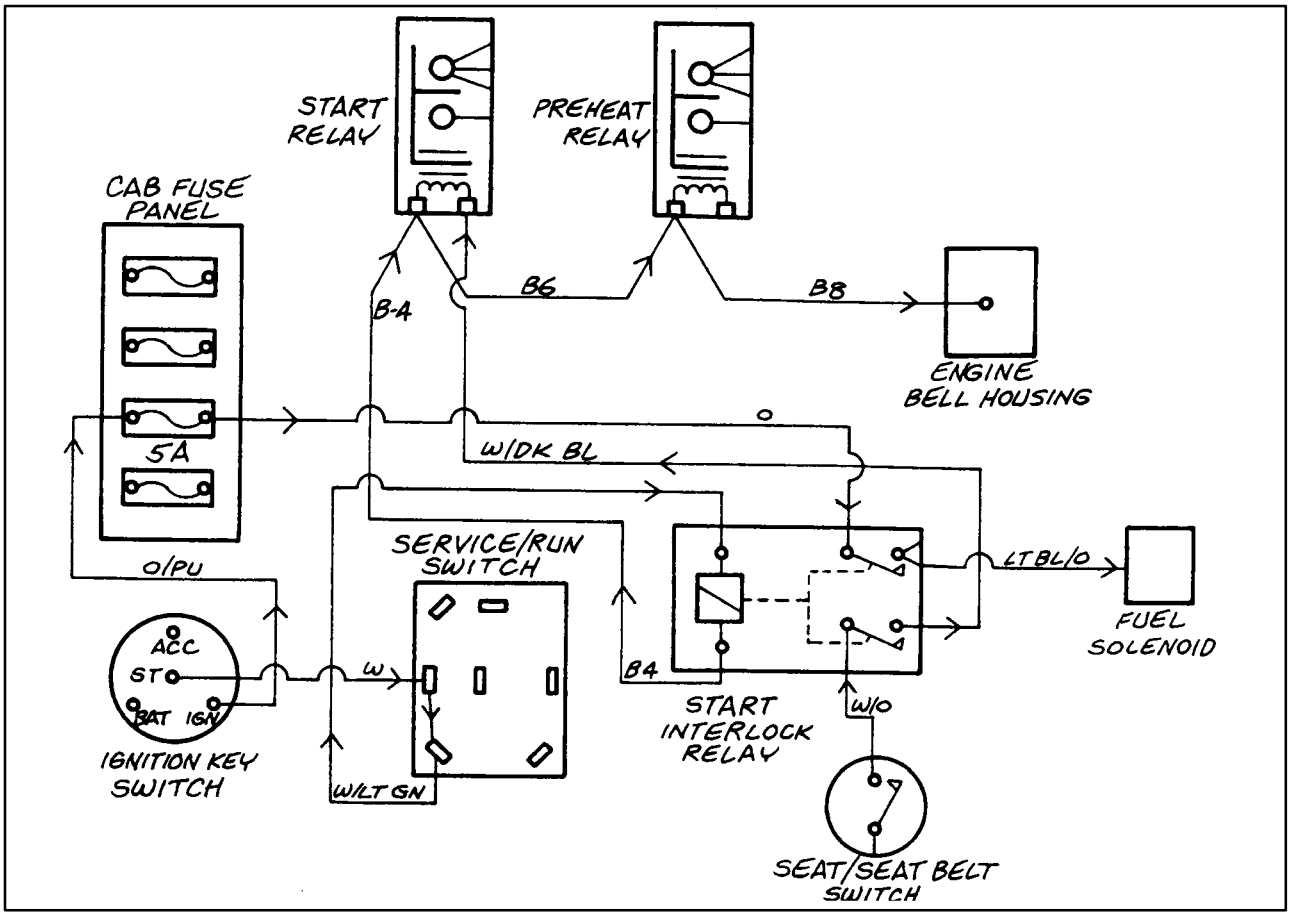

76

START INTERLOCK CIRCUIT

“SERVICE/RUN” switch in the “RUN” position.

The start interlock relay coil receives power from the service/run switch, with the switch in the “RUN” position, through the W/LTGN wire. The interlock receives power from the seat/seat belt plug when the operator is sitting in the seat with the seat belt buckled through the W/O wire.

When the interlock is “satisfied” that the service/run switch is in the “RUN” position and the operator is sitting in the seat with the seat belt buckled, power will travel through the W/DKBL wire to the start relay and through the LTBL/O wire to the fuel solenoid, allowing the engine to start. The source for the fuel solenoid power is from key switch “Ign,” then through the O/PU wire to the cab 5-amp fuse, then via the O wire to the relay.

https://truckmanualshub.com/

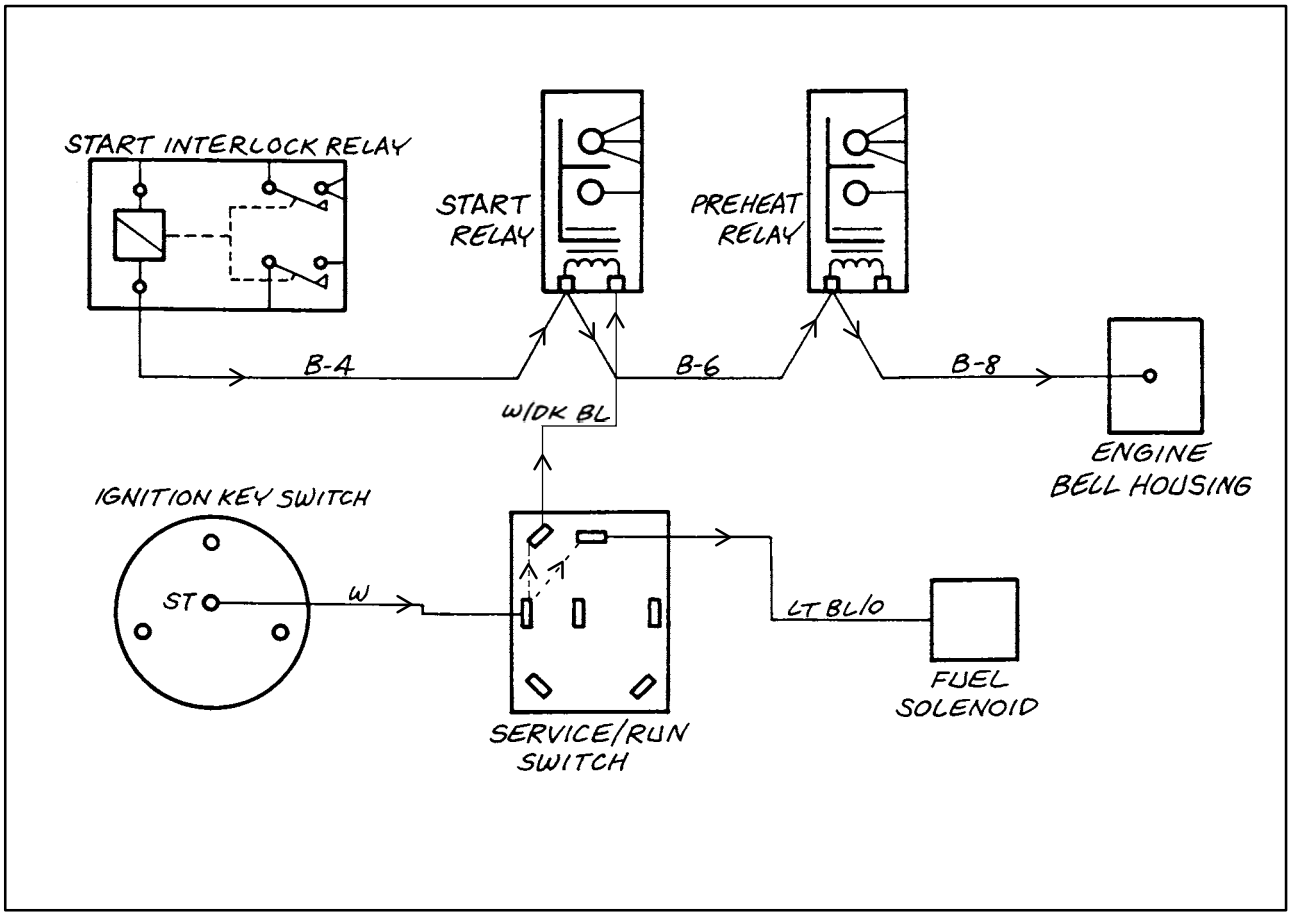

77

START INTERLOCK GROUND CIRCUIT

The interlock is grounded through the B-4 wire to the start relay, through B-6 wire to the preheat relay, through B-8 wire to the engine bell housing ground.

START CIRCUIT

“SERVICE/RUN” switch in the “SERVICE” position.

The interlock relay is not functional with the service/run switch in the “SERVICE” position. With the switch in the “SERVICE” position, power flows from the key switch “START” terminal via the W wire to the service/run switch, then through the LTBL/O wires to the fuel solenoid, allowing the engine to start and continue to run. The start relay receives power from the service/run switch via the W/DKBL wire to activate the start relay. The EIC plays no supporting role in this mode.

https://truckmanualshub.com/

Op. 55 100

REMOVAL, INSTALLATION AND WIRING OF ELECTRICAL COMPONENTS

This section will show and explain the correct wiring of switches and relays, and when and where battery voltage should be with the key switch (ignition) “ON” or “OFF” for the electrical components.

This section will also explain the removal and installation of the switches, relays, EIC board, and main wire harness.

Before servicing, changing or adding any electrical components, read the following precautionary statements.

IMPORTANT: *Do not connect any electrical circuits at the ignition key switch, the cab electrical fuse panel, or the cab ground terminal in the fuse panel area unless there are written instructions telling you to do so or damage to the EIC board may occur.*

IMPORTANT: *If any servicing or adjustments require the battery to be disconnected, or welding is required on the skid-steer loader, disconnect the negative (–) ground cable. Failure to disconnect the battery may result in damage to the EIC (Electronic Instrument Cluster) monitoring system and other electrical components.*

IMPORTANT: *If the EIC requires removal from the dash area of the skid-steer loader, disconnect the negative (–) ground battery cable. This will shut off power to the EIC and prevent damage to the EIC board or blowing the 5-amp fuses if the board is accidentally grounded.*

IMPORTANT: *Do not service the EIC board with magnetized tools (wrenches, screwdriver, etc.) or magnets. Severe damage to the EIC board may occur.*

https://truckmanualshub.com/

BATTERY

Op. 55 301 40

REMOVAL

1. Raise the boom and rest on the boom lock pins.

CAUTION

Never work under a raised boom unless it is properly supported by the boom lock pins.

2. Open the rear door and remove the right engine side shield to access the battery.
3. Disconnect the negative (–) battery cable, 1.
4. Disconnect the positive (+) battery cable, 2.
5. Loosen the top muffler support hardware at 3, and remove the lower support hardware, 4, and pivot the support in towards the engine.
6. Remove the battery hold-down hardware, 5, and remove the battery from the loader.

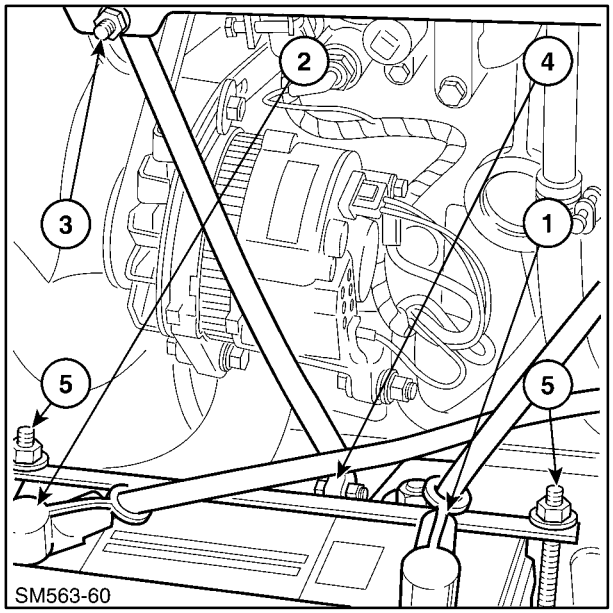

78

INSTALLATION

1. Orient the battery with the positive post toward the rear of the loader. Install the battery and the hold-down strap and hardware. Position the hold-down strap to clear other components.
2. Connect the positive (+) RED cable to positive (+) terminals and negative (–) BLACK cable to negative (–) terminals. Do not over tighten. Observe the tightening specifications on the battery label.

IMPORTANT: *Crossing of terminals may cause damage to the electrical system, alternator and Advanced Warning System (EIC).*

NOTE: *Make sure the positive (+) battery cable, 1, on LS170 models routes outside the hose, 2, and away from the turbocharger hose clamp, 3. Reverse the clamp to avoid unnecessary wear on cables and hoses.*

3. Install protective caps over the battery terminals and cable connections.

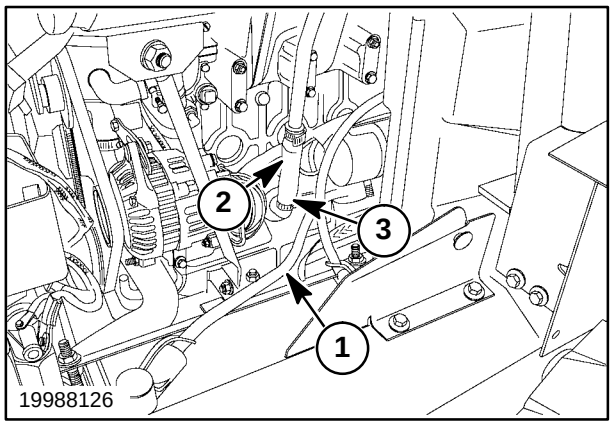

79

https://truckmanualshub.com/

Op. 55 418 10

EIC (ELECTRONIC INSTRUMENT CLUSTER) BOARD REMOVAL

1. Disconnect the negative (–) battery cable.
2. Remove the retaining hardware, 1, and remove the EIC board from the overhead dash area.

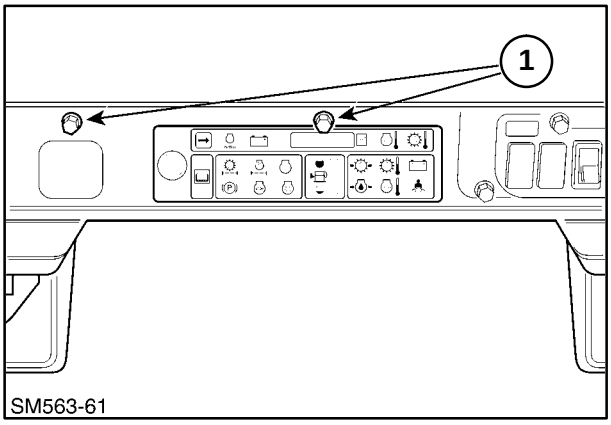

80

3. Unplug the two wire harness connectors, 1, from the EIC, taking care to not stress or bend the plastic locking ramps on the connectors.

NOTE: *Note the positioning of the connectors to the EIC board and reconnect to the new board in the correct position. If the connector is not connected properly, damage to the EIC may occur.*

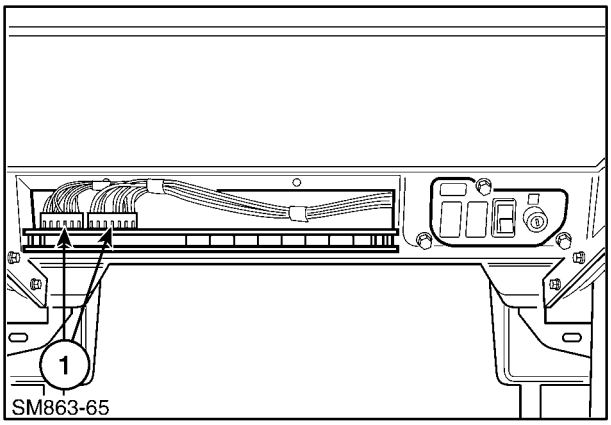

81

https://truckmanualshub.com/

EIC (Electronic Instrument Cluster) WIRING

NOTE: *There are two different style EIC board connectors as shown here.*

Board Connector #1 (J1) Pin Number	Wire Color	Harness Connector #1 (P1) Pin Number
1	NOT USED	-
2	NOT USED	-
3	NOT USED	-
4	PU/W	1
5	PU/LTGN	2
6	PU/LTBL	3
7	PU/R	4
8	NOT USED	5
9	Y/LTGN	6
10	Y/B	7
11	Y/GY	8
12	DKGR/O	9
13	B/Y	10
14	LTGN/B	11

Board Connector #2 (J2) Pin Number	Wire Color	Harness Connector #2 (P2) Pin Number
1	NOT USED	1
2	LTBL/Y	2
3	PK/LTBL	3
4	T/W	4
5	LTBL/O	5
6	NOT USED	6
7	NOT USED	7
8	NOT USED	8
9	PK	9
10	W	10
11	LTGN	11
12	O	12
13	B	13
14	R/LTGN	14

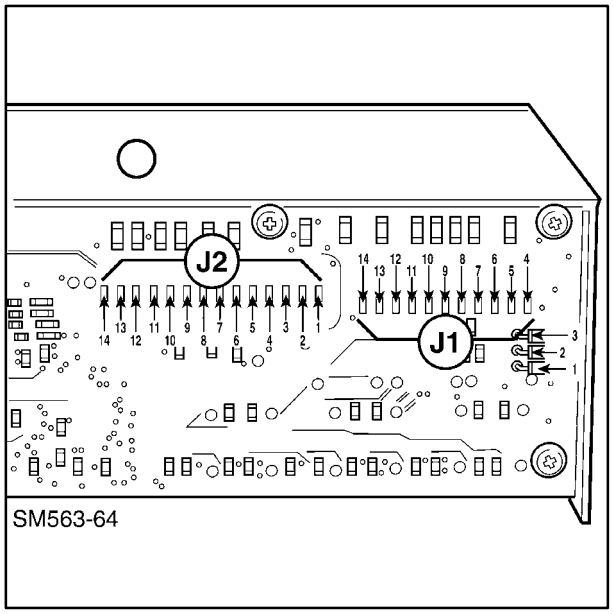

82

https://truckmanualshub.com/

EIC (Electronic Instrument Cluster) BOARD INSTALLATION

1. Connect the wire harness connectors P1 to J1 and P2 to J2 on the EIC board, making sure the connectors are properly aligned and fully seated.

IMPORTANT: *If the connector is not connected correctly, damage to the EIC may occur:*

- *Board circuits may burn out.*
- *Display may not light up.*
- *Board memory may be lost.*

2. Position the EIC board into the overhead dash flat against the support and secure with the hardware previously removed. Make sure that wires are not pinched between the EIC board and dash frame.

3. Reinstall the negative (–) battery cable.

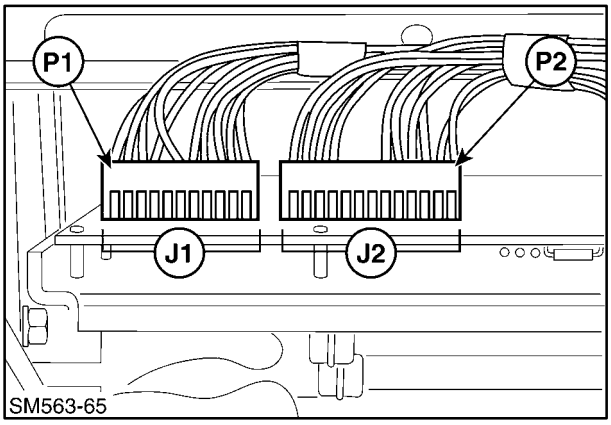

83

https://truckmanualshub.com/

IGNITION (KEY) SWITCH WIRING

Ref	Color	Destination	Battery Voltage
1	O/LTBL	To Four-Way Flashing lights 10A Fuse (cab panel) To Beacon Light 7.5A Fuse (cab panel)	Key “ON” position
2	LTGN/B	To EIC Board Pin #11 (small connector)	Key “ON” position
3	LTGN/B	To Accessory Relay (engine panel)	Key “ON” position
4	W	To Service/Run Switch	Key “START” position
5	W	To EIC Board Pin #10 (large connector)	Key “START” position
6	R/W	From 15A Fuse (engine panel)	All times
7	GY/B	Power to dome light (not available)	All times
8	O/PU-2	To Electronics 5A Fuse (cab panel)	Key “ON” position

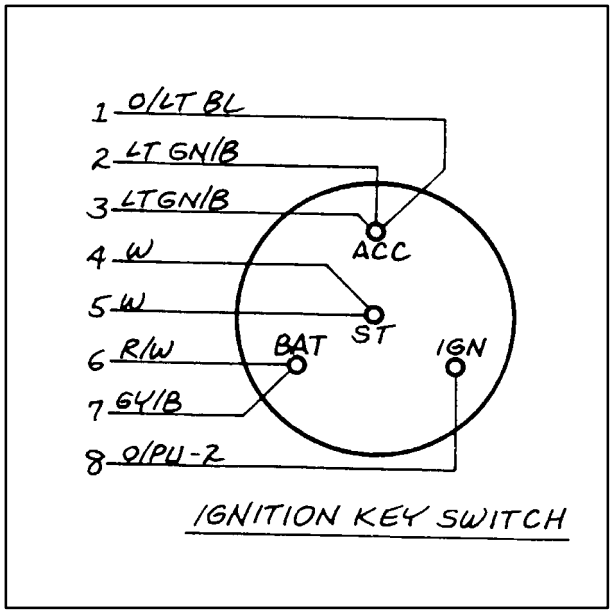

84

Op. 55 201 10

REMOVAL

1. Disconnect the negative (–) battery cable.
2. Remove the retaining hardware, 1, and remove the switch panel, 2, from the overhead dash area.
3. Remove the wires from the switch terminals.

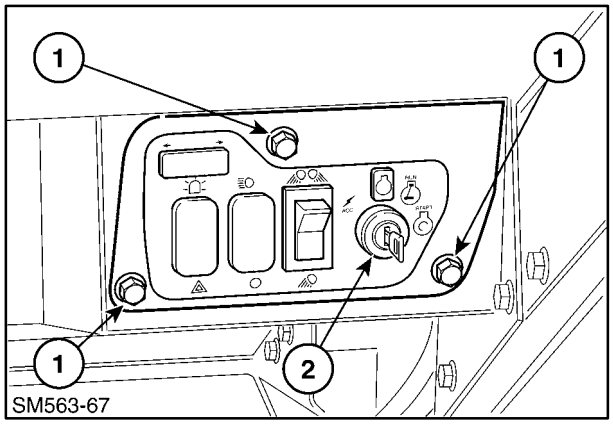

85

4. Remove the switch retaining nut, 1, from the switch and remove the switch from the panel.

INSTALLATION

1. Attach the switch to the panel and secure with nut, 1, previously removed.
2. Reconnect the wires to the terminals as shown above.
3. Reinstall the switch panel to the overhead dash.
4. Reinstall the negative (–) battery cable.

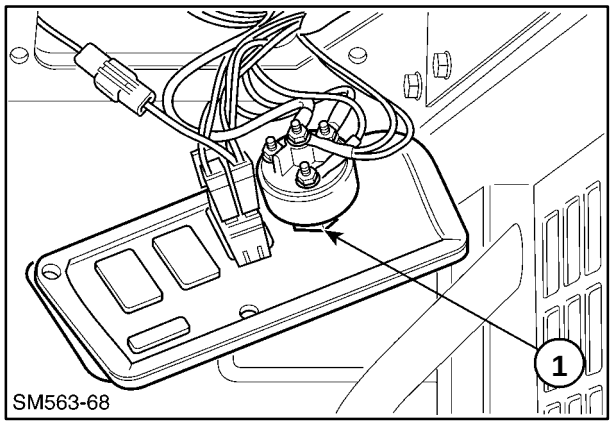

86

https://truckmanualshub.com/

CAB FUSE PANEL WIRING

Ref	Color	Destination	Battery Voltage
1	O/LTGN	(15A Fuse) From Accessory Relay (engine panel)	Key “ON” position (If equipped with lights or other accessories).
2	O/B	(15A Fuse) To Road/ Work Light Switch	Key “ON” position
3	O/GY	(7.5A Fuse) To Wiper Motor Switch	Key “ON” position
4	O	(5A Fuse) To EIC Board Pin #12 (P2 connector)	Key “ON” position
5	O	(5A Fuse) To Start Interlock Relay (engine panel)	Key “ON” position
6	PU/O	(5A Fuse) To Fuel Pump	Key “ON” position
7	O/PU-1	To Service/Run Switch	Key “ON” position
8	O/PU-2	From Key Switch (Ign. terminal)	Key “ON” position
9	O/LTBL	From Key Switch (Acc. terminal)	Key “ON” position
10	O/Y	(7.5A Fuse) To Beacon, Four-Way Warning Lights Switch	Key “ON” position

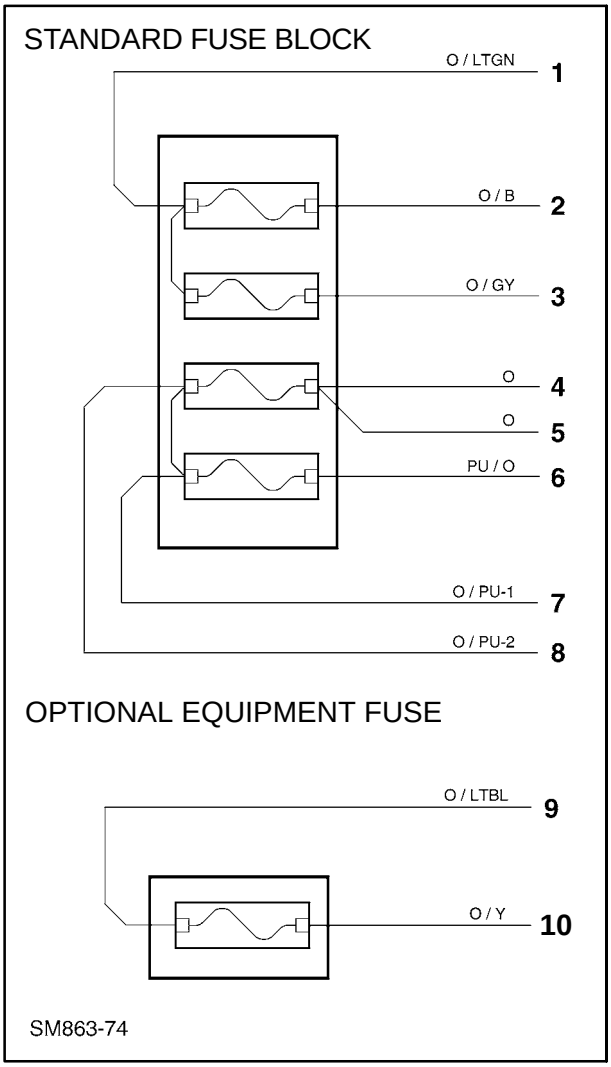

87

https://truckmanualshub.com/

CAB FUSE BLOCK AND PANEL

REMOVAL

1. Disconnect the negative (–) battery cable.
2. Remove panel, 1; retaining hardware, 2; and lower panel from the support. Removal of panel, 3, may be required for easier access.
3. Unplug the wires from the fuse block.
4. Remove the fuse block retaining hardware.

NOTE: *The standard fuse block is part of the main harness and cannot be completely removed.*

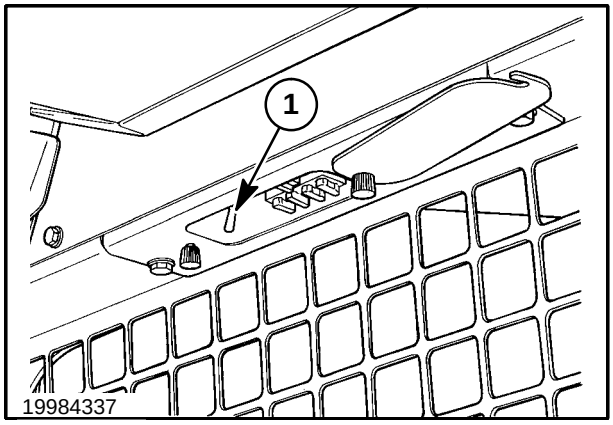

88

INSTALLATION

1. Attach the wires to the proper side of the fuses as shown at 1, and as shown in the “CAB FUSE PANEL WIRING” figure, Figure 92. Check that the fuses, 2, are in their proper slots.
2. Reinstall the block retaining hardware.
3. Reinstall the panel to the support.
4. Reconnect the negative (–) battery cable.

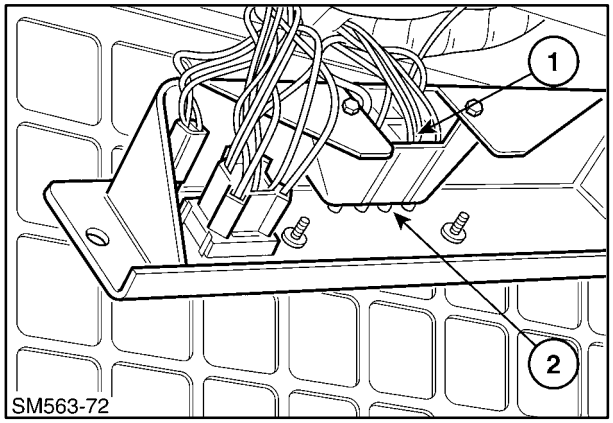

89

https://truckmanualshub.com/

SERVICE/RUN SWITCH WIRING

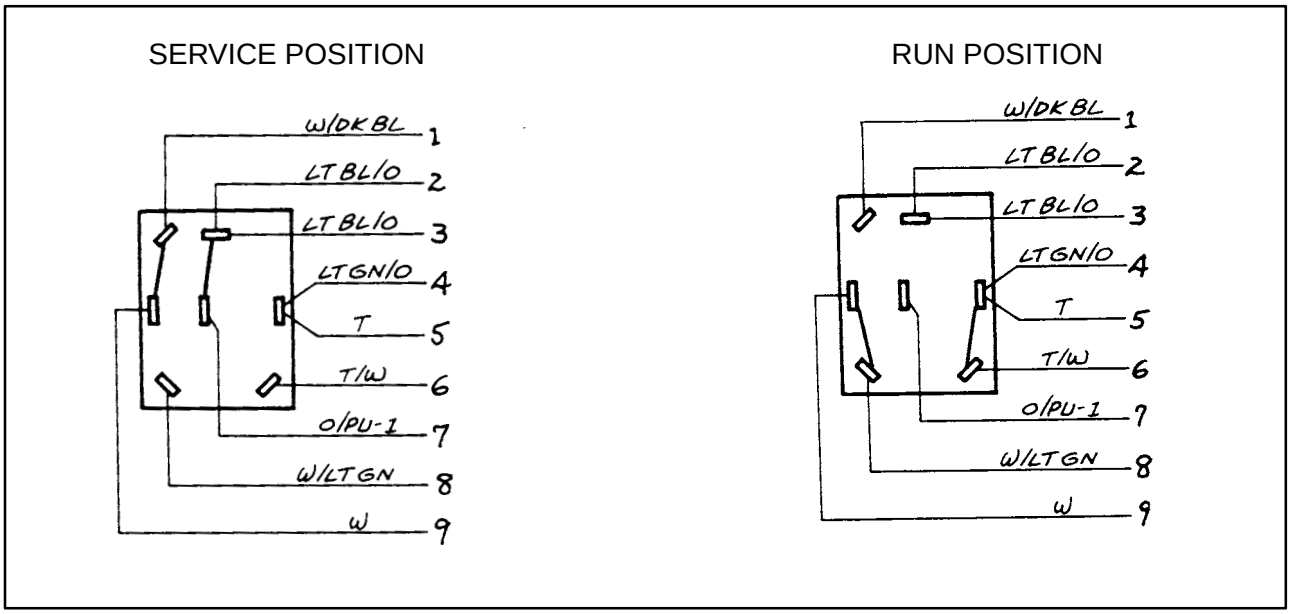

90

SERVICE/RUN SWITCH - SERVICE POSITION

Ref	Color	Destination	Battery Voltage
1	W/DKBL	To Start Relay (engine panel)	Key “START” position
2	LTBL/O	From EIC Board Pin #5 (large connector)	Key “ON” position
3	LTBL/O	To Start Interlock Relay (engine panel)	Key “ON” position
4	LTGN/O	To Manual Preheat Switch	Sitting in Seat
5	T	From Seat Switch(es)	Sitting in Seat
6	T/W	To EIC Board Pin #4 (large connector)	No Voltage Anytime
7	O/PU 1	From 5A Fuse (cab panel)	Key “ON” position
8	W/LTGN	To Start Interlock Relay (engine panel)	No Voltage Anytime
9	W	From Key Switch (ignition)	Key “START” position

SERVICE/RUN SWITCH - RUN POSITION

Ref	Color	Destination	Battery Voltage
1	W/DKBL	To Start Relay (engine panel)	Key “START” position (backfed from start interlock relay)
2	LTBL/O	From EIC Board Pin #5 (large connector)	Key “ON” position (will read 0.5 - 1.0 volt below battery voltage)
3	LTBL/O	To Start Interlock Relay (engine panel)	Key “ON” position (will read 0.5 - 1.0 volt below battery voltage)
4	LTGN/O	To Manual Preheat Switch	Sitting in Seat
5	T	From Seat Switch(es)	Sitting in Seat
6	T/W	To EIC Board Pin #4 (large connector)	Sitting in Seat
7	O/PU 1	From 5A Fuse (spare) (cab panel)	Key “ON” position
8	W/LTGN	To Start Interlock Relay (engine panel)	Key “START” position
9	W	From Key Switch (Ignition)	Key “START” position

https://truckmanualshub.com/

SERVICE/RUN SWITCH

Op. 55 418 30

REMOVAL

1. Disconnect the negative (–) battery cable.
2. Remove panel, 1; retaining hardware, 2; and lower panel from the support. Removal of panel, 3, may be required for easier access.
3. Remove the wires from the switch terminals.
4. Push the switch retaining tabs in and remove the switch from the panel.

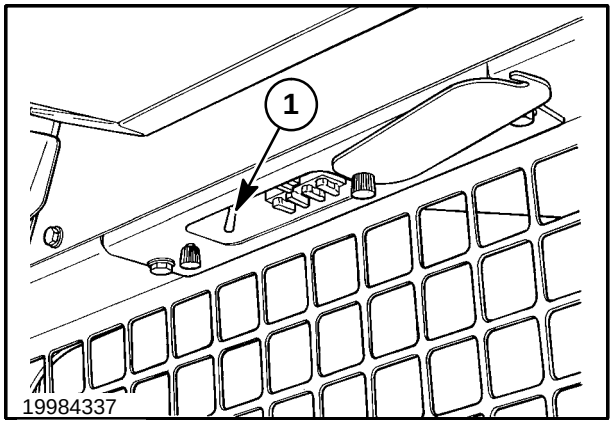

91

INSTALLATION

1. Insert the switch into the panel and make sure the locking tabs secure the switch.
2. Reconnect the wires to the proper terminals as shown in the “SERVICE/RUN SWITCH WIRING” figure, Figure 95.
3. Reinstall the panel to the support.
4. Reconnect the negative (–) battery cable.

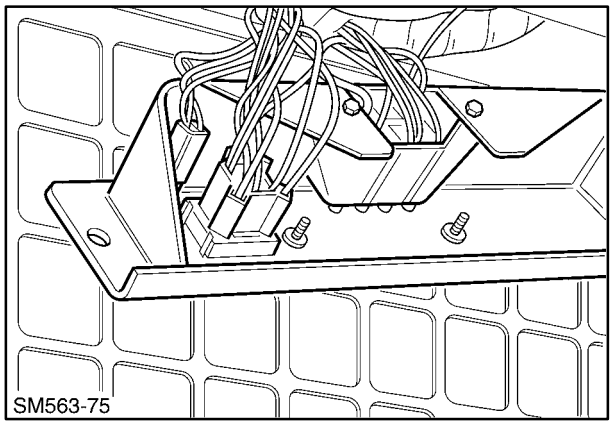

92

https://truckmanualshub.com/

SEAT AND SEAT BELT SWITCH WIRING

Ref	Color	Destination	Battery Voltage
1	LTGN	To EIC Board Pin #11 (large connector)	Seat Belt Buckled
2	T	From Seat Switch(es)	Sit in Seat
3	T	To Seat Belt switch	Sit in Seat
4	LTGN/R	From Electronics 5A Fuse (engine panel)	All Times
5	T	To Service/Run Switch	Sit in Seat

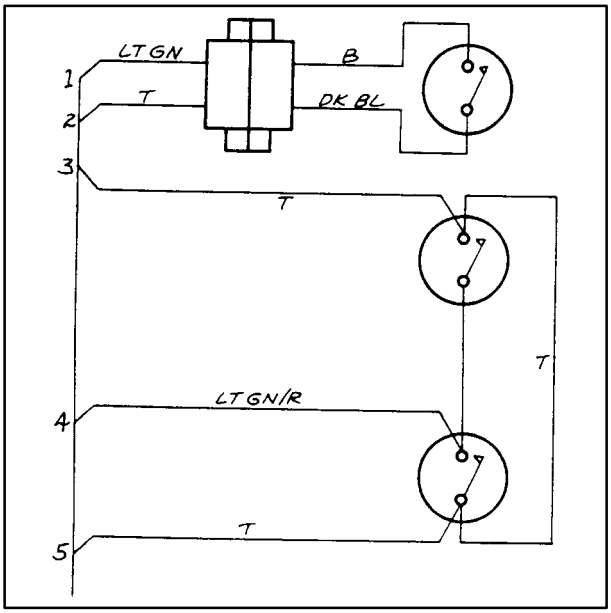

93

Op. 55 201 15

SEAT SWITCH REMOVAL

1. Disconnect the negative (–) battery cable.
2. Raise the seat and securely latch in the raised latched position, 1.

CAUTION

Never work under a raised seat unless it is securely latched in the raised position.

3. Remove the seat retaining hardware, 2.
4. Holding the seat in place, lower the seat pan and seat and unplug the seat switch(es).
5. Remove the seat from the loader.
6. Disconnect the wire harness from the switch(es) by releasing the latch away from the switch.
7. Remove the switch(es) from the seat pan. The standard seat uses one switch, 1, and the deluxe seat uses two switches, 2.

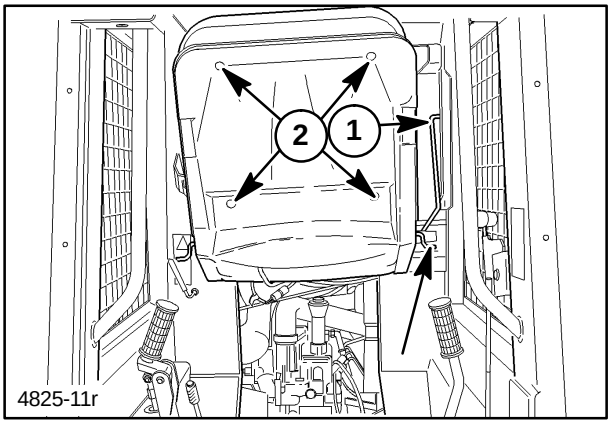

94

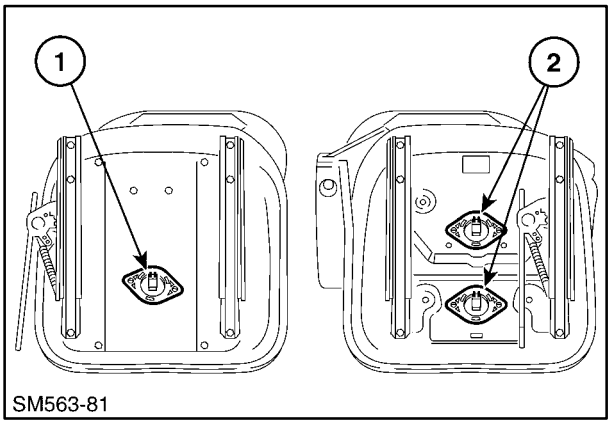

95

https://truckmanualshub.com/

SEAT SWITCH INSTALLATION

1. Install the switch(es) into the seat pan, making sure the switch is seated into the hole in the seat pan, 1.

IMPORTANT: *If the switch is not seated properly when the retaining hardware is tightened, the switch flange will be broken.*

2. Reconnect the wire harness to the switch(es) and reinstall the seat retaining hardware. Make sure the harness connector latches are engaged.
3. Reconnect the negative (–) battery cable.

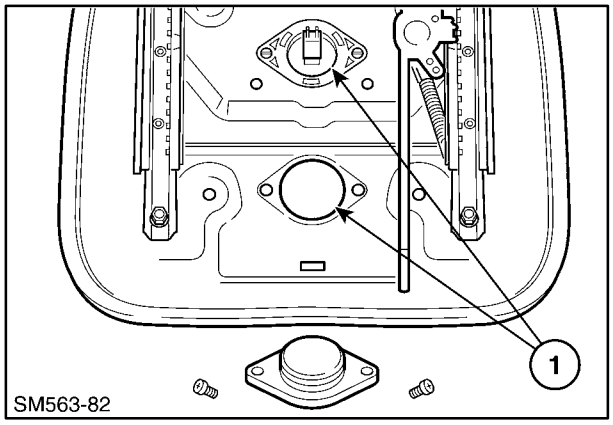

96

Op. 55 201 14

SEAT BELT BUCKLE AND SWITCH ASSEMBLY REMOVAL

1. Disconnect the negative (–) battery cable.
2. Unplug the seat belt wire harness, 1.
3. Remove the clamp hardware and clamp, 2, and save for reuse.
4. Remove the seat belt retaining hardware, 3.

SEAT BELT BUCKLE INSTALLATION

1. Reinstall the seat belt buckle retaining hardware. Tighten the locknut to hold the belt in position that will allow the belt assembly to move front or rearward.
2. Reconnect the wire harness.
3. Reinstall clamp holding harness above seat track.
4. Reconnect the negative (–) battery cable.

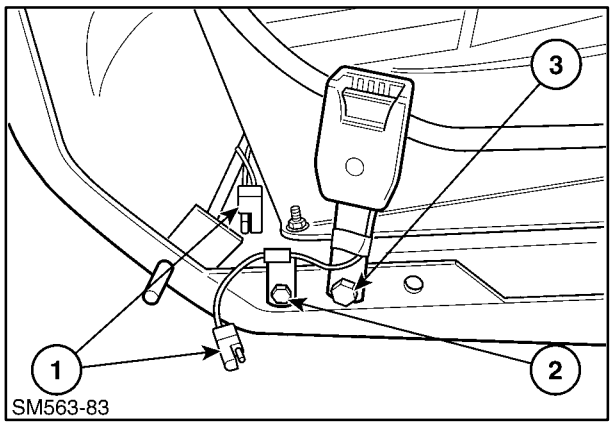

97

https://truckmanualshub.com/

ROAD LIGHT AND WORK LIGHT SWITCH WIRING

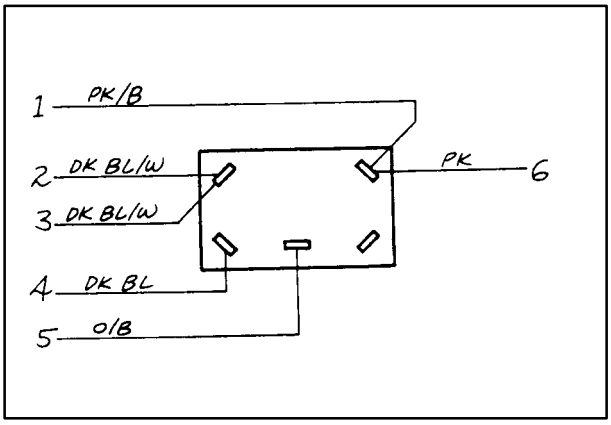

98

Switch Pushed in at Top

Ref	Color	Destination	Battery Voltage
1	PK/B	To Taillights	Yes
2	DKBL/W	To Front Road/Work Light	Yes
3	DKBL/W	To Front Road/Work Light	Yes
4	DKBL	To Rear Work Light	Yes
5	O/B	From 15A Fuse (cab panel)	Key “ON” position
6	PK	To EIC Board Pin #9 P2 connector (to dim EIC board lights)	Yes

Switch Pushed in at Bottom

Ref	Color	Destination	Battery Voltage
1	PK/B	To Taillights	Yes
2	DKBL/W	To Front Road/Work Light	Yes
3	DKBL/W	To Front Road/Work Light	Yes
4	DKBL	To Rear Work Light	NO
5	O/B	From 15A Fuse (cab panel)	Key “ON” position
6	PK	To EIC Board Pin #9 P2 connector (to dim EIC board lights)	Yes

https://truckmanualshub.com/

ROAD LIGHT AND WORK LIGHT SWITCH

Op. 55 404 20

REMOVAL

1. Disconnect the negative (–) battery cable.
2. Remove the switch panel retaining hardware, 1, and lower the panel.
3. Remove the wires and connector from the switch terminals.
4. Press in the switch retaining tabs and remove the switch from the panel.

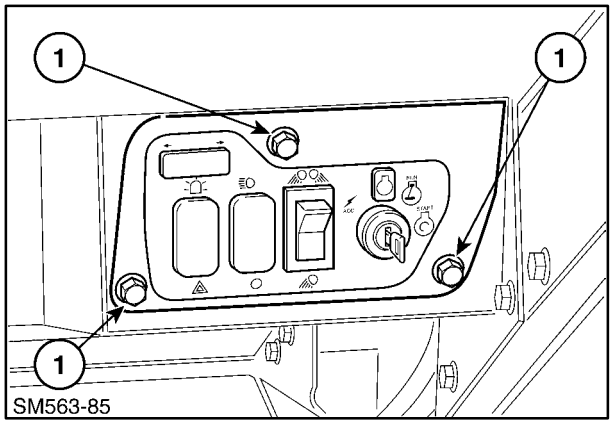

99

INSTALLATION

1. Insert the switch into the panel and insure the locking tabs secure the switch, 1.
2. Reconnect the wires and connector to the proper terminals with the PK/B and PK wires toward the top of the panel.
3. Reattach the switch panel to the overhead dash.
4. Reconnect the negative (–) battery cable.

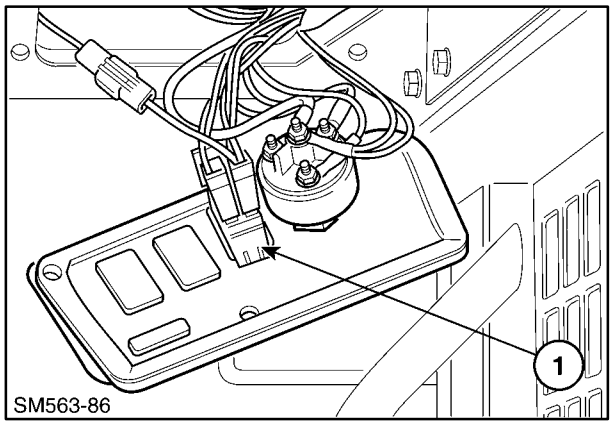

100

https://truckmanualshub.com/

ENGINE FUSE AND RELAY PANEL

The engine panel electrical components are shown here:

1. Accessory relay
2. Heater power relay (if equipped)
3. Preheat circuit breaker
4. Start interlock relay
5. Optional equipment fuse block
6. Standard fuse block
7. Alternator excite resistor
8. Start relay
9. Preheat relay

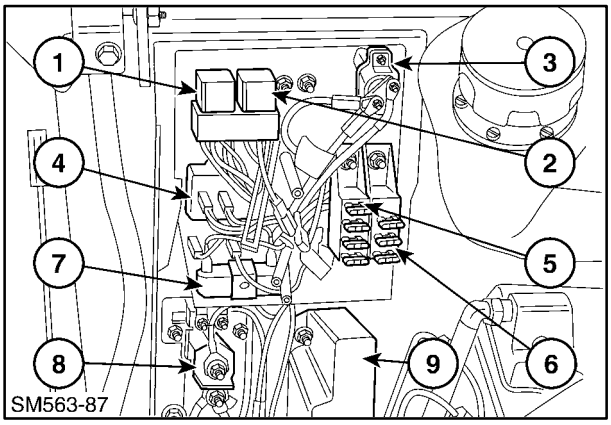

101

To access the electrical components in the engine compartment, raise the boom and rest it on the boom lock pins.

CAUTION

Never work under a raised boom unless it is properly supported by the boom lock pins.

https://truckmanualshub.com/

ACCESSORY RELAY WIRING

Ref	Color	Destination	Battery Voltage
1	O/LTGN	To Attachment/Horn 15A Fuse	Key “ON” position
2	LTGN/ B-2	To Turn Signal Relay or Heater Power Relay	Key “ON” position
3	LTGN/B	From Key Switch (accessory terminal)	Key “ON” position
4	B-7	To Turn Signal Relay or Heater Power Relay	Ground Circuit
5	B-5	To Start Relay	Ground Circuit
6	R/GY	From Accessory 25A Fuse	All Times

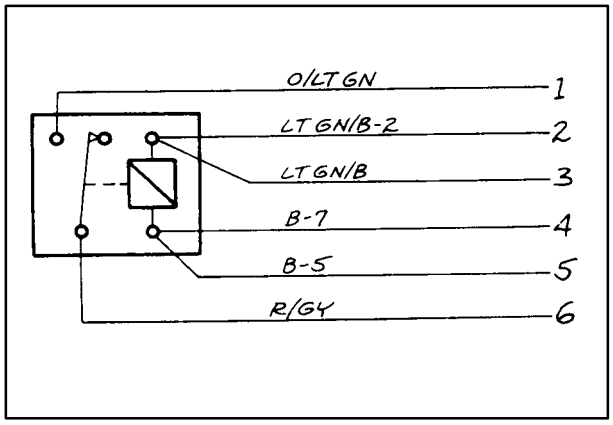

102

ACCESSORY RELAY

Op. 55 100 34

REMOVAL

1. Disconnect the negative (–) battery cable.
2. Unplug the relay, 1, from the socket, 2. The corners provide an area to insert screwdriver and twist to assist removal.

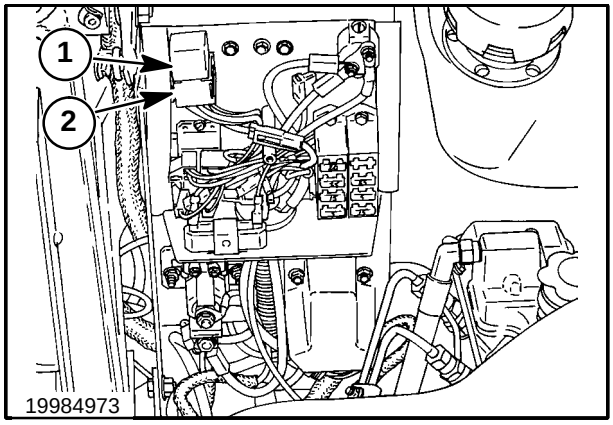

103

INSTALLATION

1. Insert new relay fully into socket.
2. Reconnect the negative (–) battery cable.

https://truckmanualshub.com/

PREHEAT CIRCUIT BREAKER WIRING

Ref	Color	Destination	Battery Voltage
1	R/LTBL	To Preheat Relay	All Times
2	R	To Start Relay	All Times
3	R	From 15A Key Main Fuse Engine Fuse Block	All Times

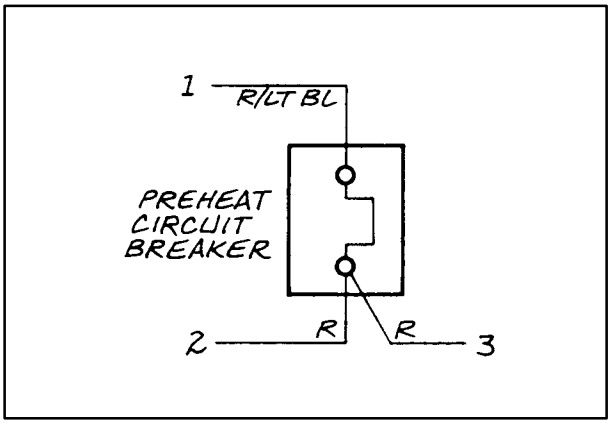

104

PREHEAT CIRCUIT BREAKER

Op. 55 100 24

REMOVAL

1. Disconnect the negative (–) battery cable.
2. Disconnect wires from the terminals, 1.
3. Remove the circuit breaker retaining hardware.

INSTALLATION

1. Reinstall the retaining hardware.
2. Reconnect the wires to the proper terminals.
3. Reconnect the negative (–) battery cable.

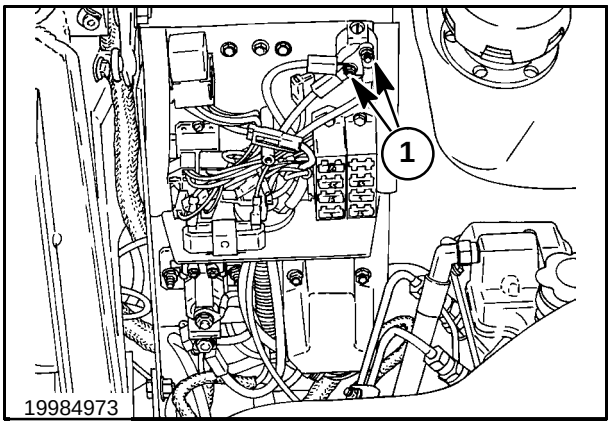

105

https://truckmanualshub.com/

START INTERLOCK RELAY WIRING

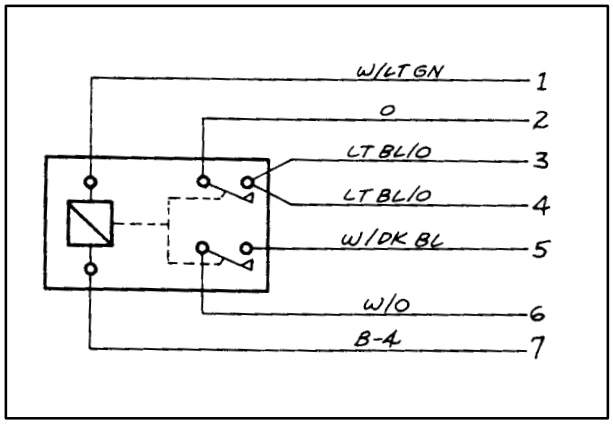

106

Service/Run Switch - Run Position

Ref	Color	Destination	Battery Voltage
1	W/LTGN	From Service/Run Switch	Key “START” position
2	O	From Cab Fuse Panel 5A Electronic Ignition Fuse	Key “ON” position
3	LTBL/O	To Fuel Solenoid	Key “ON” position *
4	LTBL/O	From EIC Board Pin #5, P2 connector	Key “ON” position *
5	W/DKBL	To Start Relay	Key “START” position Sitting in Seat with Seat Belt Buckled
6	W/O	From Connector at Boom/Bucket Control Valve	Key “START” position Sitting in Seat with Seat Belt Buckled
7	B-4	To Start Relay	Ground Circuit

* Voltage will be 0.5 - 1.0 volt below battery voltage.

Service/Run Switch - Service Position

Ref	Color	Destination	Battery Voltage
1	W/LTGN	From Service/Run Switch	No Voltage Anytime
2	O	From Cab Fuse Panel 5A Electronic Ignition Fuse	Key “ON” position
3	LTBL/O	To Fuel Solenoid	Key “ON” position
4	LTBL/O	From EIC Board Pin #5	Key “ON” position
5	W/DKBL	To Start Relay	Key “START” position
6	W/O	From the Seat/Seat Belt Connector and Connector at Boom/Bucket Control Valve	Sitting in Seat with Seat Belt Buckled
7	B-4	To Start Relay	Ground Circuit

https://truckmanualshub.com/

Op. 55 100 34

START INTERLOCK RELAY REMOVAL

1. Disconnect the negative (–) battery cable.
2. Disconnect the wires from the terminals, 1.
3. Remove the interlock relay retaining hardware.

START INTERLOCK RELAY INSTALLATION

1. Reinstall the retaining hardware.
2. Reconnect the wires to the proper terminals as shown in the “START INTERLOCK RELAY WIRING” figure, Figure 111.
3. Reconnect the negative (–) battery cable.

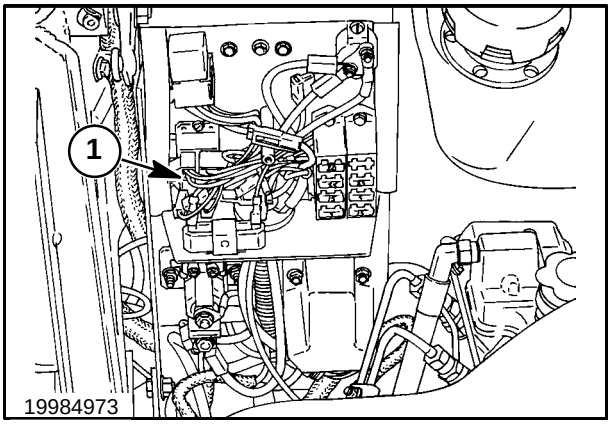

107

https://truckmanualshub.com/

ENGINE FUSE PANEL WIRING

Ref	Color	Destination	Battery Voltage
1	R/B	(10A Fuse) To Turn Signal Relay	All Times
2	R/GY	(25A Fuse) To Accessory Relay	All Times
3	R/LTGN	(5A Fuse) To EIC board Pin #14 P2 connector.	All Times
4	LTGN/R	(5A Fuse) To Seat Switch(es)	All Times
5	R/W	(15A Fuse) To Key Switch (Battery Terminal)	All Times
6	R	From Preheat Circuit Breaker	All Times
7	R	From Start Relay	All Times
8	R/O	(20A Fuse) To Heater Power Relay	All Times
9	R/T	(7.5A Fuse) Spare	All Times
10	DKGN/R	(15A Fuse) To High Flow, Horn, Power Outlet	Key “ON” position
11	O/LTGN	From Accessary Relay	Key “ON” position
12	O/W	(5A Fuse) To Back Up Alarm Switch	Key “ON” position
13	O/LTGN	From Road/Work light fuse (cab panel)	Key “ON” position

STANDARD FUSE BLOCK

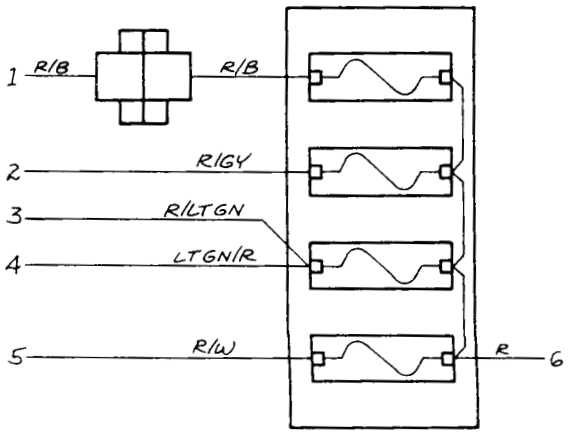

OPTIONAL EQUIPMENT FUSE BLOCK

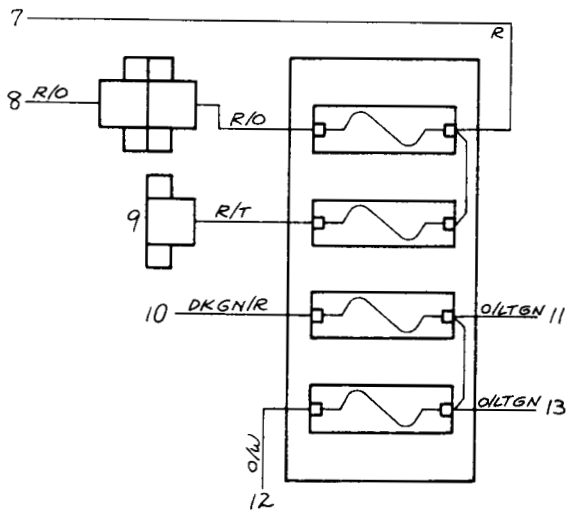

108

https://truckmanualshub.com/

ENGINE FUSE BLOCK REMOVAL

1. Disconnect the negative (–) battery cable.
2. Remove the fuse block retaining hardware.

NOTE: *The standard fuse block, 1, is part of the main harness and cannot be completely removed.*

3. The optional equipment fuse block , 2, locks into the standard fuse block. Insert a 1/4″ blade screwdriver at the center of the fuse block bases and twist to release the lock. Slide the optional block up past the fuses on the standard block to separate.
4. Unplug the wires from the fuse block assembly.

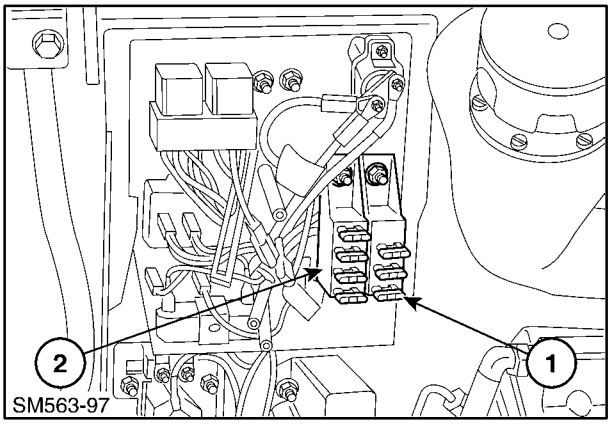

109

ENGINE FUSE BLOCK INSTALLATION

1. Insert the lock tabs, 1, into slots, 2, and slide the two blocks together to lock securely as shown.

NOTE: *The optional equipment fuse block slides down over the standard block guides and is positioned toward the center of the panel.*

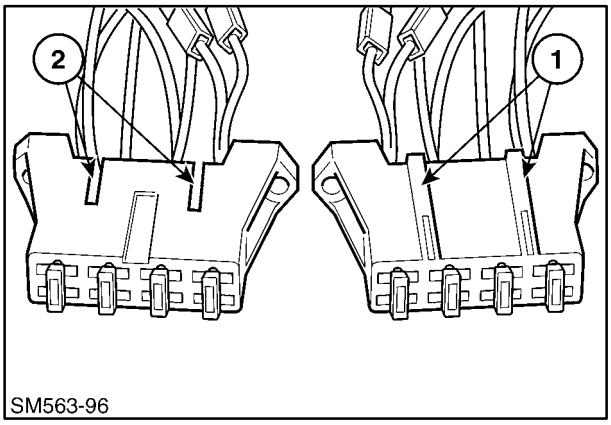

110

2. Attach the wires to the proper side of the fuses as shown in the “ENGINE FUSE PANEL WIRING“ figure, Figure 113.
   - 1 Standard fuse block
   - 2 Optional equipment fuse block
3. Reinstall the block retaining hardware.
4. Reconnect the negative (–) battery cable.

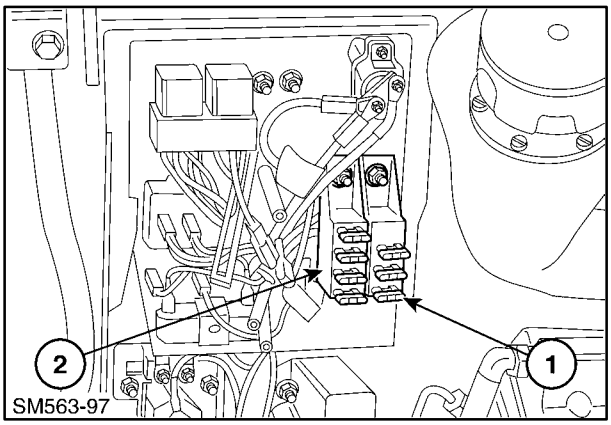

111

https://truckmanualshub.com/

ALTERNATOR EXCITE RESISTOR WIRING

Ref	Color	Destination
1	Y/DKBL	To Alternator
2	LTGN/B-1	From Accessory Relay
3	LTGN/B-3	To Alternator

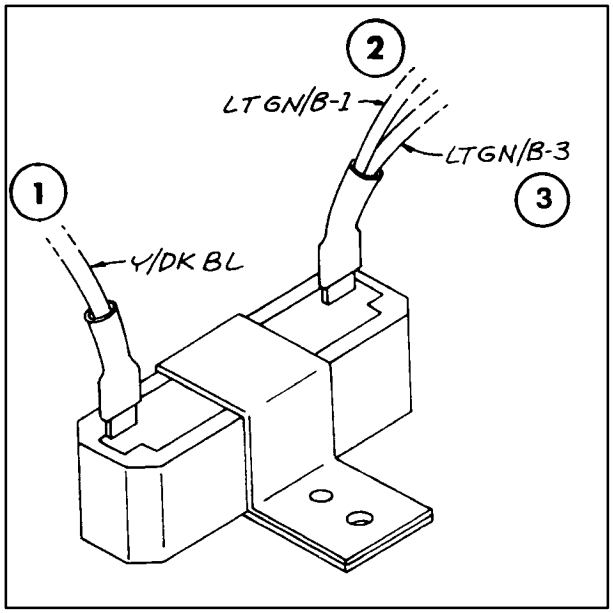

112

Op. 55 301 16

ALTERNATOR EXCITE RESISTOR REMOVAL

1. Disconnect the negative (–) battery cable.
2. Unplug the wires from the resistor terminals.
3. Remove the resistor, 1, retaining hardware.

   Testing the resistor using an ohmmeter, the resistance should read approximately 50 ohms ± 5 ohms.

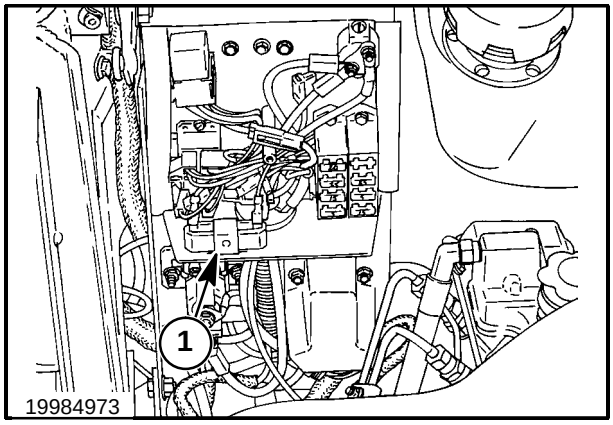

113

ALTERNATOR EXCITE RESISTOR INSTALLATION

1. Reinstall the resistor retaining hardware.
2. Reconnect the wires to the proper terminals.

https://truckmanualshub.com/

START RELAY WIRING

Ref	Color	Destination	Battery Voltage
1	R	To 20A Heater Fuse (optional fuse block)	All Times
2	R	To Preheat Circuit Breaker	All Times
3	R	From Starter Solenoid	All Times
4	W/R	To Starter Solenoid	Key “START” position
5	W/DKBL	From Start Interlock Relay	Key “START” position
6	W/DKBL	From Service/Run Switch	Key “START” position
7	B-4	To Start Interlock Relay	Ground Circuit
8	B-5	To Accessory Relay	Ground Circuit
9	B-6	To Preheat Relay	Ground Circuit

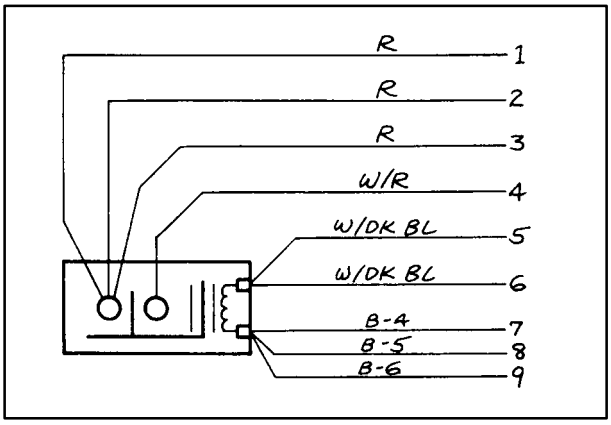

114

Op. 55 100 34

START RELAY REMOVAL

1. Disconnect the negative (–) battery cable.
2. Remove the relay cover, 1, attaching hardware and cover.
3. Remove the wires from the relay terminals.
4. Remove the relay retaining hardware.
5. Remove the barrier from between the large terminals and install on new relay.

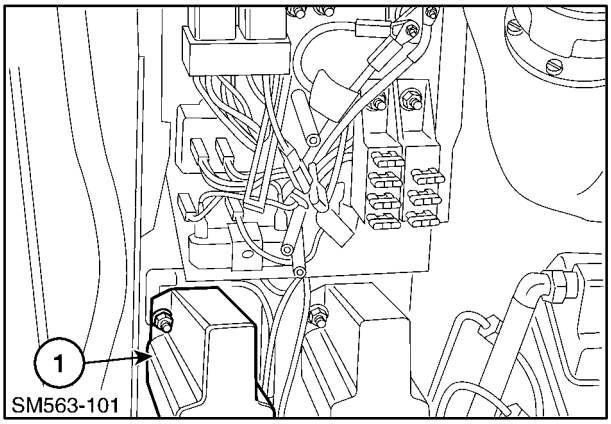

115

START RELAY INSTALLATION

1. Reattach the relay, 1, to the support.
2. Reconnect the wires to the proper relay terminals.
3. Reinstall the relay cover.
4. Reconnect the negative (–) battery cable.

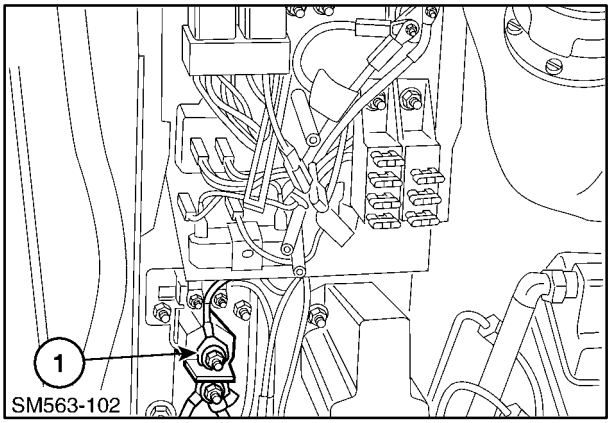

116

https://truckmanualshub.com/

PREHEAT RELAY WIRING

Service/Run Switch - Service Position

Ref	Color	Destination	Battery Voltage
1	R/LTBL	From Preheat Circuit Breaker	All Times
2	LTBL/B	To Glow Plugs	Push Button
3	LTBL/Y	From Manual Preheat Button	Push Button
4	B-6	To Start Relay	Ground Circuit
5	B-8	To Engine Bellhousing Ground	Ground Circuit

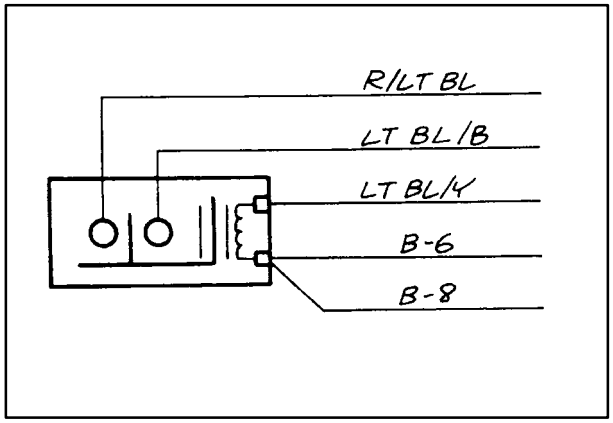

117

Service/Run Switch - Run Position

Ref	Color	Destination	Battery Voltage
1	R/LTBL	From Preheat Circuit Breaker	All Times
2	LTBL/B	To Glow Plugs	EIC Preheat Cycle
3	LTBL/Y	From Manual Preheat Button	EIC Preheat Cycle (Voltage will be 0.5 to 1.0 volt less than battery voltage).
4	B-6	To Start Relay	Ground Circuit
5	B-8	To Engine Bellhousing Ground	Ground Circuit

https://truckmanualshub.com/

Op. 55 100 34

PREHEAT RELAY REMOVAL

1. Disconnect the negative (–) battery cable.
2. Remove the relay cover, 1, attaching hardware and cover.
3. Remove the wires from the relay terminals.
4. Remove the relay retaining hardware.
5. Remove the barrier from between the large terminals and install on new relay.

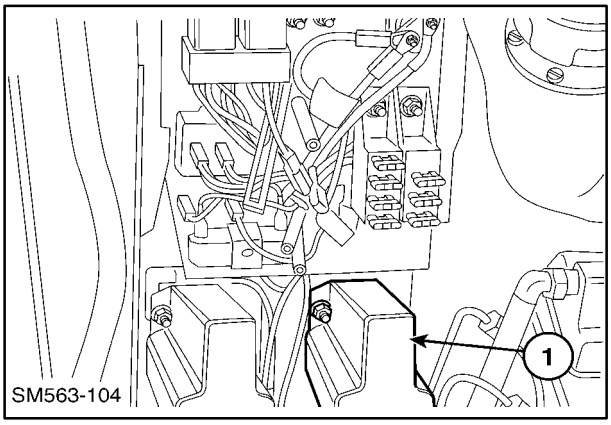

118

PREHEAT RELAY INSTALLATION

1. Reattach the relay, 1, to the support.
2. Reconnect the wires to the proper relay terminals.
3. Reinstall the relay cover.
4. Reconnect the negative (–) battery cable.

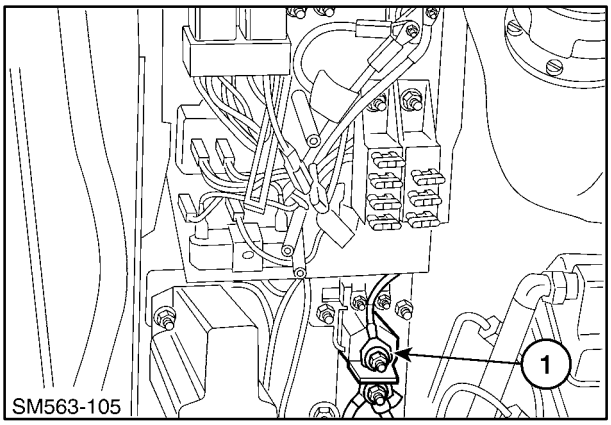

119

https://truckmanualshub.com/

Op. 55 201 76

PREHEAT GLOW PLUG REMOVAL

1. Disconnect the negative (–) battery cable.
2. Disconnect the LTBL/B wire, 1, from the glow plug bus bar.
3. Remove the bus bar retaining nuts, 2, and remove the bus bar from the glow plugs.
4. Remove glow plugs from the head.

PREHEAT GLOW PLUG INSTALLATION

1. Install glow plugs into the head and, using new sealing washers, tighten to 15 - 19 N·m (11 - 14 ft. lbs.).
2. Reinstall the bus bar onto the glow plugs.
3. Reconnect the LTBL/B wire to glow plug bus bar.
4. Reconnect the negative (–) battery cable.

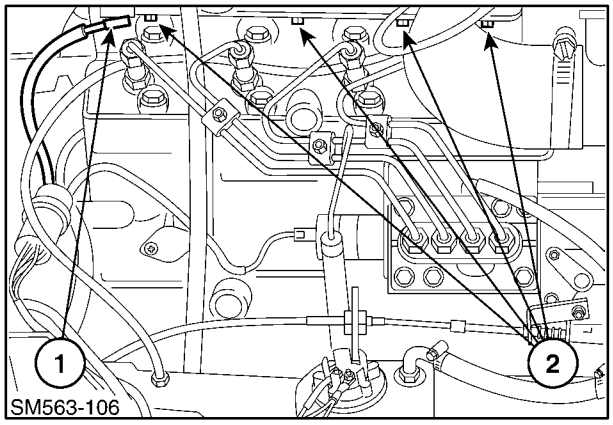

120

https://truckmanualshub.com/

FUEL SYSTEM COMPONENTS

The fuel system consists of a fuel tank located in the left side of the engine compartment at 1; fuel tank pickup tube, 2; fuel tank sending unit, 3; in-line fuel filter, 4; electric fuel pump, 5; injection pump, 6; and return fuel line, 7, from the injector bleed off to the tank. The fuel flow is controlled by an electric fuel solenoid, 8, which is controlled by the EIC (Electronic Instrument Cluster).

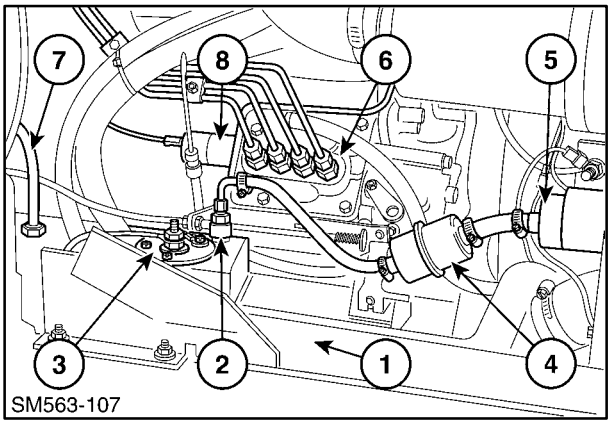

121

FUEL GAUGE

In the center of the EIC panel is the fuel gauge, implemented as a vertical 10-segment green LED bar graph. The lowest segments will flash when the fuel level is low. An audible alarm will accompany the flashing light for about 5 seconds.

FUEL TANK SENDING UNIT (Fuel level)

STEP	PRETEST INSTRUCTIONS	TEST	RESULT	PROBABLE CAUSE AND CORRECTION
1	Loader on level with parking brake engaged, key “ON” position Symptom: No bars lit	EIC gauge and sender operation Jumper wire from one terminal to other at sender	NO bars light up YES (bars light up)	Check wires from sender to EIC board, if OK, replace EIC board Replace sender
2	Symptom: Fuel level does not read lower on gauge (too many bars lit)	Disconnect PU/W wire	Bars stay lit Bars go out	Check for PU/W wire shorted to ground. If OK, replace EIC board. Replace sender

FUEL SYSTEM ELECTRICAL DIAGRAM

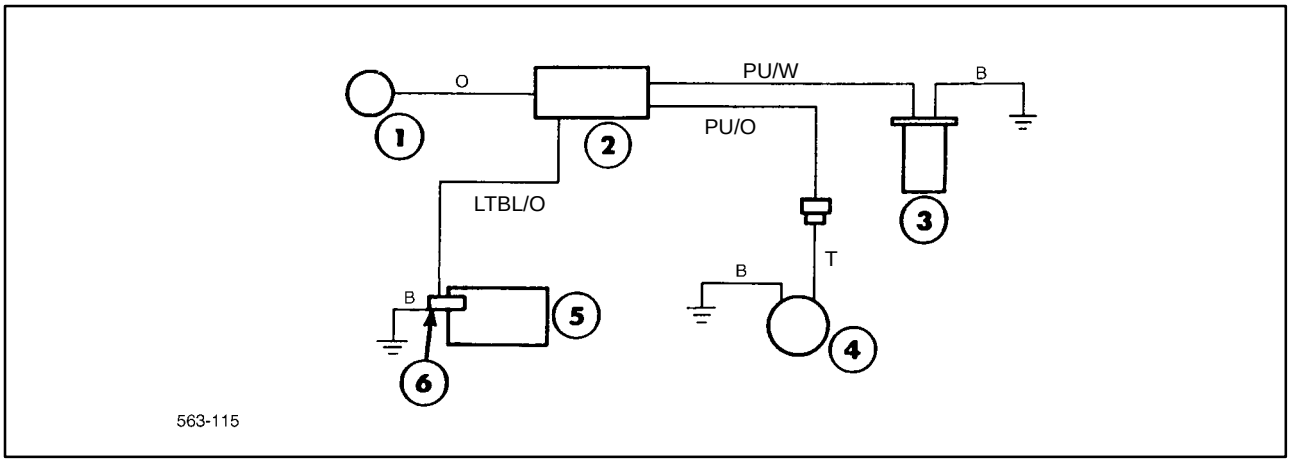

122

1. Key switch
2. EIC board
3. Fuel level sender
4. Electric fuel pump
5. Injector pump
6. Fuel shutoff solenoid

https://truckmanualshub.com/

TESTING FUEL GAUGE IN DIAGNOSTIC MODE
Use a jumper wire and connect sender terminals, 1, and the EIC board will light and beep. If the EIC board lights and beeps, the EIC and circuit wires to the sender are OK. If the EIC board fails to light, check the wires to the EIC board.

If the fuel gauge is not working and the wiring and the fuel sender are found to be good, the complete EIC board will require replacement.

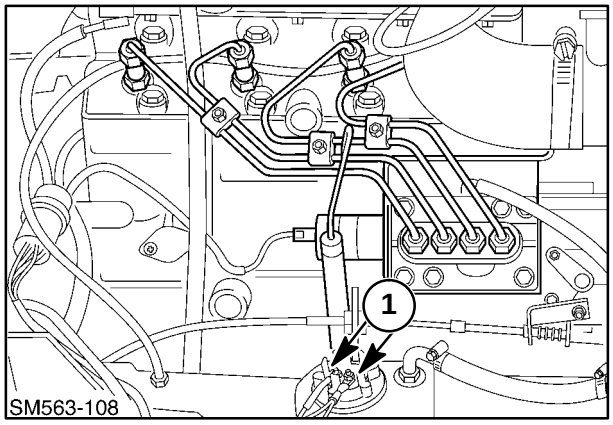

123

Op. 55 410 80

REMOVAL OF FUEL LEVEL SENDER

1. Support the boom on the boom lock pins.
2. Open the rear door and remove the left engine side shield.
3. Disconnect the wires from the sender, 1.
4. Remove the sender retaining screws, 2, and remove the sender, 3, assembly from the tank.

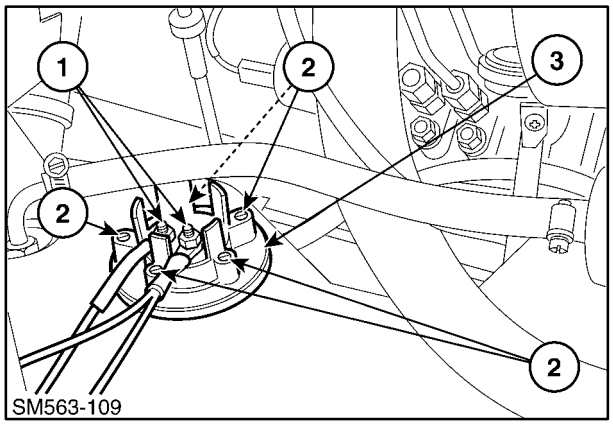

124

TESTING OF THE FUEL LEVEL SENDER
Using a volt/ohmmeter, put one lead on one terminal and the second lead on the other terminal. Rotate the sender from full tank to empty tank, and the ohms reading should be between 35 ohms full and 240 ohms empty.

If the fuel gauge is not working and the wiring and the fuel sender are found to be good, the complete EIC board will require replacement.

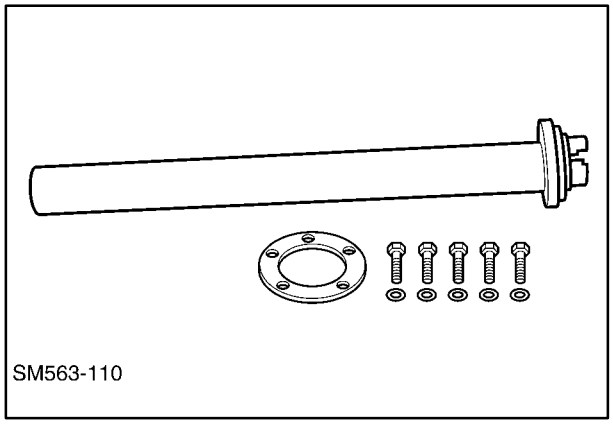

125

https://truckmanualshub.com/

ELECTRIC FUEL PUMP

The electric fuel pump, 1, is located in the left side of the engine compartment.

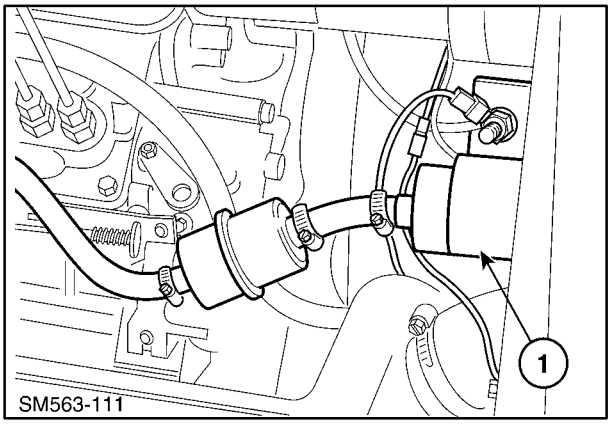

126

ELECTRIC FUEL PUMP TESTING

STEP	PRETEST INSTRUCTIONS	TEST	RESULT	PROBABLE CAUSE AND CORRECTION
1	Loader on level with parking brake engaged, key “OFF” position	Fuel level in tank	NO YES	Add fuel and bleed system Go to next step
2	Key “ON” position	Fuel pump operating	NO YES	Check power supply (5-amp fuse in cab panel). If OK, check ground; if OK, replace pump Go to next step
3	Key “ON” position	Fuel pump operating but not pumping fuel	NO YES	Check line to tank, air leak, fuel level, tank pickup tube; if OK, replace pump Go to next step
4	Key “ON” position	Fuel pump operating and pumping fuel	NO YES	Replace pump Replace fuel line at injector pump and bleed system; if OK, go to next step
5	Key “ON” position	Fuel pump operating and pumping fuel	YES	Check fuel shutoff solenoid for operation

NOTE: *Always check fuel level in tank. Always check fuel filters.*

https://truckmanualshub.com/

Op. 10 210 21

ELECTRIC FUEL PUMP REMOVAL

1. Support the boom on the boom lock pins.
2. Open the rear door and remove the left engine side shield.
3. Remove the hose clamps, 1, from the pump and hoses.
4. Remove the pump support hardware, 2, ground wire, and unplug the power wire, 3.
5. Upon reinstallation of the pump, make sure the pump wires are placed to prevent getting damaged. Make sure the ground wire is making good contact.

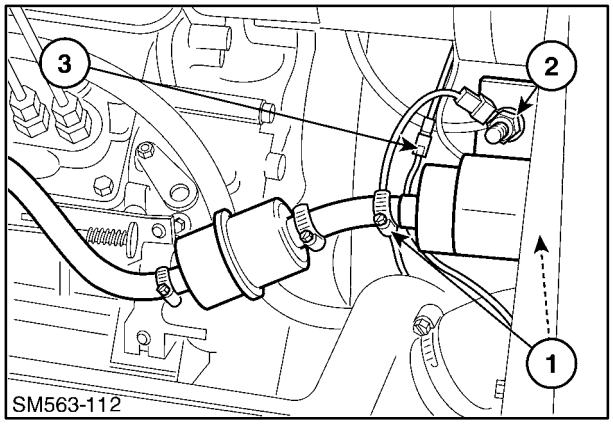

127

Op. 10 223

FUEL SHUTOFF SOLENOID

The fuel shutoff solenoid is located at the injection pump at 1. The solenoid is controlled through the starting circuit during cranking. After the engine is started, the EIC takes control of the solenoid for normal operation.

If a fault occurs in either the engine oil pressure or the hydrostatic charge pressure circuits, the EIC will remove power from the solenoid, stopping the engine within 30 seconds.

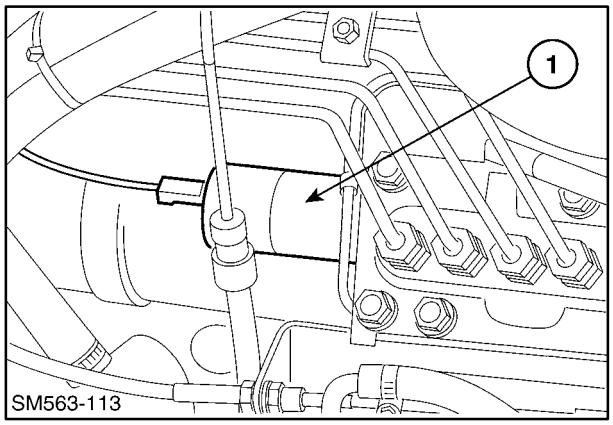

128

FUEL SHUTOFF SOLENOID TESTING

STEP	PRETEST INSTRUCTIONS	TEST	RESULT	PROBABLE CAUSE AND CORRECTION
1	Loader on level with parking brake engaged, key “ON” position, service “RUN” switch in “RUN” position	Battery voltage to solenoid	NO YES	Check power wire from EIC to solenoid for open; if OK, go to next step Replace solenoid
2	Key “ON” position, service “RUN” switch in “SERVICE” position	Battery voltage to solenoid	NO YES	Check power wire from service/run switch to fuel solenoid; if OK, go to next step Replace solenoid
3	Key “ON” position, “SERVICE/RUN” switch in “RUN” position	Check EIC board operation	NO YES	Check power to EIC board. Check 5-amp electronics Ign. fuse in cab fuse panel. Replace EIC board

https://truckmanualshub.com/

Op. 10 223 10

REPLACEMENT OF FUEL SHUTOFF SOLENOID

1. Support the boom on the boom lock pins.
2. Open the rear door and remove the left engine side shield.
3. Remove the power wire from the solenoid, 1.
4. Remove the solenoid from the injection pump.
5. Solenoid pull-in amperage 1.5 to 1.8 amps. Solenoid hold-in amperage 1.3 to 1.7 amps.
6. Reinstall the solenoid and tighten securely. Reinstall the power wire.

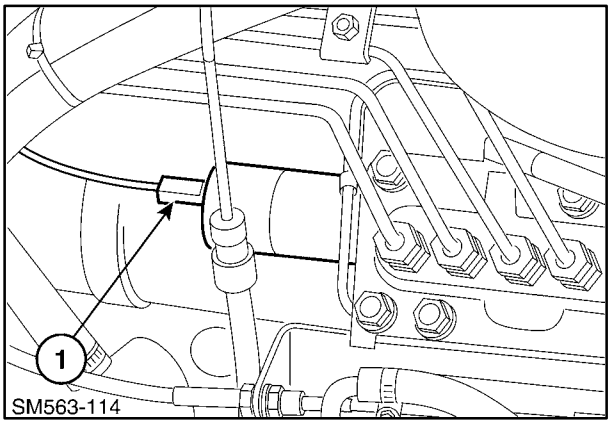

129

https://truckmanualshub.com/

AIR FILTER RESTRICTION INDICATOR SWITCH

Op. 55 414 14

REMOVAL

1. Support the boom on the boom lock pins.
2. Open the rear door and remove the left engine side shield to access the sender.
3. Remove the B/Y, 1, and B, 2, wires from the sender.
4. Remove the sender, 3, from the air cleaner tube.

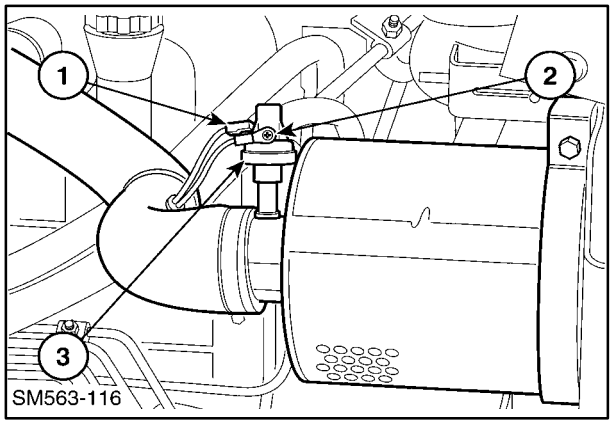

130

INSTALLATION

Install the sender and reinstall the B/Y and B wires to the sender terminals.

ENGINE COOLANT TEMPERATURE SENDER

Op. 55 414 10

REMOVAL

1. Support the boom on the boom lock pins.
2. Open the rear door and remove the right engine side shield to access the sender.
3. Remove the PU/LTGN wire, 1, from the sender terminal.
4. Drain the cooling system down below the sender level to prevent loss of coolant.
5. Remove the sender, 2, from the engine block.

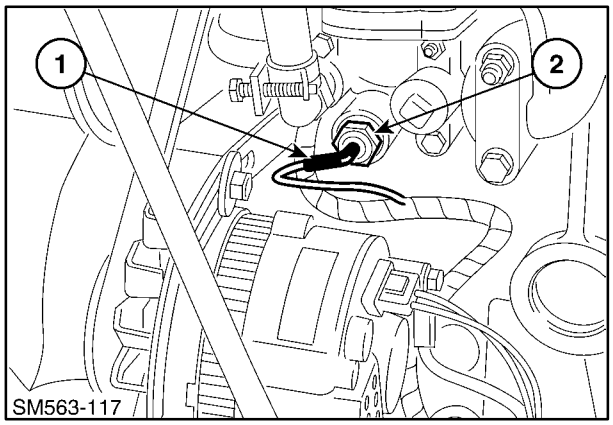

131

INSTALLATION

1. Remove and clean the engine block thread area.
2. Apply pipe sealant to the threads of the sender.
3. Install the sender into the engine block.
4. Reinstall the PU/LTGN wire to the sender terminal.
5. Refill the cooling system with coolant previously removed or a 50/50 mixture of a permanent-type antifreeze.
6. Operate the unit to remove air from the cooling system and recheck the coolant level.

https://truckmanualshub.com/

ENGINE OIL PRESSURE SWITCH

Op. 55 414 12

REMOVAL

1. Support the boom on the boom lock pins.
2. Open the rear door and raise the top engine shield to access the switch.
3. Remove the Y/B wire, 1, from the switch terminal.
4. Remove the switch, 2, from the engine head.

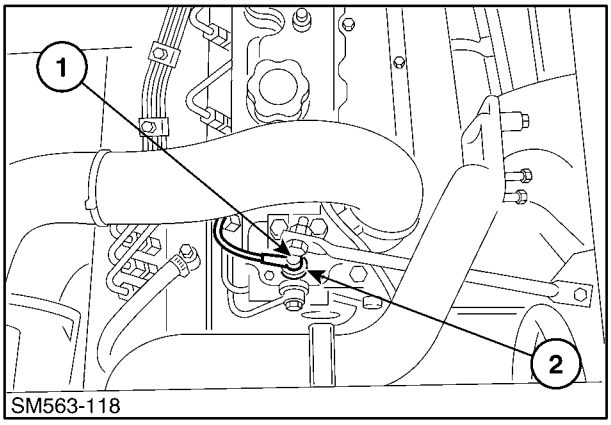

132

INSTALLATION

1. Install the switch.
2. Attach the Y/B wire to the switch terminal.

HYDROSTATIC CHARGE PRESSURE SWITCH

Op. 55 414 28

REMOVAL

1. Support the boom on the boom lock pins.
2. Open the rear door, raise the top engine shield and remove the right engine side shield to access the switch.
3. Remove the Y/GY wire, 1, and B wire, 2.
4. Remove the charge pressure switch, 3, from the return line tee.

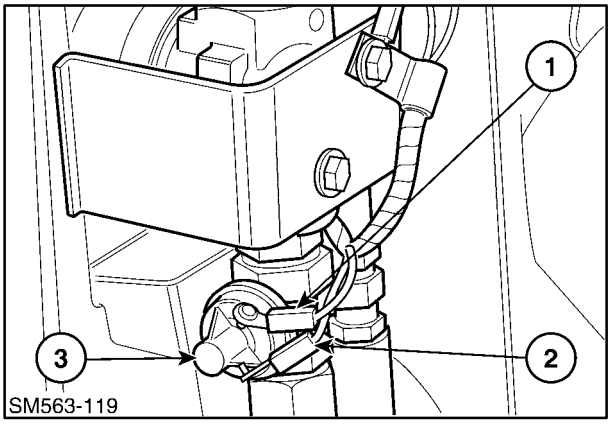

133

INSTALLATION

1. Install the charge pressure switch into the tee.
2. Reinstall the Y/GY and B wires to the switch.

https://truckmanualshub.com/

HYDRAULIC OIL FILTER RESTRICTION SWITCH

Op. 55 414 24

REMOVAL

1. Support the boom on the boom lock pins.
2. Open the rear door, raise the top engine shield and remove the right engine side shield to access the switch.
3. Remove the DKGN/O wire, 1.
4. Remove the restriction switch, 2, from the filter base.

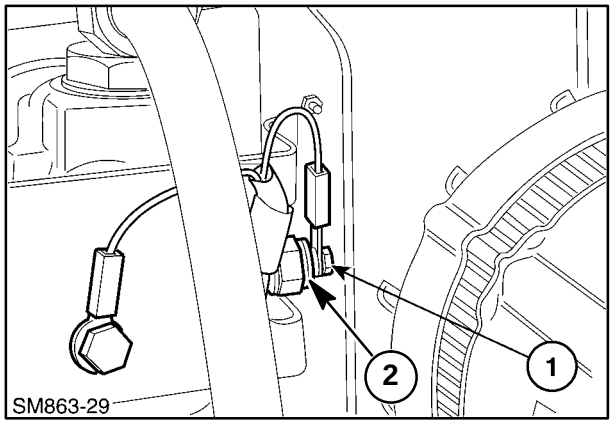

134

INSTALLATION

1. Install the switch into the filter base.
2. Attach the DKGN/O wire to the switch terminal.

HYDRAULIC OIL TEMPERATURE SENDER

Op. 55 414 20

REMOVAL

1. Remove any attachment from the boom face plate and support the boom on the boom lock pins.

CAUTION

Never work under a raised boom unless it is properly supported by the boom lock pins.

2. Raise the operator's seat and latch in the raised latched position.

CAUTION

Never work under a raised seat unless it is securely latched in the raised position.

3. Drain the hydraulic reservoir.

   Remove the rear engine belly pan hardware, 1, and lower the pan from the loader.

CAUTION

Use a floor jack to support the belly pan and prevent serious injury.

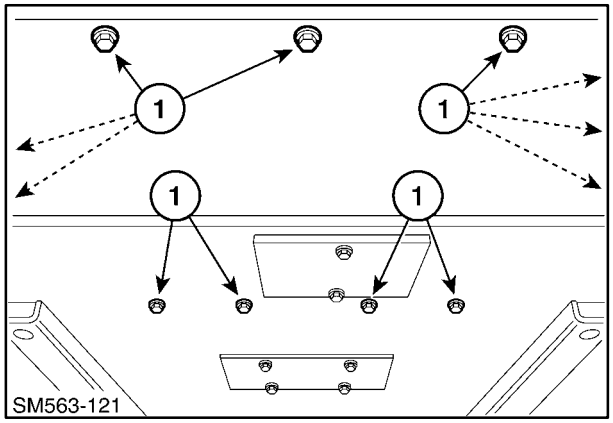

135

https://truckmanualshub.com/

4. Loosen the return line clamp at 1.
5. Remove the return line at 2, and rotate the line so the oil drains into a clean suitable pan for reuse.
6. After the reservoir is drained, reconnect the return lines and tighten all fittings and connections.

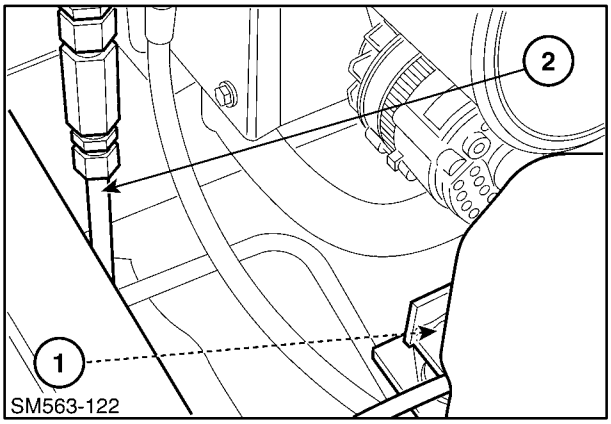

136

7. Remove the PU/LTBL wire and B wire from the sender, 1.
8. Remove the sender from the reservoir by rotating the sender counterclockwise.
9. Remove the grounding ring and washer from the old sender.

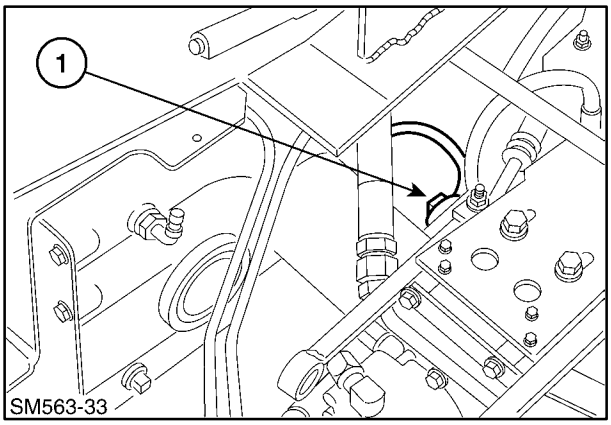

137

INSTALLATION

1. Install grounding ring and washer over threads of sender.
2. Use hydraulic thread sealant on the sender threads and install the sender, 1, into the reservoir.

IMPORTANT: *Do not over tighten the sender or damage to the reservoir threads may occur resulting in oil leakage.*

3. Reconnect the sender wires, B wire on the ground blade, and the PU/LTBL wire to the center sender terminal.
4. Refill the hydraulic reservoir with the oil previously removed or new SAE 10W/30 API Service SG-CE motor oil.
5. Reinstall the engine belly pan, and tighten the retaining hardware.
6. Operate the unit and check for leaks. Repair if required.

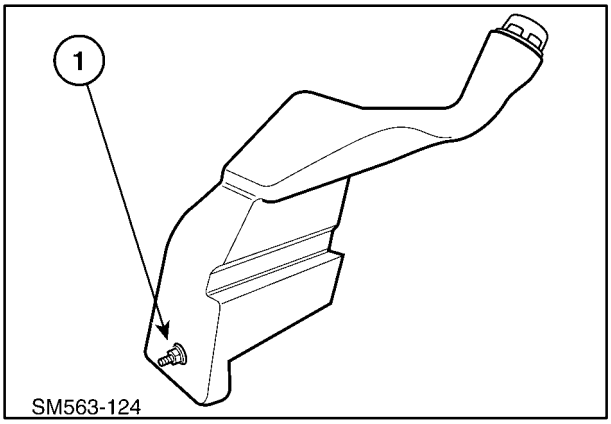

138

https://truckmanualshub.com/

BOOM/BUCKET CONTROL VALVE SPOOL LOCK SOLENOIDS

Op. 35 724 90

REMOVAL

1. Remove any attachment from the loader attaching plate.
2. Raise the boom and support on the boom lock pins.
3. Stop the engine, turn the ignition key to the “RUN” position and operate the boom and bucket controls to relieve pressure in the boom and bucket circuits. Turn “OFF” the key.

CAUTION

Never work under a raised boom unless it is properly supported by the boom lock pins.

Never work under a raised boom with an attachment. Always remove the attachment from the loader.

4. Raise the operator’s seat and latch in the raised latched position.

CAUTION

Never work under a raised seat unless it is securely latched in the raised position.

5. Remove the step shield to access the control valve area.
6. Unplug the solenoid coil wires, 1, and remove the coils, 2, from the control valve spool by turning the coils counterclockwise.

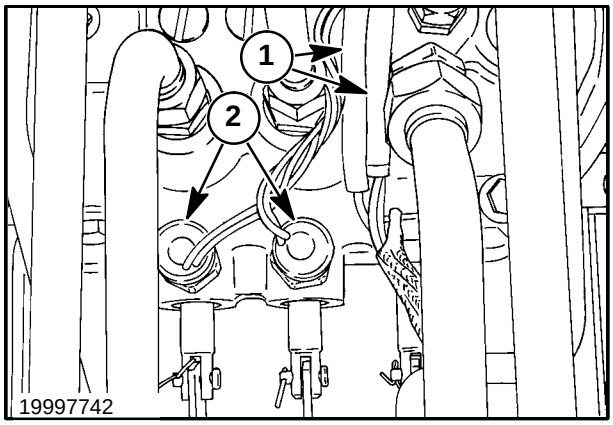

139

https://truckmanualshub.com/

INSTALLATION

1. Thoroughly clean the control valve block.
2. Install the solenoid coil into block and tighten the coils to 15 N·m (11 ft. lbs.).
3. Reconnect the coil wires to the main wire harness.
4. Reinstall the step shield.
5. Lower the seat to the operate position and securely latch.

CAUTION

Do not operate the loader unless the seat/seat support is properly latched in the latched position.

https://truckmanualshub.com/

WIRE HARNESS

Op. 55 100 74

MAIN WIRE HARNESS REMOVAL

1. Remove any attachment from the loader attaching plate.
2. Raise the boom and support on the boom lock pins.
3. Stop the engine, turn the ignition key to the “RUN” position and operate the boom and bucket controls to relieve pressure in the boom and bucket circuits. Turn “OFF” the key.

CAUTION

Never work under a raised boom unless it is properly supported by the boom lock pins.

Never work under a raised boom with an attachment. Always remove the attachment from the loader.

4. Disconnect the negative (–) battery cable.
5. Unplug the seat and seat belt wire harness at connector, 1, behind the seat assembly.

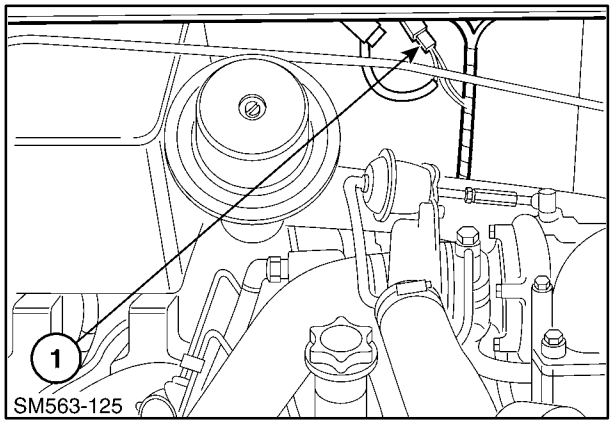

140

6. Remove the rear window and frame assembly retaining hardware, 1.

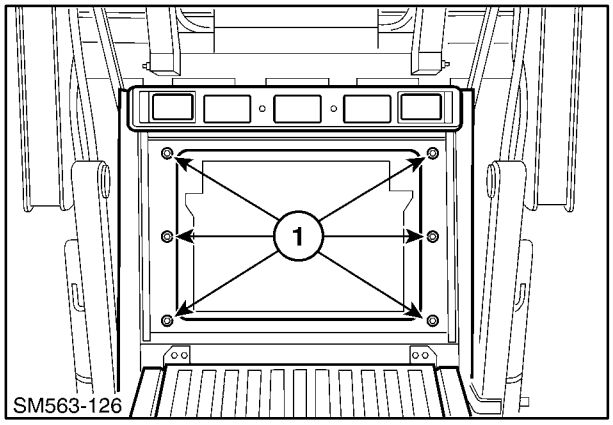

141

https://truckmanualshub.com/

7. Remove the right side plate, 1, and headliner, 2, if equipped. Unhook all wire connections at the service/run switch, preheat button, and fuse block(s) at this time. Removal of fuse block/switch panel, 3, may be required for easier switch access.

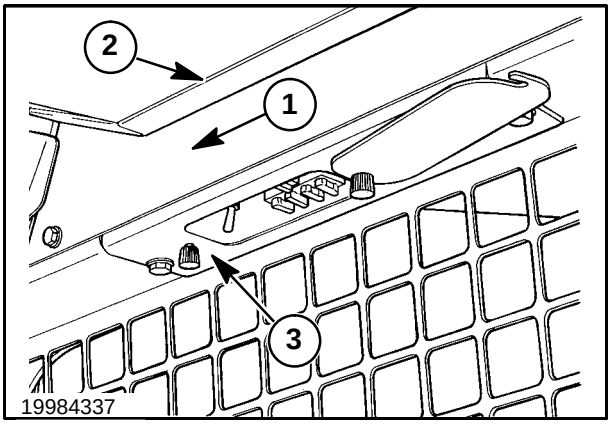

142

8. Remove the upper rear support retaining hardware, 1, right and left side and remove support, 2.

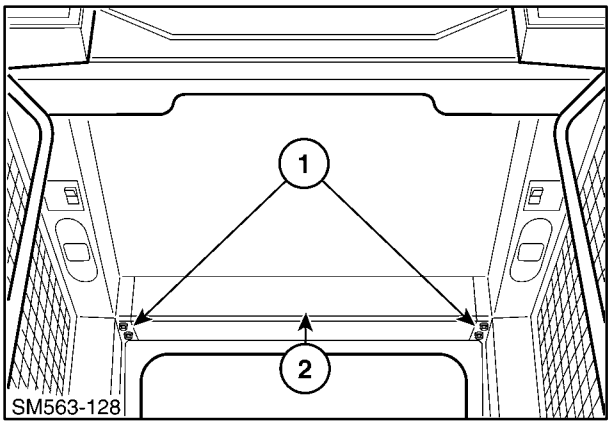

143

9. Remove the EIC board retaining hardware, 1, unplug the EIC board and remove from the dash. Remove the ignition key switch panel, 2, and remove wires from the switches. Remove the panel. Loosen the front support (dash) retaining hardware, 3, and remove the hardware from the right side.

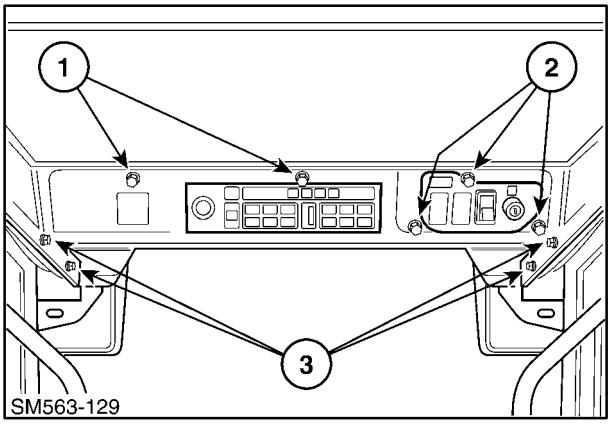

144

https://truckmanualshub.com/

10. Unplug the seat wire harness from the main harness.

11. Remove the seat and seat pan assembly retaining hardware, 1, unlatch the seat assembly at 2, and remove the assembly from the loader.

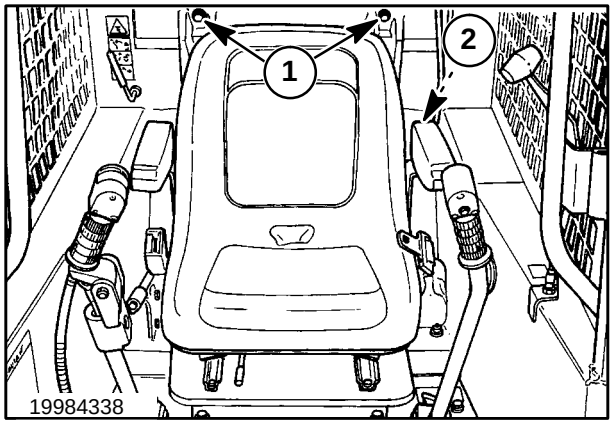

145

12. Remove the four retaining screws from the front shield, 1, and the eight retaining bolts from the step shield, 2. Remove both shields from the loader.

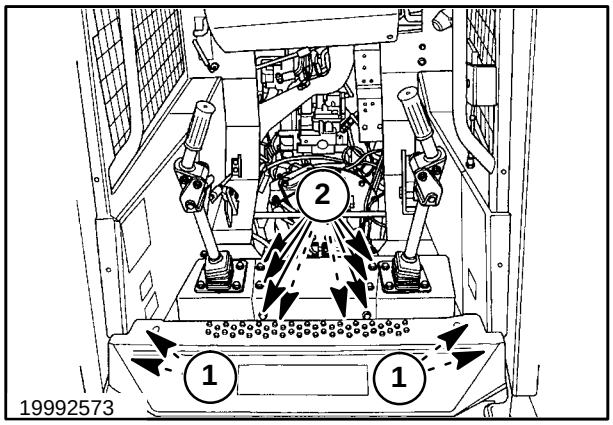

146

13. Remove the rear seat support, 1, hardware at 2, and the isolator mount hardware, 3.

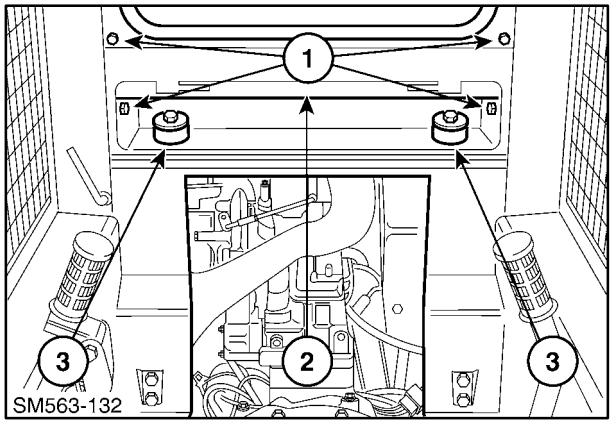

147

https://truckmanualshub.com/

14. Remove the right hydrostatic control handle assembly, 1, retaining hardware. Unhook the hydrostatic control linkage and auxiliary boom hydraulic linkage (if equipped). Lift the control assembly from the loader.

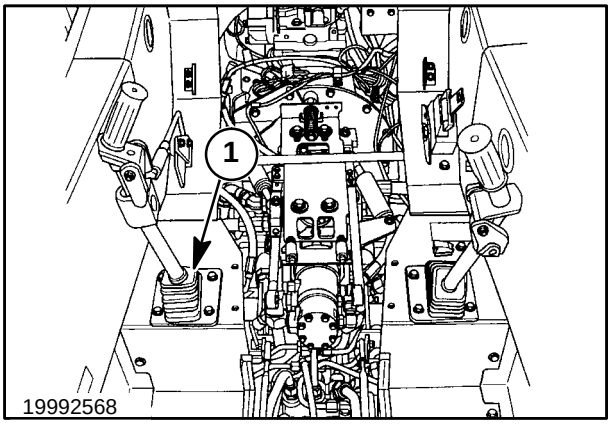

148

15. Remove the right fender to access and loosen the right front isolator mount bolt, 1.

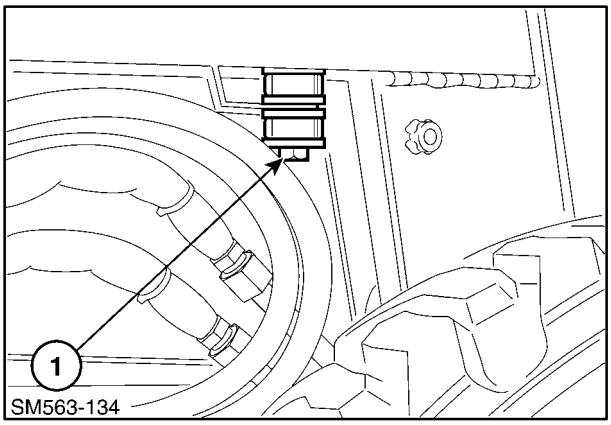

149

16. Remove the left fender.

17. Remove all wire harness retaining clamps from the main wire harness at the rear and left side of the loader frame, 1 and 2.

    (Cut wire ties along the right side of the rear window if so equipped and any ties retaining the optional harness to the main harness. Cut the wire tie at the keeper bar at the left front to rear of cab pivot).

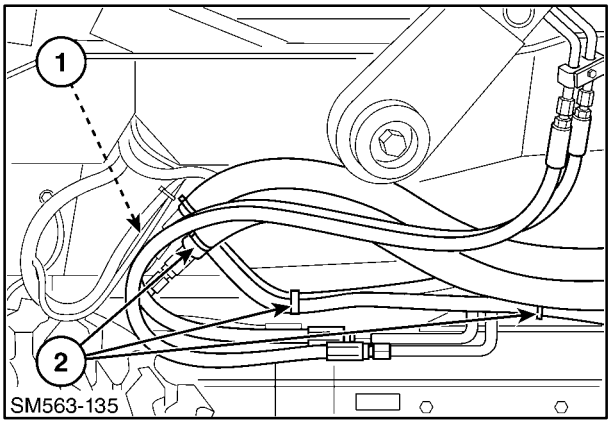

150

https://truckmanualshub.com/

18. Remove harness from left rear of engine area after disconnecting wires from fuel sender, 1, and fuel pump, 2. Remove tubing from the harness that is located in fuel tank groove, 3.

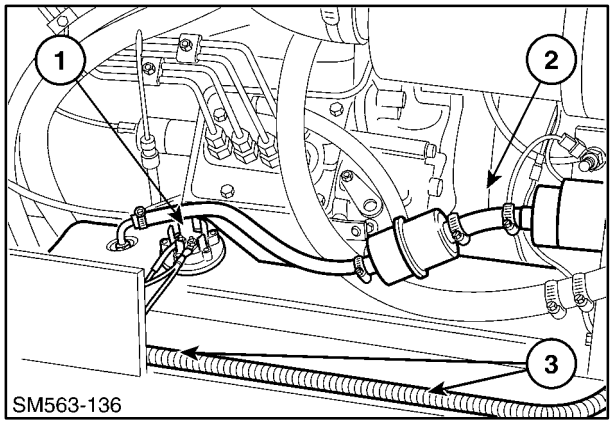

151

19. Thoroughly clean the connector between the main and engine harness. Make sure the connector is dry.

20. Unplug the main wire harness from the engine wire harness, 1, and remove the ground wires from the engine bellhousing ground stud, 2. Remove wires from the engine fuse and relay panel, 3.

21. Remove the hydraulic oil temperature sender wires, 4, and remove the harness from the clamps on the face of bellhousing, 5. Remove the remaining bellhousing clamps.

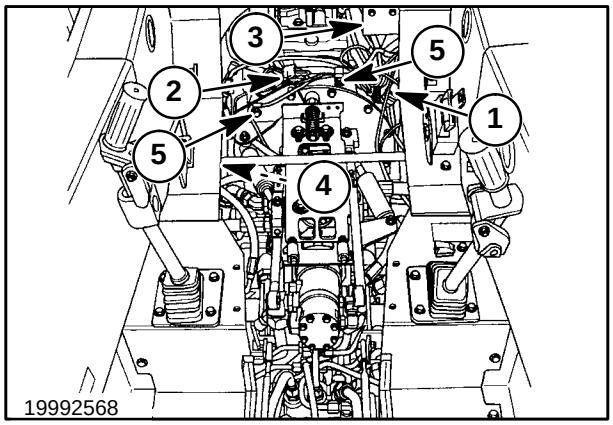

152

22. Disconnect the control valve connectors, 1, remove the harness from the J clamp, 2, on the valve and pull the harness out through the left fender area.

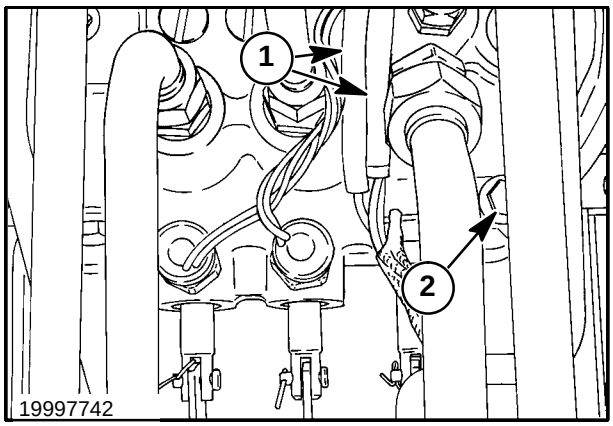

153

https://truckmanualshub.com/

23. Now the right side panel, 1, can be pivoted into the center of the cab area at the rear and the wire harness can be removed from the corner of the side panel.

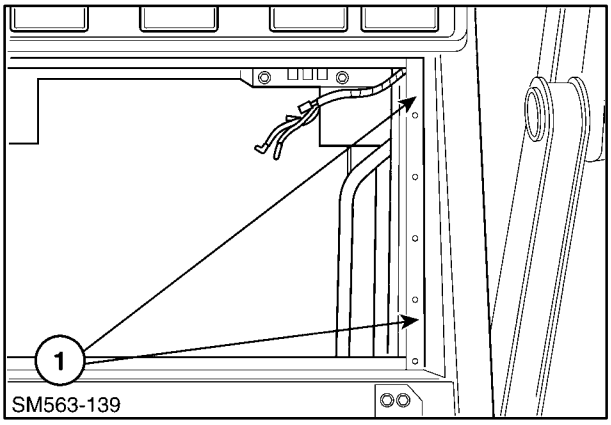

154

MAIN WIRE HARNESS INSTALLATION

1. Install the wire harness up the right rear corner of the side panel with the EIC board connector toward the front of the loader cab. Position the service/run and fuse block connectors at their location. Place the wire in the upper rear corner of the cab side panel at 1, to prevent the wire harness from contacting the cab panel retaining hardware. Install two wire ties or clamp at the upper right side of the rear window and one tie at the bottom to hold the harness up and maintain clearance from the cab panel hardware and headliner support.

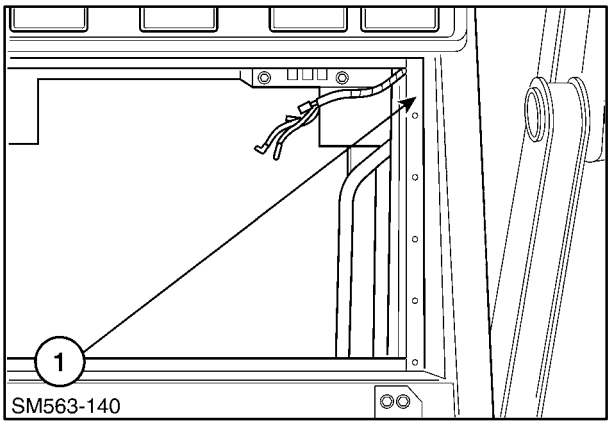

155

2. Place the main wire harness to the front side of the boom lock linkage at 1, and reinstall the wire clamps. Route the harness across the loader to the left side of the loader.

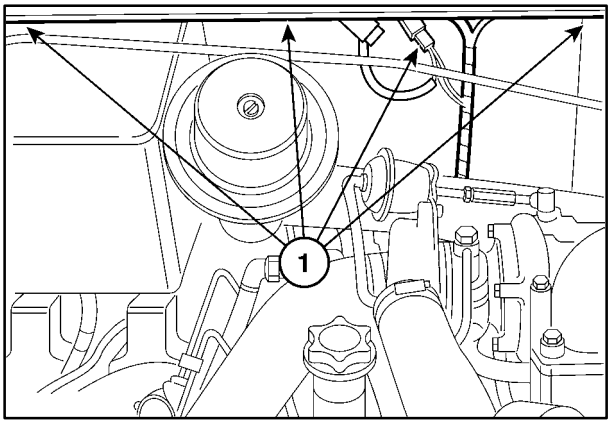

156

https://truckmanualshub.com/

3. Route the wire harness to the front of the loader on the left side, 1 and 2, and install wire clamps where previously installed. Place the harness into the loop (keeper) and secure with a wire tie at 1, and then along the top of the lower frame to the rear of the loader to the engine fuse/relay panel area.

4. Route the harness branch to the inside of the frame with the hydraulic lines and down to the floor and front of the control valve. Refasten in the J clamp and route the connectors between valve bosses and plug in solenoids. Tuck the connectors between valve bosses to protect the harness.

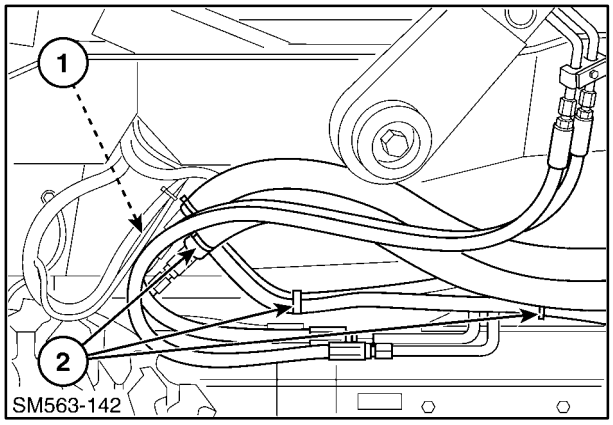

157

5. Connect the main wire harness connector to the engine wire harness, 1. Reconnect the wires to the proper components in the panel.

6. Route the harness branch along the fuel tank groove, 2, install tubing over the harness and connect to the fuel sender, 3, and fuel pump.

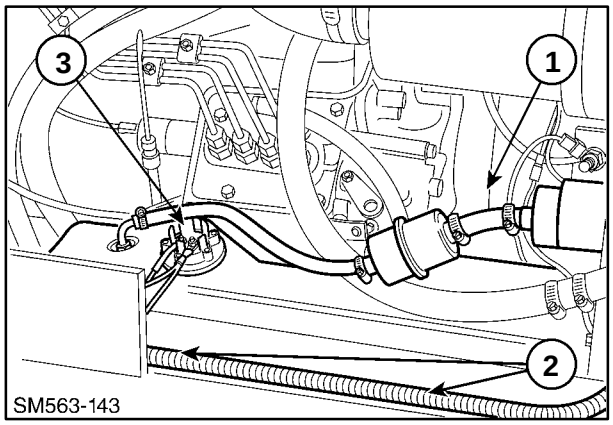

158

7. Attach the ground wires at the engine bellhousing ground stud, 1.

NOTE: *When attaching ground wires, always place the heaviest ground wire (battery ground cable) next to the ground surface (bellhousing). Then stack the remaining ground wires according to wire size; largest on bottom, smallest on top of the heaviest wire.*

8. Continue harness routing to the hydraulic temperature switch and secure in the bell housing clamps, 2. Clamp harnesses to the bellhousing.

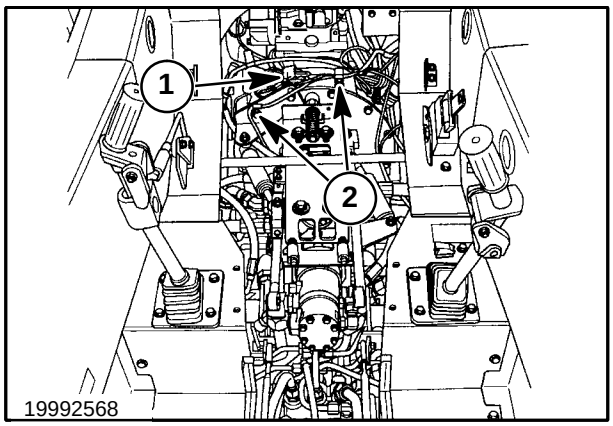

159

https://truckmanualshub.com/

9. Reattach the wires to the service/run switch, 1; fuse block(s), 2; preheat switch, 3; and any ground wires if removed at 4.

NOTE: *When attaching ground wires, always place the heaviest ground wire next to the ground surface and then stack the remaining ground wires according to wire size on top of the heaviest wire.*

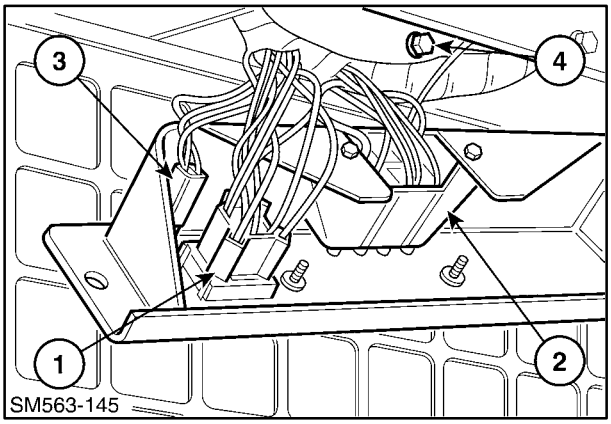

160

10. Reposition the right side panel, 1, and reinstall the front dash support hardware.
11. Reinstall the right front isolator, 2, if removed.
12. Reinstall the upper rear support.
13. Reinstall the lower rear support, 3, and the isolators, 4. Tighten all cab support and side shield hardware at this time.

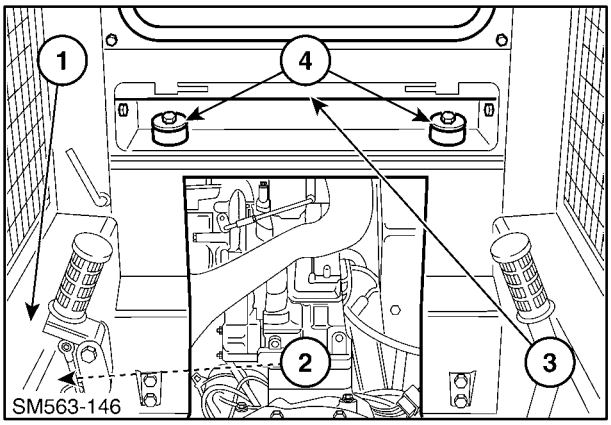

161

14. Reinstall all wire harness clamps previously removed, position the wire harness to prevent damage, and tighten the clamp hardware at this time.
15. Reinstall the seat and seat pan assembly and tighten the hardware. Reconnect the seat harness to the main harness. Check the loop for clearance when the seat is raised and lowered.

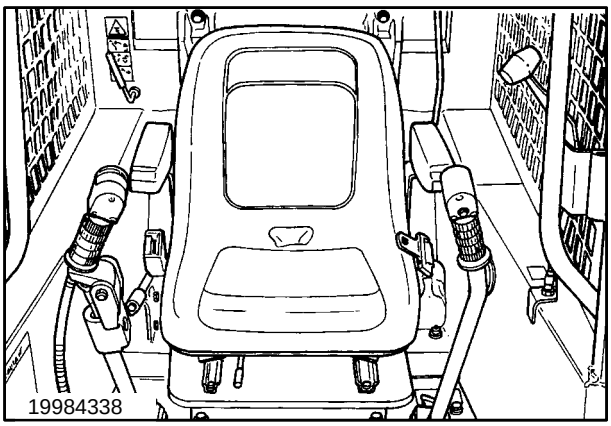

162

https://truckmanualshub.com/

16. Route the wire harness to the front of the cab to the ignition switch and EIC board area. Attach the wires to the ignition switch and position the wire harness to prevent damage. Reinstall the switch panel, 1.
17. Attach the wire harness connectors, 2, to the proper EIC board connector and position the wire harness across the front of the dash area to prevent damage. Reinstall the EIC board.
18. Reconnect the negative (–) battery cable.
19. Check the electrical system for proper operation.

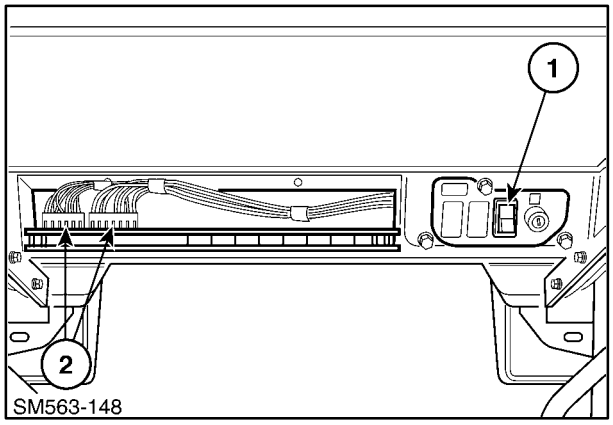

163

https://truckmanualshub.com/

Op. 55 404

ROAD/WORK LIGHTS

The road and work lights provide illumination for road travel and work operations. The rear work lights are not recommended for road travel.

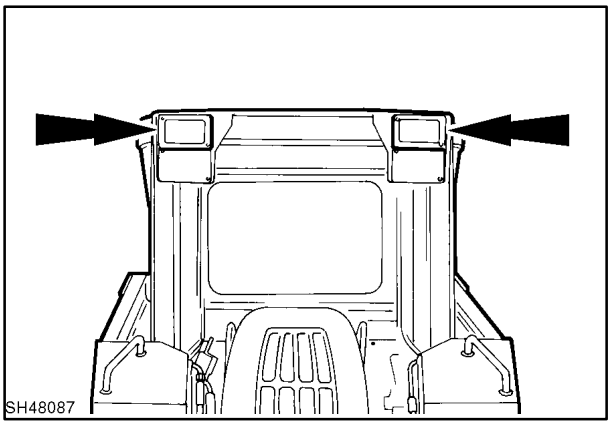

164

Road/work light switch, 1, is located in the ignition key switch panel in the upper right corner of the overhead dash. To remove the switch, disconnect the negative (–) ground battery cable. Remove the key switch panel hardware, 2, and tilt the panel down.

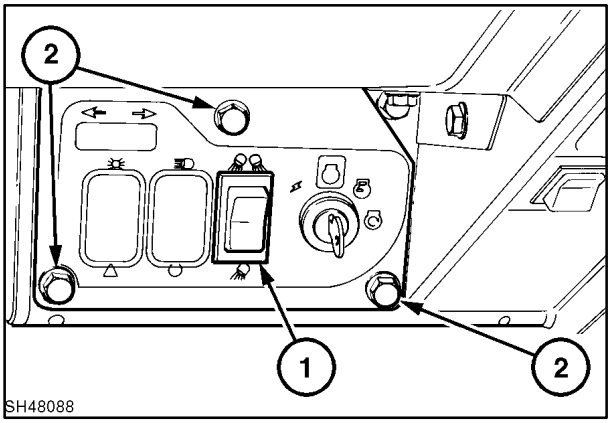

165

Disconnect wires from the switch, squeeze the switch retaining tabs in, and remove the switch from the panel.

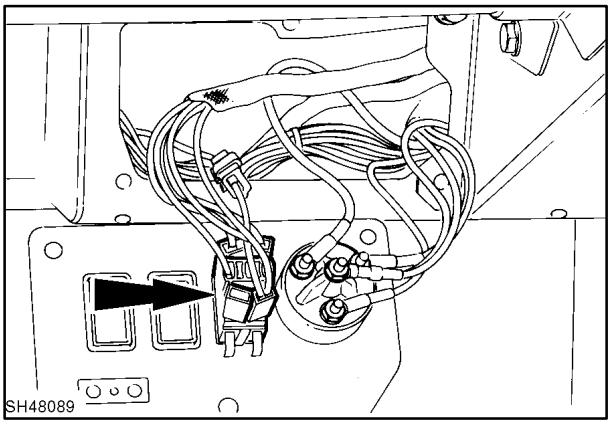

166

https://truckmanualshub.com/

Road/Work Light Switch Wiring

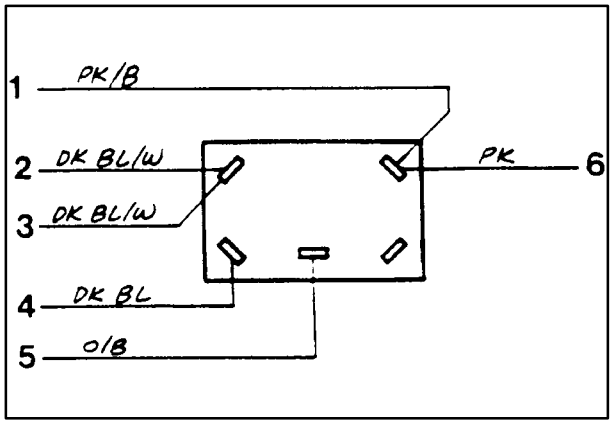

167

Road/Work Light Wiring Diagram

NOTE: *When attaching ground wires, always place the heaviest ground wire next to the ground surface and then stack the remaining ground wires according to size on top of the heaviest wire.*

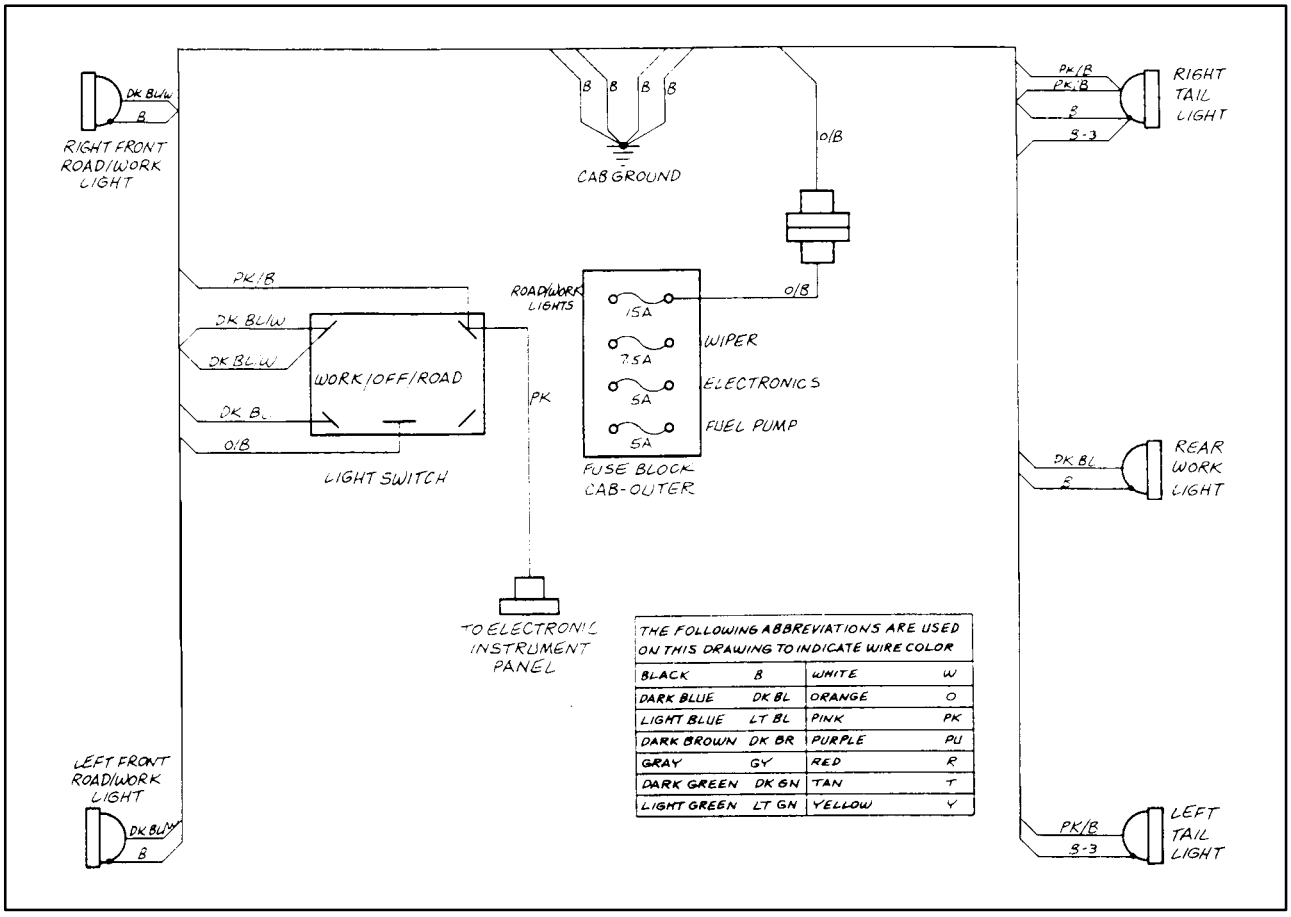

168

https://truckmanualshub.com/

Bulb Replacement
Clear lens with bulb #86533429

Bulb only (clear) #86533428

Red lens with bulb #9829515

Bulb only (red) #C6AB13465A

Op. 55 404 10

Front Road/Work Light

1. Facing the lens of the light assembly, push the lens assembly to the left and lift the right side of the assembly from the support.

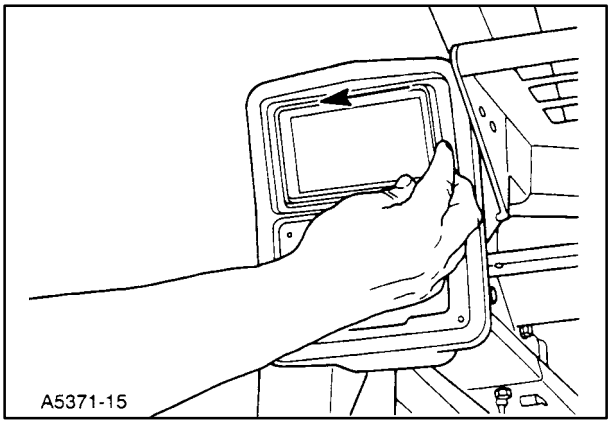

169

2. Unplug the wire harness from the bulb, unlatching the connector at 1, and sliding the harness from the bulb.

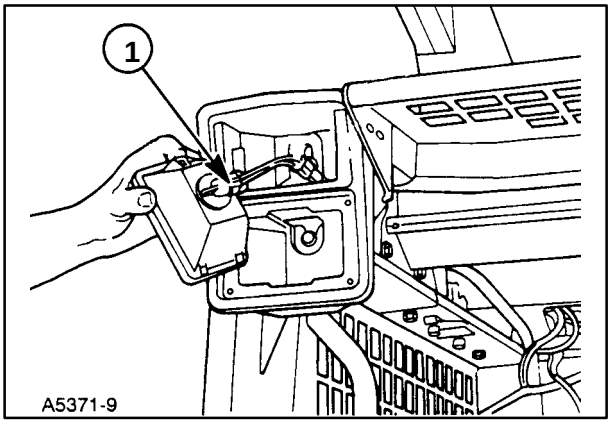

170

3. Facing the back of the assembly, rotate the bulb holder, 1, counterclockwise and remove the bulb from the support.
4. Position the bulb so when it is locked in position the connector, 2, is pointed down with the clip, 3, to the right.

IMPORTANT: *DO NOT touch the bulb during removal and installation. The bulb may become damaged or a premature failure may occur.*

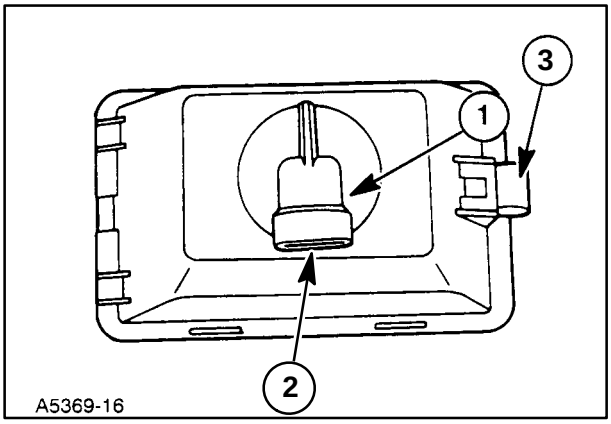

171

https://truckmanualshub.com/

Op. 55 404 10

Rear Work and Taillight

1. Remove the center work light, 1, by pushing the lens assembly to the left and lift the right side of the assembly from the support.

2. Remove the red taillight lamps, 2, by unscrewing the bezel self-tapping screws, and removing the bezels, 3.

3. Unplug the wire harness from the bulb, unlatching the connector, and sliding the harness from the bulb.

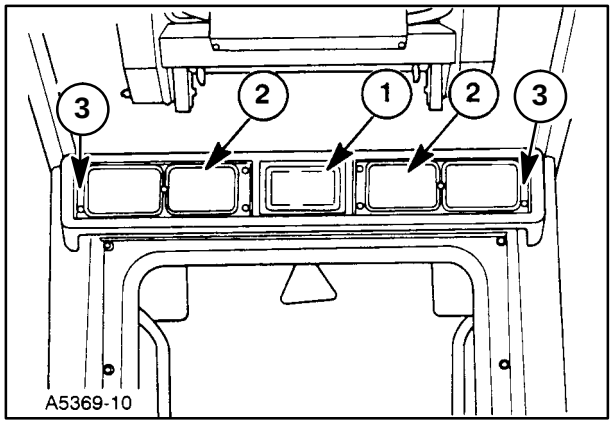

172

4. Facing the back of the assembly, rotate the bulb holder, 1, counterclockwise and remove the bulb from the support. Replace the bulb.

5. For the clear rear work lamp, position the bulb so when it is locked in position the connector, 2, is pointed down with the clip, 3, to the right.

IMPORTANT: *DO NOT touch the bulb during removal and installation. The bulb may become damaged or a premature failure may occur.*

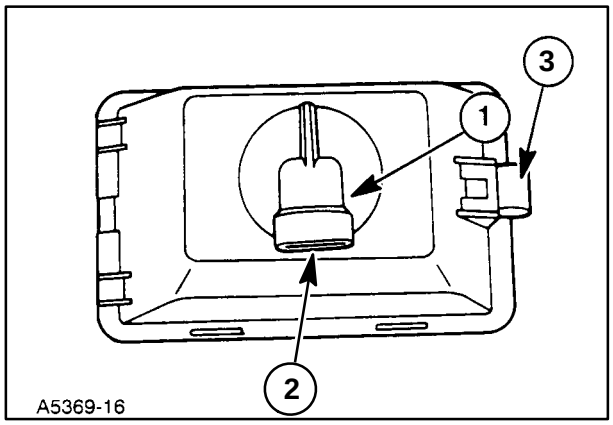

173

https://truckmanualshub.com/

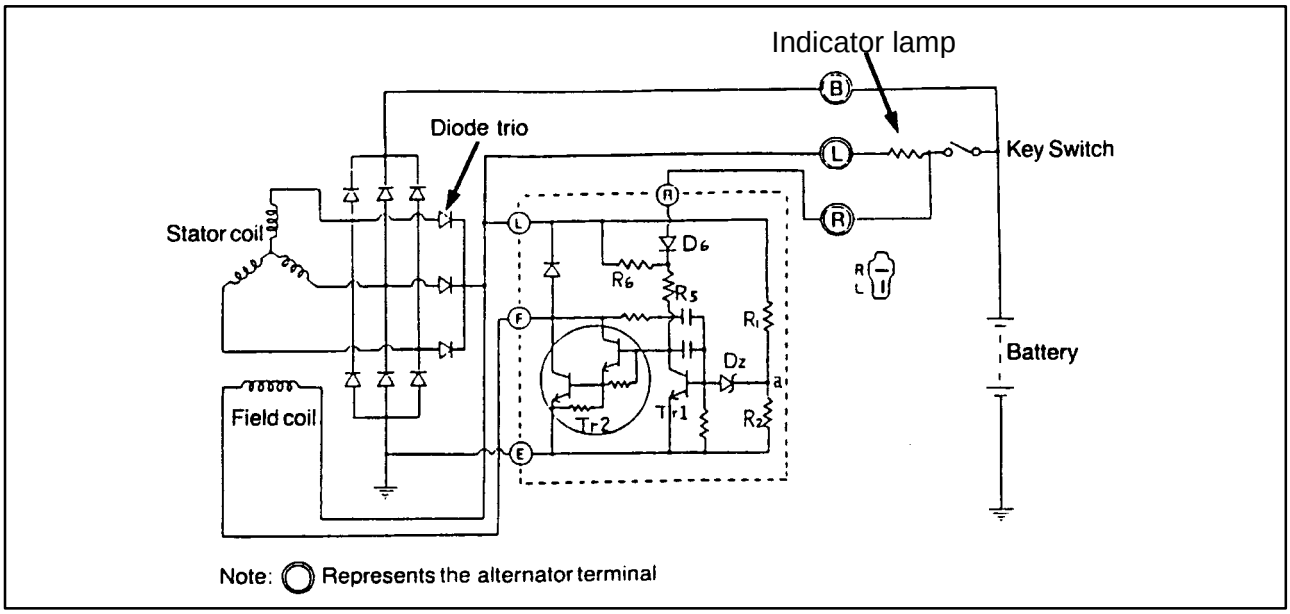

174

Op. 55 301

ALTERNATOR (40-AMP VERSION)

CHARGING CIRCUIT

Description

1. The charging circuit and internal connection are shown here. The charging system consists of an IC regulator built-in alternator, a battery, and connecting wires. Because of the use of IC, the voltage regulator is very compact and is built into the alternator.

2. The field current flows directly from the diode trio to the field coil without passing through the external circuit. Consequently, there are no voltage drops caused by the key switch or the wiring, as with the conventional vibrating-contact regulators mounted separately from the alternator. To help the initial voltage buildup when the engine is started, the field current is supplied through the indicator lamp from the battery.

3. Since the frequency pulse output of 1/10 the alternator speed develops at “P” terminal, this terminal is used for speed detection by the EIC board for engine RPM readings.

Principle of Integrated Circuit Regulator

The basic circuit of the IC regulator is shown here.

The part enclosed by a dotted line represents the IC regulator.

The basic function of the IC regulator to make terminal voltage constant by detecting generated voltage and increasing/decreasing field current is not different from that of the vibration- contact regulator.

As indicated, the regulator consists of two basic sections: a voltage control device and an output device to handle the field current. The voltage control device includes a voltage divider network (R1, R2), a Zener diode (DZ) for voltage reference, and a signal amplifying transistor (Tr1). The output device is a Darlington-type amplifier which is called power transistor (Tr2). The transistor Tr2 is placed in series with the alternator field coil and ground.

The transistor Tr1 senses the generated voltage and turns the transistor Tr2 on and off many times per second most of the time the engine is in operation.

https://truckmanualshub.com/

The basic operating principles are explained as follows:

1. When the key switch is closed, current from the battery flows through the indicator lamp and resistor R6, which are in parallel, to the field coil.

   From here it continues to flow on through the field coil to ground, completing the circuit back to the battery.

   Battery — Key Switch < Indicator lamp / Terminal R-Resistor R6

   Alternator terminal L — Field Coil — Tr2 — Ground

2. When the alternator begins to rotate, A.C. voltages are generated in the stator coil. The diodes in the rectifier assembly change the stator A.C. voltages to a D.C. voltage which appears between the ground and terminal, B.

   The stator also supplies D.C. field current through the diode trio, the field coil, Tr2, and then through the diodes in the rectifier assembly, back to the stator.

   Diode trio — Field Coil — Tr2 — Ground

3. When the generated voltage is low, no current flows in the Zener diode (DZ) since the voltage at point A is lower than the Zener voltage.

4. As the speed and voltage increases, the voltage at point A also increases until it reaches the limiting value set by the factory. As the Zener diode (DZ) breaks down, current flows through R1, DZ, and the base-emitter circuit of Tr1 to ground. This renders Tr1 conductive, so that much of the current flows through the collector-emitter circuit of Tr1. This reduces the base current of Tr2 thereby reducing the field current. This means that Tr1 turns on and Tr2 turns off.

   Regulator Terminal L — R1 — DZ
   Regulator Terminal R — R6 — R5
   > Tr1 — Ground

5. When the generated voltage decreases, the Zener diode (DZ) again turns off and Tr1 also turns off.

   This cycle then repeats many times per second and the alternator output voltage is, therefore, regulated within a narrow limit.

   In other words, the action is similar to the conventional vibrating-contact regulator, in that current to the field coil is varied to limit the output voltage, but in place of the voltage coil and spring system, there is a potential divider (R1 and R2) and a Zener diode.

https://truckmanualshub.com/

ALTERNATOR SERVICE SPECIFICATIONS

Item	How Rated	Standard Or Service Limit
Normal Output	(V - A)	12 V - 40 A
Polarity		Negative ground
Weight	(kg, lbs)	3.7 kg (8.2 lbs)
Rotational direction (viewed from the pulley)		Clockwise
Load characteristics (cold)	Terminal voltage (V)	13.5 V
	Current (A)	Min. 30 A
	Revolution (RPM)	2500 RPM
Brush length	Original (mm-in)	18.5 mm (0.728″)
	Limit (mm-in)	5.0 mm (0.20″)
Brush spring tension	Original (g-lbs)	470 - 590 g (1.036 - 1.300 lbs)
	Limit (g-lbs)	270 g (0.60 lbs)
Slip ring diameter	Original (mm-in)	22.7 mm (0.0894″)
	Limit (mm-in)	22.1 mm (0.871″)
Field coil resistance	ohms at 20° C (68° F)	2.8Ω
Adjusting voltage	(V) at 5000 RPM	14.4 - 15.0 V

https://truckmanualshub.com/

ALTERNATOR - SYSTEM TESTING AND TROUBLESHOOTING

NO CHARGING

FAULT LOCATION	POSSIBLE CAUSE	CORRECTION
Wiring	Loose connection, short circuit	Repair
Alternator	Loose connection, no ground, short circuit	Repair or replace
	Defective rectifier	Replace
	Loose connection of RF resistor	Replace
Regulator	Defective regulator	Replace
	Loose connection of alternator or regulator	Repair or replace

INSUFFICIENT CHARGING

FAULT LOCATION	POSSIBLE CAUSE	CORRECTION
Wiring	Loose connection or short circuit	Repair
Alternator	Loose drive belt	Repair
	Short in rotor coil	Replace
	Short in stator coil	Replace
	Defective rectifier	Replace
	Insufficient brush contact	Repair or replace
Regulator	Defective regulator	Replace
	Loose connection of alternator and regulator	Repair
Battery	Defective battery	Replace

OVERCHARGE

FAULT LOCATION	POSSIBLE CAUSE	CORRECTION
Battery	Internal short	Replace
Regulator	Defective regulator	Replace

https://truckmanualshub.com/

UNSTABLE CHARGING CIRCUIT

FAULT LOCATION	POSSIBLE CAUSE	CORRECTION
Wiring	Loose connection or open wire	Repair or replace
Alternator	Loose drive belt	Repair
	Short in rotor coil	Replace
	Short in stator coil	Replace
	Insufficient brush contact	Repair or replace
	Broken brush or spring	Replace
	Loose connections	Repair
Regulator	Defective regulator	Replace
	Loose connection at alternator and regulator	Repair or replace

ABNORMAL NOISE OF ALTERNATOR

FAULT LOCATION	POSSIBLE CAUSE	CORRECTION
Alternator	Loose mounting hardware	Repair
	Defective bearings	Repair or replace
	Rotor core and stator in contact	Replace
	Defective diode	Replace
	Short in stator coil	Replace

https://truckmanualshub.com/

Alternator Construction
Sectional view of the IC alternator

The principal components of the IC alternator are the stator, the rotor, the rectifier assembly, the IC voltage regulator, the front bracket, the rear bracket, and the pulley.

The rectifier assembly consists of two heat sinks, one positive and one negative, and diode trio. The diode trio is used as a field supply diode and is connected to the field coil and terminal L on the alternator.

The built-in IC regulator is a solid-state unit so that it can only be serviced as an assembly.

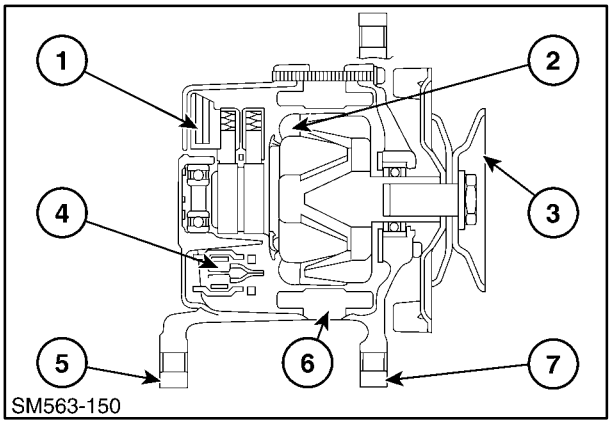

175

1. IC voltage regulator
2. Rotor
3. Pulley
4. Rectifier
5. Rear support bracket
6. Stator
7. Front support bracket

Check on the Equipment
Checking the regulator adjusting voltage.

A. In the case of equipment without an ammeter, connect a test ammeter (50A capacity) at the position shown.

   In the case of equipment with an ammeter, make use of the ammeter on the equipment.

B. Connect a voltmeter between terminal 1 of the alternator and the ground.

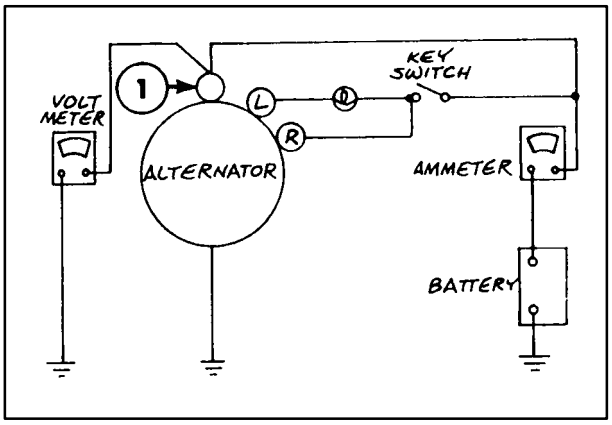

176

1. In this state, confirm the reading on the voltmeter indicates the battery voltage.
2. If the voltmeter reading is zero, the wiring between terminal 1 and the battery is faulty.

https://truckmanualshub.com/

3. With the test ammeter terminals short-circuited, start the engine.

CAUTION

In the case of where the test ammeter is connected at the position shown in Figure 181, make sure no starting current is applied to the ammeter when the engine is started.

4. Remove the short circuit across the test ammeter terminals and increase the engine speed immediately to approximately 2000 RPM. Take the ammeter reading.

5. If the ammeter reading is 5A or less, take the voltmeter reading without changing the engine speed (approximately 2000 RPM). The reading is the adjusting voltage.

6. If the ammeter reading is more than 5A, continue to charge the battery until the reading falls to less than 5A or replace the battery with a fully charged one.

   An alternative method is to limit the charging current by connecting a 1/4 (25W) resistor in series with the battery.

Checking Output

If the previous section “A” check is satisfactory, check the output as follows:

1. After opening the battery switch, disconnect terminal B of the alternator and connect an ammeter (50-amp capacity) at the position shown.

2. Connect the voltmeter between terminal B of the alternator and the ground. Confirm the voltmeter indicates the battery voltage.

3. Close the key switch.

4. Start the engine and turn on all the lamps. Immediately accelerate the engine to 2000 RPM or more and measure the maximum value indicated on the ammeter.

5. If this value is more than 70% of the nominal output (refer to the section on “Service Specifications”), the alternator can be considered as working almost satisfactorily.

NOTE: *To make the above judgement more accurate, remove the alternator from the engine and check it on a test bench.*

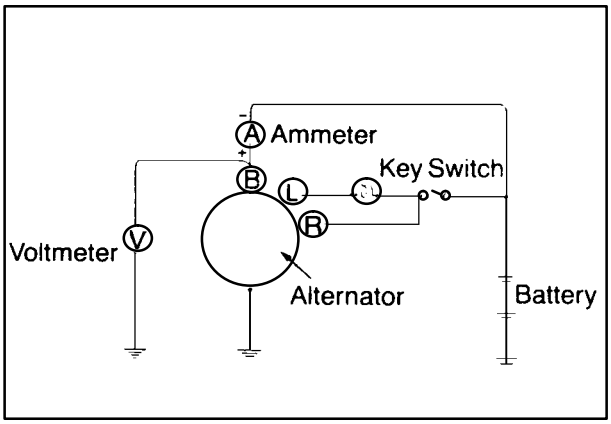

177

https://truckmanualshub.com/

ALTERNATOR

Op. 55 301 10

ALTERNATOR REMOVAL

1. Open the rear door, 1, raise the top engine shield, 2, and remove the right engine side shield, 3, to access the alternator.

2. For easier access, remove any attachment from the loader boom face plate and raise the boom and rest it on the boom lock pins.

CAUTION

Never work under a raised boom unless it is properly supported by the boom lock pins.

Never work under a raised boom with an attachment. Always remove the attachment from the loader.

3. Disconnect the negative (–) battery cable to prevent possible damage to the alternator and electrical system.

4. Disconnect the wire connections from the alternator noting their location.

5. Remove the top strap retaining hardware, 1, and lower pivot, 2.

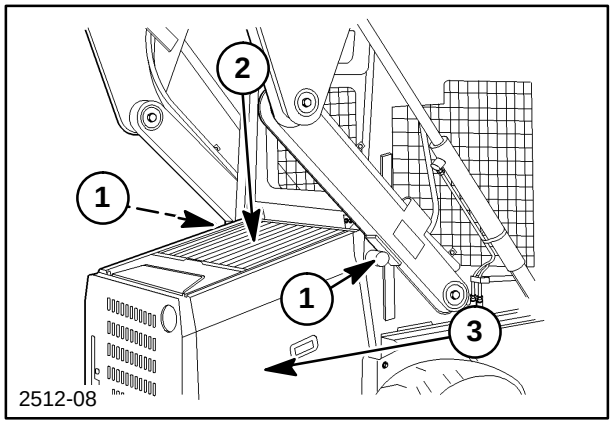

178

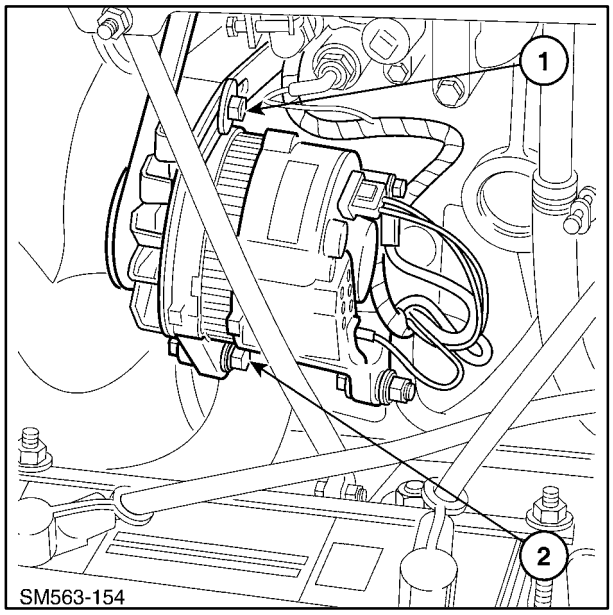

179

https://truckmanualshub.com/

Op. 55 301 12

DISASSEMBLY

1. Mark both brackets and the stator with a scribe mark for assembly.

2. Remove the four through bolts. Pry between the stator and front bracket with the blade of a screwdriver. Carefully separate the front bracket, pulley, and rotor assembly away from the stator and rear bracket assembly.

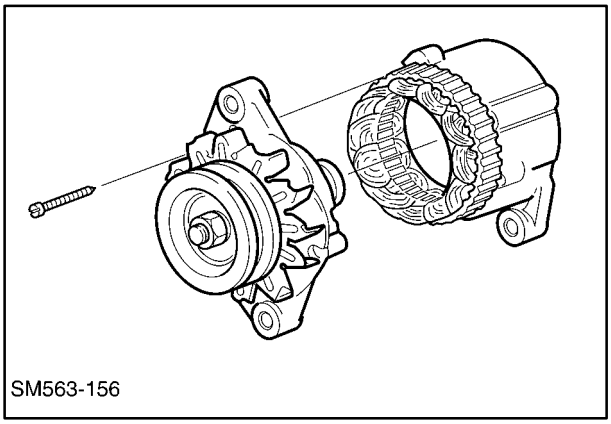

180

3. Place the rotor in a vise with soft jaws and remove the pulley nut, washer, pulley, spacer, and rear bracket from the rotor.

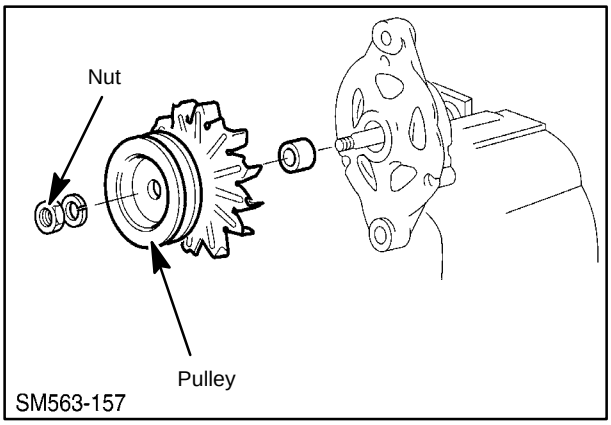

181

https://truckmanualshub.com/

Unsolder three stator leads, 1, and remove the stator.

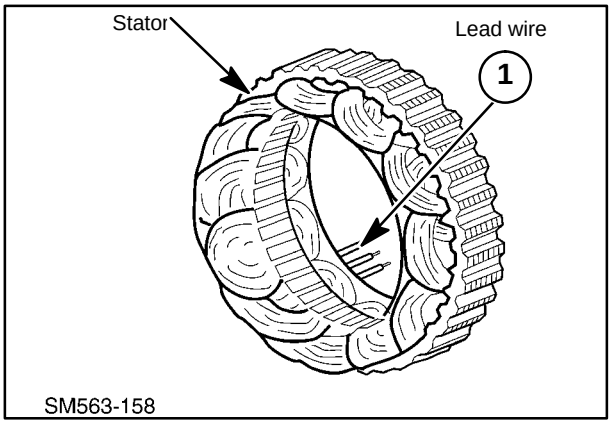

182

4. Remove the voltage regulator assembly, 1, and rectifier assembly, 2.

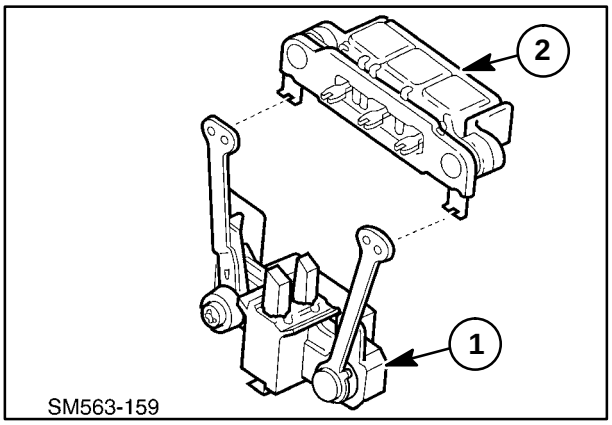

183

https://truckmanualshub.com/

Op. 55 301 14

ALTERNATOR COMPONENT TEST

Rotor

1. Inspection of slip ring surface, 1.

   Correct stain or scratches on the slip ring surface with a sandpaper of about 400# - 600#.

   A badly roughened slip ring or slip ring worn down beyond the service limit should be replaced.

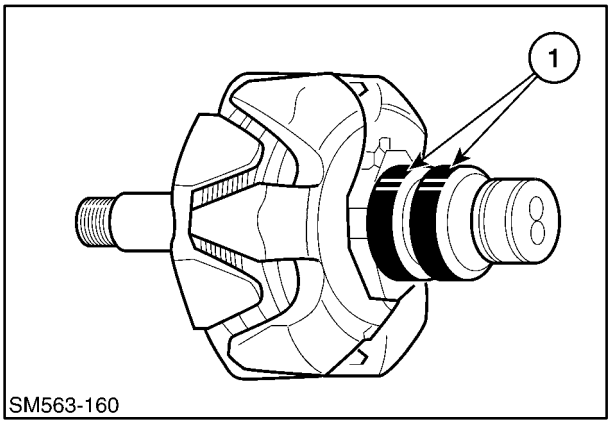

184

2. Check for continuity between both the slip rings. If there is no continuity, the field coil is defective. Replace the rotor assembly.

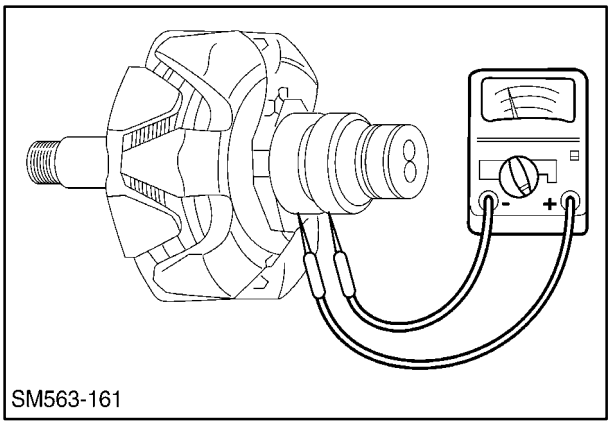

185

3. Check for continuity between the slip ring and shaft (or core). If there is continuity, it means the coil or slip ring is grounded. Replace the rotor assembly.

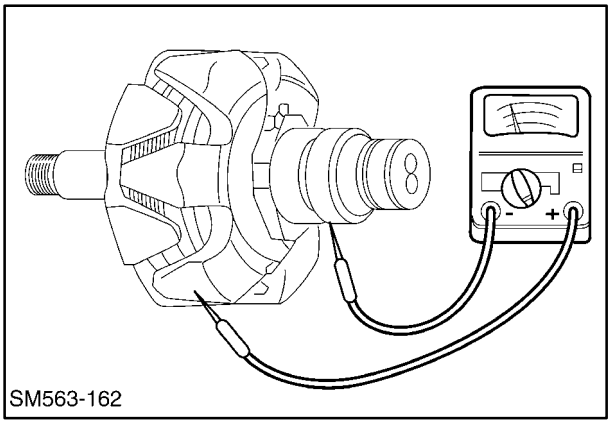

186

https://truckmanualshub.com/

Stator

1. Check for continuity between the leads of the stator coil. If there is no continuity, the stator coil is defective. Replace the stator assembly.

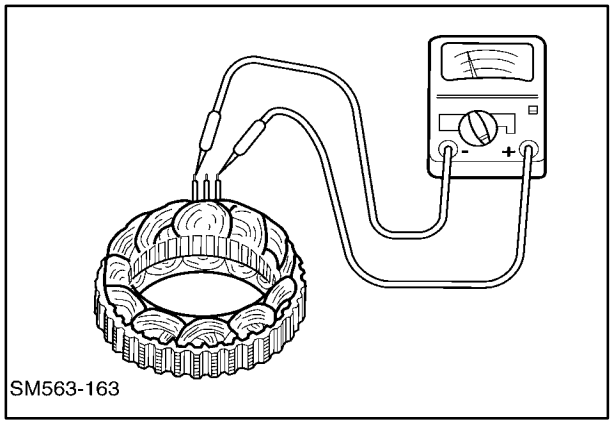

187

2. Check for continuity between any stator lead and stator core. If there is continuity, it means the coil is grounded. Replace the stator assembly.

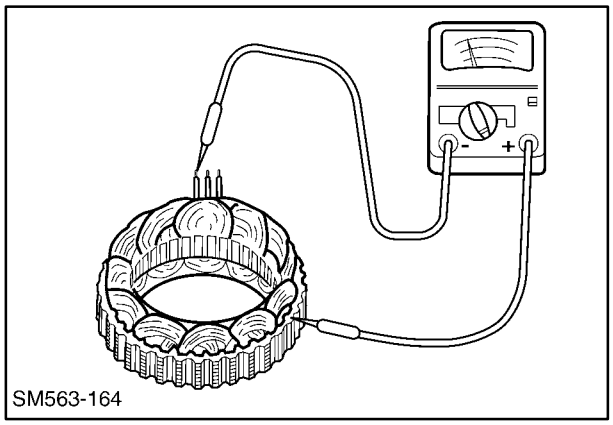

188

https://truckmanualshub.com/

Rectifier Assembly

Positive Heat Sink
Check for continuity between the positive (+) heat sink and stator coil lead connection terminal with a circuit tester. If there is continuity in both directions, the diode is short-circuited. Replace the rectifier assembly.

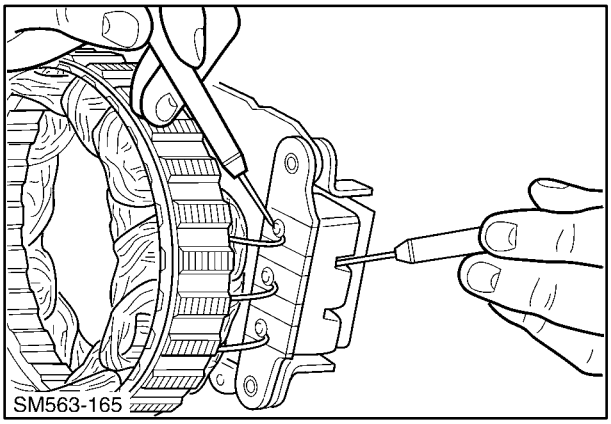

189

Negative Heat Sink
Check for continuity between the negative (–) heat sink and stator coil lead connection terminal. If there is continuity in both directions, the diode is short-circuited. Replace the rectifier assembly.

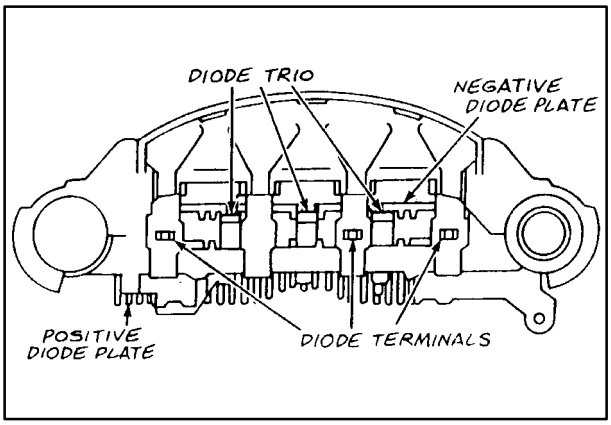

190

Diode Trio
Using a circuit tester, check the three small diodes for continuity in both directions. If there is either continuity or an open circuit in both directions, the diode is defective. Replace the rectifier assembly.

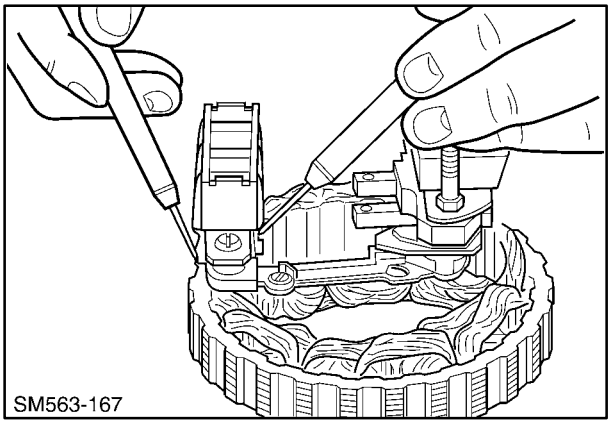

191

https://truckmanualshub.com/

Brush and Brush Spring
Check the length of the brush. A brush worn down to the wear limit line should be replaced.

Check the brush spring pressure and make sure the brush moves smoothly in the brush holder.

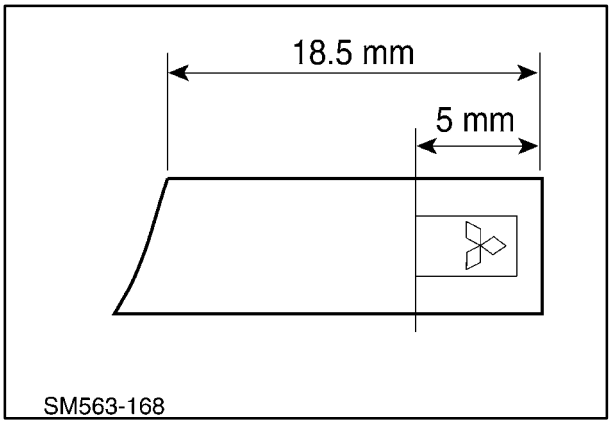

192

Reassembly
Reverse the disassembly, except for the following:

Installing Rotor

1. Push brushes, 1, into the brush holder and insert a wire, 2, to hold them in the raised position. Install the rotor and remove the wire.

NOTE: *The rear bearing and rear bracket, 3, fit is tight; heat the bearing box in the rear bracket to 50° - 60°C (122° - 140°F) before installing the rotor.*

2. Lubrication to the bearing box. Do not apply grease to a bearing with a resin band. Remove grease and oil from the bearing box in the rear bracket.

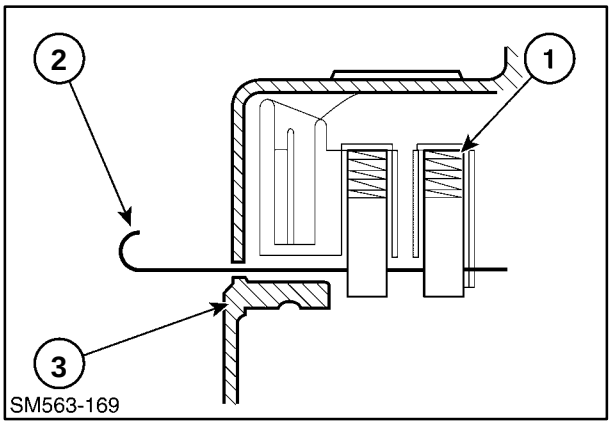

193

https://truckmanualshub.com/

Bench Check

To check the alternator on a test bench, proceed as follows:

1. Make the connection as shown, except leave the load resistor disconnected.
2. Slowly increase the alternator speed and observe the voltage.
3. If the voltage is uncontrolled with speed, and increases above 15.5 V, check the alternator.
4. If voltage is below 15.5 V, connect the load resistor as shown.
5. Operate the alternator at 2500 RPM and adjust the load resistor as required to obtain maximum output.
6. Measure the output current. The output must be within the limits shown in the section on “Service Specifications.” If the output is less than the specified value, disassemble and check the alternator.

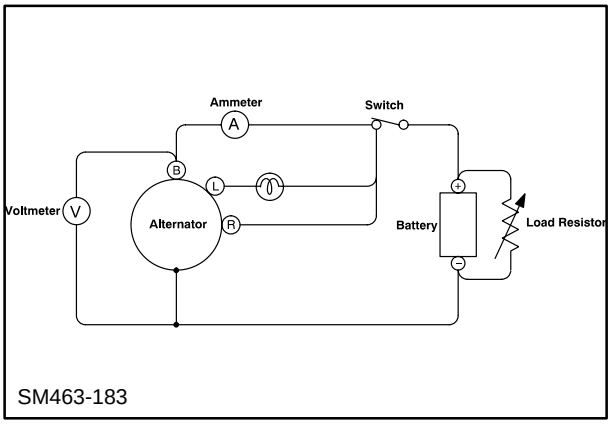

194

IMPORTANT:

1. *Reversed battery connections will damage the alternator and/or wiring.*
2. *When connecting a booster battery, make certain to connect the negative battery terminals together and the positive battery terminals together.*
3. *When a fast charger is used to charge the battery, disconnect the equipment battery cables.*
4. *Grounding of the alternator output terminal will damage the alternator and/or circuit.*
5. *Do not connect a load of over 1A to the terminal L.*
6. *If the alternator is operated with terminal L and B short-circuited, it may damage the diode trio.*

https://truckmanualshub.com/

ALTERNATOR REINSTALLATION

1. Attach the alternator to the lower pivot, 1, and the upper support strap, 2.
2. Reattach the wires to the alternator terminals.
3. Pivot the alternator to tighten the belt to obtain proper belt tension. The belt is tightened properly when a force of 1 kg (2 lbs.) is applied perpendicular to the belt at the center of the span, 3, with a 3 mm (1/8”) deflection.
4. Reconnect the negative (–) battery cable, 4.
5. Reinstall the engine side shield, close the top engine cover and rear door.

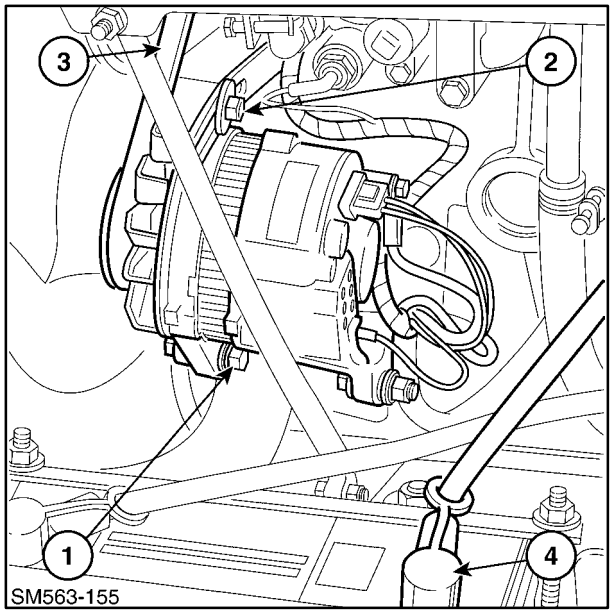

195

https://truckmanualshub.com/

Op. 55 201

STARTER

STARTER MOTOR TROUBLESHOOTING

Starter Motor Specifications

Rated voltage	12 volts
Output	2 kw
Motor type	Four-pole series wound motor
Engaging system	Magnetic shift
Rotation	Clockwise (viewed from pinion side)
Weight	Approximate 5 kg (11 lbs)

Starter Motor Service Specifications

ITEM	HOW RATED	STANDARD OR SERVICE LIMIT
No load test	Volts (V)	11.5 V
	Current (A)	130 A Max.
	Rotating speed (RPM)	4000 RPM Min.
Commutator	Outer dia. (mm-in)	35 mm (1.38″)
	Service limit (mm-in)	34 mm (1.34″)
Brush	Length (mm-in)	15 mm (0.59″)
	Service limit (mm-in)	9 mm (0.35″)
Brush spring	Tension (kg-lbs)	2.7 - 3.6 kg (5.9 - 7.8 lbs)
	Service limit (kg-lbs)	2.2 kg (4.7 lbs)

https://truckmanualshub.com/

STARTER MOTOR TROUBLESHOOTING

Use the diagnostic charts as a guide when repairing the starting system. Before diagnosis, be certain the battery is fully charged and inspect the starter and battery cables for clean and tight connections.

IMPORTANT: *Do not operate the starter longer than 30 seconds at a time.*

Do not disconnect or short any lead wire while the starter is operating.

With key switch in “start” position:

Starter does not crank engine, solenoid switch clicks.

1. Disconnect the three cables from the solenoid.
2. Using an ohmmeter, touch one probe to the solenoid spade terminal and the other to the starter case. There should be continuity.

   If none, the hold-in winding is open-circuited. Replace the solenoid.

   If continuity, the fault is in the starter motor. Refer to repair procedures.

Starter does not crank engine, solenoid does not click.

1. Disconnect battery cable from starter.
2. Connect a jumper wire to the battery positive post. Ensure the negative cable is attached to battery and starter ground.
3. Briefly touch the jumper wire to the spade terminal on the solenoid.

   If the solenoid clicks, the probable cause is in the key switch, relay or wiring.

   If the solenoid does not click, replace it.

Starter cranks engine very slowly.

1. Check battery condition, should be a minimum of 12.5 volts.
2. Check starting system circuit.

   Voltage drop between battery positive post and starter terminal should not exceed 0.2 volts.

   Voltage drop between battery negative post and starter ground should not exceed 0.2 volts.

   If voltage drop exceeds 0.2 volts, clean connections or replace the cable.
3. If battery is charged and voltage is within specification, repair or replace starter.

Engine starts but pinion does not disengage.

1. Check voltage at spade terminal of solenoid. If 12 volts with key switch “off”, fault is in the key switch or start circuit.
2. If 0 volts with key switch “off” but starter turns, fault is in the solenoid or overrunning clutch assembly.

https://truckmanualshub.com/

STARTER MOTOR

Op. 55 201 50

REMOVAL

1. The starter can be accessed through the right engine side shield with the boom up or down or from the operator's area with the seat raised.

2. To access the starter, 1, through the right engine side shield, open the rear door, raise the top engine side shield and remove the right engine side shield.

   If the boom is in the raised position, make sure the boom is resting on the boom lock pins.

CAUTION

Never work under a raised boom unless it is properly supported by the boom lock pins.

3. To access the starter, 1, from the front, raise the seat and seat pan and securely latch in the raised position.

CAUTION

Never work under a raised seat unless it is properly latched in the raised position.

4. Disconnect the negative (–) battery cable.

5. Remove the wires from the starter solenoid and starter, noting their location.

6. Remove the starter retaining hardware and remove the starter from the engine bellhousing.

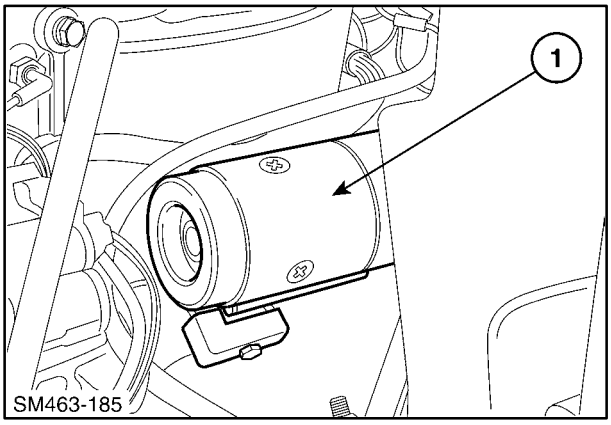

196

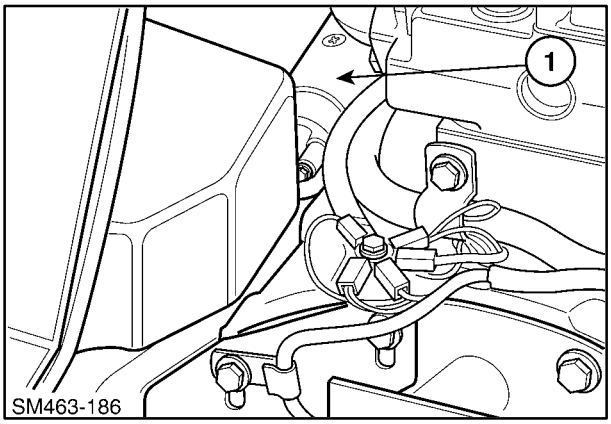

197

https://truckmanualshub.com/

Starter Motor Description

1. Drive Gear
2. Housing
3. Field Coil
4. Armature
5. Brush Spring
6. Brush
7. Plunger
8. Electric Solenoid
9. Overrunning Clutch
10. Pinion
11. Idler Gear

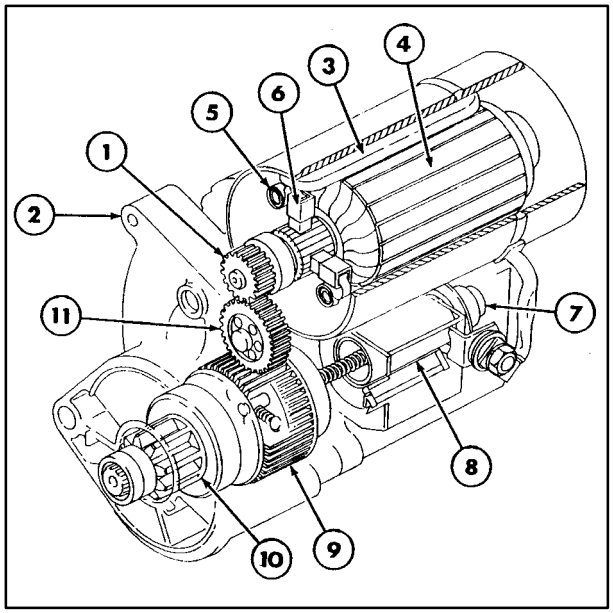

198

The starter assembly is a positive pinion shift, reduction type starter consisting of the motor, reduction gearset, overrunning clutch and electric solenoid.

The reduction type design allows use of a small, high speed, compact motor.

The sliding pinion and the electric solenoid are arranged on the same axis. The sliding pinion mechanism is totally enclosed, preventing dirt and water entry resulting in a more durable mechanism.

https://truckmanualshub.com/

Starter Construction

The reduction type starter consists of the armature, housing, electric solenoid, drive pinion assembly and reduction gears. In a conventional type starter the armature and pinion rotate at the same speed on a common shaft. In a reduction type starter the pinion speed is reduced to about one-fourth armature speed by the reduction gear. Armature, 1, rotation is transmitted to the pinion, 2, via an idler gear, 3, and the overrunning clutch, 4.

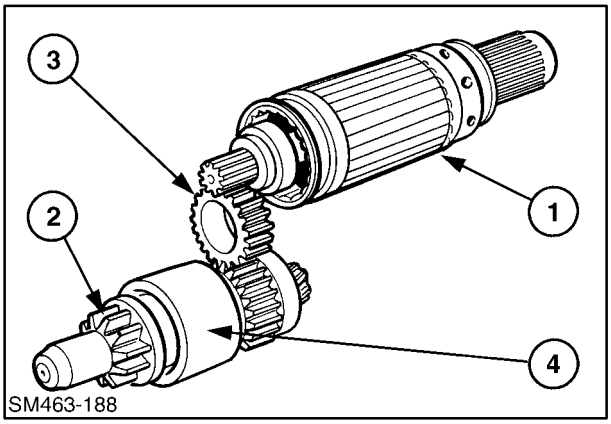

199

The overrunning clutch assembly consists of the pinion, 1, pinion shaft, 2, ball bearings and overrunning clutch which is a conventional design with clutch rollers, 3, and roller springs, 4. Due to the screw splines cut on the pinion shaft, the pinion gear advances while rotating to mesh with the flywheel ring gear.

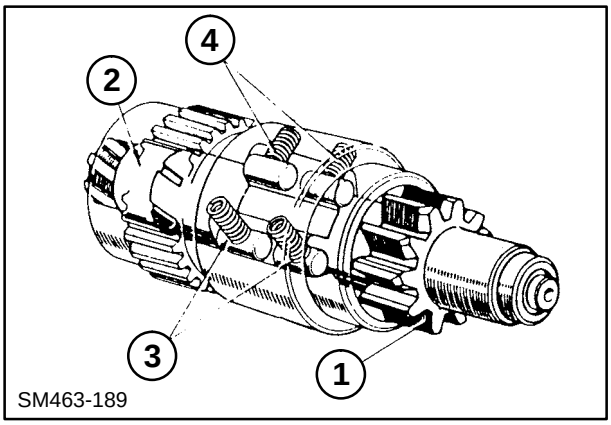

200

https://truckmanualshub.com/

Starter Operation
Circuit diagram of reduction type starter.

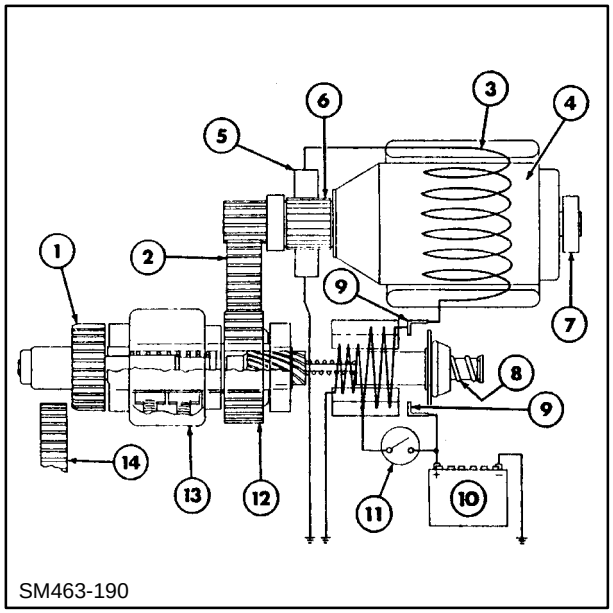

201

1. Drive Pinion
2. Idler Gear
3. Field Coil
4. Armature
5. Brush
6. Commutator
7. Ball Bearing
8. Plunger
9. Main Contacts
10. Battery
11. Starter Switch
12. Clutch Gear
13. Overrunning Clutch
14. Flywheel Ring Gear

The field windings are connected in series with the armature windings, through the brushes and commutator segments.

https://truckmanualshub.com/

Electric Solenoid Operation

The electric solenoid consists of the pull-in coil, 1, hold-in coil, 2, main contacts, 3, plunger, 4 and return spring, 5. The mechanism is sealed against entry of dirt and moisture.

When the starting switch is closed, battery current flows through both the pull-in coil and the hold-in coil. This moves the plunger to the engaged position. When the plunger closes the main contacts in the engaged position, the pull-in coil circuit is opened, leaving the hold-in coil to retain the plunger in the engaged position. At the same time, current flows through the main contacts to the motor.

When the starting switch is released, the magnetic field in the hold-in circuit is reduced allowing the plunger spring to move the plunger out, opening the main contacts.

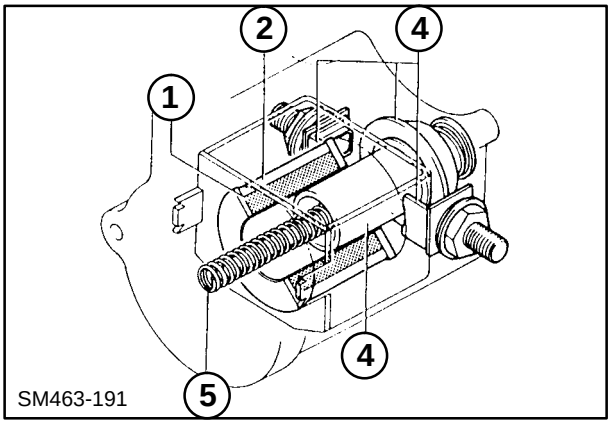

202

Drive Spring Operation

The drive spring, 1, is fitted on the pinion shaft, 2, in order to provide a smooth and positive pinion gear engagement. When the starting switch is closed, the plunger, 3, is pulled in moving the pinion, 4, toward the ring gear, 5. If the gear teeth do not mesh, the spring will be compressed, pressing on the pinion gear. With the first rotation of the pinion, the teeth will line up and the gears will mesh.

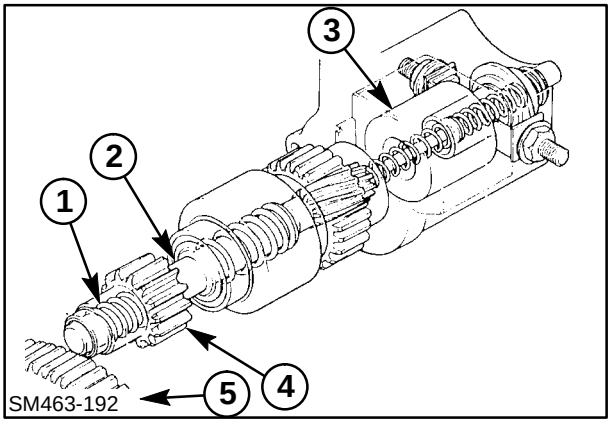

203

https://truckmanualshub.com/

STARTER DISASSEMBLY

1. Disconnect the lead wire from the electric solenoid.

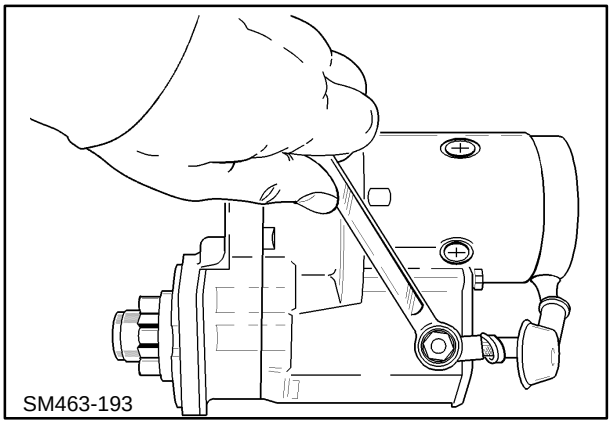

204

2. Scribe a line between the drive housing and motor to aid in proper reassembly. Remove the bolts securing the motor to the drive housing. The motor is now free to be separated from the drive housing.

NOTE: *New starter assembly #SBA185086530 has a different housing with two drawbolts. The testing and overhaul procedures are identical to the prior model (#SBA185086520).*

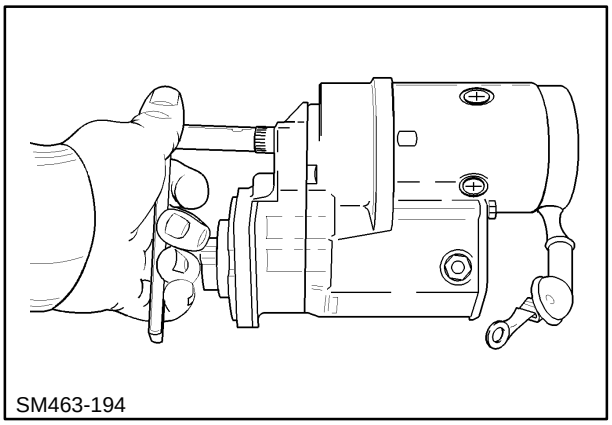

205

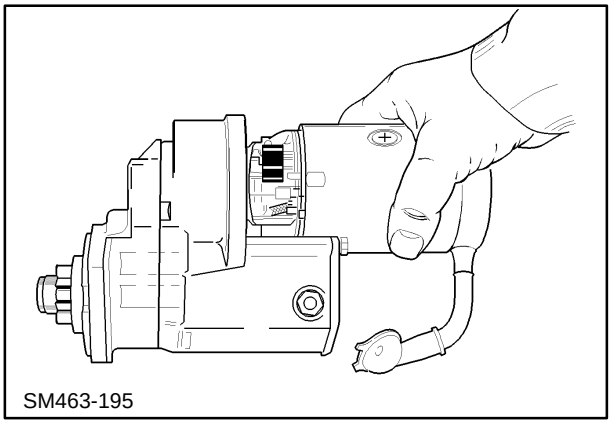

206

https://truckmanualshub.com/

3. Extract the insulated brushes, 1, from the brush holders. Hold the springs away and remove the brushes. Slide the brush plate, 2, from the commutator, 3.

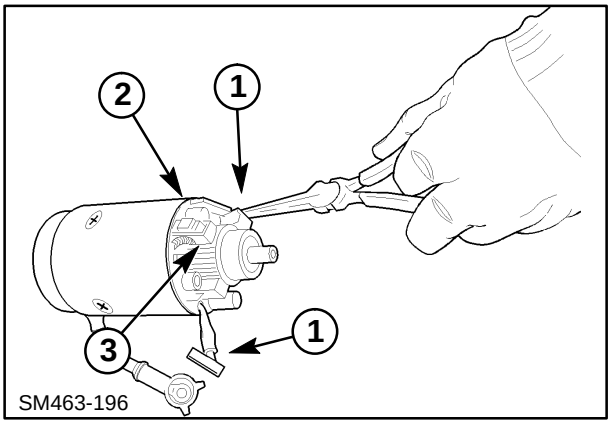

207

4. Remove the armature, 1, from the motor housing, 2. The rear bearing, 3, is a light press fit in the rear housing. It may be necessary to pull the armature from the housing, griping behind the front bearing, 4.

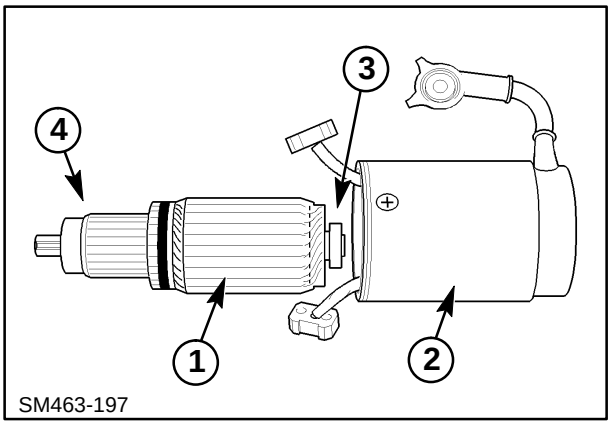

208

5. Remove the screws securing the drive end frame to the solenoid.

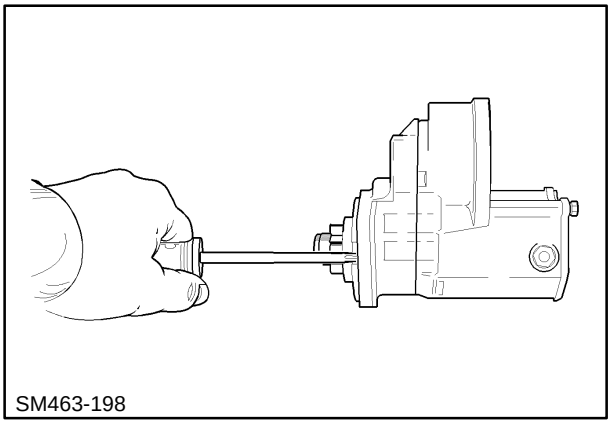

209

https://truckmanualshub.com/

6. Remove the drive end frame, 1, from the solenoid, 2. The idler gear with bearings, 3, and the pinion gear, 4, will be free to fall out. Work over a clean bench, using care to avoid losing these pieces.

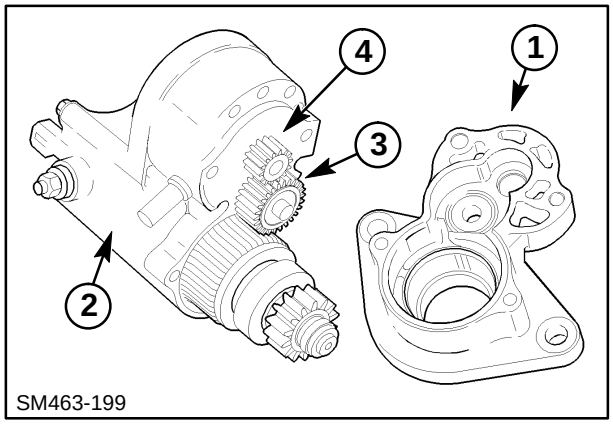

210

7. Remove the overrunning clutch from the drive end frame.

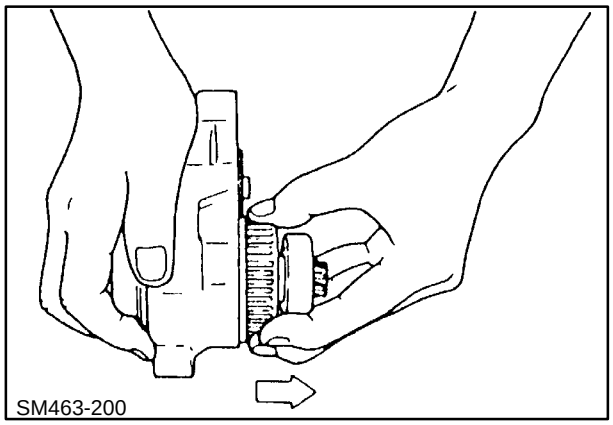

211

8. Remove the steel ball from the center of the overrunning clutch.

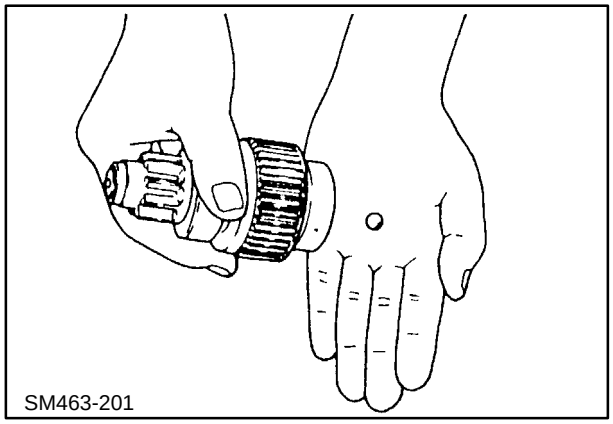

212

https://truckmanualshub.com/

9. Remove the idler gear and small pinion from the drive end frame if they were not dislodged when the housing was separated.

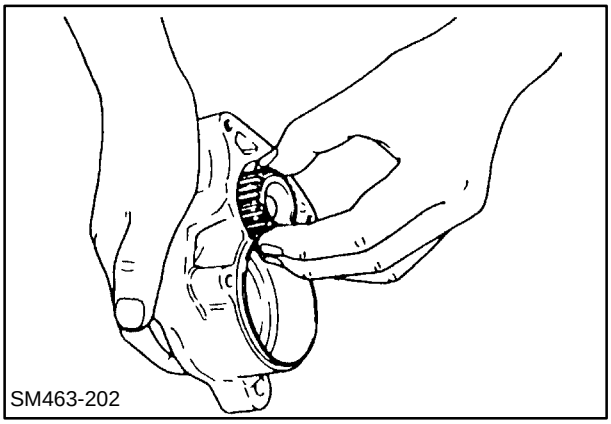

213

10. Remove the idler gear bearing rollers and retainer.

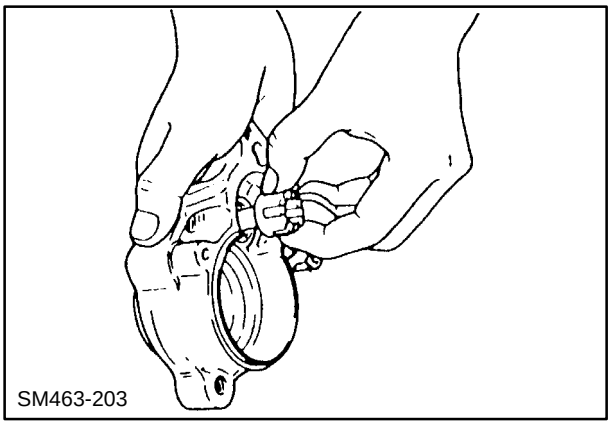

214

11. Remove the return spring from the electric solenoid.

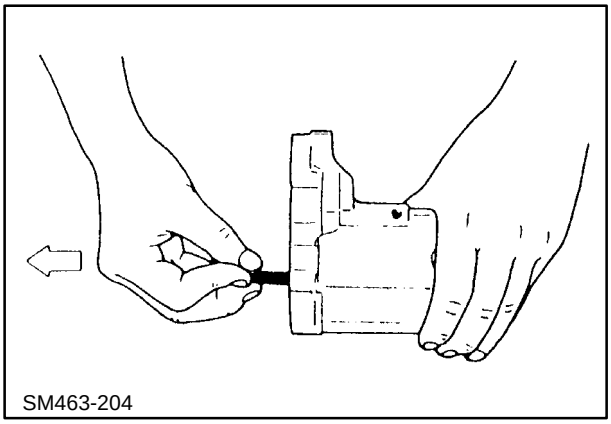

215

https://truckmanualshub.com/

INSPECTION AND REPAIR

Inspect the following components, using conventional test methods, and repair or replace as necessary.

Armature

Inspect the armature for internal short circuits with a growler.

Replace the armature if a short circuit is indicated.

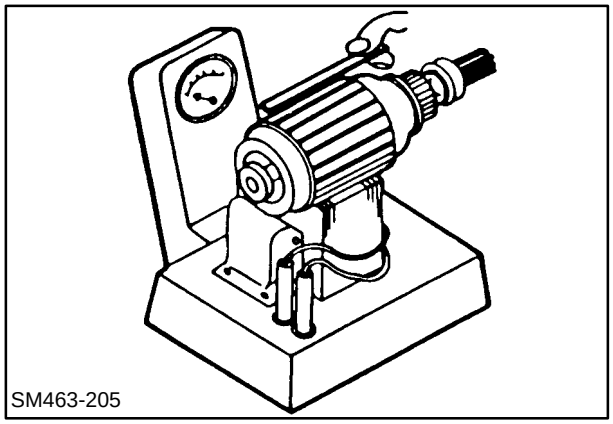

216

Inspect the armature for a short to ground using a continuity tester.

Replace the armature if there is any continuity between the commutator, 1, and armature shaft, 2, or core, 3.

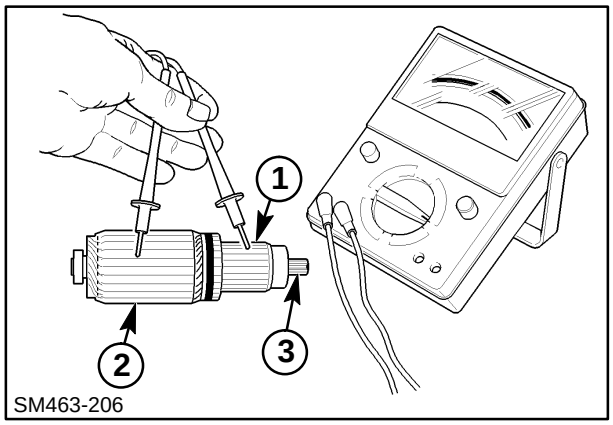

217

Check the armature for runout with a dial indicator and V-blocks. If the commutator is rough, or more than 0.05 mm (0.002″) out of round, turn it down or replace it. Undercut the separators between the segments if the depth is less than 0.2 mm (0.01″). The distance, 1, from the commutator segment and insulation should be between 0.5 mm and 0.8 mm (0.02″ and 0.03″).

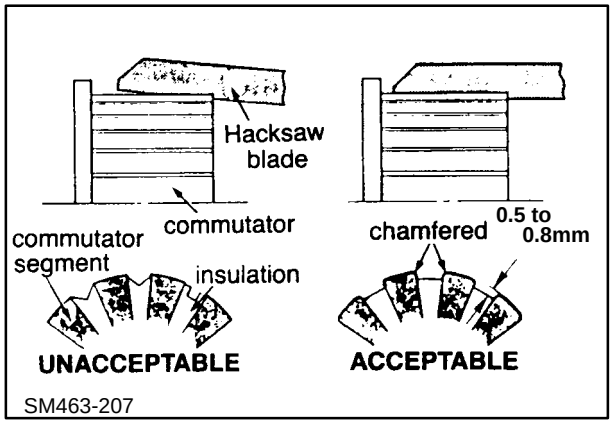

218

https://truckmanualshub.com/

Check the spline teeth for wear or damage, and replace the armature as necessary.

Check the bearings for signs of roughness or dryness. Lubricate or replace as necessary.

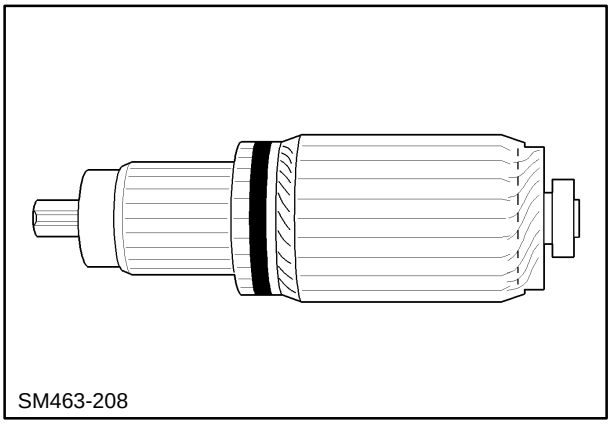

219

Field Coil

Inspect the field coil for an open circuit with a continuity tester. Replace the motor housing if there is no continuity between the two brushes.

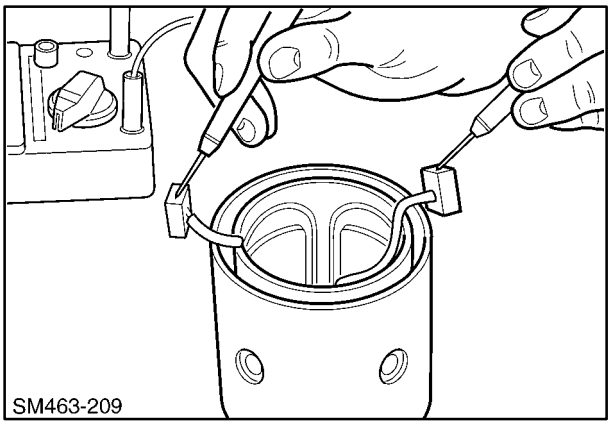

220

Inspect the field coils for short to ground with a continuity tester. If any continuity is noted between the brush and motor housing, locate the fault in the insulation, and repair or replace the motor housing as appropriate.

Check field poles and coils for tightness. Replace the motor housing if loose or improperly seated coils are detected.

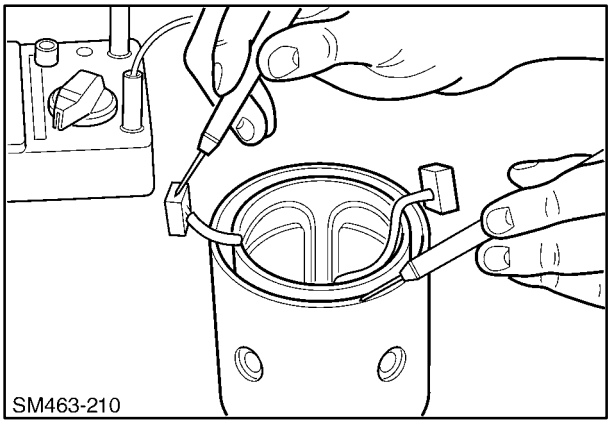

221

https://truckmanualshub.com/

Brushes

Clean brushes and adjacent parts, removing carbon particles by wiping with a clean cloth.

Check each brush for wear. Replace brushes if they are worn to the service limit.

The positive brushes are welded to the field windings. If the positive brushes must be replaced, it will be necessary to replace the motor housing.

The negative brushes are welded to the brush plate. If the negative brushes must be replaced, it will be necessary to replace the brush holder assembly.

Standard Length	Service Limit
15 mm (0.59″)	9 mm (0.35″)

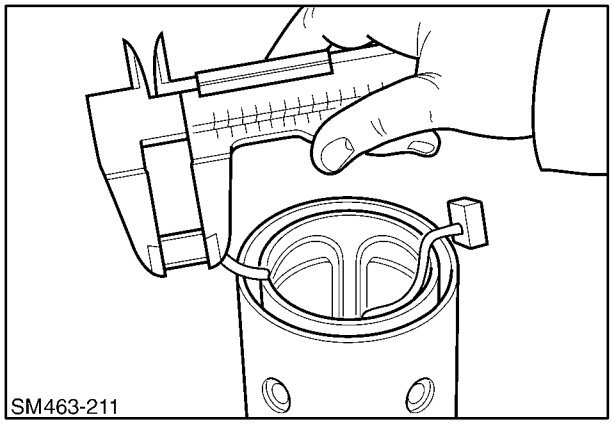

222

Move each brush in the holder to be sure that it is capable of sliding smoothly.

Check brush spring tension. Replace the brush holder assembly if the tension is not within specified limits.

Standard Tension	Service Limit
2.7 - 3.6 kg (5.9 - 7.8 lbs)	2.2 kg (4.7 lbs)

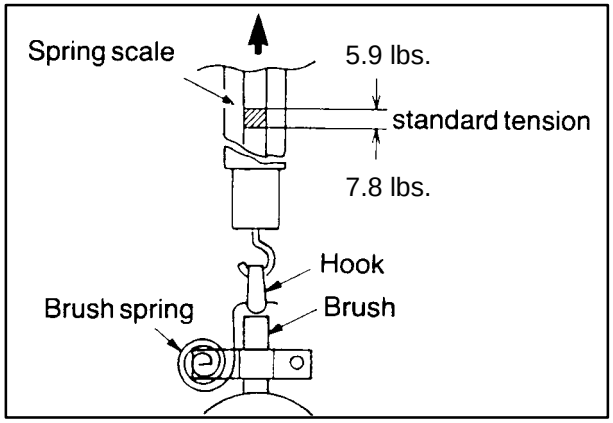

223

Check the brush holder assembly for short to ground. Touch one probe of a continuity tester to the plate and the other to each of the insulated holders. Replace the brush holder assembly if any continuity is noted.

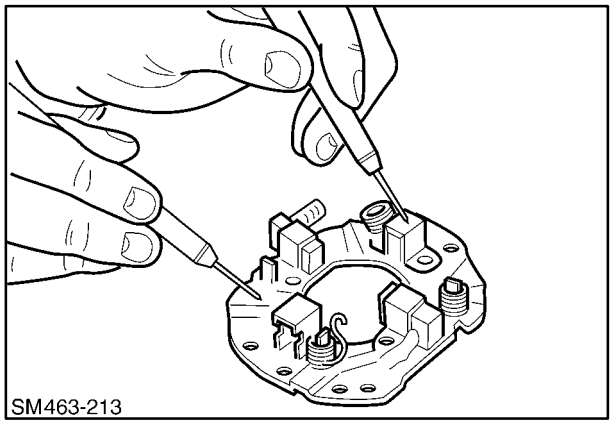

224

https://truckmanualshub.com/

Overrunning Clutch

While holding the clutch housing, rotate the pinion. The pinion should rotate smoothly in one direction (not necessarily easily), but should not rotate in the opposite direction. If the clutch does not function properly, replace it.

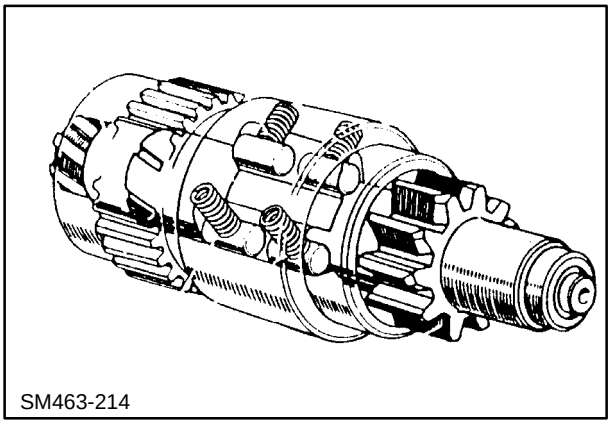

225

Reduction Gears

Inspect the pinion gear, 1, the idler gear, 2, and the overrunning clutch gear for wear or damage.

Inspect the idler gear bearing rollers and retainer, 3.

Replace any parts found worn or damaged.

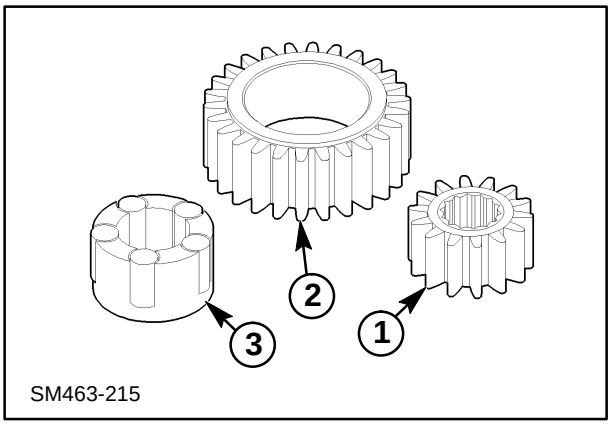

226

https://truckmanualshub.com/

Electric Solenoid

The following tests should be performed with the motor removed from the starter assembly.

Each test should not last more than 3 - 5 seconds to avoid overheating the solenoid.

Tests should be performed with a fully charged 12 volt battery.

Pull-in Test

Connect a lead from the positive battery post to the spade terminal, 1, (starter switch wire) on the solenoid. Connect a lead from the battery negative post to the solenoid housing, 2.

Touch a second negative lead to the heavy solenoid terminal leading to the field coil, 3. This completes the circuit through both the pull-in and hold-in coil windings. The pinion should jump forward.

Remove the negative lead from the field coil terminal, 3. The pinion should stay extended, held by the hold-in coil.

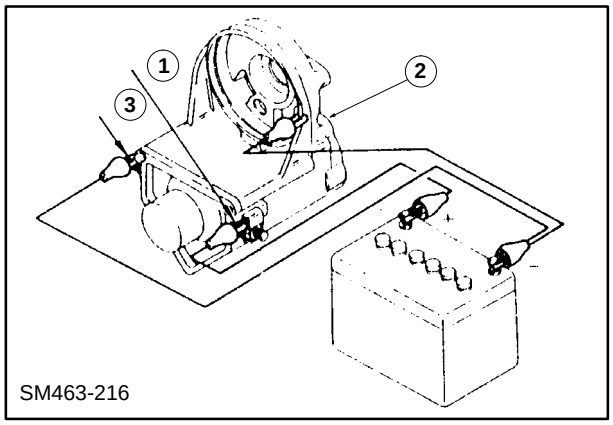

227

Remove the positive lead from the spade terminal. The pinion should retract immediately.

If the solenoid fails to perform as described, replace it.

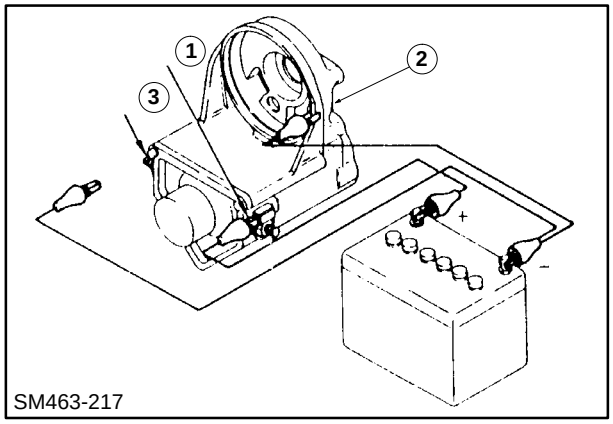

228

https://truckmanualshub.com/

REASSEMBLY

Reassemble the starter in the reverse order of disassembly. Observe the following cautions and procedures.

1. Lubricate the following components with a light coating of White Lithium Grease (Part Number RL 666).

   Idler gear retainer and rollers.

   Overrunning clutch.

   Steel ball and return spring.

   Armature bearings.

   Reduction gears.

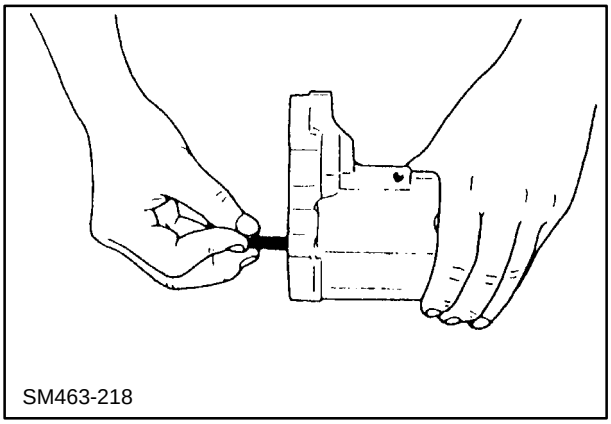

229

2. Install the return spring into the electric solenoid and the steel ball into the center of the overrunning clutch. The ball should be held in place by the coating of grease.

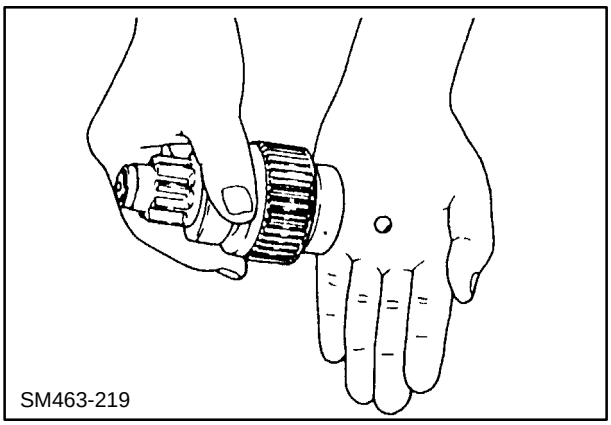

230

3. Install the idler gear bearing rollers and retainer.

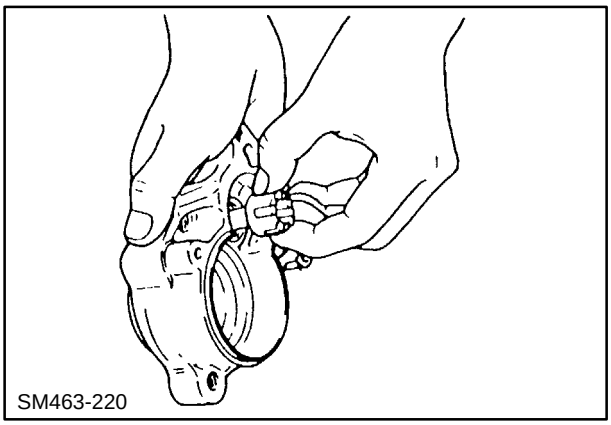

231

https://truckmanualshub.com/

4. Install the overrunning clutch assembly part way into the housing. Mesh the idler gear with the driven gear, then fully install both pieces together.

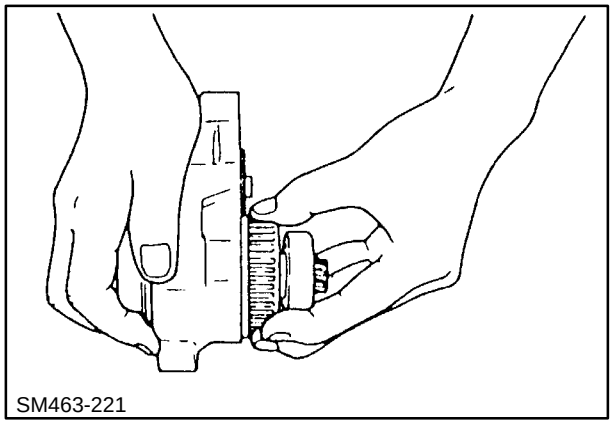

232

5. Position the pinion gear, 1,over the armature hole shaft then install the drive end frame, 2. Install the retaining screws and torque to 7 - 12 N·m (5 - 9 ft. lbs.).

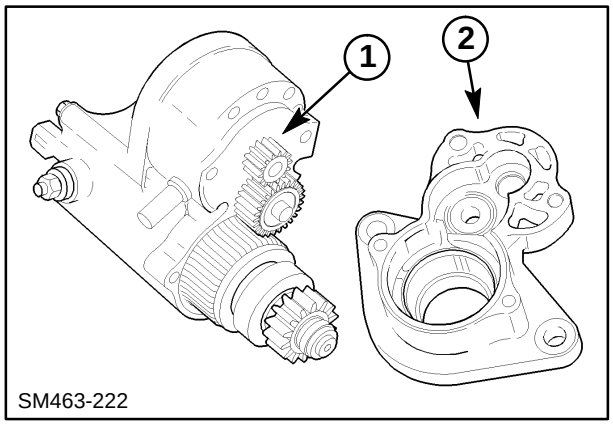

233

6. Install the armature into the motor housing. Gently tap the armature into place with a soft hammer to seat the rear bearing.

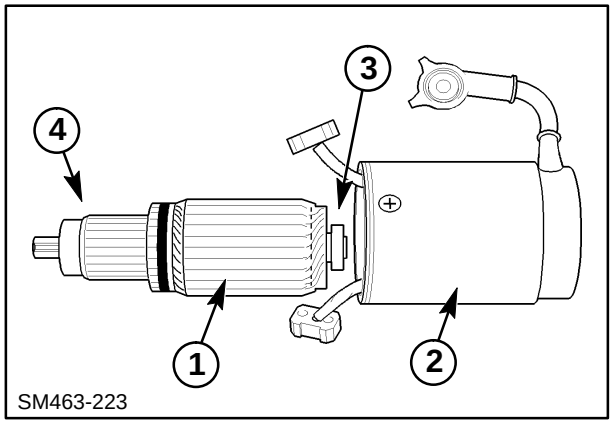

234

https://truckmanualshub.com/

7. Install the brush plate onto the motor housing. Install the insulated brushes into the holder. Ensure the insulated brush leads are not grounded. Avoid getting oil or grease on the brushes or commutator.

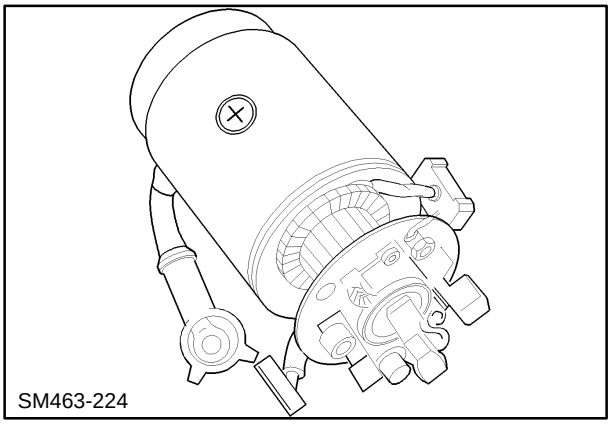

235

8. Install the motor into the drive housing observing the scribe marks. Install the retaining bolts and torque to 7 - 12 N·m (5 - 9 ft. lbs.).

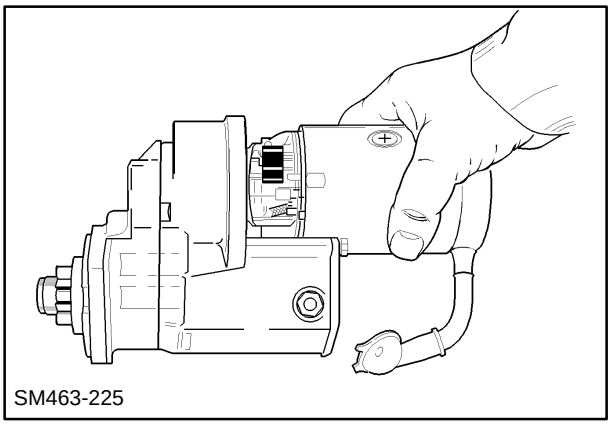

236

9. Reconnect the lead wire from the electric solenoid.

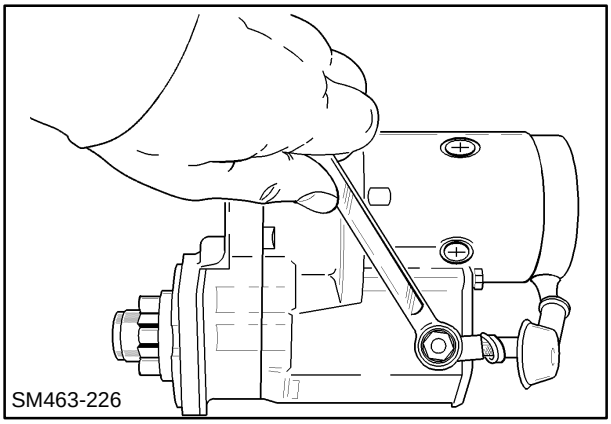

237

https://truckmanualshub.com/

Performance Test
After reassembly, a no-load test should be conducted.

Clamp the starter securely in a vise. Connect a heavy wire (jumper cable) from a 12 volt battery positive terminal, through a suitable ammeter, to the battery cable post of the starter, 1. Connect a second cable from the battery negative post to the starter case or vise. Connect a jumper wire from the positive cable to the spade terminal on the solenoid, 2.

The pinion gear should jump forward and the starter turn smoothly. Current draw should not exceed 130 amps.

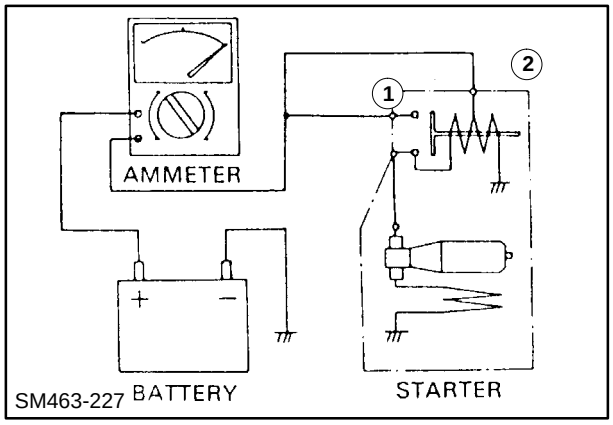

SM463-227

238

Maximum Circuit Resistance

Resistance Of Battery Cables 1, 2, & 3 Not To Exceed 0.0018 Ohm

Circuit	Cable No	Circuit Current	Resistance	Maximum Circuit Volt Drop	Rewards
Alternator Charging	4			0.5 Volt	See Glow Plugs Circuit
	7, 11	35 Amp	0.0143 OHM		
Starting Motor Solenoid	4				See Glow Plugs Circuit
	5			0.63 Volt	See Glow Plugs Circuit
	6	15.75 Amp	0.04 OHM		
Glow Plugs (Via Glow Signal)	4, 5, 8, 9, 10	27 Amp	0.0185 OHM	0.5 Volt	3 cyl Engines
		36 Amp	0.0139 OHM	0.5 Volt	4 cyl Engines

https://truckmanualshub.com/

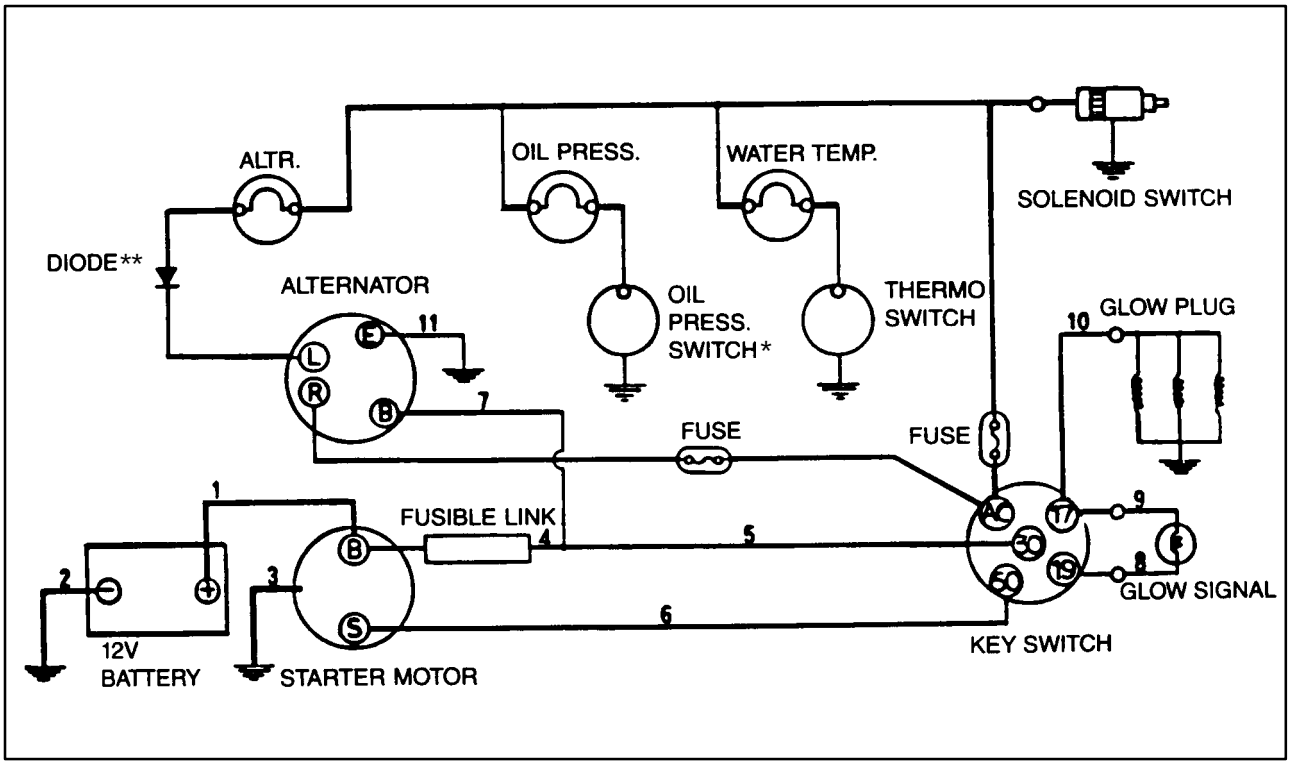

239

* Maximum current draw for oil pressure switch is 0.42 amps (5-watt max. bulb).

** Diode capacity: Current 3 amp. Reverse voltage 600 volt.

STARTER REINSTALLATION

1. Attach the starter to the bellhousing and tighten the hardware, 1. When installing the starter into the bellhousing, make sure it is properly seated before installing and tightening the hardware.
2. Reconnect the wires to the proper terminals, 2, on the starter solenoid and starter.
3. Reconnect the negative (–) battery cable.
4. Reinstall and close any shields removed.

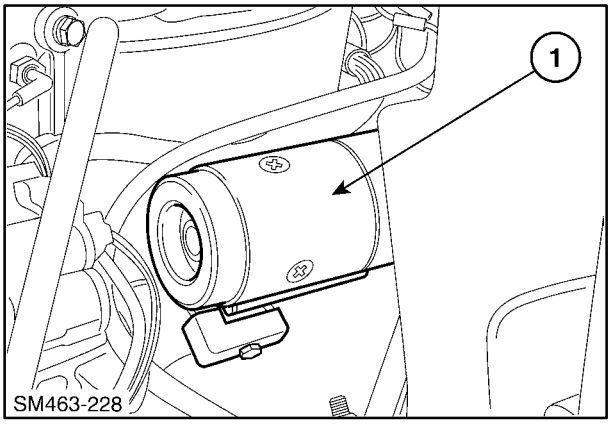

240

https://truckmanualshub.com/

LABOR GUIDE

The following labor amounts are listed as a guide only. Working conditions and experience will vary the time it actually takes to complete each job.

Job Description	Hours
Air filter sensor, remove and replace	0.5 hr.
Alternator, remove and replace	0.5 hr.
Battery, remove and replace	0.25 hr.
Electronic instrument cluster	0.25 hr.
Engine coolant sensor, remove and replace	0.25 hr.
Engine oil pressure sender, remove and replace	0.25 hr.
Fuel level sender, remove and replace	0.5 hr.
Fuel pump, remove and replace	0.5 hr.
Fuel shutoff solenoid, remove and replace	0.25 hr.
Hydraulic oil temperature sensor, remove and replace	2.0 hrs.
Hydraulic oil filter sensor, remove and replace	0.5 hr.
Hydrostatic charge pressure sensor, remove and replace	0.5 hr.
Ignition (key) switch, remove and replace	0.25 hr.
Light (road/work) switch, remove and replace	0.25 hr.
Preheat manual switch, remove and replace	0.5 hr.
Preheat circuit breaker, remove and replace	0.5 hr.
Preheat relay, remove and replace	0.5 hr.
Resistor, alternator charge circuit, remove and replace	0.5 hr.
Road/work/taillight bulb, remove and replace	0.25 hr.
Seat belt (buckle) switch, remove and replace	0.25 hr.
Seat switch(es), remove and replace	0.5 hr.
Service/run switch, remove and replace	0.5 hr.
Solenoid, control valve spool locks, remove and replace	0.5 hr.
Start interlock relay, remove and replace	0.5 hr.
Starter, remove and replace	0.75 hr.
Starter relay, remove and replace	0.5 hr.
Wire harness (main), remove and replace	6.0 hrs.
Wire harness (engine), remove and replace	1.5 hrs.
Wire harness (seat/seat belt), remove and replace	1.0 hr.

https://truckmanualshub.com/

SECTION 82 – FRONT LOADER (BOOM AND MOUNTING PLATE)

Chapter 1 – Buckets

CONTENTS

Section	Description	Page
82 100	General Information	82-2
	Buckets	82-2
82 100 77	Boom Lock Pins and Linkage	82-3
	Boom	82-3
82 100 70	Attachment Mounting Plate	82-4
	Boom and Cylinder Pivot Pins	82-4
	Boom and Cylinder Pivot Pin Location and Machine Usage	82-4
	Boom and Cylinder Pivot Pins Size	82-5
82 100 30	Pallet Fork	82-6
82 100 20	Utility Fork	82-7
82 100 12	Bucket Cutting Edge (Replacement)	82-8
82 100	Bucket Latch Plate Installation Procedure	82-9
82 100	Dirt Tooth Kit Installation	82-11
	Bucket Tooth Spacing	82-13
	Boom Lock Pin/Linkage	82-15
82 100 77	Boom Lock Pin/Linkage Removal	82-15
	Boom Lock Pin/Linkage Reinstallation	82-16
	Boom, Upper and Lower Link	82-18
	Boom, Upper and Lower Link Removal	82-18
82 100 70	Front Boom Mounting Plate Pivot Hub Replacement	82-24
	Boom, Upper and Lower Link Reinstallation	82-25
	Attachment Mounting Plate	82-29
82 100 70	Attachment Mounting Plate Removal	82-29
	Repair/Rebuild Mounting Plate	82-30
82 100 74	Latch Lever and Pin Removal/Repair	82-30
	Attachment Mounting Plate Parts Inspection	82-32
	Checking Procedure for Buckets and Attachments	82-36
	Checking Procedure	82-38
	Checking the Loader Faceplate	82-39
	Labor Guide	82-41

https://truckmanualshub.com/

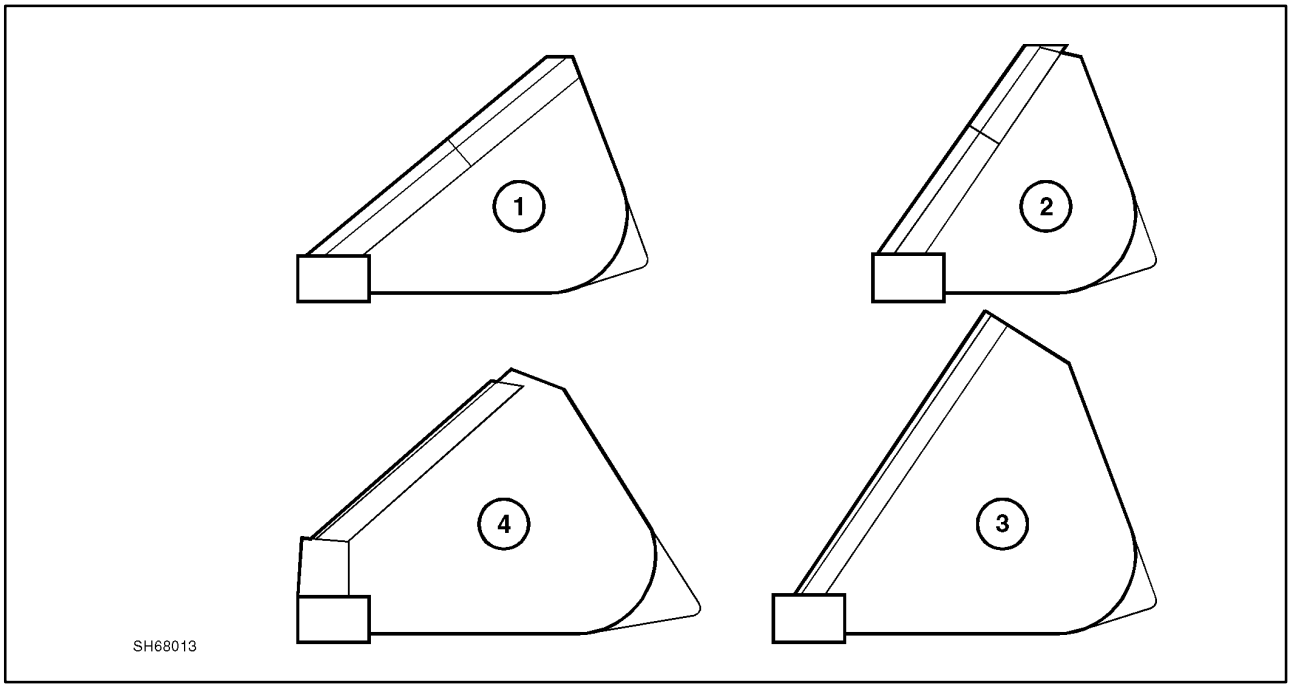

1

Op. 82 100

GENERAL INFORMATION

BUCKETS

Bucket Types

1. LP - Low profile

   The low-profile bucket has a shorter back and is longer from bucket heel to cutting edge for optimum cutting edge visibility. This is important for finish grading and accurate cut and fill jobs.

2. D & F - Dirt and foundry

   The dirt and foundry bucket is shorter from bucket heel to cutting edge to provide maximum breakout force for tough digging conditions.

3. M & F - Manure and fertilizer (slurry)

   The manure and slurry bucket is for handling loose or fluid materials with more rollback to minimize spillage.

4. LM - Light material

   The light-material bucket is for light, high- volume materials for more productivity handling light material.

Select bucket styles and sizes to provide both adequate breakout force and reasonable carrying capacity. Handle dense materials with a relatively small bucket. Handle lighter materials with higher capacity buckets. Refer to the following bucket capacity chart and the material weight chart in the operator's manual when choosing the bucket for a job.

Bucket Capacity Cubic Feet

Width		Bucket Capacity Heaped (cu ft)	Bucket Capacity Struck (cu ft)
66″	Utility fork	N/A	N/A
60″	Low profile	11.5	8.9
60″	Dirt and foundry	11.5	8.7
66″	Low profile	13.2	9.7
66″	Dirt and foundry	15.2	11.6
72″	Low profile	14.5	10.6
72″	Dirt and foundry	16.7	12.7
72″	Manure and fertilizer	15.5	15.5
72″	Light material	23.7	19.0
84″	Light material	27.9	22.3

https://truckmanualshub.com/

Op. 82 100 77

BOOM LOCK PINS AND LINKAGE

The operator can engage the boom lock pins from the operator's seat. The control is located to the right rear of the operator's seat at 1. Pivoting the handle towards the outside of the cab extends and engages the lock pins. Pivoting the handle in will retract the lock pins.

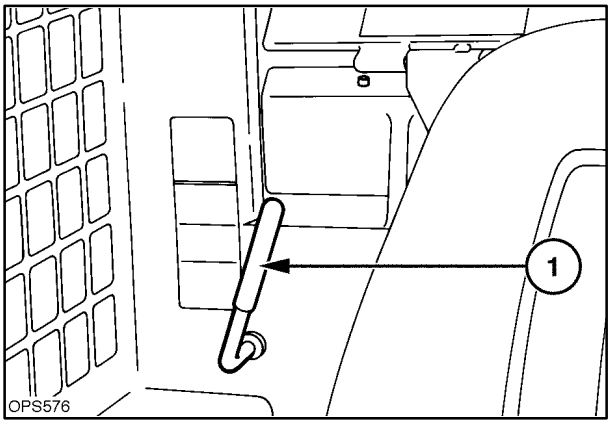

2

To engage the boom lock pins:

1. Raise the boom above the boom lock pins and engage the pins.
2. Turn the ignition key to the "OFF" position to stop the engine.
3. Turn the ignition key to the "ON" position and operate the boom and bucket hydraulic controls to lower the boom until it rests on the lock pins, 1, and relieves pressure in the boom and bucket hydraulic circuits.
4. Turn the ignition key to the "OFF" position.

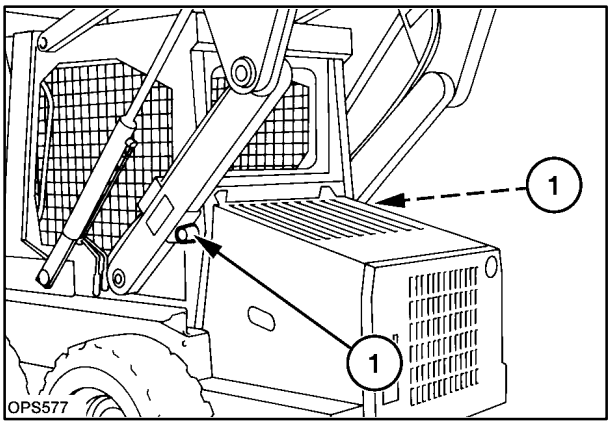

3

CAUTION

Never work under a raised boom unless the boom is resting on the boom lock pins, 1.

Never work under a raised boom with an attachment, always remove any attachment from the loader boom mounting plate.

BOOM

The boom assembly consists of:

Op. 82 100 50
1 Main boom frame

Op. 82 100 52
2 Lower link, right and left

Op. 82 100 53
3 Upper link, right and left

The boom and links are supported on the ROPS main frame with tapered pivot pins at all pivot locations.

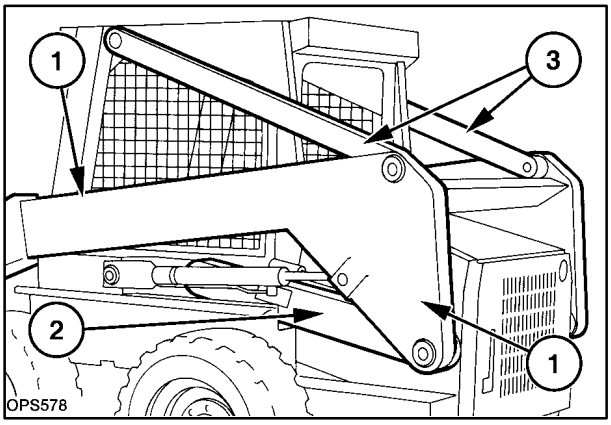

4

https://truckmanualshub.com/

Op. 82 100 70

ATTACHMENT MOUNTING PLATE

The attaching plate is attached to the main boom frame with two tapered pivot pins. The attachments used on the skid steer can be easily attached or removed from the loader with the over center levers and pins. The control levers and pins are spring loaded to hold the levers over center when unlatched to assist in changing attachments. When the control levers are in the latched position the spring-loaded pins are forced into the latch points on the attachment. The control levers and pins are shown in the latched position.

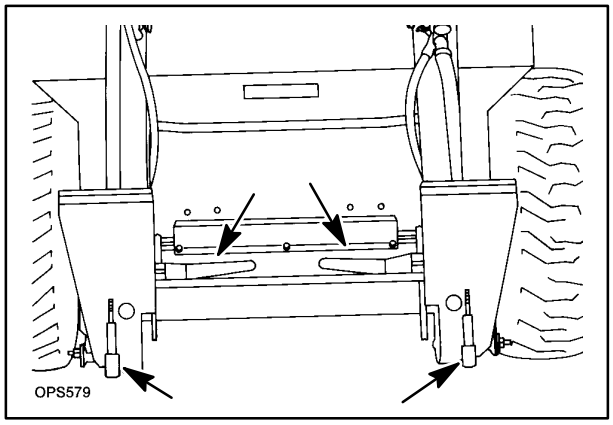

5

BOOM AND CYLINDER PIVOT PINS

When the boom, upper and lower boom links and cylinders are removed, the following figures and charts may be use for proper pin placement. The following charts and figures list the pivot pin, part number, location, and size for identification and locations.

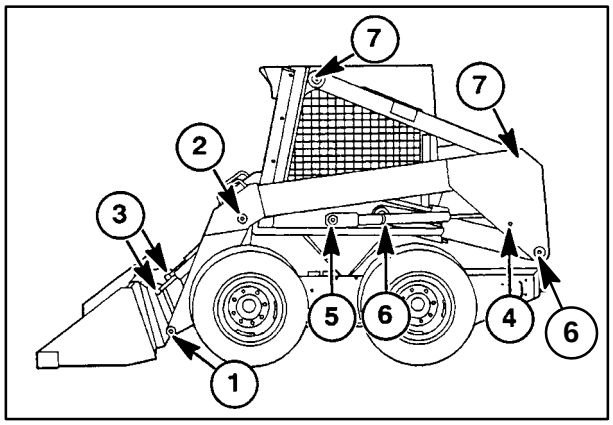

6

BOOM AND CYLINDER PIVOT PIN LOCATION AND MACHINE USAGE

Ref.#	Description	Qty.	Part Number	Torque
1	Mounting Plate Pivot	2	86501434	108 N·m (80 ft. lbs.)
2	Upper Bucket Cylinder Pivot	2	86501430	108 N·m (80 ft. lbs.)
3	Lower Bucket Cylinder Pivot	2	9614349	38 N·m (28 ft. lbs.)
4	Upper boom Cylinder Pivot	2	86521982	38 N·m (28 ft. lbs.)
5	Lower boom Cylinder Pivot	2	86504316	338 N·m (250 ft. lbs.)
6	Boom Lower Link Pivot	4	86501422	338 N·m (250 ft. lbs.)
7	Boom Upper Link Pivot	4	86501420	338 N·m (250 ft. lbs.)

https://truckmanualshub.com/

BOOM/CYLINDER PIVOT PINS SIZE

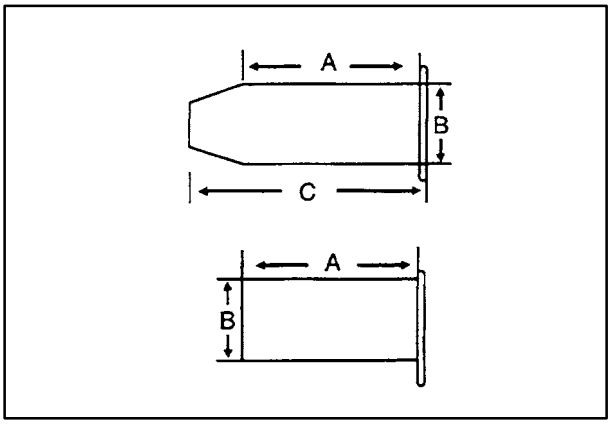

7

PART NUMBER	A	B	C
9614349	95 mm (3-3/4″)	38 mm (1-1/2″)	
86501420	49 mm (1-15/64″)	60.3 mm (2-3/8″)	113 mm (4-29/64″)
86501422	77 mm (3-1/32″)	60.3 mm (2-3/8″)	141 mm (5-9/16″)
86501430	72.3 mm (2-7/8″)	38.10 mm (1-1/2″)	112.5 mm (4-7/16″)
86501434	57.8 mm (2-9/32″)	38.1 mm (1-1/2″)	92 mm (3-5/8″)
86504316	40.0 mm (1-5/32″)	60.3 mm (2-3/8″)	113 mm (4-7/16″)
86521982	117 mm (4-39/64″)	38.1 mm (1-1/2″)	

NOTE: *After the tapered pivot pin retaining hardware is torqued, the pins must be properly seated. Using a hammer, strike the head of the bolt and pin several times to seat the tapered pin in the taper of the boom and/or ROPS. Retorque the hardware to the specified torque. Repeat this process until the torque is maintained*

https://truckmanualshub.com/

Op. 82 100 30

PALLET FORK

The pallet fork (shown) has a frame and guard assembly, with different length forks available. The fork pairs can be 36″, 42″, or 48″ long. Also available is a multi-fork block fork set for lifting cinder blocks.

To adjust fork spacing, raise the lock pins, 1, slide the forks to the required spacing, and relatch lock pins into notches.

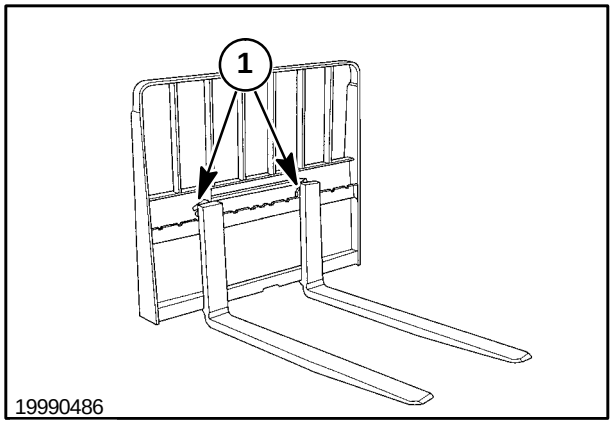

8

To install or remove the forks from the frame, slide the forks to the center of the frame at 1, and pick the end of the fork up to remove fork from frame.

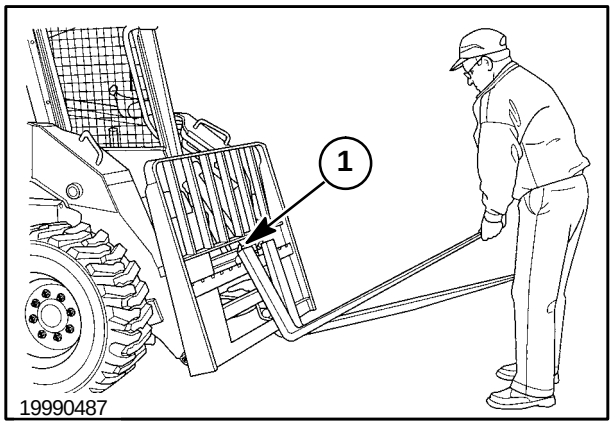

9

Pallet Fork Capacity

WITH WEIGHT KIT			
Max. Reach Height	**Tip Load**	**50%**	**SAE Rating**
2489 mm (98″)	1290 kg (2840 lbs.)	645 kg (1420 lbs.)	645 kg (1420 lbs.)
WITHOUT WEIGHT KIT			
Max. Reach Height	**Tip Load**	**50%**	**SAE Rating**
2489 mm (98″)	1140 kg (2510 lbs.)	570 kg (1255 lbs.)	570 kg (1255 lbs.)

Capacities listed are LS160/LS170 with 10 x 16.5 tires at 3.5 bar (50 PSI), full fluids, 79 kg (175 lb.) operator, 48″ pallet forks w/back guard, weight kit two 27 kg (60 lbs.) per side, per SAE rating specification J1197.

https://truckmanualshub.com/

Op. 82 100 20

UTILITY FORK

The utility fork is for handling matted, stringy material which is difficult to load into a standard bucket.

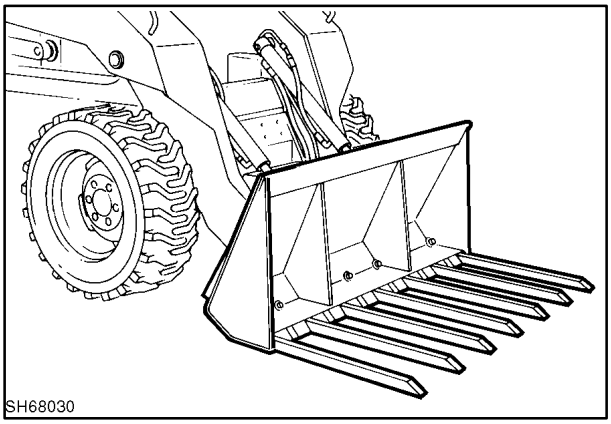

10

The standard tine spacing, center to center, is 21.8 cm (8-1/2″). The fork frame is equipped with additional holes for additional tines, reducing the tine spacing to 10.9 cm (4-1/4″).

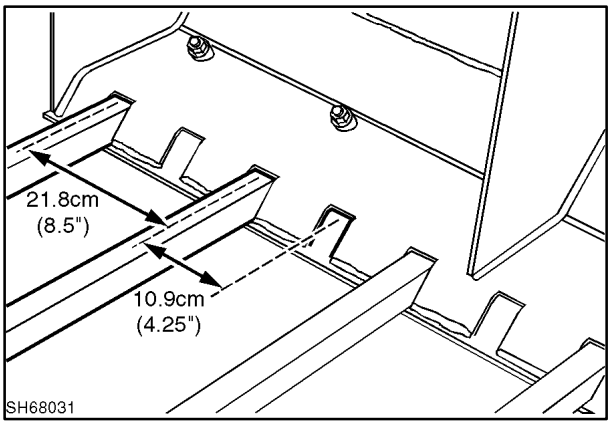

11

Op. 82 100 11

Tine Installation

1. Slide each tine, 1, into the fork backplate for the desired tine spacing, until the 1/2″ x 2-3/4″ bolt, 2, can be inserted through the fork backplate and tine with the nut to the inside of the fork backplate.
2. Position the spacer, 3, as shown with the angle end of the spacer next to the floor of the backplate. Secure the assembly with 1/2″ lock washer and nut. Tighten securely.

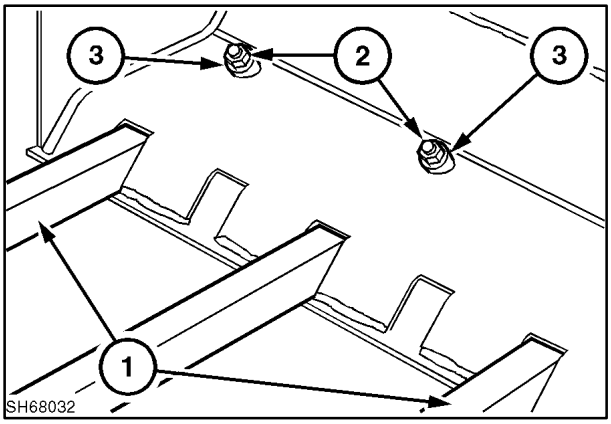

12

https://truckmanualshub.com/

BUCKETS

Op. 82 100 12

CUTTING EDGE (REPLACEMENT)

Cut or grind the old cutting edge from the bucket floor and sides. Remove all old weld and foreign material from the welding area.

1. Straighten the bucket floor and sides if required.
2. Thoroughly clean the area where the new cutting edge will be welded.
3. Use dry AWS-E7018 low hydrogen electrodes or either of the following equivalent low hydrogen wire feed electrodes: Gas metal arc welding (CO_2 or argon CO_2) AWS-E70S6 or flux cored arc welding AWS-E70T1.
4. Preheat the parts to be welded (both tack and final welds) to a minimum of 204°C (400°F). **The preheat temperature must be throughout the entire thickness of the parts joined, and at least 51 mm (2″) back from the joint.** Maintain preheat throughout the entire welding operation.

NOTE: *This is a hardened steel edge. If not preheated, the cutting edge may later crack during use.*

5. Tack weld the preheated parts starting at the center of the bucket and working toward the outside ends.
6. Finish welding the preheated parts starting at the center of the front edge of the bucket floor and working toward the outside ends. Repeat this operation at the back side of the cutting edge to bucket floor.
7. Do not remove the bucket from the welding environment until the weld and metal temperature drops to the ambient temperature. **Do not force the cooling rate of the welds and material.**

Follow the same welding procedure for welding the side cutting edges and bottom wear plates to the bucket.

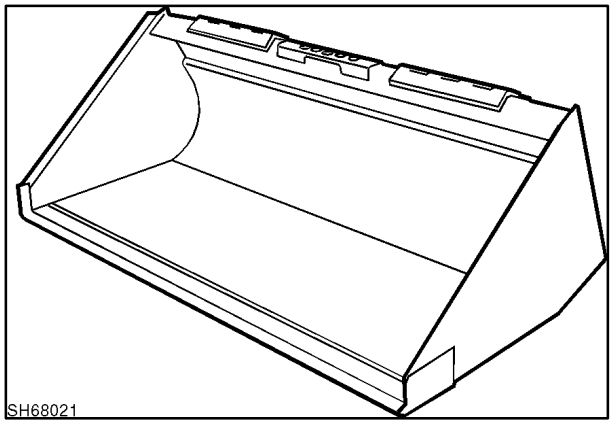

13

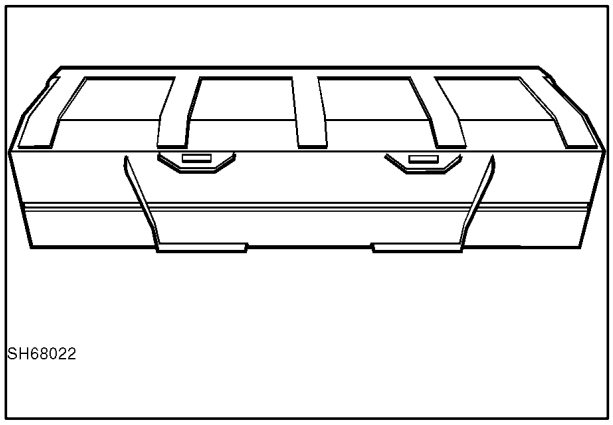

14

https://truckmanualshub.com/

Op. 82 100

BUCKET LATCH PLATE INSTALLATION PROCEDURE

1. Remove the bucket from the loader before welding to prevent damage to the loader electrical system.

   Material to be welded is low carbon, grade 50 steel; use welding rods marked 6011 or comparable.

CAUTION

Good quality welds are necessary for new plates to be properly retained. Use a professional welder if required.

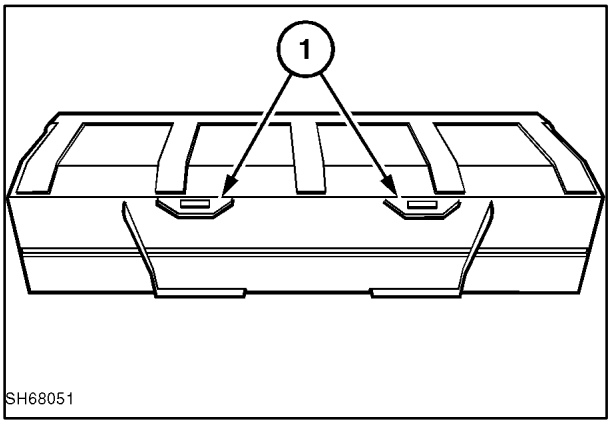

15

2. Turn the bucket over and support it about 305 mm (12″) off the floor.
3. Cut the old lower retaining plates, 1, off the bucket and grind the area flat.
4. For locating the new lower attaching plates, remove the quick-attach plate from the loader boom. To remove the plate from the boom, remove the cylinder pins, 1, and the pivot pins, 2.

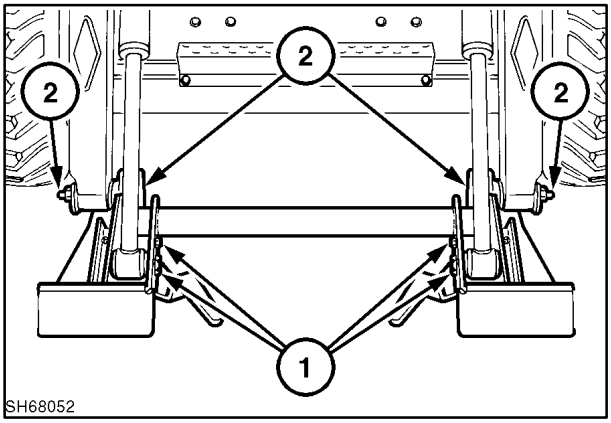

16

5. Rest the attaching plate in the saddle area, 1, of the bucket with the latch handles in the unlatched position as shown at 2. Put two 152 mm (6″) long pieces of 4.8 mm (3/16″) square key stock at 3, to position the attaching plate properly against the back of the bucket.

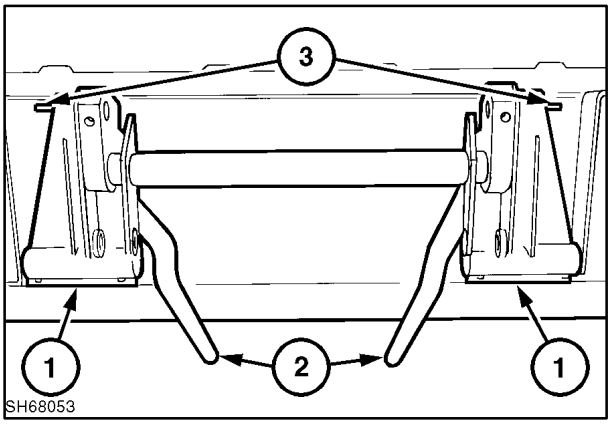

17

https://truckmanualshub.com/

6. Position the first plates against the back of the bucket at 1, and rest on the quick-attach plate, 2. Locate the center of the latch plate notches, 4, and center the outer half of the notch over the latch pin, 3. Spot weld the plate to the bucket at 1 to hold the plate in position.

NOTE: *The material to be welded is low carbon, grade 50 steel; use welding rods marked 6011 or comparable.*

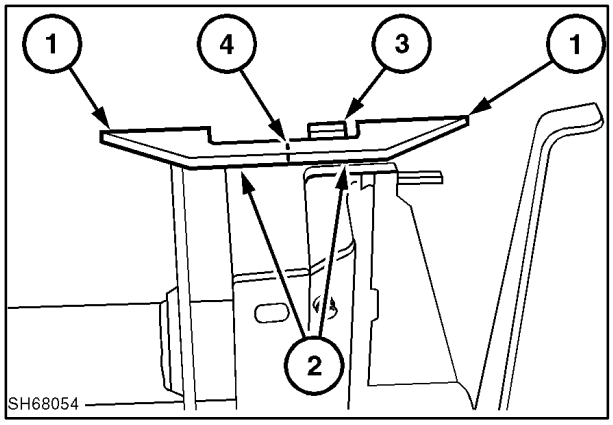

18

7. Position the second plates as shown at 1, with the plates contacting each other at 2, and about 28.6 mm (1-1/8″) spacing at 3. On low-profile buckets, the second plate will be at the rear corner of the bucket at 4. Spot weld the second plate to the bucket at 4 and the two plates together at 5.
8. Remove the 4.8 mm (3/16″) square key stock and push the latch handles to the latched position making sure the latch pins engage the bucket latch plates. The latch handles must fully latch. The latch pin will only contact the top latch plate, 6.

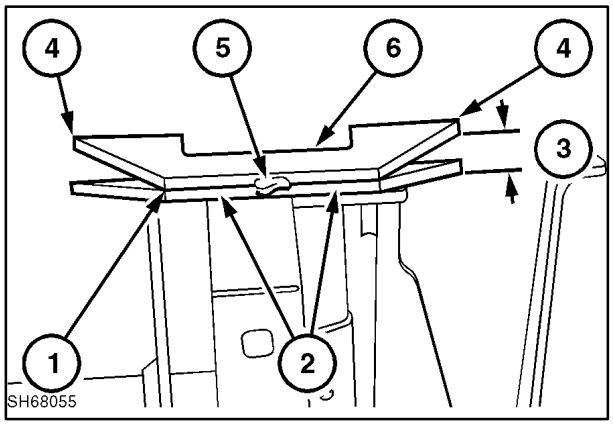

19

9. If the latch handles will not fully latch, the top plate may require some grinding in the pin area at 1, or the plates are not located properly.

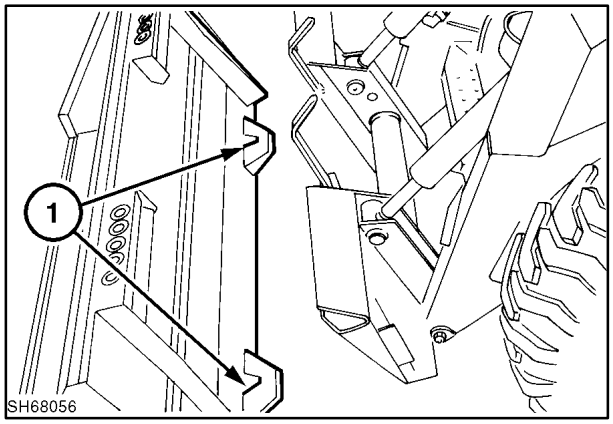

20

https://truckmanualshub.com/

10. Weld the plates to the bucket at 2; also weld the two plates at 3.
11. Reinstall the bucket quick-attach plate to the loader boom with the pins previously removed.

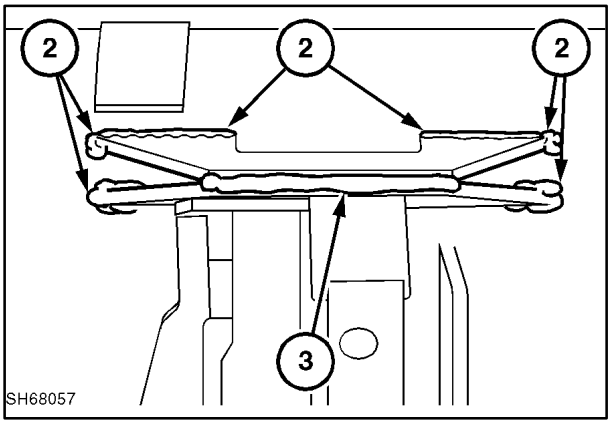

21

12. Attach the bucket to the loader by engaging the top of the plate, 1, under the lip of the bucket at 2. Curl the bucket back to allow the bucket to contact the loader quick-attach plate and engage the latch handles and pins, making sure the latch pins engage the bucket plates properly.

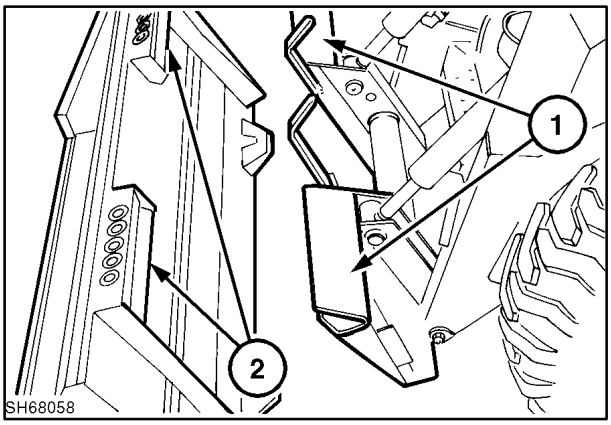

22

Op. 82 100

DIRT TOOTH KIT INSTALLATION

Bucket Dirt Tooth Kit

The dirt tooth kit consists of six teeth that are welded to the bucket cutting edge as indicated below. The teeth are used when rough digging conditions are anticipated to break up the material for easier bucket filling. The teeth are intended to be used only on dirt and foundry or low-profile buckets.

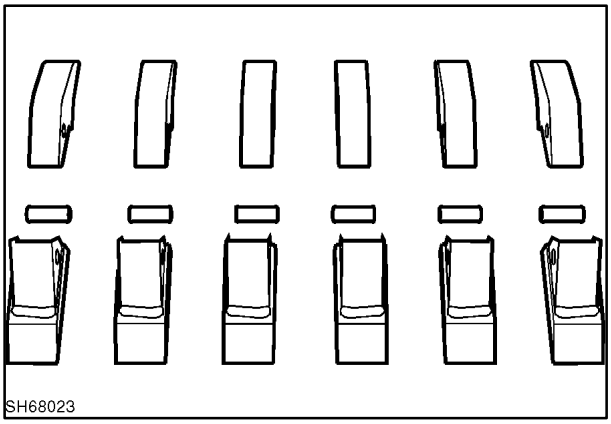

23

https://truckmanualshub.com/

Op. 82 100 10

Tooth Point Replacement

The points of the teeth are a replaceable “pin-on” design and can be obtained from Parts.

To replace the “pin-on” points, use a punch that just fits into the pin hole, 1, and drive the old retaining pin from the shank.

Place the new point over the shank and insert the retaining pin into pin hole, 1. With a punch that contacts both sides of the metal part of the retaining pin, drive the pin until it is centered in the shank.

NOTE: *If the punch or driver is too small and just contacts the rubber center of the retaining pin, the pin will be damaged and will not retain the point.*

Tooth Location and Installation

1. The bucket should be flat on the floor when placing and welding the teeth.

IMPORTANT: *Remove the bucket from the loader while welding teeth to prevent damage to the loader electrical system.*

Slide the replaceable points in place but do not attach with the steel/rubber pins as the rubber may be damaged during the welding process.

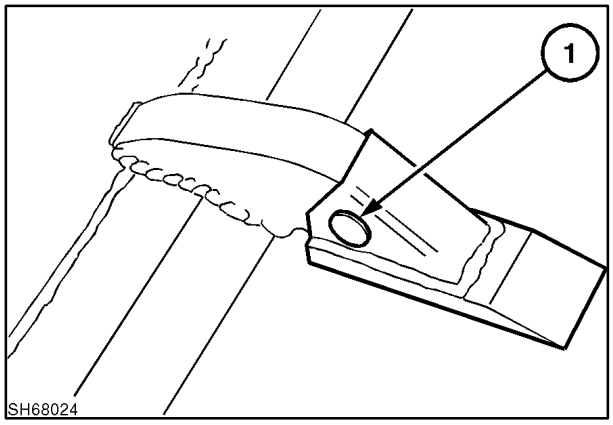

24

https://truckmanualshub.com/

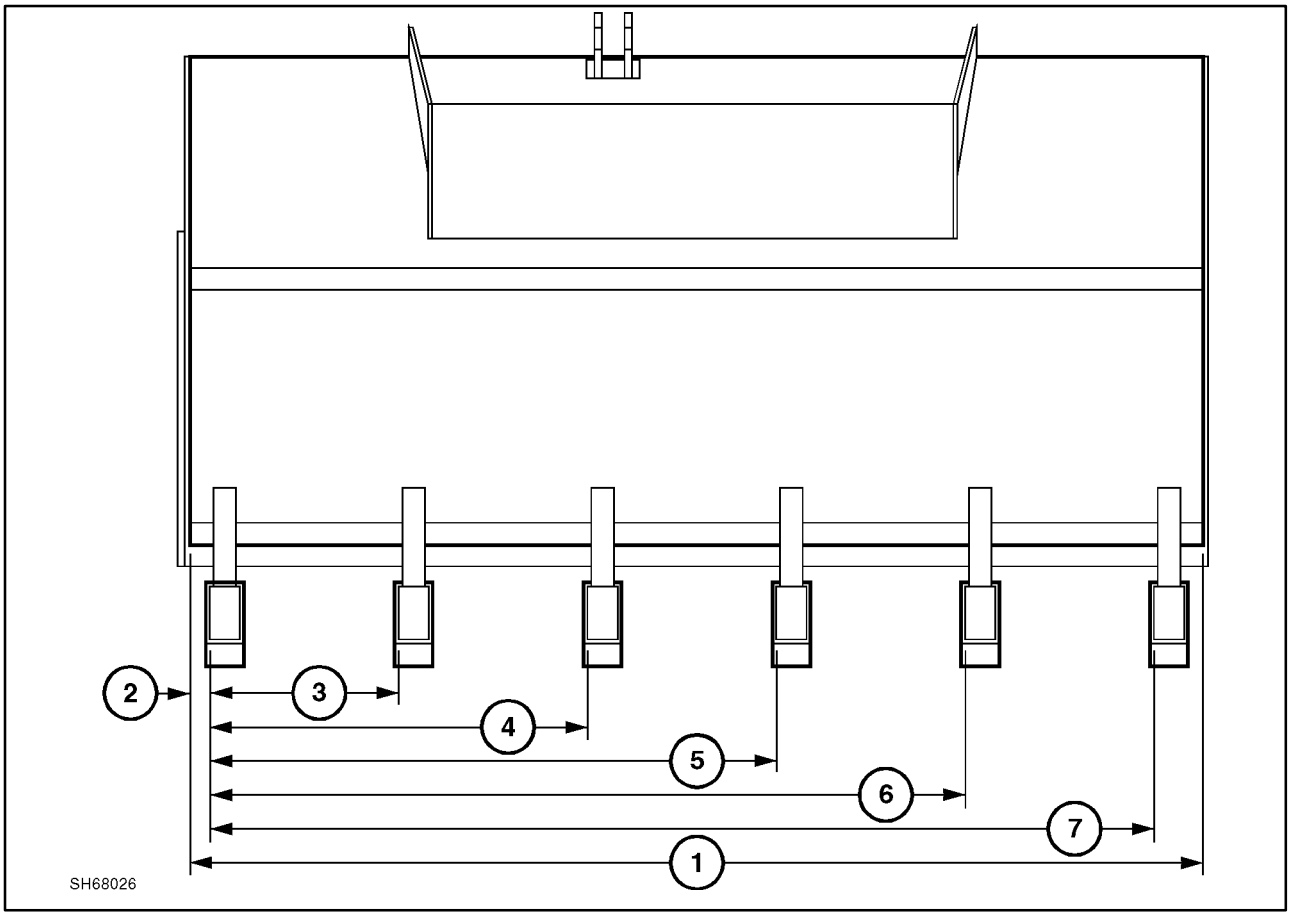

25

2. Locate the teeth on the bucket edge as indicated.

BUCKET TOOTH SPACING

Bucket Width	From End	2nd Tooth	3rd Tooth	4th Tooth	5th Tooth	6th Tooth
1	**2**	**3**	**4**	**5**	**6**	**7**
52″	1-13/16″	9-1/2″	18-15/16″	28-3/8″	37-13/16″	47-5/16″
54″	1-13/16″	9-3/4″	19-1/2″	29-3/16″	38-15/16″	48-5/8″
58″	1-13/16″	10-11/16″	21-5/16″	32″	42-5/8″	53-5/16″
60″	1-13/16″	10-15/16″	21-7/8″	32-3/4″	43-3/4″	54-5/8″
62″	1-13/16″	11-3/8″	22-3/4″	34-1/8″	45-1/2″	56-7/8″
66″	1-13/16″	12-3/16″	24-5/16″	36-1/2″	48-11/16″	60-7/8″
70″	1-13/16″	13″	26″	38-15/16″	51-7/8″	64-7/8″
76″	1-13/16″	14-3/16″	28-5/16″	42-1/2″	56-11/16″	70-7/8″
82″	1-13/16″	15-3/8″	30-3/4″	46-1/8″	61-1/2″	76-13/16″

NOTE: *Position the teeth at these spacings, then re-center if necessary for equal spacing.*

https://truckmanualshub.com/

3. Weld, 1, is high carbon steel (tooth) to high carbon steel (bucket). Use welding rods marked 7018 or comparable rods. Weld on both sides of the tooth from the back of the tooth towards the replaceable point.

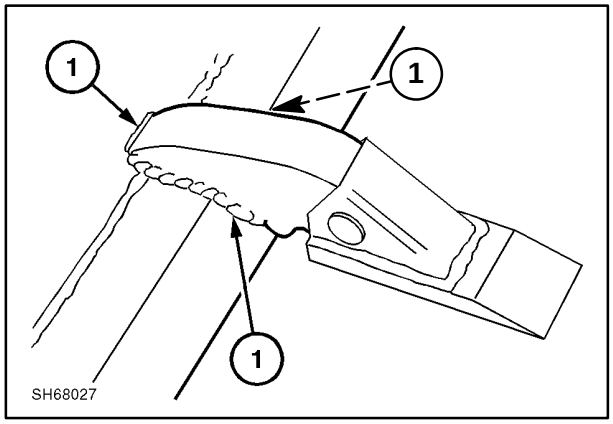

26

4. Stop welding 13 mm (1/2″) from the cutting edge as noted. A minimum 5 mm (3/16″) fillet weld is required for this application.
5. Weld in the direction shown at 1.
6. Weld a 5 mm (3/16″) bevel groove weld on both sides of the tooth, 2, high carbon steel to high carbon steel.

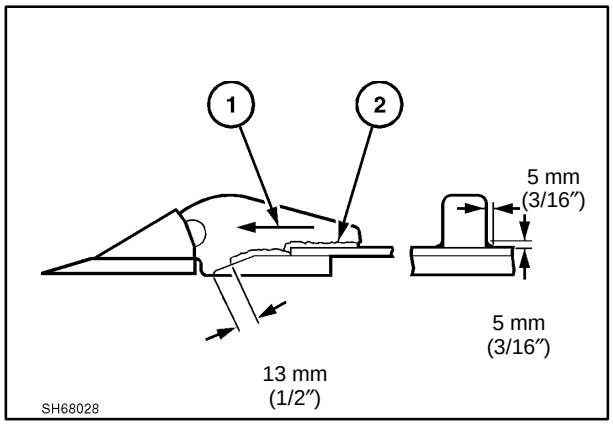

27

https://truckmanualshub.com/

BOOM LOCK PIN LINKAGE

Op. 82 100 77

REMOVAL

1. Lower the boom to the lowered position.
2. Open the rear door, 1, and the top engine, 2, access cover.
3. Remove the right and left engine side covers, 3.

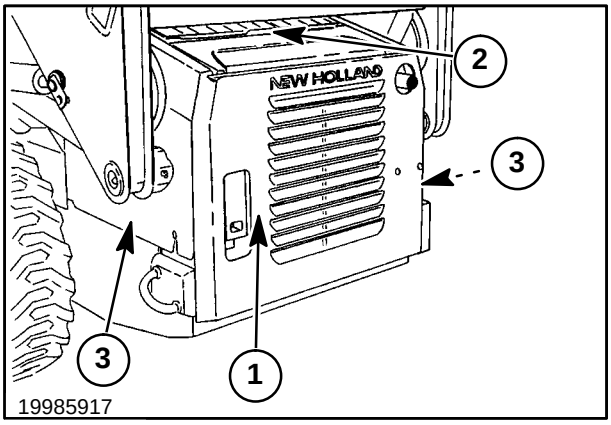

28

4. Unhook the spring, 1, from control rod by sliding spring to the side and removing spring at bottom hook, 2.
5. Remove the push nuts, 3, from the control rod, 4.
6. Remove the linkage to pin through bolt, 5.
7. Remove the linkage support retaining hardware, 6.

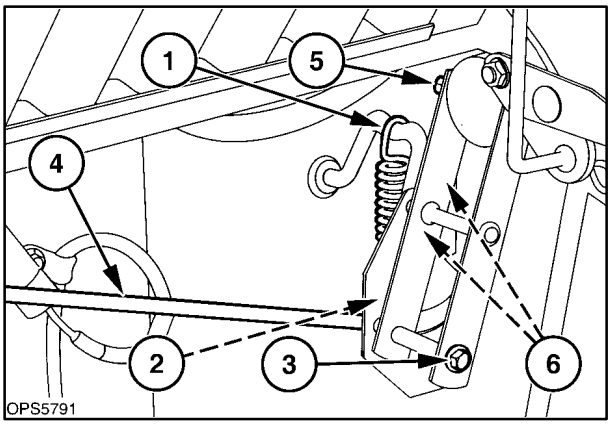

29

8. Remove the plastic handle grip, 1, from the control lever.

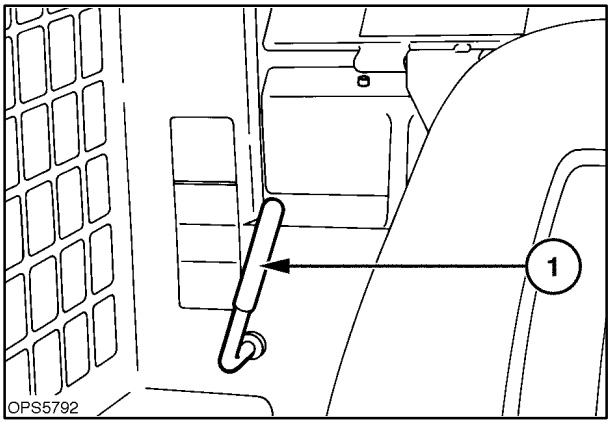

30

https://truckmanualshub.com/

9. Remove the control rod, 2, from the lever at 5, and slide the handle from the rear of the cab.
10. Slide the boom pins, 1, right and left, from the loader ROPS post.
11. The boom lock pins and linkage include:
    1. Boom Lock Pins (2)
    2. Control Rod (1)
    3. Push Nuts (2)
    4. Support Angle (1)
    5. Control Lever Assembly (1)
    6. Plastic Handle Grip (1)
    7. Spring

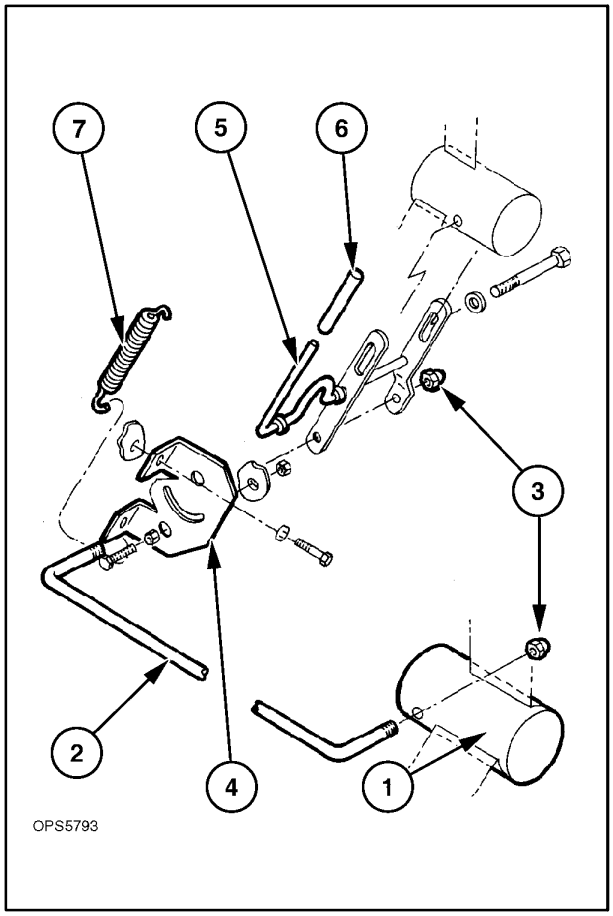

31

REINSTALLATION

1. Install the boom lock pins, 1, right and left, into the ROPS posts at 2.
2. Install a rubber grommet at 3. Insert the control handle assembly, 4, through the right cab side shield at 5.

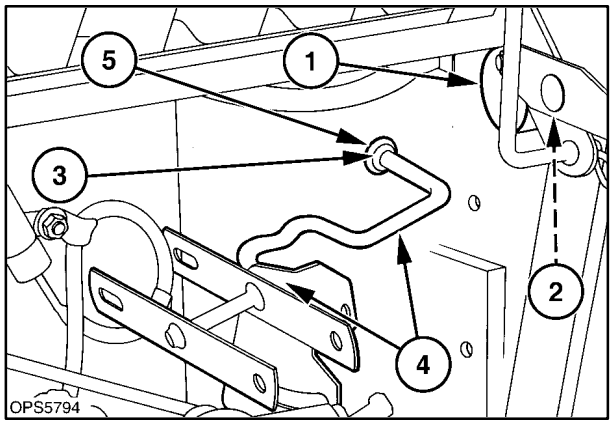

32

https://truckmanualshub.com/

3. Position the control handle over the lock pin, 1, and install the support hardware at 2.
4. Install the handle and lock pin through bolt at 3.
5. With the handle properly positioned tighten the support hardware at 2, and the through bolt lock nut, 3.

NOTE: *Do not over-tighten the through bolt because the handle must pivot at the lock pin.*

6. Install the control rod, 4, in the handle assembly, positioning the wire harness, 5, to the seat side of the control rod as shown.

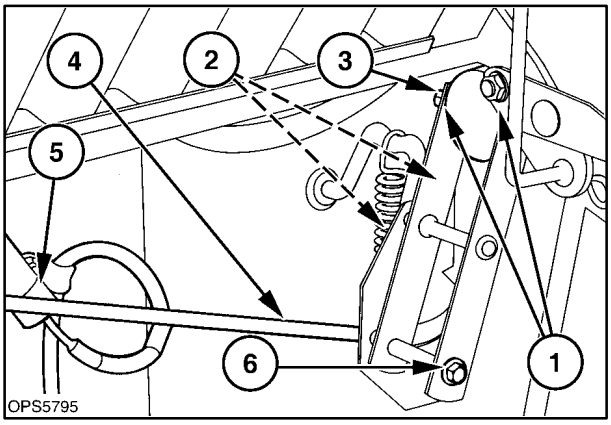

33

7. Install the control rod, 4, in the handle assembly and the left boom lock pin, 1. Slide new push retaining nuts onto rod at 6, Figures 33 and 34.

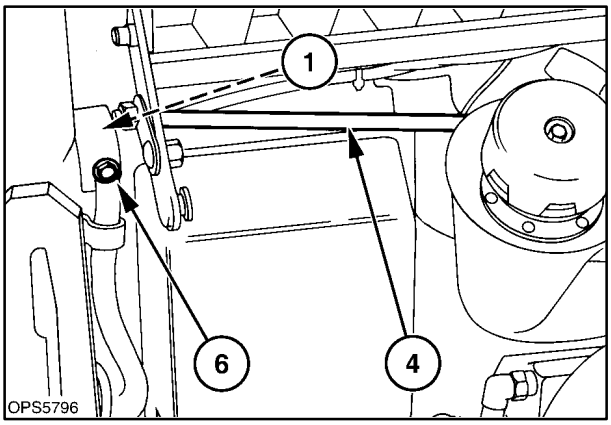

34

8. Slide the plastic handle grip, 1, onto the handle.
9. Operate the control handle to insure proper operation.

   a. Pivot the handle towards the outside of the operator's cab. The lock pins should extend from the cab post.

   b. Pivot the handle towards the inside of the operator's cab. The lock pins should retract into the cab post far enough to allow boom movement without contacting the lock pins.

10. Reinstall the engine side shields. Close the top engine cover and rear door.

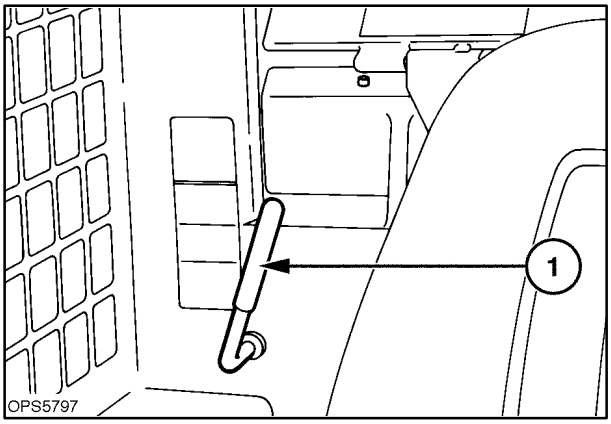

35

https://truckmanualshub.com/

BOOM, UPPER AND LOWER LINK

REMOVAL

1. Remove any attachment (bucket, fork, etc.) from the boom mounting plate and lower the boom to the lowered position.

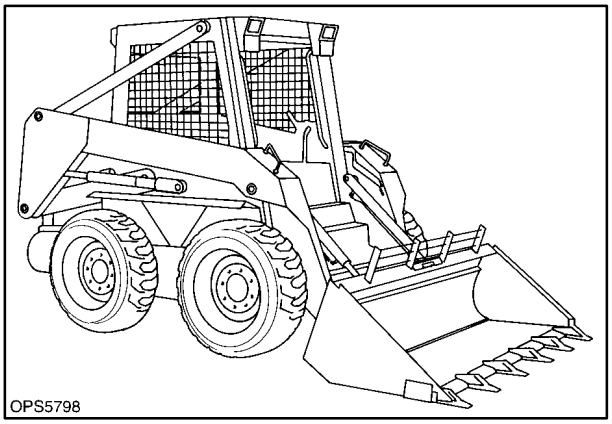

36

2. Attach a chain or strap suitable for handling the weight of the boom (approximately 800 lbs.) to the boom grab handles as shown at 1. Support the boom about level with the top of the loader ROPS.

⚠ CAUTION ⚠

Always use a suitable lifting device and chains or straps to support and remove the boom.

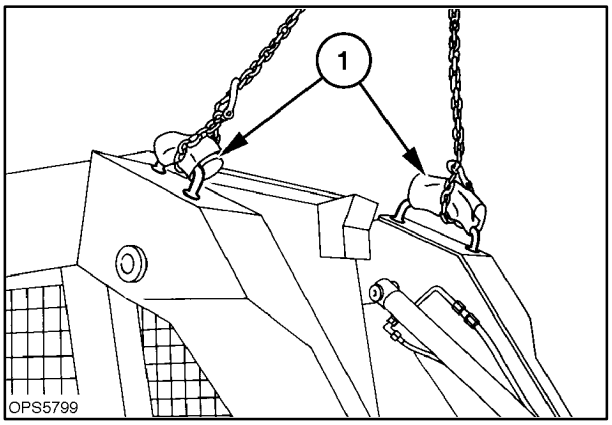

37

3. Support the rear of the boom with the rear lower link pivot above the top of the engine shielding as shown.

NOTE: *This will enable the removal of the link pivot hardware.*

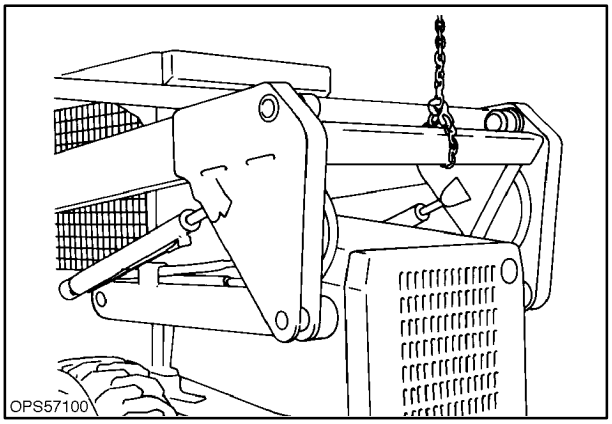

38

https://truckmanualshub.com/

Op. 82 100 52

Lower Link Removal

1. Remove the plastic plugs, 1, from the cab inner shell to access the boom lower link and cylinder pivot hardware.
2. Remove the fenders to gain access to the boom and bucket hydraulic tube and hose connections.

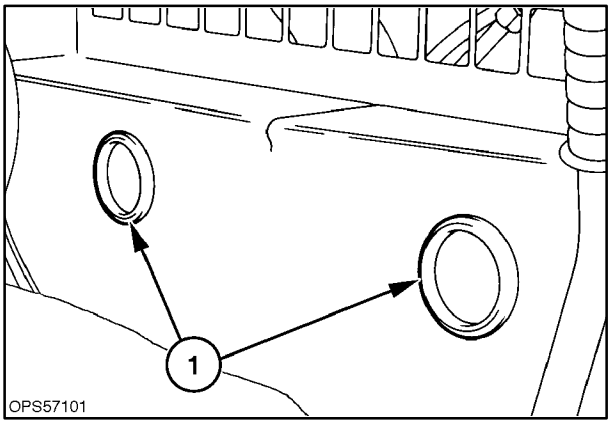

39

3. With the boom properly supported and all hydraulic oil pressure removed from the boom and bucket circuits, disconnect the hydraulic lines at 1. Cap open ends of lines and hoses. Remove the boom hose clamps, 2, retaining the hoses to the lower boom links. Remove the hoses from the lower hose retainer, 3.

CAUTION

Always use a suitable lifting device and chains or straps to support and remove the boom.

Do not disconnect any hydraulic lines until all hydraulic pressure is removed from the boom and bucket hydraulic circuits.

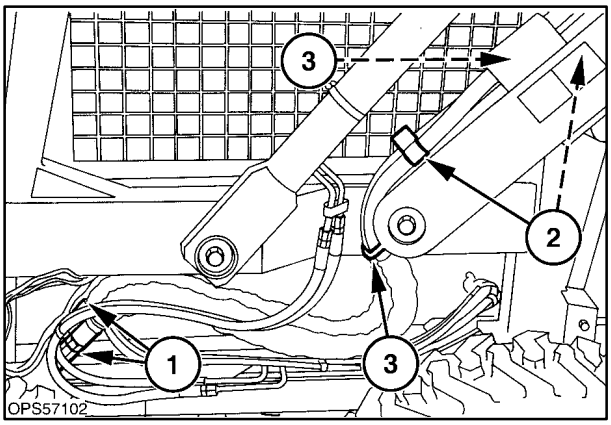

40

4. Loosen the lower link rear pivot pin retaining hardware.

CAUTION

Do not remove the pin retaining hardware until the tapered pivot pin is broken loose at the tapered end of pin or the link and pin may fall.

5. With a soft-faced sledge hammer, strike the lower link as shown to break the tapered pivot pin loose in the main boom link.

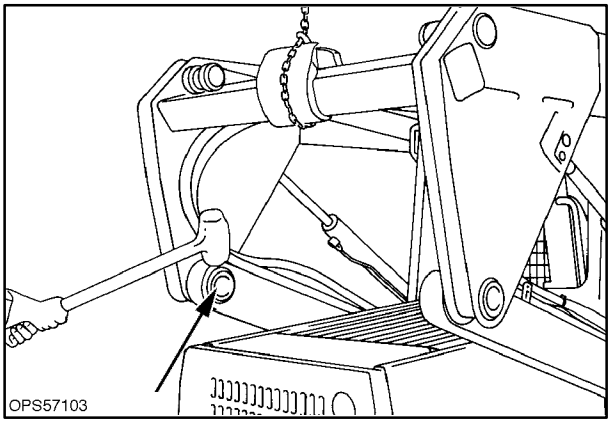

41

https://truckmanualshub.com/

6. Loosen the front lower link pivot pin retaining hardware, 1, and strike the link at 2, to break the tapered pivot pin loose in the ROPS frame.

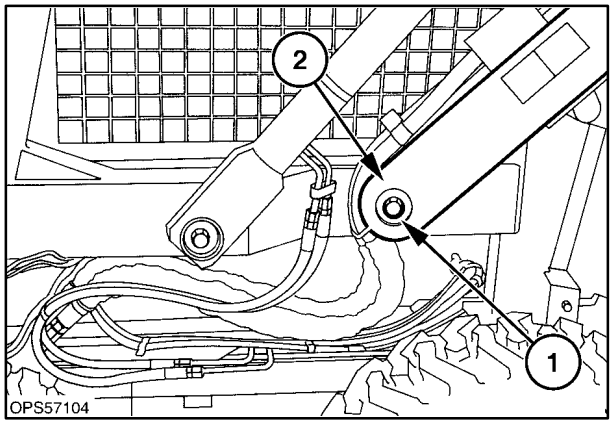

42

7. Remove the retaining pin hardware from the front and rear pins. Lift the lower link and pins from the loader.

NOTE: *Both the right and left lower links can be removed as described.*

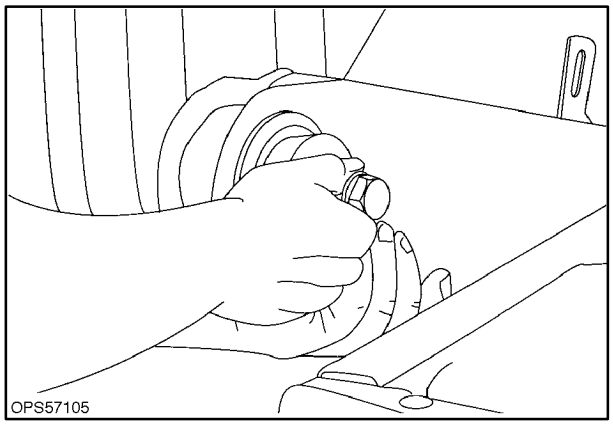

43

Op. 82 100 53

Upper Link Removal

1. The boom must be properly supported at the front and rear of the boom with the boom in the lowered position or the front of the boom above the front upper link pivot. Remove all hydraulic oil pressure from the boom and bucket hydraulic circuits.

NOTE: *Supporting of the boom will keep the boom in position during removal of the upper links.*

CAUTION

Do not remove the pin retaining hardware until the tapered pivot pin is broken loose at the tapered end of pin or the link and pin may fall.

2. Loosen the rear link retaining bolt, 1; do not remove. With a soft-faced sledge hammer, strike the link at 2, to break the tapered pivot pin loose in the main boom.

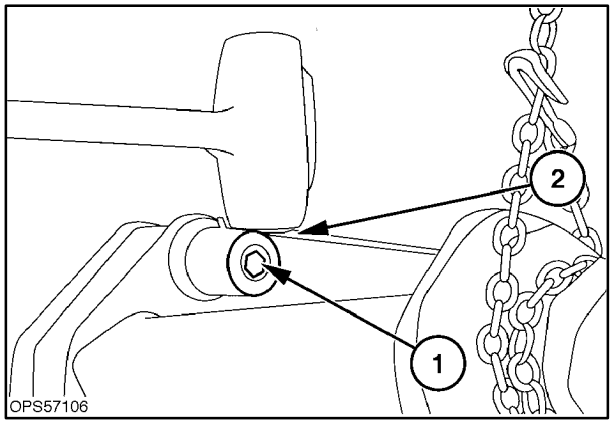

44

https://truckmanualshub.com/

3. Loosen the front link pivot hardware, 1, and with a soft-faced sledge hammer, strike the link at 1, to loosen the tapered pin in the ROPS post.
4. Remove the front and rear pivot pin retaining bolts and tapered pins and lift the link from the loader.

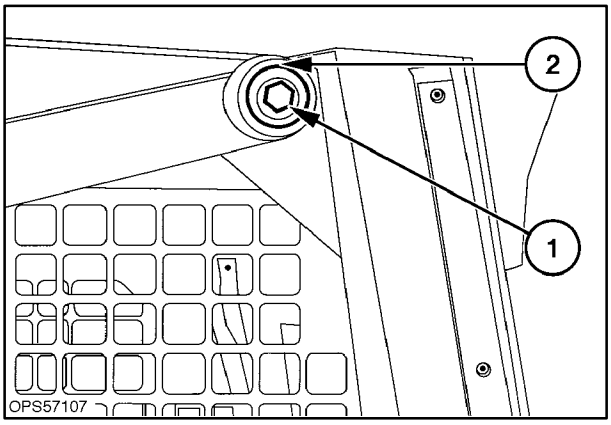

45

Op. 82 100 50

Main Boom Removal

1. Remove the plastic plugs, 1, from the cab inner shell to access the boom lower link and cylinder pivot hardware.
2. Remove the fenders to gain access to the boom and bucket hydraulic tube and hose connections.

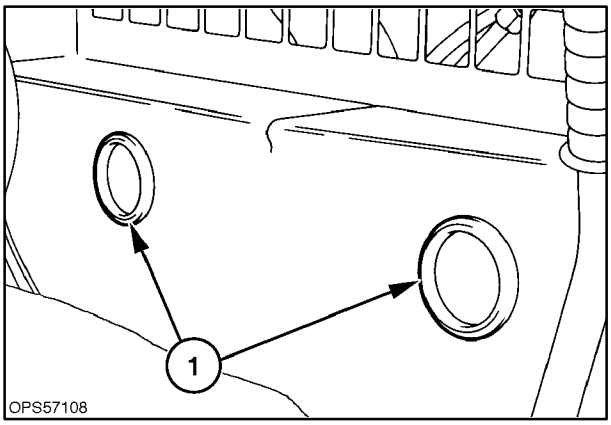

46

3. With the boom properly supported and all hydraulic oil pressure removed from the boom and bucket circuits, disconnect the hydraulic lines at 1. Cap open ends of lines and hoses. Remove the boom hose clamps, 2, retaining the hoses to the lower boom links. Remove the hoses from the lower hose retainer, 3.

CAUTION

Always use a suitable lifting device and chains or straps to support and remove the boom.

Do not disconnect any hydraulic lines until all hydraulic pressure is removed from the boom and bucket hydraulic circuits.

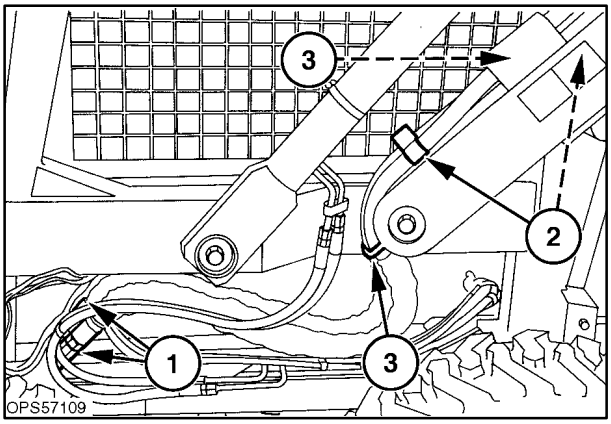

47

https://truckmanualshub.com/

4. Remove the hoses from the rear hose support, 1, remove the tube clamps, 2, and disconnect the tubes at the Z-bracket and quick couplers, 3.

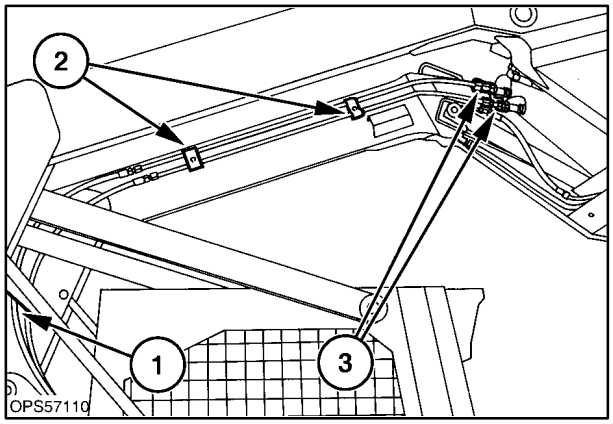

48

5. Remove the right and left upper boom cylinder pivot pin retaining hardware, 1, and pin, 2, from cylinders and boom.

NOTE: *If only the main boom is being removed, the cylinders can remain attached at the bottom pivot.*

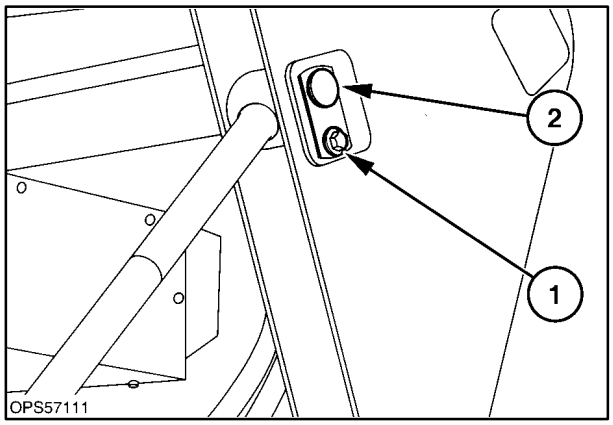

49

6. Loosen the right and left lower link rear pivot pin retaining hardware, 1.

CAUTION

Do not remove the pin retaining hardware until the tapered pivot pin is broken loose at the tapered end of pin or the link and pin may fall.

7. With a soft-faced sledge hammer, strike the lower link as shown to brake the tapered pivot pin loose in the main boom link.

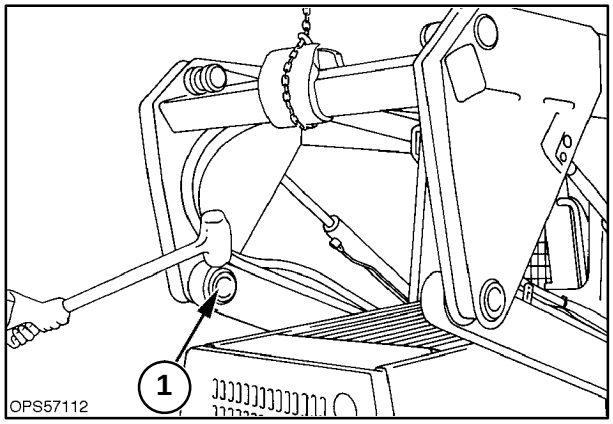

50

https://truckmanualshub.com/

8. Remove the pin retaining hardware and pin from the link and main boom. Lower the link and rest it on the loader frame.

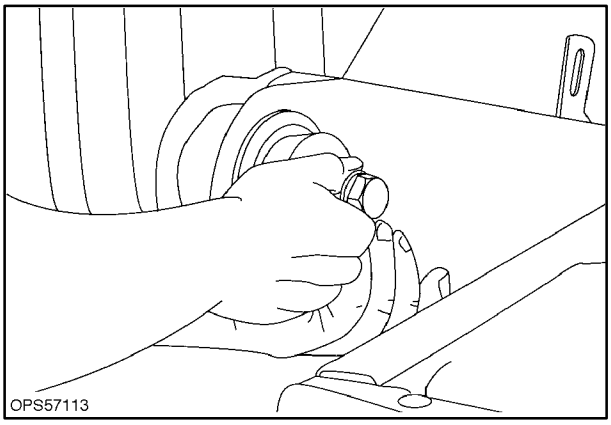

51

9. Loosen the right and left upper link rear retaining bolts, 1; do not remove. With a soft-faced sledge hammer, strike the link at 2, to break the tapered pivot pin loose in the main boom.
10. Remove the hardware and pins from the ROPS and link, resting the link on the lower link.
11. Lift the boom assembly from the loader.

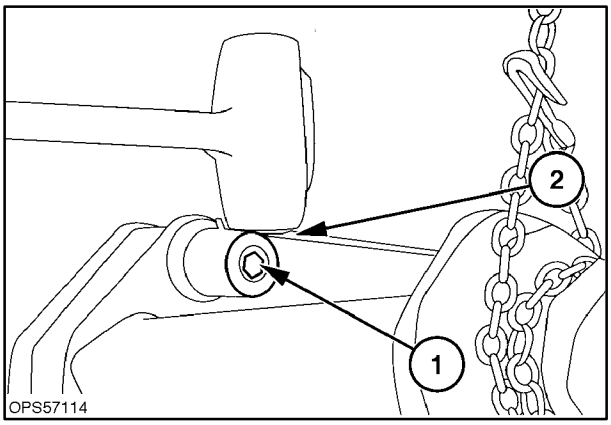

52

https://truckmanualshub.com/

Op. 82 100 70

FRONT BOOM MOUNTING PLATE PIVOT HUB REPLACEMENT

1. Remove any attachment, bucket, etc., from the boom mounting plate.
2. Pivot the mounting plate out flat and remove all hydraulic pressure from the bucket circuit.
3. Remove the cylinder rod pivot pin retaining hardware and pin from the mounting plate and cylinder.
4. Remove the mounting plate from the main boom.
   a. Loosen the mounting plate pivot hardware. DO NOT remove the hardware.
   b. With a sledge hammer (8 lbs.) or larger, strike the mounting plate at 1, to loosen the tapered pivot pin.
   c. Remove the retaining hardware, pins, and mounting plate from the boom.
5. Raise the boom and support the boom 609.6 mm (24″) off the ground on jack stands or suitable blocking at 1.
6. Remove the negative (-) battery cable.

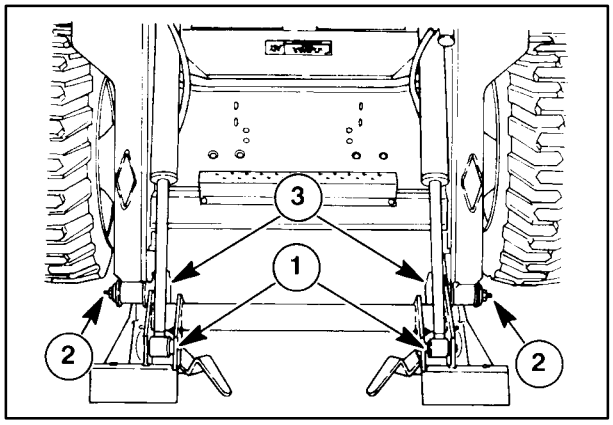

53

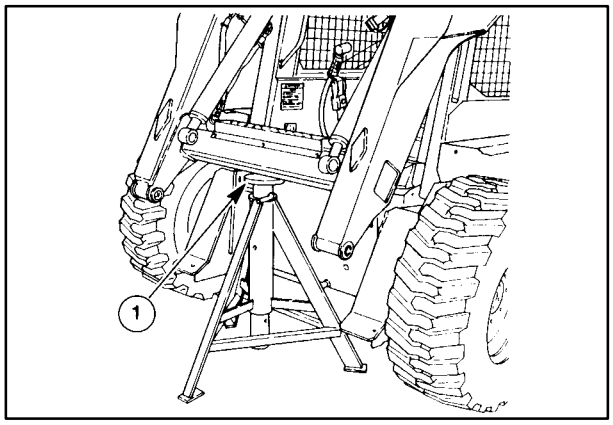

54

7. Using a cutting torch, cut the weld around the hub to separate the hub from the main boom. DO NOT cut any material from the main boom. Grind to remove any remaining weld and hub from the boom.
8. Position the hubs on the boom straight, from side to side, with center spacing, 2, as follows, and tack weld the hubs to the boom.

   Hub Center Spacing - 822 mm (32.36″)
9. Reinstall the mounting plate and tapered pivot pins and hardware. Pivot the mounting plate up and down to ensure there is no binding between the mounting plate and pivot pins. Weld the hubs to the boom.
10. Install the hub reinforcement gussets described earlier in these instructions.
11. Lubricate the pivots and torque and hammer seat the tapered pins and hardware. Refer to “MOUNTING PLATE REPAIR,” in this section.

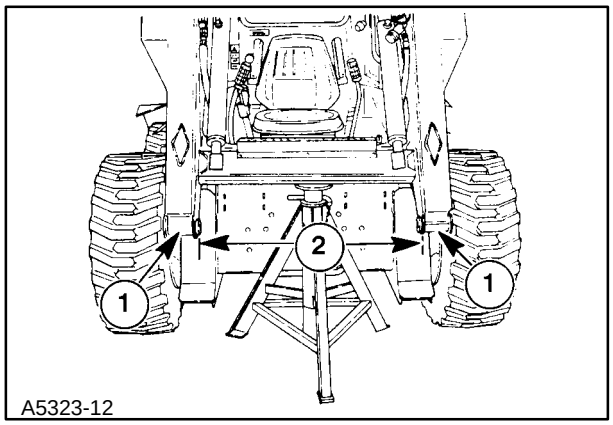

55

https://truckmanualshub.com/

BOOM, UPPER AND LOWER LINK REINSTALLATION

1. If the upper and lower boom links and boom cylinders were removed, attach the upper and lower links to the ROPS before installing the main boom assembly.
2. Install the lower link pivot pins, 1, through the links, 2, and insert the tapered end of the pin into the ROPS frame. Install the pin retaining hardware and tighten, making sure the tapered pin is inserted into the ROPS straight.

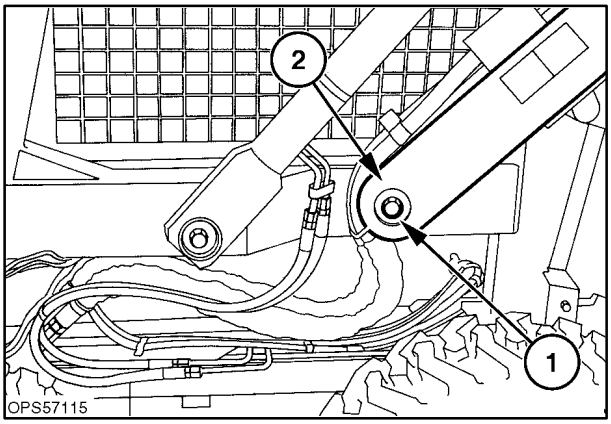

56

3. Install the upper link pivot pins through the links and insert the tapered end of the pin into the ROPS post. Install the pin retaining hardware and tighten, making sure the tapered pin is inserted into the ROPS post straight.
4. Position the main boom assembly over the loader positioning the boom against the boom stops (front of the final drive case).

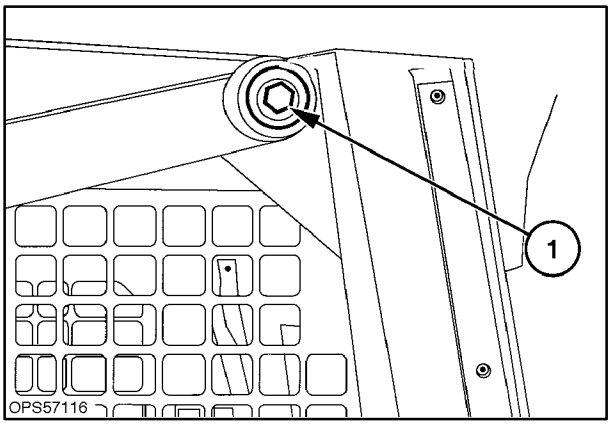

57

5. Attach the upper link rear with tapered pivot pins, 1, and retaining hardware. Tighten the hardware, making sure the pin is straight in the main boom.

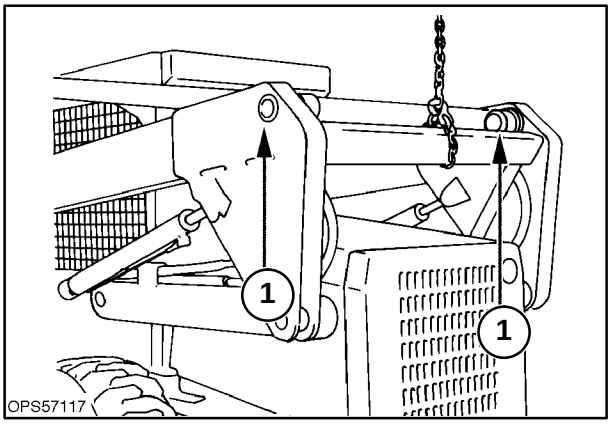

58

https://truckmanualshub.com/

6. Attach the lower link rear with tapered pivot pins and retaining hardware. Tighten the hardware, making sure the pin is straight in the main boom.

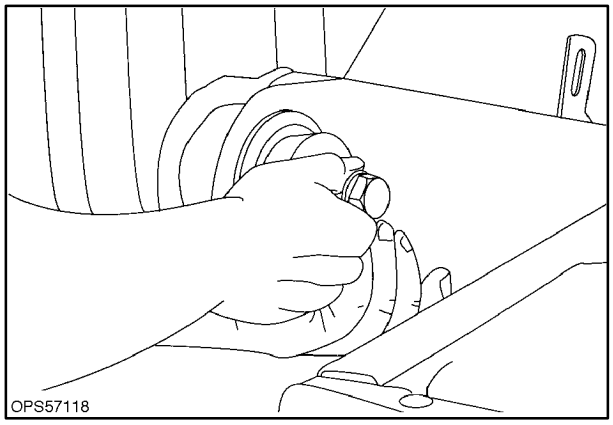

59

7. With the main boom, upper and lower links attached, the pivot pins and hardware must be properly seated.

   Torque the pin retaining hardware to the following torques:

   1 - Lower link - 338 N·m (250 ft. lbs.)

   2 - Upper link - 338 N·m (250 ft. lbs.)

   3 - Cylinder pivot (lower) - 338 N·m (250 ft. lbs.)

   4 - Cylinder pivot (upper) - 38 N·m (28 ft. lbs.)

8. After the pivot pin retaining hardware is torqued the pins must be properly seated. Using a hammer, strike the head of the bolt and pin several times to seat the tapered pin in the taper in the ROPS. Retorque the hardware to specified torque. Repeat this process until the torque is maintained.

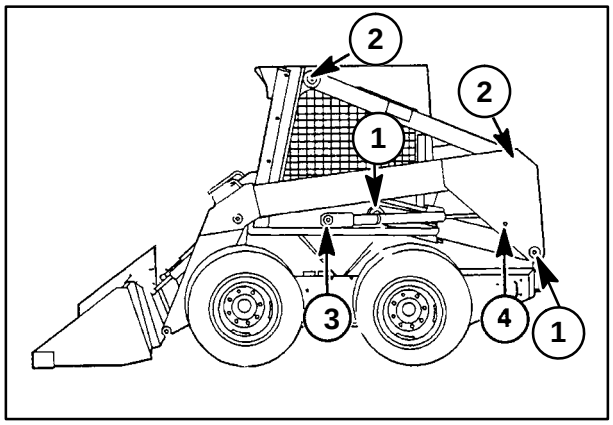

60

9. Reinstall the cylinders to the boom upper pivot.
10. Reinstall the boom hydraulic tubes and hoses if removed. Position the tube at 1, the front of the boom to maintain clearance between boom and tubes. The tubes must be properly positioned or the tubes will contact the corner of the ROPS (cab) when the boom is raised and lowered.
11. Reattach the tubes to the Z-bracket, 2, and install the quick couplers. Install the tube clamps, 3, front shown.

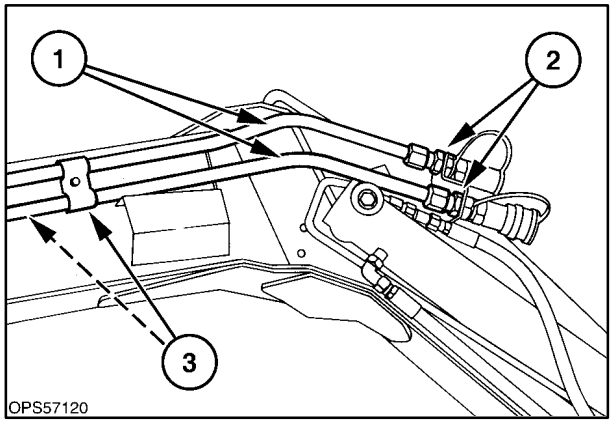

61

https://truckmanualshub.com/

12. Route the tubes and hoses to the rear of the boom through the rear hose supports, 1, and on the top side of the lower link at 2.

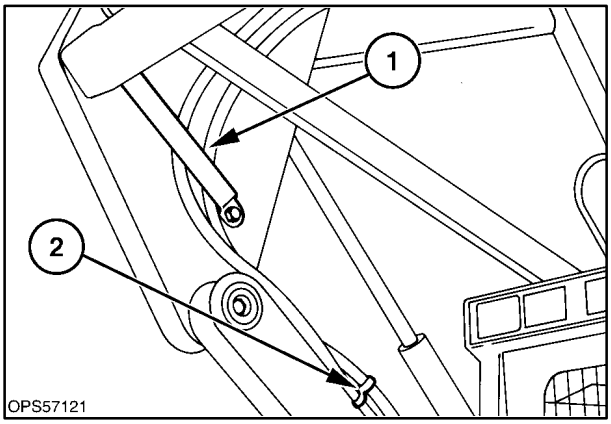

62

13. Position the hoses with one on each side of the lower link retaining clips, 1, and through the hose retainer at 2. Do not tighten clamps at this time; further adjustment will be required later.
14. Insert the hoses through the hose support on the end of link at 3.
15. Reconnect the hoses to the tubes at 4, positioning the hoses and tubes for clearance at the fender when the boom is raised and lowered.

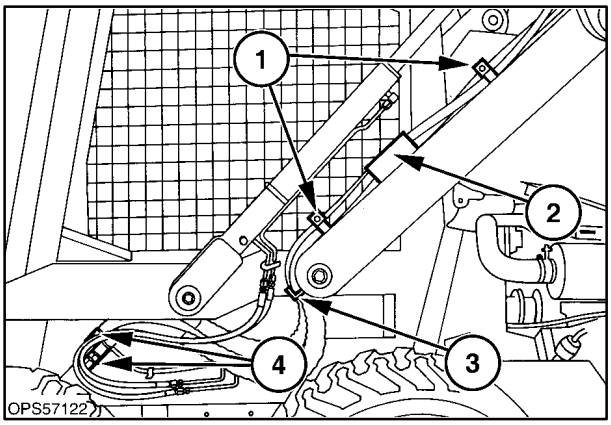

63

16. When all boom links and pivot pins are properly seated and torqued and all hydraulic connections are tightened, operate the boom up and down. Check the clearance between the tube and ROPS (cab) at 1.

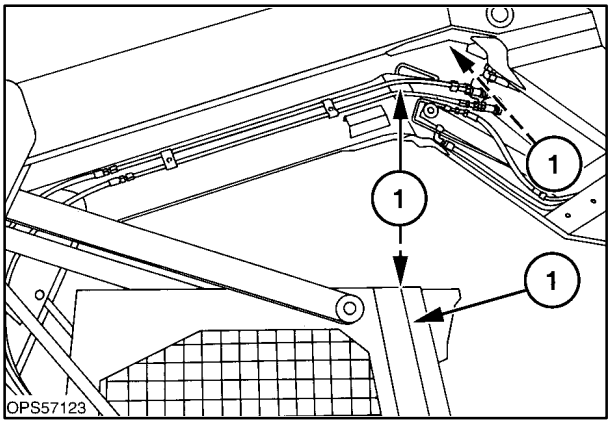

64

https://truckmanualshub.com/

17. Check the hoses, 1, around the rear supports with the boom in the fully raised position. The hoses should be routed as shown. Remove any slack from the hoses to the boom tubes and tighten the hose clamp, 2.

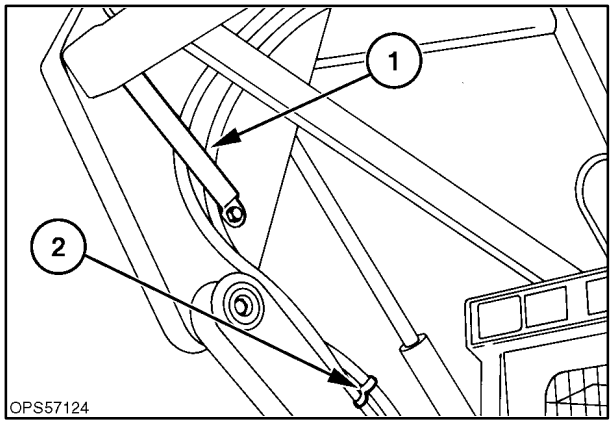

65

18. Remove any slack between the top clamp, 1, and second clamp, 2, and then tighten the second clamp.

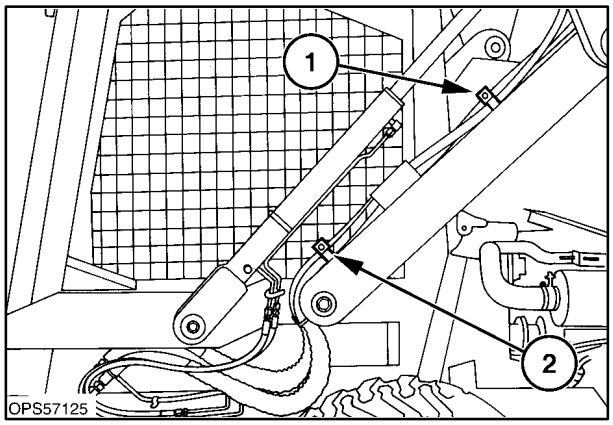

66

19. Install the front step shield, 1, the fenders, and fender hardware, 2. Raise and lower the boom checking the hose/tube clearance to fenders at 3, and readjust if required. Check for any oil leaks and repair if required.

NOTE: *The boom may require several cycles up and down to remove the air from the boom hydraulic circuit.*

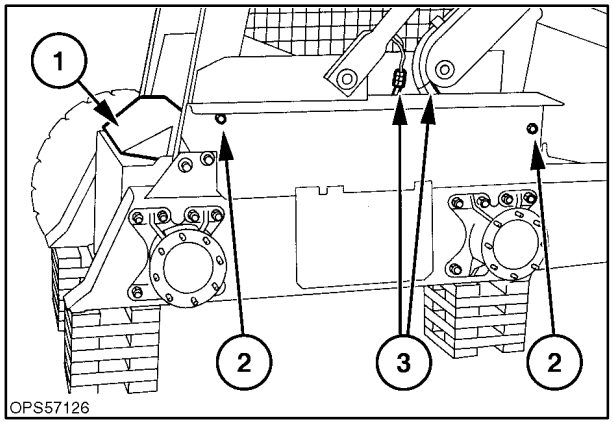

67

https://truckmanualshub.com/

20. Reinstall the boom mounting plate if removed. Torque the pivot bolts, 1, to 108 N·m (80 ft. lbs.). The tapered pivot pins and retaining hardware must be hammer seated by striking the head of the bolt and pin and retorquing the bolt. This step must be repeated until the torque is maintained.
21. Reinstall any shields removed for the repair.

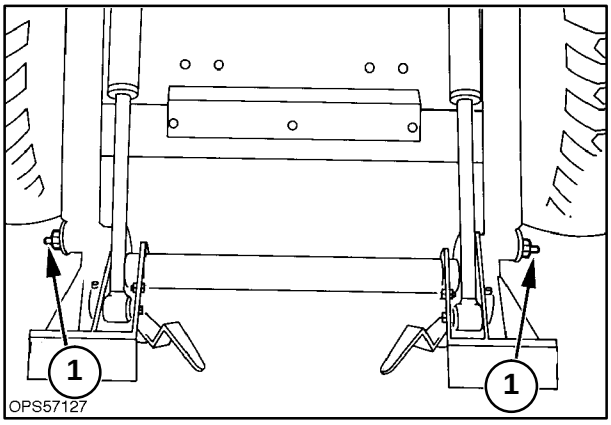

68

ATTACHMENT MOUNTING PLATE

Op. 82 100 70

REMOVAL

1. Remove any attachment from the loader attachment mounting plate.
2. Lower the boom to the fully lowered position.
3. Tilt the attachment mounting plate forward until the face is level with the ground.
4. Remove the cylinder attachment mounting plate pivot pins by removing the pin retaining bolts, 1, and sliding the pins from the mounting plate and cylinders.

CAUTION

Support the mounting plate during removal to prevent dropping the plate when pins are removed.

5. Remove hub caps, 2, from the pivots.
6. Loosen the attachment mounting plate to boom pivot pin hardware, 3. DO NOT remove the bolts at this time.
7. With a soft-faced sledgehammer, strike the mounting plate pivot area, 4. This will free the tapered pivot pin in the boom link.
8. Remove the pivot pin retaining hardware and remove the tapered pins.

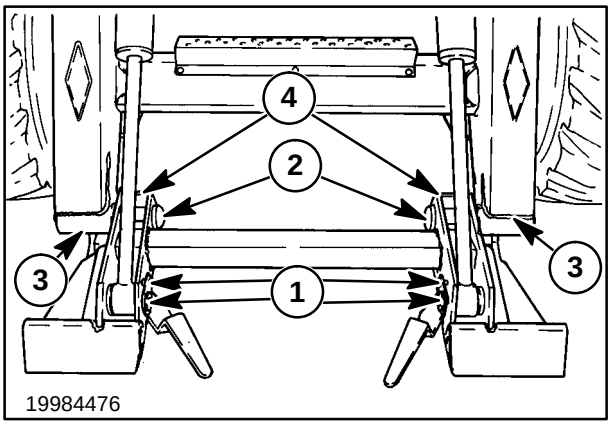

69

https://truckmanualshub.com/

REPAIR/REBUILD MOUNTING PLATE

Op. 82 100 74

LATCH LEVER AND PIN REMOVAL/REPAIR

1. Remove any attachment from the loader attachment mounting plate.
2. Lower the boom to the lowered position.
3. Tilt the attachment mounting plate forward until the face is level with the ground.
4. With an allen wrench, remove the setscrew, 1, from the backside of the mounting plate for both the left and right sides.

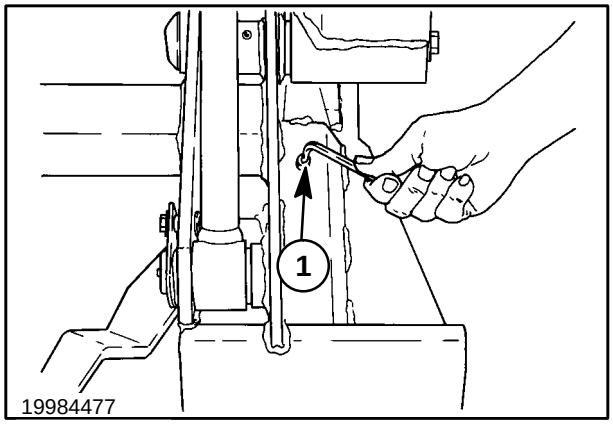

70

5. Move the latch handle, 1, to align the groove pin in the setscrew hole, 2. Drive out the groove pin with a hammer and punch. Repeat this procedure on other side.
6. Remove the latch pin from each side from the bottom of the mounting plate.

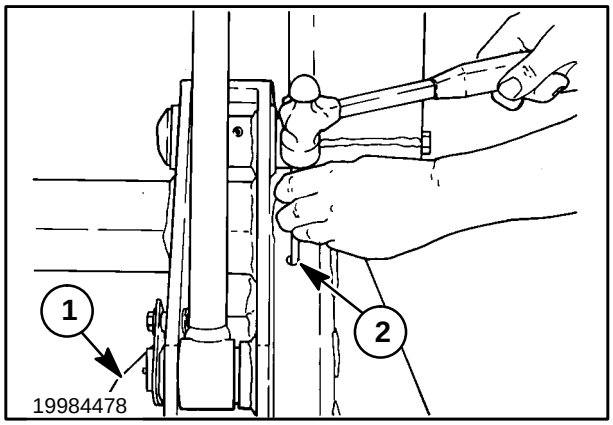

71

7. Remove the cylinder attachment mounting plate pivot pins to allow access to the latch handle pivot pin snap ring clips.

CAUTION

Support the mounting plate during removal of the mounting plate pivot pins to prevent dropping the plate down when pins are removed.

8. Remove the pin retaining bolts, 1, and slide the pins from the mounting plate and cylinders.

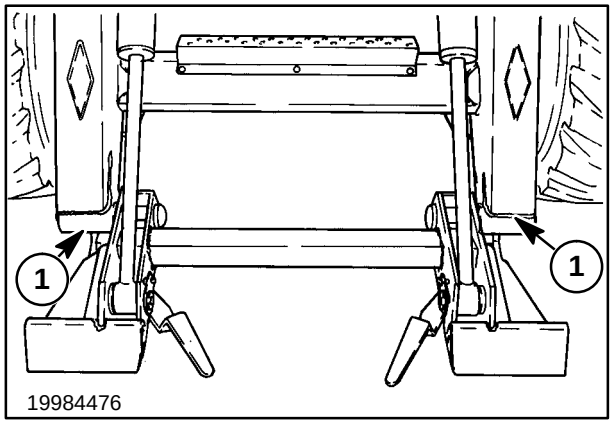

72

https://truckmanualshub.com/

9. Enter the skid-steer loader. Sitting in the operator's seat with the seat belt buckled, start the loader and retract the attachment mounting plate actuating cylinders, 1, fully to clear the attachment mounting plate, 2.

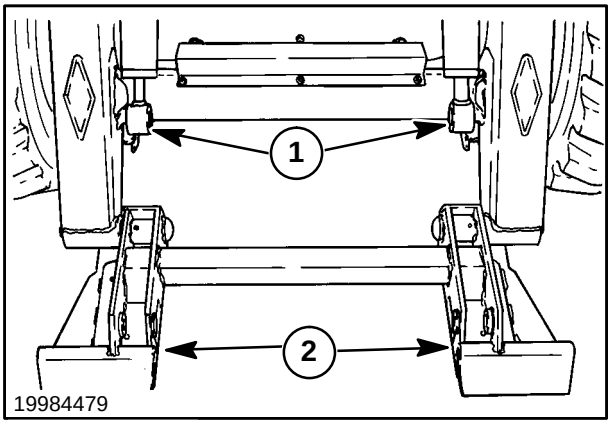

73

10. Remove the retaining ring, 1, from the latch handle pivot pin, 2, from the rear of the mounting plate on the LEFT and RIGHT sides.
11. Using a punch and hammer drive the latch handle retaining pin, 2, downward and out through the front of the attachment mounting plate on both sides. If there is insufficient ground clearance to fully remove the latch handle pivot pins, lift the attachment mounting plate up as necessary to clear the pins.

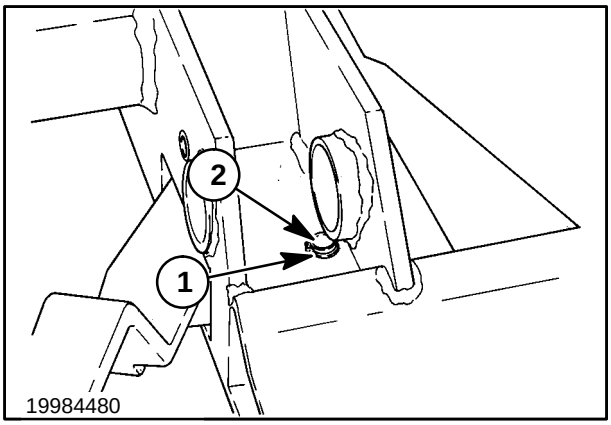

74

12. Remove the handle/spring assembly, 1, from the attachment mounting plate on the LEFT and RIGHT sides of the attachment mounting plate.

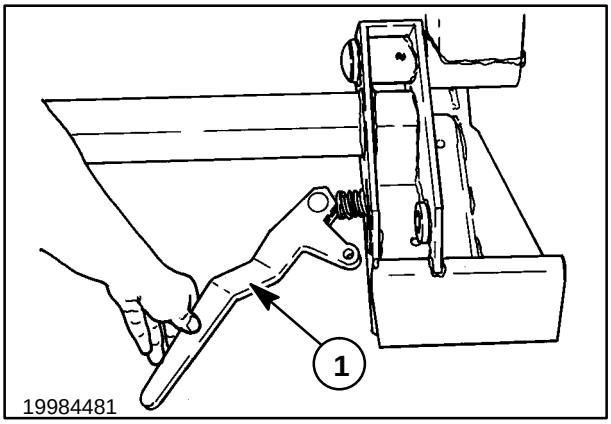

75

https://truckmanualshub.com/

PARTS INSPECTION

Mounting Plate Assembly

1. Inspect the plate, 1, for straightness. If the mounting plate pods are not straight with each other it may be difficult to hook up to attachments. Refer to the “Checking Procedure for Buckets and Attachments” in Section 8 - Optional Equipment for further details. If the mounting plate is not within specifications, replace the assembly.
2. Inspect the latch pin area for excessive wear, which can result in loose attachments. If the pins, 2, do not slide freely, remove the pins, clean and lubricate.
3. Inspect the mounting plate pivot pins, 3, and bushings, 4, for wear, which can result in loose attachment to the mounting plate boom cylinders.
4. Inspect the cylinder pivot pins, 5, for wear. Inspect the pivot pin holes for wear that could cause a sloppy fit. Replace the bushings in the mounting plate or pivot pins, if necessary.

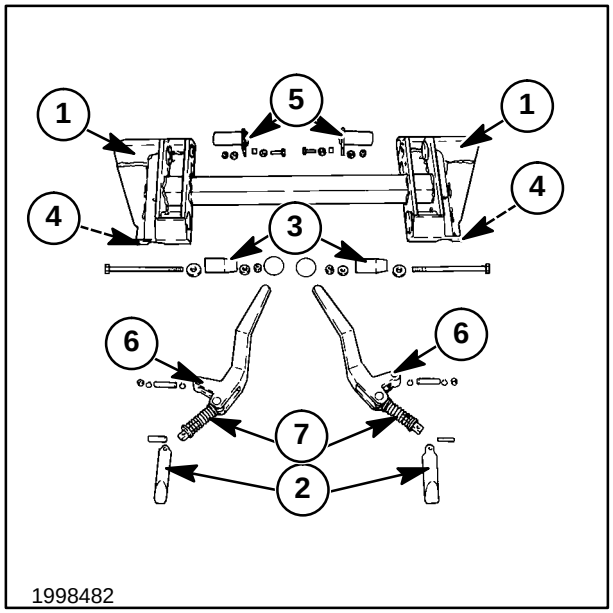

76

Latch Handle/Spring Assemblies

1. Inspect the latch handle pivot holes, 6, for excessive wear and binding in the mounting plate.
2. Check that the spring, 7, is not bent, damaged, or has broken coils. Replace if necessary.

Latch Pins

1. Examine the latch pins, 2, for excessive wear and binding in the mounting plate.
2. Check the tapered area of the pins for wear or chips. Replace if necessary.

Op. 82 100 57

Pivot Bushings Replacement

1. Use a suitable bushing driver and remove the old bushings.
2. Clean the bushing area to remove any dirt, debris and burrs.
3. Using a bushing driver, install the new pivot bushings from each end of hole, 1. Drive bushings flush with the outer edge of the hub.

NOTE: *There will be a space in the center between the two bushings.*

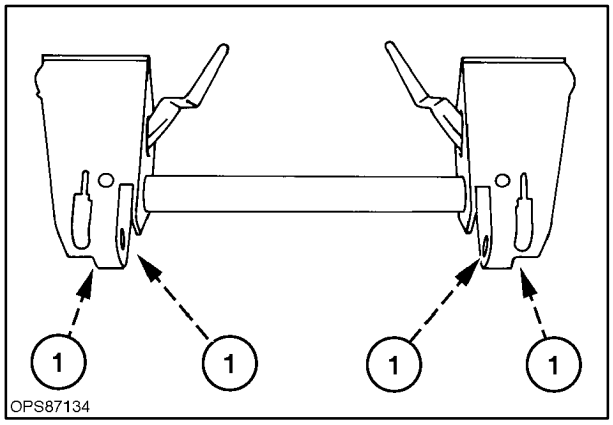

77

https://truckmanualshub.com/

Op. 82 100 74

Latch Lever and Spring Repair/Rebuild

1. Clamp the lower spring guide, 1, in a vise. Turn the step bolt, 2, to remove the lower spring guide from the step bolt and remove spring, 3.

CAUTION

When removing the step bolt, the spring will have some compression pressure. Remove the bolt while applying downward pressure on the bolt.

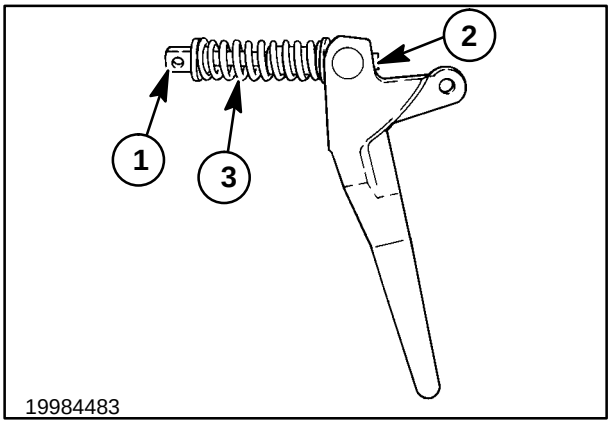

78

2. Remove the upper spring guide, 1, pivot block, 2, and step bolt, 3, from handle, 4.

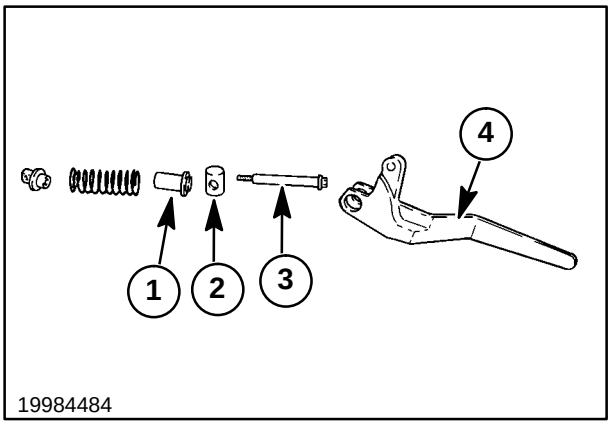

79

Reassembly

1. Insert the pivot block, 1, and step bolt, 4, into the handle, 2. Install the upper spring guide, 3, onto step bolt, 4.
2. Install spring, 5, over the upper spring guide, 3. Install the lower spring guide, 6, onto step bolt, 4, and tighten.

NOTE: *Apply slight pressure to the lower spring guide to compress the spring slightly and start threading the lower guide onto the step bolt.*

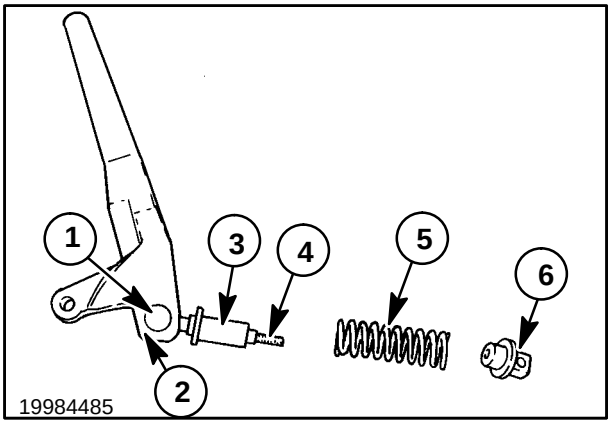

80

https://truckmanualshub.com/

3. Slide the latch handle/spring assembly, 1, into the mounting plate, pointing the spring down.

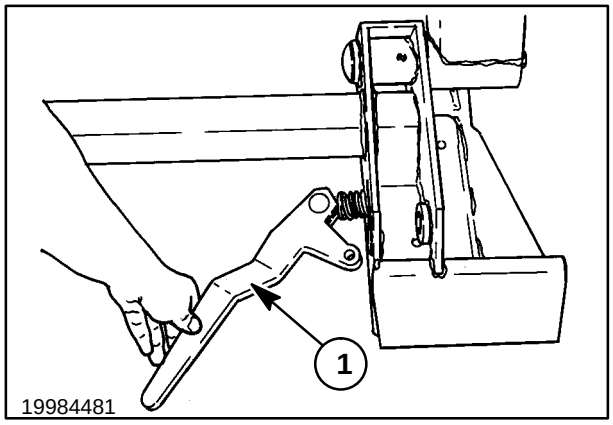

81

4. Install the handle pivot pin, 1, from the front of the plate and install the snap ring retaining clip, 2. The pivot pins will have a snap ring on both ends of the pins.

NOTE: *The handle pivot pin should have one snap ring retaining clip already installed prior to reinstallation in the attachment plate. If the snap ring retaining clip is not present, install the clip prior to pin installation.*

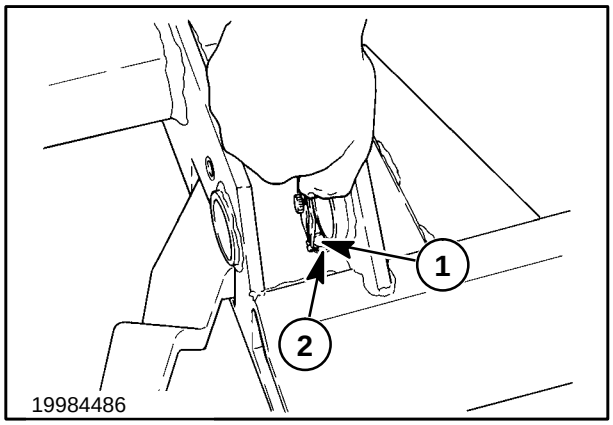

82

5. Move the latch handle, 1, to align hole with the groove and insert the latch pin with the tapered side towards the loader boom, away from the attachment.
6. With a hammer and punch, drive the grooved pin, 2, through the lower spring guide and latch pin.

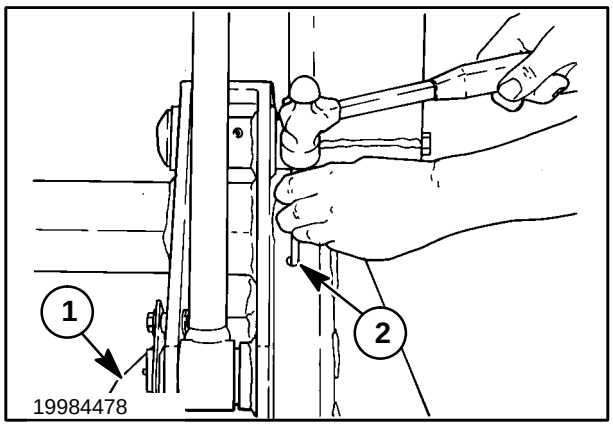

83

https://truckmanualshub.com/

7. Reinstall the setscrew, 1.

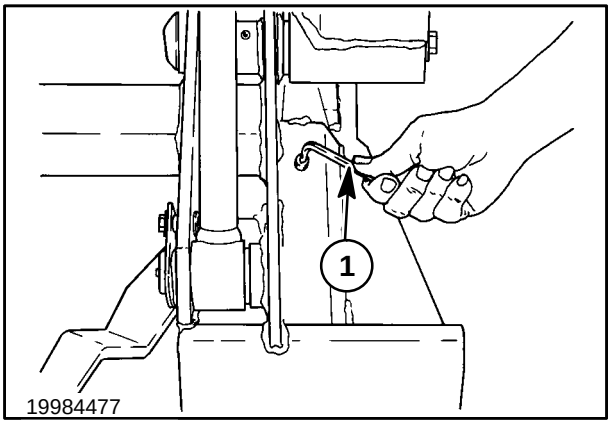

84

8. Reinstall the boom mounting plate, if removed, by installing the pivot taper pins and retaining hardware, 2.
9. Torque the pivot bolts, 2, to 108 N·m (80 ft. lbs.).

NOTE: *The tapered pivot pins and retaining hardware must be hammer seated by striking the head of the bolt and pin, and then re-tightening. This step must be repeated until the torque remains constant.*

10. Reinstall hub caps, 3, into the plate pivots.
11. Extend the attachment mounting plate cylinders until they align with their mounting holes on the attachment mounting plate.
12. Install the cylinder attachment mounting plate pins through the mounting plate and into the cylinder rod ends. Install the pin retaining hardware, 1, and tighten.
13. Grease the two boom mounting plate pivot pins and the two cylinder mounting plate pivot pins prior to moving the attachment mounting plate to prevent any damage to the pivot points.

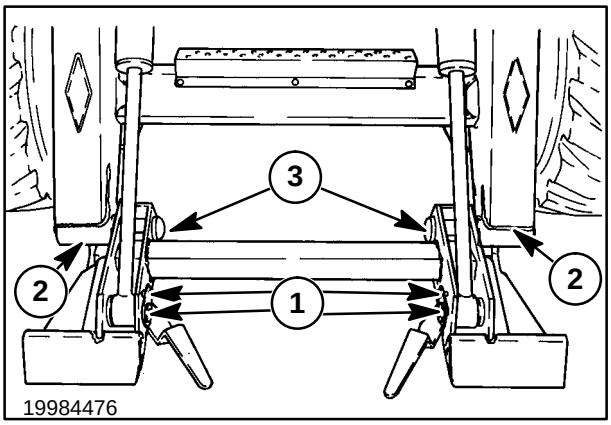

85

https://truckmanualshub.com/

Attachment Plate Over-Center Latch Pins Wear/ Bend

The loader attachment may become loose at the mounting plate. Inspection of the over-center latch pins part #9822358, shows the pin ends worn and bent, 1.

The over-center pins are NOT heat-treated. Thus, if an attachment does not fit correctly and hammers against the pins, the pins will wear and bend. New pins and ones used with properly fitted attachments should be straight, as shown at 2.

If worn pins are encountered, the pins must be replaced. Additionally, an inspection of all the customer's attachments must be made to determine the improperly fitted attachment which is causing the pin problem. Usually, an old attachment used on a previous loader can be worn and can be the problem.

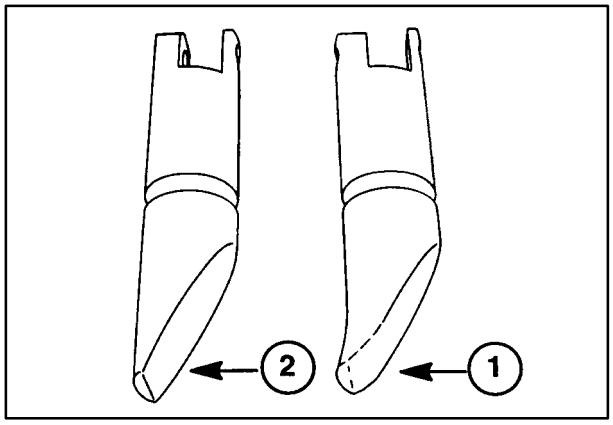

86

CHECKING PROCEDURE FOR BUCKETS AND ATTACHMENTS

The bucket/attachment does not fit or appears to come loose on the boom faceplate.

The loader boom faceplate is worn or out of height dimensions and/or the bucket latch points are worn or out of dimensions.

Inspection

The LS160 and LS170 loader latching system requires that the faceplate wedge into the attachment. The faceplate must contact the attachment at 1, 2, and 3, and must have clearance between the attachment and faceplate at 4, when the attachment is latched properly.

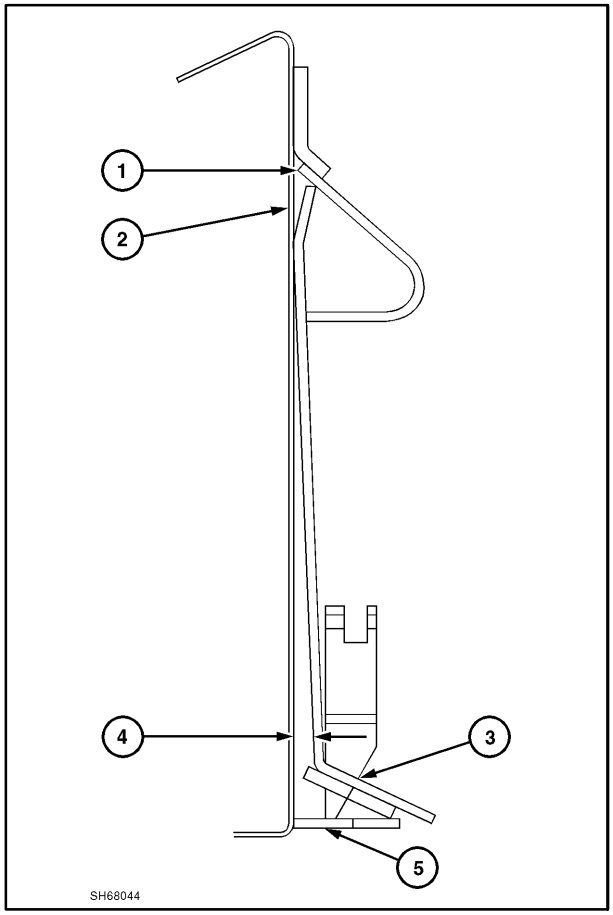

87

https://truckmanualshub.com/

The following are some quick visual checks of the loader faceplate and attachment.

1. The attachment must have a 850.1 mm ± 0.8 mm (33-15/32″ ± 1/32″) center to center latch point, 1, to be compatible with the latch system.
2. Check the latch pins and levers for proper operation and lubrication. If the latch pins do not move freely, the system will not function properly.

   a. Control levers pivot over center into the lowered latched position.

   b. Latch pins fully extend from the faceplate.

   c. Control levers pivot over center into the raised unlatched position and hold in this position.

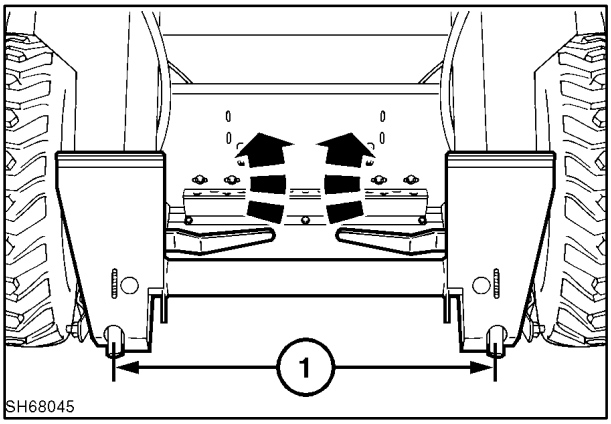

88

Loader faceplate, 5, and attachment, 6, engagement.

3. Check the saddle area of the attachment at 1, for interference, weld, debris, etc. to prevent the attaching plate and attachment from seating properly.
4. The loader latch pin should engage the lower latch plates as shown at 2.
5. Check for clearance between the faceplate and attachment at 3, minimum 0.8 mm (1/32″) and maximum 9.5 mm (3/8″), with the latch pins fully engaged.

   a. If there is no clearance at 3, the loader faceplate is too short or the distance between the top saddle area and lower latch plates is too great, 2, Figure 91.

   b. If the clearance is too great or the latch pins will not engage into the latch plates on the attachment, the loader faceplate is too long or the distance between the top saddle area and lower latch plates is too short, 2, Figure 91, or the latch plates are located incorrectly, 1, Figure 91.

6. When the latch pins are fully engaged, New Holland buckets only, the end of the pin should not extend beyond the lower plate at 4.

   a. If the latch handles do not fully engage, the dimension from the back of the attachment to the rear of the slot in the latch plates is too short at 1, Figure 91.

   b. If the latch pins extend below the lower plate at 4, the dimension from the back of the attachment to the rear of the slot in the latch plate is too long at 1, Figure 91.

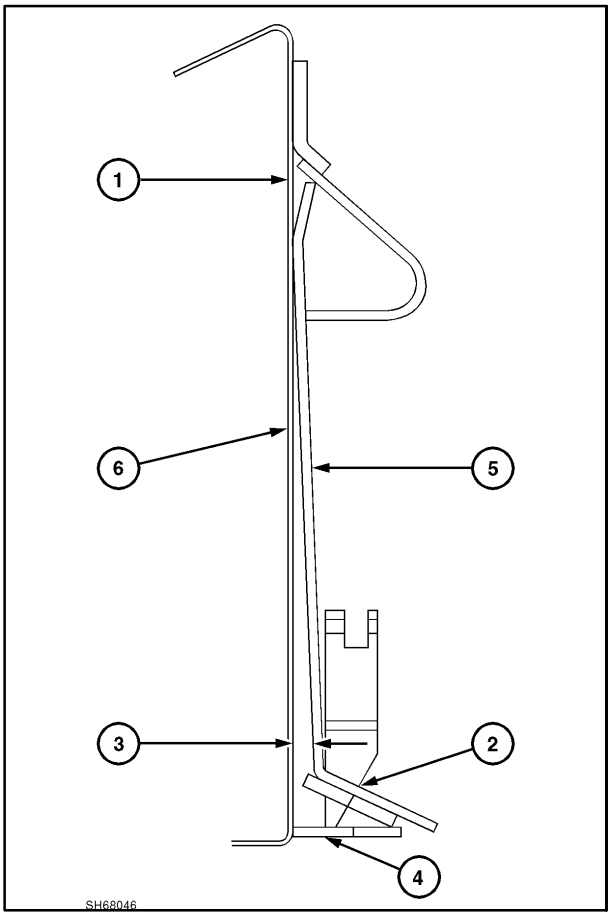

89

https://truckmanualshub.com/

CHECKING PROCEDURE

The following are the procedures used to measure the skid-steer loader faceplate and how to measure the attachment.

Checking the Attachment

1. Check the placement of the lower latch plates at 1. Measure from the back surface of the attachment to the rear of the latch plate slot at 1: 235.8 mm ± 0.8 mm (1-9/32″ ± 1/32″).

   a. If this dimension is too short, the slot can be widened by grinding out the slot 1/16″ maximum or replace the latch plates.

   If grinding is required, the rear of the slot must be ground square with the top surface of the plate to ensure proper pin engagement, 2, Figure 89.

   b. If the dimension is too long, replace the latch plates.

2. Check the height of the attachment at 2. Insert a 1/2″ x 2″ with 1/2″ standard nut as shown at 3. Measure from the top of the bolt, 4, to the rear of the latch plate slot at 5: 403.2 mm ± 0.8 mm (15-7/8″ ± 1/32″).

   If this dimension is incorrect, the lower latch plates will require replacement.

NOTE: *If new latch plates are required, order four plates #86506587 (102 mm [4″] slot) through Parts and follow the latch plate installation procedure.*

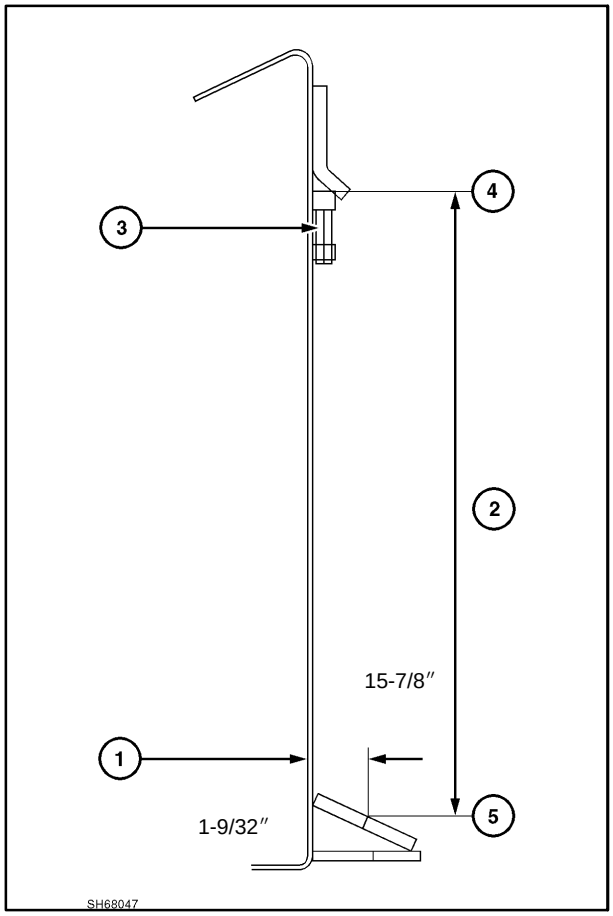

90

https://truckmanualshub.com/

CHECKING THE LOADER FACEPLATE

1. Check the height of the loader faceplate from the top of the plate at 1, to the bottom of the plate at 2: 396.9 mm ± 0.8 mm (15-5/8″ ± 1/32″). To check the faceplate, place a 24″ square over the top of the plate as shown at 4, and a straightedge at 5.

   If the faceplate is not within specifications, the plate will require replacement.

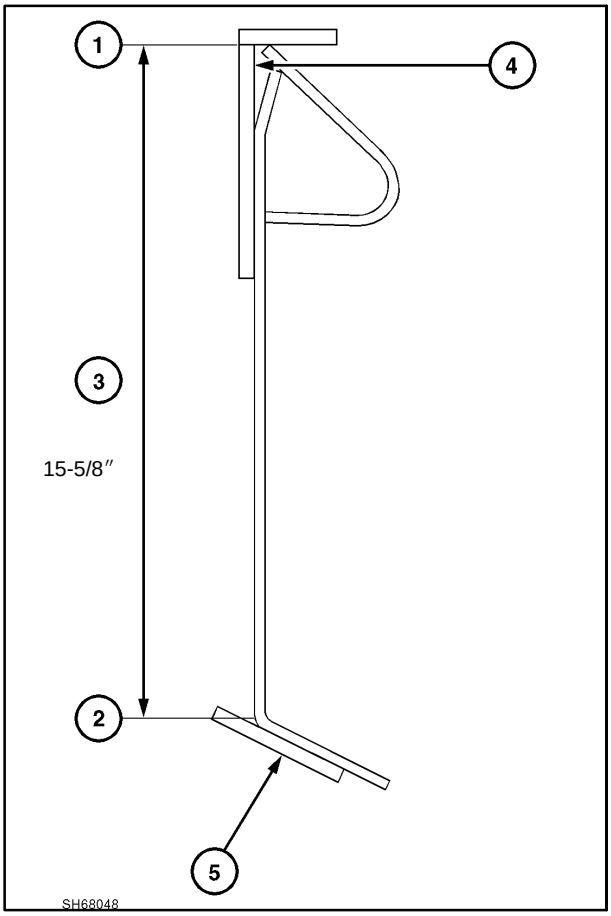

91

2. Check the faceplate pods to ensure they are straight with each other and not twisted. Place a straightedge across both pods as shown at 1, across the front flat surface and at 2, the top of the pods.

   If the pods are not straight, the faceplate will require straightening or replacement.

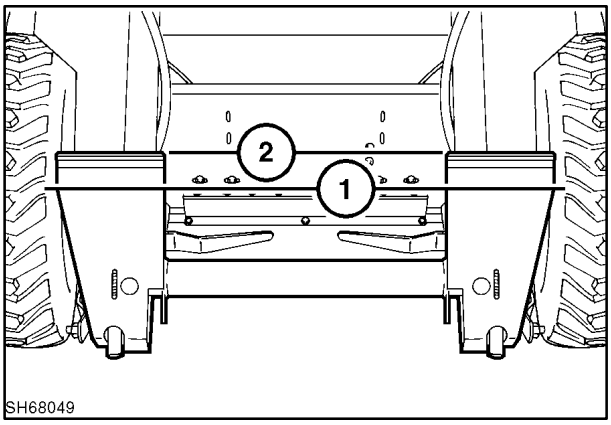

92

https://truckmanualshub.com/

3. Check the center dimension between the faceplate pods and the overall outside dimension.

   Inside Dimension 1: 647.7 mm (25-1/2″)

   Outside Dimension 2: 1122.4 mm (44-3/16″)

   Latch Pin Dimension 3: 850.1 mm ± 0.8 mm (33-15/32″ ± 1/32″) center

CAUTION

Do not cut or grind the loader faceplate to adapt any buckets or other attachments.

Do not cut or grind the loader faceplate latch pins.

When **attaching unapproved attachments**, the latch points on the attachment must meet the correct dimensions and be strong enough to maintain the correct dimensions during operation.

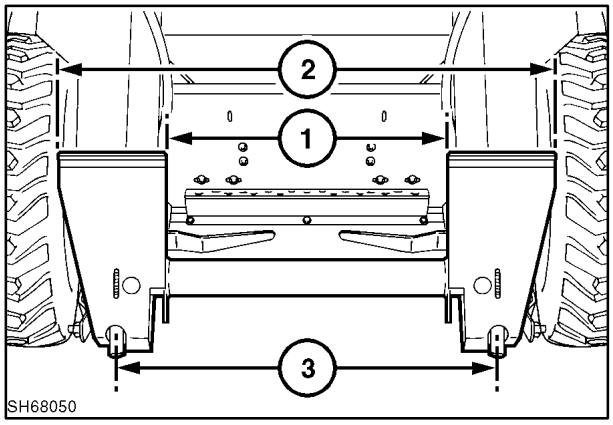

93

https://truckmanualshub.com/

LABOR GUIDE

The following labor amounts are listed as a guide only. Working conditions and experience will vary the time it actually takes to complete each job.

Job Description	Hours
Remove and replace boom lock pins and linkage	2.5 hrs.
Remove and replace main boom	4.5 hrs.
Removal and replace one upper link	1.0 hrs.
Removal and replace one lower link	2.0 hrs.
Remove and replace attachment mounting plate	1.0 hrs.
Rebuild attachment mounting plate	1.5 hrs.

https://truckmanualshub.com/

https://truckmanualshub.com/

SECTION 88 – ACCESSORIES

Chapter 1 – Dealer Installed Options

CONTENTS

Section	Description	Page
88 100	General Information	88-2
	Adapting Attachments Requiring 12V Electrical Power	88-2
	Hydraulic System Compatibility	88-5
90 000	Arm Pads For Cab Side Panels	88-7
90 000	Armrests for Deluxe Seat	88-7
90 000	Forearm Rests	88-8
55 000	Back-up Alarm	88-9
10 300	Block Heater (Engine)	88-10
55 000	Electric Power Supply (12 Volt, 15 Amp)	88-11
10 254	Exhaust (Engine)	88-12
10 254	Aspirator Precleaner Muffler	88-12
35 000	High Flow Hydraulics	88-14
	High Flow Hydraulics Troubleshooting	88-16
	High Flow Hydraulics Component Replacement	88-18
55 000	Horn	88-25
90 000	Shoulder Belt (Seat)	88-26
88 000	Slow-moving Vehicle (SMV) Sign Kit	88-27
55 000	Warning Light (Rotary Beacon)	88-28
55 000	Warning Lights (Four-way Flashers/Turn Signal/Horn)	88-31
	Labor Guide	88-35

https://truckmanualshub.com/

Op. 88 100

GENERAL INFORMATION

ADAPTING ATTACHMENTS REQUIRING 12V ELECTRICAL POWER

There are important rules that must be followed when adapting attachments that require 12 volt electrical power. Proper wiring of electrical devices and power and ground connections is very important to prevent other electrical component damage. Attaching electrical connections to locations other than recommended may allow electric current to feed back through the EIC board, creating false EIC board readings and warnings, or causing EIC board damage or failure.

1. ALWAYS FOLLOW the instructions for New Holland kit installation to ensure proper function and operation.
2. NEVER CONNECT an electrical device to any wires, fuses, switches or grounds inside the cab area. This includes any terminals of the ignition switch, fuse panel, or ground terminal.
3. NEVER INSTALL an electrical device, music radio, two-way radio, or unapproved New Holland attachment into the cab area.
4. ONLY USE the 12-volt accessory power outlet for attachments requiring less than 10 amps. The accessory outlet is connected to the engine fuse/relay panel and protected with a 15 amp fuse.

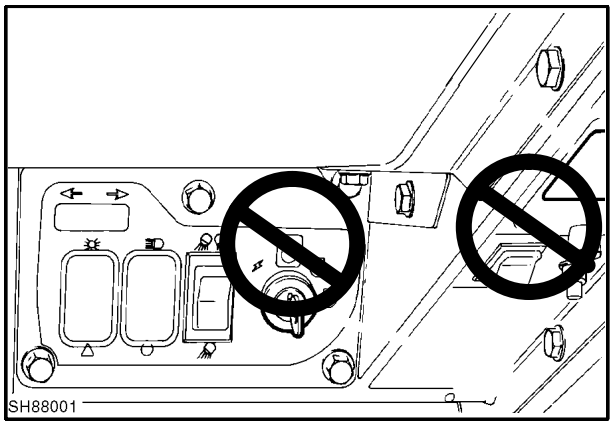

1

5. ALWAYS CONNECT new electrical attachments to the engine fuse/relay panel, 1, and connect the grounds to the engine bell housing. USE ONLY vacant connections and fuses not in use for specified attachments.

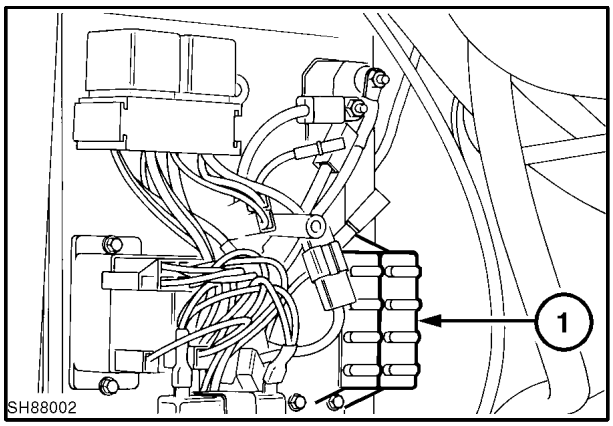

2

https://truckmanualshub.com/

Wire connections available if electrical attachments were not previously installed.

Engine Fuse Panel

Ref.	Color	Destination	Fuse	Battery Voltage	Status
1	R/B	To turn signal relay	10-amp	All times	Available
2	R/GY	To accessory relay	25-amp	All times	Available
3	R/LTGN	To EIC board pin #14 P2 connector	5-amp	All times	Occupied
4	LTGN/R	To seat switch(es)	5-amp	All times	Occupied
5	R/W	To key switch (battery terminal)	15-amp	All times	Occupied
6	R	From preheat circuit breaker	50/40-amp	All times	Occupied
7	R	From start relay		All times	Occupied
8	R/O	To heater power relay	20-amp	All times	Available
9	R/T	Spare	7.5-amp	All times	Available
10	DKGN/R	To high flow, horn, power outlet	15-amp	Key “ON” position	Available
11	O/LTGN	From accessory relay		Key “ON” position	Occupied
12	O/W	To Back-up alarm switch	5-amp	Key “ON” position	Available
13	O/LTGN	From road/work light fuse (cab panel)		Key “ON” position	Occupied

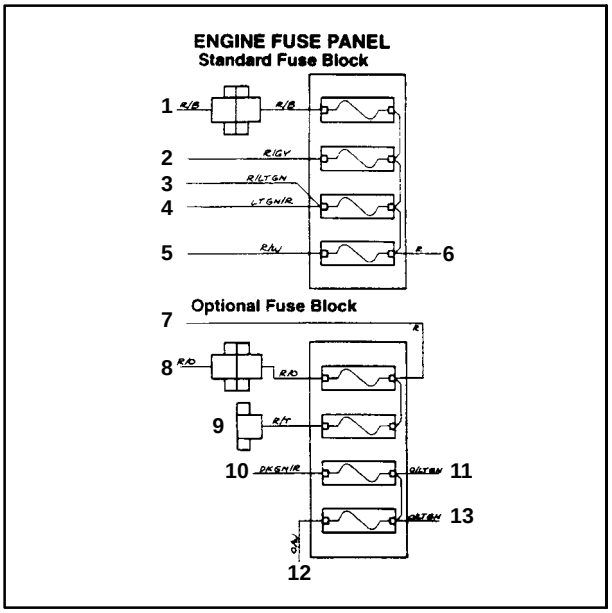

3

https://truckmanualshub.com/

A completely new auxiliary wiring circuit can be installed as shown in Figures 4 and 5, depending on electrical requirements. Mounting holes for the added circuit breakers must be drilled in the panel. Disconnect the battery before drilling and installing new wiring. Protect the panel's electrical components from drilling shavings that could cause electrical shorting of components. Figure 4 shows circuits for intermittent high current loads up to 15 amps.

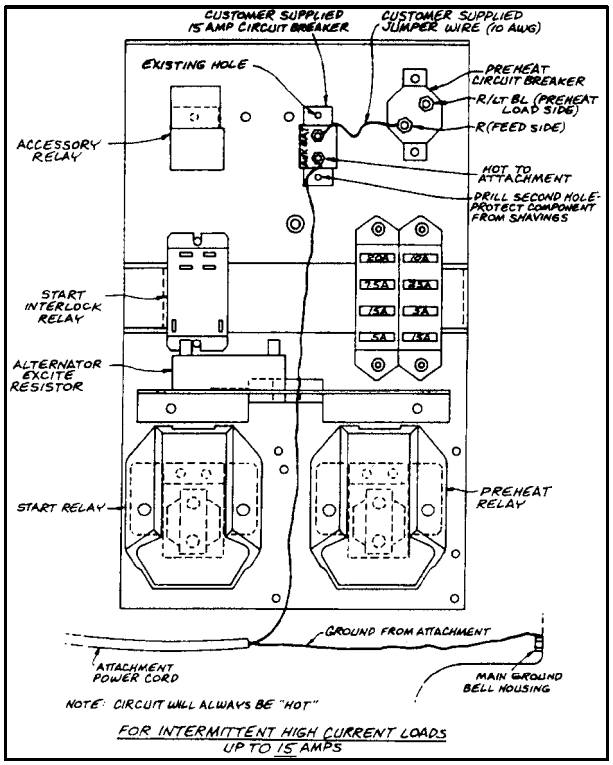

4

The Figure 5 shows the circuit for intermittent high current loads up to 30 amps.

New Holland sealed circuit breakers that can be purchased from parts.

Part Number	Capacity
9827329	15 amp
9828493	20 amp
9840279	25 amp
9840280	30 amp

NOTE: *When attaching ground wires, always place the heaviest ground wire next to the ground surface and then stack the remaining ground wires according to size on top of the heaviest wire.*

IMPORTANT*: Additional electrical attachments must have circuits properly connected to prevent damage to the Advanced Warning System (EIC board) and other electrical components.*

CAUTION

Always disconnect the battery before installing any electrical attachment to prevent accidental shorting of system.

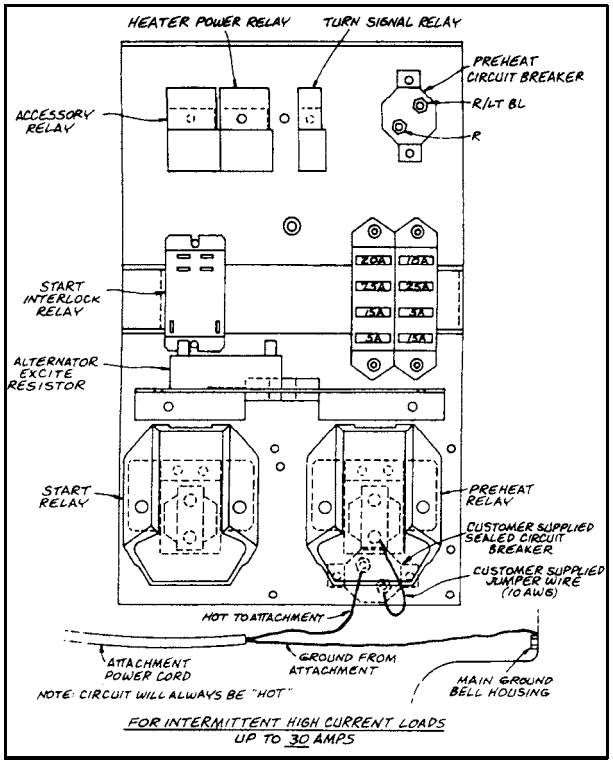

5

https://truckmanualshub.com/

HYDRAULIC SYSTEM COMPATIBILITY

There are six questions that must be answered before adapting attachments that require hydraulic oil power.

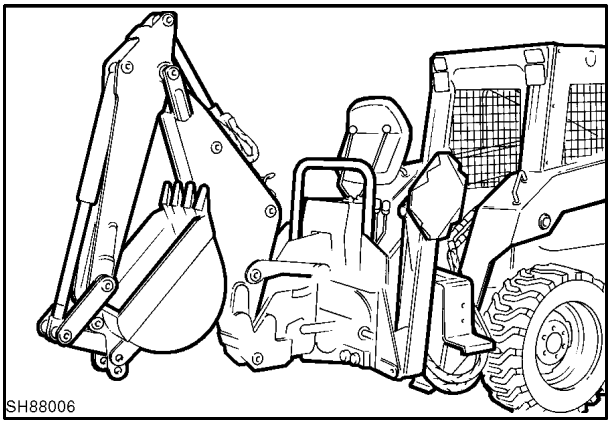

6

1. **What is the hydraulic pressure requirement, minimum and maximum? Are they higher than the maximum pressure of the model?**

Model	Maximum Pressure
LS160	170 - 176 bar (2500 - 2600 PSI)
LS170	170 - 176 bar (2500 - 2600 PSI)

2. **What is the hydraulic oil flow requirement? Is it more than the highest total flow rate of the skid-steer loader model?**

Model	Standard Hydraulics	High Flow Hydraulics
LS160	58.7 l/min. (15.5 GPM) @2900 RPM @68 bar (1000 PSI)	90.8 l/min. (24.0 GPM) @2900 RPM @156 bar (2300 PSI)
LS170	67.0 l/min. (17.7 GPM) @2900 RPM @68 bar (1000 PSI)	99.2 l/min. (26.6 GPM) @2900 RPM @156 bar (2300 PSI)

NOTE: *When using the High-Flow system, 3/4″ quick couplers must be used or high system backpressure may result.*

3. **Will the attachment accept oil flow in both directions?**

   If “YES”, nothing is required.

   If “NO”, install a check valve or cross into the attachment return line to prevent reverse oil flow to the attachment.

   Examples: Backhoes and trees spades with a separate control valve do not accept oil flow in both directions.

4. **Must the attachment “Free Wheel” to a STOP?**

   If “YES”, a crossover relief connection must be installed on the attachment side to allow the attachment to free wheel to a stop after the skid-steer loader hydraulics is turned off.

   If “NO”, nothing is required.

   Example: Snow blowers must free wheel to a stop.

5. **Will the attachment accept hydraulic system backpressure?**

   If “YES”, nothing is required.

   If “NO”, the attachment will not function properly on a New Holland skid-steer loader. Normal backpressure for New Holland skid-steer loaders is between 14 - 17 bar (200 - 250 PSI).

   Examples: Post drivers, some breakers, and some hand held hydraulic tools do not accept system backpressure.

NOTE: *LS160 and LS170 model loaders must have a minimum of 22.7 l/min. (6 GPM) returning through the main hydraulic system at all times to charge the hydrostatic system.*

If all the skid-steer loader oil flow is not required to operate an attachment (e.g., shaver post driver), a flow divider can be installed into the hydraulic oil circuit on the attachment. The flow divider sends the required oil flow to the attachment and the remainder back to the normal skid-steer loader hydraulic circuits.

https://truckmanualshub.com/

6. Does the attachment have a separate case drain oil line?

If “NO”, nothing is required.

If “YES”, install a separate case drain line to return the attachment case drain oil directly to the hydraulic oil reservoir.

Example: Cold planners have a separate case drain oil line.

NOTE: *Most attachment case drains will not accept backpressure and must drain directly into the reservoir.*

NOTE: *Skid-steer loaders equipped with High Flow Hydraulics have a separate case drain coupler and return line attached to the right boom arm.*

7. Does the attachment require a circuit relief in the bucket circuit?

If “NO”, nothing is required.

If “YES”, install a bucket circuit relief valve on front of the control valve in the bucket circuit.

Example: Some mini-backhoes attach like a bucket, and require a bucket circuit relief.

https://truckmanualshub.com/

Op. 90 000

ARM PADS FOR CAB SIDE PANELS

The cab arm pads provide additional operator comfort and may be used separately or in combination with the seat armrest.

The arm pads, 1, require gluing in place to the cab side panels with Loctite® 454 gel adhesive.

The area where the arm pads are to be located must be cleaned thoroughly to ensure a secure bond to the cab side panel. If the area is not cleaned, the adhesive will not adhere to the metal side panels. Clean with methyl ethyl ketone, isopropyl alcohol, or equivalent cleaning solvent that will not leave a residue.

NOTE: *Position arm pads quickly because the adhesive begins to bond in a few seconds.*

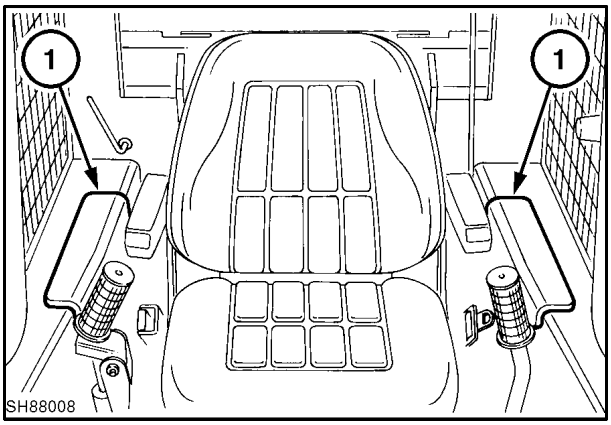

7

CAUTION

Read the adhesive label warnings. Loctite® 454 gel is a superglue-type material and can bond skin, eyes, etc. Use with adequate ventilation.

Op. 90 000

ARMRESTS FOR DELUXE SEAT

Right and left side armrests, 1, can be installed to the back of the **deluxe seat only**, at 2, for operator comfort.

NOTE: *The standard seat mounting holes are not provided to attach the armrests.*

There are two styles of armrest:

- Bolts attach armrests to the back of the steel back seat support.
- Bolts attach armrests to the sides of the plastic back seat supports.

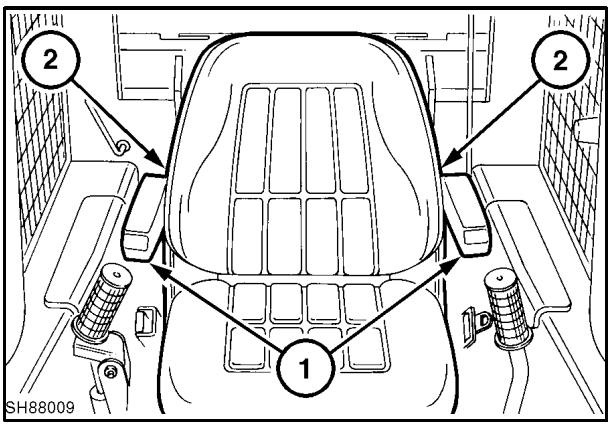

8

Armrest Adjustment

The armrest can be adjusted up or down for operator comfort by turning adjusting screws, 1.

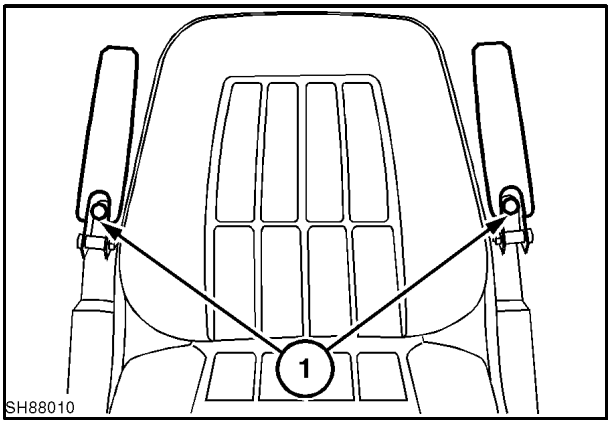

9

https://truckmanualshub.com/

Op. 90 000

FOREARM RESTS

The forearm rests are attached to the side of the operator's cab (one each side) to be used to support the operator's arms while operating the skid steer. The armrest may be pivoted up when not being used or for operator entry and exit of the operator's area. The armrest may be used in any combination of controls, boom/bucket hand controls or boom/bucket foot controls. Using the armrest in combination with the boom and bucket hand controls provides the operator with arm support during boom and bucket operations.

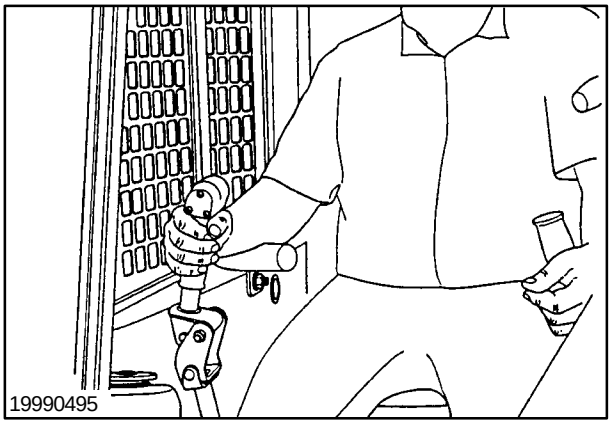

10

NOTE: *The cab armrest pad kit cannot be installed in combination with the forearm rest kit. The armrest pads are glued to the same area of the operator's cab that the forearm rests are attached.*

The LS160 and LS170 armrests mount with the bracket, 1, over the cab side panel, 2.

Pivot the armrest up and down and adjust the two clamp bolts, 3, if binding occurs, or to retain the armrest in the raised position.

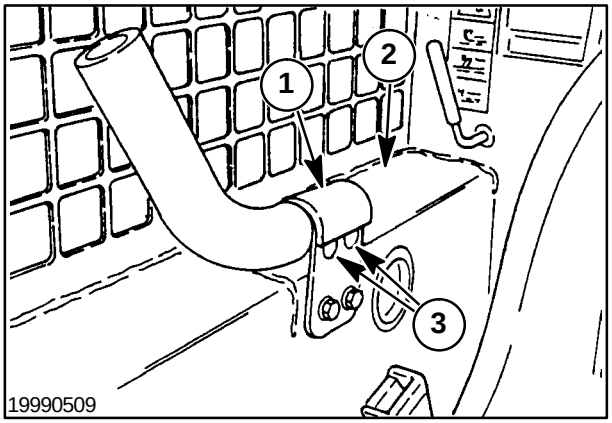

11

The right and left armrests are shown installed and pivoted down in the operating position.

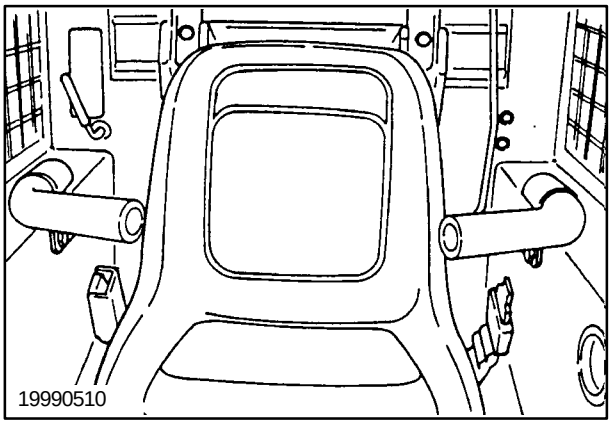

12

https://truckmanualshub.com/

Op. 55 000

BACK-UP ALARM

The back-up alarm serves as an audible warning device to alert bystanders and other machine operators of machine movements. The alarm will only sound when both hydrostatic control levers are stroked into reverse. Refer to local codes for requirements.

IMPORTANT: *Before servicing any switches or alarm, disconnect the negative (–) battery ground cable to avoid accidental shorts in the wiring system when removing or installing components.*

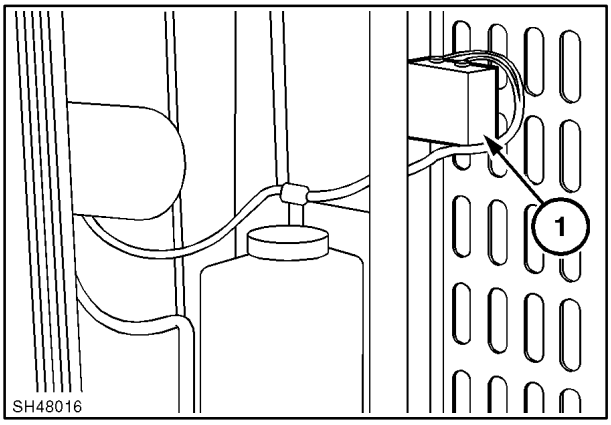

13

Alarm Location

The back-up alarm sound device should be located to the inside and in the upper right rear corner of the engine rear door at 1.

Adjustment

With the battery connected, and both hydrostatic control levers in the neutral position, loosen and slide both strikers, 1, rearward until the alarm sounds. Move the strikers forward until the alarm stops (approximately 1.5 mm [1/16″]) and tighten the hardware.

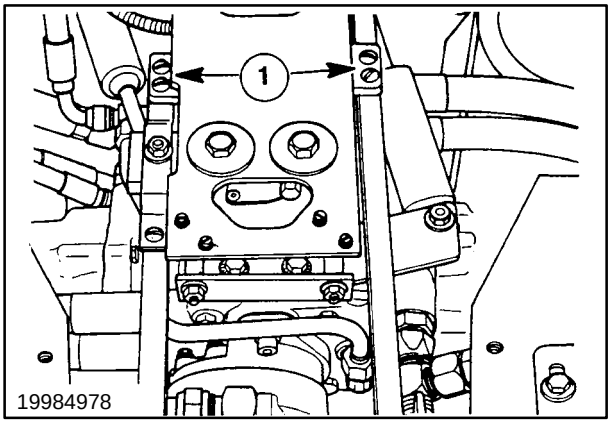

14

Back-up Alarm Wiring

The alarm is a negative (–) ground system.

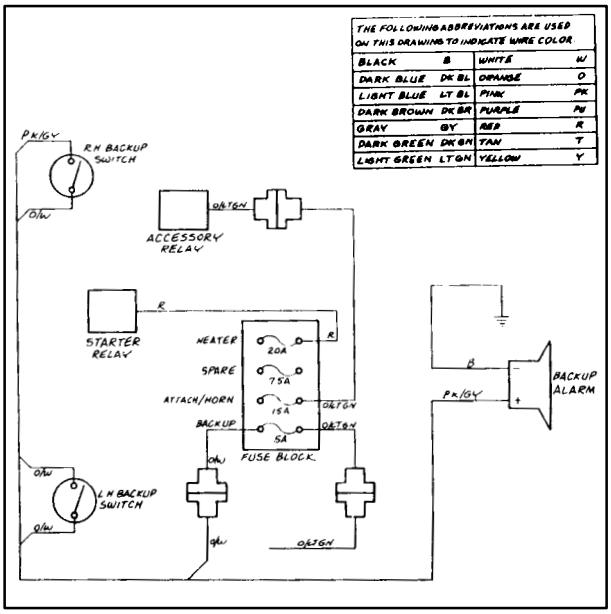

15

https://truckmanualshub.com/

Op. 10 300

BLOCK HEATER (ENGINE)

The engine block heater, 1, may be required in colder climate areas to assist in starting of the diesel engine.

The block heater is a 115-volt, 400-watt immersion type.

WARNING

The block heater must be installed and operated per the instructions provided with the kit or damage to the engine, heater element, and/or personal injury could occur.

Position the heater into the engine block so that the element is pointing to the 7 o'clock position for proper heater operation.

WARNING

Before connecting the heater to the power source, be sure that the element is immersed in coolant. Never energize the heater in air. If so energized, the element sheath could burst and cause personal injury.

Do not operate the heater until the engine cooling system is filled with a 50/50 mixture of a permanent-type antifreeze and water.

Operate the engine and check for any coolant leaks and purge the air from the cooling system; repair accordingly.

IMPORTANT: *Failure to fill the cooling system and purging the air will cause premature failure of the block heater.*

CAUTION

This is a 115-volt heater. Use caution when installing and using the heater. Properly grounded electrical outlets and properly sized extension cords are essential for the use of the heater.

To insure continued protection against shock hazard, connect to properly grounded electrical outlets only.

First connect a grounded extension cord of the proper rating for the length used to the heater plug. Then connect the extension cord to the grounded electrical outlet.

CAUTION

Disconnect the extension cord from the grounded electrical outlet first and then from the heater before starting the loader. Inspect the heater wires periodically for broken or frayed wires and/or wire coverings. If wires and/or coverings are broken or frayed, do not use the heater.

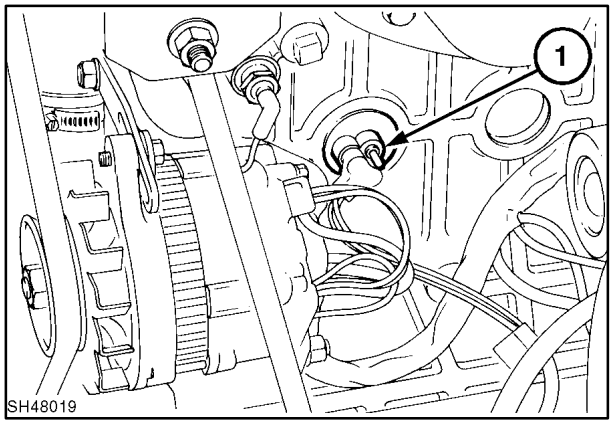

16

https://truckmanualshub.com/

Op. 55 000

ELECTRIC POWER SUPPLY (12 VOLT, 15 AMP)

The electric power outlet can be installed on the loader to provide an auxiliary 12-volt power outlet rated at 15 amp.

If the horn kit is installed, the power kit wire harness is incorporated in the horn harness.

If the horn kit is not installed, the power kit receives its power from the 15-amp attachment/horn fuse in the engine fuse panel.

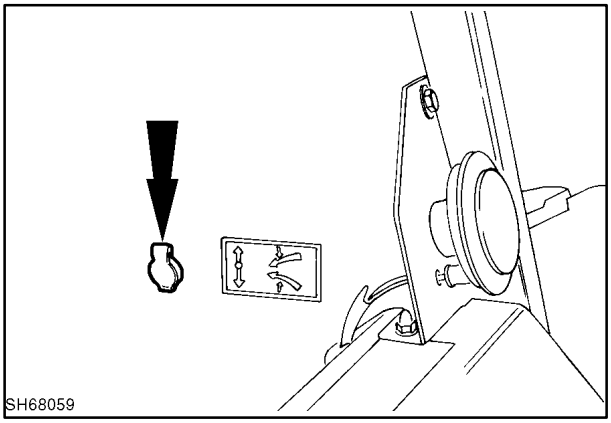

17

Electric Power Wiring

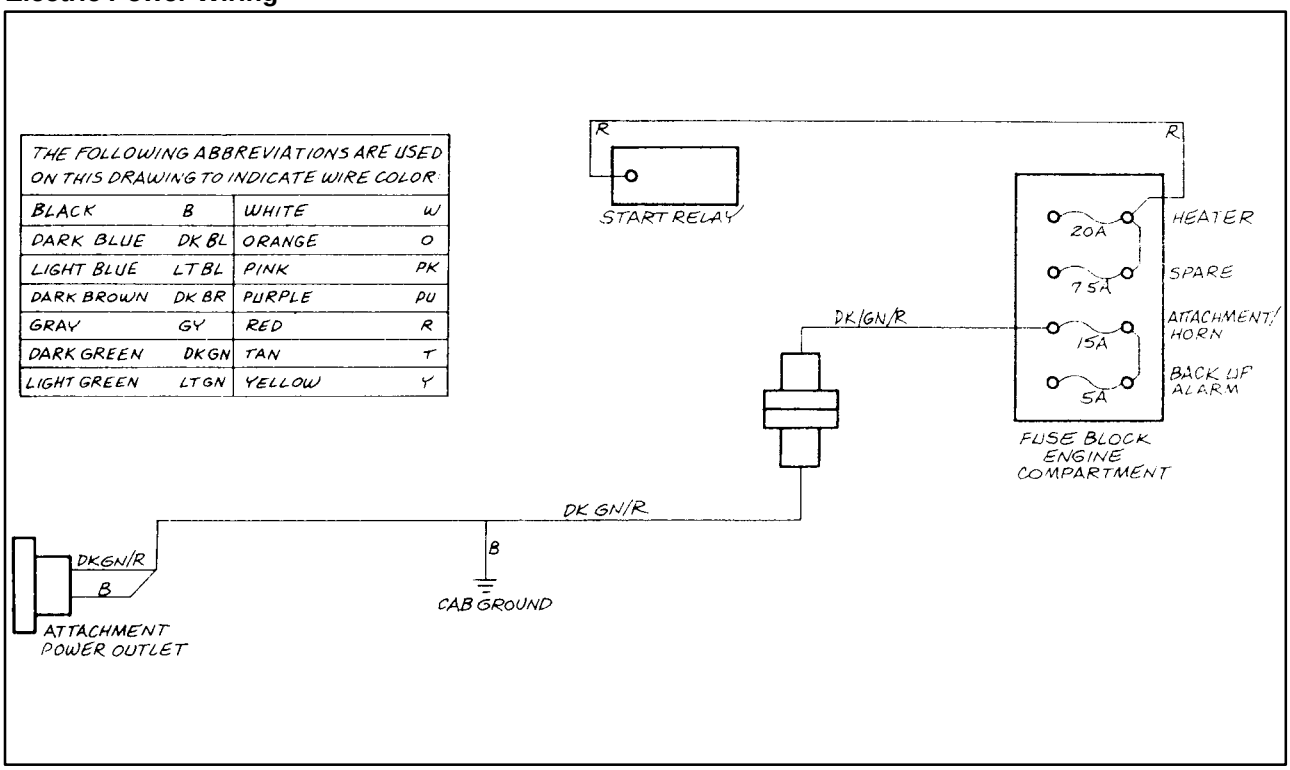

18

https://truckmanualshub.com/

Op. 10 254

EXHAUST (ENGINE)

CATALYTIC MUFFLER

The catalytic muffler kit can be installed on diesel engines being operated in applications where cleaner exhaust emissions are required.

The catalytic muffler, 1, is a direct replacement for the standard muffler without adding other parts.

When operating a skid-steer loader equipped with the catalytic muffler, the unit must be operated at full engine speed.

The engine exhaust system must be operated at operating temperature for the catalytic purifier muffler to function properly.

If the temperature is not high enough, the catalytic purifier muffler will not function properly and not reduce the carbon monoxide level. The operating life of the purifier muffler will also be reduced.

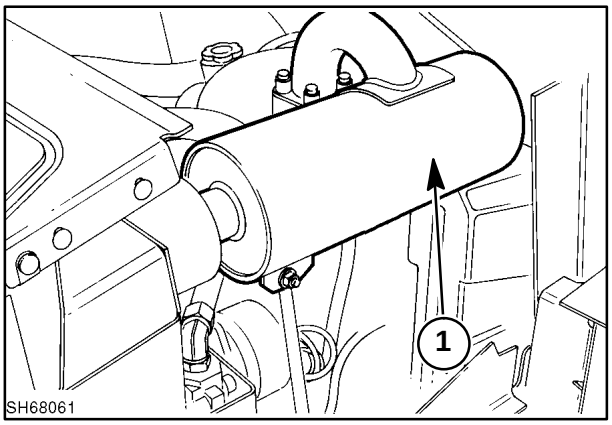

19

Op. 10 254

ASPIRATOR PRECLEANER MUFFLER

The precleaner aspirator muffler kit can be installed on diesel engines being operated in dusty applications to prolong air cleaner element life.

The aspirator muffler, 1, is a direct replacement for the standard muffler and standard air cleaner.

NOTE: *When the aspirator muffler is installed, the engine must be operated at/or near full engine speed to reduce the recirculating of exhaust gases through the air cleaner. If an air cleaner element is sooted with diesel smoke, the engine is being operated at reduced speeds.*

The aspirator muffler hose connects to the air cleaner at 1.

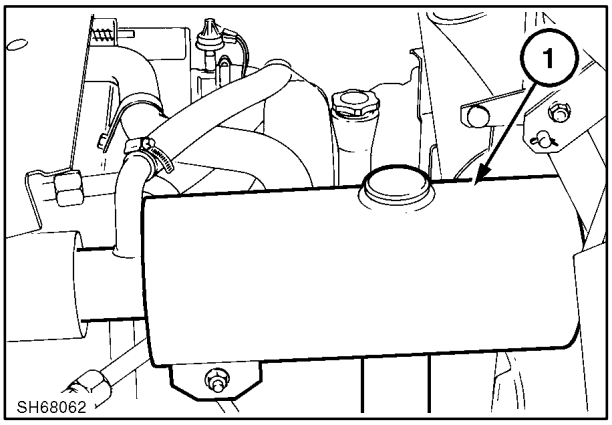

20

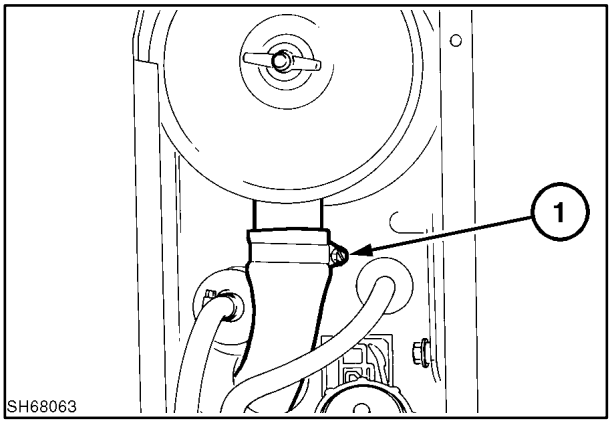

21

https://truckmanualshub.com/

Aspirator or Spark Arrester Muffler Cleaning
Clean the muffler every 250 hours of use to ensure proper operation and prolong muffler life.

1. To clean the muffler, first move the loader to an area clear of any flammable material.
2. Allow the engine and muffler to cool before cleaning the muffler.
3. Remove the plug, 1, and allow the accumulated particles to drain from the muffler; a wire or stiff bottle brush might help to begin the particles to drain.
4. Start the engine and idle in neutral, alternate between low and high idle engine speeds for a couple of minutes to thoroughly clean the muffler.
5. Turn off the engine and allow the muffler to cool, then reinstall the drain plug.

CAUTION

Clean the precleaner or spark arresting mufflers in an area clear of flammable material. Allow the engine and muffler to cool before removing and reinstalling the drain plug.

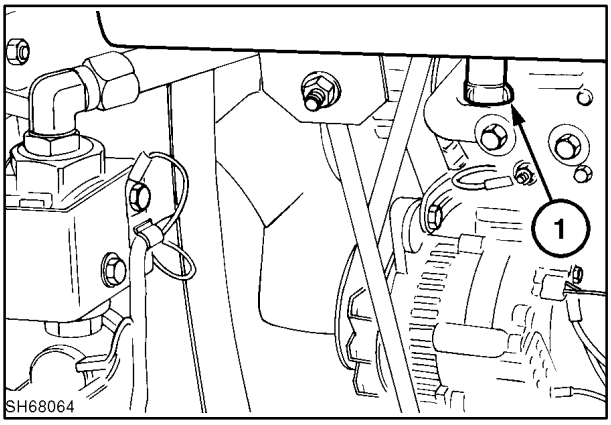

22

https://truckmanualshub.com/

Op. 35 000

HIGH FLOW HYDRAULICS

When the high flow hydraulics circuit is used, it will allow the operator to utilize more available engine horsepower through the auxiliary hydraulic circuit.

The high flow increases the hydraulic flow:

LS160
From 15.5 GPM, 1000 PSI at 2900 RPM to 24.0 GPM, 1000 PSI at 2900 RPM (= 32.2 HP).

LS170
From 17.7 GPM, 1000 PSI at 2900 RPM to 26.6 GPM, 1000 PSI at 2900 RPM (= 35.7 HP).

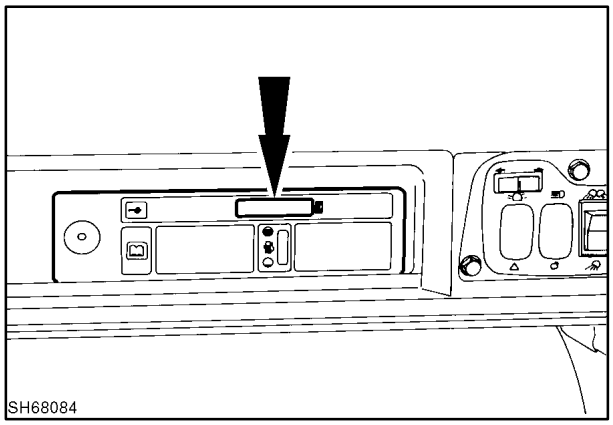

23

During warm climate operation, be conscious of the EIC (Electronic Instrument Cluster) temperature monitoring system. Adjust the attachment load (rate of feed) and length of continuous operation (duty cycle times) accordingly.

This high flow is not intended to replace a fully dedicated, specialized machine.

When the attachment is not in use, be sure the high flow switch, 1, is in the “OFF” position to prevent overheating of the hydraulic oil.

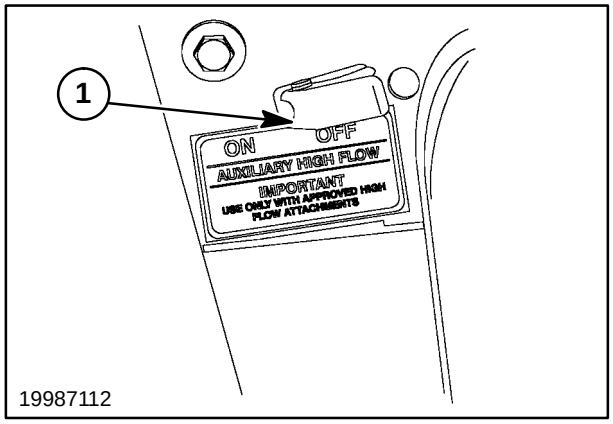

24

When the high-flow is being used, 3/4″ quick couplers, 1, must be used on the loader and attachment or overheating of the hydraulic oil may occur. The 1/2″ quick couplers, 2, can be used for other attachments that do not require the added oil flow.

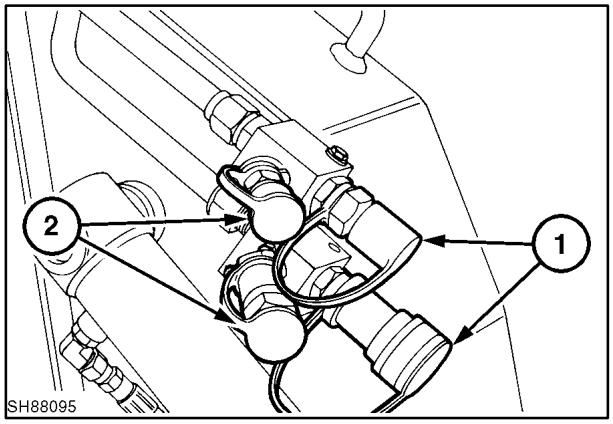

25

https://truckmanualshub.com/

Attachment Case Drain

When the high flow kit is installed, there is a separate case drain return line, 1, for the attachment case (housing) to drain oil. The case drain line drains into the hydrostatic pump/motor case drain system with 0.0 - 1.7 bar (0 - 25 PSI) system back pressure. Most auxiliary hydraulic drive attachments equipped with a separate case drain line require no system back pressure for the drain line.

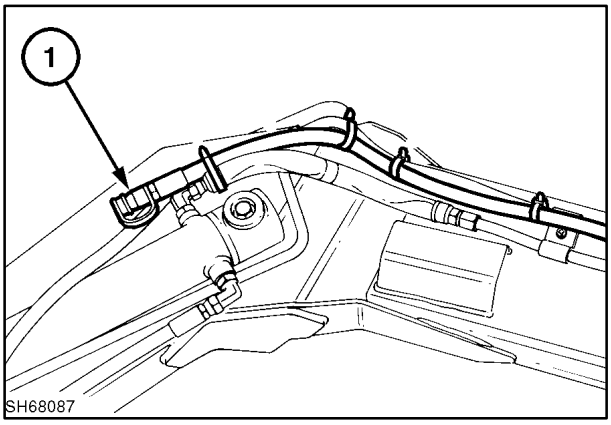

26

https://truckmanualshub.com/

HIGH FLOW HYDRAULICS TROUBLESHOOTING

PROBLEM	POSSIBLE CAUSE	CORRECTION
No switch operation	No battery voltage to switch	Check power supply at 15-amp fuse (attachment) engine fuse panel Check DKGN/R (Dark Green/Red) wire from fuse to switch
	Inoperative switch	Replace switch
No selector valve operation	No battery voltage to selector valve	Check switch for proper operation Check W/T (White/Tan) wire from switch to selector valve
	No circuit ground	Check B (Black) ground wire for proper grounding
	No selector valve spool movement	Check valve spool for binding and sticking
Hydraulic oil overheats	Using 1/2″ quick couplers	Must use 3/4″ quick couplers
	Control valve and boom steel lines and hoses were not changed from 5/8″ to 3/4″	Change lines and hoses to 3/4″
	Operating high flow when not required	Turn high flow switch to the “OFF” position
	Operating high flow at relief pressure continuously	Operate attachment at lesser load
	Operating attachment when not applying a load to the attachment	Stop attachment when not loaded (moving from one work area to another)
	Operating attachment when high oil flows are not required	Turn high flow switch to the “OFF” position
	Restriction in pressure or return lines	Check and repair
	Oil cooler restricted not allowing cooling air to flow properly	Clean oil cooler and radiator

https://truckmanualshub.com/

PROBLEM	POSSIBLE CAUSE	CORRECTION
No increase in hydraulic oil flow when switch is in the “ON” position	No switch operation	Check power supply circuit
	No selector valve operation	Check power supply from switch
	Selector valve spool binding	Check for spool binding and repair
	Drive belt slipping or broken	Check drive belt adjustment or replace
Low hydraulic power	Low high flow relief valve pressure setting	Check and replace relief valve
	Low main system relief valve setting	Check and replace relief valve
	Leaking control valve plugs, leaking oil to return	Check O ring and backup washer on plugs
	Inefficient gear pump (main)	Check pump efficiency, repair or replace
	Inefficient gear pump (high flow)	Check pump efficiency, repair or replace

https://truckmanualshub.com/

HIGH FLOW HYDRAULICS COMPONENT REPLACEMENT

Op. 35 724

High Flow Selector Valve Replacement
To access the selector valve, 1, the seat must be raised and latched in the raised position.

The left hydrostatic control lever assembly must be removed.

The cab may be tilted forward for easier access.

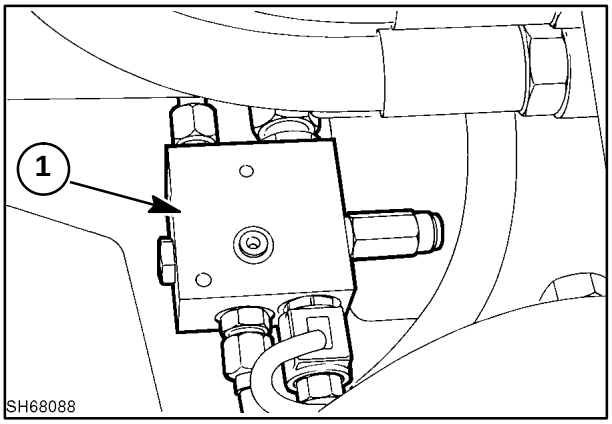

27

Rebuild the selector valve with new O rings on the spool and fittings at 1, and on both ends of the coil at 2.

To check the coil, use an ohmmeter and put one lead on one wire and the other on the other wire; the ohms reading should be between 7.5 and 11.5. If the coil is not within specification, replace it.

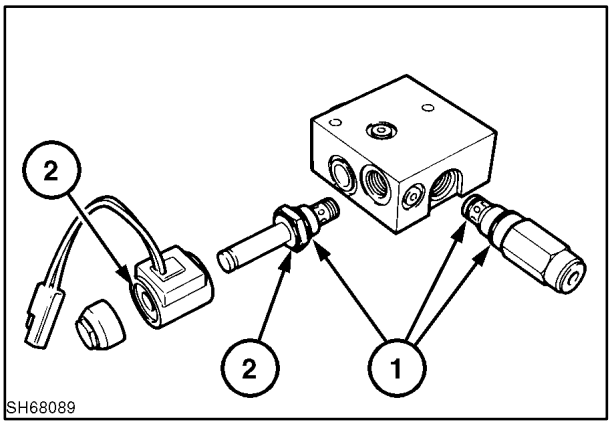

28

https://truckmanualshub.com/

Op. 35 710

High Flow Pump Removal / Disassembly

1. Clean the pump thoroughly and mark the pump assembly, 1, to ensure proper reassembly.
2. Remove the high pressure tube, 2, from the pump fitting, 3. Remove the fitting, 3, from the pump.
3. Remove the pump housing hardware, 4, and separate the end plate and body sections.

IMPORTANT: *The pump body is aluminum and can be easily damaged. BE CAREFUL not to damage machined surfaces. DO NOT use a screwdriver or other hard, sharp objects to pry the pump from the plate.*

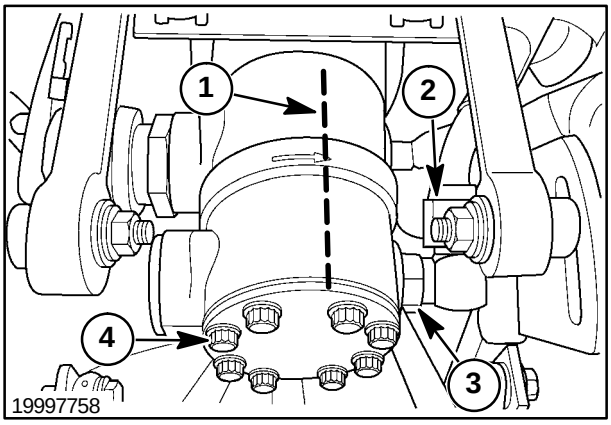

29

The high flow gear pump consists of:

1. Wear plate assembly
2. Idler gear assembly
3. Drive gear
4. Pump body
5. Pump back plate

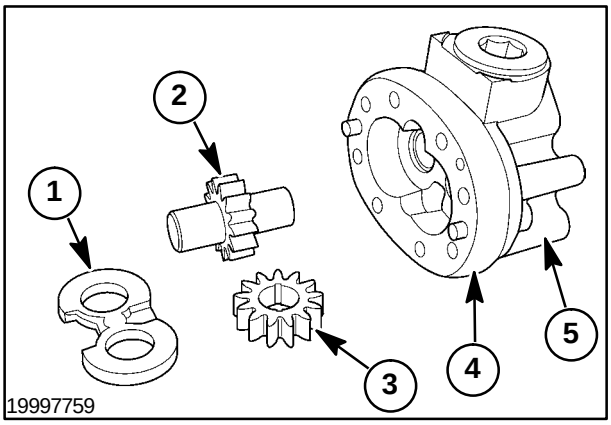

30

Op. 35 710 20

High Flow Pump Parts Inspection

1. Inspect the pump mounting plate for excessive wear. The oil grooves in the bushings, 1, should be at approximately 37° to the pressure side. If the bushing oil grooves are not positioned as noted, the bushings have turned in the plate - the plate should be replaced.

   The bushings in the plate should be 3.20 mm (0.126″) above the surface of the plate. Replace the plate if the I.D. of the idler gear bushing exceeds 19.2 mm (0.755″).

2. Check the seal areas, 2, for scratches or damage that could prevent a good seal.

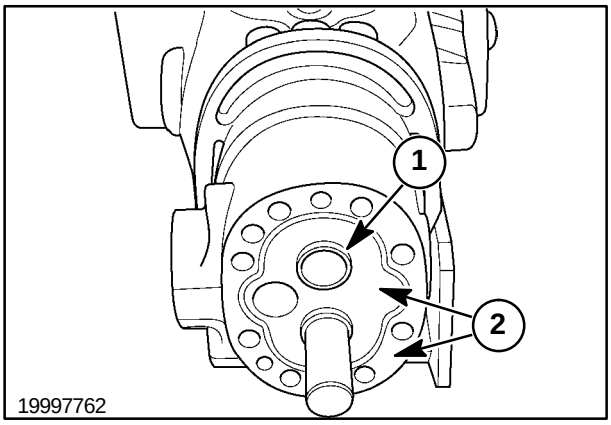

31

https://truckmanualshub.com/

3. Inspect the pump back plate for excessive wear. The oil grooves in the back plate bushings, 1, should be at approximately 37° to the pressure side. If the bushing oil grooves are not positioned as noted, the bushings have turned in the plate. The plate should be replaced under this condition.

   The bushings in the plate should be 3.20 mm (0.126″) below the surface of the plate. Replace the back plate if the I.D. of a bushing exceeds 19.2 mm (0.755″).

   Check for scoring on the face of the back plate, 2. Replace the back plate if wear exceeds 0.038 mm (0.0015″).

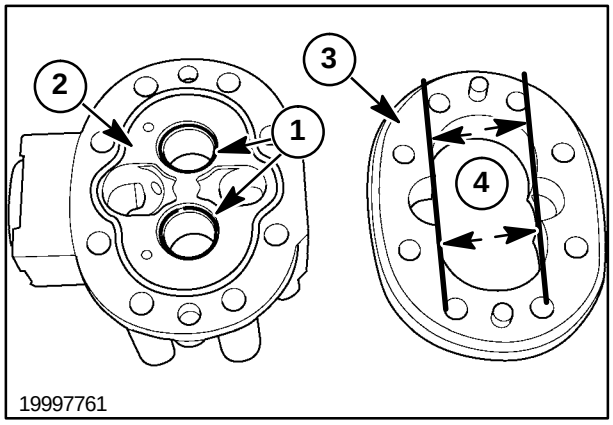

32

4. Inspect the pump body, 3, for excessive wear. Check the pump body inside the gear pockets for excessive scoring or wear.

   Replace the pump body if the I.D. of gear pockets, 4, exceed 43.7 mm (1.719″).

5. The wear plate, 1, seal, 2, and backup gasket, 3, should be replaced when the pump is rebuilt. Inspect for damage, such as nicks and tears, to determine if any problem existed. The flat Teflon-coated surface towards the gears and should not show any scratches or grooves that can be caught with a fingernail.

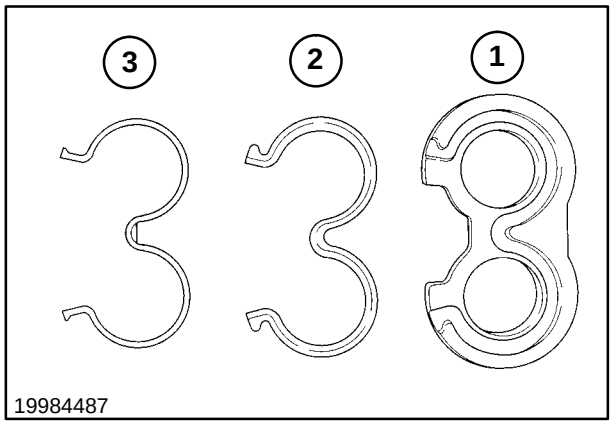

33

6. Inspect the pump gear teeth, 1, for excessive wear. Inspect the drive gear key, 2, to ensure it is not sheared.

   The gear shaft assemblies should measure at least 19.0 mm (0.748″) in the bushing area, 3. If the shaft measures less than the specified diameter, replace the gear assembly.

   The gear width should be close to when new: 12.45 mm (0.51 in.). If the gears measure much less than the specified width, the gear pump will not develop sufficient flow/pressure for loader application.

NOTE: *If replacement of the gear assemblies is necessary the gear assemblies should be replaced in pairs.*

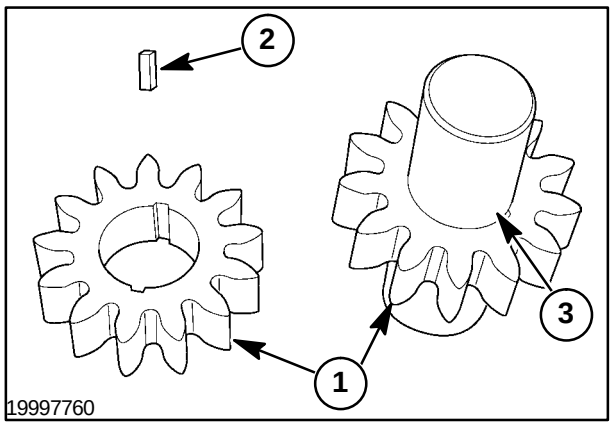

34

https://truckmanualshub.com/

High Flow Pump Reassembly / Installation

1. Coat all parts with a thin coat of petroleum jelly or oil to aid in reassembly.
2. Clean the mounting plate surface thoroughly and install a new O ring, 1. Install the shaft key, 2, in the drive shaft.

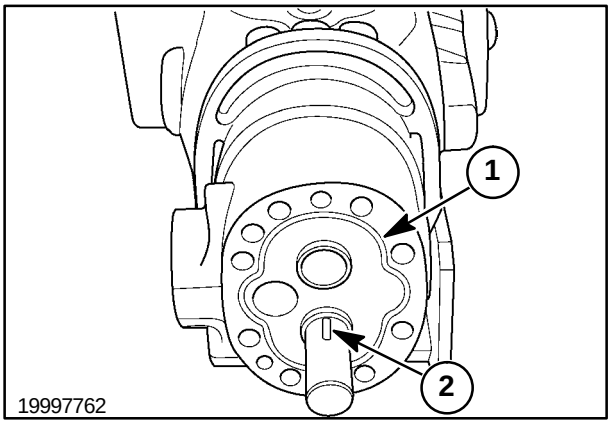

35

3. Install the seal, 1, and backup gasket 2, on the wear plate, 3. BE SURE that the flat area, 4, on the gasket AND seal, 5, are properly aligned and lay flat when installed in the wear plate.

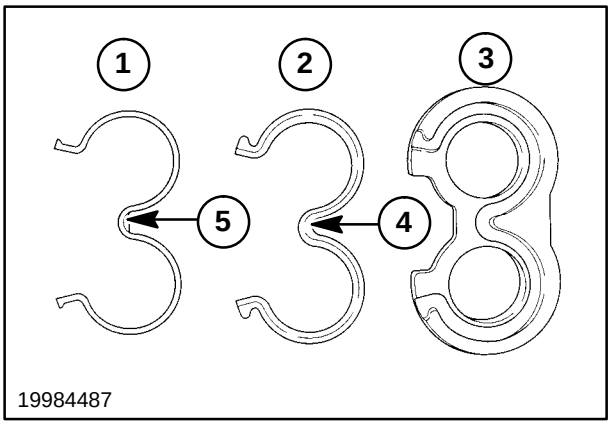

36

NOTE: *The gasket AND seal must align and lay flat when installed in the wear plate.*

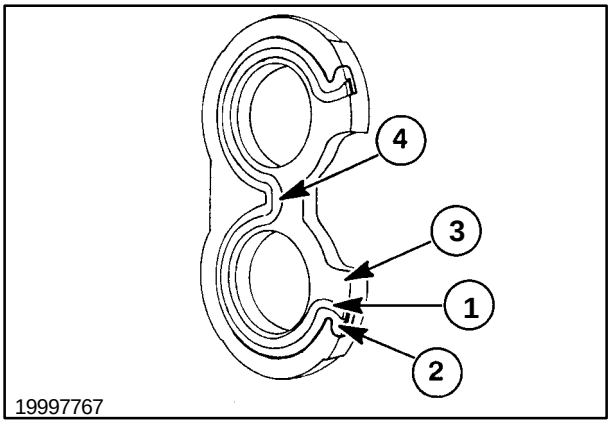

37

https://truckmanualshub.com/

4. Install the wear plate assembly, 1, with the gasket/seal side towards the pump mounting plate with the mid section cut away on the suction side, 2, of the pump.

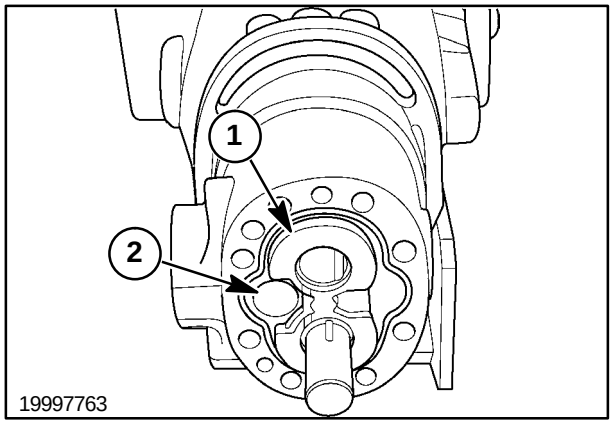

38

5. Install the drive gear, 1, on the drive shaft, slipping the groove over the shaft key, 2. Install the idler gear assembly, 3, into the bushing. Rotate the gears to help slide the idler gear into place.

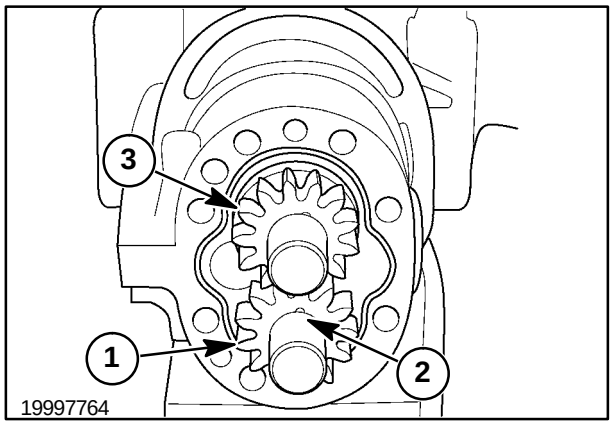

39

6. Make sure the dowel pins, 1, are in place and install the body on the plate with the half-moon cavities in the body facing out away from the plate. Check that the reference marks made during disassembly align correctly.

NOTE: *The small half-moon cavity, 2, must be on the pressure side of the pump.*

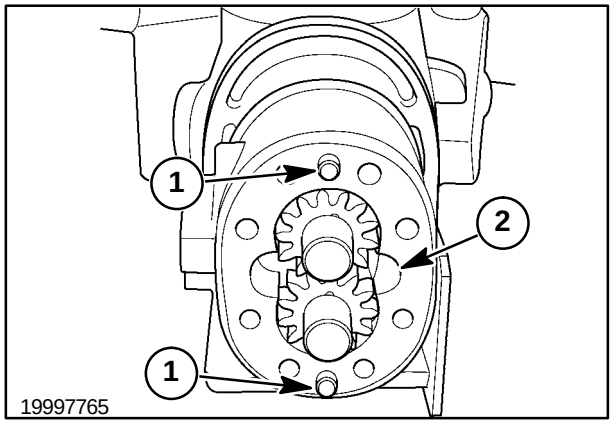

40

https://truckmanualshub.com/

7. Install a new O ring, 1, in the back plate.

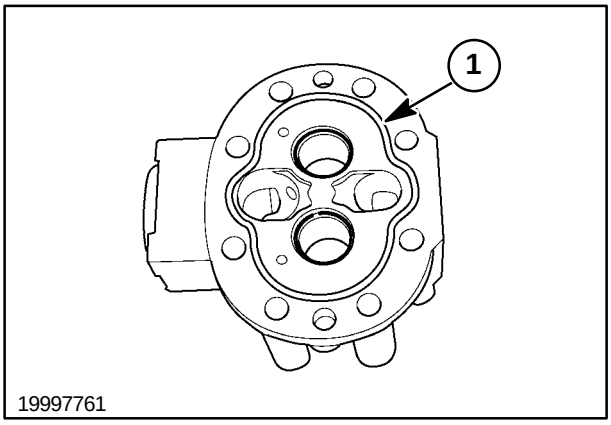

41

8. Install the pump back plate, 1, over the gear shafts. Check that the reference marks made during disassembly align correctly.
9. Install the housing hardware with the eight bolts, 2, and sealing washers. Tighten the bolts evenly in a criss-cross pattern to 34 - 38 N·m (25 - 28 ft. lbs.).
10. Install the pump port fitting, 3, and the high pressure tube, 4, and tighten securely.

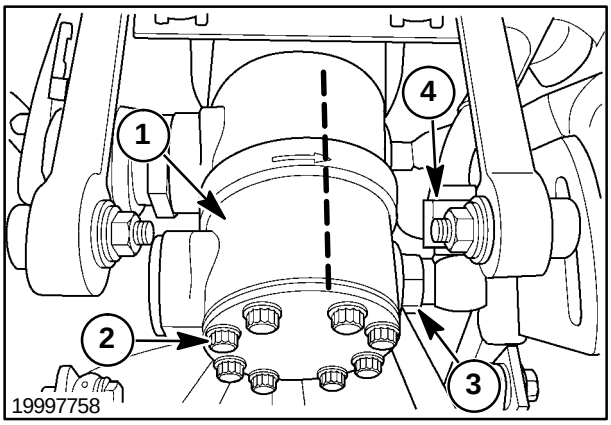

42

https://truckmanualshub.com/

High Flow Electrical Wiring Diagram

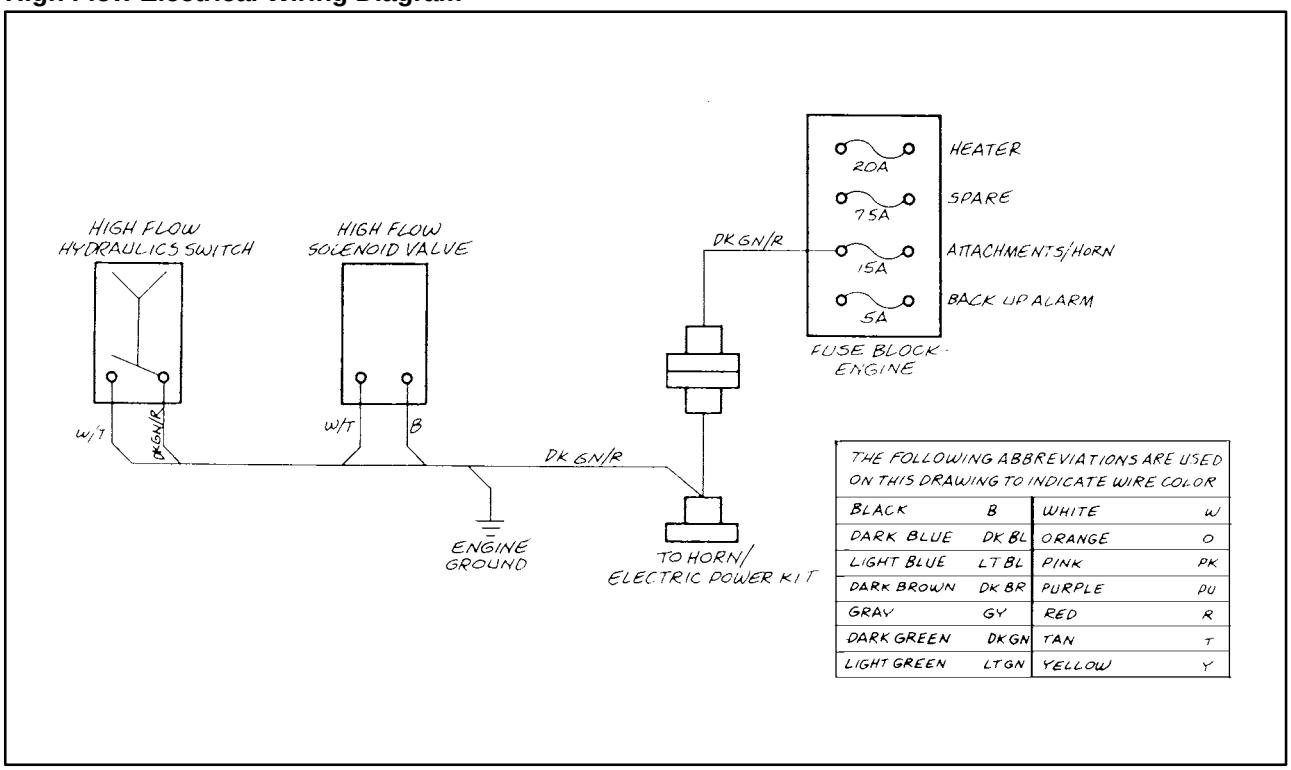

43

High Flow Hydraulic Oil Flow Diagram

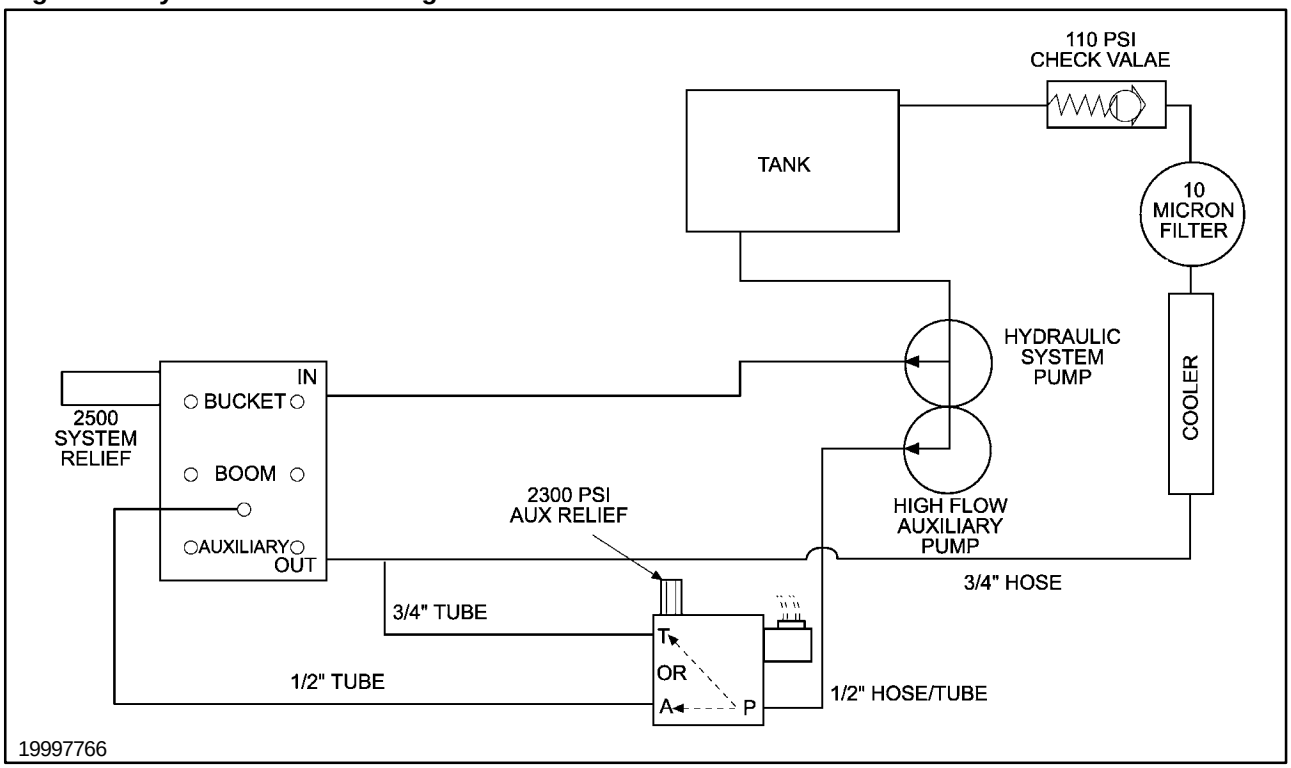

44

https://truckmanualshub.com/

Op. 55 000

HORN

The horn kit provides an operator-controlled device to alert bystanders and other machine operators. The horn button, 1, is located in the top of the left hydrostatic control lever.

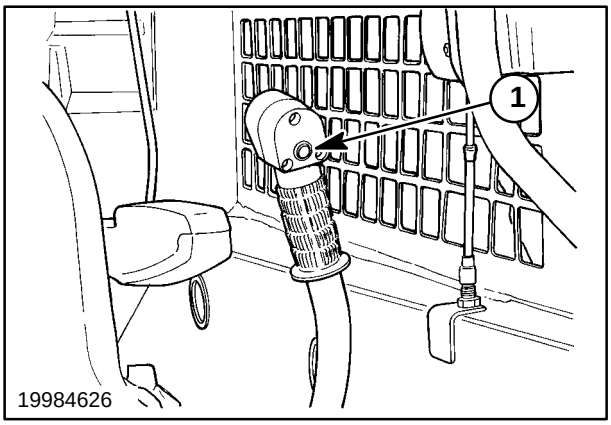

45

Horn Wiring Diagram

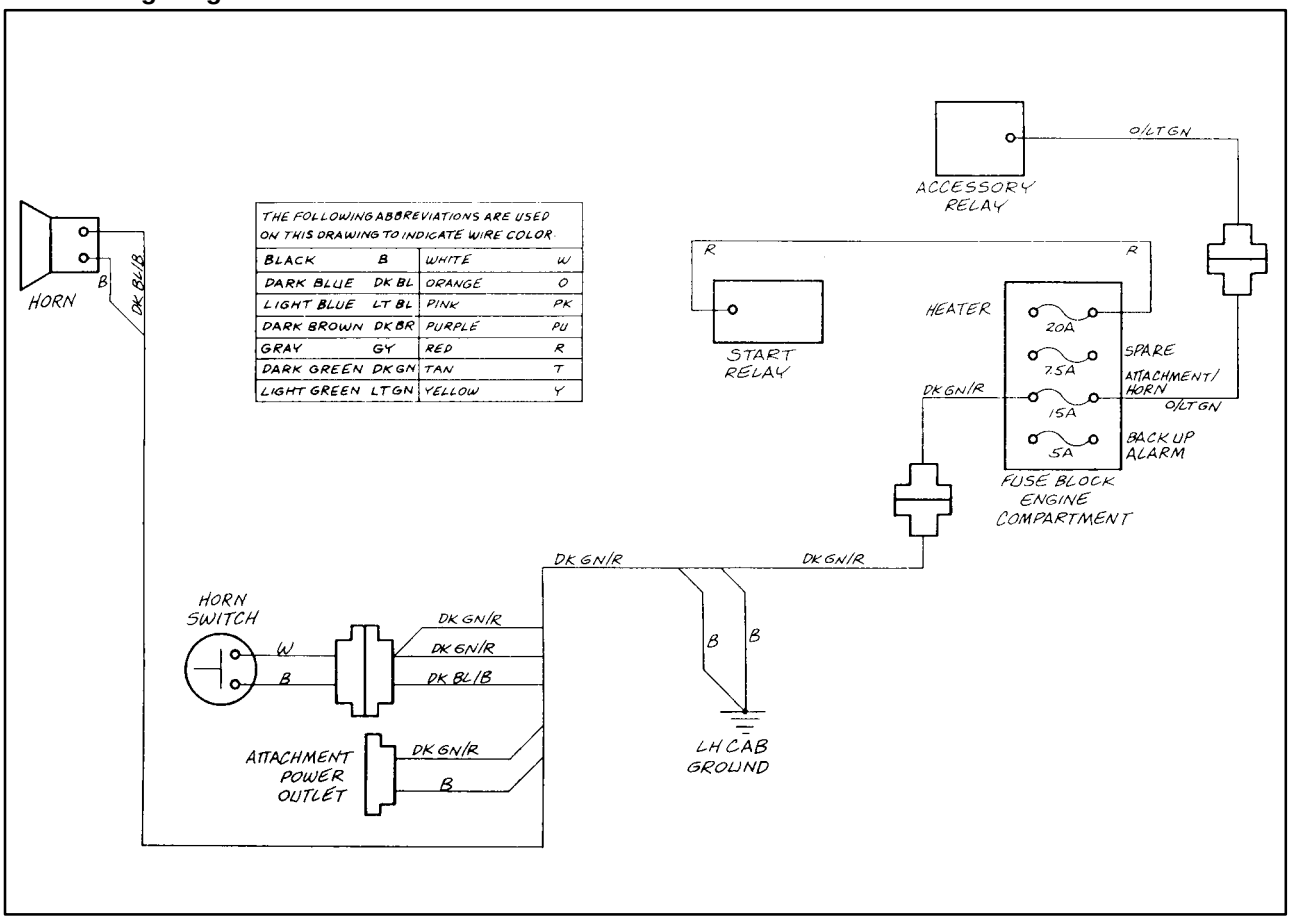

46

https://truckmanualshub.com/

Op. 90 000

SHOULDER BELT (SEAT)

The shoulder belt can be installed with the lap seat belt.

The shoulder belt is recommended anytime a front cab door is installed.

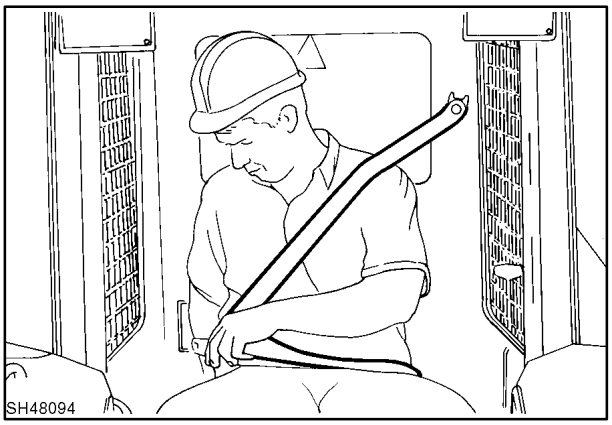

47

If the shoulder belt becomes completely retracted or the belt becomes locked, the web must move back into the retractor approximately 1/2″ with the retractor in 90/90 degree or proper mounting position. When the belt is retracted 1/2″, hold the belt straight up and pull the belt up slowly, 1. The belt will not unlock and pull out in any other position.

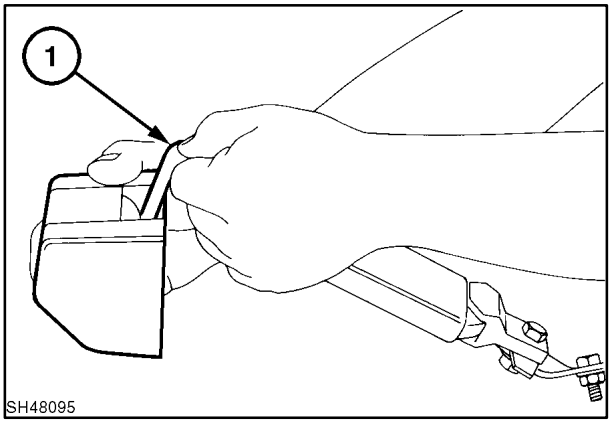

48

The shoulder belt support pivot bolt, 1, must be loose enough to allow the belt to pivot. If the belt will not pivot properly, it will not adjust to fit the operator.

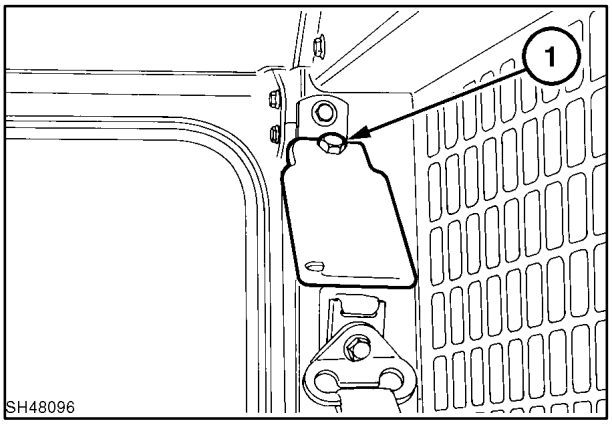

49

https://truckmanualshub.com/

Op. 88 000

SLOW-MOVING VEHICLE (SMV) SIGN KIT

The Slow-Moving Vehicle (SMV) kit mounts to the rear door of the skid-steer loader when the loader is operated on roadways.

On the louvered rear door, a bracket, 1, must be installed to hold the SMV sign in place on top of the door.

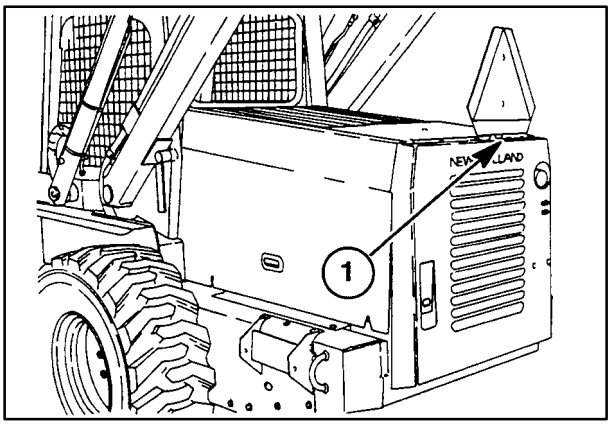

50

1. Attach the angle, 1, with one 5/16″ x 1-1/4″ carriage bolt from the kit and nut and M8 lock washer previously removed at 2.
2. Attach the spade socket to the angle at 3 using two 5/16″ x 1″ carriage bolts, M8 lock washers, and nuts.
3. Assemble the SMV sign, 4, to the support, 5, using two #10 x 1/2″ machine screws and flange nuts at 6.
4. Mount the SMV sign assembly in the spade socket as shown at 7.

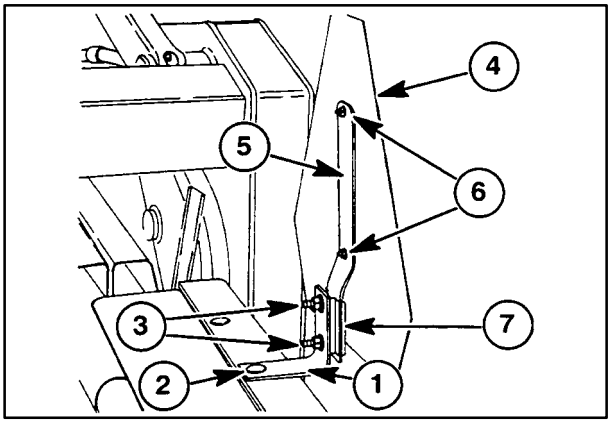

51

https://truckmanualshub.com/

Op. 55 000

WARNING LIGHT (ROTARY BEACON)

The beacon light is a visual alerting device for bystanders and other machine operators. The beacon light's magnetic base mounts the light securely to any part of the roof or frame.

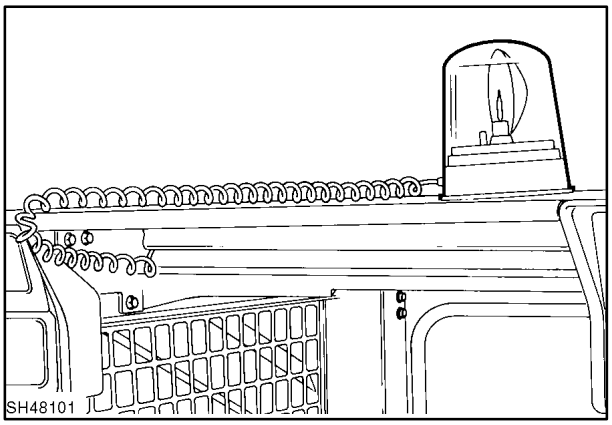

52

The beacon light switch, 1, is located in the ignition key switch panel in the upper right corner of the overhead dash.

To remove the switch, disconnect the negative (–) ground battery cable, remove the key switch panel hardware, 2, and tilt the panel down.

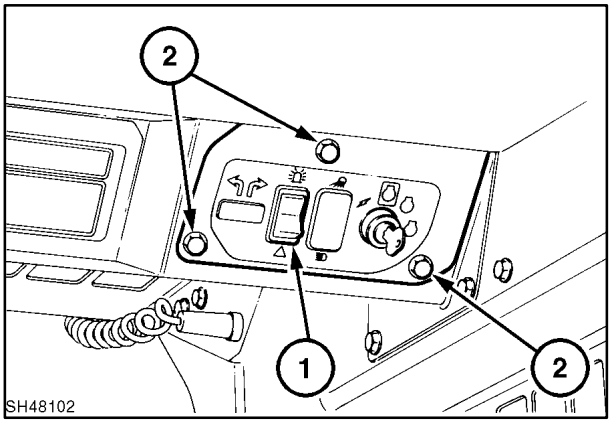

53

Disconnect wires from the switch, squeeze the switch retaining tabs in, and remove the switch from the panel.

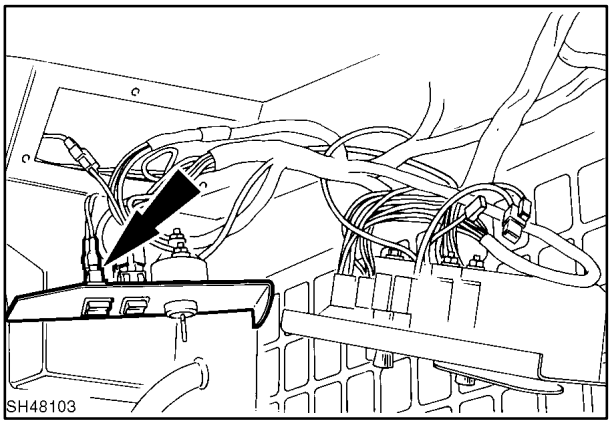

54

https://truckmanualshub.com/

Beacon Switch Wiring

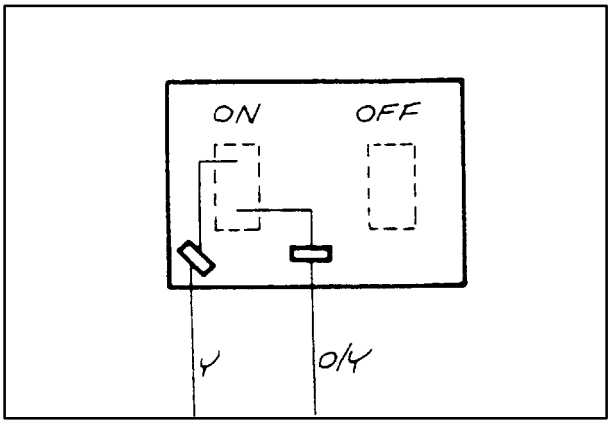

55

Beacon Wiring Diagram

NOTE: *When attaching ground wires, always place the heaviest ground wire next to the ground surface and then stack the remaining ground wires according to size on top of the heaviest wire.*

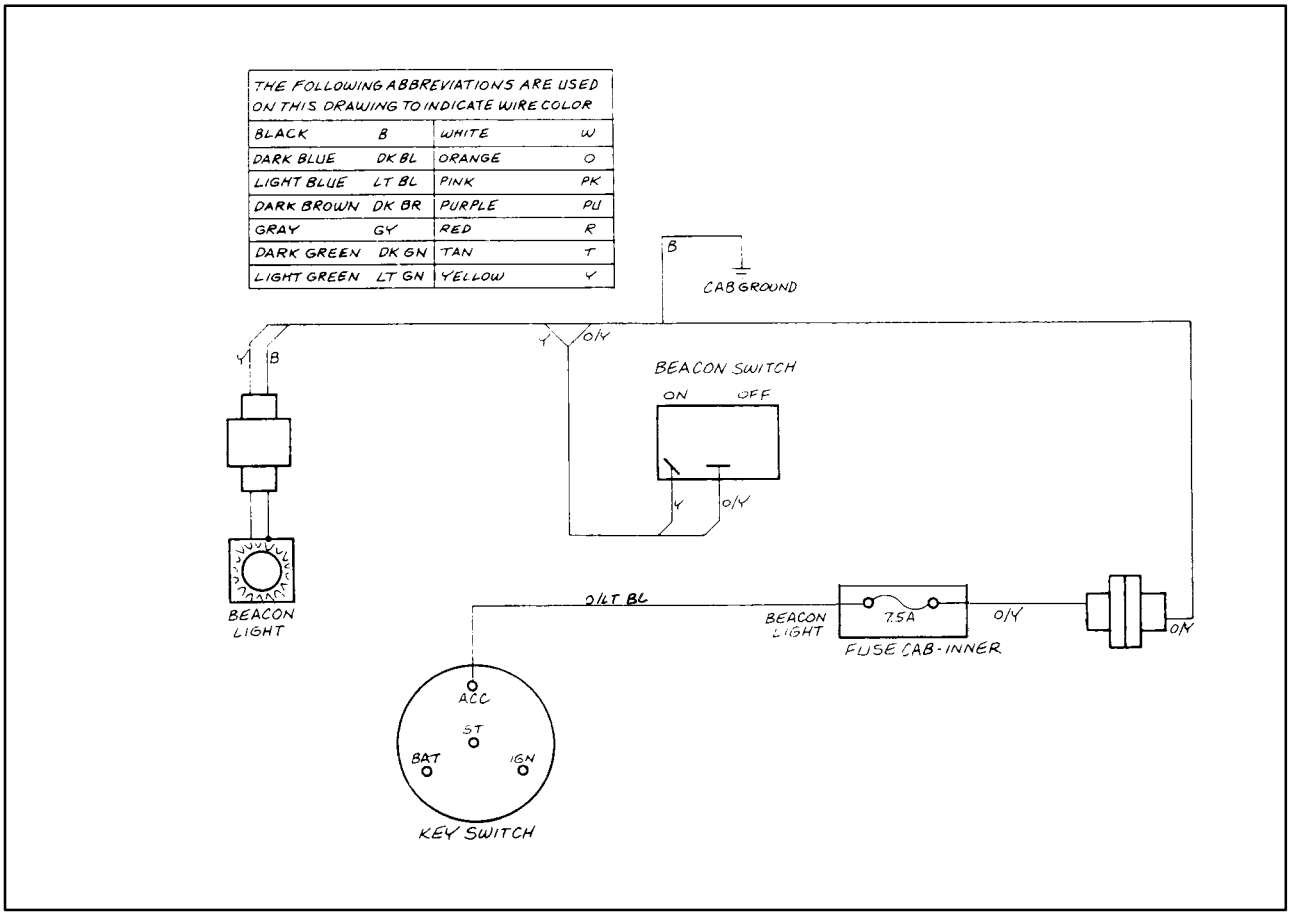

56

https://truckmanualshub.com/

Beacon Bulb Replacement
Bulb only #69AG13009AA (H1 12V 55W)

To replace the bulb, remove the three screws attaching the lens to the base and lift the lens from the base.

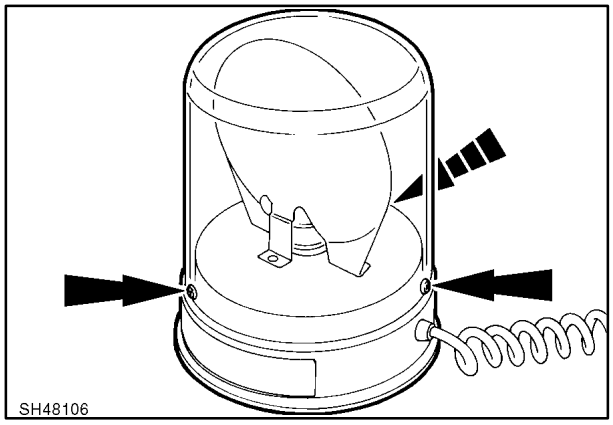

57

Squeeze the bulb retaining tabs to separate the bulb from the holder.

Remove the bulb assembly from the wire connector.

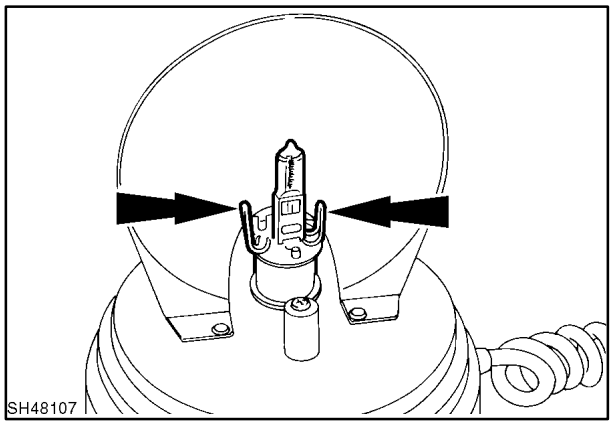

58

https://truckmanualshub.com/

Op. 55 000

WARNING LIGHTS (FOUR-WAY FLASHERS/TURN SIGNAL/HORN)

The four-way flashing lights on the front and rear of the loader provide a visual alerting device to bystanders and other machine operators.

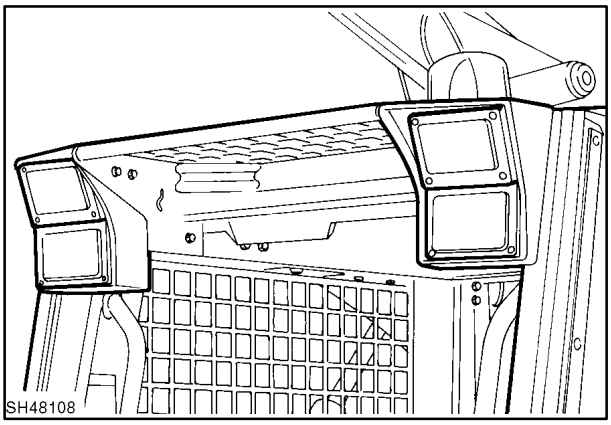

59

The warning light switch, 1, is located in the ignition key switch panel in the upper right corner of the overhead dash.

To remove the switch, disconnect the negative (–) ground battery cable, remove the key switch panel hardware, 2, and tilt the panel down.

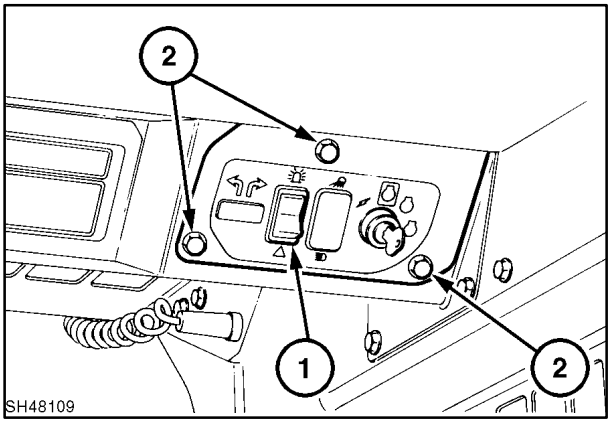

60

Disconnect the wires from the switch. Squeeze the switch retaining tabs in and remove the switch from the panel.

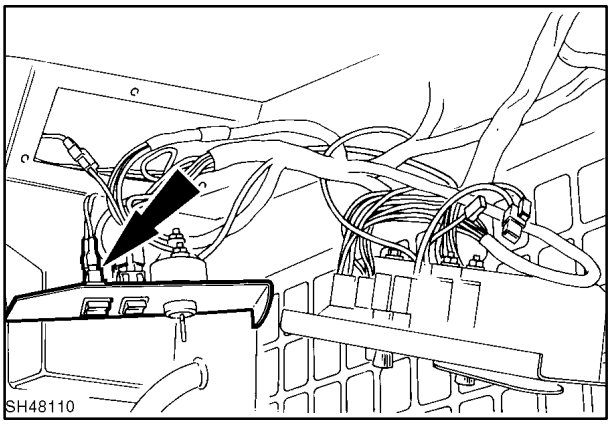

61

https://truckmanualshub.com/

Warning Light Switch Wiring

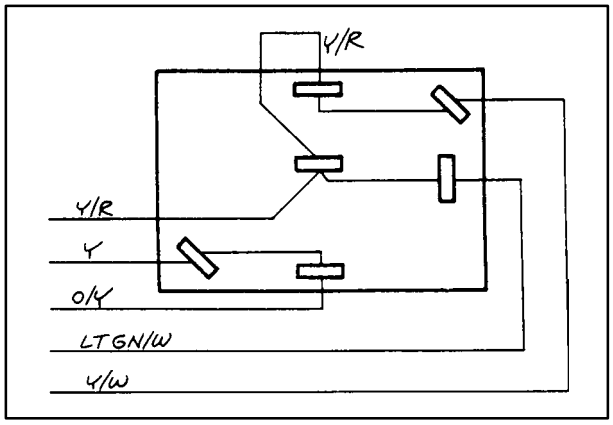

62

https://truckmanualshub.com/

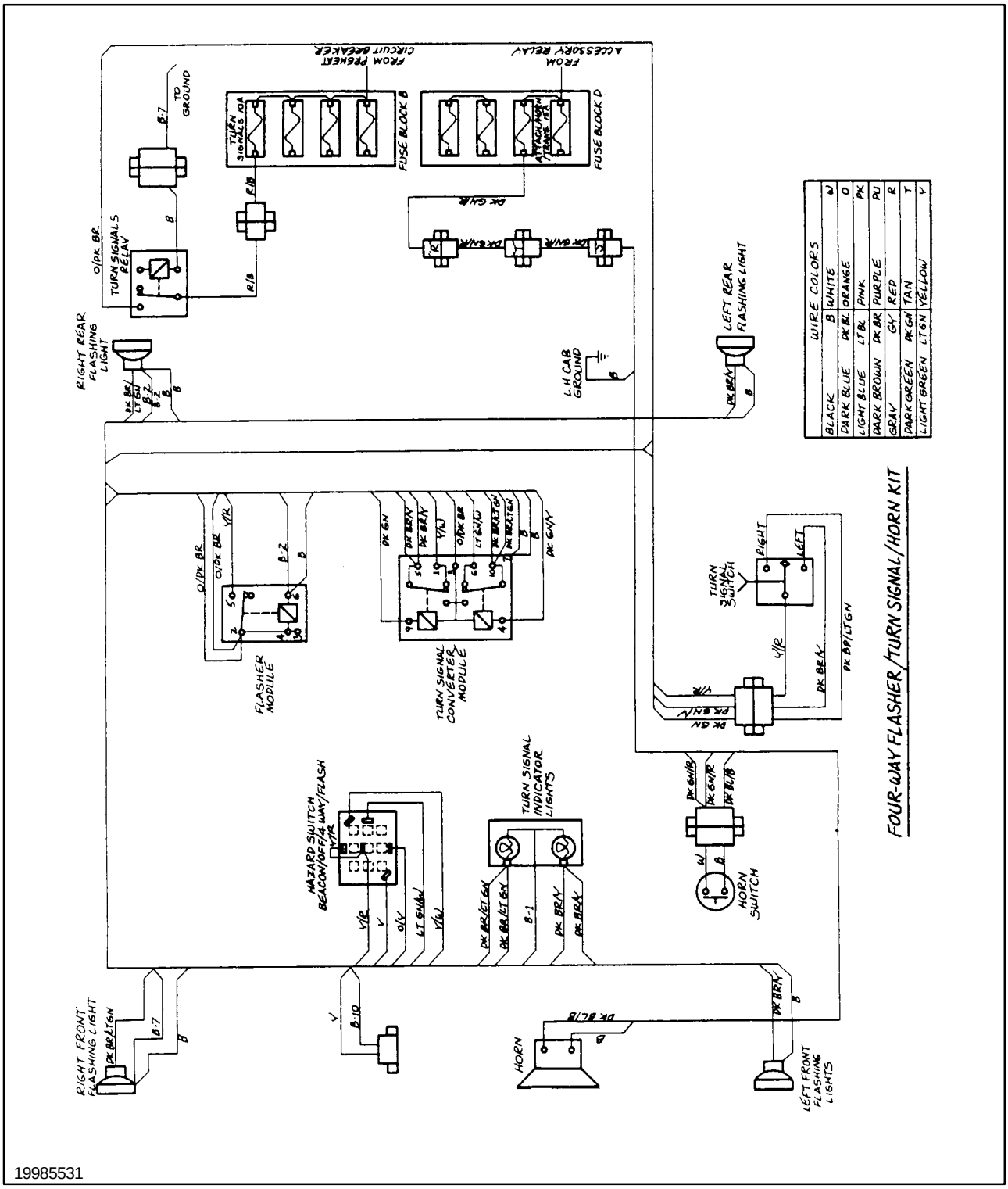

63

Warning Light (Four-way) Wiring Diagram

NOTE: *When attaching ground wires, always place the heaviest ground wire next to the ground surface and then stack the remaining ground wires according to size on top of the heaviest wire.*

https://truckmanualshub.com/

Warning Light Bulb Replacement
Amber lens with bulb #9841566
Bulb only #529068

Op. 55 404 10

Front Light

1. Remove the bezel, 1, retaining screws and remove lens from support.
2. Disconnect the wire harness from the bulb holder.
3. Rotate the light bulb holder and element assembly from the lens and remove from the lens.
4. Insert the new bulb into the lens and rotate to lock into position, using caution not to touch the bulb element.

IMPORTANT: *Touching the light bulb element may damage the element and cause a premature failure.*

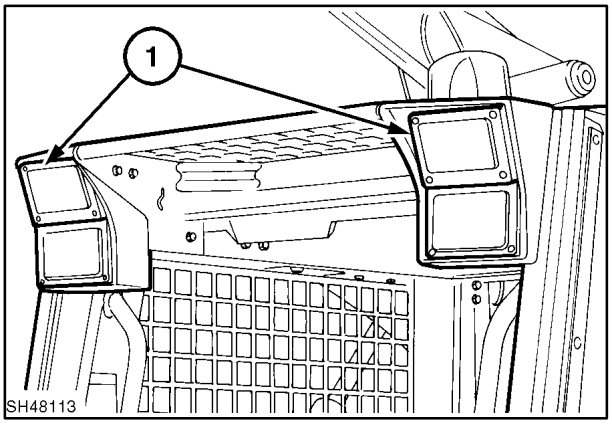

64

Op. 55 404 10

Rear Light

1. Remove the bezel, 1, retaining hardware and remove the lens from the light bar.

NOTE: *The remaining light lens will be loose in the light bar.*

2. Disconnect the wire harness from the bulb holder.
3. Rotate the light bulb holder and element assembly from the lens and remove from the lens.
4. Insert the new bulb into the lens and rotate it to lock into position, using caution not to touch the bulb element.

IMPORTANT: *Touching the light bulb element may damage the element and cause a premature failure.*

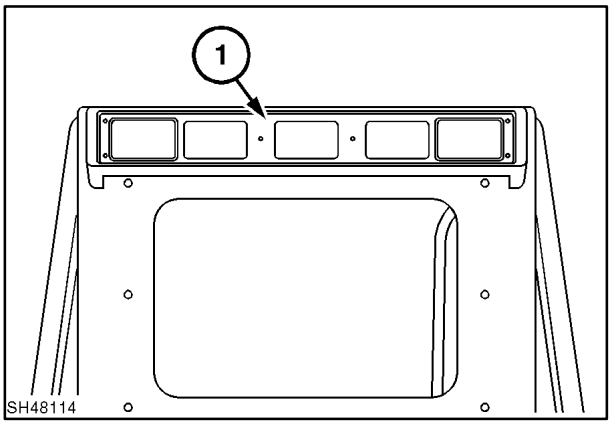

65

https://truckmanualshub.com/

LABOR GUIDE

The following labor amounts are listed as a guide only. Working conditions and experience will vary the time it actually takes to complete each job.

Job Description	Hours
Arm pads (cab)	
Remove and replace (2)	0.5
Armrest (seat)	
Remove and replace (1)	0.25
Attachment 12-Volt Electric Power Supply	
Remove and replace outlet	0.25
Remove and replace wire harness	0.5
Back-Up Alarm	
Remove and replace back-up alarm	0.25
Remove and replace back-up alarm linkage and adjust	1.0
Remove and replace back-up alarm wire harness	0.5
Block Heater (engine)	
Remove and replace block heater (engine)	0.5
High Flow Hydraulics	
Remove and replace gear pump	2.0
Remove and replace selector valve (includes tilting cab/boom forward)	2.5
Remove and replace wire harness	0.5
Horn	
Remove and replace horn button	0.5
Remove and replace horn	0.25
Remove and replace horn wire harness	0.5
Seat/Shoulder Belt	
Remove and replace belt (must replace complete assembly)	1.0
Warning Light (rotary beacon)	
Replace bulb	0.25
Warning Lights (four-way flashing lights)	
Remove and replace switch	0.05
Remove and replace lamp bulb or lamp assembly (1)	0.25
Remove and replace wire harness	2.0

https://truckmanualshub.com/

https://truckmanualshub.com/

SECTION 90 – PLATFORM, CAB, BODYWORK, AND DECALS

Chapter 1 – Cab and Seat

CONTENTS

Section	Description	Page
	General Information	90-2
	Seat and Seat Pan Support	90-2
90 152	Cab Inner Shell	90-3
90 120 10	Seat Removal	90-3
90 120 12	Seat Pan Support Removal	90-3
	Seat, Switch and Pan Reinstallation	90-5
	Cab Inner Shell	90-7
90 152 34	Cab Inner Shell Removal	90-7
90 152	Cab Inner Shell Reinstallation	90-14
90 108	Safety Decals	90-22
	Labor Guide	90-26

https://truckmanualshub.com/

GENERAL INFORMATION

Op. 90 108

SAFETY DECALS

The safety decals located on the skid steer are intended for the personal safety of you and those working with you.

Keep the decals legible. If they are not legible, replace as necessary.

SEAT AND SEAT PAN SUPPORT

Incorporated in the seat and seat belt buckle are switches that tie the seat and seat belt into the EIC (Electronic Instrument Cluster) Advanced Warning System. When the seat belt is unbuckled and/or the operator is out of the operator's seat, the boom and bucket control valve spools will be locked in the neutral position. The operator will have to properly sequence the system to unlock the controls, sit in the seat and buckle the seat belt.

1

The seat and seat pan support can be locked up in the raised position as shown at 1.

CAUTION

Do not work under a raised seat unless it is securely latched in the raised position.

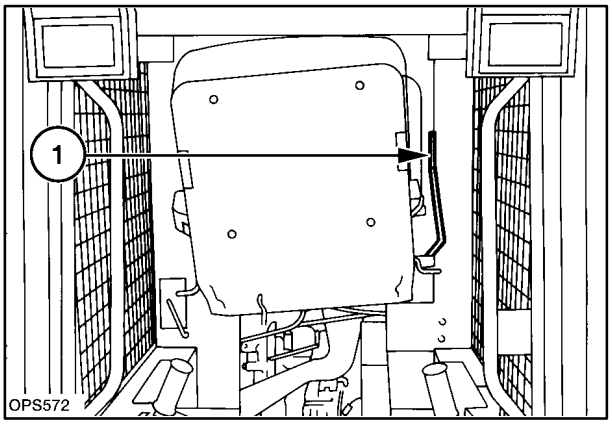

2

The seat/pan support assembly support rod, 1, is shown in the raised latched position at 2.

To lower the seat assembly, raise the seat upward to the top of the cab and pull the support rod, 1, forward to unlatch and lower the seat assembly.

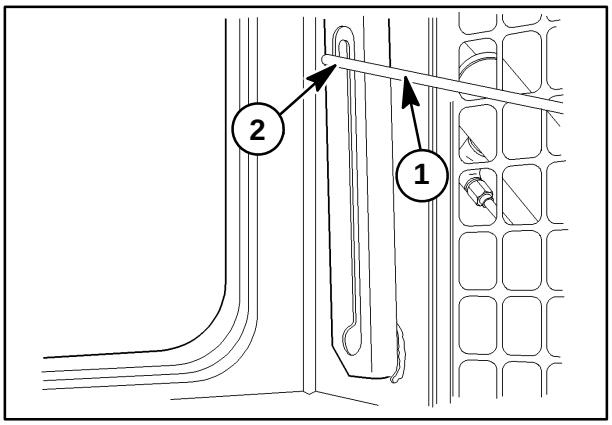

3

https://truckmanualshub.com/

When the operator's seat is returned to the operating position, make sure it is securely latched at 1.

CAUTION

Do not operate the skid steer unless the operator's seat is securely latched in the operating position.

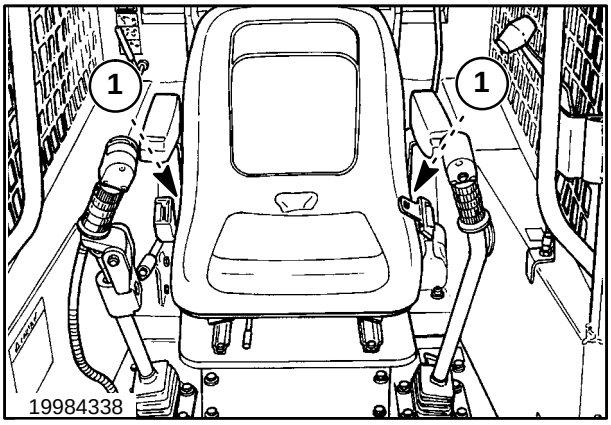

4

Op. 90 152

CAB INNER SHELL

The operator's seat and inner shell assembly (shown removed) are isolated on rubber mounts located at 1, one each side at front and at 2, one each side at rear.

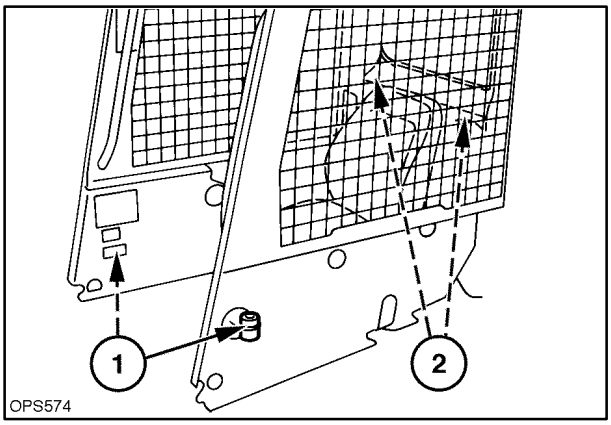

5

Op. 90 120 10

SEAT REMOVAL

This section describes how to remove the seat and seat pan support assembly.

Op. 90 120 12

SEAT PAN SUPPORT REMOVAL

1. Disconnect the negative (-) battery cable.

IMPORTANT: *Disconnect the (-) negative ground cable. Failure to disconnect the battery may result in damage to the EIC (Electronic Instrument Cluster) monitoring system and other electrical components.*

2. Disconnect the seat and seat belt wire harness connector, 1.

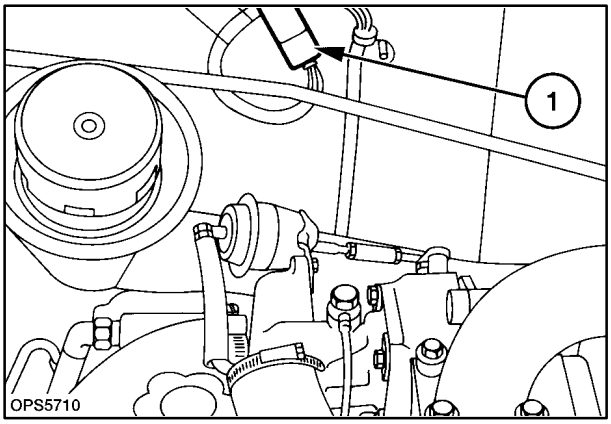

6

https://truckmanualshub.com/

3. Remove retaining pin from latch rod at 1 and remove rod.
4. Remove the seat pan support hardware at 2.
5. Unlatch the seat pan support at 3, and lift the seat and pan support assembly from the loader.

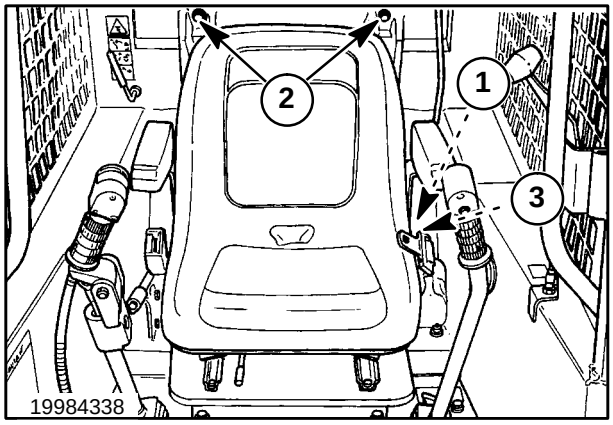

7

6. The right side of the seat and pan support holds the seat belt buckle, 1, wire harness, 2, and seat latch rod, 3.
7. To remove the seat belt buckle, remove the wire harness retaining clamp, 4, and buckle hardware, 5.

NOTE: *When reinstalling the seat belt buckle hardware, 5, tighten the pivot bolt tight enough to hold the belt in a set position but still allow movement of the buckle to the front or rear as required by the operator.*

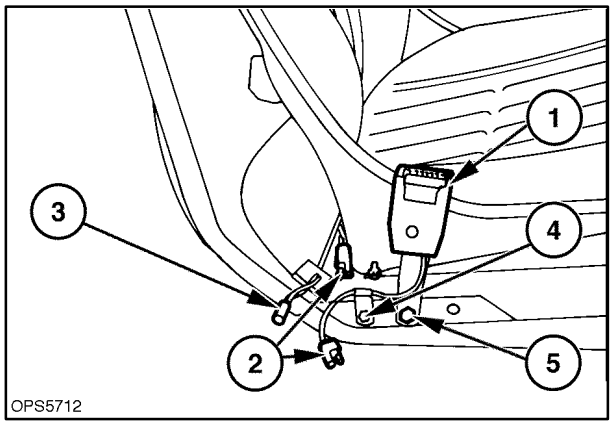

8

8. Remove the seat retaining hardware, 1, to separate the seat and seat track from seat pan support. Remove the wire clamp at 2, if the seat/seat belt wire harness is being replaced.
9. Holding the seat in place, unplug the seat switch(es). Disconnect the wire harness from the switch(es) by releasing the latch away from the switch.

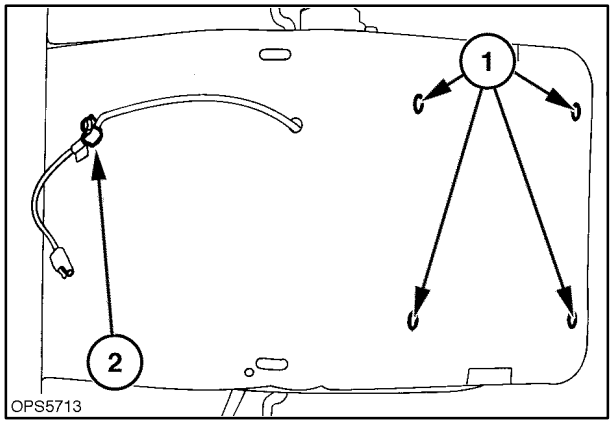

9

https://truckmanualshub.com/

10. To remove the seat tracks from the seat assembly remove the track retaining hardware, 1.

Op. 55 201 15

11. Remove the switch(es) from the seat pan, 2. Note the standard seat uses one switch and the deluxe seat uses two switches as shown.

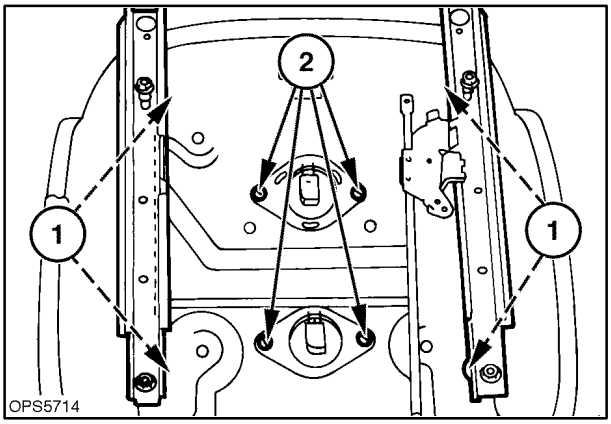

10

12. To remove the seat/seat belt wire harness, remove the grommet at 1, and pull the harness from the seat pan.
13. Remove the seat pan latch rod, 2, remove the retaining hardware, 3.

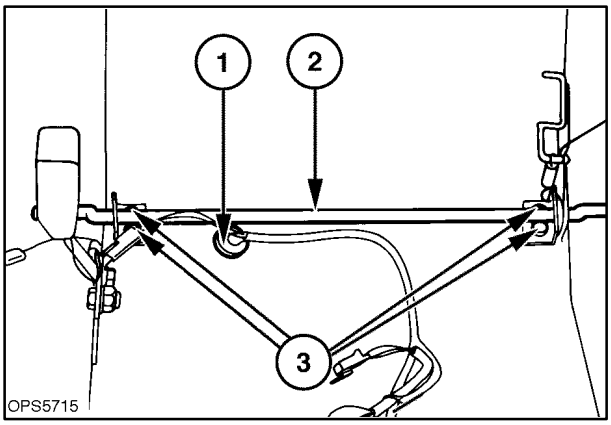

11

SEAT, SWITCH AND PAN REINSTALLATION

1. Install the switch(es) into the seat pan, making sure the switch is seated into the hole in the seat pan, 1.

IMPORTANT: *If the switch is not seated properly when the retaining hardware is tightened, the switch flange will be broken.*

2. Reconnect the wire harness to the switch(es) and reinstall the seat retaining hardware. Make sure the harness connector latches are engaged.

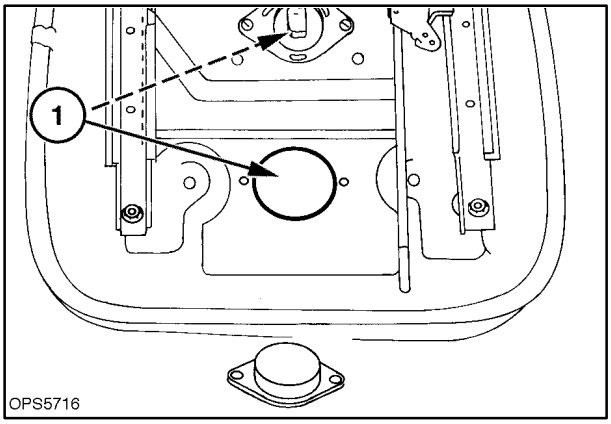

12

https://truckmanualshub.com/

3. Reattach the seat to the seat pan support with retaining hardware at 1.

NOTE: *If the seat/seat belt wire harness was removed, reinstall the wire grommet in seat pan at 2, and wire clamp on back of seat, 3, to retain the wire harness.*

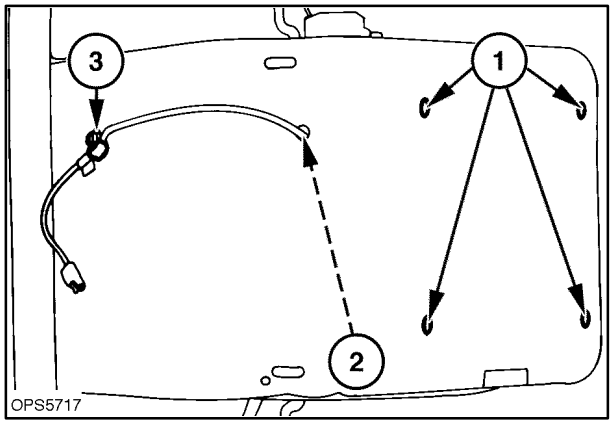

13

4. Reinstall the seat and seat pan support assembly into the loader and attach with hardware at 1.

   If the seat pan latch rod, 2, or latch plates, 3, were removed, they may require adjustment to ensure proper seat latching.

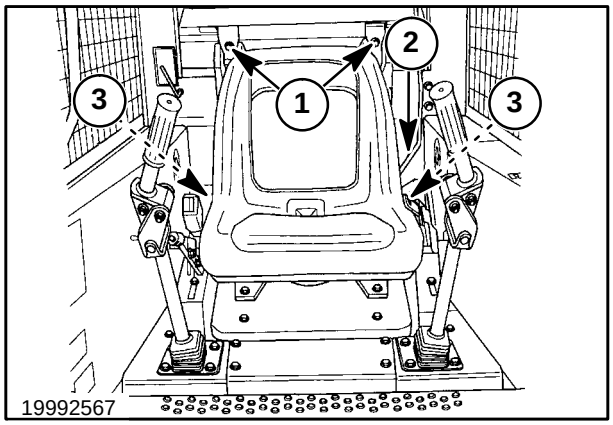

14

5. To adjust the latches, 1, lower the seat down to the operating position and slide the latches, 1, to obtain full engagement of latches and latch rod. After the latches are adjusted, release latch rod, raise seat and lower seat to operating position. Try lifting on the front of the seat to verify seat pan support is latched securely.

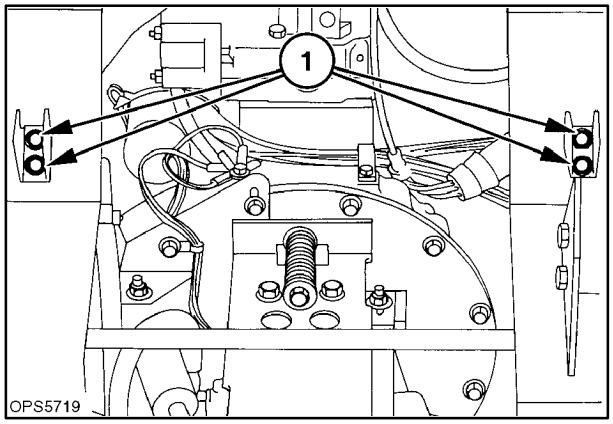

15

https://truckmanualshub.com/

6. Reconnect the seat/seat belt wire harness connector to the main wire harness behind the seat at 1.

NOTE: *Position the seat/seat belt and main wire harness to the front of the boom lock linkage, 2, to prevent interference. If the wires are to the back side of the linkage, the wires will not stay connected when the seat is raised.*

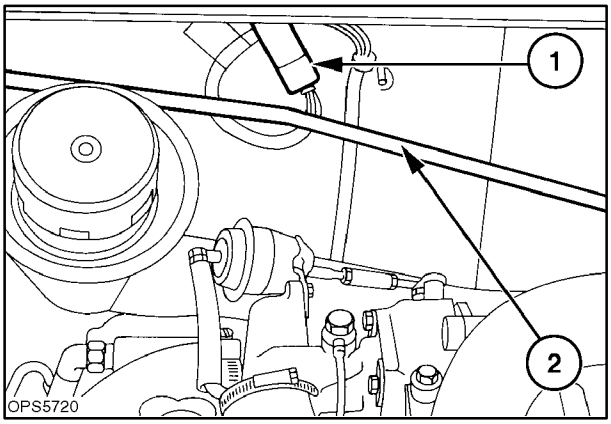

16

CAB INNER SHELL

This section describes how to remove and install the cab inner shell.

Op. 90 152 34

REMOVAL

1. Disconnect the negative (-) battery cable.

IMPORTANT: *Disconnect the (-) negative ground cable. Failure to disconnect the battery may result in damage to the EIC (Electronic Instrument Cluster) monitoring system and other electrical components.*

2. Disconnect the seat and seat belt wire harness connector, 1.

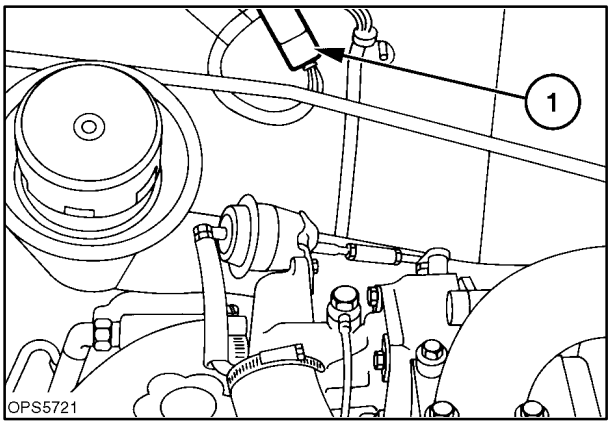

17

3. Remove the EIC board retaining hardware, 1, and remove the EIC board from the overhead dash area.
4. Unplug the two wire harness connectors from the EIC, taking care to not stress or bend the plastic locking ramps on the connectors.

NOTE: *Note the positioning of the connectors to the EIC board, and reconnect in the correct position during installation. If the connector is not connected properly, damage to the EIC may occur.*

IMPORTANT: *Do not service the EIC board with magnetized tools, wrenches, screwdrivers, etc., or magnets. Severe damage to the EIC board may occur.*

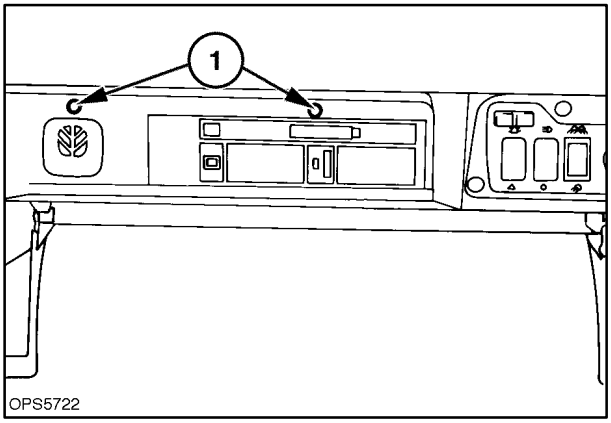

18

https://truckmanualshub.com/

5. Remove the right and left headliner supports retaining hardware, 1, right side shown, and remove both supports and headliner.
6. Remove the fuse panel retaining hardware, 2, and lower the fuse panel.

   DO NOT remove any wires from any switches or fuse blocks.

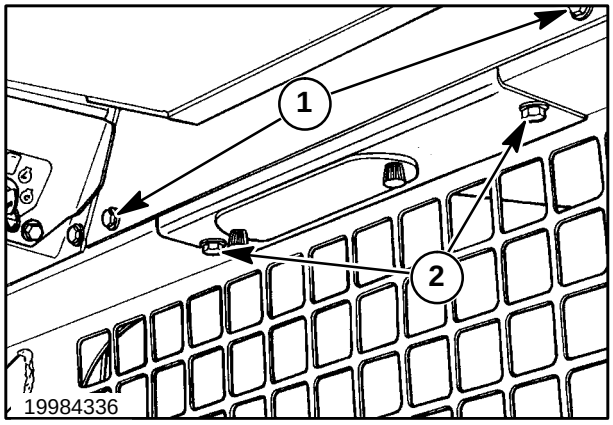

19

7. Remove the ignition switch panel hardware, 1, and lower the switch panel.

   DO NOT remove any wires from any switches.

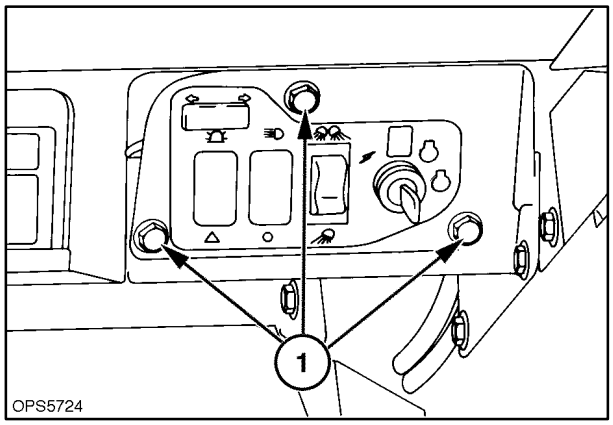

20

8. Remove any ground wires attached to cab ground terminal at 1.
9. Remove any wire harness ties or clamps in the upper cab area at this time. Remove the wire harness, fuse and switch panels from the right cab side sheet.
10. If the unit is equipped with front lights, the light harness and light bulbs must be removed.

IMPORTANT: *Touching the light bulb element may damage the element and cause a premature failure.*

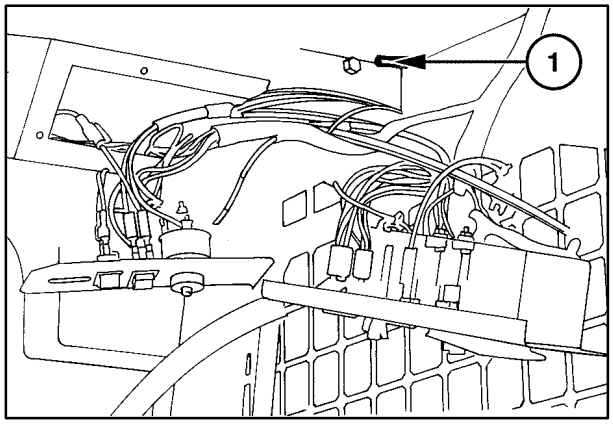

21

https://truckmanualshub.com/

11. Remove the light assembly, 1, from the pod by pushing the light assembly to the left, unlatching it from the pod.
12. Remove light pod retaining hardware, 2, and remove the pod assembly.

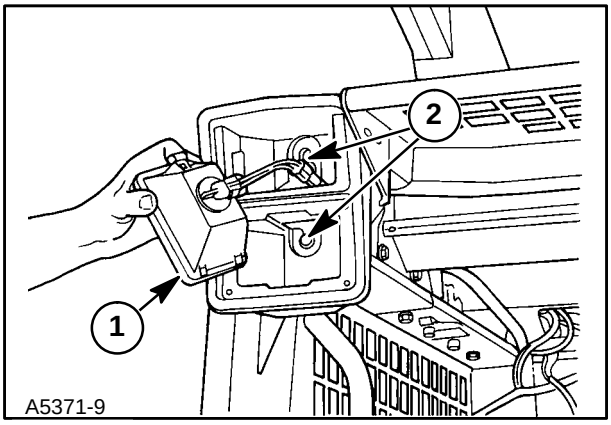

22

13. Remove the front cross support, 1, by removing hardware, 2, separating the cross member from the right and left side panels.

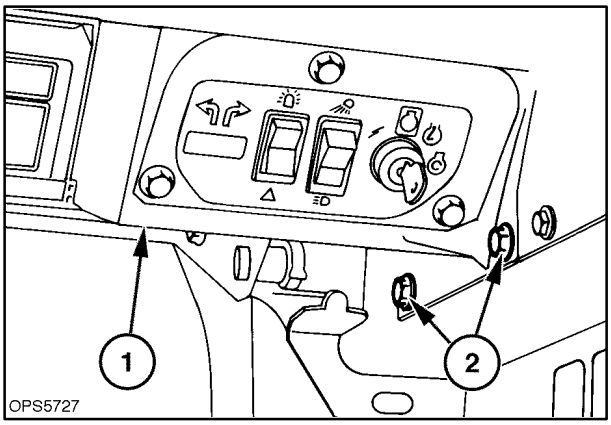

23

14. Remove the rear window and frame assembly retaining hardware, 1, and lift the window and frame from the loader.

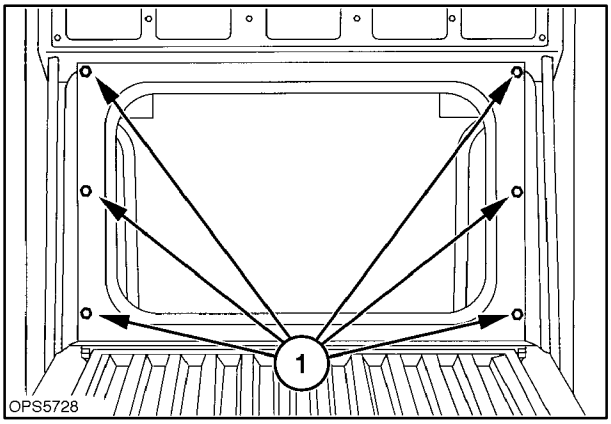

24

https://truckmanualshub.com/

15. Remove the retaining pin from latch rod at 1, and remove the rod.
16. Disconnect the seat/seat belt wire harness from the main harness, unless previously unplugged. Remove the seat pan support hardware at 2.
17. Unlatch the seat pan support at 3, and lift the seat and pan support assembly from the loader.

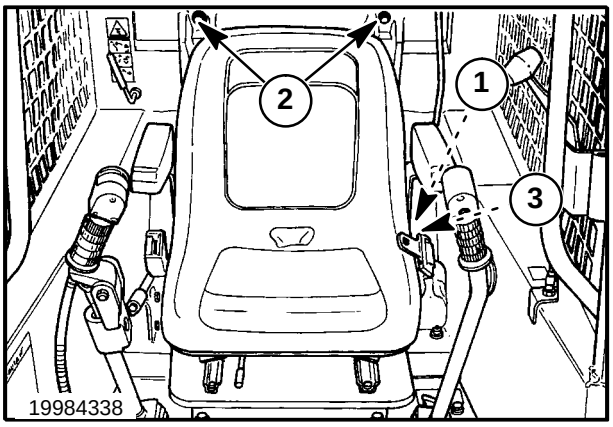

25

18. Remove the four retaining screws from the front shield, 1, and the eight retaining bolts from the step shield, 2. Remove both shields from the loader.

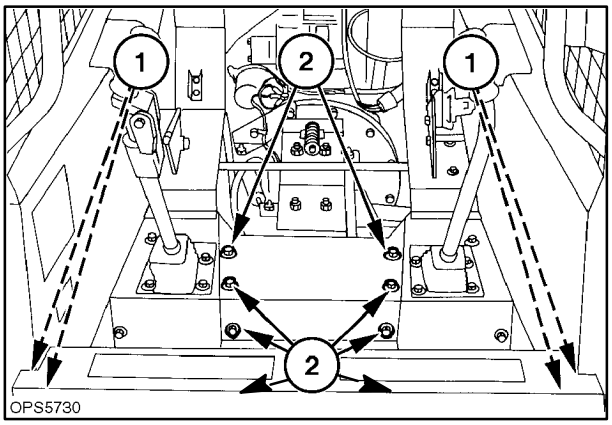

26

19. Remove the retaining hardware, 1, of the right and left fenders to access the front isolator mount bolts and wire harness.

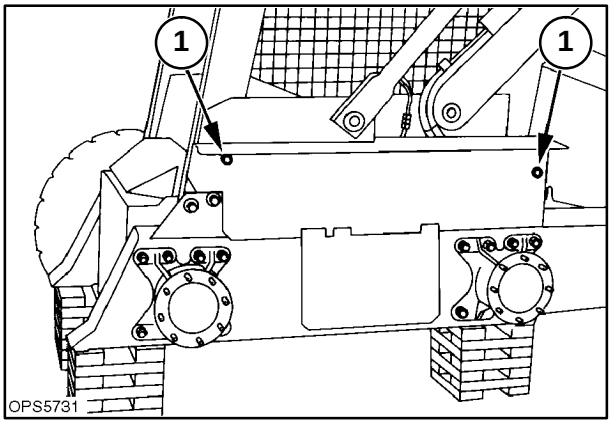

27

https://truckmanualshub.com/

20. Remove all wire harness retaining clamps and ties, 1, from the side panels.

    Cut wire tie at keeper bar at left front to rear of cab pivot.

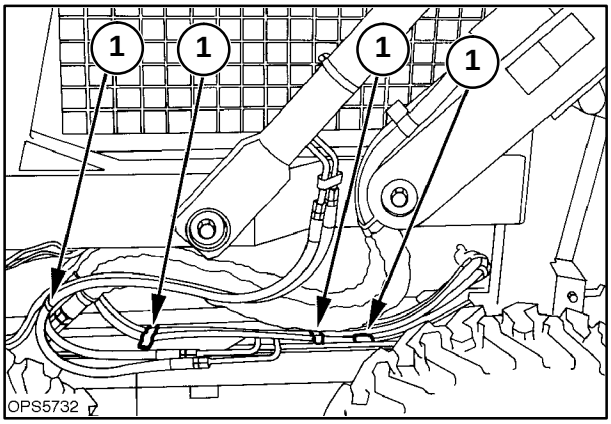

28

21. Remove any wire harness clamps and cut wire ties along the rear of the seat support and side panels, 1.

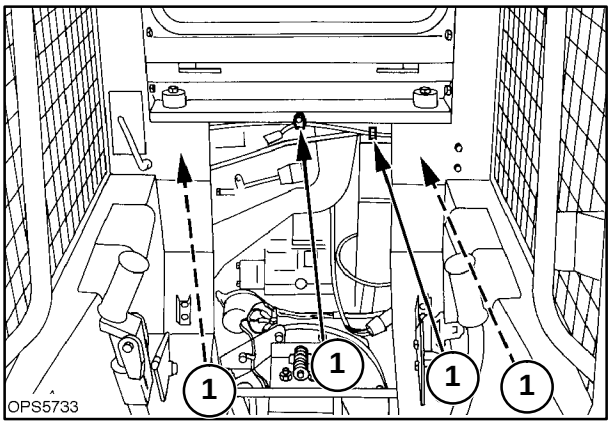

29

22. Remove the upper rear support retaining hardware, 1, right and left side and remove support.

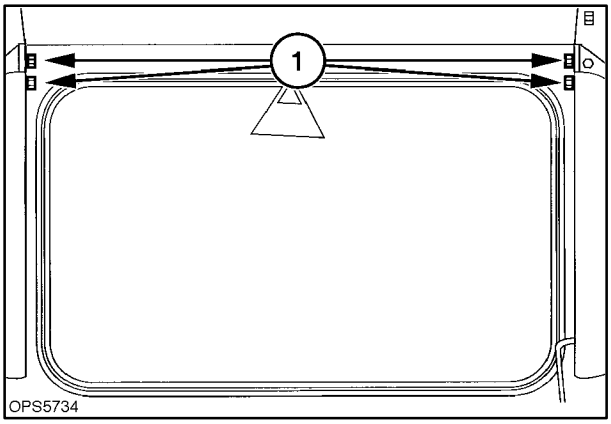

30

https://truckmanualshub.com/

23. Remove the rear seat support, 1, hardware at 2, and the isolator mount hardware, 3.

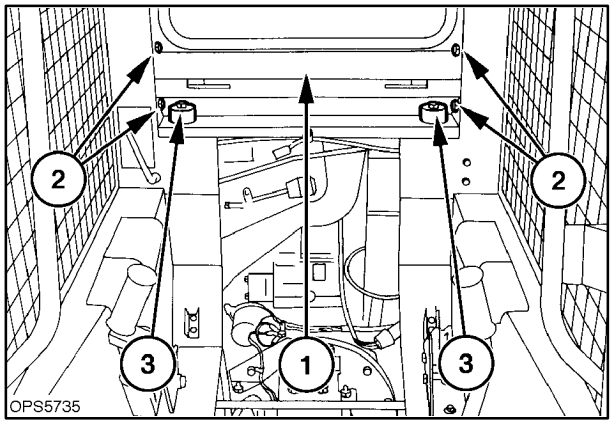

31

24. Remove the right and left hydrostatic control handle assembly retaining hardware, 1. Unhook the hydrostatic control linkage and auxiliary boom hydraulic linkage (if equipped). Unplug any electrical connections, and lift the control assemblies from the loader.

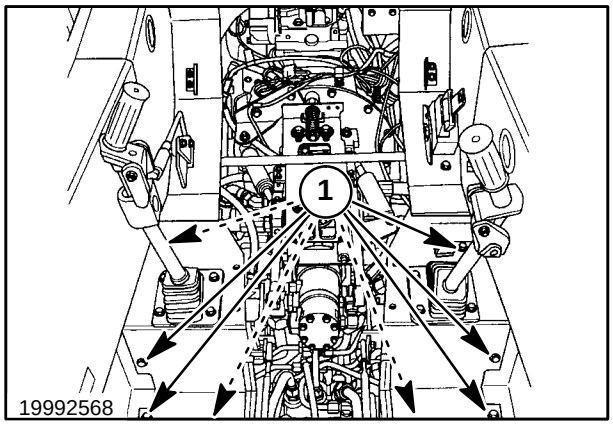

32

25. Remove the left and right side shield isolator and hardware at 1 (right side shown).

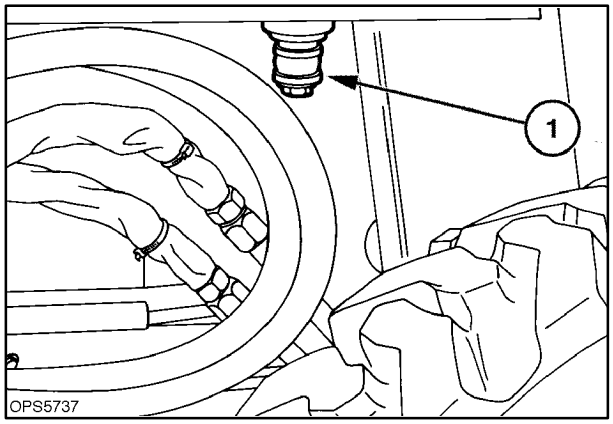

33

https://truckmanualshub.com/

26. Lift the wire harness, 1, with the switch and fuse panels from the right side shield. Remove any remaining wire ties or clamps from the wire harness and right side shield, if not previously removed.

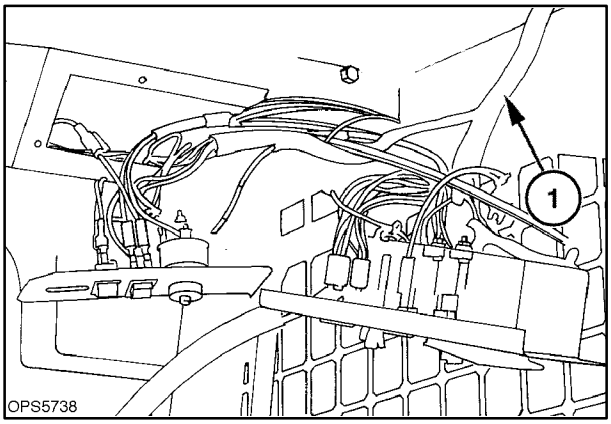

34

27. Remove the throttle control cable, 1, from the control lever at 2. Remove the cable retaining nut, 3, and slide the cable down through the right side shield at 4.

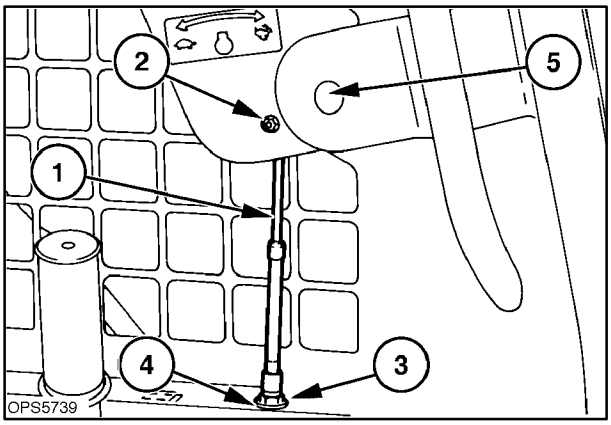

35

28. Remove the cotter pins from the parking brake control link spring at 1. Unhook the spring link from the control rod, 2.
29. Remove the control rod support hardware.
30. Remove the control lever hardware.
31. Rotate the control rod down to remove link from the side shield, and slide the rod from the support.

Now the side shields can be removed from the loader ROPS frame.

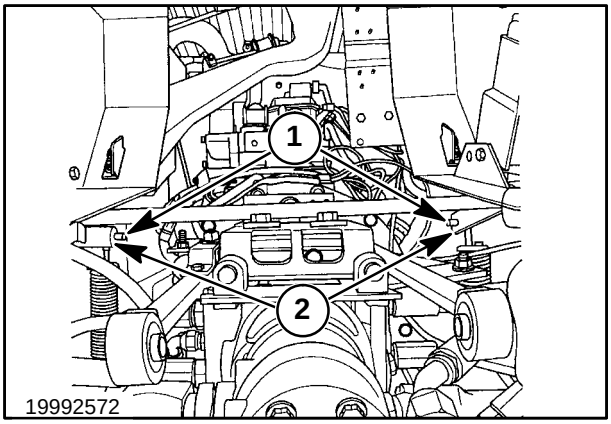

36

https://truckmanualshub.com/

Cab inner shell removed from the loader ROPS.

1. Right side shield
2. Left side shield
3. Headliner supports
4. Upper rear support
5. Lower seat support
6. Front support (dash) not shown

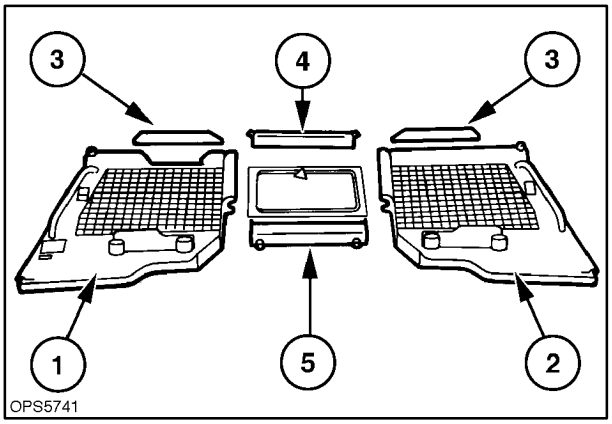

37

The loader ROPS with the seat and inner shell removed.

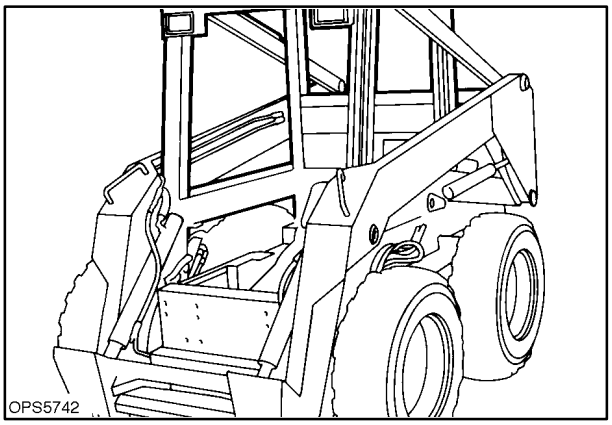

38

REINSTALLATION

1. Position the right and left side shields inside the loader frame.
2. Install the front side isolators and retaining hardware, 1. Do not tighten at this time.

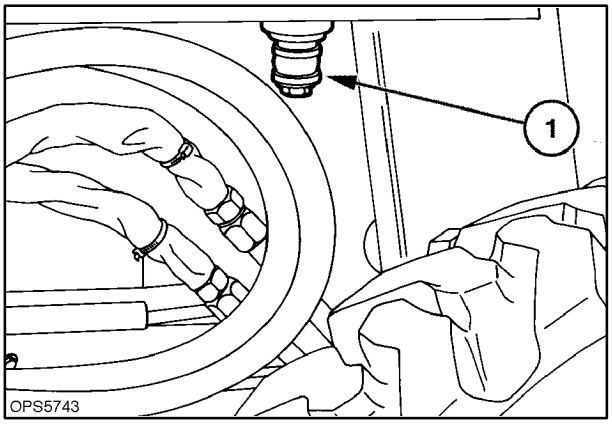

39

https://truckmanualshub.com/

3. Lay the main cab wire harness along the inside of the right side shield, 1, at the top and right rear corner.

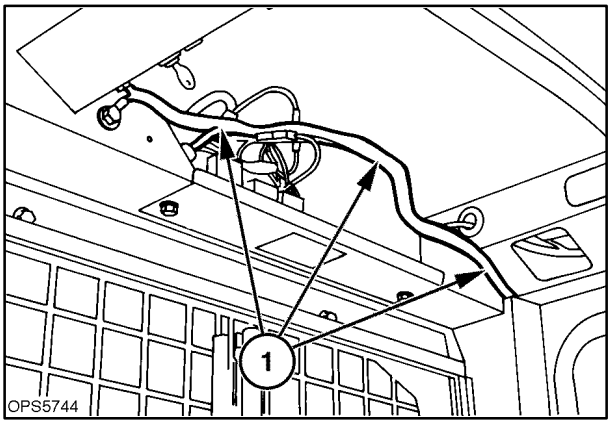

40

4. Position the side shields and install the rear lower support hardware, 1, isolators and retaining hardware, 2. Do not tighten at this time.

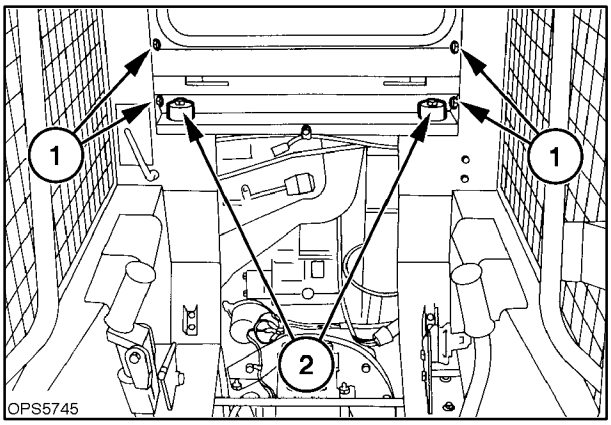

41

5. Install the upper rear support, 1, and hardware, 2. Do not tighten at this time.

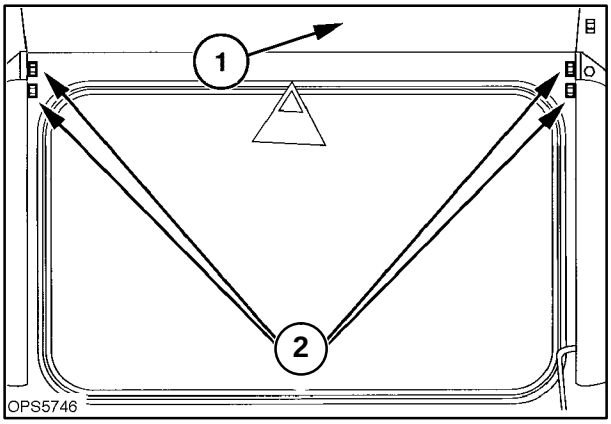

42

https://truckmanualshub.com/

6. Install the front cross member, 1, and retaining hardware. Do not tighten at this time.
7. Position the inner shell assembly squarely with the ROPS frame. Make sure the wire harness, 2, is positioned to prevent damage to the harness when the inner shell isolators and support hardware are tightened.
8. Tighten the front support hardware.

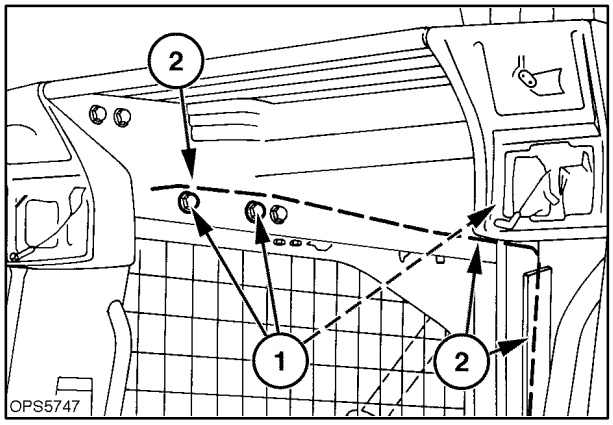

43

9. Tighten the hardware, 1, for the upper rear support, 2.

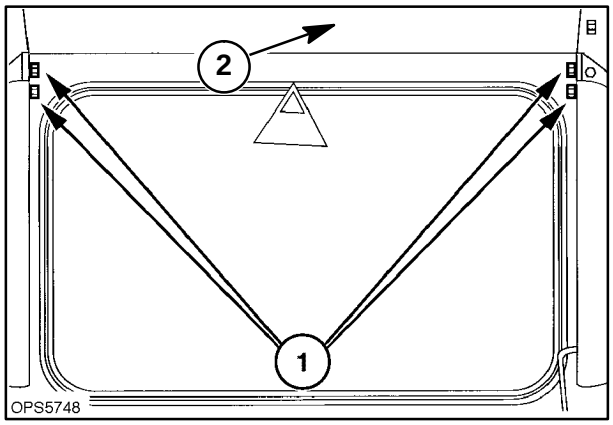

44

10. With the inner shell positioned and cross supports securely tightened, tighten the front, 2, and rear, 3, isolator support hardware at this time.

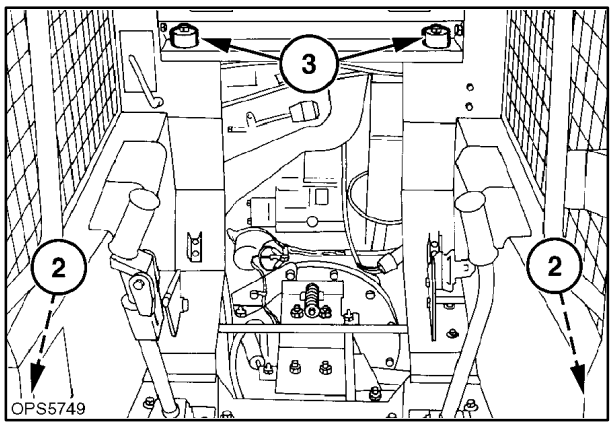

45

https://truckmanualshub.com/

11. Reinstall all wire harness retaining clamps and plastic ties to secure the harness, 1, in the upper right rear corner of the operator's cab.

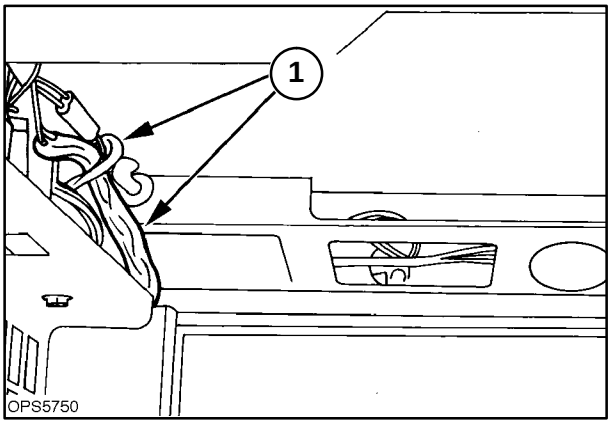

46

12. Reinstall the wire harness clamps and ties along the rear of the operator's seat. Make sure the harness is positioned to the inside of the boom lock linkage at 2 to prevent interference.

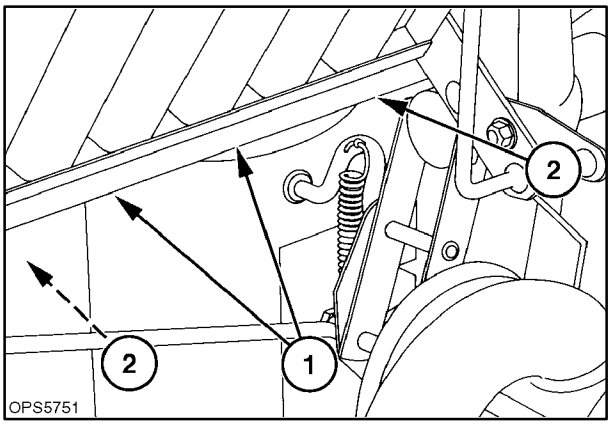

47

13. Reinstall the wire harness clamps and ties along the left side of the operator's cab at 1.
14. Position the rear of the harness and engine relay/fuse panel and install harness clamps and ties at 2.
15. With the harness positioned pull a loop (excess) of harness through the support at 3, to retain the excess wire harness.

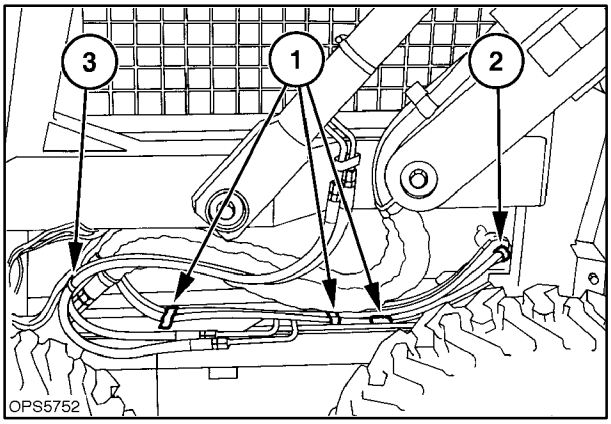

48

https://truckmanualshub.com/

16. Reinstall the light pods, light wire harness and lights.
17. Reconnect the wire harness to all switches and EIC (Electronic Instrument Cluster) previously removed.

NOTE: *Plug the two wire harness connectors into the EIC, noting the correct positioning of the connectors. If the connectors are not connected properly, damage to the EIC may occur.*

IMPORTANT: *Do not service the EIC board with magnetized tools, wrenches, screwdrivers, etc., or magnets. Severe damage to the EIC board may occur.*

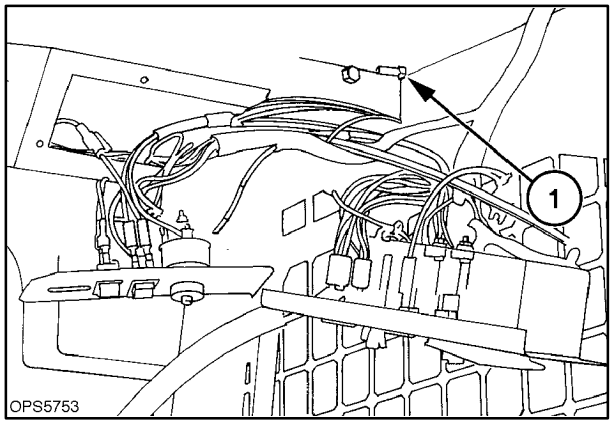

49

18. Remove any paint from the ground surface and attach ground wires at 1.

NOTE: *When attaching ground wires, always place the heaviest ground wire next to the ground surface and then stack the remaining ground wires according to size on top of the heaviest wire.*

19. Remove any paint from the ground surface and attach the ground strap, 1, from the cab inner shell to the lower main frame.

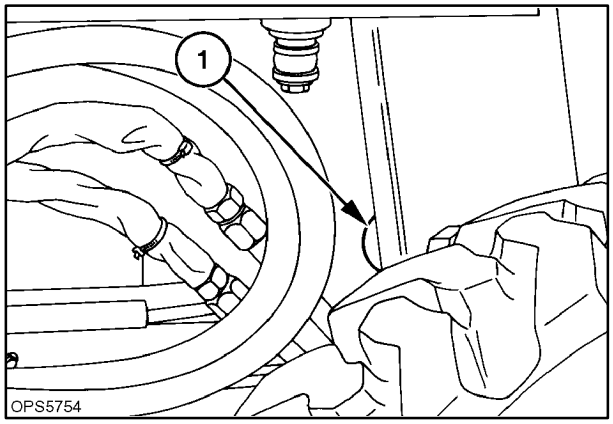

50

20. Reinstall the wire harness along the right side shield at 1. Install wire clamps and ties to prevent harness damage. Install the service/run switch, fuse panel and ignition switch panel.

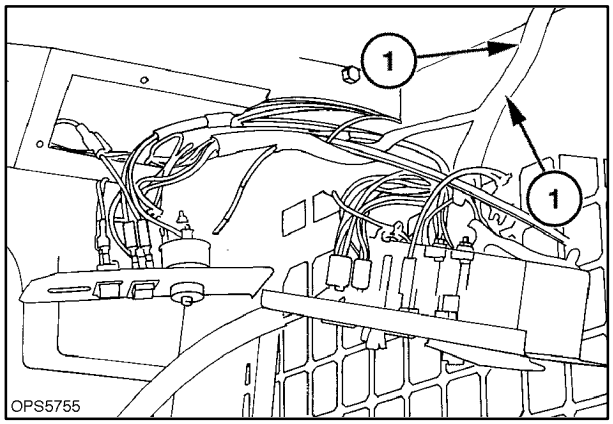

51

https://truckmanualshub.com/

21. Reinstall the parking brake control rod and pivot bearings. Install the right bearing into the right support, 1.

    Slide control rod, 2, into right bearing, place the left bearing and support over rod at 3, and rotate control rod link into cab at 4. Attach the left bearing support to the cab at 5.

    Assembly the brake handle and attach to the control link at 6.

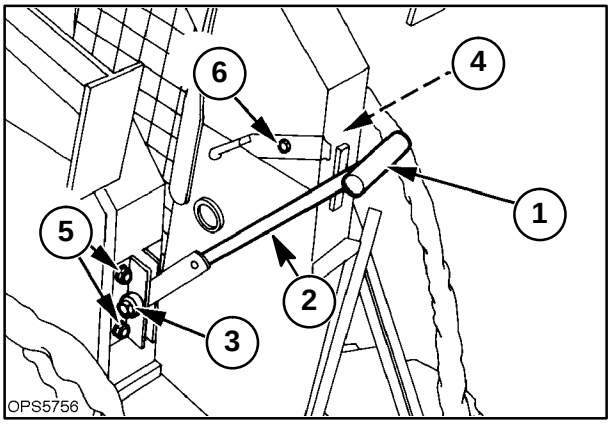

52

22. Slide the spring, 1, and washer, 2, over the end of rod, 3. Insert the rod and spring assembly into the handle at 4. Insert bushing, 5, into latch plate, 6, and insert the latch plate into handle at 7, with the extended area, 8, to the rear (engine side) of lever and position the rod assembly, 3, so the hook is back of the latch plate at 9.

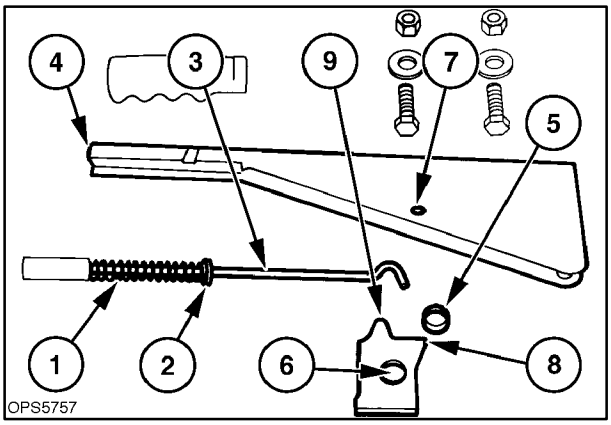

53

23. Attach the handle assembly, 1, to the control link at 2. Slide the handle grip, 3, over end of handle, 1. Use silicone or weather strip glue to hold grip in position.

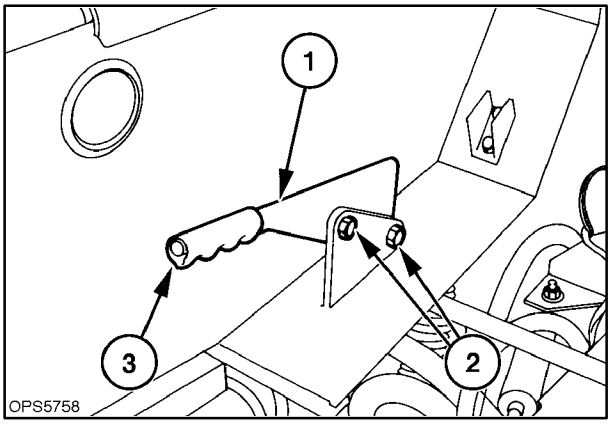

54

https://truckmanualshub.com/

24. Reconnect the spring links, 1, to the control rod at 2 and install the cotter pins.

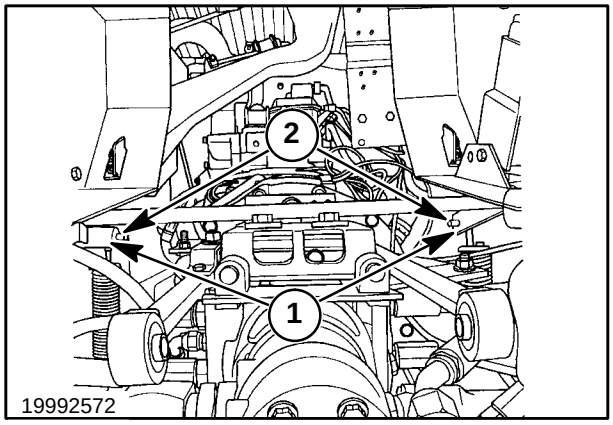

55

25. Reinstall the seat/seat pan support assembly and connect the seat/seat belt wire harness to the main wire harness, 1. Make sure the wire harness, 2, is to the inside of the boom lock linkage to prevent interference when the seat pan support assembly is pivoted up to the raised, latched position.
26. Reinstall the headliner and supports.

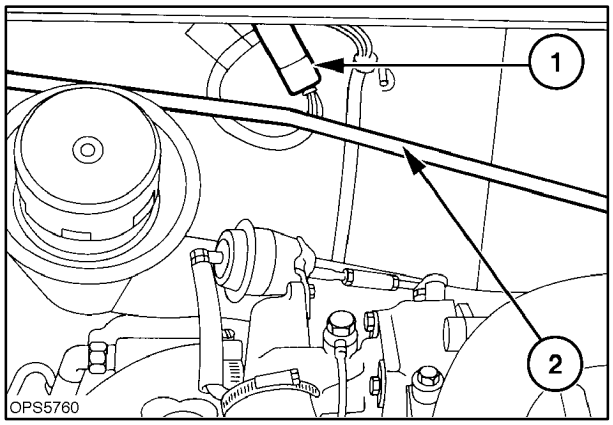

56

27. Reinstall the right and left hydrostatic control lever assemblies, 1.

    After the assemblies are installed, check the levers for parallel, external stop, and neutral adjustment. If adjustment is required, refer to the operator's manual for detailed adjustment information.

28. Reinstall the rear window assembly.

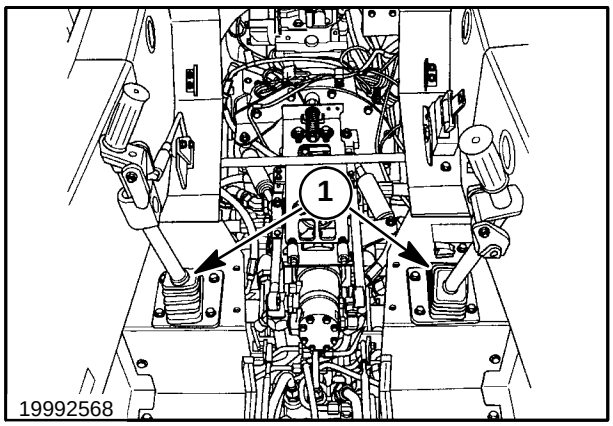

57

https://truckmanualshub.com/

29. Slide the throttle cable up through the hole in the left cab panel and secure with retaining nut at 1. Attach the control lever, 2, to the cab panel at 3, with 3/8″ x 1-1/2″ cap screw; friction disc, 4; spring, 5; 3/8″ flat washer; and locknut. Tighten the pivot hardware to hold the control lever in set position. Over tightening will require more effort to set throttle.
30. Reconnect the (-) negative ground battery cable.
31. Reinstall any shields and fenders previously removed.

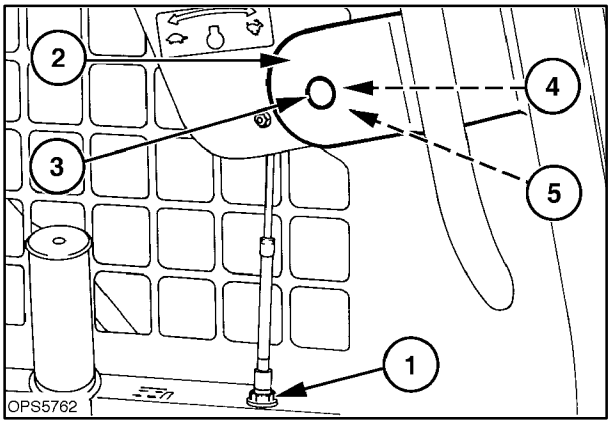

58

https://truckmanualshub.com/

Op. 90 108

SAFETY DECALS

The following safety decals have been placed on your machine in the areas indicated. They are intended for the personal safety of you, and those working with you. Please take this manual, walk around your machine and note the content and location of these warning signs. Review these decals with your machine operators.

Keep the decals legible. If they are not, obtain replacements from your New Holland dealer. The decal part numbers are listed with each decal.

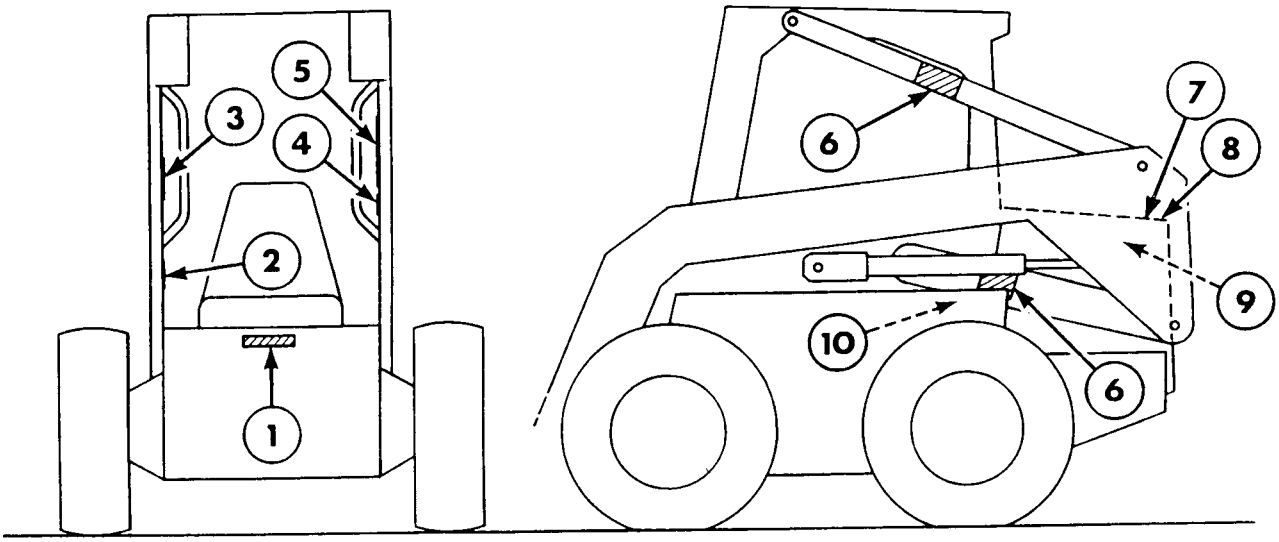

1. Danger: Do not allow passengers to ride on the skid steer at any time. Do not get under boom unless supported by the boom lock pins.

   Part #86521685

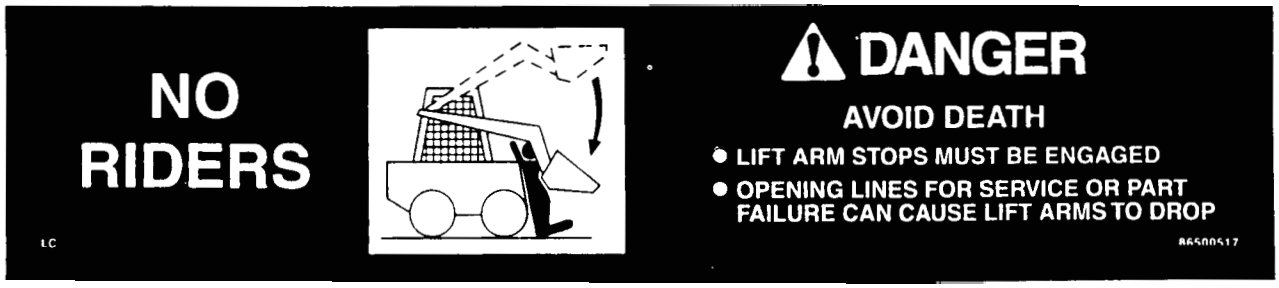

2. Caution: Do not allow anyone to operate the skid steer without proper instruction.

   Part #86521688

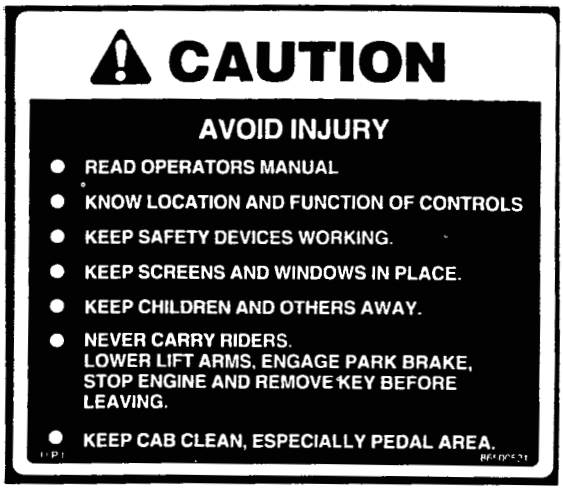

https://truckmanualshub.com/

3. Danger: Before exiting the skid steer, lower the lift arms and attachment to the ground or rest lift arms on the boom stops. Stop engine and engage the parking brake.

   Part #86521683

4. Warning: Do not overload! Never lift more than the maximum SAE load rating of the skid steer. Never transport a loaded bucket at full height. Operate the skid steer with the load as low as possible.

   Part #86521716
   LS160 - 682 kg/1500 lbs. (Mfg. Rating)

   Part #86521717
   LS170 - 770 kg/1700 lbs. (Mfg. Rating)

5. Warning: Never operate the skid steer without the seat belt securely fastened.

   Part #86521686

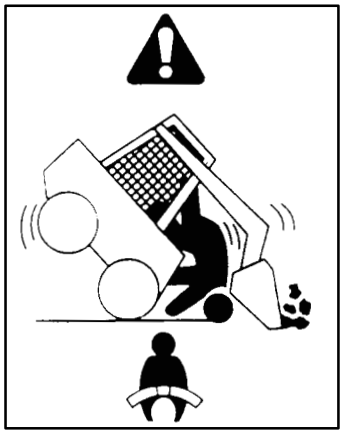

https://truckmanualshub.com/

6. Warning: Keep clear of moving parts. Keep bystanders clear of the skid steer at all times unless the boom is down on the ground or the boom is resting on the boom lock pins and engine is off. Never extend any part of the body outside of the operator's area.

   Part #86521673

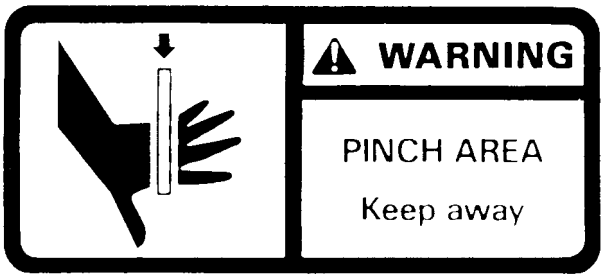

7. Warning: Keep clear! Rotating fan - stop engine.

   Part #9828825

8. Warning: Do not allow anyone near the skid steer while the engine is running and the skid steer is operational.

   Part #86509972

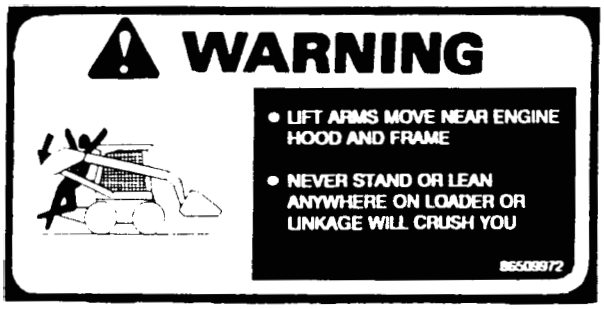

9. Caution: Do not spray ether into air intake. Explosion and injury could result.

   Part #796286

https://truckmanualshub.com/

10. Danger: Use only the New Holland cab jack kit to tilt the cab. Read instructions before tilting cab. Do not remove cab hardware until cab jack is installed. Failure to do so may cause cab to fall causing serious injury or death.

    Part #86521713

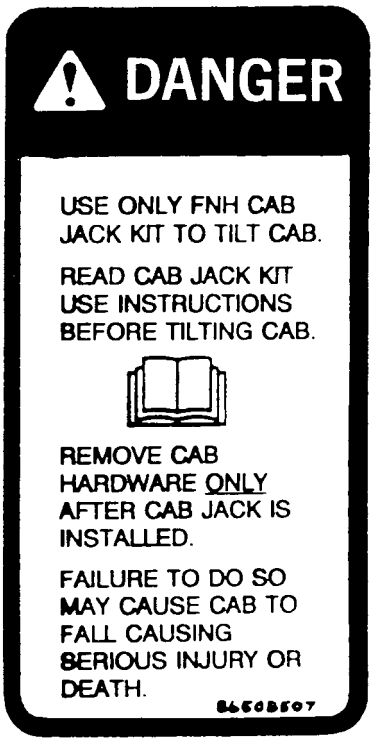

11. Danger: New Holland skid steer cab tilting tool. Read cab tilting instructions and use with proper mounting brackets before tilting cab. (Located on the cab tilting jack).

    Part #86508506

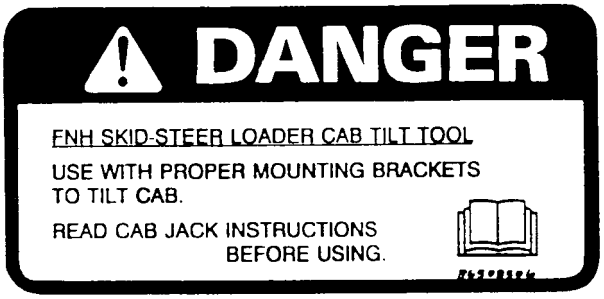

https://truckmanualshub.com/

LABOR GUIDE

The following labor amounts are listed as a guide only. Working conditions and experience will vary the time it actually takes to complete each job.

Job Description	Hours
Remove and replace seat, seat support	1.5 hrs.
Remove and replace switches (1)	0.5 hrs.
Remove and replace seat support lock linkage	0.5 hrs.
Remove and replace cab inner shell	6.5 hrs.