https://truckmanualshub.com/

Genie®
A TEREX BRAND

Operator's Manual

GS-1530/32
GS-1930/32
GS-2032
GS-2632
GS-3232
GS-2046
GS-2646
GS-3246
GS-4047

CE

with
Maintenance
Information

Original Instructions
Ninth Edition
Second Printing
Part No. 1270101

Downloaded from www.Manualslib.com manuals search engine

https://truckmanualshub.com/

Important

Read, understand and obey these safety rules and operating instructions before operating this machine. Only trained and authorized personnel shall be permitted to operate this machine. This manual should be considered a permanent part of your machine and should remain with the machine at all times. If you have any questions, contact us.

Contact Us:

Internet: www.genielift.com

E-mail: awp.techpub@terex.com

Contents

Introduction 1
Symbol and Hazard Pictorials Definitions 3
General Safety 5
Personal Safety 7
Work Area Safety 8
Legend 16
Controls 19
Inspections 23
Operating Instructions 40
Transport and Lifting Instructions 50
Maintenance 55
Specifications 57

Copyright © 1997 Terex Corporation

Ninth Edition: Second Printing, May 2016

Genie is a registered trademark of Terex South Dakota, Inc. in the U.S.A. and many other countries. “GS” is a trademark of Terex South Dakota, Inc.

CE Complies with EC Directive 2006/42/EC
See EC Declaration of Conformity

Downloaded from www.Manualslib.com manuals search engine

https://truckmanualshub.com/

Introduction

Owners, Users and Operators:

Thank you for choosing our machine for your application. Our number one priority is user safety, which is best achieved by our joint efforts. We feel that you make a major contribution to safety if you, as the equipment users and operators:

1 **Comply** with employer, job site and governmental rules.

2 **Read, understand and follow** the instructions in this and other manuals supplied with this machine.

3 **Use good safe work practices** in a commonsense way.

4 **Only have trained/certified operators**, directed by informed and knowledgeable supervision, running the machine.

Danger

Failure to obey the instructions and safety rules in this manual will result in death or serious injury.

Do Not Operate Unless:

☑ You learn and practice the principles of safe machine operation contained in this operator's manual.

1 **Avoid hazardous situations.**

Know and understand the safety rules before going on to the next section.

2 Always perform a pre-operation inspection.

3 Always perform function tests prior to use.

4 Inspect the workplace.

5 Only use the machine as it was intended.

☑ You read, understand and obey the manufacturer's instructions and safety rules—safety and operator's manuals and machine decals.

☑ You read, understand and obey employer's safety rules and worksite regulations.

☑ You read, understand and obey all applicable governmental regulations.

☑ You are properly trained to safely operate the machine.

Downloaded from www.Manualslib.com manuals search engine

https://truckmanualshub.com/

Introduction

Hazard Classification

Decals on this machine use symbols, color coding and signal words to identify the following:

Safety alert symbol—used to alert you to potential personal injury hazards. Obey all safety messages that follow this symbol to avoid possible injury or death.

DANGER Indicates a hazardous situation which, if not avoided, will result in death or serious injury.

WARNING Indicates a hazardous situation which, if not avoided, could result in death or serious injury.

CAUTION Indicates a hazardous situation which, if not avoided, could result in minor or moderate injury.

NOTICE Indicates a property damage message.

Intended Use

This machine is intended to be used only to lift personnel, along with their tools and materials to an aerial work site.

Safety Sign Maintenance

Replace any missing or damaged safety signs. Keep operator safety in mind at all times. Use mild soap and water to clean safety signs. Do not use solvent-based cleaners because they may damage the safety sign material.

Downloaded from www.Manualslib.com manuals search engine

https://truckmanualshub.com/

Symbol and Hazard Pictorials Definitions

Read the operator's manual	Read the service manual	Crush hazard	Crush hazard	Collision hazard
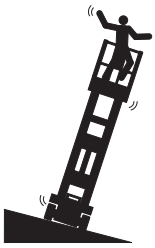 Tip-over hazard	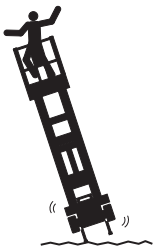 Tip-over hazard	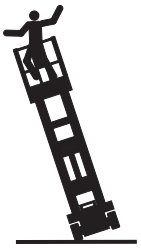 Tip-over hazard	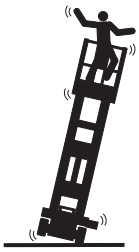 Tip-over hazard	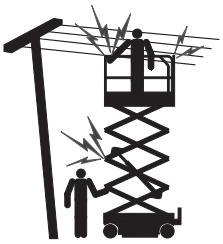 Electrocution hazard
Electrocution hazard	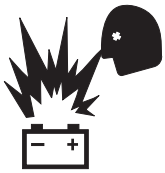 Explosion hazard	Fire hazard	Burn hazard	Skin injection hazard
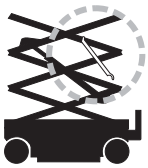 Engage safety arm	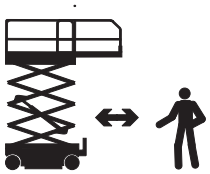 Keep away from moving parts	Keep clear of outriggers and tires	Move machine to level ground	Close chassis tray
Lower the platform	Do not set up where it cannot be leveled with outriggers	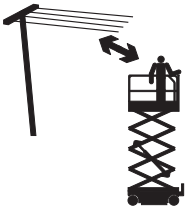 Maintain required clearance	Only trained maintenance personnel should access compartments	Use a piece of cardboard or paper to search for leaks

Downloaded from www.Manualslib.com manuals search engine

https://truckmanualshub.com/

Symbol and Hazard Pictorials Definitions

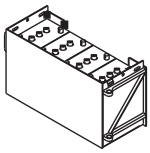 Batteries used as counterweights	Chock the wheels	Release brakes	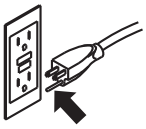 Grounded AC 3-wire only	Replace damaged wires and cords
Wheel load	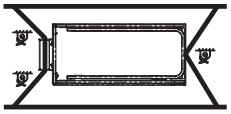 Transport diagram	Tiedown	Lanyard anchorage points	No smoking
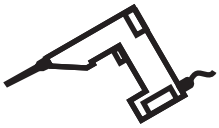 Voltage rating for power to platform	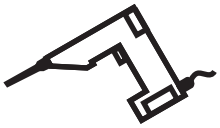 Pressure rating for air line to platform	Manual force	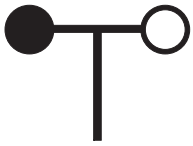 Wind speed	
Maximum capacity	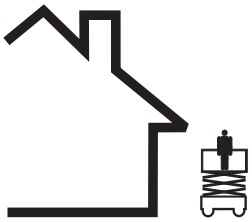 Outdoor	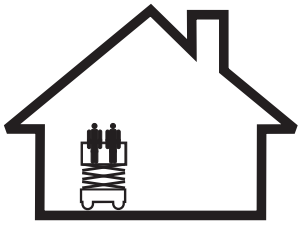 Indoor		

Downloaded from www.Manualslib.com manuals search engine

https://truckmanualshub.com/

General Safety

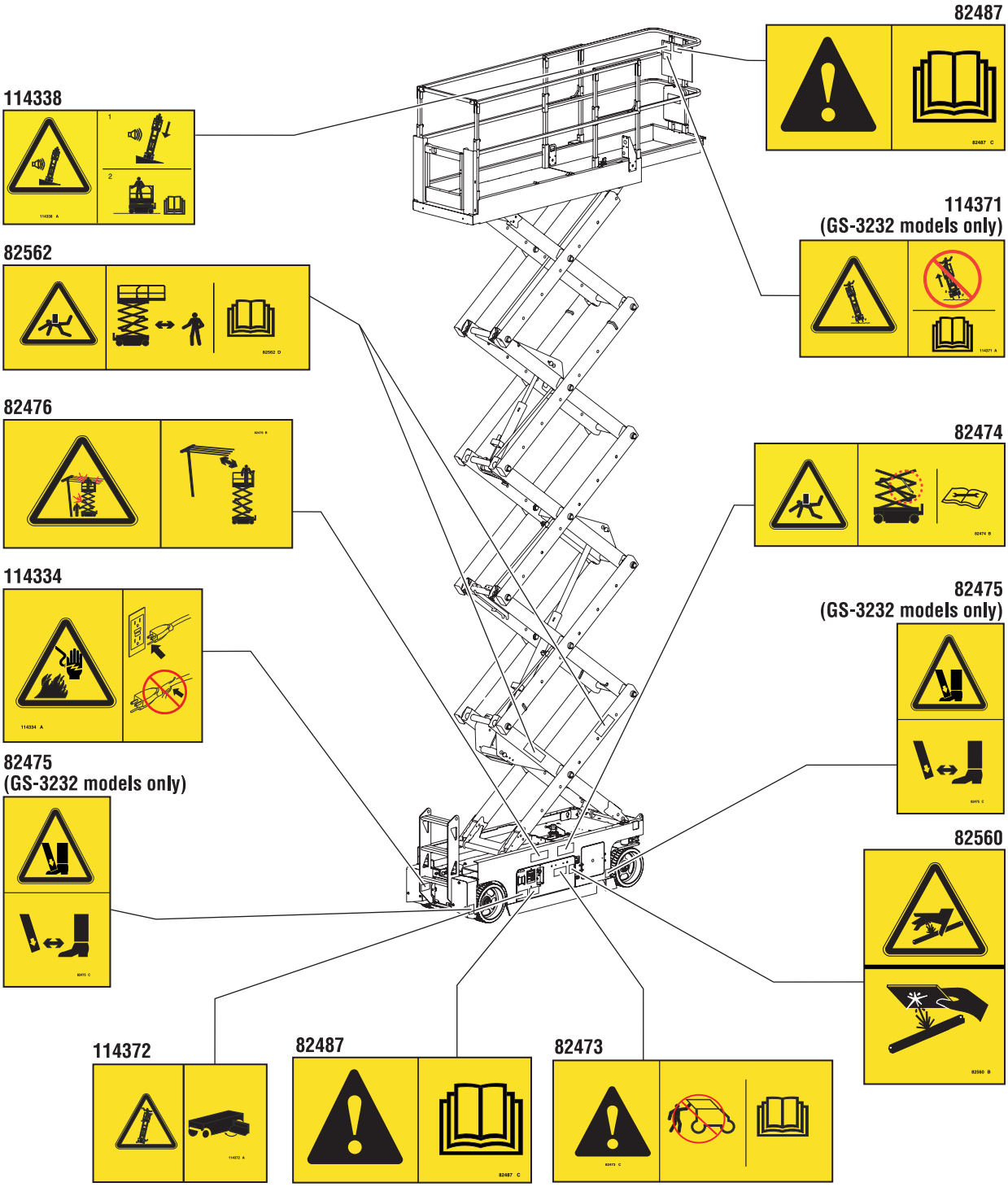

Downloaded from www.Manualslib.com manuals search engine

https://truckmanualshub.com/

General Safety

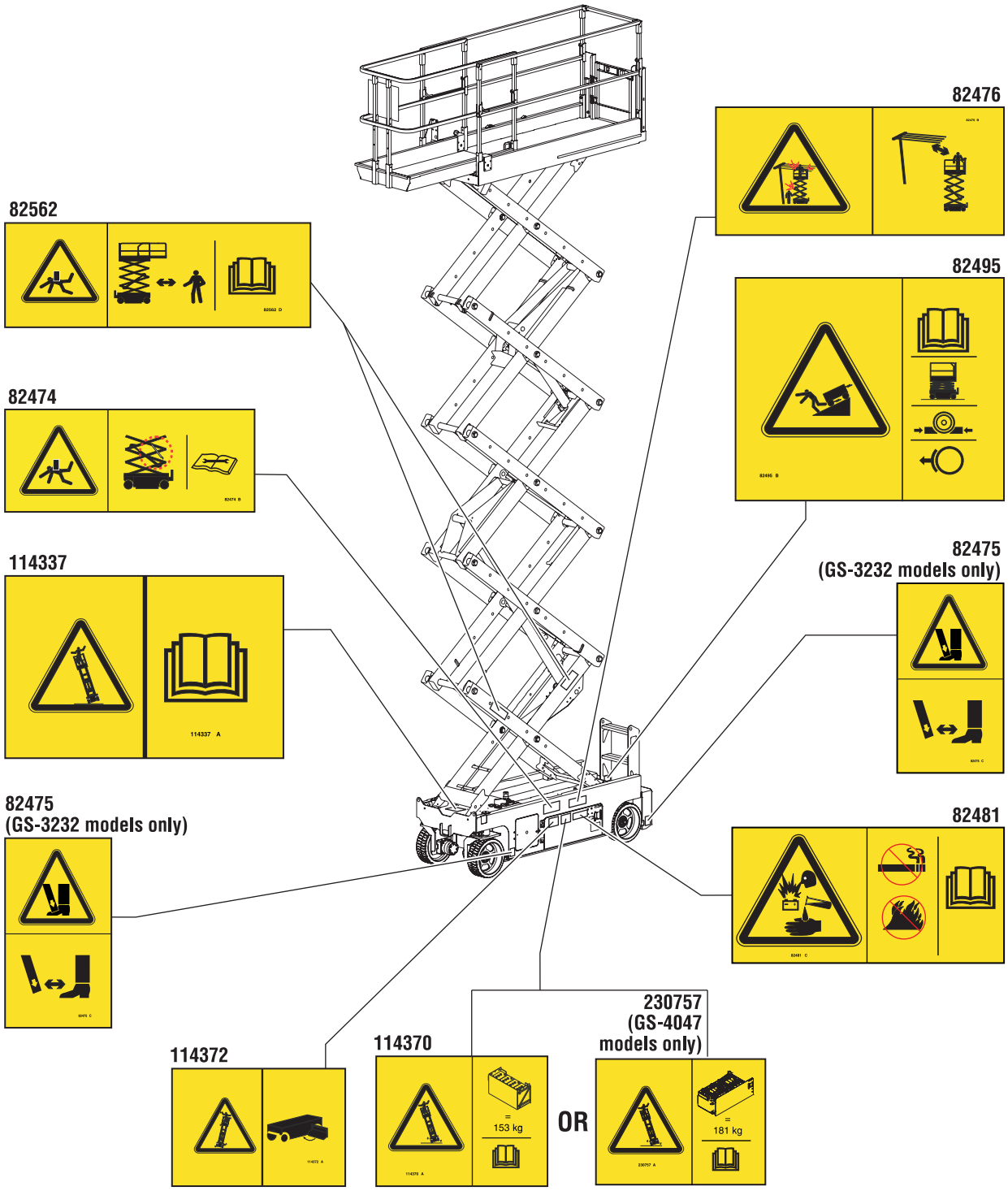

Downloaded from www.Manualslib.com manuals search engine

https://truckmanualshub.com/

Personal Fall Protection

Personal fall protection equipment (PFPE) is not required when operating this machine. If PFPE is required by job site or employer rules, the following shall apply:

All PFPE must comply with applicable governmental regulations and must be inspected and used in accordance with the manufacturer's instructions.

Downloaded from www.Manualslib.com manuals search engine

https://truckmanualshub.com/

Work Area Safety

⚠ Electrocution Hazards

This machine is not electrically insulated and will not provide protection from contact with or proximity to electrical current.

Obey all local and governmental regulations regarding required clearance from electrical power lines. At a minimum, the required clearance contained in the chart below must be followed.

Line Voltage	Required Clearance
0 to 50KV	3.05 m
50 to 200KV	4.60 m
200 to 350KV	6.10 m
350 to 500KV	7.62 m
500 to 750KV	10.67 m
750 to 1000KV	13.72 m

Allow for platform movement, electrical line sway or sag, and beware of strong or gusty winds.

Keep away from the machine if it contacts energized power lines. Personnel on the ground or in the platform must not touch or operate the machine until energized power lines are shut off.

Do not operate the machine during lightning or storms.

Do not use the machine as a ground for welding.

⚠ Tip-over Hazards

Occupants, equipment and materials shall not exceed the maximum platform capacity or the maximum platform capacity of the platform extension.

Maximum capacity	
GS-1530 and GS-1532	272 kg
GS-1930 and GS-1932	227 kg
GS-2032	363 kg
GS-2632	227 kg
GS-3232	227 kg
GS-2046	544 kg
GS-2646	454 kg
GS-3246	318 kg
GS-4047	350 kg

Downloaded from www.Manualslib.com manuals search engine

https://truckmanualshub.com/

Work Area Safety

Do not raise the platform unless the machine is on a firm, level surface.

Do not depend on the tilt alarm as a level indicator. The tilt alarm sounds on the chassis only when the machine is on a severe slope.

If the tilt alarm sounds:
Lower the platform. Move the machine to a firm, level surface. If the tilt alarm sounds when the platform is raised, use extreme caution to lower the platform.

Do not drive over 0.8 km/h with the platform raised.

Outdoor Use: Do not raise the platform when wind speeds may exceed 12.5 m/s. If wind speeds exceed 12.5 m/s when the platform is raised, lower the platform and do not continue to operate the machine.

Indoor Use: When raising the platform, follow ratings for allowable side force and number of occupants on the next page.

Do not operate the machine in strong or gusty winds. Do not increase the surface area of the platform or the load. Increasing the area exposed to the wind will decrease machine stability.

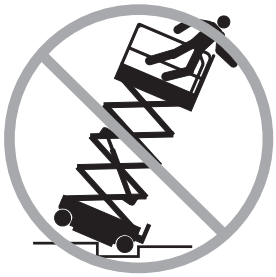

Use extreme care and slow speeds while driving the machine in the stowed position across uneven terrain, debris, unstable or slippery surfaces and near holes and drop-offs.

Do not drive the machine on or near uneven terrain, unstable surfaces or other hazardous conditions with the platform raised.

Do not use the machine as a crane.

Do not push the machine or other objects with the platform.

Do not contact adjacent structures with the platform.

Do not tie the platform to adjacent structures.

Do not place loads outside the platform perimeter.

Do not operate the machine with the chassis trays open.

Downloaded from www.Manualslib.com manuals search engine

https://truckmanualshub.com/

Work Area Safety

Do not push off or pull toward any object outside of the platform.

Maximum allowable manual force – CE

Model	Manual Force	Maximum occupants
GS-1530	400 N	Indoor use only – 2
GS-1532	400 N 200 N	Indoor – 2 Outdoor – 1
GS-1930	400 N	Indoor use only – 2
GS-1932	400 N 200 N	Indoor – 2 Outdoor – 1
GS-2032	400 N 200 N	Indoor – 2 Outdoor – 1
GS-2632	400 N	Indoor use only – 2
GS-3232	400 N	Indoor use only – 2
GS-2046	400 N	Indoor / Outdoor – 2
GS-2646	400 N	Indoor / Outdoor – 2
GS-3246	400 N 200 N	Indoor – 2 Outdoor – 1
GS-4047	400 N	Indoor use only – 3

Do not alter or disable the limit switches.

Do not alter or disable machine components that in any way affect safety and stability.

Do not replace items critical to machine stability with items of different weight or specification.

Do not use batteries that weigh less than the original equipment. Batteries are used as counterweight and are critical to machine stability. Each battery must weigh 29.5 kg. Battery tray including batteries must weigh a minimum of 152 kg.

For GS-4047 machines, each battery must weigh 37 kg. Battery tray including batteries must weigh a minimum of 181 kg.

Do not modify or alter an aerial work platform without prior written permission from the manufacturer. Mounting attachments for holding tools or other materials onto the platform, toeboards or guard rail system can increase the weight in the platform and the surface area of the platform or the load.

Downloaded from www.Manualslib.com manuals search engine

https://truckmanualshub.com/

Work Area Safety

Do not place or attach fixed or overhanging loads to any part of this machine.

Do not place ladders or scaffolds in the platform or against any part of this machine.

Do not transport tools and materials unless they are evenly distributed and can be safely handled by person(s) in the platform.

Do not use the machine on a moving or mobile surface or vehicle.

Be sure all tires are in good condition, castle nuts are properly tightened and cotter pins are properly installed.

If equipped with outriggers

Do not set the machine up where it cannot be leveled using only the outriggers.

Do not adjust the outriggers while the platform is raised.

Do not drive while the outriggers are lowered.

⚠ Crushing Hazard

Keep hands and limbs out of scissors.

Do not work under the platform or in the scissor links without the safety arm in place.

Use common sense and planning when operating the machine with the controller from the ground. Maintain safe distances between the operator, the machine and fixed objects.

Downloaded from www.Manualslib.com manuals search engine

https://truckmanualshub.com/

Work Area Safety

⚠ Operation on Slopes Hazards

Do not drive the machine on a slope that exceeds the slope and side slope rating of the machine. Slope rating applies to machines in the stowed position.

Model	Maximum slope rating, stowed position	Maximum side slope rating, stowed position
GS-1530	30% (17°)	30% (17°)
GS-1532	30% (17°)	30% (17°)
GS-1930	25% (14°)	25% (14°)
GS-1932	25% (14°)	25% (14°)
GS-2032	30% (17°)	30% (17°)
GS-2632	25% (14°)	25% (14°)
GS-3232	25% (14°)	25% (14°)
GS-2046	30% (17°)	30% (17°)
GS-2646	30% (17°)	30% (17°)
GS-3246	25% (14°)	25% (14°)
GS-4047	25% (14°)	25% (14°)

Note: Slope rating is subject to ground conditions and adequate traction.

⚠ Fall Hazards

The guard rail system provides fall protection. If occupant(s) of the platform are required to wear personal fall protection equipment (PFPE) due to job site or employer rules, PFPE and its use shall be in accordance with the PFPE manufacturer's instructions and applicable governmental requirements. Attach the lanyard to the anchor provided in the platform.

Do not sit, stand or climb on the platform guard rails. Maintain a firm footing on the platform floor at all times.

Do not climb down from the platform when raised.

Keep the platform floor clear of debris.

Do not enter or exit the platform unless the machine is in the stowed position.

Attach the platform entry chain or close the entry gate before operating.

Do not operate the machine unless the guard rails are properly installed and the entry is secured for operation.

Downloaded from www.Manualslib.com manuals search engine

https://truckmanualshub.com/

Work Area Safety

⚠ Collision Hazards

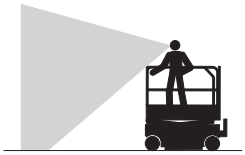

Be aware of limited sight distance and blind spots when driving or operating.

Be aware of extended platform position when moving the machine.

The machine must be on a level surface or secured before releasing the brakes.

Operators must comply with employer, job site and governmental rules regarding use of personal protective equipment.

Check the work area for overhead obstructions or other possible hazards.

Be aware of crushing hazards when grasping the platform guard rail.

Observe and use color-coded direction arrows on the platform controls and the platform decal plate for drive and steer functions.

Do not lower the platform unless the area below is clear of personnel and obstructions.

Limit travel speed according to the condition of the ground surface, congestion, slope, location of personnel, and any other factors which may cause collision.

Do not operate a machine in the path of any crane or moving overhead machinery unless the controls of the crane have been locked out and/or precautions have been taken to prevent any potential collision.

No stunt driving or horseplay while operating a machine.

Downloaded from www.Manualslib.com manuals search engine

https://truckmanualshub.com/

Work Area Safety

⚠ Bodily Injury Hazard

Do not operate the machine with a hydraulic oil or air leak. An air leak or hydraulic leak can penetrate and/or burn skin.

Improper contact with components under any cover will cause serious injury. Only trained maintenance personnel should access compartments. Access by the operator is only advised when performing a pre-operation inspection. All compartments must remain closed and secured during operation.

⚠ Explosion and Fire Hazards

Do not operate the machine or charge the battery in hazardous locations or locations where potentially flammable or explosive gases or particles may be present.

⚠ Damaged Machine Hazards

Do not use a damaged or malfunctioning machine.

Conduct a thorough pre-operation inspection of the machine and test all functions before each work shift. Immediately tag and remove from service a damaged or malfunctioning machine.

Be sure all maintenance has been performed as specified in this manual and the appropriate Genie service manual.

Be sure all decals are in place and legible.

Be sure the operator's, safety and responsibilities manuals are complete, legible and in the storage container located on the machine.

⚠ Component Damage Hazards

Do not use any battery charger greater than 24V to charge the batteries.

Do not use the machine as a ground for welding.

Downloaded from www.Manualslib.com manuals search engine

https://truckmanualshub.com/

Work Area Safety

⚠ Battery Safety

Burn Hazards

Batteries contain acid. Always wear protective clothing and eye wear when working with batteries.

Avoid spilling or contacting battery acid. Neutralize battery acid spills with baking soda and water.

Do not expose the batteries or the charger to water or rain during charging.

Explosion Hazards

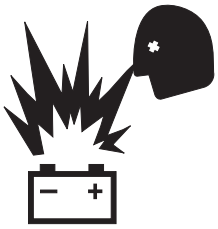

Keep sparks, flames and lighted tobacco away from batteries. Batteries emit explosive gas.

The battery tray should remain open during the entire charging cycle.

Do not contact the battery terminals or the cable clamps with tools that may cause sparks.

Component Damage Hazard

Do not use any battery charger greater than 24V to charge the batteries.

Electrocution/Burn Hazards

Connect the battery charger to a grounded, AC 3-wire electrical outlet only.

Inspect daily for damaged cords, cables and wires. Replace damaged items before operating.

Avoid electrical shock from contact with battery terminals. Remove all rings, watches and other jewelry.

Tip-over Hazard

Do not use batteries that weigh less than the original equipment. Batteries are used as counterweight and are critical to machine stability. Each battery must weigh 29.5 kg. Battery tray including batteries must weigh a minimum of 152 kg. For GS-4047 machines, each battery must weigh 37 kg. Battery tray including batteries must weigh a minimum of 181 kg.

Lifting Hazard

Use the appropriate number of people and proper lifting techniques when lifting batteries.

Lockout After Each Use

1 Select a safe parking location—firm level surface, clear of obstruction and traffic.

2 Lower the platform.

3 Turn the key switch to the off position and remove the key to secure from unauthorized use.

4 Charge the batteries.

Downloaded from www.Manualslib.com manuals search engine

https://truckmanualshub.com/

Legend

GS-1530
GS-1532
GS-1930
GS-1932

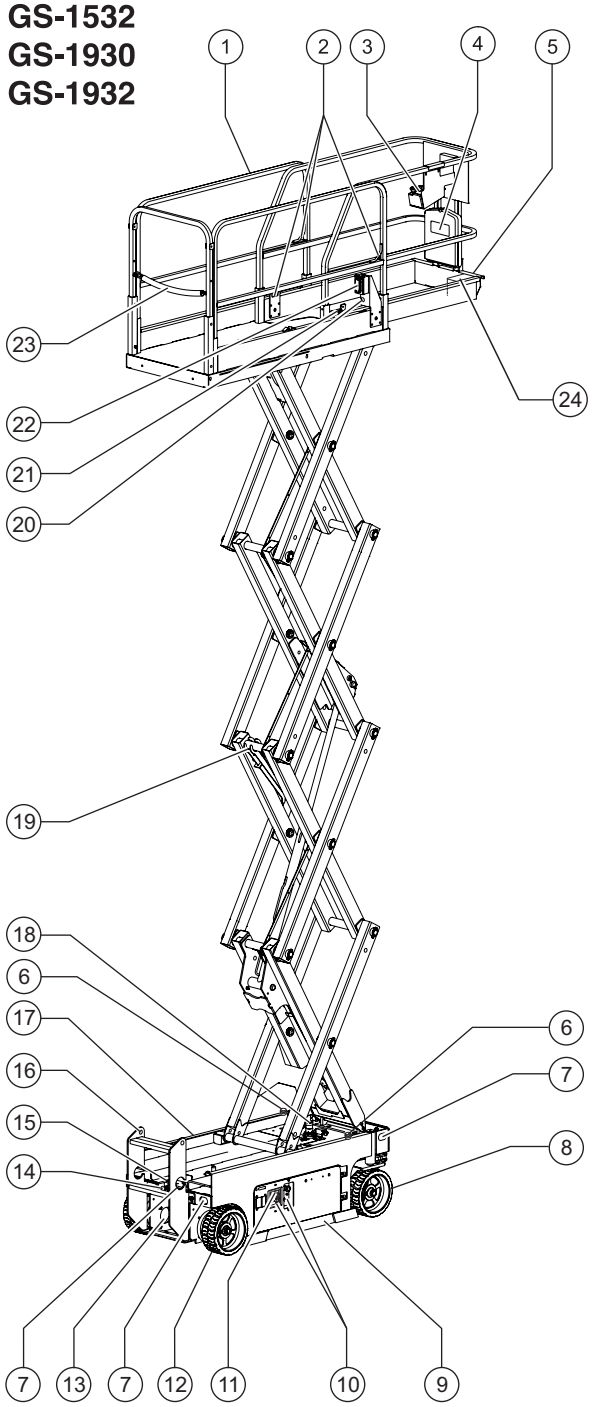

1 Platform guard rails
2 Lanyard anchorage points
3 Platform controls
4 Manual storage container
5 Platform extension
6 Flashing light
7 Transport tie-down
8 Steer tire
9 Pothole guard
10 Ground controls
11 LCD readout
12 Non-steer tire
13 Inverter (optional)
14 Brake release pump
15 Emergency lowering knob
16 Entry ladder / transport tie-down
17 Battery charger (on battery side of machine)
18 Tilt alarm
19 Safety arm
20 Air line to platform (optional)
21 Platform extension release pedal
22 GFCI outlet
23 Platform entry chain or gate
24 Foot switch (if equipped)

Downloaded from www.Manualslib.com manuals search engine

https://truckmanualshub.com/

Legend

GS-2032
GS-2632
GS-3232

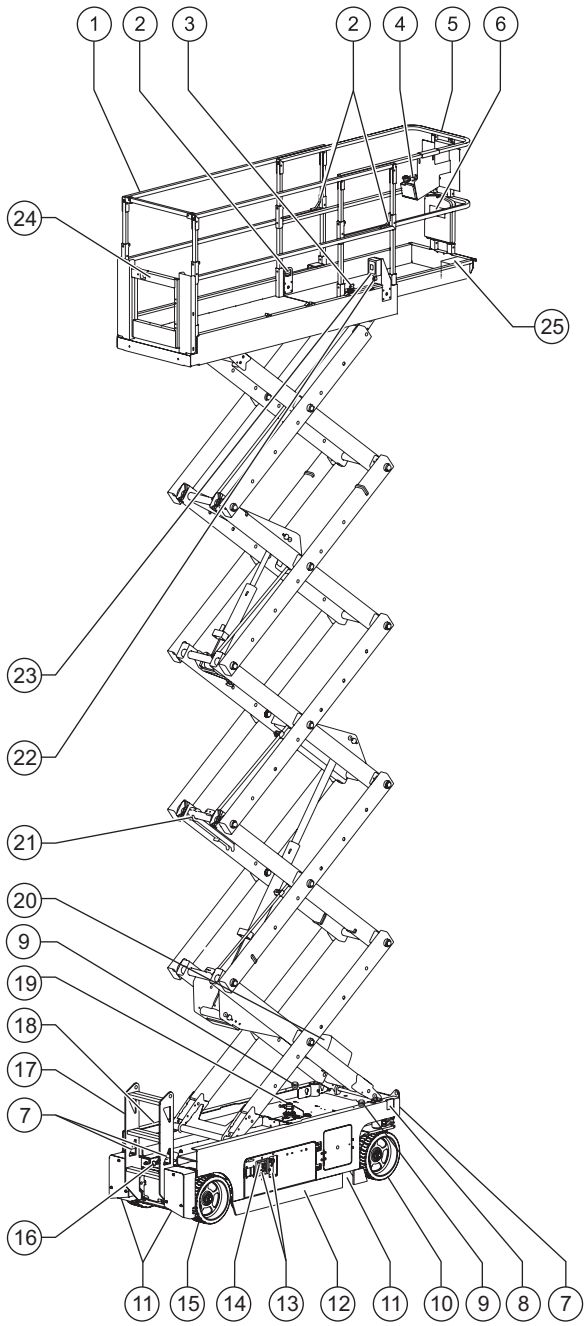

1 Platform guard rails
2 Lanyard anchorage points
3 Platform extension release pedal
4 Platform controls
5 Platform extension
6 Manual storage container
7 Transport tie-down
8 Emergency lowering knob
9 Flashing light
10 Steer tire
11 Outrigger
12 Pothole guard
13 Ground controls
14 LCD readout
15 Non-steer tire
16 Brake release pump
17 Entry ladder / transport tie-down
18 Battery charger (on battery side of machine)
19 Tilt alarm
20 Inverter (optional)
21 Safety arm
22 Air line to platform (optional)
23 GFCI outlet
24 Platform entry chain or gate
25 Foot switch (if equipped)

Downloaded from www.Manualslib.com manuals search engine

https://truckmanualshub.com/

Legend

GS-2046
GS-2646
GS-3246
GS-4047

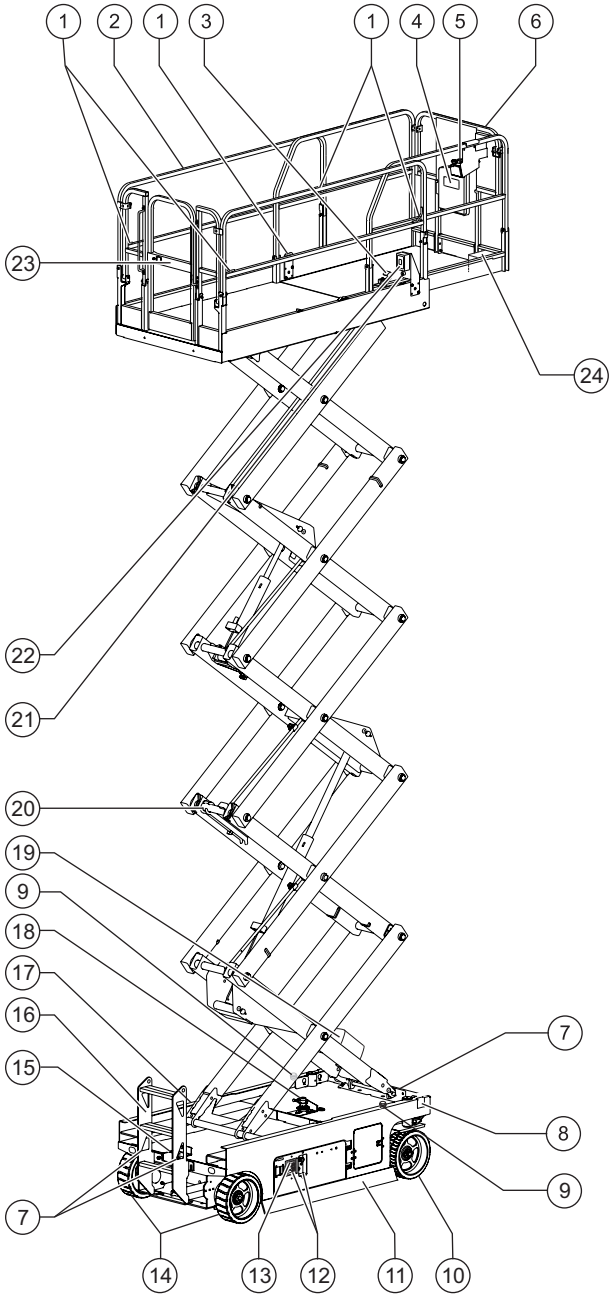

1 Lanyard anchorage points
2 Platform guard rails
3 Platform extension release pedal
4 Manual storage container
5 Platform controls
6 Platform extension
7 Transport tie-down
8 Emergency lowering knob
9 Flashing light
10 Steer tire
11 Pothole guard
12 Ground controls
13 LCD readout
14 Non-steer tire
15 Brake release pump
16 Entry ladder / transport tie-down
17 Battery charger (on battery side of machine)
18 Tilt alarm
19 Inverter (option for all models except GS-4047)
20 Safety arm
21 Air line to platform (optional)
22 GFCI outlet
23 Platform entry chain or gate
24 Foot switch (if equipped)

Downloaded from www.Manualslib.com manuals search engine

https://truckmanualshub.com/

Controls

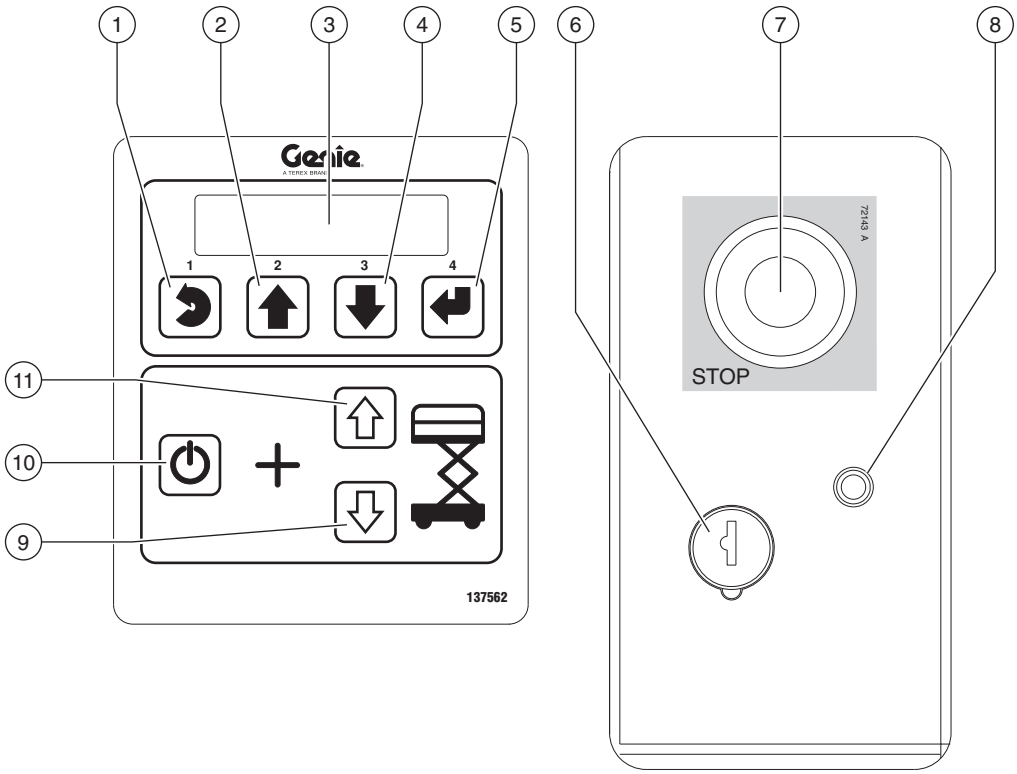

Ground Control Panel

1 Menu escape button
2 Menu up button
3 LCD diagnostic readout
4 Menu down button
5 Menu enter button
6 Key switch for platform/off/ground selection
Turn the key switch to the platform position and the platform controls will operate. Turn the key switch to the off position and the machine will be off. Turn the key switch to the ground position and the ground controls will operate.
7 Red Emergency Stop button
Push in the red Emergency Stop button to the off position to stop all functions. Pull out the red Emergency Stop button to the on position to operate the machine.
8 7A breaker for electrical circuits
9 Platform down button
10 Lift function enable button
Press and hold this button to activate the lift function.
11 Platform up button

Downloaded from www.Manualslib.com manuals search engine

https://truckmanualshub.com/

Controls

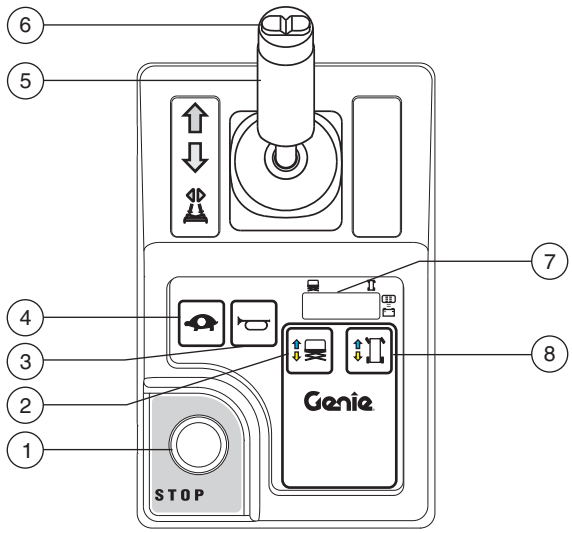

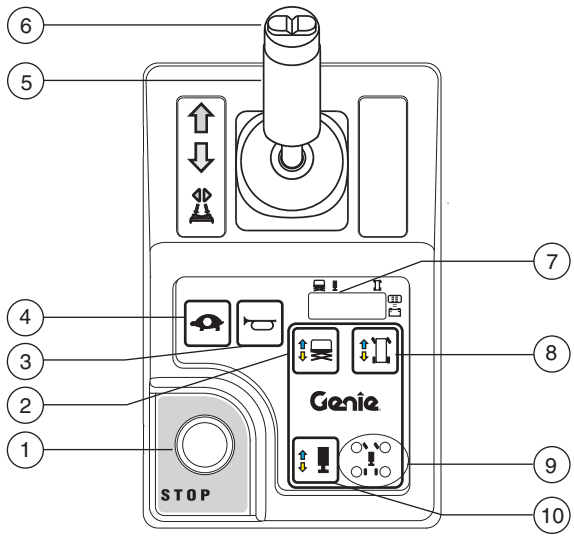

Platform Control Panel

1 Red Emergency Stop button

Push in the red Emergency Stop button to the off position to stop all functions. Pull out the red Emergency Stop button to the on position to operate the machine.

2 Lift function button

Push this button to activate the lift function.

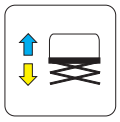

3 Horn button

Press the horn button and the horn will sound. Release the horn button and the horn will not sound.

4 Drive speed select button

Press this button to activate the slow drive function. The indicator light will be on when slow drive is selected.

Downloaded from www.Manualslib.com manuals search engine

https://truckmanualshub.com/

Controls

5 Proportional control handle and function enable switch for drive, steer, lift and outrigger functions

Lift function: Press and hold the function enable switch to enable the lift function on the platform control handle. Move the control handle in the direction indicated by the blue arrow and the platform will raise. Move the control handle in the direction indicated by the yellow arrow and the platform will lower. The descent alarm should sound while the platform is lowering.

Drive function: Press and hold the function enable switch to enable the drive function on the platform control handle. Move the control handle in the direction indicated by the blue arrow on the control panel and the machine will move in the direction that the blue arrow points. Move the control handle in the direction indicated by the yellow arrow on the control panel and the machine will move in the direction that the yellow arrow points.

Outrigger function: Press and hold the function enable switch to enable the outrigger function on the platform control handle. Move the control handle in the direction indicated by the blue arrow and the outriggers will retract. Move the control handle in the direction indicated by the yellow arrow and the outriggers will extend.

6 Thumb rocker switch for steer function

Press the left side of the thumb rocker and the machine will turn in the direction the blue triangle points on the platform control panel.

Press the right side of the thumb rocker and the machine will turn in the direction the yellow triangle points on the platform control panel.

7 LED diagnostic readout, battery charge indicator and lift/drive mode indicator

8 Drive function button

Push this button to activate the drive function.

Downloaded from www.Manualslib.com manuals search engine

https://truckmanualshub.com/

Controls

9 Outrigger indicator lights

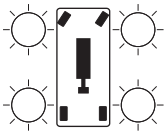

During outrigger extension, lights flash green. As each outrigger contacts the ground, lights turn solid green. Any time the outrigger extension procedure is interrupted, the lights will flash green indicating the outriggers are not contacting the ground or the outriggers are not fully deployed. During outrigger retraction lights turn solid green. As each outrigger fully retracts, lights turn off. Lights will turn solid red, indicating the corresponding outrigger is at end of stroke.

10 Outrigger function button

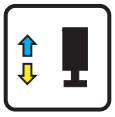

Press this button to activate the outrigger function.

Downloaded from www.Manualslib.com manuals search engine

https://truckmanualshub.com/

Inspections

Do Not Operate Unless:

☑ You learn and practice the principles of safe machine operation contained in this operator's manual.

1 Avoid hazardous situations.

2 Always perform a pre-operation inspection.

Know and understand the pre-operation inspection before going on to the next section.

3 Always perform function tests prior to use.

4 Inspect the workplace.

5 Only use the machine as it was intended.

Pre-operation Inspection Fundamentals

It is the responsibility of the operator to perform a pre-operation inspection and routine maintenance.

The pre-operation inspection is a visual inspection performed by the operator prior to each work shift. The inspection is designed to discover if anything is apparently wrong with a machine before the operator performs the function tests.

The pre-operation inspection also serves to determine if routine maintenance procedures are required. Only routine maintenance items specified in this manual may be performed by the operator.

Refer to the list on the next page and check each of the items.

If damage or any unauthorized variation from factory delivered condition is discovered, the machine must be tagged and removed from service.

Repairs to the machine may only be made by a qualified service technician, according to the manufacturer's specifications. After repairs are completed, the operator must perform a pre-operation inspection again before going on to the function tests.

Scheduled maintenance inspections shall be performed by qualified service technicians, according to the manufacturer's specifications and the requirements listed in the responsibilities manual.

Downloaded from www.Manualslib.com manuals search engine

https://truckmanualshub.com/

Inspections

Pre-operation Inspection

- ❑ Be sure that the operator's, safety and responsibilities manuals are complete, legible and in the storage container located in the platform.
- ❑ Be sure that all decals are legible and in place. See Inspections section.
- ❑ Check for hydraulic oil leaks and proper oil level. Add oil if needed. See Maintenance section.
- ❑ Check for battery fluid leaks and proper fluid level. Add distilled water if needed. See Maintenance section.

Check the following components or areas for damage, improperly installed or missing parts and unauthorized modifications:

- ❑ Electrical components, wiring and electrical cables
- ❑ Hydraulic hoses, fittings, cylinders and manifolds
- ❑ Drive motors
- ❑ Wear pads
- ❑ Tires and wheels
- ❑ Limit switches, alarms and horn
- ❑ Alarms and beacons (if equipped)
- ❑ Nuts, bolts and other fasteners
- ❑ Brake release components
- ❑ Safety arm
- ❑ Platform extension
- ❑ Scissor pins and retaining fasteners
- ❑ Platform control joystick
- ❑ Outrigger housing and footpads (if equipped)
- ❑ Battery pack and connections
- ❑ Ground strap
- ❑ Platform entry chain or gate
- ❑ Platform overload components
- ❑ Pothole guards
- ❑ Lanyard anchorage points

Check entire machine for:

- ❑ Cracks in welds or structural components
- ❑ Dents or damage to machine
- ❑ Excessive rust, corrosion or oxidation

- ❑ Be sure that all structural and other critical components are present and all associated fasteners and pins are in place and properly tightened.
- ❑ Be sure side rails are installed and bolts are fastened.
- ❑ Be sure that the chassis trays are closed and latched and the batteries are properly connected.

Note: If the platform must be raised to inspect the machine, make sure the safety arm is in place. See Operating Instructions section.

Downloaded from www.Manualslib.com manuals search engine

https://truckmanualshub.com/

Inspections

Do Not Operate Unless:

☑ You learn and practice the principles of safe machine operation contained in this operator's manual.

1 Avoid hazardous situations.

2 Always perform a pre-operation inspection.

3 Always perform function tests prior to use.

Know and understand the function tests before going on to the next section.

4 Inspect the workplace.

5 Only use the machine as it was intended.

Function Test Fundamentals

The function tests are designed to discover any malfunctions before the machine is put into service. The operator must follow the step-by-step instructions to test all machine functions.

A malfunctioning machine must never be used. If malfunctions are discovered, the machine must be tagged and removed from service. Repairs to the machine may only be made by a qualified service technician, according to the manufacturer's specifications.

After repairs are completed, the operator must perform a pre-operation inspection and function tests again before putting the machine into service.

Downloaded from www.Manualslib.com manuals search engine

https://truckmanualshub.com/

Inspections

At the Ground Controls

1 Select a test area that is firm, level and free of obstruction.

2 Be sure the batteries are connected.

3 Pull out the platform and ground red Emergency Stop button to the on position.

4 Turn the key switch to ground control.

5 Observe the diagnostic LED readout on the platform controls.

⦿ Result: The LED should look like the picture below.

6 Observe the diagnostic LCD readout on the ground controls.

⦿ Result: The LCD should display the model and hour meter.

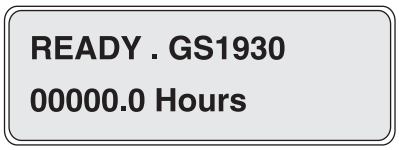

Test Emergency Stop

7 Push in the ground red Emergency Stop button to the off position.

⦿ Result: No functions should operate.

8 Pull out the red Emergency Stop button to the on position.

Test the Up/Down Functions

This machine uses both flashing lights and audible alarms.

Descent alarm: Lights flash and alarm sounds at 60 flashes/beeps per minute.

Descent delay alarm: Lights flash and alarm sounds at 180 flashes/beeps per minute.

Pothole guards not deployed: Lights flash and alarm sounds at 180 flashes/beeps per minute.

Machine not level: Lights flash and alarm sounds at 180 flashes/beeps per minute.

Horn: continuous flash and constant tone. An optional automotive-style horn is also available.

9 Do not press the lift function enable button.

10 Press the platform up or platform down button.

⦿ Result: The lift function should not operate.

11 Do not press the platform up or platform down buttons.

12 Press the lift function enable button.

⦿ Result: The lift function should not operate.

13 Press and hold the lift function enable button, and press the platform up button.

⦿ Result: The platform should raise.

14 Press and hold the lift function enable button, and press the platform down button.

⦿ Result: The platform should lower. The descent alarm should flash and sound while the platform is lowering.

When lowering the platform, the platform should stop when it is approximately 2.1 m from the ground. The descent delay lights will flash and the alarm will sound. Be sure the area below the platform is clear of personnel and obstructions before continuing. To continue lowering, release the control handle, and then move the control handle again.

Downloaded from www.Manualslib.com manuals search engine

https://truckmanualshub.com/

Test Emergency Lowering

15 Activate the up function by pressing the lift enable button and platform up button, and raise the platform approximately 60 cm.

16 **For GS-1530/32 and GS-1930/32 Models**

Pull the emergency lowering knob located behind the entry ladder.

For GS-32, GS-46, and GS-47 Models

Pull the emergency lowering knob located on the ground controls side of the machine, at the steer end.

⊙ Result: The platform should lower. The descent alarm will not sound.

17 Turn the key switch to platform control.

At the Platform Controls

Test Emergency Stop

18 Push in the platform red Emergency Stop button to the off position.

⊙ Result: No functions should operate.

Test the Horn

19 Pull out the red Emergency Stop button to the on position.

20 Press the horn button.

⊙ Result: The horn should sound.

Test the Function Enable Switch and the Up/Down Functions

21 Do not hold the function enable switch on the control handle.

22 Slowly move the control handle in the direction indicated by the blue arrow, then in the direction indicated by the yellow arrow.

⊙ Result: No functions should operate.

23 Press the lift function button.

24 Wait seven seconds for the lift function to time out.

Downloaded from www.Manualslib.com manuals search engine

https://truckmanualshub.com/

Inspections

25 Slowly move the control handle in the direction indicated by the blue arrow, then in the direction indicated by the yellow arrow.

⊙ Result: The lift function should not operate.

26 Press the lift function button.

27 Press and hold the function enable switch on the control handle. Slowly move the control handle in the direction indicated by the blue arrow.

Machines equipped with foot switch: Press and hold the foot switch and press and hold the function enable switch on the control handle at the same time.

⊙ Result: The platform should raise. The pothole guards should deploy.

28 Release the control handle.

⊙ Result: The platform should stop raising.

29 Press and hold the function enable switch on the control handle.Slowly move the control handle in the direction indicated by the yellow arrow.

⊙ Result: The platform should lower.

Test the Drive Function Button

30 Press the drive function button.

31 Wait seven seconds for the drive function to time out.

32 Slowly move the control handle in the direction indicated by the blue arrow, then in the direction indicated by the yellow arrow.

⊙ Result: No functions should operate.

Test the Steering

Note: When performing the steer and drive function tests, stand in the platform facing the steer end of the machine.

33 Press the drive function button.

34 Press and hold the function enable switch on the control handle.

35 Press the thumb rocker switch on top of the control handle in the direction indicated by the blue triangle on the control panel.

⊙ Result: The steer wheels should turn in the direction indicated by the blue triangle.

36 Press the thumb rocker switch on top of the control handle in the direction indicated by the yellow triangle, on the control panel.

⊙ Result: The steer wheels should turn in the direction indicated by the yellow triangle.

Downloaded from www.Manualslib.com manuals search engine

https://truckmanualshub.com/

Inspections

Test Drive and Braking

37 Press the drive function button.

38 Press and hold the function enable switch on the control handle.

Machines equipped with foot switch: Press and hold the foot switch and press and hold the function enable switch on the control handle at the same time.

39 Slowly move the control handle in the direction indicated by the blue arrow on the control panel until the machine begins to move, then return the control handle to the center position.

⊙ Result: The machine should move in the direction that the blue arrow points on the control panel, then come to an abrupt stop when the control handle is returned to the center position.

40 Slowly move the control handle in the direction indicated by the yellow arrow on the control panel until the machine begins to move, then return the control handle to the center position.

⊙ Result: The machine should move in the direction that the yellow arrow points on the control panel, then come to an abrupt stop when the control handle is returned to the center position.

Note: The brakes must be able to hold the machine on any slope it is able to climb.

Test the Tilt Sensor Operation

Note: Perform this test from the ground with the platform controller. Do not stand in the platform.

41 Fully lower the platform.

42 Place a 2x4 or similar piece of wood under both wheels on one side and drive the machine up onto them.

43 Raise the platform approximately 2.1 m from the ground.

⊙ Result: The platform should stop. The tilt alarm should sound and the lights should flash. The platform controls LED readout should display LL and the ground controls LCD should display LL: Machine Tilted.

44 Press the drive function button.

45 Press and hold the function enable switch on the control handle.

46 Move the control handle in the direction indicated by the blue arrow, then move the control handle in the direction indicated by the yellow arrow.

⊙ Result: The drive function should not work in either direction.

47 Lower the platform and remove both pieces of wood.

Downloaded from www.Manualslib.com manuals search engine

https://truckmanualshub.com/

Inspections

Test Elevated Drive Speed

48 Raise the platform approximately 1.2 m from the ground.

49 Press the drive function button.

50 Press and hold the function enable switch on the control handle.Slowly move the control handle to full drive position.

⊙ Result: The maximum achievable drive speed with the platform raised should not exceed 22 cm/s.

If the drive speed with the platform raised exceeds 22 cm/s, immediately tag and remove the machine from service.

Test the Pothole Guards

Note: The pothole guards should automatically deploy when the platform is raised. The pothole guards activate limit switches that allow the machine to continue to function. If the pothole guards do not deploy, an alarm sounds and the machine will not drive or steer.

51 Raise the platform.

⊙ Result: When the platform is raised 1.2 m from the ground, the pothole guards should deploy.

52 Press on the pothole guards on one side, and then the other.

⊙ Result: The pothole guards should not move.

53 Lower the platform

⊙ Result: The pothole guards should return to the stowed position.

54 Place a 2x4 or similar piece of wood under a pothole guard.

55 Raise the platform.

⊙ Result: Before the platform is raised 2.1 m from the ground, the lights should flash and an alarm should sound. The platform controls LED readout should display PHS and the ground controls LCD should display PHS: Pothole Guard Stuck.

56 Press the drive function button.

57 Press and hold the function enable switch on the control handle.

58 Slowly move the control handle in the direction indicated by the blue arrow, then in the direction indicated by the yellow arrow.

⊙ Result: The machine should not move forward or backward.

59 Press the drive function button.

60 Press and hold the function enable switch on the control handle.

61 Press the thumb rocker switch on top of the control handle in the direction indicated by the blue and yellow triangles on the control panel.

⊙ Result: The steer wheels should not turn left or right.

62 Lower the platform.

63 Remove the 2x4 or similar piece of wood.

Downloaded from www.Manualslib.com manuals search engine

https://truckmanualshub.com/

Test the Outrigger Function (GS-3232)

64 Raise the platform.

⊙ Result: The platform should raise to 6.7 m and stop.

65 Fully lower the platform.

66 Press the outrigger function button. On the LCD screen, a circle below the outrigger function symbol will turn on.

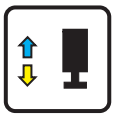

If the control handle is not moved within seven seconds of pushing the outrigger function button, the circle below the outrigger function symbol will turn off and outrigger function will not operate. Press the outrigger function button again.

67 Press and hold the function enable switch on the control handle.

68 Move the control handle in the direction indicated by the yellow arrow.

⊙ Result: The outriggers should extend. The individual outrigger indicator lights will flash green as the corresponding outrigger extends.

69 Continue holding the control handle in the direction indicated by the yellow arrow until all outrigger indicator lights turn solid green and a long beep is heard from the platform controls alarm. The machine is now level. At this point, the drive and steer functions are disabled.

Note: If the control handle or foot switch (if equipped) are released too soon during extension, the outrigger indicator lights will continue to flash green, indicating the outriggers are not contacting the ground.

Note: If the control handle or foot switch (if equipped) are released too soon after the outriggers have contacted the ground, a long beep will not be heard at the platform controls and the outrigger indicator lights will be solid green. If a long beep is not heard and the outrigger indicator lights are solid green, this condition may indicate the outriggers are not fully deployed or the machine is not level.

70 Press the drive function button.

71 Press and hold the function enable switch on the control handle.

72 Slowly move the control handle in the direction indicated by the blue arrow, then in the direction indicated by the yellow arrow.

⊙ Result: The machine should not move in the directions indicated by the blue and yellow arrows.

Downloaded from www.Manualslib.com manuals search engine

https://truckmanualshub.com/

Inspections

73 Press the drive function button.

74 Press and hold the function enable switch on the control handle.

75 Press the thumb rocker switch on top of the control handle in the direction indicated by the blue and yellow triangles on the control panel.

⊙ Result: The steer wheels should not turn in the directions indicated by the blue and yellow triangles.

76 Raise the platform.

⊙ Result: The platform should raise to 9.8 m and stop.

77 Fully lower the platform.

78 Press the outrigger function button.

79 Wait seven seconds for the outrigger function enable to time out.

80 Slowly move the control handle in the direction indicated by the blue arrow, then in the direction indicated by the yellow arrow.

⊙ Result: The outriggers should not retract.

81 Press the outrigger function button.

82 Move the control handle in the direction indicated by the blue arrow.

⊙ Result: The outriggers should retract. The individual outrigger indicator lights will turn solid green as the corresponding outrigger retracts.

83 Continue holding the control handle and the foot switch (if equipped) until the outriggers are completely retracted. Release the control handle when all outrigger indicator lights turn off. All functions are now restored.

Note: If the control handle or foot switch (if equipped) are released too soon during retraction, the outrigger indicator lights will flash green, indicating the outriggers are not fully retracted.

Downloaded from www.Manualslib.com manuals search engine

https://truckmanualshub.com/

Inspections

Do Not Operate Unless:

☑ You learn and practice the principles of safe machine operation contained in this operator's manual.

1 Avoid hazardous situations.

2 Always perform a pre-operation inspection.

3 Always perform function tests prior to use.

4 Inspect the workplace.

Know and understand the workplace inspection before going on to the next section.

5 Only use the machine as it was intended.

Workplace Inspection Fundamentals

The workplace inspection helps the operator determine if the workplace is suitable for safe machine operation. It should be performed by the operator prior to moving the machine to the workplace.

It is the operator's responsibility to read and remember the workplace hazards, then watch for and avoid them while moving, setting up and operating the machine.

Workplace Inspection Checklist

Be aware of and avoid the following hazardous situations:

- ❑ drop-offs or holes
- ❑ bumps, floor obstructions or debris
- ❑ sloped surfaces
- ❑ unstable or slippery surfaces
- ❑ overhead obstructions and high voltage conductors
- ❑ hazardous locations
- ❑ inadequate surface support to withstand all load forces imposed by the machine
- ❑ wind and weather conditions
- ❑ the presence of unauthorized personnel
- ❑ other possible unsafe conditions

Downloaded from www.Manualslib.com manuals search engine

https://truckmanualshub.com/

Inspections

Decal Inspection for Models GS-1530, GS-1532, GS-1930 and GS-1932

Use the pictures on the next page to verify that all decals are legible and in place.

Below is a numerical list with quantities and descriptions.

Part No.	Decal Description	Qty
28174	Label – Power to Platform, 230V	2
28235	Label – Power to Platform, 115V	2
40434	Label – Lanyard Anchorage Point	5
43618	Label – Directional Arrows	2
43658	Label – Power to Charger, 230V	1
44980	Label – Power to Charger, 115V	1
44981	Label – Air Line to Platform, 110 PSI	2
52475	Label – Transport Tie-down	5
62053	Cosmetic – Genie GS-1530	2
62054	Cosmetic – Genie GS-1930	2
72086	Label – Lifting Point	4
72143	Label – Emergency Stop	1
82287	Cosmetic – Genie GS-1932	2
82473	Label – Compartment Access	1
82474	Label – Use Safety Chock	2
82476	Label – Electrocution Hazard	2
82481	Label – Battery/Charger Safety	1
82482	Label – Emergency Lowering	1
82487	Label – Read the Manual	2
82495	Label – Brake Release Safety and Operating Instructions	1
82497	Label – Manual Force, 200 N Outdoors/400 N Indoors, GS-1532 & GS-1932	1
82560	Label – Skin Injection Hazard	1
82562	Label – Crushing Hazard	4
82568	Cosmetic – Genie GS-1532	2
82570	Label – Wheel Load, GS-1530 and GS-1532	4
82571	Label – Wheel Load, GS-1930 and GS-1932	4
97582	Label – Manual Force, 400 N, Indoor Use Only, GS-1530 and GS-1930	1
97719	Label – Safety Arm	1
114334	Label – Electrocution Hazard, Plug	1
114337	Label – Tip-over Hazard, Limit Switch	1
114338	Label – Tip-over Hazard, Tilt Alarm	1
114361	Label – Transport Diagram	2
114370	Label – Tip-over Hazard, Batteries	1
114372	Label – Tip-over Hazard, Open Trays	2
137605	Label – Emergency Stop, Platform Control	1
137656	Label – Drive/Steer Direction, Platform Control	1
1256702	Overlay – Platform Control Panel	1
1257923	Label – Smartlink	2
1265361	Label – Battery Charger Indicator	1
T112804	Label – Ground Control Panel	1
T112807	Instructions – Maximum Capacity, 272 kg, GS-1530 and GS-1532	1
T112808	Instructions – Maximum Capacity, 227 kg, GS-1930 and GS-1932	1

Downloaded from www.Manualslib.com manuals search engine

https://truckmanualshub.com/

Inspections

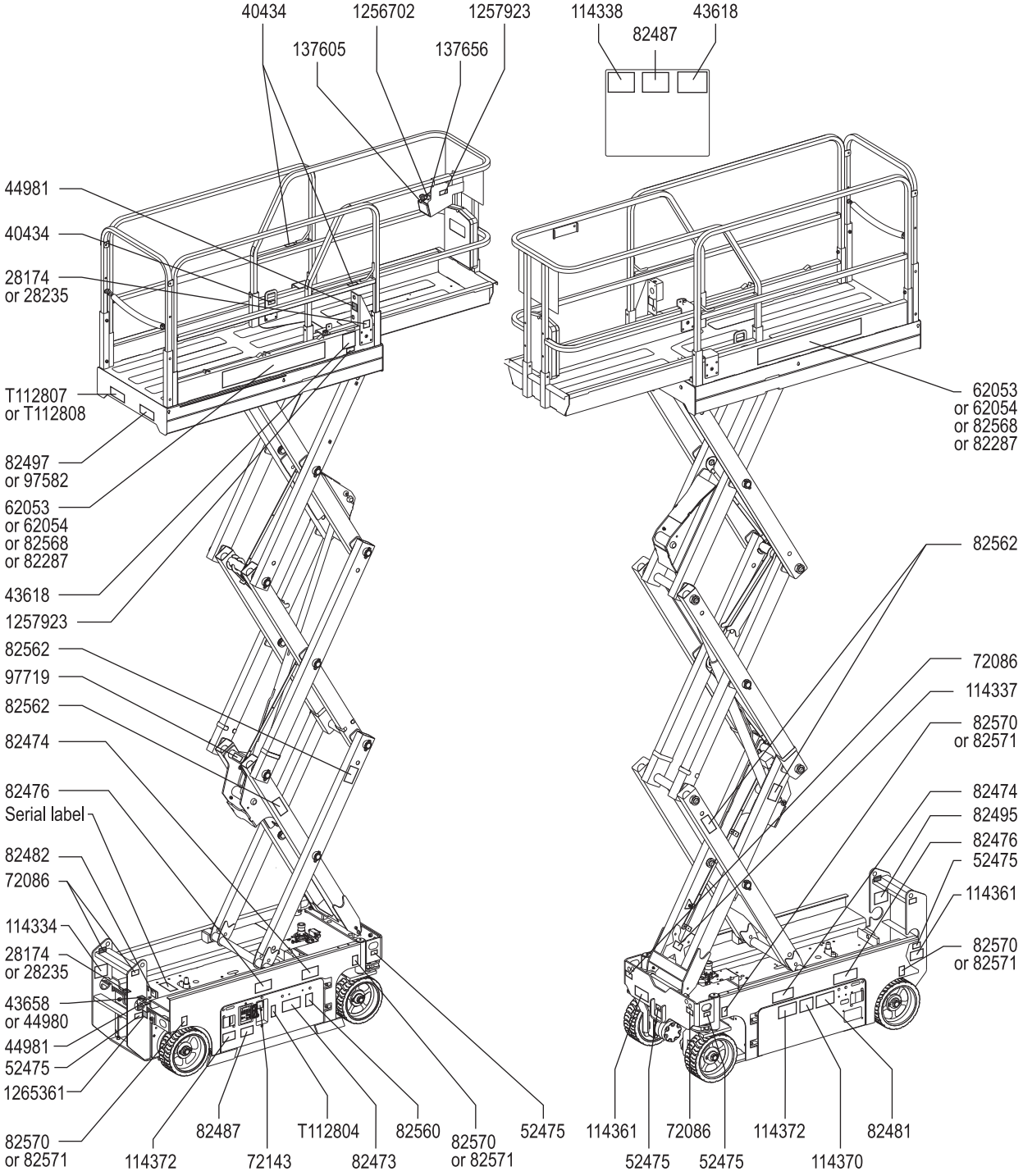

Downloaded from www.Manualslib.com manuals search engine

https://truckmanualshub.com/

Inspections

Decal Inspection for Models GS-2032, GS-2632 and GS-3232

Use the pictures on the next page to verify that all decals are legible and in place.

Below is a numerical list with quantities and descriptions.

Part No.	Decal Description	Qty
28174	Label – Power to Platform, 230V	2
28235	Label – Power to Platform, 115V	2
40434	Label – Lanyard Anchorage Point	3
43618	Label – Directional Arrows	2
43658	Label – Power to Charger, 230V	1
44980	Label – Power to Charger, 115V	1
44981	Label – Air Line to Platform, 110 PSI	2
52475	Label – Transport Tie-down	3
62055	Cosmetic – Genie GS-2032	2
72086	Label – Lifting Point	4
72143	Label – Emergency Stop	1
72973	Cosmetic – Genie GS-2632	2
82473	Label – Compartment Access	1
82474	Label – Use Safety Chock	2
82475	Label – Crushing Hazard, Outriggers (GS-3232 only)	4
82476	Label – Electrocution Hazard	2
82481	Label – Battery/Charger Safety	1
82482	Label – Emergency Lowering	1
82487	Label – Read the Manual	2
82495	Label – Brake Release Safety and Operating Instructions	1
82497	Label – Manual Force, 200 N Outdoors/400 N Indoors, GS-2032	1
82560	Label – Skin Injection Hazard	1
82562	Label – Crushing Hazard	4
97582	Label – Manual Force, 400 N, Indoor Use Only, GS-2632 and GS-3232	1
97692	Label – Wheel Load, GS-2032	4
97693	Label – Wheel Load, GS-2632	4
97719	Label – Safety Arm	1
114324	Cosmetic – Genie GS-3232	2
114334	Label – Electrocution Hazard, Plug	1
114337	Label – Tip-over Hazard, Limit Switch	1
114338	Label – Tip-over Hazard, Tilt Alarm	1
114361	Label – Transport Diagram	2
114362	Label – Wheel Load, GS-3232	4
114370	Label – Tip-over Hazard, Batteries	1
114371	Label – Outrigger Safety (GS-3232 only)	1
114372	Label – Tip-over Hazard, Open Trays	2
133531	Label – Outrigger Load, GS-3232	4
137605	Label – Emergency Stop, Platform Control	1
137656	Label – Drive/Steer Direction, Platform Control	1
228936	Label – Maximum Capacity, 363 kg, GS-2032	1
228937	Label – Maximum Capacity, 227 kg, GS-2632 and GS-3232	1
1256702	Overlay – Platform Control Panel	1
1256704	Overlay – Platform Control Panel with Outriggers	1
1257923	Label – Smartlink	2
1265361	Label – Battery Charger Indicator	1
T112804	Label – Ground Control Panel	1

Downloaded from www.Manualslib.com manuals search engine

https://truckmanualshub.com/

Inspections

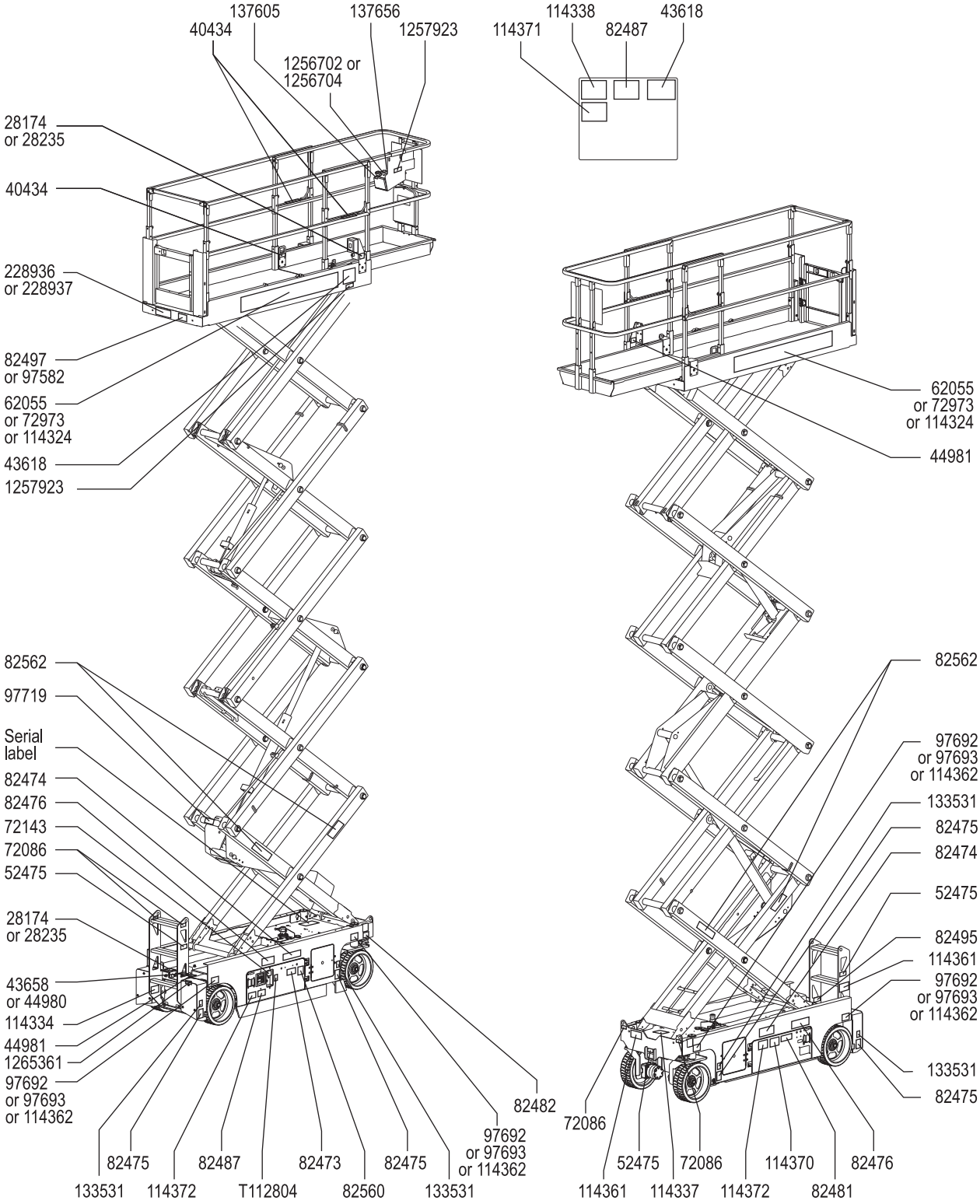

Downloaded from www.Manualslib.com manuals search engine

https://truckmanualshub.com/

Inspections

Decal Inspection for Models GS-2046, GS-2646, GS-3246 and GS-4047

Use the pictures on the next page to verify that all decals are legible and in place.

Below is a numerical list with quantities and descriptions.

Part No.	Decal Description	Qty
28174	Label – Power to Platform, 230V	2
28235	Label – Power to Platform, 115V	2
40434	Label – Lanyard Anchorage Point	5
43618	Label – Directional Arrows	2
43658	Label – Power to Charger, 230V	1
44980	Label – Power to Charger, 115V	1
44981	Label – Air Line to Platform, 110 PSI	2
52475	Label – Transport Tie-down	5
62056	Cosmetic – Genie GS-2046	2
62057	Cosmetic – Genie GS-2646	2
62058	Cosmetic – Genie GS-3246	2
72086	Label – Lifting Point	4
72143	Label – Emergency Stop	1
82473	Label – Compartment Access	1
82474	Label – Use Safety Chock	2
82476	Label – Electrocution Hazard	2
82481	Label – Battery/Charger Safety	1
82482	Label – Emergency Lowering	1
82487	Label – Read the Manual	2
82495	Label – Brake Release Safety and Operating Instructions	1
82497	Label – Manual Force, 200 N Outdoors/400 N Indoors, GS-3246	1
82560	Label – Skin Injection Hazard	1
82562	Label – Crushing Hazard	4
82703	Label – Wheel Load, GS-2046	4
82704	Label – Wheel Load, GS-2646	4
82705	Label – Wheel Load, GS-3246	4
82905	Label – Manual Force, 400 N, GS-2046 and GS-2646	1
97719	Label – Safety Arm	1
114334	Label – Electrocution Hazard, Plug	1
114337	Label – Tip-over Hazard, Limit Switch	1
114338	Label – Tip-over Hazard, Tilt Alarm	1
114361	Label – Transport Diagram	2
114370	Label – Tip-over Hazard, Batteries, GS-2046, GS-2646 and GS-3246	1
114372	Label – Tip-over Hazard, Open Trays	2
137605	Label – Emergency Stop, Platform Control	1
137656	Label – Drive/Steer Direction, Platform Control	1
228938	Label – Maximum Capacity, 544 kg, GS-2046	1
228939	Label – Maximum Capacity, 454 kg, GS-2646	1
228940	Label – Maximum Capacity, 318 kg, GS-3246	1
230620	Cosmetic – Genie GS-4047	2
230755	Label – Maximum Capacity, 350 kg, GS-4047	1
230756	Label – Manual Force, 400 N Indoors Only, GS-4047	1
230757	Label – Tip-over Hazard, Batteries, GS-4047	1
230758	Label – Wheel Load, GS-4047	4
1256702	Overlay – Platform Control Panel	1
1257923	Label – Smartlink	2
1265361	Label – Battery Charger Indicator	1
T112804	Label – Ground Control Panel	1

Downloaded from www.Manualslib.com manuals search engine

https://truckmanualshub.com/

Inspections

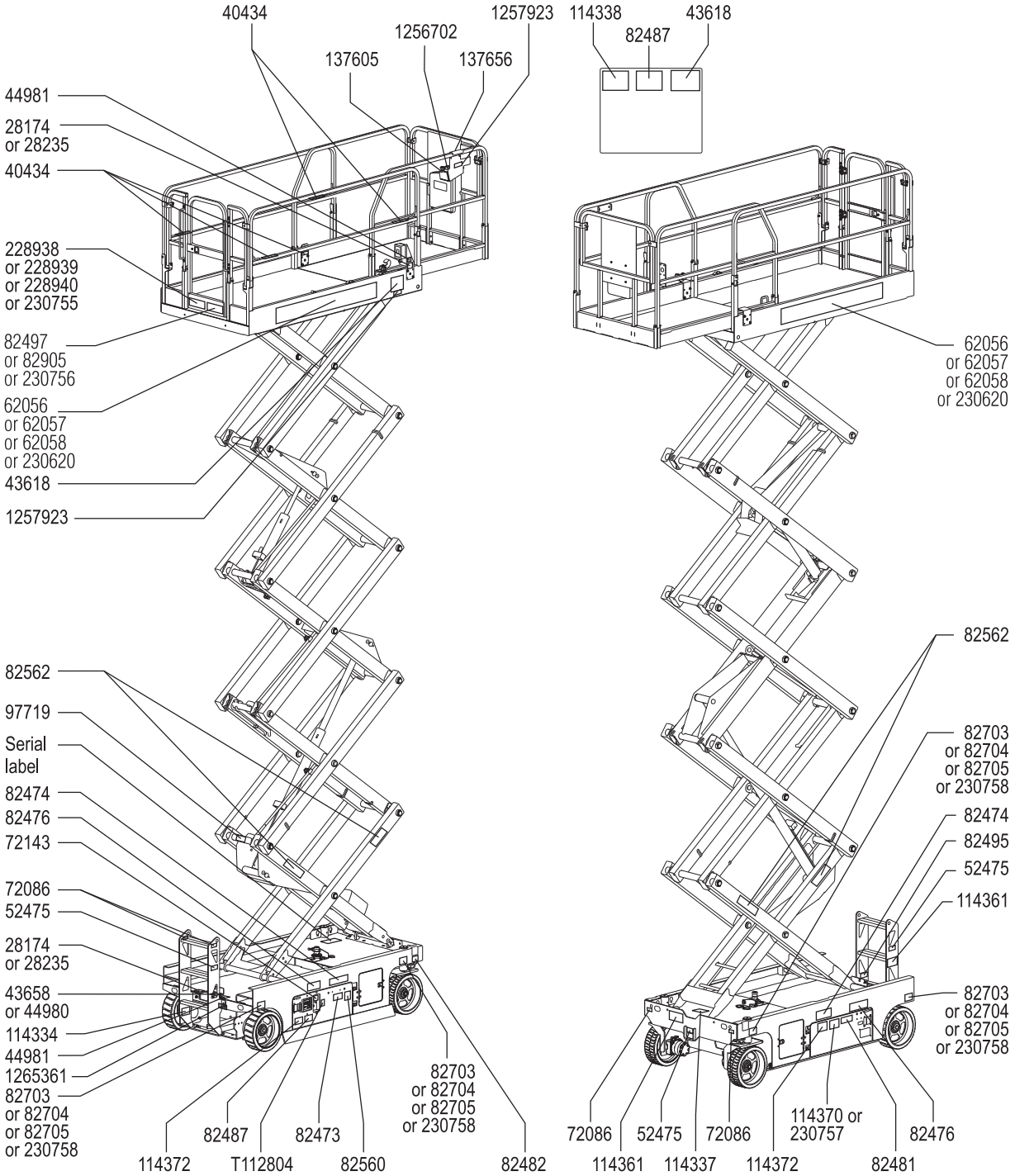

Downloaded from www.Manualslib.com manuals search engine

https://truckmanualshub.com/

Operating Instructions

Do Not Operate Unless:

☑ You learn and practice the principles of safe machine operation contained in this operator's manual.

1 Avoid hazardous situations.

2 Always perform a pre-operation inspection.

3 Always perform function tests prior to use.

4 Inspect the workplace.

5 Only use the machine as it was intended.

Fundamentals

The Operating Instructions section provides instructions for each aspect of machine operation. It is the operator's responsibility to follow all the safety rules and instructions in the operator's, safety and responsibilities manuals.

Using the machine for anything other than lifting personnel, along with their tools and materials, to an aerial work site is unsafe and dangerous.

Only trained and authorized personnel should be permitted to operate a machine. If more than one operator is expected to use a machine at different times in the same work shift, they must all be qualified operators and are all expected to follow all safety rules and instructions in the operator's, safety and responsibilities manuals. That means every new operator should perform a pre-operation inspection, function tests, and a workplace inspection before using the machine.

Downloaded from www.Manualslib.com manuals search engine

https://truckmanualshub.com/

Operating Instructions

Emergency Stop

Push in the red Emergency Stop button to the off position at the ground controls or the platform controls to stop all functions.

Repair any function that operates when either red Emergency Stop button is pushed in.

Emergency Lowering

1 Pull the emergency lowering knob to lower the platform.

Operation from Ground

1 Be sure the battery pack is connected before operating the machine.

2 Turn the key switch to ground control.

3 Pull out both ground and platform red Emergency Stop buttons to the on position.

To Position Platform

1 At the control panel, press and hold the lift function enable button.

2 Press the platform up or down button.

Drive and steer functions are not available from the ground controls.

Operation from Platform

1 Be sure the battery pack is connected before operating the machine.

2 Turn the key switch to platform control.

3 Pull out both ground and platform red Emergency Stop buttons to the on position.

To Position Platform

1 Press the lift function button. On the LCD screen, a circle below the lift function symbol will turn on.

If the control handle is not moved within seven seconds of pushing the lift function button, the circle below the lift function symbol will turn off and lift function will not operate. Press the lift function button again.

2 Press and hold the function enable switch on the control handle.

3 Machines equipped with foot switch: Press and hold the foot switch and press and hold the function enable switch on the control handle at the same time.

4 Move the control handle according to the markings on the control panel.

Downloaded from www.Manualslib.com manuals search engine

https://truckmanualshub.com/

Operating Instructions

To Position Outriggers (GS-3232 models)

To Extend Outriggers:

1 Press the outrigger function button. On the LCD screen, a circle below the outrigger function symbol will turn on.

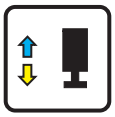

2 Machines equipped with foot switch: Press and hold the foot switch and press and hold the function enable switch on the control handle at the same time.

3 Move the control handle in the direction indicated by the yellow arrow.

The outriggers will begin to extend. The individual outrigger indicator light will turn solid green as the corresponding outrigger makes contact with the ground. Continue moving the control handle until the lift enable indicator light turns green and a beep is heard. The machine is now level. When the lift error indicator light turns red, the up/down and drive functions are disabled. The lift error indicator light will turn red under the following conditions:

- The platform is raised to 22 ft / 6.7 m and the outriggers are not deployed.
- Not all outriggers are in contact with the ground.
- All four outriggers are in contact with the ground but the machine is not level.
- Error code.

Note: If the outrigger enable and extend buttons are released too soon during extension, the outrigger indicator lights will continue to flash green, indicating the outriggers are not contacting the ground.

Note: If the outrigger lights are solid green, the machine may not be level or the outriggers may not be fully deployed if a long beep is not heard at the platform controls alarm.

To Retract Outriggers:

1 Press the outrigger function button.

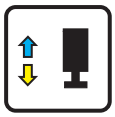

2 Machines equipped with foot switch: Press and hold the foot switch and press and hold the function enable switch on the control handle at the same time.

3 Move the control handle in the direction indicated by the blue arrow.

Release the control handle once the outriggers are off the ground. After approximately 5 seconds, the outrigger indicator lights will turn off. All functions are now restored.

Note: If the outrigger enable and retract buttons are released too soon during retraction, the outrigger indicator lights will flash green, indicating the outriggers are not fully retracted.

To Steer

1 Press the drive function button. On the LCD screen, a circle below the drive function symbol will turn on.

If the control handle is not moved within seven seconds of pushing the drive function button, the circle below the drive function symbol will turn off and drive function will not operate. Press the drive function button again.

2 Press and hold the foot switch (if equipped).

3 Turn the steer wheels with the thumb rocker switch located on the top of the control handle.

Downloaded from www.Manualslib.com manuals search engine

https://truckmanualshub.com/

Operating Instructions

To Drive

1 Press the drive function button. On the LCD screen, a circle below the drive function symbol will turn on.

If the control handle is not moved within seven seconds of pushing the drive function button, the circle below the drive function symbol will turn off and drive function will not operate. Press the drive function button again.

2 Machines equipped with foot switch: Press and hold the foot switch and press and hold the function enable switch on the control handle at the same time.

3 Increase speed: Slowly move the control handle off center.

Decrease speed: Slowly move the control handle toward center.

Stop: Return the control handle to center or release the function enable switch.

Use the color-coded direction arrows on the platform controls and on the platform to identify the direction the machine will travel.

Machine travel speed is restricted when the platform is raised.

Battery condition will affect machine performance. Machine drive speed and function speed will drop when the battery level indicator is flashing.

To select drive speed

The drive controls can operate in two different drive speed modes while in the stowed position. When the drive speed button light is on, slow drive speed mode is active. When the drive speed button light is off, fast drive speed mode is active.

Press the drive speed button to select the desired drive speed.

Note: When the platform is elevated, the drive speed button light is always on, indicating elevated drive speed.

Downloaded from www.Manualslib.com manuals search engine

https://truckmanualshub.com/

Operating Instructions

⚠ Driving on a slope

Determine the slope and side slope ratings for the machine and determine the slope grade.

Maximum slope rating, stowed position:

GS-1530, GS-1532, GS-2032, GS-2046 and GS-2646	30%	17°
GS-1930, GS-1932, GS-2632, GS-3232, GS-3246 and GS-4047	25%	14°

Maximum side slope rating, stowed position:

GS-1530, GS-1532, GS-2032, GS-2046, and GS-2646	30%	17°
GS-1930, GS-1932, GS-2632, GS-3232, GS-3246 and GS-4047	25%	14°

Note: Slope rating is subject to ground conditions and adequate traction.

Press the drive speed button to the fast drive speed mode.

To determine the slope grade:

Measure the slope with a digital inclinometer OR use the following procedure.

You will need:

- carpenter’s level
- straight piece of wood, at least 1 m long
- tape measure

Lay the piece of wood on the slope.

At the downhill end, lay the level on the top edge of the piece of wood and lift the end until the piece of wood is level.

While holding the piece of wood level, measure the vertical distance from the bottom of the piece of wood to the ground.

Divide the tape measure distance (rise) by the length of the piece of wood (run) and multiply by 100.

Example:

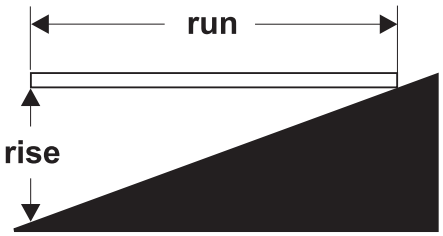

Piece of wood = 3.6 m

Run = 3.6 m

Rise = 0.3 m

0.3 m ÷ 3.6 m = 0.083 x 100 = 8.3% grade

If the slope exceeds the maximum uphill, downhill or side slope rating, then the machine must be winched or transported up or down the slope. See Transport and Lifting section.

Downloaded from www.Manualslib.com manuals search engine

https://truckmanualshub.com/

Operating Instructions

Operational indicator codes

If the platform controls LED or ground controls LCD diagnostic readout displays an operational indicator code such as LL, the fault condition must repaired or removed before resuming machine operation. Push in and pull out the red Emergency Stop button to reset the system.

LED Readout

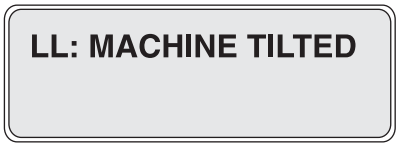

LCD Readout

Operational Indicator Codes	
Code	**Condition**
LL	Off-Level
OL	Platform Overloaded
CH	Chassis Mode Operation
PHS	Pothole Guard Stuck
Nd	No Drive (option)
Ld	Lifting Disabled (GS-3232 only)

For further information, please consult the appropriate Genie Service Manual. A code and a description of a code can also be viewed at the ground controls LCD display.

Platform Overload

If the platform controls LED diagnostic readout displays a flashing OL and the ground controls LCD diagnostic readout displays OL: Platform Overloaded, the platform is overloaded and no functions will operate. An alarm will sound.

1 Push in the Red Emergency stop button to the off position.

2 Remove weight from the platform.

3 Pull out the Red Emergency Stop button to the on position.

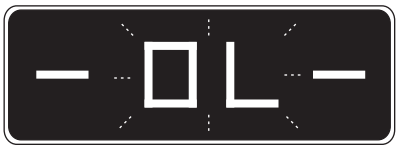

LED Readout

LCD Readout

When the platform is being raised or lowered, a self-check function will be performed near maximum height. The machine may stop and an alarm may sound. If the machine is not overloaded, normal operation will resume.

Overload Recovery

If the ground controls LCD diagnostic readout displays Overload Recovery, the emergency lowering system has been used while the platform was overloaded. For information on how to reset this message, please consult the appropriate Genie Service Manual.

Downloaded from www.Manualslib.com manuals search engine

https://truckmanualshub.com/

Operating Instructions

Operation from Ground with Controller

Maintain safe distances between the operator, machine and fixed objects.

Be aware of the direction the machine will travel when using the controller.

Battery Level Indicator

Use the LED diagnostic readout to determine the battery level.

Note: When a blinking LO code appears on the platform controls LED display, the machine must be taken out of service and charged, otherwise all machine functions will be disabled.

Full Charge

Half Charge

Low Charge

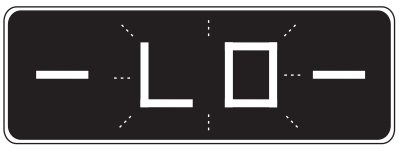

LO Flashing

Downloaded from www.Manualslib.com manuals search engine

https://truckmanualshub.com/

Operating Instructions

How to Use the Safety Arm

1 Raise the platform approximately 2.4 m from the ground.

2 Rotate the safety arm away from the machine and let it hang down.

3 Lower the platform until the safety arm rests securely on the link. Keep clear of the safety arm when lowering the platform.

How to Fold Down the Guardrails

GS-1530, GS-1532, GS-1930, GS-1932, GS-2032, GS-2632 and GS-3232 (if equipped)

The platform railing system consists of one fold down rail section for the extension deck and one section for the main deck. All sections are held in place by four wire lock pins.

1 Fully lower the platform and retract the platform extension.

2 Remove the platform controls.

⚠ Fall hazard. Use caution and maintain a firm footing on the platform floor at all times while folding the guard rails.

3 From inside the platform, remove the two extension deck lock pins.

⚠ Keep hands free of pinch points.

4 From the middle of the extension deck railing, fold down the extension deck rail assembly toward the rear of the unit.

5 At the rear of the main deck, remove the two main deck lock pins.

⚠ Keep hands free of pinch points.

6 From the middle of the unit, fold down the main deck railing assembly toward the front of the unit.

7 Remove the lock pin from the entry swing tube. Raise and step through the entry swing tube, lower the entry swing tube, and insert the lock pin.

8 Carefully open the gate and exit the platform.

9 Insert the four lock pins back into each side rail bracket.

Note: To assist in the removal and replacement of the wire lock pins, pull or push back on the railing to compress the rubber bumpers.

Downloaded from www.Manualslib.com manuals search engine

https://truckmanualshub.com/

Operating Instructions

GS-2046, GS-2646, GS-3246 and GS-4047

The platform railing system consists of three fold down rail sections for the extension deck and three sections for the main deck. All six sections are held in place by four wire lock pins.

1 Fully lower the platform and retract the platform extension.

2 Remove the platform controls.

3 From inside the platform, remove the two front wire lock pins.

4 Fold down the front rail assembly. Keep hands clear of pinch points.

5 Replace the two removed pins back into each side rail bracket.

6 Fold down each side rail assembly. Keep hands clear of pinch points.

7 At the rear of the main deck, remove the two wire lock pins.

8 Carefully open the gate and move to the ground.

9 Fold down the rear gate and entry side rails as one unit. Keep hands clear of pinch points.

10 Fold down the left and right side rails. Keep hands clear of pinch points.

11 Replace the two removed pins back into each side rail bracket.

How to Raise the Guardrails

Follow the fold down instructions but in reverse order, ensuring all lock pins are in place and installed properly.

After Each Use

1 Select a safe parking location—firm level surface, clear of obstruction and traffic.

2 Lower the platform.

3 Turn the key switch to the off position and remove the key to secure from unauthorized use.

4 Charge the batteries.

Downloaded from www.Manualslib.com manuals search engine

https://truckmanualshub.com/

Operating Instructions

Battery and Charger Instructions

Observe and Obey:

☑ Do not use an external charger or booster battery.

☑ Charge the battery in a well-ventilated area.

☑ Use proper AC input voltage for charging as indicated on the charger.

☑ Use only a Genie authorized battery and charger.

To Charge Battery

1 Be sure the batteries are connected before charging the batteries.

2 Open the battery compartment. The compartment should remain open for the entire charging cycle.

Maintenance-free batteries

1 Connect the battery charger to a grounded AC circuit.

2 The charger will indicate when the battery is fully charged.

Standard Batteries

1 Remove the battery vent caps and check the battery acid level. If necessary, add only enough distilled water to cover the plates. Do not overfill prior to the charge cycle.

2 Replace the battery vent caps.

3 Connect the battery charger to a grounded AC circuit.

4 The charger will indicate when the battery is fully charged.

5 Check the battery acid level when the charging cycle is complete. Replenish with distilled water to the bottom of the fill tube. Do not overfill.

Dry Battery Filling and Charging Instructions

1 Remove the battery vent caps and permanently remove the plastic seal from the battery vent openings.

2 Fill each cell with battery acid (electrolyte) until the level is sufficient to cover the plates.

Do not fill to maximum level until the battery charge cycle is complete. Overfilling can cause the battery acid to overflow during charging. Neutralize battery acid spills with baking soda and water.

3 Install the battery vent caps.

4 Charge the battery.

5 Check the battery acid level when the charging cycle is complete. Replenish with distilled water to the bottom of the fill tube. Do not overfill.

Downloaded from www.Manualslib.com manuals search engine

https://truckmanualshub.com/

Transport and Lifting Instructions

Observe and Obey:

- ☑ Genie provides this securement information as a recommendation. Drivers are solely responsible for making sure machines are properly secured and the correct trailer is selected pursuant to US Department of Transportation regulations, other localized regulations, and their company policy.
- ☑ Genie customers needing to containerize any lift or Genie product should source a qualified freight forwarder with expertise in preparing, loading and securing construction and lifting equipment for international shipment.
- ☑ Only qualified aerial lift operators should move the machine on or off the truck.
- ☑ The transport vehicle must be parked on a level surface.
- ☑ The transport vehicle must be secured to prevent rolling while the machine is being loaded.
- ☑ Be sure the vehicle capacity, loading surfaces and chains or straps are sufficient to withstand the machine weight. Genie lifts are very heavy relative to their size. See the serial label for the machine weight.
- ☑ The machine must be on a level surface or secured before releasing the brakes.
- ☑ Do not allow the rails to fall when the snap pins are removed. Maintain a firm grasp on the rails when the rails are lowered.
- ☑ Do not drive the machine on a slope that exceeds the uphill, downhill or side slope rating. See Driving on a Slope in the Operating Instructions section.
- ☑ If the slope of the transport vehicle bed exceeds the maximum slope rating, the machine must be loaded and unloaded using a winch as described in the brake release operation.

Downloaded from www.Manualslib.com manuals search engine

https://truckmanualshub.com/

Transport and Lifting Instructions

Brake Release Operation

1 Chock the wheels to prevent the machine from rolling.

2 Be sure the winch line is properly secured to the drive chassis tie points and the path is clear of all obstructions.

3 Push in the black brake release knob to open the brake valve.

4 Pump the red brake release pump knob.

After the machine is loaded:

1 Chock the wheels to prevent the machine from rolling.

2 Pull out the red Emergency Stop button at both the ground and platform controls to the on position.

3 Press and hold the drive/steer function enable switch on the control handle. Move the control handle off center and immediately release it to reset the brakes.

4 Push the red Emergency stop button at both the ground and platform controls to the off position.

Towing the Genie GS-1530, GS-1532, GS-1930, GS-1932, GS-2032, GS-2632, GS-3232, GS-2046, GS-2646, GS-3246 and GS-4047 is not recommended. If the machine must be towed, do not exceed 3.2 km/h.

Downloaded from www.Manualslib.com manuals search engine

https://truckmanualshub.com/

Transport and Lifting Instructions

Securing to Truck or Trailer for Transit

Always use the extension deck lock when the machine is transported.

Turn the key switch to the off position and remove the key before transporting.

Inspect the entire machine for loose or unsecured items.

Use chains or straps of ample load capacity.

Use a minimum of 2 chains or straps.

Adjust the rigging to prevent damage to the chains.

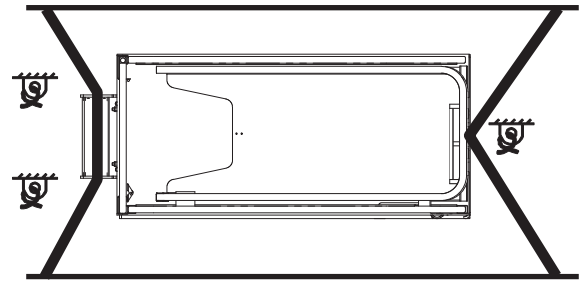

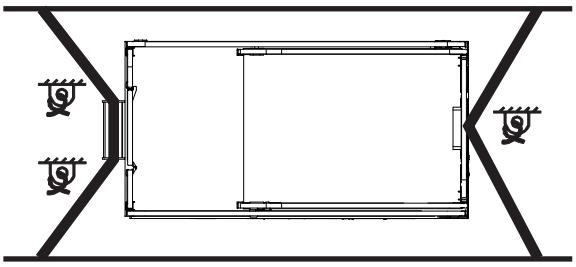

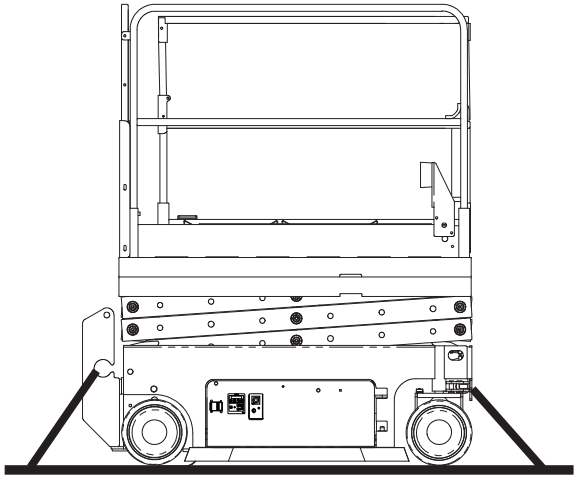

GS-1530 GS-1930
GS-1532 GS-1932

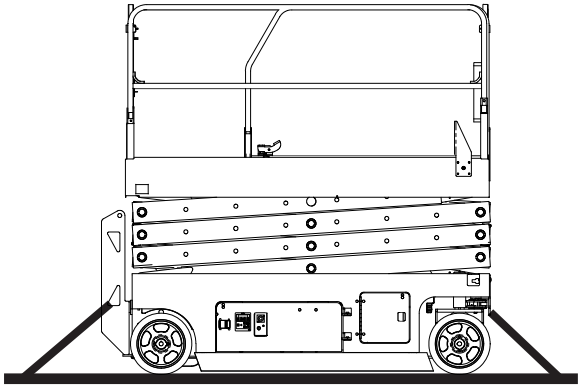

GS-2032 GS-2046
GS-2632 GS-2646
GS-3232 GS-3246
GS-4047

Downloaded from www.Manualslib.com manuals search engine

https://truckmanualshub.com/

Transport and Lifting Instructions

Observe and Obey:

- ☑ Only qualified riggers should rig and lift the machine.
- ☑ Only qualified forklift operators should lift the machine with a forklift.
- ☑ Be sure the crane capacity, loading surfaces and straps or lines are sufficient to withstand the machine weight. See the serial label for the machine weight.

Lifting the Machine with a Forklift

Be sure the extension deck, controls and component trays are secure. Remove all loose items on the machine.

Fully lower the platform. The platform must remain lowered during all loading and transport procedures.

Use the forklift pockets located on both sides of the ladder.

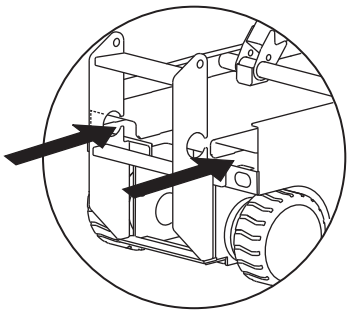

Position the forklift forks in position with the forklift pockets.

Drive forward to the full extent of the forks.

Raise the machine 0.4 m and then tilt the forks back slightly to keep the machine secure.

Be sure the machine is level when lowering the forks.

NOTICE Lifting the machine from the side can result in component damage.

Downloaded from www.Manualslib.com manuals search engine

https://truckmanualshub.com/

Transport and Lifting Instructions

Lifting Instructions

Fully lower the platform. Be sure the extension deck, controls and component trays are secure. Remove all loose items on the machine.

Determine the center of gravity of your machine using the table and the picture on this page.

Attach the rigging only to the designated lifting points on the machine. There are two 2.5 cm holes on the front of the machine and two holes in the ladder for lifting.

Adjust the rigging to prevent damage to the machine and to keep the machine level.

Center of Gravity Table

Model	X Axis	Y Axis
GS-1530	49.8 cm	47.2 cm
GS-1532	49.8 cm	47.2 cm
GS-1930	50.8 cm	49.5 cm
GS-1932	50.8 cm	49.5 cm
GS-2032	80.9 cm	53.9 cm
GS-2632	82.2 cm	59.3 cm
GS-3232	78.7 cm	67.3 cm
GS-2046	82.7 cm	56.8 cm
GS-2646	88.2 cm	56.4 cm
GS-3246	83.7 cm	59.9 cm
GS-4047	85.8 cm	51.5 cm

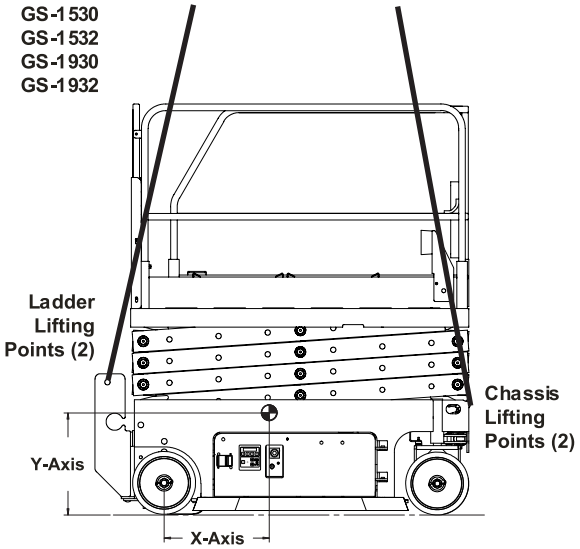

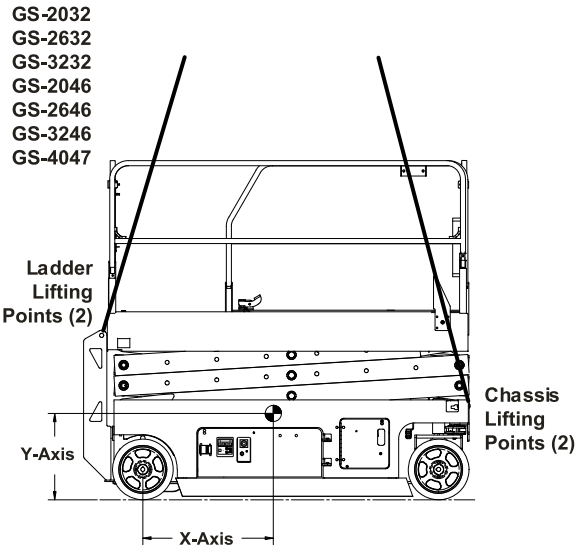

Downloaded from www.Manualslib.com manuals search engine

https://truckmanualshub.com/

Maintenance

Observe and Obey:

- ☑ Only routine maintenance items specified in this manual shall be performed by the operator.
- ☑ Scheduled maintenance inspections shall be completed by qualified service technicians, according to the manufacturer's specifications and the requirements specified in the responsibilities manual.
- ☑ Dispose of material in accordance with governmental regulations.
- ☑ Use only Genie approved replacement parts.

Maintenance Symbols Legend

The following symbols have been used in this manual to help communicate the intent of the instructions. When one or more of the symbols appear at the beginning of a maintenance procedure, it conveys the meaning below.

Indicates that tools will be required to perform this procedure.

Indicates that new parts will be required to perform this procedure.

Check the Hydraulic Oil Level

Maintaining the hydraulic oil at the proper level is essential to machine operation. Improper hydraulic oil levels can damage hydraulic components. Daily checks allow the inspector to identify changes in oil level that might indicate the presence of hydraulic system problems.

1 Be sure that the machine is on a firm, level surface, free of obstructions, with the platform in the stowed position.

2 Visually inspect the oil level in the hydraulic oil tank.

⊙ Result: The hydraulic oil level should be between the ADD and FULL marks on the tank.

3 Add oil as needed. Do not overfill.

Hydraulic oil specifications	
Hydraulic oil type	Chevron Rando HD equivalent

Downloaded from www.Manualslib.com manuals search engine

https://truckmanualshub.com/

Maintenance

Check the Batteries

Proper battery condition is essential to good machine performance and operational safety. Improper fluid levels or damaged cables and connections can result in component damage and hazardous conditions.

- ⚠ Electrocution hazard. Contact with hot or live circuits may result in death or serious injury. Remove all rings, watches and other jewelry.
- ⚠ Bodily injury hazard. Batteries contain acid. Avoid spilling or contacting battery acid. Neutralize battery acid spills with baking soda and water.

Note: Perform this test after fully charging the batteries.

1. Put on protective clothing and eye wear.
2. Be sure that the battery cable connections are tight and free of corrosion.
3. Be sure that the battery hold-down brackets are in place and secure.

Note: Adding terminal protectors and a corrosion preventative sealant will help eliminate the corrosion on the battery terminals and cables.

Scheduled Maintenance

Maintenance performed quarterly, annually and every two years must be completed by a person trained and qualified to perform maintenance on this machine according to the procedures found in the service manual for this machine.

Machines that have been out of service for more than three months must receive the quarterly inspection before they are put back into service.

Downloaded from www.Manualslib.com manuals search engine

https://truckmanualshub.com/

Specifications

Model	GS-1530 and GS-1532
Height, working maximum	6.57 m
Height, platform maximum	4.57 m
Height, stowed maximum	206 cm
Platform height, stowed maximum	97 cm
Height, guard rails	109 cm
Width GS-1530 GS-1532	 76 cm 81 cm
Length, stowed	183 cm
Length, platform extended	272 cm
Platform extension length	89 cm
Platform dimensions (length x width)	164 x 75 cm
Maximum load capacity	272 kg
Maximum wind speed GS-1530 GS-1532	 0 m/s 12.5 m/s
Wheelbase	132 cm
Turning radius (outside)	155 cm
Turning radius (inside)	0 cm
Ground clearance	6.1 cm
Ground clearance Pothole guards deployed	1.9 cm
Weight GS-1530 GS-1532	 1257 kg 1269 kg
(Machine weights vary with option configurations. See serial label for specific machine weight.)	
Power source	4 Batteries, 6V 225AH
System voltage	24V
AC outlet in platform	Standard
Maximum hydraulic pressure (functions)	241 bar
Tire size	12 x 4.5 x 8 in
Total vibration value to which the hand/arm system is subjected does not exceed 2.5 m/s^2.	
Highest root mean square value of weighted acceleration to which the whole body is subjected does not exceed 0.5 m/s^2.	

Operating temperature	
Minimum	-29°C
Maximum	66°C
Airborne noise emissions	
Sound pressure level at ground workstation	<70 dBA
Sound pressure level at platform workstation	<70 dBA
Maximum slope rating, stowed position	30% (17°)
Maximum side slope rating, stowed position	30% (17°)
Note: Slope rating is subject to ground conditions and adequate traction.	
Drive speeds	
Stowed, maximum	4.0 km/h
Platform raised, maximum	0.8 km/h 12.5 m/55 sec
Floor loading information, GS-1530	
Tire load maximum	546 kg
Tire contact pressure	9.40 kg / cm^2 921 kPa
Occupied floor pressure	1216 kg / m^2 11.92 kPa
Floor loading information, GS-1532	
Tire load maximum	547 kg
Tire contact pressure	9.43 kg / cm^2 924 kPa
Occupied floor pressure	1142 kg / m^2 11.2 kPa
Note: Floor loading information is approximate and does not incorporate different option configurations. It should be used only with adequate safety factors.	
Continuous improvement of our products is a Genie policy. Product specifications are subject to change without notice or obligation.	

Downloaded from www.Manualslib.com manuals search engine

https://truckmanualshub.com/

Specifications

Model	GS-1930
Height, working maximum	7.79 m
Height, platform maximum	5.79 m
Height, stowed maximum	210 cm
Platform height, stowed maximum	100 cm
Height, guard rails	109 cm
Width	76 cm
Length, stowed	183 cm
Length, platform extended	272 cm
Platform extension length	89 cm
Platform dimensions (length x width)	164 x 75 cm
Maximum load capacity	227 kg
Maximum wind speed	0 m/s
Wheelbase	132 cm
Turning radius (outside)	155 cm
Turning radius (inside)	0 cm
Ground clearance	6.1 cm
Ground clearance Pothole guards deployed	1.9 cm
Weight	1476 kg
(Machine weights vary with option configurations. See serial label for specific machine weight.)	
Power source	4 Batteries, 6V 225AH
System voltage	24V
AC outlet in platform	Standard
Maximum hydraulic pressure (functions)	241 bar
Tire size	12 x 4.5 x 8 in
Total vibration value to which the hand/arm system is subjected does not exceed 2.5 m/s^2.	
Highest root mean square value of weighted acceleration to which the whole body is subjected does not exceed 0.5 m/s^2.	

Operating temperature	
Minimum	-29°C
Maximum	66°C
Airborne noise emissions	
Sound pressure level at ground workstation	<70 dBA
Sound pressure level at platform workstation	<70 dBA
Maximum slope rating, stowed position	25% (14°)
Maximum side slope rating, stowed position	25% (14°)
Note: Slope rating is subject to ground conditions and adequate traction.	
Drive speeds	
Stowed, maximum	4.0 km/h
Platform raised, maximum	0.8 km/h 12.5 m/55 sec
Floor loading information, GS-1930	
Tire load maximum	600 kg
Tire contact pressure	10.35 kg / cm^2 1014 kPa
Occupied floor pressure	1391 kg / m^2 13.65 kPa
Note: Floor loading information is approximate and does not incorporate different option configurations. It should be used only with adequate safety factors.	
Continuous improvement of our products is a Genie policy. Product specifications are subject to change without notice or obligation.	

Downloaded from www.Manualslib.com manuals search engine

https://truckmanualshub.com/

Specifications

Model	GS-1932
Height, working maximum	7.79 m
Height, platform maximum	5.79 m
Height, stowed maximum	210 cm
Platform height, stowed maximum	100 cm
Height, guard rails	109 cm
Width	81 cm
Length, stowed	183 cm
Length, platform extended	272 cm
Platform extension length	89 cm
Platform dimensions (length x width)	164 x 75 cm
Maximum load capacity	227 kg
Maximum wind speed	12.5 m/s
Wheelbase	132 cm
Turning radius (outside)	155 cm
Turning radius (inside)	0 cm
Ground clearance	6.1 cm
Ground clearance Pothole guards deployed	1.9 cm
Weight	1503 kg
(Machine weights vary with option configurations. See serial label for specific machine weight.)	
Power source	4 Batteries, 6V 225AH
System voltage	24V
AC outlet in platform	Standard
Maximum hydraulic pressure (functions)	241 bar
Tire size	12 x 4.5 x 8 in
Total vibration value to which the hand/arm system is subjected does not exceed 2.5 m/s^2.	
Highest root mean square value of weighted acceleration to which the whole body is subjected does not exceed 0.5 m/s^2.	

Operating temperature	
Minimum	-29°C
Maximum	66°C
Airborne noise emissions	
Sound pressure level at ground workstation	<70 dBA
Sound pressure level at platform workstation	<70 dBA
Maximum slope rating, stowed position	25% (14°)
Maximum side slope rating, stowed position	25% (14°)
Note: Slope rating is subject to ground conditions and adequate traction.	
Drive speeds	
Stowed, maximum	4.0 km/h
Platform raised, maximum	0.8 km/h 12.5 m/55 sec
Floor loading information, GS-1932	
Tire load maximum	600 kg
Tire contact pressure	10.35 kg / cm^2 1014 kPa
Occupied floor pressure	1313 kg / m^2 12.88 kPa
Note: Floor loading information is approximate and does not incorporate different option configurations. It should be used only with adequate safety factors.	
Continuous improvement of our products is a Genie policy. Product specifications are subject to change without notice or obligation.	

Downloaded from www.Manualslib.com manuals search engine

https://truckmanualshub.com/

Specifications

Model	GS-2032
Height, working maximum	7.92 m
Height, platform maximum	5.92 m
Height, stowed maximum	212 cm
Platform height, stowed maximum	103 cm
Height, guard rails	109 cm
Width	81 cm
Length, stowed	244 cm
Length, platform extended	333 cm
Platform extension length	89 cm
Platform dimensions (length x width)	226 x 81 cm
Maximum load capacity	363 kg
Maximum wind speed Indoor Outdoor	 0 m/s 12.5 m/s
Wheelbase	185 cm
Turning radius (outside)	212 cm
Turning radius (inside)	0 cm
Ground clearance	8.9 cm
Ground clearance Pothole guards deployed	2.2 cm
Weight	1830 kg
(Machine weights vary with option configurations. See serial label for specific machine weight.)	
Power source	4 Batteries, 6V 225AH
System voltage	24V
AC outlet in platform	Standard
Maximum hydraulic pressure (functions)	241 bar
Tire size	15 x 5 x 11.25 in
Total vibration value to which the hand/arm system is subjected does not exceed 2.5 m/s^2.	
Highest root mean square value of weighted acceleration to which the whole body is subjected does not exceed 0.5 m/s^2.	

Operating temperature	
Minimum	-29°C
Maximum	66°C
Airborne noise emissions	
Sound pressure level at ground workstation	<70 dBA
Sound pressure level at platform workstation	<70 dBA
Maximum slope rating, stowed position	30% (17°)
Maximum side slope rating, stowed position	30% (17°)
Note: Slope rating is subject to ground conditions and adequate traction.	
Drive speeds	
Stowed, maximum	3.2 km/h
Platform raised, maximum	0.8 km/h 12.2 m/54 sec
Floor loading information, GS-2032	
Tire load maximum	771 kg
Tire contact pressure	7.97 kg / cm^2 781 kPa
Occupied floor pressure	1207 kg / m^2 11.84 kPa
Note: Floor loading information is approximate and does not incorporate different option configurations. It should be used only with adequate safety factors.	
Continuous improvement of our products is a Genie policy. Product specifications are subject to change without notice or obligation.	

Downloaded from www.Manualslib.com manuals search engine

https://truckmanualshub.com/

Specifications

Model	GS-2632
Height, working maximum	9.93 m
Height, platform maximum	7.93 m
Height, stowed maximum	225 cm
Platform height, stowed maximum	116 cm
Height, guard rails	109 cm
Width	81 cm
Length, stowed	244 cm
Length, platform extended	333 cm
Platform extension length	89 cm
Platform dimensions (length x width)	226 x 81 cm
Maximum load capacity	227 kg
Maximum wind speed	0 m/s
Wheelbase	185 cm
Turning radius (outside)	212 cm
Turning radius (inside)	0 cm
Ground clearance	8.9 cm
Ground clearance Pothole guards deployed	2.2 cm
Weight	1959 kg
(Machine weights vary with option configurations. See serial label for specific machine weight.)	
Power source	4 Batteries, 6V 225AH
System voltage	24V
AC outlet in platform	Standard
Maximum hydraulic pressure (functions)	241 bar
Tire size	15 x 5 x 11.25 in
Total vibration value to which the hand/arm system is subjected does not exceed 2.5 m/s^2.	
Highest root mean square value of weighted acceleration to which the whole body is subjected does not exceed 0.5 m/s^2.	

Operating temperature	
Minimum	-29°C
Maximum	66°C
Airborne noise emissions	
Sound pressure level at ground workstation	<70 dBA
Sound pressure level at platform workstation	<70 dBA
Maximum slope rating, stowed position	25% (14°)
Maximum side slope rating, stowed position	25% (14°)
Note: Slope rating is subject to ground conditions and adequate traction.	
Drive speeds	
Stowed, maximum	3.2 km/h
Platform raised, maximum	0.8 km/h 12.2 m/54 sec
Floor loading information, GS-2632	
Tire load maximum	830 kg
Tire contact pressure	8.58 kg / cm^2 841 kPa
Occupied floor pressure	1203 kg / m^2 11.80 kPa
Note: Floor loading information is approximate and does not incorporate different option configurations. It should be used only with adequate safety factors.	
Continuous improvement of our products is a Genie policy. Product specifications are subject to change without notice or obligation.	

Downloaded from www.Manualslib.com manuals search engine

https://truckmanualshub.com/

Specifications

Model	GS-3232
Height, working maximum	11.75 m
Height, working drivable	9.75 m
Height, platform maximum	9.5 m
Height, platform drivable	6.7 m
Height, stowed maximum	238 cm
Platform height, stowed maximum	129 cm
Height, guard rails	109 cm
Width	81 cm
Length, stowed	244 cm
Length, platform extended	333 cm
Platform extension length	89 cm
Platform dimensions (length x width)	226 x 81 cm
Maximum load capacity	227 kg
Maximum wind speed	0 m/s
Wheelbase	185 cm
Turning radius (outside)	212 cm
Turning radius (inside)	0 cm
Ground clearance	8.9 cm
Ground clearance Pothole guards deployed	2.2 cm
Weight	2352 kg
(Machine weights vary with option configurations. See serial label for specific machine weight.)	
Power source	4 Batteries, 6V 225AH
System voltage	24V
AC outlet in platform	Standard
Maximum hydraulic pressure (functions)	241 bar
Tire size	15 x 5 x 11.25 in
Total vibration value to which the hand/arm system is subjected does not exceed 2.5 m/s^2.	
Highest root mean square value of weighted acceleration to which the whole body is subjected does not exceed 0.5 m/s^2.	

Operating temperature	
Minimum	-29°C
Maximum	66°C
Airborne noise emissions	
Sound pressure level at ground workstation	<70 dBA
Sound pressure level at platform workstation	<70 dBA
Maximum slope rating, stowed position	25% (14°)
Maximum side slope rating, stowed position	25% (14°)
Note: Slope rating is subject to ground conditions and adequate traction.	
Drive speeds	
Stowed, maximum	3.2 km/h
Platform raised, maximum	0.8 km/h 12.2 m/54 sec
Floor loading information, GS-3232	
Tire load maximum	771 kg
Tire contact pressure	7.98 kg / cm^2 781 kPa
Occupied floor pressure	1420 kg / m^2 13.92 kPa
Note: Floor loading information is approximate and does not incorporate different option configurations. It should be used only with adequate safety factors.	
Continuous improvement of our products is a Genie policy. Product specifications are subject to change without notice or obligation.	

Downloaded from www.Manualslib.com manuals search engine

https://truckmanualshub.com/

Specifications

Model	GS-2046
Height, working maximum	8.1 m
Height, platform maximum	6.1 m
Height, stowed maximum	213 cm
Platform height, stowed maximum	104 cm
Height, stowed maximum, rails folded	156 cm
Height, guard rails	109 cm
Width	116 cm
Length, stowed	244 cm
Length, platform extended	333 cm
Platform extension length	89 cm
Platform dimensions (length x width)	226 x 116 cm
Maximum load capacity	544 kg
Maximum wind speed Indoor Outdoor	 0 m/s 12.5 m/s
Wheelbase	185 cm
Turning radius (outside)	229 cm
Turning radius (inside)	0 cm
Ground clearance	9.5 cm
Ground clearance Pothole guards deployed	1.9 cm
Weight	1945 kg
(Machine weights vary with option configurations. See serial label for specific machine weight.)	
Power source	4 Batteries, 6V 225AH
System voltage	24V
AC outlet in platform	Standard
Maximum hydraulic pressure (functions)	241 bar
Tire size	15 x 5 x 11.25 in
Total vibration value to which the hand/arm system is subjected does not exceed 2.5 m/s^2.	
Highest root mean square value of weighted acceleration to which the whole body is subjected does not exceed 0.5 m/s^2.	

Operating temperature	
Minimum	-29°C
Maximum	66°C
Airborne noise emissions	
Sound pressure level at ground workstation	<70 dBA
Sound pressure level at platform workstation	<70 dBA
Maximum slope rating, stowed position	30% (17°)
Maximum side slope rating, stowed position	30% (17°)
Note: Slope rating is subject to ground conditions and adequate traction.	
Drive speeds	
Stowed, maximum	3.2 km/h
Platform raised, maximum	0.8 km/h 12.2 m/54 sec
Floor loading information, GS-2046	
Tire load maximum	964 kg
Tire contact pressure	9.97 kg / cm^2 977 kPa
Occupied floor pressure	953 kg / m^2 9.35 kPa
Note: Floor loading information is approximate and does not incorporate different option configurations. It should be used only with adequate safety factors.	
Continuous improvement of our products is a Genie policy. Product specifications are subject to change without notice or obligation.	

Downloaded from www.Manualslib.com manuals search engine

https://truckmanualshub.com/

Specifications

Model	GS-2646
Height, working maximum	9.77 m
Height, platform maximum	7.77 m
Height, stowed maximum	225 cm
Platform height, stowed maximum	116 cm
Height, stowed maximum, rails folded	168 cm
Height, guard rails	109 cm
Width	116 cm
Length, stowed	244 cm
Length, platform extended	333 cm
Platform extension length	89 cm
Platform dimensions (length x width)	226 x 116 cm
Maximum load capacity	454 kg
Maximum wind speed Indoor Outdoor	 0 m/s 12.5 m/s
Wheelbase	185 cm
Turning radius (outside)	229 cm
Turning radius (inside)	0 cm
Ground clearance	9.5 cm
Ground clearance Pothole guards deployed	1.9 cm
Weight	2412 kg
(Machine weights vary with option configurations. See serial label for specific machine weight.)	
Power source	4 Batteries, 6V 225AH
System voltage	24V
AC outlet in platform	Standard
Maximum hydraulic pressure (functions)	241 bar
Tire size	15 x 5 x 11.25 in
Total vibration value to which the hand/arm system is subjected does not exceed 2.5 m/s^2.	
Highest root mean square value of weighted acceleration to which the whole body is subjected does not exceed 0.5 m/s^2.	

Operating temperature	
Minimum	-29°C
Maximum	66°C
Airborne noise emissions	
Sound pressure level at ground workstation	<70 dBA
Sound pressure level at platform workstation	<70 dBA
Maximum slope rating, stowed position	30% (17°)
Maximum side slope rating, stowed position	30% (17°)
Note: Slope rating is subject to ground conditions and adequate traction.	
Drive speeds	
Stowed, maximum	3.2 km/h
Platform raised, maximum	0.8 km/h 12.2 m/54 sec
Floor loading information, GS-2646	
Tire load maximum	1136 kg
Tire contact pressure	11.75 kg / cm^2 1152 kPa
Occupied floor pressure	1097 kg / m^2 10.76 kPa
Note: Floor loading information is approximate and does not incorporate different option configurations. It should be used only with adequate safety factors.	
Continuous improvement of our products is a Genie policy. Product specifications are subject to change without notice or obligation.	

Downloaded from www.Manualslib.com manuals search engine

https://truckmanualshub.com/

Specifications

Model	GS-3246
Height, working maximum	11.75 m
Height, platform maximum	9.75 m
Height, stowed maximum	238 cm
Platform height, stowed maximum	129 cm
Height, stowed maximum, rails folded	181 cm
Height, guard rails	109 cm
Width	116 cm
Length, stowed	244 cm
Length, platform extended	333 cm
Platform extension length	89 cm
Platform dimensions (length x width)	226 x 116 cm
Maximum load capacity	318 kg
Maximum wind speed Indoor Outdoor	 0 m/s 12.5 m/s
Wheelbase	185 cm
Turning radius (outside)	229 cm
Turning radius (inside)	0 cm
Ground clearance	9.5 cm
Ground clearance Pothole guards deployed	1.9 cm
Weight	2781 kg
(Machine weights vary with option configurations. See serial label for specific machine weight.)	
Power source	4 Batteries, 6V 225AH
System voltage	24V
AC outlet in platform	Standard
Maximum hydraulic pressure (functions)	241 bar
Tire size	15 x 5 x 11.25 in
Total vibration value to which the hand/arm system is subjected does not exceed 2.5 m/s^2.	
Highest root mean square value of weighted acceleration to which the whole body is subjected does not exceed 0.5 m/s^2.	

Operating temperature	
Minimum	-29°C
Maximum	66°C
Airborne noise emissions	
Sound pressure level at ground workstation	<70 dBA
Sound pressure level at platform workstation	<70 dBA
Maximum slope rating, stowed position	25% (14°)
Maximum side slope rating, stowed position	25% (14°)
Note: Slope rating is subject to ground conditions and adequate traction.	
Drive speeds	
Stowed, maximum	3.2 km/h
Platform raised, maximum	0.8 km/h 12.2 m/54 sec
Floor loading information, GS-3246	
Tire load maximum	1183 kg
Tire contact pressure	12.24 kg / cm^2 1199 kPa
Occupied floor pressure	1186 kg / m^2 11.63 kPa
Note: Floor loading information is approximate and does not incorporate different option configurations. It should be used only with adequate safety factors.	
Continuous improvement of our products is a Genie policy. Product specifications are subject to change without notice or obligation.	

Downloaded from www.Manualslib.com manuals search engine

https://truckmanualshub.com/

Specifications

Model	GS-4047
Height, working maximum	13.7 m
Height, platform maximum	11.7 m
Height, stowed maximum	254 cm
Platform height, stowed maximum	143 cm
Height, stowed maximum, rails folded	195 cm
Height, guard rails	109 cm
Width	119 cm
Length, stowed	248 cm
Length, platform extended	338 cm
Platform extension length	89 cm
Platform dimensions (length x width)	226 x 116 cm
Maximum load capacity	350 kg
Maximum wind speed	0 m/s
Wheelbase	185 cm
Turning radius (outside)	231 cm
Turning radius (inside)	0 cm
Ground clearance	9.5 cm
Ground clearance Pothole guards deployed	1.9 cm
Weight	3221 kg
(Machine weights vary with option configurations. See serial label for specific machine weight.)	
Power source	4 Batteries, 12V 150AH
System voltage	24V
AC outlet in platform	Standard
Maximum hydraulic pressure (functions)	241 bar
Tire size	15 x 5 x 11.25 in
Total vibration value to which the hand/arm system is subjected does not exceed 2.5 m/s^2.	
Highest root mean square value of weighted acceleration to which the whole body is subjected does not exceed 0.5 m/s^2.	

Operating temperature	
Minimum	-29°C
Maximum	66°C
Airborne noise emissions	
Sound pressure level at ground workstation	<70 dBA
Sound pressure level at platform workstation	<70 dBA
Maximum slope rating, stowed position	25% (14°)
Maximum side slope rating, stowed position	25% (14°)
Note: Slope rating is subject to ground conditions and adequate traction.	
Drive speeds	
Stowed, maximum	3.2 km/h
Platform raised, maximum	0.8 km/h 12 m/71 sec
Floor loading information, GS-4047	
Tire load maximum	1289 kg
Tire contact pressure	13.33 kg / cm^2 1306 kPa
Occupied floor pressure	1338 kg / m^2 13.12 kPa
Note: Floor loading information is approximate and does not incorporate different option configurations. It should be used only with adequate safety factors.	

Continuous improvement of our products is a Genie policy. Product specifications are subject to change without notice or obligation.

Downloaded from www.Manualslib.com manuals search engine

https://truckmanualshub.com/

Distributed By:

www.genielift.com

Downloaded from www.Manualslib.com manuals search engine