https://truckmanualshub.com/

Kaiser. Performance counts.

KAISER

S22 RR

Impressive technology to master tough challenges.

KAISER ROAD-RAIL EXCAVATOR

https://truckmanualshub.com/

S22RR

Short-tail road-rail excavator

Outstanding performance, stability and simple changeover to narrow gauge are the distinguishing features of the universal S22 road-rail excavator. The innovative S22RR comes in a short-tail design with a tail swing radius of less than 157 cm. A major advantage of the short-tail excavator is the enhanced safety on site.

125 kW diesel engine with stage IV emissions standards

The high-powered diesel engine provides the basis for efficient and rapid operations. The requirements of the stage IV emissions standards and the Swiss Ordinance on Air Pollution Control (OAPC) are fully met with the newly developed John Deere engine. The integration of the exhaust after-treatment system in the engine control system ensures optimal availability of the entire machine under every possible load status. The generously designed cooling system enables high continuous load, even in conjunction with power-intensive attachments.

Optimal axle load distribution

The short-tail design of the excavator calls for an innovative concept with the best possible layout of all the components. While the maximum axle load should not be exceeded, an adequate counterbalance should nonetheless be provided to achieve the required lifting capacity. The result with the S22RR: an ideal weight distribution for deployment on and alongside the railway track.

ROTO*line* for the use of power-intensive attachments

The S22RR features a modern hydraulic system in a mixed open/closed and load-sensing construction to achieve the best possible work results. The closed circuit system enables sensitive control as well as regenerative braking during slewing operations. In conjunction with the standard tool management system, the load-sensing hydraulic system ensures unsurpassable versatility of the up to three double-acting circuits. The optional ROTO*line* is unique in this machine class and is synonymous with efficiency in the case of power-intensive attachments.

https://truckmanualshub.com/

INNOVATIVE ROAD-RAIL EXCAVATOR

Two-piece offset boom to increase working performance

Generously dimensioned cooling for the toughest working conditions

Four-circuit hydraulic system with optional ROTO*line* for the use of power-intensive attachments.

Innovative road-rail excavator in a short-tail design (tail swing radius <1.57 m)

Powerful 125 kW diesel engine with stage IV and OAPC emissions standards.

Modern double cab for safe and productive working.

Optimal axle load distribution for stability and maximum lifting capacity.

Joystick, display and operating elements optimally matched.

https://truckmanualshub.com/

DIMENSIONS

with two-piece boom / stick length 2.1 m
Position category 9B to EN 15746-1

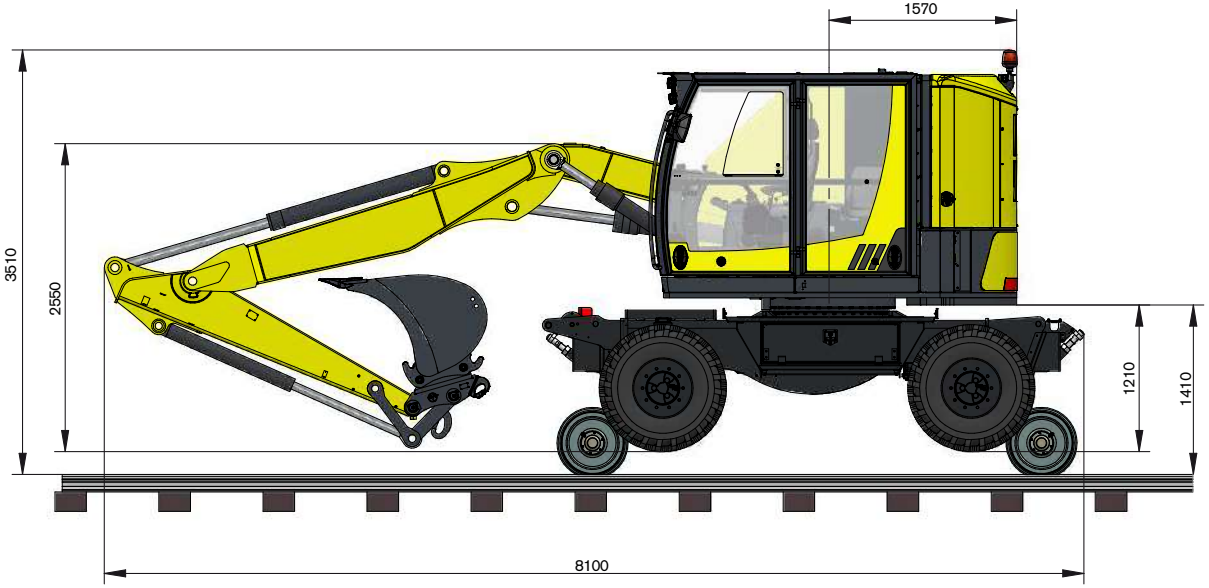

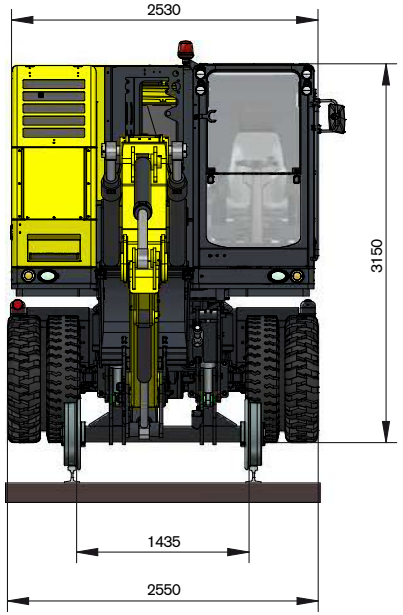

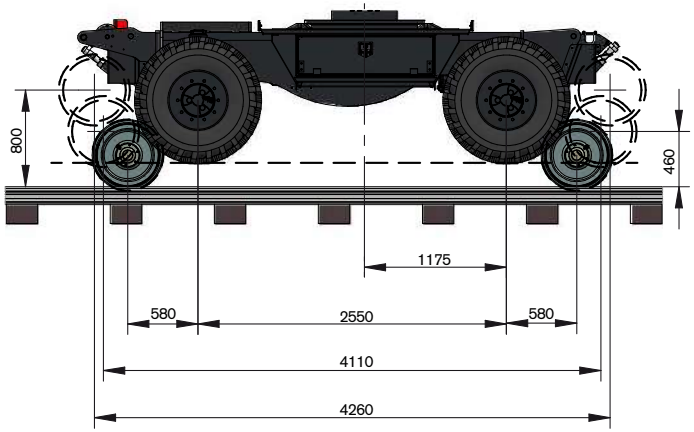

https://truckmanualshub.com/

DIMENSIONS

with two-piece boom / stick length 2.1 m
Position category 9C to EN 15746-1

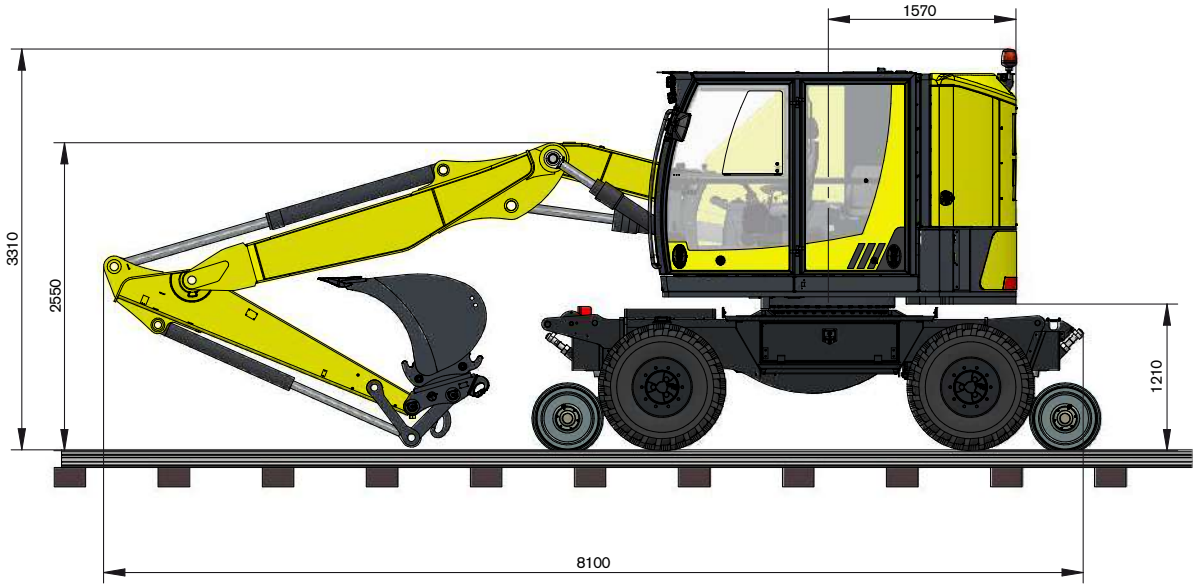

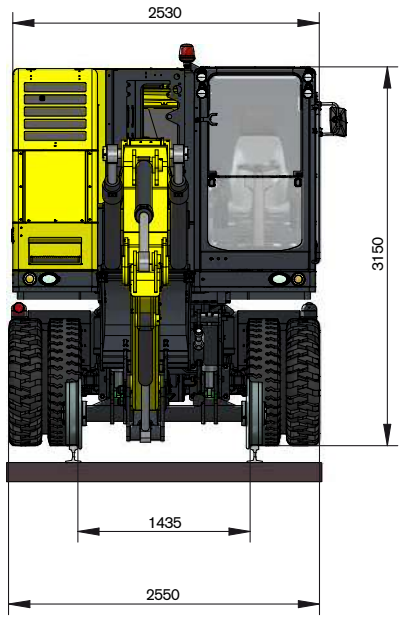

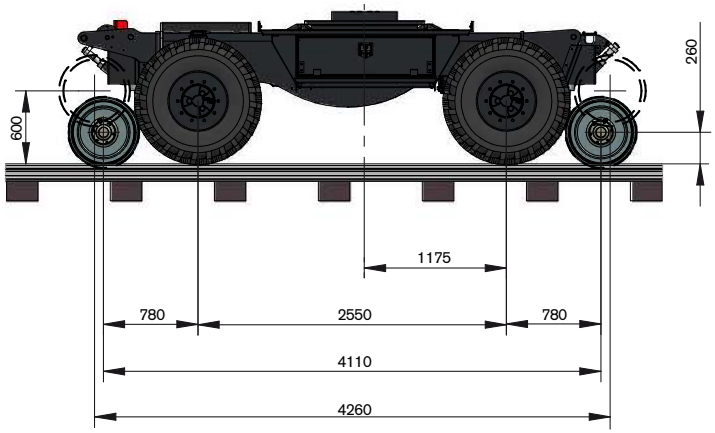

https://truckmanualshub.com/

TWO-PIECE OFFSET BOOM

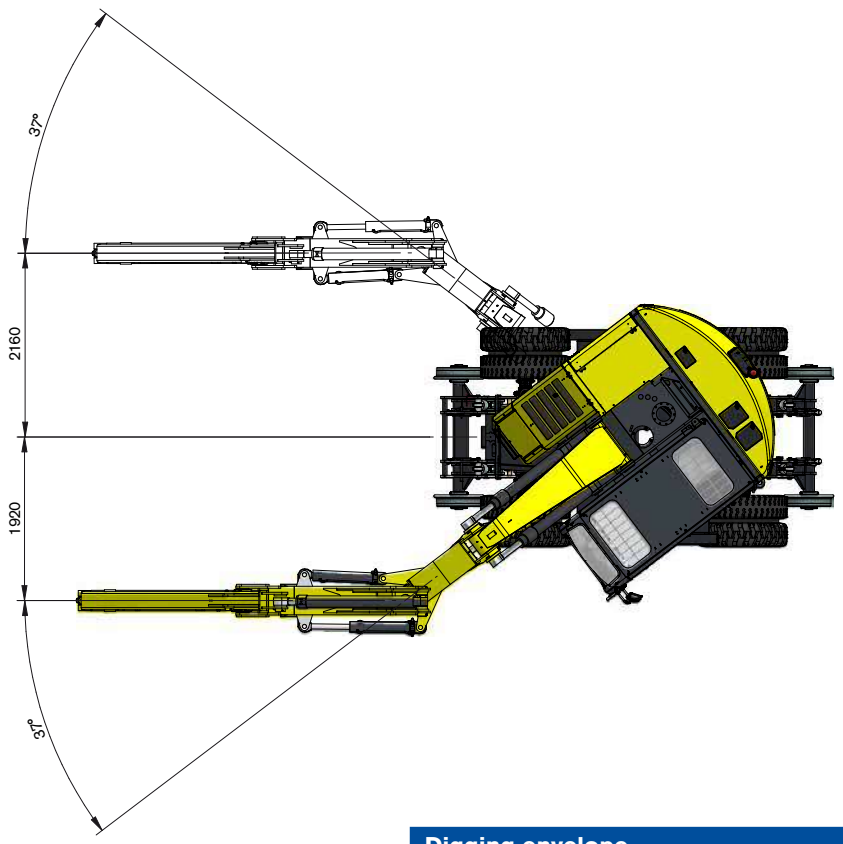

Digging forces

Stick length 2.1 m	
Breakout force	97.3 kN
Ripping force	79.4 kN

Digging envelope

Stick length 2.1 m	mm
A - Max. reach	8530
B - Max. reach at ground level	8320
C - Max. digging depth	4840
D - Max. digging height	9770
E – Min. swing radius	2400
F – Max. dumping height	7140
G – Swing radius at max. height	2350
H – Max. dumping height with stick fully retracted	3580

DIGGING ENVELOPE

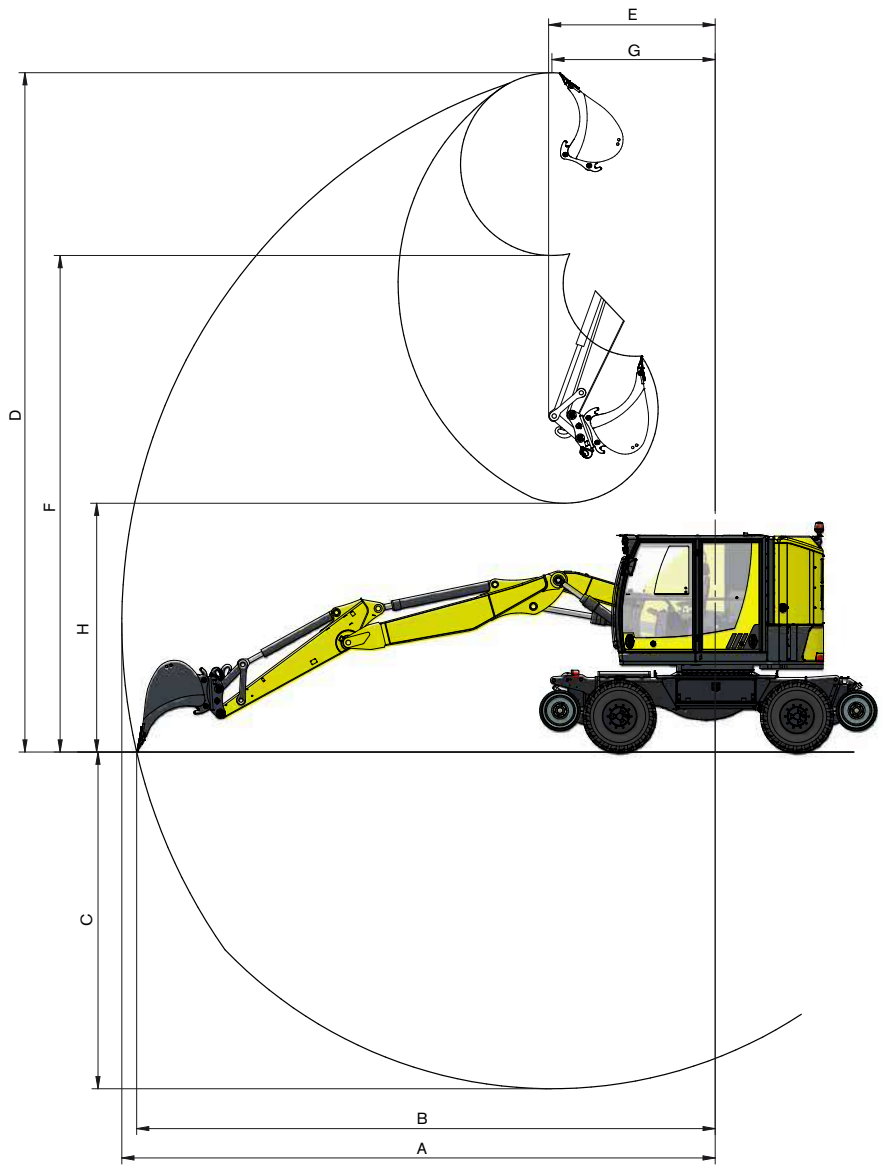

https://truckmanualshub.com/

TECHNICAL SPECIFICATIONS

(Technical specifications will vary depending on chassis type and equipment)

Engine

Engine model	John Deere 4045HFC09
Power rating to ISO3046	125 kW (168 PS) @ 2000 rpm
Torque	667 Nm @ 1600 rpm
Engine type	in-line, 4-cylinder
> Bore/stroke	106 / 127 mm
> Displacement	4.5 l
Operating method	4-cycle diesel common-rail injection, twin turbochargers with charge air cooler
Exhaust emissions	EU 97/68/EC Stage IV US EPA Tier IV Final
Exhaust filters	Particulate filter and SCR
Cooling system	Water cooling
Air filter	Dry air filter with main and safety elements
Fuel tank capacity	280 l
Automatic idle running	Joystick
Electrical system	
> Operating voltage	24 V
> Battery	2x 95 Ah / 12V
> Alternator	100 A
> Starter	7.8 kW

Swing system

Drive	Closed, stepless hydraulic circuit
Gearbox	Two-stage planetary gearing running in oil bath
Slewing ring	Module 10 with hardened surfaces
Slewing speed	0 – 10 rpm, stepless
Slewing torque	45 kNm
Brake	Negative holding brake, lockable

Attachment

Hydraulic cylinders	Cylinders with end position damping
Lubrication	Central lubrication

Hydraulic system

Hydraulic system	Four-circuit LS / LUDV load-independent flow-sharing system; option of 5-circuit system (ROTO*line*)
Operating pressure	340 bar / 370 bar (booster)
Max. flow rate	460 l/min (without ROTO*line*)
Hydraulic circuit 1	Double-acting, proportional max. 180 l/min, 150 – 350 bar
Hydraulic circuit 2	Double-acting, proportional max. 100 l/min, 150 – 350 bar
Hydraulic circuit 3	Double-acting, proportional max. 50 l/min, 150 – 350 bar
Quick coupler circuit	Double-acting, digital 50 – 350 bar
ROTO*line* (optional)	Single-acting with priority max. 190 l/min, 20 – 350 bar
Pump control	Bosch Rexroth LUDV system with electronic power limiting controller, pressure cut-off
Hydraulic tank capacity	150 l
Hydraulic system capacity	300 l
Filters	Return filter 10 µm Fine filter 1 µm
Cooling system	Stepless, hydraulically driven fan
Mode selection	Three individually adjustable performance modes and driver profiles for efficient and
Speed setting	Stepless adjustment of setting over the entire speed range

Control system

Energy distribution	Bosch Rexroth control valves with integrated pressure relief and anti-cavitation valves
Operation	
> Superstructure	Electroproportional joysticks
> Driving	Electroproportional foot pedal
Additional functions	Electroproportional foot pedals and rocker switches on joystick

Cab

Cab	ROPS/FOPS approved two-man safety cab, upper windscreen assisted and retractable under cab roof, integrated working light, door with side window, large storage compartments and integrated cool box, cab with hydromount suspension, tinted windows, sun blind
Driver seat	GRAMMER air-suspended super comfort seat with headrest, APS (automatic positioning system), fore/aft isolator, seat heating, passive climate system and lap belt
Control	Joysticks on control carriers at seat
Operation and display	Large, high-resolution display, controller next to operator seat
Air-conditioning	Central manual operating element for heating and air-conditioning, three-speed blower

Undercarriage

Drive	Bent-axis motor with brake valve on both sides
Gearbox	Two-speed powershift transmission with creep speed
Tractive force	85 kN
Travel speed	
> Creep speed	0 – 3 km/h
> 1st gear	0 – 8 km/h
> 2nd gear	0 – 30 km/h
Travel mode	Automotive driving mode with foot pedal
Axles	Manually or automatically operated locking of oscillating axle
Dual-circuit braking system	Hydraulically operated, low-maintenance multiple-disc brake running in oil bath
Stabilisation options	Rail axle front & rear Outriggers

https://truckmanualshub.com/

Kaiser. Performance counts.

KAISER

EQUIPMENT

Cab

Adjustable steering column	▪
Air-conditioning, manually adjustable	+
Auxiliary heater	+
Beacon	▪
Coat hook	▪
Cool box	▪
Display controller	▪
Driver seat with air suspension, heated and individually adjustable	▪
Emergency brake and air horn actuation	▪
Emergency stop switch	▪
Fire extinguisher (ABC, 6 kg)	▪
Foot mat (rubber), removable	▪
FOPS level I (ISO 10262)	▪
Front working lights, LED, 4 off	▪
Fuel consumption indicator	▪
Interior lighting	▪
Proportional steering	▪
Radio with Bluetooth and USB	▪
Rain cover over windscreen	▪
Reversing alarm	+
Roof guard FOPS level II (ISO 10262)	+
ROPS (roll-over protection structure) to ISO 12117-2)	▪
Side window for emergency exit	▪
Sliding window in driver's door	▪
Speed shown on display	▪
Storage compartment	▪
Sun blind	▪
Track safety accessories (signal flag, signal horn, etc.)	▪
Two-man cab with co-driver seat	▪
Windscreen bottom section can be removed and stored	▪
Windscreen monitoring (windscreen wipers)	▪
Windscreen retractable under roof	▪
Windscreen wiper/washer system	▪
Windscreen wipers with intermittent function	▪

Engine

Air prefilter with dust extraction	▪
Automatic idling	▪
Diesel engine of latest generation (Tier IV Final)	▪
Fuel preheating	+
Particulate filter (OAPC-compliant)	▪
SCR catalyst with AdBlue	▪

Undercarriage

Dual-circuit braking system	▪
Grab suspension bracket	▪
Grounding cable reel incl. cable (30 m)	+
Lashing eyes for transportation	▪
Oscillating axle lock	▪
Outriggers	+
Parking brake	▪
Pipe fracture safety valves for rail guide cylinders	▪
Rail axle position monitor	▪
Special track gauge for rail axle	+
Tool box on both sides (in the case of outriggers)	+
Tow bar	▪
Trailer hitches	▪
Trailer socket (15-pole)	+
Travel speed levels	▪
Two-speed power shift transmission	▪
Tyre filling tube in the case of wagon braking system	+
Wagon air brake	+
Wagon vacuum brake	+

Superstructure

Battery isolator switch	▪
Electric refuelling pump	▪
Hand rails, anti-slip coatings	▪
Rear working lights, LED, 2 off	▪
Service doors, lockable	▪
Signal lights, LED	▪
Swing lock, mechanical	▪

Hydraulic system

Accumulator for controlled lowering of attachment	▪
Biodegradable hydraulic oil	+
Bypass filter	+
Emergency actuation, electric	▪
Hydraulic oil filter in return line	▪
Power limiting controller, electric	▪
Pressure testing connectors	▪

Complete machine

Central lubrication for superstructure and attachments, electric	+
Custom paint finish	+
Height and swing limitation (road and rail)	▪
Remote diagnostics	+

Attachment

Cylinder end position damping	▪
Humus bucket	+
Hydraulic circuit 1 incl. return line	▪
Hydraulic circuit 2	▪
Hydraulic circuit 3	+
Leakage oil line	+
Offset two-piece boom	+
Overload warning device	▪
Pipe fracture safety valve for adjusting cylinder	▪
Pipe fracture safety valve for dipper cylinder	▪
Pipe fracture safety valve for lift cylinder	▪
Provision for ballast tamper	+
Provision for hydraulic quick coupler	+
Provision for Oilquick quick coupler	+
ROTO*line* EW/DW	+
Tool management (adjustable via display)	▪
Two-piece boom	▪
Working lights on boom, LED, 2 off	+

▪ = Standard
+ = Option

Subject to technical changes without notice. The technical specifications may change depending on the choice of options and accessories. All images are for illustration purposes only.

271042016 EN

KAISER AG
Vorarlbergerstrasse 220
9486 Schaanwald, Liechtenstein
T +423 377 21 21
F +423 377 21 10
kaiserag@kaiser.li
www.kaiser.li

KAISER Fahrzeugtechnik GmbH
Gewerbestraße 4
6710 Nenzing, Austria
T +43 5525 641 80
F +43 5525 641 80 10
mail@kaiser-fahrzeugtechnik.at
www.kaiser-fahrzeugtechnik.at

KAISER Eastern Europe s.r.o.
Priemyselná 604/5
922 02 Krakovany, Slovakia
T +421 33 7353 500
F +421 33 7353 510
kaiser@kaiser-ee.sk
www.kaiser-ee.sk

MORO KAISER S.R.L.
Via Pontebbana, 16
33080 Fiume Veneto (PN), Italy
T +39 0434 951211
F +39 0434 957786
infomoro@morokaiser.it
www.morokaiser.it

OY EUR-MARK AB
Jakobstadsvägen 39
66900 Nykarleby, Finland
T +358 20 73 45 800

info@eurmark.fi
www.eurmark.fi