https://truckmanualshub.com/

SK750/SK755

Operator's Manual

CMW®

Issue 1.0

Original Translation

053-2570

Downloaded from www.Manualslib.com manuals search engine

https://truckmanualshub.com/

Overview

Chapter Contents

Serial Number Location 3

Intended Use 4

Equipment Modification 4

Unit Components 5

Operator Orientation. 6

About This Manual 7

- Bulleted Lists. 7
- Numbered Lists. 7

Downloaded from www.Manualslib.com manuals search engine

https://truckmanualshub.com/

Serial Number Location

Record serial numbers and date of purchase in spaces provided. Unit serial number is located as shown.

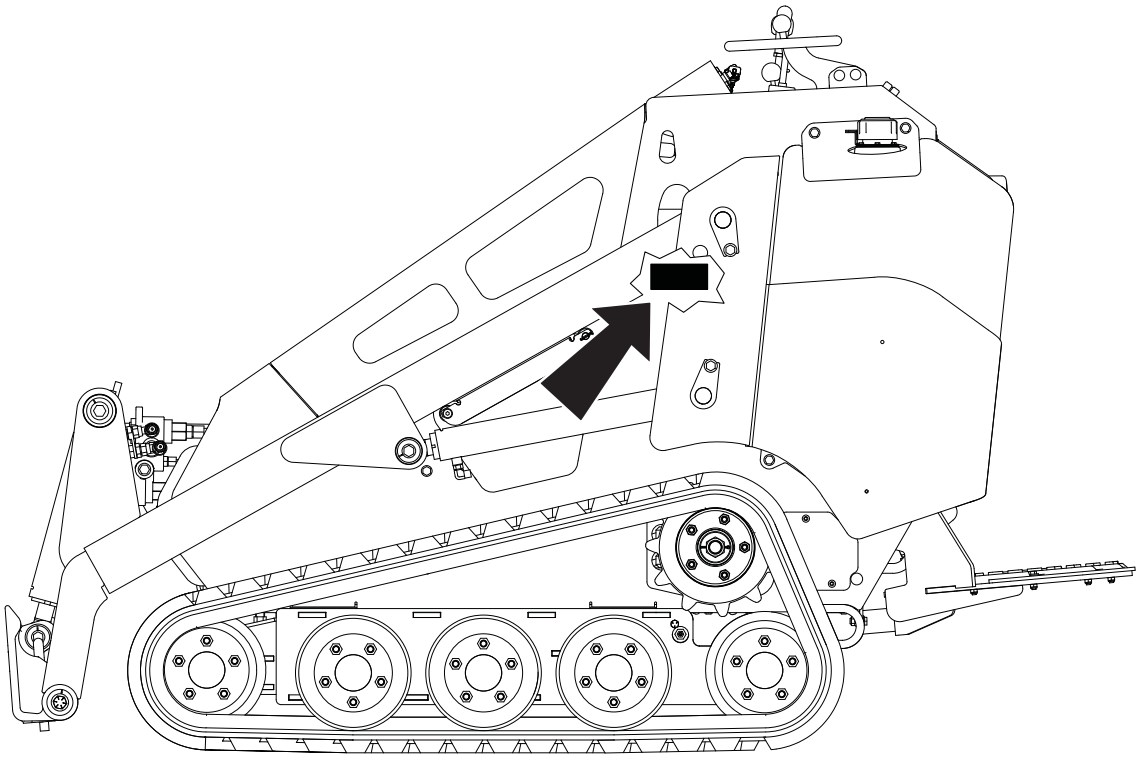

t35om034w.eps

Item	
date of manufacture	
date of purchase	
unit serial number	
engine serial number	

Downloaded from www.Manualslib.com manuals search engine

https://truckmanualshub.com/

Intended Use

The SK750/SK755 is a platform, rubber track mini skid steer unit designed for light-to medium-duty construction work. The SK750/SK755 has a quick attach mount plate which makes it easy for an operator to connect different attachments. The unit is designed for operation in temperatures typically experienced in earth moving and construction work environments. Provisions may be required to operate in extreme temperatures. Contact your Ditch Witch dealer. Use in any other way is considered contrary to the intended use.

The SK750/SK755 should be operated, serviced, and repaired only by persons familiar with its particular characteristics and acquainted with the relevant safety procedures.

Equipment Modification

This equipment was designed and built in accordance with applicable standards and regulations. Modification of equipment could mean that it will no longer meet regulations and may not function properly or in accordance with the operating instructions. Modification of equipment should only be made by competent personnel possessing knowledge of applicable standards, regulations, equipment design functionality/requirements and any required specialized testing.

Downloaded from www.Manualslib.com manuals search engine

https://truckmanualshub.com/

Unit Components

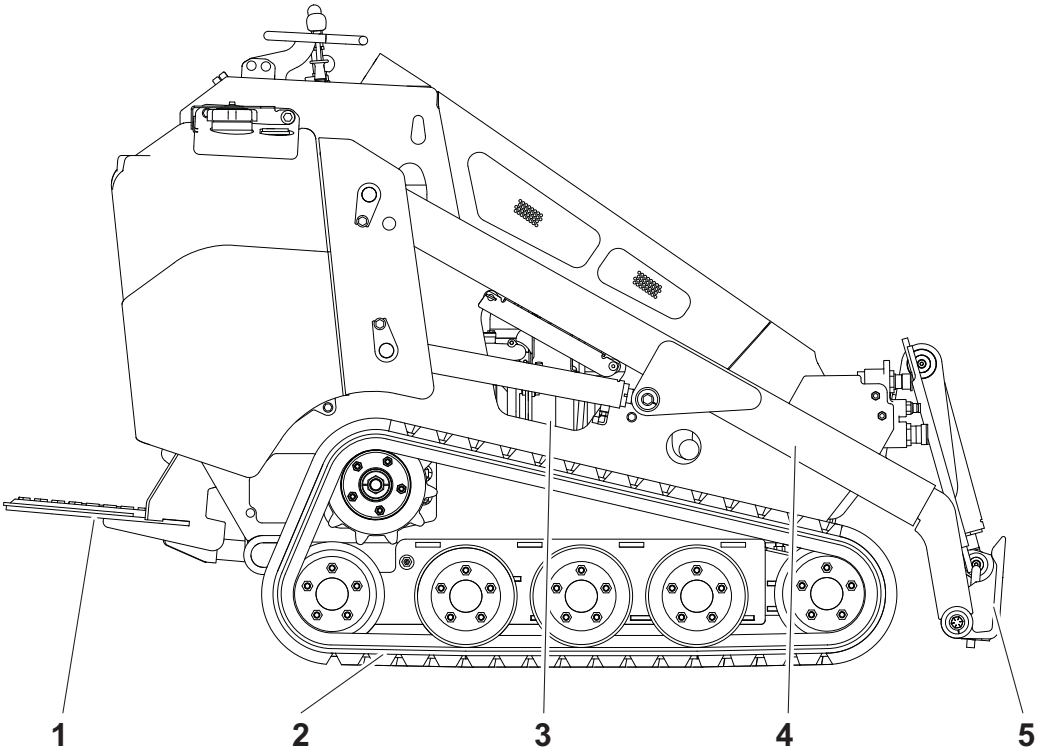

t35om001w.eps

1. Operator station
2. Tracks
3. Engine compartment
4. Lift arms
5. Mount plate

Downloaded from www.Manualslib.com manuals search engine

https://truckmanualshub.com/

Operator Orientation

1. Front of unit
2. Right side of unit
3. Rear of unit
4. Left side of unit

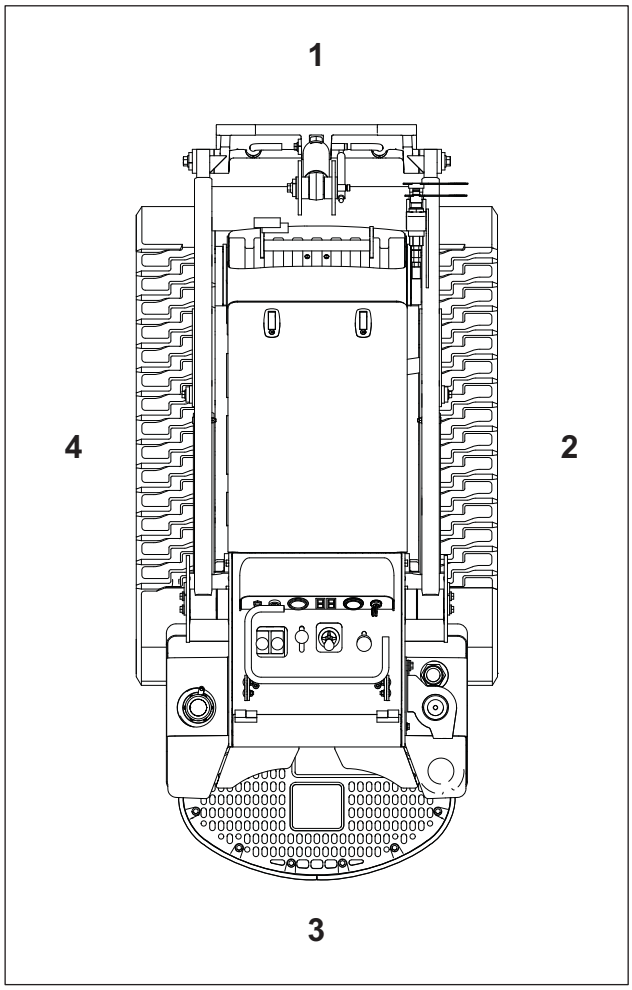

t35om002w.eps

Downloaded from www.Manualslib.com manuals search engine

https://truckmanualshub.com/

About This Manual

This manual contains information for the proper use of this machine. See the beige **Operation Overview** pages for basic operating procedures. Cross references such as "See page 50" will direct you to detailed procedures.

Bulleted Lists

Bulleted lists provide helpful or important information or contain procedures that do not have to be performed in a specific order.

Numbered Lists

Numbered lists contain illustration callouts or list steps that must be performed in order.

Downloaded from www.Manualslib.com manuals search engine

https://truckmanualshub.com/

Foreword

This manual is an important part of your equipment. It provides safety information and operation instructions to help you use and maintain your Ditch Witch equipment.

Read this manual before using your equipment. Keep it with the equipment at all times for future reference. If you sell your equipment, be sure to give this manual to the new owner.

If you need a replacement copy, contact your Ditch Witch dealer. If you need assistance in locating a dealer, visit our website at **www.ditchwitch.com** or write to the following address:

The Charles Machine Works, Inc.
Attn: Marketing Department
PO Box 66
Perry, OK 73077-0066
USA

The descriptions and specifications in this manual are subject to change without notice. The Charles Machine Works, Inc. reserves the right to improve equipment. Some product improvements may have taken place after this manual was published. For the latest information on Ditch Witch equipment, see your Ditch Witch dealer.

Thank you for buying and using Ditch Witch equipment.

Downloaded from www.Manualslib.com manuals search engine

https://truckmanualshub.com/

SK750/755
Operator's Manual

Issue number 1.0/OM-9/12
Part number 053-2570

Copyright 2012
by The Charles Machine Works, Inc.

Ditch Witch®, Ditch Witch, CMW, and Roto Witch are registered trademarks of The Charles Machine Works, Inc.

CMW

Downloaded from www.Manualslib.com manuals search engine

https://truckmanualshub.com/

Contents

Overview 2
machine serial number, information about the type of work this machine is designed to perform, basic machine components, and how to use this manual

Foreword 8
part number, revision level, and publication date of this manual, and factory contact information

Safety 12
machine safety alerts and emergency procedures

Controls 22
machine controls, gauges, and indicators and how to use them

Prepare 30
procedures for inspecting and classifying the jobsite, planning the installation path (if needed), preparing the jobsite for work, and connecting attachments

Drive 38
procedures for startup, cold start, driving, and shutdown

Transport 42
procedures for lifting, hauling, and towing

Complete the Job 50
procedures for restoring the jobsite and rinsing and storing equipment

Service 52
service intervals and instructions for this machine including lubrication, replacement of wear items, and basic maintenance

Specifications 74
machine specifications including weights, measurements, power ratings, and fluid capacities

Support 78
the warranty policy for this machine, and procedures for obtaining warranty consideration and training

Service Record 82
a record of major service performed on the machine

Downloaded from www.Manualslib.com manuals search engine

https://truckmanualshub.com/

Downloaded from www.Manualslib.com manuals search engine

https://truckmanualshub.com/

Safety

Chapter Contents

Guidelines 13

Safety Alert Classifications 14

Safety Alerts 15

Emergency Procedures 18

- Electric Strike Description 18
- If an Electric Line is Damaged 19
- If a Gas Line is Damaged 19
- If a Fiber Optic Cable is Damaged 20
- If Machine Catches on Fire 20

Downloaded from www.Manualslib.com manuals search engine

https://truckmanualshub.com/

Guidelines

Follow these guidelines before operating any jobsite equipment:

- Complete proper training and read operator's manual before using equipment.
- Contact your local One-Call (811 in USA) or the One-Call referral number (888-258-0808 in USA and Canada) to have underground utilities located before digging. Also contact any utilities that do not participate in the One-Call service.
- Classify jobsite based on its hazards and use correct tools and machinery, safety equipment, and work methods for jobsite.
- Mark jobsite clearly and keep spectators away.
- Wear personal protective equipment.
- Review jobsite hazards, safety and emergency procedures, and individual responsibilities with all personnel before work begins. Safety videos are available from your Ditch Witch dealer.
- Replace missing or damaged safety shields and safety signs.
- Use equipment carefully. Stop operation and investigate anything that does not look or feel right.
- Do not operate unit where flammable gas is present.
- Contact your Ditch Witch dealer if you have any question about operation, maintenance, or equipment use.

Downloaded from www.Manualslib.com manuals search engine

https://truckmanualshub.com/

Safety Alert Classifications

These classifications and the icons defined on the following pages work together to alert you to situations which could be harmful to you, jobsite bystanders or your equipment. When you see these words and icons in the book or on the machine, carefully read and follow all instructions. YOUR SAFETY IS AT STAKE.

Watch for the three safety alert levels: **DANGER**, **WARNING** and **CAUTION**. Learn what each level means.

DANGER indicates an imminently hazardous situation which, if not avoided, will result in death or serious injury.

WARNING indicates a potentially hazardous situation which, if not avoided, could result in death or serious injury.

CAUTION indicates a potentially hazardous situation which, if not avoided, may result in minor or moderate injury.

Watch for two other words: ***NOTICE*** and **IMPORTANT**.

NOTICE can keep you from doing something that might damage the machine or someone's property. It can also alert you against unsafe practices.

IMPORTANT can help you do a better job or make your job easier in some way.

Downloaded from www.Manualslib.com manuals search engine

https://truckmanualshub.com/

Safety Alerts

DANGER Moving digging teeth will kill you or cut off arm or leg. Stay away.

DANGER Turning shaft will kill you or crush arm or leg. Stay away.

DANGER Electric shock. Contacting electric lines will cause death or serious injury. Know location of lines and stay away.

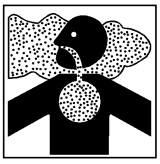

WARNING Deadly gases. Lack of oxygen or presence of gas will cause sickness or death. Provide ventilation.

WARNING Jobsite hazards could cause death or serious injury. Use correct equipment and work methods. Use and maintain proper safety equipment.

WARNING Crushing weight could cause death or serious injury. Use proper procedures and equipment or stay away.

WARNING Moving parts could cut off hand or foot. Stay away.

Downloaded from www.Manualslib.com manuals search engine

https://truckmanualshub.com/

WARNING Explosion possible. Serious injury or equipment damage could occur. Follow directions carefully.

WARNING Incorrect procedures could result in death, injury, or property damage. Learn to use equipment correctly.

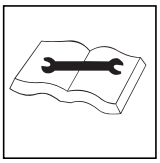

WARNING Improper control function could cause death or serious injury. If control does not work as described in instructions, stop machine and have it serviced.

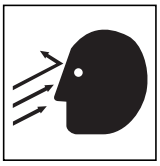

WARNING Looking into fiber optic cable could result in permanent vision damage. Do not look into ends of fiber optic or unidentified cable.

WARNING Pressurized fluid or air could pierce skin and cause injury or death. Stay away.

WARNING Runaway possible. Machine could run over you or others. Learn how to use all controls. Start and operate only from operator's position.

WARNING Fire or explosion possible. Fumes could ignite and cause burns. No smoking, no flame, no spark.

WARNING Moving traffic - hazardous situation. Death or serious injury could result. Avoid moving vehicles, wear high visibility clothing, post appropriate warning signs.

Downloaded from www.Manualslib.com manuals search engine

https://truckmanualshub.com/

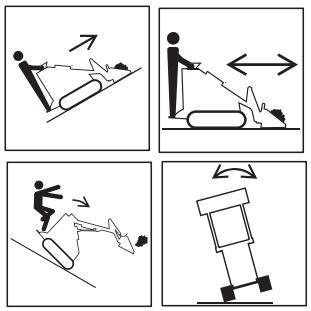

WARNING Tipover possible. Machine can tip over and crush you.

- Always operate with load end uphill.
- Always carry load low. High load can cause tipping, loss of load or loss of visibility.
- Never jerk control levers. Use a steady even motion.
- See page 75 for tip capacity.

WARNING Flying objects may cause injury. Wear hard hat and safety glasses.

WARNING Hot parts may cause burns. Do not touch until cool.

WARNING Exposure to high noise levels may cause hearing loss. Wear hearing protection.

WARNING Fall possible. Slips or trips may result in injury. Keep area clean.

WARNING Battery acid may cause burns. Avoid contact.

WARNING Improper handling or use of chemicals may result in illness, injury, or equipment damage. Follow instructions on labels and in material safety data sheets (MSDS).

Downloaded from www.Manualslib.com manuals search engine

https://truckmanualshub.com/

Emergency Procedures

Before operating any equipment, review emergency procedures and check that all safety precautions have been taken.

EMERGENCY SHUTDOWN - Turn ignition switch to STOP.

Electric Strike Description

When working near electric cables, remember the following:

- Electricity follows all paths to ground, not just path of least resistance.
- Pipes, hoses, and cables will conduct electricity back to all equipment.
- Low voltage current can injure or kill. Many work-related electrocutions result from contact with less than 440 volts.

Most electric strikes are not noticeable, but indications of a strike include:

- power outage
- smoke
- explosion
- popping noises
- arcing electricity

If any of these occur, assume an electric strike has occurred.

Downloaded from www.Manualslib.com manuals search engine

https://truckmanualshub.com/

If an Electric Line is Damaged

If you suspect an electric line has been damaged and you are **on platform**, DO NOT MOVE. Remain on platform and take the following actions. The order and degree of action will depend upon the situation.

- Warn people nearby that an electric strike has occurred. Instruct them to leave the area and contact utility.
- Raise attachments and drive from immediate area.
- Contact utility company to shut off power.
- Do not return to jobsite or allow anyone into area until given permission by utility company.

If you suspect an electric line has been damaged and you are **off platform**, DO NOT TOUCH UNIT. Take the following actions. The order and degree of action will depend upon the situation.

- LEAVE AREA. The ground surface may be electrified, so take small steps with feet close together to reduce the hazard of being shocked from one foot to the other. For more information, contact your Ditch Witch dealer.
- Contact utility company to shut off power.
- Do not return to jobsite or allow anyone into area until given permission by utility company.

If a Gas Line is Damaged

If you suspect a gas line has been damaged, take the following actions. The order and degree of action will depend on the situation.

- Immediately shut off engine(s), if this can be done safely and quickly.
- Remove any ignition source(s), if this can be done safely and quickly.
- Warn others that a gas line has been cut and that they should leave the area.
- Leave jobsite as quickly as possible.
- Immediately call your local emergency phone number and utility company.
- If jobsite is along street, stop traffic from driving near jobsite.
- Do not return to jobsite until given permission by emergency personnel and utility company.

Downloaded from www.Manualslib.com manuals search engine

https://truckmanualshub.com/

If a Fiber Optic Cable is Damaged

Do not look into cut ends of fiber optic or unidentified cable. Vision damage can occur.

If Machine Catches on Fire

Perform emergency shutdown procedure and then take the following actions. The order and degree of action will depend on the situation.

- Immediately move battery disconnect switch (if equipped) to disconnect position.
- If fire is small and fire extinguisher is available, attempt to extinguish fire.
- If fire cannot be extinguished, leave area as quickly as possible and contact emergency personnel.

Downloaded from www.Manualslib.com manuals search engine

https://truckmanualshub.com/

Downloaded from www.Manualslib.com manuals search engine

https://truckmanualshub.com/

Controls

Gauges and Indicators

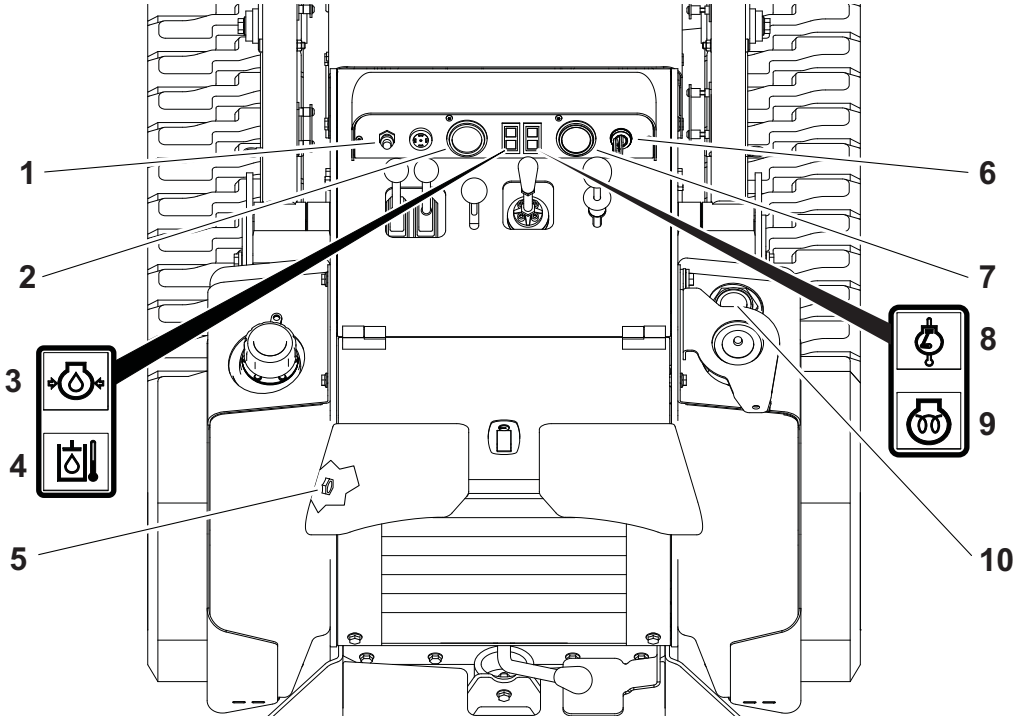

t35om003w.eps

1. Glow plug button
2. Engine coolant temperature gauge
3. Engine oil pressure indicator
4. Hydraulic fluid temperature indicator
5. Hydraulic fluid level sight glass
6. Ignition switch
7. Hourmeter
8. Engine coolant temperature indicator
9. Glow plug indicator
10. Fuel gauge

Downloaded from www.Manualslib.com manuals search engine

https://truckmanualshub.com/

Item	Description	Notes
1. Glow plug button 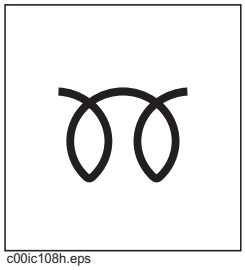 c00ic108h.eps	To help start cold engine, turn ignition switch to first position. Press glow plug button as directed in notes. Release button, then turn ignition switch all the way clockwise to start.	**IMPORTANT:** Press glow plug button according to temperatures below. • If ambient temperature is below 40° F (4° C), press and hold button for 5 seconds. • If ambient temperature is below 20° F (-7° C), press and hold button for 10 seconds. • Do not press button for more than 20 seconds continuously.
2. Engine coolant temperature gauge 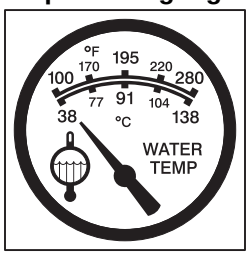 c00ic086a.eps	Displays coolant temperature.	**IMPORTANT:** If temperature goes above 230°F (110°C): 1. Stop operation, set throttle to low idle, and allow engine to cool. 2. Stop engine. 3. Check coolant level. 4. Ensure radiator is clean.
3. Engine oil pressure indicator 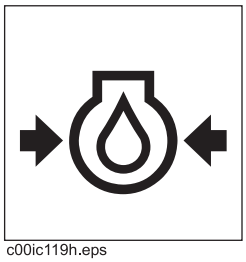 c00ic119h.eps	Lights when engine oil pressure is low. Also lights briefly when engine is started.	Engine will stop. 1. Check oil level. 2. Check for leaks before starting engine.
4. Hydraulic fluid temperature indicator 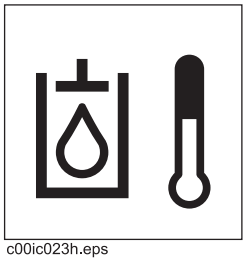 c00ic023h.eps	Lights and alarm sounds when hydraulic fluid is overheating.	Check hydraulic fluid level. Reduce load. Ensure oil cooler is clean.
5. Hydraulic fluid sight glass	Shows level of hydraulic fluid in tank. Maintain fluid at halfway point on glass.	

Downloaded from www.Manualslib.com manuals search engine

https://truckmanualshub.com/

Item	Description	Notes
6. Ignition switch 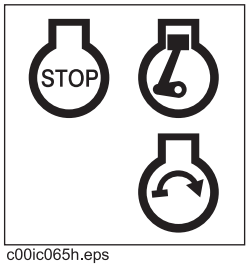 c00ic065h.eps	To start engine, insert key and turn clockwise. To stop engine, turn key counterclockwise.	**IMPORTANT:** • If engine does not start or stalls, turn key to STOP and then restart. • Do not allow starter motor to run continuously for more than 20 seconds.
7. Hourmeter 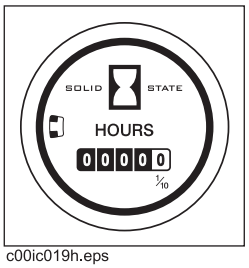 c00ic019h.eps	Displays engine operating time.	Use these times to schedule service.
8. Engine coolant temperature indicator 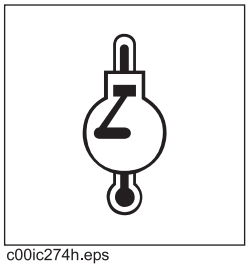 c00ic274h.eps	Lights and alarm sounds when engine coolant temperature is too high.	1. Stop operation, set throttle to low idle, and allow engine to cool. 2. Stop engine. 3. Check coolant level.
9. Glow plug indicator 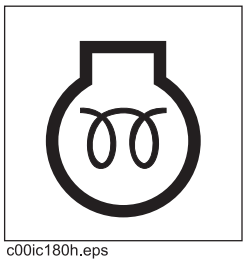 c00ic180h.eps	Lights when ignition switch is on and glow plug button is pressed.	
10. Fuel tank sight window	Shows level of fuel in tank.	***NOTICE:*** Use low sulfur or ultra low sulfur fuel only.

Downloaded from www.Manualslib.com manuals search engine

https://truckmanualshub.com/

Controls

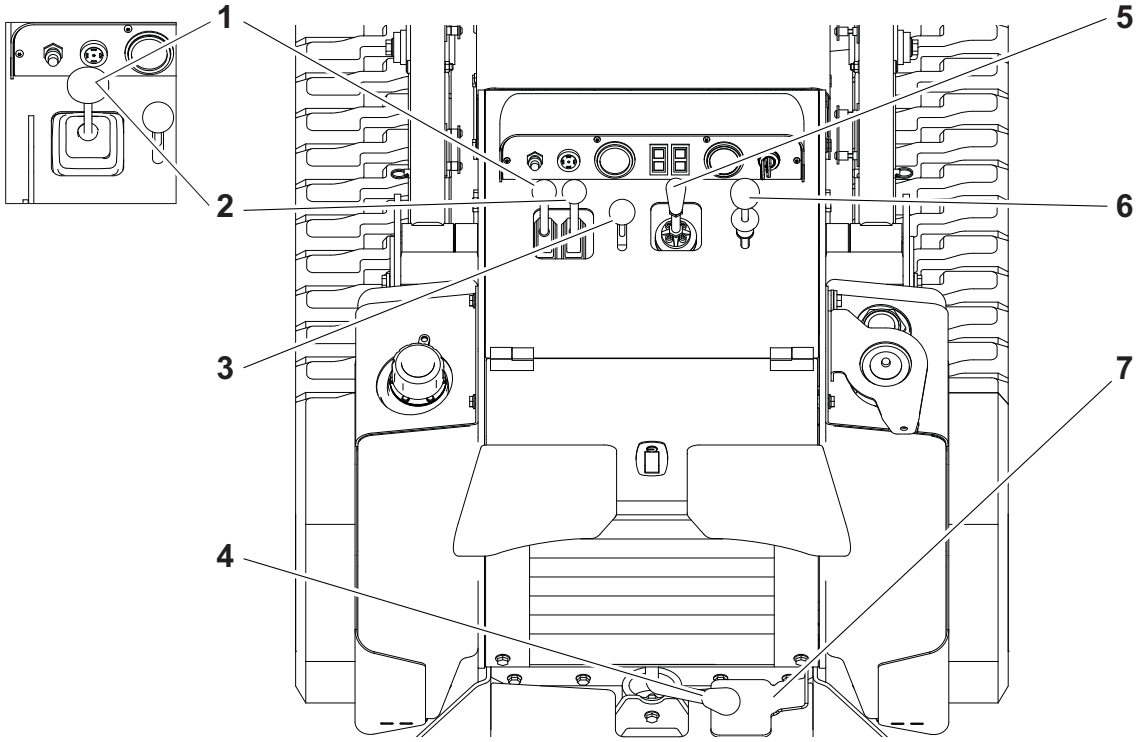

t35om004w.eps

1. Left track drive control or Track drive joystick (optional)
2. Right track drive control or Track drive joystick (optional)
3. Throttle
4. Parking brake lever
5. Lift arm control
6. Attachment drive control
7. Attachment drive foot control

Downloaded from www.Manualslib.com manuals search engine

https://truckmanualshub.com/

Item	Description	Notes
1. Left track drive control **2. Right track drive control** 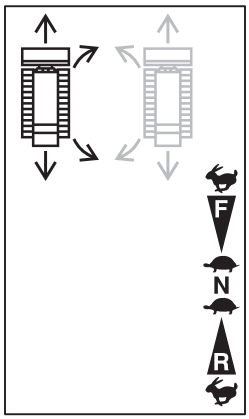 c00ic087a.eps	To move forward, push. To move backward, pull. To go faster in either direction, move control farther from neutral position. To stop, move to neutral position.	To turn right, move left control farther forward than right control. To turn left, move right control farther forward than left control. To counter-rotate in either direction, move controls in opposite directions as indicated above.
Track drive joystick (optional)l	To move forward, push. To move backward, pull. To go faster in either direction, move control farther from neutral. To stop, move to neutral.	To steer while moving forward, push joystick forward, then move left or right. Unit will gradually turn left or right. To steer while moving backward, pull joystick back, then move left or right. Unit will gradually turn left or right. For tight steering in low speed, move joystick to center position then to left or right side. Tracks will counter rotate and turn unit in a tight circle.
3. Throttle c00ic007c.eps	To increase engine speed, push. To decrease engine speed, pull.	Increasing engine speed also increases attachment speed.

Downloaded from www.Manualslib.com manuals search engine

https://truckmanualshub.com/

Item	Description	Notes
4. Parking brake lever 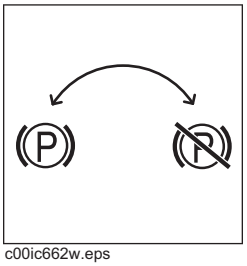 c00ic662w.eps	To engage, rotate lever counterclockwise. To disengage, rotate lever clockwise.	
5. Lift arm control 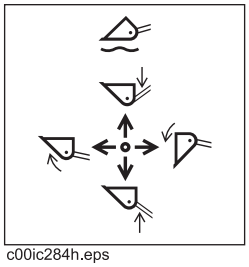 c00ic284h.eps	To move lift arms down, push. To float, push forward to end. To move lift arms up, pull. To curl attachment up, move to left. To curl attachment down, move to right.	**IMPORTANT:** Exercise caution when lifting loads. See page 75 for operating capacities.
6. Attachment drive control 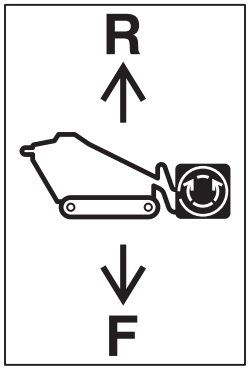 c00ic090a.eps	To engage attachment drive in reverse, lift lever lock and push forward. To engage attachment drive in forward, lift lever lock and pull back.	**IMPORTANT:** • Lever lock engages when control is in neutral. • Use foot pedal to hold attachment control in the on position when hands are busy operating lift arm or track drive controls.
7. Attachment drive foot control	To hold attachment drive in engaged position (forward or reverse), lift lever lock, move lever in desired direction, and press pedal. To return attachment drive control to neutral, release pedal.	**IMPORTANT:** Use foot pedal to hold attachment control in the on position when hands are busy operating lift arm or track drive controls.

Downloaded from www.Manualslib.com manuals search engine

https://truckmanualshub.com/

Engine Compartment

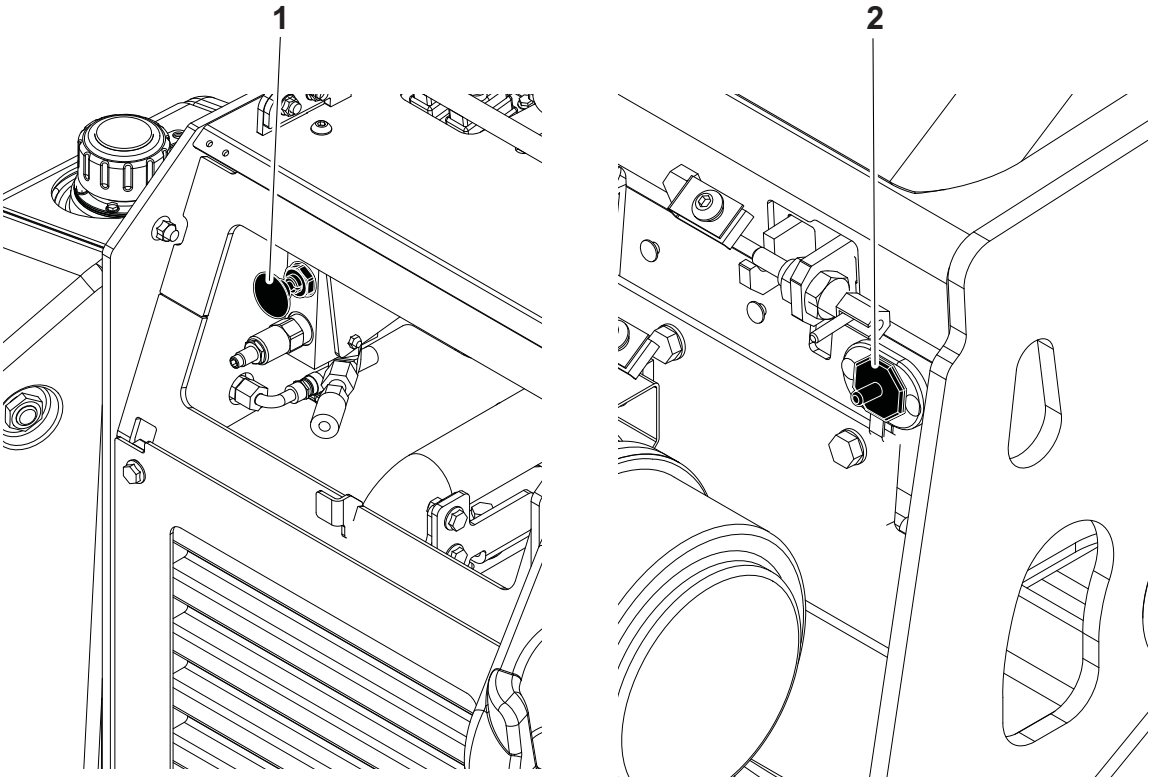

t35om016w.eps

1. Hydraulic Fluid Bypass
2. Auxiliary outlet

Item	Description	Notes
1. Hydraulic Fluid Bypass 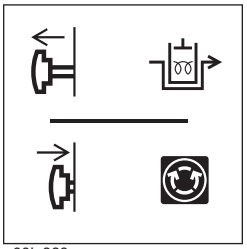 c00ic663w.eps	To open bypass valve, pull and rotate knob until it seats in the open position. Start engine and run five minutes to warm hydraulic fluid. To close bypass valve, rotate knob until it seats in the closed position.	**IMPORTANT:** • Use the hydraulic fluid bypass to assist starting a cold engine. • Tool carrier and attachment will **not** operate correctly when knob is pulled out.
2. Auxiliary power outlet	To operate work lights or other 12V devices, plug into outlet.	

Downloaded from www.Manualslib.com manuals search engine

https://truckmanualshub.com/

Tool Carrier

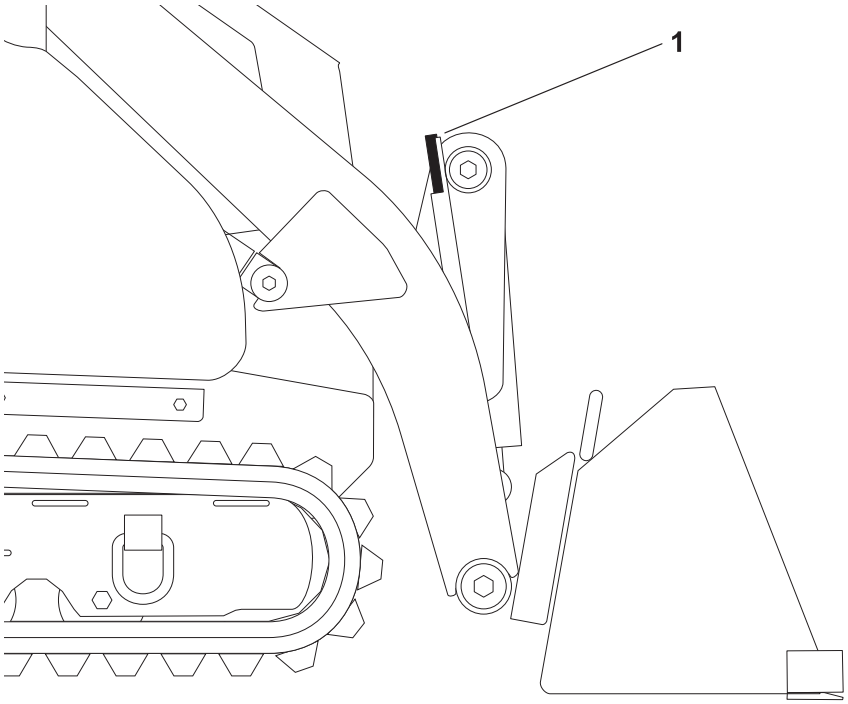

t10om029h.eps

1. Level indicator

Item	Description	Notes
1. Level indicator	To level bucket, adjust bucket position until indicator is at top of sleeve.	To level other attachments, adjust attachment position until it is level. Mark indicator position on sleeve. Use mark to indicate level with that attachment.

Downloaded from www.Manualslib.com manuals search engine

https://truckmanualshub.com/

Prepare

Chapter Contents

Gather Information 31

- All Jobs 31
- Ground-Penetrating Jobs 31
- Above-Ground Jobs 31

Inspect Site 32

- Identify Hazards 32

Classify Jobsite 33

- Inspect Jobsite 33
- Select a Classification 33
- Apply Precautions 34

Check Supplies and Prepare Equipment 35

- Supplies 35
- Fluid Levels 35
- Condition and Function 35
- Accessories 35

Connect Attachment 36

Downloaded from www.Manualslib.com manuals search engine

https://truckmanualshub.com/

Gather Information

A successful job begins before you start working. The first step in planning is reviewing information already available about the job and jobsite.

All Jobs

Review Job Plan

Review blueprints or other plans. Check for information about existing or planned structures, elevations, or proposed work that may be taking place at the same time.

Arrange for Traffic Control

If working near a road or other traffic area, contact local authorities about safety procedures and regulations.

Plan for Emergency Services

Have the telephone numbers for local emergency and medical facilities on hand. Check that you will have access to a telephone.

Ground-Penetrating Jobs

Notify One-Call Services

Contact your local One-Call (811 in USA) or the One-Call referral number (888-258-0808 in USA and Canada) to have underground utilities located before digging. Also contact any utilities that do not participate in the One-Call service.

Above-Ground Jobs

Locate Overhead Lines

Note location and height of all overhead lines in jobsite and ensure that fully lifted attachment and/or load will not touch lines.

Downloaded from www.Manualslib.com manuals search engine

https://truckmanualshub.com/

Inspect Site

Inspect jobsite before transporting equipment. Check for the following:

- changes in elevation such as hills or other open trenches
- obstacles such as buildings, railroad crossings, or streams
- signs of utilities (See "Inspect Jobsite" on page 33.)
- traffic
- access
- soil type and condition

Identify Hazards

Identify safety hazards and classify jobsite if attachment will penetrate ground. See "Classify Jobsite" on page 33.

WARNING Jobsite hazards could cause death or serious injury. Use correct equipment and work methods. Use and maintain proper safety equipment.

To help avoid injury:

- Wear personal protective equipment including hard hat, safety eye wear, and hearing protection.
- Do not wear jewelry or loose clothing.
- Notify One-Call and companies which do not subscribe to One-Call.
- Comply with all utility notification regulations before digging or drilling.
- Verify location of previously marked underground hazards.
- Mark jobsite clearly and keep spectators away.

Remember, jobsite is classified by hazards in place -- not by line being installed.

Downloaded from www.Manualslib.com manuals search engine

https://truckmanualshub.com/

Classify Jobsite

Inspect Jobsite

- Inspect jobsite and perimeter for evidence of underground hazards, such as:
  - "buried utility" notices
  - utility facilities without overhead lines
  - gas or water meters
  - junction boxes
  - drop boxes
  - light poles
  - manhole covers
  - sunken ground
- Follow U.S. Department of Labor regulations on excavating and trenching (Part 1926, Subpart P) and other similar regulations.
- Contact your local One-Call (811 in USA) or the One-Call referral number (888-258-0808 in USA and Canada) to have underground utilities located before digging. Also contact any utilities that do not participate in the One-Call service.
- Have an experienced locating equipment operator sweep area within 20' (6 m) to each side of work path. Verify previously marked line and cable locations.
- Mark location of all buried utilities and obstructions.
- Classify jobsite.

Select a Classification

Jobsites are classified according to underground hazards present.

If working . . .	then classify jobsite as . . .
within 10' (3 m) of a buried electric line	electric
within 10' (3 m) of a natural gas line	natural gas
in sand or granite which is capable of producing crystalline silica (quartz) dust	crystalline silica (quartz) dust
within 10' (3 m) of any other hazard	other

NOTICE: If you have any doubt about jobsite classification, or if jobsite might contain unmarked hazards, take steps outlined previously to identify hazards and classify jobsite before working.

Downloaded from www.Manualslib.com manuals search engine

https://truckmanualshub.com/

Apply Precautions

Once classified, precautions appropriate for jobsite must be taken.

Electric Jobsite Precautions

Use one or both of these methods.

- Expose line by careful hand digging or soft excavation.
- Have service shut down while work is in progress. Have electric company test lines before returning them to service.

Natural Gas Jobsite Precautions

In addition to positioning equipment upwind from gas lines, use one or both of these methods.

- Expose lines by careful hand digging or soft excavation.
- Have gas shut off while work is in progress. Have gas company test lines before returning them to service.

Crystalline Silica (Quartz) Dust Precautions

Cutting, drilling, or working materials such as concrete, sand, or rock containing quartz may result in exposure to silica dust. Use water spray or other means to control dust. If workers are exposed to dust they must wear appropriate breathing protection. Silica dust may cause lung disease and is known to the State of California to cause cancer.

Other Jobsite Precautions

You may need to use different methods to safely avoid other underground hazards. Talk with those knowledgeable about hazards present at each site to determine which precautions should be taken or if job should be attempted.

Downloaded from www.Manualslib.com manuals search engine

https://truckmanualshub.com/

Check Supplies and Prepare Equipment

Supplies

- fuel

> **NOTICE:** Use low sulfur or ultra low sulfur fuel only.

- keys
- lubricants
- personal protective equipment, such as hard hat and safety glasses

Fluid Levels

- fuel

> **NOTICE:** Use low sulfur or ultra low sulfur fuel only.

- hydraulic fluid
- battery charge
- engine oil

Condition and Function

- parking brake pins (See "Check Brake Operation" on page 59.)
- filters (air, oil, hydraulic)
- tracks
- pumps and motors
- hoses and valves
- signs, guards, and shields

Accessories

Fire Extinguisher

If required, mount a fire extinguisher near the power unit but away from possible points of ignition. The fire extinguisher should always be classified for both oil and electric fires. It should meet legal and regulatory requirements.

Downloaded from www.Manualslib.com manuals search engine

https://truckmanualshub.com/

Connect Attachment

NOTICE: Use only Ditch Witch-approved attachments. Attachments can change the stability and operating characteristics of the unit.

Attachment

IMPORTANT: Before connecting attachment to unit, ensure that mount and receiver plates are free of dirt and debris.

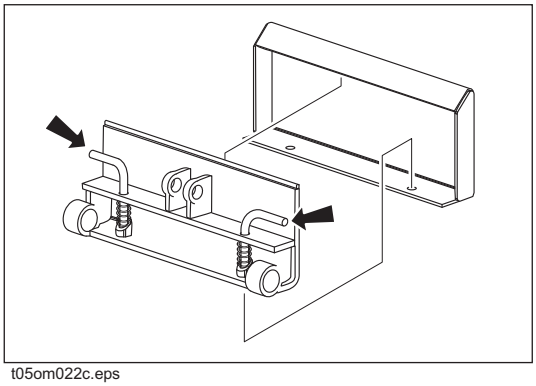

t05om022c.eps

1. Position attachment on level surface with enough space behind it to accommodate unit.
2. Ensure that lock pin handles (shown) on mount plate are turned away from center of attachment.
3. Start engine.
4. Tilt mount plate (2) forward.
5. Position mount plate in the upper lip of the receiver plate (1) on attachment.
6. Raise lift arms while tilting back mount plate.

   IMPORTANT: Attachment should be raised enough to clear the ground. Mount plate should be tilted back fully.

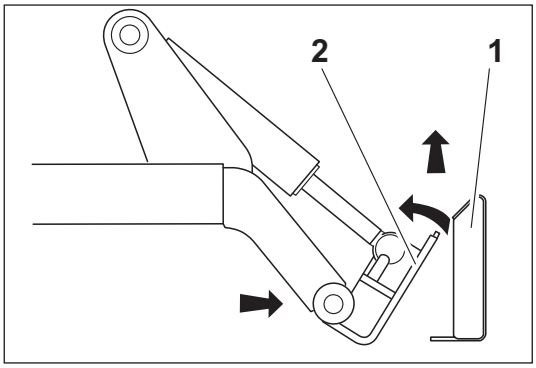

t05om026c.eps

7. Turn ignition switch off and remove key.

WARNING Incorrect procedures could result in death, injury, or property damage. Learn to use equipment correctly.

To help avoid injury: Ensure proper connection by verifying that bottoms of lock pins are visible under attachment receiver plate (shown).

8. Rotate lock pin handles toward center of mount plate to secure attachment to lift plate.

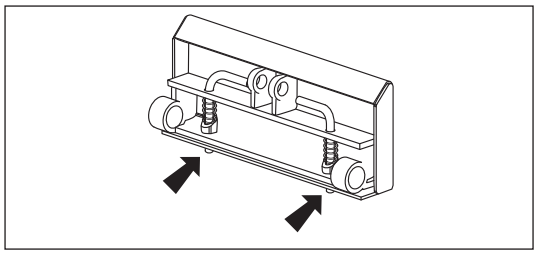

t05om027c.eps

Downloaded from www.Manualslib.com manuals search engine

https://truckmanualshub.com/

Hydraulic Hoses

If attachment requires hydraulic power for operation, connect hydraulic hoses.

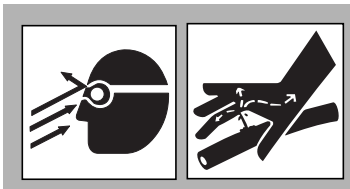

WARNING Pressurized fluid or air could pierce skin and cause injury or death. Stay away.

To help avoid injury:

- Escaping pressurized fluid can cause injury or pierce skin and poison.
- Before disconnecting a hydraulic line, turn engine off and operate all controls to relieve pressure. Lower, block, or support any raised component with a hoist. Cover connection with heavy cloth and loosen connector nut slightly to relieve residual pressure. Catch all fluid in a container.
- Before using system, check that all connections are tight and all lines are undamaged.
- Use a piece of cardboard or wood, rather than hands, to search for leaks.
- Wear protective clothing, including gloves and eye protection.
- If you are injured, seek immediate medical attention from a doctor familiar with this type of injury.

WARNING Hot parts may cause burns. Do not touch until cool.

To help avoid injury: Wear gloves when connecting and disconnecting hydraulic hoses and wait until unit has cooled before touching hydraulic components.

1. Cycle attachment drive control to relieve residual pressure at hydraulic couplers.
2. Remove dirt and debris from hydraulic couplers.
3. Connect male coupler on attachment to female coupler (3) on unit.
4. Connect female coupler on attachment to male coupler (1) on unit.
5. If needed, connect attachment case drain hose to case drain connector (2).
6. Ensure that connections are secure by pulling on hoses.

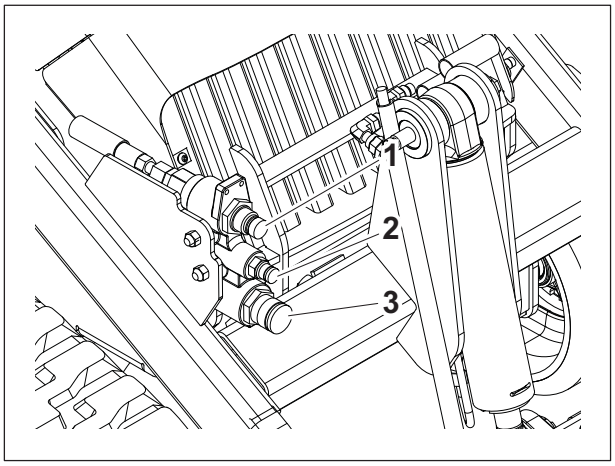

t35om011w.eps

Downloaded from www.Manualslib.com manuals search engine

https://truckmanualshub.com/

Drive

Chapter Contents

Start Unit 39

Drive 39

Shut Down 41

Downloaded from www.Manualslib.com manuals search engine

https://truckmanualshub.com/

Start Unit

1. Ensure all controls are in neutral.
2. If necessary, use glow plugs and/or hydraulic fluid bypass control to warm cold engine. See "Hydraulic Fluid Bypass" on page 28.
3. Move throttle to half open.
4. Turn ignition switch to start position and release when engine starts.

NOTICE: If jump starting is required, see "Jump Start Unit" on page 70.

EMERGENCY SHUTDOWN: Turn ignition switch to STOP.

Drive

General Operation

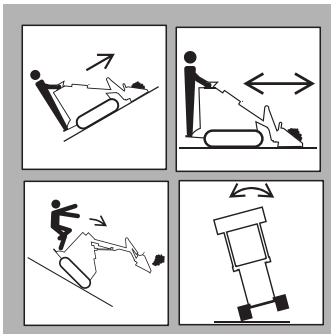

WARNING Tipover possible. Machine can tip over and crush you.

To help avoid injury:

- Always operate with load end uphill.
- Always carry load low. High load can cause tipping, loss of load or loss of visibility.
- Never jerk control levers. Use a steady even motion.
- See page 75 for tip capacity.

1. Disengage parking brake.
2. Pull lift arm control to raise mount plate (and attachment) off ground.
3. Move track drive control to steer unit. See page 26.

IMPORTANT: If needed for attachment operation, push attachment drive foot control to hold attachment control in the forward position while operating track drive and lift arm controls.

4. Adjust throttle as needed.
5. See attachment operation manual for instructions regarding proper operation of attachments.

Downloaded from www.Manualslib.com manuals search engine

https://truckmanualshub.com/

Safe Slope Operation

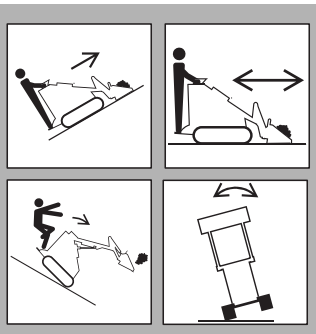

WARNING Tipover possible. Machine can tip over and crush you.

To help avoid injury:

- Always operate with heavy end uphill.
- Always carry load low. High load can cause tipping, loss of load or loss of visibility.
- Drive cautiously at all times.
- Never jerk control levers. Use a steady even motion.
- Do not park unit on slope without lowering attachment to the ground, returning all controls to neutral position, shutting down unit, and applying parking brake.
- See "Tipping capacity" on page 75.

Operating safely on a slope depends upon many factors including:

- Distribution of machine weight, including front loading and absence of load
- Height of load
- Even or rough ground conditions
- Potential for ground giving way causing unplanned tilt forward, reverse or sideways
- Nearness of ditches, ruts, stumps or other obstructions and sudden changes in slope
- Speed
- Turning
- Braking performance
- Operator skill

These varying factors make it impractical to specify a maximum safe operating angle in this manual. It is therefore important for the operator to be aware of these conditions and adjust operation accordingly. Maximum engine angle and braking performance are two absolute limits which must never be exceeded. These maximums are stated below since they are design limits. **These design limits usually exceed the operating limits and must never be used alone to establish safe operating angle for variable conditions.**

Maximum engine lubrication angle – 20°

Maximum service brake retarding force – equal to traction of both tracks.

Maximum park brake holding force – equal to traction of one track.

Downloaded from www.Manualslib.com manuals search engine

https://truckmanualshub.com/

Shut Down

1. Lower lift arms to ground.
2. Move all controls to neutral position.
3. Apply parking brake.
4. Run engine at low idle for five minutes to cool.

NOTICE: Failure to allow engine to cool before shutdown may damage turbocharger.

5. Turn ignition switch to STOP.
6. Remove key.

Downloaded from www.Manualslib.com manuals search engine

https://truckmanualshub.com/

Transport

Chapter Contents

Lift 43

- Points 43
- Procedure 43

Haul 44

- Load 44
- Tie Down 45
- Unload 46

Tow 47

Downloaded from www.Manualslib.com manuals search engine

https://truckmanualshub.com/

Lift

WARNING Crushing weight. If load falls or moves it could kill or crush you. Use proper procedures and equipment or stay away.

To help avoid injury: Only lift unit without attachment installed.

Points

Lifting points are identified by lifting decals. Lifting at other points is unsafe and can damage machinery.

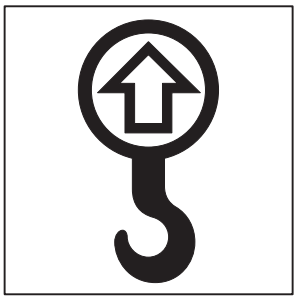

ic1319a.eps

Procedure

Use a hoist capable of supporting the equipment's size and weight. See "Specifications" on page 74 or measure and weigh equipment before lifting.

Use one of the methods below:

- Use two points nearest operator station.

IMPORTANT: Front of unit will be lower than rear of unit when using only two lift points.

- Use three lift points as shown.

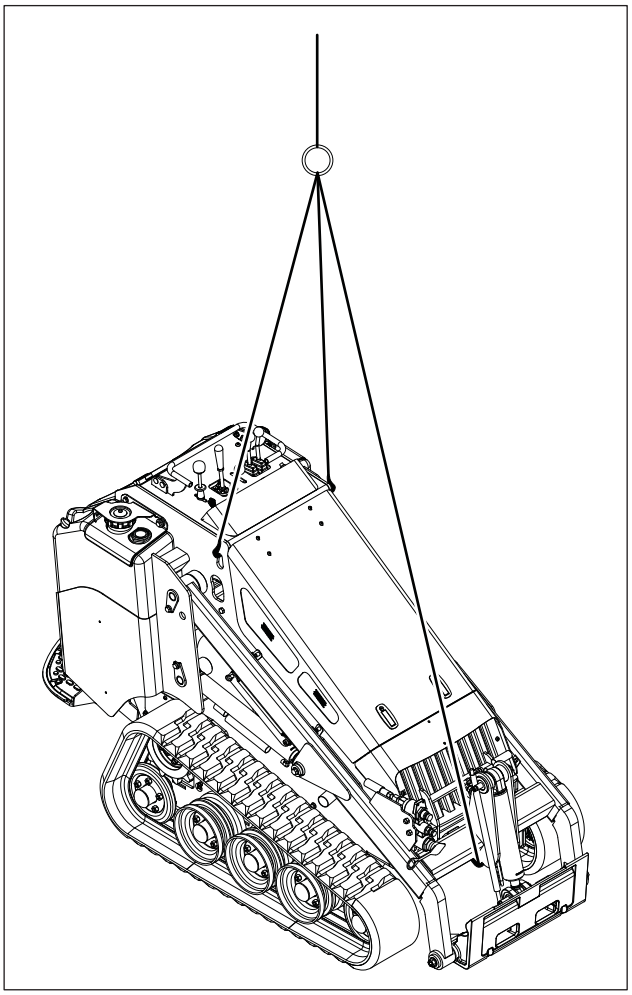

t35om022w.eps

Downloaded from www.Manualslib.com manuals search engine

https://truckmanualshub.com/

Haul

Load

WARNING Crushing weight. If load falls or moves it could kill or crush you. Use proper procedures and equipment or stay away.

To help avoid injury:

- Load and unload trailer on level ground.
- Incorrect loading can cause trailer swaying.
- Attach trailer to vehicle before loading or unloading.
- Only operate unit from operator platform.
- To help prevent trailer sway, load trailer so that ten to fifteen percent of total vehicle weight (equipment plus trailer) is on tongue.
- If loading onto tilt-bed trailer, be prepared for trailer to tilt.
- Move all controls to neutral position when stopped.

1. Disengage parking brake.
2. Start engine.
3. Adjust throttle to low speed.
4. Pull lift arm control to raise mount plate (and attachment) clear of trailer, but keep it low.
5. Move unit to rear of trailer and align with ramps.
6. Drive forward slowly to move unit onto trailer until tiedown position is reached.
7. Push lift arm control to lower mount plate (and attachment) to trailer bed.
8. Engage parking brake.
9. Ensure that all controls are in neutral position.
10. Turn ignition switch to STOP.
11. Tie down unit.

Downloaded from www.Manualslib.com manuals search engine

https://truckmanualshub.com/

Tie Down

Points

Tiedown points are identified by tiedown decals. Securing to truck or trailer at other points is unsafe and can damage machinery.

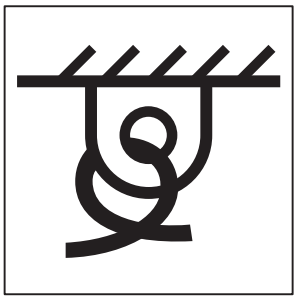

ic1320a.eps

Procedure

Loop tiedowns around unit at tiedown points. Make sure tiedowns are tight before transporting.

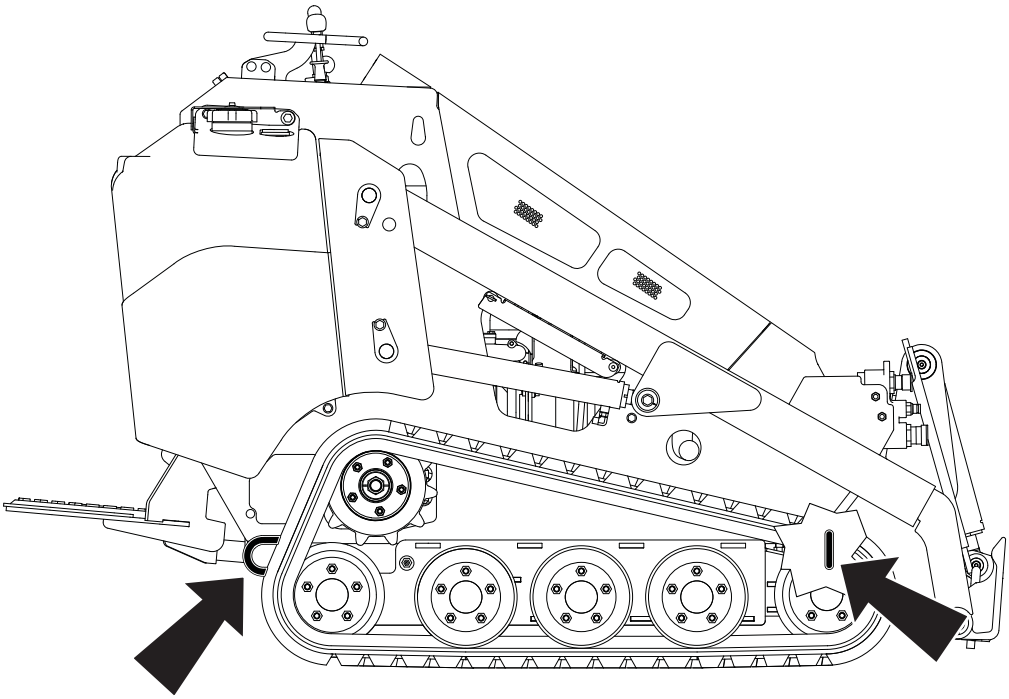

t35om005w.eps

Downloaded from www.Manualslib.com manuals search engine

https://truckmanualshub.com/

Unload

WARNING Crushing weight. If load falls or moves it could kill or crush you. Use proper procedures and equipment or stay away.

To help avoid injury:

- Load and unload trailer on level ground.
- Attach trailer to vehicle before loading or unloading.
- Only operate unit from operator platform.
- If unloading from tilt-bed trailer, be prepared for trailer to tilt.

1. Prepare trailer and ramps for unloading.
2. Remove tiedowns.
3. Disengage parking brake.
4. Start engine.
5. Pull lift arm control to raise mount plate (and attachment) off ground, but keep it low.
6. Adjust throttle to low speed and slowly back unit down trailer or ramps.

Downloaded from www.Manualslib.com manuals search engine

https://truckmanualshub.com/

Tow

WARNING Incorrect procedures could result in death, injury, or property damage. Learn to use equipment correctly.

Under normal conditions, unit should not be towed. If unit breaks down and towing is necessary:

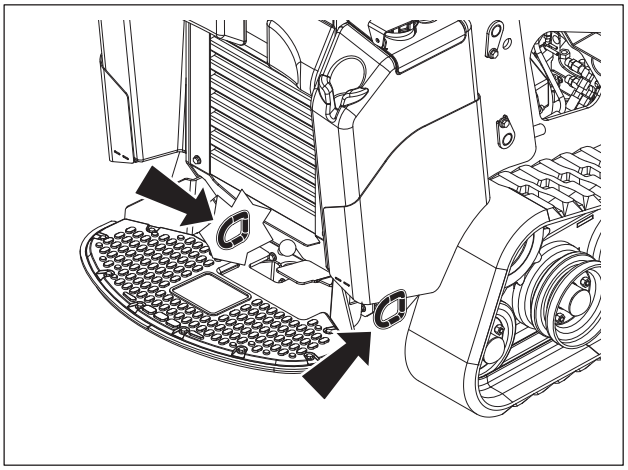

t35om007w.eps

rear tow point

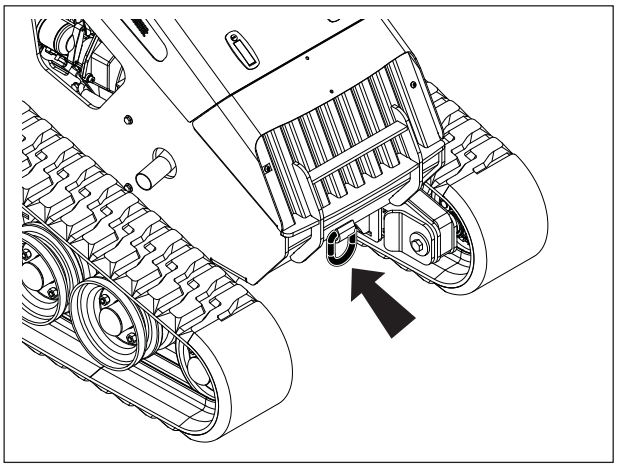

t35om006w.eps

front tow point

- attach chains to tow points facing towing vehicle
- tow for short distances at less than 1 mph (1.6 km/h)
- do not tow for more than 100' (30 m)
- use no more than 1,300 lb (5800 N) of towing force
- open bypass valve on each pump section

NOTICE: When bypass valve is open, unit has no brakes.

- disengage parking brake

Downloaded from www.Manualslib.com manuals search engine

https://truckmanualshub.com/

Prepare Unit for Towing

1. Block tracks.
2. Engage parking brake (shown).

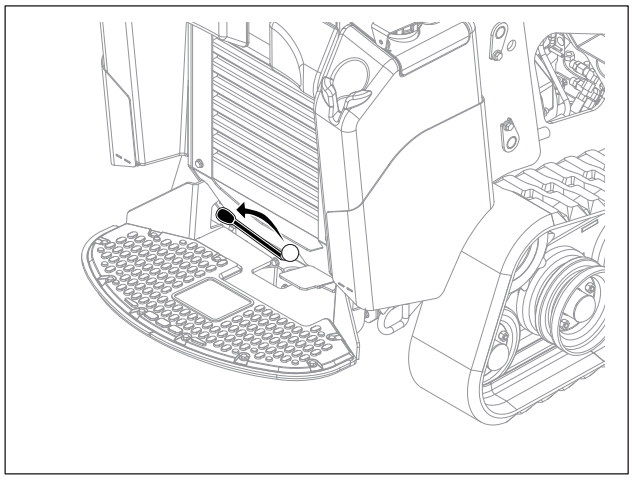

t35om008w.eps

3. Loosen bypass valves (shown) three turns.

IMPORTANT: Open bypass valves in both front and rear pumps.

NOTICE: When bypass valves are open, unit has no brakes.

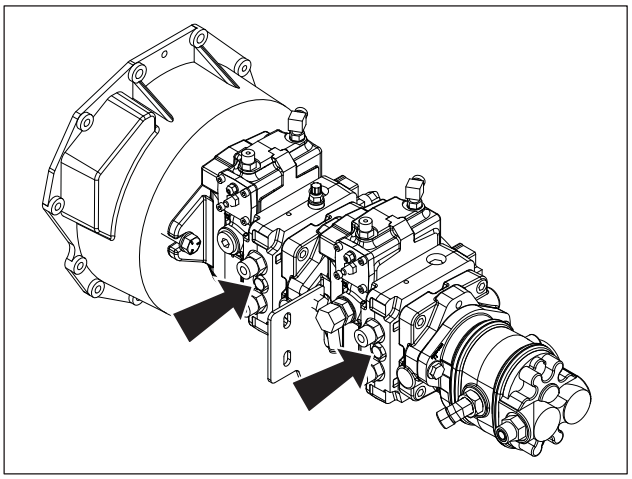

t35om012w.eps

Return Unit to Normal Operation

1. Tighten bypass valves and tighten locknut to 15-18 ft•lb (20-25 N•m).

IMPORTANT: Close bypass valve in both front and rear pumps.

2. Disengage parking brake.
3. Unblock tracks.

Downloaded from www.Manualslib.com manuals search engine

https://truckmanualshub.com/

Downloaded from www.Manualslib.com manuals search engine

https://truckmanualshub.com/

Complete the Job

Chapter Contents

Rinse Equipment 51

Disconnect Attachment 51

Stow Tools 51

Downloaded from www.Manualslib.com manuals search engine

https://truckmanualshub.com/

Rinse Equipment

1. Spray water onto equipment to remove dirt and mud.

> ***NOTICE:*** Do not spray water onto operator's console. Electrical components could be damaged. Wipe down instead.

2. Open hood and allow unit to cool. Remove debris from inside of unit.
3. Remove mud from track sprockets.
4. Wash undercarriage. Pay special attention to brake pin area.

Disconnect Attachment

1. Lower attachment to the ground.
2. Turn off engine.
3. Disengage lock pins by turning handles away from center of attachment.
4. Cycle attachment drive control and disconnect hydraulic hoses, if used.
5. Start engine.
6. Tilt mount plate forward and back unit away from attachment.

Stow Tools

Make sure all tools and accessories are loaded and properly secured on trailer.

Downloaded from www.Manualslib.com manuals search engine

https://truckmanualshub.com/

Service

Chapter Contents

Precautions 53

Overview 55

Recommended Lubricants/Service Key 55

Engine Oil Temperature Chart 56

10 Hour 58

50 Hour 62

200 Hour. 65

500 Hour 67

2000 Hour 69

As Needed 69

Downloaded from www.Manualslib.com manuals search engine

https://truckmanualshub.com/

Precautions

WARNING Incorrect procedures could result in death, injury, or property damage. Learn to use equipment correctly.

To help avoid injury:

- Unless otherwise instructed, perform all service with engine off.
- Refer to engine manufacturer's manual for engine maintenance instructions.
- Before servicing equipment, lower unstowed attachments to ground.

Working Under Raised Lift Arms

WARNING Crushing weight could cause death or serious injury. Use proper procedures and equipment or stay away.

To help avoid injury: Support both lift arms before working under raised lift arms.

Use safety supports as indicated when working under raised lift arms.

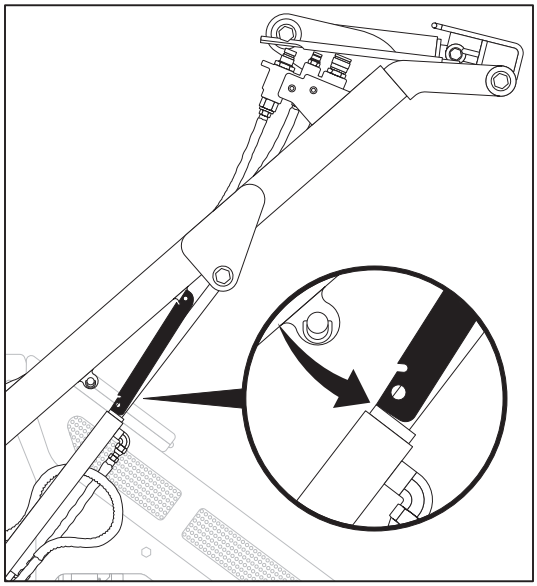

t18om027a.eps

Downloaded from www.Manualslib.com manuals search engine

https://truckmanualshub.com/

Jump Starting Precaution

WARNING Explosion possible. Serious injury or equipment damage could occur. Follow directions carefully.

To help avoid injury:

- Keep sparks and flames away from battery. Battery gas can explode.
- Follow instructions to prevent damage to electronic components.
- Only jump-start in extreme circumstances. Follow procedures on page 70 if jump starting is necessary.

Welding Precaution

WARNING Explosion possible. Serious injury or equipment damage could occur. Follow directions carefully.

NOTICE:

- Disconnect battery to prevent damage to battery. Do not turn off battery disconnect switch with engine running, or alternator and other electronic devices may be damaged.
- Connect welder ground clamp close to welding point and make sure no electronic components are in the ground path.
- Always disconnect the Engine Control Unit ground connection from the frame, harness connections to the ECU, and other electronic components prior to welding on machine or attachments.

Downloaded from www.Manualslib.com manuals search engine

https://truckmanualshub.com/

Overview

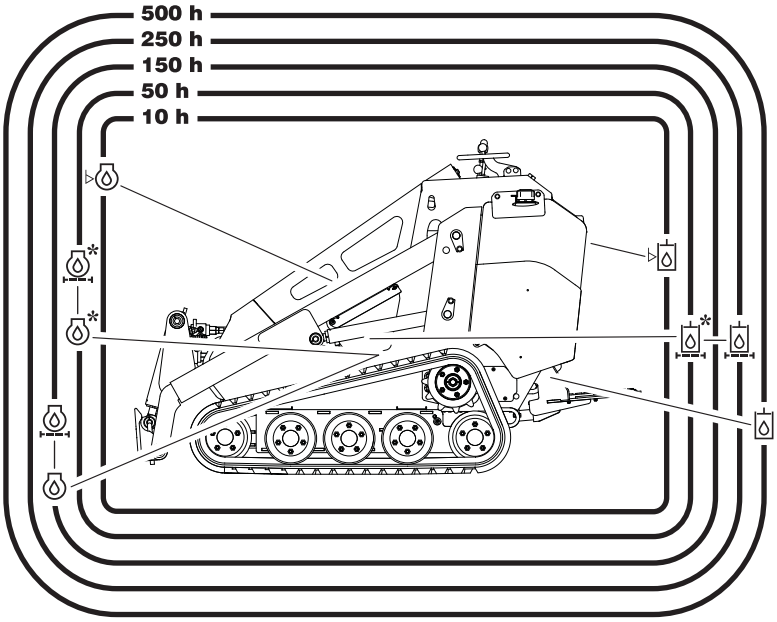

t35om035w.eps

Recommended Lubricants/Service Key

Item	Description
DEO	Diesel engine oil meeting API service classification CF-4 or E1-96 and SAE viscosity recommended by engine manufacturer (SAE 15W40)
THF	Tractor hydraulic fluid, similar to Phillips 66 HG, Mobilfluid 423, Chevron Tractor Hydraulic Fluid, Texaco TDH Oil, or equivalent
MPG	Multipurpose grease meeting NLGI GC-LB Grade 2
*	Initial service interval
	Check level of fluid or lubricant
	Check condition
	Filter
	Change, replace, adjust, service or test

Proper lubrication and maintenance protects Ditch Witch equipment from damage and failure. Service intervals listed are for minimum requirements. In extreme conditions, service machine more frequently.

Downloaded from www.Manualslib.com manuals search engine

https://truckmanualshub.com/

Use only recommended lubricants. Fill to capacities listed on page 75.

NOTICE:

- Use only genuine Ditch Witch parts, filters, and approved lubricants to maintain warranty.
- Use the "Service Record" on page 82 to record all required service to your machine.

Engine Oil Temperature Chart

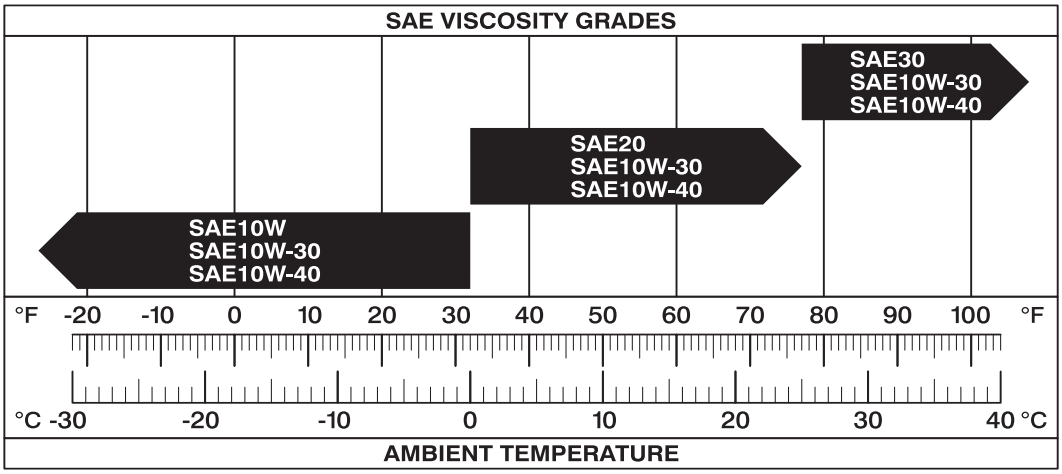

t18om049a.eps

Temperature range anticipated before next oil change

For more information on engine lubrication and maintenance, see your engine manual.

Approved Coolants

This unit was filled with John Deere Cool-Gard coolant before shipment from factory. Add only Cool-Gard (p/n 255-006) or any fully-formulated, ethylene glycol based, low-silicate, heavy-duty diesel engine coolant meeting ASTM specification D5345 (prediluted) or D4985 (concentrate). Before using any other kind of coolant, completely flush radiator.

NOTICE: Do not mix heavy-duty diesel engine coolant and automotive-type coolant. This will lead coolant breakdown and engine damage.

Downloaded from www.Manualslib.com manuals search engine

https://truckmanualshub.com/

Approved Fuel

The engine is this unit is designed to run on diesel fuel. Use only high-quality fuel meeting ASTM D975 No. 2D, EN590, or equivalent. At temperatures below 32°F (0°C), winter fuel blends are acceptable. See engine operation manual for more information.

IMPORTANT:

- For machines operated in the U.S.: The engine in this product is certified to operate on low sulfur diesel fuel (LSD) with a sulfur content of 500 ppm (0.05%) or less. Use LSD or ultra low sulfur fuel (ULSD) only. Using fuels with higher sulfur content will affect exhaust emissions. Such action is a violation of the US Clean Air Act and US EPA regulations and will result in fines.
- For machines operated outside the U.S.: Fuel sulfur content should be less than 5000 ppm (0.05%). Worldwide fuel sulfur regulations vary widely. Fuel used should always comply with local regulations. If fuel sulfur content exceeds 5000 ppm, use a lube oil meeting API CF (or equivalent) with a TBN value of 10 or greater. Do not use lube oils meeting API CJ-4 (or other low SAPS equivalent) under any conditions.

Biodiesel blends up to 5% (B5) are approved for use in this unit. The fuel must meet the specifications for diesel fuel shown above. In certain markets, higher blends may be used if certain steps are taken. Extra attention is needed when using biodiesel, especially when operating in cold weather or storing fuel. Contact your Ditch Witch dealer or the engine manufacturer for more information.

Downloaded from www.Manualslib.com manuals search engine

https://truckmanualshub.com/

Startup/10 Hour

Task	Notes
Check engine oil level	DEO
Check engine air filter service indicator	
Check engine coolant level	DEAC
Grease front track idler rollers	MPG
Check hydraulic fluid level	THF
Check brake operation	
Check track tension	
Check hydraulic hoses	

Check Engine Oil Level

Check engine oil level at dipstick opening (1) at startup and every 10 hours. Oil level should be at top of marking. If low, add DEO at fill (2). Check with unit on level surface and at least 15 minutes after stopping engine.

IMPORTANT: Use oil specified in "Engine Oil Temperature Chart" on page 56.

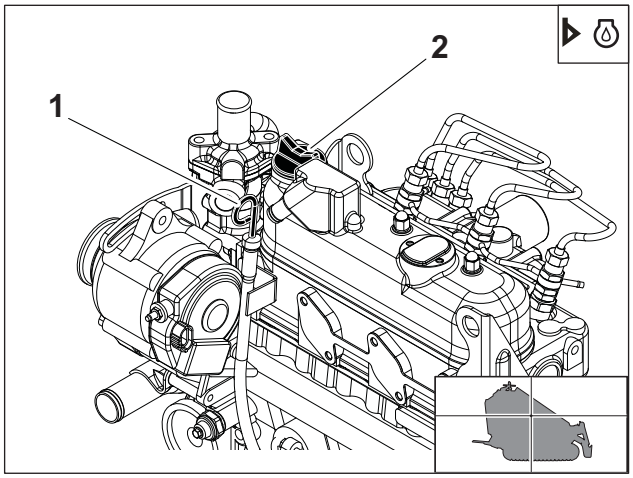

t35om009w.eps

Check Engine Air Filter Service Indicator

Check air filter service indicator (shown) at startup and every 10 hours and change filter as needed. See "Change Air Filter" on page 69.

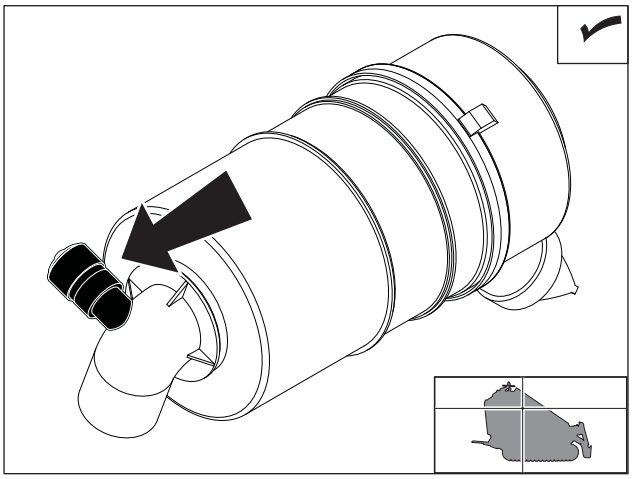
t35om010w.eps

Downloaded from www.Manualslib.com manuals search engine

https://truckmanualshub.com/

Check Hydraulic Fluid Level

Check hydraulic fluid level at startup and every 10 hours. Maintain fluid level at halfway point on sight glass (2), when engine is off, cylinders are fully retracted, and fluid is cool. If low, add THF at fill (1).

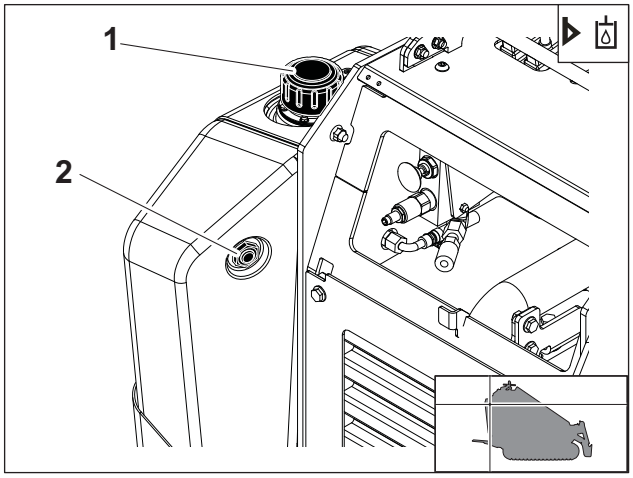

t35om013w.eps

Check Brake Operation

Check brake operation at startup and every 10 hours or more often when conditions warrant.

- Ensure parking brake pin(shown) moves freely allowing brake to be engaged and disengaged.
- Clean mud and debris from area around pin.

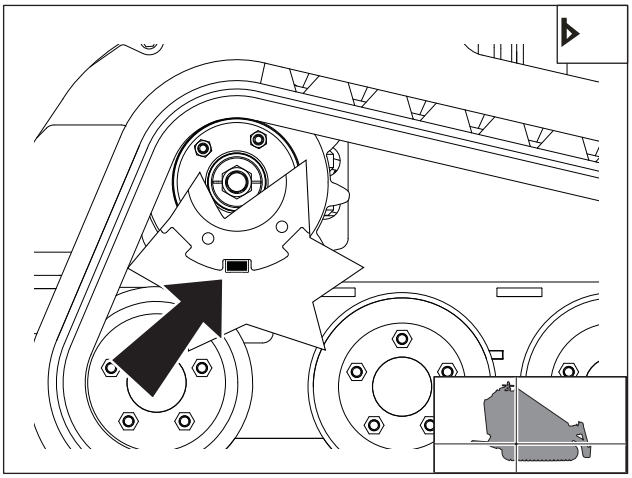

t35om014w.eps

Downloaded from www.Manualslib.com manuals search engine

https://truckmanualshub.com/

Check Track Tension

Check track tension at startup and every 10 hours and adjust as needed. Track is correctly tensioned when measurement between track and straight edges (2) is 1/2 in (13 mm).

To adjust:

1. Park machine on smooth flat surface.
2. Lay straight edge on top of track, spanning from sprocket to front idler roller.
3. Clean track cylinder zerk (1). Pump MPG into zerk until distance between track and straight edge (2) is 1/2" (13 mm).
4. **Test**: Drive forward one track length and check tension again.
   - If tension is too loose, repeat step 3 above.
   - If tension is too tight, loosen fitting on grease cylinder and allow a small amount of grease to discharge from cylinder. Tighten fitting and test again.

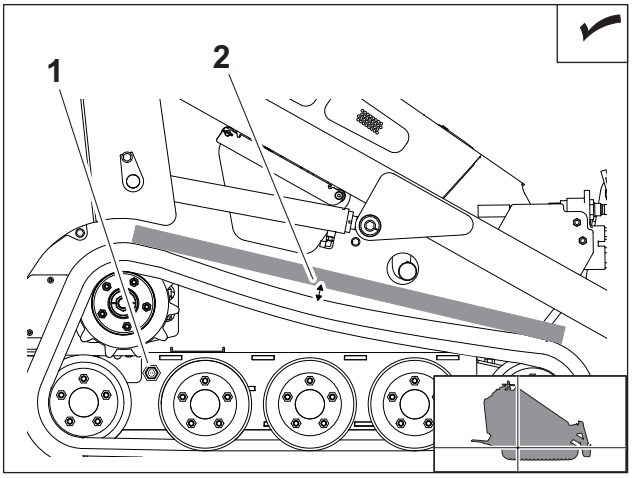

t35om033w.eps

Check Coolant Level

Check coolant level, with engine cool, at overflow bottle at startup and every 10 hours. Maintain coolant level at halfway point on bottle. If low, add approved coolant.

IMPORTANT: See page 56 for information on approved coolants.

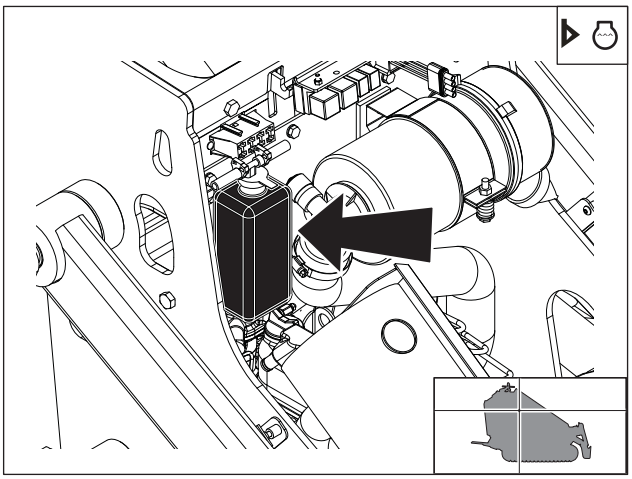
t35om015w.eps

Downloaded from www.Manualslib.com manuals search engine

https://truckmanualshub.com/

Check Hydraulic Hoses

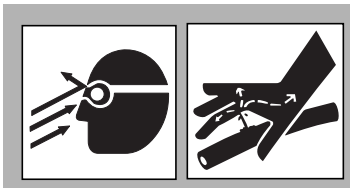

WARNING Pressurized fluid or air could pierce skin and cause injury or death. Stay away.

To help avoid injury:

- Before disconnecting a hydraulic line, turn engine off and operate all controls to relieve pressure. Lower, block, or support any raised component with a hoist. Cover connection with heavy cloth and loosen connector nut slightly to relieve residual pressure. Catch all fluid in a container.
- Before using system, check that all connections are tight and all lines are undamaged.
- Use a piece of cardboard or wood, rather than hands, to search for leaks.
- Wear protective clothing, including gloves and eye protection.
- If you are injured, seek immediate medical attention from a doctor familiar with this type of injury.

Check hydraulic hoses for leaks at startup and every 10 hours.

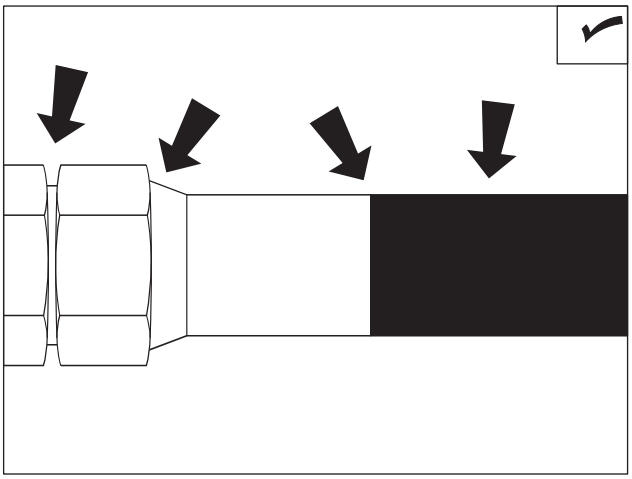

CheckHoses.eps

Downloaded from www.Manualslib.com manuals search engine

https://truckmanualshub.com/

50 Hour

Task	Notes
Change engine oil and filter	initial service
Check fan belt tension and damage	1/4-1/3" (7-9 mm)
Change hydraulic fluid filter	initial
Check fuel hose and clamp band	
Check radiator/hydraulic fluid cooler for dirt and debris	
Check battery electrolyte level	

Change Engine Oil and Filter (Initial)

Change engine oil after 50 hours. Drain oil (1) and add 4.2 qt (4 L) of DEO at fill (2).

IMPORTANT: Use oil specified in "Engine Oil Temperature Chart" on page 56.

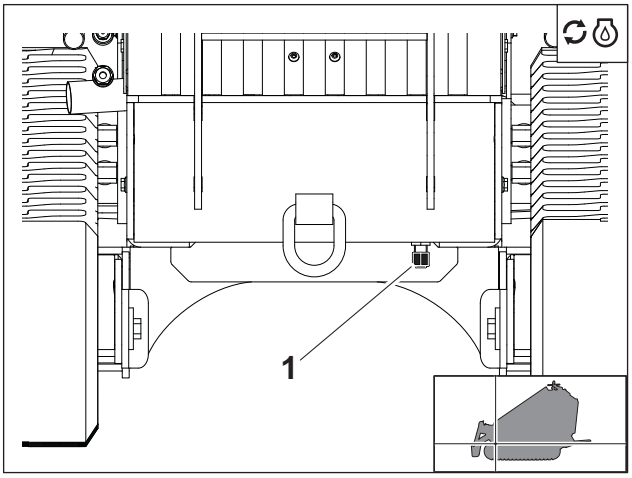

t35om017w.eps

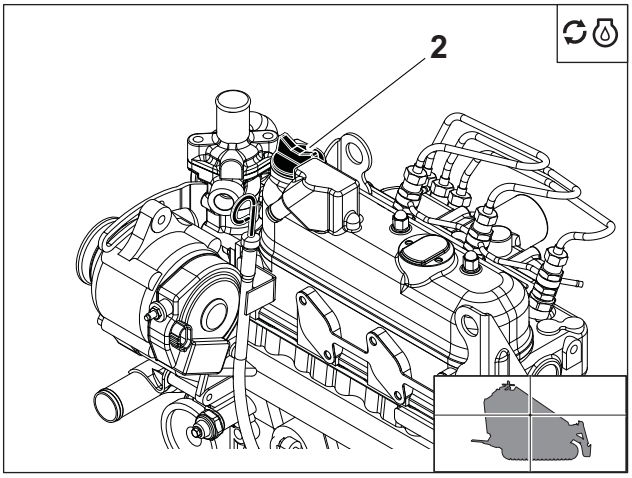

t35om018w.eps

Downloaded from www.Manualslib.com manuals search engine

https://truckmanualshub.com/

Change Hydraulic Filter (initial)

Change hydraulic filter after 50 hours.

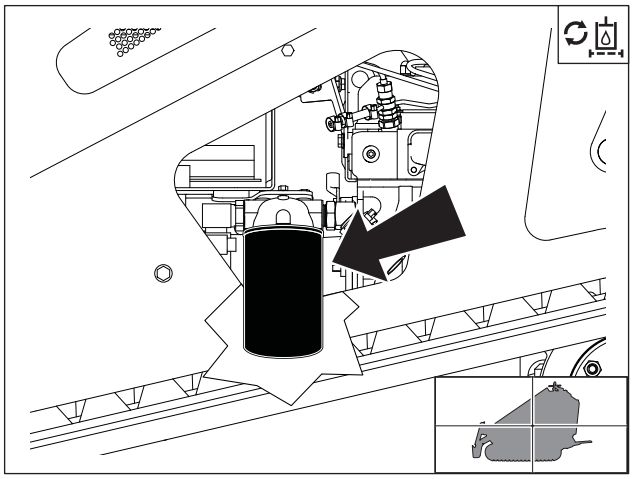

t35om019w.eps

Check Fan Belt for Tension and Damage

Check belt tension every 50 hours. Belt is properly tensioned when it moves about 1/4-3/8" (7-9 mm) when pushed at the long span. Replace the belt when it is worn and sinks into the pulley groove.

Adjust Tension

1. Loosen two alternator bolts (shown).
2. Adjust position as needed.
3. Tighten bolts.
4. Check tension.

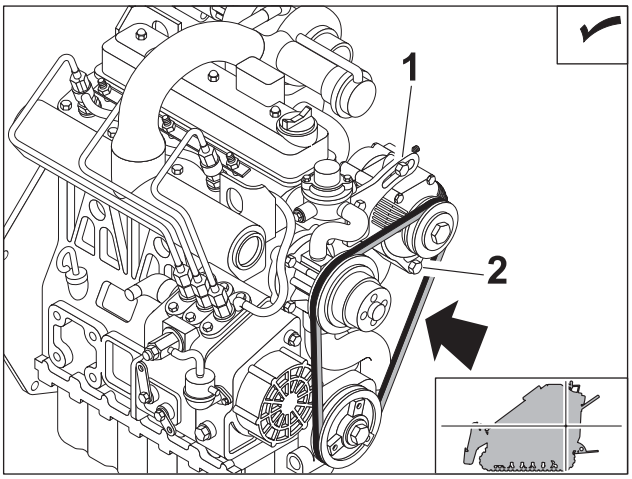

t18om048t.eps

Check Fuel Hose and Clamp Bands

Check fuel hose and clamp bands every 50 hours.

If the clamp is loose, apply oil to the threads and retighten it. If the hose is worn, replace it.

Bleed the fuel system if the hose and/or clamp is changed.

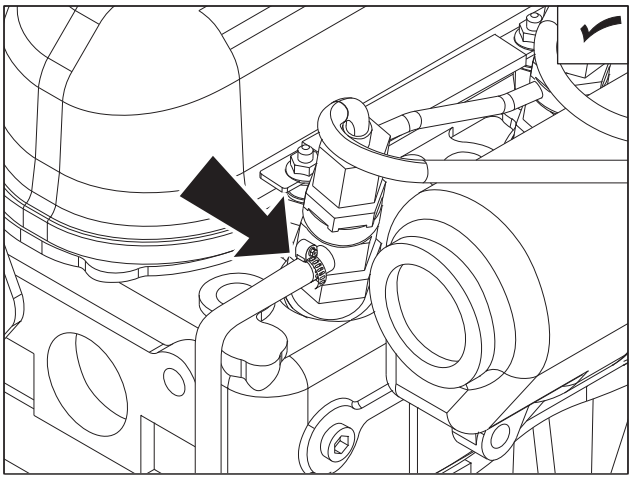

t18om053t.eps

Downloaded from www.Manualslib.com manuals search engine

https://truckmanualshub.com/

Check Radiator/Fluid Cooler

Check radiator/hydraulic fluid cooler for dirt, grass, and other foreign matter every 50 hours. Clean out with compressed air or spray wash if required. Be careful not to damage fins with high-pressure air or water. Check more often if operating in dusty or grassy conditions.

Check radiator hoses for wear. Check hose clamps for proper tightness.

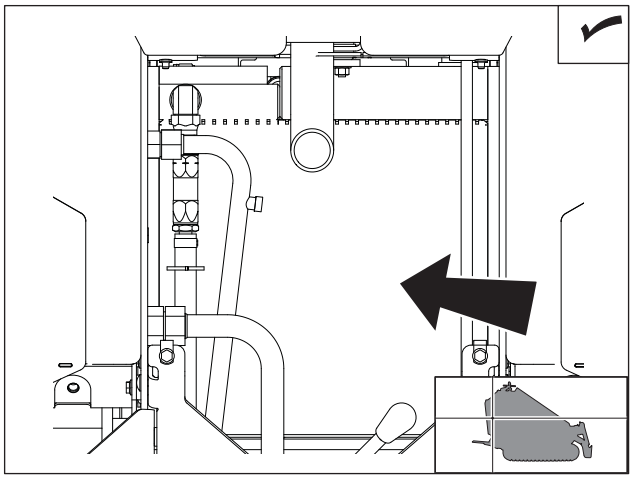

t35om020w.eps

Check Battery

WARNING Explosion possible. Serious injury or equipment damage could occur. Follow directions carefully.

To help avoid injury:

- Keep sparks and flames away from battery. Battery gas can explode.
- Always remove negative (-) battery cable first and replace it last.
- Do not splash battery electrolyte onto skin; it will burn and cause blindness if splashed into eyes. Wash hands after working around battery.
- Never disconnect battery terminals with engine running. Voltage spike may occur and damage electronic control modules or other components.

Check battery every 100 hours. Keep battery and terminals clean and free of corrosion.

Add distilled water if liquid level is low.

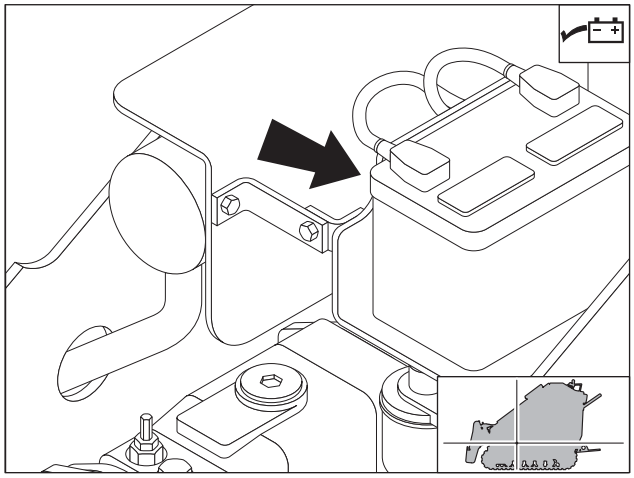

t18om036t.eps

Downloaded from www.Manualslib.com manuals search engine

https://truckmanualshub.com/

200 Hour

Task	Notes
Change engine oil and filter	4.2 qt (4 L) DEO
Check intake air line	1/4-1/3" (7-9 mm)
Change hydraulic filter	

Change Engine Oil and Filter

Change engine oil and filter every 200 hours. Drain oil, change filter (shown) and add 4.2 qt (4 L) of DEO at fill. See page 62.

IMPORTANT: Use oil specified in "Engine Oil Temperature Chart" on page 56.

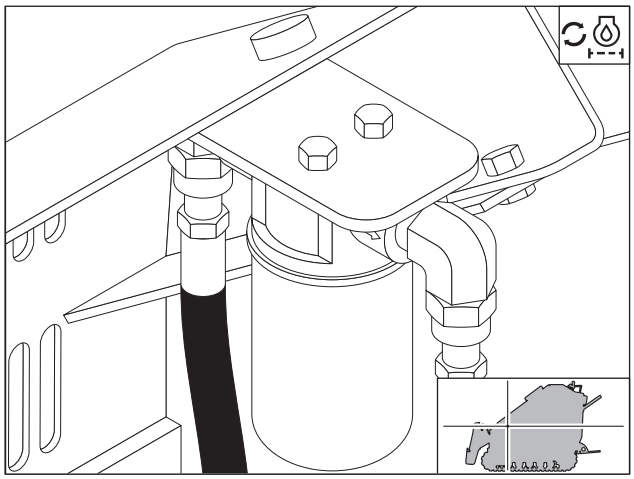

t18om037t.eps

Check Intake Air Line

Check the intake air line every 200 hours.

NOTICE: Keep dust out of the intake air line to prevent damage to the engine.

If the clamp is loose, apply oil to the threads and retighten it.

If the hose appears cracked or worn, replace it.

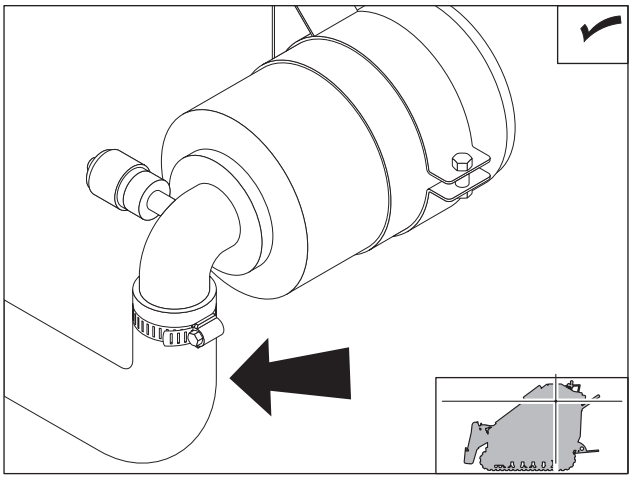

t18om056t.eps

Downloaded from www.Manualslib.com manuals search engine

https://truckmanualshub.com/

Change Hydraulic Filter

Change hydraulic filter every 200 hours.

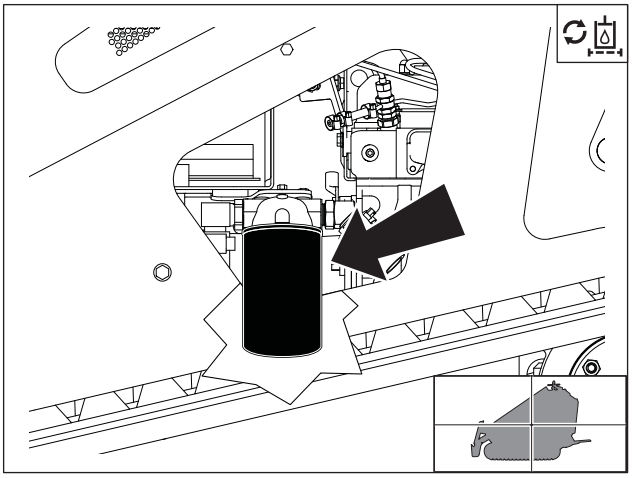

t35om019w.eps

Downloaded from www.Manualslib.com manuals search engine

https://truckmanualshub.com/

500 Hour

Task	Notes
Change fuel filters	
Change hydraulic fluid and filter	

Change Fuel Filters

Change filters every 500 hours. If you refuel from cans, replace filters more often.

The canister filter is located in the engine compartment. The inline filter is located under the control console.

See parts manual or contact your Ditch Witch dealer for correct replacement filter.

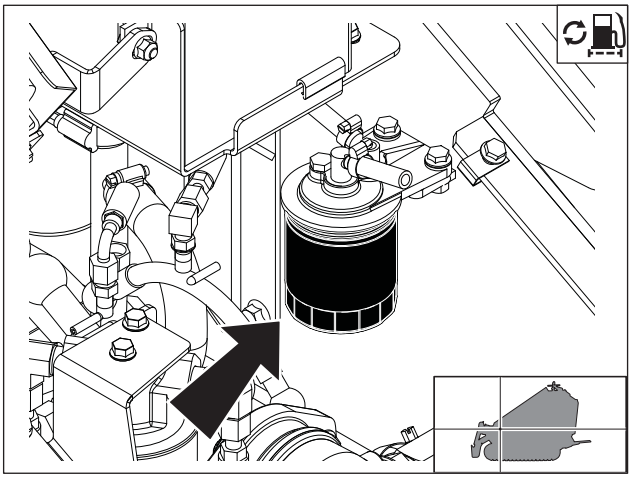

t35om028w.eps

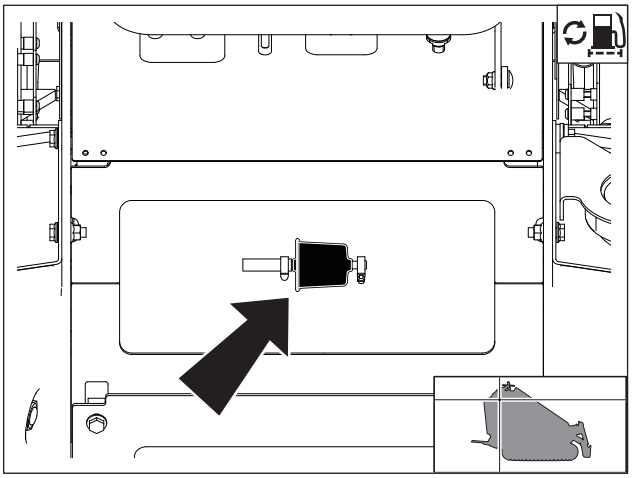

t35om030w.eps

Downloaded from www.Manualslib.com manuals search engine

https://truckmanualshub.com/

Change Hydraulic Fluid and Filter

Change hydraulic fluid and filter every 500 hours. Change every 250 hours if jobsite temperature exceeds 100°F (38°C) more than 50% of the time.

1. Remove drain plug (3).
2. Drain fluid and replace plug.
3. Change filter. See page 66.
4. Add THF at fill (1) until fluid level is at halfway point on sight glass (2). Capacity is 9.2 gal (35 L).

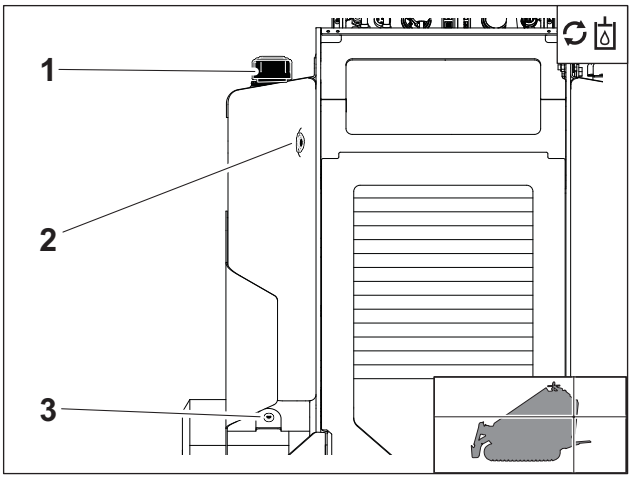

t35om029w.eps

Downloaded from www.Manualslib.com manuals search engine

https://truckmanualshub.com/

2000 Hour

Change Engine Coolant

Drain cooling system at drain (2). Add approved coolant at fill (1) every two years or 2000 hours.

NOTICE:

- The use of non-approved coolant may lead to engine damage or premature engine failure and will void engine warranty.
- See page 56 for list of approved coolants.

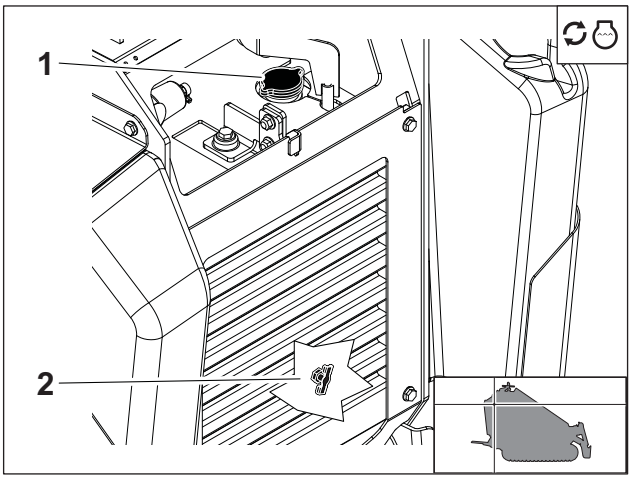

t35om031w.eps

As Needed

Change Air Filter

Change air filter when red band on indicator (1) is visible. Replace safety element (4) every third change of primary filter (3) or any time primary element has become damaged.

1. Open air filter housing at latches (2).
2. Remove primary element (3).
3. Wipe inside of housing and end cup (2).
4. Insert new primary element.
5. Latch air filter case.
6. Reset air filter service indicator (1).

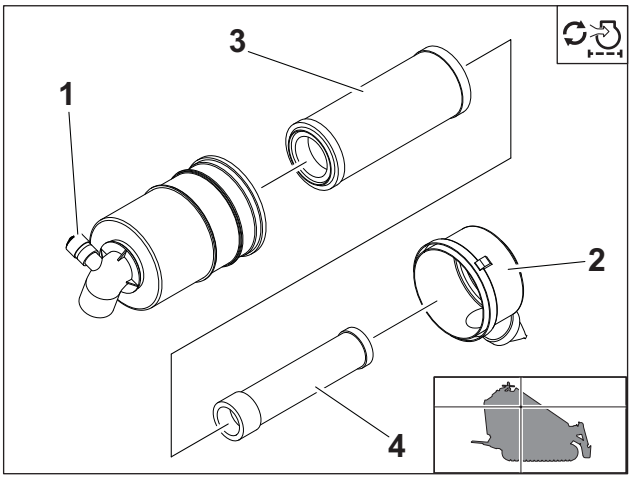

t35om032w.eps

Downloaded from www.Manualslib.com manuals search engine

https://truckmanualshub.com/

Jump Start Unit

WARNING Incorrect procedures could result in death, injury, or property damage. Use equipment correctly.

To help avoid injury:

- Park on level area.
- Put all drive controls in neutral and lower all unstowed attachments.
- Turn off all electrical loads.
- Turn off engine and remove key from ignition.
- Block wheels or tracks.

WARNING Explosion possible. Serious injury or equipment damage could occur. Follow directions carefully.

To help avoid injury:

- Lead-acid batteries vent explosive hydrogen gas when charging.
- Do not smoke, create sparks, or use flames around batteries.
- NEVER lean over battery when making connections.
- Do not allow vehicles to touch when jump starting.
- Wear eye protection and remove metal jewelry and watches.
- Do not attempt to jump start a battery that is leaking, bulging, heavily corroded, frozen, or otherwise damaged.
- NEVER short-circuit battery terminals for any reason.
- NEVER hammer on battery posts or cable terminals.

Downloaded from www.Manualslib.com manuals search engine

https://truckmanualshub.com/

Before You Start

Electronic components can be easily damaged by electrical surges. Jump starting can damage electronics and electrical systems, and is not recommended except in extreme circumstances. Use quality large diameter jumper cables capable of carrying high currents (400 amps or more). Cheap cables may not allow enough current flow to start a dead/discharged battery.

Read all steps thoroughly and review illustration before performing procedure.

Jump Start Procedure (Engine Off)

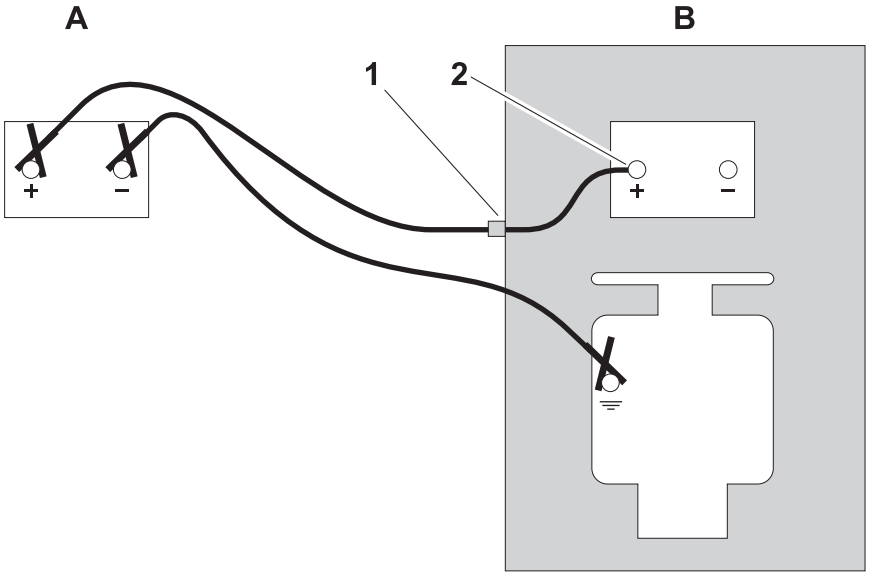

x00xx001h.eps

1. Park service vehicle close to disabled equipment but do not allow vehicles to touch.
2. Engage parking brake in both vehicles.
3. Turn the ignition switch to the OFF position in both vehicles, and turn off all electrical loads.
4. Inspect battery in disabled vehicle (B) for signs of cracking, bulging, leaking, or other damage. Connect red positive (+) jumper cable clamp to positive (+) post (2) of battery in disabled vehicle first.

IMPORTANT: Some equipment may have a positive jumper cable terminal (1) located externally. If so equipped, connect red positive (+) jumper cable clamp to terminal.

5. Connect the other red positive (+) jumper cable clamp to positive (+) post of battery (A) in the service vehicle.

Downloaded from www.Manualslib.com manuals search engine

https://truckmanualshub.com/

6. Connect black negative (-) cable clamp to negative (-) post of battery (A) in service vehicle.
7. Connect the other black negative (-) cable clamp to the engine or frame ground on the disabled vehicle, at least 12" (305 mm) from the failed battery, as shown.
8. Operate service vehicle engine at 1500-2000 rpm for a few minutes to build an electrical charge in the failed battery.
9. Stop engine in service vehicle.
10. Remove jumper cables from the service vehicle, black negative (-) clamp first. Do not allow clamps to touch.
11. Attempt to start disabled vehicle.
12. If engine starts, operate at full throttle for a few minutes to build an electrical charge in the battery.
13. Remove black negative (-) cable clamp from the disabled engine or frame ground first.
14. Remove red positive (+) cable clamp from the disabled vehicle positive (+) battery post last.

If the disabled vehicle did not start, check for loose or corroded battery cable connections. Poor connections will prevent current from charging the failed battery. Clean terminals and posts if necessary and repeat steps above. If a running jump is necessary, repeat steps above with engine running.

NOTICE: Jumping with engine running can damage the alternator and electronic components on both vehicles, and should be performed only if necessary.

Downloaded from www.Manualslib.com manuals search engine

https://truckmanualshub.com/

Downloaded from www.Manualslib.com manuals search engine

https://truckmanualshub.com/

Specifications

SK750/SK755 Basic Unit

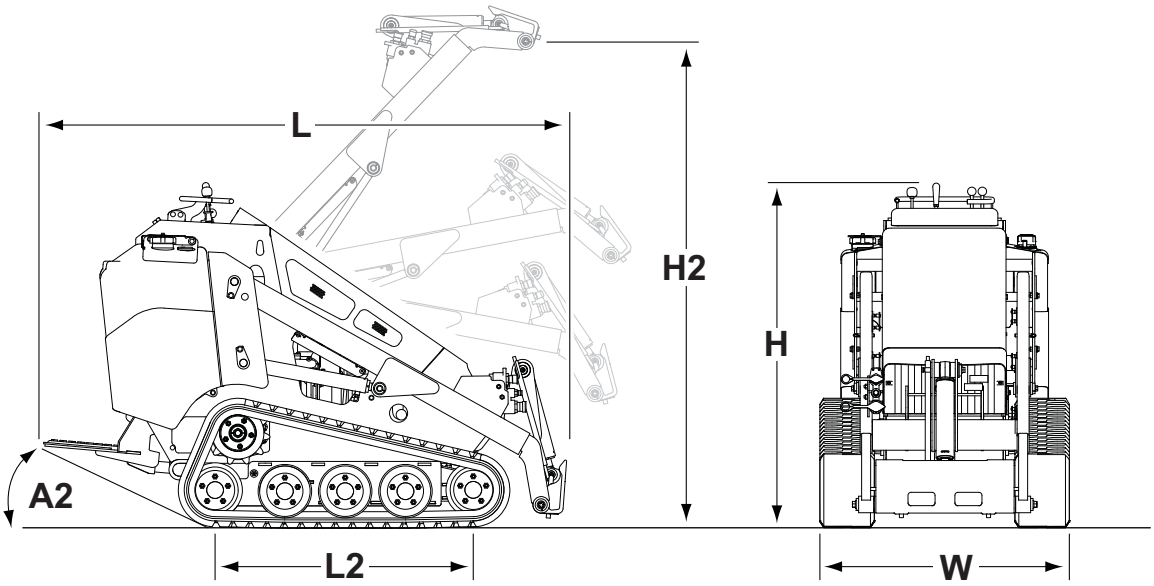

Dimensions		U.S.	Metric
H2	Hinge pin height, max	81 in	2057 mm
	Operating height, max, standard bucket	103 in	2615 mm
H	Overall height of machine	57 in	1450 mm
L	Overall length of loader, no attachment	86 in	2190 mm
	Overall length of machine, with standard bucket	105 in	1670 mm
L2	Wheelbase/track length	43 in	1092 mm
A2	Angle of departure	27°	27°
	Ground clearance, min (center/side)	8.9 in / 3.7 in	170 mm / 124 mm
W	Track width, max	42 in	1065 mm
	Track width, min	36 in	914 mm
	Unit width, excluding tracks	35 in	890 mm
	Dump height, max, with standard bucket	64 in	1626 mm
	Reach, standard bucket at max dump height	17 in	430 mm

Downloaded from www.Manualslib.com manuals search engine

https://truckmanualshub.com/

Dimensions		U.S.	Metric
	Bucket rollback angle, ground level	25°	25°
	Bucket rollback angle, full height	90°	90°
	Dump angle, standard bucket at max dump height	35°	35°
	Bucket width, max	44 in	1120 mm
	Bucket width, min	36 in	915 mm
	Swing radius, max, with standard bucket	65 in	1650 mm
	Swing radius, no attachment	44 in	1120 mm
	Rear overhang, max	29 in	735 mm

Performance	U.S.	Metric
Ground drive speed, forward and reverse	4.7 mph	7.6 km/h
Ground pressure, 7" (180 mm) tracks *	4.8 psi	0.33 bar
Ground pressure, 9" (230 mm) tracks *	3.8 psi	0.26 bar
Tipping capacity The rated operating capacity for this machine was determined using a standard bucket in the drive position with center of gravity 7 in (18 cm) from the mounting plate. Depending on the attachment, the actual operating capacity of the attachment may vary.	2285 lb	1039 kg
Operating capacity (35% of tipping capacity)	800 lb	364 kg
Machine weight (no attachment, fluids full)	2890 lb	1314 kg

* Includes machine weight, 175-lb (80-kg) bucket, 165-lb (75-kg) operator

Battery
SAE reserve capacity 110 min, SAE cold crank @ 0°F (-18°C) 800 amp, 12V electrical system

Fluid Capacities	U.S.	Metric
Fuel tank	10.5 gal	40 L
Engine oil, with filter	4.2 qt	4 L
Hydraulic reservoir	9.2 gal	35 L

Specifications are called out according to SAE recommended practices. Specifications are general and subject to change without notice. If exact measurements are required, equipment should be weighed and measured. Due to selected options, delivered equipment may not necessarily match that shown.

Downloaded from www.Manualslib.com manuals search engine

https://truckmanualshub.com/

SK750 Power Specifications

Power	U.S.	Metric
Engine: Kubota D1105, diesel, EPA Tier 4, EU Stage IIIa		
Number of cylinders	3	
Displacement	68.5 in^3	1.12 L
Bore	3.07 in	78 mm
Stroke	3.09 in	78.4 mm
Manufacturer's gross power rating (per SAE J1955)	23.1 hp	17.2 kW
Estimated net power rating (per SAE 1348)	31.5 hp	23.5 kW
Rated engine speed	3000 rpm	3000 rpm

Hydraulic System	U.S.	Metric
Auxiliary: double gear pump		
Flow rate (pump 1)	6.5 gpm	24 L/min
Flow rate (pump 2)	5.5 gpm	21 L/min
Pressure	3000 psi	207 bar
Ground drive: dual hydrostat		
Flow rate	13.9 gpm	52 L/min
Pressure	3500 psi	241 bar

Noise Levels
Operator 87 dBA sound pressure per ISO 6394 Exterior 100 dBA sound power per ISO 6393

Vibration Level
Average vibration transmitted to the operator's hand during normal operation with a loader bucket is 4.31 m/sec^2. Average vibration transmitted to the whole body during normal operation with a loader bucket is 1.07 m/sec^2. Actual vibration will depend upon the attachment being used.

Specifications are called out according to SAE recommended practices. Specifications are general and subject to change without notice. If exact measurements are required, equipment should be weighed and measured. Due to selected options, delivered equipment may not necessarily match that shown.

Downloaded from www.Manualslib.com manuals search engine

https://truckmanualshub.com/

SK755 Power Specifications

Power	U.S.	Metric
Engine: Kubota D1105-T, diesel, EPA Tier 4, EU Stage IIIa		
Number of cylinders	3	
Displacement	68.5 in^3	1.12 L
Bore	3.07 in	78 mm
Stroke	3.09 in	78.4 mm
Manufacturer's gross power rating (per SAE J1955)	32.8 hp	24.5 kW
Estimated net power rating (per SAE 1348)	31.5 hp	23.5 kW
Rated engine speed	3000 rpm	3000 rpm
Maximum tilt angle, fore and aft	30°	30°
Maximum tilt angle, side to side	30°	30°

* Exceeding these operating angles will cause engine damage. This DOES NOT imply that the machine is stable to maximum angle of safe engine operation.

Hydraulic System	U.S.	Metric
Auxiliary: double gear pump		
Flow rate (pump 1)	8.0 gpm	30 L/min
Flow rate (pump 2)	5.5 gpm	21 L/min
Pressure	3000 psi	207 bar
Ground drive: dual hydrostat		
Flow rate	13.9 gpm	52 L/min
Pressure	3500 psi	241 bar

Noise Levels
Operator 87 dBA sound pressure per ISO 6394 Exterior 101 dBA sound power per ISO 6393

Vibration Level
Vibration at the operator's hand during normal operation is 4.31 m/sec^2 Vibration at the operator's foot during normal operation is 1.07 m/sec^2

Specifications are called out according to SAE recommended practices. Specifications are general and subject to change without notice. If exact measurements are required, equipment should be weighed and measured. Due to selected options, delivered equipment may not necessarily match that shown.

Downloaded from www.Manualslib.com manuals search engine

https://truckmanualshub.com/

Support

Procedure

Notify your dealer immediately of any malfunction or failure of Ditch Witch equipment.

Always give model, serial number, and approximate date of your equipment purchase. This information should be recorded and placed on file by the owner at the time of purchase.

Return damaged parts to dealer for inspection and warranty consideration if in warranty time frame.

Order genuine Ditch Witch replacement or repair parts from your authorized Ditch Witch dealer. Use of another manufacturer's parts may void warranty consideration.

Resources

Publications

Contact your Ditch Witch dealer for publications and videos covering safety, operation, service, and repair of your equipment.

Ditch Witch Training

For information about on-site, individualized training, contact your Ditch Witch dealer.

Downloaded from www.Manualslib.com manuals search engine

https://truckmanualshub.com/

Warranty

Ditch Witch Equipment and Replacement Parts Limited Warranty Policy

Subject to the limitation and exclusions herein, free replacement parts will be provided at any authorized Ditch Witch dealership for any Ditch Witch equipment or parts manufactured by The Charles Machine Works, Inc. (CMW) that fail due to a defect in material or workmanship within one (1) year of first commercial use (Exception: 2 years for all SK5 attachments). Free labor will be provided at any authorized Ditch Witch dealership for installation of parts under this warranty during the first year following "initial commercial" use of the serial-numbered Ditch Witch equipment on which it is installed. The customer is responsible for transporting their equipment to an authorized Ditch Witch dealership for all warranty work.

Exclusions from Product Warranty

- All incidental or consequential damages.
- All defects, damages, or injuries caused by misuse, abuse, improper installation, alteration, neglect, or uses other than those for which products were intended.
- All defects, damages, or injuries caused by improper training, operation, or servicing of products in a manner inconsistent with manufacturer's recommendations.
- All engines and engine accessories (these are covered by original manufacturer's warranty).
- Tires, belts, and other parts which may be subject to another manufacturer's warranty (such warranty will be available to purchaser).
- ALL IMPLIED WARRANTIES NOT EXPRESSLY STATED HEREIN, INCLUDING ANY WARRANTY OF FITNESS FOR A PARTICULAR PURPOSE AND MERCHANTABILITY.

IF THE PRODUCTS ARE PURCHASED FOR COMMERCIAL PURPOSES, AS DEFINED BY THE UNIFORM COMMERCIAL CODE, THEN THERE ARE NO WARRANTIES WHICH EXTEND BEYOND THE FACE HEREOF AND THERE ARE NO IMPLIED WARRANTIES OF ANY KIND WHICH EXTEND TO A COMMERCIAL BUYER. ALL OTHER PROVISIONS OF THIS LIMITED WARRANTY APPLY INCLUDING THE DUTIES IMPOSED.

Ditch Witch products have been tested to deliver acceptable performance in most conditions. This does not imply they will deliver acceptable performance in all conditions. Therefore, to assure suitability, products should be operated under anticipated working conditions prior to purchase.

Defects will be determined by an inspection within thirty (30) days of the date of failure of the product or part by CMW or its authorized dealer. CMW will provide the location of its inspection facilities or its nearest authorized dealer upon inquiry. CMW reserves the right to supply remanufactured replacements parts under this warranty as it deems appropriate.

Extended warranties are available upon request from your local Ditch Witch dealer or CMW.

Some states do not allow exclusion or limitation of incidental or consequential damages, so above limitation of exclusion may not apply. Further, some states do not allow exclusion of or limitation of how long an implied warranty lasts, so the above limitation may not apply. This limited warranty gives product owner specific legal rights and the product owner may also have other rights which vary from state to state.

For information regarding this limited warranty, contact CMW's Product Support department, P.O. Box 66, Perry, OK 73077-0066, or contact your local Ditch Witch dealer.

First version: 1/91; Latest version: 7/05

Downloaded from www.Manualslib.com manuals search engine

Downloaded from www.Manualslib.com manuals search engine

A Note To Ditch Witch Equipment Owners:

If your equipment was purchased through a Ditch Witch dealer, there is no need to read further.

However, if you purchased from any other source, please fill out the form on the reverse side and return it to us.

This will enable you to receive updates on this equipment as well as information on new products of interest.

Thanks for using Ditch Witch equipment.

(Please Fold Along This Line And Seal At Bottom With Tape)

NO POSTAGE NECESSARY IF MAILED IN THE UNITED STATES

BUSINESS REPLY MAIL

FIRST CLASS PERMIT NO 23 PERRY OKLAHOMA

POSTAGE WILL BE PAID BY

The Charles Machine Works, Inc.
P.O. Box 66
Perry, Oklahoma 73077-9989

A Note To Ditch Witch Equipment Owners:

If your equipment was purchased through a Ditch Witch dealer, there is no need to read further.

However, if you purchased from any other source, please fill out the form on the reverse side and return it to us.

This will enable you to receive updates on this equipment as well as information on new products of interest.

Thanks for using Ditch Witch equipment.

(Please Fold Along This Line And Seal At Bottom With Tape)

NO POSTAGE NECESSARY IF MAILED IN THE UNITED STATES

BUSINESS REPLY MAIL

FIRST CLASS PERMIT NO 23 PERRY OKLAHOMA

POSTAGE WILL BE PAID BY

The Charles Machine Works, Inc.
P.O. Box 66
Perry, Oklahoma 73077-9989

https://truckmanualshub.com/

Downloaded from www.Manualslib.com manuals search engine

Ditch Witch® Registration Card

Please Type or Print All Information

Purchaser's Company Name

Attention

Street Address or P.O. Box

City County

State Zip Nation

( )

Phone Number With Area Code

Model Serial Number

Attachments/Accessories Serial Numbers

Attachments/Accessories Serial Numbers

Attachments/Accessories Serial Numbers

Name of Ditch Witch Dealership

Your Signature

Ditch Witch® Registration Card

Please Type or Print All Information

Purchaser's Company Name

Attention

Street Address or P.O. Box

City County

State Zip Nation

( )

Phone Number With Area Code

Model Serial Number

Attachments/Accessories Serial Numbers

Attachments/Accessories Serial Numbers

Attachments/Accessories Serial Numbers

Name of Ditch Witch Dealership

Your Signature

https://truckmanualshub.com/

https://truckmanualshub.com/

Service Record

Service Performed	Date	Hours

Downloaded from www.Manualslib.com manuals search engine

https://truckmanualshub.com/

Service Performed	Date	Hours

CMW

Downloaded from www.Manualslib.com manuals search engine