https://truckmanualshub.com/

Kaiser. Performance counts.

KAISER

NEW
THE POWER PACK IN THE 10-TONNE CLASS

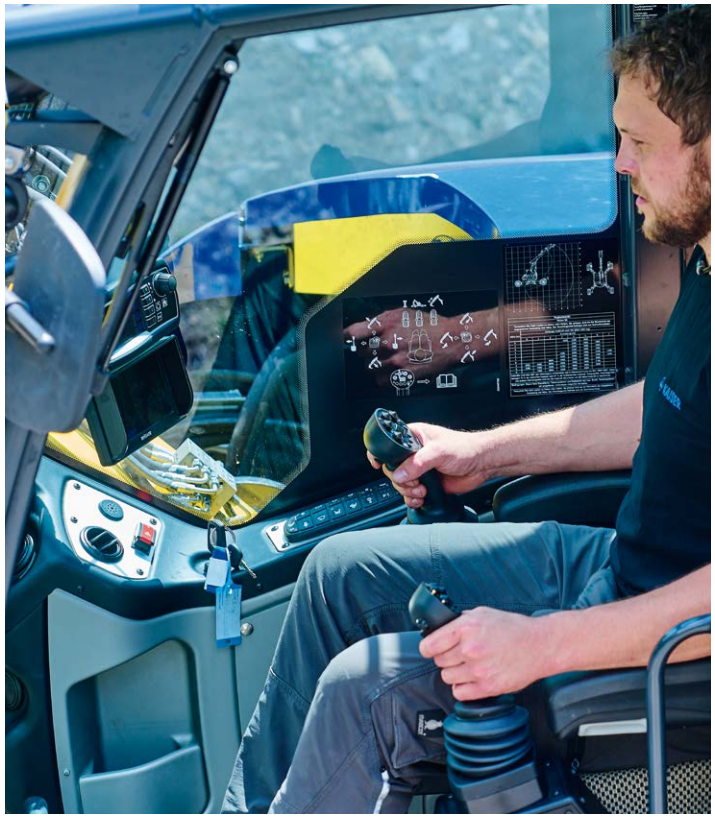

S8 | S8 ALLROAD

KAISER MOBILE WALKING EXCAVATOR

https://truckmanualshub.com/

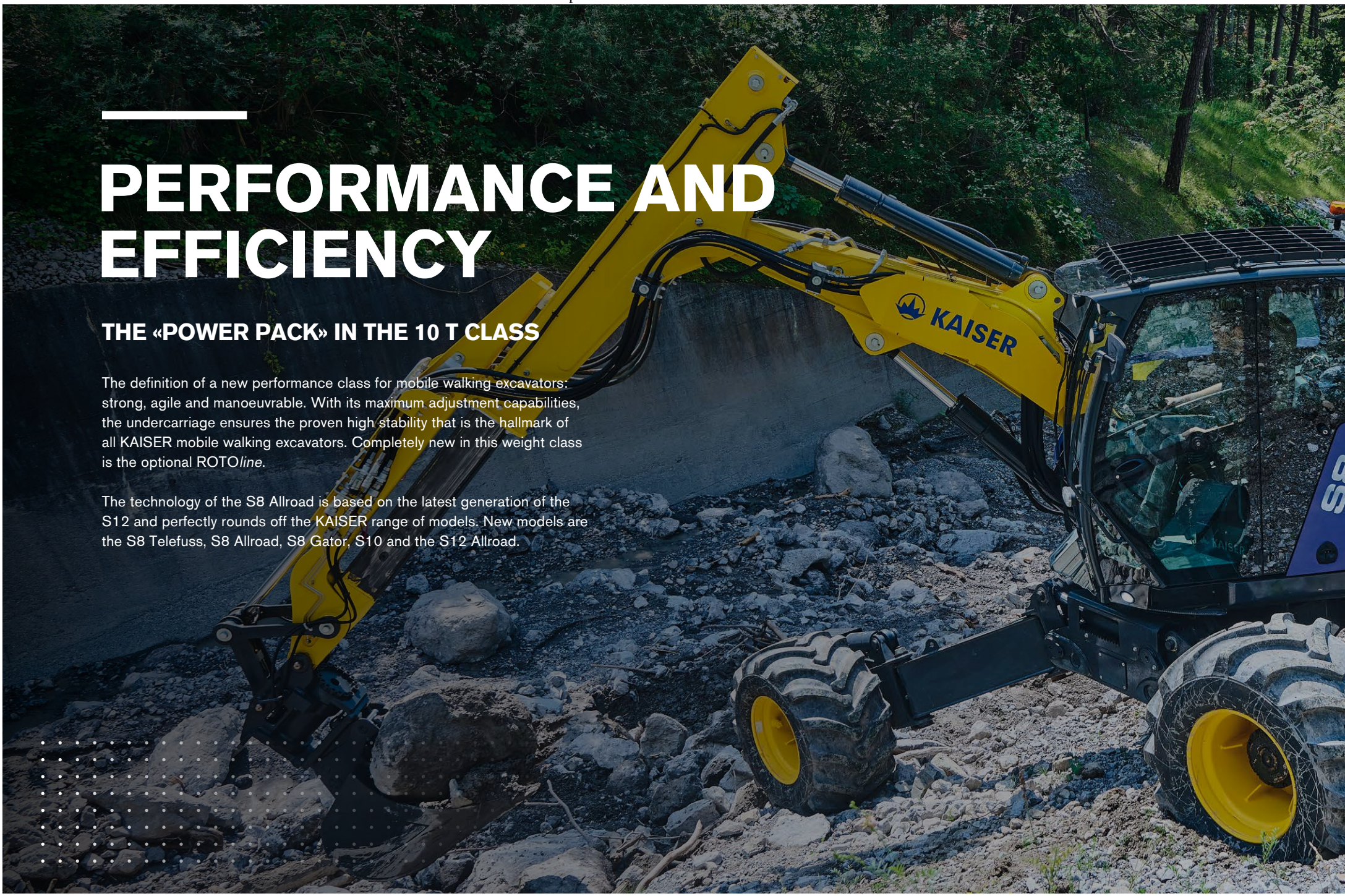

PERFORMANCE AND EFFICIENCY

THE «POWER PACK» IN THE 10 T CLASS

The definition of a new performance class for mobile walking excavators: strong, agile and manoeuvrable. With its maximum adjustment capabilities, the undercarriage ensures the proven high stability that is the hallmark of all KAISER mobile walking excavators. Completely new in this weight class is the optional ROTO*line*.

The technology of the S8 Allroad is based on the latest generation of the S12 and perfectly rounds off the KAISER range of models. New models are the S8 Telefuss, S8 Allroad, S8 Gator, S10 and the S12 Allroad.

https://truckmanualshub.com/

PERFORMANCE DATA COMPARISON

–29 % weight

S12 Allroad	**15,100 kg**
S8 Allroad	**10,800 kg**
S3	13,800 kg

29 % less weight than the S12 Allroad in comparable configuration

+11 % hydraulic power

S12 Allroad	**92 kW**
S8 Allroad	**70 kW**
S2	63 kW

11 % more hydraulic power compared with the S2

+56 % with ROTO*line*

S12 Allroad	**570 L**
S8 Allroad	**451 L**
S2	290 L

56 % higher pump flow rate in comparison with the S2

Engine power

S12 Allroad	**140 kW**
S8 Allroad	**100 kW**
S2 / S3	106 kW

https://truckmanualshub.com/

S8 ALLROAD

S8

Working Ranges KAISER S8 Allroad

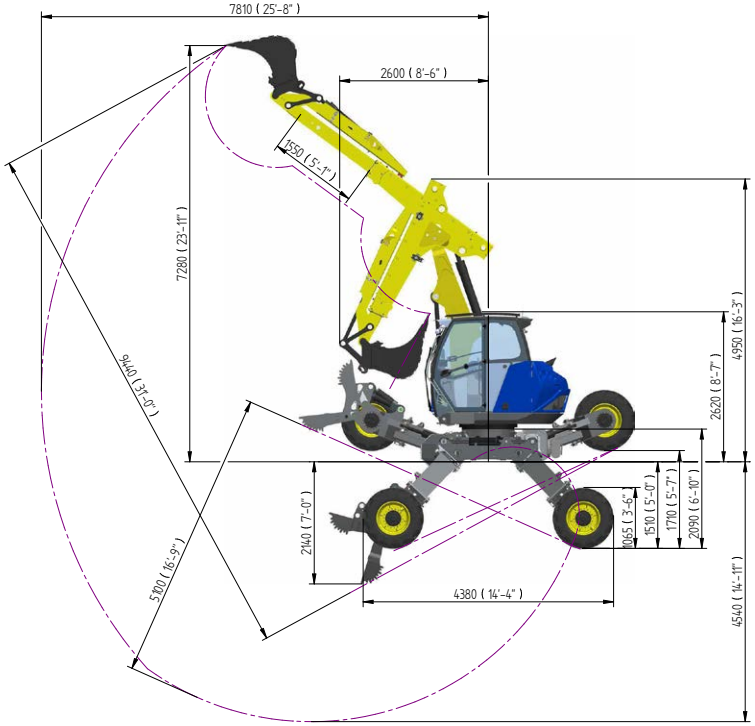

Working Ranges KAISER S8

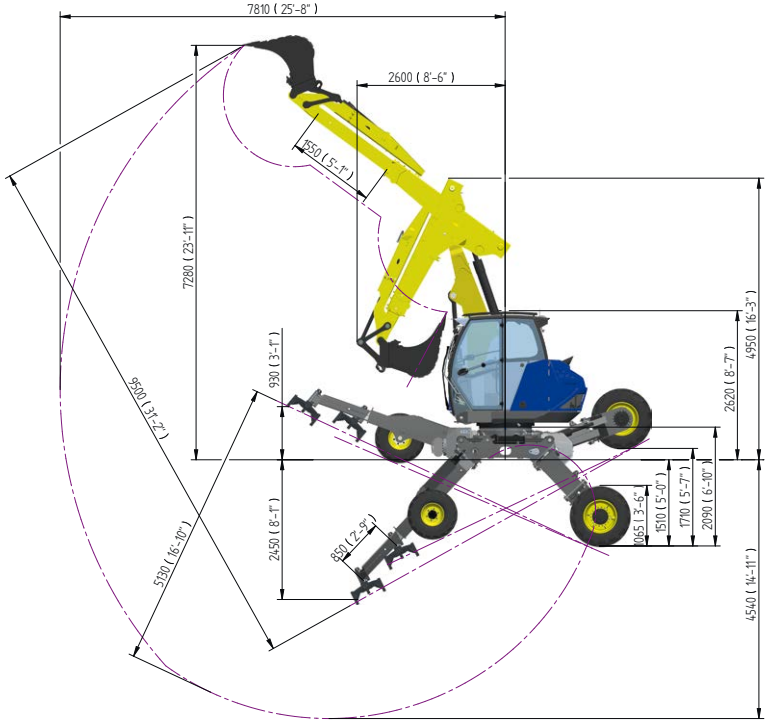

Undercarriage KAISER S8 Allroad

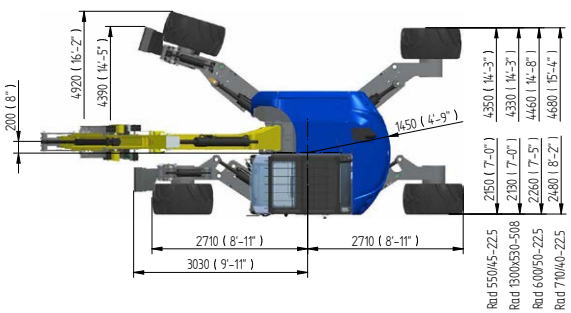

Undercarriage KAISER S8

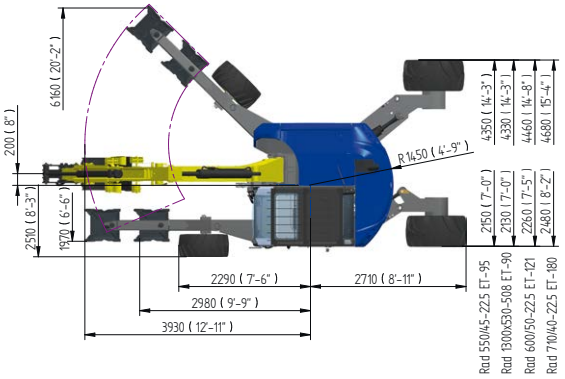

Turning radius KAISER S8 Allroad

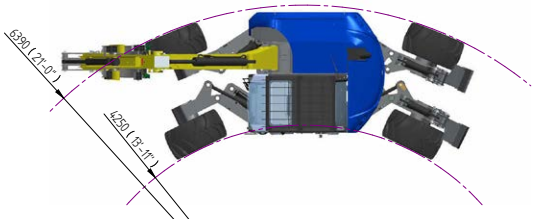

Turning radius KAISER S8

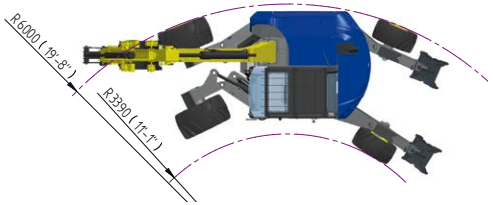

Experience the
S8 Allroad.
Watch the film now!

https://truckmanualshub.com/

TECHNICAL SPECIFICATIONS S8 ALLROAD / S8

Engine

Perkins 904J-E36TA	Emissions Max. power Torque	EU2016/1628 Stage V; US EPA Tier4 Final 100 kW / 136 hp @ 2000 rpm 550 Nm @ 1500 rpm
Perkins 904D-E44TA	Emissions Max. power Torque	EU97/68 Stage IIIA; US EPA Tier3 90 kW / 122 hp @ 2000 rpm 500 Nm @ 1500 rpm
Voltage	24 VDC	
Displacement	3620 ccm	
Service interval	500 operating hours	
Diesel tank capacity (fuel tank / reserve tank)	310 l (150 l / 160 l)	

Cab

Cab	ROPS ISO3471 / FOPS ISO3449 level 2 approved safety cab, upper windscreen assisted, integrated working light
Driver seat	Air-suspended comfort seat with lap belt GRAMMER air-suspended super comfort seat with headrest (option) Four-point safety belt (option)
Air-conditioning	Central operating element for heating and air-conditioning (option)
Control	Joysticks on control carriers at seat
Camera	Rear and side view camera

Performance data

Lifting capacity	3 m 4 m 6 m	7700 kg 5300 kg 3100 kg
Breakout force (ISO6015)	90 kN	
Ripping force (ISO6015)	67 kN	
Wading depth	2.15 m	
Travel speed	Two-speed, 0-13 km/h, dependent on model and tyre size	
Weight S8 S8 Allroad S8 Gator	 from 9,800 kg from 10,200 kg from 10,500 kg	

Hydraulics

Flow rate, working pump	max. 260 l/min	330 bar
Flow rate, drive pump	max. 156 l/min	400 bar
Flow rate, fan pump	max. 48 l/min	200 bar
Hydraulic system	Three-circuit LS / LUDV load-independent flow-sharing system, option of four-circuit system (ROTO*line*)	
Hydraulic system capacity	Approx. 250 l	
Pump control	Bosch Rexroth LUDV system with electronic power limiting controller, pressure cut-off	
Mode selection	Three individually adjustable performance modes and driver profiles for efficient and environmentally friendly working	
Speed setting	Stepless adjustment of setting over the entire speed range	
Filters	Return filter 10µm Fine filter 1µm	
Cooling system	3-circuit cooling system, coolers arranged one above the other with reversible fan drive for cleaning Stepless, hydraulically driven fan	
Cylinders	With joint bearings Lift and dipper cylinder with pipe fracture safety valve (ISO8643) Undercarriage cylinder with pilot-controlled check valves	
Circuit I	max. 150 l/min	120-330 bar
Circuit II	max. 40 l/min	
Circuit III (option)	max. 80 l/min	
ROTO*line* (option)	max. 165 l/min	100-350 bar
Quick coupler circuit		
Rope winch circuit (option)	max. 100 l/min	330 bar
Return		
Leakage oil line (option)		

Swing system

Drive	Torque control in open circuit, axial piston motor with reduction gear and integrated spring applied brake
Slewing speed	0 – 9 rpm, stepless
Slewing torque	46,000 Nm
Slewing ring	Module 8 with hardened surfaces
Brake	Negative holding brake

https://truckmanualshub.com/

Kaiser. Performance counts.

KAISER

Liechtenstein, Austria, Italy, Finland, Slovakia and the USA. What does it mean to have 6 international production plants and a network of over 100 sales and service partners worldwide?

Customer proximity and regional support!

THE RIGHT KAISER PRODUCT FOR YOUR APPLICATION

MOBILE WALKING EXCAVATOR

S10 and S12 stand for the latest generation of KAISER mobile walking excavators. They set benchmarks in performance and efficiency.

S12 Allroad

S10

The «power package» in the 10 t class.

S8

Proven toughness with the EU Stage IIIA engine generation.

S2

ROAD-RAIL EXCAVATOR

Perfectly matched to the application of the railway environment.

S22RR

VEHICLES FOR SEWER CLEANING AND INDUSTRIAL DISPOSAL

The international focus on modern environmental technologies has led to the growing importance of efficient, high-performance vehicles for sewer cleaning and industrial disposal. The KAISER Group is a leading player in the world market.

Recycling | **Sewer cleaning** | **Water treatment** | **Dry vacuumation** | **Hydrovac**

513092022 EN

Subject to change without notice. Technical specifications may change, depending on the chosen options and accessories. All photos and diagrams are for illustration only.

KAISER AG
Vorarlbergerstrasse 220
9486 Schaanwald, Liechtenstein
T +423 377 21 21
kaiserag@kaiser.li
www.kaiser.li

MORO KAISER S.R.L.
Via Pontebbana, 16
33080 Fiume Veneto (PN), Italy
T +39 0434 951 211
infomoro@morokaiser.it
www.morokaiser.it

KAISER PREMIER LLC
2550 E. Bijou Ave.
Fort Morgan, CO 80701, USA
T +1 970 542 1975
sales@kaiserpremier.com
www.kaiserpremier.com

OY EUR-MARK AB
Jakobstadsvägen 39
66900 Nykarleby, Finland
T +358 20 73 45 800
info@eurmark.fi
www.kaiser-eurmark.fi

KAISER Fahrzeugtechnik GmbH
Gewerbestraße 4
6710 Nenzing, Austria
T +43 5525 641 80
mail@kaiser-fahrzeugtechnik.at
www.kaiser-fahrzeugtechnik.at

KAISER Eastern Europe s.r.o.
Priemyselná 604/5
922 02 Krakovany, Slovakia
T +421 33 7353 500
kaiser@kaiser-ee.sk
www.kaiser-ee.sk