https://truckmanualshub.com/

UD TRUCKS

Condor PK 16 250

SPECIFICATIONS

GVM*	15,500 kg	Torque	716 Nm @ 1,400 rpm
GCM*	15,500 kg	Transmission	Allison 5 speed automatic
Power	180 kW @ 2500 rpm	Suspension	UD Trucks leaf or Hendrickson airbag

FEATURES

- ECE-R29 Cab Strength Compliant
- ADR84/00 (ECE-R93) integrated Front Underrun Protection (FUPS)
- WABCO ABS (Anti-lock Braking System)
- Allison Generation 5 automatic transmission
- Drivers SRS airbag and seat belt pretensioner
- Multi adjustable air suspended driver seat
- Cruise control
- Touch screen multimedia with SD, USB, CD, DVD, 3.5mm inputs
- ADR42 compliant sleeper cab and mattress
- Heated and electronically operated external mirrors

udtrucks.com.au

Note: PK 16 250 cab chassis shown – may not be representative of actual vehicle

https://truckmanualshub.com/

SAFETY

ECE-R29 Cab strength compliant
ADR84/00 (ECE-R93) integrated Front Underrun Protection (FUPS)
SRS drivers airbag with seat belt pretensioner
WABCO ABS (Anti-lock Braking System)
Easy Hill Start (EHS) - manual models only
Electrically operated and heated mirrors
360° visibility with up to 4 optional cameras

ENGINE

Make	UD Trucks
Model	GH7TA
Description	4 Cycle direct injected turbocharged and intercooled diesel engine. Single overhead camshaft with 4 valves per cylinder.
Cylinders	6 in-line
Total piston displacement	7,013 cc (7 litres)
Bore x stroke	110 mm x 123 mm
Compression ratio	17.5:1
Max. Power (ECE Net)	180 kW (245 ps) @ 2,500 rpm
Max. Power (JIS Gross est.)	187 kW (254 ps) @ 2,500 rpm
Max. Torque (ECE Net)	716 Nm (528 lb/ft) @ 1,400 rpm
Max. Torque (JIS Gross est.)	744 Nm (548 lb/ft) @ 1,400 rpm
Max. governed engine speed	2,600 rpm

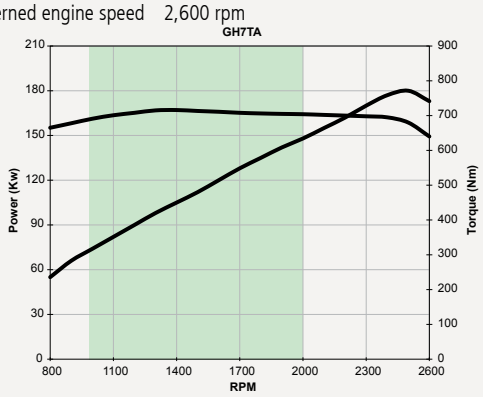

Lubrication system	Forced oil feed by gear pump, flat tube oil cooler, full flow and bi-pass oil filters with replaceable elements and 17 litre capacity
Compressed air system	Water cooled reciprocating type, single cylinder air compressor with air dryer
Cooling System	Forced feed by centrifugal water pump, wax pellet type thermostat with bypass. Aluminium corrugated fin type radiator with cab front bonnet mounted reserve tank and a 600 mm diameter 11 blade viscous coupling cooling fan

FUEL AND INTAKE SYSTEM

Injection type	Ultra high pressure common rail injection system
Filtration	Chassis mounted primary and engine mounted secondary
Capacity	200 litre steel tank with lockable cap on LHS chassis
Air filtration	Primary dry paper element air filter on RHS under cab
Air intake	High mounted RHS air intake

EXHAUST AND EMISSION CONTROL

Emission standard	ADR80/03 (Euro 5 emission standard)
Emission system	Selective Catalytic Reduction (SCR)
AdBlue® capacity	50 litre polymer tank with lockable cap mounted on LHS
Exhaust system	RHS chassis mounted muffler/catalytic converter with horizontal rear facing exhaust discharge

ELECTRICAL

Power	24 volt, negative ground system
Battery capacity	2 x 12 volt 120 Ah batteries mounted on LHS chassis
Alternator	110 amp with built in IC regulator

TORQUE CONVERTER

Make	Allison
Model	TC 221
Description	One stage, three element, polyphase. Includes standard integral damper with lock-up function
Stall torque ratio	1.73:1

TRANSMISSION

Make	Allison Generation 5
Model	LCT2500
Description	Five forward speeds and one reverse. Fully automatic adaptive shift with power and Eco modes
Shift type	T-bar shifter with shift lock and overdrive buttons, cable operation
Gear ratios	**1st** 3.51 **4th** 1.00 **2nd** 1.90 **5th** 0.74 **3rd** 1.44 **Rev** 5.09
PTO capability	Transmission type drive with LHS and RHS openings 339 Nm using one opening, or 542 Nm total using both openings
Electronic Brake Interface (EBI)	Transmission assisted engine braking effort when exhaust brake is activated

FRONT AXLE AND SUSPENSION SYSTEM

Axle make	UD Trucks
Description	Drop forged steel "I" section beam, "ELLIOT" type
Suspension	Long taper leaf spring with anchor at front and shackle at rear
Dimensions (mm)	80 mm x 1,400 mm
Number of leaves	3
Spring constant	343 N/mm (35.0 kg/mm)
Shock absorbers	2 telescopic double acting
Max. ground capacity	Refer to the **Load Capacity Summary**

REAR AXLE AND SUSPENSION SYSTEM

Axle make	UD Trucks
Type	Fully floating pressed steel banjo type housing with single drive
Gear type	Single reduction, hypoid gear
Final reduction ratio	5.143:1

LEAF SUSPENSION

Description	Semi-elliptic leaf spring and helper with anchor at front and shackle at rear
Dimensions (mm)	Main: 80 mm x 1,600 mm Helper: 80 mm x 1,100 mm
Number of Leaves	Main: 9 Helper: 8
Spring Constant (total)	1,102 N/mm (112.5 kg/mm)
Max. ground capacity	Refer to the **Load Capacity Summary**

AIR SUSPENSION

Description	Hendrickson HAS230 - Road Friendly compliant
Air spring diameter	320 mm
Number of springs	2 airbags
Spring constant	125 N/mm (12.8 kg/mm)
Shock absorbers	2 telescopic double acting
Road Friendly Certification Number (RFCN)	RF2022
Control System	WABCO ECAS (Electronic Controlled Air Suspension) with programmable remote control in cab
Max. ground capacity	Refer to the **Load Capacity Summary**

LOAD CAPACITY SUMMARY

	Front (kg)	**Rear (kg)**	
		HAS 230	**or Leaf**
Axle	6,500	11,500	11,500
Steering/suspension	6,500	10,000	9,500
Tyres	6,300	11,600	11,600
Max. ground capacity*	**6,300**	**10,000**	**9,500**

https://truckmanualshub.com/

BRAKES

Type	WABCO ABS (Anti-lock Braking System)		
Description	Full air brake, dual line system, with aluminium air tanks, automatic adjusting taper roller drum brakes with 4 channel ABS		
Air pressure	7.2 - 8.5 kg/cm²		
	Front	**Rear**	**Total**
Drum diameter	410 mm	410 mm	
Lining area	2,480 cm²	3,648 cm²	6,128 cm²
Park brakes	Hand operated pneumatically controlled spring park brake on drive axle		
Auxiliary brake	Butterfly type exhaust brake		

STEERING

Type	Recirculating ball and screw with hydraulic assist
Steering gear ratio	22.42:1
Column	Adjustable, tilt and telescopic control
Steering wheel	460 mm diameter with ignition key steering lock

WHEELS AND TYRES

Wheels		Pressed steel disc type 8.25" x 22.5" rim with 165 mm offset - ISO 10 stud pattern (335 mm PCD)
Front tyres		Single 275/70R 22.5" Dunlop SP160, regroovable
Rear tyres	*H WB only*	Dual 275/70R 22.5" Dunlop SP650, regroovable
	except H WB	Dual 275/70R 22.5" Dunlop SP160 regroovable
Spare tyre		Single 275/70R 22.5" Dunlop SP160, regroovable mounted on spare tyre carrier at rear of chassis

FRAME

Construction	Ladder, channel type double skin chassis construction		
Width	860 mm		
Side rail dimensions	250 mm x 80 mm x 8 mm + 234 mm x 72 mm x 3.2mm (except R & S wheelbase) 250 mm x 80 mm x 8 mm + 234 mm x 72 mm x 6 mm (R & S wheelbase only)		
Material	Pressed high tensile carbon steel		
Rail data	**Tensile**	**Yield**	**Modulus**
	55 kg/mm²	48 kg/mm²	Refer to Body Manual udtrucks.com.au

STANDARD DRIVER AIDS

Safety equipment	SRS driver steering wheel airbag SRS driver seat belt pretensioner ECE-R29 cab crash compliance ADR84/00 (ECE-R93) Front Underrun Protection System compliance (FUPS) ABS – Anti-lock Brake System
Instrumentation	Fully electronic, CAN-BUS instrument system including speedometer, tachometer (with economical green driving band), fuel, temperature, AdBlue® level and independent front and rear air circuit pressure gauges. Digital odometer display with dual trip function
Warning systems	Up to 22 visual warning lamps plus up to 38 different written warnings displayed on the LCD screen. In conjunction, 13 audible tones are used
Driver assistance	Driver Information System (DIS) displaying useful vehicle data including: date/time, engine temperature, oil pressure, voltmeter, trip information, along with service intervals for engine, transmission, differentials, belts and air filter. Electronic stalk mounted cruise control. GPS satellite navigation with NAVTEQ "truck" mapping

EXTERNAL CABIN

Description	Aerodynamically designed, forward control, pressed steel construction cab with 45° torsion bar cab tilt
Mounting type	Spring suspended cab with 2 dual acting shock absorbers
Crash test standard	ECE-R29 compliant
Cab paint	Standard – Jumping White (W33)
Doors	90° opening, steel construction with side intrusion beams
Inspection points	All daily inspections can be carried out without lifting the cab from the front opening inspection panel
Bumper type	2 piece pressed steel and fibre-glass air dam front bumper
Mirrors	Heated and electrically operated LH and RH main mirrors with wide vision spot mirrors and passenger side down facing spot mirror
Lamps	Halogen multi-reflector head lamps ADR49/00 bumper mounted fog lamps ADR49/00 roof mounted clearance lights
Glass	Tinted front, side and rear
Wipers	Double arm, 2 speed wipers with intermittent operation and integrated washers
Reversing system	Rear facing reverse light and audible warning alarm Optional - remote mounted camera with microphone (see Dealer Options list)

INTERNAL CABIN

Lighting	Single ON/OFF/DOOR interior lights with an independent 720 mm x 140 mm fluorescent lamp
Standard seat capacity	3 occupant seats - 2 outer seats with 3 point ELR seat belts, centre seat with adjustable lap belt
Driver seat	CVG multi-adjustable, air suspended with automatic height control and adjustable shock absorber
Passenger seat(s)	Flat folding LH assistant seat with lift-up base Flat folding centre seat with back of seat storage
Sleeping capability	ADR42/04 compliant sleeper bunk with mattress (full cab curtains)
Side windows	Power operated door glass
Security	Remote keyless central locking
Air conditioning	Adjustable temperature control with multi-speed fan
Audio system	6.1" Touch Screen, Digital Radio DAB+, Inbuilt 32G Hard Drive, 4 Camera inputs incl. option for IR night vision and multiple component inputs, SD, USB, CD, DVD, 3.5mm
Cub holders	2 centre mounted cup-holders RH and LH door mounted bottle-holders Additional 2 back of centre seat cup-holders
Storage	Driver and passenger overhead consoles (6 litres each) with lids 10 litre back of centre seat storage box with lid Driver and passenger door pockets
Power outlets	24 volt 240 W cigarette lighter / power outlet
Accessory fitment	Two DIN sized compartments for accessory fitment
Floor coverings	Vinyl

FACTORY OPTIONAL EQUIPMENT (indent order)

Suspension	Multi-leaf front springs 294 Nm/mm (29.9 kg/mm)
Fuel Capacity	200 litre LHS chassis mounted auxiliary tank with lockable cap (except H wheelbase)
Seating	Large centre console (replaces centre seat)
Engine/ PTO control	Electronic engine governor control with external control lever
Cab paint	20 x factory option colours Custom paint colours (up to 3 colours per cab)

DEALER FIT OPTIONAL EQUIPMENT

Rear engine PTO	343 Nm torque capacity @ 120% engine speed 343 Nm torque capacity @ 85% engine speed
PTO	Transmission
Fleet managment	GPS-based fleet management system
Cameras	Up to 4 cameras connected to the in-dash multimedia unit
Other	Refer to your UD Trucks Accessories brochure udtrucks.com.au

https://truckmanualshub.com/

TYPICAL APPLICATIONS

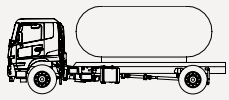
Skip/Tanker

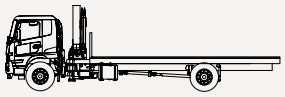
Tray body

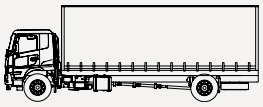
Pan / tautliner

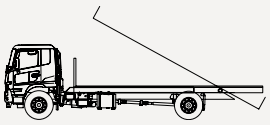
Tilt tray

GENERAL SPECIFICATIONS (Approximate)

		Mass (kg)						Vehicle Dimensions (mm)													
Variant		Wheelbase code	GVM*	GCM*	FA[1]	RA[1]	Total Tare[1]	WB	OL	OW	OH[2]	FT	RT	ROH	CA	GC[2]	FHF[2]	FHR[2]	FHR[2] (Lowered height)	Turning radius (kerb to kerb)	UD order code
UD - Leaf	Automatic	H	15,500	15,500	3,000	2,025	5,025	4,500	7,625	2,472	2,690	1,934	1,810	1,850	3,613	222	921	1,014	N/A	8,000	PK16250HAL
		N			3,080	2,105	5,185	5,550	9,425					2,600	4,663					9,600	PK16250NAL
		R			3,105	2,125	5,230	6,050	10,125					2,800	5,163					10,400	PK16250RAL
		S			3,190	2,180	5,370	6,450	10,625					2,900	5,563					11,100	PK16250SAL
HAS230 – air	Automatic	R	15,500	15,500	3,080	2,025	5,105	6,050	10,125	2,472	2,690	1,934	1,860	2,800	5,163	222	921	940	895	10,400	PK16250RAA
		S			3,155	2,140	5,295	6,450	10,625					2,900	5,563					11,100	PK16250SAA

[1] Mass is an estimation only based on standard model, includes fluids (not diesel fuel or AdBlue®), STC and spare, excludes tools and driver.
[2] Based on vehicle with standard 275/70R 22.5" front and rear tyres.

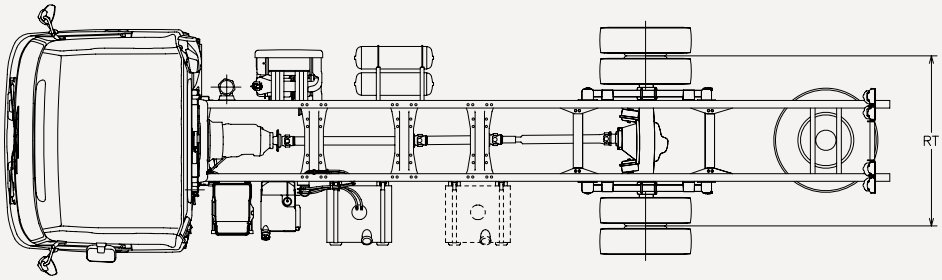

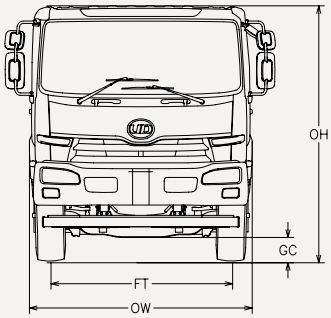

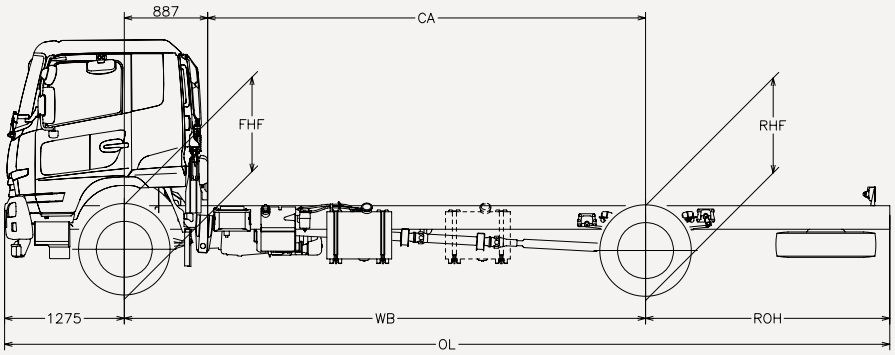

Note: PK 16 250 photo and drawing shown, may not be representative of actual truck

PERFORMANCE (Calculated)

	5 speed Allison automatic with 5.143 diff ratio and 275/70R 22.5" tyres
Max road speed	100 km/h (ADR65/00 - speed limited)
Gradeability 1st gear	29.1% @ 15,500 kg
Gradeability top gear	2.4% @ 15,500 kg
Est rpm @ 100 km/h	2,188 rpm

WARRANTY

Standard warranty+	36 months/200,000 kms	+ For details refer to your UD Trucks New Vehicle Warranty brochure Pub No. AUS000273
Cab corrosion warranty+	36 months/unlimited kms	++Covers selected items only. For details refer to your UD Trucks Extended Protection Plan
Extended warranty++	36 months/350,000 kms	brochure Pub No. AUS000472

NOTES: *Rated GVM/GCM for on highway applications ONLY. Other applications requires UD Trucks engineering approval. See your UD Trucks dealer.
*Rated GVM and axle capacities are subject to Federal, State and Territory legal requirements.

udtrucks.com.au

DISCLAIMER: Imported and distributed by Volvo Group Australia Pty Ltd (ABN: 27 000 761 259). Photos for illustration purposes. Volvo Group Australia Pty Ltd reserves the right to modify design and change equipment without previous notification. Please consult with your UD Trucks Dealer for the latest information about vehicle specifications.

ISSUE DATE
OCTOBER 2014