https://truckmanualshub.com/

UniCarriers Europe AB
SE-435 82 Mölnlycke
Sweden
Phone +46 (0)31 98 40 00
info@unicarriers.com
www.unicarriers.com
P/N: 159147, Rev. A

Subsidiary/Dealer

Instruction handbook

GB

PLL • PLE • PSD • PSL • PS • PSH • PLP • TS

https://truckmanualshub.com/

The content of this manual is protected by copyright law and may not be copied, fully or in part, without written permission.

The material has undergone careful examination with regard to correctness. We reserve the right to make changes.

© Copyright UniCarriers Europe AB, 2015

https://truckmanualshub.com/

TABLE OF CONTENTS

01 INTRODUCTION **6**
Instruction Handbook 6

02 TRUCK MODIFICATION **7**
Truck modification 7

03 ENVIRONMENTAL CONSIDERATIONS **8**
We respect the environment 8

04 THE SUPERVISOR **9**
Foreman's responsibility 9

05 TRUCK DRIVER **10**
Authorization to drive a truck 10
Driver requirements 10
Inspection of the truck 10

06 MACHINE PLATES **11**
Explanation of machine plates 11
Location of machine plates 13

07 DESCRIPTION OF THE TRUCK **14**
Powered trucks PLL, PLE, PSL, PSD, PS, PSH 14
PLL, PLE, PSL, PSD, PS, PSH driver environment 15
PLP pedestrian truck 16
PLP driver environment 16
TS pedestrian truck 17
TS driver environment 18
Trucks equipped with folding platform 20
Options 21

08 BATTERY **22**
Specifications 22
Battery changing 22
Maintaining and changing the battery 25
Battery servicing 27

09 TRUCK COMPUTER (ATC) **28**
Introduction 28
General 28
Symbols and characters on the display 28

https://truckmanualshub.com/

Display of battery status 29
Error messages 29
Change language 29
Warnings 30
Menus 31
Navigation in menus 31

10 DRIVING INSTRUCTIONS 33
Driving instructions PLL, PLE, PSL, PSD, PS, PSH, PLP 33
Driving instructions TS 36

11 GENERAL LOADING AND UNLOADING INFORMATION 38
Responsibility for the load 38
Responsibility for others 38
Maximal load 38
Picking up a load 38
2-pallet handling 38

12 GENERAL INFORMATION CONCERNING STACKING 39
Stacking 39

13 MAINTENANCE OF THE TRUCK 40
Daily maintenance (before each shift) 40
Daily Service (after each shift) 40
Weekly inspection 41
Preventive maintenance 41

14 SERVICING AND MAINTENANCE 42
Service technician 42
Safety instructions for maintenance 42
Maintenance intervals 42
Maintenance instructions 55

15 SAFETY REGULATIONS 60
The authority and obligations of the truck driver 60
Getting in and out 60
Driving the truck 60
Transportation security 64

https://truckmanualshub.com/

Lifting the forks 65
Normal operating conditions 65
Exceptional operating conditions 65
Work in hazardous environments 65
Parking 65
When lifting the truck 66
Assembling and putting into service 68
Temporarily taking the truck out of service 68
Taking the truck out of service 69
Swinging loads 69
Installing the fire extinguisher 69
In the event of accidents 70
Noise/Sound levels 70
Vibrations 70
Climatic conditions 70
Work platforms 70
Overhead guard 70
Protective shoes 70
Lighting 70
Additional units/Trailers 70
Safety and warning signs 71

16 DIMENSIONS 75
Dimensions PL*/PS* 75
Dimensions PS, PSH 77
Dimensions PLP 79
Dimensions TS 80

17 WEIGHT 82
Weight PLL, PLE, PSL, PSD, PS, PSH 82
Weight PS, PSH 82
Weight PLP 82
Weight TS 82

18 ORDERING HANDBOOKS AND MANUALS 84
Ordering a Spare Parts Manual 84

https://truckmanualshub.com/

Instruction Handbook

This Instruction Handbook contains information that you, as user of the truck, must be aware of in order to avoid/minimise the risk of injury/damage to yourself or the truck. You are also responsible to the company management, other people and objects in your environment. You should therefore carefully read all the way through this handbook before starting the truck for the first time.

The Instruction manual describes a truck with standard equipment, customer modifications may have been fitted.

It is not obvious that the options that are described in the Instruction Handbook are suitable for all truck models. Contact your truck supplier for information.

Our products are constantly being developed and renewed, we therefore reserve the right to make alterations without prior notice.

We have been manufacturing trucks since 1958. Quality, operational safety and innovation have made us a leading worldwide truck supplier.

Thank you for choosing us as your truck supplier.

Service

As the owner of one of our products, you are also welcome to contact our service department.

We offer support and advice for any problems that may arise and assistance with servicing and ordering of replacement parts. Refer to the nearest authorised sales agent or service workshop for assistance.

Genuine Parts

The reliability that we promise is contingent upon using our original spare parts. Only our genuine replacement parts guarantee correct operation, long life and the right to a warranty.

Our truck driving courses

The importance of goods handling to companies and society in general increases every year. At the same time, trucks are being equipped with ever more advanced technical solutions. It is therefore important that the operator, who has a key role to play in goods handling, is given the correct conditions to operate as safely and efficiently as possible. Statistics show that the number of incidents decreases significantly when a truck operator has been properly trained. To receive information on current training offers, please contact your local authorised representative, preferably, or, if necessary, another authorised dealer.

Declaration of conformity

UniCarriers Europe AB, SE-435 82 Mölnlycke, Sweden, guarantees under its own liability that the product delivered meets relevant safety requirements in Directives 2006/42/EC and 2004/108/EC. Risk analysis is based on ISO 3691 and EN 1726. The *Declaration of conformity* certificate accompanies every machine, and it is important that it remains with the truck.

https://truckmanualshub.com/

Truck modification

NOTE!
Unauthorized truck modification is not permitted.

No modifications or changes to powered industrial trucks that can affect areas such as capacity, stability or safety requirements for the truck may be made without advance written authorisation from the manufacturer, its authorised representatives or a successor to these. Contact your local authorised dealer before any modification or change is made to your industrial truck that may affect, for example, braking, steering, visibility and connection of separate load aggregates. Once permission has been granted by the manufacturer, authorised representative thereof or successor to these, the plate indicating the truck's capacity, decals, labels and operating and instruction handbooks must also be changed accordingly.

Only in the event that the manufacturer is no longer in business and there is no successor to the company's stakeholders may the user implement a modification or alteration to a powered industrial truck. This applies on the condition that the user:

- arranges for the modification or alteration to be designed, tested and implemented by one or more engineers who are experts in industrial trucks and their safety
- maintains a permanent record of the design, test(s) and implementation of the modification or alteration
- approves and makes appropriate changes to the capacity plate(s), decals, tags and Instruction Handbook
- affixes a permanent and readily visible label to the truck stating the manner in which the truck has been modified or altered, together with the date of the modification or alteration, and the name and address of the organization which performed the task.

https://truckmanualshub.com/

We respect the environment

The majority of our products consist of steel, and can be completely recycled.

Environmental impact

All products have an impact on the environment throughout their entire life cycle.

The consumption of energy when in use is one of the most important factors that influences the environment.

Through correct care, maintenance and use the consumption of energy can be reduced, thereby reducing the environmental impact.

Waste

Waste material in conjunction with repairs, maintenance, cleaning, or scrapping, must be collected and disposed of in an environment-friendly way and in accordance with the directives of respective countries.

Such work should only be carried out in areas intended for this purpose.

Recyclable material should be taken care of by specialised authorities.

Environmentally hazardous waste, such as oil filters, hydraulic oil, batteries and electronic equipment, can, if handled incorrectly, have a negative effect on the environment and human health.

https://truckmanualshub.com/

Foreman’s responsibility

1. It is the responsibility of the supervisor, on behalf of the company management, to ensure that the truck is driven and used correctly.
2. The supervisor is responsible for compliance with the requirements placed on the driver, refer to *Driver requirements* page 10.
3. It is the duty of the supervisor to instruct and to ensure that driver instructions are followed.
4. The supervisor must supply, and the truck operator must sign for, the following relevant instruction handbooks.

The supervisor must also read and be familiar with the appropriate instruction handbooks.

The fork lift truck must be insured with at least third party insurance if this is a national authority requirement.

Maintenance personnel

NOTE!
Daily inspection and certain servicing shall be carried out by the operator once he or she has received sufficient training in the truck's construction and care. Ongoing routine servicing should be performed by an authorised service organisation. In order to maintain effective and adequate servicing for the truck, contact an authorised dealer, who can offer a service agreement for routine inspection.

Conditions of use

The truck may be driven under the following conditions:

- indoors
- on a flat, hard and smooth surface
- with the maximum floor loading checked and not exceeded
- normal operating temperature, refer to *Climatic conditions* page 70
- good visibility, adequate lighting and approved routes.
- driving with the load lowered

WARNING!
A truck operating in an area where there is a risk of fire or explosion, or in any other high-risk area, must be specially equipped for the purpose. The truck is normally not equipped for these environments.

https://truckmanualshub.com/

Authorization to drive a truck

The employer must ensure that the employee has the required training and knows what must be observed in order to avoid risks while working. The employer must take into consideration an employee's suitability for the work in question. It is therefore necessary that a person engaged as a driver completes the appropriate truck driver training, both theoretical and practical, that corresponds to the work assignments the driver is expected to undertake after training. Further training may be required in the event of major changes in work assignments. The employer should give the employee written authorization to drive the truck - as well as a written outline of the extent of his/her duties.

Driver requirements

The truck driver shall have the mental and physical capacity required for the job. The driver shall also be aware of everything that is relevant to the handling and manoeuvring of the truck, traffic regulations and any other relevant instructions. The driver shall have the permission of the supervisor to drive the type of truck in question and be specially trained for the work and the traffic conditions involved.

The responsibilities of the driver in specific markets

The following apply in respect of the driver's responsibilities concerning the use of fork lift trucks:

- Australia: Users shall follow the requirements of AS 2359.2.
- North America: Users shall follow the requirements of the applicable part of ANSI/ITSDF B56.

Inspection of the truck

- The driver of the truck is responsible to the supervisor, for ensuring that the truck is kept in good working order.
- Daily maintenance shall be carried out carefully before the start of each shift. See section *Maintenance of the truck* page 40.
- Any faults must be reported to the supervisor immediately.
- The truck must be kept clean and maintained so that it is always in good working order. It must be checked at regular intervals in accordance with the service instructions.
- Check that no safety equipment has been modified or put out of service.

For optimum performance and so as not to invalidate the warranty, use only genuine replacement parts!

https://truckmanualshub.com/

Explanation of machine plates

European machine plates

The Machine plate contains important information. Read it carefully! The permitted load shall not be exceeded. The stated load limit assumes that the load is evenly distributed on the forks.

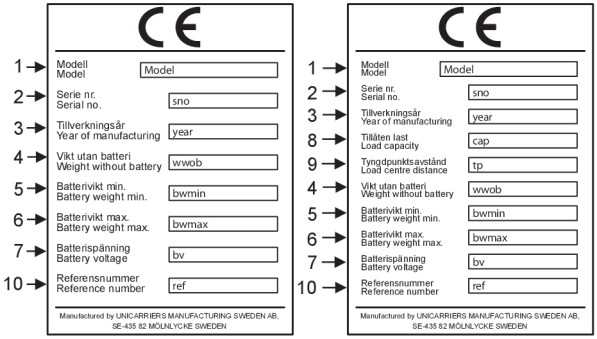

Figure 1. Machine plates

1. Model designation
2. Type Serial No./Version (S=Special version)
3. Year of manufacture
4. Weight without battery
5. Minimum battery weight
6. Maximum battery weight
7. Battery voltage
8. Permitted load
9. Distance to centre of gravity
10. Reference number (year and nonth of manufacture)

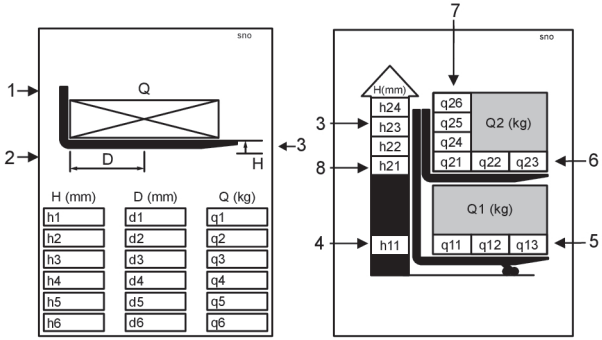

Figure 2. Load limit plates

1. Actual capacity, Q
2. Load centre distance, D
3. Lift height for fork lift, H
4. Lift height for straddle lift
5. Load limit for straddle lift, Q1
6. Load limit for fork lift with load on straddle lift, Q2
7. Load limit for fork lift without load on straddle lift
8. Maximum lifting height for fork lift with load on straddle legs

WARNING!
For the truck to fulfil stability requirements, the instructions on the load limit plate must be respected.

https://truckmanualshub.com/

USA machine plates

The machine plate contains important information. Read it carefully! Permitted loads may not be exceeded. The stated load limit assumes that the load is evenly distributed over the forks.

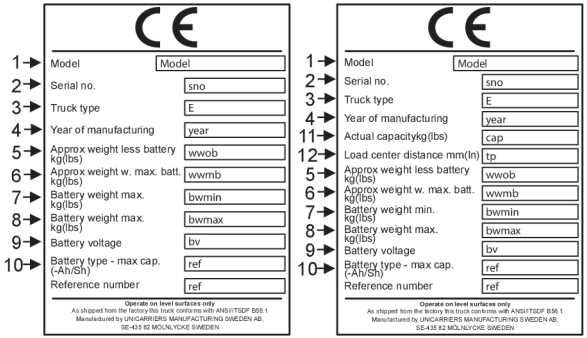

Figure 3. Machine plates

1. Model designation
2. Type Serial No./Version (S=Special version)
3. Truck Type
4. Year of manufacture, week and guarantee limit in months
5. Weight without battery
6. Weight with battery
7. Minimum battery weight
8. Maximum battery weight
9. Battery voltage
10. Battery type maximum capacity
11. Actual capacity, Q
12. Load centre distance, D

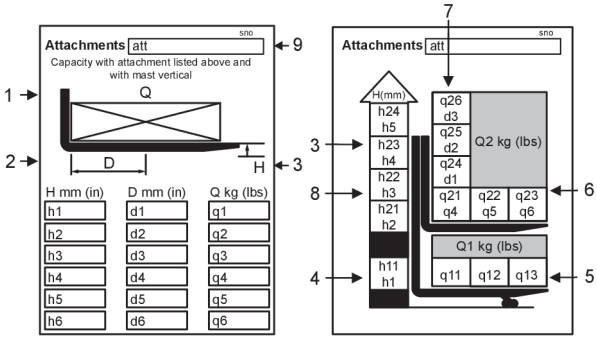

Figure 4. Load limit plates

1. Actual capacity, Q
2. Load centre distance, D
3. Lift height for fork lift, H
4. Lift height for straddle lift
5. Load limit for straddle lift, Q1
6. Load limit for fork lift with load on straddle lift, Q2
7. Load limit for fork lift without load on straddle lift
8. Maximum lifting height for fork lift with load on straddle legs
9. Serial number of the attachment

WARNING!
To ensure the machine meets the stability requirements always ensure the the lift capacity shown on the machine plate is observed.

https://truckmanualshub.com/

Location of machine plates

Location of machine plates

PSD, PSL

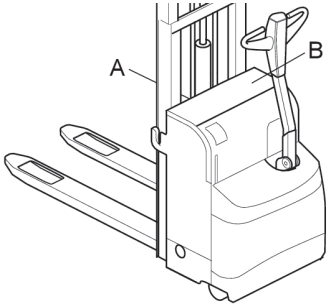

PS, PSH

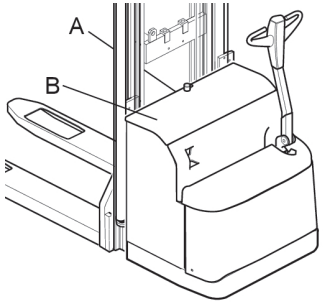

TS

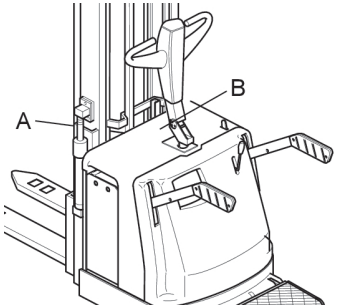

PLE

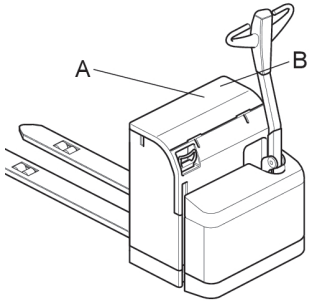

PLP

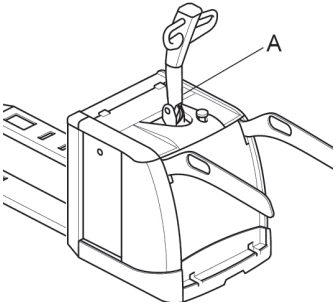

A. Machine plate

B. Load limit plate

https://truckmanualshub.com/

Powered trucks PLL, PLE, PSL, PSD, PS, PSH

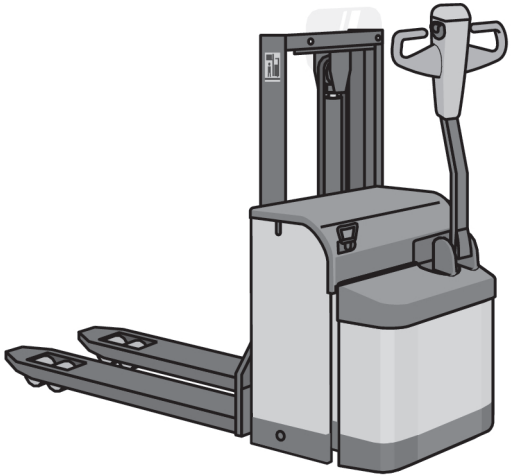

PL* is an electric truck for walking operators, specially adapted for low level transportation, picking and handling at loading bays. The truck can be equipped with a low mast for ergonomic picking height or long forks for the transport of several load carrier types. Usual loads are pallets or roller containers. The trucks are intended for use indoors on hard level surfaces.

PS* is an electric truck for walking operators, specially adapted for stacking, short to medium distance internal transportation, order picking and handling at loading bays. Certain trucks are equipped with straddle lift for the transport of double load carriers. Usual loads are pallets or roller containers.

https://truckmanualshub.com/

PLL, PLE, PSL, PSD, PS, PSH driver environment

Functions

Controls PLL, PLE, PSL, PSD, PS

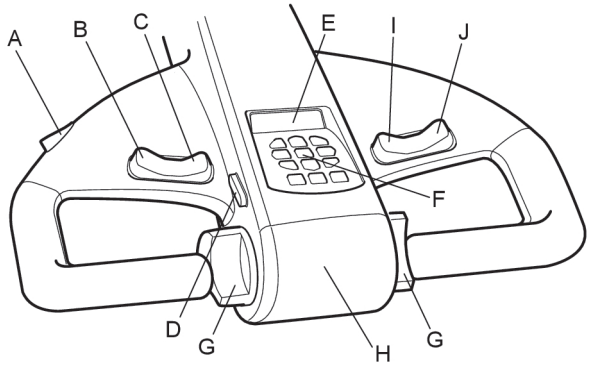

A. “Tiller up drive” driving at slow speed with the tiller in its end position (option)
B. Lower
C. Lift
D. Horn
E. Display
F. Keyboard (the keys may be hidden by a cover)
G. Speed Controller
H. Belly safety switch
I. Lift vertically adjustable straddle leg (option) (PSD, PLE)
J. Lower vertically adjustable straddle leg (option) (PSD, PLE)

Controls PSH

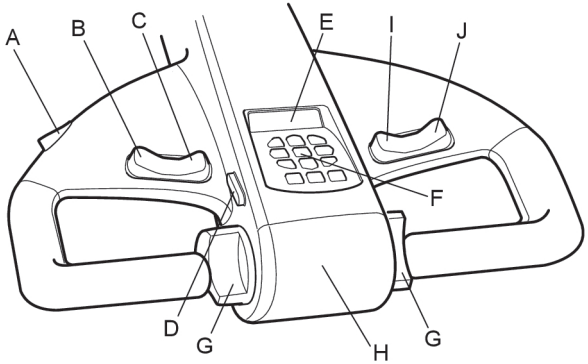

A. “Tiller up drive” driving at slow speed with the tiller in its end position (option)
B. Lower vertically adjustable straddle leg (option) (PSH)
C. Lift vertically adjustable straddle leg (option) (PSH)
D. Horn
E. Display
F. Keyboard (the keys may be hidden by a cover)
G. Speed Controller
H. Belly safety switch
I. Lift
J. Lower

Safety functions

The truck is equipped with a number of safety functions to minimise the risk of accidents.

https://truckmanualshub.com/

- Automatic reversing if the driver becomes trapped between the tiller arm and an obstacle (belly safety switch).
- Automatic stop when a fault occurs in the electrical system.

PLP pedestrian truck

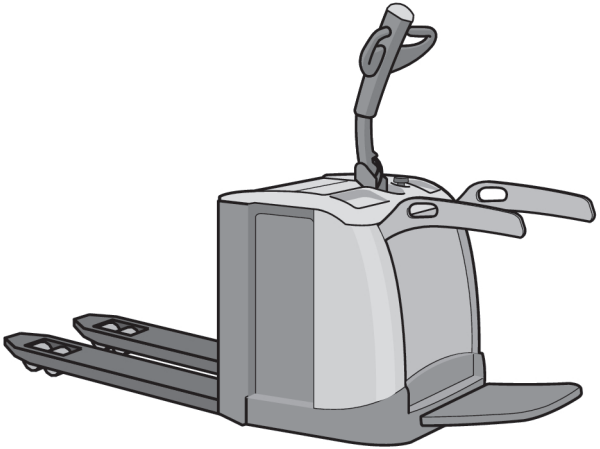

The PLP Presto is an electric low lifter for ride-on drivers, specially adapted for transportation and handling at loading bays. The truck can be equipped with a mast for stacking and the transport of double load carriers, or with long forks for the transport of several load carriers. Usual loads are pallets or roller containers.

PLP driver environment

Functions

Controls

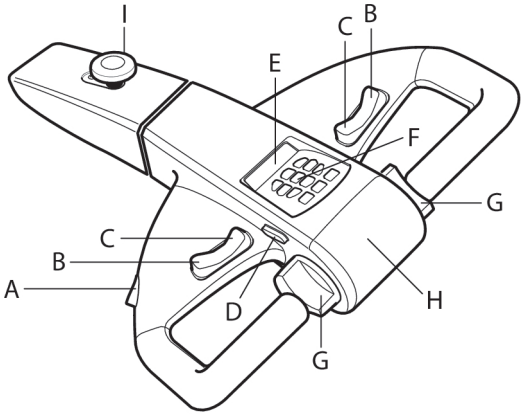

A. “Tiller up drive” driving at slow speed with the lever in its end position (option)
B. Lower
C. Lift
D. Horn
E. Display
F. Keyboard
G. Speed Controller
H. Belly safety switch
I. Forwards/backwards adjustment (option)

https://truckmanualshub.com/

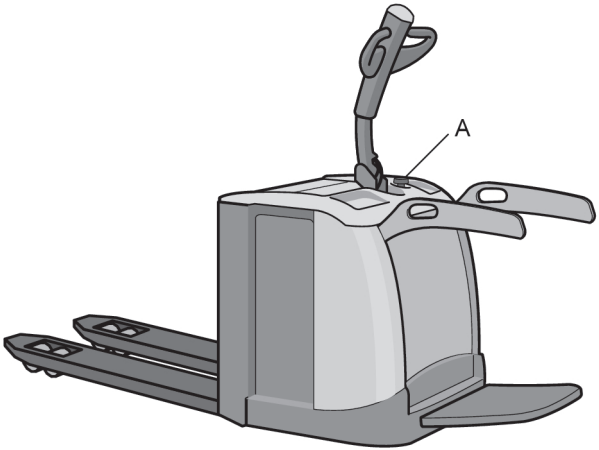

A. Emergency stop

Safety functions

The truck is equipped with a number of safety functions to minimise the risk of accidents.

- Driving is prevented if the platform is down and there is no operator standing on it.
- In the case of a fixed platform (option), lifting and lowering of the forks are also prevented if there is no operator standing on the platform.
- Automatic reversing if the driver becomes trapped between the tiller arm and an obstacle (belly safety switch).
- Automatic stop when a fault occurs in the electrical system.

TS pedestrian truck

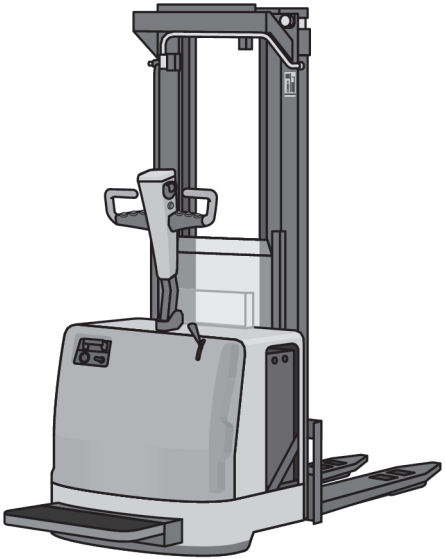

The TS is a versatile electric pedestrian stacker for a walking, or, if the truck is equipped with a fold-up platform, a ride-on operator. The truck is designed for stacking, internal

https://truckmanualshub.com/

transportation, and order picking. Certain trucks are equipped with straddle lift for the transport of double load carriers, ordinary pallets or handling at loading bays.

TS driver environment

Functions

Common controls

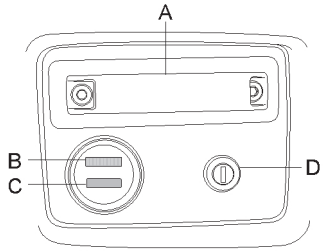

A. Battery plug (emergency stop)
B. Battery indicator
C. Hour meter
D. Key switch

Controls for manual operation of lifting/lowering forks

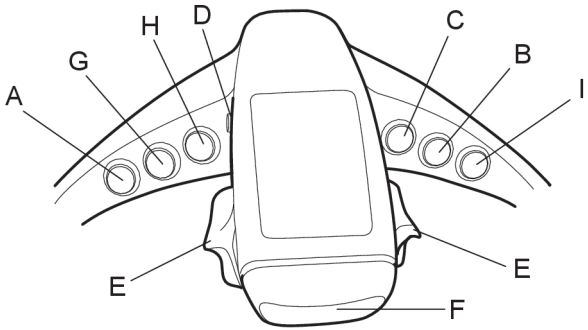

A. Not used
B. Not used
C. Not used
D. Horn
E. Speed Controller
F. Belly safety switch
G. Lowering of the adjustable height straddle legs (option), otherwise not used
H. Lifting of the adjustable height straddle legs (option), otherwise not used
I. Not used

https://truckmanualshub.com/

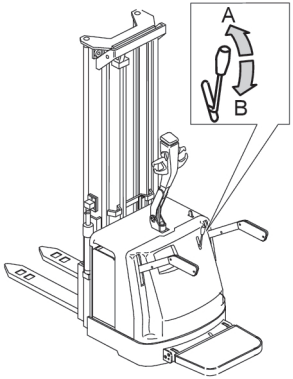

A. Lower forks

B. Lift forks

Controls for proportional operation of lifting/lowering forks (option)

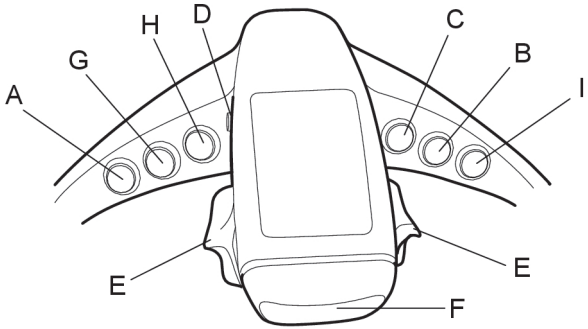

A. Not used
B. Lower
C. Lift
D. Horn
E. Speed Controller
F. Belly safety switch
G. Lowering of the adjustable height straddle legs (option), otherwise the same function as button B
H. Lifting of the adjustable height straddle legs (option), otherwise the same function as button C
I. Not used

Safety functions

The truck is equipped with a number of safety functions to minimise the risk of accidents.

https://truckmanualshub.com/

- Driving is prevented if the platform is down and there is no operator standing on it.
- Automatic reversing if the driver becomes trapped between the tiller arm and an obstacle (belly safety switch).
- Lift stop at 1.8 m forks height and folded up gates. To continue lifting, the gates must be folded down.
- Automatic stop when a fault occurs in the electrical system.

Trucks equipped with folding platform

If the machine is to be used as a pedestrian truck, the platform must be folded up manually.

A number of safety functions have been built into the truck to avoid accidents:

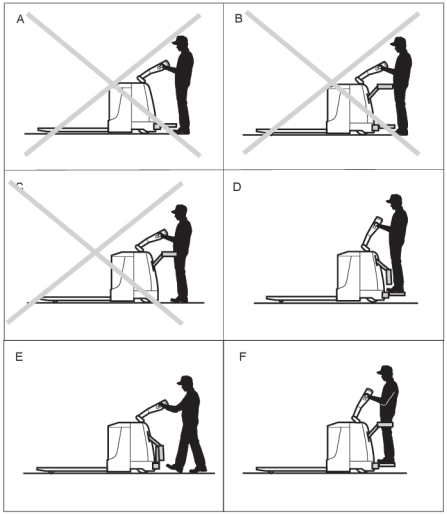

A. Platform folded down without operator standing on it: The truck cannot be driven.
B. Platform folded down and gates up without operator standing on it: The truck cannot be driven.
C. Platform folded up and gates up: The truck cannot be driven.
D. Platform folded down with operator standing on it and gates down: The truck can be driven at reduced speed.
E. Platform folded up and gates down: The truck can be driven at reduced speed.
F. Platform folded down with operator standing on it and gates up: The truck can be driven at normal speed.

https://truckmanualshub.com/

Options

Additional equipment

The truck may be equipped with additional equipment. Among other things, there are the following possibilities:

Table 1. PLL, PLE, PS, PSL, PSD, PSH

Additional equipment	PLL	PLE	PS	PSL	PSD	PSH
Writing desk						
Earthing strap	x	x	x	x	x	
Rubber foot protection				x	x	
Stretch film holder			x			
Pen holder			x			
AC/12 V DC converter			x			
Fire extinguisher			x			

Table 2. PLP, TS

Additional equipment	PLP	TS
Writing desk		x
Earthing strap		
Rubber foot protection		
Stretch film holder		
Pen holder		
AC/12 V DC converter		
Fire extinguisher		

https://truckmanualshub.com/

Specifications

Specifications PLL, PSD, PSL, PLE, PS, PSH

Table 3. Battery as standard

Truck model	Battery voltage and capacity (V/Ah)	Capacity (kWh)	Weight min/max (kg)
PLL	24/160-230	3,8-5,5	140/215
PLE	24/150	3,6	140/190
PSD/PSL/PS	24/160-230	3,8-5,5	140/215
PSH	24/240	5,8	240/300
PSH	24/345	6,5	330/360

Specifications PLP

Table 4. Battery as standard

Truck model	Battery voltage and capacity (V/Ah)	Capacity (kWh)	Weight min/max (kg)
PLP 200	24/220-400	5,3-9,6	250/370
PLP 250	24/330-600	7,9-14,4	350/500

Specifications TS

Table 5. Battery as standard

Truck model	Battery voltage and capacity (V/Ah)	Capacity (kWh)	Weight min/max (kg)
TS	24/240	5,8	215/290
TS	24/270	6,5	250/290

Battery changing

Battery servicing may only be performed by specially trained personnel. The battery may, however, be charged by other personnel on the condition that a battery connector is used to connect the battery to the charging unit. The battery is charged in accordance with recommendations from the battery manufacturer, using a charger adapted for the battery. The truck is intended to be used with lead/acid batteries. Only fully automatic charging systems should be used.

Follow local laws and safety regulations when charging the battery. The area where batteries are charged should be marked out and have proper ventilation. An eyewash station, cleaning equipment, fire extinguisher and safety glasses must be available.

WARNING!
Specific gravity checks should only be performed by an authorised service technician.

https://truckmanualshub.com/

WARNING!
Always use safety glasses. Acid can cause serious corrosive injuries.

WARNING!
Explosive gas is generated during charging!
Smoking or a naked flame can cause an explosion!

WARNING!
Remove all rings, bracelets, necklaces and similar items before handling batteries.

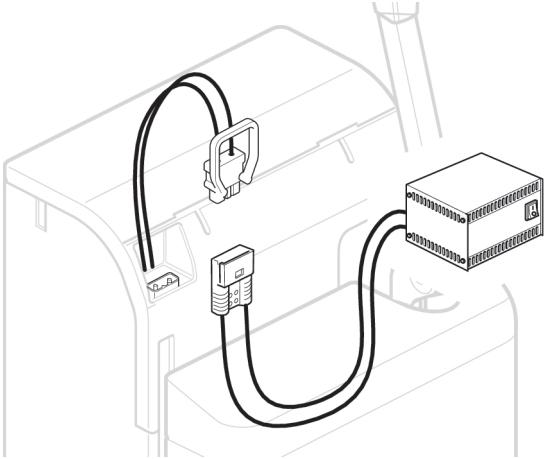

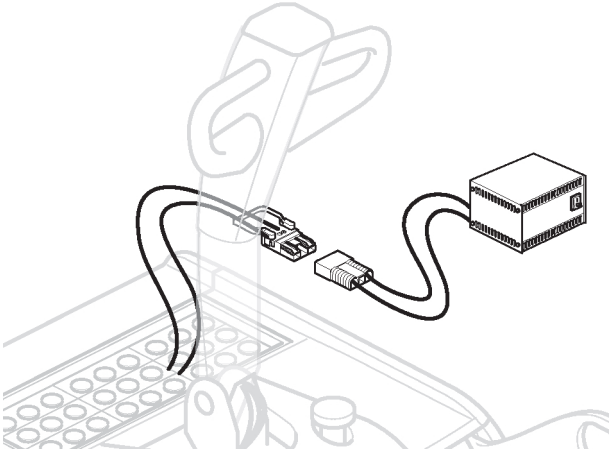

https://truckmanualshub.com/

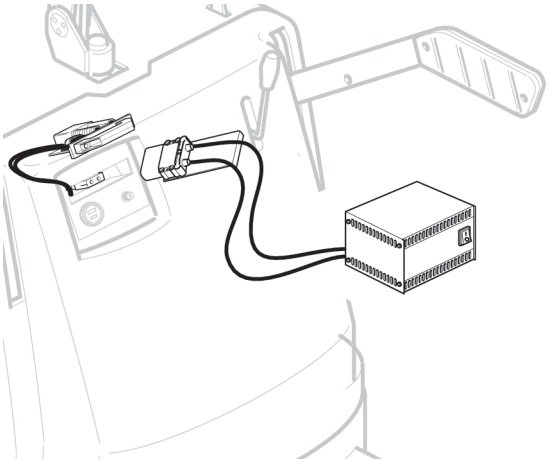

Before charging

1. Switch off the truck.
2. Remove any battery covers, to gain access to the battery plug and to permit the heat generated during charging to be ventilated away.
3. Remove the battery connector from the truck using the battery charger handle. This procedure will vary depending on truck model.

> **CAUTION!**
> Do not pull out the battery plug by pulling on its cables.

4. Check that the battery electrolyte level is not above or below the cell plates.

   The battery can be damaged if the cell plates become dry during charging. There is a risk that the acid will spill over during charging if the acid level is too high.
5. Connect the battery plug to the charger's connector.
6. Set the charging switch on the battery charger to on.
7. Check that the ammeter shows a normal indication.

After charging

1. Check that charging is completed.
2. Set the charging switch to off.
3. Disconnect the battery charger connector.
4. Top up to the correct level with distilled water.
5. Dry off the battery to prevent leakage current and self discharging.
6. Connect the battery plug.
7. If there is a battery cover, close it.

Charging with a built-in charger (option)

1. Switch off the truck.
2. Open the battery cover and pick up the mains power connector.
3. Check that there is no visible damage to the cable or connector.

https://truckmanualshub.com/

4. Plug the connector into a mains power outlet. Charging will start.

> **NOTE!**
> For safety reasons the truck cannot be driven while the mains power connector is connected to an outlet.

When the battery is fully charged the LED lights green.

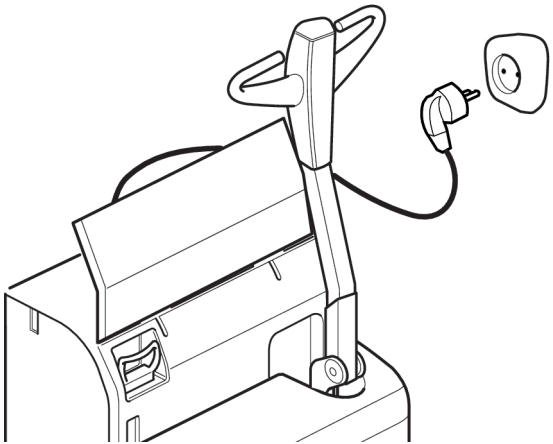

5. Pull the connector out of the mains power outlet.
6. Dry off the battery to prevent leakage current and self discharging.
7. Return the mains power connected to the truck and closes the battery cover.

Maintaining and changing the battery

Maintaining and changing the battery PL*/PS*, PS

1) Pull out the battery plug.
2) Open the battery cover.

> **WARNING!**
> There is a risk of crushing injury. Do not insert a hand between the battery cover and the chassis.

3) Attach the lifting device in the lifting eyes.
4) Lift the battery and set it to one side.

> **WARNING!**
> Observe care to avoid splashing waste acid or oxide from the battery.

5) Perform a battery inspection in accordance with *Maintenance of the truck* page 40.
6) Lift the battery in.
7) Carefully close the battery cover.

> **WARNING!**
> There is a risk of crushing injury. Do not insert a hand between the battery cover and the chassis.

https://truckmanualshub.com/

8) Connect the battery plug.

9) Check the battery voltage on the battery indicator.

Maintaining and changing the battery PSH

1)

NOTE!
A battery carriage must be used when changing battery.

Pull out the battery plug.

2) Open the battery cover.

3) Open the battery door using the battery key.

4) Roll out the battery on the battery carriage.

WARNING!
Observe care to avoid splashing waste acid or oxide from the battery.

5) Perform a battery inspection in accordance with *Maintenance of the truck* page 40.

6) Roll the battery back.

7) Close the battery cover.

8) Connect the battery plug.

9) Check the battery voltage on the battery indicator.

Maintaining and changing the battery PLP

1)

NOTE!
A battery carriage must be used when changing battery.

Pull out the battery plug.

2) Release the battery lock.

3) Roll out the battery on the battery carriage.

WARNING!
Observe care to avoid splashing waste acid or oxide from the battery.

4) Perform a battery inspection in accordance with *Maintenance of the truck* page 40.

5) Roll in the battery after completed service.

6) Lock the battery in place with the battery lock and replace the battery plug.

7) Check the battery voltage on the battery indicator.

Maintaining and changing the battery TS

1) Pull out the battery plug.

2) Remove the battery locks (one on each side of the truck).

3) Roll the battery out to one side. Note that a safety stop is activated when the battery has reached halfway out. When

https://truckmanualshub.com/

changing the battery on a truck with vertically adjustable straddle legs, raise the straddle legs to their highest position in order to remove the battery stop.

CAUTION!
There is a risk of pinching while rolling the battery out or in.

NOTE!
A battery carriage must be used when changing battery. Unscrew and remove the safety stop.

4) Perform a battery inspection in accordance with *Maintenance of the truck* page 40.

5) Roll the battery in.

6) Refit the battery locks.

7) Refit the battery plug.

8) Check the battery voltage on the battery indicator.

Battery servicing

WARNING!
Battery and battery charger servicing may only be carried out by specially trained personnel.

WARNING!
Avoid short circuits, which can cause explosion or fire.

https://truckmanualshub.com/

Introduction

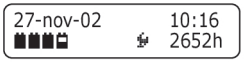

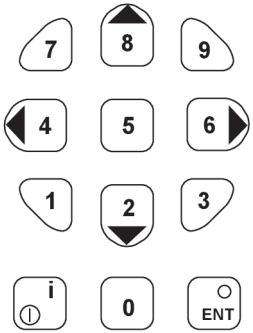

The truck is equipped with an ATC system; a control and monitoring system consisting of a display, a keyboard and a control unit. The system is also equipped with a buzzer in order to catch the driver's attention in various situations.

NOTE!
Not available on TS trucks

General

In order to start the truck, the driver must enter Operator ID and PIN code or use the keylock (option). Using the display, the driver may find a lot of information after turning on the truck, e.g.: date, time, battery status, as well as any error codes and warnings. The Operator ID and PIN code are supplied along with the delivery of the truck. The code should be changed after delivery.

Symbols and characters on the display

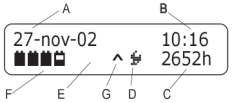

A. Date: Day-month-year.
B. Time: Hours-minutes
C. Hour meter: Shows active time or logon time. Normally, total active time is displayed.
D. Symbol normal speed/slow speed: Shows whether the truck is in normal speed or crawler mode (hare/tortoise).
E. Field for error codes: An error code consisting of an E+digits is shown if a fault occurs (if a warning is displayed, it covers the entire upper row).
F. Battery indicator: Shows battery status.
G. Symbol for lift stop. If the truck is equipped with a restart function, press push button 8 to continue lifting.

https://truckmanualshub.com/

Display of battery status

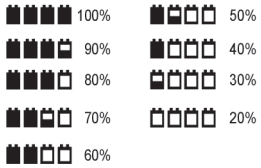

If the battery is discharged, the battery indicator will start blinking and a buzzer will sound at regular intervals. If the battery is not recharged or replaced, the lift function will shortly be deactivated in order to avoid harming the battery or preventing the truck from functioning normally. A deactivated lift function is indicated by a lit ^ symbol to the left of the hare/tortoise symbol.

NOTE!
When the battery status display indicates that the battery is discharged, it must be recharged/replaced.

Error messages

Error codes

All error messages are shown on the bottom row of the display. An error message is presented in the form of a code, consisting of the letter E and a code number, e.g. 008. When an error code is shown, the truck will go into a failsafe mode, which may mean that the truck's functions will stop. Certain error conditions are corrected automatically or by turning the truck on and off. The error code will then be turned off.

CAUTION!
The error code will persist in the event of a serious error. If this occurs, an authorised service technician should be contacted and given the error message code.

Change language

1) Navigate to “Settings”, using the button.

```
Settings
```

2) Press the button.

3) Navigate with the arrow keys to select a language, then press the button to confirm the selection.

https://truckmanualshub.com/

```
SELECT LANGUAGE:
English
```

4) You will now enter the logon mode automatically with the new language setting.

```
Operator ID:
?
```

Warnings

There are a number of different warnings used to catch the driver's attention in the case of, for example, an operational error. Certain of the truck's systems will also not be operable until the driver has followed the command on the display.

- `Release throttle`
  The driver is asked to position the speed lever in neutral.
- `Release controls`
  The driver is asked to set all hydraulic levers to their neutral positions.
- `Release tiller`
  The driver is instructed to place the steering arm to its uppermost and lowermost positions.

Other warning messages are shown if, for example. a system in the truck is beginning to overheat. If the warnings do not disappear even though the driver has followed the instructions on the display, contact and authorised service technician.

https://truckmanualshub.com/

Menus

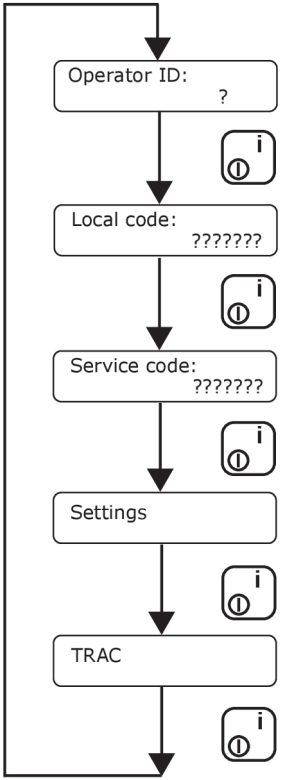

ATC has a number of functions available in a menu system. There are five basic menus with multiple submenus. The button is used to navigate between menus. Certain basic menus require a password to be able to access them.

- *Operator ID:* Menu to start the truck.
- *Local:* Intended for local supervisor.
- *Service:* Intended for authorised service technician.
- *Settings:* Here, it is possible to set the language to be shown in the display. ATC supports Swedish, English, German and French. It is also possible to install one additional language using special software.
- *Trac:* Intended for authorised service technician.

Navigation in menus

The arrow keys (buttons 4, 6, 2, 8 on the keyboard) are used for navigating in the menus. You may navigate either vertically or horizontally. The availability of these alternatives is shown on the display.

```
LOCAL MENU:
<      Options      >
```

```
OPTIONS:
   Time & date    v^
```

https://truckmanualshub.com/

- To enter into a menu: Press the ENT button.
- To exit a selected menu: Press 4. The horn button serves as an "Esc button". Press the ENT button when "Exit" is shown in the display.

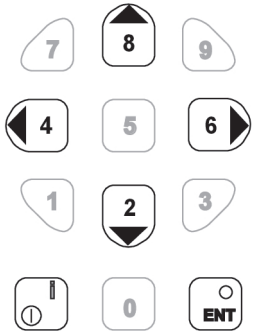

https://truckmanualshub.com/

Driving instructions PLL, PLE, PSL, PSD, PS, PSH, PLP

Starting the truck

1) Connect the battery plug and check that the emergency stop function is disengaged.

2) If the truck is equipped with an electric lock, turn the key. The display briefly shows a start image.

3) A request to state the operator identification will be displayed. You will be asked to enter an Operator ID. Note that there must be as many digits as question marks.

```
Operator ID:
?
```

4) Enter your PIN code.

```
Operator code
????
```

5) When the valid Operator ID and PIN code have been entered, the truck will be ready to drive.

NOTE!
If a lever is activated when the truck is started, you will see a message on the display asking you to reposition the lever to neutral position. Then the truck may be operated. This means that sudden movements are avoided when starting.

Driving instructions

1) Start the truck in accordance with *Starting the truck* page 33. Release the parking brake by moving the tiller arm backwards-downwards (but not to the bottom position).

2) The truck begins to move when the tiller arm speed control is pushed forwards/backwards. The further the speed control is moved the faster the truck will move.

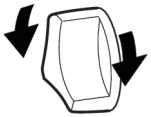

3) There are several ways to brake the truck:

- Brake the truck by reversing, i.e. changing the direction of travel.

NOTE!
The further the speed control is moved the greater the braking capacity.

https://truckmanualshub.com/

- Brake by moving the speed control back to its neutral position and moving the tiller arm up or down to its end position.

> **NOTE!**
> The brakes function whether the lever is released or not.

4) If the main power needs to be disconnected in an emergency, press the emergency stop button or pull out the battery plug. The emergency stop buttons are on the left and right hand sides of the driver cab facing the forks.

5) In order to avoid crushing injuries during driving, there is a belly switch at the end of the tiller arm. When the belly switch (H) is pressed in, the truck will move in the direction the forks are pointing.

6) It is possible to manually activate crawl speed during operations. Select crawl speed by pressing the button 2 (F). (Button 8 (F) to go directly to normal speed.)

7) Switch off the truck in accordance with *Switching off the truck* page 34.

Switching off the truck

1) To turn off the truck: Keep the button pressed in for approx. two seconds. The display will show “shutting down” and then show the log-on text.

```
shutting down...
```

```
Operator ID:
?
```

> **NOTE!**
> Always turn off the truck in accordance with the above instructions before the battery plug is disconnected to avoid locking the program or damaging the ATC system.

2) In the case of a lengthy stop, pull out the battery plug.

> **NOTE!**
> Emergency stop shall not be used to turn off the truck.

Normal or crawler mode

Normal speed mode

A symbol for normal speed (hare) or crawler (tortoise) is always shown on the display, depending on which is currently active.

https://truckmanualshub.com/

Crawler mode

It is possible to manually activate crawl speed during operations. Button 2 alternates between the two speed selections. (Button 8 to go directly to normal speed.) Various safety systems in the truck may automatically reduce the speed in certain situations. For example, driving with forks lifted high and/or folded out side stabilizers results in reduced speed. The symbols for normal speed or crawler mode are not changed by reducing the speed.

Standby position

Standby mode is only used for shorter stops during the work shift. At the end of the work shift or when the truck is going to be left unattended, it should always be turned off.

1) To enter standby mode: Keep the button pressed until the text “standing by” is shown on the display.

2) To return to operating mode: Briefly press the button again.

Manual release of the brake PLL, PSD, PLE, PSL, PS

The brake can be released in order to move a truck without power by turning the handle at the top of the brake clockwise (A). The truck cannot be driven in this position. To return to normal operation, turn the handle anticlockwise back to normal position (B).

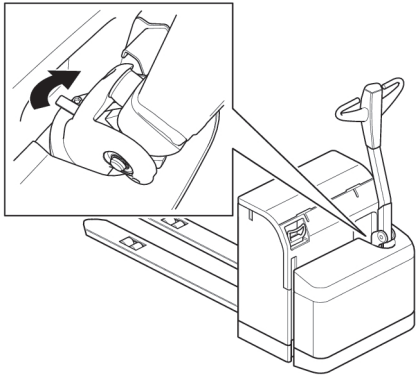

https://truckmanualshub.com/

A

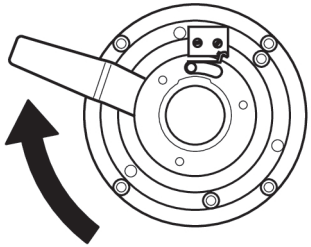

B

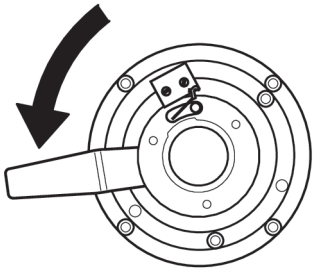

WARNING!
The brake may only be released when the truck is standing still on clean, level and solid ground.

Driving instructions TS

Starting the truck

1) Connect the battery plug.
2) Turn the key.

Driving instructions

1) Start the truck in accordance with *Starting the truck* page 36.
2) Release the parking brake by moving the tiller arm downwards (but not to the bottom position).

NOTE!
For trucks with fixed/protected platforms, the driver must stand on the platform to be able to use any of the hydraulic functions.

3) The truck begins to move when the lever on the operating handle is pushed forwards/backwards. The further the speed control is moved the faster the truck will move.

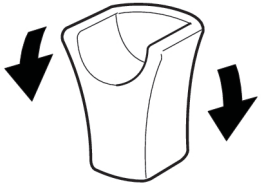

4) There are several ways to brake the truck:
   - Brake the truck by reversing, i.e. changing the direction of travel.

https://truckmanualshub.com/

NOTE!
The further the speed controller is moved the greater the braking capacity.

- Brake by moving the lever on the operating handle back to its neutral position and moving the operating handle up or down to its end position.

NOTE!
The brakes function whether the speed control is released or not.

5) If the main power needs to be disconnected in an emergency, pull out the battery plug.

6) In order to avoid crushing injuries during driving, there is a belly switch at the end of the tiller arm. When the belly switch is pressed in, the truck will move in the direction the forks are pointing.

7) Switch off the truck in accordance with *Switching off the truck* page 37.

Switching off the truck

1) Switch off the truck by turning the key counterclockwise.

2) In the case of a lengthy stop, pull out the battery plug.

NOTE!
Emergency stop shall not be used to turn off the truck.

https://truckmanualshub.com/

Responsibility for the load

The driver of the truck is responsible for the load that is being carried during transport. There must not be any risk of the load tipping or sliding off during transport. The driver of the truck has the right and duty to refuse to carry any load that is a clear safety hazard. Refer to the load limit plate to see the permitted maximum load for the truck.

Responsibility for others

Operate the truck so that there is no risk of an accident. No one may pass or stand under the raised forks, whether they are carrying a load or not. The driver has the right and duty to see that these directives are followed.

Maximal load

The maximum lifting capacity of the truck must not be exceeded (refer to the fork lift truck load limit plate). Note the effect of the centre of gravity on the lifting capacity.

Picking up a load

Always pick up a load so that it comes to rest as close to the mast as possible.

CAUTION!
Check the location of the centre of gravity of the load.

CAUTION!
Do not drive with the load lifted, except during 2-pallet handling.

2-pallet handling

The following applies to trucks with adjustable outriggers which make 2 pallet handling possible:

- Adjust the speed in accordance with floor conditions, load distribution and when cornering.
- Remember that a higher centre of gravity makes the truck less stable. Try to have the load as low as possible, with the heaviest load always lowermost.
- Whilst loading with only the forks, the straddle legs must be completely lowered.
- Refer to the load limit plate to see the permitted load combinations for a particular truck.

https://truckmanualshub.com/

Stacking

1) Approach the stack with the load in the lowered position.
2) Lift the load sufficiently high that it clears the stack or shelf and then drive towards the stack.
3) When the load is in a suitable position, lower it onto the stack.
4) Lower the forks so that they release the load/pallet, and check that no-one is behind the truck before reversing away from the stack.
5) Lower the forks into their transport positions.
6) When fetching a load from a stack, carry out these movements in reverse order.

https://truckmanualshub.com/

Daily maintenance (before each shift)

Responsibility: Fork lift truck driver

CAUTION!
Naked flames or smoking are prohibited when working on or near to the battery.

CAUTION!
Loading ergonomics must be observed during battery change or battery check.

1) Check that the battery cables, connections and plugs are connected correctly and not damaged.
2) Check that the battery is properly secured in its compartment.
3) Check that the truck is not leaking oil.
4) Check the horn by activating the controls while the truck is running.
5) Check the braking capacity on the main brake and parking brake.
6) Check for external damage or excessive wear on the wheels.
7) Check that there are no error messages or warnings on the truck computer display.
8) Check that the securing arrangements for the finger protection are intact and that there is a good view through the protection.

WARNING!
There is the danger of personal injury if the truck is operated without having the finger protection in place.

WARNING!
There is a danger to life if the truck is driven with insufficient visibility through the finger protection.

CAUTION!
Errors detected during daily inspection must be reported to a foreman/supervisor. See section *Truck Driver* page 10.

9) Check the height measuring system reflector surface.
10) Trucks with gates: check the gate switches.

Daily Service (after each shift)

Responsibility: Fork lift truck driver

https://truckmanualshub.com/

Battery changing

1. Check the battery voltage on the battery indicator.
2. Charge the battery as necessary. The battery is charged in accordance with the recommendation from the battery manufacturer. Only fully automatic charging units should be used.

   Refer to *Battery changing* page 22 for the charging procedure.

If there is damage

Any damage that has occurred must be reported to the supervisor.

Weekly inspection

Responsibility: Truck operator

1) Clean the battery; see the battery manufacturer's maintenance instructions.
2) Check the oil level in the hydraulic system by pushing all the hydraulic cylinders to their fully extended positions. Then, check that the fork truck raise all the way up to maximum lift height without the pump sucking air.
3) Check that the wheels have not separated – tread/hub and tread/cord.
4) The outside of the truck must be cleaned. Vacuum clean and wipe with moist cloth in the operator cab. Electrical panels and circuit boards must always be protected from fluids. Damage to the truck caused by fluids in electrical components is not covered by the manufacturer's warranty.

Preventive maintenance

NOTE!
Preventive maintenance must be carried out by specially appointed and trained personnel with a good working knowledge of the function and maintenance of the truck.

To obtain the best results from your truck investment, we advise you to contact an authorised service technician and take out a service agreement for preventive maintenance.

https://truckmanualshub.com/

Service technician

NOTE!
Servicing and maintenance must be carried out by a specially appointed and trained technician with a good working knowledge of the truck's function and maintenance.

To obtain the best results from your truck investment, we advise you to contact an authorised service technician and take out a service agreement for routine maintenance.

Safety instructions for maintenance

Working at height

Comply with local safety instructions when working at height.

Precautionary measures during repair

Extreme importance must be placed on precautionary measures to avoid accidents during all work on the truck.

- **WARNING!**
  The battery plug should be pulled out before working on the truck.
- Ensure that the drive wheel is off the ground before trouble shooting. Secure the truck with blocks.
- To prevent injuries caused by crushing the battery plug should always be removed when working on and around the mast and hydraulic unit.
- When dismantling parts of the hydraulic system the system must not be pressurised, e.g. the pump motor is shut off and the forks are down.
- The battery should always be protected during grinding work.
- When changing a fuse the controllers must be thoroughly discharged. (Remove the battery plug and wait for two minutes before fuses are changed, otherwise there a risk of arcing.)
- Great caution must be observed when removing gas springs.

Maintenance intervals

Recommended replacements

NOTE!
To ensure correct operation, use only original spare parts.

https://truckmanualshub.com/

- The hydraulic oil filter and air filter for the hydraulic oil tank must be changed after every 500 hours of operation. For TS, this should happen every 1,000 hours of operation.

> **NOTE!**
> Only TS trucks have replaceable hydraulic filters.

- The hydraulic oil must be changed annually or every 1,000 hours of operation.

> **CAUTION!**
> If the hydraulic oil has been heated to over 60°C the oil and the filter must be replaced immediately, since the technical properties of the oil may have changed.

- Hoses should be replaced after 5 years, since they are perishable.

Servicing, type and frequency

General

A complete operations test must be performed before the inspection. Faulty functions must be rectified before the inspection.

First service (200 hours)

This service has the purpose of securing the operation of the truck and its component parts. The gearbox oil and hydraulic oil filter must be changed and a functional test carried out in accordance with the following list.

- Check for external damage on chassis.
- Check of weld joints at vital points.
- Check of lifting devices.
- Check of component attachments.
- Functional test, lever, lever bolts, 195 Nm.
- Check of the horn.
- Test drive backwards and forwards, and turning.
- Check of the drive unit.
- Check of all the wheels.
- Test of the brake function.
- Change the oils and filter in accordance with instructions.
- Check for oil leakage.
- Check of the hydraulic unit, pipes and hoses.
- Check of the cylinders.
- Function test, lifting and lowering.
- Lubrication in accordance with lubrication chart.
- Measurement and check of the battery and charging function.

Service intervals

Service must be carried out regularly, once a year or after 500 hours of operation with normal use of the truck. The planned

https://truckmanualshub.com/

servicing includes operations such as test driving, functional tests, and the changing of filters and oils, etc.

NOTE!
In the case of demanding and/or dusty environments with humid or corrosive air, it is advisable to perform maintenance more often. Reduce the periods between maintenance by one half (or one third).

Service points PLP, PS, PSH, TS

Planned service inspections are implemented in accordance with the following points:

X Obligatory

O Not obligatory

Chassis			
Descriptions	**PLP**	**PS/PSH**	**TS**
Signs/Decals	X	X	
Covers and panels	X	X	X
Overhead guard			X
Rail wheel	X	X	O
Battery stop, Lock, Rollers	X	X	X
Rubber mat	X		X
Chassis	X	X	X

Chassis			
Descriptions	**PLP**	**PS/PSH**	**TS**
Lubrication	X	X	X
Link system	X	X	O
Stabilizers		X	O
Castor wheel	X	X	X
Microswitch	X	X	X
Pivot points	X		
Driver’s platform	X		X
Gates	X		X
Colour	X	X	X
Finger protection		X	X
Machine plate	X	X	X

Drive unit			
Descriptions	**PLP**	**PS/PSH**	**TS**
Gearbox	X	X	X
Traction motor	X	X	X
Drive wheel	X	X	X
Drive shaft	X	X	X
Gearbox oil level	X	X	X

https://truckmanualshub.com/

Mast system			
Descriptions	PLP	PS/PSH	TS
Lift chains	X	X	X
Forks, fork carriage	X	X	X
Bearings/Rollers	X	X	X
Lubrication	X	X	X
Mast profile	X	X	X
Pull rods	X	X	O

Steering			
Descriptions	PLP	PS/PSH	TS
Servo motor	X		O
Steering servo unit	X		O
Sliding bearing		X	X
Tiller foot	X	X	X
Steering Bearing	X		X
Steering belt/Steering chain	X		X

Hydraulic system			
Descriptions	PLP	PS/PSH	TS
Hydraulic oil level	X	X	X
Hoses	X	X	X

Hydraulic system			
Descriptions	PLP	PS/PSH	TS
Couplings	X	X	X
Pump motor	X	X	X
Hydraulic pump	X	X	X
On/off valve proportional valve	X	X	X
Friction force system	X		

Lift cylinders			
Descriptions	PLP	PS/PSH	TS
Cylinders	X	X	X

Electrical system			
Descriptions	PLP	PS/PSH	TS
Cables, Switches	X	X	X
Contactors	X	X	X
Battery	X	X	X
Traction motor controllers	X	X	X
Horn	X	X	X
Speed Controller	X	X	X
Mast sensor/switch	X		X

https://truckmanualshub.com/

Electrical system			
Descriptions	**PLP**	**PS/PSH**	**TS**
Fuses	X	X	X
Battery plug	X	X	X
Cooling fan	X		X
Truck computer	X	X	
Belly switch button	X	X	X
Emergency stop	X	X	X
Lift switch	X		
Hour meter	X	X	X
Driver presence sensor	X		X
Battery indicator	X	X	X
Key switch	O	O	X

Brake-System			
Descriptions	**PLP**	**PS/PSH**	**TS**
Brake function	X	X	X
Parking brake	X	X	X
Brake disc	X	X	X

Service points PLL, PLE, PSD, PSL

Planned service inspections are implemented in accordance with the following points:

X Obligatory

X Not obligatory

Chassis			
Descriptions	**PLL**	**PLE**	**PSD/PSL**
Signs/Decals	X	X	X
Covers and panels	X	X	X
Rail wheel	X	X	X
Battery stop, Lock, Rollers	O	O	O
Chassis	X	X	X
Lubrication	X	X	X
Link system	X	X	X
Stabilizers			X
Castor wheel	X	X	X
Microswitch	X	X	X
Colour	X	X	X
Finger protection			X
Machine plate	X	X	X

https://truckmanualshub.com/

Drive unit			
Descriptions	**PLL**	**PLE**	**PSD/PSL**
Gearbox	X	X	X
Traction motor	X	X	X
Drive wheel	X	X	X
Drive shaft	X	X	X
Gearbox oil level	X	X	X

Mast system			
Descriptions	**PLL**	**PLE**	**PSD/PSL**
Lift chains		X	X
Forks, fork carriage	X	X	X
Bearings/Rollers	X	X	X
Lubrication	X	X	X
Mast profile		X	X
Pull rods	X	X	X

Steering			
Descriptions	**PLL**	**PLE**	**PSD/PSL**
Sliding bearing	X	X	X
Tiller foot	X	X	X
Steering Bearing	X	X	X

Hydraulic system			
Descriptions	**PLL**	**PLE**	**PSD/PSL**
Hydraulic oil level	X	X	X
Hoses	X	X	X
Couplings	X	X	X
Pump motor	X	X	X
Hydraulic pump	X	X	X
On/off valve proportional valve	X	X	X

Lift cylinders			
Descriptions	**PLL**	**PLE**	**PSD/PSL**
Cylinders	X	X	X

Electrical system			
Descriptions	**PLL**	**PLE**	**PSD/PSL**
Cables, Switches	X	X	X
Contactors	X	X	X
Battery	X	X	X
Traction motor controllers	X	X	X
Horn	X	X	X
Speed Controller	X	X	X

https://truckmanualshub.com/

Electrical system			
Descriptions	**PLL**	**PLE**	**PSD/PSL**
Fuses	X	X	X
Battery plug	X	X	X
Truck computer	X	X	X
Belly switch button	X	X	X
Emergency stop	X	X	X
Hour meter	X	X	X
Battery indicator	X	X	X
Key switch	O	O	O

Brake-System			
Descriptions	**PLL**	**PLE**	**PSD/PSL**
Brake function	X	X	X
Parking brake	X	X	X
Brake disc	X	X	X

Consumable materials

Only supplies (oils, grease, lubricants etc.) that have been approved by our genuine spare parts department may be used for servicing and maintenance of the truck. See Genuine Parts.

Lubrication chart PL*/PS*

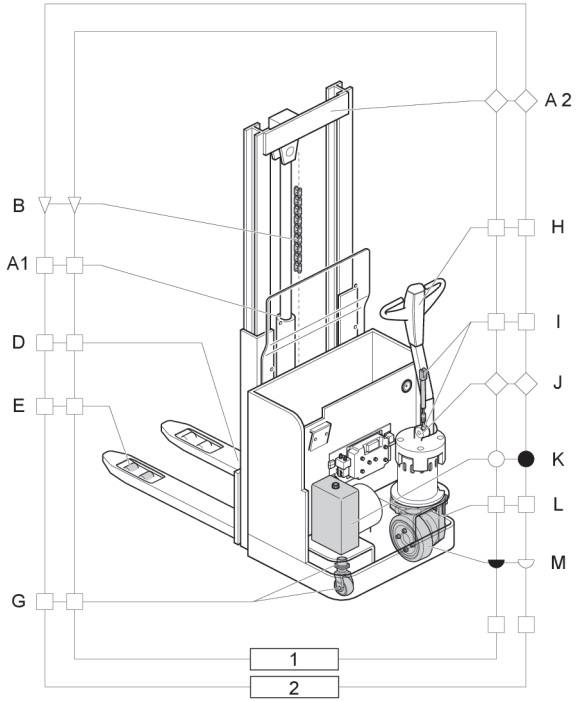

Figure 5. PSL, PSD

1. 500 hr service
2. Annual service

https://truckmanualshub.com/

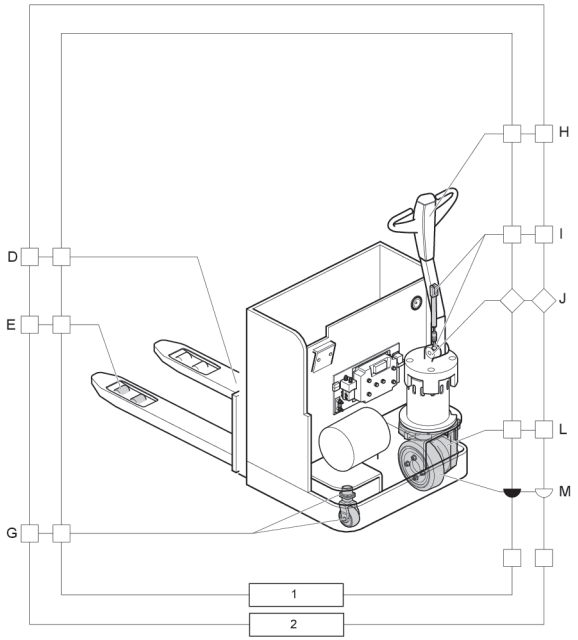

Figure 6. PLE, PLL

1. 500 hr service
2. Annual service

PL*/PS* components requiring lubrication

Location	Explanation
A1	Mast profile roller surfaces and slide surfaces
A2	Thrust rollers
B	Lift chains
C	Straddle legs
D	Fork carriage
E	Bogie wheel
F	Battery rollers
G	Castor wheel - sliding bearing, grease nipple
H	Speed and brake controls - slide surfaces and springs
I	Steering arm - gas spring
J	Steering arm housing
K	Hydraulic tank
L	Guide ring
M	Gearbox

https://truckmanualshub.com/

Lubrication chart PS/PSH

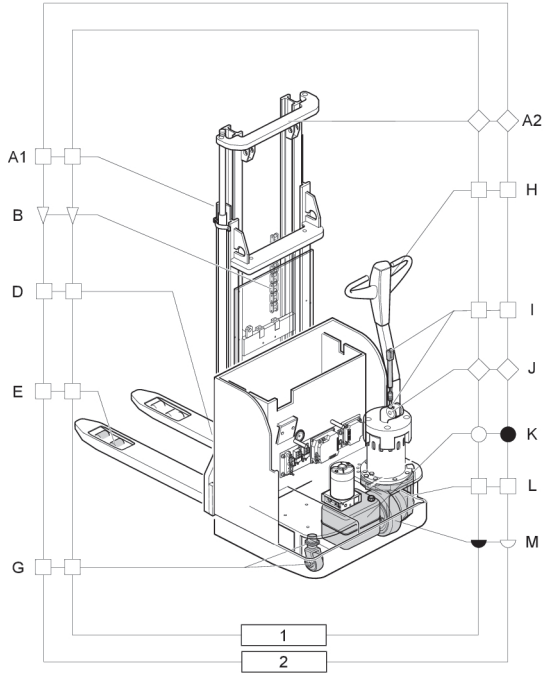

Figure 7. PS

1. 500 hr service
2. Annual service

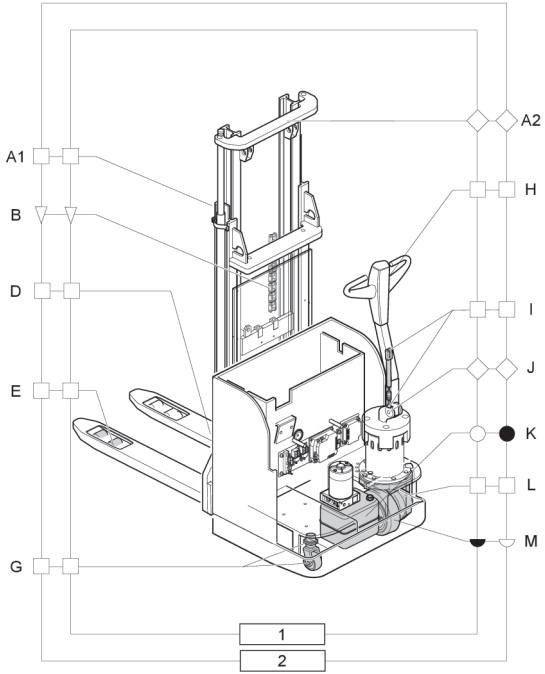

Figure 8. PSH

1. 500 hr service
2. Annual service

https://truckmanualshub.com/

PS/PSH components requiring lubrication

Location	Explanation	Location	Explanation
A1	Mast profile roller surfaces and slide surfaces	G	Castor wheel - sliding bearing, grease nipple
A2	Thrust rollers	H	Speed and brake controls - slide surfaces and springs
B	Lift chains	I	Steering arm - gas spring
C	Straddle legs	J	Steering arm housing
D	Fork carriage	K	Hydraulic tank
E	Bogie wheel	L	Guide ring
F	Battery rollers	M	Gearbox

Lubrication chart PLP

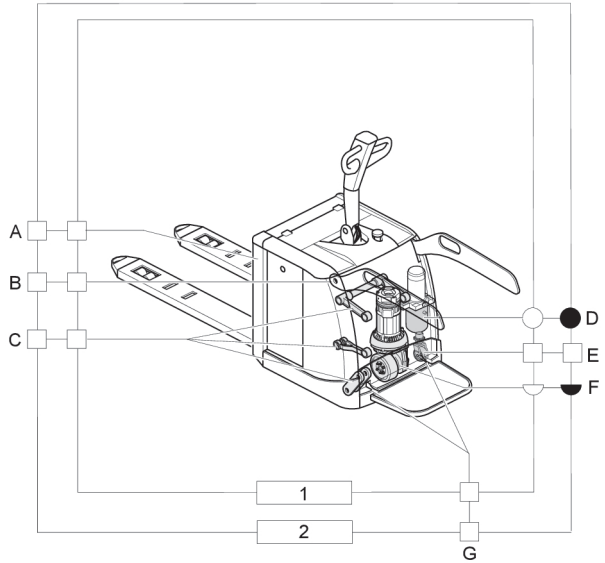

1. 500 hr service
2. Annual service

Components to lubricate, PLP

Location	Explanation
A	Mast section - roller surfaces and slide surfaces
B	Gates – bearing surfaces lubricated

https://truckmanualshub.com/

Location	Explanation
C	Spring-mounted drive unit – link bearings, 12 grease nipples
D	Hydraulic oil
E	Castor wheel - sliding bearings, 2 grease nipples
F	Gearbox oil
G	Platform, 2 grease nipples

Lubrication chart PLP CD

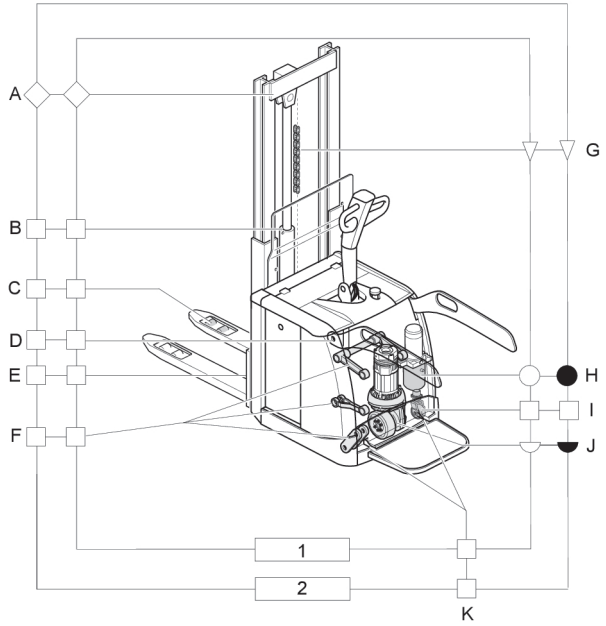

1. 500 hr service
2. Annual service

https://truckmanualshub.com/

PLP CD components requiring lubrication

Location	Explanation
A	Thrust rollers
B	Mast profile roller surfaces and slide surfaces
C	Bogie wheel
D	Gates, bearing surfaces
E	Fork carriage
F	Spring-mounted drive unit, link bearings, 12 grease nipples
G	Lift chains
H	Hydraulic oil
I	Castor wheel, sliding bearings, 2 grease nipples
J	Gearbox oil
K	Platform, 2 grease nipples

Lubrication chart TS

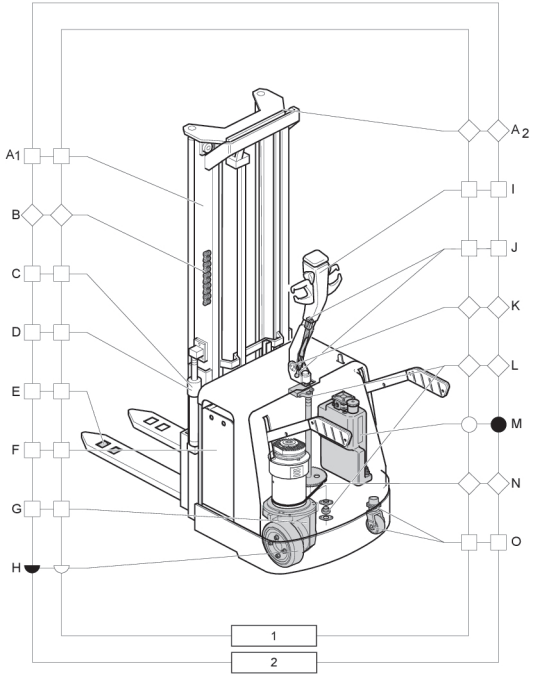

1. 500 hr service
2. Annual service

https://truckmanualshub.com/

TS components requiring lubrication

Location	Explanation
A1	Mast section - roller surfaces and slide surfaces
A2	Thrust rollers - all
B	Lift chains - all
C	Fork carriage - support rollers
D	Fork carriage – slide surfaces
E	Bogie – axle (unloaded)
F	Battery rollers
G	Guide ring
H	Gearbox
I	Speed and brake controls – slide surfaces and springs lubricated
J	Attachment gas spring steering arm
K	Steering arm housing
L	Upper/lower guide bearings lubricated
M	Hydraulic tank
N	Steering chain
O	Castor wheel, sliding bearings, wheel bearings

Symbol key lubrication chart

Symbol	Explanation	Symbol	Explanation
◓	Oil filter and air filter, change	●	Hydraulic oil, oil filter and air filter, change
◡	Gearbox oil, check	◒	Gearbox oil, change
□	Grease	❄	Only cold store version
▽	Chain spray	◇	Chain spray/oil

Applicable in general for the symbols:

Unfilled symbol, check lubrication.

Filled symbol – Change.

Fuses

General

WARNING!
Fuses should be changed by an authorised service technician.

WARNING!
Always switch off the current by pulling out the battery plug when changing fuses.

https://truckmanualshub.com/

PL*/PS* fuses

Table 6. PL/PS* fuses*

Designations	Heavy current (A)	Use
F1	100	Traction motor
F2	80	Pump motor
F3	7,5	Manoeuvring

PS, PSH fuses

Table 7. PS, PSH fuses

Designations	Heavy current (A)	Use
F1	100	Traction motor
F2	125	Pump motor (PS)
	160	Pump motor (PSH)
F3	7,5	Manoeuvring

PLP fuses

Table 8. Fuses

Designations	Heavy current (A)	Use
F1	250	Traction motor
F2	250	Pump motor
F3	7,5	Manoeuvring
F4	5	For additional equipment. Max. 120 W
F5	25	Servo steering

TS fuses

Table 9. TS fuses

Model	Heavy current (A)	Use
TS 1.1 kW, TS 2 kW	3	Manoeuvring
TS 1.1 kW, TS 2 kW	7,5	Manoeuvring
TS 1.1 kW, TS 2 kW	250	Pump motor
TS 1.1 kW	100	Traction motor
TS 2 kW	160	Traction motor

Maintenance instructions

Genuine replacement parts

Genuine Parts

The reliability that we promise is contingent upon using original spare parts. Only our genuine replacement parts guarantee correct operation, long life and the right to a warranty.

https://truckmanualshub.com/

Basic trouble shooting

If the truck does not work after action has been taken in accordance with the following table, contact an authorised service technician. Further action should only be carried out by specially assigned and trained servicing technicians. If an error code is shown on the diver's display, this must be reported to an authorised service technician.

Truck condition	Possible cause	Procedure
The truck does not start	The battery plug has not been inserted	Insert the battery plug
	The emergency stop switch/battery connector is not connected	Connect the emergency stop switch/battery connector
	The battery capacity is too low	Charge the battery
	Fuse defective	Change the defective fuse
	The key switch is set to "0" or the truck is not logged on	Turn the key switch to position "I" or enter the appropriate Operator ID and password

Truck condition	Possible cause	Procedure
The truck cannot be driven	The truck is not ready for use	Carry out all the actions under the heading "The truck does not work"
	The driving seat switch is not activated	Sit in the driving seat P**/TS: Pull down the tiller arm and stand on the platform
	Drive fuse defective	Change the defective drive fuse
The truck will not lift the load	The truck is not ready for use	Carry out all the actions under the heading "The truck will not start"
	The driving seat switch is not activated	PLP/TS: Stand on the platform
	The hydraulic oil level is too low	Check the level and top up the hydraulic oil
	The battery capacity is below 20%	Charge the battery
	Pump fuse defective	Change the defective pump fuse
	The load is too heavy	Reduce the load Refer to the maximum permitted weight on the machine plate

https://truckmanualshub.com/

Dismantling and assembling the panels

General

WARNING!
The removal and refitting of panels and covers should be carried out by an authorised service technician.

WARNING!
Disconnect the main power circuit by pulling out the battery plug before the covers are removed.

WARNING!
It is not permitted to use the truck with covers and panels removed.

Removal and installation of the machine housing cover, PL*/PS*

1) Remove the securing bolts.
2) Hold the cover by the holes in the sides and lift it off.
3) Install in the reverse order.

Removal and installation of the machine housing cover, PLP

1) Press the emergency stop button.
2) Take out the plastic plug from the plastic cover over the battery.
3) Insert a round rod or similar into the emergency stop button. Turn the emergency stop button until the hole in the shaft is found. Then remove the emergency stop button shank by turning it counterclockwise.
4) Remove the securing bolts.
5) Fold out the gates and remove the panel by working it over the gates.
6) Install in the reverse order.

Removal and installation of the machine housing cover, TS

1) Remove the securing bolts.
2) Lift off the cover.
3) Install in the reverse order.

Dismantling and assembling wheels

Safety regulations concerning wheel change

WARNING!
For safety reasons, we recommend that wheel changes only be carried out by an authorised service technician.

https://truckmanualshub.com/

WARNING!
For optimum performance and so as not to invalidate the warranty, use only our genuine replacement parts! Otherwise, we are unable to guarantee stability and brake function.

WARNING!
Take care while lifting and securing the truck with a block, as there is a risk of crushing injury.

Dismantling and assembling the castor wheel, PLL, PLE, PSL, PSD, PS, PSH

Lift the load wheel off the ground and secure the truck with blocks.

WARNING!
Ensure that the truck is unable to move while work is in progress.

1) Remove the plastic cover from the machine housing.
2) Remove the bolts.
3) Take out the castor wheel assembly and support the fork in a vice.
4) Undo the bolt and drive out the wheel axle. Now the wheel can be taken out of the fork.
5) Install in the reverse order.

Torque
The bolts must be tightened to a torque of **47 Nm**.

Dismantling and assembling the castor wheel, PLP

Lift the load wheel off the ground and secure the truck with blocks.

WARNING!
Ensure that the truck is unable to move while work is in progress.

1) Remove the plastic cover from the machine housing.
2) Remove the securing bolts.
3) Take out the castor wheel assembly and support the fork in a vice.
4) Tap out the retaining pin, drive out the wheel axle and remove the wheel from the fork.

NOTE!
In connection with a wheel change, the retaining pin should also be replaced.

5) Install in the reverse order.

https://truckmanualshub.com/

Torque
The bolts must be tightened to a torque of **47 Nm**.

Dismantling and assembling the castor wheel, TS

Lift the wheel off the ground and secure the truck with blocks.

WARNING!
Ensure that the truck is unable to move while work is in progress.

1) Remove the plastic cover from the machine housing.
2) Remove the securing bolts.
3) Take out the castor wheel assembly and support the fork in a vice.
4) Tap out the retaining pin, drive out the wheel axle and remove the wheel from the fork.

NOTE!
In connection with a wheel change, the retaining pin should also be replaced.

5) Install in the reverse order.

Torque
The bolts must be tightened to a torque of **47 Nm**.

Dismantling and assembling the drive wheel

Pull out the battery plug.

1) Loosen the drive wheel nuts, without removing them.
2) Lift the load wheel off the ground and secure the truck with blocks.

WARNING!
Ensure that the truck is unable to move while work is in progress.

3) Remove the wheel nuts and remove the drive wheel.
4) Install in the reverse order.

Tighten the wheel nuts crosswise, to:

Torque
PLL, PLE, PSL, PSD, PS, PSH: **80 Nm**

Torque
PLP: **84 Nm**

Torque
TS: **135 Nm**

Start the truck and test drive in both directions. The wheel must not catch or jam.

https://truckmanualshub.com/

The authority and obligations of the truck driver

The driver has the authority and the responsibility to refuse to drive the truck in the following cases:

- The truck constitutes a clear safety hazard.
- The load constitutes a clear safety hazard.
- If the truck has been repaired, altered or adjusted without the changes being approved by the supervisor.
- If the truck driver's physical or psychological condition is such that he/she can be considered a safety hazard.

The driver has the authority to:

- prevent unauthorized persons from using the truck for which he/she is responsible. An unauthorized person is someone who has not received permission from the supervisor and/or someone who lacks training
- prevent anyone from walking or standing under a raised lift, whether this is loaded or unloaded.

WARNING!
Take great care in the machinery compartment, beware of hot surfaces, etc.

Getting in and out

Be careful when getting in and out. Use the handle if one is installed and take into account the height difference between the floor and the truck.

WARNING!
It is not permitted to climb on to the truck.

Driving the truck

Driving in public areas

The truck must not be driven on public roads outside a private area.

Distance between vehicles

Remember that the vehicle in front of you may stop suddenly. Keep a reasonable distance. Remember that any load on the forks affects the braking distance.

Pinch risk

WARNING!
Always be careful when using the truck to be aware of the risk of pinching, both in respect of the driver and adjacent people.

Passengers

Passengers must not ride on the truck unless otherwise indicated on the truck.

https://truckmanualshub.com/

Clearance height

Bear in mind that the truck cannot be used where the clearance height of an opening is less than the height of the drivers cab, the load or the mast.

The truck in an industrial lift

The truck can only be driven into an industrial lift if this has been authorised. Make sure that the capacity of the industrial lift is never exceeded (the total weight of the truck including the weight of the driver). The driver must be able to escape. Park inside the lift so that the driver is beside the door. Never place the truck or the load within the industrial lift's risk zones. Ensure that the truck's brakes have been engaged before the industrial lift is started!

Floor load

Carefully check notices or other instructions concerning the maximum floor load or maximum wheel pressure to ensure that these are not exceeded. For the truck's total weight, see the machine plate.

Signalling

Use the signal horn to attract attention.

Reduced vision

Slow down when approaching crossings and other places where the line of vision is reduced. Avoid driving in the same direction as the forks if the load in front of you obstructs your sight. Find someone to help you, if your vision is blocked.

NOTE!
Accessories on the truck may restrict the view.

WARNING!
There is a danger to life if the truck is driven with insufficient visibility through the finger protection. Beware therefore of, for example, condensation and icing, which must be removed before the truck is driven.

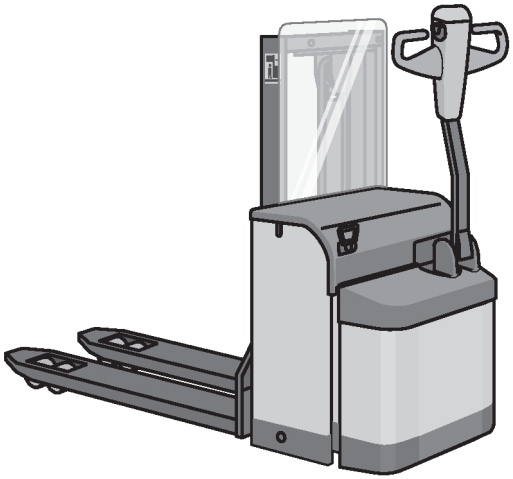

https://truckmanualshub.com/

Transports

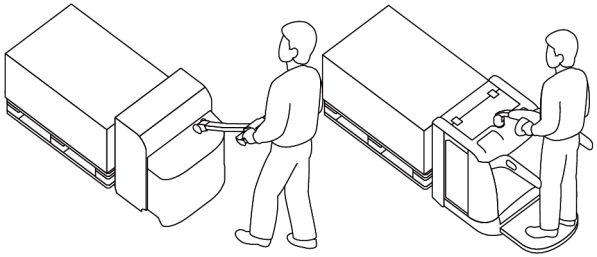

Figure 9. Transport mode

In normal operation, the truck's transport mode must be observed. It is prohibited to drive with forks raised when moving loads up and down in shelves and similar.

When transporting loads, the truck should, if possible, be driven in the opposite direction to the direction the forks are pointing. This ensures that the operator has a better view if the load is high, and makes the truck easier to manoeuvre. When driving in the direction of the forks, the truck is sensitive to any sharp steering movements (compare with reversing a car). Only drive the truck with covers and housings closed and locked in place.

Speed

Adjust the speed according to the floor conditions, the line of sight and operational safety. Avoid rapid acceleration, sudden braking and cornering at speed; there is a risk for overturning or that the load will fall off.

Driving space

Ensure that you have sufficient space for the truck - both the driver and the load - in narrow aisles. Narrow door openings that will not permit two-way traffic must be entered through the centre of the opening. Remember that the truck platform, gates and overhead guard require extra room. Follow the truck paths marked within the driving area. Remember to keep your whole body inside the truck perimeter to avoid crushing injuries.

WARNING!
It is not permitted to push material that is on the floor out of the way by means of the truck's chassis.

Powered trucks equipped with folding platform

WARNING!
Take great care when guiding a pedestrian truck with a platform, as there is a risk of being crushed between the truck and surrounding objects.

https://truckmanualshub.com/

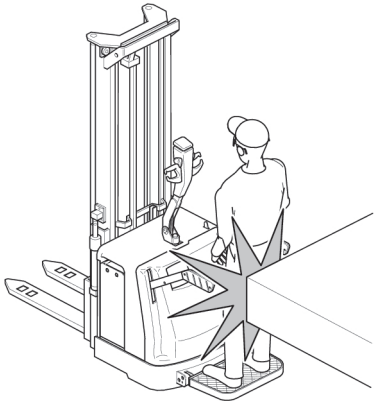

WARNING!
Place your feet correctly on the platform to avoid injury.

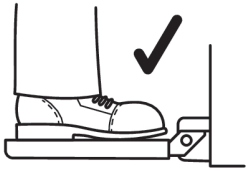

Figure 10. Correct location

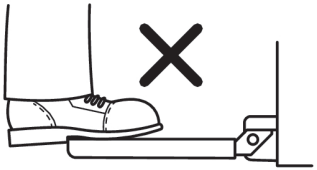

Figure 11. Incorrect location

Load guard

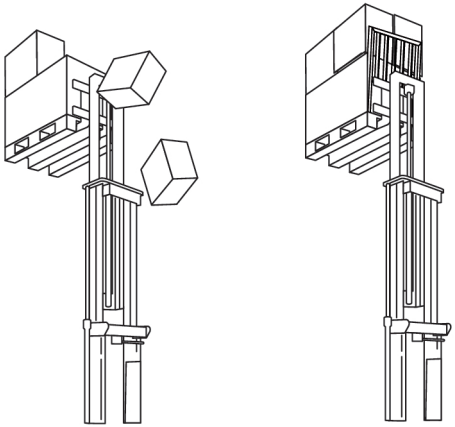

Figure 12. Load guard

The truck may be equipped with load protection if it is to handle small objects that are at risk of falling down and injuring the operator or the truck while the load is raised.

WARNING!
Remember that the load guard requires extra lifting space!

https://truckmanualshub.com/

Risk zones

Do not drive near the edges of loading bays, gangways, etc. where there is a risk of the truck going over an edge. Be careful when operating close to colour marked risk zones.

Overturning

If the truck overturns, get out and keep away from it.

Trucks on another vehicle's loading platform or on a gangway

When the truck is being driven on a ramp from a loading platform to a lorry bed or trailer, the ramp's bearing capacity must be checked. There must be devices in place to prevent the ramp from shifting. The bearing capacity of the vehicle that is being driven up onto must be checked. There must be devices (such as brake chocks) in place to prevent the vehicle from moving. For information on the truck's total weight, see the truck's machine plate.

Direction of travel when driving on slopes

Outrigger trucks

These trucks are always driven unloaded with the forks facing away from the crown of the hill or slope.

When driving with a load on an incline, keep the forks facing the top.

Awareness!

Always be aware of personnel in the neighbourhood when operating the truck.

Transportation security

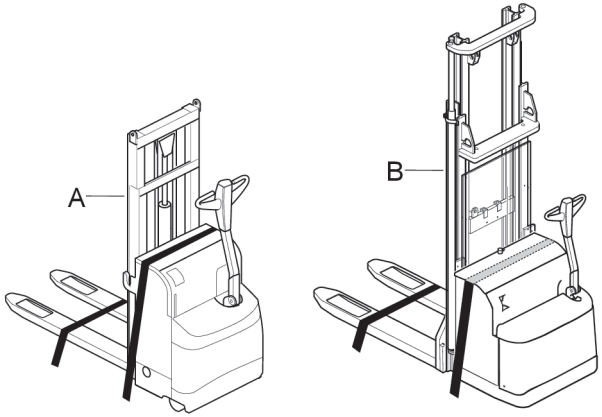

A. PLL, PLE, PSL, PSD, PLP, TS

B. PS, PSH

When a truck is to be transported, it must be secured at the defined transportation points. All trucks are to be secured by a strap across the forks. If the truck has an overhead guard or a mast that is higher than 2.5 m, a strap must also be secured over the overhead guard/mast. Chocks can be placed against the chassis in every direction to prevent rolling or sliding.

https://truckmanualshub.com/

PS, PSH: Open the battery cover and thread the strap under it so that the cover is not damaged by the pressure.

Lifting the forks

Unsecured forks may be lifted by means of a strop intended for the purpose, as in the illustration. The forks are fitted and removed by being balanced on a piece of wood and pulled or pushed by hand off or on to the truck.

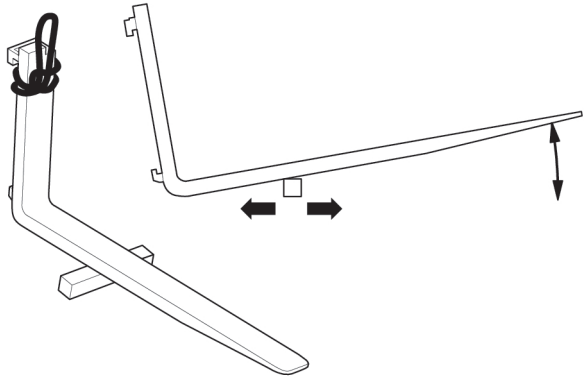

Normal operating conditions

Stacking must be carried out on firm, clean and level ground.

Exceptional operating conditions

When the operating conditions differ from the normal conditions above, the following steps must be taken:

- If the working conditions are of a permanent nature, an agreement must be drawn up with the supervisory authority and any other party concerned.
- If the working conditions are of a temporary nature, take suitable measures, such as using a larger truck, or reducing the load appropriately.

Work in hazardous environments

A truck operating in an area where there is a risk of fire, explosion, or in any other high risk area, must be specially equipped for the purpose.

WARNING!
A truck is not normally equipped for these situations.

Parking

The truck must never be left unattended other than when in the intended parking space. The truck should always be parked on level ground. The parking brake must always be engaged. The forks must be lowered to their lowest position so that nobody can trip on them. Always turn off the truck so that it is cannot be operated. If the truck is equipped with a PIN code, the truck should be "logged off" so that a new code is required to restart, thereby preventing unauthorised use. See section *Switching off*

https://truckmanualshub.com/

the truck page 34. If the truck is equipped with a key switch, the key must be taken out when leaving the truck, so that unauthorised persons cannot use it. Fire insurance terms dictate whether or not the key should be taken out at the end of work. Check!

If the truck is left unused for a prolonged period without it being recharged, e.g. between two shifts, the battery plug must be disconnected.

CAUTION!
Do not block access to fire fighting equipment or fire doors by parking the truck or placing goods in front of them.

When lifting the truck

General

The truck may only be lifted using lifting eyes directly intended for lifting. The image shows where the permitted lift points are located on the truck. The lift points are marked with a decal showing a lifting hook.

When the truck is being lifted up with a jack, make sure that it is secured with blocks. The truck must not rest on the jack during operation.

WARNING!
Lifting of the truck should only be carried out by an authorised service technician.

WARNING!
If the truck is lifted incorrectly, parts may be damaged by being subjected to excessive force.

When lifting truck types PLL, PLE, PSL, PSD

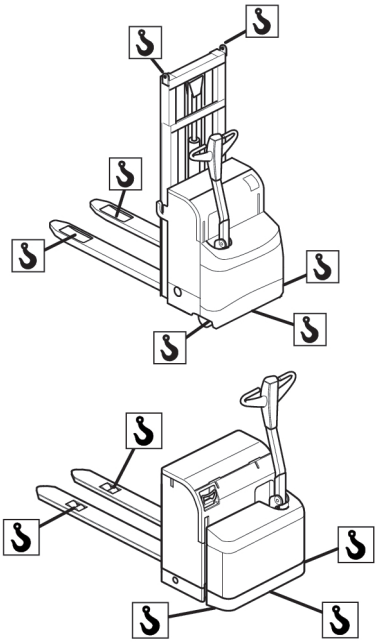

The illustration below shows where the jack should be placed.

https://truckmanualshub.com/

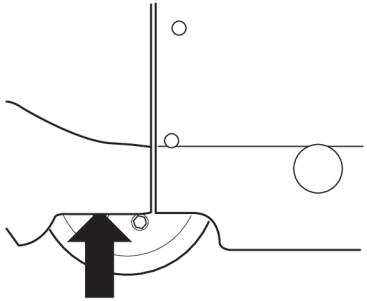

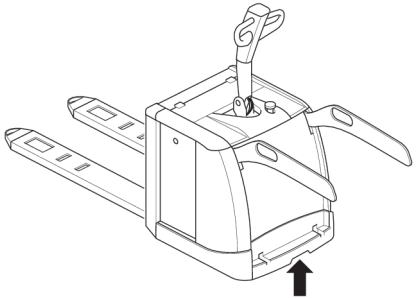

When lifting a PLP truck

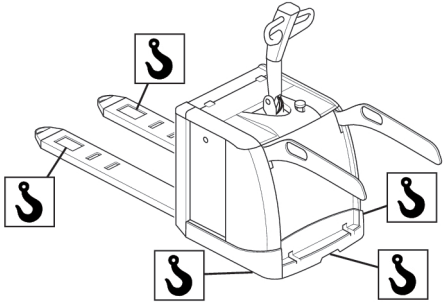

The illustration below shows where the jack should be placed.

When lifting truck types PS/PSH

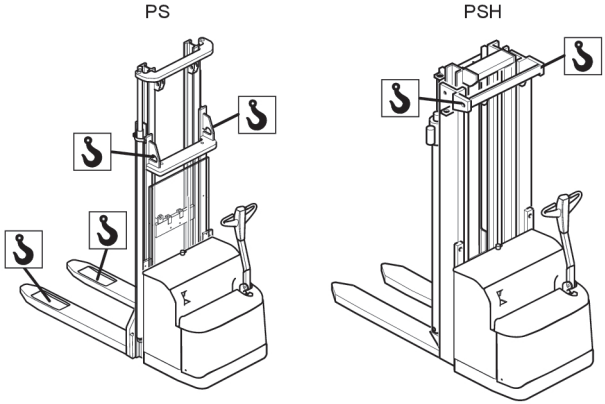

https://truckmanualshub.com/

When lifting TS trucks

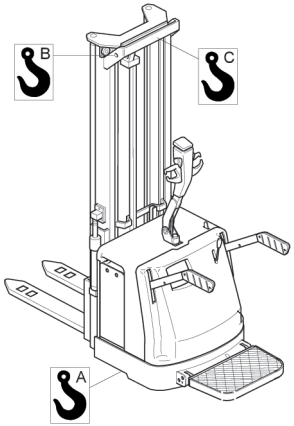

When lifting a TS truck that has free view frames, the lifting holes in the outer mast must be used (point B)

On machines with other mast types the lifting strap is attached round the upper mast strut (point C).

Assembling and putting into service

WARNING!
Assembling/dismantling and putting the truck into service may only be carried out by an authorised service technician.

The following actions are to be taken in order to make the truck ready for use.

- Charge the battery.
- Perform an inspection in accordance with *Daily maintenance (before each shift)* page 40.
- Visually inspect the truck, including the forks, for signs of damage.
- Check that the safety and warning signs are in place and are legible. See *Safety and warning signs* page 71.

Temporarily taking the truck out of service

Storage

If the truck is to be taken out of service for more than a month, it should be stored indoors in dry and frost-free premises.

Actions before storage

1) Clean the truck.
2) Clean and charge the battery in accordance with the battery manufacturer's maintenance instructions.
3) Check the oil level in the hydraulic system by looking at the markings on the truck, or alternatively by pushing all the hydraulic cylinders to their fully extended positions. Top up the oil if necessary.
4) Check the braking effect on the main brake and parking brake.

https://truckmanualshub.com/

5) Lubricate the truck in accordance with the lubrication chart.

6) Disconnect the battery plug.

Actions during storage

1) Charge the battery and check the cell electrolyte levels about every second month.

Putting back into service after storage

1) Clean the truck.

2) Clean and charge the battery in accordance with *Battery changing* page 22.

3) Check the gearbox and hydraulic oil levels.

4) Lubricate the truck in accordance with the lubrication chart.

5) Connect the battery plug.

6) Carry out a weekly inspection in accordance with *Weekly inspection* page 41.

WARNING!
The truck should only be put back into service by an authorised service technician.

Taking the truck out of service

If the truck is out of action and cannot be operated from the driver's seat using normal driving controls, contact the supervisor immediately.

In consultation with an authorised service organisation, the supervisor must make sure that the move can take place in a controlled manner, so that there is no risk of accident. The truck is moved using another truck of sufficient capacity to a suitable place where the repair can take place. The truck must be lifted using the specified lift points, see *When lifting the truck* page 66.

WARNING!
Ensure that the truck cannot fall over or slide off the forks while being moved.

Swinging loads

The truck is not equipped to handle hanging loads that may start to swing.

Installing the fire extinguisher

The fire extinguisher is to be installed in a suitable location so that it is easily accessible without interfering with the view or becoming a collision hazard in the case, for example, of severe braking.

WARNING!
It is not permitted to drill into the overhead guard pillars or the overhead guard itself.

https://truckmanualshub.com/

In the event of accidents

Report all accidents or incidents immediately to the supervisor. If possible, leave the truck where it is. If possible, take action to lessen the damage or harm, especially if there are people hurt. Avoid actions that might hinder accident investigation. In general, you must await the decision of the supervisor.

Noise/Sound levels

Noise levels at the driving position are lower than 70 dB(A) measured in accordance with European standard EN 12053.

Vibrations

Vibration data for truck models (tested in accordance with EN 13059+A1:2008).

PLP	$_{w,z}F$ = 0.63 m/s², measuring accuracy Cv 0.09
TS	$_{w,z}F$ = 0.62 m/s², measuring accuracy Cv 0.10

Climatic conditions

The normal operating temperature in which the truck is designed to operate in is in the range of +1°C to +25°C. Max short term temperature +40°C, min short term temperature -25°C.

Work platforms

When temporarily lifting persons with a truck without driver lifting, national regulations and recommendations for working with work platforms must be complied with.

Overhead guard

It is not permitted to remove the overhead guard from a truck which is equipped with one.

Protective shoes

Protective shoes must be worn when working with trucks according to applicable national standards.

Lighting

Work lighting facilitates work in poor light conditions. Work lighting is available as accessory for many models.

Additional units/Trailers

If, after delivery, it is decided to equip the truck with additional units, towing hitch equipment for trailers or other accessories which could influence the stability or braking capacity of the truck, an authorised representative of the truck manufacturer must be contacted. Before the truck is assembled, it must have been approved by its manufacturer, see *Truck modification* page 7.

https://truckmanualshub.com/

Safety and warning signs

General

NOTE!
There are a number of warning signs on the truck. Always replace signs that are damaged or missing.

Explanation of symbols

Crushing risk between moving parts

Do not stand under the forks

Do not stand on the forks

Passengers are only allowed at the designated positions on the truck (platform)

Read and comply with the Instruction Handbook before operating the truck.

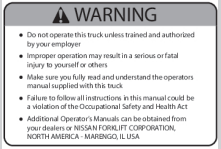

Read and comply with the Instruction Handbook before operating the truck.

https://truckmanualshub.com/

Only one person is allowed on the truck		

Locations of safety and warning signs on PLE, PSL, PSD, PS, PSH

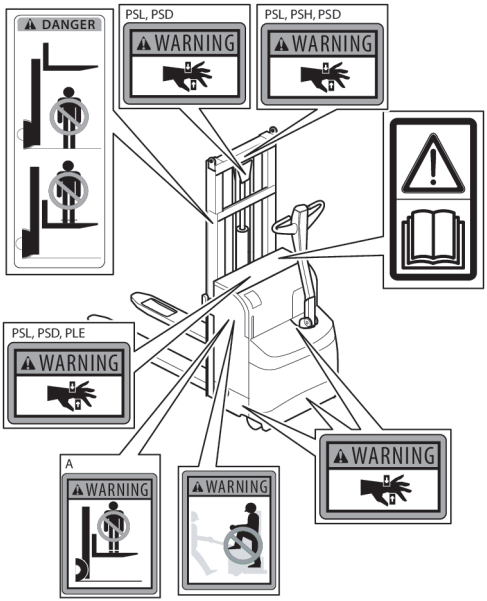

A. Only applies to PL*/PS* without mast.

https://truckmanualshub.com/

Locations of safety and warning signs on PLL

Europe

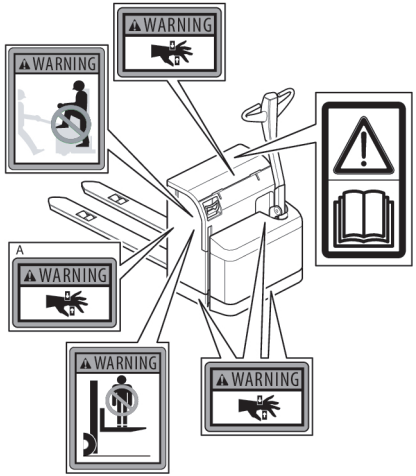

A. Only applies to PLL with battery on rollers.

USA

A. Only applies to PLL with battery on rollers

https://truckmanualshub.com/

Locations of safety and warning signs on PLP

Locations of safety and warning signs on TS

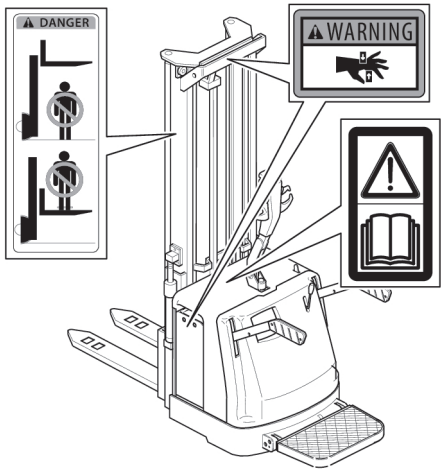

https://truckmanualshub.com/

Dimensions PL*/PS*

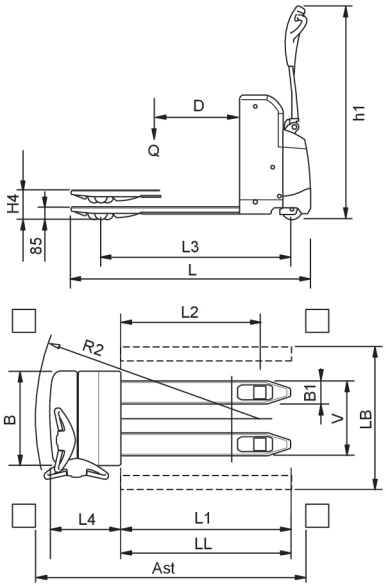

Figure 13. Positions for dimensions PLL

Table 10. Truck type and dimensions in mm

Measurements	PLL 145	PLL 180	PLL 200
D	600	600	600
H4	205	205	205
R2	1385/1575	1385/1575	1385/1575
H6			
L	1495/1685	1495/1685	1495/1685
B	660	660	660
L1	1000/1190	1000/1190	1000/1190
V (width over forks, std max-min)	520/680	520/680	520/680
V (width between fork shanks)	200/360	200/360	200/360
L4	495	495	495
B1	160-48	160-48	160-48
H1	85	85	85
L2	785-975	785-975	785-975
L3	1128/1318	1128/1318	1128/1318

https://truckmanualshub.com/

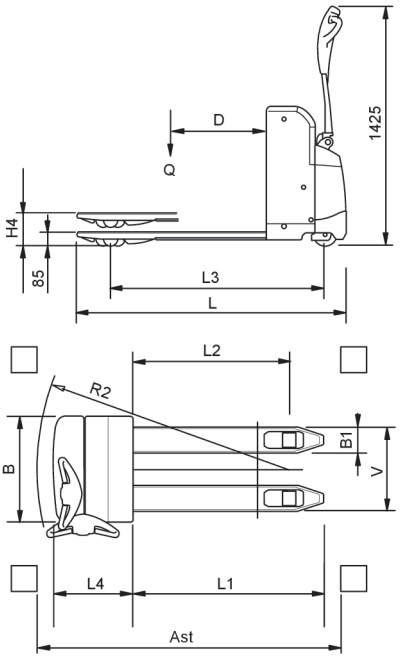

Figure 14. Positions for dimensions PLE

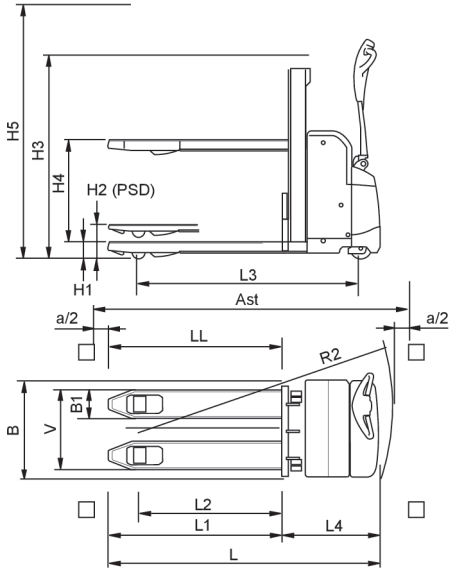

Figure 15. Positions for dimensions PSD/PSL

Table 11. Truck type and dimensions in mm

Measurements	PLE	PSD 125/160	PSL
D	600	600	600
H4	730		
H3	880		

https://truckmanualshub.com/

Measurements	PLE	PSD 125/160	PSL
H5	1090		
H2	210		
R2	1710	1755	1755
L	1770	1873	1873
B	660	660	660
L1	1200	1200	1200
V (width over forks, std max-min)	534	540	540
V (width between fork shanks)		170	170
L4	570	673	673
B1	184-60	185-65	185-65
H1	88		92
B2	166		175
L2	990	990	950
L3	1412	1510	1510

Dimensions PS, PSH

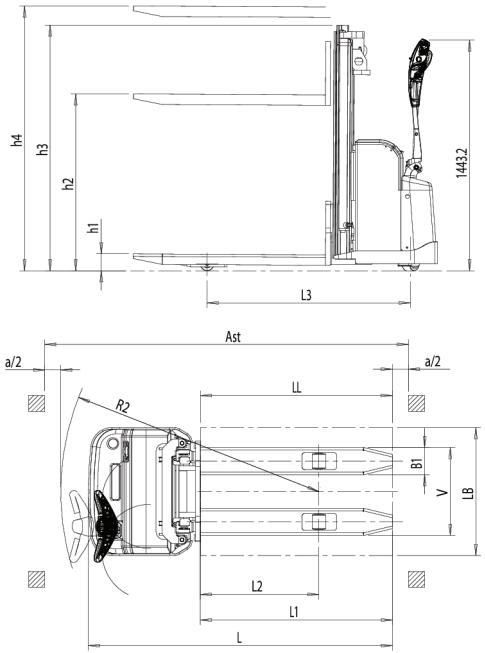

Measurements	PSH 200 SDTFV	PSH 200 BDTFV	PS 125 TV/TFV
H5	4118-5918	4130-5930	3105-4010
H4	3600-5400	3600-5400	2690-3590

https://truckmanualshub.com/

Measurements	PSH 200 SDTFV	PSH 200 BDTFV	PS 125 TV/TFV
H3	1738-2338	1735-2335	1845-2300
H1	90	60	90
L	2030	2000	1700/1900
L1	1000/1150	800/1000/1150	1000/1200
L2	650/800	732	752
L3	1498	1480	1282
L4	880	880	700
R2	1675	1663	1665
B1	195x70	100x50	170x65
B2	180	855	-
V	570	316-773	550

Measurements	PSH 160					
	SDTFV	BDTFV	BT	ST	STFV	BTFV
H5	4112-5912	4125-5925	2183-4713	2170-4700	2170-4700	3413-4713
H4	3600-5400	3600-5400	1670-4200	1670-4200	1670-4200	2900-4200
H3	1740-2340	1740-2340	1375-2640	1375-2640	1375-2640	1990-2640

Measurements	PSH 160					
	SDTFV	BDTFV	BT	ST	STFV	BTFV
H1	90	60	60	90	90	60
L	1980	2000	2000	1980	1980	2000
L1	1000/1150	800/1000/1150	800/1000/1150	1000/1150	1000/1150	800/1000/1150
L2	650-800	743	743	650-800	650-800	743
L3	1448	1430	1430	1448	1448	1430
L4	830	830	830	830	830	830
R2	1625	1613	1613	1625	1625	1613
B1	170x70	170x70	170x70	170x70	170x70	170x70
B2	265	855	855	265	265	855
V	560	316-773	316-773	560	560	316-773

https://truckmanualshub.com/

Dimensions PLP

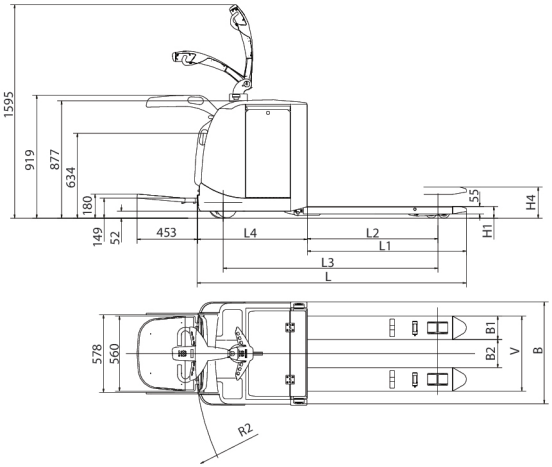

Figure 16. PLP

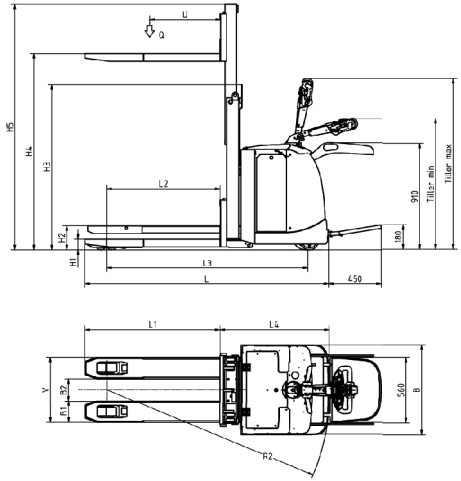

Figure 17. PLP CD

Table 12. Truck type and dimensions in mm

Measurements	PLP 200	PLP 250	PLP 200 CD
H5			2095
H4	205	205	1675
H3			1410
H1	85	85	90
R2	770+L2	835+L2	1900

https://truckmanualshub.com/

Measurements	PLP 200	PLP 250	PLP 200 CD
L	750+L1	825+L1	2085
B	770	770	770
L1	1000/2375	1000/2375	1150
V (width over forks, std max-min)	680/460	680/480	560
V (width between fork shanks)	V-350	V-350	190
L4	750	825	934
B1	175x55	175x55	185x65
H1	85	85	90
L2	785-1765	785-1465	958
L3	551+L2	626+L2	

Dimensions TS

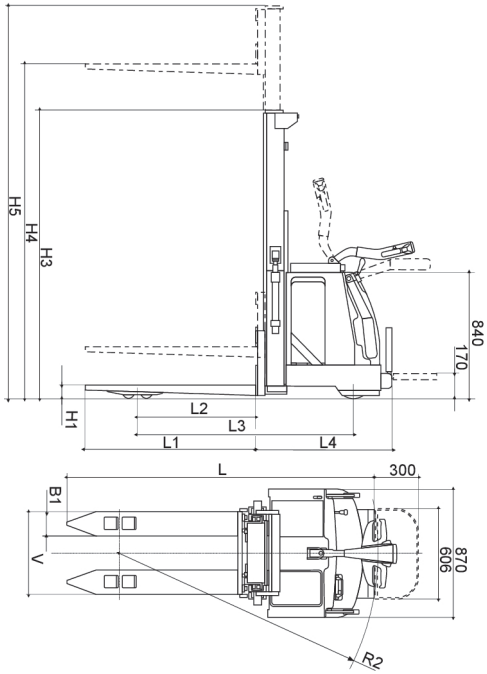

https://truckmanualshub.com/

Table 13. Truck type and dimensions in mm

Measurements	TSP			TSL		
	120	140	150	120	140	150
H5	3100-4005	2170-4700	2170-4700	3100-4005	2170-4700	2170-4700
H4, T		1670-4200	1670-4200		1670-4200	1670-4200
H4, TV	2690-3590			2690-3590		
H4, TFV		1670-4200	1670-4200		1670-4200	1670-4200
H4, DTFV		3600-4800	3600-5400		3600-4800	3600-5400
H3	1840-2295	1375-2640	1375-2640	1840-2295	1375-2640	1375-2640
H2	170	203	203	170	203	203
H1	90	90	90	90	90	90
L	L1+L4	L1+L4	L1+L4	L1+L4	L1+L4	L1+L4
L1	1200	1000/1150	1000/1150	1200	1000/1150	1000/1150
L2	750	650/800	650/800	750	650/800	650/800
L3	1335	1473	1473	1335	1473	1473
L4	901	959	959	819	877	877
R2	1674	1784	1784	1569	1679	1679

Measurements	TSP			TSL		
	120	140	150	120	140	150
B1	170x65	170x55	170x55	170x65	170x55	170x55
V	550	560	560	550	560	560

https://truckmanualshub.com/

Weight PLL, PLE, PSL, PSD, PS, PSH

Truck	Service weight with/without battery (kg)
PLL 145	460 / 280
PLL 180	460 / 280
PLL 200	465 / 285
PLE	565 / 405
PSL	775 / 550
PSD 125/160	800 / 560

Weight PS, PSH

Truck	Service weight with/without battery (kg)
PS 125 TV	915 / 740
PS 125 TFV	930 / 755
PSH 160BDTFV	1350 / 1050
PSH 160SDTFV	1300 / 1000
PSH 200BDTFV	1600 / 1300
PSH 200SDTFV	1550 / 1250
PSH 160BT	1350 / 1050
PSH 160ST	1300 / 1000
PSH 160STFV	1300 / 1000
PSH 160BTFV	1350 / 1050

Weight PLP

Truck	Service weight with/without battery (kg)
PLP 200	860 / 530
PLP 200 CD	1106 / 810
PLP 250	925 / 545

Weight TS

Truck	Service weight with/without battery (kg)
TSP 120 TV	1070 / 800
TSP 140T	1120 / 850
TSP 140TFV	1230 / 960
TSP 140DTFV	1230 / 960
TSP 150T	1120 / 850
TSP 150TFV	1230 / 960
TSP 150DTFV	1230 / 960

https://truckmanualshub.com/

Truck	Service weight with/without battery (kg)
TSL 120 TV	1070 / 800
TSL 140T	1120 / 850
TSL 140TFV	1230 / 960
TSL 140DTFV	1230 / 960
TSL 150T	1120 / 850
TSL 150TFV	1230 / 960
TSL 150DTFV	1230 / 960

https://truckmanualshub.com/

Ordering a Spare Parts Manual

We do not automatically send out spare parts catalogues with delivery of your truck. It is possible to order a Spare Parts Manual via your local distributor, for a fee. Delivery time is estimated at around three weeks.

Complete the order form below and send it to your local distributor.

TRUCK TYPE	P/N	QUANTITY
PLL/PSD/PSL/PLE	159249	
PLP	159250	
PS/PSH	159251	
TS	005937	

Name

.....

Company

.....

Address

.....

Country

.....

Tel

.....

Fax

.....