Original instructions

Electric truck

RX60-60
RX60-70
RX60-80
RX60-80/900

6341 6342 6343 6344

56358042501 EN - - 11

first in intralogistics

Address of manufacturer and contact details

STILL GmbH
Berzeliusstraße 10
22113 Hamburg, Germany
Tel. +49 (0) 40 7339-0
Fax: +49 (0) 40 7339-1622
Email: info@still.de
Website: http://www.still.de

Rules for the operating company of industrial trucks

In addition to these operating instructions, a code of practice containing additional information for the operating companies of industrial trucks is also available.

This guide provides information for handling industrial trucks:

- Information on how to select suitable industrial trucks for a particular area of application
- Prerequisites for the safe operation of industrial trucks
- Information on the use of industrial trucks
- Information on transport, initial commissioning and storage of industrial trucks

Internet address and QR code

The information can be accessed at any time by pasting the address **https://m.still.de/vdma** in a web browser or by scanning the QR code.

Spare parts list

You can request to download the spare parts list by copying and pasting the address **https://sparepartlist.still.eu** into a web browser or by scanning the QR code shown to the side.

On the web page, enter the following password: **Spareparts24!**

On the next screen, enter your email address and truck serial number to receive an email with the link and download the spare parts list.

2511

1 Foreword

Your truck 2
Description of the truck 2
General 4
Conformity marking 5
Declaration that reflects the content of the declaration of conformity 6
Accessories 7
Overview 8
Nameplate 12
Production number 13
StVZO (Road Traffic Licensing Regulations) information 14
Nameplate of a lithium-ion battery 14

Using the truck 16
Commissioning 16
Proper usage 16
Proper use during towing 16
Improper use 17
Place of use 17
Parking in temperatures below -10 °C 18
Using working platforms 19

Information about the documentation 20
Documentation scope 20
Supplementary documentation 21
Issue date and topicality of the operating instructions 22
Copyright and trademark rights 22
Explanation of information symbols used 22
List of abbreviations 23
Units 25
Definition of directions 26
Schematic views 27

Environmental considerations 28
Packaging 28
Disposal of components and batteries 28

2 Safety

Definition of responsible persons 30
Operating company 30
Specialist 30
Drivers 31

Basic principles for safe operation 33
Insurance cover on company premises 33
Modifications and retrofitting 33
Changes to the overhead guard and roof loads 35
Warning regarding non-original parts 36
Damage, defects and misuse of safety systems 36
Tyres 37
Medical equipment 38
Exercise caution when handling gas springs and accumulators 39
Length of the fork arms 39

Residual risk 41
Residual dangers, residual risks 41
Special risks associated with using the truck and attachments 42
Overview of hazards and countermeasures 44
Danger to employees 46

Safety tests 48
Regular safety inspection of the truck 48
Insulation testing 48

Safety regulations for handling consumables 50
Permissible consumables 50
Oils 50
Hydraulic fluid 51
Battery acid 52
Coolant and cooling fluid 53
Disposal of consumables 54

Emissions 55

3 Overviews

Overview 60

Driver's compartment 62

Operating devices and display elements 63
Display operating unit 63
Operating devices for hydraulic and driving functions 64
Double mini-lever 65
Three-way mini-lever 66
Four-way mini-lever 67
Joystick 4Plus 68
Fingertip 69
Mini console 70

4 Operating

Checks and tasks before daily use 72
Visual inspections 72
Climbing into and out of the truck 75
Shelves and cup holders 78
Adjusting the MSG 65/MSG 75 driver's seat 78
Adjusting the armrest. 83
Adjusting the steering column 84
Unlocking the emergency off switch 85
Operating the signal horn 85
Seat belt 86
Using the driver's cab 89
Checking the brake system for correct function 90
Checking the steering system for correct function. 93
Checking the emergency off function 93
Checking the vertical lift mast position (variant) for correct function 94
Zero adjustment of the load measurement (variant) 95

Switching on 97
Switching on the key switch. 97
Access authorisation with PIN code (variant) 99

Operating the display-operating unit 110
Indicators 110
Adjusting the displays 112
Symbols in the display. 114
Setting the date or time 118
Resetting the daily kilometres and daily operating hours 119
Setting the language 119
Softkeys for operating various equipment variants 120
Configuring Blue-Q efficiency mode 120

Blue-Q efficiency mode 122
Functional description 122
Switching off additional consumers 123
Switching efficiency mode Blue-Q on and off 124

Driving 125
Safety regulations when driving. 125
Roadways 127
Setting the drive programme 129
Sprint mode (variant). 131
Selecting the drive direction 132
Actuating the drive direction switch, mini-lever version. 133

Actuating the vertical rocker button for the "drive direction", Joystick 4Plus version. . . . 133
Actuate the drive direction switch, fingertip version. 134
Actuating the drive direction switch, mini-console version 134
Starting drive mode 134
Starting drive mode, dual pedal version (variant) 137
Operating the service brake 140
Actuating the mechanical parking brake 141
Steering 143
Reducing speed when turning (Curve Speed Control) 144
Driving on ascending and descending gradients. 145
Reducing speed with a raised load (variant) 146

Parking. 147
Parking the truck securely and switching it off. 147
Wheel chock (variant) 148

Lifting 149
Lifting system variants 149
Automatic lift cut out (variant) 149
Lift mast vertical position (variant). 150
Types of lift mast 154
Malfunctions during lifting mode 155
Hydraulic blocking function 156
Lifting system operating devices 157
Controlling the lifting system using a double mini-lever. 158
Controlling the lifting system using a triple mini-lever 160
Controlling the lifting system using a quadruple mini-lever 161
Controlling the lifting system using the Joystick 4Plus 162
Controlling the lifting system with the fingertip console. 165
Changing the fork arms 166
Fork extension (variant). 168
Operation with reversible fork arms (variant). 170

Handling loads 172
Safety regulations when handing loads. 172
Before taking up load. 173
Load measurement (variant) 174
Picking up loads 177
Danger area. 178
Transporting pallets 179
Transporting suspended loads 179
Load pick up 181
Transporting loads. 184
Setting down loads 187

Driving on lifts . . . 189
Driving on loading bridges . . . 190

Attachments . . . 191
Fitting attachments . . . 191
Releasing the pressure from the hydraulic system . . . 194
General instructions for controlling attachments . . . 196
Controlling attachments using a double mini-lever . . . 198
Controlling attachments using the double mini-lever and the 5th function . . . 200
Controlling attachments using a triple mini-lever . . . 202
Controlling attachments using the triple mini-lever and the 5th function . . . 204
Controlling attachments using a quadruple mini-lever . . . 206
Controlling attachments using the quadruple mini-lever and the 5th function . . . 208
Controlling attachments using the Joystick 4Plus . . . 210
Controlling attachments with Joystick 4Plus and the 5th function . . . 211
Controlling the attachments with fingertip . . . 212
Controlling attachments with fingertip and the 5th function . . . 213
Clamp locking mechanism (variant) . . . 215
Taking up a load using attachments . . . 218

Auxiliary equipment . . . 220
Switching the lighting on and off . . . 220
Switching the working spotlight for reverse travel on and off . . . 221
Switching the rotating beacon on and off . . . 221
Switching the hazard warning system on and off . . . 222
Switching the turn indicators on and off . . . 222
Switching the double working spotlights on and off . . . 224
STILL SafetyLight (variant) . . . 226
Operating the windscreen wiper/washer . . . 227
Filling the washer system . . . 227
FleetManager (variant) . . . 228
Shock recognition (variant) . . . 228
12-V socket . . . 229
Driver restraint systems (variants) . . . 229
Ceiling sensor (variant) . . . 230

Cab . . . 236
Opening the cab door . . . 236
Closing the cab door . . . 237
Opening the side windows . . . 237
Closing the side windows . . . 238
Operating the interior lighting . . . 239
Operating the rear window heating . . . 240
Radio (variant) . . . 240

Heating system (variant) 241
Push-up roof window (variant) 243
Clipboard (variant) 243

Trailer operation 244
Towed load 244
Coupling pin in the counterweight 245
Automatic tow coupling 247
Towing trailers 255

Display messages 256
Display content 256
Error code table 256
General messages 260
Drive-specific messages 270

Connecting and disconnecting the battery male connector 273
Connecting the battery male connector 273
Disconnecting the battery male connector 274

Handling the battery 276
Safety regulations when handling the battery 276
Checking the battery charge status 279
Charging the lead-acid battery 279
Equalising charging to preserve the battery capacity 283

Replacing and transporting the battery 285
General information on replacing the battery 285
Changing to a different battery type 285
Opening and closing the battery cover 286
Replacing the battery 288

PowerPlusLife battery 295
PowerPlusLife® battery 295
PowerPlusLife® temperature monitoring 296
PowerPlusLife® error messages 297

Cleaning 298
Clean the truck 298
Cleaning the electrical system 300
Cleaning load chains 300
Cleaning the windows 301
After cleaning 301

Procedure in emergencies 303
Emergency shutdown 303
Procedure if truck tips over 305

Emergency hammer 306
Emergency lowering 306
Releasing the spring-operated brake 308
Towing 311

Transporting the truck 315
Transportation 315
Crane loading 317

Decommissioning 321
Shutting down and storing the truck 321
Re-commissioning after shutdown 323

5 Maintenance

Safety regulations for maintenance 326
General information 326
Working on the hydraulic equipment 326
Working on the electrical equipment 325
Safety devices 327
Set values 327
Lifting and jacking up 327
Working at the front of the truck 328

General maintenance information 330
Personnel qualifications 330
Information for carrying out maintenance 330
Maintenance - 1000 hours/annually 333
Maintenance - 3000 hours/every two years 336
Ordering spare parts and wearing parts 336
Quality and quantity of the required operating materials 336
Lubrication plan 338
Maintenance data table 339

Providing access to maintenance points 342
Removing and attachingthe left side cover 342
Installing and removing the bottom plate 342
Opening/closing the front right cover 344
Removing and attaching the rear cover 345

Preserving operational readiness 346
Checking the coolant level 346
Topping up cooling fluid and checking coolant content 347
Cleaning the radiator and checking the radiator for leak tightness 350
Checking the battery condition, acid level and acid density 352
Changing the heating system fresh air filter 353

Lubricating the joints and controls 354
Maintaining the seat belt 355
Checking the driver's seat 356
Checking the door latch 357
Replacing the recirculated air filter for the heating system 357
Servicing wheels and tyres 358
Replacing the fuses 360
Checking the hydraulic oil level 362
Checking the hydraulic system for leak tightness 364
Lubricating the lift mast and roller track 365
Greasing the automatic tow coupling 365

6 1000-hour maintenance/annual maintenance

Other work that must be carried out 370

Checking the lift cylinders and the hydraulic connections for leak tightness 370

Checking the fork arms 370

Checking the reversible fork arms 371

7 Technical data

Dimensions 374

VDI datasheet 376

Eco-design requirements for electric motors and variable speed drives 380

Ergonomic dimensions 381

Battery specifications 382

Fuse assignment 384

1

Foreword

Your truck

Description of the truck

General

The electrically driven counterbalanced trucks from series RX60–60/70/80 have a load capacity of up to eight tonnes with a load centre of gravity of 900 mm. This means that the truck can reach a top speed of 17 km/h, which can be increased to 20 km/h thanks to sprint mode and PowerPlusLife battery.

The bend-resistant and warp-resistant lift mast enables safe load handling during indoor and outdoor use, even with heavy loads. In addition, the driver's compartment features the most up-to-date ergonomic design in order to support safety. The steering column and the driver's compartment are both offset to one side, enabling comfortable working and preventing fatigue.

The low centre of gravity of the truck provides stability, which is guaranteed if the truck is used according to its intended use.

The truck is equipped with a particularly long-life air-cooled battery. Thanks to the high battery capacity of 1240 Ah and battery replacement from the side, the truck is suitable for multi-shift use. In addition, the series supports all the functions of FleetManager4.x.

Brake system

The brake system of the truck comprises three different brakes:

- Service brake
- Regenerative brake
- Parking brake

The service brake is based on a wear-free, oil-immersed multi-disc brake. This multi-disc brake is used as the service brake for heavy braking or emergency braking with the brake pedal. In the normal working mode, the regenerative brake of the electric traction motor takes effect. The regenerative brake converts the acceleration energy of the truck into electrical energy. This causes the truck to decelerate as soon as the accelerator pedal is

released. Completely removing your foot from the accelerator pedal causes the truck to brake until it comes to a standstill. A parking brake ensures that the truck remains securely in place when parked.

Steering

The truck is equipped with a swing axle and has kickback-free, hydraulic rear-wheel steering. Stability is guaranteed when cornering thanks to speed limitation based on the steering angle. The simple handling of the truck is assisted by the agile steering axle.

Hydraulic system

The steering, the lift cylinders and the tilt cylinders of the lift mast are all supplied by the electrically driven hydraulic pump.

The directional control valve block with electrical proportional technology ensures extremely sensitive movements and safe handling of the load. The hydraulic functions can be parameterised individually by the authorised service centre.

Up to three hydraulic circuits can be used to activate attachments (variant). Depending on the equipment, a hydraulic accumulator is also available in the lifting circuit for the purpose of dampening pressure peaks in the hydraulic system.

Drive concept

The RX60 60–80 is driven by a maintenance-free 80-volt three-phase drive.

Power is supplied by a battery that is located at the side for ease of access. The optional cold store variant is available for operating the truck in temperatures down to —30°C.

The driver can help to influence the energy consumption and performance of the truck using the Blue-Q efficiency mode, which allows the required setting for each current application to be called up via the display-operating unit.

Operating devices

The truck is characterised by an accessible operating concept. When purchasing the truck, a variety of operating devices and equipment variants are available:

- Double mini-lever
- Triple mini-lever
- Quadruple mini-lever
- Joystick 4Plus
- Fingertip switch
- Single pedal
- Dual pedal

Hands are always kept free for steering and for controlling the operational movements to allow efficient working. The forces that need to be applied for this purpose are reduced to a minimum thanks to the compact steering wheel.

Operational information, such as the fuel level or an indication that the Blue-Q energy-saving mode is enabled, is shown on the display-operating unit.

For drive mode, the truck features either single-pedal or dual-pedal operation. The accelerator pedal is used to accelerate and brake (regenerative brake) the truck. In emergency situations or when carrying heavy loads, the driver can also brake the truck using the service brake by pressing the brake pedal. In dual-pedal operation, the truck has one pedal for the "Forwards" drive direction and one pedal for the "Reverse" drive direction. Acceleration and braking behaviour can be individually selected from five different drive programmes.

General

The truck described in these operating instructions corresponds to the applicable standards and safety regulations.

If the truck is to be operated on public roads, it must conform to the existing national regulations for the country in which it is being used. The driving permit must be obtained from the appropriate office.

The truck has been fitted with state-of-the-art technology. Following these operating instructions will allow the truck to be handled safely. By complying with the specifications in these operating instructions, the functionality and the approved features of the truck will be retained.

Get to know the technology, understand it and use it safely - these operating instructions provide the necessary information and help to avoid accidents and to keep the truck ready for operation beyond the warranty period.

Therefore:

– Before commissioning the truck, read the operating instructions and follow the instructions.

– Always follow all of the safety information contained in the operating instructions and on the truck.

Conformity marking

The manufacturer uses the conformity marking to document the conformity of the industrial truck with the relevant directives at the time of placing on the market:

- CE: in the European Union (EU)
- UKCA: in the United Kingdom (UK)
- EAC: in the Eurasian Economic Union

The conformity marking is applied to the nameplate. A declaration of conformity is issued for the EU and UK markets.

An unauthorised structural change or addition to the industrial truck can compromise safety, thus invalidating the declaration of conformity.

▷

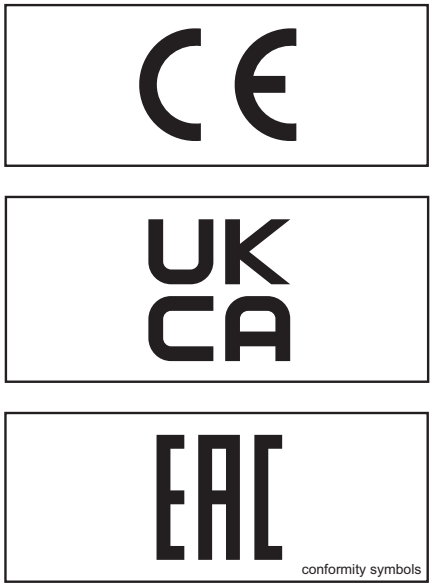

conformity symbols

Declaration that reflects the content of the declaration of conformity

Declaration

STILL GmbH
Berzeliusstraße 10
22113 Hamburg Germany

We declare that the specified machine conforms to the most recent valid version of the directives specified below:

Industrial truck type	**corresponding to these operating instructions**
Model	**corresponding to these operating instructions**

– "Machinery Directive 2006/42/EC" [1)]
– "Supply of Machinery Safety Regulations 2008, 2008 No. 1597" [2)]

Personnel authorised to compile the technical documents:

See declaration of conformity

STILL GmbH

[1)] For the markets of the European Union, the EU candidate countries, the EFTA States and Switzerland.
[2)] For the United Kingdom market.

The declaration of conformity document is supplied with the industrial truck. The declaration shown explains the conformity with the provisions of the EC Machinery Directive and the Supply of Machinery Safety Regulation 2008, 2008 No. 1597.

An unauthorised structural change or addition to the industrial truck can compromise safety, thus invalidating the declaration of conformity.

The declaration of conformity must be carefully stored and made available to the responsible authorities if necessary. It must also be handed over to the new owner if the industrial truck is sold on.

Accessories

- Key for key switch (two pieces)
- Key for cab (variant)
- Hexagon socket wrench for emergency lowering

Overview

Labelling points, left

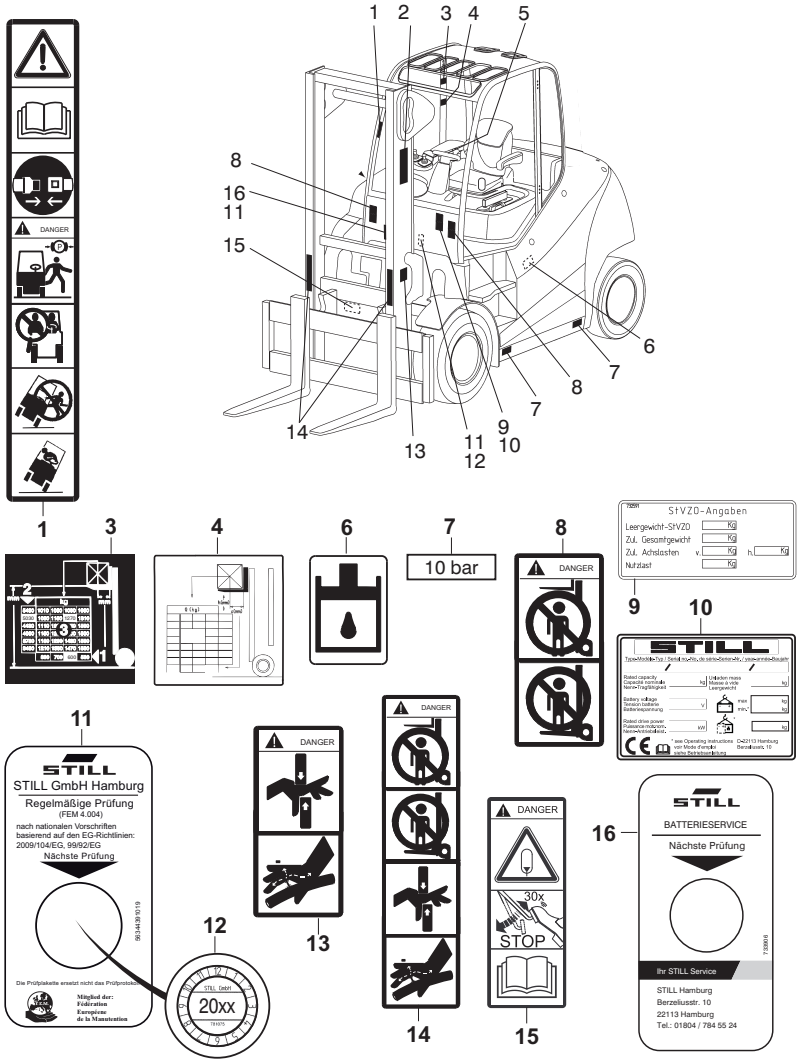

Your truck

1 Decal information: Caution/Read the operating instructions/Fasten seat belt/Apply parking brake when leaving the truck/Passengers are not allowed/Do not jump off if the truck is tipping over/Lean in the opposite direction to which the truck is tipping
2 Manufacturer's label text
3 Decal information: Capacity rating plate
4 Decal information: Attachment capacity rating plate
5 Manufacturer's label text
6 Decal information: Hydraulic oil tank
7 Decal information: Tyre filling pressure
8 Warning sign: Do not stand underneath the fork/Do not stand on the fork
9 Decal information: StVZO (German Road Traffic Licensing Regulations) information (variant)
10 Decal information: Nameplate
11 Decal information: Inspection sticker
12 Decal information: FEM test
13 Warning sign: Danger due to shearing/Danger due to high fluid pressure
14 Warning sign: Do not stand underneath the fork/Do not stand on the fork/Danger due to shearing/Danger due to high fluid pressure
15 Warning sign: Actuate accumulator/brake pedal 30x/Read operating instructions
16 Decal information: Battery service

Labelling points, right

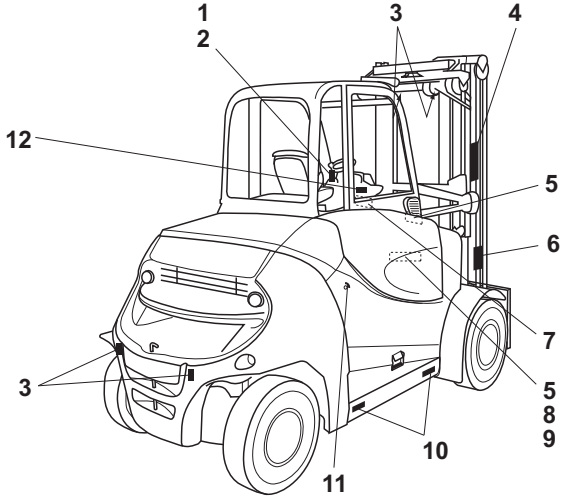

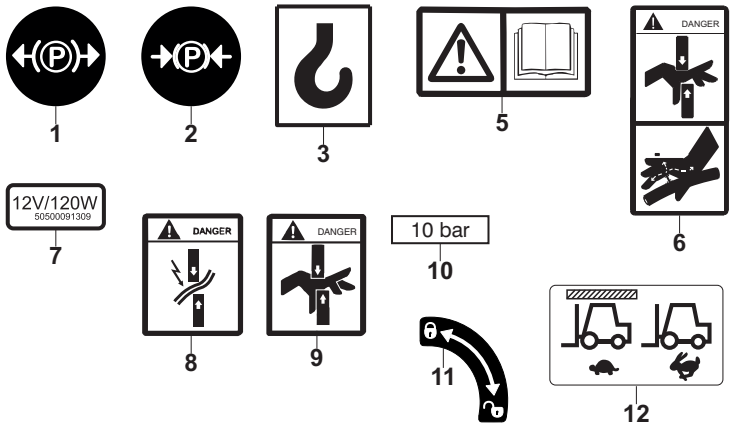

1 Decal information: Parking brake released
2 Decal information: Parking brake applied
3 Decal information: Lifting gear attachment point
4 Manufacturer's label text
5 Decal information: Caution/read the operating instructions
6 Warning sign: Danger due to shearing/ Danger due to high fluid pressure
7 Decal information: 12-V socket
8 Warning sign: Risk of short circuit due to shearing
9 Warning sign: Danger due to shearing
10 Decal information: Tyre filling pressure
11 Decal information: To unlock, turn 90° to the right/to lock, turn 90° to the left
12 Decal information: Ceiling sensor

Nameplate

Variant 1: Industrial trucks built up to 12/2021

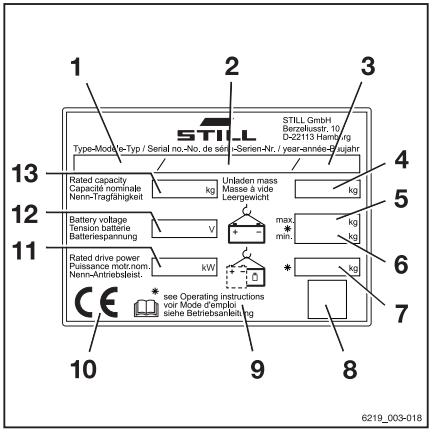

1 Model
2 Production number
3 Year of manufacture
4 Tare weight in kilograms
5 Maximum permitted battery weight in kilograms (only for electric trucks)
6 Minimum permitted battery weight in kilograms (only for electric trucks)
7 Ballast weight in kilograms (only for electric trucks)
8 Data matrix code
9 For more detailed information, refer to the technical data in the operating instructions
10 CE labelling
11 Nominal drive power in kilowatts
12 Battery voltage V
13 Rated capacity in kilograms

Variant 2: Industrial trucks built after 12/2021

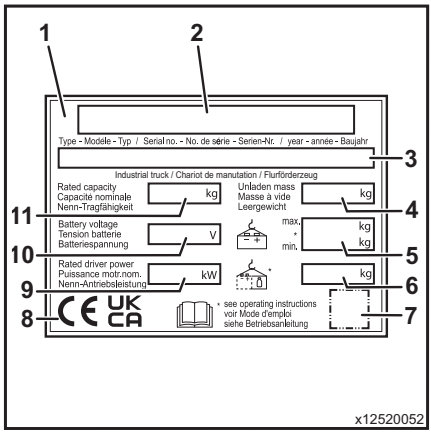

1 Nameplate
2 Manufacturer
3 Model/serial number/year of manufacture
4 Tare weight
5 Max. battery weight/min. battery weight (only for electric trucks)
6 Ballast weight (only for electric trucks)
7 Placeholder for "data matrix code"
8 Conformity marking: CE mark for the markets of the EU, the EU candidate countries, the EFTA States and Switzerland; UKCA mark for the United Kingdom market; EAC mark for the Eurasian Economic Union market
9 Rated drive power
10 Battery voltage (only for electric trucks)
11 Rated capacity

NOTE

- *It is possible for there to be multiple conformity markings on the nameplate.*
- *The EAC mark may also be located in the immediate vicinity of the nameplate.*

Production number

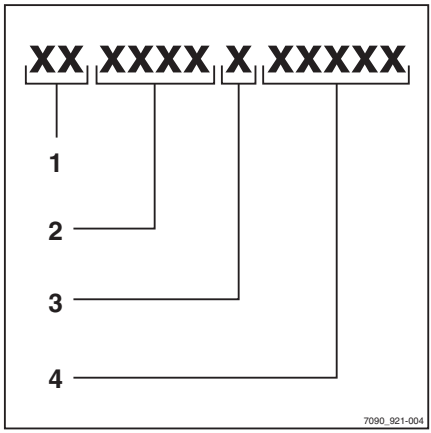

NOTE

The production number is used to identify the truck. It can be found on the nameplate and must be referred to in all technical questions.

The production number contains the following coded information:

(1) Production location

(2) Model

(3) Year of manufacture

(4) Sequential number

StVZO (Road Traffic Licensing Regulations) information

This label includes information on the weight and load distribution of the truck.

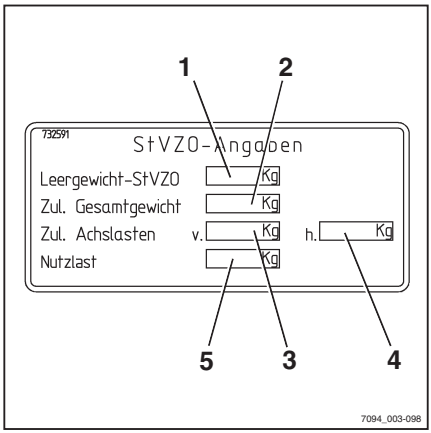

1 Tare weight (in kg)
2 Permitted total weight (in kg)
3 Permitted front axle weight (in kg)
4 Permitted rear axle weight (in kg)
5 Payload (in kg)

Nameplate of a lithium-ion battery

Variant 1: Industrial trucks built up to 12/2021

1 Manufacturer
2 Technology
3 Transportation notes
4 General operating notes
5 Data matrix code for the authorised service centre
6 CE labelling
7 Safety information
8 Data/technical data
9 Address of manufacturer

Variant 1: Industrial trucks built after 12/2021 ▷

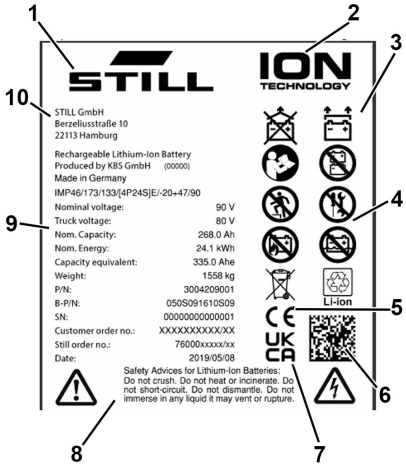

1 Manufacturer
2 Technology
3 Transportation notes
4 General operating notes
5 CE labelling
6 Data matrix code for the authorised service centre
7 UKCA labelling
8 Safety information
9 Data/technical data
10 Address of manufacturer

Using the truck

Commissioning

Commissioning is the initial intended use of the truck.

The necessary steps for the commissioning vary depending on the model and equipment of the truck. These steps require preparatory work and adjustment work that cannot be performed by the operating company. See also the chapter entitled "Definition of responsible persons".

– To commission the truck, contact the authorised service centre.

Proper usage

The truck described in these operating instructions is suitable for lifting, transporting and stacking loads.

The truck may only be used for its proper purpose as set out and described in these operating instructions.

If the truck is to be used for purposes other than those specified in the operating instructions, the approval of the manufacturer and, if applicable, the relevant regulatory authorities must be obtained beforehand to prevent hazards.

The maximum load to be lifted is specified on the capacity rating plate (load diagram) and must not be exceeded; see also the chapter entitled "Before picking up a load".

Proper use during towing

This truck is suitable for the occasional towing of trailers and is equipped with a towing device for this purpose. This occasional towing may not exceed 2% of the daily operating time. If the truck is to be used for towing on a more regular basis, the manufacturer should be consulted.

The regulations regarding trailer operation must be observed; see chapter "Trailer operation".

Improper use

The operating company or driver, and not the manufacturer, is liable for any hazards caused by improper use.

NOTE

Please note the definition of the following responsible persons: "operating company" and "driver".

Use for purposes other than those described in these operating instructions is prohibited.

DANGER

There is a risk of fatal injury from falling off the truck while it is moving!

– It is prohibited to carry passengers on the truck.

The truck may not be operated in areas where there is a risk of explosion, in areas that cause corrosion or in areas that are particularly dusty.

Stacking or unstacking on inclined surfaces or ramps is not permitted.

Place of use

The truck can be used both outdoors and in buildings. Operation on public roads is only permitted if the "StVZO" (German Road Traffic Licensing Regulations) equipment variant is installed.

If the truck is to be operated on public roads, it must conform to the national regulations for the country in which it is being used.

The ground must have an adequate load capacity (concrete, asphalt) and a rough surface. Routes, work areas and aisle widths must conform to the specifications in these operating instructions, see the "Routes" chapter.

Driving on upward and downward gradients is permitted provided the specified data and specifications are observed, see the "Routes "chapter.

The truck is suitable for indoor and outdoor use in countries ranging from the Tropics to Nordic regions (temperature range: -20 °C to +40 °C).

This truck is not designed to be operated in cold stores.

⚠ CAUTION

Batteries may freeze!

If the truck is parked in an ambient temperature of below -10 °C for an extended period, the batteries will cool down. The electrolyte may freeze and damage the batteries. The truck will then not be ready for operation.

– When the ambient temperature is below -10 °C, only park the truck for short periods of time.

The operating company must ensure suitable fire protection for the relevant application in the truck's surroundings. Depending on the application, additional fire protection must be provided on the truck. If in doubt, contact the relevant authorities.

NOTE

Please note the definition of "operating company" in the sense of responsible persons!

Parking in temperatures below -10 °C

⚠ CAUTION

Batteries may freeze!

If the truck is parked in an ambient temperature of below -10°C for an extended period, the batteries will cool down. The electrolyte may freeze and damage the batteries. The truck is then not ready for operation.

– At ambient temperatures of below -10°C, only park the truck for short periods of time.

Using working platforms

⚠ WARNING

The use of working platforms is regulated by national law. The use of working platforms is only permitted by virtue of the jurisdiction in the country of use.

– Observe national legislation.

– Before using working platforms, consult the national regulatory authorities.

Information about the documentation

Documentation scope

- Original operating instructions
- Original operating instructions for attachments (variant)
- Spare parts list
- Depending on the truck equipment, "UPA" operating instructions may also be provided

NOTE

Refer to the additional information in the section entitled "Rules for the operating company of industrial trucks".

These operating instructions describe all measures necessary for the safe operation and proper maintenance of the truck in all possible variants available at the time of printing. Special versions to meet customer requirements (UPA) are documented in separate operating instructions. If you have any questions, please contact your authorised service centre.

Enter the production number and year of manufacture from the nameplate in the space provided:

Production number:
Year of manufacture:

Please quote the production number in all technical enquiries.

Each truck comes with a set of operating instructions. These instructions must be stored carefully and must be available to the driver and operating company at all times. The storage location is specified in the chapter entitled "Overviews".

If the operating instructions are lost, the operating company must obtain a replacement from the manufacturer immediately.

The operating instructions are included in the spare parts list and can be reordered as a spare part.

The personnel responsible for operating and maintaining the equipment must be familiar with these operating instructions.

The operating company must ensure that all users have received, read and understood these operating instructions.

Safely store the complete documentation and pass on to the subsequent operating company when transferring or selling the truck.

NOTE

Please observe the definition of the following responsible persons: "operating company" and "driver".

Thank you for reading and complying with these operating instructions. If you have any questions or suggestions for improvements, or if you have found any errors, please contact the authorised service centre.

Supplementary documentation

This industrial truck can be fitted with a **C**usto-mer **O**ption (**CO**) that deviates from the stand-ard equipment and the variants.

This CO may consist of:

- Special sensors
- A special attachment
- A special towing device
- Customised attachments

When fitted with a CO, the industrial truck is provided with additional documentation. This may take the form of an insert or separate op-erating instructions.

The original operating instructions for this in-dustrial truck are valid for the operation of standard equipment and variants without re-striction. The operational and safety informa-tion in the original operating instructions con-tinues to be valid in its entirety unless it is countermanded in this additional documenta-tion.

The requirements for the qualification of per-sonnel as well as the time for maintenance may vary. This is defined in the additional doc-umentation.

– If you have any questions, contact your au-thorised service centre.

Issue date and topicality of the operating instructions

The issue date and the version of these operating instructions can be found on the title page.

STILL is constantly engaged in the further development of trucks. These operating instructions are subject to change, and any claims based on the information and/or illustrations contained in them cannot be asserted.

Please contact your authorised service centre for technical support relating to your truck.

Copyright and trademark rights

These instructions must not be reproduced, translated or made accessible to third parties —including as excerpts—except with the express written approval of the manufacturer.

Explanation of information symbols used

⚠ DANGER

Indicates procedures that must be strictly adhered to in order to prevent the risk of fatalities.

⚠ WARNING

Indicates procedures that must be strictly adhered to in order to prevent the risk of injuries.

⚠ CAUTION

Indicates procedures that must be strictly adhered to in order to prevent material damage and/or destruction.

NOTE

For technical requirements that require special attention.

ENVIRONMENT NOTE

To prevent environmental damage.

List of abbreviations

This list of abbreviations applies to all types of operating instructions. Not all of the abbreviations that are listed here will necessarily appear in these operating instructions.

Abbreviation	Meaning	Explanation
ArbSchG	Arbeitsschutzgesetz	German implementation of EU occupational health and safety directives
BetrSichV	Betriebssicherheitsverordnung	German implementation of the EU working equipment directive
BG	Berufsgenossenschaft	German insurance company for the company and employees
BGG	Berufsgenossenschaftlicher Grundsatz	German principles and test specifications for occupational health and safety
BGR	Berufsgenossenschaftliche Regel	German rules and recommendations for occupational health and safety
DGUV	Berufsgenossenschaftliche Vorschrift	German accident prevention regulations
CE	Communauté Européenne	Confirms conformity with product-specific European directives (CE labelling)
CEE	Commission on the Rules for the Approval of the Electrical Equipment	International commission on the rules for the approval of electrical equipment
DC	Direct Current	Direct current
DFÜ	Datenfernübertragung	Remote data transfer
DIN	Deutsches Institut für Normung	German standardisation organisation
EG	European Community	
EN	European standard	
FEM	Fédération Européene de la Manutention	European Federation of Materials Handling and Storage Equipment
F_{max}	maximum Force	Maximum power
GAA	Gewerbeaufsichtsamt	German authority for monitoring/issuing regulations for worker protection, environmental protection, and consumer protection
GPRS	General Packet Radio Service	Transfer of data packets in wireless networks
ID no.	Identification number	

Abbreviation	Meaning	Explanation
ISO	International Organization for Standardization	International standardisation organisation
K_{pA}	Uncertainty of measurement of sound pressure levels	
LAN	Local Area Network	Local area network
LED	Light Emitting Diode	Light emitting diode
L_p	Sound pressure level at the workplace	
L_{pAZ}	Average continuous sound pressure level in the driver's compartment	
LSP	Load centre of gravity	Distance of the centre of gravity of the load from the front face of the fork backs
MAK	Maximum workplace concentration	Maximum permissible air concentrations of a substance at the workplace
Max.	Maximum	Highest value of an amount
Min.	Minimum	Lowest value of an amount
PIN	Personal Identification Number	Personal identification number
PPE	Personal protective equipment	
SE	Super-Elastic	Superelastic tyres (solid rubber tyres)
SIT	Snap-In Tyre	Tyres for simplified assembly, without loose rim parts
StVZO	Straßenverkehrs-Zulassungs-Ordnung	German regulations for approval of vehicles on public roads
TRGS	Technische Regel für Gefahrstoffe	Ordinance on hazardous materials applicable in the Federal Republic of Germany
UKCA	United Kingdom Conformity Assessed	Confirms conformity with the product-specific directives that apply in the United Kingdom (UKCA labelling)
VDE	Verband der Elektrotechnik Elektronik Informationstechnik e. V.	German technical/scientific association
VDI	Verein Deutscher Ingenieure	German technical/scientific association
VDMA	Verband Deutscher Maschinen- und Anlagenbau e. V.	German Mechanical Engineering Industry Association
WLAN	Wireless LAN	Wireless local area network

Units

Unit symbol	Unit name	Explanation
°C	Degree Celsius	Unit of temperature
°F	Degree Fahrenheit	Unit of temperature
A	Ampere	Unit of electrical current
Ah	Ampere hour	Unit of electrical charge storage capacity (nominal capacity)
dB	Decibel	Unit of sound intensity
cm	Centimetre	Unit of length (1 cm = 10 mm)
cm^3	Cubic centimetres	Unit of volume
g	Gram	Unit of mass
h/d	Hours per day	Hours driven per day
kg	Kilogram	Unit of mass (1 kg = 1000 g)
kg/m^3	Kilograms per cubic metre	Unit of density (ratio of the mass of a body to its volume)
km/h	Kilometres per hour	Unit of speed
kN	Kilonewton	Unit of force (1 kN = 1000 N)
kW	Kilowatt	Unit of electrical power
kWh/h	Kilowatt hour/hour	Energy consumption
l	Litre	Unit of volume
l/h	Litres per hour	Unit of consumption
l/min	Litres per minute	Unit of consumption
m	Metre	Unit of length (1 m = 100 cm)
m/s^2	Metres per second squared	Unit of acceleration
min	Minute	Unit of time (1 min. = 60 s)
rpm	Revolution(s) per minute	Unit of revolution speed
mm	Millimetre	Unit of length (1 mm = 10^{-3} m)
N	Newton	Unit of force (1 N = 10^{-3} kN)
Nm	Newton metre	Unit of torque
s	Second	Base unit for time

Unit symbol	Unit name	Explanation
t	Tonne	Unit of mass (1 t = 1000 kg)
V	Volt	Unit of electrical voltage
W	Watt	Unit of electrical power
W/kg	Watt/kilogram	Performance by mass (power density)
Wh	Watt-hours	Unit of electrical work (nominal energy)
Wh/kg	Watt-hours/kilogram	Stored energy per kilogram of mass (energy density)

Definition of directions

▷

The directions "forwards" (1), "backwards" (3), "right" (2) and "left" (4) refer to the installation position of the parts as seen from the driver's compartment; the load is to the front.

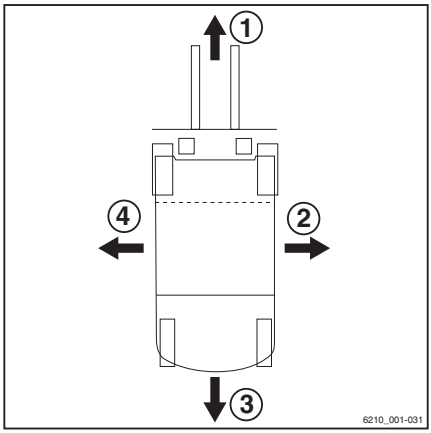

Schematic views

View of functions and operations

This documentation explains the (usually sequential) chain of certain functions or operations. Schematic diagrams of a counterbalance truck are used to illustrate these procedures.

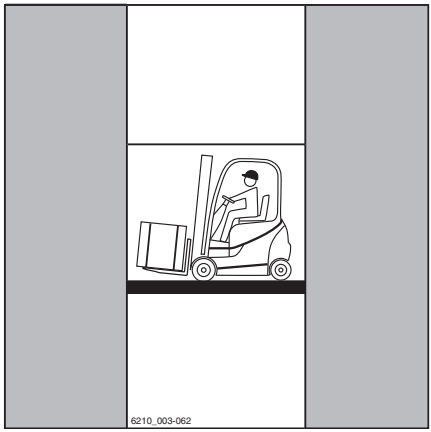

NOTE

These schematic diagrams are not representative of the structural state of the documented truck. The diagrams are used solely for the purpose of clarifying procedures.

View of the display operating unit

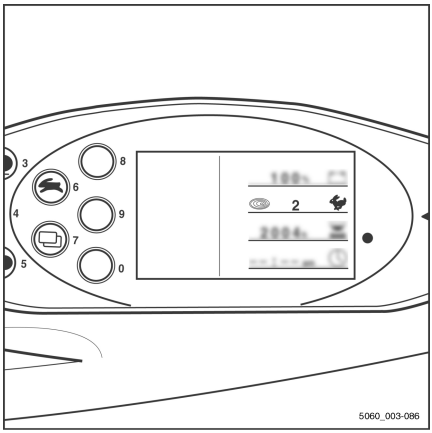

NOTE

Views of operating statuses and values in the display of the display operating unit are examples and partly dependent on the truck equipment. As a result, the displays shown of the actual operating statuses and values can vary. Information that is not relevant for descriptions is not shown.

Environmental considerations

Packaging

During delivery of the truck, certain parts are packaged to provide protection during transport. This packaging must be removed completely prior to initial start-up.

ENVIRONMENT NOTE

The packaging material must be disposed of properly after delivery of the truck.

Disposal of components and batteries

The truck is composed of different materials. If components or batteries need to be replaced and disposed of, they must be:

- disposed of,
- treated or
- recycled in accordance with regional and national regulations.

NOTE

The documentation provided by the battery manufacturer must be observed when disposing of batteries.

ENVIRONMENT NOTE

We recommend working with a waste management company for disposal purposes.

2

Safety

Definition of responsible persons

Operating company

The operating company is the natural or legal person or group who operates the truck or on whose authority the truck is used.

The operating company must ensure that the truck is only used for its proper purpose and in compliance with the safety regulations set out in these operating instructions.

The operating company must ensure that all users read and understand the safety information.

The operating company is responsible for the scheduling and correct performance of regular safety checks.

We recommend that the national performance specifications are adhered to.

Specialist

A qualified person is defined as a service engineer or a person who fulfils the following requirements:

- A completed vocational qualification that demonstrably proves their professional expertise. This proof should consist of a vocational qualification or a similar document.
- Professional experience indicating that the qualified person has gained practical experience of industrial trucks over a proven period during their career During this time, this person has become familiar with a wide range of symptoms that require checks to be carried out, such as based on the results of a hazard assessment or a daily inspection
- Recent professional involvement in the field of the industrial truck test in question and an appropriate further qualification are essential. The qualified person must have experience of carrying out the test in question or of carrying out similar tests. Moreover, this person must be aware of the latest technological developments regarding the industrial truck to be tested and the risk being assessed

Drivers

This truck may only be driven by suitable persons who are at least 18 years of age, have been trained in driving, have demonstrated their skills in driving and handling loads to the operating company or an authorised representative, and have been specifically instructed to drive the truck. Specific knowledge of the truck to be operated is also required.

The training requirements under §3 of the Health and Safety at Work Act and §9 of the plant safety regulations are deemed to have been satisfied if the driver has been trained in accordance with BGG (General Employers' Liability Insurance Association Act) 925. Observe the national regulations for your country.

Driver rights, duties and rules of behaviour

The driver must be trained in his rights and duties.

The driver must be granted the required rights.

The driver must wear protective equipment (protection suit, safety footwear, safety helmet, industrial goggles and gloves) that is appropriate for the conditions, the job and the load to be lifted. Solid footwear should be worn to ensure safe driving and braking.

The driver must be familiar with the operating instructions and have access to them at all times.

The driver must:

- have read and understood the operating manual
- have familiarised himself with safe operation of the truck
- be physically and mentally able to drive the truck safely

⚠ DANGER

The use of drugs, alcohol or medications that affect reactions impair the ability to drive the truck!

Individuals under the influence of the aforementioned substances are not permitted to perform work of any kind on or with the truck.

Prohibition of use by unauthorised persons

The driver is responsible for the truck during working hours. He must not allow unauthorised persons to operate the truck.

When leaving the truck, the driver must secure it against unauthorised use, e.g. by pulling out the key.

Basic principles for safe operation

Insurance cover on company premises

In many cases, company premises are restricted public traffic areas.

NOTE

The business liability insurance should be reviewed to ensure that, in the event of any damage caused in restricted public traffic areas, there is insurance cover for the truck in respect of third parties.

Modifications and retrofitting

If the truck will be used for work that is not listed in the directives or in these instructions, convert or retrofit the truck for this purpose as required. Any structural modification can impair the handling and stability of the truck, and can result in accidents.

Any modifications that adversely affect the stability, the load capacity or the circumferential view of the truck require written approval from the manufacturer.

The following components may only be modified with prior written approval from the manufacturer:

- Brakes
- Steering
- Operating devices
- Safety systems
- Equipment variants
- Attachments

The truck may only be converted with written approval from the manufacturer. If necessary, obtain approval from the relevant authorities.

– Only the authorised service centre is permitted to perform welding work on the truck.

We warn against installing and using restraint systems that have not been approved by the manufacturer.

– Contact the authorised service centre before converting or retrofitting the truck.

Only the authorised service centre is permitted to perform welding work on the truck.

⚠ DANGER

Risk of explosion from additional bores in the battery hood!

Explosive gases can escape and can lead to potentially fatal injuries if they explode. Sealing bores with plugs is not sufficient to prevent gas from escaping.

– Do not drill any holes in the battery hood.

⚠ DANGER

Risk of accident from additional holes in the battery hood!

The rigidity of the battery hood is impaired and the battery hood can break. The driver's seat may collapse into the battery hood, which could cause the driver to perform uncontrolled steering and driving manoeuvres.

– Do not drill any holes in the battery hood.

⚠ DANGER

Risk of fatal injury from falling load!

There is a risk to the driver's life if the truck is not equipped with an overhead guard, as the driver may be struck by a load falling from a lift height of 1800 mm or greater.

Operation of the truck without an overhead guard is prohibited at a lift height greater than 1800 mm.

– At lift heights of 1800 mm and above, only use the truck in conjunction with an overhead guard.

The operating company is only permitted to make modifications to the truck independently if the manufacturer goes into liquidation and the company is not taken over by another legal person.

The operating company must also fulfil the following prerequisites:

- Design documents, test documents and assembly instructions associated with the modification must be permanently archived and remain accessible at all times.
- The capacity rating plate, the decal information, the hazard warnings and the operating instructions must be checked to ensure that they are consistent with the modifications and must be amended if required.
- Modifications must be designed, checked and implemented by a design office that specialises in industrial trucks. The design office must comply with the standards and directives valid at the time that modifications are made.

Decal information with the following data must be permanently affixed to the truck so that it is clearly visible:

- Type of modification
- Date of modification
- Name and address of the company that carried out the modification

Changes to the overhead guard and roof loads

⚠ DANGER

In the event of the overhead guard failing due to a falling load or the truck tipping over, there are potentially fatal consequences for the driver. There is a risk to life!

Welding and drilling on the overhead guard changes the material characteristics and the structural design of the overhead guard. Excessive forces caused by falling loads or the truck tipping over may result in buckling of the modified overhead guard and no protection for the driver.

– Do not perform welding on the overhead guard.

– Do not perform drilling on the overhead guard.

⚠ CAUTION

Heavy roof loads damage the overhead guard!

To ensure the stability of the overhead guard at all times, a roof load may only be mounted on the overhead guard if the structural design has been tested and the manufacturer has given approval.

– Seek advice from the authorised service centre for the mounting of roof loads.

Warning regarding non-original parts

Original parts, attachments and accessories are specially designed for this truck. We specifically draw your attention to the fact that parts, attachments and accessories supplied by other companies have not been tested and approved by STILL.

⚠ CAUTION

Installation and/or use of such products may therefore have a negative impact on the design features of the truck and thus impair active and/or passive driving safety.

We recommend that you obtain approval from the manufacturer and, if necessary, from the relevant regulatory authorities before installing such parts. The manufacturer accepts no liability for any damage caused by the use of non-original parts and accessories without approval.

Damage, defects and misuse of safety systems

Damage or other defects on the truck or attachment must be reported to the supervisor or responsible fleet manager immediately so that they can have the defect rectified.

Trucks and attachments that are not functional or safe to drive may not be used until they have been properly repaired.

Do not remove or deactivate safety systems and switches.

Fixed set values may only be changed with the approval of the manufacturer.

Work on the electrical system (e.g. connecting a radio, additional headlights etc.) is only permitted with the manufacturer's written approval. All electrical system interventions must be documented.

Even if they are removable, roof panels may not be removed, as they are designed to protect against small falling objects.

Tyres

⚠ DANGER

Risk to stability!

Failure to observe the following information and instructions can lead to a loss of stability. The truck may tip over, risk of accident!

The following factors can lead to a loss of stability and are therefore **prohibited**:

- Different tyres on the same axle, e.g. pneumatic tyres and superelastic tyres
- Tyres not approved by the manufacturer
- Excessive tyre wear
- Tyres of inferior quality
- Changing rim wheel parts
- Combining rim wheel parts from different manufacturers

The following rules must be observed to ensure stability:

- Only use tyres with equal and permitted levels of wear on the same axle
- Only use wheels and tyres of the same type on the same axle, e.g. only superelastic tyres
- Only use wheels and tyres approved by the manufacturer
- Only use high-quality products

Wheels and tyres approved by the manufacturer can be found on the spare parts list. If other wheels or tyres are to be used, authorisation from the manufacturer must be obtained beforehand.

– Contact the authorised service centre on this matter.

When changing wheels or tyres, always ensure that this does not cause the truck to tilt to

one side (e.g. always replace right-hand and left-hand wheels at the same time). Changes must only be made following consultation with the manufacturer.

If the type of tyre used on an axle is changed, for example from superelastic tyres to pneumatic tyres, the load diagram must be changed accordingly.

– Contact the authorised service centre on this matter.

Medical equipment

⚠ WARNING

Electromagnetic interference may occur on medical devices!

Only use equipment that is sufficiently protected against electromagnetic interference.

Medical equipment, such as pacemakers or hearing aids, may not work properly when the truck is in operation.

– Ask your doctor or the manufacturer of the medical equipment to confirm that the medical equipment is sufficiently protected against electromagnetic interference.

Exercise caution when handling gas springs and accumulators

⚠ WARNING

Gas springs are under high pressure. Improper removal results in an elevated risk of injury.

For ease of operation, various functions on the truck can be supported by gas springs. Gas springs are complex components that are subject to high internal pressures (up to 300 bar). They may under no circumstances be opened unless instructed to do so, and may be installed only when not under pressure. If required, the authorised service centre will depressurise the gas spring in accordance with the regulations before removal. Gas springs must be depressurised before recycling.

– Avoid damage, lateral forces, buckling, temperatures over 80°C and heavy contamination.
– Damaged or defective gas springs must be changed immediately.
– Contact the authorised service centre.

⚠ WARNING

Accumulators are under high pressure. Improper installation of an accumulator results in an elevated risk of injury.

Before starting work on the accumulator it must be depressurised.

– Contact the authorised service centre.

Length of the fork arms

⚠ DANGER

Risk of accident due to the incorrect selection of fork arms!

– The fork arms must match the depth of the load.

If the fork arms are too short, the load may fall off the arms after it has been picked up. In addition, be aware that the load centre of gravity may shift as a result of dynamic forces, such as braking. A load that is otherwise resting safely on the fork arms may move forwards and fall.

If the fork arms are too long, they can catch on loading units behind the load that is to be

picked up. These other loading units then fall over when the load is raised.

– For help with selecting the correct fork arms, contact the authorised service centre.

Residual risk

Residual dangers, residual risks

Despite careful working and compliance with standards and regulations, the occurrence of other risks when using the truck cannot be entirely excluded.

The truck and all other system components comply with current safety requirements. Nevertheless, even when the truck is used for its proper purpose and all instructions are followed, some residual risk cannot be excluded.

Even beyond the narrow danger areas of the truck itself, a residual risk cannot be excluded. Persons in this area around the truck must exercise a heightened degree of awareness, so that they can react immediately in the event of any malfunction, incident or breakdown etc.

⚠ WARNING

All persons that are in the vicinity of the truck must be instructed regarding these risks that arise through use of the truck.

In addition, we draw attention to the safety regulations in these operating instructions.

Risks can include:

- Escape of consumables due to leakages, rupture of lines and containers etc.
- Risk of accident when driving over difficult ground such as gradients, smooth or irregular surfaces, or with poor visibility etc.
- Falling, tripping etc. when moving on the truck, especially in wet weather, with leaking consumables or on icy surfaces
- Fire and explosion risks due to batteries and electrical voltages
- Human error resulting from failure to observe the safety regulations,
- Unrepaired damage or defective and worn components,
- Insufficient maintenance and testing
- Use of incorrect consumables
- Exceeding test intervals

The manufacturer is not held responsible for accidents involving the truck caused by the failure of the operating company to comply

with these regulations either intentionally or carelessly.

Stability

The stability of the truck has been tested to the latest technological standards and is guaranteed provided that the truck is used properly and according to its intended purpose. These standards only take into account the dynamic and static tipping forces that can arise during specified use in accordance with the operating rules and intended purpose. However, the danger of exceeding the moment of tilt due to improper use or incorrect operation and losing stability can never be excluded.

The loss of stability can be avoided or minimised by the following actions:

- Always secure the load against slipping, e.g. by lashing.
- Always transport unstable loads in suitable containers.
- Always drive slowly when cornering.
- Drive with the load lowered.
- Even with sideshifts, align the load as centrally as possible with the truck and transport in this position.
- Avoid turning and diagonally driving across slopes or gradients.
- Never have the load facing downhill when travelling on slopes or gradients.
- Pick up only loads of the approved width.
- Always take great care when transporting suspended loads.
- Do not drive over ramp edges or steps.

Special risks associated with using the truck and attachments

Approval from the manufacturer and attachment manufacturer must be obtained each time the truck is used in a manner that falls outside the scope of normal use, and in cases where the driver is not certain that he can use

the truck correctly and without the risk of accidents.

Overview of hazards and countermeasures

NOTE

This table is intended to help evaluate the hazards in your facility and applies to all drive types. It does not claim to be complete.

– Observe the national regulations for the country in which the truck is being used.

Hazard	Course of action	Check note √ done - Not applicable	Notes
Truck equipment does not comply with local regulations	Testing	O	If in doubt, consult the responsible factory inspectorate or employers' liability insurance association
Driver's lack of skills or qualifications	Driver training (sit-on and stand-on)	O	DGUV principle 308-001 VDI 3313 driver's licence
Usage by unauthorised persons	Access with key only for authorised persons	O	
Truck not safe for operation	Periodic inspection and rectification of defects	O	German Ordinance on Industrial Safety and Health (BetrSichV)
Risk of falling when using working platforms	Compliance with national regulations (different national laws)	O	German Ordinance on Industrial Safety and Health (BetrSichV) and employer's liability insurance associations
Impaired visibility due to load	Application planning	O	German Ordinance on Industrial Safety and Health (BetrSichV)
Contamination of breathable air	Assessment of diesel exhaust gases	O	Technical Regulations for Hazardous Substances (TRGS) 554 and the German Ordinance on Industrial Safety and Health (BetrSichV)

Hazard	Course of action	Check note √ done - Not applicable	Notes
	Assessment of LPG exhaust gases	O	German threshold limit values list (MAK-Liste) and the German Ordinance on Industrial Safety and Health (BetrSichV)
Impermissible usage (improper usage)	Provide operating instructions	O	German Ordinance on Industrial Safety and Health (BetrSichV) and German Health and labour protection law (ArbSchG)
	Written notice of instruction to driver	O	German Ordinance on Industrial Safety and Health (BetrSichV) and German Health and labour protection law (ArbSchG)
	German Ordinance on Industrial Safety and Health (BetrSichV), observe the operating instructions	O	
When fuelling			
a) Diesel	German Ordinance on Industrial Safety and Health (BetrSichV), observe the operating instructions	O	
b) LPG	DGUV regulation 79, observe the operating instructions	O	
When charging the drive battery	German Ordinance on Industrial Safety and Health (BetrSichV), observe the operating instructions	O	VDE 0510-47 (= DIN EN 62485-3): In particular - Ensure adequate ventilation - Insulation value within the permissible range
When using battery chargers	German Ordinance on Industrial Safety and Health (BetrSichV),	O	German Ordinance on Industrial Safety and Health (BetrSichV) and DGUV rule 113-001

Hazard	Course of action	Check note √ done - Not applicable	Notes
	DGUV rule 113-001 and observe the operating instructions		
When parking LPG trucks	German Ordinance on Industrial Safety and Health (BetrSichV), DGUV rule 113-001 and observe the operating instructions	O	German Ordinance on Industrial Safety and Health (BetrSichV) and DGUV rule 113-001
When operating driverless transport systems			
Roadway quality inadequate	Clean/clear roadways	O	German Ordinance on Industrial Safety and Health (BetrSichV)
Loading equipment incorrect/slipped	Reposition load on pallet	O	German Ordinance on Industrial Safety and Health (BetrSichV)
Unpredictable driving behaviour	Employee training	O	German Ordinance on Industrial Safety and Health (BetrSichV)
Routes blocked	Mark routes Keep roadways clear	O	German Ordinance on Industrial Safety and Health (BetrSichV)
Routes intersect	Announce right-of-way rule	O	German Ordinance on Industrial Safety and Health (BetrSichV)
No person detection when placing goods into stock and removing goods from stock	Employee training	O	German Ordinance on Industrial Safety and Health (BetrSichV)

Danger to employees

According to the German Ordinance on Industrial Safety and Health (BetrSichV) and labour protection law (ArbSchG), the operating company must determine and assess hazards during operation, and establish the labour protection measures required for employees (BetrSichVO). The operating company must therefore draw up appropriate operating instructions (§ 6 ArbSchG) and nominate a person who is responsible for these operating instructions. Drivers must be informed of the operating instructions that apply to them.

NOTE

Please note the definition of the following responsible persons: "operating company" and "driver".

The design and equipment of the truck comply with the standards and directives required for CE conformity. The design and equipment also comply with the standards and directives necessary for the UKCA compliance that is required in the United Kingdom. The design and equipment are therefore not part of the required scope of the hazard assessment. The same applies to attachments with their own CE labelling and UKCA labelling. The operating company must, however, select the type and equipment of the trucks so as to comply with the local provisions for deployment.

The result of the hazard assessment must be documented (§ 6 ArbSchG). In the case of truck applications involving similar hazard situations, the results may be summarised. Refer to the chapter entitled "Overview of hazards and countermeasures", which provides advice on complying with this regulation. The overview specifies the primary hazards that, in the event of non-compliance, are the most frequent causes of accidents. If other major hazards are present as a result of the specific operating conditions, these hazards must also be taken into consideration.

The conditions of use for trucks are broadly similar in many plants, so the hazards can be summarised in one overview. Observe the information provided by the relevant employers' liability insurance association on this subject.

Safety tests

Regular safety inspection of the truck ▷

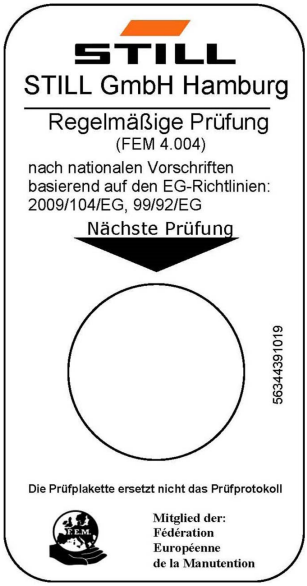

Safety inspection based on time and extraordinary incidents

The operating company must ensure that the truck is checked by a specialist at least once a year or after particular incidents.

As part of this inspection, a complete check of the technical condition of the truck must be performed with regard to accident safety. In addition, the truck must be thoroughly checked for damage that could potentially have been caused by improper use. A test log must be created. The results from the inspection must be retained until a further two inspections have been carried out.

The inspection date is indicated by an adhesive label on the truck.

– Arrange for the service centre to perform periodic safety inspections on the truck.

– Observe guidelines for checks carried out on the truck in accordance with FEM 4.004.

The operator is responsible for ensuring any defects are remedied without delay.

– Contact your service centre.

NOTE

Observe the national regulations for your country!

Insulation testing

The insulation of the truck must have sufficient insulation resistance. For this reason, insulation testing in accordance with DIN EN 1175 and DIN 43539, VDE 0117 and VDE 0510 must be conducted at least once yearly as part of the FEM testing.

The insulation testing results must be at least the test values given in the following two tables.

– For insulation testing, contact the authorised service centre.

The exact procedure for this insulation testing is described in the workshop manual for this truck.

NOTE

The truck's electrical system and drive batteries must be checked separately.

Test values for the drive battery

Component	Recommended test voltage	Measurements		Nominal voltage U_{Batt}	Test values
Battery	50 VDC	Batt+ Batt-	Battery tray	24 volts	> 1200 Ω
	100 VDC			48 volts	> 2400 Ω
	100 VDC			80 volts	> 4000 Ω

Test values for the entire truck

Nominal voltage	Test voltage	Test values for new trucks	Minimum values over the duration of the service life
24 volts	50 VDC	Min. 50 kΩ	> 24 kΩ
48 volts	100 VDC	Min. 100 kΩ	> 48 kΩ
80 volts	100 VDC	Min. 200 kΩ	> 80 kΩ

Safety regulations for handling consumables

Permissible consumables

⚠ WARNING

Consumables can be dangerous!

– Observe general information and safety information regarding the use of consumables.

– Refer to the chapter entitled "Safety regulations for handling consumables".

– Note the safety datasheets provided by the manufacturer of the consumables in question.

– Only use consumables that are approved for use with this truck. The permissible consumables can be found in the maintenance data table.

Oils

⚠ DANGER

Oils are flammable!

– Follow the statutory regulations.

– Do not allow oils to come into contact with hot engine parts.

– No smoking, fires or naked flames!

⚠ DANGER

Oils are toxic!

– Avoid contact and consumption.

– If vapour or fumes are inhaled, move to fresh air immediately.

– In the event of contact with the eyes, rinse thoroughly (for at least 10 minutes) with water and then consult an eye specialist.

– If swallowed, do not induce vomiting. Seek immediate medical attention.

⚠ WARNING

Prolonged intensive contact with the skin can result in dryness and irritate the skin!

– Avoid contact and consumption.
– Wear protective gloves.
– After any contact, wash the skin with soap and water, and then apply a skin care product.
– Immediately change soaked clothing and shoes.

⚠ WARNING

There is a risk of slipping on spilled oil, particularly when combined with water!

– Spilt oil should be removed immediately with oil-binding agents and disposed of according to the regulations.

ENVIRONMENT NOTE

Oil is a water-polluting substance!

- *Always store oil in containers that comply with the applicable regulations.*
- *Avoid spilling oils.*
- *Spilt oil should be removed immediately with oil-binding agents and disposed of according to the regulations.*
- *Dispose of old oils according to the regulations.*

Hydraulic fluid

⚠ WARNING

These fluids are pressurised during operation of the truck and are hazardous to your health.

– Do not spill the fluids.
– Follow the statutory regulations.
– Do not allow the fluids to come into contact with hot engine parts.

⚠ WARNING

These fluids are pressurised during operation of the truck and are hazardous to your health.

– Do not allow the fluids to come into contact with the skin.

– Avoid inhaling spray.

– Penetration of pressurised fluids into the skin is particularly dangerous if these fluids escape at high pressure due to leaks in the hydraulic system. In case of such injury, immediate medical assistance is required.

– To avoid injury, use appropriate personal protective equipment (e.g. protective gloves, industrial goggles, skin protection and skin care products).

ENVIRONMENT NOTE

Hydraulic fluid is a water-polluting substance.

- *Always store hydraulic fluid in containers that comply with regulations*
- *Avoid spills*
- *Spilt hydraulic fluid should be removed immediately with oil-binding agents and disposed of according to the regulations*
- *Dispose of old hydraulic fluid according to the regulations*

Battery acid

⚠ WARNING

Battery acid contains dissolved sulphuric acid. This is toxic.

– Avoid touching or swallowing the battery acid at all costs.

– In case of injury, seek medical advice immediately.

⚠ WARNING

Battery acid contains dissolved sulphuric acid. This is corrosive.

- When working with battery acid, use appropriate PSA (rubber gloves, apron, protection goggles).
- When working with battery acid, never wear a watch or jewellery.
- Do not allow any acid to get onto clothing or skin or into the eyes. If this does happen, rinse immediately with plenty of clean water.
- In case of injury, seek medical advice immediately.
- Immediately rinse away spilt battery acid with plenty of water.
- Follow the statutory regulations.

ENVIRONMENT NOTE

- Dispose of used battery acid in line with the applicable regulations.

Coolant and cooling fluid

⚠ WARNING

Coolant and cooling fluid can be hazardous to your health and the environment!

Coolants are chemical corrosion inhibitors and cooling system protecting agents such as Glysantin. The cooling fluid is an appropriate mixture of water and coolant. Coolant in both concentrated and dilute form can be hazardous to your health if swallowed, or hazardous to the environment if spilled.

- Store coolant and cooling fluid only in their original containers and do not spill them.
- Never store coolant or cooling fluid in empty food containers, bottles or other containers.
- Observe the national regulations for the country of use.

ENVIRONMENT NOTE

- Soak up any spilt coolant or cooling fluid immediately using an oil binding agent and dispose of it in accordance with the national regulations for the country of use.
- Dispose of old coolant or cooling fluid in accordance with the national regulations for the country of use.

Disposal of consumables

ENVIRONMENT NOTE

Materials that accumulate during repair, maintenance and cleaning must be collected properly and disposed of in accordance with the national regulations for the country in which the truck is being used. Work must only be carried out in areas designated for that purpose. Care must be taken to minimise any environmental pollution.

- Soak up any spilt fluids such as hydraulic oil or gearbox oil immediately using an oil-binding agent.
- Neutralise any spilt battery acid immediately.
- Always observe national regulations concerning the disposal of used oil.

Emissions

The values specified apply to a standard truck (compare the specifications in the "Technical data" chapter). Different tyres, lift masts, additional units etc. may produce different values.

Noise emissions

The values were determined based on measuring procedures from the standard EN 12053 "Safety of industrial trucks - Test methods for measuring noise emissions", based on EN 12001, EN ISO 3744 and the requirements of EN ISO 4871.

This machine emits the following sound pressure level:

Continuous sound pressure level in the driver's compartment

L_{pAZ}	Measurement uncertainty K_{pA}
< 70 dB(A)	4 dB(A)

The values were determined in the test cycle on an identical machine from the weighted values for operating statuses and idling.

Time proportions:

- Lifting 18%
- Idling 58%
- Driving 24%

However, the indicated noise levels at the truck cannot be used to determine the noise emissions at workplaces according to the most recent version of **Directive 2003/10/EC** (daily personal noise pollution). Observe the applicable national regulations in non-EU countries. If necessary, these noise emissions must be determined by the operating company directly at the workplaces under the actual conditions there (additional noise sources, special application conditions, sound reflections).

NOTE

Please observe the definition of the following responsible person: "operating company".

Vibrations

The vibrations of the machine have been determined on an identical machine in accordance with the standards DIN EN 13059 "Safety of industrial trucks - Test methods for measuring vibration" and DIN EN 12096 "Mechanical vibration - Declaration and verification of vibration emission values".

Frequency-weighted effective value of acceleration on the seat

MSG 65 driver's seat	Uncertainty of measurement
0.31 m/s^2	0.093 m/s^2

Tests have indicated that the amplitude of the hand and arm vibrations on the steering wheel or on the operating devices in the truck is less than 2.5 m/s^2. There are therefore no measurement guidelines for these measurements.

The personal vibration load on the driver over a working day must be determined by the operating company at the actual place of use in accordance with **Directive 2002/44/EC**, in order to consider all additional influences, such as driving route, intensity of use etc. Observe the applicable national regulations in non-EU countries.

NOTE

Please note the definition of the following responsible person: "operating company".

Battery

⚠ DANGER

Risk of explosion due to flammable gases!

During charging, the battery releases a mixture of oxygen and hydrogen (oxyhydrogen gas). This gas mixture is explosive and must not be ignited.

- Make sure that there is always sufficient ventilation in working areas that are entirely or partially enclosed.
- Keep away from open flames and flying sparks.
- Do not smoke.
- Observe the safety regulations for handling the battery.

Radiation

In accordance with the guidelines DIN EN 62471:2009-03 (VDE 0837-471:2009-03), the STILL Safety-Light (variant) is assigned to risk group 2 (medium risk) due to its photobiological hazard potential.

3

Overviews

Overview

Left-hand side (when viewed in the drive direction)

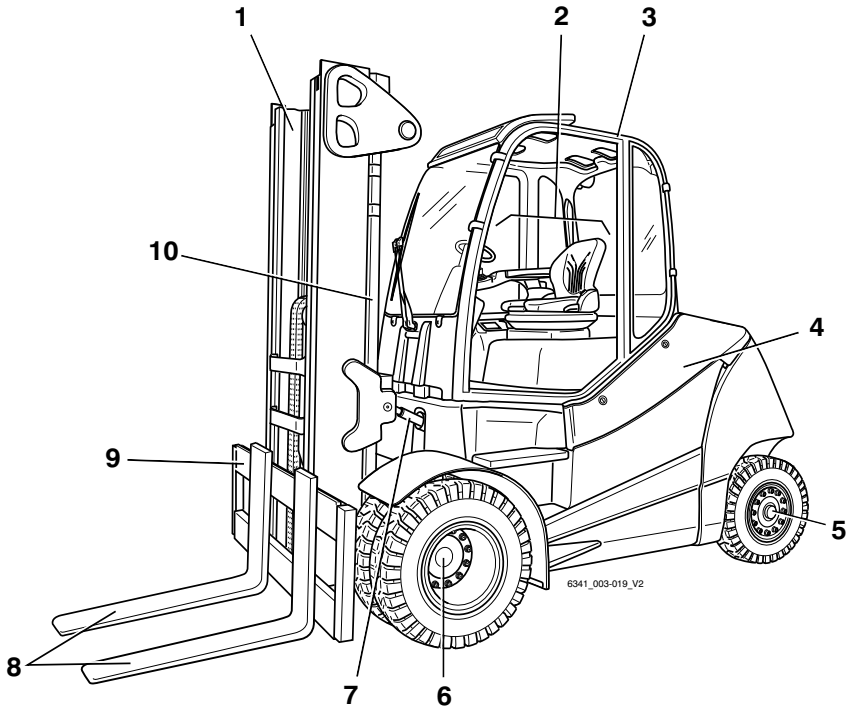

1	Lift mast	6	Drive axle
2	Driver's compartment	7	Tilt cylinder
3	Overhead guard	8	Fork arms
4	Left side cover	9	Fork carriage
5	Steering axle	10	Lift cylinder

Right-hand side (when viewed in the drive direction)

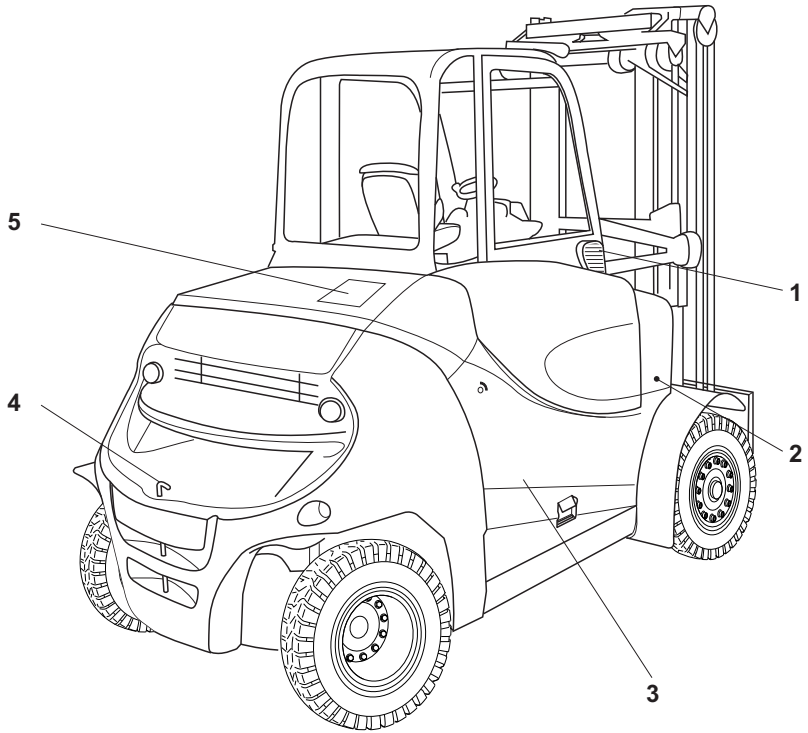

1	Fresh air filter for heating system	4	Coupling pin
2	Cover, front right	5	Rear cover
3	Battery cover		

Driver's compartment

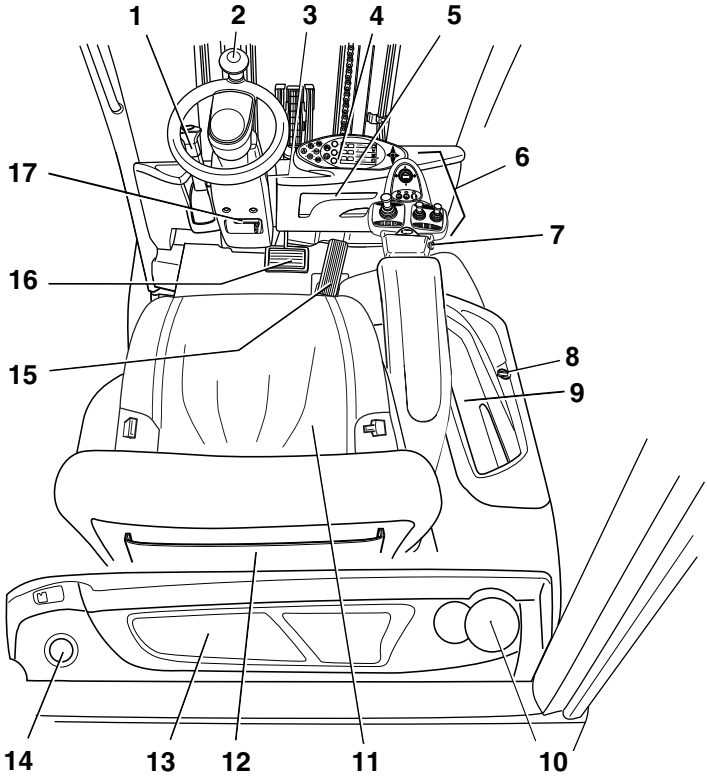

1	Parking brake lever
2	Steering wheel
3	Key switch
4	Display and operating unit
5	Document holder / storage compartment for operating instructions
6	Operating devices for hydraulic and traction functions
7	Emergency off switch
8	12-V socket
9	Compartment
10	Bottle holder for bottles of max. 0.5 l
11	Driver's seat
12	Storage compartment / storage compartment with cover (variant)
13	Compartment
14	Filler cap for windscreen washer reservoir (variant)
15	Accelerator pedal
16	Brake pedal
17	Steering column adjustment lever

NOTE

The truck equipment may differ from the equipment shown.

Operating devices and display elements

Display operating unit

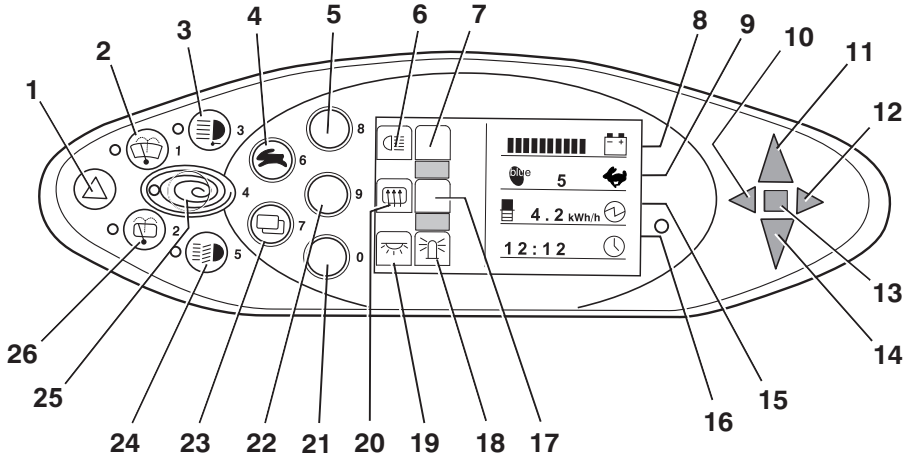

1	Hazard warning system button
2	Front windscreen wiper button
3	Working spotlight button
4	Drive programme selector button
5	Softkey for lighting
6	Lighting symbol
7	Not assigned
8	Battery charge display
9	Drive programme display (numerical)
10	Left direction indicator light
11	Forward travel display
12	Right direction indicator light
13	Malfunction display
14	Reverse travel display
15	Power rating display
16	Time display (digital)
17	Not assigned
18	Rotating beacon display
19	Interior light display
20	Rear window heating display
21	Softkey for interior light/rotating beacon
22	Softkey for rear window heating
23	Menu change button
24	Lighting button
25	Blue-Q button
26	Rear window wiper button

NOTE

The Softkeys (5, 21, 22) and the corresponding indicators (6, 7, 18, 19, 20) are assigned according to the auxiliary equipment installed.

The assignment shown here is an example and may differ from the assignment actually programmed on the truck. Softkeys can be assigned multiple functions that are called up according to the menu navigation. For further information, see the section entitled "Operating the display-operating unit".

– If you have any questions, please contact your authorised service centre.

Operating devices for hydraulic and driving functions

Different versions of the operating devices are available for operating the truck's hydraulic functions and drive functions.

The truck can be equipped with the following operating devices:

- Double mini-lever
- Triple mini-lever
- Quadruple mini-lever
- Joystick 4Plus
- Fingertip
- Mini-console

Double mini-lever

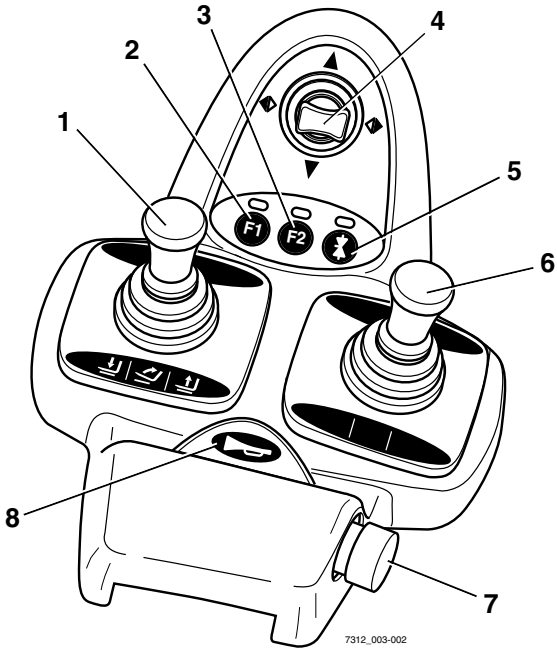

1	"Lift mast" 360° lever	5	Function key "5th function"
2	Function key F1	6	"Attachments" cross lever
3	Function key F2	7	Emergency stop switch
4	"Drive direction / turn indicator" cross lever	8	Signal horn button

NOTE

Depending on the specification, various electric attachment parts can be controlled via function keys (2) and (3). Changes must only be made by the authorised service centre.

Three-way mini-lever

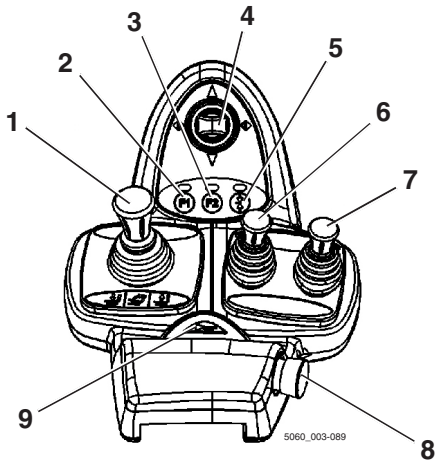

1	"Lift mast" 360° lever	6	"Auxiliary hydraulics 1" operating lever
2	Function key F1	7	"Auxiliary hydraulics 2" operating lever
3	Function key F2	8	Emergency stop switch
4	"Drive direction / turn indicator" cross lever	9	Signal horn button
5	Function key "5th function"		

NOTE

Depending on the specification, various electric attachment parts can be controlled via function keys (2) and (3). Changes must only be made by the authorised service centre.

Four-way mini-lever

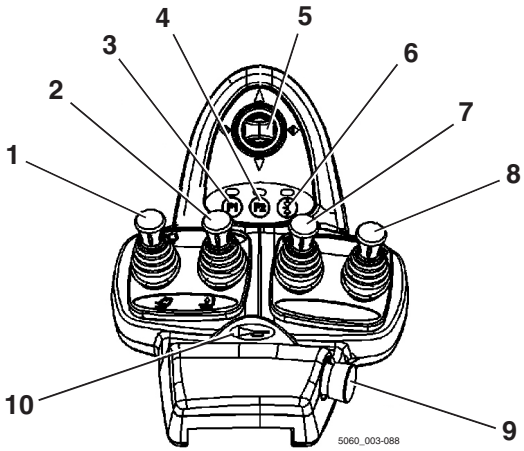

1	"Lift/lower" operating lever	6	Function key "5th function"
2	"Tilt" operating lever	7	"Auxiliary hydraulics 1" operating lever
3	Function key F1	8	"Auxiliary hydraulics 2" operating lever
4	Function key F2	9	Emergency stop switch
5	"Drive direction / turn indicator" cross lever	10	Signal horn button

NOTE

Depending on the specification, various electric attachment parts can be controlled via function keys (3) and (4). Changes must only be made by the authorised service centre.

Joystick 4Plus

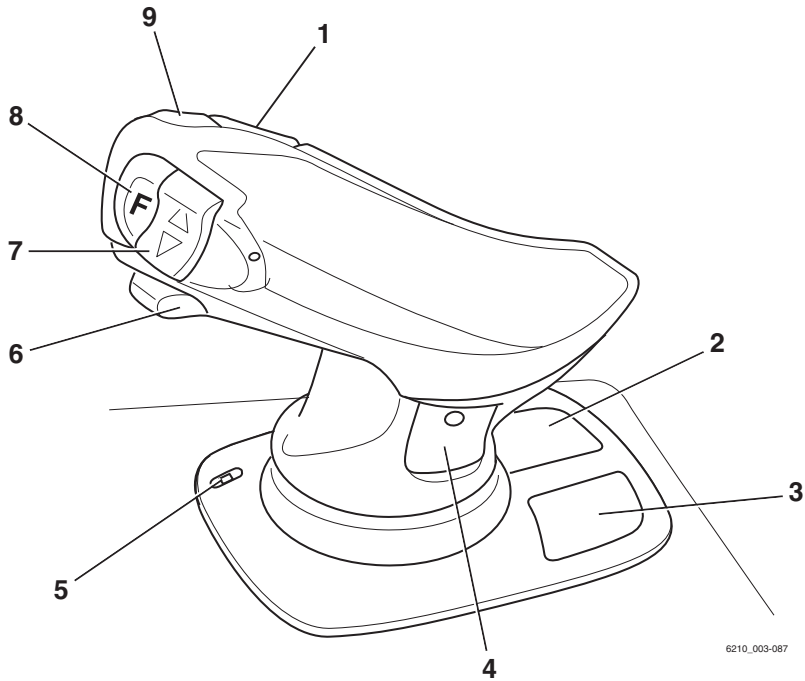

1	Horizontal rocker button for the "3rd hydraulic function", tilting the lift mast	5	LED for the clamp locking mechanism (variant)
2	Symbols for the basic hydraulic functions	6	Slider for the "4th hydraulic function", e.g. side shift frame forwards/backwards
3	Pictograms for the 5th hydraulic function and for the clamp locking mechanism (variant)	7	Vertical rocker button for the "drive direction"
4	Pictograms for the 3rd & 4th hydraulic function	8	Shift key "F"
		9	Signal horn button

Fingertip

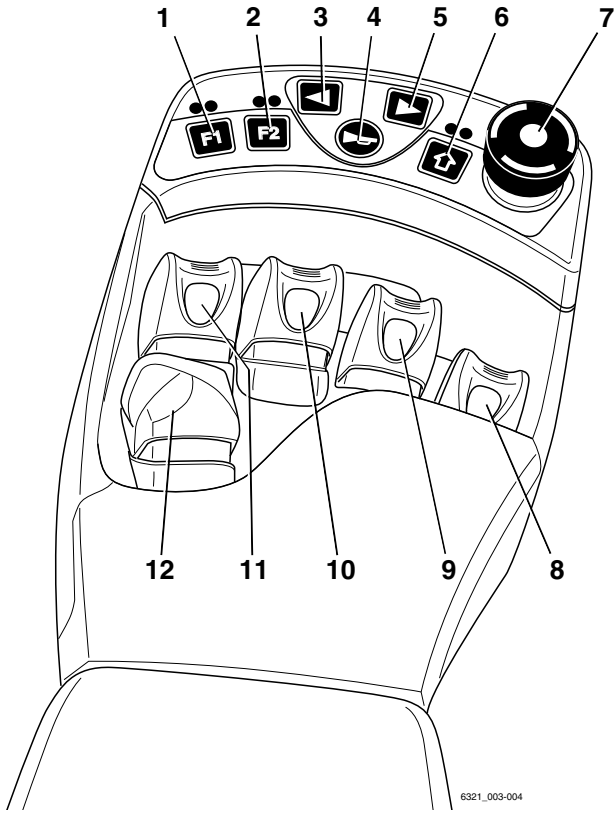

1	Function key F1	7	Emergency stop switch
2	Function key F2	8	"Attachments" operating lever
3	Left-hand turn indicator button	9	"Attachments" operating lever
4	Signal horn button	10	"Tilt" operating lever
5	Right-hand turn indicator button	11	"Lift/lower" operating lever
6	Button for 5th function	12	Travel direction switch

NOTE

Depending on the specification, various electric attachment parts can be controlled via function keys (1) and (2). Changes must only be made by the authorised service centre.

Mini console

The mini console is located on the steering column below the steering wheel.

▷

1 Travel direction switch
2 Direction indicator switch

4

Operating

Checks and tasks before daily use

Visual inspections

⚠ WARNING

Risk of injury from falling off the truck!

When climbing onto the truck, there is a risk of getting stuck or slipping and falling. Use suitable equipment to reach higher points on the truck.

- Use only the steps provided for this purpose to climb onto the truck.
- Use equipment such as stepladders or platforms to reach inaccessible areas.

Damage to the truck or the attachment (variant), non-functional switches or safety systems and modification of predefined set values can lead to unpredictable and dangerous situations.
The following checks and tasks enable causes of this type to be identified in good time. It is important to run through all the checks and tasks listed in the following table from top to bottom before daily use of the truck.
If damage or other defects are identified on the truck or the attachment (variant), the truck must not be used until it has been properly repaired.

Ensure that the truck is safe for operation each day before it is used:

Component	Course of action
Fork arms, general lifting accessories	Perform a visual inspection to check for deformation and wear (e.g. to check if they are bent, broken or feature significant wear). Check the condition and function of the fork locking devices for preventing lifting and shifting.
Lift mast roller tracks	Make sure that there is a film of grease.
Load chains	Perform a visual inspection to ensure that the chains are intact and have adequate and even tension.

Component	Course of action
Attachments (variant)	Ensure the attachments are mounted correctly in accordance with the operating instructions of the manufacturer. Perform a visual inspection to ensure the attachments are intact and not leaking. Perform checks to ensure the attachments are working correctly.
Underside	Check the area under the truck for leaking consumables.
Overhead guard, guard grille (variant)	Perform a visual inspection for integrity. Check for secure mounting.
Steps	Make sure they are clean (free of ice, not slippery).
Panes of glass (variant)	Perform a visual inspection for integrity. Make sure they are clean (also free of ice).
Handholds	Check for secure mounting.
Maintenance lids	Check the close function and close the lids.
Battery	Perform a visual inspection for integrity and deformation. Check that the battery tray is securely and correctly seated on the battery base frame. The battery must be level.
Battery connection assembly	Check the battery male connector, the plug connection and the contacts for integrity and deformation. Have any damaged or deformed components replaced by the authorised service centre. Inspect the battery male connector and the plug connection for moisture or for any foreign objects that may have become lodged. Remove any moisture or foreign objects, e.g. using compressed air.
Battery cover	Perform a visual inspection for integrity and deformation. Check the condition and function of the quick release clamp, the handles, the interlock and the latch. Check the close function and close the cover.
Battery rack	Perform a visual inspection for integrity and deformation. Detent cams in the battery compartment must be fully engaged in the bores of the battery base frame.
Battery lock	Check the condition and function. Swivel the battery lock all the way down.

Component	Course of action
Coupling pin, tow coupling (variant)	Perform a visual inspection for deformation and wear (for example, bent, torn, broken). Check the securing bush in the counterweight for integrity and to ensure that it is working correctly. Check that the linchpin is present and working correctly (chain, rope, split pin).
Labelling, adhesive labels	Check for presence, integrity and legibility. Replace damaged or missing adhesive labels in accordance with the section entitled "Labelling points".
Driver's seat, seat belt	Check the integrity and function.
Lighting, warning units	Check the integrity and function.
Antistatic belt	Perform a visual inspection for integrity. Ensure cleanliness. The antistatic belt must be long enough to touch the ground adequately.
Lift and tilt cylinders, tank, valve block, hoses, pipes, connections	Perform a visual inspection for damage and leakages. Check the area under the truck for leaking consumables. Have damaged components replaced only by the authorised service centre.
Wheels, tyres	Perform a visual inspection for wear and damage. Make sure that only rims of the same type from the same manufacturer are fitted. In the event of uneven tyre wear, replace both tyres. Observe the safety regulations in the section entitled "Tyres".
Axle	Make sure that no consumables are escaping from the axle.
Exhaust air grille on the cover of the rear weight	Perform a visual inspection for contamination or deposits. Clean as required.

– Do not use the truck if there is any damage or defect.

– Contact your authorised service centre.

Climbing into and out of the truck

⚠ WARNING

Risk of injury when climbing into and out of the truck due to slipping, striking parts of the truck or becoming stuck!

If the footwell cover is very dirty or smeared with oil, there is a risk of slipping. There is a risk of hitting your head on the overhead guard post or of your clothes becoming stuck when climbing out of the truck.

– Ensure that the footwell cover is non-slip.
– Do not jump into or out of the truck.
– Ensure that you have a secure grip on the truck.

⚠ WARNING

Risk of injury when jumping out of the truck!

If your clothing or jewellery (e.g. watch, ring etc.) becomes stuck on a component while you are jumping out of the truck, this can lead to serious injuries (e.g. from falling, loss of fingers etc.). It is forbidden to jump out of the truck.

– Do not jump out of the truck.
– Do not wear jewellery at work.
– Do not wear loose-fitting workwear.

⚠ CAUTION

Components may become damaged through incorrect use!

Truck components, such as the driver's seat, steering wheel, parking brake lever etc., are not designed to be used for climbing in and out of the truck and may be damaged due to misuse.

– Only use the fittings specifically designed for the purpose of climbing into and out of the truck.

NOTE

The foot that the driver starts with when climbing into and out of the truck is crucial in ensuring this action is carried out safely. This will depend on the number of steps. Trucks with a single wheel on the front axle feature two steps. Trucks with two wheels on the front axle feature three steps.

Climbing in and out of trucks featuring a single wheel and two steps

When climbing into and out of the truck, use the handles (2) and (4) for support. The overhead guard post (1) can also be used for support.

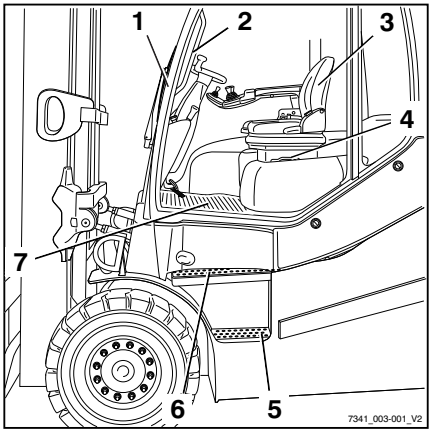

Always **climb into** the truck facing forwards:

- Grip handle (2) with your left hand and hold on.
- Grip handle (4) with your right hand and hold on.
- Place your right foot on the bottom step (5).
- Place your left foot on the top step (6).
- Place your right foot into the footwell (7).
- Enter the truck and sit down on the driver's seat (3).

Always **climb out** of the truck backwards:

- Grip handle (2) with your left hand and hold on.
- Stand up from the driver's seat and place your left foot on the top step (6).
- Grip the handle (4) with your right hand and hold on.
- Place your right foot on the bottom step (5).
- Place your left foot on the ground and climb down from the truck.

Climbing in and out of trucks featuring two wheels and three steps

When climbing into and out of the truck, use the handles (2) and (4) for support. The overhead guard post (1) can also be used for support.

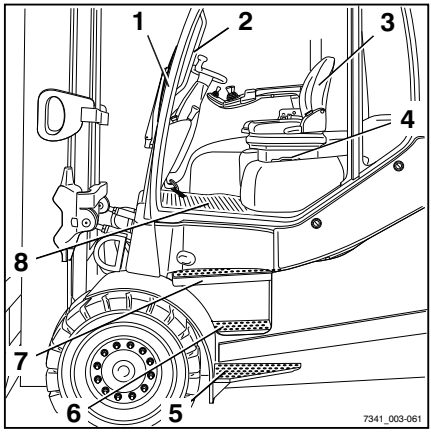

Always **climb into** the truck facing forwards:

- Grip handle (2) with your left hand and hold on.
- Grip handle (4) with your right hand and hold on.
- Place your left foot on the bottom step (5).
- Place your right foot on the middle step (6).
- Place your left foot on the top step (7).
- Place your right foot into the footwell (8).
- Enter the truck and sit down on the driver's seat (3).

Always **climb out** of the truck backwards:

- Grip handle (2) with your left hand and hold on.
- Stand up from the driver's seat and place your left foot on the top step (7).
- Grip the handle (4) with your right hand and hold on.
- Place your right foot on the middle step (6).
- Place your left foot on the bottom step (5).
- Place your right foot on the ground and climb down from the truck.

Shelves and cup holders

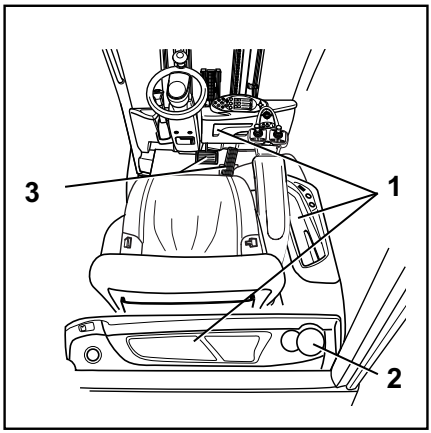

⚠ WARNING

Risk of accident!

Objects that fall into the footwell during travel as a result of steering or braking may slip between the pedals (3) and prevent them from working correctly. It may then be impossible to brake the truck.

– The storage compartment must only be used for objects that cannot fall out.

– Make sure that stored objects cannot fall from the shelves (1) when the truck is started up, steered or braked.

– Bottles with a maximum size of 0.5 l may be stored in the cup holder (2).

Adjusting the MSG 65/MSG 75 driver's seat

⚠ DANGER

There is a risk of accident if the seat or seat backrest shifts suddenly, which could cause the driver to move in an uncontrolled manner. This may result in unintentional actuation of the steering or operating devices and thus cause the truck or load to move in an uncontrolled fashion.

– Do not adjust the seat or seat backrest while driving.

– Adjust the seat and the seat backrest so that all operating devices can be actuated safely.

– Ensure that the seat and seat backrest are securely engaged.

⚠ WARNING

On some equipment variants, the amount of head clearance on the truck may be restricted.

On these specific equipment variants, the distance between the driver's head and the lower edge of the roofing sheet must be at least 40 mm.

NOTE

Observe any separate operating instructions for the seat.

⚠ WARNING

To obtain optimum seat cushioning, you must adjust the seat suspension to your own body weight. This course of action is better for your back and protects your health.

– To prevent injury, make sure that there are no objects within the swivel area of the seat.

Moving the driver's seat

▷

– Raise the lever (1) and hold it in position.
– Push the driver's seat into the desired position.
– Release the lever.
– Ensure that the driver's seat is securely engaged.

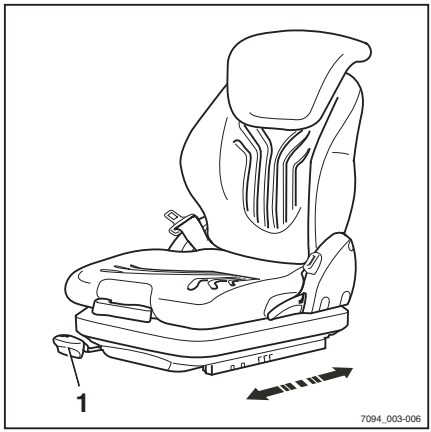

Adjusting the seat backrest

▷

Do not put pressure on the seat backrest while disengaging it.

– Raise the lever (2) and hold it in position.
– Push the seat backrest into the desired position.
– Release the lever.
– Ensure that the seat backrest is securely engaged.

NOTE

The backwards tilt angle of the seat backrest can be restricted by the structural condition of the truck.

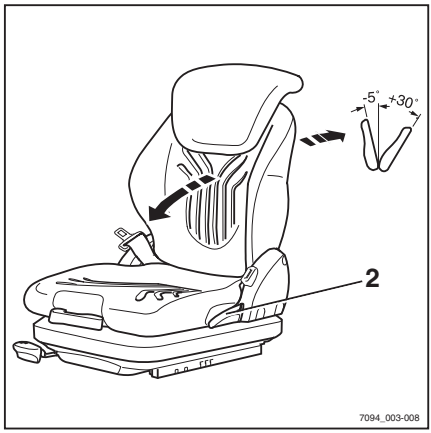

Adjusting the seat suspension ▷

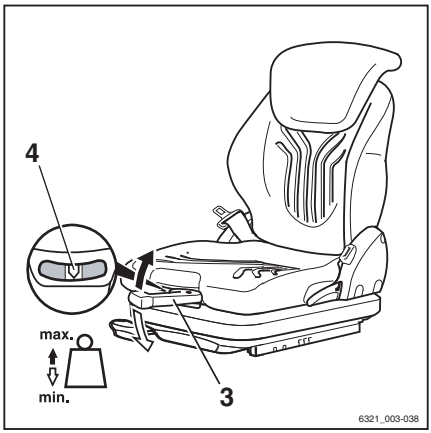

NOTE

The driver's seat can be adjusted to suit the weight of the individual driver. To obtain optimal settings for the seat suspension, the driver must perform the adjustment whilst sitting on the seat.

NOTE

The MSG 65/MSG 75 driver's seat is designed for people weighing between 45 kg and 170 kg.

NOTE

The MSG 75 seat is equipped with electric air suspension that is activated using an electric switch instead of the lever (3).

– Fully fold out the weight adjusting lever (3).
– Pump the lever up or down to set the driver's weight.
– Return the weight adjusting lever to the initial central position before each new lift (a click can be heard).
– Fully fold in the weight adjusting lever once adjustment is complete.

NOTE

The driver's weight has been selected correctly when the arrow (4) is in the centre position of the inspection window. If there is a noticeable empty stroke when you pump the weight adjusting lever, the minimum or maximum weight setting has been reached.

Adjusting the lumbar support (variant) ▷

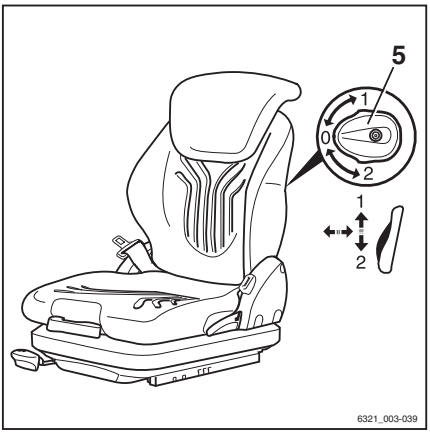

NOTE

The lumbar support can be adjusted to suit the contours of the individual driver's spine. Adjusting the lumbar support moves a convex support cushion into the upper or lower part of the backrest.

– Turn the turning knob (5) up or down until the lumbar support is in the desired position.

Adjusting the backrest extension (variant) ▷

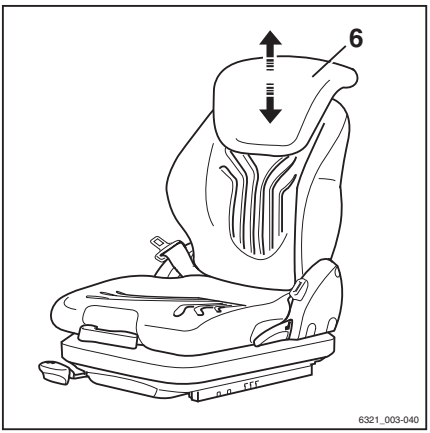

– Adjust the backrest extension (6) by pulling it out or pushing it into the desired position.

To remove the backrest extension, move it past the end stop by firmly pushing it upwards.

Switching the seat heater (variant) on and off

NOTE

The seat heater functions only if the seat contact switch is active, i.e. when the driver is sitting on the driver's seat.

– Switch the seat heater (7) on or off using the switch.

Longitudinal seat adjustment

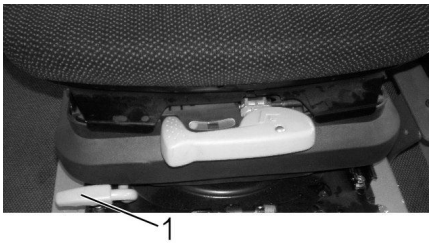

As with a standard driver's seat, the lever (1) on the front right-hand side of the driver's seat as viewed in the drive direction can be used to adjust the longitudinal position of the driver's seat.

– Pull the lever (1) upwards and hold it there to unlock the driver's seat.

– Push the driver's seat into the required position.

– Release the lever (1) again to lock the driver's seat. If necessary, gently slide the seat back and forth to allow the interlock to engage.

Blocking the longitudinal horizontal suspension

– If necessary, the longitudinal horizontal suspension can be blocked using the locking lever (2) on the left-hand side of the driver's seat as viewed in the drive direction:

A Longitudinal horizontal suspension free

B Longitudinal horizontal suspension blocked

⚠ CAUTION

When the longitudinal horizontal suspension is blocked, the suspension comfort is significantly lower.

Impacts are much more noticeable.

Adjusting the armrest

⚠ DANGER

There is a risk of accident if the armrest lowers suddenly, causing the driver to move in an uncontrolled manner. This can result in unintentional actuation of the steering or the operating devices and thus cause uncontrolled movements of the truck or load.

– Do not adjust the armrest while driving.

– Adjust the armrest so that all operating devices can be actuated safely.

– Ensure that the armrest is securely tightened.

Adjusting the length of the armrest

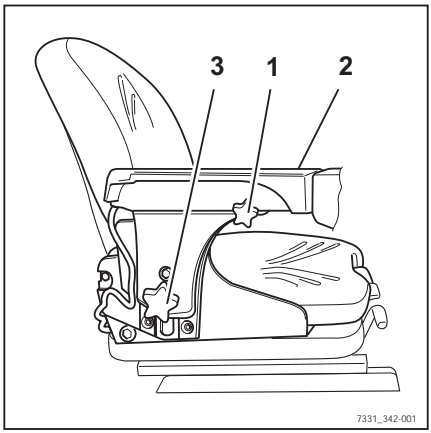

- Release the star-grip handle (1) by turning it anti-clockwise.
- Shift the armrest (2) into the desired position.
- Tighten the star-grip handle by turning it clockwise.
- Check that the armrest is firmly attached.

Adjusting the height of the armrest

- Release hand wheel (3) by turning it anti-clockwise.
- Shift the armrest (2) into the desired position.
- Tighten the hand wheel by turning it clockwise.
- Check that the armrest is firmly attached.

Adjusting the steering column

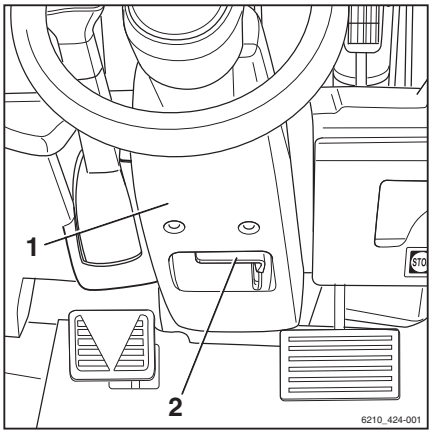

⚠ DANGER

Risk of accidents!

Adjusting the steering column during travel may cause the truck to career out of control.

- Adjust the steering column only when the truck is at a standstill.
- Ensure that the steering column is engaged.

- Press down and hold the lever (2) for steering column adjustment.
- Position the steering column (1) and release the lever.

When the steering column engages, the lever snaps back to the initial position.

- Gently push and pull on the steering column to make sure that the steering column is engaged.

Unlocking the emergency off switch

▷

– Pull the emergency off switch (1) until it is unlocked.

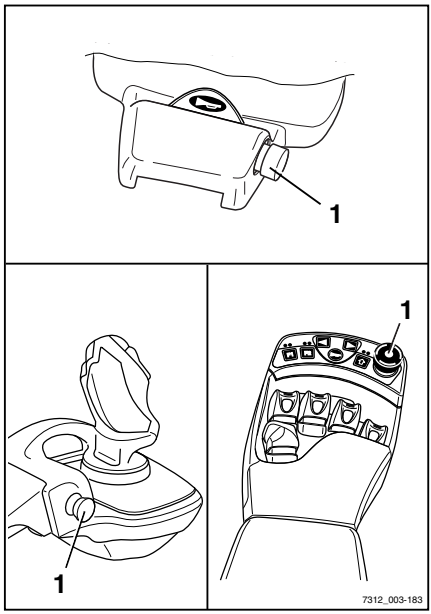

Operating the signal horn

▷

NOTE

The signal horn is used to warn people against imminent danger or to announce your intention to overtake.

– Push the signal horn button (1).

The signal horn sounds.

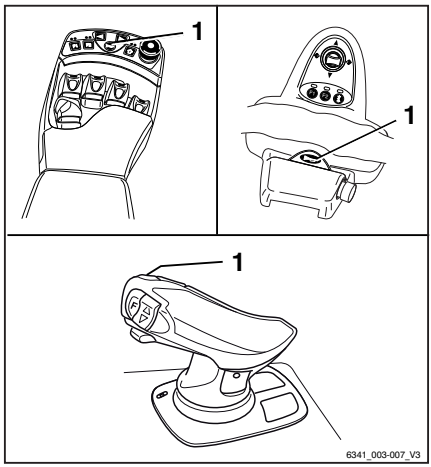

Seat belt

DANGER

Even when using an approved restraint system, there is some residual risk of the driver being injured if the truck tips over.

This risk of injury can be reduced through the combined use of the restraint system and the seat belt.

In addition, the seat belt protects against the consequences of rear-end collisions and falling off a ramp.

– Recommendation: When operating the truck on a ramp, fasten the seat belt in addition to using the driver's cab, the bracket door or the restraining bracket.

DANGER

Only bracket doors (variant), the restraining bracket (variant) or the driver's cab (variant) with closed, fixed doors constitute a driver restraint system. Plastic doors (weather protection) do not constitute a restraint system!

If the doors are open or have been removed, you must use an alternative suitable restraint system (e.g. a seat belt)!

Fastening the seat belt

▷

DANGER

Risk to life when driving without a seat belt!

If the truck tips over or crashes into an obstacle and the driver is not wearing the seat belt, the driver may be thrown from the truck. The driver could slide under the truck or collide with an obstacle.

There is a risk of fatal injury!

– Fasten the seat belt before every trip.
– Do not twist the seat belt when fastening it.
– Only use the seat belt to secure one person.
– Have any malfunctions repaired by the authorised service centre.

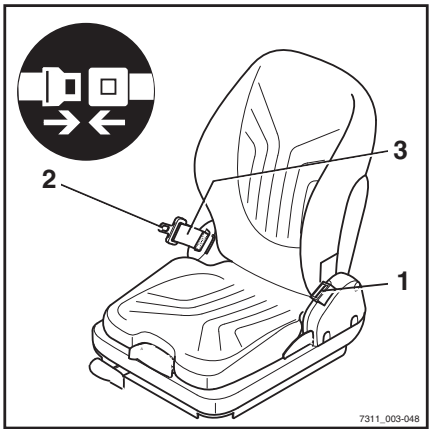

NOTE

The buckle has a buckle switch (variant). In the event of an operating error or malfunction, the message `SAFETY BELT` *appears in the display and operating unit, see the chapter entitled "Display messages".*

– Pull the seat belt (3) smoothly out of the belt retractor and fasten closely around the body over the thighs.

NOTE

Sit as far back as possible so that your back is leaning against the seat backrest. The automatic blocking mechanism permits sufficient freedom of movement on the seat.

– Click the belt tongue (2) into the buckle (1).

– Check the tension of the seat belt. The belt should fit closely around your body.

Fastening on a steep slope

The automatic blocking mechanism prevents the belt from being extended whenever the truck is on a steep gradient. It is no longer possible to pull the seat belt out of the belt retractor.

– Move away carefully from the slope.

– Fasten the seat belt.

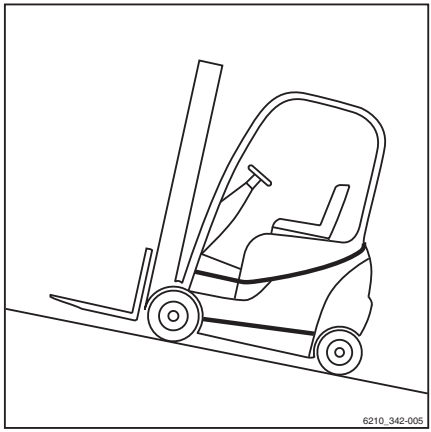

Releasing the seat belt

– Push the red button (4) on the buckle (1). ▷

– Slowly guide the belt tongue back to the retractor by hand.

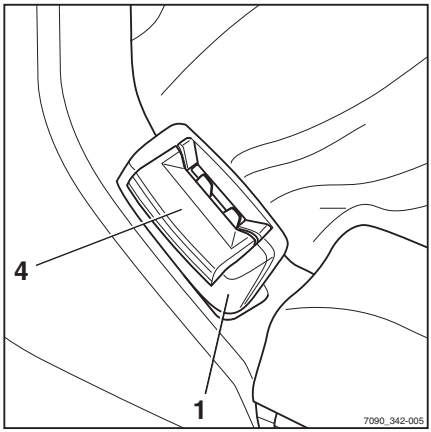

NOTE

Do not allow the seat belt to retract too quickly. The automatic blocking mechanism may be triggered if the belt tongue strikes the housing. It will then no longer be possible to pull the seat belt out with the usual force.

– Using increased force, pull the seat belt around 10-15 mm out of the retractor to disengage the blocking mechanism.

– Slowly allow the seat belt to retract again.

– Protect the seat belt from dirt (for example, by covering it).

Malfunction due to cold weather conditions

– If the buckle or belt retractor is frozen, thaw them out and dry them thoroughly to prevent recurrence.

⚠ CAUTION

The seat belt may be damaged by heat!

Do not subject the buckle or belt retractor to excessive heat when thawing.

– Do not use air warmer than 60°C when thawing.

Using the driver's cab

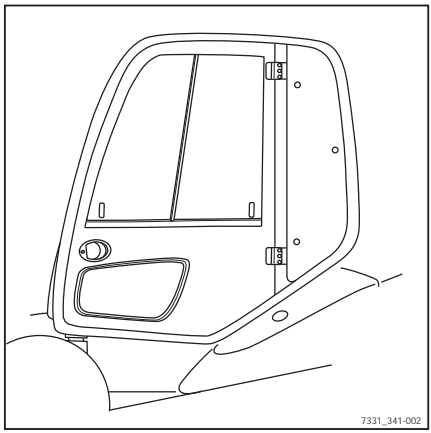

DANGER

Risk of fatal injury in the event of falling from the truck if it tips over!

In order to prevent the driver from sliding underneath the truck and being crushed if the truck tips over, a restraint system must be in place and must be used. This will prevent the driver from falling out of the truck if it tips over. The driver's cab constitutes a driver restraint system only if the cab door is sturdy and closed. Fabric-covered cabs (variant) with doors made of plastic or canvas do not constitute a driver restraint system and offer no protection from the consequences of the truck tipping over!

- Close the cab door before operation.
- If the door is open or has been removed, use a comparably secure restraint system.
- We recommend that you always use the seat belt.

Checking the brake system for correct function

⚠ DANGER

Risk of accident in the event of failure of the brake system!

If the brake system fails, the truck will be insufficiently braked.

– Do **not** operate the truck if the brake system is faulty.

Checking the electric brake

▷

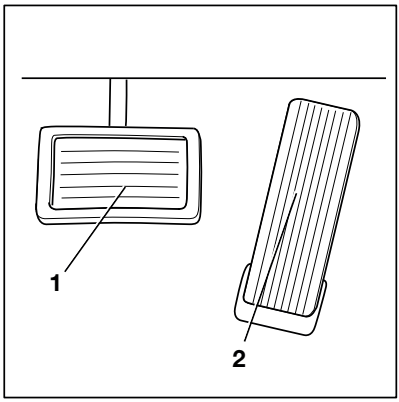

⚠ DANGER

Risk of accident if the braking effect of the electric brake is inadequate!

The braking effect of the electric brake may be insufficient for emergency braking.

– Always actuate the brake pedal (1) for emergency braking.

⚠ DANGER

Risk of accident due to excessive speed!

Depending on the charge state of the battery, regenerative braking may be insufficient when driving downhill, meaning that the maximum permissible speed of the truck is exceeded.

– Press the brake pedal (1).

If the driving speed is restricted or if the opposite drive direction is selected, the truck is braked using the electric brake.

– To actuate this, release the accelerator pedal (2).

The truck must decelerate and remain stationary.

– If the truck does not slow down, press the brake pedal (1).

Checking the service brake

– Release the parking brake.

– Press the brake pedal (1).

There must be a slight pedal clearance and then a noticeable brake pressure point.

– Accelerate the unladen truck in a clear area.

– Press the brake pedal (1) firmly.

The truck must decelerate noticeably.

Checking the parking brake on a gradient or a lorry ramp

⚠ DANGER

Risk to life if the truck rolls away!

If the parking brake is not applied, the truck could run people over.

– Do not leave the truck until the parking brake has been applied.

– Stop the truck on a steep gradient (e.g. a HGV ramp) and actuate the parking brake.

The parking brake must hold the truck on the incline.

– If the truck rolls away despite the parking brake being applied, stop the truck using the service brake.

– In an emergency, secure the truck with wedges on the downhill-facing side to prevent it from rolling away.

– Have the parking brake checked and repaired by the authorised service centre.

Checking the parking brake on a level surface

⚠ WARNING

Risk of accident from abrupt deceleration!

The truck will decelerate abruptly if the parking brake is applied.

– Fasten the seat belt.

– Use the available restraint systems.

– Find a sufficiently large and open area in which nobody will be endangered or obstructed.

– Accelerate the truck to walking speed.

– Press the emergency off switch.

NOTE

When the emergency off switch is actuated, note the following:

- *The electric brake is disabled. The truck no longer responds to the command issued by the accelerator pedal.*
- *The power steering is no longer available. Steering forces are increased due to the remaining emergency steering function.*

– Release the accelerator pedal.

– Apply the parking brake.

The electric parking brake slows the truck with a low level of deceleration.

– To increase the level of deceleration, either press and hold the actuating button for longer or press it several times.

The truck must decelerate and remain stationary.

NOTE

To release the parking brake, unlock the emergency off switch.

– If the truck only coasts and does not decelerate or decelerates only slightly, stop the truck using the service brake.

– Secure the truck with chocks so that the truck does not roll away.

– Have the parking brake checked and repaired by the authorised service centre.

Checking the steering system for correct function ▷

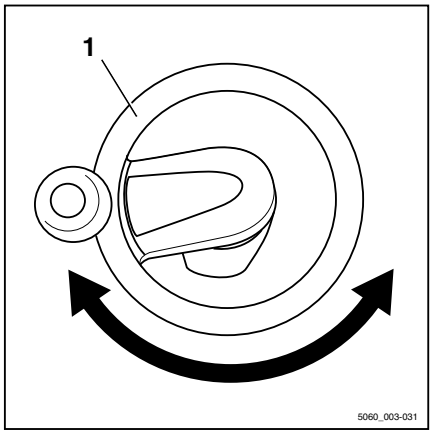

DANGER

If the hydraulics fail, there is a risk of accident as the steering characteristics have changed.

– Do not operate the truck if it has a defective steering system.

– Operate steering wheel (1). The steering play while stationary must not be more than two finger widths.

NOTE

If the truck is switched on with the steering wheel turned, the maximum driving speed is limited. Travel speed limitation is removed as soon as the steering wheel is moved out of a cornering position into the straight-ahead position. This requires a change in steering angle of about half a revolution.

Checking the emergency off function

WARNING

There is no electric braking assistance when the emergency off switch is actuated!

Actuating the emergency off switch will de-energise the entire electrical system. The truck will not be held on a slope by the electric brake.

– Brake the truck by depressing the brake pedal.

CAUTION

There is no power steering when the emergency off switch is actuated!

The truck is equipped with a hydraulic power steering system. When the emergency off switch is actuated, the hydraulic system is completely shut down. Steering forces are increased by the remaining emergency steering function.

– Steer with a higher level of force.

– Slowly drive the truck forwards.

– Press the emergency off switch (1). ▷

The truck will roll to a stop.

– Brake the truck to a standstill by depressing the brake pedal.

– Pull out the emergency off switch (1).

The knob is unlocked and pops out. The truck performs an internal self-test and is then ready for operation again.

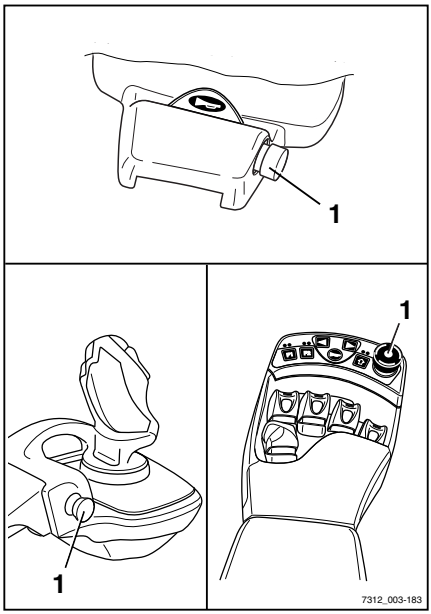

Checking the vertical lift mast position (variant) for correct function ▷

NOTE

The function check of the lift mast vertical position (variant) must be carried out every time a truck is commissioned.

– Press the Softkey (1).

The comfort feature "lift mast vertical position" is switched on. The symbol (2) is displayed.

– Tilt the lift mast backwards.

The lift mast must tilt back fully and move gently as far as the end stop.

– Tilt the lift mast forward.

The lift mast must tilt forwards and stop in the vertical position.

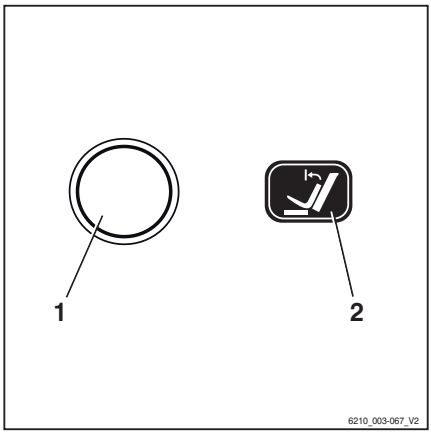

– Release the operating device to tilt and actuate again.

The lift mast must tilt forwards fully and move gently as far as the end stop.

Zero adjustment of the load measurement (variant)

NOTE

A zero adjustment must be carried out in order to guarantee the accuracy of the load measurement (variant) at all times. Zero adjustment is required

- *Before daily use*
- *after changing the fork arms*
- *after fitting or changing attachments.*

NOTE

Accurate zero adjustment is only possible if the fork is not carrying a load. Do not take up a load yet.

NOTE

Accurate zero adjustment is only possible within the first lifting stage of the lift mast. When carrying out the zero adjustment, do not raise the fork more than 800 mm above the ground.

NOTE

The way in which the lifting system is operated depends on the operating devices included in the truck's equipment; see the chapter entitled "Lifting system operating devices".

– Set lift mast to vertical.

– Raise the fork to a height of 300-800 mm.

– Press the Softkey (1).

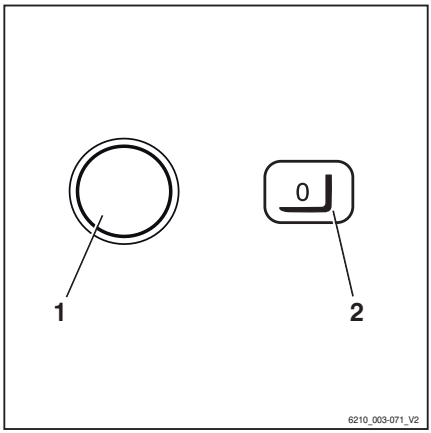

The zero adjustment of the load measurement is switched on. The symbol is displayed. The message `LOWER FORKS` appears on the display.

NOTE

During the following process, the fork carriage must be lowered slightly and then stopped abruptly. While doing so, the fork must not touch the ground, otherwise the zero adjustment will not be accurate. To stop the lowering procedure quickly, release the operating device for lowering so that it jumps into the zero position.

– Lower the fork carriage slightly and release the operating device.

When the zero adjustment has been carried out correctly, the value "0 kg" appears on the display.

– The zero adjustment of the load measurement is completed. The symbol (2) is displayed.

Switching on

Switching on the key switch

⚠ WARNING

Before switching on the key switch, all tests and operations prior to commissioning must be performed without any defects being detected.

- Carry out checks and operations before commissioning.
- Do not operate the truck if defects have been detected; contact the authorised service centre.

NOTE

When the truck is switched on, the maximum driving speed is restricted. The driving speed limitation is disabled as soon as the truck is steered out of cornering to drive in a straight line. To do this, rotate the steering wheel by approximately half a turn.

- Insert switch key (1) into the key switch and turn to position "I". ▷

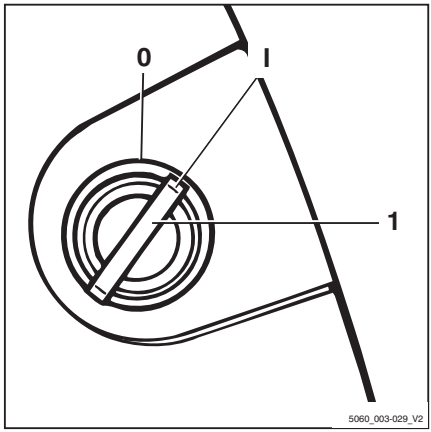

Switching on

This initiates a self-test. All lamps in the drive direction and turn indicator displays light up briefly. ▷

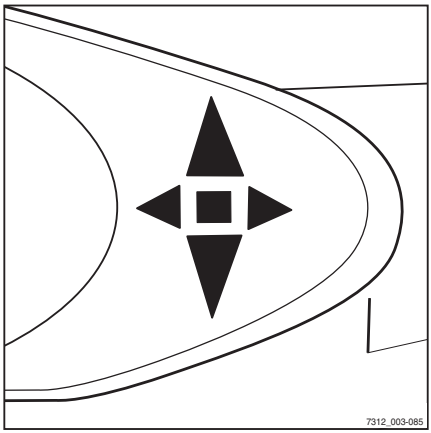

When the key switch is switched on, the display shows the welcome screen in the set language until the truck controller has fully started up. ▷

If the truck is ready for operation, the standard displays are shown.

If the truck is equipped with the "access authorisation with PIN code" variant, the display initially changes to the input menu for access authorisation.

Standard display elements

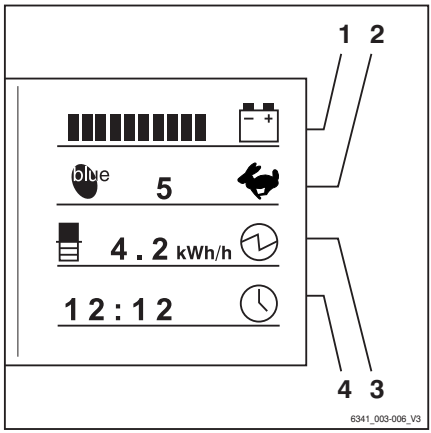

1 **Battery charge**
The available battery capacity is shown in the display field.

2 **Drive program**
The current traction program (1–5) appears on the display.

3 **Power rating**
The average power consumption and consumption trends are shown in the display field.

4 **Time**
The current time appears in the display field.

NOTE

After connecting the battery, the correct charging state may not be displayed until the battery is placed under load in the form of driving or lifting operations.

Additional information may appear on the display.

– If malfunctions occur, refer to the information in the chapter entitled "Display messages".

Access authorisation with PIN code (variant)

Description

Trucks equipped with the "Access authorisation with PIN code" variant are protected against unauthorised use by a five-digit driver PIN. Up to fifty different driver PINs can be defined so that the same truck can be used by different drivers, each with their own driver PIN.

NOTE

The driver PINs are defined in a truck control unit menu that can only be accessed by persons with the corresponding access authorisation, e.g. fleet managers.

Once the key switch has been switched on, the input menu for the driver PIN appears on

the display and operating unit screen. All of the truck's functions (driving, hydraulics, additional electrical installations and the display and operating unit displays) are blocked. The function of the hazard warning system (variant) is guaranteed. Enter the five-digit driver PIN (possible entries from 00000 to 99999) to enable the blocked functions. Once the correct driver PIN has been entered, the standard displays are shown. All of the truck functions are available.

The access authorisation can be configured in such a way that the driver PIN has to be re-entered each time the driver steps off the truck, in order for the truck to be operated again.

– Contact the authorised service centre on this matter.

The first driver PIN is preset to "11111" at the factory. All others are preset to "0xFFF" but have no function as the highest valid driver PIN is "99999". Persons with the appropriate access authorisation, e.g. fleet managers, can change the driver PINs in the corresponding menu.

NOTE

When first commissioning the truck, we recommend you change the access authorisation set at the factory. This is the only way to guarantee that the driver PIN is only known to persons with corresponding access authorisation.

The driver PINs are stored in the truck control unit. These are still available if the display and operating unit has been changed. The authorised service centre can use a diagnostic device to read out the driver PIN and, if necessary, restore the factory default driver PIN.

ACCESS CODE input menu

The driver enters the five-digit driver PIN (00000 to 99999) in this input menu.

The driver PIN is entered using the buttons or Softkeys (1). The digits entered for the driver PIN (2) are not visible but are represented by circles instead. If the driver PIN entered is correct, the familiar screen appears with the standard display, and all truck functions are available.

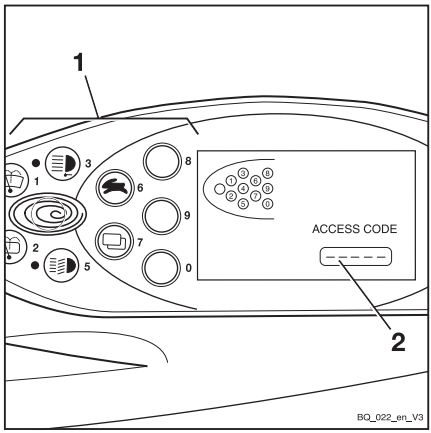

If an incorrect driver PIN is entered, the message `INVALID` appears for a short time. When the message goes out, the driver PIN can be re-entered.

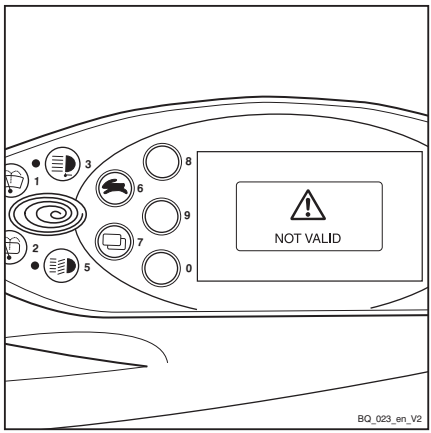

After three invalid entry attempts, the message `CODE DENIED` appears. The input is then locked for five minutes before another attempt can be made. ▷

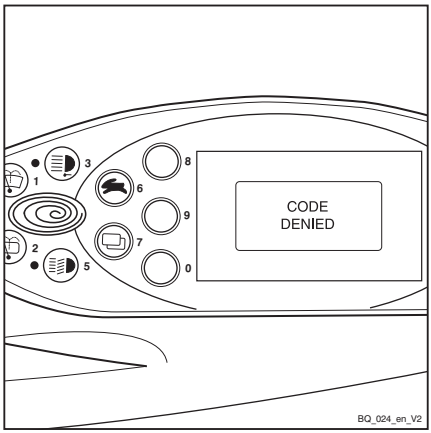

Defining the driver PIN ▷

NOTE

The driver PINs can be defined only by persons with the appropriate access authorisation, e.g. fleet managers. To set the driver PIN, the fleet manager must access the configuration menu. The configuration menu is password-protected. After entering the password, the fleet manager can configure general settings for the truck. To change the password, see the chapter entitled "Changing the password".

– Push the drive program selection button (1) and the menu change button (2) at the same time.

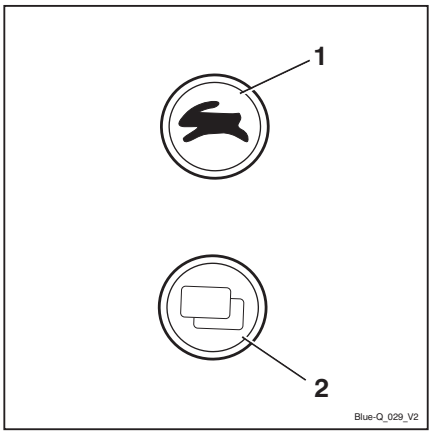

PASSWORD appears in the display.

– Enter the four-digit password (factory default: 2777) using the buttons (1).

– Confirm the input using Softkey ↵ (2).

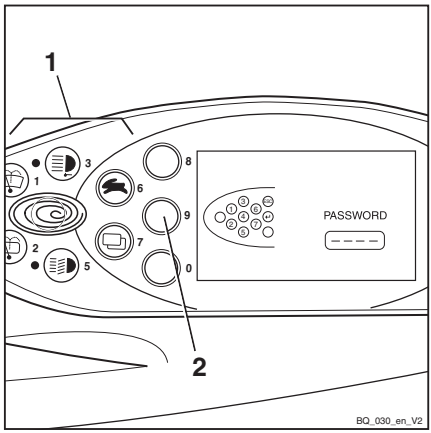

CONFIGURATION appears in the display.

– Use the drive program selection button (1) and the menu change button (3) to select the ACCESS CODE menu.

– Confirm your selection using Softkey ↵ (2).

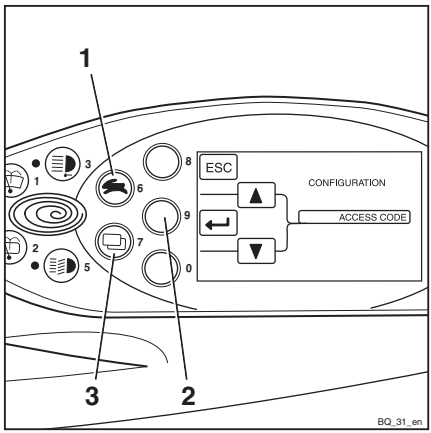

Selecting the driver PIN

In the ACCESS CODE menu, there are fifty possible driver PINs to choose from.

The digit sequences can be set or changed in the NEW CODE submenu.

Once the ACCESS CODE menu has been accessed, the CODE selection field (2) contains the number 1. The first of the fifty driver PINs can now be defined.

– Use the drive program selection button (1) and the menu change button (4) to select the desired driver PIN (1 to 50).

– Confirm your selection using Softkey ↵ (3).

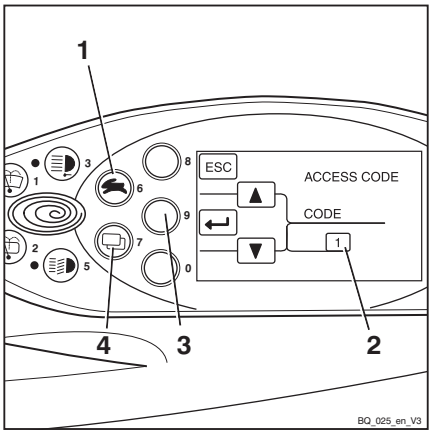

NEW CODE appears in the display.

– Enter the desired driver PIN using the buttons or Softkeys (5).

The digits entered do not appear in the display. Instead they are represented by circles in the NEW CODE field (6).

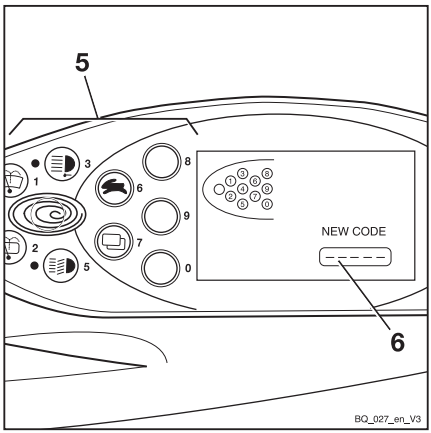

CONFIRM appears in the display. ▷

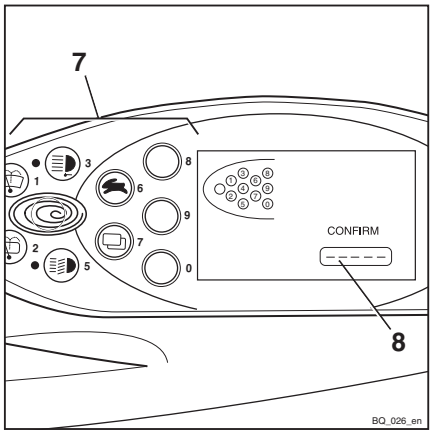

The CONFIRM submenu is used to confirm the new driver PIN.

– Enter the new driver PIN for a second time in the CONFIRM field (8) using the buttons or Softkeys (7).

If the entry matches the new driver PIN previously entered, the system will accept the new driver PIN once the last digit has been entered. The display switches back to the ACCESS CODE menu.

Another driver PIN can be defined here.

If the driver PIN entered in the CONFIRM submenu does not match the driver PIN entered previously in the NEW CODE submenu, the message INVALID will appear. ▷

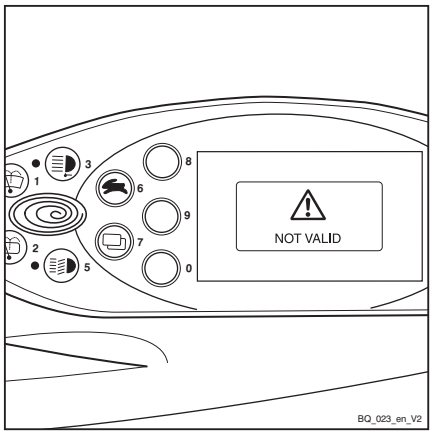

The message will then disappear after a short time. The new driver PIN can be entered in the CONFIRM submenu for further confirmation.

After three incorrect entries, the CODE DENIED message appears.

The display switches back to the ACCESS CODE menu. The desired driver PIN must be re-defined.

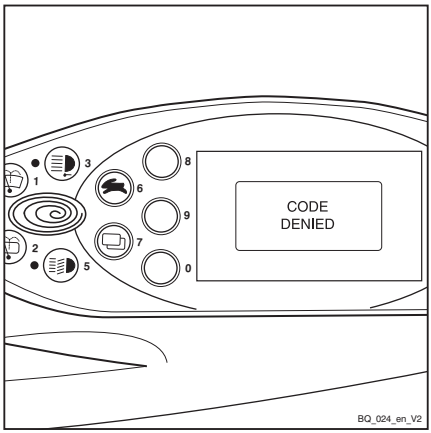

Changing the password

It is recommended that you change the factory default password.

NOTE

The password can only be changed when the parking brake is applied.

– Push the drive program selection button (1) and the menu change button (2) at the same time.

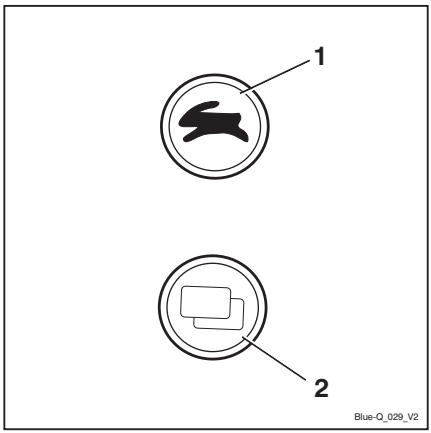

PASSWORD appears in the display.

– Enter the current password using the buttons (1).

– Confirm the input using Softkey ↵ (2).

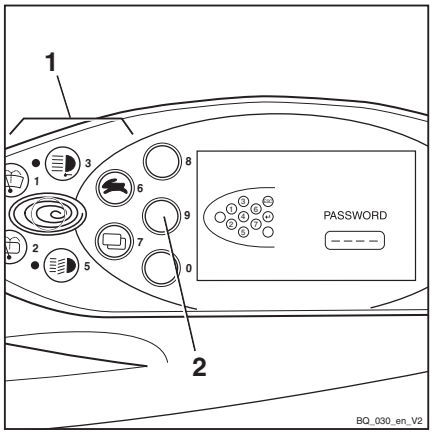

CONFIGURATION appears in the display.

– Use the drive program selection button (1) and the menu change button (3) to select the PASSWORD menu.

– Confirm your selection using Softkey ↵ (2).

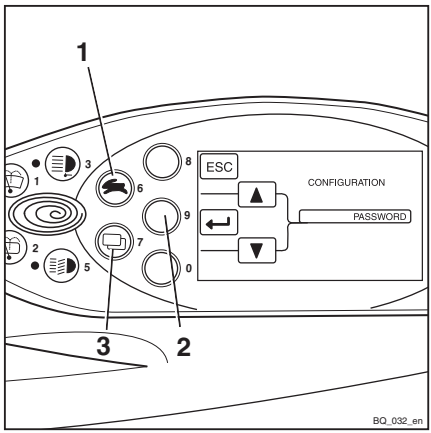

PASSWORD/PASSWORD LEVEL appears in the display. ▷

– Use the drive program selection button (1) and the menu change button (4) to select the desired PASSWORD LEVEL (2).

– Confirm your selection using Soft-key ↵ (3).

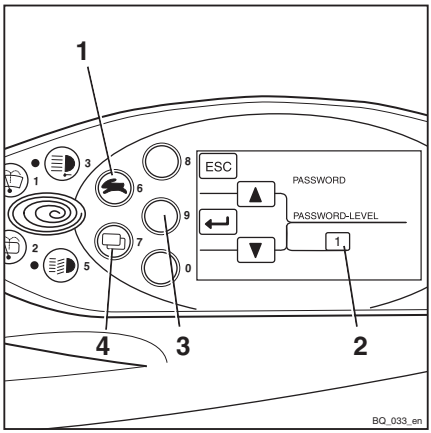

NEW CODE appears in the display. ▷

The four-digit password can be entered using the buttons (1).

⚠ CAUTION

Do not enter the password 1777!

If this password is entered, the configuration options for the fleet manager are restricted to driver authorisations and cannot be reset independently.

The authorisations can only be reset by the authorised service centre!

– Enter the new desired password using the buttons (1).

The digits entered are shown in plain text in the NEW CODE field (4).

– Confirm your selection using Soft-key ↵ (3).

In the NEW CODE field, -??- appears briefly. The new password is confirmed.

– Press Softkey ESC (2) to correct the new password.

The display switches back to PASSWORD/PASSWORD LEVEL.

– Repeat the process steps from PASSWORD/PASSWORD LEVEL.

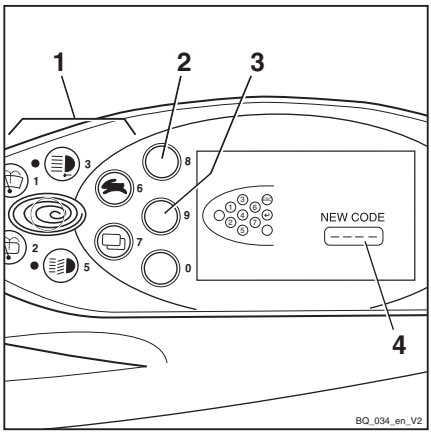

– To exit the configuration menu, press Soft-key ESC (2) repeatedly until the standard display appears.

Operating the display-operating unit

Indicators

Standard displays

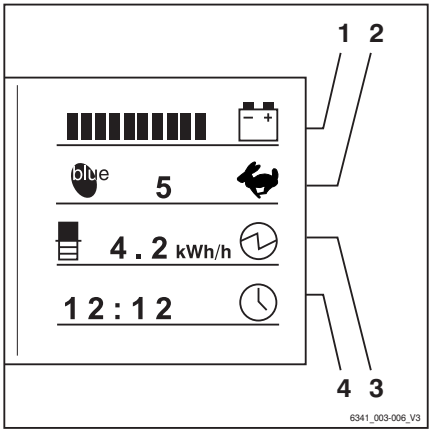

In the factory setting, the following indicators can be seen in the display and operating unit:

1 **Battery charge**

Displays the available battery capacity as a segmented bar graph in 10% increments.

Approx. every 10 seconds, the display switches from showing the battery charge to the remaining operating time.

If a different drive program or a different drive mode (e.g. Blue-Q) is selected, the system immediately recalculates the remaining operating time and indicates for how long the truck can be driven if the operating situation of the last 30 minutes is maintained.

2 **Drive program**

Displays the number of the selected drive program. To change the drive program, refer to the section entitled "Setting the drive program".

The Blue-Q icon appears when the Blue-Q function is switched on; refer to the section entitled "Blue-Q efficiency mode".

3 **Power rating**

The power rating indicator shows the average energy consumption over the last 30 minutes in kilowatts (kW).

Trends relating to the current energy consumption are displayed as a vertical bar graph. The percentage change in each bar is shown in the table under "Power trends indicator" below.

4 **Time**

Displays the current time digitally in hours and minutes. The time can be adjusted; see the chapter entitled "Setting the time".

⚠ CAUTION

Deep discharges shorten the service life of the battery.

If no bar is shown (0% of the available battery capacity, i.e. around 20% of the nominal capacity), deep discharge begins.

– Deep discharge (no bar on the display) must be avoided.
– Cease work with the truck immediately.
– Charge the batteries immediately.

NOTE

To prevent deep discharge, certain restrictions (variant) can be activated (e.g. slow lifting). Consult the authorised service centre on this matter.

Power trends indicator

Symbol	Energy consumption trend
	Significant increase (> 50%)
	Increase (up to 50%)
	Slight increase (up to 30%)
	No change
	Slight decrease (up to -30%)
	Decrease (up to -50%)
	Significant decrease (> -50%)

Additional indicators

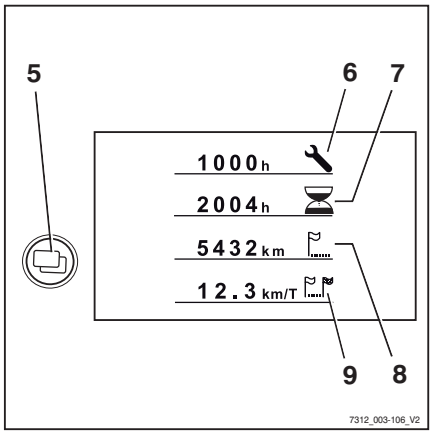

- **Menu change button**
  When the menu change button is pressed, the following additional indicators appear:
- **"Service in" display**
  Displays the remaining time in operating hours until the next maintenance operation is due according to the maintenance schedule in the maintenance instructions. Contact the authorised service centre in good time.
- **Operating hours**
  Displays the total operating hours completed by the truck. The hour meter starts running as soon as the truck is driven or the working hydraulics are actuated.
- **Total distance**

Displays the total distance driven in kilometres.

- **Daily kilometres**
  Displays the kilometres driven for the day.

NOTE

Ask the authorised service centre about the speed driven indicator.

NOTE

Have all repair and maintenance work performed by an authorised service centre. This is the only way to permanently correct defects.

– Inform the authorised service centre when the maintenance interval is reached.

Adjusting the displays

NOTE

The parking brake must always be engaged when you adjust the displays. The displays cannot be adjusted if the parking brake is not engaged.

NOTE

When adjusting the displays, do not actuate the hydraulic system operating devices. If you do, entry is interrupted and the display returns to the operating display.

The displays are adjusted in the `CONFIGURATION` menu.

– Turn the key switch to position "I".

– Press the drive program button (1) and the menu change button (2) at the same time. ▷

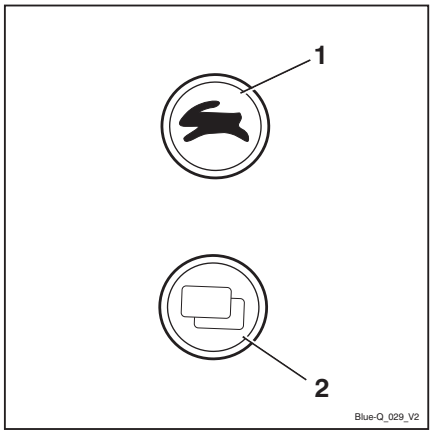

The display changes to the `PASSWORD` menu. ▷

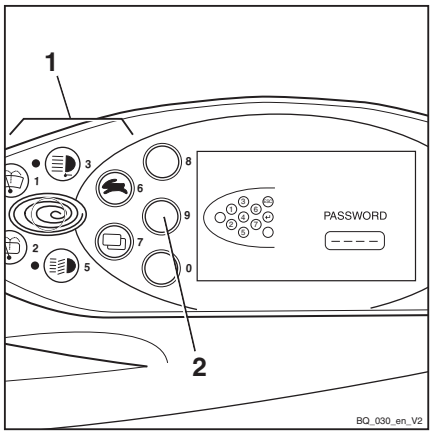

NOTE

It may be necessary to enter a password in order to configure the displays. This depends on the configuration of the display-operating unit.

- *For configuration of the display-operating unit, contact the authorised service centre*

– Press the Softkey ↵ (3). ▷

The display changes to the CONFIGURATION menu.

The following settings are possible and can be found in the corresponding chapter:

- Setting the date and time
- Resetting the daily kilometres and daily operating hours
- Setting the language
- Configure Blue-Q

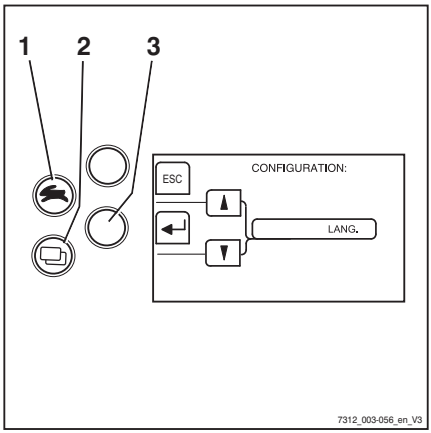

Symbols in the display

Messages

To show operating messages, warning messages or error messages in the display, text messages and symbols are used.

Symbols for operating messages

Description	Symbol
Empty field	No display
Please wait	
Service required	
Lift limitation	
Reference cycle	
Battery charging	
Drive program	
Hour meter	
Odometer	
Daily hour meter	
Daily odometer	
Speed	
Steering angle	
Load	
Time	

Description	Symbol
Hydraulic system	
Exh.gas purifier	
Coolant temperature	
Fuel level	
Blue-Q	
Power rating (average)	
Power rating (trend)	

Symbols for warning messages

Description	Symbol
Parking brake	
Actuate seat switch	
Safety belt	
Battery acid level	
Neutral warning message	
Are you sure?	
Oil pressure	

Symbols for error messages

Description	Symbol
Brake system malfunction	
Overheating of the engine	
Overheating	
Malfunction in the electrical system	
General malfunction	

Symbols for softkey functions of auxiliary equipment

The following symbols for softkey functions are used on the left of the display for auxiliary equipment:

Description	Symbol
Empty field	No display
General function OFF	F1 F2 F3
General function **ON**	F1 F2 F3
Rear working spotlight OFF	

Description	Symbol
Rear working spotlight **ON**	
Front working spotlight OFF	
Front working spotlight **ON**	
Windscreen heating OFF	
Windscreen heating **ON**	
Rear window heating OFF	
Rear window heating **ON**	
Interior lighting OFF	
Interior lighting **ON**	
Roof wiper/washer OFF	
Roof wiper/washer **ON**	
Heater blower OFF	
Heater blower **ON**	
Rotating beacon OFF	
Rotating beacon **ON**	
Seat heater OFF	
Seat heater **ON**	
Signal horn OFF	
Signal horn **ON**	
Cruise control OFF	
Cruise control **ON**	
Automatic mast vertical positioning OFF	
Automatic mast vertical positioning **ON**	
Load measurement zero adjustment OFF	
Load measurement zero adjustment **ON**	
Load measurement OFF	
Load measurement **ON**	

Symbols for softkey functions for menu navigation and for acknowledging messages

The following symbols for the softkey functions are used on the left of the display for menu navigation and to acknowledge messages:

Description	Symbol
Empty field	No display
Cancel input	ESC
Confirm input	

Description	Symbol
Confirm information	✓
Reset	RES
Back by one menu level	←
Back to the previous edit field	◄
Scroll up	▲
Scroll down	▼
Count up	+
Count down	−

Status LEDs of the function keys for additional electrical installations

The current switch status of a button is indicated with LEDs next to the relevant function key for the additional electrical installation.

Description	LED
Function off	LED **OFF**
Function on	LED **ON**

Symbols for numeric keypad

The buttons and Softkeys that can be used to enter numbers and to cancel or confirm input values are shown in the display.

Screen for entering the fleet manager password: ▷

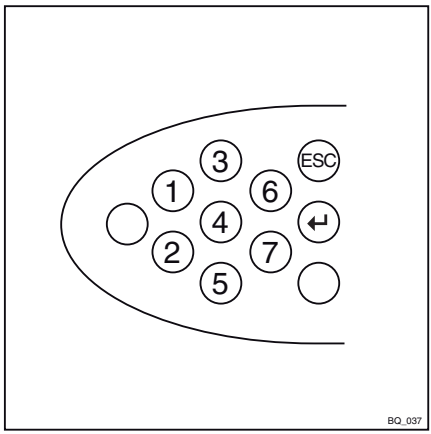

Screen for entering the driver PIN (access code): ▷

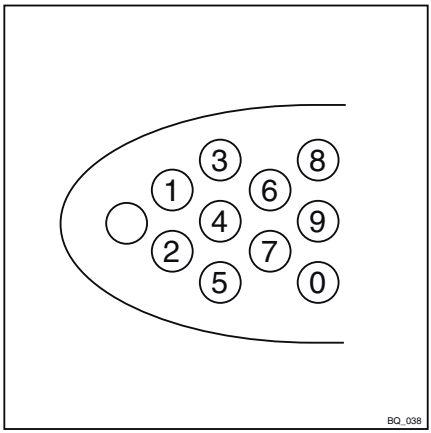

Setting the date or time ▷

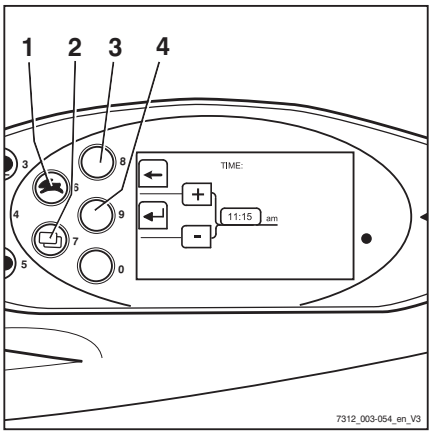

– Switch to the `CONFIGURATION` menu; see the chapter entitled "Adjusting the displays".

– Press the Drive programme button (1) or the Menu change button (2) repeatedly until the `TIME` option appears.

– Confirm your selection using the Soft-key ↵ (4).

The `TIME` menu appears.

– Press and hold down the Drive programme button (1) or Menu change button (2) until the desired time appears on the display.

As the buttons are held down for longer, the scrolling speed increases in three levels.

– Confirm the set time using Softkey ↵ (4).

– Use the Softkey ← (3) to exit the menu and return to the next level up.

NOTE

The date is set in a similar manner.

Resetting the daily kilometres and daily operating hours

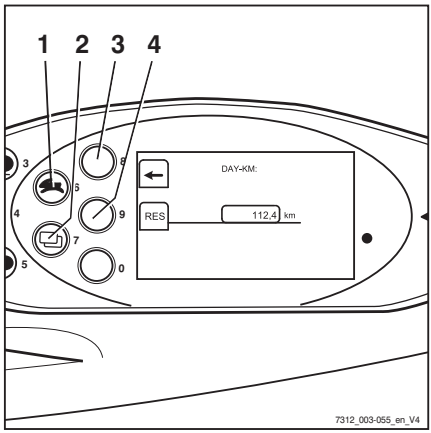

The daily number of kilometres and daily operating hours displays can be reset to zero:

– Switch to the CONFIGURATION menu; see the chapter entitled "Adjusting the displays".

– Press the Drive programme button (1) or the Menu change button (2) repeatedly until the DAY KM option appears.

– Confirm your selection using the Softkey ↵ (4).

The DAY KM menu appears.

– Reset the displayed mileage using Softkey RES (4).

– Use the Softkey ← (3) to exit the menu and return to the next level up.

NOTE

The daily operating hours are reset in the same manner.

Setting the language

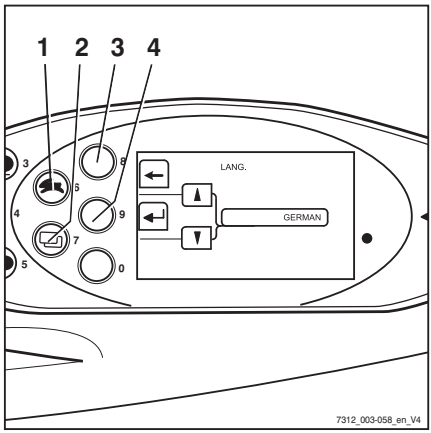

The displays can be shown in additional languages:

– Switch to the CONFIGURATION menu; see the chapter entitled "Adjusting the displays".

– Press the drive programme button (1) or the menu change button (2) repeatedly until the LANGUAGE option appears.

– Confirm your selection using the Softkey ↵ (4).

The LANGUAGE menu appears.

– Press drive program button (1) or menu change button (2) until the desired language appears in the display.

– Confirm your selection using the Softkey ↵ (4).

– Use the Softkey ← (3) to exit the menu and return to the next level up.

Softkeys for operating various equipment variants

Additional functions can be displayed on the display-operating unit. These additional functions, e.g. a rotating beacon, can be switched on and off using Softkeys.

Changing the Softkey functions:

A grey bar (3) highlights the Softkey column. This is the right-hand column in the example shown here. These additional functions can now be switched on and off via the corresponding Softkeys (2). The right-hand column is only populated with additional functions if the truck has more than three equipment variants that can be switched on and off using Softkeys.

In this case, proceed as follows to switch between the two columns:

– Briefly press the Menu change button (1).

The grey bar jumps to the left-hand column. These additional functions can now be switched on and off via the corresponding Softkeys (2).

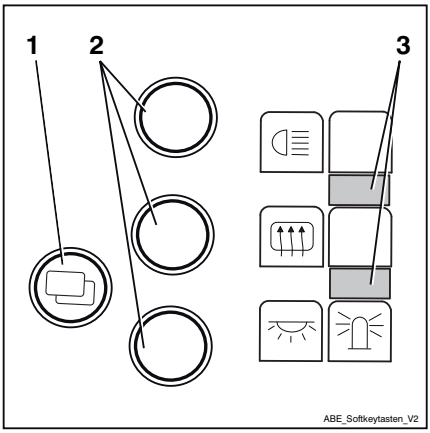

NOTE

Press the Menu change button (1) for approx. 1 second to switch between the individual menus on the display-operating unit.

NOTE

The additional functions depend on the individual equipment of the truck and may vary from those shown here.

Configuring Blue-Q efficiency mode

The following operating modes can be selected to activate the Blue-Q efficiency mode:

STANDARD

- Blue-Q is turned off whenever the truck is commissioned. The driver can use the Blue-Q button to switch efficiency mode on and off at any time while the truck is being operated

FIXED

- Blue-Q is switched on permanently whenever the truck is commissioned and during truck operation. The driver cannot turn efficiency mode off

FIXED-FLEX

- Blue-Q is turned on whenever the truck is commissioned. The driver can use the Blue-Q button to switch efficiency mode on and off at any time while the truck is being operated

– Switch to the CONFIGURATION menu; see the chapter entitled "Adjusting the displays". ▷

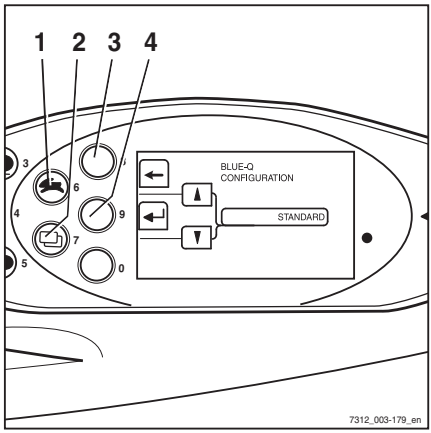

– Keep pressing the drive programme button (1) or the menu change button (2) until option BLUE Q CONFIGURATION appears.

– Confirm your selection with Softkey ↵ (4).

The BLUE-Q CONFIGURATION menu appears.

– Press drive program button (1) or menu change button (2) until the desired efficiency mode appears in the display.

– Confirm the set efficiency mode using Softkey ↵ (4).

– Use the Softkey ← (3) to exit the menu and return to the next level up.

Blue-Q efficiency mode

Functional description

The Blue-Q efficiency mode affects both the drive unit and the activation of the additional consumers, and reduces the truck's energy consumption.

If the efficiency mode has been activated, the acceleration behaviour of the truck changes to make acceleration more moderate.

When travelling at low speeds—normally when manoeuvring—no reduction is noticeable despite the activated efficiency mode. For moderate speeds of at least approx. 7 km/h, acceleration is gentler. Therefore, on distances of up to approx. 40 m, lower speeds are reached than would be the case if the efficiency mode was not activated.

Blue-Q has no influence on:

- Maximum speed
- Climbing capability
- Traction
- Braking characteristics

NOTE

The Blue-Q efficiency mode can be switched on and off in the `STANDARD` *and* `FIXED-FLEX` *operating modes. If the* `FIXED` *operating mode is configured in the display operating unit, the Blue-Q button has no function and the Blue-Q efficiency mode is switched on permanently; see also chapter "Configuring Blue-Q efficiency mode".*

Switching off additional consumers

If the Blue-Q efficiency mode is activated, the controller switches off various additional consumers after a few seconds in certain conditions. The additional consumers available depend on the truck equipment. The following table shows the conditions that cause additional consumers to be switched off. Only one of the conditions listed must be met.

Additional consumers	Condition		
	Seat switch not actuated	Truck stopped	Truck is in motion
Front working spotlights	X	X	Backwards > 3 km/h
Rear working spotlights	X	X	Forwards
Top double working spotlight	X	X	> 3 km/h
Headlights	X	X	-
Front wiper	X	X	Backwards > 3 km/h
Rear wiper	X	X	Forwards
Seat heater	X	-	-
Cab heating	X	-	-

NOTE

On the version with StVZO (German Road Traffic Licensing Regulations) equipment, the Blue-Q efficiency mode does not switch off the lighting devices headlights and working spotlights, side lights, rear lights and license plate lamps.

Switching efficiency mode Blue-Q on and off

NOTE

The Blue-Q efficiency mode can be switched on and off in the `STANDARD` *and* `FIXED-FLEX` *operating modes. If the* `FIXED` *operating mode is configured in the display-operating unit, the Blue-Q button is disabled and the Blue-Q efficiency mode is switched on permanently. For information on configuring the Blue-Q operating modes, see the "Configuring Blue-Q efficiency mode" section.*

– Press the Blue-Q button (2) to switch on Blue-Q. ▷

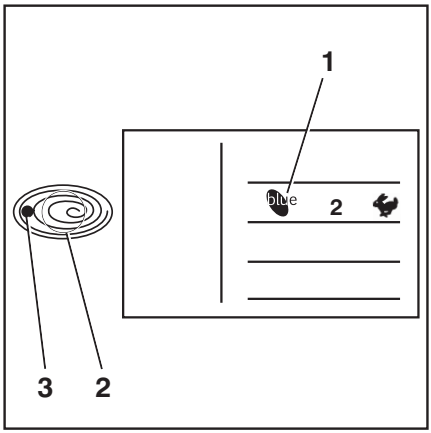

The Blue-Q symbol (1) is displayed. The LED (3) illuminates in blue. Blue-Q efficiency mode is switched on.

– To switch it off, press the Blue-Q button (2) again.

The Blue-Q symbol (1) and the LEDs (3) go out. Blue-Q efficiency mode is switched off.

Driving

Safety regulations when driving

Driving conduct

The driver must follow the public rules of the road when driving in company traffic.

The speed must be appropriate to the local conditions.

For example, the driver must drive slowly around corners, in tight passageways, when driving through swing-doors, at blind spots, or on uneven surfaces.

The driver must always maintain a safe braking distance from vehicles and persons in front, and must always have the truck under control. Stopping suddenly, turning quickly and overtaking at dangerous or blind spots must be avoided.

– Initial driving practice must be carried out in an empty space or on a clear roadway.

The following are forbidden during driving:

- Allowing arms and legs to hang outside the truck
- Leaning the body over the outer contour of the truck
- Climbing out of the truck
- Moving the driver's seat
- Adjusting the steering column
- Releasing the seat belt
- Disabling the restraint system
- Raising the load higher than 300 mm above the ground (with the exception of manoeuvring processes during the placement into stock/removal from stock of loads)
- Using electronic devices, for example radios, mobile phones etc.

⚠ WARNING

The use of multimedia and communication equipment as well as playing these devices at an excessive volume during travel or when handling loads can affect the operator's attention. There is a risk of accident!

– Do not use devices during travel or when handling loads.

– Set the volume so that warning signals can still be heard.

⚠ WARNING

In areas where use of mobile phones is prohibited, use of a mobile phone or radio telephone is not permitted.

– Switch off the devices.

Visibility when driving

The driver must look in the drive direction and have a sufficient view of the driving lane.

Particularly for reverse travel, the driver must be sure that the driving lane is clear.

When transporting goods that impair visibility, the driver must drive the truck in reverse.

If this is not possible, a second person acting as a guide must walk in front of the truck.

In this case the driver must only move at walking pace and with extra care. The truck must be stopped immediately if eye contact with the guide is lost.

Rear-view mirrors are only to be used for observing the road area behind the truck and not for reverse travel. If visual aids (mirror, monitor) are necessary to achieve sufficient visibility, it is necessary to practise using them. For reverse travel using visual aids, extra care should be taken.

When using attachments, special conditions apply; see the chapter entitled "Fitting attachments".

Any glass (variant, e.g. windscreen) and mirrors must always be clean and free of ice.

Roadways

Dimensions of roadways and aisle widths

To ensure safe manoeuvring, the following dimensions and aisle widths apply under specified conditions. In individual cases, check to determine whether a larger aisle width is necessary, e.g. in the case of load dimensions, attachments or lift masts that deviate from the standard configuration.

In the European Union, Directive 89/654/EEC concerning the "minimum safety and health requirements for the workplace" applies. Outside the European Union, the respective national regulations apply.

The required aisle widths depend on the dimensions of the load.

For pallets, these are:

Model	Type	Aisle width [mm]	
		With pallet 1000x1200 crosswise	With pallet 800x1200 lengthwise
RX60-60	6341	4907	5107
RX60-70	6342		
RX60-80	6343		
RX60–80 (LSP 900)	6344	4999	5199

The truck must be used only on roadways that do not have excessively sharp curves, excessively steep gradients or excessively narrow or low entrances.

Driving on gradients

⚠ WARNING

Driving up and down longer gradients can cause the drive unit to overheat and switch off.

Driving up and down longer gradients greater than 15% is not permitted due to the minimum specified braking values. The climbing capability values given below apply only to negotiating obstacles on the roadway and to temporary differences in level, e.g. ramps.

It is permitted to drive the truck on the following ascending and descending gradients:

Model	Type	Maximum gradient [%]	
		With a load	Without a load
RX60-60 (LSP 600)	6341	16.3	25.0
RX60-70 (LSP 600)	6342	15.5	25.3
RX60-80 (LSP 600)	6343	14.0	23.4
RX60–80 (LSP 900)	6344	12.0	18.3
LSP = load centre of gravity			

The stated values are used only to compare the performance of trucks in the same category. The gradient values in no way represent the normal daily operating conditions.

⚠ CAUTION

To use the truck safely—with or without a load—the maximum permitted ascending or descending gradient for travel is 15%.

– If you have any questions, contact your authorised service centre.

The ascending and descending slopes must not exceed the above gradient.

A rough road surface is non-slip and increases tyre grip.

Even transitions of the road surface to the gradient prevent impact with the ground. This helps to avoid damage to the load, the truck and the road surface.

Warning about components that protrude beyond the truck contour

Trucks are designed to enter very narrow or very low areas, such as aisles and containers. Moving components may protrude beyond the truck contour and become damaged or severed. Examples of these components are:

- A folding roof panel in the driver's cab
- Cab doors
- LPG cylinders that can be swung out

Condition of the roadways

Roadways must be firm, level and free from contamination and fallen objects.

The structural design of drains, level crossings and other similar facilities must enable them to be driven over with as few bumps as possible. If necessary, use ramps to compensate for uneven roadways.

Note the load capacity of manhole covers, drain covers etc.

There must be sufficient distance between the highest points of the truck or the load and the fixed elements of the surrounding area. The height is based on the overall height of the lift mast and the dimensions of the load; see the chapter entitled "Technical data".

Rules for roadways and the working area

Only routes approved by the operating company or its representative may be driven on. The roadways must be free of obstacles. The load must only be set down and stored in the designated locations. The operating company and its representative must ensure that unauthorised persons do not enter the working area.

NOTE

Please note the definition of the following responsible person: "operating company".

Hazardous areas

Hazardous areas on roadways must be indicated by the customary road traffic signs.

Setting the drive programme

The driving and braking characteristics of the drive can be set on the display and operating unit.

– Push the drive programme button (1) repeatedly until the number of the desired drive programme appears on the display (2).

Drive programs 1–5 are available.

Essentially, the higher the drive program number is, the greater the driving dynamics.

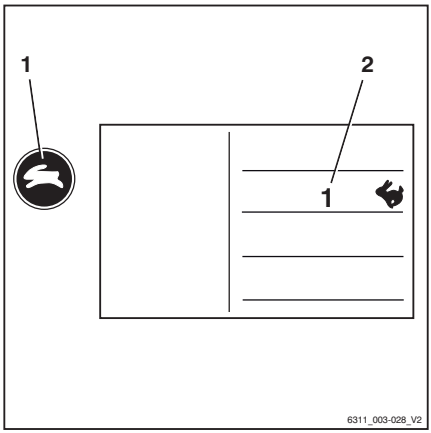

The following drive programmes are available:

Drive values[1]	Drive programme				
	1	2	3	4	5
Maximum speed (km/h)	19	19	19	19	19
Acceleration (%) (forwards/backwards)	80	90	100	110	120
Deceleration (%) (forwards/backwards)	80	90	100	110	120
Reversing (%) (forwards/backwards)	80	90	100	110	120
Brake retardation (%) (electric brake booster)	60	70	80	90	100

NOTE

The maximum speed pre-set in the drive programme is technically dependent on the battery used. Depending on the battery type used, the preset maximum speed must be adapted by the authorised service centre. If the maximum speed is not adapted, it can lead to technical faults in drive mode.

- *Contact your authorised service centre.*

Battery designation	Maximum speed (km/h)
7 PzS 1085 PowerPlusLife®	20
8 PzS 1120	19
8 PzS 1240	19
TENSOR® TCSM 2545	17

1 Values applicable to the standard device. Values for variants may deviate from this data.

Sprint mode (variant)

NOTE

Sprint mode is only possible in combination with the PowerPlusLife battery.

Switching on sprint mode

The performance of the electric drive can be increased by switching on sprint mode. When sprint mode is on, the truck accelerates to maximum speed more quickly.

NOTE

With sprint mode switched on, the truck's energy consumption is higher. The battery is therefore discharged more quickly.

– Push button (1).

Sprint mode is switched on, the symbol has a dark background.

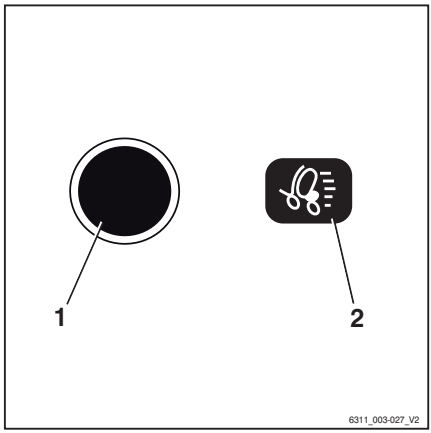

NOTE

Sprint mode remains on until the seat is vacated or button (1) is pushed again.

Switching off sprint mode

– Push button (1).

Sprint mode is switched off, the symbol has a light background.

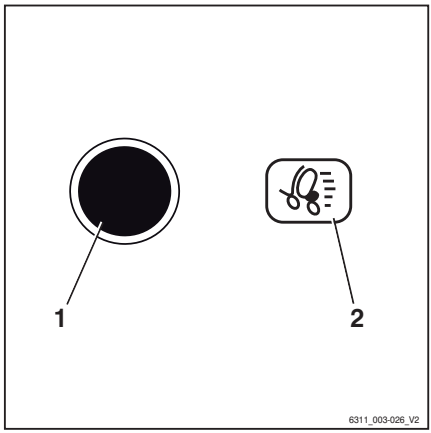

Selecting the drive direction

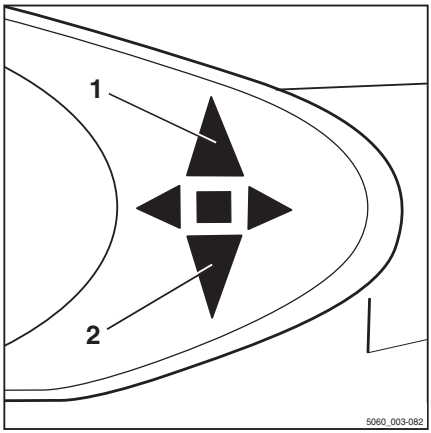

The drive direction of the truck must be selected using the drive direction switch before attempting to drive. The method of actuating the drive direction switch depends on the operating devices included in the truck's equipment.

Possible equipment variants include:

- **Mini-lever**
- **Joystick 4Plus**
- **Fingertip**
- **Mini-console**

NOTE

The drive direction can also be changed during travel. Your foot can remain on the accelerator pedal while you do so. The truck is then decelerated and accelerated again in the opposite direction (reversing).

The indicator for the selected drive direction ("forwards" (1) or "backwards" (2)) lights up on the display-operating unit.

Neutral position

If the truck is stopped for an extended period, select the neutral position to prevent the truck from suddenly starting if the accelerator pedal is inadvertently pressed.

– Briefly select the drive direction switch for the direction opposite to the current direction.

The drive direction indicator on the display and operating unit goes out.

NOTE

When the seat is vacated, the drive direction switch is set to "Neutral". To drive, the drive direction switch must be actuated again.

Actuating the drive direction switch, mini-lever version

- Push the cross lever (1) forwards to drive "forward".
- Pull the cross lever backwards to drive "backward".

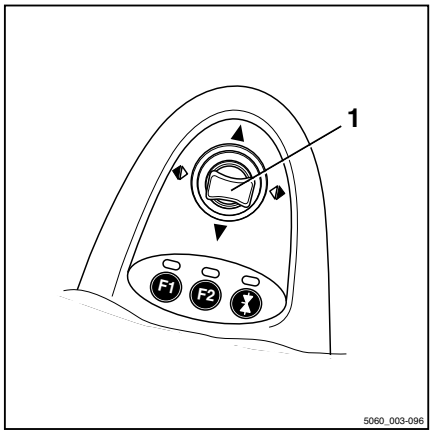

Actuating the vertical rocker button for the "drive direction", Joystick 4Plus version

- For the "forward" drive direction, push the vertical rocker button for the "drive direction" (1) upwards (A).
- For the "backward" drive direction, push the vertical rocker button for the "drive direction" (1) downwards (B).

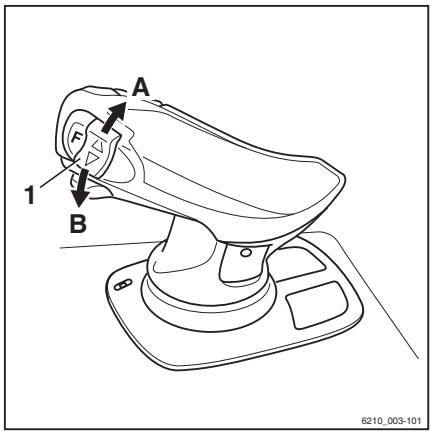

Actuate the drive direction switch, fingertip version

▷

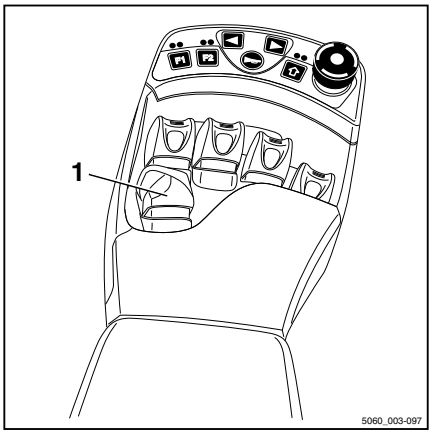

- For the "forwards" drive direction, push the drive direction switch (1) forwards.
- For the "backwards" drive direction, push the drive direction switch backwards.

Actuating the drive direction switch, mini-console version

▷

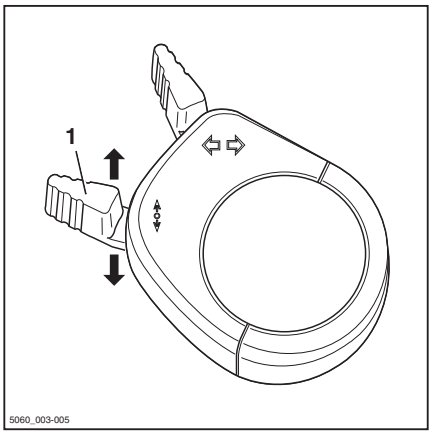

- For the "forwards" drive direction, push the drive direction switch (1) forwards.
- For the "backwards" drive direction, push the drive direction switch to the rear.

NOTE

Alternatively, the drive direction can also be selected using the drive direction switches on the operating devices.

Starting drive mode

DANGER

Risk to life if the truck rolls away or tips over!

- Sit on the driver's seat.
- Fasten the seat belt.
- Activate the available restraint systems.

Observe the information in the chapter entitled "Safety regulations when driving".

The driver's seat has a seat switch that checks whether the driver's seat is occupied. The truck cannot be moved if the driver's seat is not occupied or if the seat switch malfunctions. All lifting functions are disabled. The `SEAT SWITCH` message appears on the display-operating unit.

– Lift the fork carriage until the necessary ground clearance is achieved.

– Tilt the lift mast backwards.

– Release the parking brake.

– Select the desired drive direction.

The indicator for the selected drive direction ("forwards" (1) or "reverse" (2)) lights up on the display-operating unit. ▷

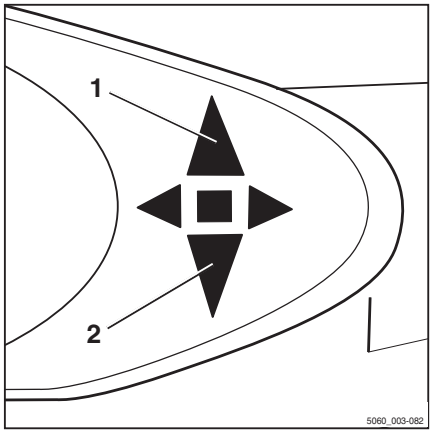

NOTE

Depending on the equipment, an acoustic signal (variant) may sound a warning during reverse travel, the warning light (variant) may light up or the hazard warning system (variant) may flash.

– Press the accelerator pedal (3). ▷

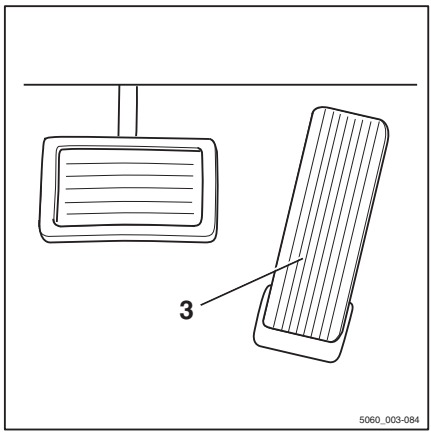

The truck will travel in the selected drive direction. The accelerator pedal position controls the speed. When the accelerator pedal is released, the truck brakes automatically via the regenerative brake.

NOTE

The regenerative brake holds the truck briefly, even on ascending or descending gradients, without the parking brake being actuated. The truck will then begin to creep downhill slowly.

NOTE

If the following message appears in the display when the accelerator pedal is actuated: `! PARKING BRAKE OIL PRESSURE`*, the service brake of the truck is not yet ready for operation.*

- *The driving speed is limited to 5 km/h.*
- *The message disappears when the service brake is ready for operation. The speed limitation is cancelled.*

DANGER

Risk of accident due to brake failure!

The electric brake only functions while the key switch is switched on, the emergency off switch has not been actuated and the parking brake is released.

– Use the brake pedal if the electric brake malfunctions.

– Only leave the truck when the parking brake is applied.

Changing the drive direction

– Remove your foot from the accelerator pedal.

– Select the desired drive direction.

– Actuate the accelerator pedal.

The truck will travel in the selected drive direction.

NOTE

The drive direction can also be changed during travel. Your foot can remain on the accelerator pedal while doing so. The truck is then decelerated and accelerated again in the opposite direction (reversing).

NOTE

If an electrical fault occurs in the accelerator, the drive unit switches off. The truck is braked by the regenerative brake. Once the electrical fault has been corrected, it will be possible to drive the truck again by releasing the accelerator pedal and then actuating the accelerator pedal again. If the truck still cannot be operated, park the truck securely and contact the authorised service centre.

Starting drive mode, dual pedal version (variant)

DANGER

Risk to life if the truck rolls away or tips over!

- Sit on the driver's seat.
- Fasten the seat belt.
- Activate the available restraint systems.

Observe the information in the chapter entitled "Safety regulations when driving".

The driver's seat has a seat switch that checks whether the driver's seat is occupied. The truck cannot be moved if the driver's seat is not occupied or if the seat switch malfunctions. All lifting functions are disabled. The `SEAT SWITCH` message appears on the display-operating unit.

- Lift the fork carriage until the necessary ground clearance is achieved.
- Tilt the lift mast backwards.
- Release the parking brake.

– Actuate the right-hand accelerator pedal (1) ▷ to drive "forward" and actuate the left-hand accelerator pedal (2) to drive "backward".

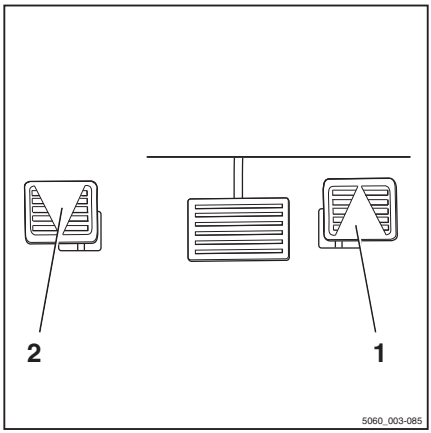

NOTE

In the dual pedal version, the drive direction switches on the operating devices do not function.

The indicator for the selected drive direction ("forwards" (3) or "reverse" (4)) lights up on the display-operating unit. ▷

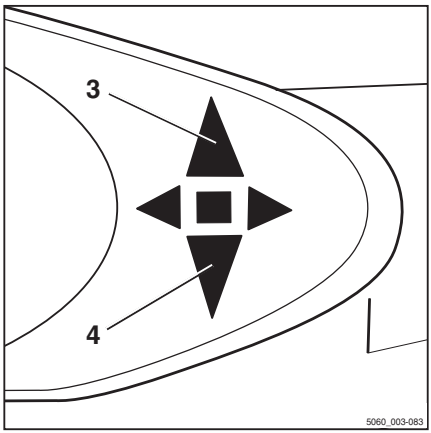

NOTE

Depending on the equipment, an acoustic signal (variant) may sound a warning during reverse travel, the warning light (variant) may light up or the hazard warning system (variant) may flash.

The truck will travel in the selected drive direction. The accelerator pedal position controls the speed. When the accelerator pedal is released, the truck brakes automatically via the regenerative brake.

NOTE

The regenerative brake holds the truck briefly, even on ascending or descending gradients, without the parking brake being actuated. The truck will then begin to creep downhill slowly.

NOTE

If the following message appears in the display when the accelerator pedal is actuated: `! PARKING BRAKE OIL PRESSURE`, *the service brake of the truck is not yet ready for operation.*

- *The driving speed is limited to 5 km/h.*
- *The message disappears when the service brake is ready for operation. The speed limitation is cancelled.*

DANGER

Risk of accident due to brake failure!

The electric brake only functions while the key switch is switched on, the emergency off switch has not been actuated and the parking brake is released.

– Use the brake pedal if the electric brake malfunctions.

– Only leave the truck when the parking brake is applied.

Changing the drive direction

– Remove foot from actuated accelerator pedal.

– Actuate the accelerator pedal for the opposite direction.

The truck will travel in the selected drive direction.

NOTE

If an electrical fault occurs in the accelerator, the drive unit switches off. The truck is braked by the regenerative brake. Once the electrical fault has been corrected, it will be possible to drive the truck again by releasing the accelerator pedal and then actuating the accelerator pedal again. If the truck still cannot be operated, park the truck securely and contact the authorised service centre.

Operating the service brake ▷

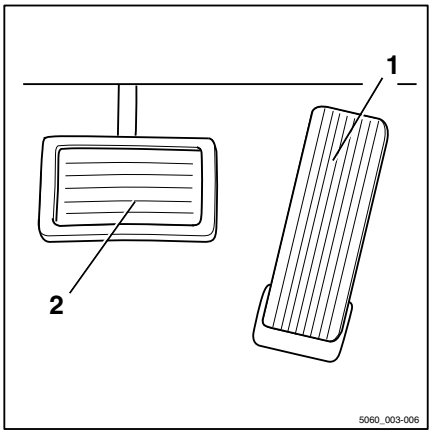

The regenerative brake converts the acceleration energy of the truck into electrical energy. This causes the truck to brake.

– To do this, release the accelerator pedal (1).

– If the braking effect is inadequate, use the brake pedal (2) to also actuate the service brake.

In the first section of the brake pedal's travel, only the regenerative braking takes effect. As the pedal is depressed further, the mechanical brake is also activated and acts on the drive wheels.

Electrical braking recovers energy for the battery. This results in a longer operating time between the charging processes and less wear to the brakes.

⚠ DANGER

If the service brake fails, the truck cannot brake sufficiently. Risk of accident!

If the driver notices that the electrical braking effect has reduced by 50% and that the drive torque has decreased to 50% of the normal level, a component failure may have occurred.

– Bring the truck to a standstill using the brakes. Use the parking brake if necessary to assist in this process.

– Notify the authorised service centre.

– Do not operate the truck again until the service brake has been repaired.

⚠ DANGER

At speeds that are too high, there is a danger that the truck could slip or overturn!

The braking distance of the truck depends on various factors such as the weather conditions and the level of contamination on the roadway. Note that the basic braking distance increases with the square of the speed.

– Adapt your driving and braking style to suit the weather conditions and the level of contamination on the roadway.

– Always choose a driving speed that will provide a sufficient stopping distance.

Actuating the mechanical parking brake

DANGER

There is a risk of being run over if the truck rolls away, and therefore a danger to life.

- The truck must not be parked on a slope.
- In emergencies, secure with wedges on the side facing downhill.
- Only leave the truck when the parking brake is applied.

NOTE

Once the parking brake is released, the previously selected drive direction is retained and is shown on the drive direction indicator.

NOTE

If you operate the accelerator pedal while the parking brake is applied and a drive direction is selected, the message `PARKING BRAKE` *appears in the display.*

Apply the parking brake

- Pull the parking brake lever (1) down fully and release.

The parking brake lever swivels back half the distance into the middle position automatically.

The parking brake is engaged and the wheels are blocked. Driving is no longer possible. The drive direction indicator (2) on the display and operating unit goes out.

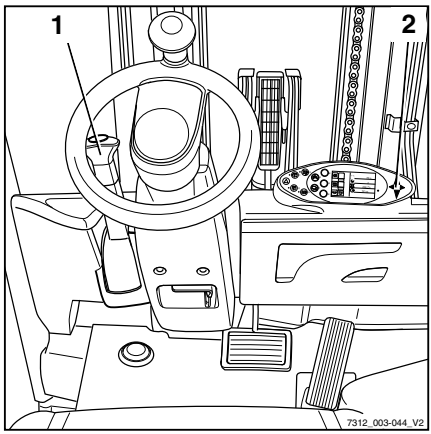

Releasing the parking brake

▷

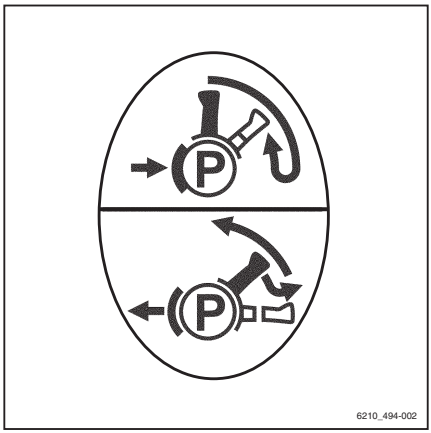

– Pull the parking brake lever (1) down fully out of the middle position.
– In the lower lever position, pull out the lever knob and then guide the parking brake lever up fully.

NOTE

The parking brake lever swivels to the upper position automatically by means of spring force and should be guided only lightly by hand. If the adjustment is stiff, notify the authorised service centre.

Steering

DANGER

If the hydraulics fail, there is a risk of accident as the steering characteristics have changed.

– Do not operate the truck if it has a defective steering system.

– Steer the truck by turning the steering wheel (1) accordingly.

Turning the steering wheel in the direction of arrow (A) steers the truck in drive direction (A).

Turning the steering wheel in the direction of arrow (B) steers the truck in drive direction (B).

For turning radius information, see ⇒Chapter "Technical data", Page 373 .

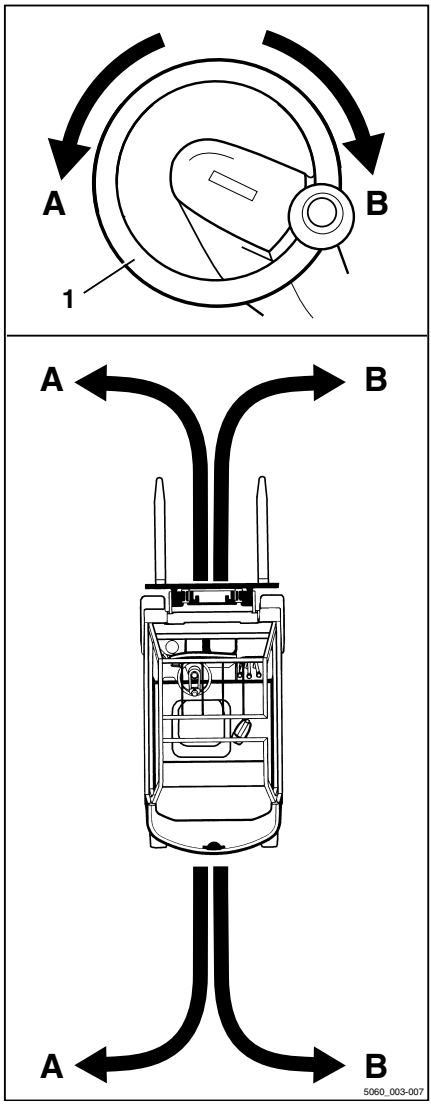

Reducing speed when turning (Curve Speed Control)

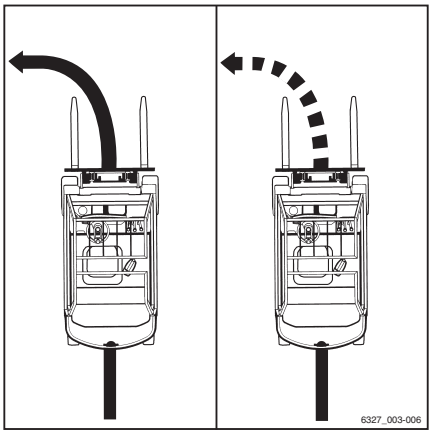

This function reduces the speed of the truck as the steering angle increases, regardless of the amount to which the accelerator has been actuated. If the steering angle is reduced again upon exiting the curve, the truck accelerates in line with how far the accelerator is depressed.

However, the function does not release the driver from the duty to approach a curve at a speed according to the following factors:

- The carried load
- The roadway conditions
- The radius of the curve

⚠ DANGER

The Curve Speed Control function cannot override the physical limits of stability. Despite this function, there still is a risk of tipping!

– Before using this function, familiarise yourself with the change to the driving and steering characteristics of the truck.

⚠ DANGER

Increased risk of tipping if the Curve Speed Control function is disabled! If the controller fails while the truck is in motion or if the controller is disabled, the truck will no longer automatically brake when steering.

– Do not turn off the key switch while driving.

– Actuate the emergency stop switch only in emergencies.

– Always adapt your driving style to the conditions.

Despite the Curve Speed Control function, the truck may overturn in extreme cases within the following situations:

- Cornering too fast on uneven or inclined roadways.
- Turning the steering wheel sharply while driving.
- Cornering with an inadequately secured load.
- Cornering too fast on a smooth or wet roadway.

Driving on ascending and descending gradients

DANGER

Danger to life!

Driving on ascending and descending gradients carries special dangers!

– Always follow the instructions below.

– On ascending and descending gradients, the load must be carried facing uphill.

– It is only permitted to drive on ascending and descending gradients that are marked as traffic routes and that can be used safely.

– Ensure that the ground to be traversed is clean and provides a good grip.

– Do not turn on ascending and descending gradients.

– Do not drive onto or along ascending and descending gradients at an angle.

– Do not park the truck on ascending or descending gradients.

– In case of emergency, secure the truck with wedges so that the truck does not roll away.

– Reduce the driving speed on descending gradients.

It is not permitted to drive on long ascending and descending gradients greater than 15% due to the specified minimum braking and stability values.

– Before driving on ascending and descending gradients greater than 15%, consult the authorised service centre.

The process of placing loads into stock and removing loads from stock while on an ascending or descending gradient is not permitted!

– Always place loads into stock and remove loads from stock on a horizontal plane.

Reducing speed with a raised load (variant)

This function (variant) reduces the speed of the truck with a raised load.

▷

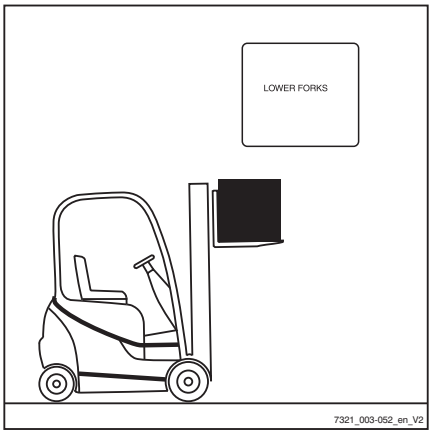

Parking

Parking the truck securely and switching it off

DANGER

Risk of fatal injury from being run over if the truck rolls away!

- The truck must not be parked on a slope.
- In emergencies, secure with wedges on the side facing downhill.
- Only leave the truck when the parking brake has been applied.

DANGER

There is a risk of fatal injury from a falling load or parts of the truck being lowered!

- Lower the load fully before leaving the truck.

CAUTION

Batteries may freeze!

If the truck is parked in an ambient temperature of below -10°C for an extended period, the batteries will cool down. The electrolyte may freeze and damage the batteries. The truck will then not be ready for operation.

- At ambient temperatures of below -10°C, only park the truck for short periods of time.

- Apply the parking brake.
- Lower the fork carriage to the ground.
- Tilt the lift mast forwards until the tips of the fork arms rest on the ground.
- If attachments (variant) are fitted, retract the working cylinders; see the chapter entitled "General instructions for controlling attachments".
- Turn the switch key to the left and remove it.

NOTE

Switch keys, FleetManager cards (variant), FleetManager transponder chips (variant) and the PIN code for access authorisation (variant) must not be handed over to other persons unless explicit instructions to this effect have been given.

Wheel chock (variant)

The wheel chock (variant) is used to prevent the truck from rolling away on a slope.

- Lift handle (2) on the support mounting.
- Remove wheel chock (1) from the support mounting.
- Push the wheel chock under a front axle wheel on the side facing the downhill slope.

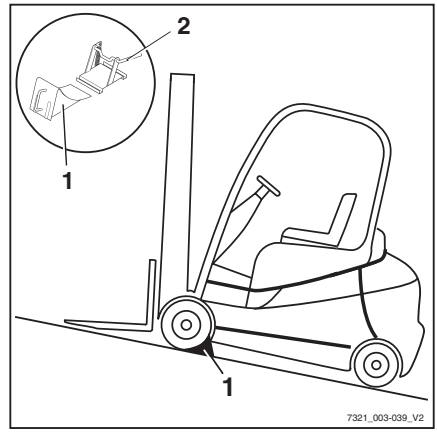

NOTE

After use, return the wheel chock to the support mounting and press the handle (2) down again.

Lifting

Lifting system variants

The movement of the fork carriage and the lift mast heavily depends on the following equipment:

- The lift mast with which the truck is equipped, see ⇒Chapter "Types of lift mast", Page 154
- The operating device with which the hydraulic functions are controlled, see ⇒Chapter "Lifting system operating devices", Page 157

Regardless of the equipment variants of the truck, the basic specifications and procedures must be complied with, see ⇒Chapter "Safety regulations when handing loads", Page 172 .

Automatic lift cut out (variant)

Description:

The automatic lift cut out (variant) means that the load cannot be lifted above a preset height. This function uses a sensor that is welded on at the factory at the required lift mast limit height. Once attached, the height cannot be easily changed.

Application:

- If the ceiling of the building is lower than the maximum lift height of the truck, this variant can prevent the lift mast from accidentally hitting the ceiling, which can result in damage.
- If the truck is frequently used at a particular height, the work is simplified by the automatic lift cut out at this height.

NOTE

If a load is lifted very quickly, the fork carriage and load are moved approximately 15 cm above the position of the sensor due to inertia. This deviation is already taken into consideration at the factory when determining the position of the sensor.

Overriding and reactivating the automatic lift cut out

If a load needs to be lifted to the truck's maximum lift height and the automatic lift cut out function is not required, it is possible to override the lift cut out. It is automatically reactivated when the truck is switched off and back on again.

To override the automatic lift cut out:

– Press Softkey F1 (1). ▷

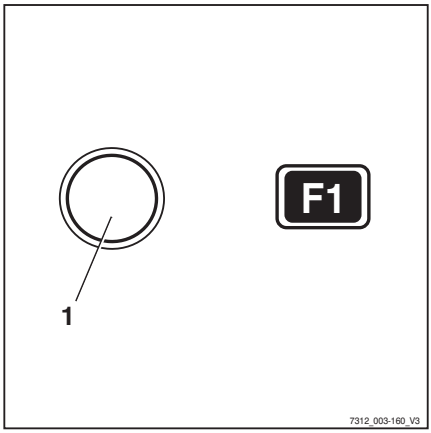

Automatic lift cut out is switched off.
The F1 symbol is displayed. Loads can be lifted to the maximum lift height for the truck.

To switch the automatic lift cut out back on:

– Press Softkey F1 (1).

Automatic lift cut out is switched on.
The F1 symbol is displayed. Loads can be lifted only to the set lift height for the truck.

Lift mast vertical position (variant)

Description

If the truck is equipped with the "lift mast vertical position" comfort feature (variant), the driver can put goods, such as paper rolls, down vertically with precision and thus avoid damage when unloading. The tilt cylinders run into the end stops gently to prevent hard vibrations and impacts. Oscillating motions of the truck are minimised, thus increasing work safety. The lift mast vertical position reduces wear on various components and therefore reduces maintenance costs.

⚠ CAUTION

Risk of damage to property due to the lift mast colliding with racks or other objects!

– Before using the "lift mast vertical position" comfort feature, position the truck at a sufficient distance from racks and other objects.

The "lift mast vertical position" comfort feature consists of the following individual functions:

- Display of the "lift mast vertical position"
- Automatic approach towards the "lift mast vertical position"
- Gentle running-in to the end stops

Display of the "lift mast vertical position" ▷

The driver can see the mast tilt on the display and operating unit screen. The bar in the display shows the current mast tilt relative to the "lift mast vertical position". The arrow above the bar marks the vertical position of the lift mast.

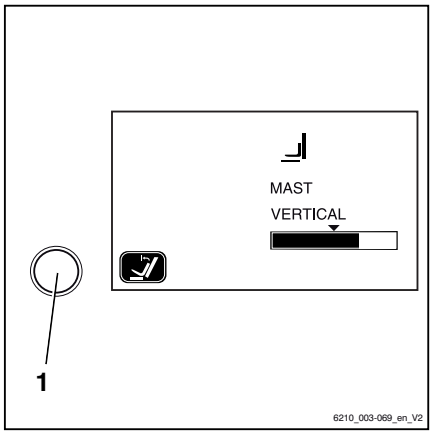

Automatic approach towards the "lift mast vertical position"

– Switch on the "lift mast vertical position" comfort feature via the button (1) on the display and operating unit. ▷

– Tilt the lift mast forwards using the corresponding operating device. The lift mast stops automatically as soon as the preselected setting is reached for the "lift mast vertical position".

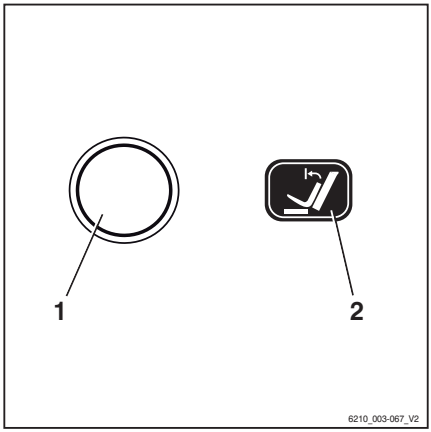

If the comfort feature is switched off, the lift mast tilts forwards past the "lift mast vertical position" without stopping.

If the lift mast is tilted backwards, it moves past the "lift mast vertical position" without stopping, regardless of whether the comfort feature is switched on or not.

Gentle running-in to the end stops

The lift mast is braked gently at the end of the tilt range. This prevents the lift mast from stopping harshly in the end position and reduces severe oscillating motions of the truck.

Tilting the lift mast forwards with the "lift mast vertical position"

– Actuate the button (1) to switch on the "lift mast vertical position" comfort feature; the function display (2) in the display shows the activated status. ▷

– Tilt the lift mast forwards.

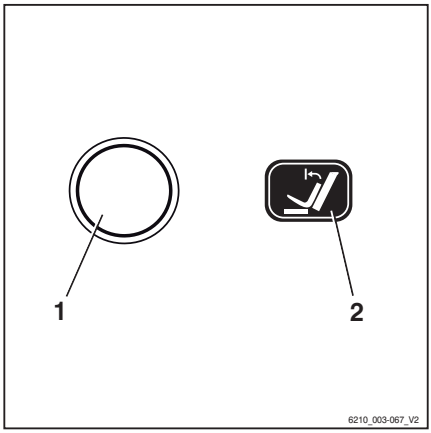

NOTE

The way in which the lifting system is operated depends on the operating devices included in the truck's equipment; see the chapter entitled "Lifting system operating devices".

The lift mast is tilted forwards and stops as soon as the vertical position is reached. The arrow above the bar shown on the screen of the display and operating unit represents the "lift mast vertical position".

Tilt the lift mast forwards beyond the vertical position:

– Release the operating device for tilting and actuate again.

The lift mast is tilted beyond the vertical position up to the end stop. The current mast tilt is shown in the display and operating unit.

– To deactivate the "lift mast vertical position", actuate the button (1) again.

▷

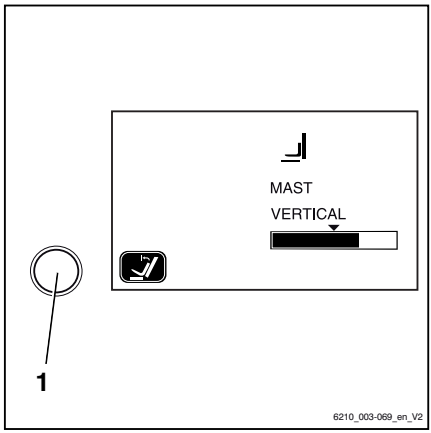

Tilting the lift mast backwards with the "lift mast vertical position"

– Tilt the lift mast backwards.

The lift mast is tilted backwards without stopping in the vertical position.

Possible restrictions on the "lift mast vertical position"

In some circumstances, the lift mast cannot move exactly into the preset vertical position. Possible causes include:

- Uneven ground
- Bent fork
- Bent attachment
- Worn tyres
- Severely deformed lift mast

The vertical position can be corrected by tilting the lift mast using the relevant operating device. If the vertical position has to be corrected frequently, the "lift mast vertical position" should be calibrated.

Calibrating the "lift mast vertical position"

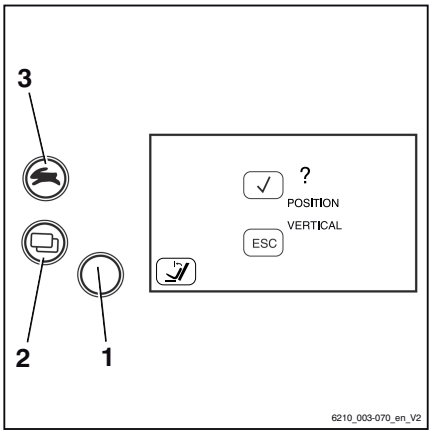

– Set the lift mast to the required position.

– Press and hold the button (1) for the "lift mast vertical position" for at least five seconds.

The message "`? VERTICAL POSITION`" will appear on the display.

Storing the mast position:

– Press the drive program button (3).

The current mast position is stored.

Cancelling calibration:

– Press the menu change button (2).

The calibration is cancelled.

Types of lift mast

One of the following lift masts may be installed in the truck:

Telescopic mast

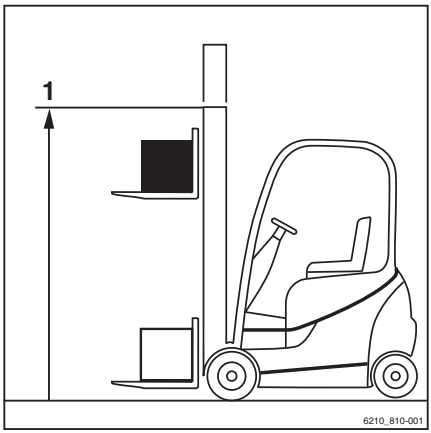

During lifting, the lift mast rises over the outer lift cylinders, bringing the fork carriage with it via the chains (fork carriage rises twice as fast as the inner lift mast). The top edge (1) of the inner lift mast can therefore be higher than the fork carriage.

⚠ DANGER

Risk of accident due to collision of the lift mast or load with low ceilings or entrances.

– Note that the inner lift mast or load may be higher than the fork carriage.

– Note the heights of ceilings and entrances.

Triplex lift mast (variant)

During lifting, the inner lift cylinder moves up to free lift (3), and then the outer lift cylinders raise the inner lift mast up to the max. height (2).

⚠ DANGER

Risk of accident due to collision of the lift mast or load with low ceilings or entrances.

– Note that the inner lift mast or load may be higher than the fork carriage.

– Note the heights of ceilings and entrances.

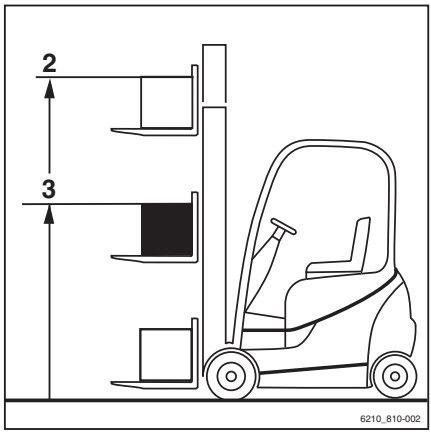

Malfunctions during lifting mode

Incorrect extension sequence

⚠ DANGER

Risk of accidents!

With triple masts (variant), an incorrect extension sequence may occur, i.e. the inner lift mast may extend before the free lift has finished. As a result, the overall height is exceeded and damage may occur in passageways or from low ceilings.

An incorrect extension sequence may, for instance, result from:

- The hydraulic oil temperature being too low.
- The fork carriage becoming blocked in the inner lift mast.
- Blocking of the free lift cylinder.
- The chain roller becoming blocked at the free lift cylinder.

– If the hydraulic oil temperature is too low, slowly actuate the lift mast functions several times in order to raise the oil temperature.

In the event that the fork carriage is blocked in the inner lift mast, or the free lift cylinder or chain roller are blocked, the cause of the blockage must be eliminated before resuming work.

– Notify your service centre

Load chains not under tension

⚠ DANGER

Danger caused by a falling load!

– Make sure that the chain(s) does (do) not become slack when lowering the load.

Slack chains can, for instance, result from:

- Resting the fork carriage or the load on the racking.
- Fork carriage rollers becoming blocked in the lift mast due to contamination.

– If the fork carriage or the load comes to an unexpected stop, lift the fork carriage until the chains are under tension again and lower the load at another suitable location.

– If the fork carriage rollers in the lift mast become blocked due to contamination, lift the fork carriage until the chains are under tension again. Remove the contamination before resuming work.

⚠ WARNING

Risk of injury!

– Observe the safety regulations for working on lift masts; see ⇒Chapter "Working at the front of the truck", Page 328 .

Hydraulic blocking function

The hydraulic blocking function ensures that all the functions of the working hydraulics are disabled whenever the seat switch in the driver's seat is unloaded.

If the driver stands up from the driver's seat, the blocking function prevents the hydraulic functions that:

- Lift the load
- Lower the load
- Tilt the lift mast
- Additional functions

Releasing the block on the hydraulics

Proceed as follows to release the block on the hydraulics:

– Sit down on the driver's seat.

All the relevant functions of the working hydraulics will be available again.

NOTE

If it is not possible to release the block on the hydraulics when the load is raised because of a technical fault, the load must be lowered using the "emergency lowering" mechanism before any further action is taken. Do not operate the truck again until the fault has been rectified by the authorised service centre.

Lifting system operating devices

The method of operating the lifting system depends on the operating devices included in the truck's equipment.

Possible equipment variants include:

- **Double mini-lever**
- **Triple mini-lever**
- **Quadruple mini-lever**
- **Joystick 4Plus**
- **Fingertip**

– The following information must be observed regardless of the equipment variant.

DANGER

Reaching into or climbing between moving parts of the truck (e.g. lift mast, sideshifts, working equipment, load carrying devices etc.) can lead to serious injury or death and is therefore prohibited.

– Observe the safety regulations for handling loads.

– Only operate the lifting system from the driver's seat.

WARNING

If several hydraulic functions are used at the same time, these functions can influence each other.

For example, if the fork carriage is raised and an attachment is operated at the same time, this may change the lifting speed or the operating speed of the attachment.

Controlling the lifting system using a double mini-lever ▷

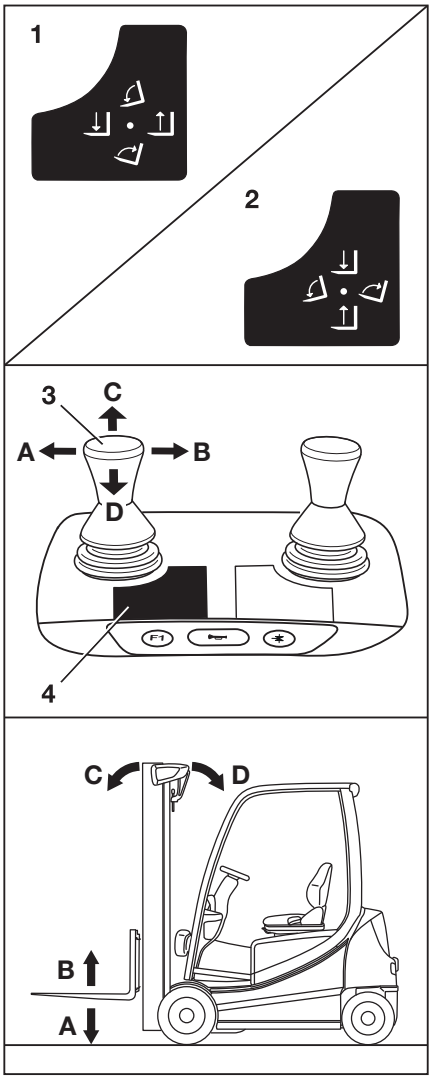

⚠ DANGER

Reaching into or climbing between moving parts of the truck (e.g. lift mast, sideshifts, working equipment, load carrying devices etc.) can lead to serious injury or death and is therefore prohibited.

– Observe the safety regulations for handling loads.
– Operate the lifting system from the driver's seat only.

⚠ WARNING

Risk of accident as a result of an operating error!

These operating instructions describe how to operate the lifting system in the factory configuration.

If the authorised service centre has configured a different configuration, the newly applied pictograms must be observed to ensure safe operation. The operating company must make all drivers aware of the fact that a different configuration has been configured.

– Observe the pictograms on the operating levers.
– Before use, check that the hydraulic functions are working correctly.

The lifting, lowering and tilting movements of the lift mast are controlled using the "lift mast" 360° lever (3). The adhesive label bearing the pictograms for the hydraulic functions (1) or (2) is affixed at the designated point (4).

The pictograms are arranged according to the direction of movement of the "lift mast" 360° lever (3).

NOTE

- *The truck is configured at the factory in accordance with the adhesive label (1). The following steps for moving the fork carriage and lift mast are based on this configuration.*
- *The configuration according to the adhesive label (2) with reversed functional axes can be ordered as a variant.*

Lifting/lowering the fork carriage

To lift the fork carriage:

– Move the "lift mast" 360° lever (3) in the direction of the arrow (B).

To lower the fork carriage:

– Move the "lift mast" 360° lever (3) in the direction of the arrow (A).

Tilting the lift mast

To tilt the lift mast forwards:

– Move the "lift mast" 360° lever (4) in the direction of the arrow (C).

To tilt the lift mast backwards:

– Move the "lift mast" 360° lever (4) in the direction of the arrow (D).

Movements of the lifting system and meanings of the pictograms

A Lowering
B Lifting
C Tilting forwards
D Tilting backwards

Controlling the lifting system using a triple mini-lever ▷

⚠ DANGER

Reaching into or climbing between moving parts of the truck (e.g. lift mast, sideshifts, working equipment, load carrying devices etc.) can lead to serious injury or death and is therefore prohibited.

– Observe the safety regulations for handling loads.
– Only operate the lifting system from the driver's seat.

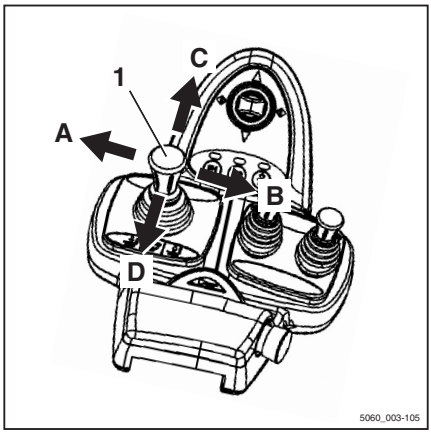

Lifting/lowering the fork carriage

To lift fork carriage:

– Move the "lift mast" 360° lever (1) in the direction of arrow (B).

To lower fork carriage:

– Move the "lift mast" 360° lever (1) in the direction of arrow (A).

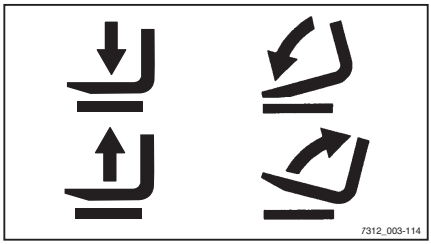

Tilting the lift mast

To tilt the lift mast forwards:

– Move the "lift mast" 360° lever (1) in the direction of arrow (C).

To tilt the lift mast backwards:

– Move the "lift mast" 360° lever (1) in the direction of arrow (D).

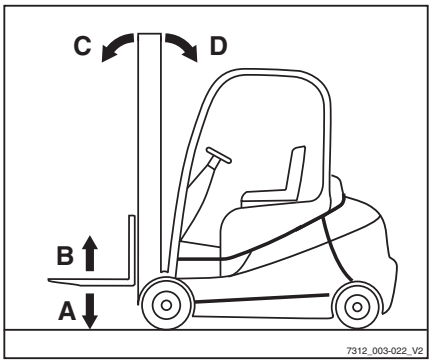

NOTE

The symbols on the 360° lever show the direction of movement of the lift mast and the fork carriage when the 360° lever is moved.

Controlling the lifting system using a quadruple mini-lever ▷

⚠ DANGER

Reaching into or climbing between moving parts of the truck (e.g. lift mast, sideshifts, working equipment, load carrying devices etc.) can lead to serious injury or death and is therefore prohibited.

- Observe the safety regulations for handling loads.
- Only operate the lifting system from the driver's seat.

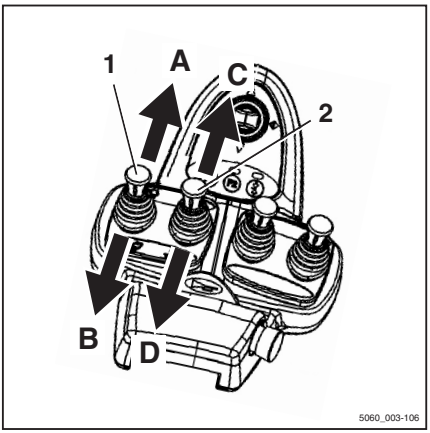

Tilting the lift mast

To tilt the lift mast forwards:

- Move the "lift mast" operating lever (1) in the direction of the arrow (A).

To tilt the lift mast backwards:

- Move the "lift mast" operating lever (1) in the direction of the arrow (B).

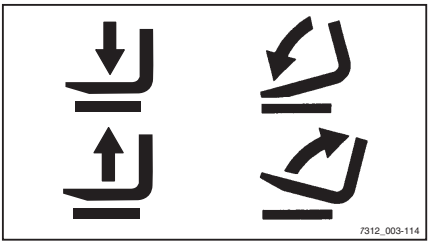

Lifting/lowering the fork carriage

To lift fork carriage:

- Move the "lift-lower" operating lever (2) in the direction of arrow (D).

To lower fork carriage:

- Move the "lift-lower" operating lever (2) in the direction of arrow (C).

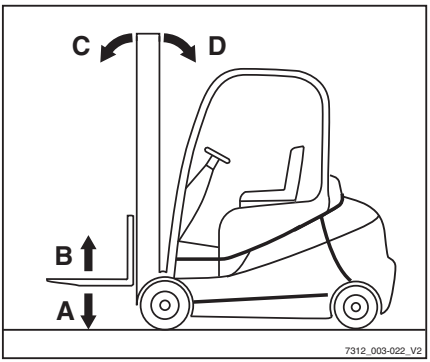

NOTE

The symbols on the operating levers show the direction of movement of the lift mast or fork carriage when the operating lever is moved.

Controlling the lifting system using the Joystick 4Plus

⚠ DANGER

Reaching into or climbing between moving parts of the truck (e.g. lift mast, sideshifts, working equipment, load carrying devices etc.) can lead to serious injury or death and is therefore prohibited.

– Observe the safety regulations for handling loads.

– Only operate the lifting system from the driver's seat.

Lifting/lowering the fork carriage

To lift the fork carriage:

– Pull the Joystick 4Plus (1) backwards (B).

To lower the fork carriage:

– Push the Joystick 4Plus (1) forwards (A).

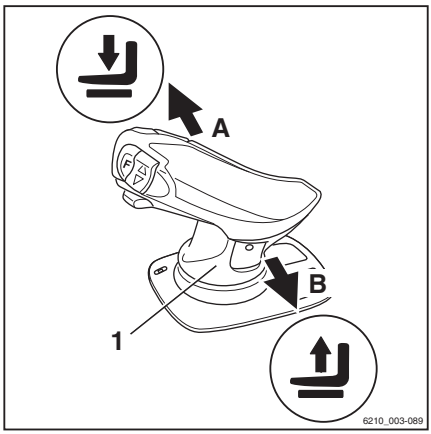

Tilting the lift mast

To tilt the lift mast forwards:

– Tilt the horizontal rocker button (2) to the left (C).

To tilt the lift mast backwards:

– Tilt the horizontal rocker button (2) to the right (D).

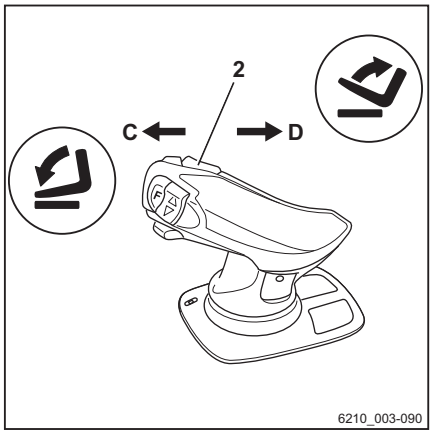

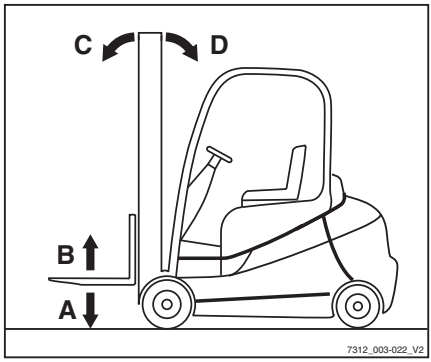

Fork carriage sideshift

To move the fork carriage to the left:

– Push the Joystick 4Plus (1) to the left (E).

To move the fork carriage to the right:

– Push the Joystick 4Plus (1) to the right (F).

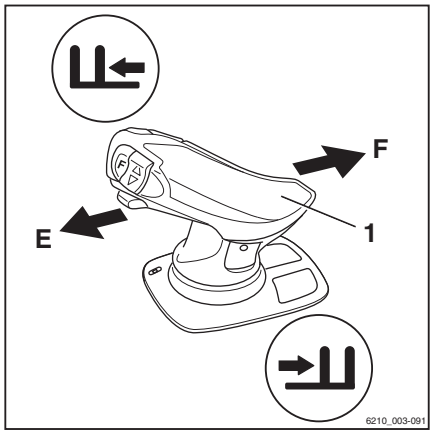

NOTE

The symbols on the Joystick 4Plus indicate the direction of movement of the lift mast or fork carriage.

Controlling the lifting system with the fingertip console ▷

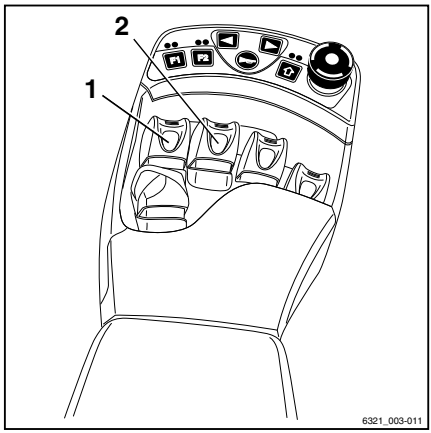

⚠ DANGER

Reaching into or climbing between moving parts of the truck (e.g. lift mast, sideshifts, working equipment, load carrying devices etc.) can lead to serious injury or death and is therefore prohibited.

- Observe the safety regulations for handling loads.
- Only operate the lifting system from the driver's seat.

Lifting/lowering the fork carriage

To lift fork carriage:

- Pull the "lift/lower" operating lever (1) backwards.

To lower fork carriage:

- Push the "lift/lower" operating lever (1) forwards.

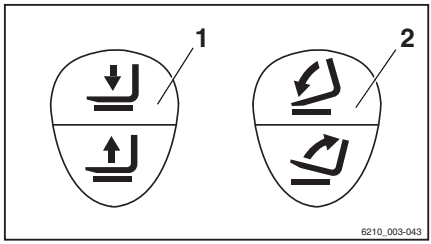

Tilting the lift mast

To tilt the lift mast forwards:

- Push the "tilt" operating lever (2) forwards.

To tilt the lift mast backwards:

- Pull the "tilt" operating lever (2) backwards.

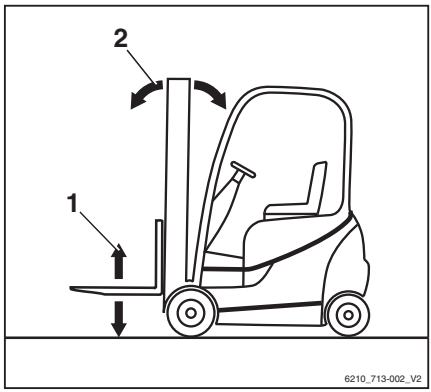

NOTE

The symbols on the operating levers show the direction of movement of the lift mast or fork carriage when the operating lever is moved.

Changing the fork arms

⚠ DANGER

Risk of fatal injury from being run over if the truck rolls away!

– Do not park the truck on a gradient.
– Apply the parking brake.
– Change the fork arms in a separate, safe location on a level surface.

⚠ WARNING

There is a risk of injury when changing the fork arms; the weight of the fork arms could cause them to fall on your legs, feet or knees. The space to the left and right of the fork is a danger area.

– Always wear protective gloves and safety footwear when changing the fork arms.
– Ensure that no one stands in the danger area!
– Do not pull on the fork arms.
– The fork arms must always be carried by two people; if necessary, use a hoist.

NOTE

- *For installation and removal, a transport pallet is recommended for supporting the fork arms. The pallet size depends on the fork arm size used and should be dimensioned such that the fork arms do not protrude after being placed on the pallet. This means the fork arms can be safely placed down and transported.*
- *Both fork arms can be pushed over to the same side. It is possible to choose the side via which the forks are removed*

Removal

- Select a pallet corresponding to the fork arm size.
- Set down the pallet next to the fork carriage on the side chosen for removal.
- Lift the fork carriage until the fork arms are approx. 3 cm above the pallet.
- Apply the parking brake.
- Remove the switch key.
- Unscrew the locking screw (2) on the side chosen for removal.
- Pull up the locking lever (1) and push the fork arms onto the pallet one after the other.

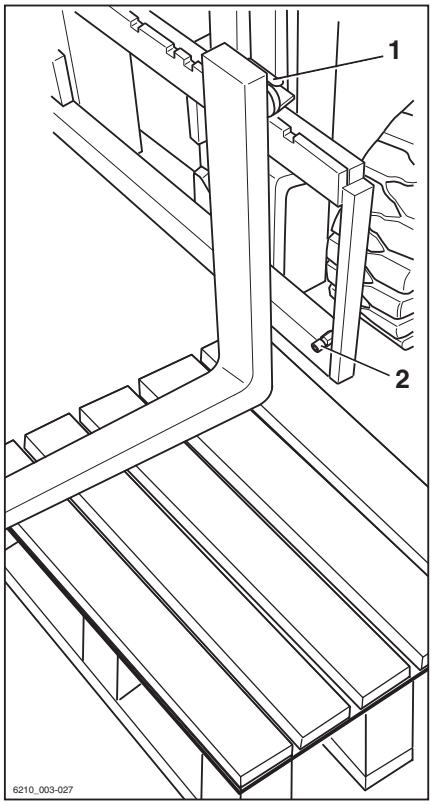

Installation

- Make sure that the locking screw is unscrewed on the side chosen for installation.
- Place the fork arms on a pallet next to the fork carriage on the side chosen for installation.
- Pull up the locking lever (1) and push the fork arms onto the fork carriage one after the other.
- Place the fork arms in the required position and push down the locking lever. Ensure that the locking lever snaps into place.
- Screw in and tighten the locking screw (2).

⚠ DANGER

There is a risk of fatal injury from a falling load or fork!

- Tighten the locking screw each time a fork is changed.
- Driving and moving loads without the locking screw is prohibited.

NOTE

If the truck is equipped with the "load measurement" comfort feature, a "zero adjustment of the load measurement" must always be performed after the fork arms have been changed. Otherwise, correct load measurement cannot be guaranteed.

Fork extension (variant)

DANGER

There is a risk of being run over if the truck rolls away and therefore a danger to life.

– Do not park the truck on a slope.
– Apply the parking brake.
– Change the fork extension in a separate, safe location on a level surface.

WARNING

There is a risk of crushing!

The weight of the fork extension can cause crushing or cuts on sharp edges or burrs.

– Always wear protective gloves and safety footwear.

WARNING

There is a risk of tipping!

The weight and dimensions of the fork extension affect the stability of the truck. The permissible weights stated on the capacity rating plate must be reduced in proportion to the actual load distance.

The truck is equipped with a fork extension ex works, the capacity rating plate is already adjusted accordingly.

– Observe load capacity, see the "Before picking up a load" chapter.

NOTE

If the truck is equipped with the "load measurement" comfort feature, a "zero adjustment of the load measurement" must always be performed after the fork extensions have been changed. Otherwise, correct load measurement cannot be guaranteed.

Attachment

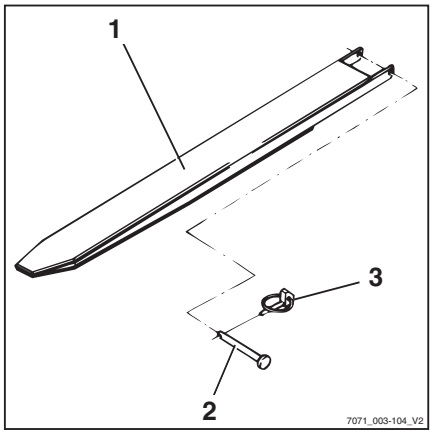

DANGER

Risk to life from falling load!

At least 60% of the length of the fork extension must lie on the fork arm. A maximum 40% overhang over the fork arm end is permissible. The fork extension must also be secured against slipping from the fork arm.

If the fork extension (1) is not secured with a securing bolt (2) and linch pin (3), the load with the fork extension may fall.

- Push the fork extension completely to the back of the fork.
- Make sure that 60% of the length of the fork extension is on the fork arm.
- Always secure the fork extension with a securing bolt.
- Always secure the securing bolt with a linch pin.

- Remove the linch pin (3) from the securing bolt (2).
- Remove the securing bolt from the fork extension (1).
- Push the fork extension onto the fork arms until it is flush with the fork back.
- Insert the securing bolts located behind the fork back fully into the fork extension.
- Insert the linch pin into the securing bolt and secure.

Removal

- Remove the linch pin (3) from the securing bolt (2).
- Remove the securing bolt from the fork extension (1).
- Pull the fork extension from the fork arms.
- Insert the securing bolt fully into the fork extension.
- Insert the linch pin into the securing bolt and secure.

Operation with reversible fork arms (variant)

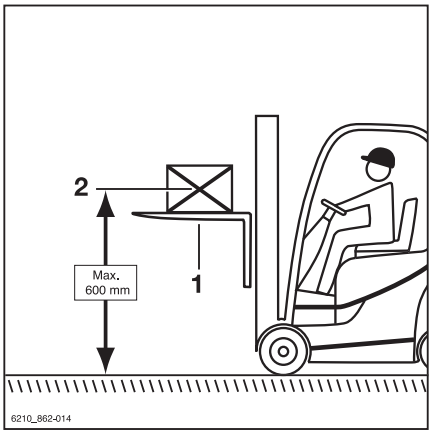

DANGER

Risk to life from falling load!

Standard fork arms are not structurally designed for reverse operation. If this instruction is not observed, it can lead to material failure and the load falling.

– Only work in reverse operation using reversible fork arms (1)

WARNING

Risk of accident from slipping load!

Loads may slip on the reversible fork arms if there is no load support. A fork extension (variant) cannot be secured against slipping.

– Do not use a fork extension (variant)

WARNING

Risk of accident from the truck tipping over.

When driving, the centre of gravity of the load (2) must not be higher than 600 mm above the ground. The truck may tip forwards when driving or braking.

– Only drive with a load centre of gravity up to a max. of 600 mm above the ground

NOTE

If the truck is equipped with the "load measurement" comfort feature, a "zero adjustment of the load measurement" must always be performed after the reversible fork arms have been changed. Otherwise, correct load measurement cannot be guaranteed.

Reversible fork arms (1) can be used to reach an additional lift height. The reversible fork arms are installed on the fork carriage in the same manner as standard fork arms. Loads may be lifted on and beneath the reversible fork arms. The mast is lifted and tilted in the same manner.

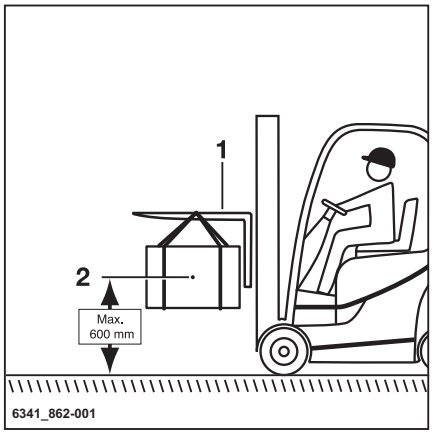

- Only work in reverse operation using reversible fork arms
- Do not use a fork extension (variant)
- If the "load measurement" comfort feature is available, perform a "zero adjustment of the load measurement"
- To drive, raise the load centre of gravity (2) to a max. of 600 mm above the ground
- Observe the information in the section entitled "Transporting suspended loads"

Handling loads

Safety regulations when handing loads ▷

The safety regulations for handling loads are shown in the following sections.

⚠ DANGER

There is a risk to life caused by falling loads or if parts of the truck are being lowered.

- Never walk or stand underneath suspended loads or raised fork arms.
- Never exceed the maximum load indicated on the capacity rating plate. Otherwise stability cannot be guaranteed!

⚠ DANGER

Risk of accident from falling or crushing!

- Do not step onto the forks.
- Do not lift people.
- Never grab or climb on moving parts of the truck.

⚠ DANGER

Risk of accident from a falling load!

- When transporting small items, attach a load safety guard (variant) to prevent the load from falling on the driver.
- Use a closed roof covering (variant) in addition.

Before taking up load

Load capacity

The load capacity indicated for the truck on the capacity rating plate may not be exceeded. The load capacity is influenced by the load centre of gravity and the lift height as well as by the tyres, if applicable.

The position of the capacity rating plate can be found in the chapter entitled "Identification points".

⚠ WARNING

The figures show examples.

Only the capacity rating plates on the truck are valid!

The attachment of additional weights to increase load capacity is prohibited.

⚠ DANGER

Risk to life from the truck losing stability!

Never exceed the maximum loads shown! These values apply to compact and homogenous loads. Otherwise, the stability as well as the rigidity of the fork arms and lift mast cannot be guaranteed.

Improper or incorrect operation or the placement of persons to increase load capacity is prohibited.

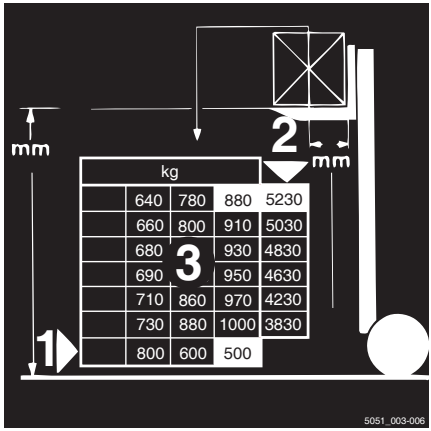

Example

Weight of load to be lifted: 880 kg (3)

Load distance from fork back: 500 mm (1)

Permitted lift height: 5230 mm (2)

⚠ WARNING

Risk of accident from the truck losing stability!

The permissible load of the attachments (variant) and the reduced lifting capacity of the combination of truck and attachment must not be exceeded.

– Observe the special capacity rating plate information shown on the truck and the attachment.

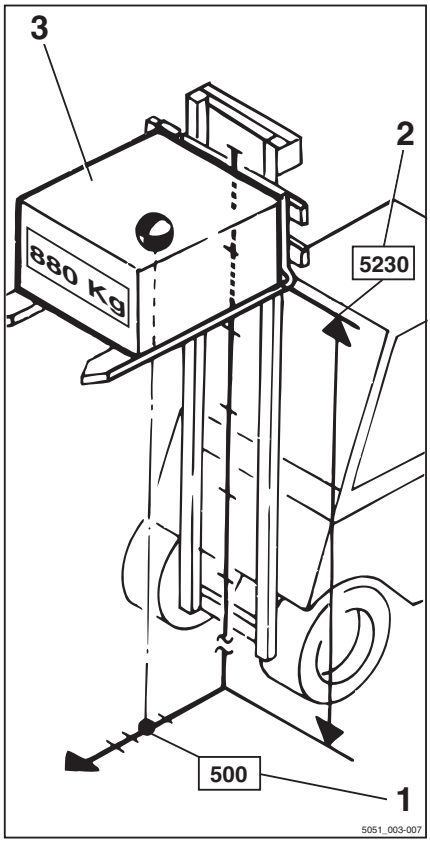

Load measurement (variant)

Description

Knowing the weight of the load to be transported gives the driver greater security. If the truck is equipped with the "load measurement" (variant) comfort feature, the weight of the lifted load can be measured and shown in the display and operating unit.

Load measurement is possible only when the truck is at a standstill. Before performing a load measurement, the load must be raised to a height of 300-800 mm above the ground.

The load measurement has an accuracy of +/-3% of the rated capacity of the truck.

NOTE

In order to ensure accuracy at all times, a zero adjustment of the load measurement must be carried out. Zero adjustment is required.

- *as part of daily commissioning*
- *after changing the fork arms*
- *after fitting or changing attachments.*

Performing the load measurement

DANGER

Risk of accident from a falling load!

The load may fall if the load centre of gravity has not been taken into account or the load has not been picked up securely.

– Pick up the load securely; see the chapter entitled "Picking up loads".

CAUTION

If the weight determined by a load measurement exceeds the permissible residual load capacity of the truck, the truck cannot be operated safely.

– Set down and reduce load immediately.

– If necessary, use another truck with sufficient load-bearing capacity.

NOTE

Accurate load measurement is only possible under the following conditions:

- *The hydraulic oil is at normal operating temperature*
- *The load is at rest at the beginning of the load measurement*
- *The load corresponds to at least 10% of the nominal load capacity in trucks with a load capacity of up to 2.5 t*
- *The load corresponds to at least 5% of the nominal load capacity in trucks with a load capacity of 3 t and over*
- *The lift mast is in the vertical position*
- *The fork is not raised to more than 800 mm above the ground*

NOTE

The method of operating the lifting system depends on the operating devices included in the truck's equipment.

– Ensure that the truck has been in operation for a period of time before carrying out the load measurement.

– Set lift mast to vertical.

– Raise the fork to a height of 300–800 mm.

– Ensure that the load is at rest.

– Press Softkey (1). ▷

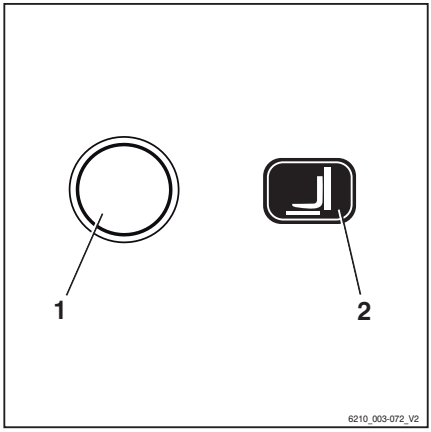

Load measurement is switched on.
The (2) symbol is displayed.

NOTE

If the truck is equipped with mini-levers or fingertip operation, the F1 button can also be pressed as an alternative.

NOTE

During the following process, the fork carriage must be lowered slightly and then stopped abruptly. While doing so, the fork must not touch the ground, otherwise the load measurement will not be accurate. To stop the lowering procedure quickly, release the operating device for lowering so that it jumps into the zero position.

– Lower the fork carriage slightly and release the operating device.

NOTE

When stopping the lowering process the load must be cushioned in order to create a measurable impulse.

When load measurement has been performed correctly, the determined load weight (3) is shown on the display. ▷

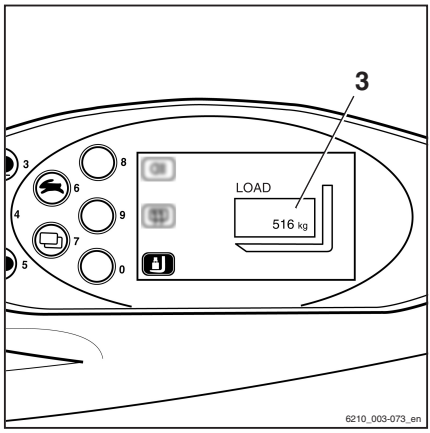

NOTE

If the load measurement is invalid, the value "-9999 kg" is displayed in the operating unit.

Picking up loads

To make sure that the load is securely supported, it must be ensured that the fork arms are sufficiently far apart and are positioned as far as possible under the load.

If possible, the load should rest on the back of the fork.

The load must not protrude too far over the fork tips, nor should the fork tips protrude too far out from the load.

Loads are to be picked up and transported as close to the middle as possible.

DANGER

Risk of accident from a falling load!

When transporting small items, attach a load safety guard (variant) to prevent the load from falling on the driver.

A closed roof covering (variant) should also be used.

Removable roof panels may not be removed.

Adjusting the fork

▷

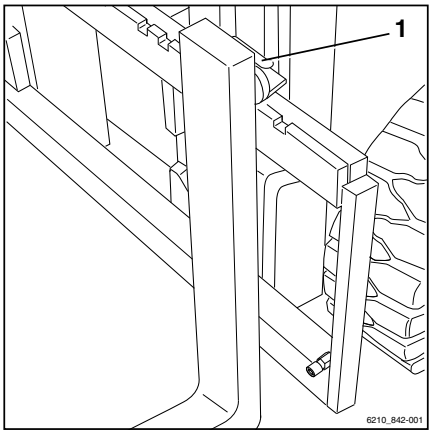

– Lift the locking lever (1) and move the fork arms to the desired position.
– Allow the locking lever to snap back into place.

The load centre of gravity must be midway between the fork arms.

– Only actuate the fork prong positioner (variant) when the fork is not carrying a load.

Danger area

The danger area is the area in which people are at risk due to the movements of the truck, its working equipment, its load-carrying equipment (e.g. attachments) or the load. Also included are the areas where loads could fall or working equipment could fall or be lowered.

⚠ DANGER

Risk of injury!

– Do not step on the fork.

⚠ DANGER

Risk of injury!

– Do not step under the raised forks.

⚠ DANGER

People may be injured in the danger area of the truck!

The danger area of the truck must be completely clear of all personnel, except the driver in his normal operating position. If persons fail to leave the danger area despite warnings:

– Cease work with the truck immediately.
– Secure the truck against use by unauthorised parties.

DANGER

Danger of death from falling loads!

– Never walk or stand underneath suspended loads.

Transporting pallets

As a rule, loads (e.g. pallets) must be transported individually. Transporting multiple loads at the same time is only permitted:

- when instructed by the supervisor and
- when the technical requirements have been met.

The driver must ensure proper condition of the load. Only safely and carefully positioned loads may be transported.

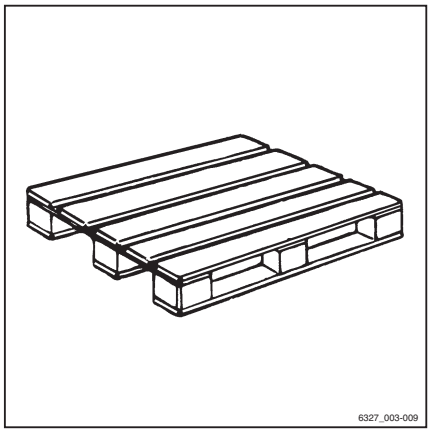

Transporting suspended loads

Before transporting suspended loads, consult the national regulatory authorities (in Germany, the employer's liability insurance associations).

National regulations may place restrictions on these operations, e.g. in Italy. Contact the relevant authorities.

If there are no country-specific regulations for suspended loads in the country of use, the following instructions for safe handling must be observed.

DANGER

Suspended loads that begin to swing can result in the following risks:

- Impaired braking and steering movement
- Tipping over the load wheels or drive wheels

- Tipping the truck at right angles to the drive direction
- Risk of crushing of guide persons
- Reduced visibility

⚠ DANGER

Loss of stability!

Slipping or swinging suspended loads can lead to a loss of stability and cause the truck to tip over.

– When transporting suspended loads, observe the following instructions.

Instructions for transporting suspended loads:

- Swinging loads must be prevented by using the proper driving speed and driving style (careful steering, braking).
- Hanging loads must be hooked on to the truck in such a way that the harness cannot shift or release unintentionally and cannot be damaged.
- When transporting suspended loads, suitable aids (e.g. guy wires or supporting poles) must be available so that accompanying persons can guide suspended loads and prevent the loads from swinging.
- Take particular care to ensure that there is no one in the drive direction in the driving lane.
- If, despite this, the load begins to swing, ensure that no person is placed at risk.

⚠ DANGER

Risk of accident!

When transporting suspended loads, never perform or end driving and load movements abruptly.

Never drive on slopes with a suspended load.

Transporting containers holding fluids as hanging loads is not permitted.

Load pick up

⚠ DANGER

There is a risk to life caused by a falling load or if parts of the truck are being lowered.

- Never walk or stand underneath suspended loads or raised fork arms.
- Never exceed the maximum load values specified on the capacity rating plate. Otherwise, stability cannot be guaranteed.

- Only store pallets which do not exceed the specified maximum size. Damaged loading equipment and incorrectly formed loads must not be stored.
- Attach or secure the load to the load-carrying equipment so that the load cannot move or fall.
- Store the load so that the specified aisle width is not reduced by protruding parts.
- Approach the racking carefully, brake gently and stop just in front of the racking. ▷

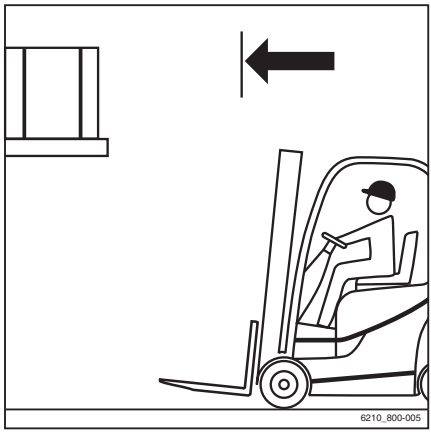

– Position the forks. ▷

– Set lift mast to vertical.

– Lift the fork carriage to the stacking height.

⚠ CAUTION

Component damage possible!

When inserting the fork into the racking, ensure that the racking and load are not damaged.

– Insert the fork as far under the load as possible. Stop the truck as soon as the fork back is resting on the load. The centre of gravity of the load must be positioned between the fork arms in the middle. ▷

– Lift the fork carriage until the load is resting entirely on the forks. ▷

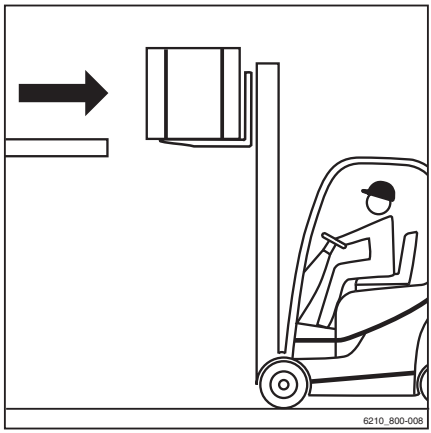

⚠ DANGER

Risk of accidents!

– Beware of any people in the danger area.
– Ensure that the roadway behind you is clear.

⚠ DANGER

Never tilt the lift mast with a raised load due to the risk of tipping!

– Lower the load before tilting the lift mast.

– Move backwards carefully and slowly until the load is clear of the racking. Brake gently.

– Lower the load while maintaining ground clearance. ▷

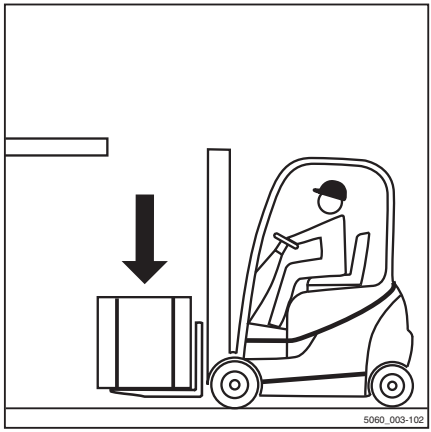

– Tilt the lift mast backwards. ▷

The load can be transported.

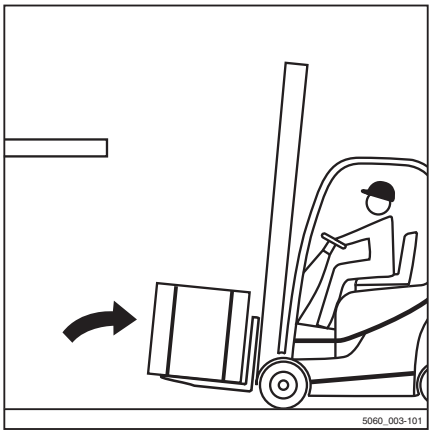

Transporting loads ▷

NOTE

Observe the information in the chapter entitled "Safety regulations when driving".

DANGER

The higher a load is lifted, the less stable it becomes. The truck can tip over or the load can fall, increasing the risk of accident!

Driving with a raised load and the lift mast tilted forward is not permitted.

– Only drive with the load lowered.
– Lower the load until ground clearance is reached (not over 300 mm).
– Only drive with the lift mast tilted backwards.

– Drive slowly and carefully round corners! ▷

NOTE

Observe the information in the chapter entitled "Steering".

– Always accelerate and brake gently!

NOTE

Observe the information in the chapter entitled "Operating the service brake".

– Never drive with a load protruding to the side (e.g. with the sideshift)! ▷

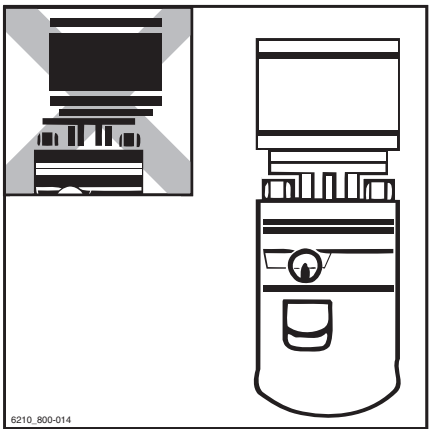

Determining visibility conditions when driving with a load

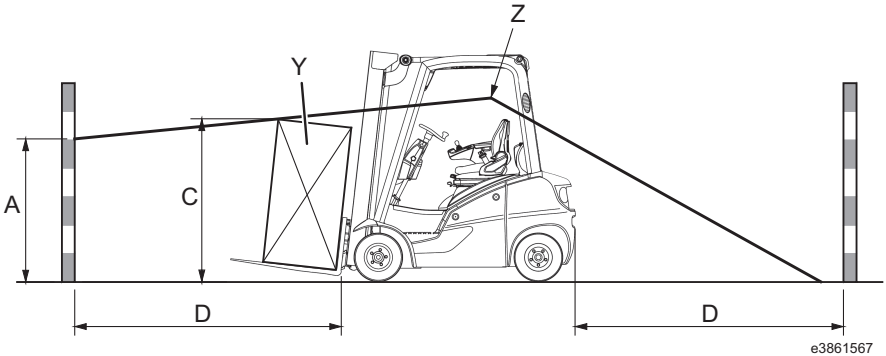

A	Area that is not visible (max. 1085 mm)	Y	Load (varies depending on operator)
C	Load height (in driving position)	Z	Driver's eye level
D	4000 mm (distance to the front from the rear corner of the load when it is positioned on the fork carriage in the driving position)		

The driver's field of vision can be severely limited when driving with a larger load or with attachments fitted. In this case, safe operation is no longer guaranteed.

Visibility conditions can be evaluated by determining the size of the area that is not visible (A).

Procedure:

- The driver moves into position in his seat.
- The area that is not visible (A) is determined based on the load (Y) and the length of the route (D).
- If the area that is not visible exceeds 1085 mm (EN16842-2/A3), the visibility conditions are inadequate.

In the case of inadequate visibility conditions, the following measures are possible:

- Reverse travel (see illustration)
- Splitting the loads
- Optimising the transport routes
- Using support staff, e.g. as a guide

The operating company must complete a risk analysis in order to evaluate visibility

obstructions that may be encountered during operation.

The risks of poor visibility due to the load must be weighed against the risk of health-related consequences due to the upper body being twisted during reverse travel.

A rotary seat can be used to assist the driver when reversing.

Contact your service partner.

NOTE

Any applicable national regulations must be observed.

Setting down loads

DANGER

Risk of accident due to changed moment of tilt!

The load centre of gravity and the moment of tilt move due to tilting the lift mast forwards with a raised load or due to the load slipping. The truck may tip forwards.

- Only tilt the lift mast forwards with a raised lifting accessory when it is directly above the stack.
- When the lift mast is tilted forwards, take particular care to ensure that the truck does not tip forwards and that the load does not slip.

WARNING

Risk of accident from a falling load!

If the fork or the load remains suspended during lowering, the load may fall.

- When removing from stock, move the truck far enough back so that the load and the fork can be lowered freely.

– Drive up to the stack with the load lowered in accordance with regulations. ▷
– Set lift mast to vertical.
– Lift the load to the stacking height.
– Drive the truck towards the rack carefully.

– Lower the load until it rests securely on the rack. ▷

⚠ DANGER

Risk of accident!

– Beware of any people in the danger area.
– Ensure that the roadway behind you is clear.

– Move the truck back until the fork arms can be lowered without touching the stack.
– Lower the fork while maintaining ground clearance.
– Tilt the lift mast backwards and drive away.

Driving on lifts

The driver is only allowed to use this truck on lifts with a sufficient load capacity and for which the operating company (see ⇒Chapter "Definition of responsible persons", Page 30) has been granted authorisation.

⚠ DANGER

There is a risk to life from being crushed or run over by the truck.

- There must be no personnel already in the lift when the truck is driven into the lift.
- Personnel are only permitted to enter the lift once the truck is secure, and must exit the lift before the truck is driven out.

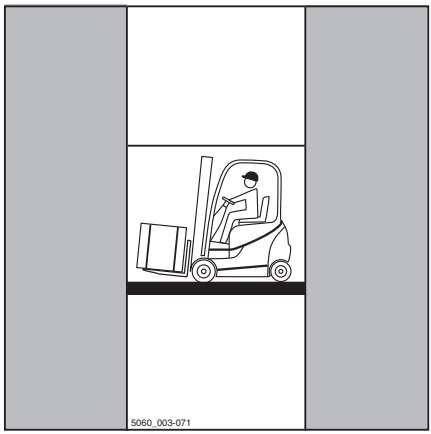

Determining the actual total weight

- Park the truck securely, see ⇒Chapter "Parking the truck securely and switching it off", Page 147 .
- Determine the unit weights by reading the truck nameplate and, if necessary, the attachment (variant) nameplate and, if necessary, by weighing the load to be lifted.
- Add the determined unit weights to obtain the actual total weight of the truck:

  Tare weight (1)
  + Max. permissible battery weight (2)
  + Ballast weight (variant) (3)
  + Net weight of attachment (variant)
  + Weight of the load to be lifted
  + 100 kg allowance for the driver
  = Actual total weight

- Drive the truck with the forks forwards into the lift without touching the shaft walls.
- Park the truck securely in the lift, see ⇒Chapter "Parking the truck securely and switching it off", Page 147 , to prevent uncontrolled movements of the load or the truck.

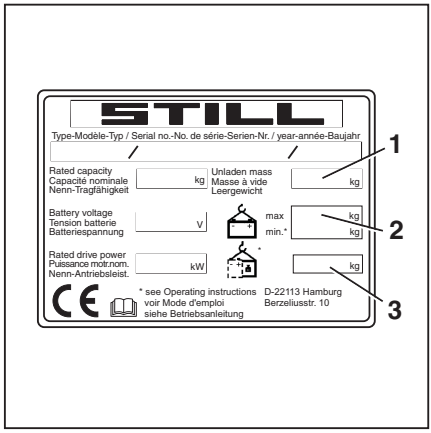

Driving on loading bridges

DANGER

Risk of accident from the truck crashing!

Steering movements can cause the tail end to veer off the loading bridge towards the edge. This may cause the truck to crash

The lorry driver and the truck driver must agree on the lorry's departure time.

- Establish the departure time of the lorry.
- Determine the total actual weight of the truck.
- Before driving across a loading bridge, ensure that it is properly attached and secured and has a sufficient load capacity (lorry, bridge etc.).
- Ensure that the vehicle onto which you will be driving is secured to prevent it from shifting and that it can support the load of the truck.

Determining the total actual weight

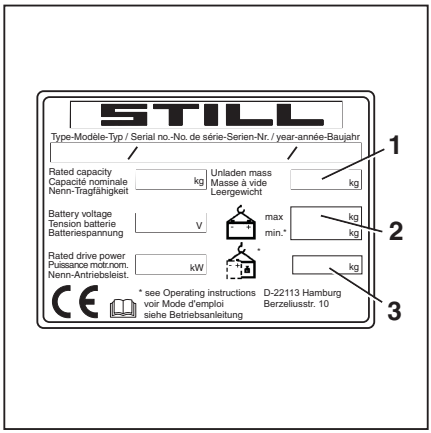

- Park the truck securely.
- Determine the unit weights by reading the truck nameplate and, if necessary, the attachment (variant) nameplate and, if necessary, by weighing the load to be lifted.
- Add the determined unit weights to obtain the total actual weight of the truck:

  Tare weight (1)
  + Max. permissible battery weight (2)
  + Ballast weight (variant) (3)
  + Attachment net weight (variant)
  + Weight of the load to be lifted
  + 100 kg allowance for driver
  = Total actual weight

- Drive slowly and carefully on the loading bridge.

Attachments

Fitting attachments

If the truck is equipped with an integrated attachment (variant) at the factory, the specifications in the STILL operating instructions for integrated attachments must be observed.

If attachments are fitted at the place of use, the specifications in the operating instructions from the attachment manufacturer must be observed.

If an attachment is not delivered together with the truck, the specifications from the manufacturer and the operating instructions from the attachment manufacturer must be observed.

Before initial commissioning, the function of the attachment and the visibility from the driver's position with and without a load must be checked by a competent person. If the visibility is deemed insufficient, visual aids must be used, such as mirrors, a camera, a monitor system etc.

– Observe the following warning notices.

⚠ DANGER

Risk of fatal injury from falling load!

If attachments that hold the load by clamping it or exerting pressure on it do not have a second method of operating the function (lock), the load can work loose and fall off.

– Ensure that the second method of operating the function (lock) is available.
– When retrofitting such attachments, a second method of operating the function (lock) must also be retrofitted.

⚠ DANGER

Risk of fatal injury from falling load!

When installing a clamp with an integrated sideshift function, ensure that the clamp does not open when the sideshift is actuated.

– Notify your authorised service centre before installation.
– Never grab or climb on moving parts of the truck.

⚠ WARNING

Risk of accident due to incorrect labelling!

The use of attachments can cause accidents if the labelling is incorrect or missing.

If the truck is not fitted with an attachment-specific residual load capacity rating plate, and the operating devices are not marked with the relevant pictograms, the truck must not be used.

- Use only CE-certified attachments that include operating instructions and the required labels.
- In the United Kingdom, the attachments must also be UKCA certified and have the required labelling.
- Arrange for an attachment-specific residual load capacity rating plate to be fitted to the truck.
- Arrange for the operating devices to be re-labelled.
- Arrange for the authorised service centre to adjust the hydraulic system to the requirements of the attachment (e.g. adjust the pump motor speed).

NOTE

If the required labelling is not provided with the attachment, contact the authorised service centre promptly.

Alternating operation using an electrical switch valve

If non-integrated attachments for alternating operation are used in conjunction with an electrical switch valve for the 5th and 6th hydraulic function, the electrical switch valve must operate at 12 V.

- Contact the authorised service centre if necessary.

Plug connectors on the lift mast

▷

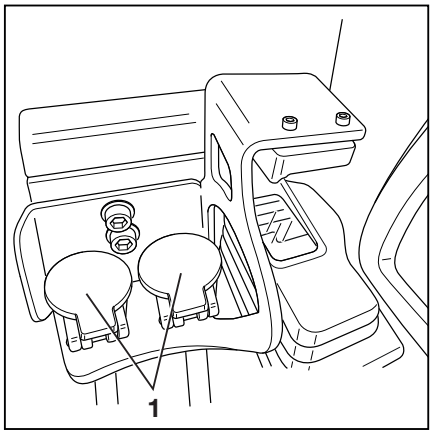

– Before fitting the attachment, depressurise the hydraulic system; see the chapter entitled "Depressurising the hydraulic system".

⚠ CAUTION

Risk of damage to components!

Open connections on the plug connectors (1) can become dirty. Dirt can enter the hydraulic system. The plug connectors can become stiff.

– Once the attachment has been disassembled, seal the plug connectors using the protective caps.

Mounting attachments

Only competent persons are permitted to mount and connect the energy supply to the attachment.

– Observe the information provided by the manufacturer and supplier or sub-supplier of the attachment when doing so.

NOTE

Please observe the definition of the following responsible person: "competent person".

– Switch off the truck.

– Install the attachment.

– Switch on the truck.

– Check and ensure that all functions of the installed attachment are working properly.

Load capacity with attachment

The permissible load capacity of the attachment and the permissible load (load capacity and load moment) of the truck must not be exceeded by the combination of the attachment and the payload. Comply with the specifications of the manufacturer and supplier of the attachment.

– Observe the residual load capacity rating plate; see the chapter entitled "Picking up a load using attachments".

Releasing the pressure from the hydraulic system ▷

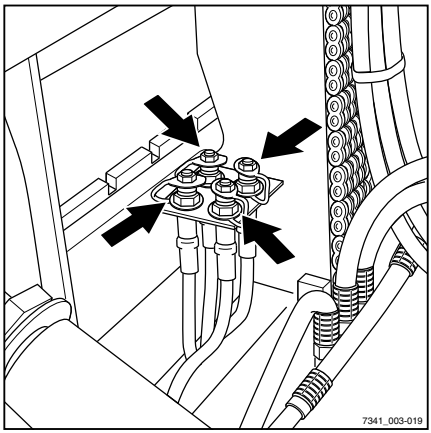

Prior to assembling attachments, the pressure must be released from the plug connectors (arrows).

Attachments must only be assembled by authorised personnel in accordance with the information provided by the manufacturer and supplier of the attachments. After each assembly, the attachment must be checked for proper functioning prior to being put into operation for the first time.

NOTE

The pressure release procedure is dependent on the operating devices for controlling the hydraulic functions; see the chapter entitled "Lifting system operating devices".

Releasing the pressure

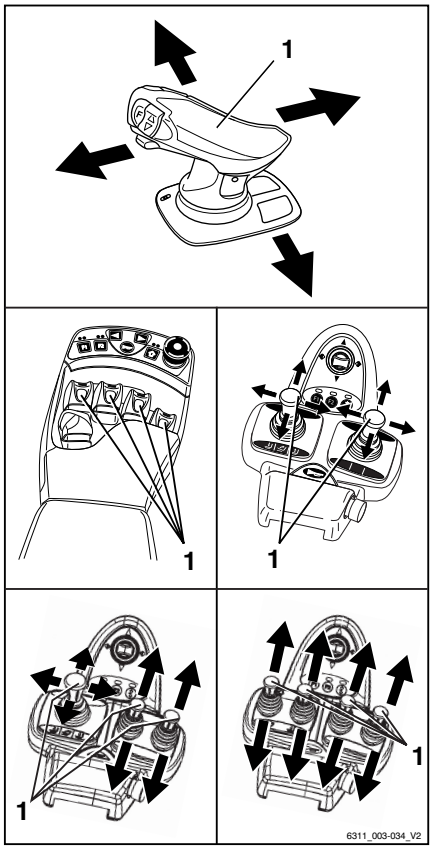

NOTE

In trucks with the "FleetManager" or "access authorisation with PIN code" equipment variants, access authorisation must be enabled.

– Switch on the key switch.

– Lower the fork carriage.

– Switch on the hazard warning system (variant).

NOTE

Press the button for switching on the hazard warning system even if the truck is not equipped with a hazard warning system. Switching on the hazard warning system prevents the electrical system from being switched off, even if the key switch is subsequently switched off.

– Switch off the key switch.

– Actuate the operating lever (1) for controlling the hydraulic functions repeatedly in the direction of the arrow, as far as the end position.

The valves open and the hydraulic system is depressurised.

General instructions for controlling attachments

The way in which attachments (variant) are controlled depends on the operating devices included in the truck's equipment.

Essentially, a distinction is drawn between:

- **Double mini-lever**
- **Double mini-lever and 5th function** (variant)
- **Triple mini-lever**
- **Triple mini-lever with a 5th function** (variant)
- **Quadruple mini-lever**
- **Quadruple mini-lever with a 5th function** (variant)
- **Joystick 4Plus**
- **Joystick 4Plus with a 5th function** (variant)
- **Fingertip**
- **Fingertip with a 5th function** (variant)

– For information on controlling attachments with the respective operating devices, see the relevant sections in this chapter.

⚠ WARNING

Use of attachments can give rise to additional hazards such as a change in the centre of gravity, additional danger areas etc.

Attachments must only be deployed for their intended use as described in the relevant operating instructions. Drivers must be taught how to operate the attachments.

Loads may only be picked up and transported with attachments if the loads are securely grasped and attached. Where necessary, loads must also be secured against slipping, rolling away, falling over, swinging or tipping over. Note that any change to the position of the load centre of gravity will affect the stability of the truck.

– Refer to the capacity rating plate for the attachments being used.

⚠ WARNING

If several hydraulic functions are used at the same time, these functions can influence each other.

For example, if the fork carriage is raised and an attachment is operated at the same time, this may change the lifting speed or the operating speed of the attachment.

NOTE

Further variants and functions are available in addition to the functions described below. The directions of movement can be seen in the pictograms on the operating devices.

NOTE

All the attachments described fall into the category of equipment variants. Please see the respective operating instructions for an exact description of the respective movements/ actions of the attachment fitted.

With fleet manager access authorisation (variant), the fleet manager can adjust the speed of the auxiliary hydraulics for attachments.

– See also the section entitled "Adjusting the hydraulic speed for attachments" in this chapter.

Controlling attachments using a double mini-lever ▷

The attachments (variants) are controlled in this version using the "attachments" cross lever (1).

The pictograms on the "attachments" cross lever show the respective functions that are activated by this lever.

This essentially involves the following:

– Move the "attachments"(1) cross lever in the direction of the arrow (A) .

The attachment moves in accordance with the pictogram in position (A).

– Move the "attachments"(1) cross lever in the direction of the arrow (B) .

The attachment moves in accordance with the pictogram in position (B).

– Move the "attachments"(1) cross lever in the direction of the arrow (C) .

The attachment moves in accordance with the pictogram in position (C).

– Move the "attachments"(1) cross lever in the direction of the arrow (D) .

The attachment moves in accordance with the pictogram in position (D).

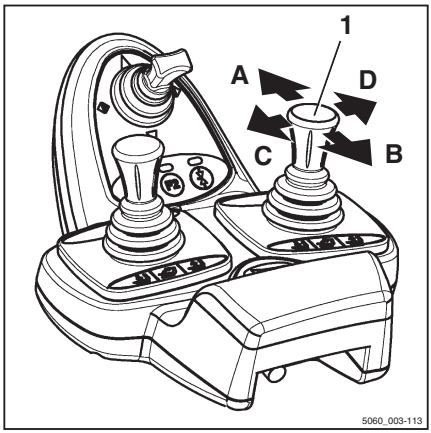

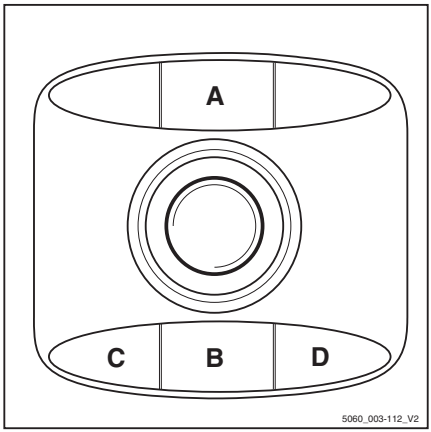

– Note the following attachment functions and pictograms. ▷

3	Move sideshift frame or fork forwards
4	Move sideshift frame or fork backwards
5	Move sideshift to the left
6	Move sideshift to the right
7	Adjust fork arms: open
8	Adjust fork arms: close
9	Swivel lift mast or fork to the left
10	Swivel lift mast or fork to the right
11	Release load retainer
12	Clamp load retainer
13	Push off the load
14	Pull in the load
15	Open clamps
16	Close clamps
17	Rotate to the left
18	Rotate to the right
19	Tip shovel over
20	Tip shovel back

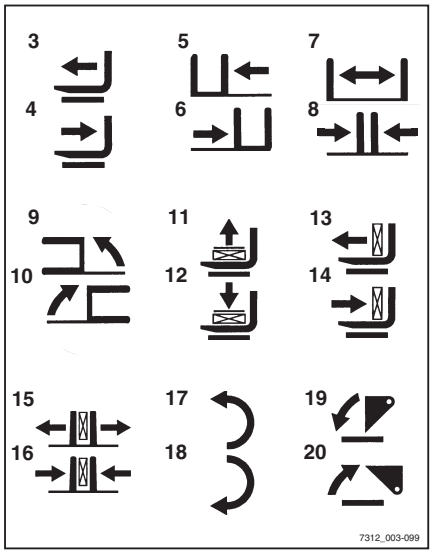

NOTE

The pictograms shown correspond to the attachments fitted to this truck at the factory. If an attachment with other functions is fitted, the pictograms must be checked for the correct representation and changed if necessary.

– Contact the authorised service centre if required.

Controlling attachments using the double mini-lever and the 5th function ▷

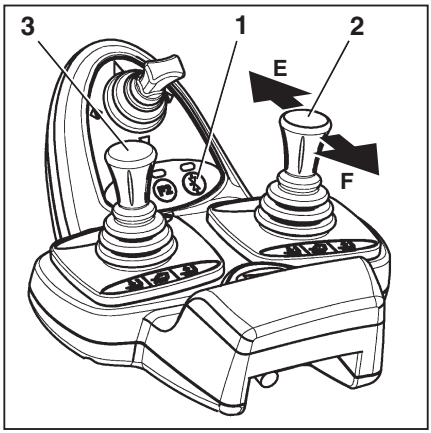

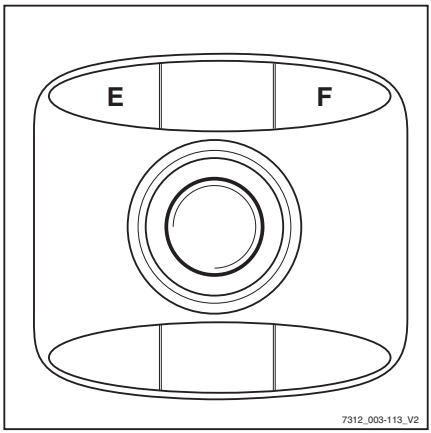

NOTE

*For technical reasons, clamping attachments **must not** be controlled via the 5th function.*

NOTE

The "lift mast" 360° lever (3) and the "attachments" cross lever (2) control four hydraulic functions. The designation "5th function" refers to the fact that the 5th hydraulic function can be controlled with the cross lever by switching the functions using the "5th function" function key (1).

The pictograms on the "attachments" cross lever (2) show the respective functions that are activated by this lever.

This essentially involves the following:

– Actuate the "5th function" function key (1) and move the "attachments" cross lever (2) in the direction of arrow (E).

The attachment moves in accordance with the pictogram in position (E).

– Actuate the "5th function" function key (1) and move the "attachments" cross lever (2) in the direction of arrow (F).

The attachment moves in accordance with the pictogram in position (F).

NOTE

The pictograms are attached depending on the pre-assembled attachment. If an attachment with other functions is fitted, the pictograms must be checked for the correct representation and changed if necessary.

– Contact the authorised service centre if required.

– Note the following attachment functions and pictograms. ▷

3	Move sideshift frame or fork forwards
4	Move sideshift frame or fork back-wards
5	Move sideshift to the left
6	Move sideshift to the right
7	Adjust fork arms: open
8	Adjust fork arms: close
9	Swivel lift mast or fork to the left
10	Swivel lift mast or fork to the right
11	Release load retainer
12	Clamp load retainer
13	Push off the load
14	Pull in the load
15	Rotate to the left
16	Rotate to the right
17	Tip shovel over
18	Tip shovel back

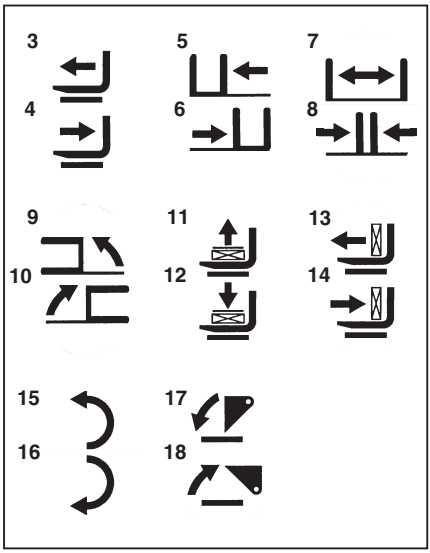

Controlling attachments using a triple mini-lever ▷

The attachments (variant) are controlled in this version using operating levers (1) and (2).

The pictograms on the operating levers show the respective functions that are activated by these levers.

This essentially involves the following:

– Move the operating lever (1) towards (A)

The attachment moves in accordance with the pictogram in position (A).

– Move the operating lever (1) towards (B)

The attachment moves in accordance with the pictogram in position (B).

– Move the operating lever (2) towards (C)

The attachment moves in accordance with the pictogram in position (C).

– Move the operating lever (2) towards (D)

The attachment moves in accordance with the pictogram in position (D).

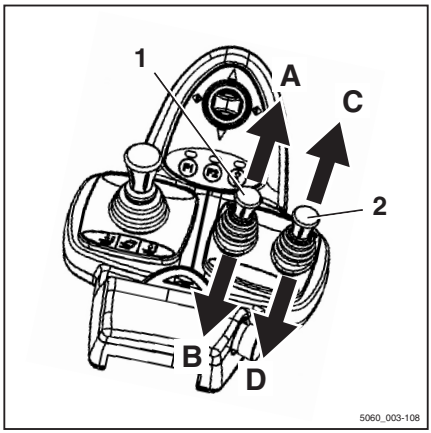

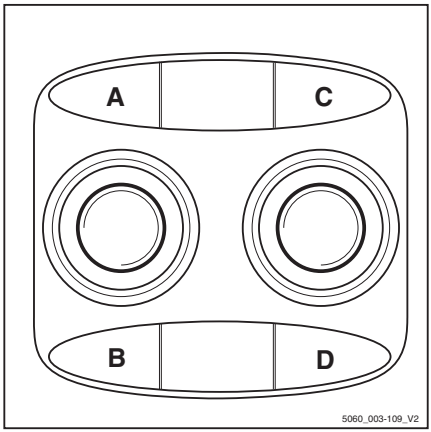

– Note the following attachment functions and pictograms. ▷

3	Move sideshift frame or fork forwards
4	Move sideshift frame or fork backwards
5	Move sideshift to the left
6	Move sideshift to the right
7	Adjust fork arms: open
8	Adjust fork arms: close
9	Swivel lift mast or fork to the left
10	Swivel lift mast or fork to the right
11	Release load retainer
12	Clamp load retainer
13	Push off the load
14	Pull in the load
15	Open clamps
16	Close clamps
17	Rotate to the left
18	Rotate to the right
19	Tip shovel over
20	Tip shovel back

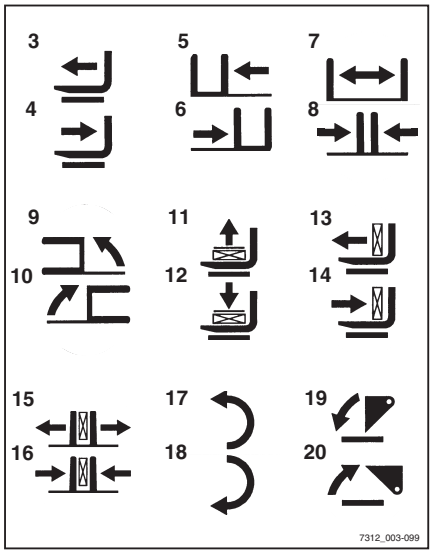

NOTE

The pictograms shown correspond to the attachments fitted to this truck at the factory. If an attachment with other functions is fitted, the pictograms must be checked for the correct representation and changed if necessary.

– Contact the authorised service centre if required.

Controlling attachments using the triple mini-lever and the 5th function ▷

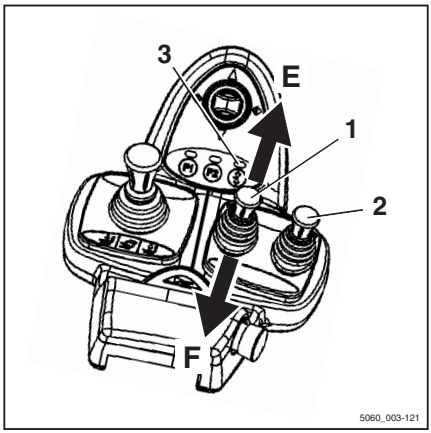

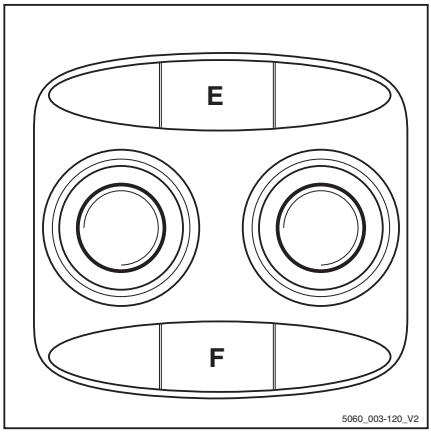

NOTE

*For technical reasons, clamping attachments **must not** be controlled via the 5th function.*

NOTE

The "lift mast" 360° lever and operating levers (1) and (2) control four hydraulic functions. The designation "5th function" refers to the fact that the 5th hydraulic function can be controlled with the operating lever (1) by switching the functions using the function key (3).

The pictograms on the operating levers show the respective functions that are activated by these levers.

This essentially involves the following:

– Actuate the "5th function" function key (3) and move operating lever (1) towards (E).

The attachment moves in accordance with the pictogram in position (E).

– Actuate the "5th function" function key (3) and move operating lever (1) towards (F).

The attachment moves in accordance with the pictogram in position (F).

– Note the following attachment functions and pictograms. ▷

1	Adjust fork arms: open
2	Adjust fork arms: close
3	Rotate to the left
4	Rotate to the right

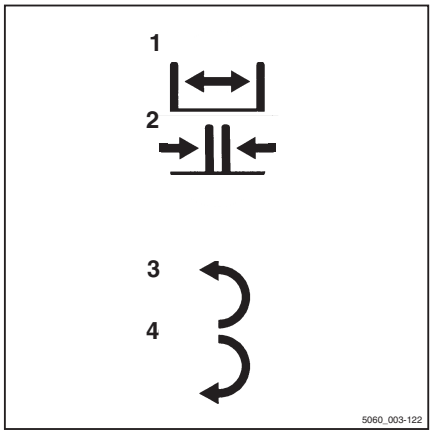

NOTE

The pictograms shown correspond to the attachments fitted to this truck at the factory. If an attachment with other functions is fitted, the pictograms must be checked for the correct representation and changed if necessary.

– Contact the authorised service centre if required.

Controlling attachments using a quadruple mini-lever ▷

The attachments (variant) are controlled in this version using operating levers (1) and (2).

The pictograms on the operating levers show the respective function that is activated by these levers.

This essentially involves the following:

– Move the operating lever (1) towards (A)

The attachment moves in the direction shown in pictogram (A).

– Move the operating lever (1) towards (B)

The attachment moves in the direction shown in pictogram (B).

– Move the operating lever (2) towards (C)

The attachment moves in the direction shown in pictogram (C).

– Move the operating lever (2) towards (D)

The attachment moves in the direction shown in pictogram (D).

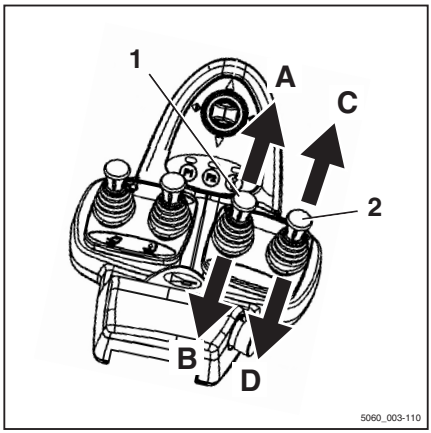

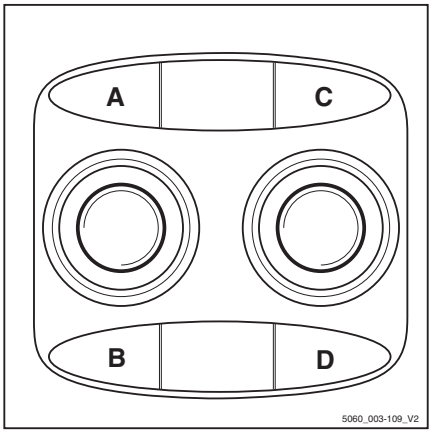

– Note the following attachment functions and pictograms. ▷

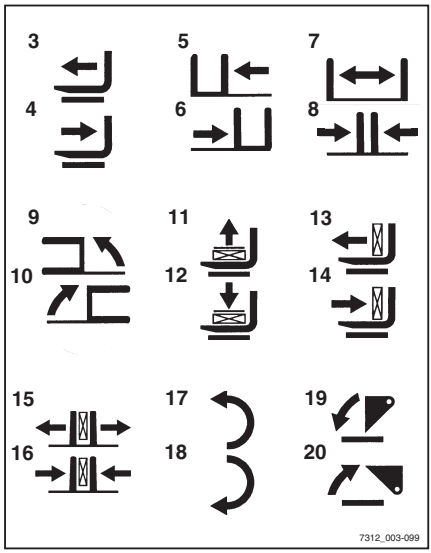

3	Move sideshift frame or fork forwards
4	Move sideshift frame or fork backwards
5	Move sideshift to the left
6	Move sideshift to the right
7	Adjust fork arms: open
8	Adjust fork arms: close
9	Swivel lift mast or fork to the left
10	Swivel lift mast or fork to the right
11	Release load retainer
12	Clamp load retainer
13	Push off the load
14	Pull in the load
15	Open clamps
16	Close clamps
17	Rotate to the left
18	Rotate to the right
19	Tip shovel over
20	Tip shovel back

NOTE

The pictograms shown correspond to the attachments fitted to this truck at the factory. If an attachment with other functions is fitted, the pictograms must be checked for the correct representation and changed if necessary.

– Contact the authorised service centre if required.

Controlling attachments using the quadruple mini-lever and the 5th function ▷

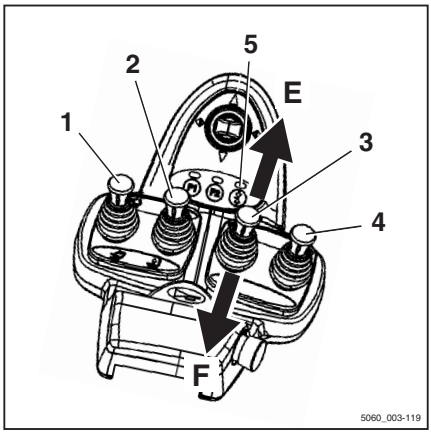

NOTE

*For technical reasons, clamping attachments **must not** be controlled via the 5th function.*

NOTE

Operating levers (1) to (4) are used to control four hydraulic functions. The designation "5th function" refers to the fact that the 5th hydraulic function can be controlled with the operating lever (3) by switching the functions using the "5th function" function key (5).

The pictograms on the operating levers show the respective functions that are activated by these levers.

This essentially involves the following:

– Actuate the "5th function" function key (5) and move operating lever (3) towards (E).

The attachment moves in accordance with the pictogram in position (E).

– Actuate the "5th function" function key (5) and move operating lever (3) towards (F).

The attachment moves in accordance with the pictogram in position (F).

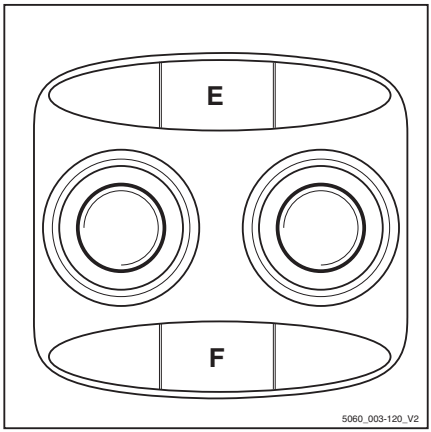

– Note the following attachment functions and pictograms. ▷

1	Adjust fork arms: open
2	Adjust fork arms: close
3	Rotate to the left
4	Rotate to the right

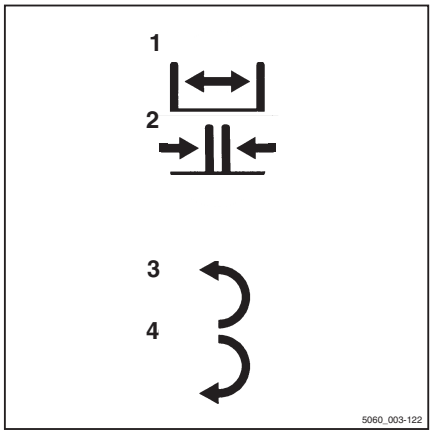

NOTE

The pictograms shown correspond to the attachments fitted to this truck at the factory. If an attachment with other functions is fitted, the pictograms must be checked for the correct representation and changed if necessary.

– Contact the authorised service centre if required.

Controlling attachments using the Joystick 4Plus

In this equipment, the attachments (variant) are controlled using the Joystick 4Plus (1).

The pictograms on the decal information regarding operation of the Joystick 4Plus show the respective functions that are activated by the individual operating devices of the Joystick 4Plus.

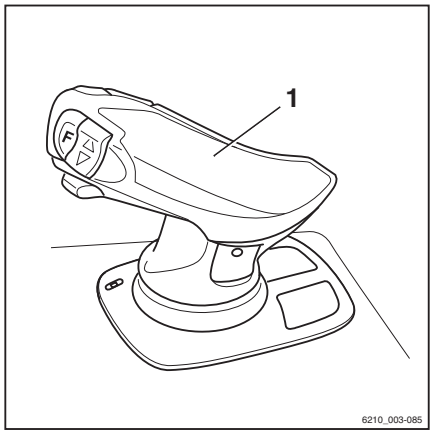

– Observe the following attachment functions and pictograms.

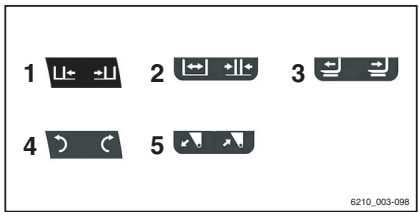

	Operating device	Function of the attachment
1	Joystick 4Plus	Move sideshift to the left/right
2	Joystick 4Plus or slider	Adjust fork arms: open/close
3	Slider	Move side shift frame or fork carriage forwards/backwards
4	Joystick 4Plus or slider	Rotate attachment left/right
5	Slider	Tip shovel over/tip shovel back

NOTE

The pictograms are affixed according to the attachment fitted at the factory. If an attachment with different functions is fitted, the authorised service centre must check that the pictograms bear the correct representation and must change them if necessary.

Controlling attachments with Joystick 4Plus and the 5th function

NOTE

*For technical reasons, clamping attachments **must not** be controlled via the 5th function.*

NOTE

The 5th hydraulic function can be used to control an attachment. The pictograms on the Joystick 4Plus show which attachment functions can be controlled using the 5th function.

For attachments that are controlled using the 5th hydraulic function, the procedures for operation are as follows:

- Press and hold shift key "F" (1) on the Joystick 4Plus.
- Simultaneously actuate the horizontal rocker button (2) in the direction shown in the pictogram.

The attachment moves in the selected direction.

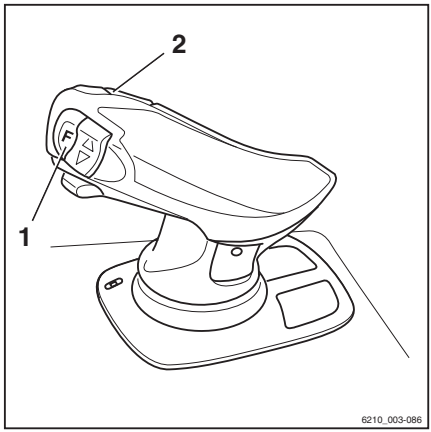

NOTE

The pictograms are affixed according to the attachment fitted at the factory. If an attachment with different functions is fitted, the authorised service centre must check that the pictograms bear the correct representation and must change them if necessary.

Controlling the attachments with fingertip ▷

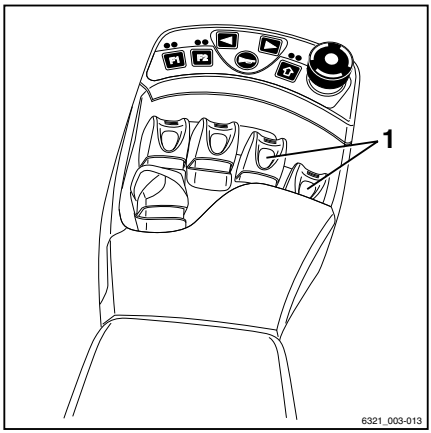

The attachments (variant) are controlled in this version using the operating levers (1).

The pictograms on the operating levers always show the functions that are activated by that lever.

– Move operating lever (1) forwards.

The attachment moves in the direction of movement shown in the upper part of the pictogram.

– Move operating lever (1) backwards.

The attachment moves in the direction of movement shown in the lower part of the pictogram.

– Note the following attachment functions and pictograms. ▷

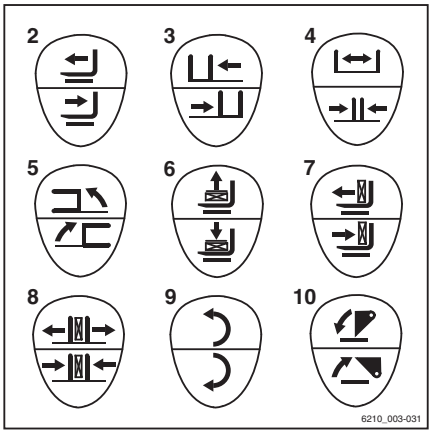

2	Move side shift frame or forks forwards/backwards
3	Move sideshift to the left/to the right
4	Adjust fork arms: open/close
5	Swivel lift mast or forks to the left/to the right
6	Release/clamp load retainer
7	Push off/pull in load
8	Open/close clamps
9	Turn to the left/to the right
10	Tip shovel over/tip shovel back

NOTE

The pictograms shown correspond to the attachments fitted to this truck at the factory. If an attachment with other functions is fitted, the pictograms must be checked for the correct representation and changed if necessary.

– Contact the authorised service centre if required.

Controlling attachments with fingertip and the 5th function ▷

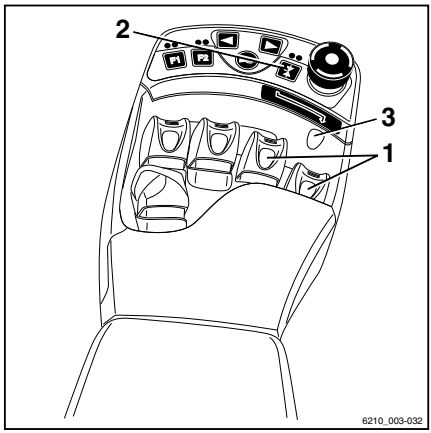

NOTE

For technical reasons, clamping attachments ***must not*** *be controlled via the 5th function.*

NOTE

The designation "5th function" refers to the fact that the four operating levers control four functions, while the "5th function" can be controlled by switching functions.

The attachments (variant) are controlled using the operating levers (1).

You can also use the switch (2) to switch functions, in which case the corresponding operating lever controls the "5th function".

The pictogram (3) behind the operating lever shows in the upper and lower parts the function that is activated with this lever.

The meanings are as follows:

– Move operating lever forwards.

The attachment moves in the direction of movement shown in the upper part of the pictogram.

– Move operating lever back.

The attachment moves in the direction of movement shown in the lower part of the pictogram.

– Actuate the switch (2).

The additional function of the attachment is activated/deactivated and can be controlled as the "5th function" using the operating lever.

– Press the function key (4). ▷

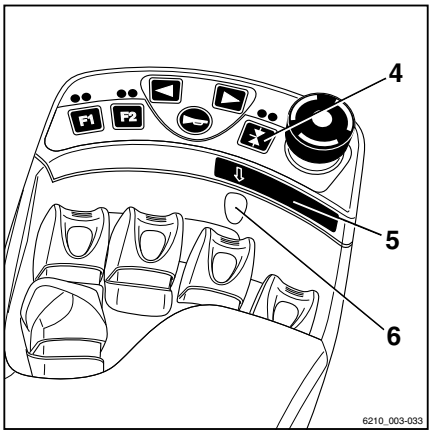

NOTE

The arrow (5) under the function key indicates which operating lever is equipped with the "5th function".

The "5th function" is switched to the 3rd operating lever; see adhesive label (6).

– Press the function key (7). ▷

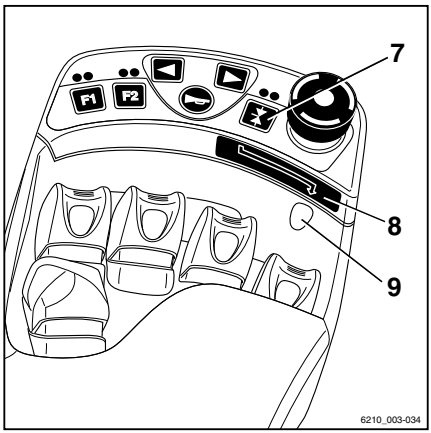

NOTE

The arrow (8) under the function key indicates which operating lever is equipped with the "5th function".

The "5th function" is switched to the 4th operating lever; see adhesive label (9).

NOTE

The movement/action of this "5th function" can be found in the operating instructions of the fitted attachment.

NOTE

The pictograms are applied depending on the pre-assembled attachment. If an attachment with other functions is fitted, the pictograms must be checked for the correct representation and changed if necessary.

– Contact the authorised service centre if required.

– Note the following attachment functions and pictograms. ▷

10	Move side shift frame or fork forwards/backwards
11	Move sideshift to the left/right
12	Adjust fork arms: open/close
13	Swivel lift mast or fork to the left/right
14	Release/clamp load retainer
15	Push off/pull in load
16	Turn to the left/right
17	Tip shovel over/tip shovel back

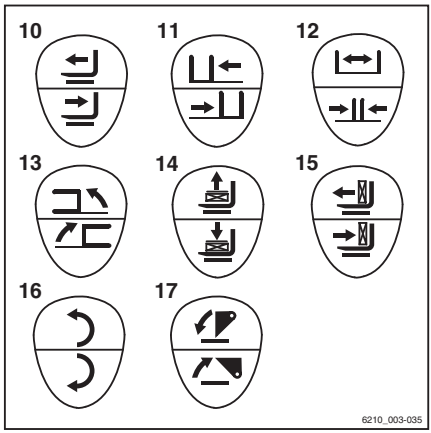

Clamp locking mechanism (variant)

This truck can be fitted with a clamp locking mechanism as a variant. This prevents the clamp from opening unintentionally if the operating function is inadvertently triggered.

⚠ DANGER

There is a risk of fatal injury from falling loads if the correct function of the clamp locking mechanism is not guaranteed!

If other attachments are used on this truck in addition to the clamp, make sure that the clamp locking mechanism function is reassigned to the corresponding operating device every time the clamp is reassembled; see the chapter entitled "Fitting attachments".

– Make sure that the additional clamp locking mechanism function is available.

Double mini-lever

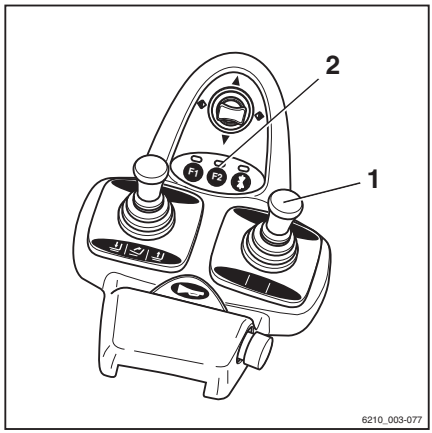

– To release the clamp locking mechanism, push the cross lever (1) forwards.

The LED for button F2 (2) lights up as long as the clamp locking mechanism is released.

NOTE

The hydraulic function for opening the clamp is available for one second after the clamp locking mechanism is released. After one second, the clamp locking mechanism is automatically reactivated.

– To open the clamp, push the cross lever (1) forwards again.

It is not necessary to release the clamp locking mechanism in order to close the clamp.

– To close the clamp, pull the cross lever (1) back.

Triple mini-lever

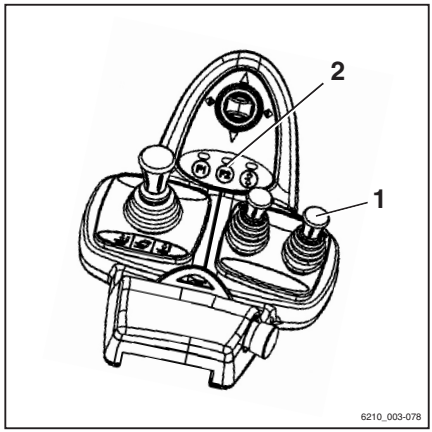

– To release the clamp locking mechanism, push the operating lever (1) forwards.

The LED for button F2 (2) lights up as long as the clamp locking mechanism is released.

NOTE

The hydraulic function for opening the clamp is available for one second after the clamp locking mechanism is released. After one second, the clamp locking mechanism is automatically reactivated.

– To open the clamp, push the operating lever (1) forwards again.

It is not necessary to release the clamp locking mechanism in order to close the clamp.

– To close the clamp, pull the operating lever (1) back.

Quadruple mini-lever

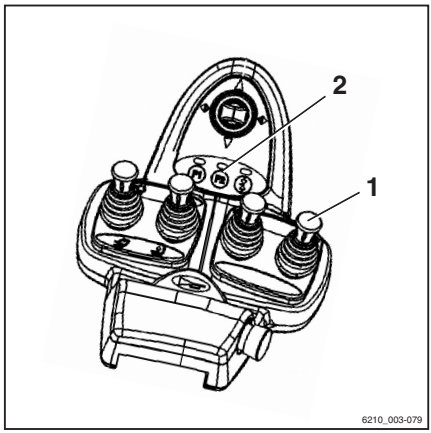

– To release the clamp locking mechanism, push the operating lever (1) forwards.

The LED for button F2 (2) lights up as long as the clamp locking mechanism is released.

NOTE

The hydraulic function for opening the clamp is available for one second after the clamp locking mechanism is released. After one second, the clamp locking mechanism is automatically reactivated.

– To open the clamp, push the operating lever (1) forwards again.

It is not necessary to release the clamp locking mechanism in order to close the clamp.

– To close the clamp, pull the operating lever (1) back.

Joystick 4Plus

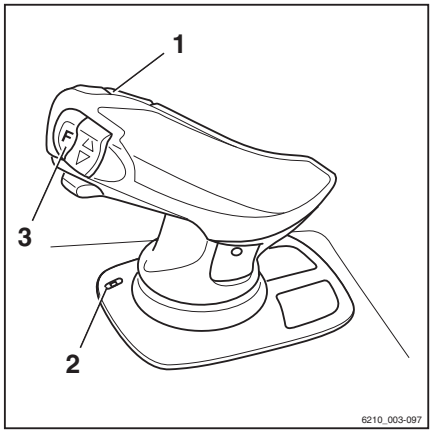

– To release the clamp locking mechanism, press and hold shift key F (3) and move the horizontal rocker button (1) to the right.

– Keep shift key F(3) pressed and move the horizontal rocker button (1) back to the neutral position.

The LED (2) lights up as long as the clamp locking mechanism is released.

– To open the clamp, press and hold shift key F (3) and move the horizontal rocker button (1) to the right.

NOTE

The hydraulic function for opening the clamp is available for one second after the clamp locking mechanism is released. After one second, the clamp locking mechanism is automatically reactivated.

It is not necessary to release the clamp locking mechanism in order to close the clamp.

– To close the clamp, press and hold shift key F (3) and move the horizontal rocker button (1) to the left.

Fingertip

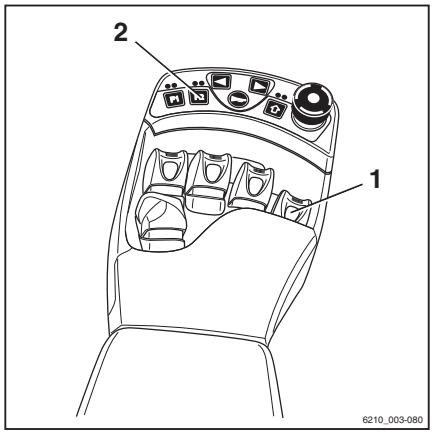

– To release the clamp locking mechanism, push the operating lever (1) forwards.

The LED for button F2 (2) lights up as long as the clamp locking mechanism is released.

NOTE

The hydraulic function for opening the clamp is available for one second after the clamp locking mechanism is released. After one second, the clamp locking mechanism is automatically reactivated.

– To open the clamp, push the operating lever (1) forwards again.

It is not necessary to release the clamp locking mechanism in order to close the clamp.

– To close the clamp, pull the operating lever (1) back.

Taking up a load using attachments

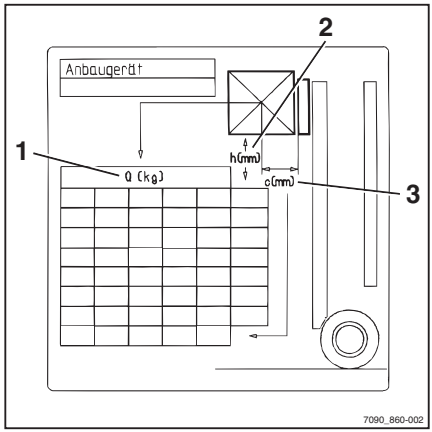

WARNING

Risk of accidents!

Attachments may only be used for their intended purpose as described in the relevant operating instructions.

Drivers must be instructed in the handling of the attachments.

WARNING

Risk of accidents!

Loads may only be picked up and transported with attachments if they are securely attached. Where necessary, loads should also be secured against slipping, rolling, falling over, swinging or tipping over. Note that any change to the position of the load's centre of gravity will affect the stability of the forklift truck.

Check the capacity rating plates for the attachments or combination of attachments.

– The rating plates show the permissible values for:

- Load capacity Q (kg) (1)
- Lift height h (mm) (2)
- Load distance C (mm) (3)

Auxiliary equipment

Switching the lighting on and off

Driving lights

– To switch on the parking light, press the button (1). ▷

The front sidelights and the rear lights light up. On the variant with StVZO (German Road Traffic Licensing Regulations) equipment, the licence plate lamp also lights up.

– To switch on the headlights, press the button (1) again.

The headlights light up in addition to the parking light.

– To switch off the driving lights, press the button (1) again.

The driving lights go out.

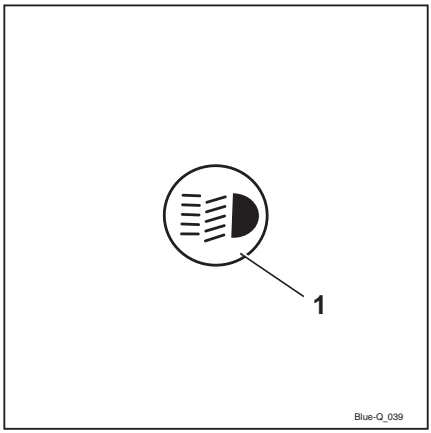

Working spotlights

– To switch on the working spotlights (front and rear), press the button (1). ▷

The working spotlights light up.

– To switch off the working spotlights, press the button (1) again.

The working spotlights go out.

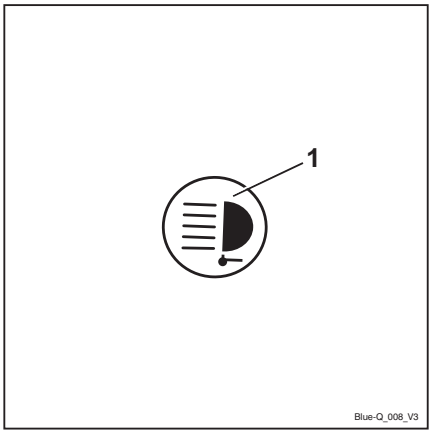

NOTE

In trucks with StVZO (German Road Traffic Licensing Regulations) equipment (variant), the following lighting elements on the truck are also activated when the working spotlights are switched on:

- *Rear lights*
- *Licence plate lamp*
- *Sidelights*

Switching the working spotlight for reverse travel on and off

The working spotlight for reverse travel is attached to the overhead guard at the rear. It provides optimal illumination of the roadway if the truck is travelling in reverse.

– Press the softkey (1).

The symbol (2) is displayed. The rear working spotlight does not yet illuminate.

– Set the drive direction to "Reverse".

The rear working spotlight illuminates.

NOTE

If the drive direction is set to "Forwards", the rear working spotlight goes out.

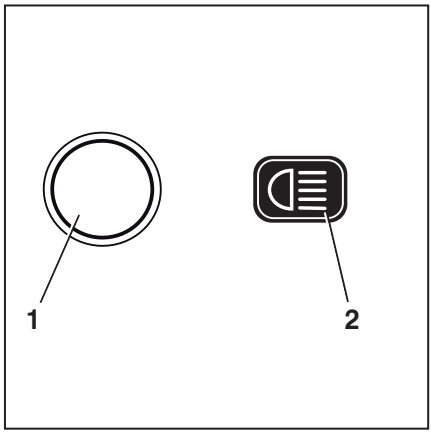

Switching the rotating beacon on and off

– Press the Softkey (1) to switch on the rotating beacon.

The rotating beacon is switched on. The symbol is displayed.

– To switch off the rotating beacon, press the Softkey .

The rotating beacon goes out. The symbol (2) is displayed.

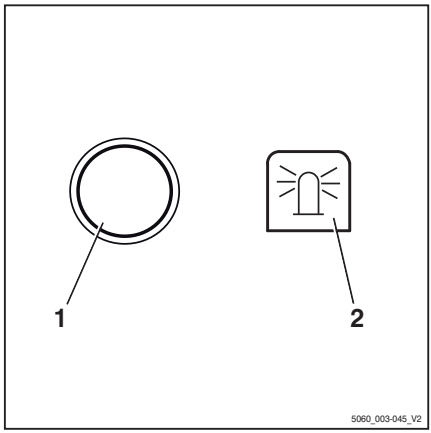

Switching the hazard warning system on and off

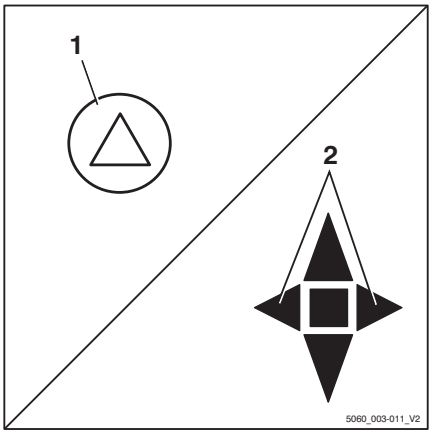

– To switch on the hazard warning system, press the button (1).

All turn indicators and indicator lights (2) flash.

– To switch off the hazard warning system, press the button (1) again.

The hazard warning system goes out.

NOTE

To switch on the hazard warning system without the key switch being switched on, press and hold the button for three seconds.

Switching the turn indicators on and off

Mini-lever version

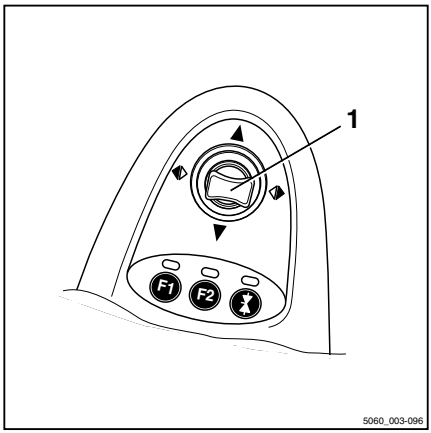

– Switch on the turn indicators by moving the cross lever of the drive direction/turn indicator (1) to the left or to the right.

The turn indicators and the corresponding turn indicator displays (2) or (3) flash. ▷

– Switch off the turn indicators by moving the cross lever to the centre position.

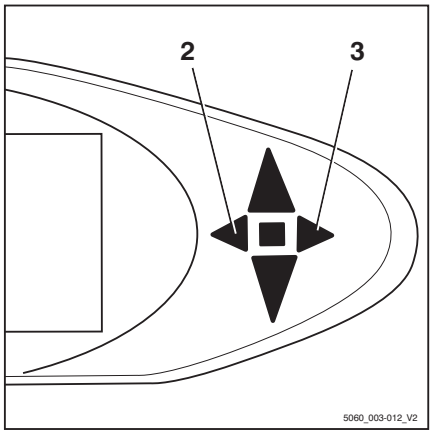

Mini-console version ▷

– Switch on the turn indicators by moving the turn indicator switch (1) to the left or to the right.

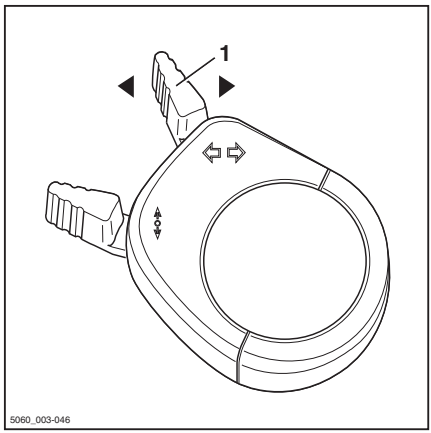

The turn indicators and the corresponding turn indicator displays (2) or (3) flash. ▷

– Switch off the turn indicators by moving the turn indicator switch to the centre position.

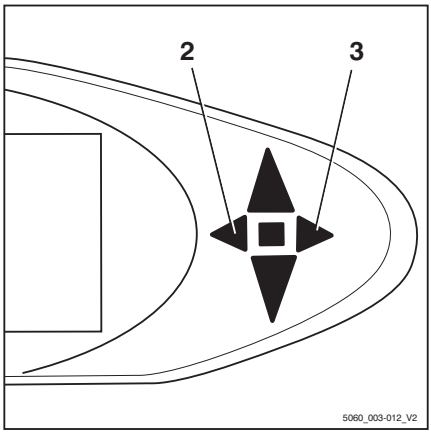

Switching the double working spotlights on and off. ▷

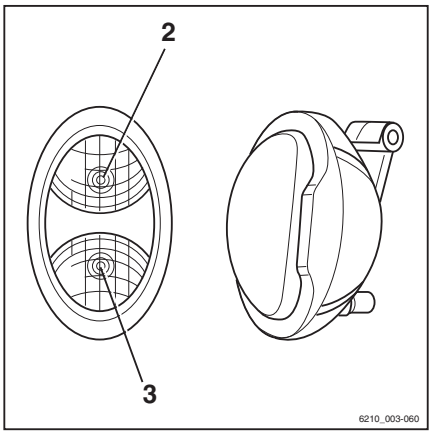

The double working spotlights are fitted up on the front right and left on the overhead guard. Each double working spotlight consists of an upper working spotlight (2) and a lower working spotlight (3). The upper working spotlight illuminates the working area at great lift heights, the lower working spotlight illuminates the working area directly in front of the truck.

Depending on the equipment, the upper working spotlights can be switched on/off automatically or manually.

Switching the upper working spotlights on/off manually

NOTE

The upper working spotlights can be switched on/off independently of the lower working spotlights. For information about switching on the lower working spotlights, see the section entitled "Switching the lighting on and off".

NOTE

This function is not available if the truck is equipped with rear window heating.

– Turn the key switch to position "I".

– Press Softkey (1) to switch on the working spotlights. ▷

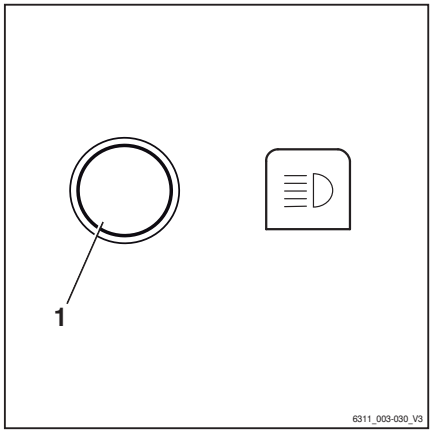

The working spotlights are switched on. The symbol is displayed.

– Press Softkey to switch off the working spotlights.

The working spotlights are switched off. The symbol is displayed.

Switching the upper working spotlights on/off automatically

– Turn the key switch to position "I".

– For information about switching on the working spotlights, see the chapter entitled "Switching the lighting on and off".

The lower working spotlights light up.

The upper working spotlights are switched on automatically when the lift mast is lifted for a period of at least two seconds.

NOTE

During these two seconds, a maximum of two lifts can be executed to prevent the working spotlights from switching on each time a precise adjustment is made. If more lifts are carried out during this time, the upper working spotlights will remain switched off.

NOTE

The upper working spotlights are switched off automatically when the truck is driven for longer than one second at a speed faster than 2.1 km/h.

Lift-height-controlled switching on/off of the upper working spotlights

NOTE

This equipment is available only if a proximity switch is fitted to the lift mast to record a particular lift height of the fork carriage on the lift mast.

– Turn the key switch to position "I".

– Switch on the working spotlights.

The lower working spotlights light up.

The upper working spotlights are switched on by the proximity switch when the fork carriage reaches or exceeds the preset lift height.

The upper working spotlights are switched off by the proximity switch when the fork carriage falls below the preset lift height again.

⚠ CAUTION

Possible component damage caused by collision if the proximity switch is set incorrectly.

– The proximity switch may be adjusted by trained personnel.

– If necessary, inform the authorised service centre.

STILL SafetyLight (variant) ▷

⚠ WARNING

Danger of damage to eyes from looking into the STILL SafetyLight.

Do not look into the STILL SafetyLight.

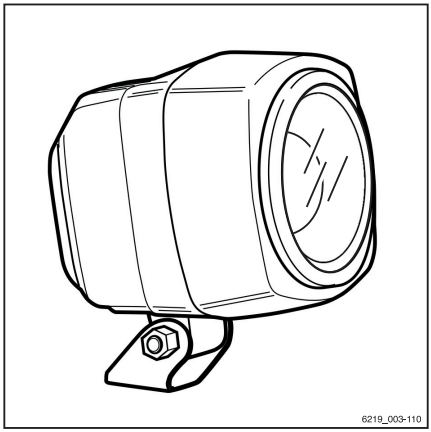

The STILL SafetyLight is a visual warning unit designed to enable early detection of trucks in driving areas with low visibility (such as drive lanes, high racks), as well as at blind junctions. The STILL SafetyLight is mounted on a support on the overhead guard such that it is not affected by jolts and vibrations. The STILL SafetyLight projects one or more light-blue light spots in front of or behind the truck and thus warns others about the approaching truck. Several light spots are projected as a chase light. The chase light indicates the location of the truck with its direction of travel.

Depending on the configuration of the truck, the STILL SafetyLight automatically switches itself on when the truck is moving. The STILL SafetyLight can also be switched on and off on the display-operating unit.

– To do so, press the corresponding button.

NOTE

If the truck is to be operated on public roads, the STILL SafetyLight must be switched off.

Operating the windscreen wiper/ washer

– Press the button (1) to activate the front wiper/washer (variant) and the roof panel wiper (variant).

– Push button (2) to actuate the rear windscreen wiper/washer (variant).

Repeated pressing of the respective button switches between the operating stages in the sequence shown below.

Button actuation	Operating stage
	Off
1st time	On
2nd time	Interval
3rd time + hold	Washer
4th time	Off

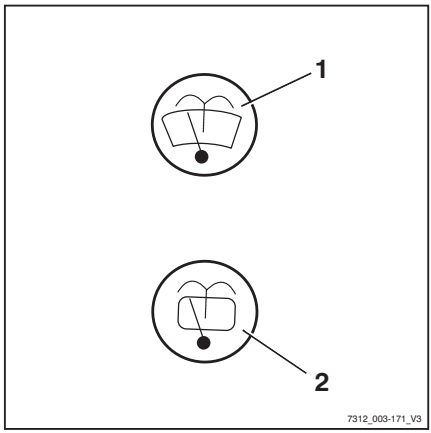

Filling the washer system

CAUTION

Components may become damaged due to the effects of frost!

Water expands when it freezes. If there is no anti-freeze in the washer system, the system may be damaged due to the build up of ice in freezing conditions.

– Always use washer fluid containing anti-freeze.

The windscreen washer reservoir is under the compartment behind the driver's seat. The sight glass (1) displays the fill level.

– Open filler cap (2) for the windscreen washer reservoir. ▷
– Fill the windscreen washer reservoir with washer fluid and anti-freeze in accordance with the maintenance data table; see ⇒Chapter "Maintenance data table", Page 339 .
– Close lid.
– Operate washer system until washer fluid is discharged from the spray nozzles.

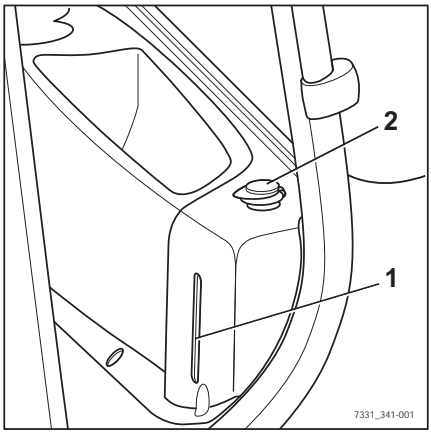

FleetManager (variant)

FleetManager is an equipment variant and can be fitted to the truck in different versions. The description and operation information can be found in the separate operating instructions for the corresponding FleetManager versions.

Shock recognition (variant)

The shock recognition is an equipment variant of the FleetManager (variant) in which an acceleration sensor is installed in the truck. The acceleration sensor records data arising from rapid accelerations or decelerations of the truck, e.g. in the event of an accident. This data can be electronically read out and evaluated.

– If you have any questions, please contact your authorised service centre.

12-V socket

To the right of the driver's seat, there is a 12-V socket (1) for connecting an external electrical consumer.

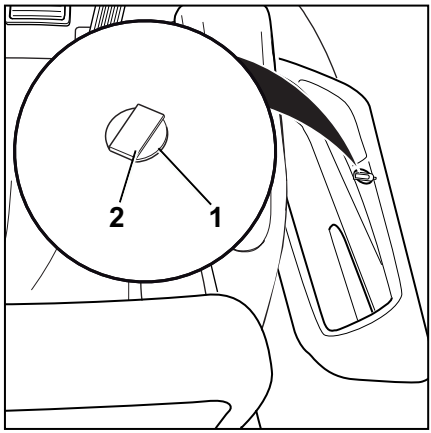

⚠ CAUTION

Risk of short circuit!

The nominal current of the connected consumer must not exceed 10 A.

– Before connecting, check the nominal current of the device in question.

– Open the dust guard cover (2).
– Insert the plug of the device to be connected into the socket (1).
– Place the dust guard cover on the plug.
– Perform a functional check of the electrical connection on the connected device.

⚠ CAUTION

Malfunctions possible.

The exposed socket may become dirty and dusty if no plug is inserted or the dust guard cover is not closed. Over time, this can lead to problems with the electrical connection.

– Push the dust guard cover all the way down after using the socket.

Driver restraint systems (variants)

Different driver restraint systems are available as variants for this truck. The description and operation for these systems can be found in the separate "Driver restraint systems" operating instructions.

Ceiling sensor (variant)

Description

The ceiling sensor (1) on the overhead guard is an assistance system that automatically reduces the driving speed of the truck within halls. However, this assistance system does not release the driver from the responsibility of observing the speed limits on company premises.

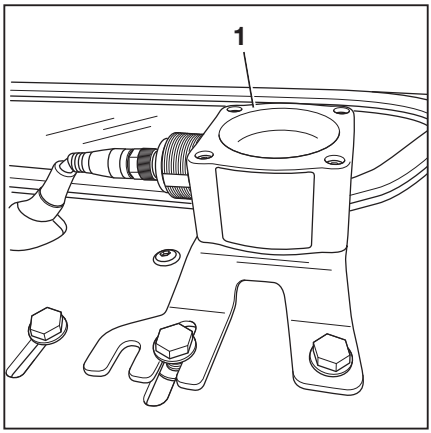

Depending on the system setting, the ceiling sensor can detect overhead structures above the truck at a height of 2 m to 24 m above the sensor.

If the truck is equipped with a ceiling sensor, this assistance system is listed in the "Assistance systems" menu in the display-operating unit.

Operating the ceiling sensor system

The drivers must be instructed on the use of the ceiling sensor system by the operating company.

When the driver enters a hall for the first time after starting work, they must be certain that the ceiling sensor system is working correctly. Despite the ceiling sensor system being installed, the driver must also check the speed indicator on the display-operating unit on a regular basis to ensure that they do not exceed the maximum speed permitted for the environment.

- **Entering a hall**
  The ceiling sensor system automatically detects when the truck enters a hall. The system then automatically slows the truck to the maximum speed that is set for the hall. The "Speed restriction" symbol appears in the display.
- **Leaving a hall**
  If the truck leaves the hall again, the ceiling sensor system enables the maximum speed set for areas outside the hall. Due to the range of the sensor, this may not happen until the truck is a few metres away from the hall exit. Before the truck is able to accelerate to the maximum speed permitted for outdoor areas, the speed limitation must still

be unlocked. To do this, release the accelerator briefly and then operate the accelerator again.

- **Switching on the truck in a hall**
  If the truck is switched on inside a hall, the ceiling sensor system detects the hall ceiling and reduces the driving speed to the maximum speed that is set for halls.

Possible limitations for object recognition

- If the truck moves under larger overhead structures outdoors, e.g. a pedestrian bridge, the ceiling sensor system may interpret this overhead structure to be a hall ceiling and reduce the maximum speed.
- In rare cases, it may occur that the ceiling sensor system does not recognize a ceiling and does not then reduce the speed. This can happen if the signals from the ceiling sensor are insufficiently reflected due to the ceiling geometry; for example, if there are large window areas at a 45° angle.

In these cases, the sensitivity and the range of the ceiling sensor system must be adjusted. See the following section.

Changing the sensor settings

NOTE

The ceiling sensor system is supplied by STILL with the following factory settings:

- *Sensitivity: High*
- *Ceiling height: 24 m*

– Park the truck securely and switch it off.

– Turn the union nut (4) anti-clockwise to loosen it. Disconnect the electrical connection assembly by pulling out the plug.
– On the underside of the assembly baseplate on the overhead guard, hold four nuts (3) in place.
– Unscrew four socket head screws (2).

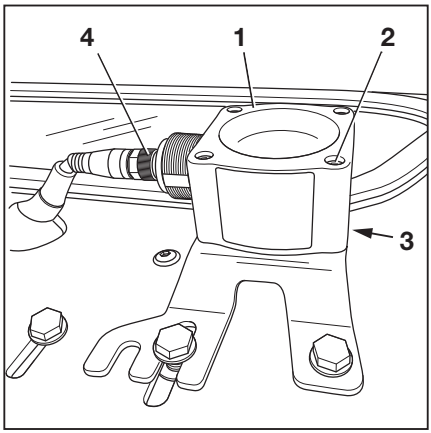

The key (5) is secured with a nut under the assembly baseplate.

– Carefully remove the ceiling sensor (1).

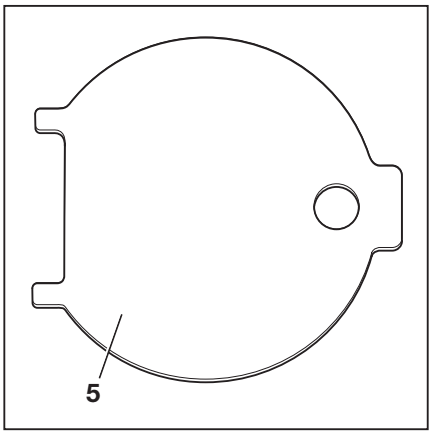

The sensor is adjusted using DIP switches (6).

– To access the DIP switches, open the cover on the underside of the sensor housing with the key (5).

During this process, the two tabs of the key (5) fit into the recesses of the cover.

– Using the DIP switches "1 to 5" (6), adjust the range and the sensitivity of the sensor. The DIP switches can be adjusted using a small screwdriver.

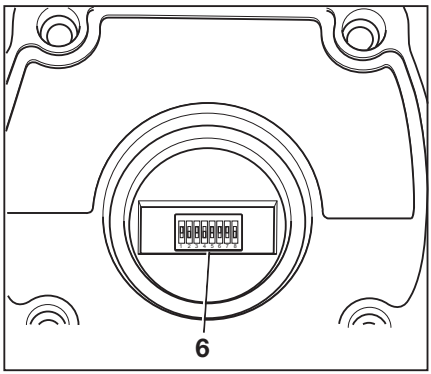

⚠ CAUTION

The settings for DIP switches "6 to 8" are the factory settings of the manufacturer.

Do **not** change the factory settings of the manufacturer!

Factory settings of the manufacturer

DIP switch		
6	7	8
1	1	0

The possible settings for DIP switches "1 to 5" are shown in the following tables:

DIP switch			
1	2	3	Range
0	0	0	2 m
0	0	1	3 m
0	1	0	4 m
0	1	1	6 m
1	0	0	8 m
1	0	1	12 m
1	1	0	16 m
1	1	1	24 m

4	5	Sensitivity
0	0	Very high
0	1	High
1	0	Medium
1	1	Low

Representation of the beam angle depending on the sensitivity of the sensor that has been set, from (1) "low" to (4) "very high". ▷

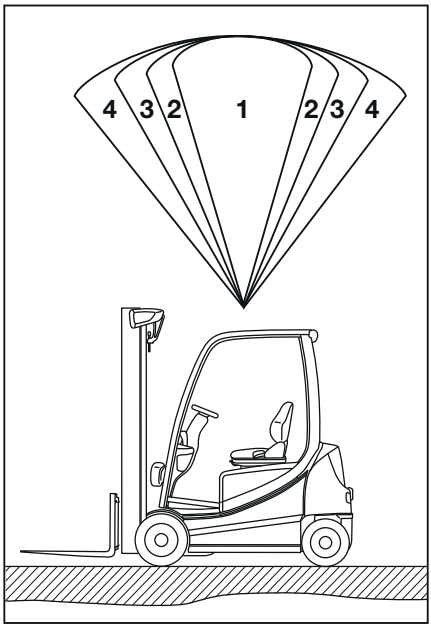

The sensor has different beam angles depending on the combination of range and sensitivity that has been set. See the following table:

Sensitivity	Range	Beam angle
Low (1)	2 m	22.5°
	4 m	22.5°
	8 m	20°
	16 m	15°
	24 m	5°
Medium (2)	2 m	35°
	4 m	30°
	8 m	25°
	16 m	22.5°
	24 m	10°

Sensitivity	Range	Beam angle
High (3)	2 m	42°
	4 m	33°
	8 m	22.5°
	16 m	20°
	24 m	15°
Very high (4)	2 m	45°
	4 m	43°
	8 m	30°
	16 m	22.5°
	24 m	18°

– After the adjustment, refit the cover.

– Refit the ceiling sensor and connect it.

– Check that it is working correctly.

Cab

Opening the cab door

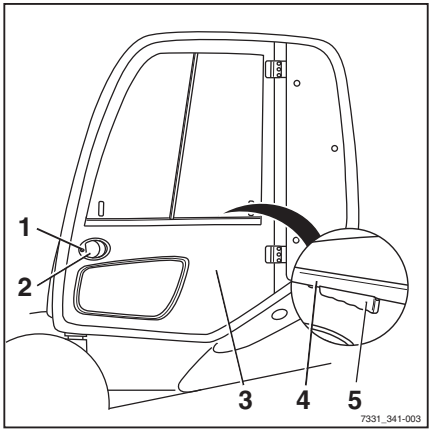

⚠ DANGER

There is a risk of damage caused by collision if the cab door opens while driving.

– The cab door must be latched securely in the engaged position.

Opening the cab door from the outside:

– Insert the key in the door lock (1), unlock and remove the key.

– Pull the door handle (2) and release the door lock.

– Open the cab door (3) by pulling outwards.

Opening the cab door from the inside:

– Take hold of the handlebar (4) and latch (5).

– Press the latch in and push the cab door outwards.

Closing the cab door

⚠ DANGER

There is a risk of damage caused by collision if the cab door opens while driving.

– The cab door must be latched securely in the engaged position.

Opening the side windows

⚠ WARNING

There is a risk of crushing between the window frame and side window from the side windows slipping inadvertently during travel.

– Make sure that the handle engages securely in the corresponding stop slot.

Opening the rear side window:

– Press the handle (2) together and slide the rear side window (1) forwards.

– Make sure that the handle engages in the stop slot (3).

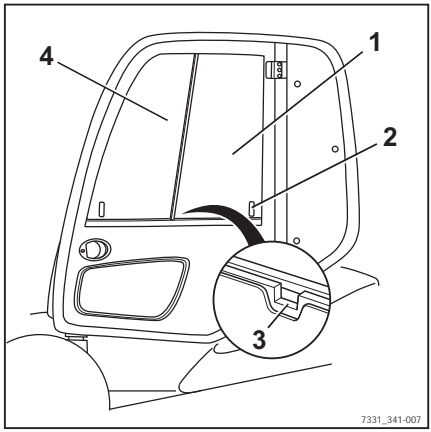

Opening the front side window:

The front side window (4) can be opened in the same way as the rear side window.

Closing the side windows

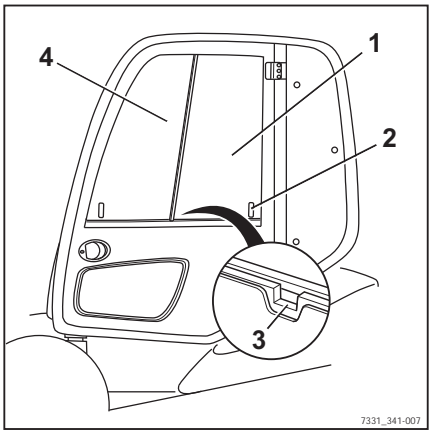

⚠ WARNING

There is a risk of crushing between the window frame and side window from the side windows slipping inadvertently during travel.

– Make sure that the handle engages securely in the corresponding stop slot.

Closing the rear side window:

– Press the handle (2) together and pull the rear side window (1) to the rear.

– Make sure that the handle engages in the stop slot (3).

Closing the front side window:

The front side window (4) can be closed in the same way as the rear side window.

Operating the interior lighting ▷

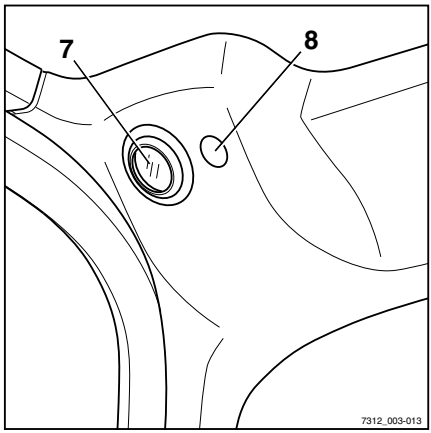

– Switch the interior lighting (7) on or off using the switch (8) or button (1). ▷

The "interior lighting" symbol (2) appears in the display.

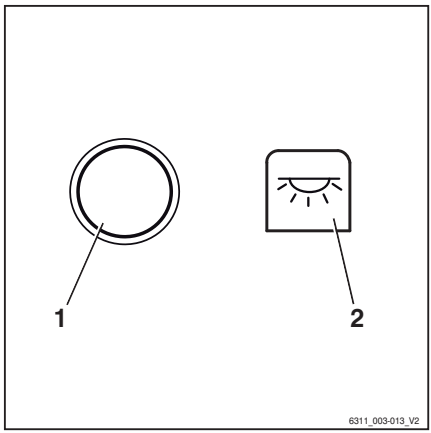

Operating the rear window heating

– Press Softkey (1) to switch on the rear window heating.

Rear window heating is switched on.
The symbol is displayed.

– Press Softkey (1) to switch off the rear window heating.

Rear window heating is switched off.
The (2) symbol is displayed.

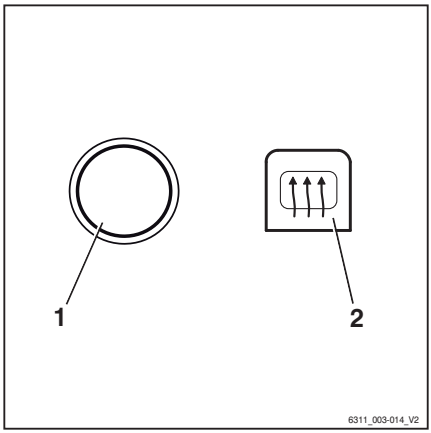

NOTE

Rear window heating will switch off automatically after approximately 10 minutes.

Radio (variant)

The radio (1) and the loudspeakers (2) are an equipment variant. If the truck is equipped with a radio and loudspeakers, they are integrated into the roof lining.

The description and operation can be found in the separate operating instructions for the radio.

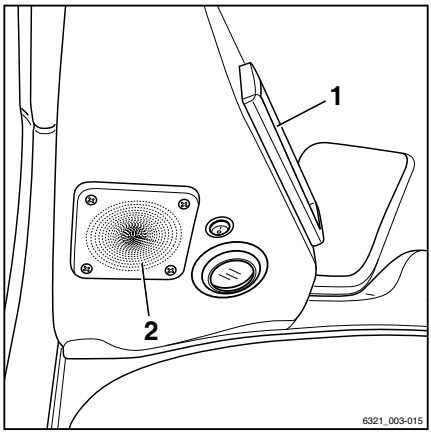

WARNING

The driver's attention is adversely affected by operating the radio or listening to excessive volume while driving or handling loads. There is a risk of accident!

– Do not use the radio when driving or when handling loads.
– Set the radio volume so that you can still hear warning signals.

Heating system (variant)

⚠ DANGER

Risk of explosion!

There is a risk of explosion if the heater is operated in the vicinity of storage areas or similar areas where fuel vapours or coal dust, wood dust and crop dust can accumulate.

– Do not expose spray cans or gas cartridges to the flow of hot air.

– Do not operate the heater in hazardous areas.

⚠ DANGER

Risk of fire as a result of heat building up in the heating element!

Heat may build up if the air intake opening is blocked or the heating element collects dust. The heating element may overheat or short-circuit.

– Do not cover the air intake opening.

– Do not operate the heating system without a fresh air filter and recirculated air filter fitted.

⚠ DANGER

Risk of burns!

When the heating system is operated, the heating system housing becomes hot and can burn the skin if it is touched.

– Do not touch the heating system housing during operation.

⚠ CAUTION

Risk of blower malfunction!

The fresh air filter and recirculated air filter collect dust and dirt particles from the intake air. If the filter elements are not fitted, dust and dirt particles may block the blower.

– Do not operate the blower without a fresh air filter and recirculated air filter fitted.

Switching on the blower

– To switch on the blower, turn on the blower switch (1). ▷

The blower runs at the speed level set at the switch.

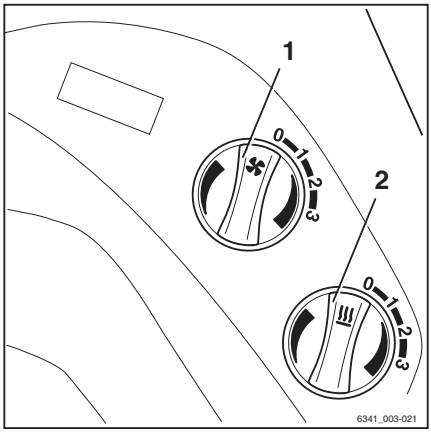

Switching on the heating system

NOTE

The heating system only heats up when the blower is switched on. If the blower switch is switched off, the heating system will not function, regardless of the position of the heater switch.

– To switch the heating system on, first switch on the blower switch (1) and then the heating switch (2).

The heating system is in operation. The air is heated up to the heat output level set at the heating switch (2).

Adjusting the air flow

– Adjust the air flow at the front outlet vents (3) and at the outlet vent in the footwell (4). ▷

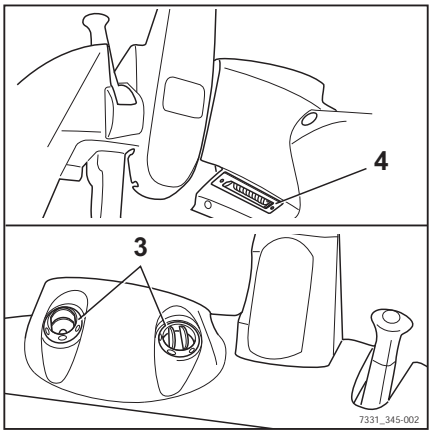

Push-up roof window (variant) ▷

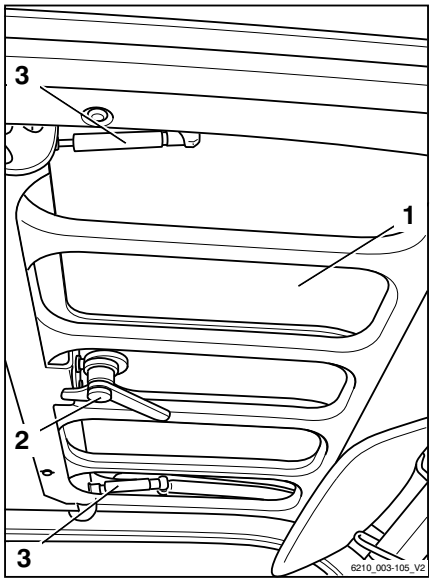

⚠ WARNING

Risk of crushing!

- When closing the roof window, do not reach between the roof window and the overhead guard.
- Do not reach in to touch components as they are being closed.

The push-up roof window (1) is an equipment variant.

- To unlock and open the roof window, rotate the handle (2) in an anti-clockwise direction and use it to push the roof window upwards.

The roof window is held in the open position by means of gas springs (3).

- To close and lock the roof window, pull the roof window downwards using the handle and rotate the handle in a clockwise direction

Clipboard (variant) ▷

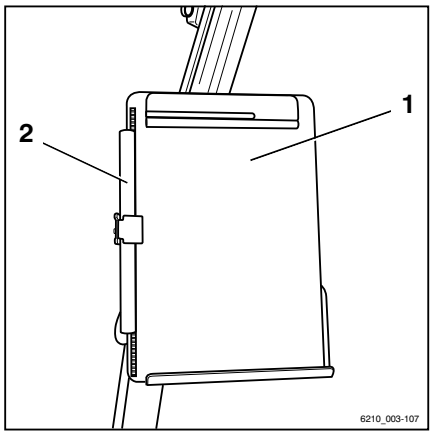

The clipboard (1) with reading lamp (2) is an equipment variant.

Trailer operation

Towed load

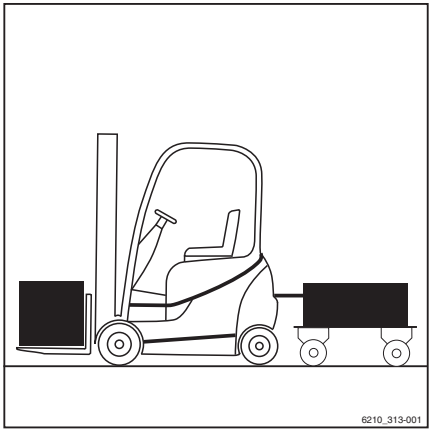

DANGER

There is an increased risk of accident when using a trailer.

Using a trailer changes the truck handling characteristics. When towing, operate the truck such that the trailer train can be safely driven and braked at all times. The maximum permissible speed when towing is 5 km/h.

- Do not exceed the permissible speed of 5 km/h.
- Do not couple the truck in front of rail vehicles.
- The truck must not be used to push any kind of trolley.
- It must be possible to drive and brake at all times.

CAUTION

Risk of damage to components!

The maximum towed load for occasional towing is the rated capacity specified on the nameplate. Overloading can lead to component damage on the truck. The sum of the actual towed load and the actual load on the fork must not exceed the rated capacity. If the towed load present corresponds to the rated capacity of the truck, it is not permitted to transport a load on the fork at the same time. The load can be distributed between the fork and the trailer.

- Check the load distribution and adjust to correspond to the rated capacity.
- Observe the permissible rigidity value of the tow coupling.

CAUTION

Risk of damage to components!

The maximum towed load only applies when towing unbraked trailers on a level surface (maximum deviation +/- 1%) and on firm ground. The towed load must be reduced if towing on gradients. If necessary, notify the authorised service centre of the application conditions. The service centre provides the required data.

- Inform the authorised service centre.

⚠ CAUTION

Damage to the tow coupling due to overloading!

Tow couplings RO*243 and RO*244 must be individually checked to ensure that they are suitable for the planned towing operation. The permissible rigidity value of the tow coupling must always be taken into account. The authorised service centre can check and/or confirm the maximum towed load for the planned towing operation.

– Observe the operating instructions for the tow coupling.
– Inform the authorised service centre.

⚠ CAUTION

Risk of damage to components!

A support load is not permitted.

– Do not use trailers with tillers supported by the tow coupling.

This truck is suitable for the occasional towing of trailers. If the truck is equipped with a towing device, this occasional towing must not exceed 2% of the daily operating time. The manufacturer must be consulted if the truck is to be used for towing on a more regular basis.

Coupling pin in the counterweight

Coupling the trailer

⚠ DANGER

Danger to life! If you briefly leave the truck to couple or uncouple the trailer, there is a risk of being run over by the truck rolling away.

– Apply the parking brake.
– Lower the fork to the ground.
– Turn off the key switch and remove the key.

– Take measures to prevent the trailer from rolling away, e.g. use wheel chocks (1). ▷

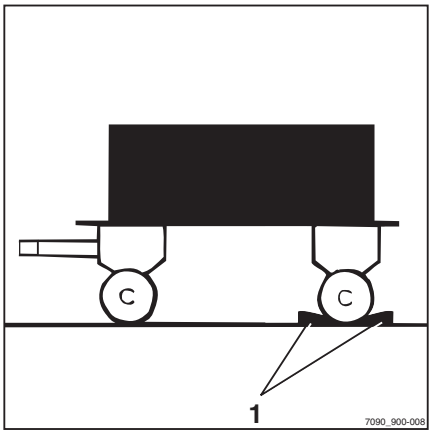

– Push the coupling pin (2) down, turn 90° and pull out. ▷

– Adjust the tiller height.

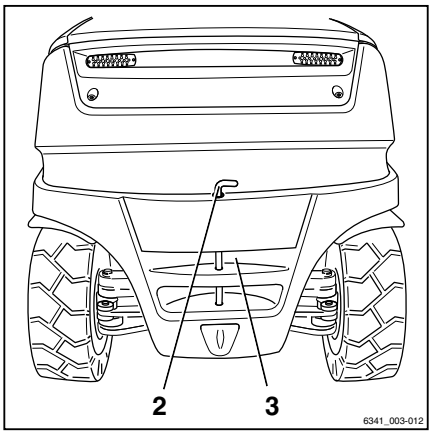

⚠ DANGER

People can become trapped between the truck and trailer.

When coupling, ensure that there are no persons present between the truck and the trailer.

– Slowly move the truck backwards.

– By moving the truck back, introduce the tiller into the recess (3) in the counterweight.

⚠ DANGER

If the coupling pin or securing bush are lost or destroyed during towing, the trailer will work loose and become uncontrollable. This poses a risk of accident!

– Only use genuine coupling bolts that have been checked.

– Ensure that the coupling pin is correctly inserted and secured.

– Insert the coupling pin into the counterweight, press downwards against the spring pressure and turn 90° (the coupling pin is locked in this position).

– Remove any items used to prevent the trailer from rolling away.

Uncoupling the trailer

- Take measures to prevent the trailer from rolling away, e.g. use wheel chocks.
- Push the coupling pin (2) down, turn 90° and pull out.
- Slowly move the truck forwards and guide the tow-bar eye completely out of the counterweight.
- Insert the coupling pin into the counterweight, press downwards against the spring pressure and turn 90° (the coupling pin is locked in this position).

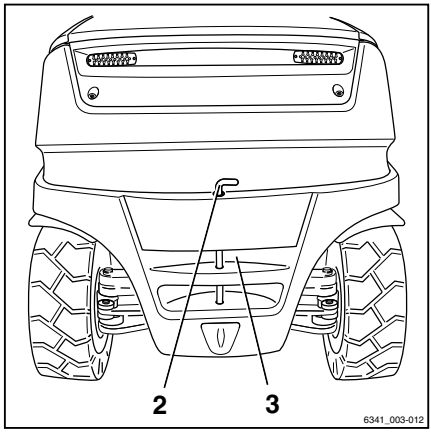

Automatic tow coupling

⚠ DANGER

Persons may become trapped between the truck and trailer.

When hooking up, ensure that no one is between the truck and trailer.

⚠ DANGER

Never jack up or crane load the truck on the tow coupling. The tow coupling is not designed for this and could be deformed or destroyed. The truck could fall off, with potentially fatal consequences!

- Use the tow coupling only for towing.
- For jacking up and crane loading, use only the designated lifting points.

⚠ DANGER

The tow coupling is not designed for support loads and could be deformed or destroyed. This could cause the supported load to fall, with potentially fatal consequences!

- The tow coupling should be subjected only to horizontal loads, i.e. the tiller must be horizontal.

⚠ DANGER

If you briefly leave the truck to couple or uncouple, there is a risk to life caused by the truck rolling away and running you over.

– Apply the parking brake.
– Lower the fork to the ground.
– Turn off the key switch and remove the key.

⚠ WARNING

Never reach between the coupling pins and the towing jaws. If the component moves suddenly there is a risk of injury!

– To release the coupling pin, actuate the corresponding lever or use a suitable device (e.g. assembly lever).
– When not in use, close the automatic tow coupling.

⚠ CAUTION

Risk of damage due to component collision.

A truck with tow coupling needs more room for manoeuvring due to its overhang. The tow coupling can damage the racking or the tow coupling itself when manoeuvring. If there is a collision with the tow coupling, check the tow coupling for damage such as cracks. A damaged tow coupling must not be used again.

– Always manoeuvre carefully and with sufficient room.
– In the case of a collision, check the tow coupling for damage.
– Replace tow coupling if damaged, if necessary contact the authorised service centre.

⚠ CAUTION

Risk of damage to the tow bar eye or tiller!

Due to the truck's rear wheel steering, the side slewing angle of the tiller may not be adequate. The coupling or the tiller may be damaged! The tow bar eye of the tiller must fit the tow coupling in terms of shape and size.

– Ensure that the tow bar eye and tiller fit correctly.
– Avoid sharp cornering.
– Exercise care when travelling and manoeuvring in reverse.

⚠ CAUTION

Risk of component damage if the tiller in the tow coupling is tilted!

The tiller should if possible be kept horizontal when towing. This ensures a sufficient rotation range at the top and bottom. The authorised service centre can adjust the assembly height for the tow coupling to the tiller height if necessary.

– Make sure that the tiller is level.
– To change the coupling height, contact the authorised service centre.

Coupling model RO*243

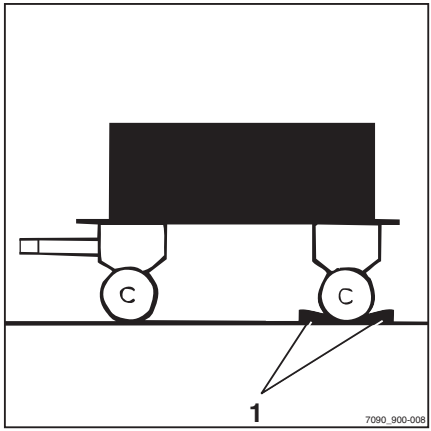

⚠ CAUTION

Damage to the tow coupling due to overloading!

Tow couplings RO*243 and RO*244 must be individually checked to ensure that they are suitable for the planned towing operation. The permissible rigidity value of the tow coupling must always be taken into account. The authorised service centre can check and/or confirm the maximum towed load for the planned towing operation.

– Observe the operating instructions for the tow coupling.
– Inform the authorised service centre.

NOTE

*Tow coupling RO*243 is intended for a tow-bar eye in accordance with DIN 74054 (bore diameter 40 mm).*

– Take measures to prevent the trailer from rolling away, e.g. use wheel chocks (1).
– Adjust the tow bar eye of the tiller so that it is at the centre of the towing jaws.

– Pull out the safety handle (3).

– Push the hand lever (2) upwards.

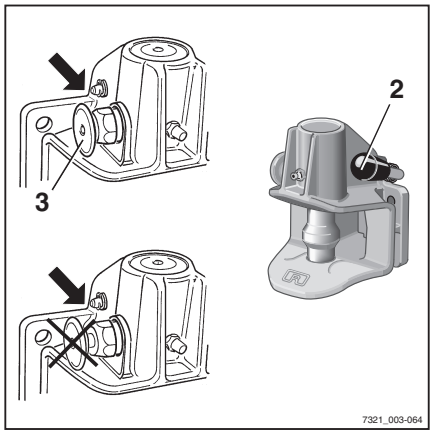

DANGER

Persons may become trapped between the truck and trailer.

When hooking up, ensure that no one is between the truck and trailer.

CAUTION

When being coupled, the tow-bar eye must engage in the middle of the coupling jaw. Failure to follow these instructions could result in damage to the coupling jaw or to the tow-bar eye!

– Ensure that the tow-bar eye enters the coupling jaw centrally.

– Slowly move the truck back.

DANGER

If the coupling pin drops out during towing, the trailer will work loose and can no longer be controlled. There is a risk of accident!

A protruding safety handle means that the tow bar eye has not been coupled correctly. The trailer must not be towed in this condition.

– Ensure that the safety handle is flush with the securing bush.

– If the safety handle protrudes, repeat the coupling process.

– Remove any items used to prevent the trailer from rolling away.

– Tow the trailer.

Closing model RO*243 by hand

DANGER

Risk of injury from hand becoming trapped!

Do not reach into the coupling pin area with your hand. If, for example, a tow rope is to be secured in the tow coupling, use only a suitable device to close the tow coupling (e.g. assembly lever).

– Use a suitable device (e.g. assembly lever) to push the coupling pin up.

The coupling pin is released from the latch and then closes the tow coupling automatically.

Uncoupling model RO*243

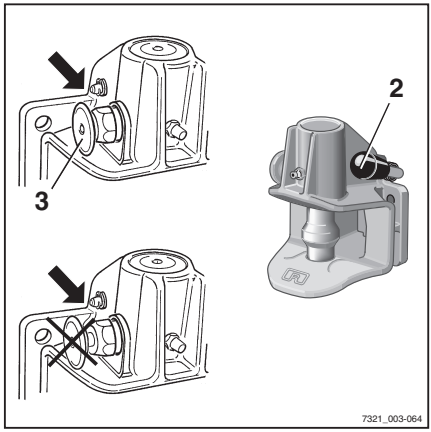

- Take measures to prevent the trailer from rolling away, e.g. use wheel chocks.
- Pull out the safety handle (3).
- Push the hand lever (2) upwards.
- Slowly drive the truck forwards until the tow-bar eye and towing jaws are disconnected.
- Close the tow coupling by hand.

Coupling model RO*244 A

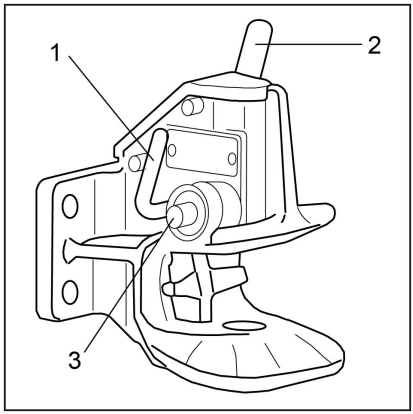

⚠ CAUTION

Damage to the tow coupling due to overloading!

Tow couplings RO*243 and RO*244 must be individually checked to ensure that they are suitable for the planned towing operation. The permissible rigidity value of the tow coupling must always be taken into account. The authorised service centre can check and/or confirm the maximum towed load for the planned towing operation.

- Observe the operating instructions for the tow coupling.
- Inform the authorised service centre.

NOTE

*Tow coupling RO*244 A is intended for a tow-bar eye in accordance with DIN 74054 (bore diameter 40 mm) or DIN 8454 (bore diameter 35 mm).*

- Take measures to prevent the trailer from rolling away, e.g. use wheel chocks.
- Adjust the tow bar eye of the tiller so that it is at the centre of the towing jaws.

– Push the hand lever (2) upwards until it snaps into place.

The tow coupling is opened.

⚠ DANGER

Persons may become trapped between the truck and trailer!

When hooking up, ensure that no one is between the truck and trailer.

⚠ CAUTION

When being coupled, the tow-bar eye must engage in the middle of the coupling jaw. Failure to follow these instructions could result in damage to the coupling jaw or to the tow-bar eye!

– Ensure that the tow-bar eye enters the coupling jaw centrally.

– Move the truck back slowly until the tow bar eye is inserted centrally into the coupling jaw of the tow coupling and the coupling pin engages.

NOTE

*The coupling pin is correctly engaged if the control pin (3) does**not** protrude out of its guide.*

⚠ DANGER

If the coupling pin drops out during towing, the trailer will work loose and can no longer be controlled. There is a risk of accident!

The control pin (3) must **not** protrude out of its guide.

– Ensure that the coupling pin is engaged correctly.

If the coupling pin is not correctly engaged:

– Remove any items used to prevent the trailer from rolling away.

– Move the truck with the trailer forwards approx. 1 m and then move it back slightly.

– On the coupling pin, check again that the control pin **does not** protrude out of its guide.

– Remove any items used to prevent the trailer from rolling away.

– Tow the trailer.

Closing model RO*244 A by hand ▷

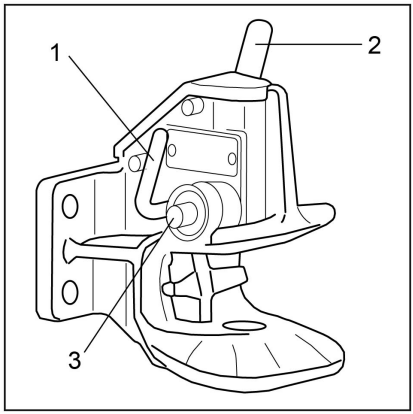

⚠ DANGER

Risk of injury from hand becoming trapped!

Do not reach into the coupling pin area with your hand. If, for example, a tow rope is to be secured in the tow coupling, only actuate the tow coupling via the closing lever (1).

– Press the closing lever (1) downwards as far as it will go.

The tow coupling is closed.

Uncoupling model RO*244 A

– Take measures to prevent the trailer from rolling away, e.g. use wheel chocks.

– Push the hand lever (2) upwards until it snaps into place.

The tow coupling is opened.

– Slowly drive the truck forwards until the tow-bar eye and towing jaws are disconnected.

– Close the tow coupling by actuating the closing lever (1).

NOTE

To protect the lower coupling pin bush against contamination, always keep the tow coupling closed.

Coupling model RO*245

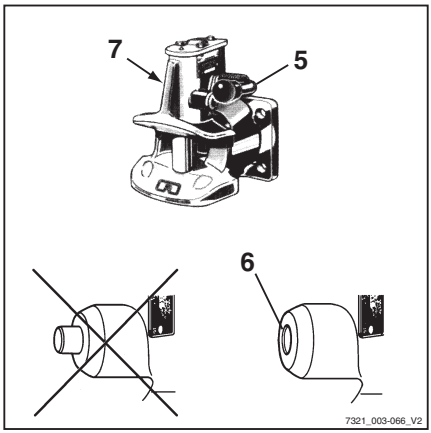

NOTE

Tow coupling RO 245 is intended for a tow-bar eye in accordance with DIN 74054 (bore diameter 40 mm) or DIN 8454 (bore diameter 35 mm).

– Take measures to prevent the trailer from rolling away, e.g. use wheel chocks.

– Adjust the tow bar eye of the tiller so that it is at the centre of the towing jaws.

– Push the hand lever (5) upwards.

The tow coupling is opened.

DANGER

Persons may become trapped between the truck and trailer!

When hooking up, ensure that no one is between the truck and trailer.

– Slowly move the truck back.

DANGER

If the coupling pin drops out during towing, the trailer will work loose and can no longer be controlled. There is a risk of accident!

A protruding safety handle means that the tow bar eye has not been coupled correctly. The trailer must not be towed in this condition.

– Make sure that the control pin does **not** protrude from the control bush.

– Repeat the coupling process if necessary.

– Remove any items used to prevent the trailer from rolling away.

– Tow the trailer.

Uncoupling model RO*245

- Take measures to prevent the trailer from rolling away, e.g. use wheel chocks.
- Push the hand lever (5) upwards.
- Slowly drive the truck forwards until the tow-bar eye and towing jaws are disconnected.
- Push the closing lever (7) on the left side of the tow coupling down as far as it will go.

The tow coupling is closed.

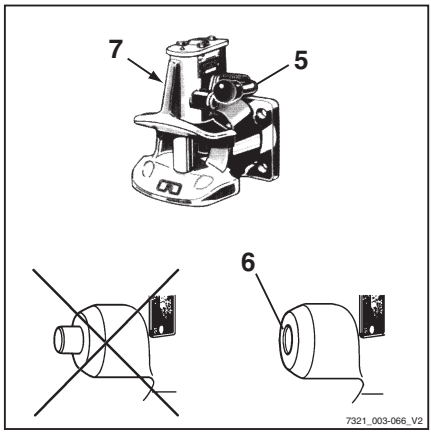

Towing trailers

- Drivers who are towing a trailer for the first time must practise driving with a trailer in a suitable area.
- When passing through narrow road areas (entrances, gates etc.), observe the dimensions of the trailer and load.
- When towing multiple trailers, ensure a sufficient minimum distance to fixed installations when turning and cornering.

The permissible length of the trailer trains depends on the roadways to be driven and may need to be determined during the test drive.

It is the responsibility of the operating company to instruct the drivers regarding the permissible number of trailers and, where required, any additional speed reductions on individual sections of the route.

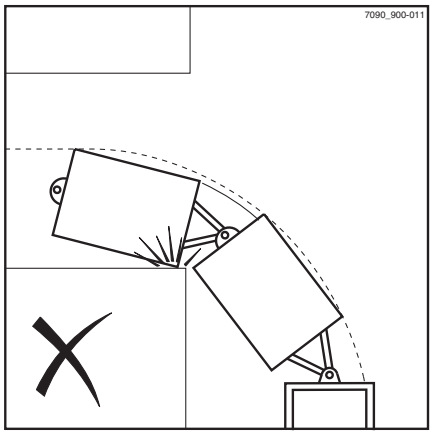

NOTE

Please observe the definition of the following responsible persons: "operating company" and "driver".

Display messages

Display content

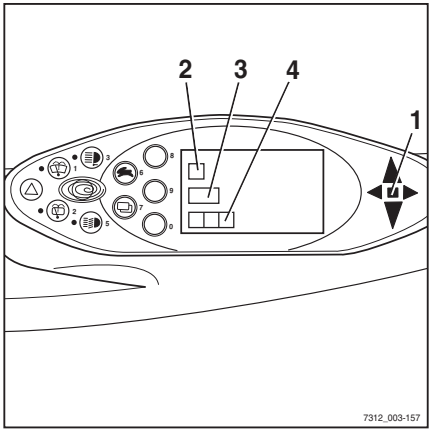

On the display of the display-operating unit, event-related messages may appear due to certain truck conditions.

The following types of message may appear individually or in combination:

- A graphic symbol (2)
- The message (3)
- An error code (4) consisting of a letter and a four-digit number

NOTE

Each time a message appears, the "Malfunction" display (1) also lights up.

Messages are always shown repeatedly and for a certain period of time, according to the event.

In the case of successive events, the respective messages are displayed one after another on the display.

After a few seconds, the display will alternate between the last shown operating display and the message.

The frequency of alternation depends on the type of event.

– If a message appears, follow these operating instructions.

Once the event is remedied, the message will disappear.

If a malfunction continues to occur, the message will continue to appear.

– Park the truck safely.

– Inform the authorised service centre.

Error code table

The table gives an overview of possible displays. The "Comment" column contains information on how to proceed if any of these messages are displayed.

Message text (English)/ Error code	Comment
OVERHEATING A5022	Traction motor(s) is/are too hot. 1. phase: regulation of acceleration and speed. 2. phase: limitation of the phase current in the converter (emergency driving function is retained). The error automatically disappears as soon as the temperature is below the limit. If the error occurs more frequently, notify your authorised service centre.
OVERHEATING A5364	Pump converter is too hot. Notify the authorised service centre.
ACCELERATOR A3002 A3003 A3004 A3005 A3006 A3007 A3505	Sensor fault, truck cannot be driven. Notify the authorised service centre.
ACCELERATOR A3008	Accelerator voltages (for dual pedal) do not match; truck cannot be driven. Notify the authorised service centre.
ACCELERATOR A3811	Accelerator configuration is invalid. The truck cannot be driven. Notify the authorised service centre.
BRAKE SENSOR A3016 A3017	Sensor fault; truck can only be driven at emergency mode speed. Notify the authorised service centre.
CONFIGURATION A2111 A3801 A3812	Parameterisation error; drive unit and hydraulic drive not functioning. Notify the authorised service centre.
SEAT SWITCH A302	Seat switch has not been operated for approx. 8 hours. Truck can possibly still be driven at a reduced speed and with reduced lifting capacity. Stand up briefly and then sit down again. If this does not resolve the problem, contact your authorised service centre.
STEERING A3215 A3216 A3570	Sensor fault; truck can be driven at emergency mode speed. Notify the authorised service centre.
DIRECTION SWITCH A3020	Switch error; no or limited drive unit function. Notify the authorised service centre.

Message text (English)/ Error code	Comment
LIFTING A3102 A3103	Sensor fault; no or limited hydraulic drive function. Notify the authorised service centre.
TILTING A3107 A3108	Sensor fault; no or limited hydraulic drive function. Notify the authorised service centre.
VERTICAL MAST A3130 A3131 A3132	No hydraulic function. Turn off "vertical lift mast position". Notify the authorised service centre.
VERTICAL MAST ERROR A3135	No hydraulic function. Turn off "vertical lift mast position". Notify the authorised service centre.
EXT1 A3112 A3113	Sensor fault; no or limited hydraulic drive function. Notify the authorised service centre.
EXT2 A3117 A3118	Sensor fault; no or limited hydraulic drive function. Notify the authorised service centre.
POWER SUPPLY A2242	Transmitter power supply short circuit. The truck cannot be driven. Notify the authorised service centre.
SURVEILLANCE A2801 A2802 A2808 A2809 A2810 A2815	Drive unit not functioning. Release accelerator pedal. If this error occurs sporadically, it can be tolerated. If the operational capacity is impaired, notify your authorised service centre.
SURVEILLANCE A2803 A2806	Drive direction is set to neutral. Reselect the drive direction. If this error occurs sporadically, it can be tolerated. If the operational capacity is impaired, notify your authorised service centre.
SURVEILLANCE A2817	Truck is not ready for operation. Turn key switch to the zero position and restart. If this error occurs sporadically, it can be tolerated. If the operational capacity is impaired, notify your authorised service centre.

Message text (English)/ Error code	Comment
SURVEILLANCE A2804 A2805 A2807 A2811 A2812 A2813 A2814 A2816 A2818	No or limited drive unit function. Notify the authorised service centre.
SURVEILLANCE A2295	No or limited function of drive unit and hydraulic drive. Notify the authorised service centre.
DRIVE A5031 A5041 A5046 A5301 A5331 A5361	Temperature sensor fault Notify the authorised service centre.
BATTERY CHANGER A5910	The support roller is not fully extended for the hydraulic battery carrier Notify the authorised service centre.
BATTERY CHANGER A5920	Hydraulic pump of the hydraulic battery carrier is overheating. Allow the truck to cool down for one hour.
BATTERY CARRIER A5930	Button error Notify the authorised service centre.
BATTERY CARRIER A5931	Potentiometer plausibility error for hydraulic battery carrier Notify the authorised service centre.
CONTROL UNIT A3305	CIO not functioning. Notify the authorised service centre.
PARKING BRAKE OIL PRESSURE A3043	The oil pressure in the parking brake is too low; the drive unit is locked. If this message remains permanently displayed, notify your authorised service centre.
PARKING BRAKE OIL PRESSURE A3049	The oil pressure in the parking brake is low; the truck only moves at emergency mode speed. If this message remains permanently displayed, notify your authorised service centre.

Message text (English)/ Error code	Comment
LIFT LEVER A4601	The "lifting" hydraulic operating device has been moved and held in place for too long. The relevant hydraulic function is switched off. The message disappears and the hydraulic function is available again as soon as the operating device is released. If required, the authorised service centre can disable monitoring of the hydraulic functions.
TILT LEVER A4602	The "tilting" hydraulic operating device has been moved and held in place for too long. The relevant hydraulic function is switched off. The message disappears and the hydraulic function is available again as soon as the operating device is released. If required, the authorised service centre can disable monitoring of the hydraulic functions.
AUXILIARY1 LEVER A4603	The "auxiliary hydraulics 1" hydraulic operating device has been moved and held in place for too long. The relevant hydraulic function is switched off. The message disappears and the hydraulic function is available again as soon as the operating device is released. If required, the authorised service centre can disable monitoring of the hydraulic functions.
AUXILIARY2 LEVER A4604	The "auxiliary hydraulics 2" hydraulic operating device has been moved and held in place for too long. The relevant hydraulic function is switched off. The message disappears and the hydraulic function is available again as soon as the operating device is released. If required, the authorised service centre can disable monitoring of the hydraulic functions.
LEVER A4680	Implausible pressure request to the hydraulic pump. Switch the truck off and then on again using the key switch. If the error message persists, notify the authorised service centre.

General messages

NOTE

Some of the following messages are equipment-specific and may not appear on the display and operating unit of every truck. The following messages are therefore intended only as a reference.

SERVICE BRAKE message

If the message `SERVICE BRAKE` appears on the display, notify the authorised service centre.

– Park the truck securely for checking by the authorised service centre.

– If multi-disc brakes in the drive wheel units are blocked, tow the truck.

APPLY HANDBRAKE message

⚠ DANGER

Risk of fatal injury from being run over if the truck rolls away!

Parking the truck without the parking brake applied is dangerous and is not permitted.

– The truck must not be parked on a slope.

– Only leave the truck when the parking brake has been applied.

– In emergencies, secure the truck using wedges on the side facing downhill.

NOTE

The truck is equipped with a negative spring-operated brake. Switching off the truck will block the multi-disc brakes in the drive wheel units after a few minutes. However, the truck can still roll until the drive wheel units are blocked. For this reason, the parking brake must always be applied before you leave the truck!

If you park the truck without applying the parking brake and then vacate the driver's seat, the `APPLY HANDBRAKE` message will appear in the display (variant). An optional signal tone sounds.

– Apply the parking brake.

The `APPLY HANDBRAKE` message disappears.

If the truck moves even though the parking brake is applied:

– Drive the truck onto level ground and park it safely. Secure it with wedges if necessary.

– Notify the authorised service centre.

BRAKE SENSOR message

If the `BRAKE SENSOR` message appears in the display, the maximum driving speed will be reduced. The brake sensor in the brake pedal must be checked.

– Notify the authorised service centre.

CODE DENIED message

If the message `CODE DENIED` appears on the display, the driver PIN has been entered incorrectly three times. The input is then locked for five minutes before another attempt can be made.

– Enter the driver PIN again after five minutes.

ACCELERATOR message

If the `ACCELERATOR` message appears on the display, the truck will remain stationary. The accelerator must be checked.

– Notify the authorised service centre.

SWITCH OFF TRUCK? message

If the `SWITCH OFF THE TRUCK?` message appears on the display, the truck switch-off is verified.

– Press the corresponding softkey on the display and operating unit to switch off the truck or cancel the operation.

PARKING BRAKE ACTIVE message

If the electric parking brake is applied, the `PARKING BRAKE ACTIVE` message appears on the display for 5 seconds.

– Release the parking brake to enable driving mode.

RELEASE PARKING BRAKE message

If the message `RELEASE PARKING BRAKE` appears on the display, driving mode cannot be enabled until the parking brake has been released by pressing the button.

– Release the parking brake by pressing the button.

PARKING BRAKE: APPLY HAND-BRAKE! message

If the message `PARKING BRAKE: APPLY HANDBRAKE!` appears on the display, the electric parking brake is faulty.

– Release the parking brake by pressing the button.

LOWER FORKS message

⚠ DANGER

There is a risk of fatal injury from a falling load or parts of the truck being lowered!

Parking the truck with the load lifted is dangerous and is not permitted under any circumstances! The increased safety provided by this function must not be misused in order to take safety risks.

– Lower the load fully before leaving the truck.

The fork is not lowered.

If the fork is above the height sensor, the key switch is turned off and the seat vacated, the `LOWER FORKS` message appears in the display (variant). An optional signal tone sounds.

– Lower the fork to the ground.

The message `LOWER FORKS` disappears.

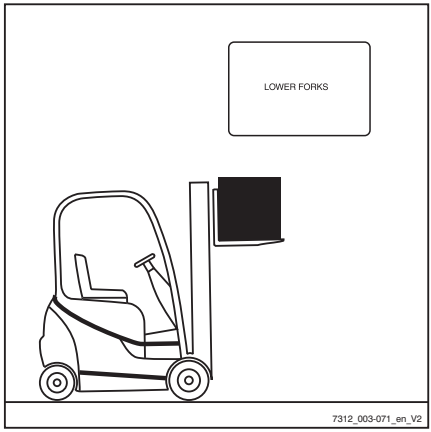

TILT LEVER, LOWER LEVER, AUXILIARY1 LEVER, AUXILIARY2 LEVER messages

If an operating device is operated continuously for a long period, the `TILT LEVER`, `LOWER LEVER`, `AUXILIARY1 LEVER` or `AUXILIARY2 LEVER` message appears. The message indicates the affected operating device. The message will disappear if the operating device is immediately released.

If operation of the operating device continues, the affected hydraulic function is disabled and another message with the error code A4601 …4604 appears for the affected operating device.

If the operating device is released at this point, the error message disappears and the hydraulic function is enabled again.

STEERING message

If the `STEERING` message appears in the display, the truck will only move at emergency mode speed. The steering angle sensor must be checked.

– Notify the authorised service centre.

TILTING SPEED message

If the message `TILTING SPEED` appears on the display after the welcome screen, the tilting speed of the lift mast on this truck is significantly higher than on previous trucks in this family.

EMERGENCY SWITCH message

⚠ WARNING

No electric braking assistance is available when the emergency off switch is actuated!

Actuating the emergency off switch will disconnect the drives from the power supply.

– To brake, actuate the service brake.

The truck is equipped with an emergency off switch. When this switch is actuated, the driving functions and the functions of the working hydraulics are blocked.

The `EMERGENCY SWITCH` message appears periodically when the following criteria are met:

- The key switch is set to stage "I"
- The emergency off switch is actuated
- An operating device is actuated

? VERTICAL POSITION

If the message `? VERTICAL POSITION` appears on the display, calibration of the "vertical lift mast position" has been activated.

– Save the mast position or cancel the calibration.

REFERENCE CYCLE message

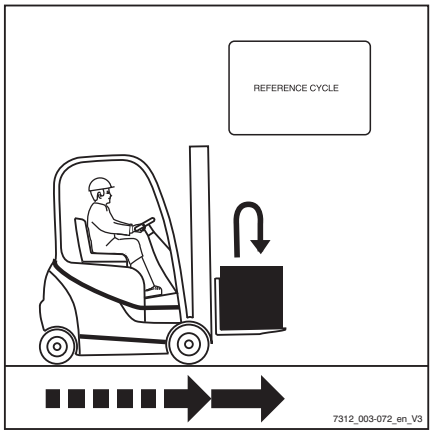

If the fork was lowered after the truck was switched off, the control electronics do not know the position of the fork when the truck is restarted. The truck will only travel at a reduced driving speed. Depending on the position of the fork, the message `REFERENCE CYCLE` (variant) may appear in the display. To align the position with the control electronics, the fork must be raised.

– Switch on the key switch.

The truck will only travel at a reduced driving speed. The message `REFERENCE CYCLE` may appear in the display.

– Raise the fork.

The `REFERENCE CYCLE` message disappears, or now appears in the display for the first time and then disappears.

– To drive again, lower the fork to a maximum of 300 mm above the ground.

The truck can now be driven again with no speed limitation.

SAFETY BELT message

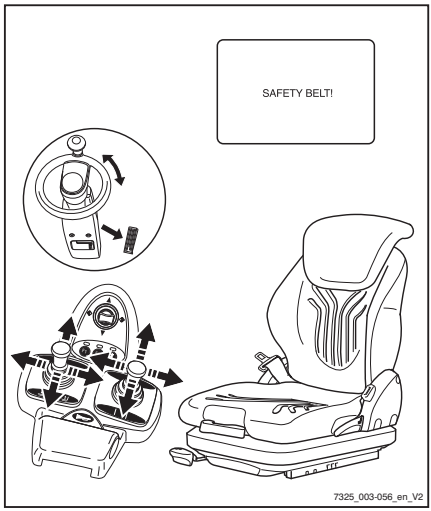

⚠ DANGER

Risk of fatal injury in the event of falling from the truck if it tips over!

If the truck tips over, the driver is at risk of injury even if a restraint system is used. The risk of injury can be reduced by using a combination of a restraint system and a seat belt. In addition, the seat belt protects against the consequences of rear-end collisions and falling off ramps.

– We recommend that you always use the seat belt.

This device (variant) ensures that if the seat belt is not being used or is being used incorrectly, the truck will only drive slowly or (optionally) will not drive at all.

Depending on the configuration selected, the working hydraulics functions (lifting/tilting) are either available as normal, slowed down or not available at all.

The SAFETY BELT message with the restricted driving and lifting functions is triggered by the following circumstances:

- Seat belt not worn and driver's seat occupied
- The seat belt is constantly fastened but the driver's seat is only occupied afterwards
- The seat belt is not fastened until after the key switch has been switched on
- The seat belt is unfastened while driving

– If the SAFETY BELT message appears, fasten the seat belt in accordance with the regulations.

The truck can again be operated without restrictions.

If the seat belt is released while driving, the truck will be limited to low driving speeds or will be braked to a halt.

⚠ DANGER

Risk of accident!

– The speed must be adjusted to suit the driving situation!

The increased safety provided by this function must not be misused in order to take safety risks.

SECURE TRUCK AGAINST ROLLING AWAY message

This message appears if the truck control unit detects a movement of the truck without the accelerator pedal being actuated.

– Apply the parking brake.

– If necessary, secure the truck with wedges so that it cannot roll away.

The load on the driver's seat is released but the parking brake cannot engage due to a defect.

– Secure the truck with wedges so that the truck does not roll away.

SEAT SWITCH message

The truck is equipped with a seat switch.

If the SEAT SWITCH message appears, the driving functions and the working hydraulics are blocked.

The SEAT SWITCH message is triggered by the following situations:

- The seat switch is not actuated while the accelerator pedal or steering wheel is actuated
- The seat switch is not actuated while the operating device for the working hydraulics is actuated
- The shift time has been exceeded
- The operating time has been exceeded

NOTE

The operating devices shown in the following illustrations are only examples and may differ from the equipment in your truck.

The seat switch is not actuated while the accelerator pedal or steering wheel is actuated

The accelerator pedal or the steering wheel is actuated, even though no one is sitting in the driver's seat. The message SEAT SWITCH appears on the display. The truck will not move.

– Sit in the driver's seat and fasten the seat belt.

The truck can be driven again without restrictions.

▷

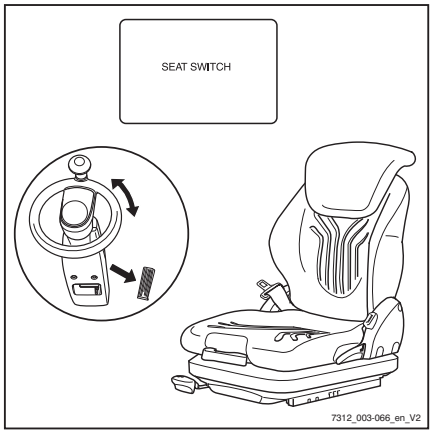

The seat switch is not actuated while the operating device for the working hydraulics is actuated

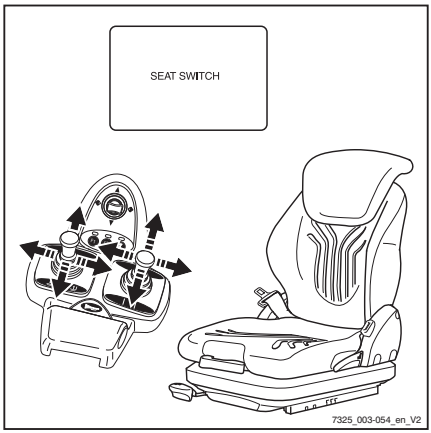

An operating device for the working hydraulics is actuated, even though no one is sitting in the driver's seat. The message `SEAT SWITCH` appears on the display. The working hydraulics functions cannot be executed.

– Sit in the driver's seat and fasten the seat belt.

The working hydraulics can be operated again.

The shift time has been exceeded

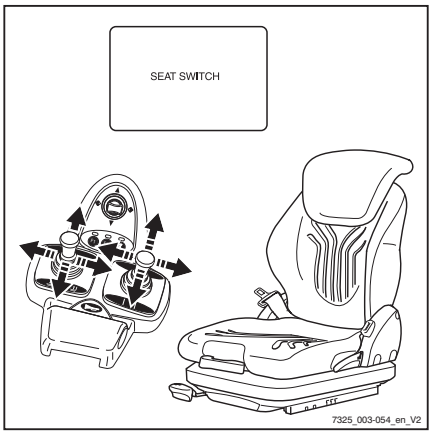

NOTE

The shift time is adjustable.

If the key switch is switched on and the driver does not leave the seat before the set shift time is exceeded, `SEAT SWITCH` appears on the display. This is also the case if an operating device for the working hydraulics or the accelerator pedal is actuated. Depending on the configuration, the working hydraulic functions can be executed normally, only slowly or not at all.

– Stand up briefly from the seat, sit back down again and fasten the seat belt.

The truck can again be operated without restrictions.

The operating time has been exceeded

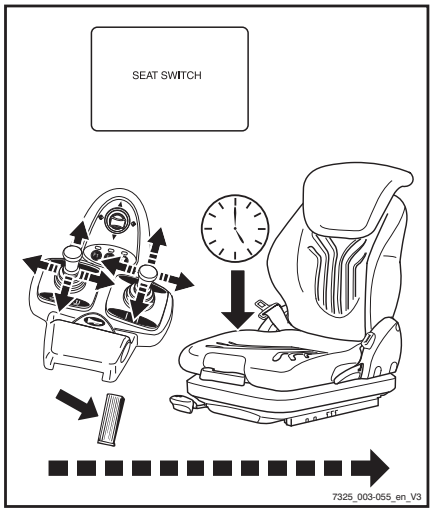

NOTE

The operating time is adjustable.

If the key switch is switched on, the parking brake is released and the driver does not leave the seat before the set operating time is exceeded, and if neither the operating devices for the working hydraulics nor the accelerator pedal are actuated during this time, `SEAT SWITCH` appears on the display. The truck will not move. Depending on the configuration, the working hydraulic functions can be executed normally, only slowly or not at all.

– Stand up briefly from the seat, sit back down again and fasten the seat belt.

The truck can again be operated without restrictions.

OVERHEATING message

If the message `OVERHEATING` appears in the display, the traction motors have overheated. The acceleration and the speed of the truck are reduced.

– Allow the truck to cool down.

– If the error persists, contact your authorised service centre.

SURVEILLANCE message

If the `SURVEILLANCE` message appears in the display, there is a fault in the process monitoring.

This shuts off the drive unit.

– Switch the key switch to the "0" position and then back to the "I" position.

– Start the engine.

– Release accelerator pedal.

– Select the drive direction again.

NOTE

If this error occurs sporadically, it can be tolerated. If the operational capacity is impaired, notify your authorised service centre.

NOT VALID message

If the message `NOT VALID` appears on the display, an incorrect driver PIN has been entered when entering the access code.

– Once the message goes out, enter the driver PIN again.

Drive-specific messages

Message ! PARKING BRAKE OIL PRESSURE

If the following message appears in the display when the accelerator pedal is actuated: `! PARKING BRAKE OIL PRESSURE`, the service brake of the truck is not yet ready for use.

The driving speed is limited to 5 km/h.

When the service brake is ready for operation, the message disappears. The speed limitation is cancelled.

MOT/GEN.-TEMP. message

If the `MOT/GEN.-TEMP.` message appears, the traction motor or the generator is overheated or a cable is broken.

– Interrupt work and allow the truck to cool down. Do not switch off the key switch.

NOTE

If the operational capacity is impaired, notify your authorised service centre.

OVERHEATING message

If the message `OVERHEATING` appears in the display, the traction motors have overheated. The acceleration and the speed of the truck are reduced.

– Allow the truck to cool down.

– If the error persists, contact your authorised service centre.

CLOSE THE DOOR message

If the message `CLOSE THE DOOR` (variant) appears in the display, the battery door is not shut correctly. The truck will not move.

– Close the battery door.

LEVER message

If an operating device is actuated continuously for a long period, the `Lever` message is displayed with the error code `A4601…4604`. If you continue to move the operating device, the affected hydraulic function is switched off. The message disappears as soon as the operating device is released. The hydraulic function is available again.

– Release the operating device.

LIFT HEIGHT message

Speed limitation with a raised load (variant)

This function makes sure that the truck can only move slowly when a load is lifted.

⚠ DANGER

Risk of accident!

Before using this function, familiarise yourself with the altered driving characteristics of the truck!

Optionally, the truck can have altered acceleration behaviour and/or braking characteristics.

⚠ DANGER

Risk of accident!

Driving with a lifted load is prohibited because the truck can overturn due to the high centre of gravity.

Because the limits determined by physics cannot be altered, the increased safety provided by this function must not be misused in order to take safety risks.

If the fork is raised above a certain height, the following happens:

Lifting the load at a standstill

The key switch is switched on. The driver sits on the seat with the belt fastened. The load is lifted. The display briefly shows the flashing message `LIFT HEIGHT`. The truck will only travel at a reduced driving speed.

– Lower the fork (load) to just above the ground.

The truck can now be driven again with no speed limitation.

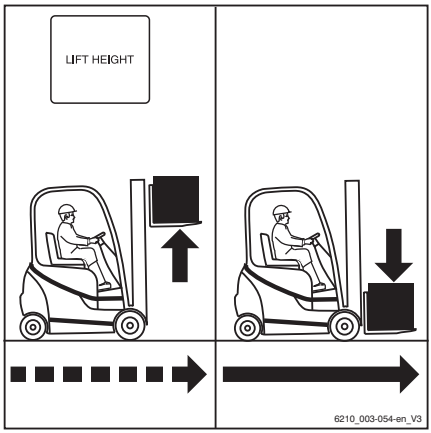

Lifting the load while driving

If you are travelling with the load during a stacking/unstacking operation and lift the load while travelling, the flashing message `LIFT HEIGHT` appears briefly in the display. The truck will travel slowly or will be braked.

– Lower the fork (load) to just above the ground.

The truck can now be driven again with no speed limitation.

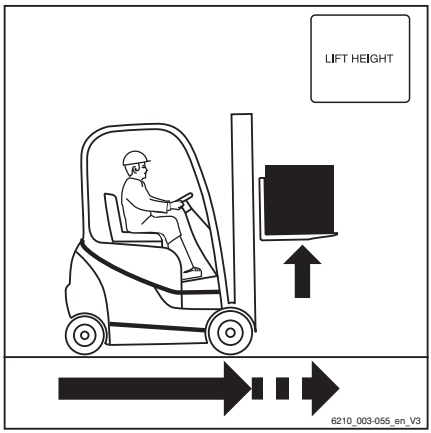

Connecting and disconnecting the battery male connector

Connecting the battery male connector

⚠ CAUTION

Risk of damage to the battery male connector when connecting!

If the battery male connector is connected while the key switch is switched on under load, a jump spark will be produced. The discharge spark can damage the contacts and considerably shorten the service life of the contacts.

– Switch off the key switch.

– Only connect the battery male connector while the key switch is switched off.

⚠ CAUTION

There is a risk of short circuit if the cables are damaged!

– Do not crush the battery cable when closing the battery cover.

– Switch off the key switch.

– Open the battery cover.

– Ensure that the battery male connector and the plug connection are dry, clean and free of foreign objects.

– Hold the battery male connector (2) by the handle (1) and insert the battery male connector into the plug connection on the truck.

– Push the fastener (3) completely to the right to retract the battery male connector into the plug connection and to secure the battery male connector in position.

– Ensure that the battery cable does not come into contact with the battery cover.

– Close the battery cover.

▷

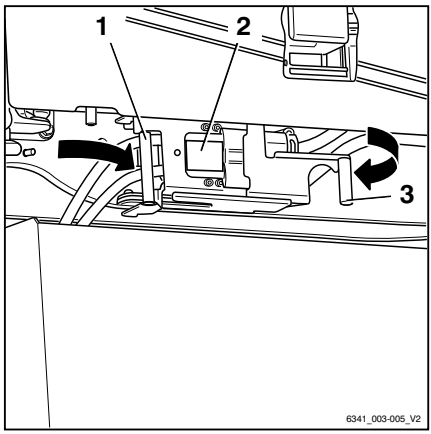

Disconnecting the battery male connector

⚠ CAUTION

Risk of damage to the battery male connector when disconnecting!

If the battery male connector is disconnected while the key switch is switched on under load, an arc will be produced. The arc can damage the contacts and considerably shorten the service life of the contacts.

- Switch off the key switch.
- Only disconnect the battery male connector while the key switch is switched off.
- Do not disconnect the battery male connector while under load, except in an emergency.

⚠ CAUTION

There is a risk of short circuit if the cables are damaged!

- Do not crush the battery cable when closing the battery cover.

- Switch off the key switch.
- Open the battery cover.
- Pull the fastener (4) to the left and open the fastener. ▷
- Disconnect the battery male connector (3) from the plug connection by pulling the handle (2) in the direction of the arrow.
- Check the battery cable for damage.

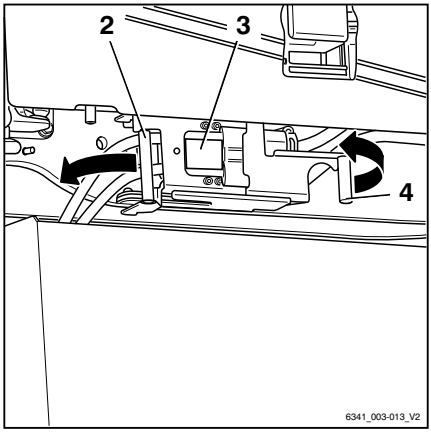

– Hang the battery male connector (3) on the front of the battery tray (1). ▷

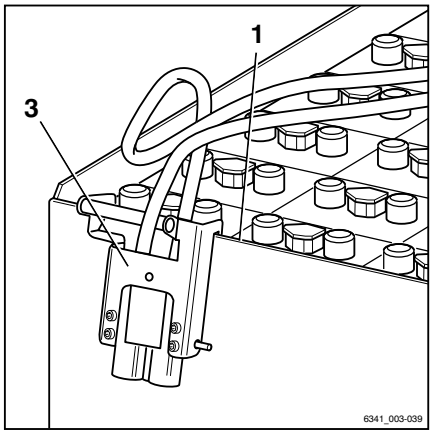

⚠ CAUTION

When closing the battery cover, there is a risk of damage to the battery male connector!

When you close the battery cover, the battery cover may collide with the battery male connector that you have hung on the battery tray. As a result, the battery male connector may become damaged.

– Leave the battery cover open.

Handling the battery

Safety regulations when handling the battery

Maintenance personnel

⚠ WARNING

Risk of crushing/shearing!

The battery is very heavy. There is a risk of serious injury if limbs are trapped underneath the battery or between the battery cover and the edge of the chassis.

- Wear safety shoes when replacing the battery.
- Only close the battery cover if there is no part of the body between the battery cover and the edge of the chassis.

- The battery must only be replaced in accordance with the directions in these operating instructions.
- When charging and maintaining the battery, observe the manufacturer's maintenance instructions for the battery and the battery charger.

Fire protection measures

⚠ DANGER

Risk of explosion due to flammable gases!

During charging, the battery releases a mixture of oxygen and hydrogen (oxyhydrogen gas). This gas mixture is explosive and must not be ignited.

There must be no flammable materials or spark-forming operating materials within 2 m of either the truck when it is parked for charging or the battery charger.

- Take the following safety precautions.

- Keep away from open flames and do not smoke.
- Always ensure adequate ventilation in the vicinity.

- Disconnect the battery male connector when the key switch is switched off or the battery charger is switched off.
- Keep the battery cover open during charging.
- Expose the surfaces of the battery cells.
- Do not place any metal objects on the battery.
- Fully open any protective structures (e.g. fabric-covered cab).
- Have fire extinguishing equipment ready.

Lifting accessory

The battery can be removed using the following lifting accessories:

- For trucks, see chapter entitled "Replacing a battery using a truck"

⚠ DANGER

Risk of fatal injury from the battery falling!

The lifting accessory could tip over. The battery could fall off the lifting accessory and onto persons.

The battery must be removed only when the truck is on level, even ground with sufficient load capacity. The load capacity of the lifting accessory in use must at least match the battery weight.

- Ensure the load capacity of the lifting accessory.
- Compare the information on the battery identification plate with the operating instructions or the nameplate.
- Remove the battery on suitable ground.

Battery weight and dimensions

⚠ DANGER

Risk of tipping due to change in battery weight!

The battery weight and dimensions affect the stability of the truck. When replacing the battery, the weight ratios must not be changed. The battery weight must remain within the weight range specified on the nameplate.

- Do not remove or change the position of ballast weights.
- Note the battery weight.

Damage to cables and battery male connectors

⚠ CAUTION

There is a risk of short circuit if the cables are damaged.

- Do not crush the battery cable when closing the battery cover.
- Check the battery cable for damage.

⚠ CAUTION

Risk of damage to the battery male connector when connecting!

If the battery male connector is connected while the key switch is switched on or the battery charger is under load, a jump spark will be produced. The discharge spark can damage the contacts and considerably shorten the service life of the contacts.

- Switch off the key switch or the battery charger.
- Only connect the battery male connector while the key switch is switched off.

⚠ CAUTION

Risk of damage to the battery male connector when disconnecting!

If the battery male connector is disconnected while the key switch is switched on or the battery charger is under load, an arc will be produced. The arc can damage the contacts and considerably shorten the service life of the contacts.

- Switch off the key switch or the battery charger.
- Only disconnect the battery male connector while the key switch or the battery charger is switched off.
- Do not disconnect the battery male connector while under load, except in an emergency.

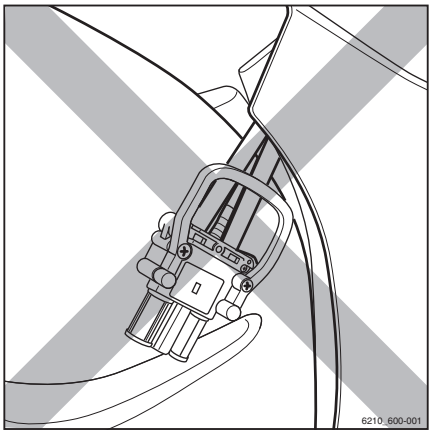

Checking the battery charge status ▷

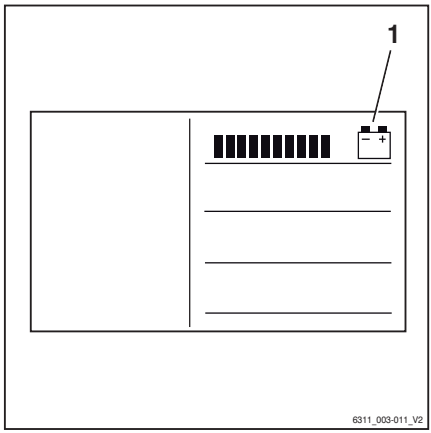

⚠ CAUTION

Deep discharges shorten the service life of the battery.

If there are no bars on the battery charge display (1) (0% of the available battery capacity, i.e. around 20% of the nominal capacity), it indicates the start of deep discharge.

- Avoid deep discharge (no bar on the display).
- Cease work with the truck immediately.
- Charge the batteries immediately.
- Do not leave batteries in a discharged or partly discharged state.

- Apply the parking brake.
- Switch on the key switch.
- Read the battery charge (1) on the display.
- Charge a discharged or partly discharged battery.

NOTE

The battery charge displays shows the available battery capacity as a segmented bar graph in 10% increments. Approx. every 10 seconds, the display switches between the battery charge and the remaining operating time.

Charging the lead-acid battery

⚠ DANGER

Danger to life and limb!

- Observe the instructions in the chapter entitled "Safety regulations when handling the battery".

⚠ DANGER

Risk of explosion due to old batteries!

Old and inadequately maintained batteries can cause excessive gas emissions and excessive heating during charging.

The increased production of explosive gas can lead to an explosion.

- If an increased build-up of heat or a sulphurous odour is detected, stop the charging process immediately.
- Provide adequate ventilation.
- Inform the authorised service centre so that it can determine the condition of the battery.

⚠ WARNING

Battery acid is toxic and corrosive!

- Observe the safety regulations in the chapter entitled "Battery acid".

⚠ CAUTION

Possible damage to components!

Incorrect connection or incorrect operation of the charging station or the battery charger may result in damage to components.

- Follow the operating instructions for the charging station or battery charger and for the battery.

⚠ CAUTION

Potential for damage to the battery male connector!

- Switch off the key switch on the truck.
- Switch off the battery charger.
- Connect or disconnect the battery male connector once the key switch and the battery charger are switched off.

NOTE

A 640-A battery male connector/230-A battery charger plug adaptor cable is available as an accessory from the authorised service centre.

- Park the truck securely.
- Switch off the key switch.

- Ensure that work areas are adequately ventilated.
- Fully open any protective structures (e.g. fabric-covered cab).
- Make sure that the external ventilation openings on the truck are unobstructed and are not blocked.
- Open the battery cover.
- Open the fastener (4) for the battery male connector (3) by pulling the fastener to the left.
- Disconnect the battery male connector (3) from the plug connection by pulling the handle (2) in the direction of the arrow.
- Do not place any metal objects or tools on the battery.
- Keep away from open flames and do not smoke.
- Inspect the battery cables and charging cables for damage; replace if necessary.

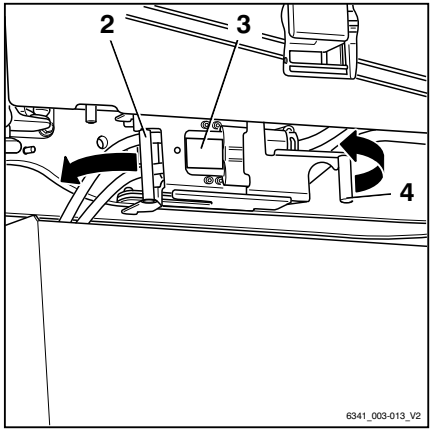

- Use the handle (4) to hang the battery charger plug (5) on the front edge of the battery tray (1).
- Hold the battery male connector (3) by the handle (2) and insert the battery male connector into the battery charger plug (5).
- Push the fastener (6) for the battery charger plug to the right up to the stop to retract the battery male connector into the battery charger plug and to secure the battery male connector in position.

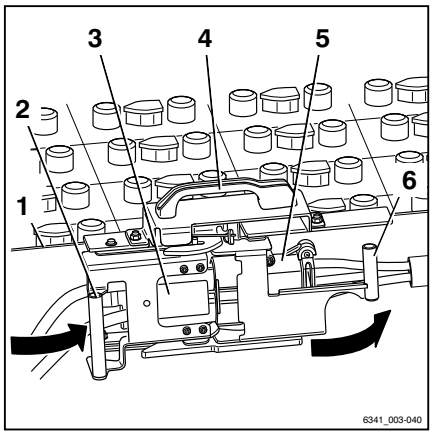

NOTE

Follow the information in the operating instructions for the battery and the battery charger (equalising charge).

⚠ CAUTION

When using PowerPlusLife® batteries, ensure that there is a good circulation of cooling air.

The cooling air inlet and cooling air outlet must not be covered. Otherwise, the air cannot circulate through the air ducts and the battery will heat up too much.

– Make sure that no cloths or rags etc. cover the cooling air inlet and cooling air outlet.

– Adjust the settings of the battery charger to the battery capacity of the lead-acid battery.

– Start the battery charger.

Once the charging process is complete:

– Switch off the battery charger.

– Open the fastener (6) for the battery charger plug (5) by pulling the fastener to the left. ▷

– Disconnect the battery male connector (3) from the battery charger plug by pulling the handle (2) in the direction of the arrow.

– Pick up the battery charger plug using the handle (4) and remove the battery charger plug from the battery tray (1).

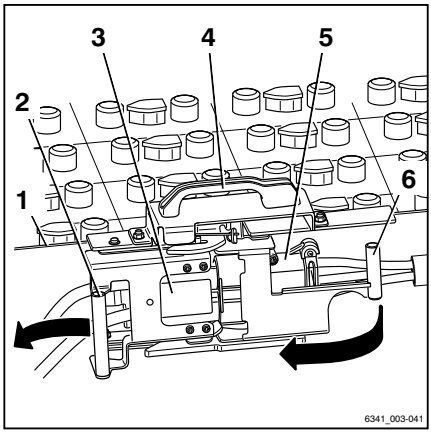

– Hold the battery male connector (2) by the handle (1) and insert the battery male connector into the plug connection on the truck.
– Push the fastener (3) to the right up to the stop to retract the battery male connector into the plug connection and to secure the battery male connector in position.
– Ensure that the battery cable does not come into contact with the battery cover.
– Close the battery cover. When doing so, ensure that no cables are crushed between the chassis and the flap.

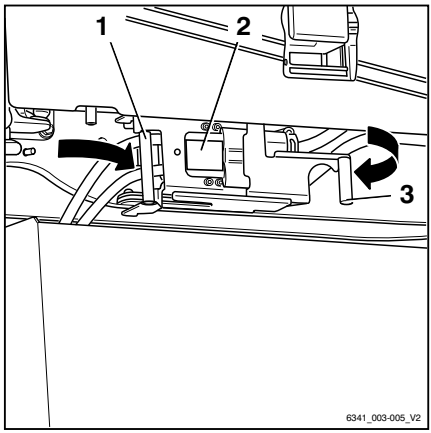

Equalising charging to preserve the battery capacity

Equalising charges ensure that unevenly charged battery cells are evenly charged again. This preserves the service life of the battery and the battery capacity.

An equalising charge should be carried out in accordance with the battery manufacturer's instructions several times a month after the normal charging process.

NOTE

Depending on the battery charger used, the equalising charge may not begin until 24 hours have elapsed. A period when no shifts are running, such as the weekend, is therefore ideal for performing the equalising charge.

– Observe the information in the operating instructions of the battery charger regarding how to perform an equalising charge.

Starting the equalising charge

– Charge the battery.
– After charging, leave the battery in the charger.

The battery charger remains switched on. Depending on the type of battery charger, the equalising charge begins between 6 and 24 hours after the end of the actual charging process. The equalising charge takes up to 2 hours.

– Please refer to the operating instructions from the manufacturer of the battery charger.

Ending the equalising charge

The equalising charge ends automatically. If the battery is required during this process, you can interrupt the equalising charge by pushing the "stop button" on the battery charger.

– Please refer to the operating instructions from the manufacturer of the battery charger.

⚠ CAUTION

Damage to the connection assembly is possible!

If you disconnect the charging cable while the battery charger is switched on, an arc will be produced. This can lead to erosion at the contacts, which considerably shortens the service life of the contacts.

– Switch off the battery charger before you disconnect the charging cable.

– Switch off the battery charger.

– Disconnect the battery male connector from the plug for the battery charger.

– Insert the battery male connector fully into the plug connection on the truck.

Replacing and transporting the battery

General information on replacing the battery

⚠ CAUTION

Risk of components being damaged by the lifting accessory and battery rolling away!

The lifting accessory and battery may roll away in an uncontrolled manner if the battery is not replaced on a level, even floor with sufficient load capacity.

– Observe the operating instructions for the lifting accessory used.

– Always replace the battery on a level, even floor with sufficient load capacity.

Use the following lifting accessories when replacing the battery:

- Truck
- ECU 30 special pallet truck

The load capacity of the lifting accessory used must at least match the battery weight (see battery identification plate).

Changing to a different battery type

It is generally possible for a truck to be converted to a different battery type and a different capacity by the authorised service centre.

Note the following points:

- The display-operating unit must be adjusted to the new battery capacity.

  If this is not done, the actual battery discharge status cannot be determined. The battery charge level is not displayed correctly.

  In the worst case, the battery may be damaged by a deep discharge.

– Contact your authorised service centre.

NOTE

When converting to PowerPlusLife® batteries, the maximum speed of the truck can be increased to 20 km/h.

- *Contact your authorised service centre.*

NOTE

When converting from PowerPlusLife® batteries to other batteries, the maximum speed of the truck must be limited to 17 km/h for technical reasons.

- *Contact your authorised service centre.*

Opening and closing the battery cover

Opening the battery cover

▷

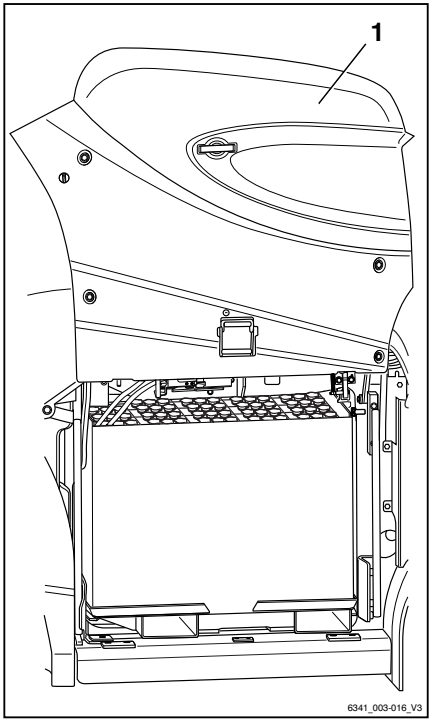

WARNING

Risk of injury from the battery cover lowering!

The battery cover (1) is equipped with gas springs that hold it in the opened position. When additional load is present, for example through heavy objects, strong wind or other persons, the battery cover can lower suddenly. Cold weather and ageing can also reduce the performance of the gas springs and cause the cover to lower.

– Make sure that the battery cover is not being pushed down by strong winds or other persons.

– If the gas springs no longer hold the battery cover independently, notify your authorised service centre.

– Unlock the quick release clamp (1) with a 1/4 turn in a clockwise direction. ▷

– Open the battery cover lock (3) using the key.

– To release the battery cover, pull the handle (4) and at the same time use the other handle (2) to swivel the battery cover upwards.

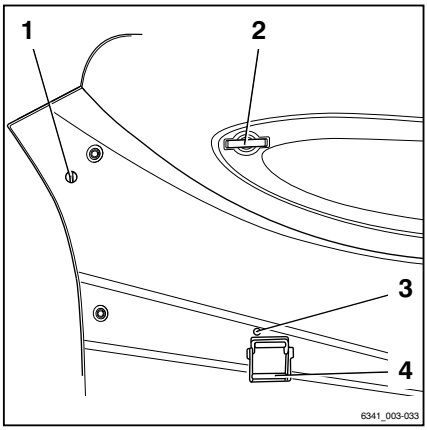

NOTE

Beneath the battery cover, there is a latch that engages in the upper position of the battery cover and prevents accidental closing.

– Make sure that the safety hook (1) engages in the gap on the bracket (2). ▷

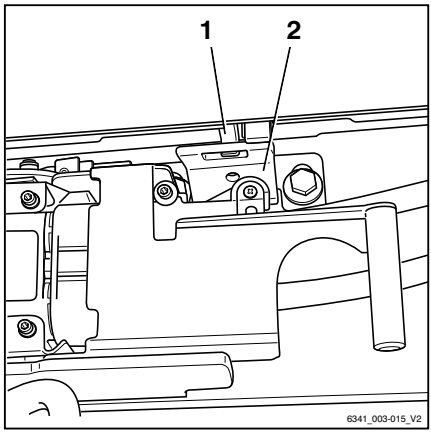

Closing the battery cover

⚠ CAUTION

When closing the battery cover, limbs could become trapped — risk of crushing!

When closing the battery cover, nothing should come between the battery cover and the edge of the chassis.

– Do not grasp any edges. Always close the battery cover by grasping one of the handles in each hand.

– Close the battery cover carefully.

– Only close the battery cover if there are no parts of the body in the way.

– To close the battery cover, take hold of the handles (2) and (4) at the same time and pull down firmly.
– Make sure that the battery cover lock engages when you close it.
– Lock the battery cover lock (3) using the key.
– Lock the quick release clamp (1) with a 1/4 turn in an anti-clockwise direction.

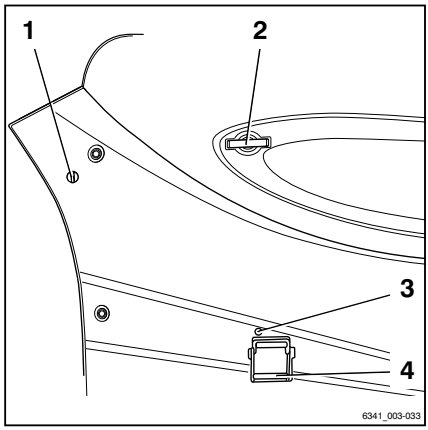

NOTE

The battery cover is only correctly locked if the top section of the handle (4) closes flush with the cover.

Replacing the battery

DANGER

Risk to life!

– Observe the chapter entitled "Safety regulations for handling the battery" without fail.

NOTE

The battery can be replaced using the following lifting accessories. Observe the relevant operating instructions.

- *Truck*
- *ECU 30 special pallet truck*

Preparation

The load capacity of the lifting accessory in use must at least match the battery weight (see battery identification plate).

The procedure for replacing a battery does not differ depending on the lifting accessory selected.

– Check the load capacity of the lifting accessory.
– Make sure that the floor is suitable for battery removal.
– Switch off the key switch.

– Open the battery cover.

⚠ CAUTION

Do not disconnect the battery male connector while the key switch is switched on!

– Ensure that the key switch is switched off.

– Open the fastener (4) for the battery male connector (3) by pulling the fastener to the left.

– Disconnect the battery male connector (3) from the plug connection by pulling the handle (2) in the direction of the arrow.

– Check the battery cable for damage.

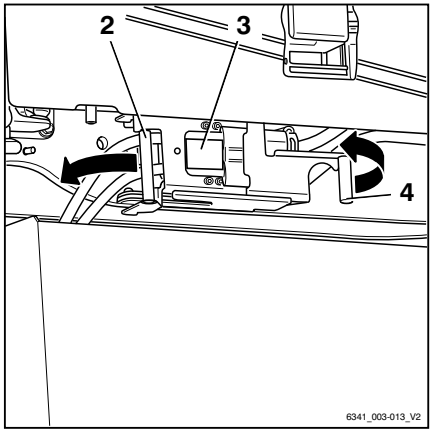

– Hang the battery male connector (3) on the front edge of the battery tray (1).

– When removing the battery cable, make sure that it does not come into contact with any components.

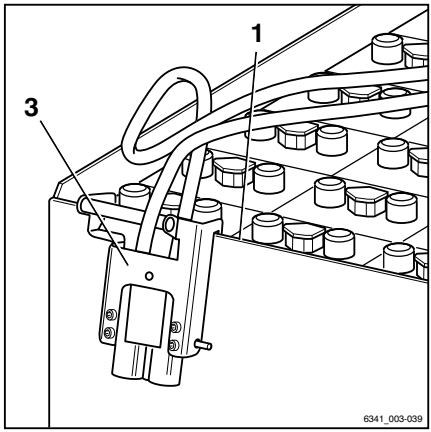

– Adjust the distance (A) between the fork arms of the lifting accessory to match the distance (A) between the forked fittings in the battery base frame.

– Swivel the battery lock (1) upwards.

The battery lock is held in the raised position by means of the tension spring. The battery can be accessed as required.

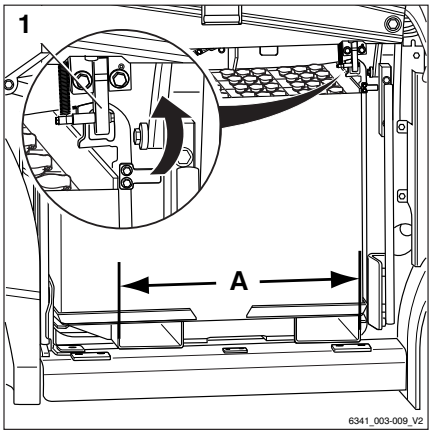

Taking up the battery

⚠ WARNING

Risk of crushing/shearing!

Personnel must not stand directly next to the battery or between the battery and the truck when removing and inserting the battery with the truck.

– Determine the length of the battery base frame and, starting from the fork tip, mark one of the fork arms; dimension (B).

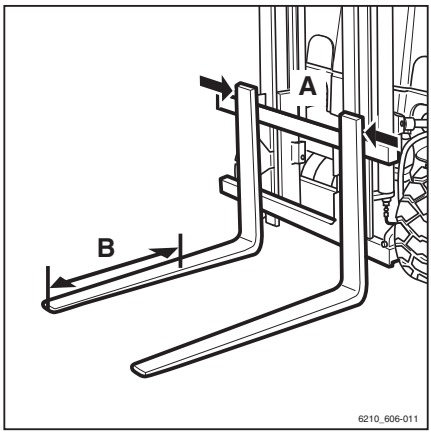

– Move the fork arms carefully up to the mark in the forked fittings in the battery base frame.

– Carefully lift the battery and battery base frame up and out of the truck. When doing so, pay attention to the distance to the chassis.

– Carefully remove the battery and the battery base frame from the truck, i.e. at a low speed, using slow steering movements and braking carefully.

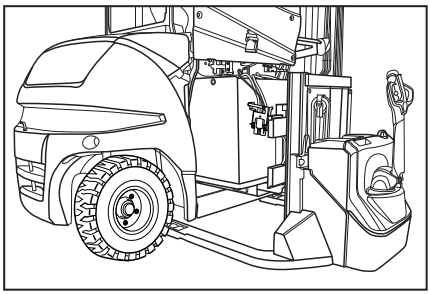

– Set the battery and battery base frame down carefully.

The battery always remains on the battery base frame.

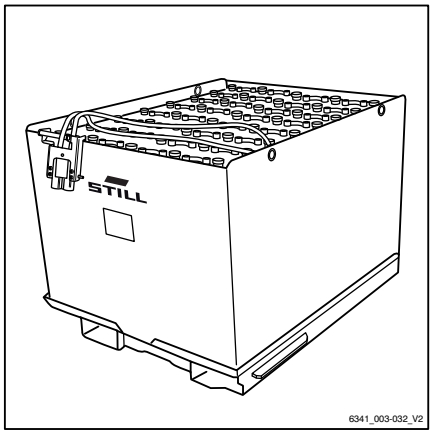

Installing the battery

⚠ CAUTION

Damage to the battery possible!

If the battery is not used in the truck in conjunction with the battery base frame, the battery cannot be securely positioned in the battery compartment. The battery can tip over in the battery compartment. This may cause damage to the battery and the truck components.

– Always use the battery in conjunction with the battery base frame.

– Pick up the new battery along with the battery base frame and carefully transport it to the truck.

– Make sure to hang the battery male connector (3) on the front edge of the battery tray (1), and ensure that the battery cable does not become trapped during installation.

– Position the battery at a right angle to the truck.

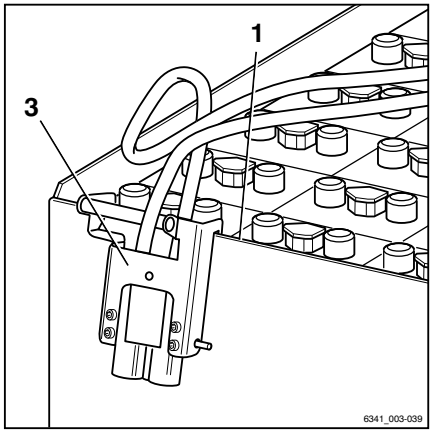

The slide rail (1) serves as an installation aid and guides the battery base frame at a right angle into the battery compartment.

The impact protection (2) protects the flap support from damage during insertion of the battery.

The detent cams (3) must engage in the battery base frame when the battery is lowered. When the detent cams are engaged, the battery is prevented from slipping sideways out of the battery compartment.

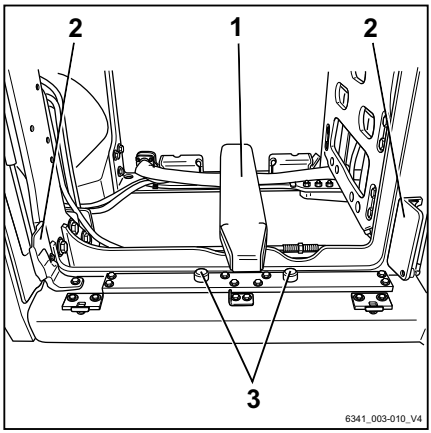

– Carefully insert the battery into the battery compartment. When doing so, take note of the adjustment and entry aids (3) on the left of the battery compartment.

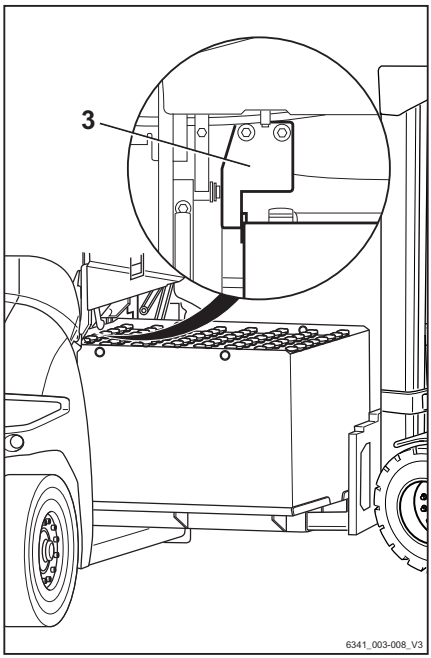

NOTE

The battery must be guided in flush against the adjustment and entry aids (3). This will help the driver to insert the battery without it getting stuck on the truck.

Once the battery is positioned correctly in the battery compartment: ▷

- Carefully lower the battery.
- Check that the detent cams (2) are fully engaged in the bores (1) and that the battery is level.
- If the battery is not positioned correctly, repeat this process.
- Carefully move the fork arms out from the battery base frame.

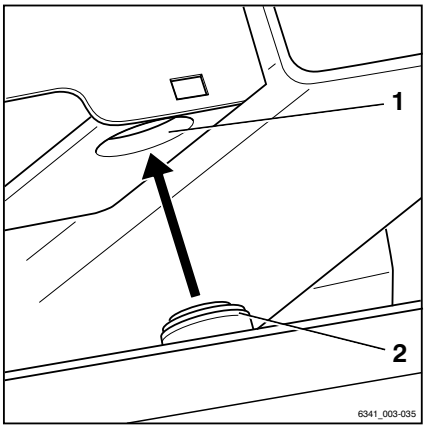

- Swivel the battery lock (1) downwards. ▷

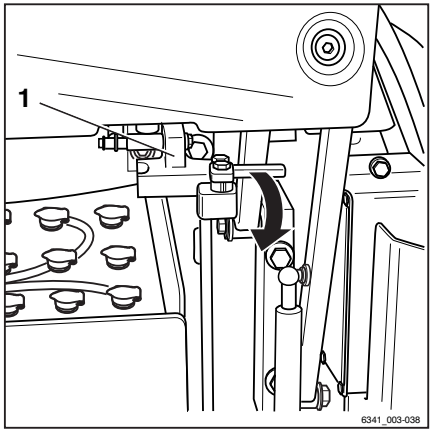

Replacing and transporting the battery

- Hold the battery male connector (2) by the handle (1) and insert the battery male connector into the plug connection on the truck.
- Push the fastener (3) completely to the right to retract the battery male connector into the plug connection and to secure the battery male connector in position.
- Ensure that the battery cable cannot come into contact with the battery cover.
- Close the battery cover.

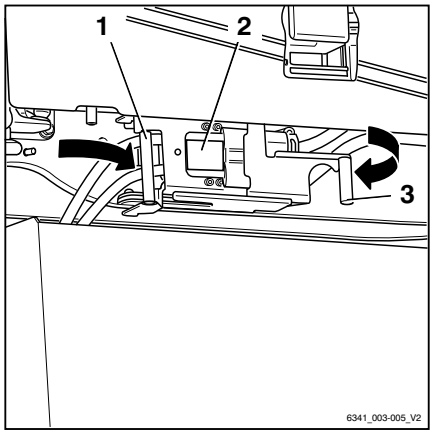

PowerPlusLife battery

PowerPlusLife® battery

The PowerPlusLife® battery is an air-cooled lead-acid battery. The self-cooling feature gives this battery significant advantages over conventional lead-acid batteries which heat up during operation and whilst charging, and stay hot for a long time.

The PowerPlusLife® battery is a protected in-house development by STILL GmbH.

Advantages of the PowerPlusLife® battery:

- Higher driving speeds and greater handling performance
- Longer battery life, even under severe conditions
- Continuous temperature-controlled self-cooling, even when removed from the truck and not connected to a battery charger
- Ready for use again more quickly after charging
- Less heat radiated into the driver's compartment

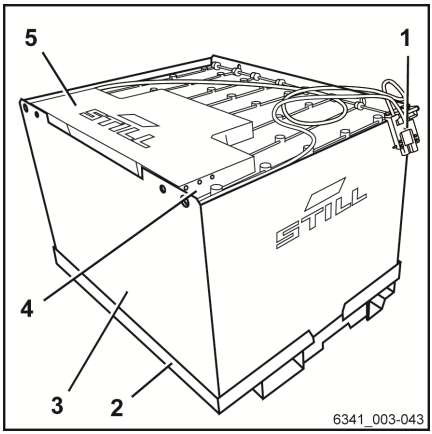

1 Battery male connector
2 Battery tray
3 Battery rack
4 Temperature monitoring
5 Battery management

NOTE

When converting to PowerPlusLife® batteries, the maximum speed of the truck can be increased to 20 km/h.

- *Contact your authorised service centre.*

Cooling air flow

⚠ CAUTION

If the cooling air flow is low, the cooling of the battery malfunctions.

Do not cover the intake openings (1) and air distributors (2) on the battery. Otherwise, the cooling air flow cannot circulate through the air ducts. The battery will then heat up too much.

– Make sure that the intake openings and air distributors stay open.
– When installing and removing the battery, check the intake openings and air distributors for dirt.

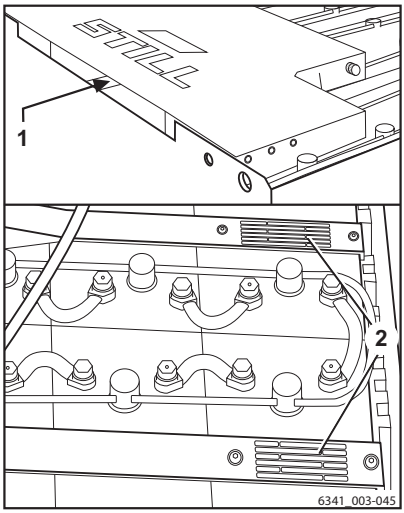

1 Intake opening
2 Air distributors

PowerPlusLife® temperature monitoring

The control unit detects the core temperature of the battery and adjusts the fan control for cooling. The LEDs continuously indicate the cooling state of the battery.

If the red LED (1) is illuminated, the battery temperature is high and cooling is active.

If the yellow LED (2) is illuminated, battery cooling is active.

If the green LED (3) is illuminated, the battery is ready for use.

Especially when PowerPlusLife® batteries are used for mixed applications, the temperature monitoring function makes it clear whether the battery has cooled down sufficiently after charging and is now ready for use.

– If the red LED (1) is illuminated, allow the battery to cool down further until the red LED goes out.

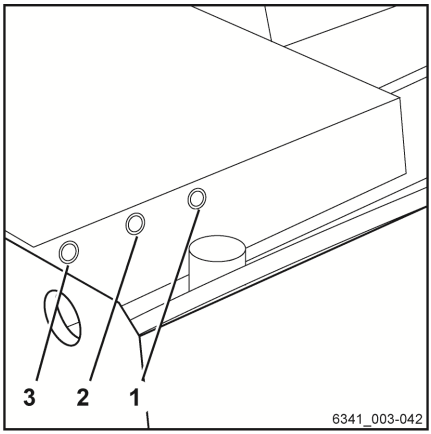

1 Red LED "not ready for use"
2 Yellow LED "cooling active"
3 Green LED "ready for use"

PowerPlusLife® error messages ▷

One of the three LEDs is always lit up to indicate the cooling status of the PowerPlusLife® battery. If an LED changes from being permanently illuminated to flashing, it indicates that an error message has been generated. The error message is independent of the colour of the LED. In the event of a fault, it is always the LED that is currently illuminated that flashes.

The following error messages are indicated by a flashing LED:

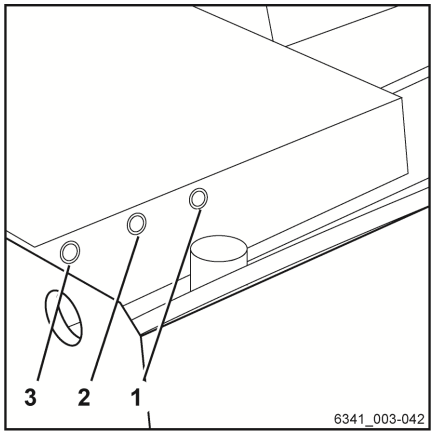

1 Red LED
2 Yellow LED
3 Green LED

Fluid level

The fluid level in the PowerPlusLife® battery is checked by a sensor.

If an LED slowly flashes alternately, it indicates that the fluid level is too low.

– Top up the fluid; see the chapter entitled "Servicing the battery".

Internal error ▷

If an LED flashes at frequent intervals, it indicates the presence of an internal fault.

The error can be read using the diagnostics function. The diagnostic connector (1) is located on the battery management device, on the right alongside the LEDs.

– Contact your authorised service centre.

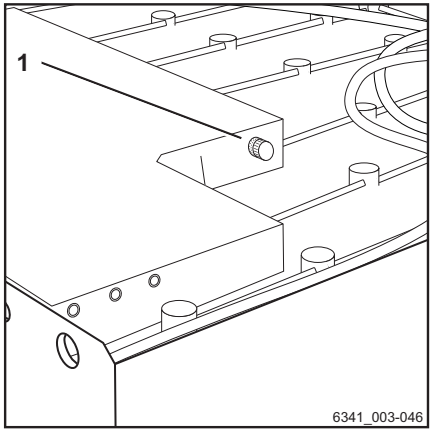

1 Diagnostic connector

Cleaning

Clean the truck

⚠ WARNING

Risk of injury from falling off the truck!

When climbing onto the truck, there is a risk of getting stuck or slipping and falling. Use suitable equipment to reach higher points on the truck.

– Use only the steps provided for this purpose to climb onto the truck.

– Use equipment such as stepladders or platforms to reach inaccessible areas.

⚠ WARNING

Risk of fire due to flammable cleaning materials!

Flammable cleaning materials can be ignited by hot components.

– Do not use any flammable cleaning materials.

⚠ CAUTION

Risk of fire due to flammable materials!

Deposits and solids can be ignited by hot components, e.g. drive units.

– Remove deposits and solids.

⚠ CAUTION

Risk of damage to the battery male connector when disconnecting!

If the battery male connector is disconnected while the key switch is switched on under load, an arc will be produced. The arc can damage the contacts and considerably shorten the service life of the contacts.

– Switch off the key switch.

– Only disconnect the battery male connector while the key switch is switched off.

⚠ CAUTION

If water penetrates the electrical system, there is a risk of a short circuit occurring!

– Strictly adhere to the following steps.

⚠ CAUTION

Excessive water pressure or water and steam that are too hot can damage truck components.

– Strictly adhere to the following steps.

⚠ CAUTION

Abrasive cleaning materials can damage the surfaces of components!

Using abrasive cleaning materials that are unsuitable for plastics can cause plastic parts to dissolve or become brittle. The screen on the display-operating unit could become cloudy.

– Strictly adhere to the following steps.

– Park the truck securely.
– Switch off the key switch.
– Disconnect the battery male connector.
– Do not spray electric motors and other electrical components or their covers directly with water.
– Use only high-pressure cleaners with a maximum output power of up to 50 bar and 85°C.
– If a high-pressure cleaner is used, maintain a distance of at least 20 cm between the nozzle and the object being cleaned.
– Do not aim the cleaning jet directly at adhesive labels or decal information.
– Remove all deposits and accumulations of foreign materials in the vicinity of hot components.
– Use only non-flammable fluids for cleaning.
– Observe the manufacturer's guidelines for working with cleaning materials.
– Clean plastics only with cleaning materials intended for plastics.
– Clean the truck exterior using water-soluble cleaning materials and water. Cleaning with a water jet, a sponge or a cloth is recommended.
– Clean all accessible areas.

– Before lubrication, clean the oil filling openings and the area around the oil filling openings, as well as the lubricating nipples.

Cleaning the electrical system

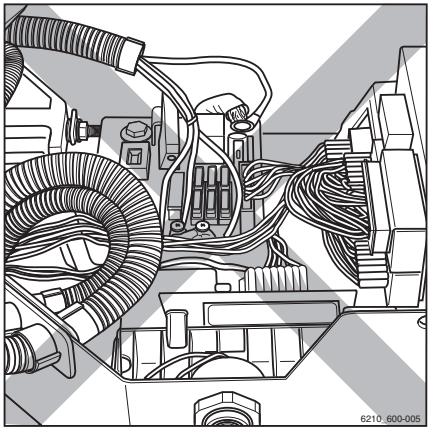

⚠ WARNING

Danger of electric shocks due to residual capacity!

– Never reach into the electrical system with your bare hands.

⚠ CAUTION

Cleaning electrical system parts with water can damage the electrical system.

Cleaning electrical system parts with water is forbidden!

– Do not remove covers etc.

– Use only dry cleaning materials in accordance with the manufacturer's specifications.

– Clean the electrical system parts with a metal-free brush and blow the dust off with low-pressure compressed air.

Cleaning load chains

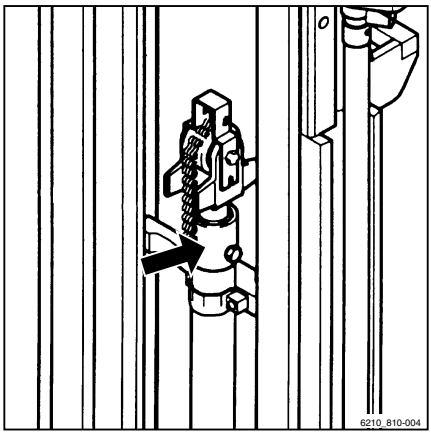

⚠ WARNING

Risk of accident!

Load chains are safety elements.

The use of cold/chemical cleaners or fluids that are corrosive or contain acid or chlorine can damage the chains and is forbidden!

– Observe the manufacturer's guidelines for working with cleaning materials.

– Place a collection vessel under the lift mast.

– Clean with paraffin derivatives, such as benzine.

– When using a steam jet, do not use additional cleaning agents.

– Remove any water in the chain links using compressed air immediately after cleaning.

Move the chain several times during this procedure.

– Immediately after drying the chain, spray it with chain spray. Move the chain several times during this procedure.

For chain spray specifications, see the "Maintenance data table" chapter.

ENVIRONMENT NOTE

Dispose of any fluid that has been spilled or collected in the collection vessel in an environmentally friendly manner. Follow the statutory regulations.

Cleaning the windows

Any panes of glass, e.g. cab windows (variant), must always be kept clean and free of ice. This is the only means of guaranteeing good visibility.

CAUTION

Do not damage the rear window heater (inside)!

– Take great care when cleaning the rear window and do not use any objects with sharp edges.

– Clean the windows using a commercially available glass cleaner.

After cleaning

CAUTION

Danger of short-circuits!

Ingress of moisture into the battery male connector can lead to an electrical short circuit.

– Use compressed air to dry the battery male connector before you connect the battery male connector.

– Only connect the battery male connector if it is dry.

– Thoroughly dry the truck after wet cleaning, e.g. using compressed air.

– Apply a thin layer of oil or grease to all uncoated moving parts.

- Grease the truck.
- Lubricate the joints and controls.
- Lubricate the battery cover interlock.
- Check that the battery male connector is dry before you connect the battery male connector.

NOTE

The more often the truck is cleaned, the more frequently the truck must be lubricated.

Procedure in emergencies

Emergency shutdown

⚠ WARNING

Electrical and hydraulic functions will no longer be available following an emergency shutdown!

The emergency shutdown procedure disables the hydraulic functions. The entire electrical system is de-energised.

– Only use this safety system in the event of an emergency.

In drive mode, the emergency shutdown has the following effect:

- Regenerative braking is not available.
- The regenerative brake will not hold the truck on ascending or descending gradients. Actuate the service brake, otherwise the truck will roll down gradients.
- No speed reduction when you release the accelerator pedal. The truck will coast.
- Power steering is not available. Steering forces are increased by the remaining emergency steering function.
- The "Curve Speed Control" system (automatic reduction of speed when cornering) is not available.
- Hydraulic functions are not available.

In the event of an emergency, all electrical and hydraulic functions can be switched off via the emergency off switch or via the battery male connector using the following procedures:

Emergency shutdown via the emergency off switch

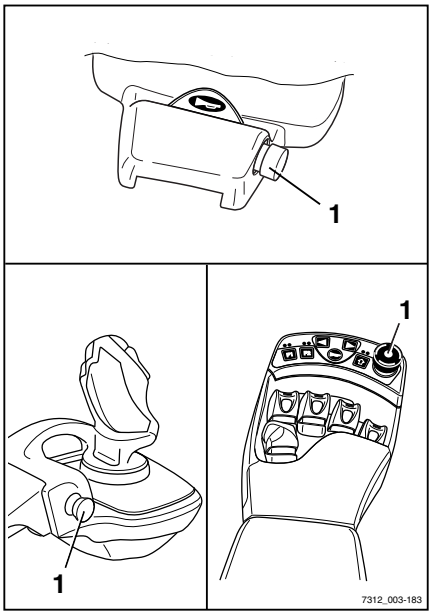

- Push the emergency off switch (1).
- Steer the truck to a safe place by applying greater steering power.
- Decelerate the truck with the service brake by depressing the brake pedal.
- Use the service brake to hold the truck on ascending or descending gradients.

Emergency shutdown via the battery male connector

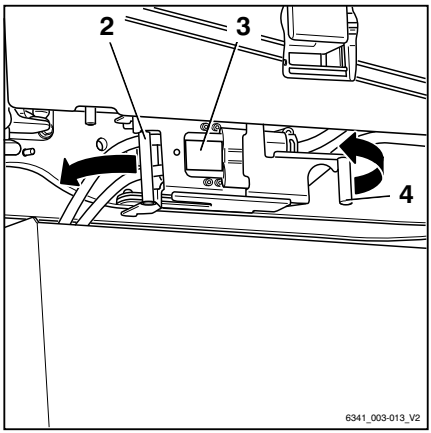

⚠ CAUTION

Risk of damage to the battery male connector when disconnecting!

If the battery male connector is disconnected while the key switch is switched on under load, an arc will be produced. The arc can damage the contacts and considerably shorten the service life of the contacts.

- Do not disconnect the battery male connector while under load, except in an emergency.

- Pull the fastener (4) to the left and open the fastener.
- Disconnect the battery male connector (3) from the plug connection by pulling the handle (2) in the direction of the arrow.

NOTE

An emergency shutdown via the battery male connector can be performed only when the truck is stationary and the battery cover is open.

Procedure if truck tips over

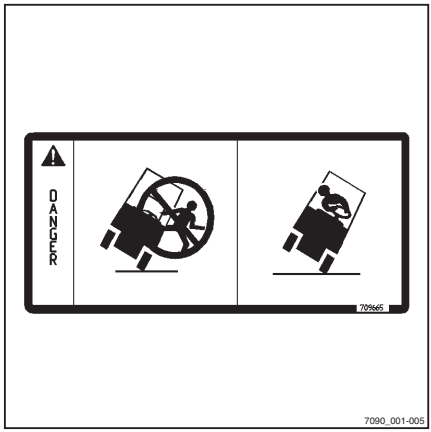

DANGER

If the truck tips over, the driver could fall out and slide under the truck with potentially fatal consequences. There is a risk to life.

Failure to comply with the limits specified in these operating instructions, e.g. driving on unacceptably steep gradients or failing to adjust speed when cornering, can cause the truck to tip over. If the truck starts to tip over, do not leave the truck under any circumstances. This increases the danger of being hit by the truck.

- Do not release your seat belt.
- Never jump off the truck.
- You must adhere to the rules of behaviour if the truck tips over.

Rules of behaviour if truck tips over:

- Hold onto the steering wheel with your hands.
- Brace your feet in the footwell.
- Bend your upper body over the steering wheel.
- Bend your body against the direction of the fall.

Emergency hammer

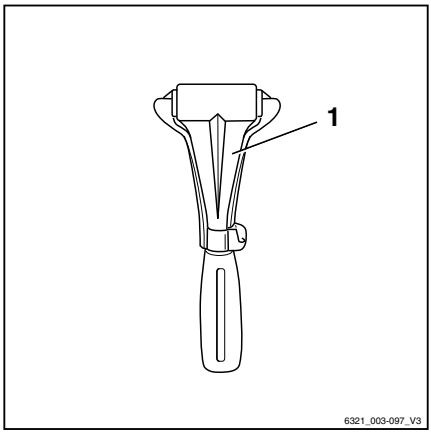

The emergency hammer is used to rescue the driver if he is shut inside the cab in a hazardous situation, for example if the truck has toppled over and the cab door cannot be opened.

Single-pane safety glass can be struck relatively safely using the emergency hammer in order for the driver to escape or be rescued from the danger area.

Using the emergency hammer

⚠ WARNING

When glass is smashed there is a risk of injury caused by glass splinters!

When the cab glass is smashed, splinters of glass can shoot into the face and cause damage to skin and eyes through cuts. When a pane of glass is smashed, the face should be turned away and covered with the crook of the free arm.

– Protect the face when smashing a pane of glass.

– Pull the emergency hammer out of its support mounting at the handle.

– Using one of the two metal tips on the head of the emergency hammer, hit the pane of glass with force until it breaks.

Emergency lowering

If the hydraulic controller fails whilst a load is raised, emergency lowering can be performed. An emergency lowering screw for this purpose is located on the control block.

⚠ DANGER

There is a risk of fatal injury from falling loads or parts of the truck being lowered.

– Do not walk beneath the raised load.

– Follow the steps described below.

NOTE

A hexagon socket wrench is located beneath the bottom plate on the brake valve for carrying out the steps detailed below. This hexagon socket wrench must remain in the truck at all times.

– Remove the bottom plate.

– Take the hexagon socket wrench (1) out of the support mounting. ▷

– Open the front right cover.

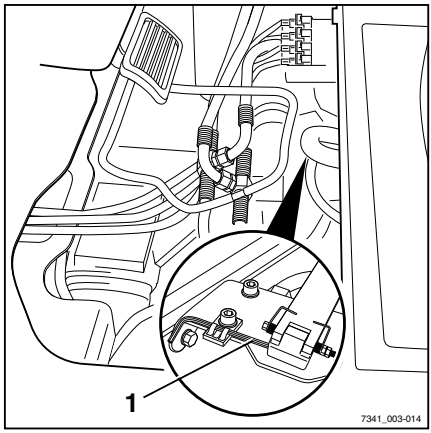

– Loosen the emergency lowering screw (3) on the control block (2) by a maximum of 1.5 revolutions using the hexagon socket wrench. ▷

– Screw the emergency lowering screw back in after the load is lowered.

– Return the hexagon socket wrench to the support mounting provided.

– Install the bottom plate.

– Close the front right cover.

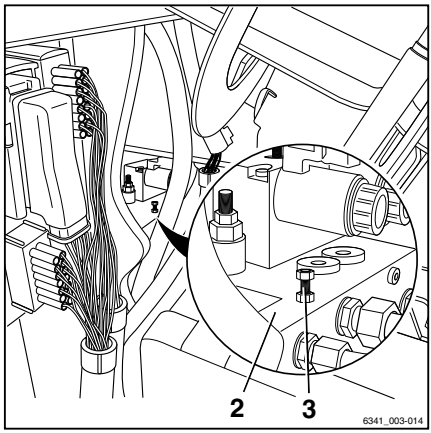

WARNING

The load is lowered!

The lowering speed is regulated by unscrewing the emergency lowering screw.

– Note the following list.

Remember the following:

- Tightening torque:
  max. 2.5 Nm
- When unscrewed a little:

The load lowers slowly
- When unscrewed a lot:
  The load lowers quickly

⚠ DANGER

If the truck is operated with the hydraulic controller blocked, there is an increased risk of accidents!

– After the emergency lowering procedure, have the malfunction rectified.

– Notify the authorised service centre.

Releasing the spring-operated brake

⚠ CAUTION

Component damage as a result of blocked brakes!

In order to tow the truck, the multi-disc brakes must not be blocked in the drive wheel units.

– Repeatedly release the spring-operated brake during the towing process, in accordance with the table below.

The truck is equipped with a negative spring-operated brake. Switching off the truck will block the multi-disc brakes in the drive wheel units after a few minutes. However, the truck can still be moved until the drive wheel units are blocked. In order to tow the truck, the spring-operated brake must be released by actuating the brake valve. Otherwise, the truck is towed with the wheels blocked.

NOTE

The brake valve is installed in front of the driver's seat beneath the bottom plate.

The coupling pin from the counterweight can be used as an aid to actuate the brake valve. If there is no removable coupling pin available on the truck, for example, if the truck is equipped with an automatic tow coupling (variant), the bottom plate must be raised completely in order to access the brake valve.

Once the spring-operated brake is released, the pressure gradually drops again in the brake hydraulics and the brakes can block

again. The towing process must be interrupted at certain times and the spring-operated brake released again, in accordance with the table below.

Hydraulic oil temperature	Period after releasing the spring-operated brake until it is blocked once again	
°C	Minutes	Seconds
-20	190	0
20	7	40
50	2	50
95	1	50

Actuate the brake valve by means of a coupling pin:

– Take the coupling pin out of the counterweight.

– Grip the rubber tab in the rubber mat using the finger opening and pull up the tab. ▷

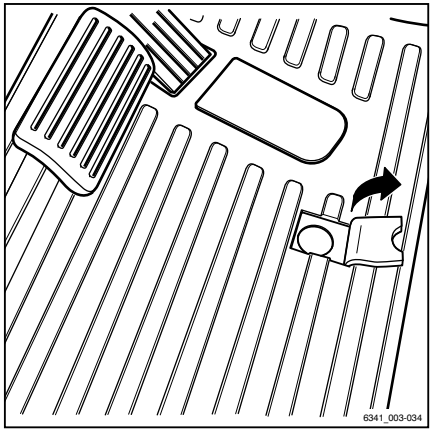

– Insert the coupling pin (1) into the bore (2) on the bottom plate until the pin noticeably rests on the brake valve plate beneath.

– Repeatedly press the coupling pin down vertically.

The spring-operated brake is released.

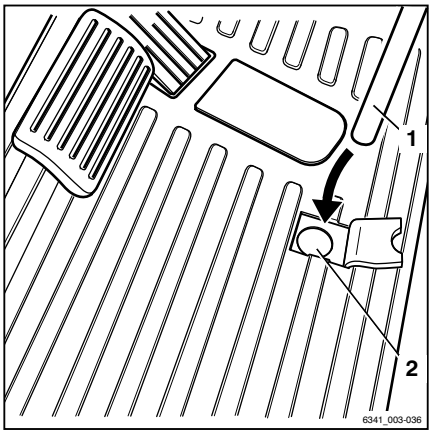

NOTE

To fully release the spring-operated brake, press down on the brake valve plate at least 30 times. The pressure that builds up in the brake hydraulics as a result releases the spring-operated brake.

– Once the spring-operated brake is released, fold the rubber tab in the rubber mat back down.

– Insert the coupling pin in the counterweight.

Actuate the brake valve without a coupling pin:

– Remove the rubber mat.

– Remove the bottom plate.

– Press the brake valve plate (3) down repeatedly.

The spring-operated brake is released.

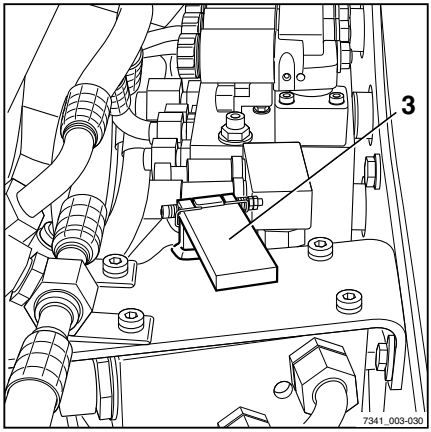

NOTE

To fully release the spring-operated brake, press down on the brake valve plate at least 30 times. The pressure that builds up in the brake hydraulics as a result releases the spring-operated brake.

– After releasing the spring-operated brake, re-install the bottom plate and the rubber mat.

⚠ WARNING

Risk of injury through falling or slipping!

If the bottom plate is not inserted, there is a danger of footwear getting stuck, causing you to fall. Even when the bottom plate is installed, there is still a danger of slipping and injury if the rubber mat is not used.

– Install the bottom plate and rubber mat.

Towing

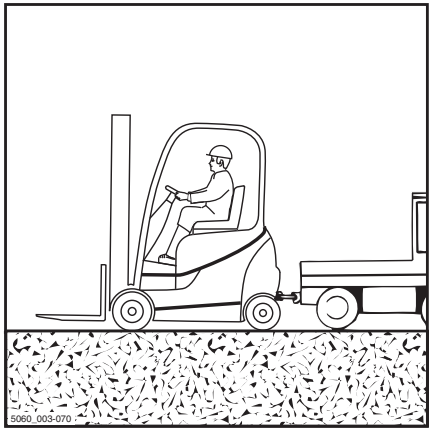

⚠ DANGER

Risk of accident due to failure of the brake system of the towing vehicle!

If the brake system of the towing vehicle is not adequately sized, the vehicle may not brake safely or the brakes may fail. The towing vehicle must be designed such that it is able to absorb the tractive and braking forces from the unbraked towed load (the actual total weight of the truck).

– Check the tractive and braking forces of the towing vehicle.

⚠ DANGER

If the towing vehicle brakes, there is a risk that the truck will drive into the towing vehicle!

If a rigid connection has not been used for power transmission in two directions during towing, the truck may drive into the towing vehicle when the towing vehicle brakes. Use a tested tow bar for safety reasons.

– Use a tested tow bar.

⚠ CAUTION

If the truck drive between the drive motor and the drive axle is not interrupted, the drive may be damaged.

– Place the drive direction switch in the neutral position.

⚠ CAUTION

Risk of damage to the battery male connector when disconnecting!

If the battery male connector is disconnected while the key switch is switched on under load, an arc will be produced. The arc can damage the contacts and considerably shorten the service life of the contacts.

– Switch off the key switch.
– Only disconnect the battery male connector while the key switch is switched off.

⚠ DANGER

While manoeuvring, there is a risk of fatal injury in the area between the truck and the towing vehicle!

Inform the driver of the towing vehicle and the mechanic attaching the tow bar about the risks. When you fit the tow bar, always use a second person to guide the towing vehicle manoeuvres.

– Manoeuvre with a second person as a guide.

⚠ CAUTION

Steering is stiff! There is no power steering if the hydraulics fail!

– Select a slow towing speed to ensure that the truck and the towing vehicle can be braked and controlled effectively at all times.

⚠ CAUTION

If the truck is not steered while it is being towed, the truck may veer out in an uncontrolled manner!

– The truck being towed must also be steered by a driver.
– The driver of the truck being towed must sit in the driver's seat and fasten the seat belt before towing.
– Where possible, activate the restraint systems provided.

⚠ CAUTION

Component damage as a result of blocked brakes!

The truck is equipped with a negative spring-operated brake. As a result, when you switch off the truck, the multi-disc brakes in the drive wheel units block. For towing, the brake must be released at the brake valve. Otherwise, the truck is towed with the wheels blocked.

Once the spring-operated brake is released, pressure builds up gradually again in the brake hydraulics. The brakes can block again. Note the towing time when the key switch is switched off. The towing process must be interrupted in each case and the brake released again.

- Releasing the spring-operated brake
- Note the towing time and release the spring-operated brake again as necessary.

- Set down the load and lower the fork arms close to the ground.
- Place the drive direction switch in the neutral position.
- Apply the parking brake.
- Switch off the key switch.
- Disconnect the battery male connector.
- Check the tractive and braking forces of the towing vehicle.
- With the help of a guide, manoeuvre the towing vehicle to the truck.
- Secure the tow bar to the tow coupling on the towing vehicle and on the truck.
- Release the spring-operated brake
- Sit in the driver's seat of the truck being towed and fasten the seat belt.
- Where possible, activate the restraint systems provided.
- Release the parking brake.
- Select a slow towing speed.
- Tow the truck.
- Note the towing time (refer to the table in the section entitled "Releasing the spring-operated brake") and release the spring-operated brake again as necessary.

– After towing, secure the truck so that it cannot roll away (e.g. by applying the parking brake or by using wheel chocks).

– Remove the tow bar.

Transporting the truck

Transportation

⚠ CAUTION

Risk of material damage from overloading!

If the truck is driven onto a means of transport, the load capacity of the means of transport, the ramps and the loading bridges must be greater than the actual total weight of the truck. Components can be permanently deformed or damaged due to overloading.

– Determine the total actual weight of the truck.

– Only load the truck if the load capacity of the means of transport, the ramps and the loading bridges is greater than the actual total weight of the truck.

Determining the total actual weight

▷

– Park the truck securely.

– Determine the unit weights by reading the truck nameplate and, if necessary, the attachment nameplate (variant).

– Add the determined unit weights to obtain the total actual weight of the truck:

Tare weight (1)
\+ Max. permissible battery weight (2)
\+ Ballast weight (variant) (3)
\+ Attachment net weight (variant)
\+ 100-kg allowance for driver
= Total actual weight

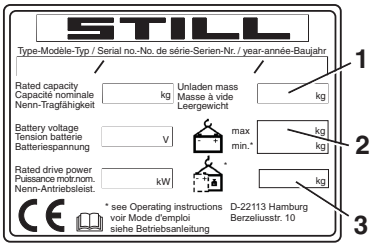

⚠ DANGER

Risk of accident from the truck crashing!

Steering movements can cause the tail end to veer off the loading bridge towards the edge. This may cause the truck to crash.

- Before driving across a loading bridge, ensure that the loading bridge is properly attached and secured.
- Ensure that the transport vehicle onto which the truck is to be driven has been sufficiently secured against moving.
- Maintain a safety distance from edges, loading bridges, ramps, working platforms etc.
- Drive slowly and carefully onto the transport vehicle.

Inserting wedges

- Secure the truck from rolling away by placing a wheel chock (1) in front of each front wheel and behind each back wheel.
- Park the truck securely.

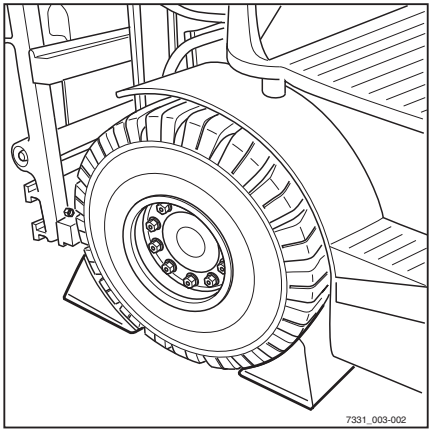

⚠ CAUTION

Risk of damage to the battery male connector when disconnecting!

If the battery male connector is disconnected while the key switch is switched on under load, an arc will be produced. The arc can damage the contacts and considerably shorten the service life of the contacts.

- Switch off the key switch.
- Only disconnect the battery male connector while the key switch is switched off.

- Ensure that the key switch is switched off.
- Disconnect the battery male connector.

Lashing down

⚠ CAUTION

Harnesses can rub against the seating and cause damage!

- Place a slip-resistant material between the harness and the seating, e.g. rubber mats or foam.

– Attach a harness (1) to each side of the truck. Lash the truck towards the rear.
– Attach a harness (1) to the coupling pin (2) or loop the harness around the coupling pin.

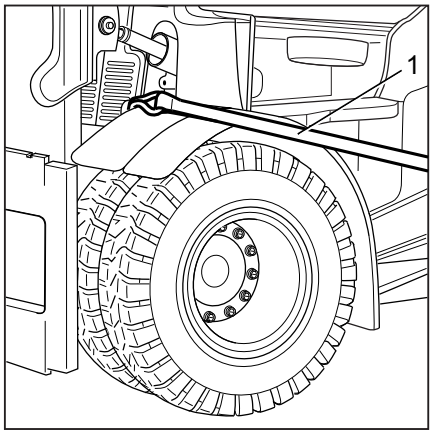

– Lash the truck to the side.

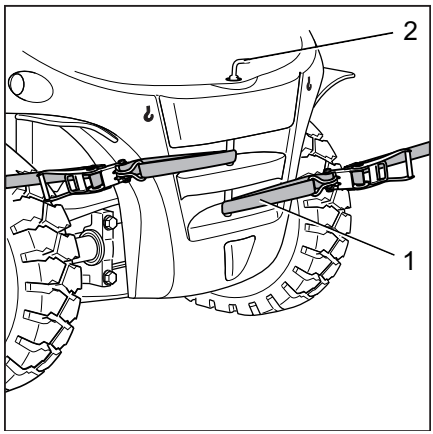

DANGER

The truck may slip if the harnesses slip!

The truck must be lashed securely to ensure that it does not move during transportation.

– Ensure that the harnesses are tightened securely and that the pads cannot slip off.

Crane loading

Crane loading is only intended for transporting the complete truck, including the lift mast, for its initial commissioning. For application conditions that require frequent loading or that are not dealt with here, please contact the manufacturer with regard to special equipment variants.

Trucks may only be laden by persons with sufficient experience with the suitable harnesses and hoists.

Determining the loading weight

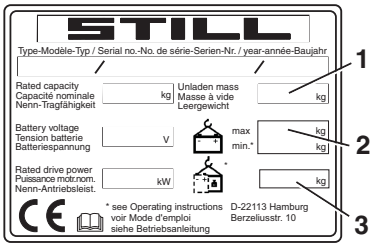

– Park the truck securely; see the chapter entitled "Parking the truck securely".
– Determine the unit weights by reading them off the truck nameplate and, if necessary, the attachment (variant) nameplate.
– Add the determined unit weights to obtain the loading weight of the truck:

Unladen weight (1)

\+ Max. permissible battery weight (2)

\+ Ballast weight (variant) (3)

\+ Attachment net weight (variant)

= Loading weight

Hooking on the lifting straps

⚠ CAUTION

Harnesses may damage the truck's paintwork!

Harnesses may damage paintwork by rubbing and pressing on the surface of the truck. Particularly hard or sharp-edged harnesses, such as wires or chains, can quickly damage the surface.

– Use textile harnesses, e.g. lifting straps, with edge protectors or similar protective devices where necessary.

⚠ DANGER

There is a risk of fatal injury if the hoists and harnesses fail and cause the truck to fall!

– Only use hoists and harnesses with sufficient load capacity for the determined loading weight.
– Only use the truck's designated lifting points.
– Make sure that harness parts such as hooks, shackles, belts and similar items are only used in the indicated load direction.
– The harnesses must not be damaged by truck parts.

NOTE

The lifting points are indicated by a hook symbol.

– Loop the lifting straps around the main traverse (3) on the outer mast of the lift mast as shown. ▷

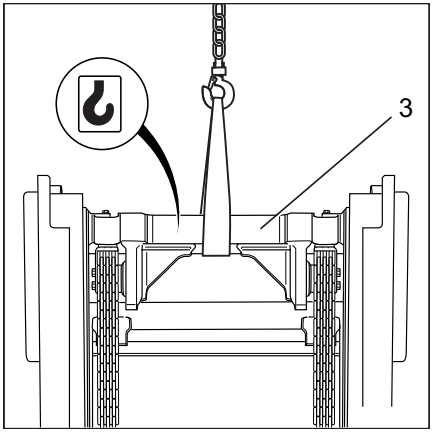

– Loop the lifting straps around the counterweight (4) as shown. ▷

– Determine the truck's centre of gravity, see chapter entitled "Dimensions".

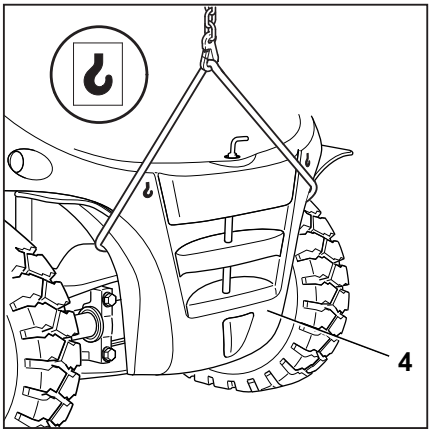

– Adjust the length of the harnesses so that the lifting eye (6) is vertically above the truck's centre of gravity.

This ensures that the truck hangs level when lifted.

– Attach the lifting straps to the lifting eye and insert the safety device (5).

⚠ CAUTION

Incorrectly fitted harnesses may damage attachment parts!

Pressure from the harnesses can damage or destroy attachment parts when the truck is lifted. If attachment parts are in the way (e.g. lighting, rear window, trademark emblem etc.), these must be removed before loading.

– Secure harnesses in such a way that they do not touch any attachment parts.

– Check that harnesses cannot come into contact with attachment parts.

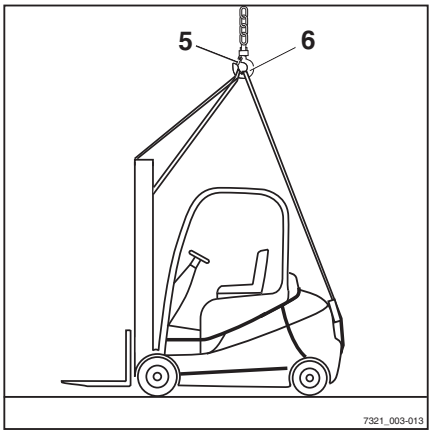

Loading the truck

⚠ DANGER

If the raised truck swings in an uncontrolled manner, it may crush people. There is a risk of fatal injury!

– Never walk or stand underneath suspended loads.

– Do not allow the truck to bump into anything whilst it is being lifted, or allow it to move in an uncontrolled manner.

– If necessary, hold the truck using guide ropes.

– Carefully lift the truck and set it down at the intended location.

Decommissioning

Shutting down and storing the truck

⚠ CAUTION

Component damage due to incorrect storage!

Storing the truck improperly or decommissioning the truck for more than two months will result in corrosion on the truck. If the truck is parked in an area with an ambient temperature of below -10°C for an extended period, the batteries will cool down. The electrolyte may freeze and damage the batteries.

– Implement the following measures before shutting down.

⚠ CAUTION

Risk of damage to the battery male connector when disconnecting!

If the battery male connector is disconnected while the key switch is switched on under load, an arc will be produced. The arc can damage the contacts and considerably shorten the service life of the contacts.

– Switch off the key switch.

– Only disconnect the battery male connector while the key switch is switched off.

⚠ CAUTION

Tyre deformation as a result of continuous loading on one side!

Keeping all wheels clear of the ground prevents permanent deformation of the tyres.

– Have the truck raised and jacked up by the authorised service centre.

⚠ CAUTION

Danger of damage from corrosion due to condensation on the truck!

Many plastic films and synthetic materials are watertight. Condensation water on the truck cannot escape through these covers.

– Do not use plastic film as this facilitates the formation of condensation water.

NOTE

Only store batteries that are fully charged.

Measures to be implemented before shutdown

- Store the truck in a dry, clean, frost-free and well-ventilated environment.
- Clean the truck thoroughly; see the chapter entitled "Cleaning".
- Lift the fork carriage to the stop several times.
- Tilt the lift mast forwards and backwards several times and move the attachment repeatedly, if an attachment is fitted.
- To relieve the strain on the load chains, lower the fork onto a suitable supporting surface, e.g. a pallet.
- Check the hydraulic oil level and top up if required.
- Apply a thin layer of oil or grease to all uncoated moving parts.
- Lubricate the truck.
- Oil joints and controls.
- Lubricate the battery cover interlock.
- Ensure that the key switch is switched off. Then disconnect the battery male connector.
- Check the battery condition, acid level and acid density.
- Service the battery.
- Spray all exposed electrical contacts with a suitable contact spray.
- Only have the truck raised and jacked up by the authorised service centre.
- Cover the truck with vapour-permeable material, such as cotton, in order to protect the truck against dust.
- If the truck will be shut down for longer periods, contact the authorised service centre to find out about additional courses of action.

Re-commissioning after shut-down

If the truck has been decommissioned for longer than six months, the truck must be carefully checked before being recommissioned. As with the yearly safety inspection, this check must also include all safety-related aspects of the truck.

– Thoroughly clean the truck.

– Oil joints and controls.

– Lubricate the lubrication points.

– Check the condition and the acid density of the battery. Charge the battery if necessary.

– Check the hydraulic oil for condensation water and replace if necessary.

– Have the same checks and tasks carried out by the authorised service centre that were carried out before initial commissioning.

– Carry out the checks and tasks that are to be performed before daily use.

– Recommission the truck.

During recommissioning, the following points in particular must be checked:

- Drive, controller, steering
- Brake system (service brake, parking brake, regenerative brake)
- Lifting system (lifting accessories, load chains, mounting)

NOTE

For further information, see the workshop manual for the truck and contact the authorised service centre.

5

Maintenance

Safety regulations for maintenance

General information

To prevent accidents during maintenance and repair work, all necessary safety measures must be taken, e.g.:

- Apply the parking brake.
- Turn off the key switch and remove the key.
- Disconnect the battery male connector.
- Ensure that the truck cannot move unintentionally or start up inadvertently.
- If required, have the truck jacked up by the authorised service centre.
- Have the raised fork carriage or the extended lift mast secured against accidental lowering by the authorised service centre.
- Insert an appropriately sized wooden beam as an abutment between the lift mast and the cab, and secure the lift mast to prevent it tilting backwards unintentionally.
- Observe the maximum lift height of the lift mast, and compare the dimensions from the technical data with the dimensions of the hall into which the truck is to be driven. These steps are taken to prevent a collision with the ceiling of the hall and to avoid any damage caused as a result.

Working on the hydraulic equipment

The hydraulic system must be depressurised prior to all work on the system.

Working on the electrical equipment

Work may only be performed on the electrical equipment of the truck when it is in a voltage-free state. Function checks, inspections and adjustments on energised parts must only be performed by trained and authorised persons, taking the necessary precautions into account.

Rings, metal bracelets etc. must be removed before working on electric components.

To prevent damage to electronic systems with electronic components, such as an electronic driving regulator or lift control, these components must be removed from the truck prior to the start of electric welding.

Work on the electrical system (e.g. connecting a radio, additional headlights etc.) is only permitted with approval from the authorised service centre.

Safety devices

After maintenance and repair work, all safety devices must be reinstalled and tested for operational reliability.

Set values

The device-dependent set values must be observed when making repairs and when changing hydraulic and electrical components. These are listed in the appropriate sections.

Lifting and jacking up

⚠ DANGER

There is a risk to life if the truck tips over!

If not raised and jacked up properly, the truck may tip over and fall off. Only the hoists specified in the workshop manual for this truck are allowed and are tested for the necessary safety and load capacity.

- Only have the truck raised and jacked up by the authorised service centre.
- Only jack the truck up at the points specified in the workshop manual.

The truck must be raised and jacked up for various types of maintenance work. The authorised service centre must be informed that this is to take place. Safe handling of the truck and the corresponding hoists is described in the truck's workshop manual.

Working at the front of the truck

⚠ DANGER

Risk of accident!

If the lift mast or fork carriage is raised, no work may be performed on the lift mast or at the front of the truck unless the following safety measures are observed.

– When securing, only use chains with sufficient load-bearing capacity.

– Contact the authorised service centre.

⚠ CAUTION

Possibility of damage to the ceiling!

– Note the maximum lift height of the lift mast.

Securing the lift mast against tilting backwards

A hardwood beam with a cross-section of 120 x 120 mm is required. The length of the hardwood beam must approximately correspond to the width of the fork carriage (b3). To avoid impact injuries, the hardwood beam must not protrude beyond the outer contour of the truck. A maximum length matching the total width (b1) of the truck is recommended.

– Obtain the dimensions (b1) and (b3) from the corresponding VDI datasheet.

– Clamp the hardwood beam (1) between the driver protection structure (2) and the lift mast (3). ▷

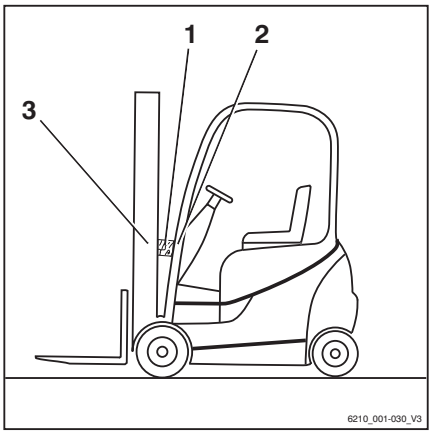

Removing the lift mast

⚠ DANGER

Risk of accident!

This work must only be performed by an authorised service technician.

– Arrange for an authorised service technician to remove the lift mast.

Securing the lift mast against falling off

⚠ DANGER

Risk of accident!

This work must only be performed by an authorised service technician.

– Arrange for an authorised service technician to secure the lift mast.

General maintenance information

Personnel qualifications

Only qualified and authorised personnel are allowed to perform maintenance work. Regular safety checks and checks after unusual incidents must be performed by a competent person. The competent person must conduct their evaluation and assessment from a safety standpoint, unaffected by operational and economic conditions. The competent person must have sufficient knowledge and experience to be able to assess the condition of a truck and the effectiveness of the protective devices in accordance with technical conventions and the principles for testing trucks.

Maintenance personnel for batteries

Batteries must only be charged, serviced, and replaced by personnel who have received appropriate training in accordance with the instructions from the manufacturers of the battery, battery charger and truck.

– Follow the handling instructions for the battery and the operating instructions for the battery charger.

Maintenance work without special qualifications

Simple maintenance work, such as checking the hydraulic oil level, may be carried out by untrained personnel. A qualification of the type held by a competent person is not required to carry out this work. The required tasks are described in the chapter entitled "Preserving operational readiness".

Information for carrying out maintenance

This section contains all information required to determine when the truck needs maintenance. Carry out maintenance work within the time limits according to the hour meter and using the following maintenance check lists. This

is the only way to ensure that the truck remains ready for operation and provides optimal performance and service life. It is also a precondition for any warranty claims.

Maintenance timeframe

▷

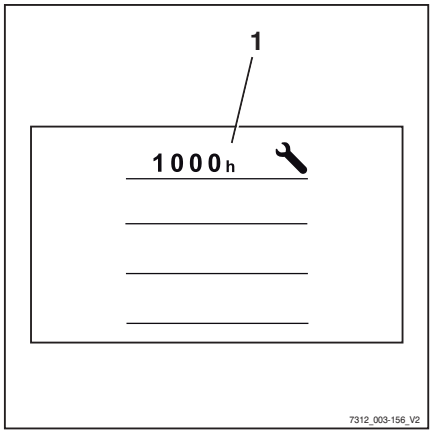

– Carry out maintenance work on the truck in accordance with the "Service in" display (1).

– The maintenance check lists indicate the maintenance work that is due.

The intervals are defined for standard use. Shorter maintenance intervals can be defined in consultation with the operating company, depending on the application conditions of the truck.

The following factors may necessitate shorter maintenance intervals:

- Contaminated, poor quality roads
- Dusty or salty air
- High levels of air humidity
- Extremely high or low ambient temperatures, or extreme changes in temperature
- Multi-shift operation with a high duty cycle
- Specific national regulations for the truck or individual components

Maintenance - 1000 hours/annually

At operating hours										Carried out	
1000		2000		4000		5000		7000			
8000		10000		11000		13000		14000		✓	✗
Chassis, bodywork and fittings											
Check the chassis for cracks											
Check the overhead guard/cab and panes of glass for damage											
Check the controls, switches and joints for damage, and apply grease and oil											
Check the driver's seat for correct function and for damage											
Check the driver restraint system for correct function and for damage, and clean											
Check the battery door and interlock for correct function and for damage											
Check the indexing bolt for the battery pallet lock for damage											
Check the signal horn											
Variant: Check the dual pedal for damage and correct function, and lubricate											
Tyres and wheels											
Check the tyres for wear and check the air pressure if necessary											
Check the wheels for damage and check the tightening torques.											
Power unit											
Drive axle: Check mounting, check for leaks, clean cooling fins											
Check the oil level in the drive wheel unit											
Change gearbox oil (once after 1000 hours)											
Steering											
Check the steering system for correct function and for leaks											
Check that the steering wheel is securely attached and check the turning handle for damage											
Steering axle: Check that the steering axle is securely attached, check for leaks and apply grease											
Check the steering stop											
Brake											
Check the condition of all mechanical brake parts and check for correct function											
Check the brake valve for correct function and leaks											
Check the service brake for correct function											
Check the parking brake for correct function											
Electrical system											

At operating hours										Carried out	
1000		2000		4000		5000		7000			
8000		10000		11000		13000		14000		✓	✖
Check all power cable connections											
Check the contacts of the main contactors.											
Check the switches, transmitters and sensors for correct function											
Check the lighting and indicator lights											
Cooling system (power electronics and hydraulics)											
Check the coolant level and quality											
Check for correct function and leaks											
Clean the radiator, radiator grilles, exhaust air funnel and water outlet											
Battery and accessories											
Check battery for damage and acid density; observe manufacturer's maintenance instructions											
Electrolyte circulation: replace the non-return valve											
Check the battery pallet for damage.											
Check the appliance plug and truck harness for damage.											
Check the battery male connector and battery harness for damage											
Hydraulics											
Check the condition of the hydraulic system, and check for correct function and leaks											
Check the hydraulics blocking function (ISO valve)											
Check the oil level											
Lift mast											
Check the mast bearings for damage, lubricate them, and check the tightening torque											
Check the mast profiles for damage and wear. Lubricate the mast profiles											
Check the guide in the lower (load reversal) mast profile for damage and for wear											
Check the load chains for damage and wear. Adjust and lubricate the load chains											
Check the lift cylinders and connections for damage and leaks											
Check the guide pulleys for damage and wear											
Check the support rollers and chain rollers for damage and wear											
Check the play between the fork carriage stop and the run-out barrier											
Check the tilt cylinders and connections for damage and leaks											

At operating hours										Carried out	
1000		2000		4000		5000		7000			
8000		10000		11000		13000		14000		✓	✗
Check the fork carriage for damage and wear											
Check the fork arm interlock for damage and correct function											
Check the fork arms for wear and deformation											
Check that there is a safety screw on the fork carriage or on the attachment											
Check the auxiliary hydraulics hoses for damage											
Special equipment											
Heating system: Replace the fresh air filter											
Heating system: Replace the recirculated air filter											
Check the heating system for damage; observe the manufacturer's maintenance instructions											
Check the attachments for wear and damage; observe the manufacturer's maintenance instructions											
Check the trailer coupling for wear and damage; observe the manufacturer's maintenance instructions											
General											
Read out the error numbers and delete the list											
Reset the maintenance interval											
Check the labelling to ensure it is complete											
Perform a test drive											

Maintenance - 3000 hours/every two years

At operating hours										Carried out	
3000		6000		9000		12000		15000		✓	✗
Note											
Perform all 1000-hour maintenance work.											
Power unit											
Change the gearbox oil											
Replace the bleeder screws on the drive wheel units											
Cooling system (power electronics and hydraulics)											
Replace the coolant (every 2 years)											
Hydraulics											
Change the hydraulic oil											
Replace the return line filter and the breather filter											
Replace the high-pressure filter											
Variant: Replace the accumulator											

Ordering spare parts and wearing parts

Spare parts are provided by our spare parts service department. The information required for ordering parts can be found in the spare parts list.

Only use spare parts as per the manufacturer's instructions. The use of unapproved spare parts can result in an increased risk of accidents due to insufficient quality or incorrect assignment. Anyone using unapproved spare parts shall assume unlimited liability in the event of damage or harm.

Quality and quantity of the required operating materials

Only the operating materials specified in the maintenance data table may be used.

– The required consumables and lubricants can be found in the maintenance data table.

Oil and grease types of a different quality must not be mixed. This negatively affects the lubricity. If a change between different manufacturers cannot be avoided, drain the old oil thoroughly.

Before carrying out lubricating work, filter changes or any work on the hydraulic system, carefully clean the area around the part involved.

When topping up working materials, use only clean containers!

Lubrication plan

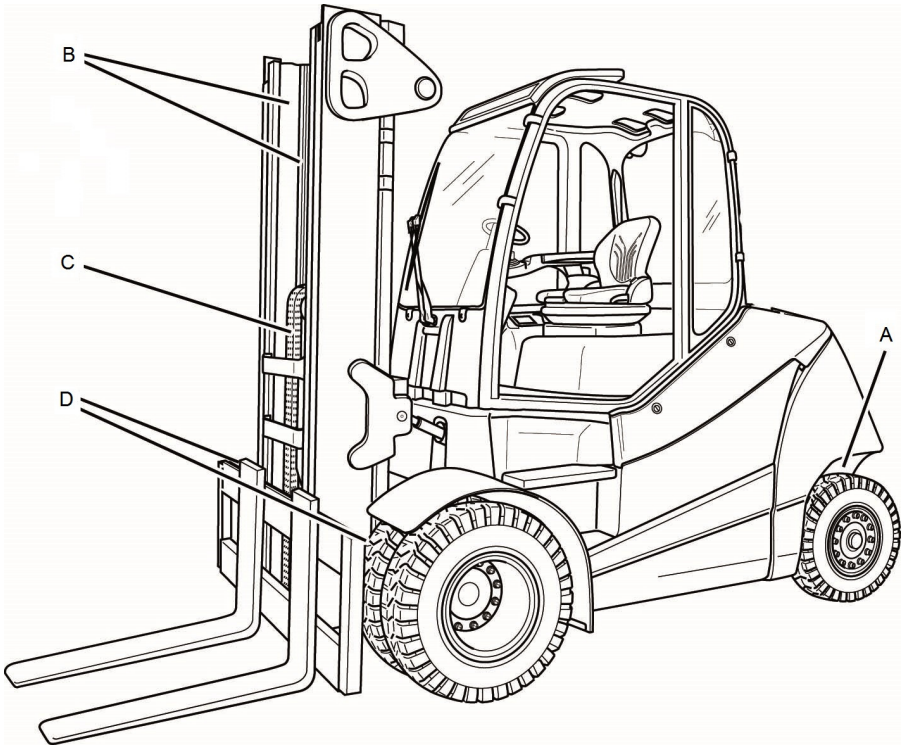

Code[1]	Lubrication point
(A)	Four lubricating nipples on each side of the steering axle for the axle stub bearing and track rod arm
(B)	Sliding surfaces on the lift mast
(C)	Load chains
(D)	One lubricating nipple on each of the two lift mast bearings

[1]See the following chapter, "Maintenance data table", under this Code.
for the respective lubricant specificationThis lubrication plan describes the series-production truck with standard equipment. For maintenance points on variant trucks, see the relevant chapter and/or instructions provided by the manufacturer.

Maintenance data table

General lubrication points

Code	Unit	Operating materials	Specifications	Dimension
	Lubrication	High-pressure grease	ID no. 0147873	As required

Battery

Code	Unit	Operating materials	Specifications	Dimension
	System filling	Distilled water		As required
	Insulation resistance		DIN 43539 VDE 0510	For further information, refer to the workshop manual for the truck in question.

Electrical system

Code	Unit	Operating materials	Specifications	Dimension
	Insulation resistance		DIN EN 1175 VDE 0117	For further information, refer to the workshop manual for the truck in question.

Controls/joints

Code	Unit	Operating materials	Specifications	Dimension
	Lubrication	High-pressure grease	ID no. 0147873	As required
		Oil	SAE 80 MIL-L2105 API-GL4	As required
	Dual-pedal operation	High-pressure grease	ID no. 0147873	As required

Hydraulic system

Code	Unit	Operating materials	Specifications	Dimension
	System filling	Hydraulic oil	HVLP 68 or ISO VG 68 DIN 51524, part 2	Max. 125 l
		Hydraulic oil for the food industry (variant)	USDA H1 DIN 51524	

Tyres

Code	Unit	Operating materials	Specifications	Dimension
	Superelastic tyres	Minimum tread depth		Min. 1.6 mm
		Wear limit		To wear mark

AL80-01 steering axle

Code	Unit	Operating materials	Specifications	Dimension
	Wheel nuts/screws	Torque wrench	DIN 74361-A 20-10 A2C	For further information, refer to the workshop manual for the truck in question.
(A)	Axle stub bearing, spherical bearing	Multi-purpose grease	Aralub 4320 DIN 51825-KPF2N20 ID no. 0148659	Fill with grease until a small amount of fresh grease escapes
(A)	Wheel bearing, rotary shaft seal of wheel bearing	Multi-purpose grease	DIN 51825-KPF2 K-30, lithium-saponified ID no. 0163488	Fill with grease

AE80-02 drive axle

Code	Unit	Operating materials	Specifications	Dimension
	System contents incl. service brake	Gearbox oil	SAE 80W-90 API-GL4	For further information, refer to the workshop manual for the truck in question.
			ARAL EP Plus 80W-90 BP Energear HT 80W-90 Castrol Syntrax Universal 80W-90	
	Wheel nuts/screws	Torque wrench	DIN 74361-A 20-10 A2C	For further information, refer to the workshop manual for the truck in question.

Lift mast

Code	Unit	Operating materials	Specifications	Dimension
(B)	Lubrication	High-pressure grease	ID no. 0147873	As required
	Stop	Play		Min. 2 mm

Code	Unit	Operating materials	Specifications	Dimension
	Screws for the lift mast bearing	Torque wrench	Cylinder head bolt M24x90-12.9 ISO 4762	For further information, refer to the workshop manual for the truck in question.
(D)	Lift mast bearing	Grease	Aralub 4320 DIN 51825-KPF2N20 ID no. 0148659	Fill with grease until a small amount of fresh grease escapes

Load chains

Code	Unit	Operating materials	Specifications	Dimension
(C)	Lubrication	High-load chain spray	Fully synthetic Temperature range: -35°C to +250°C ID no. 0156428	As required

Cooling system (power electronics/hydraulic oil)

Code	Unit	Operating materials	Specifications	Dimension
	System filling	Corrosion inhibitor and cooling system protecting agent/ water	40% coolant/60% water, for frost protection down to -25 C VW G12 plus (violet) TL-VW 774 F	Approx. 4.5 l

Washer system

Code	Unit	Operating materials	Specifications	Dimension
	System filling	Screen wash	Winter, ID no. 172566	As required

Providing access to maintenance points

Removing and attaching the left side cover

Removing the cover

▷

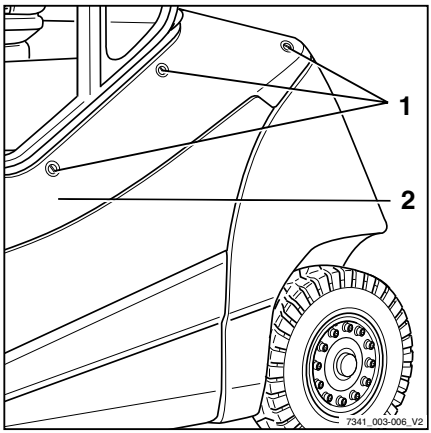

– Release the quick release clamps (1) with a 1/4 revolution.
– Remove the cover (2) and put carefully aside.

Attaching the cover

– Carefully position the cover (2).
– Lock the quick release clamps (1) with a 1/4 turn.

Installing and removing the bottom plate

Removing the bottom plate.

⚠ CAUTION

Risk of short circuit if cables are damaged!

– Check the connecting cables for damage.
– When removing and reinstalling the bottom plate, make sure that the connecting cables are not damaged.

⚠ CAUTION

Placing the bottom plate on top of the rubber edging strip can cause damage to the rubber edging strip.

– Do not place the bottom plate on top of the rubber edging strip.

NOTE

The bottom plate has a recess that the operator can insert his fingers into to lift it. The recess is beneath the rubber mat.

NOTE

The accelerator pedal is attached to the bottom plate and is removed with this also. The connecting plug for the accelerator is located underneath the bottom plate.

– Open the bonnet.

– Remove the rubber mat.

– Grasp the recess (3) in the bottom plate (2). ▷

– Raise the bottom plate slightly.

– Pull out the bottom plate under the brake pedal and set it down upright.

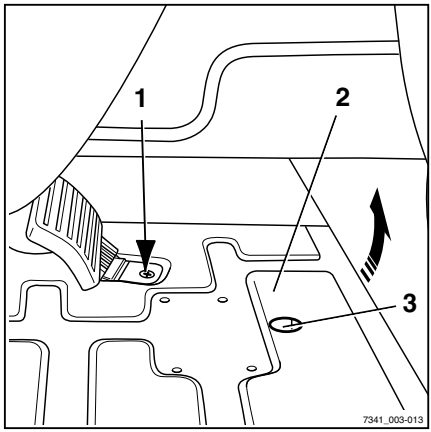

– Disconnect the plug connector (1) on the accelerator pedal. ▷

– Lift bottom plate and place in a safe location.

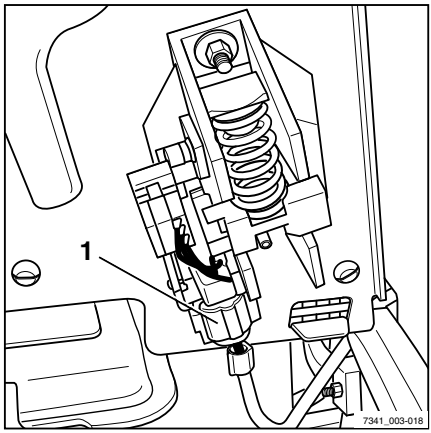

Installing the bottom plate

WARNING

Risk of crushing between bottom plate and frame edge!

If limbs or objects are between the bottom plate and frame edge when the bottom plate is closed, they can be crushed.

– When closing the bottom plate, ensure that there is nothing between the bottom plate and the edge of the chassis.

CAUTION

Placing the bottom plate on top of the rubber edging strip can cause damage to the rubber edging strip.

– Do not place the bottom plate on top of the rubber edging strip.

- Set down the bottom plate upright in the footwell.
- Connect the connection assembly to the accelerator pedal.
- Position the bottom plate at the front.
- Carefully guide the bottom plate down and close.
- Insert the rubber mat.
- Close the bonnet.

Opening/closing the front right cover

Opening the cover

⚠ WARNING

Risk of injury through crushing if the cover falls down!

The cover is equipped with a gas spring that holds the cover in the open position unless there is any other load on it, e.g. heavy objects, strong winds or other persons.

- There must be no objects on the cover when you open it.
- Make sure that the cover is not being pushed down by strong winds or other persons.

- Release the quick release clamp (3) with a 1/4 revolution.
- Swivel the cover (2) upwards.

The cover is held in the opened position by the gas spring.

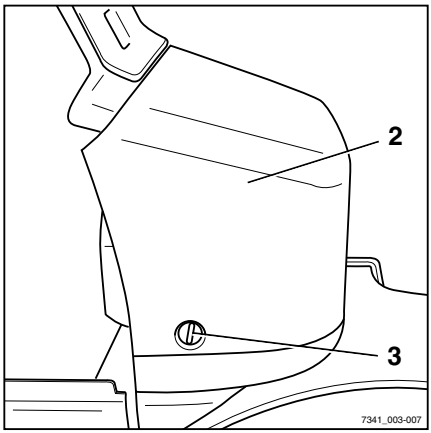

Closing the cover

⚠ WARNING

Risk of crushing between cover and frame edge!

If limbs or objects are between the cover and frame edge when the cover is closed, they can be crushed.

- Make sure when you close the cover that there is nothing between the cover and the frame edge.

– Swivel the cover (2) downwards. ▷
– Lock the quick release clamp (3) with a 1/4 revolution.

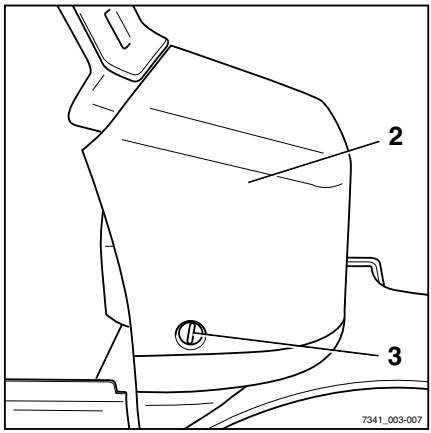

Removing and attaching the rear cover ▷

⚠ CAUTION

Risk of component damage!

If a load is placed on the exhaust air grille (2), this can lead to deformation or cause the exhaust air grille to come away.

– Do not lean or step on the exhaust air grille.
– Do not place any objects on the exhaust air grille.

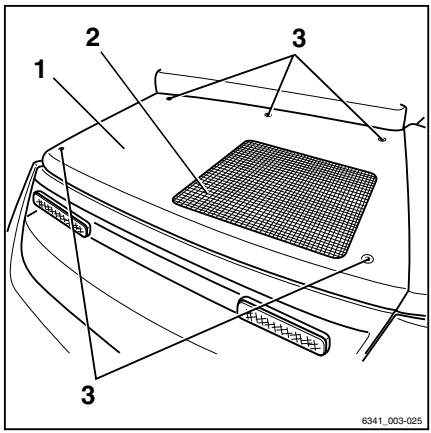

Removing the rear cover

– Unscrew five screws (3) from the rear cover (1).
– Remove the rear cover (1).

Attaching the rear cover

– Make sure that the top rubber seal of the exhaust air funnel is properly secured.
– Attach the rear cover (1).
– Screw the rear cover into place with five screws (3).

Preserving operational readiness

Checking the coolant level

⚠ WARNING

Risk of scalding due to hot coolant!

The cooling system is pressurised! Opening the cooling fluid tank may result in hot cooling fluid leaking out. Only open the cooling fluid tank when the cooling system is cool.

– Switch off the truck and allow it to cool down.
– Do not open the coolant reservoir until the engine has cooled down.

⚠ CAUTION

Risk of overheating!

A cooling system protects the power electronics and the hydraulic oil against overheating. Loss of coolant from leaking coolant hoses or from the radiator reduces the cooling capacity and can cause components to overheat. If the cooling fluid level is low, this indicates leakages in the cooling system.

– Check the cooling system for leak tightness.

– Remove the cover on the left-hand side.
– Pull the locking pin (1) on the coolant reservoir (2) upwards. ▷
– Pull out the coolant reservoir under the rear cover.
– Check the coolant level.

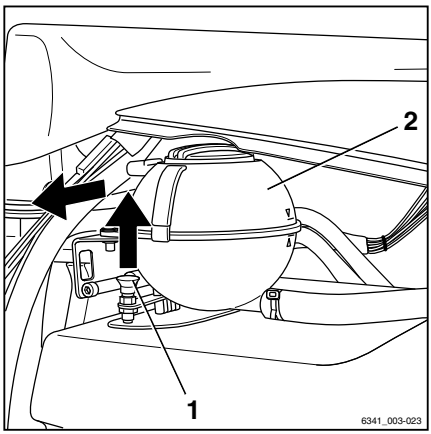

The cooling fluid level must be between the upper marking (4) and the lower marking (5).

– If the cooling fluid level is below the lower marking, top up the cooling fluid to no higher than the upper marking.
– Make sure that the reservoir cap (3) is screwed on and tightly sealed.
– Push the coolant reservoir (2) back in until the locking pin (1) engages.
– Fit the cover on the left-hand side.

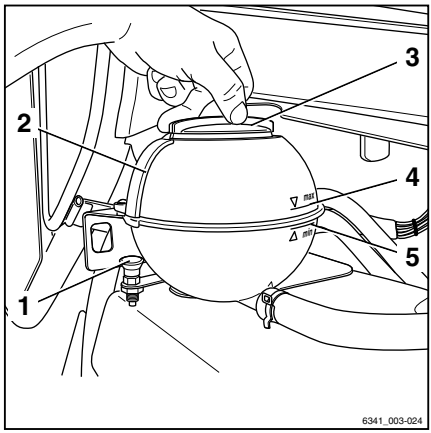

Topping up cooling fluid and checking coolant content

⚠ WARNING

Risk of scalding due to hot cooling fluid!

The cooling system is pressurised! Opening the cooling fluid tank may result in hot cooling fluid leaking out. Only open the cooling fluid tank when the cooling system is cool.

– Switch off the truck and leave it to cool down.
– Do not open the cooling fluid tank until the truck has cooled down.

⚠ WARNING

Coolant and cooling fluid can pose a hazard to health and the environment!

– Observe the safety regulations set out in the chapter entitled "Coolant and cooling fluid".

– Remove the cover on the left-hand side.

– Pull up the locking pin (1) on the cooling fluid tank (2). ▷

– Pull out the cooling fluid tank from under the rear cover.

– Slowly open the tank cap (3) and release the over pressure.

– Check the concentration of the coolant.

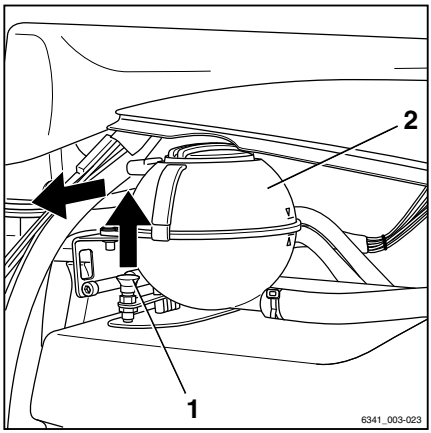

Concentration of the coolant

⚠ CAUTION

Risk of corrosion!

The coolant percentage must be at least 40%, even if frost protection is not needed in warmer climates.

If an increased level of frost protection is required for climatic reasons, the coolant percentage can be increased to 60%.

The coolant percentage must not exceed 60%. If the coolant percentage is above 60%, the frost protection is reduced and the cooling effect is diminished.

– Only use clean, softened water for the water percentage.

⚠ CAUTION

Coolant with a different specification must not be mixed in!

– Only use coolant as set out in the maintenance data table to top up the tank.

Frost protection up to °C	Water percentage %	Coolant percentage %
-25	60	40
-30	55	45
-35	50	50
-40	40	60

– Observe the filling quantity of the cooling system; see the chapter entitled "Maintenance data table".

The cooling fluid level must be between the upper marking (4) and the lower marking (5).

- Check the cooling fluid level.
- If the cooling fluid level is below the lower marking, top up the cooling fluid to no higher than the upper marking
- Screw the tank cap (3) back on tightly.
- Slide the coolant tank (2) back into position until the locking pin (1) engages.
- Fit the cover on the left-hand side.

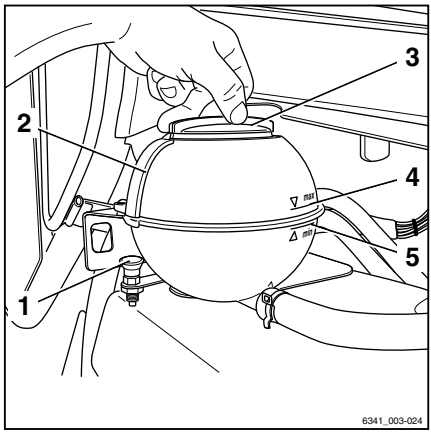

Cleaning the radiator and checking the radiator for leak tightness

⚠ WARNING

Risk of burns due to hot components!

Cooling system components can be so hot that direct contact may burn the skin.

– Ensure that the cooling system has cooled down.
– Do not grasp or touch hot components.
– In the event of burns, seek first aid immediately.

⚠ CAUTION

Risk of component damage due to overheating!

A cooling system protects the power electronics and the hydraulic oil against overheating. Loss of coolant from leaking coolant hoses or from the radiator reduces the cooling capacity and can cause components to overheat. If the cooling fluid level is low, this indicates a leak in the cooling system.

– Check the cooling system for leak tightness.

– Park the truck securely.
– Remove the cover on the left-hand side.
– Check the cooling fluid level.
– Remove the rear cover and clean the exhaust air grille.
– Clean the radiator grille (1), the exhaust air funnel (2) and the water drain (3) using a suitable brush or blow them out using compressed air (max. 2 bar).
– To clean the radiator behind (4), unscrew the radiator grille (1) at the screw joints (5) and remove the radiator grille.
– Clean the radiator fins.
– Check the radiator and the cooling fluid hoses for leak tightness.
– Tighten clips at leaking hose connections.
– Check whether the leakage has been eliminated. If not, notify the authorised service centre.
– Fit the radiator grille and tightly screw on the radiator grille.

▷

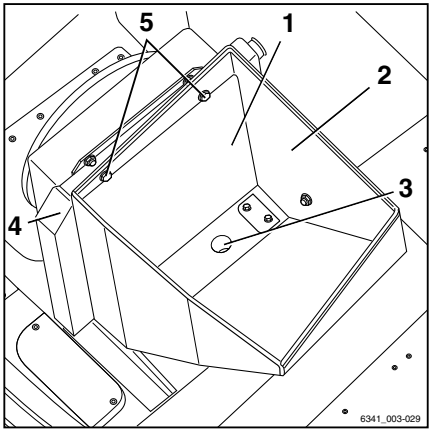

NOTE

Make sure that the radiator grille is screwed tightly into place.

– Fit the rear cover.

– Fit the cover on the left-hand side.

Checking the battery condition, acid level and acid density

– Remove the battery from the truck.

⚠ DANGER

Risk to life!

– Observe the chapter entitled "Safety regulations when handling the battery".

⚠ WARNING

The electrolyte (diluted sulphuric acid) is poisonous and corrosive!

– Observe safety regulations for handling battery acid; see the chapter entitled "Battery acid".

– Wear personal protective equipment (rubber gloves, apron and protection goggles).

– Rinse away spilt battery acid immediately using plenty of water!

⚠ CAUTION

Damage to the battery possible!

– Follow the information in the operating instructions for the battery.

The battery must be removed for servicing; if necessary, change the truck battery.

– Keep away from open flames and do not smoke.

– Always ensure adequate ventilation in the vicinity.

– Expose the surfaces of the battery cells.

– Do not place any metal objects on the battery.

– Inspect battery for cracked housing, raised plates and acid leaks.

– Have defective batteries repaired by the authorised service centre.

– Open filler cap (1) and check the acid level. ▷

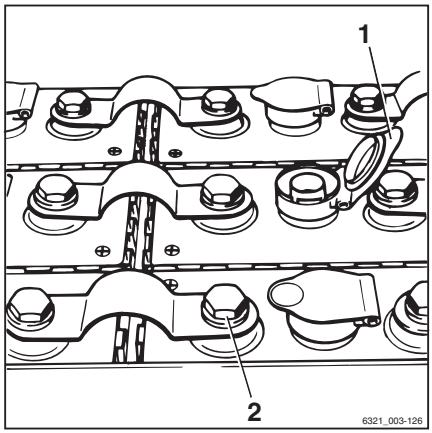

For batteries with "caged cell plugs", the liquid must reach the bottom of the cage.

For batteries without "caged cell plugs", the liquid must reach a height of approx. 10 to 15 mm above the lead plates.

– Top up low fluid with distilled water only.

– Immediately rinse away any spilled battery acid with plenty of water.

– Clean the battery cell cover and dry if necessary.

– Remove any oxidation residue on the battery terminals and battery terminal clips and grease them with acid-free grease.

– Tighten the battery-terminal clips (2) to a torque of 22 - 25 Nm (depending on the size of the terminal screws used).

– Check the acid density using an acid siphon.

After charging, this value must lie between 1.28 - 1.30 kg/l.

For a discharged battery, the acid density must **not be less** than 1.14 kg/l.

– Close the filler cap (1) again.

When using PowerPlusLife® batteries:

– Make sure that when cleaning or when filling up with liquid none of the liquid flows into the cooling channels.

– Check the cooling air inlet and cooling air outlet for dirt and remove any dirt that is present.

Changing the heating system fresh air filter

The fresh air filter for the heating system is on the right on the exterior of the cab.

– Loosen the quick-release clamp (1) by turning it and remove the cover (2). ▷

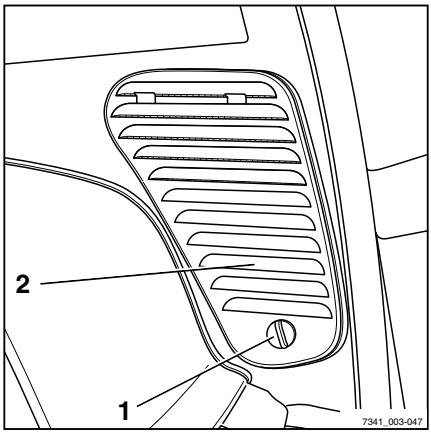

– Grasp the filter insert (3) at the finger opening (4) and remove it completely from the filter housing. ▷

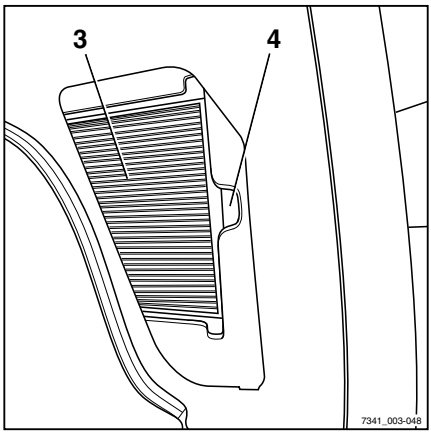

– Check the filter insert for contamination and beat out.

NOTE

Replace the filter insert when it is clearly grey, but at least every two months.

– Remove pollution present in the filter housing and fresh-air inlet.

– Insert the filter insert back into the filter housing.

– Ensure that the filter insert sits correctly and precisely in the filter housing.

– Attach the cover and lock the quick-release clamp.

Lubricating the joints and controls

– Oil or grease other bearings and joints according to the maintenance data table.

- Driver's seat guide
- In the cab, lubricate door hinges at the lubricating nipple (variant)

- Battery door hinges or battery cover hinges
- Lubricate shafts and joints in dual-pedal operation (variant)

Maintaining the seat belt

⚠ DANGER

There is a risk to life if the seat belt fails during an accident!

If the seat belt is faulty, it may tear or open during an accident and no longer keep the driver in the driver's seat. The driver may therefore be hurled against the truck components or out of the truck.

– Ensure operational reliability by continually testing.
– Do not use a truck with a defective seat belt.
– Only have a defective belt replaced by your service centre.
– Only use genuine spare parts.
– Do not make any changes to the belt.

NOTE

Carry out the following checks on a regular basis (monthly). In the case of significant strain, a daily check is necessary.

Checking the seat belt

– Pull out the belt (3) completely and check for wear. ▷

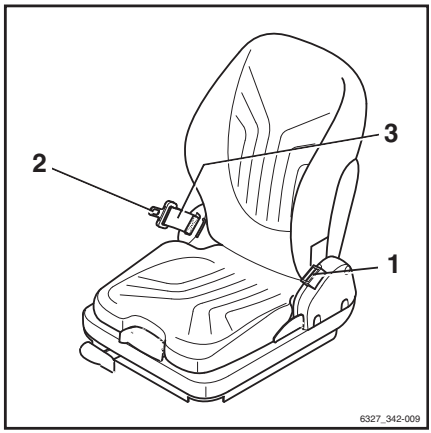

The belt must not be frayed or cut. The stitching must not be loose.

– Check whether the belt is dirty.
– Check whether parts are worn or damaged, including the attachment points.
– Check the buckle (1) to ensure that it locks in properly.

When the belt tongue (2) is inserted, the belt must be held securely.

– The belt tongue (2) must release when the red button (4) is pressed.

– The automatic blocking mechanism must be tested at least once a year:

– Park the forklift truck on level ground.

– Pull out the belt with a jerk.

The automatic blocking mechanism must block extension of the belt.

– Tilt the seat at least 30 ° (if necessary, remove the seat).

– Slowly extend the belt.

The automatic blocking mechanism must block extension of the belt.

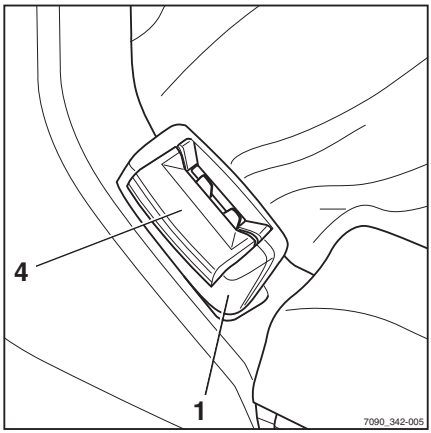

Cleaning the seat belt

– Clean the seat belt as necessary, but without using chemical cleaning materials (a brush will suffice).

Replacement after an accident

As a rule, the seat belt must be changed after an accident.

Checking the driver's seat

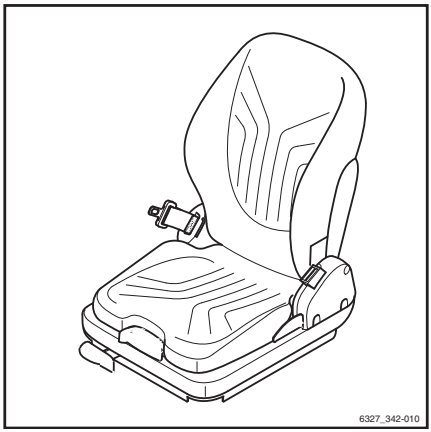

⚠ WARNING

Risk of injury!

– After an accident, check the driver's seat with attached restraining belt and fastening.

– Check the controls for correct operation.

– Check the condition of the seat (e.g. wear on the upholstery) and secure fastening to the hood.

⚠ WARNING

Risk of injury!

– Have the seat repaired by the service centre if you identify any damage during the checks.

Checking the door latch

– Inspect the condition of the catch bolt and check for wear.

– Check the lock mechanism for easy operation.

Replacing the recirculated air filter for the heating system

The recirculated air filter for the heating system is located on the right-hand side of the cab, underneath the heating system panelling (1).

– Unscrew the screws (2) and remove the heating system panelling.

– Completely remove the filter mat (3) from the filter housing.

– Check the filter mat for contamination and beat out.

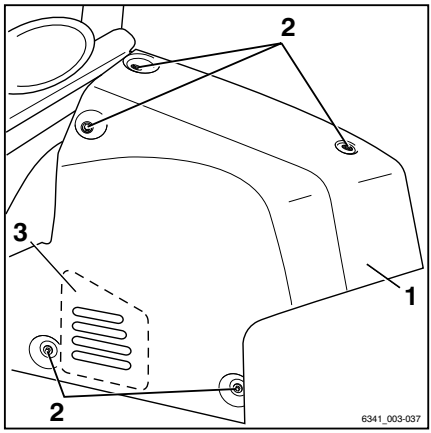

NOTE

Replace the filter mat when it is clearly grey, but at least every two months.

– Remove any dirt that has collected in the filter housing and recirculated-air inlet.

– Re-insert the filter mat into the filter housing.

– Make sure that the filter mat sits correctly and accurately in the filter housing.

– Attach the heating system panelling and secure tightly in place using the screws.

Servicing wheels and tyres

⚠ WARNING

Risk of accident!

Uneven wear reduces the stability of the truck and increases the braking distance. The level of wear exhibited by tyres on the same axle must be approximately the same.

– Worn or damaged tyres (left or right) must be replaced immediately.
– When changing wheels or tyres, ensure that this does not cause the truck to tilt to one side (e.g. always replace right-hand and left-hand wheels at the same time).
– Changes must only be made following consultation with the manufacturer.

⚠ WARNING

Risk to stability!

Tyre quality affects the stability of the truck. There is a risk of tipping!

When using pneumatic tyres or solid rubber tyres, rim wheel parts must never be changed and rim wheel parts from different manufacturers must not be mixed.

– Obtain approval from the truck manufacturer before using a different type of tyre or a different tyre manufacturer.

Checking condition and wear of the tyres

Superelastic tyres (variant)

– Check the remaining distance between the tyre tread and the (60 J) wear mark.

Super-elastic tyres (variant) can be worn down to the (60 J) wear mark.

– Remove any foreign bodies embedded in the tyre.

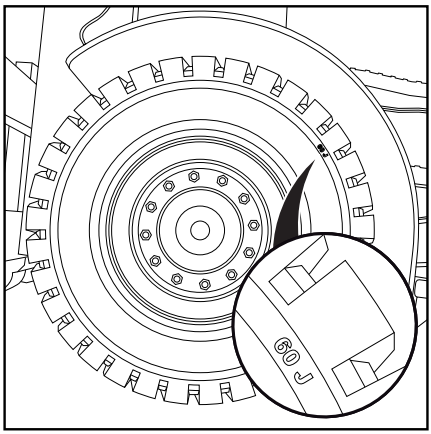

Pneumatic tyres (variant)

▷

– Check the tread depth on all four tyres.

The tread depth for pneumatic tyres (variant) must be **at least 1.6 mm** at every point on the tread. If the tread is worn down to the wear mark (2) at any point on the tyre, replace the tyres on one axle.

– Remove any foreign bodies embedded in the tyre.

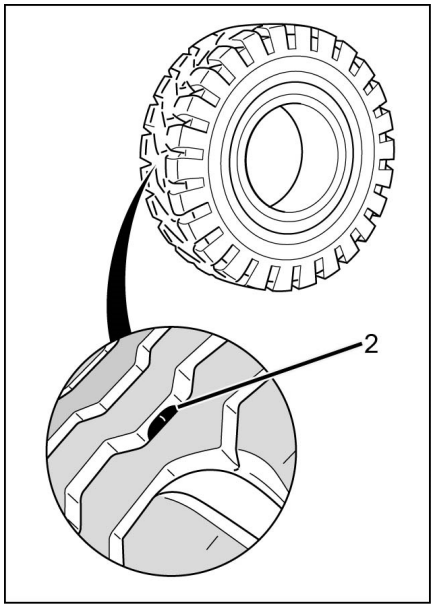

Checking the air pressure

▷

NOTE

The correct air pressure for pneumatic tyres (variant) is determined by the type of tyre used. The air pressure measured must correspond to the manufacturer's information.

– Observe the air pressure value indicated on the adhesive label (1) on the truck.

– Check the air pressure of all four tyres and compare with the air pressure values stated on the adhesive labels.

– Add or release air as required if the air pressure deviates from the values stated.

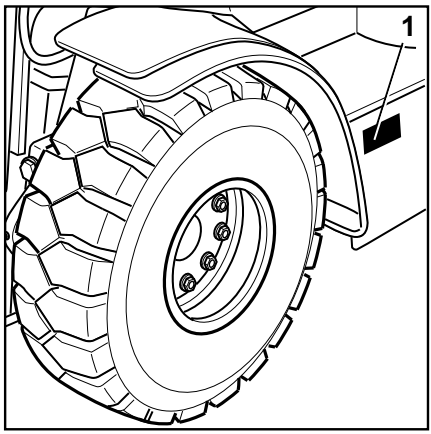

Checking wheel fastenings

▷

- Check that all wheel fastenings (4) are securely fastened and retighten as necessary.
- Observe the relevant torques; see section entitled "Maintenance data table".

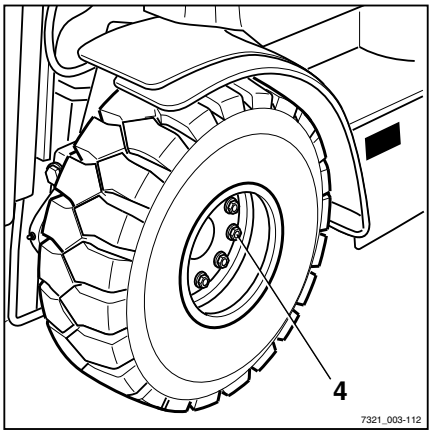

Replacing the fuses

⚠ DANGER

Risk of fire and risk of injury!

The truck must be de-energised before any work is carried out on the electrical system. Electric shocks can result in injuries and cause fires in the electrical system. There is also a risk of fire if fuses are bridged or repaired. Fuses with the wrong nominal current can cause short circuits.

- Park the truck securely and de-energise.
- Do not bridge or repair fuses.
- Use only fuses with the prescribed nominal current, see the chapter entitled "Fuse assignment".
- See the chapter entitled "Working on the electrical equipment".

NOTE

The electrical fuses for the truck are located in two separate fuse boxes.

Front fuse box
Power distribution unit and 80-V technology

The fuses for the power distribution unit and the 80-V consumers are located in the front fuse box (1).

- De-energise the truck.
- Determine the cause of the short circuit or overload and eliminate it. Notify the authorised service centre as necessary.
- Open the front right cover.

▷

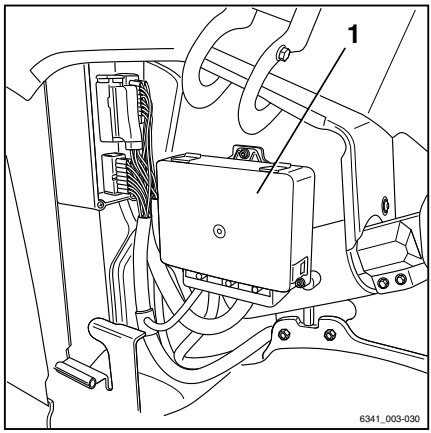

- Open the cover fastenings (1) and remove the cover.
- Replace the defective fuse with nominal current according to "Fuse assignment - front fuse box".
- Close the cover to secure the fuse box.
- Close the front right cover.
- Perform a function check. If the error persists or if the fuse is still defective, notify your authorised service centre.

▷

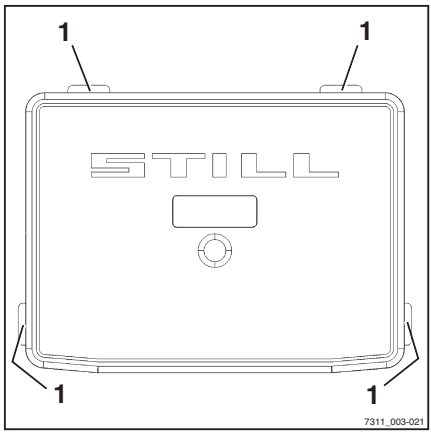

Rear fuse box 12-V technology

The fuses for the 12-V consumers are located in the rear fuse box (1).

– De-energise the truck.

– Determine the cause of the short circuit or overload and eliminate it. Notify the authorised service centre as necessary.

– Remove the left side cover.

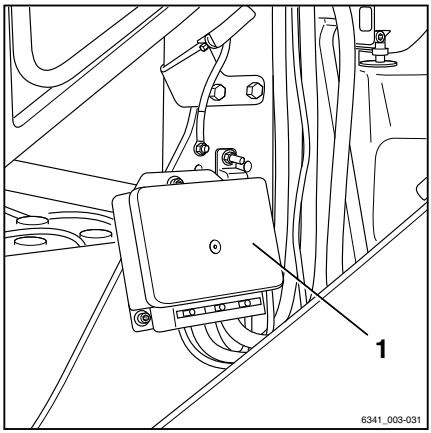

– Open the cover fastenings (1) and remove the cover.

– Replace the defective fuse with nominal current according to "Fuse assignment - rear fuse box".

– Close the cover to secure the fuse box.

– Attach the left side cover.

– Perform a function check. If the error persists or if the fuse is still defective, notify your authorised service centre.

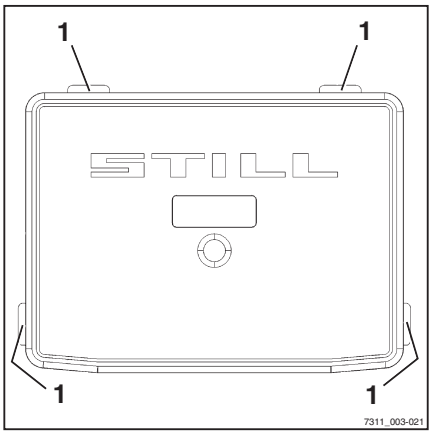

Checking the hydraulic oil level

⚠ CAUTION

Hydraulic oils are hazardous to health and are pressurised during operation.

– Note the safety regulations in the "Hydraulic fluid" chapter.

– Park the truck securely.

– Remove the left side cover.

– Unscrew breather filter (1).

▷

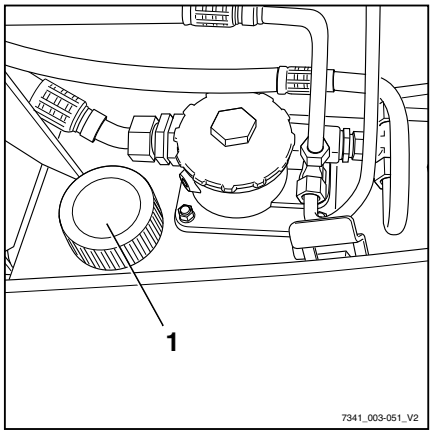

The lower mark, (1) or (2), indicates the minimum filling level. The top mark, (max), indicates the maximum filling quantity.

The lower mark that is applicable for the specific truck depends on the lift mast, the relevant lift height (see table below) and the resulting filling quantities.

▷

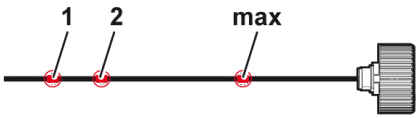

Lower mark	Lift height [mm]			
	6 t		7 t/8 t	
	Telescopic	Triplex	Telescopic	Triplex
1	3550 - 6849	-	3550 - 5249	4205 - 4654
	6850 - 8449	4770 - 5819	5250 - 6449	4655 - 5704
2	8450 - 8850	5820 - 9270	6450 - 8850	5705 - 9755

– Determine which lift mast is fitted to the truck.

– Use the table to determine which lower mark, (1) or (2), is applicable.

– Check the oil level on the oil dipstick.

The oil level must be between the lower mark, (1) or (2), and the top mark, (max).

If the oil level is too low:

– Insert a funnel into the filler neck.

– Add hydraulic oil with the correct specification according to the maintenance data table.

– Top up the hydraulic oil only as far as the top (max) mark.

ENVIRONMENT NOTE

Carefully collect any spilled oil and dispose of it in an environmentally friendly manner.

– Screw in the breather filter with oil dipstick.

– Attach the left side cover.

WARNING

If the hydraulic oil level is too high, it can lead to inadmissibly high pressure and damage to the hydraulic system.

– If the oil level is higher than the top (max) mark, lower the hydraulic oil level.

– Contact the authorised service centre if required.

Checking the hydraulic system for leak tightness

WARNING

Hydraulic oil is hazardous to health!

Hydraulic oil under pressure can escape from leaking pipes and lines, and cause injuries.

– Wear suitable protective gloves, protection goggles etc.

CAUTION

Hydraulic hoses become brittle!

– Do not store hydraulic hoses for more than two years.

– Do not use hydraulic hoses for more than six years if they are subject to normal wear.

– Do not use hydraulic hoses for more than two years if they are subject to a high level of wear.

– Comply with the specifications of DGUV 113-020 in Germany.

– Outside of Germany, observe the national regulations for the country of use.

– Check pipe and hose connection screw joints for leaks (traces of oil).

Replace hose lines if they display the following abnormalities:

- Outer layer has been damaged, or is brittle or cracked
- Leaking
- Deformation (e.g. with blisters or kinks)
- A fitting has come loose
- A fitting is badly damaged or corroded

Replace pipes if they display the following abnormalities:

- Abrasion
- Deformation and bending
- Leaking

Lubricating the lift mast and roller track ▷

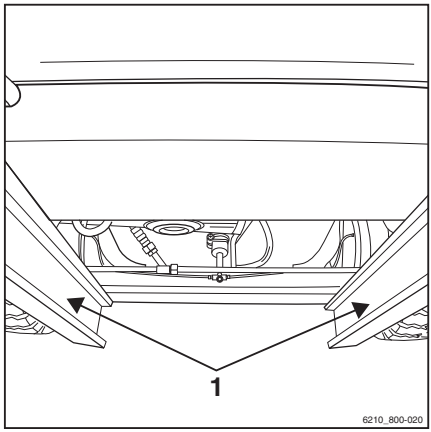

– Remove dirt and lubricant residue from the roller track.

– Lubricate the roller tracks (1) of the outside, middle, and inside mast with a super-pressure adhesion lubricant to reduce wear. See ⇒Chapter "Maintenance data table", Page 339 .

NOTE

Spray the roller track evenly from a distance of approx. 15-20 cm. Wait approx. 15 minutes until the equipment is ready to use again.

Greasing the automatic tow coupling

NOTE

Wear to moving parts can be significantly reduced by appropriate servicing and regular lubrication of the coupling.

– Avoid over-greasing!

NOTE

Close the coupling before cleaning with a high-pressure cleaner. After cleaning, lubricate the coupling pin, tow bar eye and its supporting surface again.

Model RO*243

▷

- Pull out the safety handle (3).
- Push the hand lever (2) upwards.
- Grease using the lubricating nipple(1) in accordance with the maintenance data table; see ⇒Chapter "Maintenance data table", Page 339 .
- Close the coupling by raising the coupling pin with a suitable tool.
- For journeys with a rigid drawbar trailer, lubricate the underside of the tow bar eye and the supporting surface on the coupling.

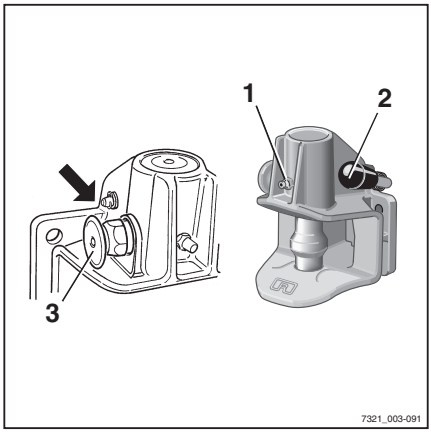

- Determine the wear on the coupling pin. ▷

The diameter of the spherical part must not be less than 36.5 mm.

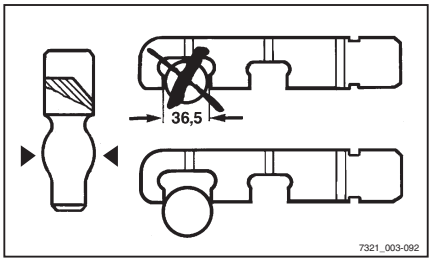

Model RO*244 A

- Open coupling.

– Grease using the lubricating nipple(1) in accordance with the maintenance data table; see ⇒Chapter "Maintenance data table", Page 339 .

– Grease coupling pin, tow bar eye and its supporting surface.

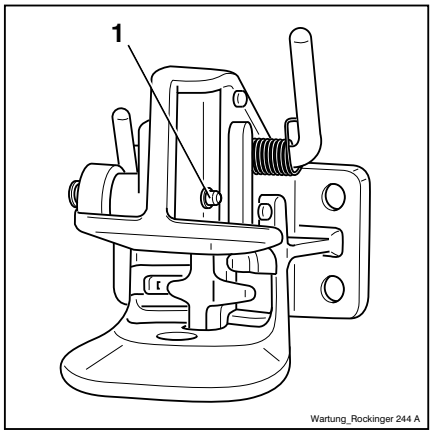

Model RO*245

– Lubricate via the points provided for this purpose (lubricating nipple, opened coupling) in accordance with the maintenance data table; see ⇒Chapter "Maintenance data table", Page 339 .

– Grease the supporting surface for the tow-bar eye.

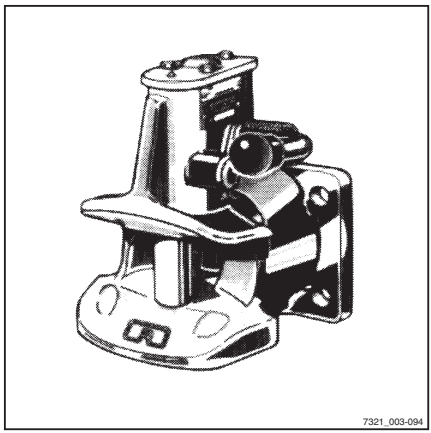

Model RO*841

▷

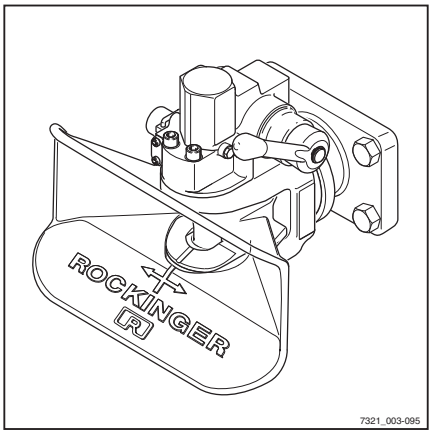

– Lubricate via the points provided for this purpose (lubricating nipple, opened coupling) in accordance with the maintenance data table; see ⇒Chapter "Maintenance data table", Page 339 .

– Grease the supporting surface for the towbar eye.

6

1000-hour maintenance/annual maintenance

Other work that must be carried out

– Perform all tasks required to maintain full operability; see the chapter entitled "Remaining ready for operation".

Checking the lift cylinders and the hydraulic connections for leak tightness ▷

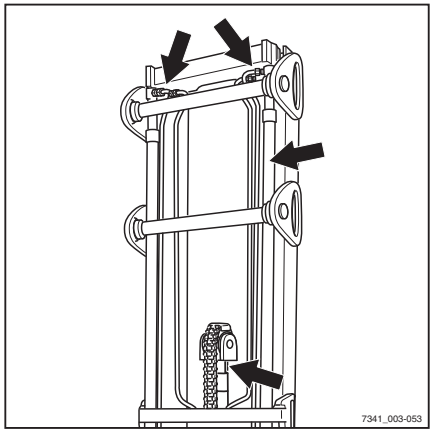

⚠ WARNING

Risk of injury!

Observe safety regulations for working on the lift mast, see the "Working at the front of the truck" chapter.

– Check the lift cylinders and the hydraulic connections for leak tightness (visual inspection).

– Have any leaking lift cylinders and hydraulic connections repaired by the authorised service centre.

Checking the fork arms ▷

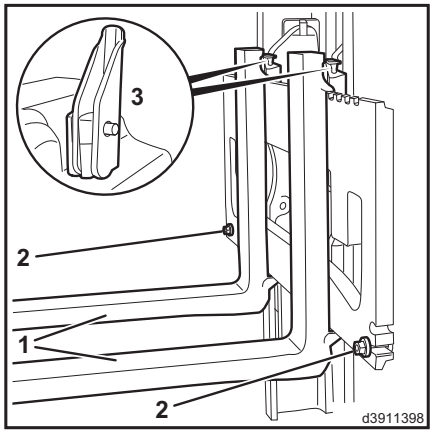

⚠ CAUTION

Fork arms must not be uneven!

– Always replace both fork arms.

– Check the fork arms (1) for visible deformation and excessive wear.

No cracks or deformations must be visible on the fork arms in the area around the fork bend. Wear must not amount to more than 10% of the original thickness.

– Check that the locking screws (2) are present and securely attached.

– Replace any worn or deformed fork arms.

Check the condition and correct operation of the fork latch:

– Move the locking lever (3) into a vertical position.

It must be possible to move the fork arm.

– Move the locking lever into a horizontal position.

The latch must engage in a recess on the fork carriage. It must not be possible to move the fork arm.

– Replace faulty fork latches.

Checking the reversible fork arms ▷

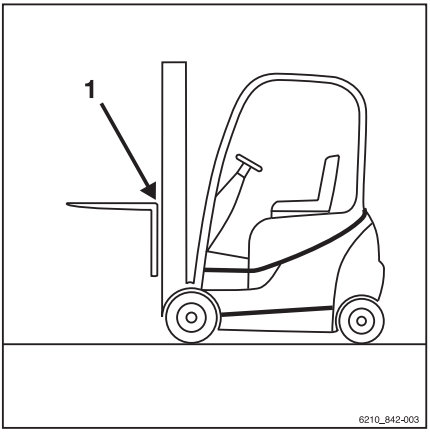

NOTE

This check is only required for reversible fork arms (variant).

– Check the outside of the fork bend (1) for cracks. Contact your service centre.

Checking the reversible fork arms

7

Technical data

Dimensions

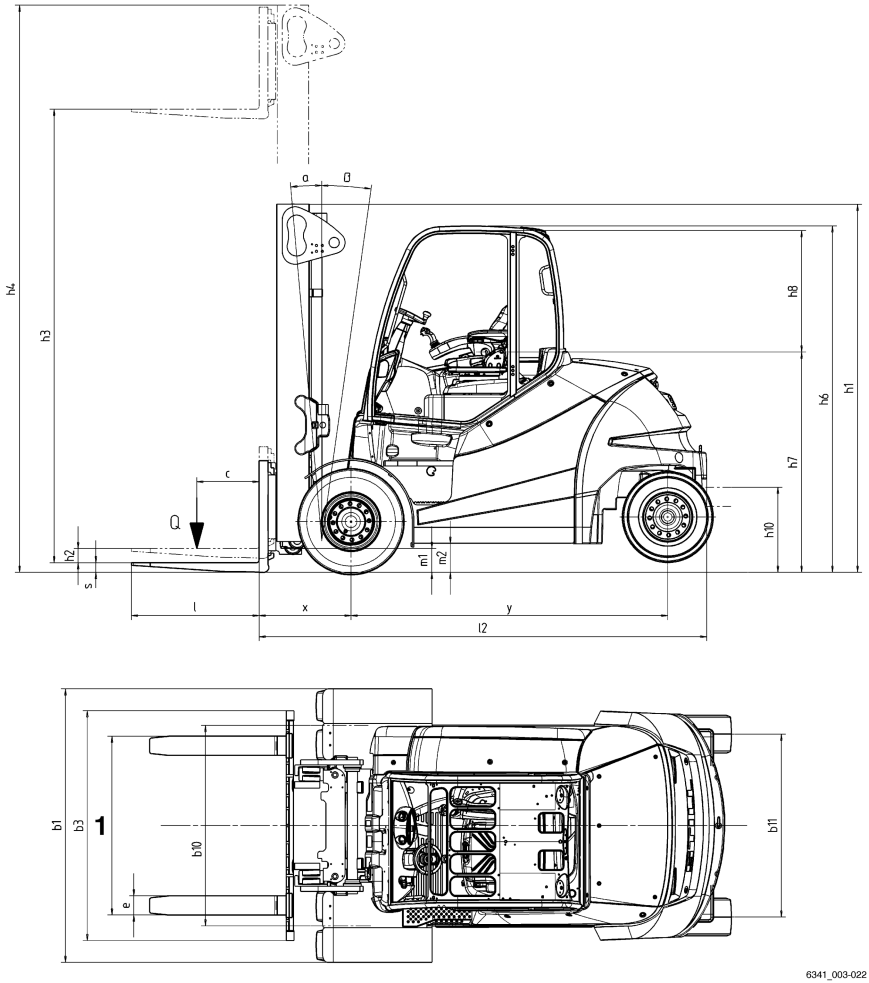

1 Fork spacing is adjustable

NOTE

Measurements h_1, h_3, h_4, h_6 and b_1 are customised and can be taken from the order confirmation.

Centre of gravity "S" (distance measured from the front axle)	
RX60-60	1006 mm
RX60-70	1006 mm
RX60-80	1006 mm
RX60-80 (LSP 900)	1006 mm

NOTE

The specified centre of gravity "S" relates to trucks with standard equipment. If, for example, the truck is equipped with a different lift mast, attachment or driver protection structure, this value is only a guide value. If necessary, the centre of gravity "S" must be determined on an individual basis for each truck.

VDI datasheet

NOTE

This VDI datasheet specifies only the technical values of the truck version with standard equipment. Different tyres, lift masts, additional units etc. may produce different values.

Characteristics

Model		RX60-60	RX60-70	RX60-80	RX60-80 LSP 900
Type carrier		6341	6342	6343	6344
Manufacturer		STILL GmbH	STILL GmbH	STILL GmbH	STILL GmbH
Drive		Electric	Electric	Electric	Electric
Operation		Seated	Seated	Seated	Seated
Rated capacity / load	Q (kg)	6000	7000	8000	8000
Load centre of gravity distance	c (mm)	600	600	600	900
Load distance	x (mm)	710	720	720	750
Wheelbase	y (mm)	2285	2285	2285	2285

Weights

Model		RX60-60	RX60-70	RX60-80	RX60-80 LSP 900
Net weight	kg	11,996	12,512	13,369	15,915
Axle load with front load	kg	15,842	17,751	19,355	21,549
Axle load with rear load	kg	2154	1761	2015	2366
Axle load without front load	kg	6413	6591	6627	7097
Axle load without rear load	kg	5619	5823	6655	8333

Wheels, chassis frame

Model		RX60-60	RX60-70	RX60-80	RX60-80 LSP 900
Tyres: superelastic (SE), solid rubber (V), pneumatic (L)		SE	SE	SE	SE
Front wheel size		355/50-20	8.25-15	315/70-15	315/70-15
Rear wheel size		250-15	250-15	250-15	28x12.5–15
Number of front wheels (x = driven)		2x	4x	4x	4x
Number of rear wheels (x = driven)		2	2	2	2
Front track width, single tyre	b10 (mm)	1364	-	-	-
Front track width, twin tyres	b10 (mm)	-	1510	1561	1561
Rear track width	b11 (mm)	1358	1358	1358	1432

Basic dimensions

Model		RX60-60	RX60-70	RX60-80	RX60-80 LSP 900
Lift mast/fork carriage tilt, forwards	Degree	5	5	5	5
Lift mast/fork carriage tilt, backwards	Degree	8	8	8	8
Height with lift mast retracted	h1 (mm)	2710	2710	2710	2710
Free lift	h2 (mm)	150	150	150	150
Lift height[1]	h3 (mm)	3550	3150	3150	2750
Height with lift mast extended	h4 (mm)	4440	4240	4140	4140
Height above overhead guard	h6 (mm)	2697	2697	2697	2697
Seat height in relation to SIP/ standing height	h7 (mm)	1719	1719	1719	1719
Coupling height	h10 (mm)	520/670	520/670	520/670	520/670
Total length	l1 (mm)	4640	4660	4660	5335
Length including fork back	l2 (mm)	3440	3460	3460	3535
Total width	b1	1679	1996	1996	2141

1 The specified lift takes into account the tyre deflection and the tolerances of the tyre diameter.

Model		RX60-60	RX60-70	RX60-80	RX60-80 LSP 900
Fork arm thickness	s (mm)	70	70	70	70
Fork arm width	e (mm)	150	150	150	200
Fork arm length	l (mm)	1200	1200	1200	1200
Fork carriage, class/form A, B		ISO IV A	ISO IV A	ISO IV A	ISO IV A
Fork carriage width	b3 (mm)	1600	1800	1800	2180
Ground clearance with load under lift mast	m1 (mm)	220	220	220	220
Ground clearance at centre of wheelbase	m2 (mm)	210	210	210	210
Aisle width for pallet 1000 x 1200 crosswise	Ast (mm)	4907	4907	4907	4999
Aisle width for pallet 800 x 1200 lengthwise	Ast (mm)	5107	5107	5107	5199
Turning radius	Wa (mm)	3007	3007	3007	3049
Smallest pivot point distance	b13 (mm)	877	877	877	877

Performance data

Model		RX60-60	RX60-70	RX60-80	RX60-80 LSP 900
Driving speed with load	km/h	14	14	14	14
Driving speed without load	km/h	17	17	17	17
Lifting speed with load	m/s	0.36	0.30	0.28	0.28
Lifting speed without load	m/s	0.48	0.37	0.37	0.37
Lowering speed with load	m/s	0.56	0.53	0.53	0.53
Lowering speed without load	m/s	0.52	0.42	0.42	0.42
Tractive force with load	N	28788	28674	28468	27997
Tractive force without load	N	29023	28936	28767	28295
Climbing capability[1] with load	%	16.3	16.1	16.0	15.5
Climbing capability without load	%	25.0	24.1	23.0	>22.5
Acceleration time with load (15 m)	s	5.7	5.8	5.8	6.0
Acceleration time without load (15 m)	s	5.0	5.1	5.1	5.2
Service brake		Mech./hydr.	Mech./hydr.	Mech./hydr.	Mech./hydr.

1 The stated values are used only to compare performance of trucks in the same category. The gradient values in no way represent the normal daily operating conditions.

⚠ CAUTION

To use the truck safely—with or without a load—the maximum ascending or descending gradient permitted for travel is 15%.

– If you have any questions, please contact the authorised service centre.

Electric motor

Model		RX60-60	RX60-70	RX60-80	RX60-80 LSP 900
Traction motor, power rating at S2: 60 min	kW	2x10.5	2x10.5	2x10.5	2x10.5
Lift motor, power rating at 15% ED	kW	2x21.0	2x21.0	2x21.0	2x21.0
Battery in accordance with DIN 43531/35/36 A, B, C		DIN 43536 A	DIN 43536 A	DIN 43536 A	DIN 43536 A
Battery voltage	U (V)	80	80	80	80
Battery capacity	K_5 Ah	1240	1240	1240	1240
Battery weight	kg	2824	2824	2824	2824
Energy consumption[1]: 45 VDI working cycles/hour	kWh/h	12.6	14.5	16.0	17.7
Handling performance	t/h	348.4	376.1	411.4	420.0
Energy consumption versus handling performance	kWh/h	15.4	17.5	19.2	19.8

Other

Model		RX60-60	RX60-70	RX60-80	RX60-80 LSP 900
Working pressure for attachments	bar	250	250	250	250
Oil flow for attachments	l/min	60	60	60	60
Sound pressure level L_{pAZ} (driver's compartment)[2]	dB (A)	66.4	66.4	66.4	66.4
Sound power level L_{wAZ}	dB (A)	86.6	86.6	86.6	86.6

1 With Blue-Q energy-saving programme.

2 Without cab. Values differ with a cab.

Model		RX60-60	RX60-70	RX60-80	RX60-80 LSP 900
Human vibration acceleration[1] according to EN 13059	m/s^2	< 0.38	< 0.38	< 0.38	< 0.38
Tow coupling, type/model		Bolt	Bolt	Bolt	Bolt

Eco-design requirements for electric motors and variable speed drives

All motors in this industrial truck are exempt from Regulation (EU) 2019/1781 because these motors do not meet the description given in Article 2 "Scope", Item (1) (a) and because of the provisions in Article 2 (2) (h) "Motors in cordless or battery-operated equipment" and Article 2 (2) (o) "Motors designed specifically for the traction of electric vehicles".

All variable speed drives in this industrial truck are exempt from Regulation (EU) 2019/1781 because these variable speed drives do not meet the description given in Article 2 "Scope", Item (1) (b).

1 With a standard driver's seat.

Ergonomic dimensions

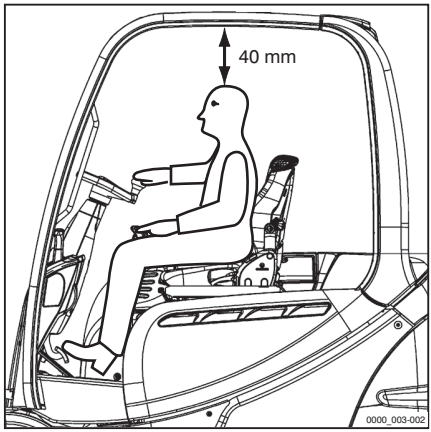

⚠ WARNING

Danger of impact injuries to the head!

If the head of the operator is located too close to the underside of the roof, the suspension of the driver's seat or an accident may cause the head to strike the overhead guard.

To avoid head injuries, a minimum distance of **40 mm** must be ensured between the underside of the roof and the head of the tallest operator.

To determine the actual head clearance, the operator must sit in the driver's seat and the seat suspension must be set to this driver's requirements.

Due to the individual nature of height and body weight as well as the wide variety of types of driver's seat and overhead guard, the minimum head clearance must be ensured in every truck.

The driver's compartment has been designed taking ergonomics in the workplace into account and in accordance with EN ISO 3411. In general, from the seat position, the operator has sufficient space to reach the operating devices safely, to operate the truck and to view the outline of the truck. Operators whose body size deviates from the specified dimensions on which EN ISO 3411 is based must be individually considered by the operating company.

Battery specifications

⚠ CAUTION

The battery weight and dimensions affect the stability of the truck.

When replacing the battery, the weight ratios must not be changed. The battery weight must remain within the weight range specified on the nameplate. The location of ballast weights must not be changed. The bottom of the battery tray must be closed.

- Use batteries that meet DIN standards.
- Do not change the position of ballast weights.
- Check the battery weight against the information on the nameplate.
- Only use a battery tray that is closed at the bottom.

Lead-acid batteries

NOTE

Battery specifications to DIN 43536; cells to DIN EN 60254-2, 80 V circuit A.

- The battery weight can be found on the nameplate of the battery.

Battery designation	Capacity (Ah)	Battery compartment dimensions (mm)			Tray
		Depth	Width	Height	
7 PzS 1085 PowerPlusLife®	1085	1037	1287	784	238
8 PzS 1120	1120	1037	1287	784	238
8 PzS 1240	1240	1037	1287	784	238
TENSOR® TCSM 2545	1320	1037	1287	784	238

NOTE

When determining the weight, add the weight of the battery base frame (65 kg) to the battery weight.

NOTE

The maximum speed pre-set in the drive programme is technically dependent on the battery used. Depending on the battery type used, the preset maximum speed must be adapted by the authorised service centre. If the maximum speed is not adapted, it can lead to technical faults in drive mode.

- *Contact your authorised service centre.*

Fuse assignment

NOTE

The electrical fuses for the truck are located in two separate fuse boxes. Depending on the specification, not all fuses will be present in the truck.

Fuse assignment - Front fuse box Power Distribution Unit and 80-V technology

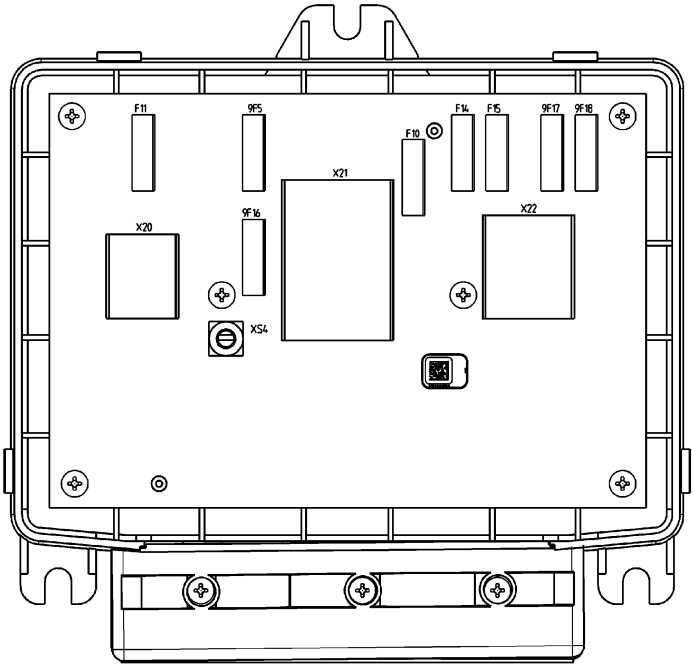

6341_003-027_V2

F11	SU control unit/MCU control unit (10 A)
9F5	Not assigned
9F16	Heating system (30 A)
F10	Reserve (20 A)
F14	Not assigned
F15	Voltage transformer U1 (10 A)
9F17	Voltage transformers U2 and U3 (15 A)
9F18	Voltage transformers U4 and U5 (15 A)

Fuse assignment - rear fuse box
12-V technology

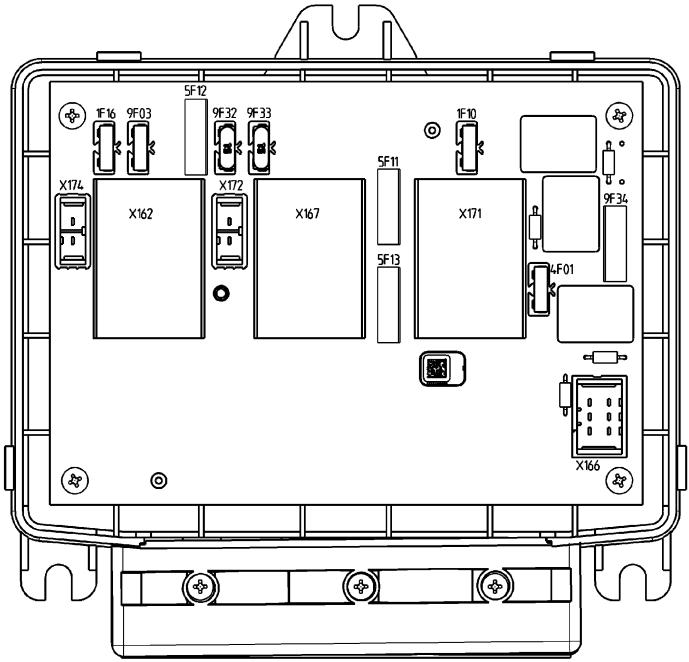

6341_003-028

1F16	Proportional technology (10 A)	5F11	Roof CPP - control unit (30 A)
9F03	Option board (10 A)	5F13	Seat CPP - control unit (30 A)
5F12	Front CPP - control unit (20 A)	1F10	Cooling pump (10 A)
9F32	Not assigned	4F01	Signal horn (10 A)
9F33	Not assigned	9F34	Cooling fan (20 A)

Numbers and Symbols

12-V socket. 229

A

Access authorisation
- Changing the password. 106
- Defining the driver PIN. 102
- Entering the access code. 101
- Selecting the driver PIN. 104

Access authorisation with PIN code. 99
Accessories. 7
Actuating the drive direction switch
- Fingertip version. 134
- Joystick 4Plus version. 133
- Mini-console version. 134
- Mini-lever version. 133

Address of manufacturer. I
Adjusting the armrest. 83
Adjusting the fork. 178
Adjusting the steering column. 84
After cleaning. 301
Aisle widths. 127
Attachments
- Alternating operation. 192
- Assembly. 191
- Connection. 193
- Controlling using a double mini-lever. 198
- Controlling using the double mini-lever and the 5th function. 200
- Controlling using the joystick 4Plus. . 210
- Controlling using the quadruple mini-lever and the 5th function. 208
- Controlling using the triple mini-lever and the 5th function. 204
- Controlling with a quadruple mini-lever. 206
- Controlling with a triple mini-lever. . . . 202
- Controlling with fingertip. 212
- Controlling with fingertip and 5th function 213
- Controlling with Joystick 4Plus and the 5th function. 211
- General controlling. 196
- Load capacity. 193
- Mounting. 193
- Releasing the pressure from the connections. 194
- Safety information. 191
- Special risks. 42
- Taking up a load. 218

Automatic lift cut out. 149
Automatic tow coupling. 247
- Coupling RO*243. 249
- Coupling RO*244 A. 251
- Coupling RO*245. 254
- Uncoupling RO*243. 251
- Uncoupling RO*244 A. 253
- Uncoupling RO*245. 255

B

Basic principles for safe operation. 33
Battery
- Changing the battery type. 285
- Charging. 279
- Charging to equalise. 283
- Checking the acid density. 352
- Checking the acid level. 352
- Checking the charge status. 279
- Checking the condition. 352
- Disposal. 28
- PowerPlusLife. 295
- Safety regulations. 276

Battery acid. 52
Battery cover
- Closing. 287
- Opening. 286

Battery male connector
- Connecting. 273
- Disconnecting. 274

Battery specifications. 382
Before taking up load. 173
Blue-Q
- Configure. 120
- Functional description. 122
- Switching off. 124
- Switching off additional consumers. . 123
- Switching on. 124

Bottom plate
- Installing. 343
- Removing. 342

C

Cab
- Operating the interior lighting. 239
- Operating the rear window heating. . . 240

Ceiling sensor. 230
Changes to the truck. 33
Changing the drive direction. 136
- Dual pedal version. 139

Changing the fork arms. 166
Changing the heating system fresh air filter. 353
Changing the password. 106
Checking coolant content. 347
Checking the door latch. 357
Checking the driver's seat. 356
Checking the emergency off function. . . . 93
Checking the fork arms. 370
Checking wheel fastenings. 360
Clamp locking mechanism
- Releasing. 215

Cleaning. 298
Cleaning the electrical system. 300
Cleaning the windows. 301
Clean the truck. 298
Climbing into the truck. 75
Climbing out of the truck. 75
Clipboard. 243
Closing the cab door. 237
Closing the side windows. 238
Commissioning. 16
Condition of the roadways. 129
Conformity marking. 5
Consumables. 50
- Coolant and cooling fluid safety information. 53
- Disposal. 54
- Safety information for handling battery acid. 52
- Safety information for handling oils. . . 50
- Safety information for hydraulic fluid. . 51

Contact details. I
Coolant
- Checking the level. 346

Coolant and cooling fluid. 53
Cooling fluid. 347
- Topping up. 347

Copyright and trademark rights. 22
Coupling pin in the counterweight. 245
Crane loading. 317
- Determining the loading weight. 318
- Hooking on the lifting straps. 318

Curve Speed Control. 144

D

Damage. 36
Danger area. 178
Danger to employees. 46
Declaration of conformity. 6
Defects. 36
Defining the driver PIN. 102
Definition of directions. 26
Description of the truck. 2
Determining visibility conditions when driving with a load. 186
Dimensions. 374
Dimensions of roadways. 127
Display-operating unit
- Standard display elements. 99

Display and operating unit
- Additional indicators. 111
- Adjusting the displays. 112
- Configure Blue Q. 120
- Indicators. 110

Display messages
- Display content. 256
- Drive-specific. 270
- General. 260

Display operating unit. 63
- Resetting the daily kilometres. 119
- Setting the date. 118
- Setting the language. 119
- Setting the time. 118
- Standard displays. 110

Display symbols. 114
- Auxiliary equipment softkey functions. 115
- Error messages. 115
- Menu navigation softkey functions. . . 116
- Numeric keypad. 117
- Operating messages. 114
- Status LEDs. 117
- Warning messages. 115

Disposal
Battery. 28
Components. 28
Documentation scope. 20
Double mini-lever. 65
Lifting/lowering the fork carriage. 159
Tilting the lift mast. 159
Driver rights, duties and rules of behaviour. 31
Drivers. 31
Driver's cab
Use. 89
Driving. 125
Ascending gradients. 145
Descending gradients. 145
Driving lights
Switching on and off. 220
Driving on gradients. 127
Driving on lifts. 189
Driving on loading bridges. 190

E

EC declaration of conformity in accordance with the Machinery Directive. 6
Emergencies
Truck tipping over. 305
Using the emergency hammer. 306
Emergency hammer. 306
Emergency lowering. 306
Emergency shutdown. 303
Emissions. 55
Battery. 57
Noise emissions. 55
Radiation. 57
Vibrations. 56
Entering the access code. 101
Environmental considerations. 28
Ergonomic dimensions. 381
Error code table. 256
Example. 174

F

Filling the washer system. 227
Fingertip. 69
Lifting/lowering the fork carriage. 165
Tilting the lift mast. 165
Fitting attachments. 191
FleetManager. 228
Shock recognition. 228
Foreword. 0
Fork arms
Length. 39
Fork extension. 168
Four-way mini-lever. 67
Lifting/lowering the fork carriage. 161
Front right cover
Closing. 344
Opening. 344
Fuse assignment. 384
12-V technology. 385
80-V technology. 384
Front fuse box. 384
Power distribution unit. 384
Rear fuse box. 385
Fuse box
Front. 361
Rear. 362

G

General. 4

H

Handling gas springs and accumulators. . 39
Handling loads. 172
Hazardous areas. 129
Hazards and countermeasures. 44
Hazard warning system. 222
Heating system. 241
Adjusting the air flow. 242
Switching on. 242
Switching on the blower. 242
Hydraulic blocking function. 156
Releasing. 156
Hydraulic connections
Checking for leak tightness. 370
Hydraulic fluid. 51
Hydraulic system
Checking for leak tightness. 364
Checking the oil level. 362

I

Identification points
Overview. 8
Improper use. 17

Information about the documentation. . . . 20
Information for carrying out maintenance. 330
Maintenance timeframe. 331
Information symbols. 22
Inserting wedges. 316
Insulation testing. 48
Drive battery test values. 49
Test values for the truck. 49
Insurance cover on company premises. . . 33
Interior lighting. 239
Issue date of the operating instructions. . . 22

J

Jacking up. 327
Joystick 4Plus. 68
Fork carriage sideshift. 164
Lifting/lowering the fork carriage. 162
Tilting the lift mast. 163

L

Lashing down. 316
Left side cover. 342
Attaching. 342
Removing. 342
Lift cut out
Automatic. 149
Lift cylinder
Checking for leak tightness. 370
Lifting. 149, 327
Lifting system
Controlling using a double mini-lever. 158
Controlling using a quadruple mini-lever. 161
Controlling using a triple mini-lever. . 160
Controlling using the joystick 4Plus. . 162
Controlling with the fingertip console. 165
Operating devices. 157
Lift mast
Lubricating the roller track. 365
Removing. 328
Securing against falling off. 329
Securing against tilting backwards. . . 328
Lift mast versions
Triplex lift mast. 155
Lift mast vertical position. 150
Automatic approach. 152
Calibrating. 154
Description. 150
Display. 151
Possible restrictions. 153
Run-in to end stops. 152
Tilting the lift mast backwards. 153
Tilting the lift mast forwards. 152
Lighting
STILL SafetyLight. 226
Switching on and off. 220
List of abbreviations. 23
Lithium-ion batteries
Changing the battery type. 285
Nameplate. 14
Load
Picking up. 181
Setting down. 187
Transporting. 184
Load capacity. 173
Load chains
Cleaning. 300
Load measurement. 174
Description. 174
Execution. 175
Zero adjustment. 95
Lubricating the joints and controls. 354

M

Maintenance. 0
General information. 330
Removing and attaching the rear cover. 345
Safety regulations. 326
Maintenance data table. 339
Battery. 339
Controls/joints. 339
Cooling system (power electronics/ hydraulic oil). 341
Drive axle. 340
Electrical system. 339
General lubrication points. 339
Hydraulic system. 339
Lift mast. 340
Load chains. 341
Steering axle. 340
Tyres. 340
Washer system. 341
Maintenance personnel for batteries. . . . 330

Maintenance work without special qualifications. 330
Malfunctions during lifting mode. 155
Manual tow coupling
Coupling. 245
Uncoupling. 247
Medical equipment. 38
Message
ACCELERATOR. 262
APPLY HANDBRAKE. 261
AUXILIARY1 LEVER. 263
AUXILIARY2 LEVER. 263
BRAKE SENSOR. 262
CLOSE THE DOOR. 271
CODE DENIED. 262
EMERGENCY SWITCH. 264
LEVER. 271
LIFT HEIGHT. 271
LOWER FORKS. 263
LOWER LEVER. 263
MOT/GEN. TEMP.. 270
NOT VALID. 270
OVERHEATING. 269, 270
PARKING BRAKE ACTIVE. 262
PARKING BRAKE: APPLY HAND-BRAKE!. 263
REFERENCE CYCLE. 265
RELEASE PARKING BRAKE. 262
SAFETY BELT. 265
SEAT SWITCH. 266
SECURE TRUCK AGAINST ROLLING AWAY. 266
SERVICE BRAKE. 261
STEERING. 264
SURVEILLANCE. 269
SWITCH OFF TRUCK?. 262
TILTING SPEED. 264
TILT LEVER. 263
! PARKING BRAKE OIL PRESSURE. 270
? VERTICAL POSITION. 264
Messages
General. 260
Mini console. 70
Misuse of safety systems. 36
MSG 65/MSG 75 driver's seat
Adjusting. 78
Adjusting the backrest extension. 81
Adjusting the lumbar support. 81
Adjusting the seat backrest. 79
Adjusting the seat suspension. 80
Moving. 79
Switching the seat heater on and off. . 82

N

Nameplate. 12
Nameplate of a lithium-ion battery. 14
Neutral position. 132

O

Oils. 50
Opening the cab door. 236
Opening the side windows. 237
Operating. 0
Operating company. 30
Operating devices and display elements. . 63
Operating devices for hydraulic and driving functions. 64
Operating materials
Quality and quantity. 336
Operating procedures. 27
Operating the service brake. 140
Operating the signal horn. 85
Ordering spare parts and wearing parts. 336
Overhead guard
Drilling. 35
Roof loads. 35
Welding. 35
Overview
Driver's compartment. 62
Overviews. 0

P

Packaging. 28
Parking brake
Mechanical parking brake. 141
Parking the truck securely
Switching off the truck. 147
Personnel qualifications. 330
Picking up loads. 177
Place of use. 17

PowerPlusLife
Cooling air flow. 296
Diagnostic connector. 297
Error messages. 297
Fluid level. 297
Internal error. 297
Temperature monitoring. 296
PowerPlusLife battery. 295
Procedure if truck tips over. 305
Production number. 13
Prohibition of use by unauthorised persons. 32
Proper usage. 16
Push-up roof window. 243

Q

Quadruple mini-lever
Tilting the lift mast. 161

R

Radiator
Checking for leak tightness. 350
Cleaning. 350
Radio. 240
Re-commissioning after shutdown. 323
Rear cover
Attaching. 345
Removing. 345
Rear window heating. 240
Reducing speed when turning. 144
Reducing speed with a raised load. 146
Replacing the battery. 288
General information. 285
Replacing the fuses. 360
12-V technology. 362
80-V technology. 361
Front fuse box. 361
Power distribution unit. 361
Rear fuse box. 362
Replacing the recirculated air filter for the heating system. 357
Resetting the daily kilometres. 119
Resetting the daily operating hours. 119
Residual dangers. 41
Residual risk. 41
Residual risks. 41
Retrofitting. 33
Reversible fork arm
Checking. 371
Reversible fork arms. 170
Roadways. 127, 129
Dimensions of aisle widths. 127
Rotating beacon. 221
Rules for roadways and the working area. 129

S

Safety. 0
Safety devices. 327
Safety inspection. 48
Safety regulations
Consumables. 50
Safety regulations for maintenance
General information. 326
Safety devices. 327
Set values. 327
Working on the electrical equipment. 326
Working on the hydraulic equipment. 326
Safety regulations for working on the lift mast. 328
Safety regulations when driving. 125
Safety regulations when handing loads. . 172
Safety regulations when handling the battery. 276
Battery weight and dimensions. 277
Damage to cables and battery male connectors. 278
Fire protection measures. 276
Lifting accessory. 277
Maintenance personnel. 276
Safety tests. 48
Schematic views. 27
Scope of the documentation
CO solutions. 21
Seat belt. 86
Checking. 355
Cleaning. 356
Fastening. 86
Fastening on a steep slope. 87
Maintaining. 355
Malfunction due to cold weather conditions. 88
Releasing. 88
Replacement after an accident. 356
Selecting the drive direction. 132

Selecting the driver PIN. 104
Setting the date. 118
Setting the drive programme. 129
Setting the language. 119
Setting the time. 118
Set values. 327
Shock recognition. 228
Shutdown
Re-commissioning. 323
Shutting down the truck. 321
Spare parts list. II
Special risks. 42
Spring-operated brake
Releasing. 308
Sprint mode (variant). 131
Stability. 42
Standard display elements. 99
Starting drive mode. 134
Dual pedal version. 137
Status LEDs. 117
Steering. 143
Steering system
Checking for correct function. 93
Storing the truck. 321
StVZO (Road Traffic Licensing Regulations) information. 14
Switching on the key switch. 97

T

Technical data. 0
Dimensions. 374
VDI datasheet. 376
Three-way mini-lever. 66
Lifting/lowering the fork carriage. 160
Topicality of the operating instructions. . . 22
Towed load. 244
Towing. 311
Proper use. 16
Trailer operation. 244
Trailers
Towing. 255
Transportation. 315
Transporting pallets. 179
Transporting suspended loads. 179
Triple mini-lever
Tilting the lift mast. 160
Turn indicators. 222
Mini-console version. 223
Mini-lever version. 222
Types of lift mast. 154
Telescopic mast. 154
Tyres
Safety principles. 37

U

Units. 25
Unlocking the emergency off switch. 85
Using the truck. 16
Using working platforms. 19

V

Variant
Ceiling sensor. 230
Variants
Access authorisation with PIN code. . . 99
Automatic lift cut out. 149
Clamp locking mechanism. 215
Clipboard. 243
FleetManager. 228
Fork extension. 168
Heating system. 241
Lifting systems. 149
Lift mast vertical position. 150
Load measurement. 174
Push-up roof window. 243
Radio. 240
Reducing speed with a raised load. . . 146
Reversible fork arms. 170
Shock recognition. 228
Sprint mode. 131
Triplex lift mast. 155
Wheel chock. 148
Windscreen wiper/washer. 227
VDI datasheet. 376
Vertical lift mast position
Checking for correct function. 94
View of functions and operations. 27
View of operating procedures. 27
Views of the display operating unit. 27
Visual inspections. 72

W

Warning regarding non-original parts. . . . 36

Wheel chock. 148
Wheels and tyres
Checking condition and wear of the tyres. 358
Checking the air pressure. 359
Checking wheel fastenings. 360
Servicing. 358
Windscreen wiper/washer. 227
Working at the front of the truck. 328
Working on the electrical equipment. . . . 326
Working on the hydraulic equipment. . . . 326
Working spotlight for reverse travel
Switching on and off. 221
Working spotlights
Automatically switching on/off. 225
Lift-height-controlled switching on/off. 225
Manually switching on/off. 224
Switching on and off. 220, 224

Y

Your truck. 2

Z

Zero adjustment of the load measurement. 95

STILL GmbH

56358042501 EN - - 11