https://truckmanualshub.com/

J1 SERIES
(J1-86 / J1-126 / J1-162)

TASK SUPPORT VEHICLE

U.S. Patent Nos. D730,614; D733,389; D733,390; D734,589; 9,440,830 B2 and 10,214,402

Maintenance
Repair Parts Manual

NOTE:This vehicle is for indoor and level surface use only.

NOTE:For the most current parts information and service updates, please refer to the Big Joe Support site at www.bigjoesupport.com

Big Lift LLC
www.bigjoeforklifts.com

MANUAL NO. BL-J1-0315 - 11-19-2019

https://truckmanualshub.com/

WARNING

Do not operate this vehicle unless you have been authorized and trained to do so, and have read all warnings and instructions in Operator's Manual and on this vehicle. Read, understand and comply with the information on the vehicle's nameplate at all times.

Do not operate this vehicle until you have performed the daily operation's check list. Verify and inspect tires, horn, battery, controller, lift and hydraulic systems, brakes, steering mechanism and guards. Verify that all emergency controls, personal protection and safety devices are in place and functioning correctly and ensure the vehicle is free of fluid leaks and has no loose or missing parts. Report any problems to the designated authority and do not use the vehicle until they are corrected by a qualified mechanic.

This vehicle must not be modified without the manufacturer's consent. Components critical to the vehicles stability such as batteries shall not be replaced with lighter weight components.

Operate vehicle only from designated platform operating position. Use this vehicle indoors on level surfaces only. Never operate on ramps and slopes or uneven floors. This vehicle is not for use on mezzanines or balcony areas. Before operating, inspect the floor area it will be used on and be certain it will support the vehicle at full capacity and lift height. Identify and avoid holes, drop-offs, bumps and obstructions.

Before and during all vehicle operations ensure that adequate clearance is maintained from overhead obstructions and energized electrical conductors and parts.

Before elevating platform be sure guardrail access gates are in place and lowered. Keep feet on platform floor at all times while using vehicle, never climb onto guard rails or platform shelf. Do not use ladders, planks or other devices to achieve additional height on platform.

When transferring loads to platform or platform shelf, do not exceed capacity ratings on vehicle nameplate. Ensure loads are centered and do not contact any obstructions in the vehicle's vicinity. Do not stabilize the platform by contact with adjacent objects such as racks or shelving. Do not use the platform as a crane.

Take care to prevent electrical cords, hoses or other equipment from entangling in platform. Ensure area surrounding the vehicle is free of personnel and equipment before lowering platform.

Maintain a clear view of the ground while travelling and a safe distance from obstacles in the vehicle or platform's path. Ensure personnel in the vicinity are aware of the vehicle's movement. Travel at a safe speed for the conditions the vehicle is operating in.

Observe applicable traffic regulations. Yield right of way to pedestrians. Slow down and sound horn at cross aisles and wherever vision is obstructed. Avoid hazardous locations.

Enter and exit platform only through raised access gates and with the platform fully lowered and vehicle stopped. When leaving vehicle unattended, remove key to prevent unauthorized use.

https://truckmanualshub.com/

TABLE OF CONTENTS

Section		Page
1	DESCRIPTION	1-1
1-1	INTRODUCTION	1-1
1-2	GENERAL DESCRIPTION	1-1
1-3	DATA PLATE AND WARNING DECAL	1-2
1-4	INSTALLATION / WARRANTY CHECK LIST	1-2
2	PLANNED MAINTENANCE	2-1
2-1	GENERAL	2-1
2-2	MONTHLY AND QUARTERLY CHECKS	2-1
2-3	FREQUENT INSPECTIONS	2-1
2-4	ANNUAL INSPECTIONS	2-1
2-5	BATTERY CARE	2-1
2-5.1	General	2-1
2-5.2	Safety Rules	2-2
2-5.3	Maintenance Personnel	2-2
2-5.4	Battery Care And Charging	2-2
2-5.5	Battery Cleaning	2-2
2-5.6	Maintenance Free Batteries	2-2
2-6	CHARGING BATTERIES	2-3
2-7	REPLACING BATTERIES	2-3
2-7.1	Battery Disposal	2-3
2-8	LUBRICATION	2-4
2-9	LIFT CHAIN MAINTENANCE	2-4
3	TROUBLESHOOTING	3-1
3-1	GENERAL	3-1
3-2	CONTROLLER TROUBLESHOOTING	3-4
3-2.1	Zapi Handset	3-4
3-2.2	Fault Detection	3-4
3-2.2.1	General	3-4
3-2.2.2	Logbook Access	3-4
3-2.3	Testing Truck Operation	3-4
3-2.4	Factory Settings	3-5
4	STEERING SYSTEM	4-1
4-1	CONTROL ARM	4-1
4-1.1	Steering Control RemovaL	4-1
4-1.2	Steering Control Installation	4-2
4-2	COMPARTMENT COVER	4-2
4-2.1	Cover Removal	4-2
4-2.2	Cover Installation	4-2
4-3	STEER MOTOR	4-2
4-3.1	Motor Removal	4-2
4-3.2	Motor Installation	4-3
5	BRAKE SERVICING	5-1
5-1	BRAKES	5-1
5-1.1	Brake Assembly Replacement	5-1
6	DRIVE UNIT ASSY. , LOAD WHEEL & CASTERS	6-1
6-1	TRANSMISSION AND DRIVE MOTOR	6-1
6-2	LOAD WHEEL	6-2
6-2.1	Removal	6-2
6-2.2	Installation	6-2
6-3	DRIVE WHEEL	6-2
6-4	CASTER	6-2
7	ELEVATION SYSTEM SERVICING	7-1
7-1	GENERAL	7-1
7-2	LIFT CHAIN LENGTH ADJUSTMENT	7-1
7-3	LIFT CHAIN WEAR INSPECTION	7-2
7-4	LIFT CHAIN REPLACEMENT	7-2
7-4.1	Telescopic	7-2
7-4.2	Three Stage Mast	7-4
7-4.2.1	Mast Lifting Chain	7-4
7-4.2.2	Platform Lifting Chain	7-4
7-5	LIFT CYLINDERS	7-8
8	HYDRAULIC SYSTEM SERVICING	8-1
8-1	LINES AND FITTINGS	8-1
8-2	HYDRAULIC PUMP, MOTOR AND RESERVOIR ASSEMBLY	8-1
8-2.1	Removal	8-1
8-2.2	Disassembly And Reassembly	8-1
8-2.3	Installation	8-3
8-3	LIFT CYLINDER (TELESCOPIC)	8-3
8-3.1	Removal	8-3
8-3.2	Repair	8-3
8-3.3	Installation	8-5
8-4	LIFT CYLINDER (THREE STAGE MAST FULL FREE LIFT)	8-5
8-4.1	Removal	8-5
8-4.2	Repair	8-6
8-4.3	Installation	8-6
8-5	LIFT CYLINDER (THREE STAGE MAST SECONDARY)	8-10
8-5.1	Removal	8-10
8-5.2	Repair	8-10
8-5.3	Installation	8-11
9	ELECTRICAL COMPONENTS	9-1
9-1	ELECTRICAL CONTROL PANEL	9-1
9-1.1	Maintenance	9-1
9-1.2	Cleaning	9-1
9-1.3	Panel Removal	9-1
9-1.4	Panel Disassembly	9-1
9-1.5	Panel Installation	9-1
9-2	HORN REPLACEMENT	9-1
9-3	LOWERING BUZZER REPLACEMENT	9-3
9-4	LEVEL SENSOR BUZZER REPLACEMENT	9-3
9-5	LEVEL SENSOR REPLACEMENT	9-3
9-6	WARNING LIGHT REPLACEMENT	9-3
9-7	BATTERY REPLACEMENT	9-3
9-8	BATTERY CHARGER	9-3
9-8.1	Removal	9-3
9-8.2	Installation	9-5
9-9	PLATFORM CABLE REPLACEMENT	9-5
9-9.1	Telescopic	9-5
9-9.2	Three Stage Mast	9-7
10	OPTIONAL EQUIPMENT	10-1
10-1	INDUSTRIAL BATTERY	10-1
11	ILLUSTRATED PARTS BREAKDOWN	11-1

https://truckmanualshub.com/

https://truckmanualshub.com/

SECTION 1
DESCRIPTION

1-1. INTRODUCTION.

This publication describes the 24 volt J1 task support vehicle by Big Lift LLC. Included are planned maintenance instructions, lubrication procedures, corrective maintenance procedures and a complete parts list with part location illustrations.

Users shall comply with all requirements indicated in applicable OSHA standards and the current edition of A.N.S.I. A92.6. By following these requirements and the recommendations contained in this manual, you will receive many years of dependable service from your J1 task support vehicle.

1-2. GENERAL DESCRIPTION.

The self-propelled J1 task support vehicle lifts and transports up to 1,000 pounds capacity including load and operator. The vehicle enables general maintenance work and efficient selection and moving of materials in any area or at any level of the warehouse or storeroom. This vehicle is not for use on mezzanines or balcony areas. The design permits one man to perform all operations of selecting stock, driving vehicle, and replacing the stock at the designated place. The battery-powered vehicle is quiet and allows operation in closed areas without special provisions for ventilation.

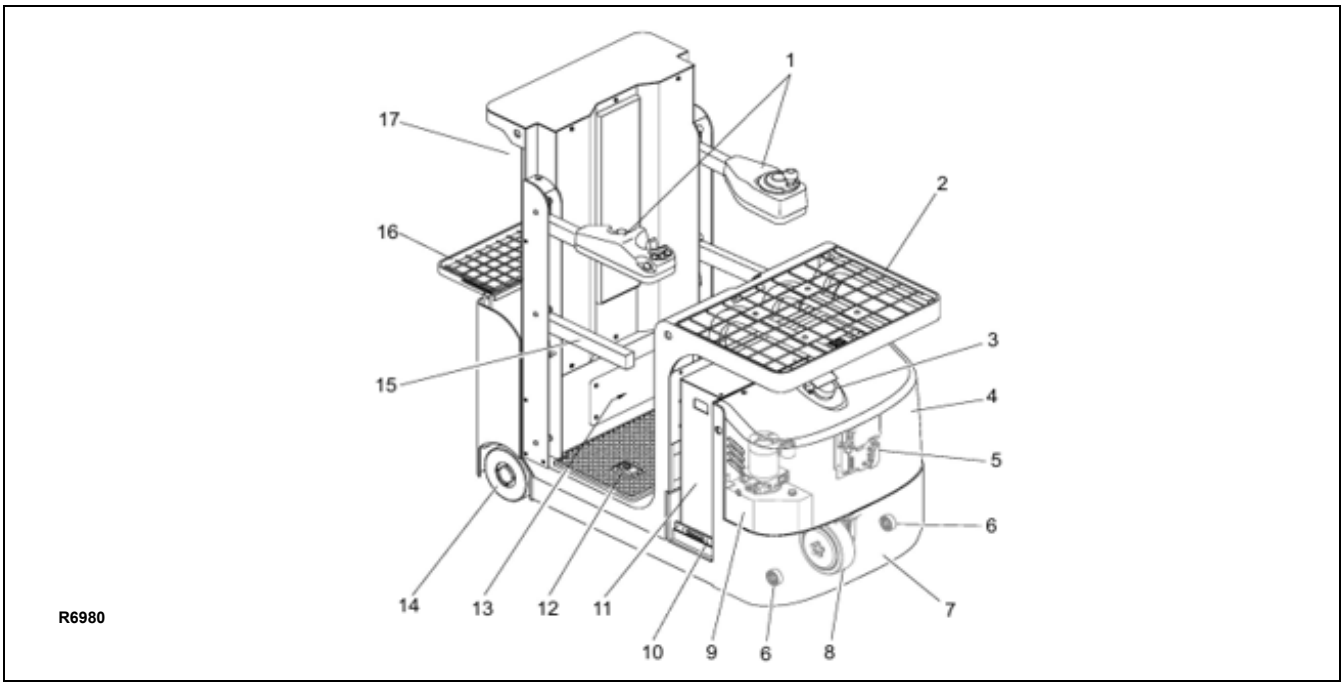

Figure 1-1 J1 Elevating Work Platform

ITEM	COMPONENT
1	Control arms
2	Pick tray
3	Warning light
4	Cover
5	Control panel
6	Casters
7	Frame
8	Drive wheel
9	Hydraulic pump and reservoir

ITEM	COMPONENT
10	Battery retainer
11	Battery
12	“Deadman” footswitch
13	Operator platform
14	Load wheels
15	Side gates
16	Rear tray for additional capacity and storage
17	Mast

https://truckmanualshub.com/

The AC motor propels the vehicle in forward or reverse direction. The vehicle can be driven with the platform raised or lowered; however the speed is restricted above 24”.

On demand power steering makes the vehicle highly maneuverable.

The control arms are used to operate the work vehicle and provide operator safety.

The pick tray is used to place and transport merchandise, equipment and tools.

The operator platform contains the “deadman” footswitch which must be depressed for the vehicle to operate.

The folding rear tray provides for transporting up to a 200 pound load.

1-3. DATA PLATE AND WARNING DECAL.

Warning decals are located to the left of the Instrument panel. The data plate is mounted on the right side of the Instrument panel.

If the data plate or warning decals are lost or damaged they MUST be replaced immediately. Have your supervisor or the designated authority contact Big Lift LLC Authorized Dealer for replacement.

The data plate shows the model, serial number, capacity, lift height, vehicle weight and minimum battery weight. See Figure 1-2.

1-4. INSTALLATION / WARRANTY CHECK LIST.

The Big Lift, LLC Installation and Warranty Registration Reports are used to initiate the start of the warranty period to the first original end user.

This report also serves as documentation that all items on the Installation and Warranty Registration Report were reviewed and discussed with the end user prior to taking receipt of the equipment.

This report must be completed and returned to Big Lift, LLC within fifteen (15) days of receipt of equipment. (See “page 1-3” for a copy of the form, also available at www.bigjoesupport.com)

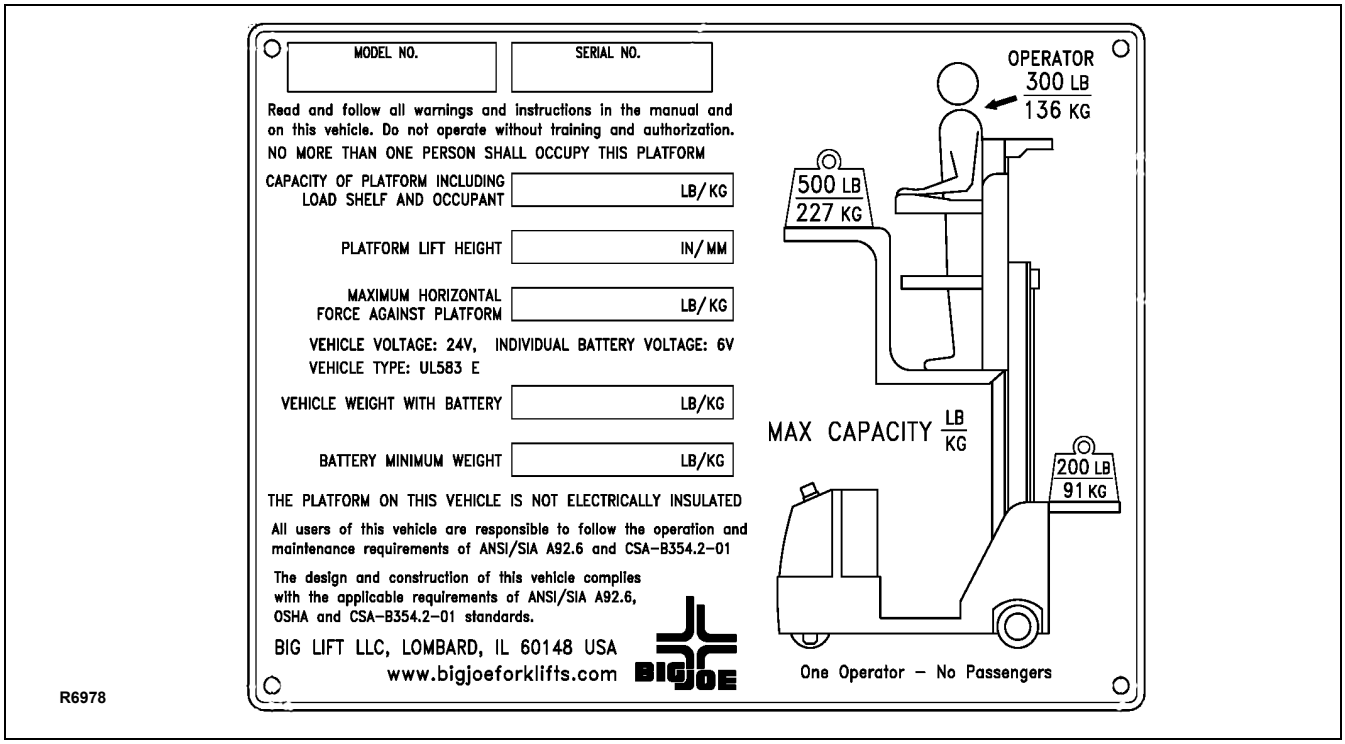

Figure 1-2 J1 Data Plate

https://truckmanualshub.com/

Installation and Warranty Registration for Big Lift J1 vehicles

Instructions: Complete form, provide a copy for the customer and return a copy via e-mail, fax or mail to:

Big Lift LLC.
1060 N. Garfield Street
Lombard, IL 60148
Tel.#: 630-916-2600
Fax.#: 630-916-0657
E-mail: sales@bigjoeforklifts.com

CUSTOMER MUST FILE CLAIM WITH CARRIER FOR ANY DAMAGE RECEIVED IN TRANSIT.

DATE EQUIPMENT RECEIVED:	
INSTALLATION DATE:	

WARRANTY REGISTRATION

THIS FORM MUST BE COMPLETED AND RETURNED TO BIG LIFT LLC WITHIN 15 DAYS OF DELIVERY IN ORDER TO BEGIN WARRANTY COVERAGE.

PLEASE NOTE THIS VEHICLE IS RATED AS AN ELEVATING WORK PLATFORM INTENDED FOR OPERATION INDOORS ON LEVEL SURFACES ONLY. PLEASE REFER TO THE J1 OPERATIONS MANUAL, MAINTENANCE MANUAL AND THE ANSI A92.6 STANDARD FOR SPECIFIC REQUIREMENTS AND GUIDELINES.

CUSTOMER INFORMATION SECTION

MODEL #:					
SERIAL #:					
DEALER:					
ADDRESS:					
CITY:		STATE:		ZIP/POSTAL:	
COUNTRY:					
CUSTOMER:					
ADDRESS:					
CITY:		STATE:		ZIP/POSTAL:	
COUNTRY:					

VEHICLE INSTALLATION SECTION - Following to be filled out by Service Representative

THE FOLLOWING HAS BEEN CHECKED PRIOR TO OR ON DELIVERY

ELECTRICAL SYSTEM	OK	ADJ.	R & R
ELECTRICAL CONNECTIONS PROPERLY SECURED	☐	☐	☐
BATTERY TERMINALS PROPERLY SECURED	☐	☐	☐
HORN AND FLASHING LIGHT	☐	☐	☐
TRAVEL CONTROLS, FWD. / REV.	☐	☐	☐
EMERGENCY BRAKE SWITCH	☐	☐	☐
BATTERY DISCONNECT PLUGS	☐	☐	☐
HIGH SPEED LIMIT SWITCH	☐	☐	☐
LIFT / LOWER CONTROLS	☐	☐	☐
BRAKES	**OK**	**ADJ.**	**R & R**
REVERSE BRAKING OPERATION	☐	☐	☐
COAST BRAKING OPERATIONS	☐	☐	☐
HYDRAULICS	**OK**	**ADJ.**	**R & R**
PROPER OIL LEVEL	☐	☐	☐
PUMP AND MOTOR MOUNTING SECURE	☐	☐	☐
CHECK FOR LEAKS ON CYLINDERS	☐	☐	☐
CHECK FOR LEAKS ON HYDRAULIC PUMP / TANK	☐	☐	☐
CHECK FOR LEAKS ON HOSES AND FITTINGS	☐	☐	☐
STEERING	**OK**	**ADJ.**	**R & R**
ELECTRONIC POWER STEERING OPERATION	☐	☐	☐
MAST ASSEMBLY	**OK**	**ADJ.**	**R & R**
LIFT CHAIN TENSION	☐	☐	☐
COTTER KEYS IN ANCHOR PINS	☐	☐	☐
LUBRICATION OF MAST CHANNEL,	☐	☐	☐
BEARINGS AND RAM HEAD	☐	☐	☐
OTHER	**OK**	**ADJ.**	**R & R**
PICK TRAY AND REAR TRAY OPERATION	☐	☐	☐
CONTROL ARMS AND GUARD RAILS	☐	☐	☐
SAFETY WARNING LABELS AND NAME PLATE	☐	☐	☐
WHEELS	☐	☐	☐
PLATFORM OPERATION	☐	☐	☐
DRIVE WHEEL	☐	☐	☐
LOAD WHEELS	☐	☐	☐
CASTER WHEELS	☐	☐	☐

THE FOLLOWING MUST BE EXPLAINED OR DEMONSTRATED TO THE CUSTOMER

- CAPACITY LIMITATION
- OPERATIONAL SAFETY PROCEDURES
- OPERATING PROCEDURES
- BATTERY CARE
- CHARGING PROCEDURE
- WARRANTY POLICY
- OPTIONAL FEATURES
- LOCATION OF SERIAL NUMBER AND SAFETY DECALS
- OPERATION & MAINTENANCE MANAUL
- PLANNED MAINTENANCE PROGRAM

CUSTOMER AND DEALER SIGN OFF

THE SERVICING DEALER, OWNER, SUPERVISOR AND OPERATOR SHOULD ENSURE THAT THE VEHICLE IS ONLY OPERATED INDOORS ON LEVEL SURFACES. FLOORS SHOULD BE CLEAN AND CLEAR OF DEBRIS AND OBSTRUCTIONS.

PLANNED MAINTENANCE IS REQUIRED ON THIS VEHICLE PER THE ANSI GUIDELINES. BE SURE TO REFERENCE ANSI A92.6 FOR SPECIFIC PM REQUIREMENTS.

IT IS THE RESPONSIBILITY OF THE SERVICING DEALER, OWNER, SUPERVISOR AND OPERATOR TO ENSURE THE APPROPRIATE ONSITE INSPECTION AND TRAINING HAS TAKEN PLACE PRIOR TO USAGE. PLEASE SEE ANSI A92.6 GUIDELINES FOR COMPLETE REQUIREMENTS.

THIS MACHINE HAS BEEN RECEIVED IN SATISFACTORY CONDITION. WE HAVE RECEIVED PROPER INSTRUCTION REGARDING OPERATION, MAINTENANCE AND SAFETY PRACTICES.

CUSTOMER SIGNATURE:

PRINTED NAME: **DATE:**

AT THE TIME OF DELIVERY, THE OWNER'S AND OPERATOR'S MANUAL AND WARRANTY POLICY WERE PRESENTED AND EXPLAINED. THE DELIVERY SERVICE WAS CONDUCTED AS NOTED ABOVE.

DEALER SIGNATURE:

PRINTED NAME: **DATE:**

VISIT WWW.BIGJOESUPPORT.COM FOR PARTS, MANUALS, SUPPORT AND MORE!

https://truckmanualshub.com/

NOTES

https://truckmanualshub.com/

SECTION 2
PLANNED MAINTENANCE

2-1. GENERAL.

Planned maintenance consists of periodic visual and operational checks, inspection, lubrication, and scheduled maintenance designed to catch an issue in the early hours or discover malfunctions and defective parts. The operator performs the checks in the Operator's Manual, and refers any required servicing to a qualified maintenance technician who performs the planned maintenance and any required servicing.

2-2. MONTHLY AND QUARTERLY CHECKS.

Table 2-1 is a monthly and quarterly inspection and service chart based on normal usage of equipment eight hours per day, five days per week. If the vehicle is used in excess of forty hours per week, the frequency of inspection and service should be increased accordingly. These procedures must be performed by a qualified service technician or your Big Lift LLC Service Representative.

2-3. FREQUENT INSPECTIONS.

The owner and user are required by ANSI A92.6 to ensure frequent inspections of the J1 Task Support Vehicle occur and are performed in accordance with the following points: 1. If purchased used unless it's determined that the frequent and annual inspections are current. 2. The J1 Task Support Vehicle has been in service for three (3) months or 150 hours, whichever comes first. 3. The J1 Task Support Vehicle has been out of service for a period longer than three (3) months. inspection is to be performed by a mechanic that is qualified and authorized to perform service on the J1 Task Support Vehicle. All service records must be maintained. (See “Page 2-6” and “Page 2-7” for copy of inspection sheet, also available at www.bigjoesupport.com).

2-4. ANNUAL INSPECTIONS.

The owner and user are required by ANSI A92.6 to ensure annual inspections of the J1 Task Support Vehicle occur and are performed no later than 13 months from the date of prior annual inspection or every 700 hundred hours of use, whichever occurs first. This annual inspection is to be performed by a mechanic that is qualified and authorized to perform service on the J1 Task Support Vehicle. All service records must be maintained. (See “Page 2-6” and “Page 2-7” for copy of inspection sheet, also available at www.bigjoesupport.com).

2-5. BATTERY CARE.

2-5.1. General

The vehicle may be equipped with maintenance free batteries.

The care and maintenance of the battery is very important to obtain efficient vehicle operation and maximum battery life.

CAUTION: Gases produced by a battery can be explosive. Do not smoke, use an open flame, create an arc or sparks in the vicinity of the battery. Ventilate an enclosed area well when charging.

CAUTION: Batteries contain sulfuric acid which may cause severe burns. Avoid contact with eyes, skin or clothing. In case of contact, flush immediately and thoroughly with clean water. Obtain medical attention when eyes are affected. A baking soda solution (one pound to one gallon of water) applied to spilled acid until bubbling stops, neutralizes the acid for safe

Table 2-1 Monthly and Quarterly Inspection and Service Chart

VISUAL CHECKS	
INTERVAL	**INSPECTION OR SERVICE**
Monthly	Check electrical brake for proper operation.
Monthly	Inspect wiring for loose connections and damaged insulation.
Monthly	Check wheels for wear and damage.
Monthly	Check "deadman” footswitch for proper operation.
Monthly	Check lift chain tension, lubrication & operation (see paragraph 2-9.)
Quarterly	Check lift cylinder for leakage.
Quarterly	Test electric steering.
Quarterly	Check steering gear for wear and lubricate.
Semi-annually	Inspect for chain wear (See SECTION 7)

https://truckmanualshub.com/

2-5.2. Safety Rules

- Wear protective clothing, such as rubber apron, gloves, boots and goggles when performing any maintenance on batteries. Do not allow electrolyte to come in contact with eyes, skin, clothing or floor. If electrolyte comes in contact with eyes, flush immediately and thoroughly with clean water. Obtain medical attention immediately. Should electrolyte be spilled on skin, rinse promptly with clean water and wash with soap. A baking soda solution (one pound to one gallon of water) will neutralize acid spilled on clothing, floor or any other surface. Apply solution until bubbing stops and rinse with clean water.
- Do not bring any type of flame, spark, etc., near the battery. Gas formed while the battery is charging, is highly explosive. This gas remains in cell long after charging has stopped.
- Do not lay metallic or conductive objects on battery. Arcing will result.
- Do not touch non-insulated parts of DC output connector or battery terminals to avoid possible electrical shock.
- Disconnect all AC and DC power connections before servicing battery.
- Do not charge a frozen battery.
- Do not use charger if it has been dropped or otherwise damaged.

2-5.3. Maintenance Personnel

Batteries may only be charged, serviced or replaced by trained personnel. This manual and the manufacturer's instructions concerning batteries and charging stations must be observed when carrying out the work.

2-5.4. Battery Care and Charging

CAUTION: Never smoke or bring open flame near the battery. Gas formed during charging is highly explosive and can cause serious injury.

1. Charge the battery only in areas designated for that use.
2. Battery terminals should be checked and cleaned of corrosion regularly. Good battery terminal contact is essential not only for operation, but also for proper charging of the battery.
3. Make certain battery used meets weight and size requirements of vehicle. NEVER operate vehicle with an undersized battery.

2-5.5. Battery Cleaning

Always keep vent plugs tightly in place when cleaning battery. When properly watered and charged, the battery will remain clean and dry. All that is necessary is to brush or blow off any dust or dirt that may accumulate on them. However, if electrolyte is spilled or overflows from a cell, it should be neutralized with a solution of baking soda and water, brushing the soda solution beneath the connectors and removing grime from the covers. Then rinse the battery with cool water from a low pressure supply to remove the soda and loosen dirt. If batteries stay wet consistently, they may be either overcharged or over filled. This condition should be investigated and corrected.

2-5.6. MAINTENANCE FREE BATTERIES

Some vehicles may be equipped with maintenance free batteries. These batteries are completely sealed, will not require any watering and have a full 80% discharge available.

Sealed Maintenance Free batteries contain a pressure release valve and under normal operating conditions do not require any special ventilation.

CAUTION: Do not try to open this battery or remove the pressure release valve.

Only under severe overcharging, such as connected to an improperly sized charger, will any significant amount of gases be released from the battery. Also, being a valve regulated battery, it never requires watering.

https://truckmanualshub.com/

2-6. CHARGING BATTERIES

Charging requirements will vary depending on depth of discharge and temperature. Follow safety rules when placing a battery on charge.

Proceed as follows:

1. Park vehicle at charging station with platform lowered and turn the key switch OFF.
2. Apply the emergency disconnect switch.
3. Check the condition of the AC cord and battery cables. If there are any cuts in the cable, any exposed wires, loose plugs or connectors, DO NOT attempt to charge the batteries.
4. Disconnect plug (1, Figure 2-1) from the vehicle and connect it to charger's plug (2).
5. Connect cord (3) and charge the battery according to Supplement 374 *.
6. Disconnect the charger cord and insert it in its receptacle on the vehicle.

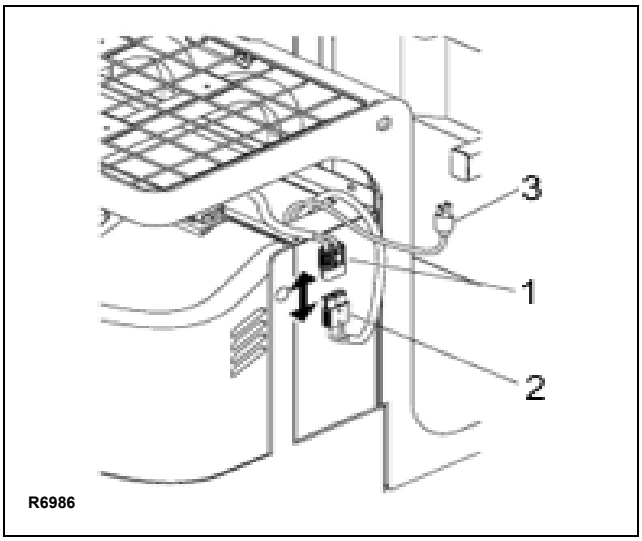

Figure 2-1 Battery Charging

2-7. REPLACING BATTERIES

Replace only with original OEM batteries or batteries approved by an authorized Big Lift LLC dealer. Contact your authorized Big Joe dealer for information on optional batteries and battery chargers.

1. Park vehicle at charging station with platform lowered and turn the key switch OFF.
2. Apply the emergency parking brake.
3. Disconnect the battery from the vehicle and place the battery plug and cable in such a way that they will not get caught on the vehicle when the battery is removed.
4. Remove retainer (2, Figure 2-2).

WARNING: Take caution when removing the battery pack or optional industrial battery from the vehicle. Battery is located on battery rollers. Use of a battery stand is recommended when removing the battery. Only an authorized Big Joe dealer should be used for battery removal and installation.

5. Remove battery (1) out the side of the vehicle.
6. Install in reverse order.

WARNING: The weight and dimensions of the battery have considerable affect on the operational safety of the vehicle. Battery equipment may only be replaced with the agreement of the manufacturer.

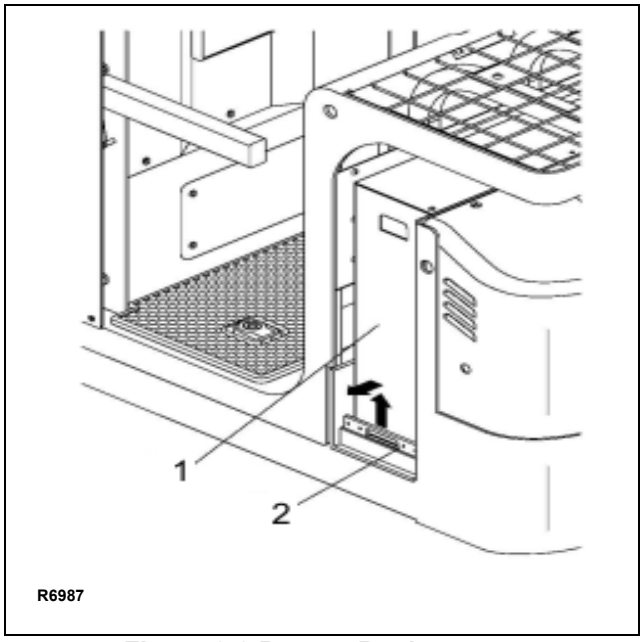

Figure 2-2 Battery Replacement

2-7.1. Battery disposal:

Dispose in accordance with national environmental protection regulations or disposal laws. The manufacturer's disposal instructions must be followed

* Please refer to the Big Joe Support site at www.bigjoesupport.com

https://truckmanualshub.com/

R6115

2-8. LUBRICATION.

Refer to Table 2-2 for the recommended types of grease and oil. Table 2-3 in conjunction with Figure 2-3 identifies the items requiring lubrication.

Table 2-2 Recommended Lubricants (See Table 2-3 for Application)

No. 1	Grease—Polylub GA352P
No. 2	Hydraulic oil—L-HM46#.

2-9. LIFT CHAIN MAINTENANCE.

Fully raise and lower lift carriage while observing chains as they move over chain sheaves. Ensure chain is aligned and tracking properly and all links are pivoting freely. With lift carriage fully lowered, spray on a film of Moly Chain Lube. For more information see SECTION 7

https://truckmanualshub.com/

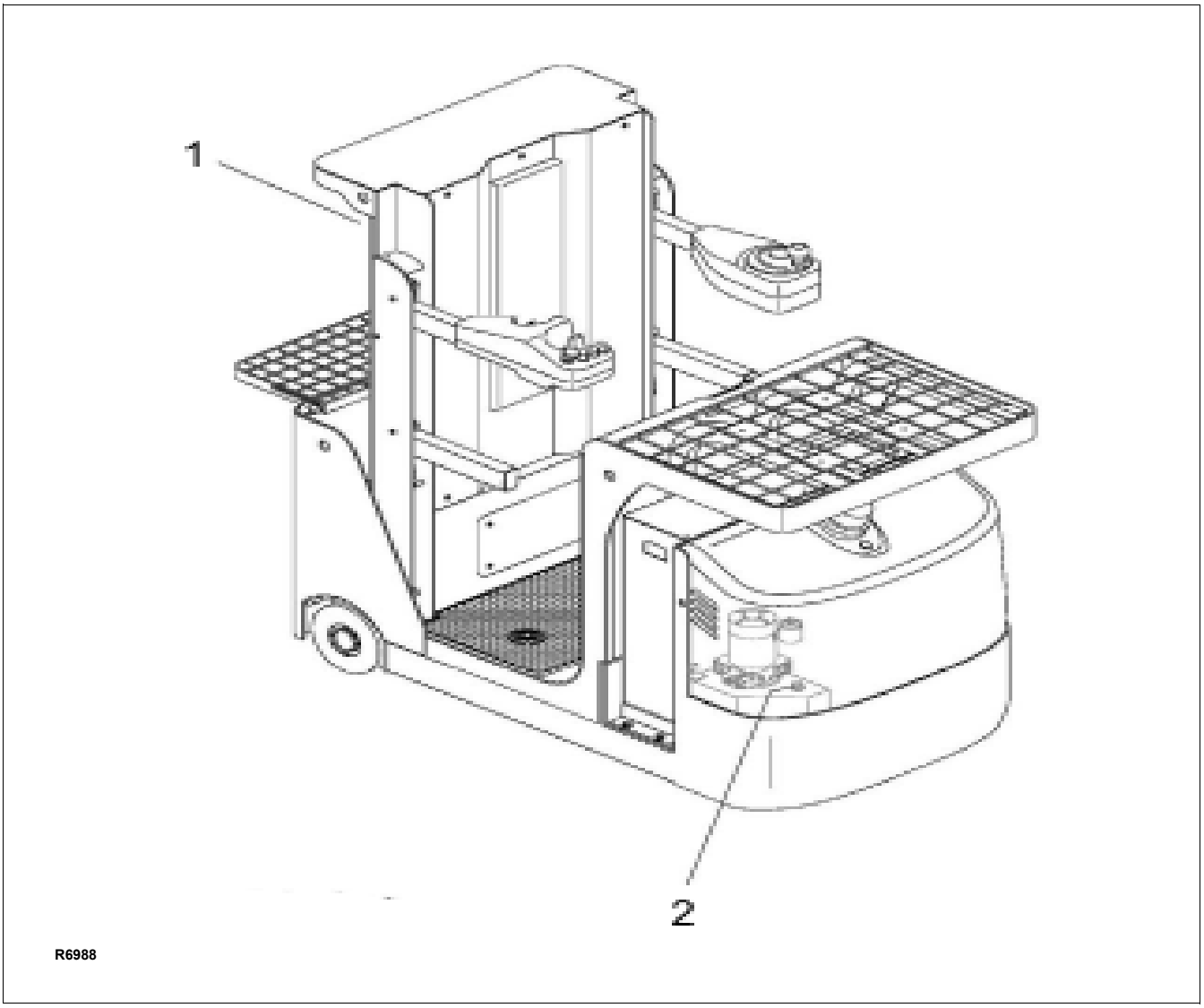

Figure 2-3 Lubrication Diagram

Table 2-3 Lubrication Chart

FIG 3-2 INDEX NO.	LOCATION	METHOD OF APPLICATION	TYPE (Table 2-3)	APPLICATION OF LUBRICANT
1	Mast	Spray	No. 1	Full length of channel where rollers operate.
2	Hydraulic Reservoir	Can	No. 2	With platform fully lowered, fill reservoir with hydraulic oil to level on dip stick.

https://truckmanualshub.com/

Big Lift LLC.
1060 N. Garfield St.
Lombard, IL 60148

J1 - Task Support Vehicle (TSV)
Annual Inspection Report

www.bigjoesupport.com

DEALER INFORMATION		OWNER / END USER INFORMATION	
COMPANY:		COMPANY:	
ADDRESS:		ADDRESS:	
CITY/STATE/ZIP:		CITY/STATE/ZIP:	

VEHICLE INFORMATION:							
MODEL:		SERIAL:		MAST SIZE:		HOUR METER:	
BATTERY SPEC.:		OPTIONS:				PREVIOUS INSPECTION:	

INSPECTION REQUIREMENTS per ANSI A92.6 (ANNUAL AND FREQUENT)
ANNUAL INSPECTION: The owner and user are required by ANSI A92.6 to ensure annual inspections of the J1 Task Support Vehicle occur and are performed no later than 13 months from the date of prior annual inspection or every 700 hundred hours of use, whichever occurs first. This annual inspection is to be performed by a mechanic that is qualified and authorized to perform service on the J1 Task Support Vehicle. All service records must be maintained.
FREQUENT INSPECTIONS: The owner and user are required by ANSI A92.6 to ensure frequent inspections of the J1 Task Support Vehicle occur and are performed in accordance with the following points: 1. If purchased used unless it's determined that the frequent and annual inspections are current. 2. The J1 Task Support Vehicle has been in service for three (3) months or 150 hours, whichever comes first. 3. The J1 Task Support Vehicle has been out of service for a period longer than three (3) months. inspection is to be performed by a mechanic that is qualified and authorized to perform service on the J1 Task Support Vehicle. All service records must be maintained.
INSTRUCTIONS: Refer to service/maintenance manuals for specific information regarding inspection procedures and criteria. Indicate in the appropriate space as each item has been performed. If the item is found to be not acceptable, describe each discrepancy on an additional page and attach to the form. Immediate action must be taken to correct all discrepancies. The vehicle shall not be placed in service until all discrepancies have been corrected.

Put a ✓ in the column that applies: P = Passed Inspection , F = Failed Inspection, C = Corrected			
FUNCTIONS and CONTROLS	P	F	C
Drive and operate machine to test all functions. Ensure controls operate properly and return to "off" or neutral when released.	☐	☐	☐
Ensure emergency power disconnect switch deactivates all movement and power and that the deadman foot switch operate properly.	☐	☐	☐
Instrument panel is clean and free of debris and dash display is functional.	☐	☐	☐
Operator right side control arm functions properly. Horn / travel / lift / lower / accelerator buttons are functional.	☐	☐	☐
Operator left side control arm steering wheel functions properly.	☐	☐	☐
Emergency lower button operates properly.	☐	☐	☐
Ensure gate switches disable travel/lift and lower functions and flashing lights on the front and rear of the vehicle.	☐	☐	☐
The drive wheel returns to "neutral" (straight forward) when powering up the vehicle and is accurately depicted on the LCD display.	☐	☐	☐
OPERATOR PLATFORM ASSEMBLIES	P	F	C
Mast sections are free of visual evidence of damage. Mast chains and cables are inspected per the Service and Maintenance Manual.	☐	☐	☐
Mast wiring harnesses are properly installed, seated in their pulleys and that there are no frayed or broken strands.	☐	☐	☐
Chains are adequately lubricated and are not dry or rusty.	☐	☐	☐
Mast cover plates are in place and securely attached for each section.	☐	☐	☐
Mast operates smoothly to full height and descends smoothly. Ensure speed cutbacks occur at appropriate heights per the maintenance manual.	☐	☐	☐
Platform guard rails are undamaged and gates open / close freely.	☐	☐	☐
All nuts, bolts, pins, shafts, covers, bearings and wear pads are checked for proper installation, and do not have excessive wear, cracks or distortion.	☐	☐	☐

Continued on page 2

VEHICLE INFORMATION:							
MODEL:		SERIAL:		MAST SIZE:		HOUR METER:	
DEALER:				OWNER / END USER:			

HYDRAULIC SYSTEM	P	F	C
Lift cylinder is free of damage, no evidence of leaks and that all hardware is secure and undamaged.	☐	☐	☐
All hydraulic hoses, fittings and components are properly secured and that there is no evidence of leaks.	☐	☐	☐
Ensure fluid level is correct in hydraulic tank.	☐	☐	☐
Ensure hydraulic pump is secure and undamaged, operates properly and is free of leaks.	☐	☐	☐
Ensure hydraulic control valve is secure and undamaged, operates properly and is free of leaks.	☐	☐	☐
Ensure hydraulic oil breather/vented cap is clean, hydraulic tank cap is tight and vent is open.	☐	☐	☐
POWER and DRIVE SYSTEM	P	F	C
Ensure battery fluid level is correct (if applicable).	☐	☐	☐
Visually inspect motors to ensure there is no damage.	☐	☐	☐
Ensure battery charger scrolls through diagnostics when plugged in.	☐	☐	☐
Ensure all electrical connections are tight, free of frays and corrosion.	☐	☐	☐
Ensure battery meets weight and voltage requirements.	☐	☐	☐
Ensure drive, load and caster wheels are properly installed, secure and do not have excessive wear. Ensure all five wheels have contact with the floor.	☐	☐	☐
Ensure the electronic brake operates properly.	☐	☐	☐
GENERAL	P	F	C
Ensure paint is in good condition and that there are not any issues with the overall appearance of the task support vehicle.	☐	☐	☐
Inspect overall structural condition including welds.	☐	☐	☐
Verify that no unauthorized modifications or additions have been made.	☐	☐	☐
Grease and lubricate the mast channel per maintenance manual.	☐	☐	☐
Ensure stability pads at base of unit (adjacent to caster wheels) are intact, properly secured and have not sustained any damage	☐	☐	☐
Ensure optional equipment such as anchor point, tether, full body harness and tow hitch are in good condition and fully functional (if applicable).	☐	☐	☐
Inspect front and rear load trays for functionality and damage.	☐	☐	☐
MANUALS - DECALS - DATA PLATE	P	F	C
Ensure ANSI/ SIA A92.6 manual of responsibilities, operations manual and service manual are in weather resistant pouch on vehicle.	☐	☐	☐
Ensure data plate is in place, secured and legible	☐	☐	☐
Ensure all instruction and safety decals are installed, secure and legible.	☐	☐	☐
ADDITIONAL COMMENTS			

The undersigned certifies that this machine has been inspected, per each area of inspection, and any and all discrepancies have been brought to the attention of the Owner / User, and that all discrepancies have been corrected prior to any further use of this machine.

OWNER / USER SIGNATURE:	OWNER / USER PRINTED NAME:	DATE:
DEALER SIGNATURE:	DEALER PRINTED NAME:	DATE:

https://truckmanualshub.com/

NOTES

https://truckmanualshub.com/

SECTION 3
TROUBLESHOOTING

3-1. GENERAL

Use Table 3-1 as a guide to determine possible causes of trouble. The table is divided into five main categories: Vehicle and Hydraulic System Will Not Operate: Vehicle Does Not Operate Forward or Reverse: Trouble With Braking: Trouble With Lifting Or Lowering, and Miscellaneous malfunctions.

Table 3-1 Troubleshooting Chart

MALFUNCTION	PROBABLE CAUSE	CORRECTIVE ACTION
TRAVEL AND HYDRAULIC SYSTEM WILL NOT OPERATE		
	a. Battery connector (12, Figure 11-12) not connected.	Check the battery connector and connect if necessary.
	b. Keyswitch (3, Figure 11-8) “OFF” or defective.	Turn keyswitch “ON” or bypass keyswitch to determine if it is malfunctioning.
	c. Safety guard rail open.	Close safety guard rail.
	d. Emergency power disconnect switch (6, Figure 11-8 pressed or defective.	Disengage the emergency power disconnect switch or bypass switch to determine if it is malfunctioning.
	e. “Deadman” footswitch (19, Figure 11-33) not pressed or defective.	Press "deadman" footswitch or bypass pedal to determine if it is malfunctioning.
	f. Battery charge too low.	Check battery charge, charge battery if necessary.
	g. Faulty fuse (12, Figure 11-13).	Test fuses.
VEHICLE DOES NOT OPERATE FORWARD OR REVERSE		
Vehicle does not travel forward or reverse. All other functions operate normally.	a. Check all wiring. A loose connection may be the cause of malfunction.	Tighten all loose connections before further troubleshooting.
	c. Defective controller (4, Figure 11-13).	Check for proper operation and replace if necessary.
	d. Defective travel switch (8, Figure 11-8).	Check and replace switch if defective.
Vehicle travels forward but not in reverse.	Defective travel switch (8, Figure 11-8).	Check and replace switch if defective.
Vehicle travels reverse but not in forward.	Defective travel switch (8, Figure 11-8) in control head.	Check and replace switch if defective.
Vehicle travels forward and in reverse at lower speeds; will not travel at high speed.	a. Defective travel switch (8, Figure 11-8) in control head.	Check and replace switch if defective.
	b. Operator platform raised above 47 inches.	Lower operator platform below 47 inches.

https://truckmanualshub.com/

Table 3-1 Troubleshooting Chart - Continued

MALFUNCTION	PROBABLE CAUSE	CORRECTIVE ACTION
TROUBLE WITH LIFTING OR LOWERING		
Oil sprays or flows from the top of the lift cylinder.	Defective packing in lift cylinder	Repair lift cylinder.
Squealing sounds when lifting Operator's platform.	a. Oil level too low.	Identify oil leak and fill reservoir.
	b. Dry channels in mast.	Apply grease.
	c. Defective mast or Platform rollers	Replace rollers.
Forks do not lift to top.	a. Oil level too low.	Add oil to reservoir.
	b. Load larger than capacity.	Refer to I.D.plate for capacity.
Weak, slow or uneven action of hydraulic system.	a. Defective pump or relief valve.	Check pressure. Adjust as necessary.
	b. Worn lift cylinder.	Replace cylinder.
	c. Load larger than capacity.	Refer to I.D.platefor capacity.
	d. Defective lift motor relay.	Replace relay (18, Figure 11-10) on pump motor.
	e. Battery charge low.	Charge battery.
Platform does not lift, pump motor does not run.	a. Battery is dead or disconnected.	Check and recharge if required.
	b. Defective wiring.	Check and repair as required.
	c. Defect in electrical system for operating pump motor.	Check lift switch (1, Figure 11-8) in control head, as well as the relay (18, Figure 11-10).
Platform does not lift, motor runs.	Defect in hydraulic system.	Check the oil level in the reservoir and the oil lines to the lift cylinder, and repair as required. If normal, check the hydraulic pump, and relief valve. Repair, or adjust.
Platform lifts, but will not go down.	Defect in hydraulic system	Check lowering control switch (1, Figure 11-8) and lowering solenoid (10, Figure 11-10). Replace as required.
Load will not hold	a. Oil bypassing internally in control valve	Replace valve assembly (Figure 11-10).
	b. Worn lift cylinder or packing.	Repack cylinder.
Platform does not lift to top. Pump motor runs.	a. Oil level too low.	Add oil to reservoir.
	b. Load larger than capacity.	Refer to nameplate on side of mast for maximum load capacity.
	c. Batteries need charging.	Charge batteries.

https://truckmanualshub.com/

Table 3-1 Troubleshooting Chart - Continued

MALFUNCTION	PROBABLE CAUSE	CORRECTIVE ACTION
TROUBLE WITH LIFTING OR LOWERING - Continued		
Forks drifts down under load when in a raised position.	Leak in hydraulic system, lift cylinder or lowering valve.	Check for leaking fitting in hydraulic line and repair as required. Repack lift cylinder or replace valve assembly (Figure 11-10).
TROUBLE WITH STEERING		
	a. Faulty fuse (12, Figure 11-13).	Test fuses.
	b. Check all wiring. A loose connection may be the cause of malfunction.	Tighten all loose connections before further troubleshooting.
	c. Defective potentiometer (20, Figure 11-7).	Check and replace potentiometer if defective.
	d. Defective controller (2, Figure 11-13).	Check for proper operation and replace if necessary.
	e. Defective steer motor (6, Figure 11-5) or (23 Figure 11-6).	Replace if necessary.

https://truckmanualshub.com/

3-2. CONTROLLER TROUBLESHOOTING

3-2.1. Zapi Handset

A Zapi Handset is available that is designed specifically for use with the Zapi controller. It serves multiple functions of reading diagnostic data, testing truck operation, setting options, adjustments and parameter changes of the controller. The Zapi Handset is available through your Big Lift LLC dealer. If you require dealer location information, contact Big Lift LLC.

Remove the rubber plug from the CNC connector of the controller Figure 3-1 and plug in the Zapi Handset connector.

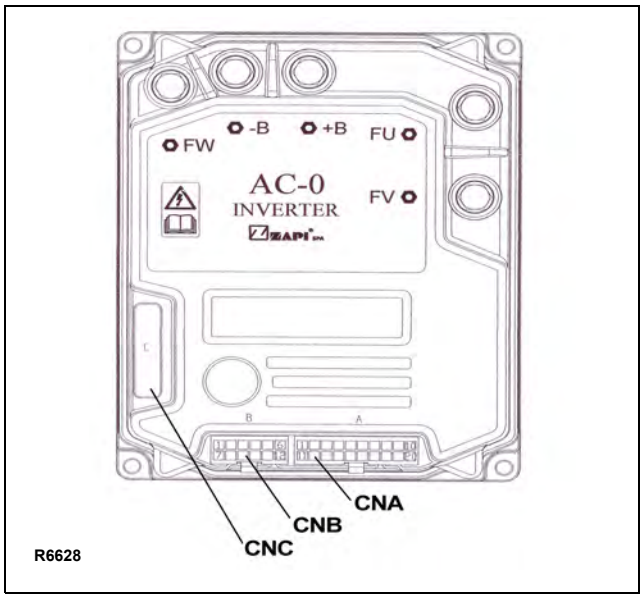

Figure 3-1 Zapi Controller

3-2.2. Fault Detection.

3-2.2.1. General

The microprocessor in the controller records the last five Alarms that have occurred. Items remembered relative to each Alarm are:

- The alarm code
- The times that each alarm occurs consecutively
- The Hour Meter value when the latest event of every alarm occurred

This function permits a deeper diagnosis of problems as the recent history can be revisited.

3-2.2.2. Logbook Access

To view the alarm logbook proceed as follows:

1. Connect the Zapi Handset, refer to paragraph 3-2.1.
2. Press the ENTER button (3, Figure 3-2) to enter the MAIN MENU.
3. Press the ROLL down button (2) or the ROLL up button (1) until ALARMS menu appears on the display.
4. Press the ENTER button (3) to enter the ALARMS menu.
5. Press the ROLL up button (1) to view the alarms. Pressing the ROLL down button (2) returns to the most recent alarm.

   If an alarm has not occurred, the display will show NONE.
6. Press the OUT button (4) to exit the alarms.

   The display will ask: “CLEAR LOGBOOK?” Press the ENTER button (3) for Yes or OUT button (4) for No.
7. Press the OUT button (4) again to return to Opening Zapi Menu.

3-2.3. Testing Truck Operation.

The Zapi Handset can be used to test certain truck operations as follows:

1. Connect the Zapi Handset, refer to paragraph 3-2.1.
2. Press the ENTER button (3, Figure 3-2) to enter the MAIN MENU.
3. Press the ROLL down button (2) or the ROLL up button (1) to find the TESTER display.
4. Press the ENTER button (3) to enter the TESTER function.

   The first switch to be tested is shown on the display.
5. To verify various switch functions, press the ROLL down button (2) or the ROLL up button (1) to locate the switch on the display and then operate that function to verify operation
6. Press the OUT button (6) to exit the tests. The display will show TESTER.
7. Press the OUT button (6) again to return to Opening Zapi Menu.

https://truckmanualshub.com/

3-2.4. Factory Settings

Parameter setting are not to be changed from factory settings without explicit written permission from Big Lift LLC. To verify the parameter settings proceed as follows and refer to Table 3-2:

1. Connect the Zapi Handset, refer to paragraph 3-2.1.
2. Press the ENTER button (3, Figure 3-2) to enter the MAIN MENU.
3. Press the ROLL down button (1) or the ROLL up button (2) to find the PARAMETER CHANGE display.
4. Press the ENTER button (3) to view the parameters.

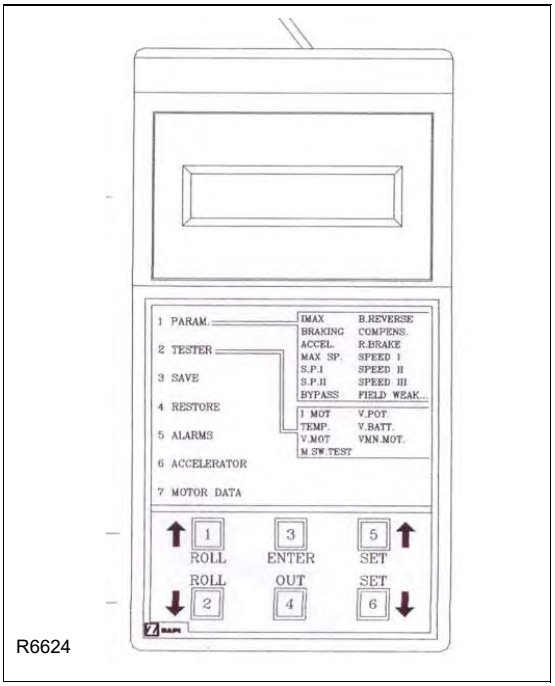

Figure 3-2 Zapi Handset

5. Press the ROLL down button (2) or the ROLL up button (1) to find the parameter to be checked.
6. Press the SET up button (5) or the SET down button (6) until the factory setting is reached.
7. Press the OUT button (4) to exit the parameters. The confirmation request appears.
8. Press ENTER button (3) to accept the changes or press OUT button (6) to refuse the changes.
9. Press the OUT button (6) again to return to Opening Zapi Menu.

Table 3-2 Parameter Adjustments

Parameter	Factory Setting
ACCELER. DELAY	LEVEL = 4
RELEASE BRAKING	LEVEL = 5
INVERS. BRAKING	LEVEL = 7
PEDAL BRAKING	LEVEL = 9
SPEED LIMIT BRK	LEVEL = 2
BRAKE CUTBACK	LEVEL = 5
MAX SPEED FORW	107 Hz
MAX SPEED BACK	107 Hz
CUTBACK SPEED	70%
CUTBACK SPEED 2	50%
CUTBACK SPEED 3	20%
CURVE CUTBACK	60%
DEADMAN BRAKING	7
HS (hard-soft) CUTBACK	100%
FREQUENCY CREEP	1.20 Hz
MAXIMUM CURRENT	9
INCHING SPEED	0 Hz
INCHING TIME	0%
AUXILIARY TIME	0.4

https://truckmanualshub.com/

Table 3-3 Troubleshooting Chart (Traction/Lift Controller)

ERROR	ERROR TEXT	POSSIBLE CAUSE	FAULT CLEARANCE
1	WRONG CONFIG	This alarm occurs the first time a controller is switched on when the non volatile eeprom memory is not initialized yet. Then it is necessary to specify if the controller is AC-0 or AC-1 type (see AC TYPE 0 in the hidden hardware setting Zapi menu). If the alarm is present, by switching off the key the AC TYPE 0 setting will be automatically turned On (and the controller is specified to be an AC-0). The AC TYPE 0 setting can be changed only when a WRONG CONFIG alarm is present. If it is not present, it is necessary to clear the eeprom memory if the WRONG CONFIG alarm occurs.	The AC TYPE 0 setting must be factory adjusted and so the alarm should never happen. So ask for the assistance of a Big Lift LLC Service Representative when this alarm occurs.
8	WATCH DOG	This alarm occurs when the embedded WATCH DOG protection is not able to either cut off the power stage when not triggered or it is not able to activate the power stage when triggered.	Verify the motor is connected and there is continuity of the three motor phases. If the alarm occurs permanently, replace the controller.
16	AUX OUPUT KO	This alarm occurs when the feedforward PWM generated by the controller to supply the Electromechanical Brake are not matched in between. The diagnosis is made only when the Tiller Switch is active.	Replace the controller because the driver of the Electromechanical Brake has a failure.
13	EEPROM KO	This alarm occurs due to a HW or SW defect of the non-volatile embedded memory supporting the controller regulations.	Try to execute a CLEAR EEPROM operation. This consists of entering ALARMS in the MAIN MENU. Push at the same time the two right side buttons to enter the hidden ZAPI MENU. Roll up and down until the CLEAR EEPROM appears on the handset display. Push the Enter Button two times. Switch the key off and on to check the result. If the alarm occurs permanently, replace the controller.
17	LOGIC FAILURE #3	This alarm occurs when the circuit to limit via HW the current peak in the controller is active.	If is probably a power failure or a logic failure. If the alarm occurs permanently, replace the controller.
18	LOGIC FAILURE #2	This alarm occurs when the circuit, to compensate for the dead times of the sine waves, is failed.	Replace the Controller.

https://truckmanualshub.com/

Table 3-3 Troubleshooting Chart (Traction/Lift Controller) - Continued

ERROR	ERROR TEXT	POSSIBLE CAUSE	FAULT CLEARANCE
19	LOGIC FAILURE #1	This alarm signals that an overvoltage/ undervoltage protection operation has occurred.	Normally the overvoltage occurs due to the regenerative braking energy increasing the battery voltage; the under voltage of the logic supply, can be due to a depletion in the key voltage. First, check for the failure mode. Then contact the Big Lift LLC Service Representative to look for a countermeasure. This alarm may occur for a HW failure. Replace the Controller.
30	VMN LOW	Before the main contactor is turned on, the SW turns on the top side Power Mosfets and expects the phase V voltage to increase toward the rail capacitor value. If the phase V does not increase, this alarm occurs. The alarm may occur when the initial diagnosis is overcome, and the main contractor is expected to be closed. Then when the operator tries to move the vehicle, but the +Batt terminal of the controller is lower voltage than the Battery voltage, this alarm occurs (Main Contractor has lost the contact although it is closed).	If the problem occurs before the Main Contactor closes, a power failure occurred (e.g. a bottom side Power Mosfet short circuited or a top side Power Mosfet is broken) or a Logic Failure occurred in the controller. If the problem occurs when the operator turns a moving vehicle, the problem is the Battery positive is not connected to the +Batt terminal of the controller (check the continuity of the main contactor). If the problem occurs permanently, replace the controller.
31	VMN HIGH	Before the main contactor is turned on, the SW turns on the bottom side Power Mosfets and expects the phase V voltage to fall to GND value. If the phase V remains high, this alarm occurs.	There are two possibilities: 1. A motor phase is not connected to the controller or broken. 2. A Power Failure (e.g. a Bottom side Power Mosfet opened) or a Logic Failure occurred in the controller. In this case, replace the controller.
37	CONTACTOR CLOSED	The controller check if the MV contact is closed when the coil isn't driven, trying to discharge the capacitor bank. If they don't discharge, the fault condition is entered.	It is suggested to check the contactor, if it is mechanically stuck or burnt closed.
38	CINTACTOR OPEN	The main contactor coil has been driven by the logic board, but the contactor does not close.	There are two possibilities: 1. The wires to the coil are interrupted or not well connected. 2. The contact of the contactor is defective.

https://truckmanualshub.com/

Table 3-3 Troubleshooting Chart (Traction/Lift Controller) - Continued

ERROR	ERROR TEXT	POSSIBLE CAUSE	FAULT CLEARANCE
49	I=0 EVER	This test is carried out when the motor is running, and it verifies that the current feedback sensor is not constantly stuck at 0.	If everything is OK for the motor, the problem could be in the related circuit.
55	PROGRAM LIFT LEVER	The SW continuously matches the potentiometer connected to CNA#18 with the Main Lifting/Lowering pair request (CNB# and CNB#8). When the vehicle TYPE is set 2, the alarm occur in the following conditions: 1. If both the Main Lifting and Main Lowering request are disactive and the potentiometer voltage is higher than 60 mV over either the MIN LIFT or the MIN LOWER setting. 2. If the Main Lifting request is active and the potentiometer voltage is higher than 200 mV over the MAX LIFT setting. 3. If the Main Lowering request is active and the potentiometer voltage is higher than 200 mV over the MAX LOWER setting. 4. If the MIN LIFT setting is higher than the MAX LIFT setting. When the vehicle TYPE is set at 3, the alarm occurs in the following conditions: 1. If the Main Lowering request is higher that the MIN LOWER. 2. If the MIN LOWER setting is higher that the MAX LOWER	Check the Main Lifting/Lowering pair (CNB#8 and CNB#9) and the voltage on the potentiometer connected to CNA#18. (Use the readings LIFTING SWITCH, DESCENT SWITCH and LIFTING CONTROL in the TESTER to facilitate the troubleshooting).
53	STBY I HIGH	This diagnosis is executed only when the main contactor is opened and asked to be closed (e.g. at key on or when the main contactor is opened and a new motion request turn active). Then the outputs of the Current amplifiers must be in a narrow window close to 2.5 Vdc (from 2.26 V to 2.74 V). Otherwise this STBY I HIGH alarm occurs.	If the alarm occurs permanently, replace the controller.

https://truckmanualshub.com/

Table 3-3 Troubleshooting Chart (Traction/Lift Controller) - Continued

ERROR	ERROR TEXT	POSSIBLE CAUSE	FAULT CLEARANCE
60	CAPACITOR CHARGE	In working condition, a resistance connected between the key and the Rail Capacitors, keeps the Rail Capacitors charged before the Main Contactor closes. When the voltage on the Rail Capacitors (measured on the phase V) is low and does not increase when the main contactor is opened, this alarm occurs.	The possibilities: 1. Another device, connected in parallel with the Rail Capacitors, has a failure. 2. At least one motor phase is not connected to the controller or broken. 3. A Power failure or a Logic Failure occurred in the controller. Replace the controller.
61	HIGH TEMPERATURE	This alarm occurs when the temperature of the base plate is higher than 78°C up to 100°C. At 100°C the current is limited to 0 Amps.	Improve the air cooling of the controller.
65	MOTOR TEMPERAT	This is just a warning with not effect will the vehicle performance. It occurs when the temperature of the motor winding overtakes the MOTOR OVERTEMP setting.	Check the thermal sensor inside the motor (use the MOTOR TEMPERATURE reading in the TESTER menu). If the senor is OK, improve the air cooling of the motor.
67	CAN BUS KO	This alarm occurs if the controller does not receive any message from the CAN Bus line.	1. First check the wiring. 2. If OK, try to disconnect one to one the module connected to the CAN Bus and check if this alarm disappears. 3. Replace the controller.
70	ENCODER ERROR	Two consecutive readings of the encoder speed are too drastic. It is not possible for the encoder to change its speed a lot in a short period. An encoder failure has occurred (e.g. one or two channels of the encoder are corrupted or disconnected.	Check both the electric and the mechanical encoder functionality. Frequently one of the two sensor bearing rings slips inside its seat causing this alarm. Also, the electronic noise on the sensor bearing can be a cause of the alarm.
71	HANDBRAKE	This alarm occurs when the operator tries to travel with the emergency brake active.	Check the emergency brake switch and its wiring to CNA#13 The emergency brake switch must be connected between CAN#13 and GND. When it is closed to GND, the emergency brake is considered active. A failure in the logic is possible too. Replace the controller.
73	THERMIC SENS KO	When the output of the thermal sensor on the base plate is higher than 4.95V or lower than 0.1V, the sensor is assumed defective and this alarm occurs.	It is necessary to replace the controller.

https://truckmanualshub.com/

Table 3-3 Troubleshooting Chart (Traction/Lift Controller) - Continued

ERROR	ERROR TEXT	POSSIBLE CAUSE	FAULT CLEARANCE
74	DRIVER SHORTED	This alarm occurs when the voltage on the main contactor is higher than expected. This means that the main contactor coil has a high voltage although it is not supplied.	Replace the controller.
75	CONTACTOR DRIVER	This alarm occurs when the voltage on the main contactor is smaller than expected. The main contactor has a null voltage when supplied.	Check coils of the main contactor (CNA#1) is not short circuited. If not, replace the controller.
76	COIL SHORTED	This alarm occurs when there is an overload on one of the following connections: CNA#1, CNA#3, CNA#4 or CNA#6. Typically the problem is due to a short circuit of one of the coils connected to these outputs. After the overload has been removed, the alarm automatically resets by releasing and then enabling a travel demand.	Check the coils of main contactor (CNA#1), electromechanical brake (CNA#3), pump contactor (CNA#4), and aux valve (CNA#6).
78	VACC NOT OK	A test is made at key-on and after 20 sec that both the travel demands are disactive. This alarm occurs if the ACCELERATOR reading in the TESTER menu is higher than 1.0V (meaning the wiper of the potentiometer is higher than 2Vdc).	Check the mechanical calibration and the functionality of the potentiometer.
80	FORW+BACK	This alarm occurs when both the travel demands (Fwd and Bwd) are active at the same time.	Check the wiring of the Fwd and Bwd travel demand inputs (use the readings in the TESTER to facilitate the troubleshooting). A failure in the logic is possible too. When you verified the travel demand switches are working properly and the wiring is right, replace the controller.
79	INNCORECT START	This is just a warning for an incorrect starting sequence.	The possible reasons for this alarm are (use the readings in the TESTER to facilitate the troubleshooting): 1. A travel demand active at key on 2. The tiller switch active at key on 3. The H&S input active at key on 4. The Quick inversion active at key on A failure in the logic is possible too. When all of the above conditions checked OK, replace the controller.

https://truckmanualshub.com/

Table 3-3 Troubleshooting Chart (Traction/Lift Controller) - Continued

ERROR	ERROR TEXT	POSSIBLE CAUSE	FAULT CLEARANCE
86	PEDAL WIRE KO	The SW continuously checks for the connection of the two supply ends of the potentiometer in the accelerator. The test consists of the voltage drop on a sense diode, connected between MPOT (CNB#11) and GND and cascaded with the potentiometer: if the potentiometer gets disconnected on PPOT or NPOT, no current flow in this sense diode and the voltage on the MPOT connection collapses down. When the NPOT voltage is less than 0.3V this alarm occurs. This alarm also occurs when the NPOT voltage is higher than 2 VDC (to detect the condition of a broken sense diode).	Check the voltage on NPOT (CNB#11) and the potentiometer connections.
90	LIFT+LOWER	This alarm occurs when both a lifting request and a lowering request are active at the same time.	If the MDI-PRC is absent, check only the of the main lifting/lowering pair (CNB#8 and CNB#9); if the MDI-PRC is present check the wiring of the aux lift/lowering pair (CNA#14 and CNA#15). (Use the readings in the TESTER to facilitate the troubleshooting). A failure in the logic is also possible. When you have verified the lifting/lowering switches and the wiring is right, replace the controller.
97	INPUT ERROR #1	This alarm occurs when the PLD device has a failure. The PLD device is used for both, the Passive Emergency Cell and a Multiplexer on the main lifting/lowering requests. This Multiplexer exists the lifting and the not lifting level on two distinct addresses. When the lifting and the not lifting outputs have the same logic level, the PLD device has failed and this alarm occurs.	Replace the controller.

https://truckmanualshub.com/

Table 3-3 Troubleshooting Chart (Traction/Lift Controller) - Continued

ERROR	ERROR TEXT	POSSIBLE CAUSE	FAULT CLEARANCE
91	LIFT LOW ACTIVE	This is just a warning when a lifting/lowering request is active at key-on.	The possible reasons for this alarm are (use the readings in the TESTER to facilitate the troubleshooting): • When MDI-PRC is absent: at least on between LIFTING SWITCH (CNB#9) or DESCENT SWITCH (CNB#8) active at key on. • When vehicle TYPE is Level=1: at lease one between: LIFTING SWITCH (CNB#9) or DESCENT SWICH (CNB#8), DIGITAL INPUT#1 (CNA#14) or DIGITAL INPUT#2 (CNA#15) active at key on. • When vehicle TYPE is Level=2: at lease one between: LIFTING SWITCH (CNB#9) or DESCENT SWICH (CNB#8) active at key on. • When vehicle TYPE is Level=3: at least one between LIFTING SWITCH (CNB#9) or DECENT SWITCH (CNB#8) active at key-on. A failure in the logic is possible too. When all of the above conditions were checked and nothing was found, replace the controller.
93	WRONG SET BAT.	When the key is turned ON, the controller checks the battery voltage and verifies it is within a window around the nominal value.	Replace the battery.
94	CURRENT SENS KO	This alarm occurs when the procedure for the maximum current set-up is in progress.	The maximum current set-up is factory adjusted and so this alarm should never happen. So ask for the assistance of a Big Lift LLC Service Representative when this alarm occurs.
99	CHECK UP NEEDED	This is just a warning to perform programmed maintenance.	It is just enough to turn the CHECK UP DONE option to level ON after the maintenance is executed.

https://truckmanualshub.com/

Table 3-4 Troubleshooting Chart (EPS-AC0 Controller)

ERROR	ERROR TEXT	POSSIBLE CAUSE	FAULT CLEARANCE
6	SERIAL ERR #1	Main uC and Slave uC communicate via a local serial interface. This alarm occurs when the slave uC does not receive the communication from the main uC through the serial interface.	Replace the controller.
13	EEPROM KO	This occurs if a test to write and read one location in EEPROM fails. The SW expects to read the written value. It can also occur when the hour counter gives different values between the three redundant location in which it is recorded. It also occurs when the busy bit of the EEPROM does not rise within 12 msec.	Replace the controller.
16	LOGIC FAILUREE #4	This alarm occurs in the rest state if the output of the voltage amplifier of the phase Vw-Vv have a drift larger than ±0.25 V.	Replace the controller.
17	LOGIC FAILURE #3	This alarm occurs in the rest state if the output of the voltage amplifier of phase Vu-Vw have a drift larger than ±0.25 V.	Replace the controller.
18	LOGIC FAILURE #2	This alarm occurs when the real voltage between phases X and V of the motor is different from the desired.	Replace the controller.
19	LOGIC FAILURE #1	This alarm occurs when the real voltage between phases W and U of the motor is different from the desired.	Replace the controller.
32	VMN NOT OK	This alarm occurs in the initial rest state after key on if the output of the motor voltage amplifiers are not in the window from 2.2 to 2.8 Vdc.	Replace the controller.
48	MAIN CONT. OPEN	This alarm occurs only when the setting CAN BUS is PRESENT. Then the EPS-AC0 waits for a via CAN information that the traction controller has closed the main contactor. If this information lacks more than 1.5 secs, this alarm occurs.	Find, on the traction controller, the reason for keeping the main contactor open.
53	STBY I HIGH	This alarm occurs two ways: 1. In the initial rest state after key on, if the outputs of the current amplifiers are not comprised in the window 2.2 to 2.8 Vdc. 2. After the initial diagnosis this alarm occurs when the output of the current amplifiers at rest have a drift larger than ±0.15 V.	Replace the controller.

https://truckmanualshub.com/

Table 3-4 Troubleshooting Chart (EPS-AC0 Controller) - Continued

ERROR	ERROR TEXT	POSSIBLE CAUSE	FAULT CLEARANCE
61	HIGH TEMPERATURE	This alarm occurs if the temperature od the controller base plate overtakes 75 degrees.	Improve the cooling of the controller; otherwise replace the controller.
65	MOTOR TEMPERATURE	This alarm occurs only when DIAG MOTOR TEMP is on and the thermal sensor inside the motor measures a temperature higher than 150 degrees. It also occurs when trying to acquire the motor resistance with a temperature in the motor higher than 150 degrees (still with DIAG MOTOR TEMP to ON).	3. Check that the thermal sensor in the motor is working correctly. If it is, improve the cooling of the motor.
70	HIGH CURRECT	This alarm occurs if the circuit to limit via hardware the current in the motor is either always active at key on or repeatedly active when the motor is turning.	Check that the motor is suited to work with the EPS-AC0 (not oversized). Otherwise, replace the controller.
71	POWER FAILURE #3	This alarm occurs when the current in the phase V of the motor is zero and the motor is commanded for moving.	Check that the power fuse is OK. Check the battery positive arrives to the controller. Check the continuity of the wire in the [phase V of the motor. Otherwise replace the controller.
72	POWER FAILURE #2	This alarm occurs when the current in the phase U of the motor is zero and the motor is commanded for moving.	Check that the power is OK. Check the battery positive arrives to the controller. Check the continuity of the wire in the phase U of the motor. Otherwise replace the controller.
73	POWER FAILURE #1	This alarm occurs when the current in the phase W of the motor is zero and the motor is commanded for moving.	Check that the power is OK. Check the battery positive arrives to the controller. Check the continuity of the wire in the phase W of the motor. Otherwise replace the controller.
83	BAD ENCODER SIGN	This alarm occurs in applications with toggle switches when the applied frequency (FREQUENCY) and the motor speed (ENC SPEED) have opposite sign.	Swap in between the two encoder channels (CNB#7 with CNB#8).
84	STEER SEBSOR KO	This alarm occurs if the command potentiometer (CPOC1 on CNA#9 or CPOC2 on CNA#8) changes with a jerk larger than MAX SP SLOPE. This alarm is used to catch a discontinuity in the voltages of the command potentiometer.	Change the twin pot.
85	STEER HAZARD	This is just a warning to inform that the steering controller is limiting the angle in the steering direction. No speed reduction occurs on the traction	

https://truckmanualshub.com/

Table 3-4 Troubleshooting Chart (EPS-AC0 Controller) - Continued

ERROR	ERROR TEXT	POSSIBLE CAUSE	FAULT CLEARANCE
218	CLOCK PAL NOT OK	The main uC send an analog signal towards the salve uC to reset the slave uC on demand. When the slave uC detects this analog signal external to a window from 2.2 to 2.8 and not in the range to generate the reset on demand, the slave uC raises this alarm.	Replace the controller.
99	INPUT ERROR #1	This alarm occurs when the voltage on CNA#4 (lower potential terminal of the safety contacts) is higher than 12V.	When the safety contacts are open, the voltage on CNA#4 is expected to be close to 0 Vdc. Only a harness mistake may connect NK1 to a higher than 12 V.
212	MICRO SLAVE #8	This alarm occurs when the encoder counting of the main uC is not matched with the encoder counting of the slave uC.	Replace the controller.
219	STEPER MOTORE MISM	This alarm occurs if the frequency and the amplitude of the voltages from the stepper motor lines are mismatched. In normal condition when the amplitude of the stepper motor lines increase, the frequency of the stepper motor lines must increase too.	Replace the controller.
220	MOTOR LOCKED	This alarm occurs if the current in the steer motor stays close to the maximum current longer than 1 sec.	Search for a mechanical problem locking the motor. To make easier fault detecting, set DEBUG OUTPUT to level 11.
221	MICRO SLAVE #4	This alarm occurs in one of the following: (Open loop application only) If the slave uC detects the stator voltage phasor rotates in the opposite direction respect to the sign of the stepper motor speed. (Closed loop application only) if the slave uC detects the stator voltage phasor rotates in the opposite direction respect to the commanded position.	Replace the controller.

https://truckmanualshub.com/

Table 3-4 Troubleshooting Chart (EPS-AC0 Controller) - Continued

ERROR	ERROR TEXT	POSSIBLE CAUSE	FAULT CLEARANCE
222	FB POT LOCKED	In application with a feedback potentiometer, this alarm occurs if the feedback potentiometer (CPOT on CNB#6) does not change (or changes in the opposite direction) its value even if commanded to change. In application with toggle switches with ENCODER CONTROL to off, this alarm occurs if the feedback encoder counting does not change its value even if commanded to change.	In application with the feedback with the feedback potentiometrer, verify the feedback potentiometer is not mechanically loosened. Check there is not a mechanical block of the steered wheel. Be sure the wiper has not reached its own electrical limit because of too much angle of the steered wheel. Besides, this alarm may occur at the installation when the motor rotates in the wrong direction from the command.
223	JERKING FB POT	This alarm occur if the feedback potentiometrer (CPOT on CNB#6) changes with a jerk larger than 0.3 V in 16 msec. This alarm is used to catch a discontinuity in the voltages of the feedback potentiometer.	Change the feedback potentiometer.
225	CURRENT GAIN	This alarm occurs when the parameters to compensate for the gain of the current amplifiers (ADJUSTMENT #03 and ADJUSTMENT #04) have the default values.	Replace the controller.
226	NO SYNC	Every 16 msec, inside the code cycle, the main uC rises and then lowers an input for the slave uC (SYNC). When the slave uC detects no edge for more than 100 msec on this input, this alarm occurs. This is just a watch dog function: when the main uC does not execute the code cycle it does not update the SYNC signal and the slave uC cuts off the steer and traction.	Replace the controller.
227	SLAVE COM. ERROR	Main uC and Slave uC communicate via a local serial interface. This alarm occurs when the main uC does not receive the communication from the slave uC through this serial interface.	Replace the controller.
237	WAITING DATA	This warning occurs only if CAN BUS is PRESENT. At the eps-ac0 asks to the traction controller to send a list of parameters via CAN Bus. From the request until the parameters are correctly relieved, this warning occurs. The steer is not activated yet, and the safety relays remain open when this warning is present.	

https://truckmanualshub.com/

Table 3-4 Troubleshooting Chart (EPS-AC0 Controller) - Continued

ERROR	ERROR TEXT	POSSIBLE CAUSE	FAULT CLEARANCE
228	POSITION ERROR	This alarm occurs for an error in the redundant test o the feedback sensors.	Check the potentiometer connected to CNB#6 is working correctly. If toggle switches are connected to CNA#2 and CNA#3, verify that they are working correctly and setting AUX FUNCTION 11 is correct. Also the sensor bearing in the motor (encoder). The sensor bearing has two rings: one connected to the rotor safety; the other is connected to the motor frame. Check these two rings are strictly connected to their structure without slip.
238	EPS NOT ALIGNED	This is a real alarm that cuts off the traction. It occurs at the initial alignment if the straight-ahead condition is not matched within 6 sec. Throughout this 6 secs delay, the steer is not activated yet, the safety relays are open and the traction is stopped.	
239	WAITING FOR TRAC	At key-on the eps-ac0 needs an assent from the traction controller to close the safety contacts and to turn on operational mode. Until this assent is not relieved, this warning occurs. The steer is not activated yet and the safety relays remain open when this warning is present.	
241	ENCODER ERROR	It occur when ENCODER CONTROL is set ON and the real frequency does not pursuit the commanded frequency.	This condition occurs several times due to either, a mismatch between the Encoder resolution used in the SW and the real encoder resolution, or a wrong connection between th4e two encoder channels. In this latest case exchange in between the two encoder channels.
242	Q LINE SENSOR KO	This alarm occurs when the mean voltage on the Quadrature line of the stepper motor (connection CNA#8) is not null: the voltage on every stepper motor line is a sine wave with null mean voltage.	Check continuity of the stepper motor connections. In particular the resistance between CNA#8 and the minus battery (with the stepper motor at rest) is expected to be very low (close to 30 ohms).
243	D LINE SENSOR KO	This alarm occurs when the mean voltage on the Direct line of the stepper motor (connection CNA#9) is not null: the voltage on every stepper motor line is a sine wave with null mean voltage.	Check continuity of the stepper motor connections. In particular the resistance between CNA#9 and the minus battery (with the stepper motor at rest) is expected to be very low (close to 30 ohms)

https://truckmanualshub.com/

245	DATA ACQUISITION	This alarm occurs when acquiring the motor resistance or when adjusting the parameters to compensate for the gain of the current amplifiers (maximum current factory adjusted).	Recycle the key.
244	GAIN EEPROM KO	The parameter to compensate for the gain of the current amplifiers (ADJUSTMENT #03 and ADJUSTMENT #4) are recorded in a non-volatile memory (eeprom) with a redundant handling. In fact every adjustment is recorded in three eeprom locations. If the values in these three locations are different, this alarm occurs.	Replace the controller.
246	MICRO SLAVE KO	In stepper motor application, this alarm occurs if the main uC is detecting a direction of the stepper motor not matched with the one that the slave uC is detecting. In the closed loop application, this alarm occurs if the main uC is detecting a direction of the steering error not matched with the one that the slave uC is detecting. Furthermore, this alarm occurs if the main uC is detecting no steering limitation while the slave uC is detecting a steering limitation.	Replace the controller.
247	CAN BUS KO	This alarm occurs only when the setting CAN BUS is PRESRENT. Then the eps-ac0 must receive the event messages from the traction controller. If these messages lack more than about 1 sec, this alarm occurs.	Check the CAN Bus communication system and analyze the frames from the traction controller to the steer controllers.
248	S.P OUT OF RANGE	This alarm occurs for a fault on the command potentiometer (CPOC1 on CNA#9, CPOC2 on CNA#8). When a single command pot is chosen, the alarm occurs if its wiper (CPOC1) range is from 0.8 Vdc to 4.2 Vdc. When the twin pot is chosen, the alarm occurs if the sum of the two wiper voltages (CPOC1+CPOC2) range is from 4.5 Vdc to 5.5 Vdc.	Check the connections of the potentiometer. This alarm occurs when one connection of the command potentiometer is broken.
249	F.B OUT OF RANGE	This alarm occurs for a fault on the feedback potentiometer (CPOT on CNB#6). It occurs if CPOT exits the range of 0.3 Vdc to 4.7 Vdc.	Check the connections of the feedback potentiometer. This alarm occurs when one connection of the feedback potentiometer is broken.

https://truckmanualshub.com/

250	MICRO SLAVE	It occurs when the information on the status bus between the main uC and the slave uC is frozen to the 0xFF value (the slave uC does not update the status bus configuration).	Replace the controller.
251	KM OPEN	This alarm occurs if the slave uC detects the safety contact, of the main uC, is open when expected to be closed.	Replace the controller.
252	KS OPEN	This alarm occurs if the main uC detects the safety contact, of the slave uC, is open when expected to be closed.	Replace the controller.
253	KM CLOSED	This alarm occurs at key on if the slave uC detects the safety contact, of the main uC, is closed prior to being commanded.	This alarm occurs if the connection CNA#5 (K1) is around a voltage of 12 Vdc when switching on the key. In fact, when the safety contacts are open, K1 is expected to be connected to a battery voltage (not 12 V). Search for a harness problem or replace the controller.
254	KS CLOSED	This alarm occurs if the main uC detects the safety contact, of the slave uC to be closed prior to being commanded.	This alarm occurs if the connection CNA#4 (NK1) is around a voltage of 12 Vdc when switching on the key. In fact, when the safety contacts are open to a minus battery voltage (not 12 V). Search for a harness problem or replace the controller.

https://truckmanualshub.com/

NOTES

https://truckmanualshub.com/

SECTION 4
STEERING SYSTEM

4-1. CONTROL ARM

4-1.1. Steering Control Removal.

1. Engage the emergency power disconnect switch (6, Figure 11-8) and turn off key switch (3).
2. Remove four screws (24, Figure 4-1) and two screws (26). Separate lower cover (23) and upper cover (12).

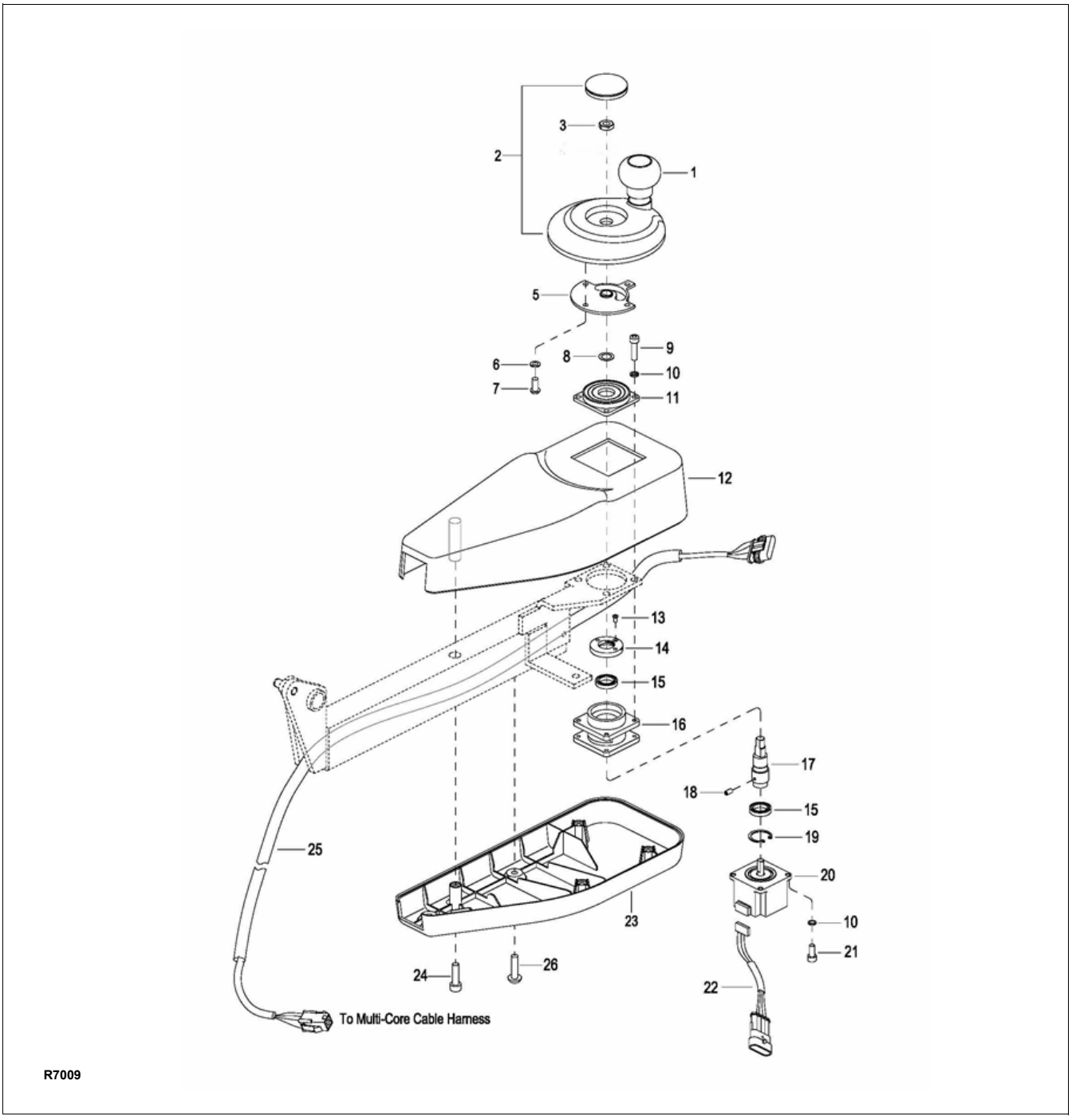

Figure 4-1 Control Arm (Left)

https://truckmanualshub.com/

3. Disconnect harness (22) from harness (25) and potentiometer (20).
4. Remove button plug, nut (3), lock washer (4), handle (2) and shims (8).
5. Remove four screws (7), four lock washers (6) and bracket (5) from handle (2).
6. Remove four screws (9), four lock washers (10) and damper (11).
7. Remove potentiometer (20) from control arm.
8. Remove screw (13), nut (14) and upper bearing (15)
9. Remove four screws (21), four lock washers (10) and remove potentiometer (20) from bearing block (16).
10. Loosen screw (18) and remove shaft (17) from potentiometer (20).
11. Remove snap ring (19) and lower bearing (15) from shaft (17).

4-1.2. Steering Control Installation.

1. Install lower bearing (15, Figure 4-1) and snap ring (19) on shaft (17).
2. Install shaft (17) on potentiometer (20) and secure with screw (18).
3. Position potentiometer (20) on bearing block (16) and secure with four screws (21), and four lock washers (10).
4. Install upper bearing (15), nut (14) and screw (13).
5. Position potentiometer (20) on control arm.
6. Install damper (11) and secure with four screws (9) and four lock washers (10).
7. Install bracket (5) on handle (2) and secure with four screws (7) and four lock washers (6).
8. Install shims (8) and handle (2), engaging bracket (5) with damper (11).
9. Secure handle (2) with nut (3) and lock washer (4) and install the button plug.
10. Reconnect harness (22) to harness (25) and potentiometer (20).
11. Install lower cover (23) and upper cover (12) and secure with four screws (24) and two screws (26).
12. Disengage the emergency power disconnect switch (6, Figure 11-8) and turn on key switch (3).

4-2. COMPARTMENT COVER

4-2.1. Cover Removal.

1. Engage the emergency power disconnect switch (6, Figure 11-8) and turn off key switch (3).
2. Remove two screws (1, Figure 4-2).
3. Carefully lift cover (2) up and off the truck.

4-2.2. Cover Installation.

1. Carefully position cover (2, Figure 4-2) on the truck.
2. Install two screws (1).
3. Disengage the emergency power disconnect switch (6, Figure 11-8) and turn on key switch (3).

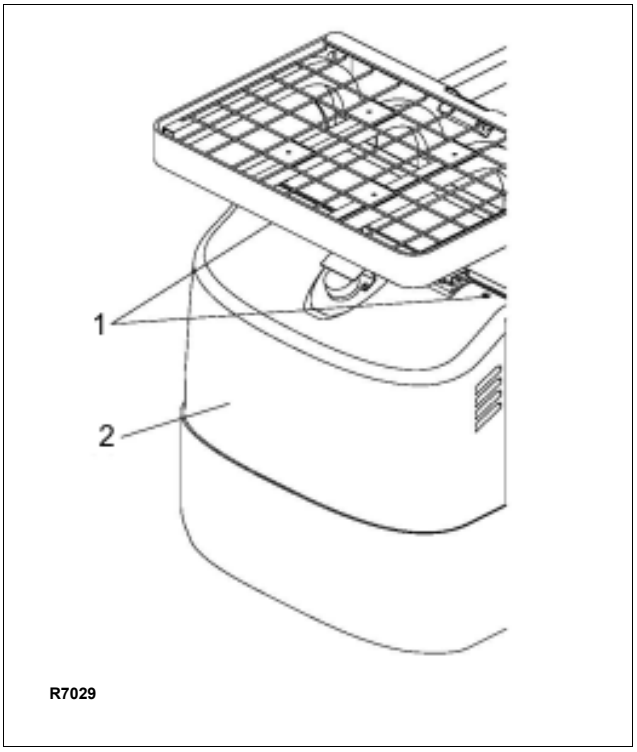

Figure 4-2 Compartment Cover

4-3. STEER MOTOR

4-3.1. Motor Removal.

1. Engage the emergency power disconnect switch (6, Figure 11-8) and turn off key switch (3).
2. Remove the compartment cover as described in paragraph 4-2.1.

https://truckmanualshub.com/

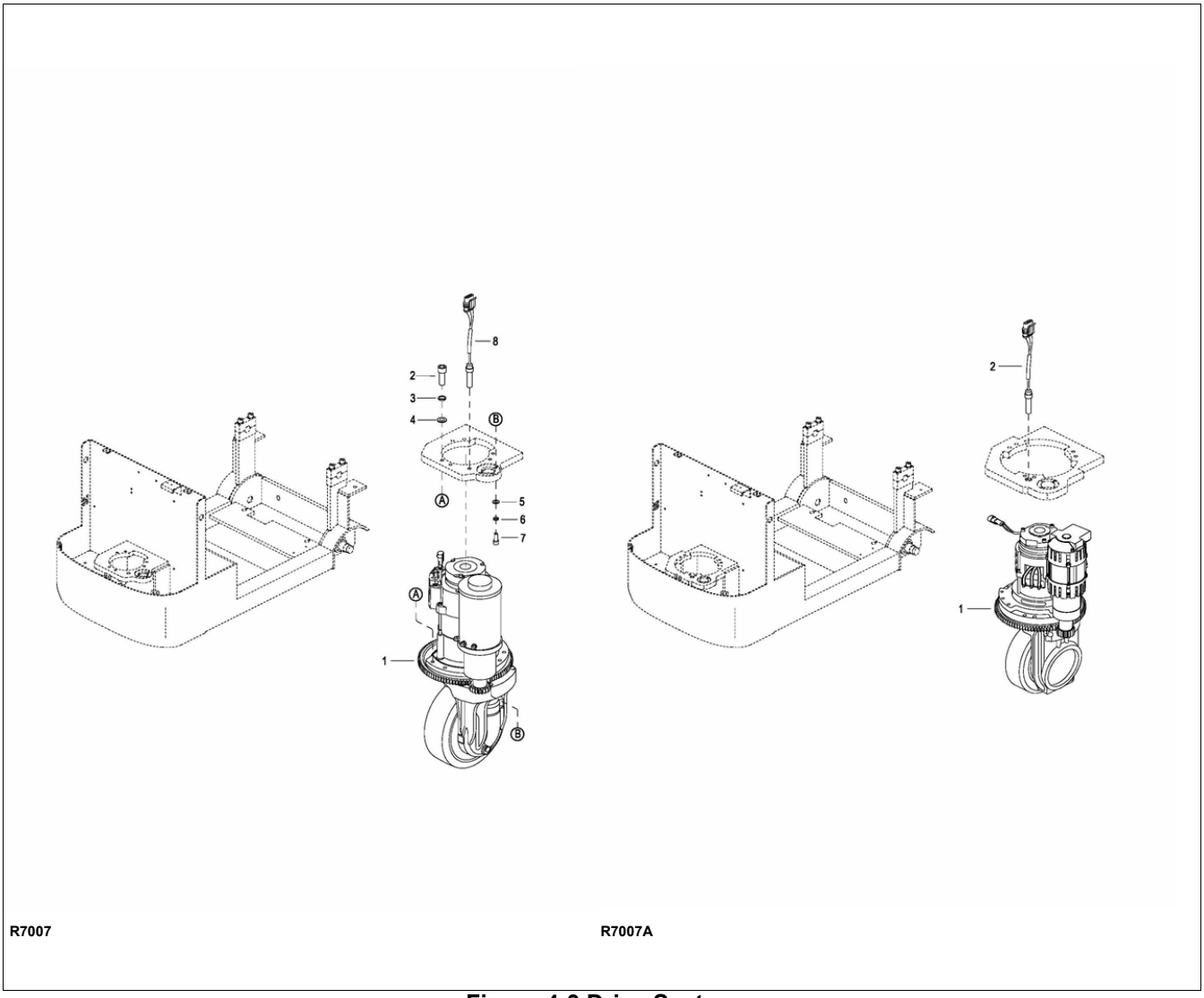

Figure 4-3 Drive System

3. Disconnect harness (1, Figure 11-14) and cables (6, 7 and 8, Figure 11-15 or Figure 11-16) from the steer motor.
4. Remove three screws (7, Figure 4-3) three lock washers (6) and three flat washers (5) from under the vehicle.
5. Remove the steering motor from the top of the vehicle.

4-3.2. Motor Installation.

1. Position the steering motor in the top of the motor compartment.
2. Secure the motor with two screws (7, Figure 4-3) two lock washers (6) and two flat washers (5) from under the vehicle.
3. Reconnect harness (1, Figure 11-14) and cables (6, 7 and 8, Figure 11-15 or Figure 11-16)) to the steering motor.
4. Install the compartment cover as described in paragraph 4-2.2.
5. Disengage the emergency power disconnect switch (6, Figure 11-8) and turn on key switch (3).

https://truckmanualshub.com/

NOTES

https://truckmanualshub.com/

SECTION 5
BRAKE SERVICING

5-1. BRAKES.

The brake system consists of a drive motor mounted brake. This brake is spring applied and electrically released.

5-1.1. Brake Assembly Replacement

1. Engage the emergency power disconnect switch (6, Figure 11-8) and turn off key switch (3).
2. Block load wheels.
3. Remove the compartment cover as described in paragraph 4-2.1.
4. Disconnect electric brake from harness (1, Figure 11-14).
5. Remove the mounting screws and brake (1, Figure 5-1).
6. Place the new brake into position and secure with the mounting screws.
7. Reconnect electric brake to harness (1, Figure 11-14).
8. Remove load wheel blocks and check operation.
9. Disengage the emergency power disconnect switch (6, Figure 11-8) and turn on key switch (3).

https://truckmanualshub.com/

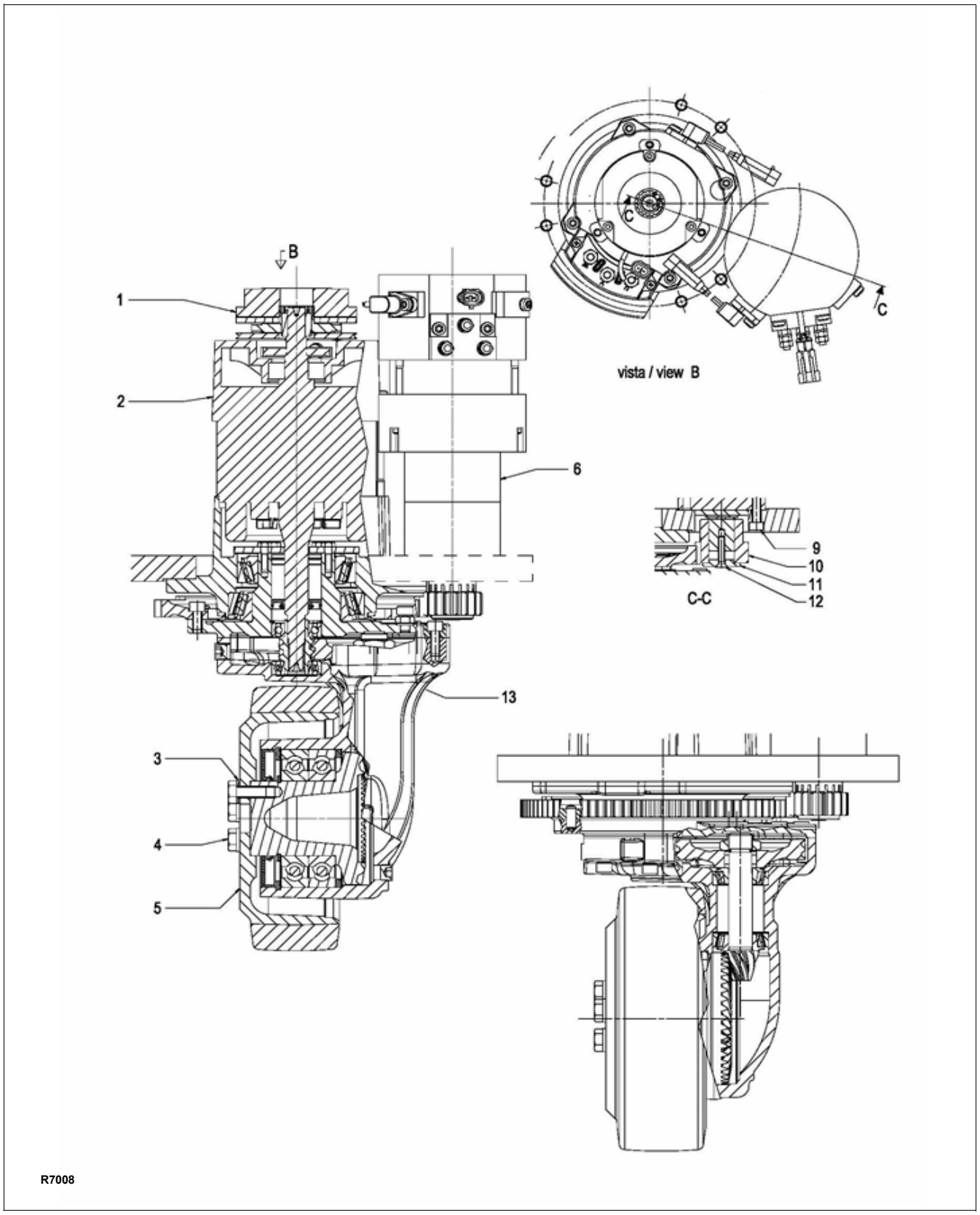

Figure 5-1 Transmission, Motor & Brake Assembly - Used up to Serial # S2213285

https://truckmanualshub.com/

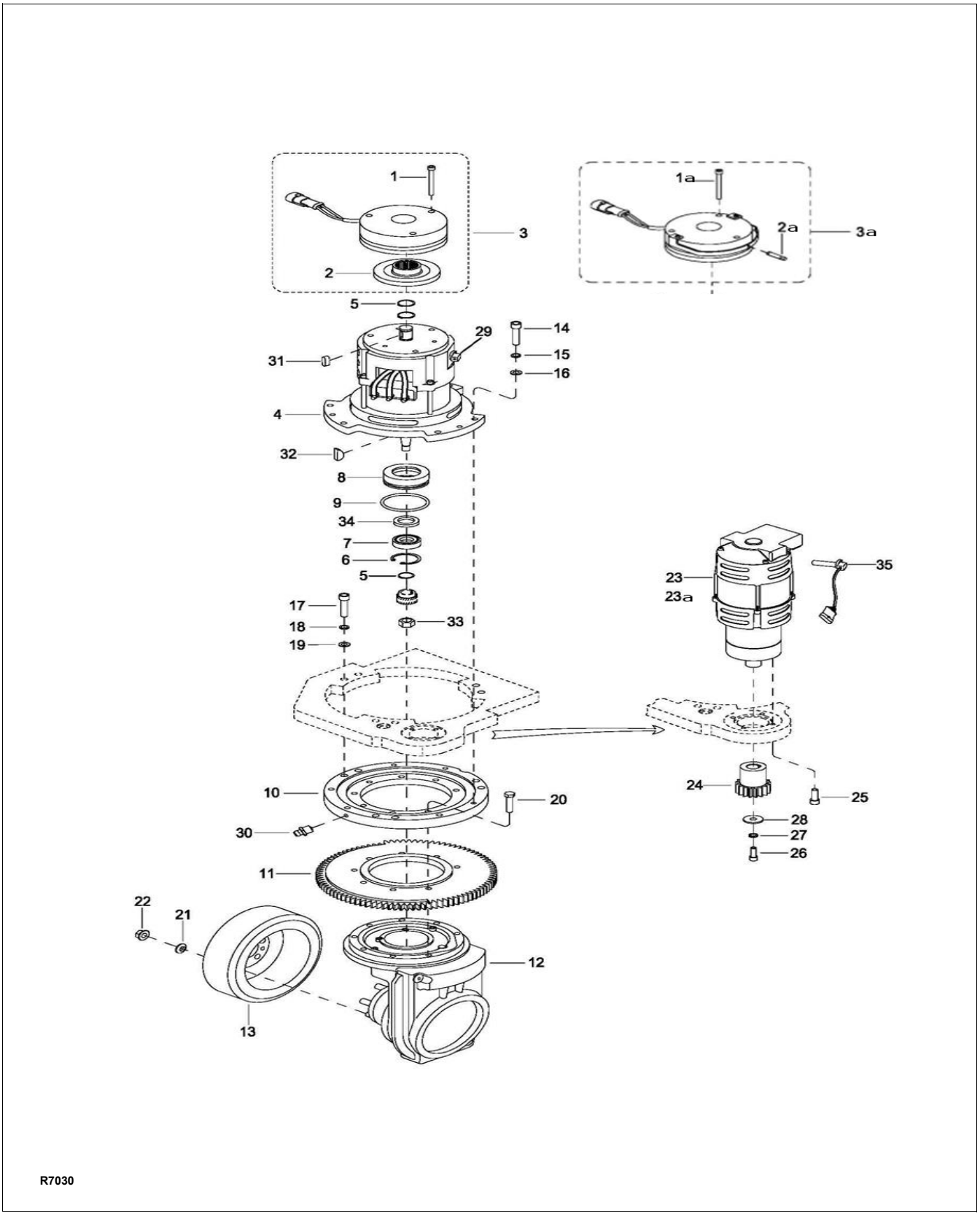

Figure 5-2 Transmission, Motor & Brake Assembly - Used from Serial # S2213286

https://truckmanualshub.com/

https://truckmanualshub.com/

SECTION 6
TRANSMISSION, DRIVE WHEEL, LOAD WHEEL, CASTERS

6-1. Transmission and Drive Motor.

1. Engage the emergency power disconnect switch (6, Figure 11-8) and turn off key switch (3).
2. Remove the compartment cover as described in paragraph 4-2.1.
3. Remove the steering motor as described in paragraph 4-3.
4. Raise the vehicle off the ground to provide clearance for drive assembly (1, Figure 6-1) out the bottom. Securely block the vehicle to prevent movement.
5. Disconnect electric brake (1, Figure 6-3) from harness (1, Figure 11-14).
6. Disconnect cables (3, 4 and 5, Figure 11-15 or Figure 11-16) from drive motor (2, Figure 6-3).
7. Disconnect encoder (7) from drive motor (2).
8. Support the drive assembly (1, Figure 6-1) and remove six screws (2), six washers (3) and flat washers (4).
9. Lower the drive assembly (1) out the bottom of the vehicle.
10. Install new drive assembly (1) by reversing the steps above.

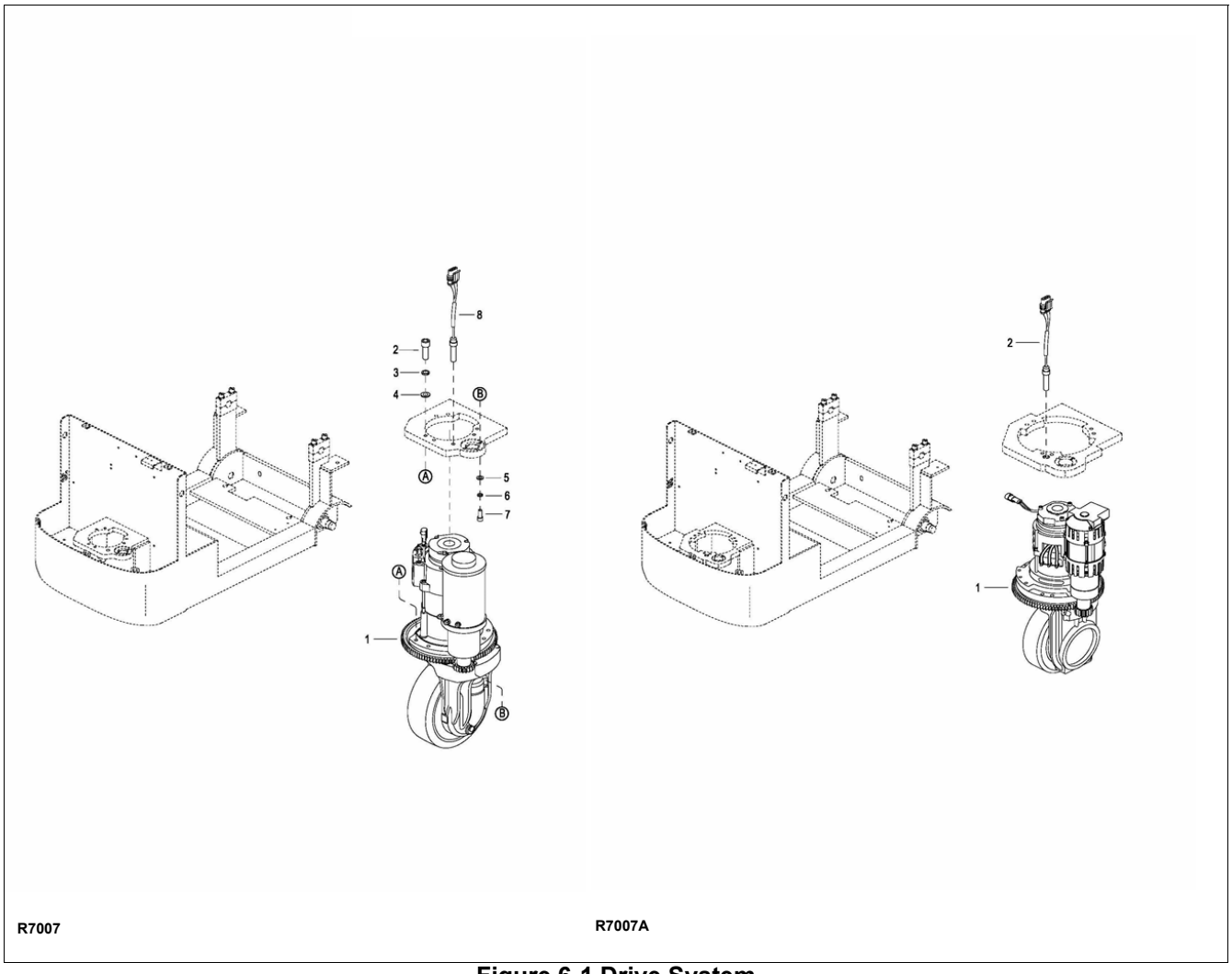

Figure 6-1 Drive System

https://truckmanualshub.com/

6-2. Load Wheel.

6-2.1. Removal

1. Engage the emergency power disconnect switch (6, Figure 11-8) and turn off key switch (3).
2. Block the drive wheel to prevent the vehicle from rolling.
3. Jack up the vehicle to raise the load wheels off the floor. Securely block the vehicle in the raised position by positioning supports under both fork tips.
4. Remove four screws (8, Figure 6-2) and cover (7).
5. Remove nut (6), washer (5) and load wheel (3).
6. Remove seal (1) from load wheel (3).
7. Remove bearings (2 and 4) from load wheel (3).
8. Inspect bearings (2 and 4) and replace if necessary.

6-2.2. Installation

1. Pack bearings (2 and 4, Figure 6-2) with grease.
1. Reassemble bearings (2 and 4) in wheel (3).
2. Install seal (1) from load wheel (3).
3. Position load wheel (3) in the axle and install washer (5) and nut (6). Tighten nut (6) until there is a slight drag on load wheel (3). Secure nut (6) with tab on washer (5).
4. Install cover (7) and secure with four screws (8).
5. Remove the blocking from under the vehicle and lower it to the ground.
6. Disengage the emergency power disconnect switch (6, Figure 11-8) and turn on key switch (3).

6-3. Drive Wheel.

1. Engage the emergency power disconnect switch (6, Figure 11-8) and turn off key switch (3).
2. Jack up the vehicle to gain access to the drive wheel; then securely block the vehicle to prevent movement.
3. Remove the five mounting screws (4, Figure 6-3) and five lock washers (3).
4. Remove drive wheel (5).
5. Install new drive wheel in reverse order of removal.

6-4. Caster.

Casters provide additional stability. Installation of the casters is shown in Figure 6-2 and repair parts are shown in Figure 11-3.

https://truckmanualshub.com/

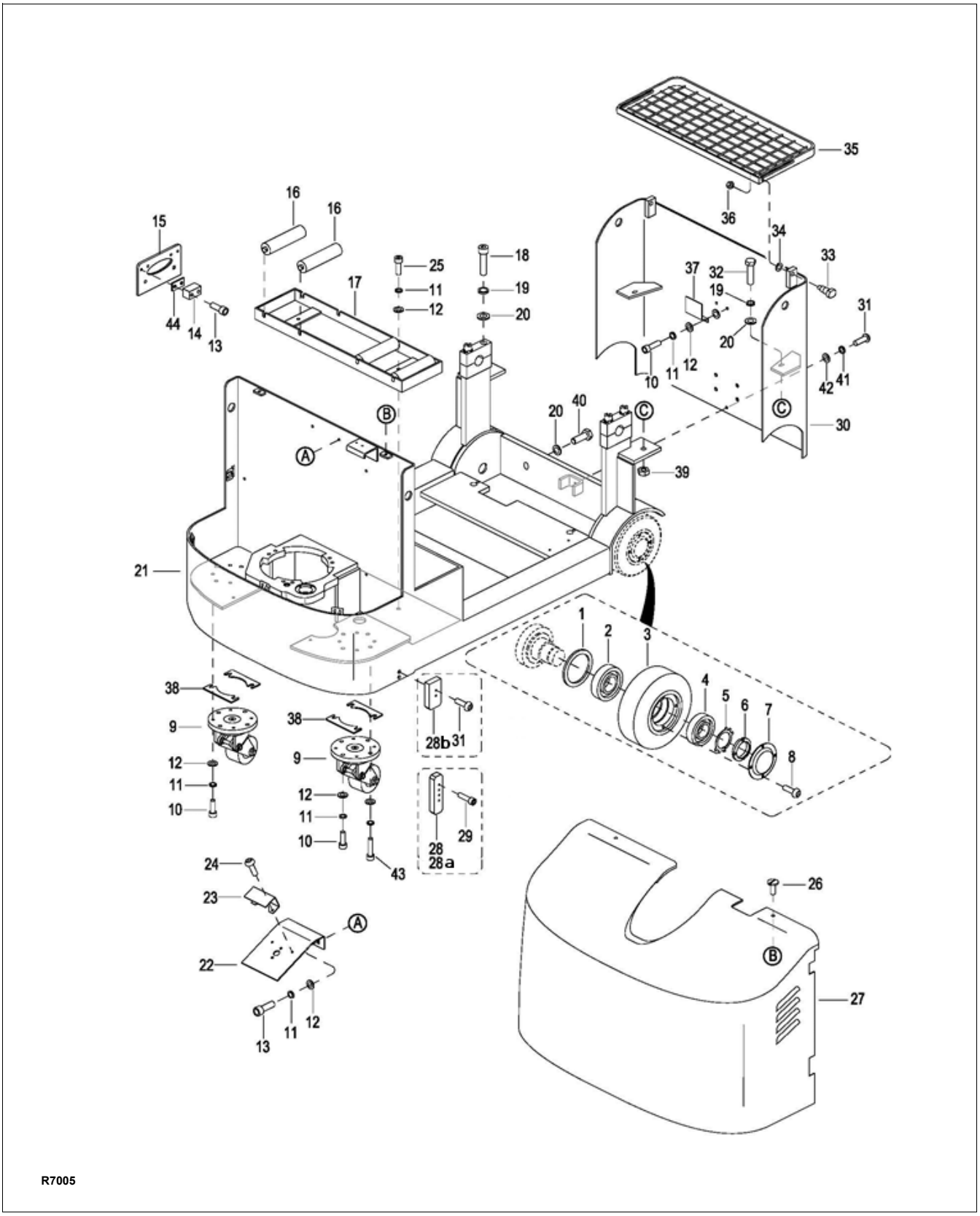

Figure 6-2 Frame

https://truckmanualshub.com/

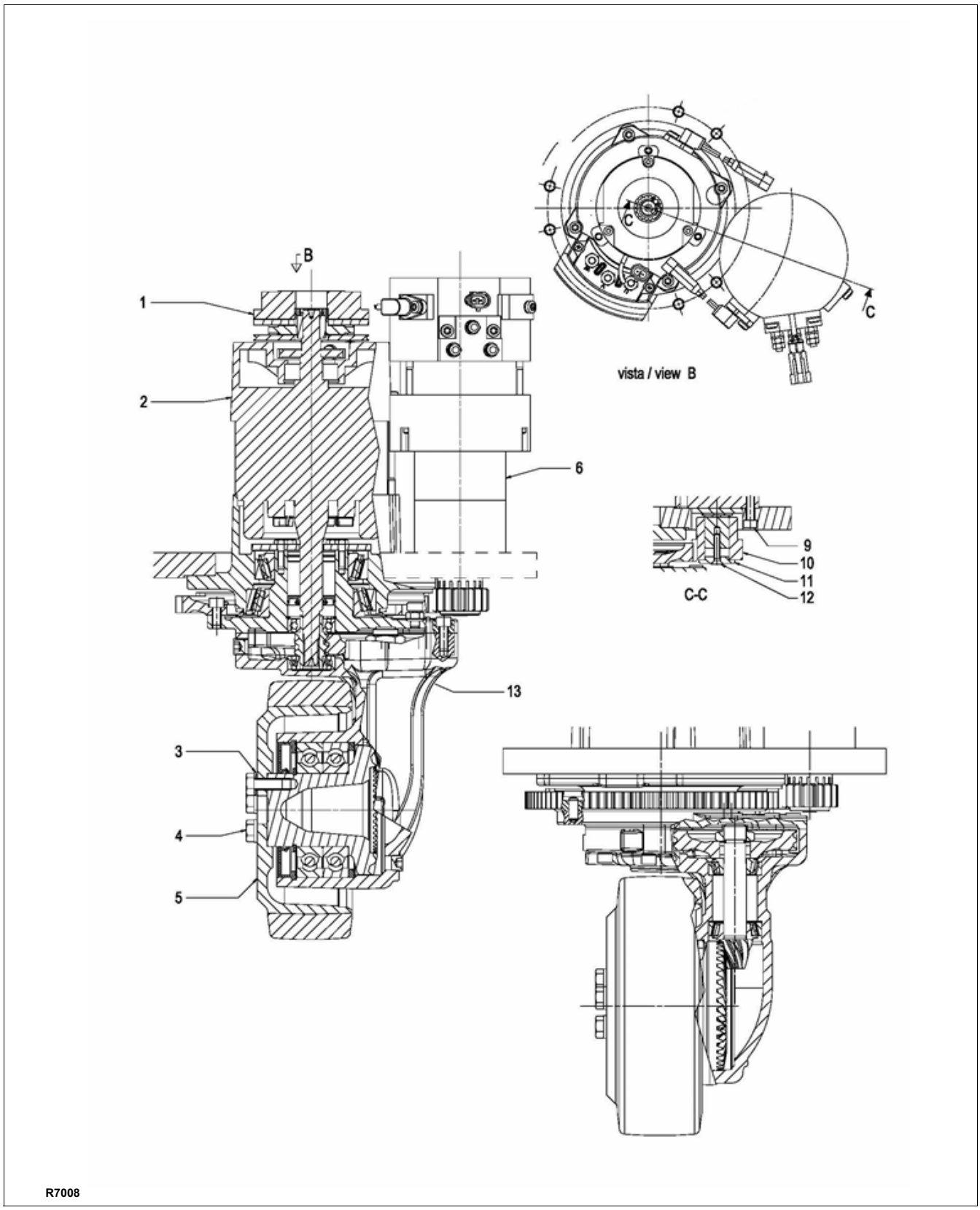

Figure 6-3 Transmission, Motor & Brake Assembly - Used up to Serial # S2213285

https://truckmanualshub.com/

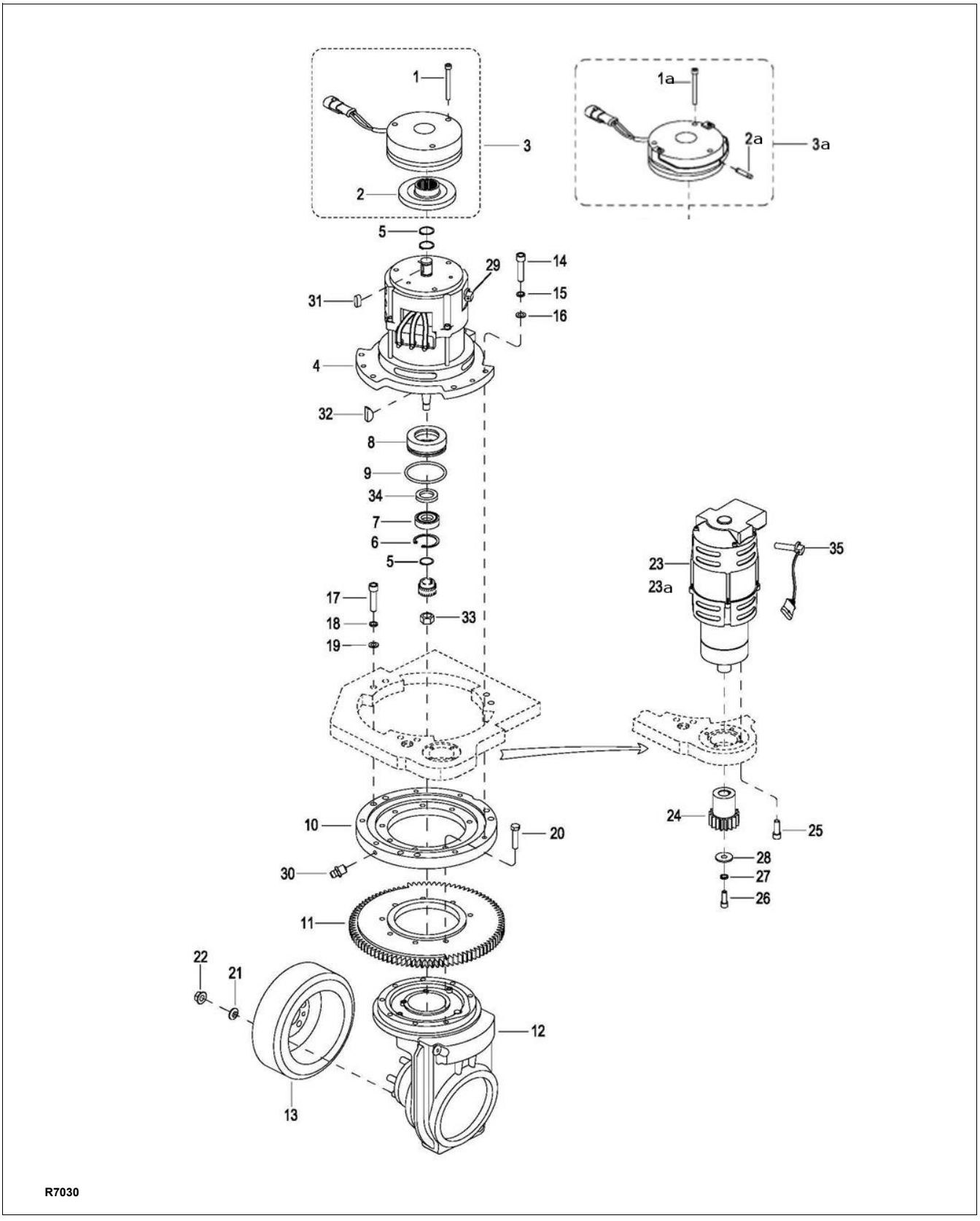

Figure 6-4 Transmission, Motor & Brake Assembly - Used from Serial # S2213286

https://truckmanualshub.com/

https://truckmanualshub.com/

SECTION 7
ELEVATION SYSTEM SERVICING

7-1. GENERAL.

The elevation system includes the outer mast, inner mast, lift linkage, drag chains, lift chains, lift cylinder and ram head.

7-2. LIFT CHAIN LENGTH ADJUSTMENT.

1. Fully lower the Platform (11, Figure 7-5).
2. Engage the emergency power disconnect switch (6, Figure 11-8) and turn off key switch (3).

WARNING: Before attempting any adjustment, make certain power is disconnected.

3. Loosen jam nut (2, Figure 7-1) to allow for adjustment of middle jam nut.
4. Break the lower jam nut (2) free from the middle jam nut (2).
5. Take up slack in the lift chain with middle jam nut (2).
6. Align anchor (1) so the clevis pin (4) is parallel to the mast.

CAUTION: At least 3 full threads must be present below lower nut (2) after adjustment.

7. Tighten jam nuts securely while maintaining alignment of clevis pin (4).
8. Disengage the emergency power disconnect switch (6, Figure 11-8) and turn on key switch (3).
9. Test chain by operating Platform (11, Figure 7-5). If slack is still apparent, repeat above procedure.

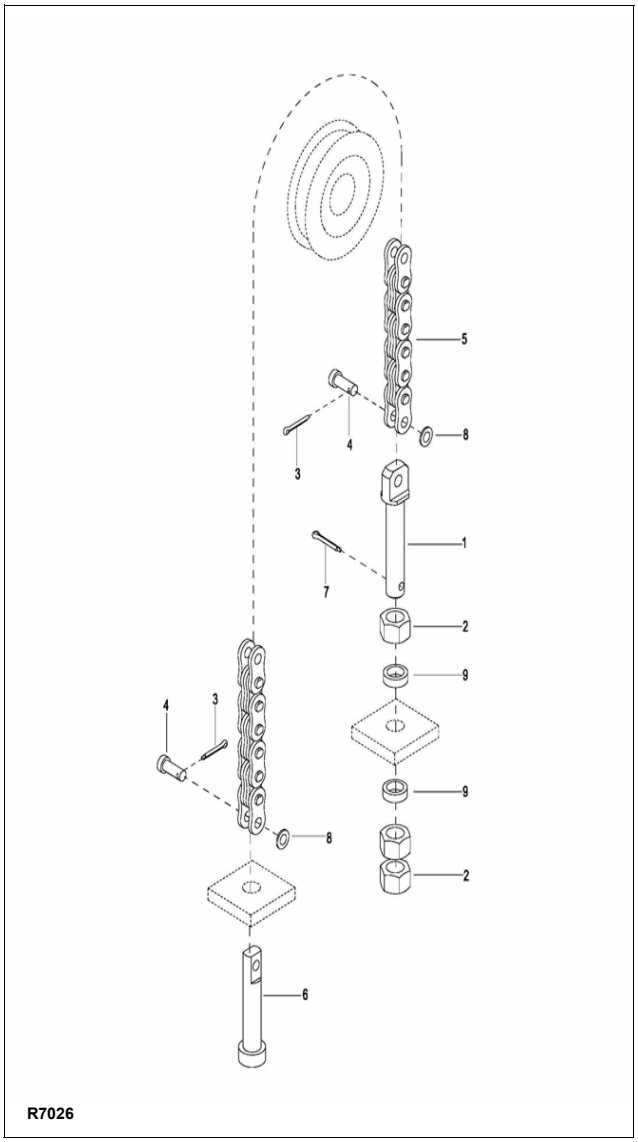

Figure 7-1 Chain Assembly

https://truckmanualshub.com/

7-3. LIFT CHAIN WEAR INSPECTION.

The lift chain should be replaced when it is worn enough to increase it's length by 3% or more. On Telescopic vehicles, Both chains should be replaced at the same time. To make this determination proceed as follows.

Using a section of chain that sees the most frequent operation over the chain sheaves, isolate a vertical portion under tension from the weight of carriage and forks.

Measure the distance between pin centers on 20 vertical links. If the section measures 12.88" or more, the chain should be replaced.

New chain anchor pins should be installed when chains are replaced. Never replace a partial section of chain and never repair chain. Refer to paragraph 7-4. when installing new chain.

7-4. LIFT CHAIN REPLACEMENT.

7-4.1. Telescopic

1. With the vehicle wheels securely blocked, raise the Platform (11, Figure 7-5) approximately three feet and position blocks or strong supports under the Platform.
2. Lower the Platform onto the support. Check that arrangement is secure before proceeding.
3. Engage the emergency power disconnect switch (6, Figure 11-8) and turn off key switch (3).

WARNING: Before attempting any replacement, make certain power is disconnected.

4. Remove cotter pin (3, Figure 7-1), flat washer (8), clevis pin (4) and anchor (6) connecting chain (5) to Platform (11, Figure 7-5).
5. Remove cotter pin (3, Figure 7-1), flat washer (8) and clevis pin (4) connecting chain (5) to adjusting screw (1) at the outer mast (20, Figure 7-2).
6. Remove chain from sheave (13).
7. Position new chain on sheave (13).
8. Secure chain (5, Figure 7-1) to adjusting screw (1) with clevis pin (4), flat washer (8) and cotter pin (3).
9. Connect the opposite end of chain to the Platform (11, Figure 7-5) with anchor (6), clevis pin (4), washer (8) and cotter pin (3).
10. Adjust the chains according to paragraph 7-2.
11. Disengage the emergency power disconnect switch (6, Figure 11-8) and turn on key switch (3).

https://truckmanualshub.com/

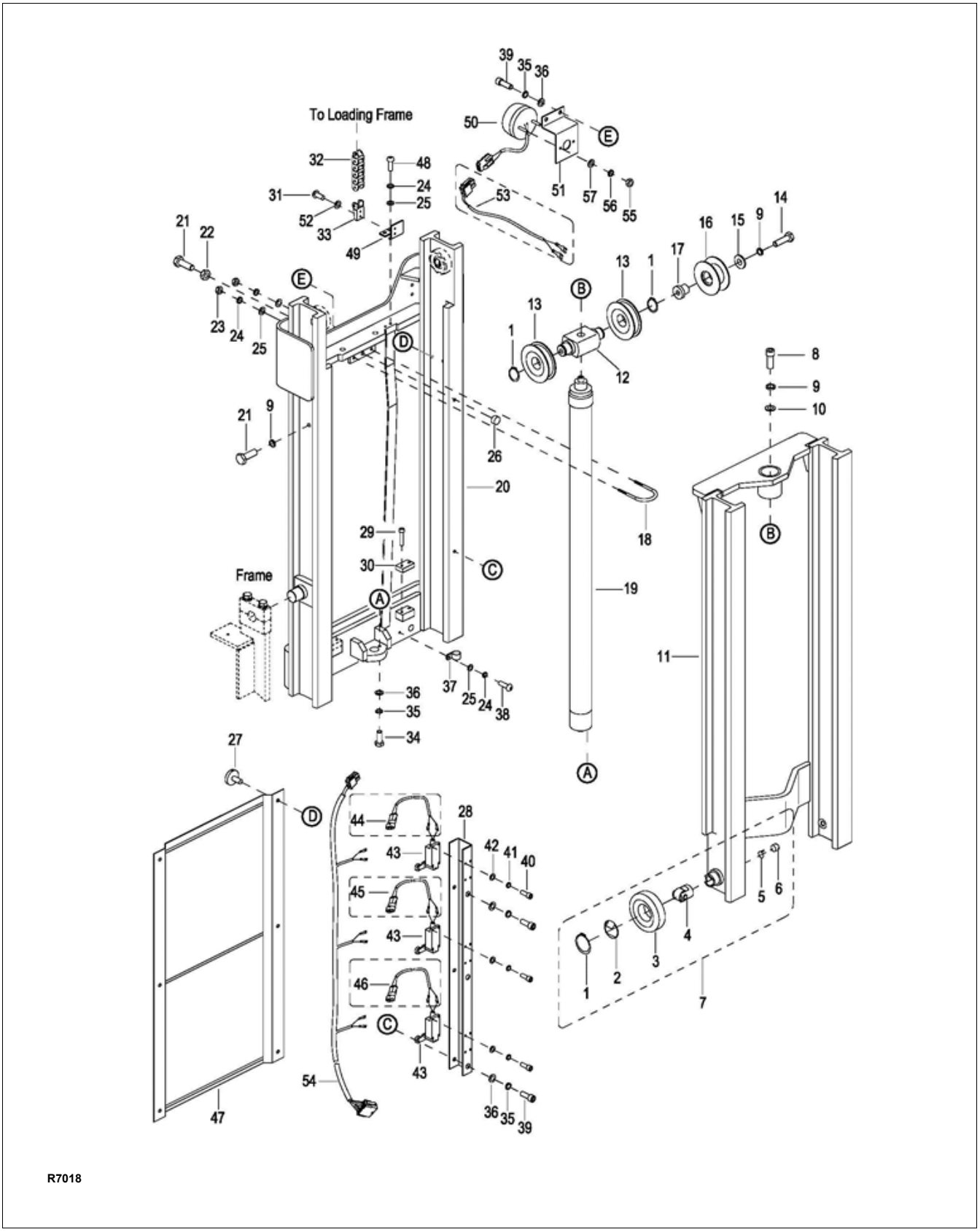

Figure 7-2 Elevation System (Telescopic)

https://truckmanualshub.com/

7-4.2. Three Stage Mast

7-4.2.1.Mast Lifting Chain

1. With the vehicle wheels securely blocked, raise the inner mast (49, Figure 7-3) approximately three feet and position blocks or strong supports under the inner mast (49).
2. Lower inner mast onto the support. Check that arrangement is secure before proceeding.
3. Engage the emergency power disconnect switch (6, Figure 11-8) and turn off key switch (3).

WARNING: Before attempting any replacement, make certain power is disconnected.

4. Remove cotter pin (3, Figure 7-1), flat washer (8), clevis pin (4) and anchor (6) connecting chain (5) to inner mast (49, Figure 7-3).
5. Remove cotter pin (3, Figure 7-1), flat washer (8) and clevis pin (4) connecting chain (5) to adjusting screw (1) at the outer mast (1, Figure 7-3).
6. Remove chain from sheave (14).
7. Position new chain on sheave (14).
8. Secure chain (5, Figure 7-1) to outer mast (1, Figure 7-3) with adjusting screw (1), clevis pin (4), flat washer (8) and cotter pin (3).
9. Connect the opposite end of chain to the inner mast (49, Figure 7-3) with anchor (6, Figure 7-1), clevis pin (4), washer (8) and cotter pin (3).
10. Adjust the chains according to paragraph 7-2.
11. Disengage the emergency power disconnect switch (6, Figure 11-8) and turn on key switch (3).

7-4.2.2.Platform Lifting Chain

1. With the vehicle wheels securely blocked, raise the Platform (49, Figure 7-3) approximately three feet and position blocks or strong supports under Platform (49).
2. Lower Platform onto the support. Check that arrangement is secure before proceeding.
3. Engage the emergency power disconnect switch (6, Figure 11-8) and turn off key switch (3).

WARNING: Before attempting any replacement, make certain power is disconnected.

4. Remove cotter pin (3, Figure 7-1), flat washer (8), clevis pin (4) and anchor (6) connecting chain (5) to lift cylinder (18, Figure 7-3).
5. Remove cotter pin (3, Figure 7-1), flat washer (8) and clevis pin (4) connecting chain (5) to adjusting screw (1) at Platform (49, Figure 7-3).
6. Remove chain from sheave (17, Figure 7-4).
7. Position new chain on sheave (17).
8. Secure chain (5, Figure 7-1) to Platform (49, Figure 7-3) with adjusting screw (1, Figure 7-1), clevis pin (4), flat washer (8) and cotter pin (3).
9. Connect the opposite end of chain to the lift cylinder (18, Figure 7-3) with anchor (6, Figure 7-1), clevis pin (4), washer (8) and cotter pin (3).
10. Adjust the chains according to paragraph 7-2.
11. Disengage the emergency power disconnect switch (6, Figure 11-8) and turn on key switch (3).

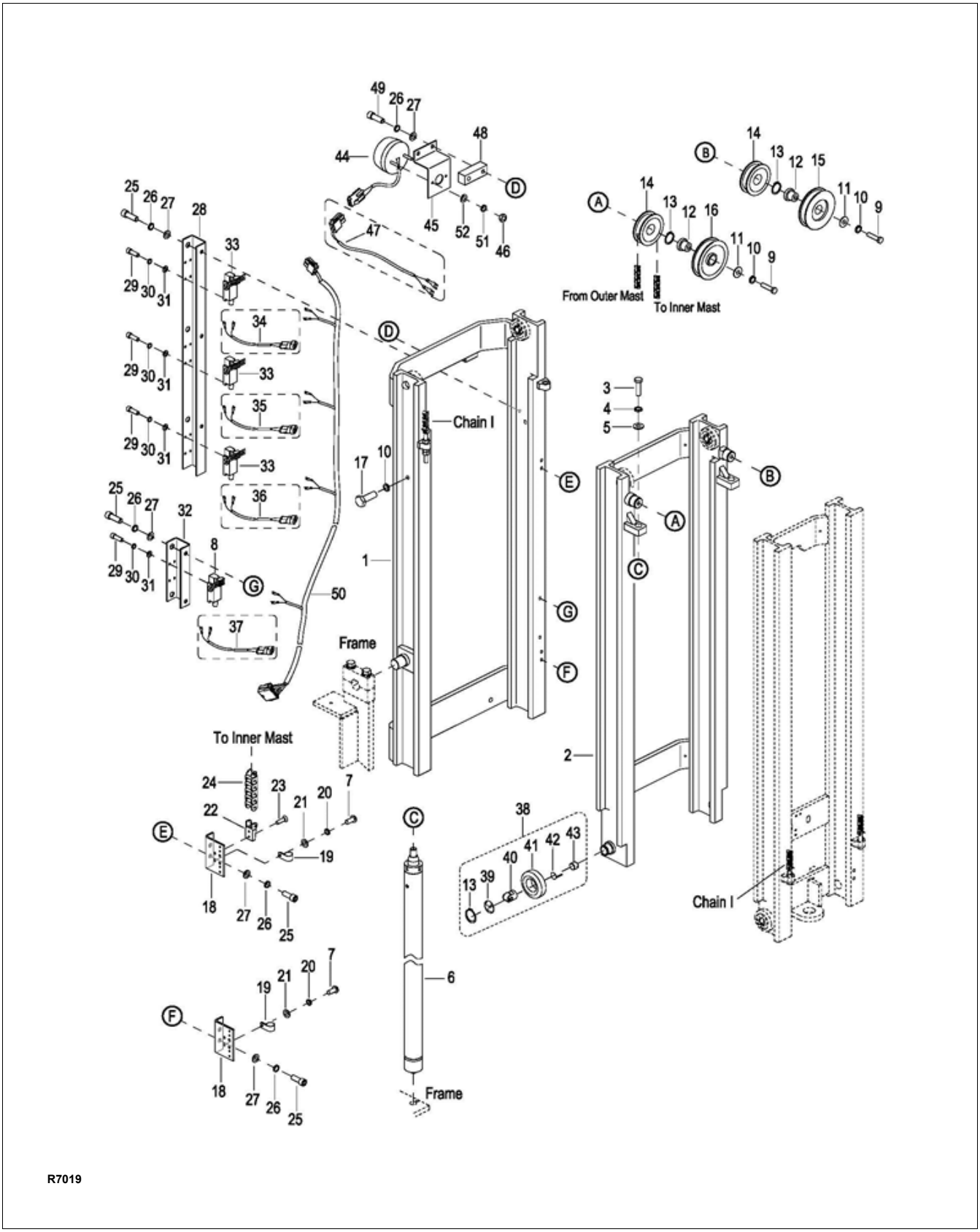

Figure 7-3 Elevation System (Three Stage Mast - Part 1)

https://truckmanualshub.com/

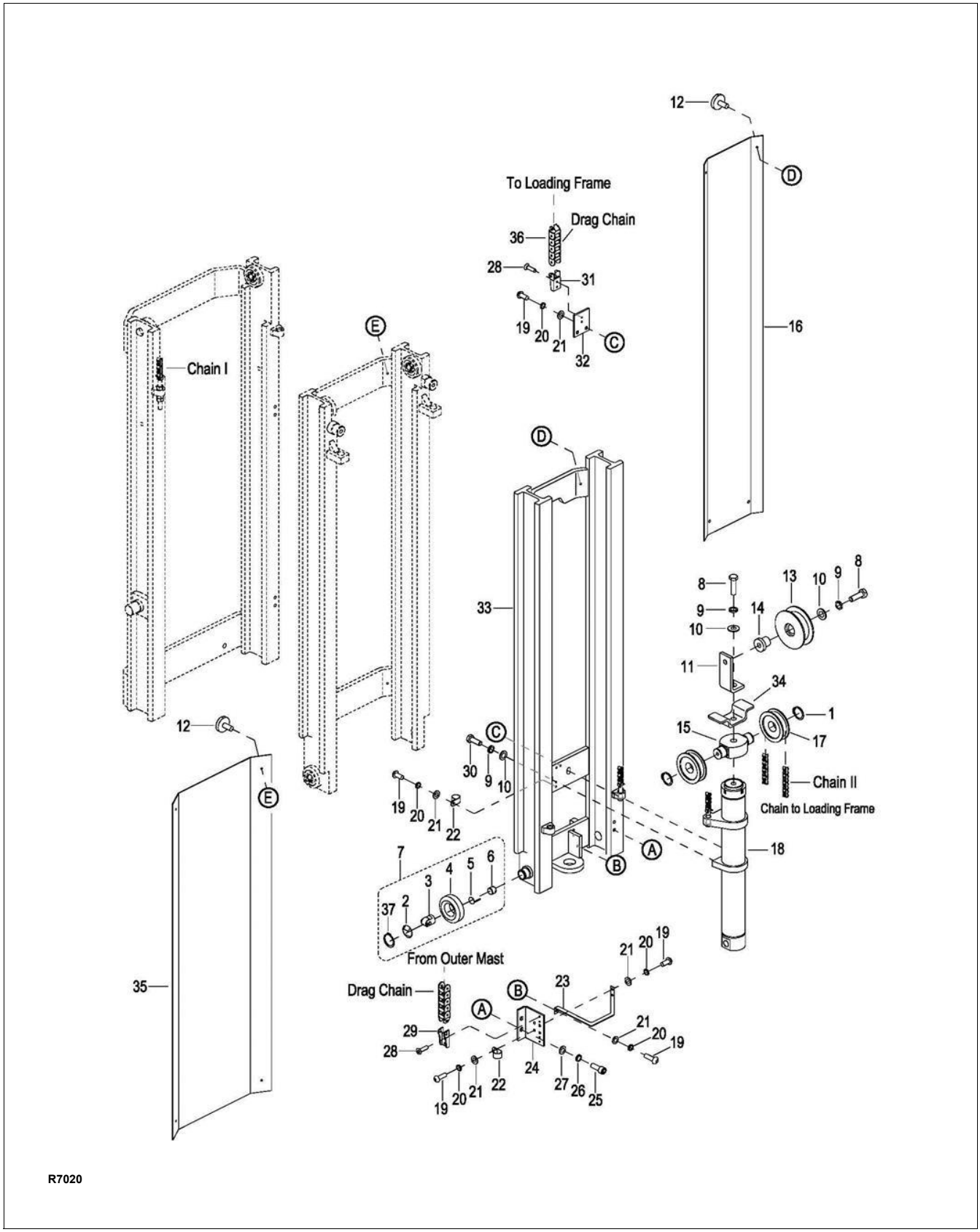

Figure 7-4 Elevation System (Three Stage Mast - Part 2)

https://truckmanualshub.com/

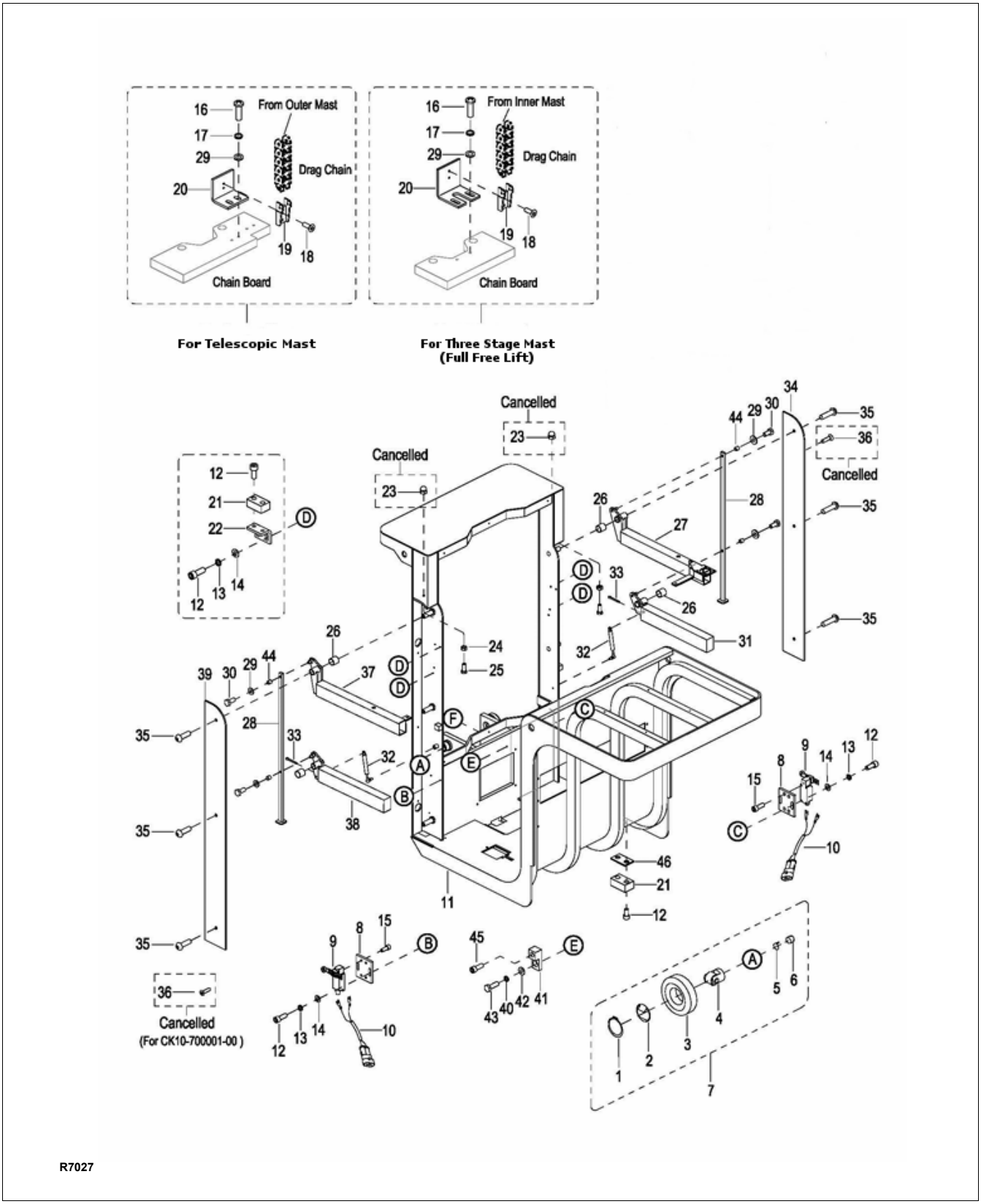

Figure 7-5 Platform Installation

https://truckmanualshub.com/

7-5. LIFT CYLINDERS.

NOTE: Removal and repair of lift cylinders are covered in SECTION 8.

https://truckmanualshub.com/

SECTION 8
HYDRAULIC SYSTEM SERVICING

8-1. LINES AND FITTINGS

WARNING: When the platform is raised, pressure exists in the hydraulic system lines and fittings. To ensure release of pressure, platform must be fully lowered and the batteries disconnected before performing any maintenance on the hydraulic system.

NOTE: Leaking hydraulic fittings may be remedied by simply tightening fittings. If this does not remedy the leak, the fittings or line must be replaced.

1. Fully lower the platform.
2. Engage the emergency power disconnect switch (6, Figure 11-8) and turn off key switch (3).
3. Remove the compartment cover as described in paragraph 4-2.

CAUTION: Hydraulic oil can damage parts. Wipe off any oil immediately. Provide a container under the line or fitting before disconnecting.

4. **Telescopic vehicles**: Refer to Figure 8-1 and Figure 8-2 and remove leaking line or fitting and replace it with a new line or fitting.

   Three Stage Mast vehicles: Refer to Figure 8-1 and Figure 8-6 and remove leaking line or fitting and replace it with a new line or fitting.
5. Check level of hydraulic oil. If required, add hydraulic oil to bring to proper level. Use hydraulic oil listed in Figure 2-3.
6. Disengage the emergency power disconnect switch (6, Figure 11-8) and turn on key switch (3).
7. Operate the lift and lower buttons to refill the cylinder and lines with hydraulic oil.
8. Check level of hydraulic oil. If required, add hydraulic oil to bring to proper level. Use hydraulic oil listed in Table 2-2.
9. Install the compartment cover as described in paragraph 4-2.

8-2. HYDRAULIC PUMP, MOTOR, AND RESERVOIR ASSY

The hydraulic pump/motor assembly can be disassembled and repaired. However, a defective pump, valve or motor requires replacement of that component.

WARNING: When the platform is raised, pressure exists in the hydraulic system lines and fittings. To ensure release of pressure, platform must be fully lowered and the batteries disconnected before performing any maintenance on the hydraulic system.

8-2.1. Removal

1. Fully lower the platform.
2. Engage the emergency power disconnect switch (6, Figure 11-8) and turn off key switch (3).
3. Remove the compartment cover as described in paragraph 4-2.
4. Tag and disconnect electrical leads from motor and solenoid of pump/motor assembly (1, Figure 8-1).

NOTE: The reservoir and tube will be filled with hydraulic oil. Place a container under the pump assembly to catch any hydraulic oil.

5. Disconnect hose (13) from pump/motor assembly (1).
6. While supporting pump/motor assembly (1), remove four screws (8), four lock washers (9) and four flat washers (7).
7. Remove the pump/motor assembly (1).

8-2.2. Disassembly and Reassembly

1. Remove the hydraulic pump/motor assembly as described in paragraph 8-2.1.
2. Refer to Figure 11-10 for disassembly and reassembly.

https://truckmanualshub.com/

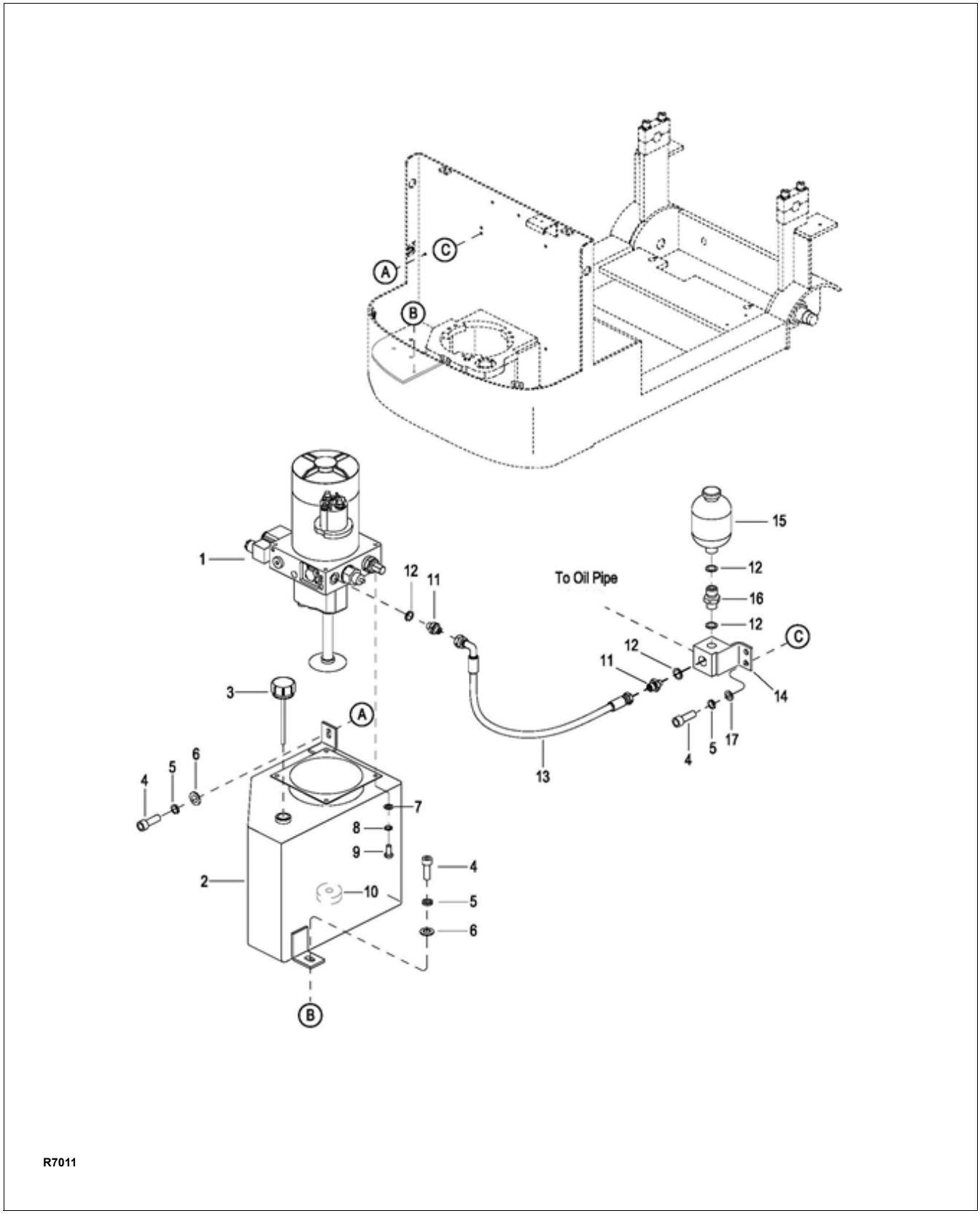

Figure 8-1 Hydraulic System

https://truckmanualshub.com/

8-2.3. Installation

1. Position pump/motor assembly (1, Figure 8-1) on reservoir (2) and install four screws (8), four lock washers (9) and four flat washers (7).
2. Reconnect hose (13) to pump/motor assembly (1).
3. Connect electrical leads to motor and solenoid of pump/motor assembly (1).
4. Fill the hydraulic reservoir. Use hydraulic oil listed in Table 2-2.
5. Disengage the emergency power disconnect switch (6, Figure 11-8) and turn on key switch (3).
6. Operate the lift and lower buttons to refill the cylinder and lines with hydraulic oil.
7. Check level of hydraulic oil. If required, add hydraulic oil to bring to proper level. Use hydraulic oil listed in Table 2-2.
8. Install the compartment cover as described in paragraph 4-2.

8-3. Lift Cylinder (Telescopic)

8-3.1. Removal

1. With the lift vehicle wheels securely blocked, raise the platform approximately three feet and position blocks or strong supports under inner frame (11, Figure 8-3).
2. Lower platform onto the support. Check that arrangement is secure before proceeding.
3. Engage the emergency power disconnect switch (6, Figure 11-8) and turn off key switch (3).
4. Remove the compartment cover as described in paragraph 4-2.

WARNING: Before attempting any replacement, make certain power is disconnected.

CAUTION: Hydraulic oil can damage parts. Wipe off any oil immediately. Provide a container under the line or fitting before disconnecting.

5. Remove the lift chain as described in paragraph 7-4.
6. Remove screw (8, Figure 8-3), lock washer (9), and flat washer (10).
7. Remove bolt (6, Figure 8-2), two washers (5), relief valve (4) and disconnect the hose (3) from the bottom of lift cylinder.
8. Manually push the cylinder rod down as far as possible and remove ram head (12, Figure 8-3) from cylinder (19).

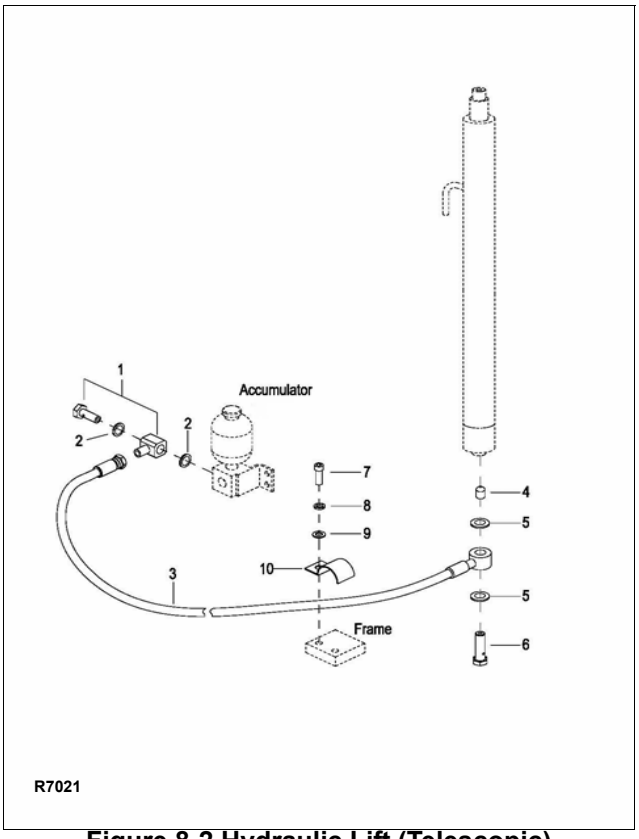

Figure 8-2 Hydraulic Lift (Telescopic)

WARNING: Support lift cylinder before performing the following steps to prevent cylinder from falling.

9. Remove two nuts (23), two lock washers (24), two flat washers (25) and U bolt (18).
10. Raise lift cylinder assembly (19) up and out of vehicle.

8-3.2. Repair

CAUTION: To prevent damage, use proper pipe clamp vise. The cylinder will be distorted if the vise is tightened too much.

1. Secure the lift cylinder in a vise, clamping lightly at the base of the cylinder.
2. Remove gland nut (7, Figure 8-4).
3. Remove wiper ring (8) and O-ring (9) from gland nut (7).
4. Pull out piston rod (1).
5. Remove bearing (5) and bushing (4).
6. Remove piston (2) and O-ring (3) from rod (1).
7. Remove guide ring (10) and seal (11) from piston (2).

https://truckmanualshub.com/

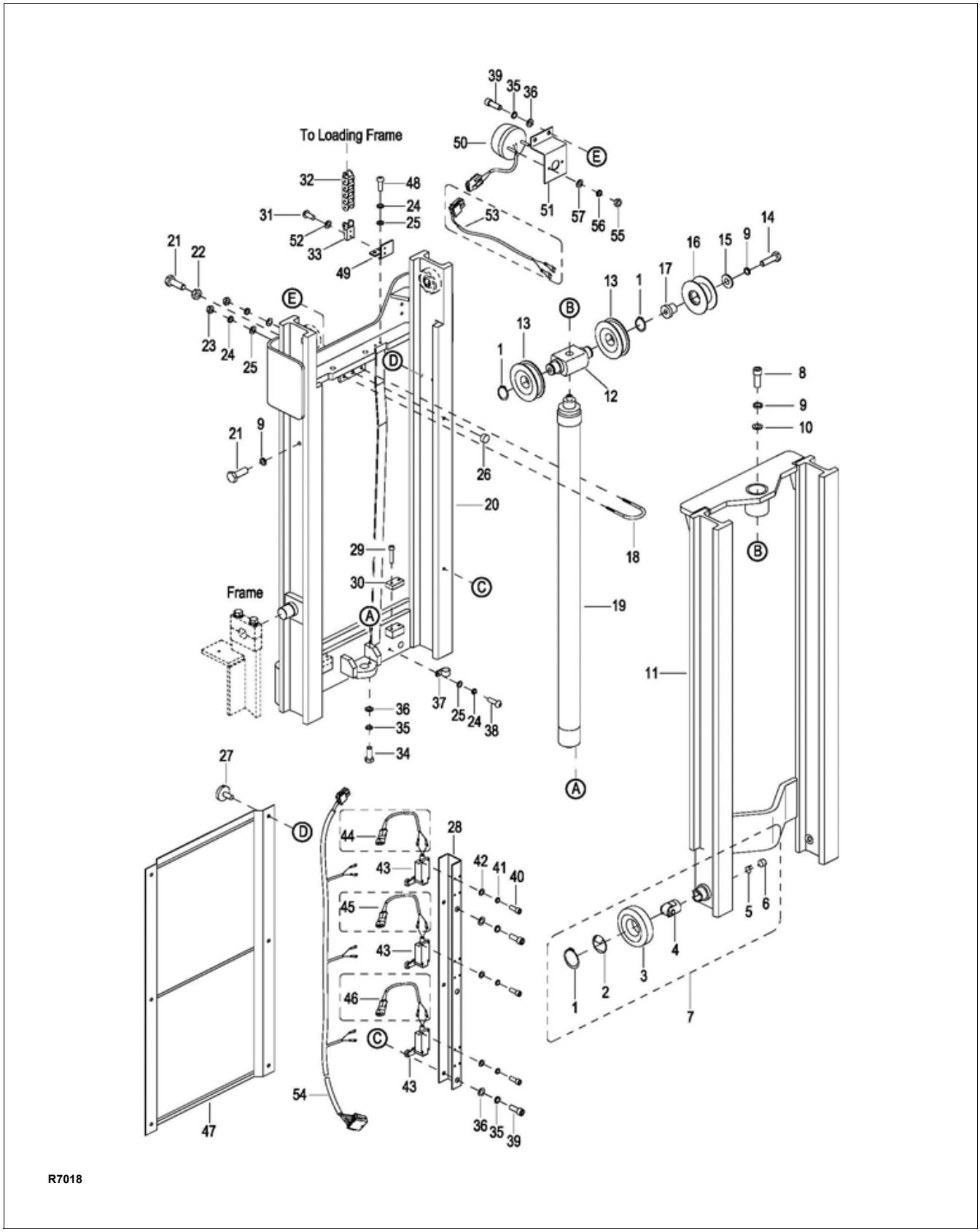

Figure 8-3 Elevation System (Telescopic)

https://truckmanualshub.com/

8. Coat all parts with hydraulic oil (Table 2-2).
9. Install guide ring (10) and new seal (11) on piston (2).
10. Install new O-ring (3) on rod (1).
11. Install piston (2) on rod (1).
12. Install bearing (5) and bushing (4).
13. Insert rod (1) in cylinder tube (6).
14. Install wiper ring (8) and O-ring (9) on gland nut (7).
15. Install gland nut (7) in cylinder tube (6).

8-3.3. Installation

1. Position the cylinder in the mast.
2. Install U bolt (18, Figure 8-3) and secure with two nuts (23), two lock washers (24), two flat washers (25).
3. Install ram head (12) on top of cylinder (19).
4. Lift inner mast (11) and remove the blocking.
5. Lower inner mast (11) onto cylinder (19) and secure with screw (8), lock washer (9) and flat washer (10).
6. Install the lift chain as described in paragraph 7-4.
7. Install relief valve (4, Figure 8-2) and reconnect hose (3) with two washers (5) and bolt (6) to the bottom of lift cylinder.
8. Fill the hydraulic reservoir. Use hydraulic oil listed in Table 2-2.
9. Disengage the emergency power disconnect switch (6, Figure 11-8) and turn on key switch (3).
10. Operate the lift and lower buttons to refill the cylinder and lines with hydraulic oil.
11. Check level of hydraulic oil. If required, add hydraulic oil to bring to proper level. Use hydraulic oil listed in Table 2-2.
12. Adjust the chains according to paragraph 7-2.
13. Install the compartment cover as described in paragraph 4-2.

8-4. Lift Cylinder (Three Stage Mast Full Free Lift)

8-4.1. Removal

1. With the vehicle wheels securely blocked, raise the platform approximately three feet and position blocks or strong supports under Platform (11, Figure 11-31).

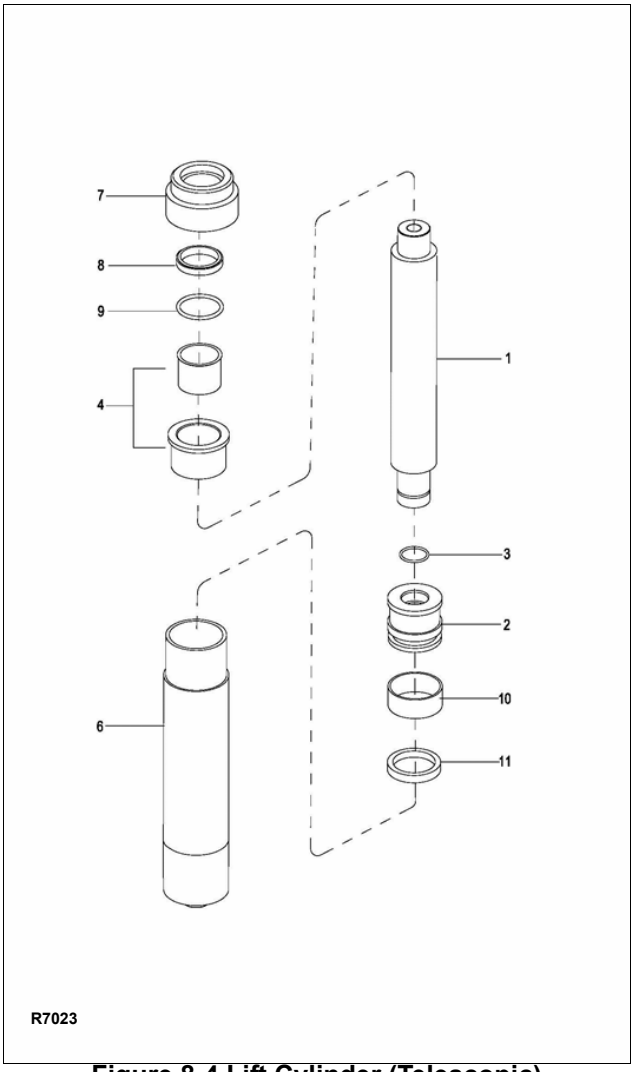

Figure 8-4 Lift Cylinder (Telescopic)

2. Lower Platform onto the support. Check that arrangement is secure before proceeding.
3. Engage the emergency power disconnect switch (6, Figure 11-8) and turn off key switch (3).
4. Remove the compartment cover as described in paragraph 4-2.

WARNING: Before attempting any replacement, make certain power is disconnected.

CAUTION: Hydraulic oil can damage parts. Wipe off any oil immediately. Provide a container under the line or fitting before disconnecting.

5. Remove the lift chain as described in paragraph 7-4.
6. Remove bolt (12, Figure 8-8), lock washer (9), flat washer (10), sheave (13) and bushing (14).

https://truckmanualshub.com/

7. Remove screw (8), lock washer (9), flat washer (10), angle (11), bracket (34) and header (15) from cylinder (18).
8. Disconnect the hose (13, Figure 8-6) from tube (14).
9. Remove screw (16), lock washer (17), flat washer (18) and disconnect tube (14) from connector (15).
10. Remove connector (15), two washers (5) and relief valve (6) from cylinder (25).

WARNING: Support lift cylinder before performing the following steps to prevent cylinder from falling.

11. Remove two bolts (30, Figure 8-8), two lock washers (9), two flat washers (10).
12. Raise lift cylinder assembly (18) up and out of vehicle.

8-4.2. Repair

CAUTION: To prevent damage, use proper pipe clamp vise. The cylinder will be distorted if the vise is tightened too much.

1. Secure the lift cylinder in a vise, clamping lightly at the base of the cylinder.
2. Remove gland nut (4, Figure 8-5).
3. Remove wiper ring (1), backup ring (2), packing (3) and O-ring (5) from gland nut (4).
4. Pull out piston rod (6).
5. Remove screw (9) and piston (7) from rod (6).
6. Remove ring (8) from piston (7).
7. Coat all parts with hydraulic oil (Table 2-2).
8. Install ring (8) on piston (7).
9. Install piston (7) on rod (6) and secure with screw (9).
10. Insert rod (7) in cylinder tube (10).
11. Install wiper ring (1), backup ring (2), packing (3) and O-ring (5) on gland nut (4).
12. Install gland nut (4) in cylinder tube (10).

8-4.3. Installation

1. Position the cylinder (18, Figure 8-8) in the mast (33).
2. Install two bolts (30), two lock washers (9), and two flat washers (10).
3. Install relief valve (6, Figure 8-6), two washers (5) and connector on cylinder (25).

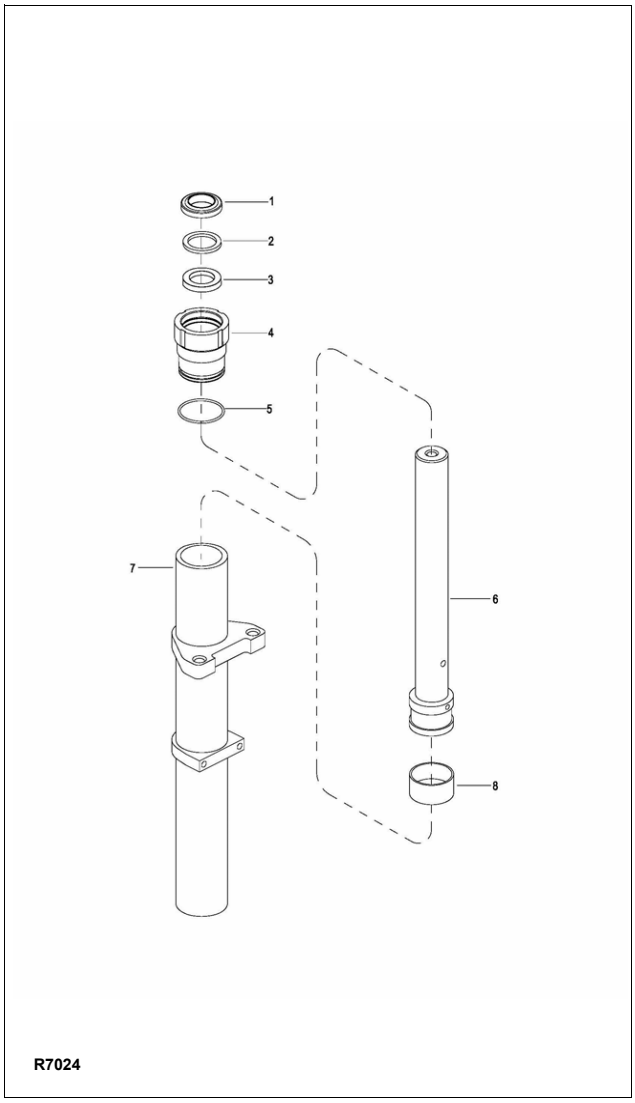

Figure 8-5 Lift Cylinder (Three Stage Mast Full Free Lift)

4. Reconnect tube (14, Figure 8-8) to connector (15) and secure the tube with screw (16), lock washer (17) and flat washer (18).
5. Position header (15), bracket (34) and angle (11) on top of cylinder (18) and secure with screw (8), lock washer (9) and flat washer (10).
6. Install bushing (14), sheave (13) on angle (11) and secure with bolt (12), lock washer (9) and flat washer (10).
7. Install lift chains as described in paragraph 7-4.
8. Lift inner mast (11) and remove the blocking.
9. Fill the hydraulic reservoir. Use hydraulic oil listed in Table 2-2.
10. Disengage the emergency power disconnect switch (6, Figure 11-8) and turn on key switch (3).

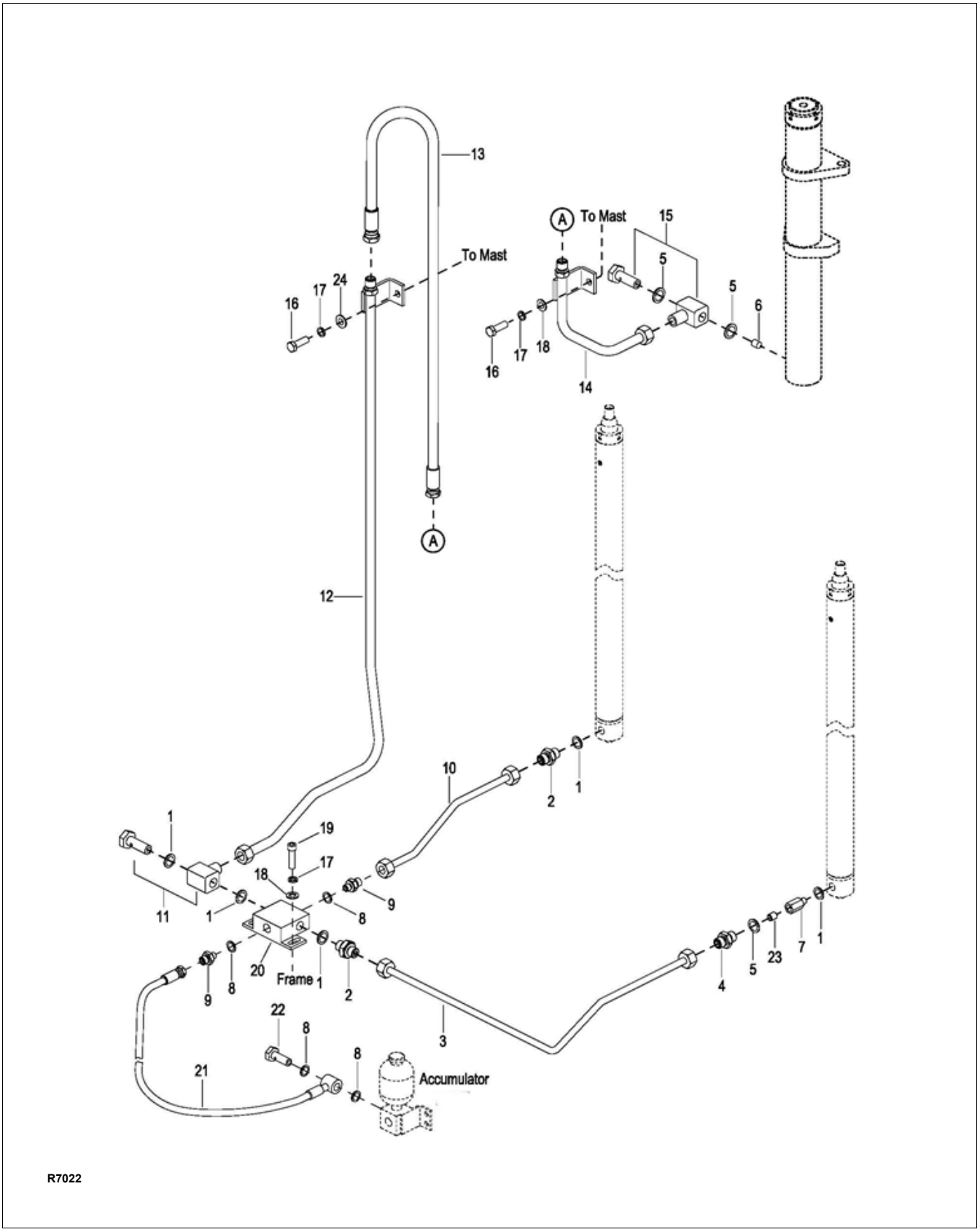

Figure 8-6 Hydraulic Lift (Three Stage Mast)

https://truckmanualshub.com/

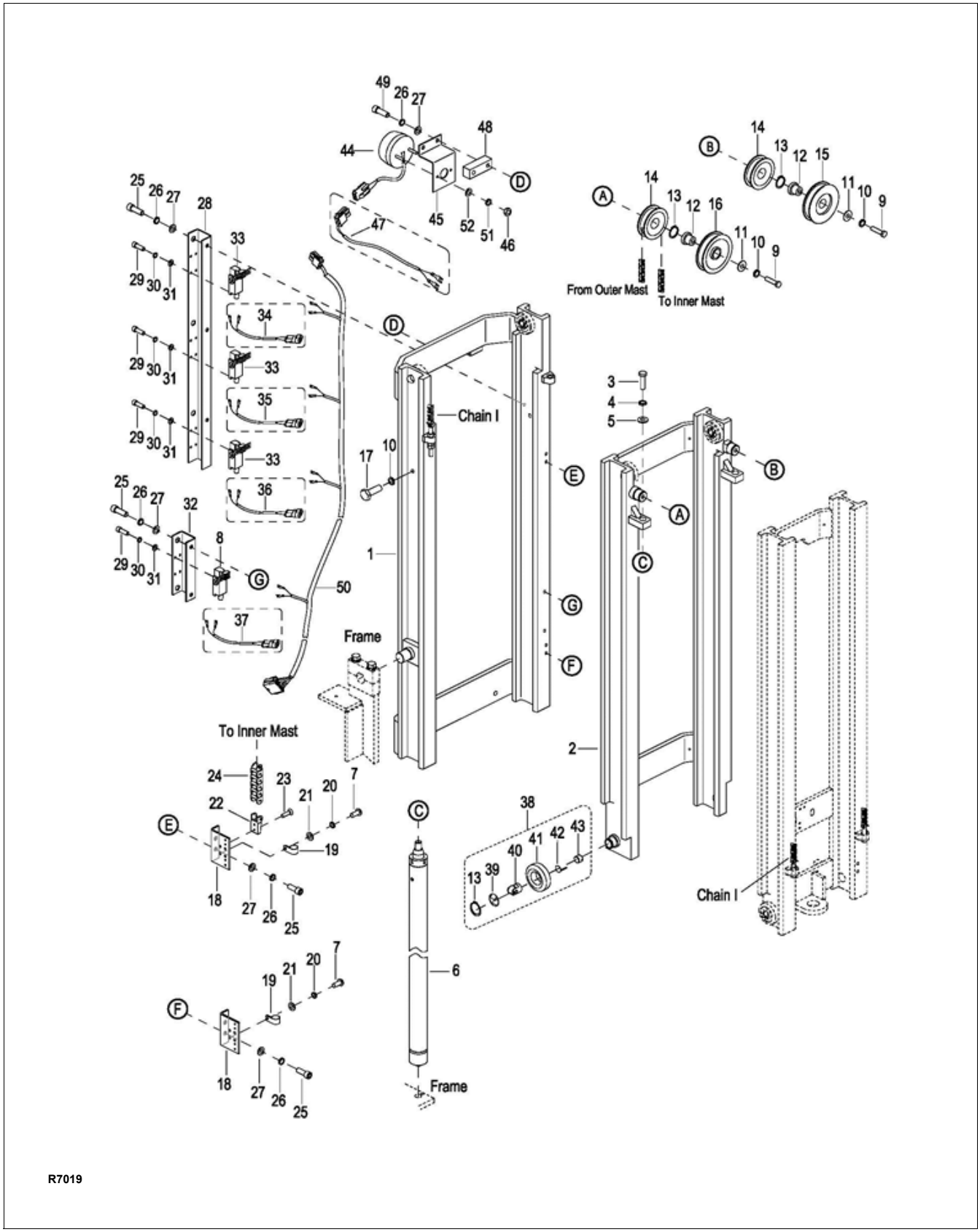

Figure 8-7 Elevation System (Three Stage Mast - Part 1)

https://truckmanualshub.com/

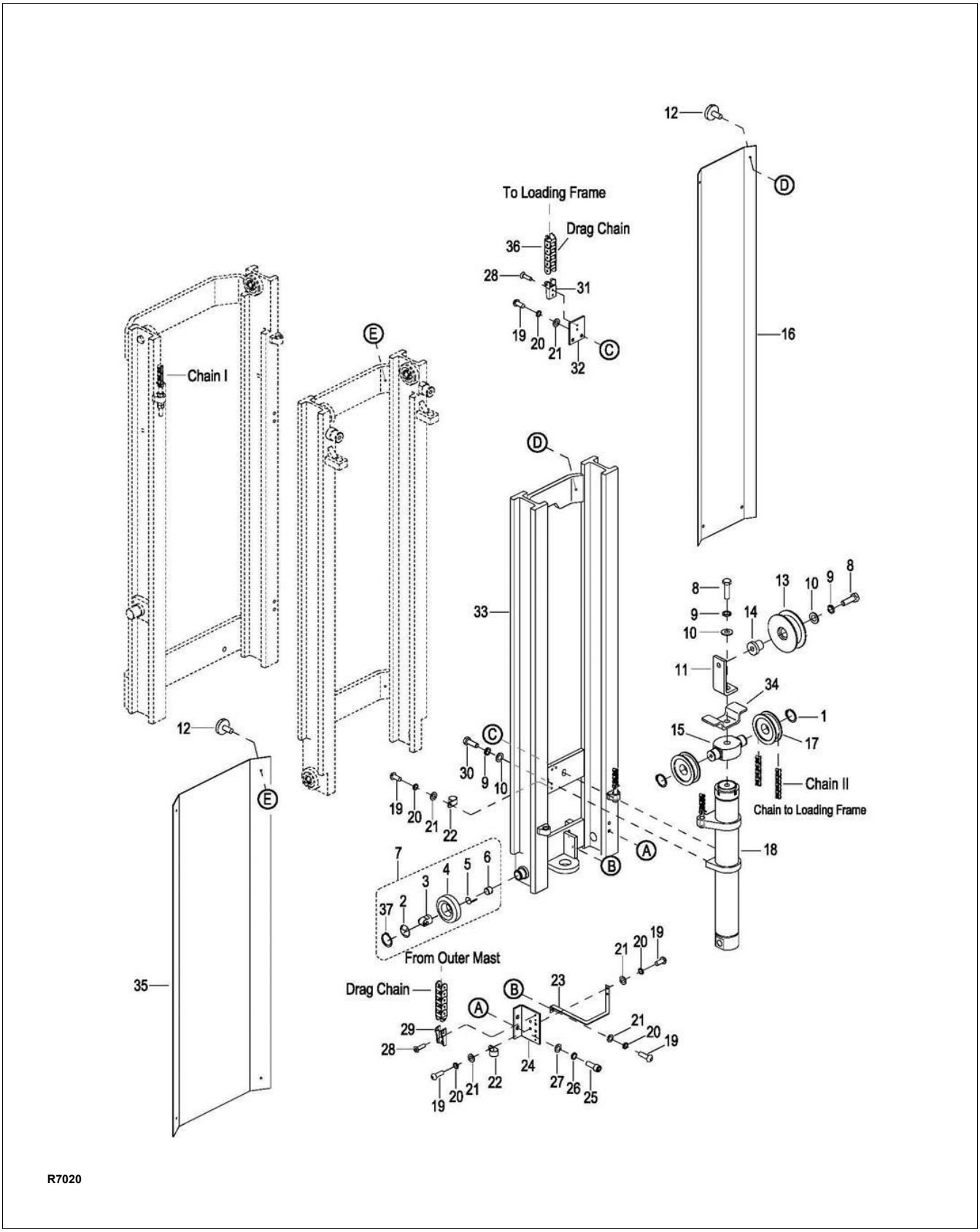

Figure 8-8 Elevation System (Three Stage Mast - Part 2)

https://truckmanualshub.com/

11. Operate the lift and lower buttons to refill the cylinder and lines with hydraulic oil.
12. Check level of hydraulic oil. If required, add hydraulic oil to bring to proper level. Use hydraulic oil listed in Table 2-2.
13. Adjust the chains according to paragraph 7-2.
14. Install the compartment cover as described in paragraph 4-2.

8-5. Lift Cylinder (Three Stage Mast Secondary)

8-5.1. Removal

1. With the vehicle wheels securely blocked, raise the platform approximately three feet and position blocks or strong supports under middle mast (2, Figure 8-7).
2. Lower mast onto the support. Check that arrangement is secure before proceeding.
3. Engage the emergency power disconnect switch (6, Figure 11-8) and turn off key switch (3).
4. Remove the compartment cover as described in paragraph 4-2.

WARNING: Before attempting any replacement, make certain power is disconnected.

CAUTION: Hydraulic oil can damage parts. Wipe off any oil immediately. Provide a container under the line or fitting before disconnecting.

5. Remove the lift chain as described in paragraph 7-4.
6. Disconnect the tube (3 or 10, Figure 8-6) from the cylinder being removed.
7. Remove connector (2) and washer (1); or connector (4), washer (5), relief valve (23), connector (7) and washer (1) from the cylinder being removed.

WARNING: Support lift cylinder before performing the following steps to prevent cylinder from falling.

8. Remove two bolts (3, Figure 8-7), two lock washers (4) and two flat washers (5).
9. Raise lift cylinder assembly (6) up and out of vehicle.

8-5.2. Repair

CAUTION: To prevent damage, use proper pipe clamp vise. The cylinder will be distorted if the vise is tightened too much.

1. Secure the lift cylinder in a vise, clamping lightly at the base of the cylinder.
2. Remove screw (11, Figure 8-9) and washer (12).
3. Remove gland nut (3).
4. Remove wiper ring (1), packing (2) and O-rings (4 and 13) from gland nut (3).
5. Pull out piston rod (5).
6. Remove buffer rod (14), ring (8), snap ring (7) and bushing (6) from piston rod (5).
7. Coat all parts with hydraulic oil (Table 2-2).
8. Install buffer rod (14), ring (8), snap ring (7) and bushing (6) on piston rod (5).
9. Insert rod (5) in cylinder tube (9).
10. Install wiper ring (1), packing (2) and O-rings (4 and 13) on gland nut (3).
11. Install gland nut (3) in cylinder tube (9).

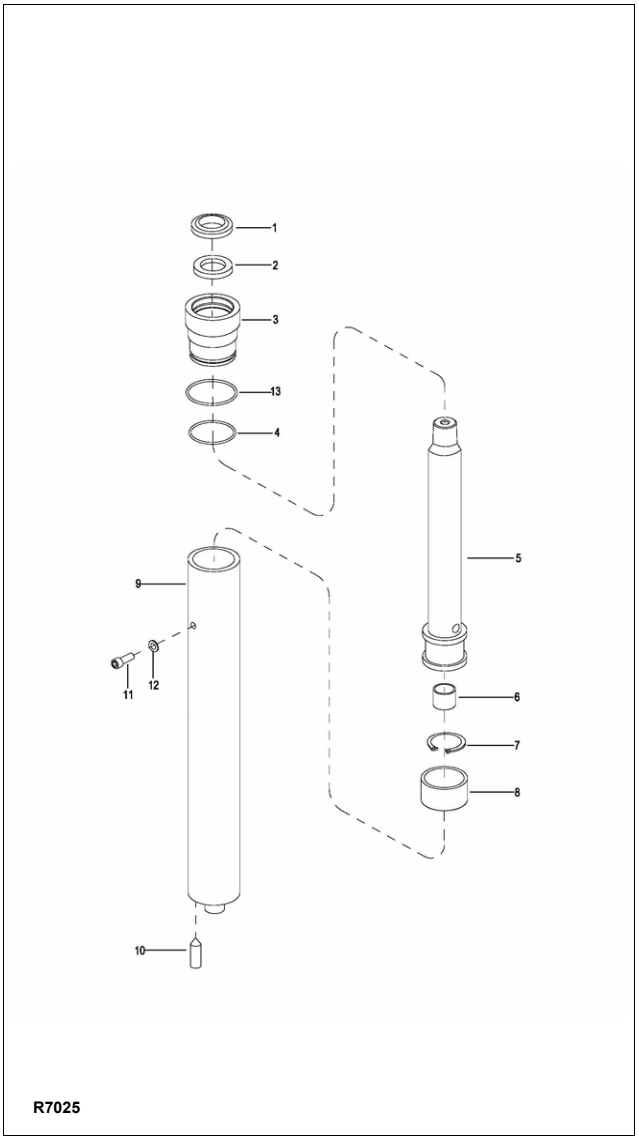

https://truckmanualshub.com/

Figure 8-9 Lift Cylinder (Three Stage Mast Secondary)

8-5.3. Installation

1. Position the cylinder (6, Figure 8-7) on the frame.
2. Lift middle mast (2) and remove the blocking.
3. Install two bolts (3), two lock washers (4), and two flat washers (5).
4. Install connector (2) and washer (1); or connector (4), washer (5), relief valve (23), connector (7) and washer (1) two washers (5) and connector on cylinder (25).
5. Reconnect tube (3 or 10).
6. Install lift chains as described in paragraph 7-4.
7. Fill the hydraulic reservoir. Use hydraulic oil listed in Table 2-2.
8. Disengage the emergency power disconnect switch (6, Figure 11-8) and turn on key switch (3).
9. Operate the lift and lower buttons to refill the cylinder and lines with hydraulic oil.
10. Check level of hydraulic oil. If required, add hydraulic oil to bring to proper level. Use hydraulic oil listed in Table 2-2.
11. Adjust the chains according to paragraph 7-2.
12. Install the compartment cover as described in paragraph 4-2.

https://truckmanualshub.com/

NOTES

https://truckmanualshub.com/

SECTION 9
ELECTRICAL COMPONENTS

9-1. ELECTRICAL CONTROL PANEL

9-1.1. Maintenance

NOTE: Erratic operation of the vehicle may be caused by defective controller components. Before removing the electrical panel, perform troubleshooting procedures per SECTION 3, to determine corrective action to be taken.

There are no user-serviceable parts inside the controller. No attempt should be made to open the controller. Opening the controller may damage it and will void the warranty.

The controller is programmed at the factory specifically for the vehicle model on which it is equipped. It is important to replace the controller with the correct preprogrammed unit to assure proper performance settings intended for that particular vehicle. See Figure 11-13 for the preprogrammed controller number.

It is recommended that the controller exterior be cleaned periodically, and if a hand held programmer is available, this periodic cleaning provides a good opportunity to check the controller's diagnostic history file. It is also recommended that the controller's fault detection circuitry be checked whenever the vehicle is serviced.

9-1.2. Cleaning

1. Engage the emergency power disconnect switch (6, Figure 11-8) and turn off key switch (3).
2. Remove the compartment cover as described in paragraph 4-2.
3. Remove any dirt or corrosion from the bus bar area. The controller should be wiped clean with a moist rag. Allow it to dry before reconnecting the battery.

9-1.3. Panel Removal.

1. Engage the emergency power disconnect switch (6, Figure 11-8) and turn off key switch (3).
2. Remove the compartment cover as described in paragraph 4-2.
3. Tag and disconnect all electrical cables and harness from control panel (5, Figure 9-1).
4. Remove four screws (1), four lock washers (2), four flat washers (3) and panel (5).

9-1.4. Panel disassembly.

Refer to Figure 11-13 for the location and identity of the major replacement components mounted on the panel and remove defective parts.

9-1.5. Panel Installation.

1. Position panel (5, Figure 9-1) and secure with four screws (1), four lock washers (2), four flat washers (3).
2. Connect all electrical cables and harness to the control panel as noted during removal.
3. Install compartment covers as described in paragraph 4-2.
4. Disengage the emergency power disconnect switch (6, Figure 11-8) and turn on key switch (3).

9-2. HORN REPLACEMENT.

1. Engage the emergency power disconnect switch (6, Figure 11-8) and turn off key switch (3).
2. Remove the compartment cover as described in paragraph 4-2.
3. Tag and disconnect harness (1, Figure 11-14) from horn (4, Figure 9-1).
4. Remove screw (6), lock washer (2), flat washer (3) and horn (4).
5. Install horn (4) and secure with screw (6), lock washer (2), flat washer (3).
6. Reconnect harness (1, Figure 11-14) to horn (4, Figure 9-1).
7. Install compartment covers as described in paragraph 4-2.
8. Disengage the emergency power disconnect switch (6, Figure 11-8) and turn on key switch (3).

https://truckmanualshub.com/

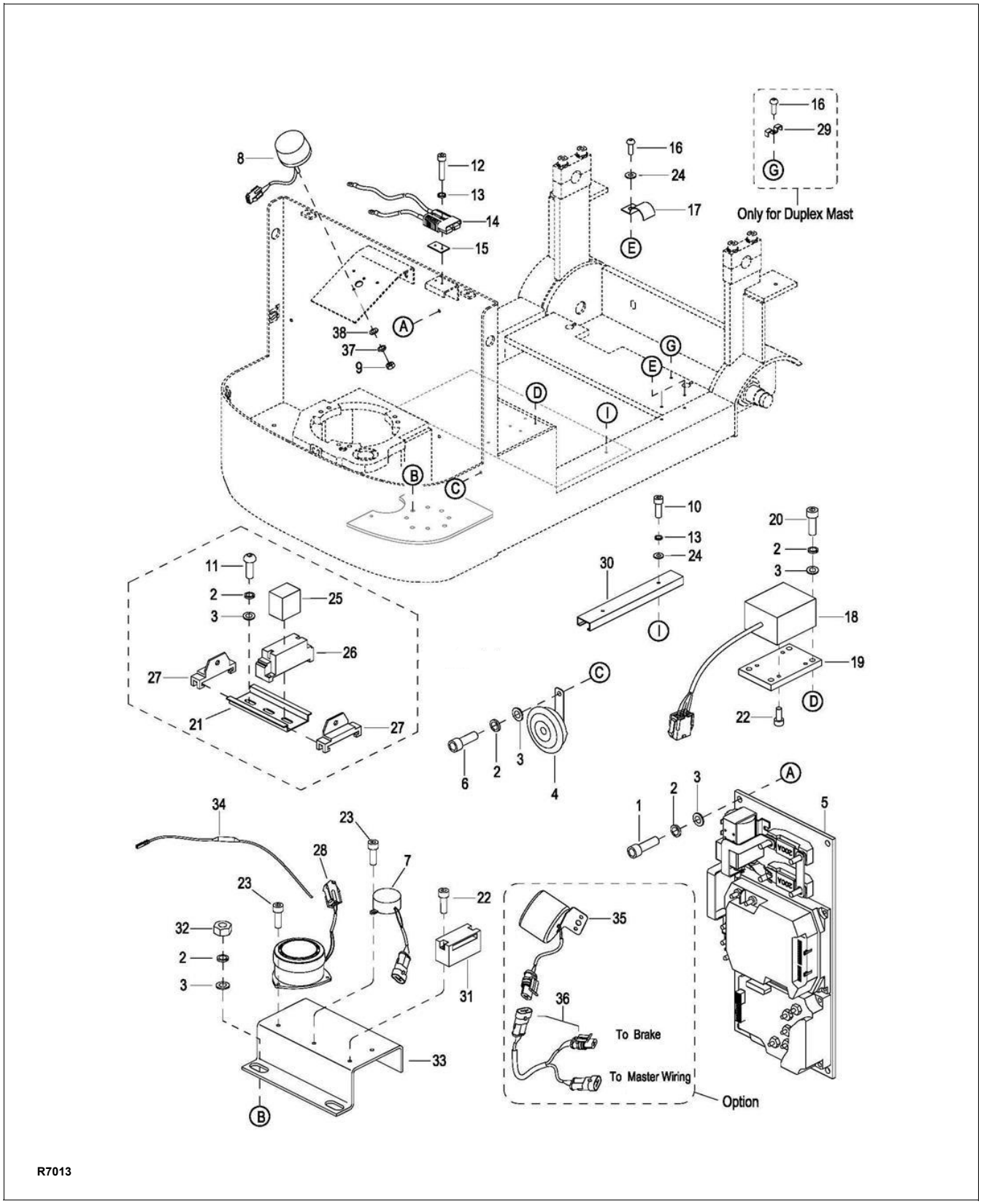

Figure 9-1 Electrical System

https://truckmanualshub.com/

9-3. LOWERING BUZZER REPLACEMENT.

1. Engage the emergency power disconnect switch (6, Figure 11-8) and turn off key switch (3).
2. Remove the compartment cover as described in paragraph 4-2.
3. Tag and disconnect harness (1, Figure 11-14) from buzzer (7, Figure 9-1).
4. Remove screw (23) and buzzer (7).
5. Install new buzzer (7) and secure with screw (23).
6. Reconnect harness (1, Figure 11-14) to buzzer (7, Figure 9-1).
7. Install compartment covers as described in paragraph 4-2.
8. Disengage the emergency power disconnect switch (6, Figure 11-8) and turn on key switch (3).

9-4. LEVEL SENSOR BUZZER REPLACEMENT.

1. Engage the emergency power disconnect switch (6, Figure 11-8) and turn off key switch (3).
2. Remove the compartment cover as described in paragraph 4-2.
3. Tag and disconnect harness (1, Figure 11-14) from buzzer (28, Figure 9-1).
4. Remove screw (23) and buzzer (28).
5. Install new buzzer (28) and secure with screw (23).
6. Reconnect harness (1, Figure 11-14) to buzzer (28, Figure 9-1).
7. Install compartment covers as described in paragraph 4-2.
8. Disengage the emergency power disconnect switch (6, Figure 11-8) and turn on key switch (3).

9-5. LEVEL SENSOR REPLACEMENT.

1. Engage the emergency power disconnect switch (6, Figure 11-8) and turn off key switch (3).
2. Remove the battery as described in paragraph 2-7.
3. Tag and disconnect harness (1, Figure 11-14) from sensor (18, Figure 9-1).
4. Remove four screws (20), four lock washers (13) and four flat washers (28).
5. Remove mounting plate (19) with sensor (18).
6. Remove four screws (22) and separate sensor (18) from mounting plate (19).
7. Position new sensor (18) on mounting plate (19) and secure with four screws (22).
8. Install mounting plate (19) with sensor (18) and secure with four screws (20), four lock washers (13) and four flat washers (28).
9. Reconnect harness (1, Figure 11-14) to sensor (18, Figure 9-1).
10. Install the battery as described in paragraph 2-7.
11. Disengage the emergency power disconnect switch (6, Figure 11-8) and turn on key switch (3).

9-6. WARNING LIGHT REPLACEMENT.

1. Engage the emergency power disconnect switch (6, Figure 11-8) and turn off key switch (3).
2. Remove the compartment cover as described in paragraph 4-2.
3. Tag and disconnect harness (1, Figure 11-14) from light (8, Figure 9-1).
4. Remove two screws (9) and light (8).
5. Install new light (8) and secure with two screws (9).
6. Reconnect harness (1, Figure 11-14) to light (8, Figure 9-1).
7. Install compartment covers as described in paragraph 4-2.
8. Disengage the emergency power disconnect switch (6, Figure 11-8) and turn on key switch (3).

9-7. BATTERY REPLACEMENT.

Replace the battery as described in paragraph 2-7.

9-8. BATTERY CHARGER.

9-8.1. Removal.

1. Engage the emergency power disconnect switch (6, Figure 11-8) and turn off key switch (3).
2. Remove the battery as described in paragraph 2-7.
3. Remove four screws (13, Figure 9-2), four lock washers (14), three screws (1) and three lock washers (9) and remove cover (4).
4. Disconnect cable (18) from charger (17).
5. Remove two screws (16) and two lock washers (2) and free the charger connector from battery tray (15).
6. Remove two screws (6) two lock washers (7), two flat washers (8) and charger (17).

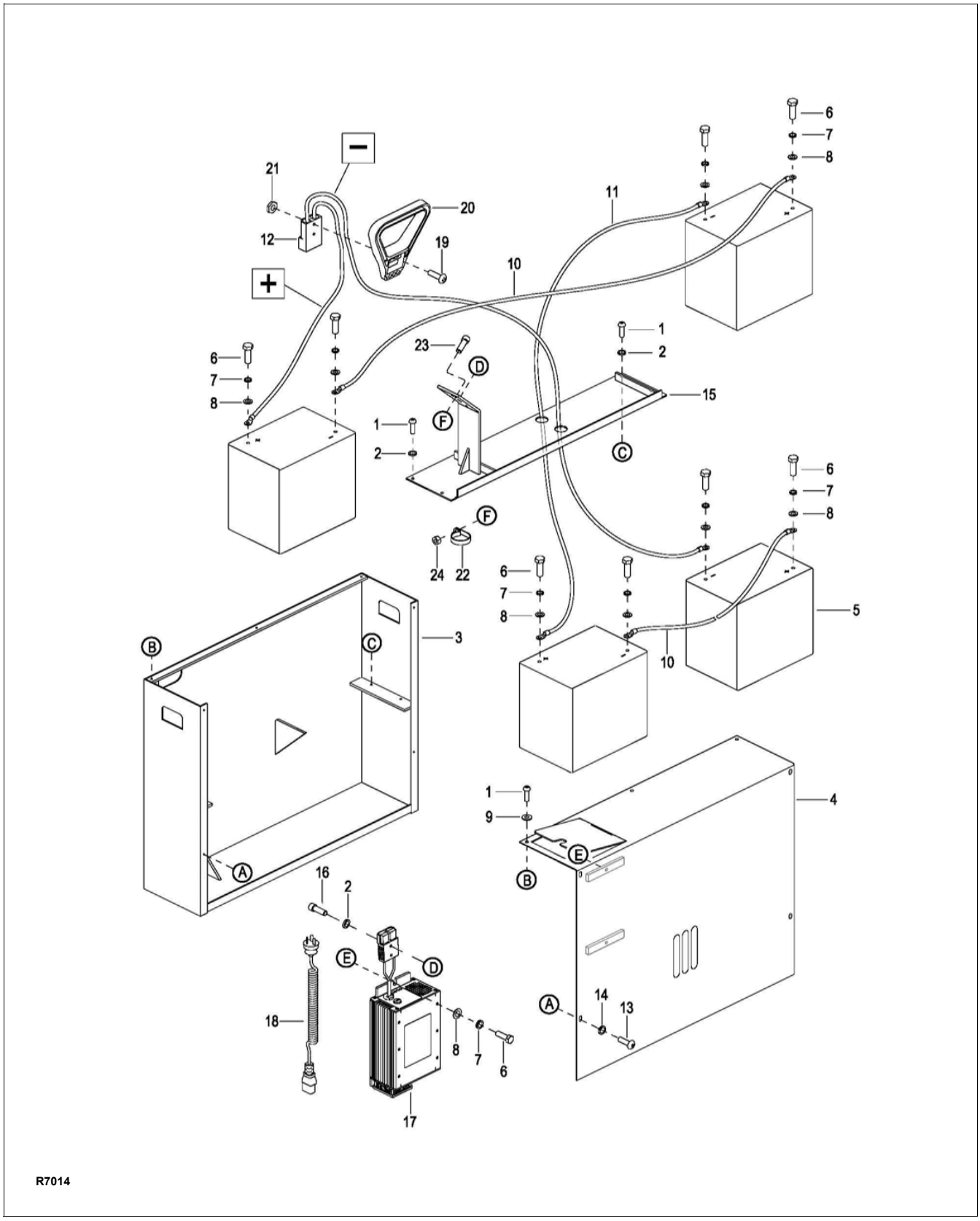

Figure 9-2 Battery Assembly

https://truckmanualshub.com/

9-8.2. Installation.

1. Position new charger (17, Figure 9-2) in frame (3) and secure with two screws (6) two lock washers (6), two flat washers (8).
2. Position charger connector on battery tray (15) and secure with two screws (16) and two lock washers (2).
3. Reconnect cable (18) to changer (17).
4. Install cover (4) and secure with four screws (13), four lock washers (14), three screws (1) and three lock washers (9).
5. Install the battery as described in paragraph 2-7.

9-9. Platform CABLE REPLACEMENT.

9-9.1. Telescopic

1. With the lift vehicle wheels securely blocked, raise the Platform approximately three feet and position blocks or strong supports under inner frame (11, Figure 9-3).
2. Lower Platform onto the support. Check that arrangement is secure before proceeding.
3. Engage the emergency power disconnect switch (6, Figure 11-8) and turn off key switch (3).
4. Disconnect harness (3, Figure 11-14) from harness (1).
5. Disconnect harness (3, Figure 11-14) from harness (25, Figure 11-7).
6. Disconnect harness (3, Figure 11-14) from harness (11, Figure 11-8).
7. Disconnect harness (3, Figure 11-14) from harness (13, Figure 9-7).
8. Disconnect harness (3, Figure 11-14) from harness (18, Figure 9-7).
9. Remove two screws (18, Figure 9-6) and disconnect mount (19) from bracket (20).
10. Disconnect protective chain (44) from mount (19).
11. Remove two screws (38, Figure 9-3), two lock washers (24), two flat washers (25) and clamp (37).
12. Remove two screws (31), two lock washers (52) and disconnect mount (33) from bracket (49).
13. Disconnect protective chain (32) from mount (33).
14. Lift harness with protective chain (32) from sheave (16).
15. Remove harness from the protective chain.
16. Install new harness by reversing the steps above.

https://truckmanualshub.com/

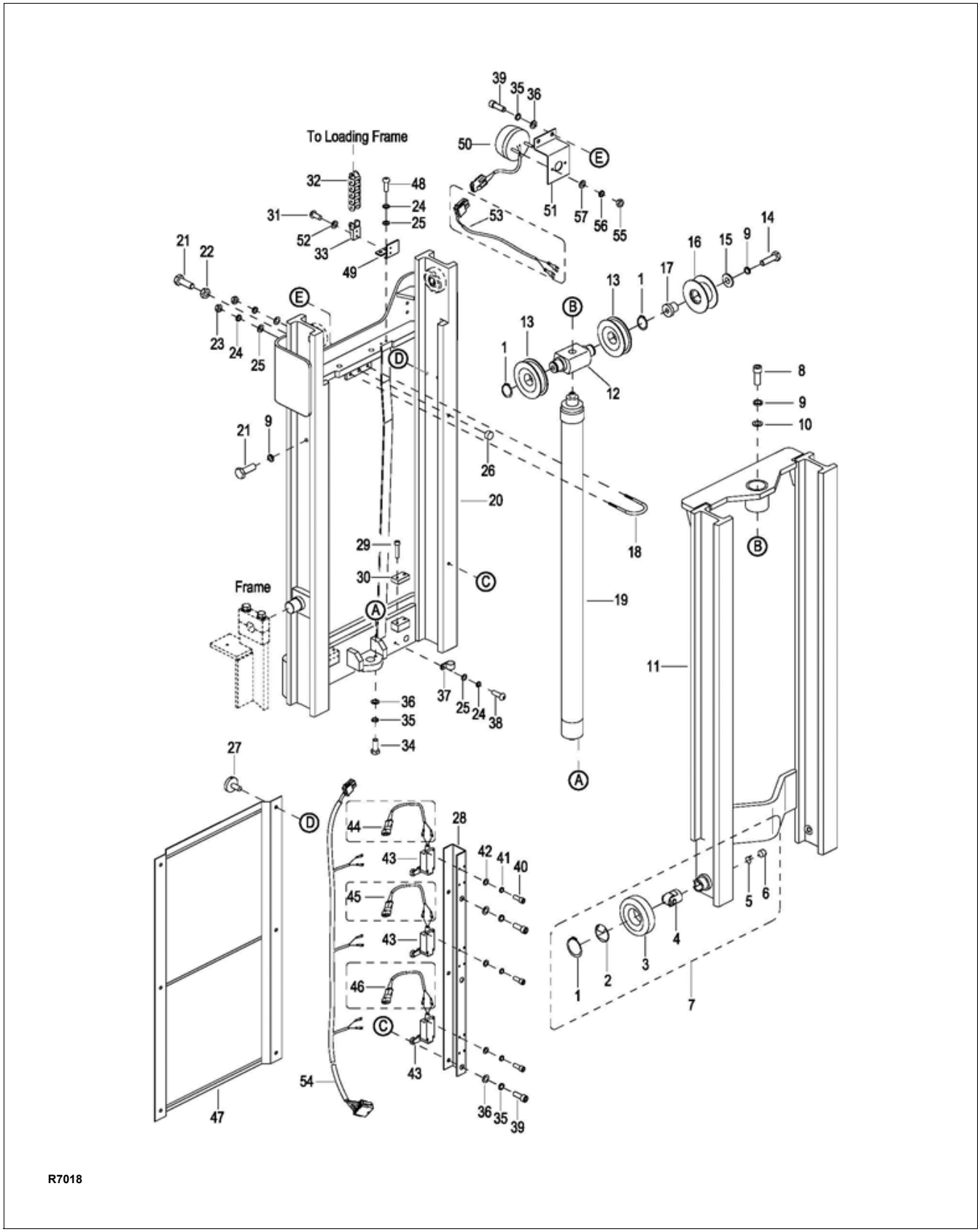

Figure 9-3 Elevation System (Telescopic)

https://truckmanualshub.com/

9-9.2. Three Stage Mast

NOTE: The Three Stage Mast version uses two protective chains on harness (3, Figure 11-14).

1. With the lift vehicle wheels securely blocked, raise the Platform approximately three feet and position blocks or strong supports under Platform (11, Figure 9-6).
2. Lower Platform onto the support. Check that arrangement is secure before proceeding.
3. Engage the emergency power disconnect switch (6, Figure 11-8) and turn off key switch (3).
4. Disconnect harness (3, Figure 11-14) from harness (1).
5. Disconnect harness (3, Figure 11-14) from harness (25, Figure 11-7).
6. Disconnect harness (3, Figure 11-14) from harness (11, Figure 11-8).
7. Disconnect harness (3, Figure 11-14) from harness (13, Figure 9-7).
8. Disconnect harness (3, Figure 11-14) from harness (18, Figure 9-7).
9. Remove two screws (18, Figure 11-8) and disconnect mount (19) from bracket (20).
10. Disconnect protective chain (45) from mount (19).
11. Remove two screws (23, Figure 9-5) and disconnect mount (25) from bracket (26).
12. Disconnect protective chain (30) from mount (25).
13. Lift harness with protective chain (30) from sheave (13).
14. Remove harness from the protective chain (30).
15. Remove the ties securing the harness to bracket (60).
16. Remove two screws (52, Figure 9-4), two lock washers (53), two flat washers (54) and clamp (55).
17. Remove two screws (50) and disconnect mount (51) from bracket (59).
18. Disconnect protective chain (24) from mount (51).
19. Remove the two clamps (19) from brackets (18) by removing screws (7), lock washers (20), flat washers (21).
20. Remove two screws (23) and disconnect mount (22) from bracket (18).
21. Disconnect protective chain (24) from mount (22).
22. Lift harness with protective chain (24) from sheave (15).
23. Remove harness from the protective chain.
24. Install new harness by reversing the steps above.

https://truckmanualshub.com/

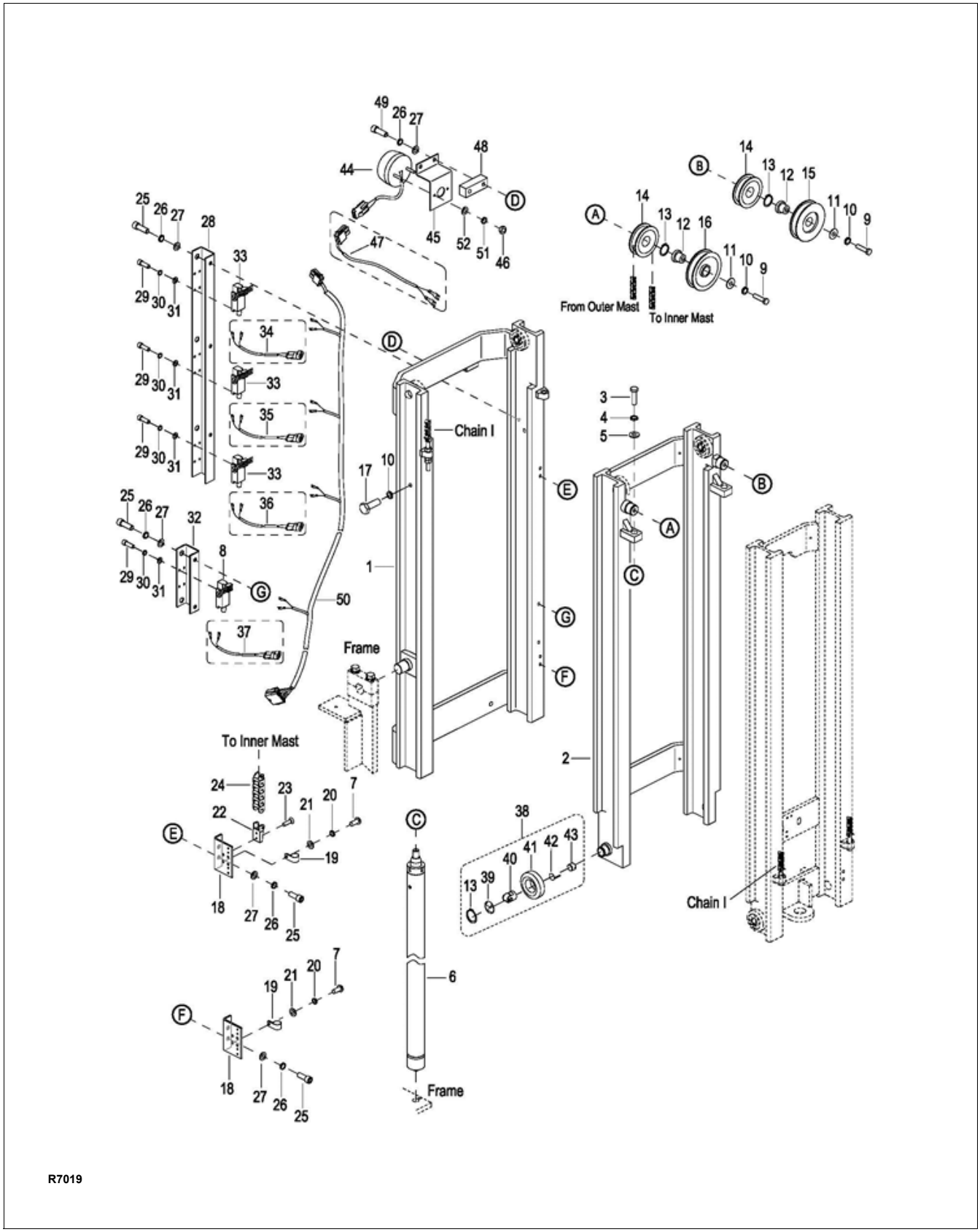

Figure 9-4 Elevation System (Three Stage Mast - Part 1)

https://truckmanualshub.com/

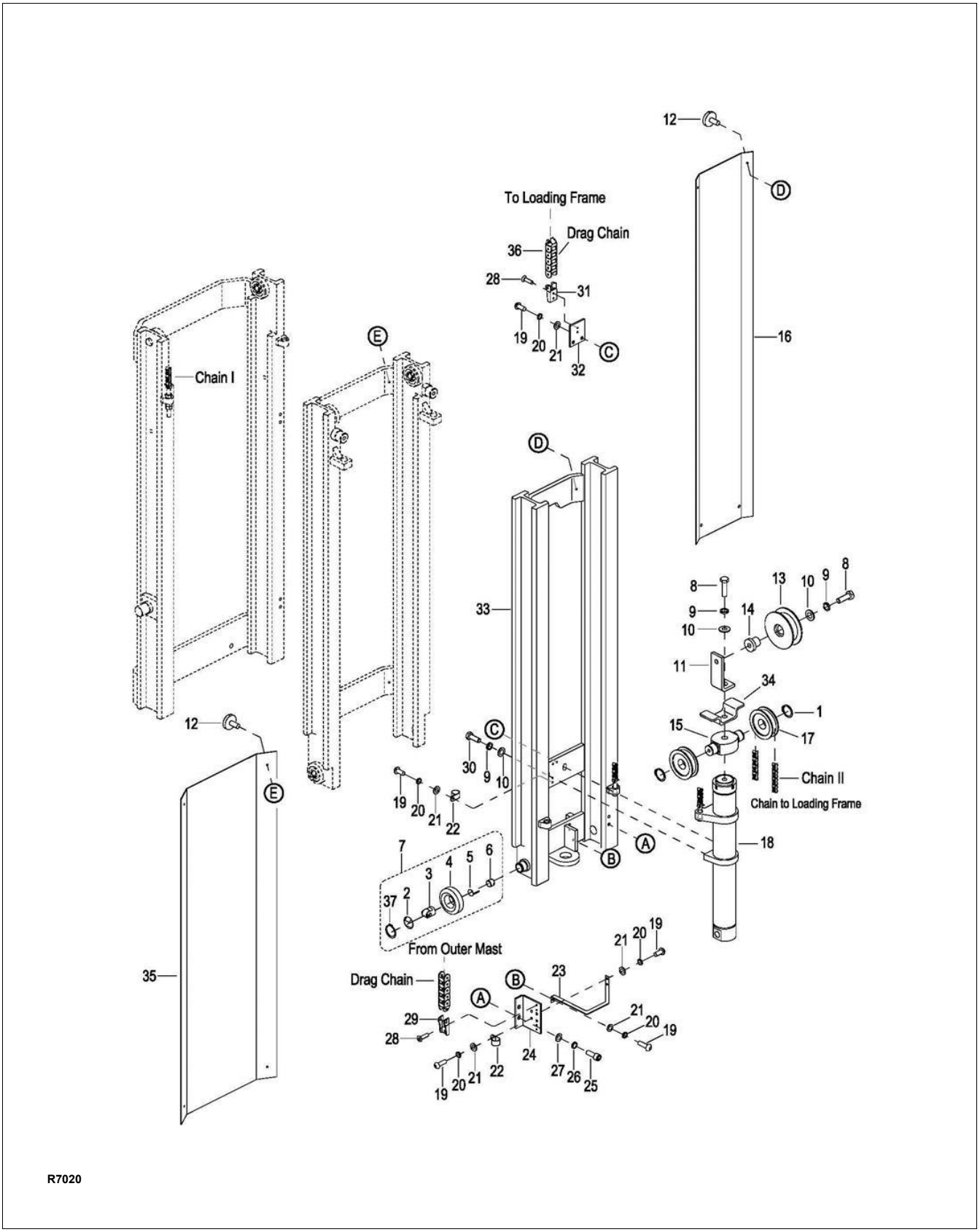

Figure 9-5 Elevation System (Three Stage Mast - Part 2)

https://truckmanualshub.com/

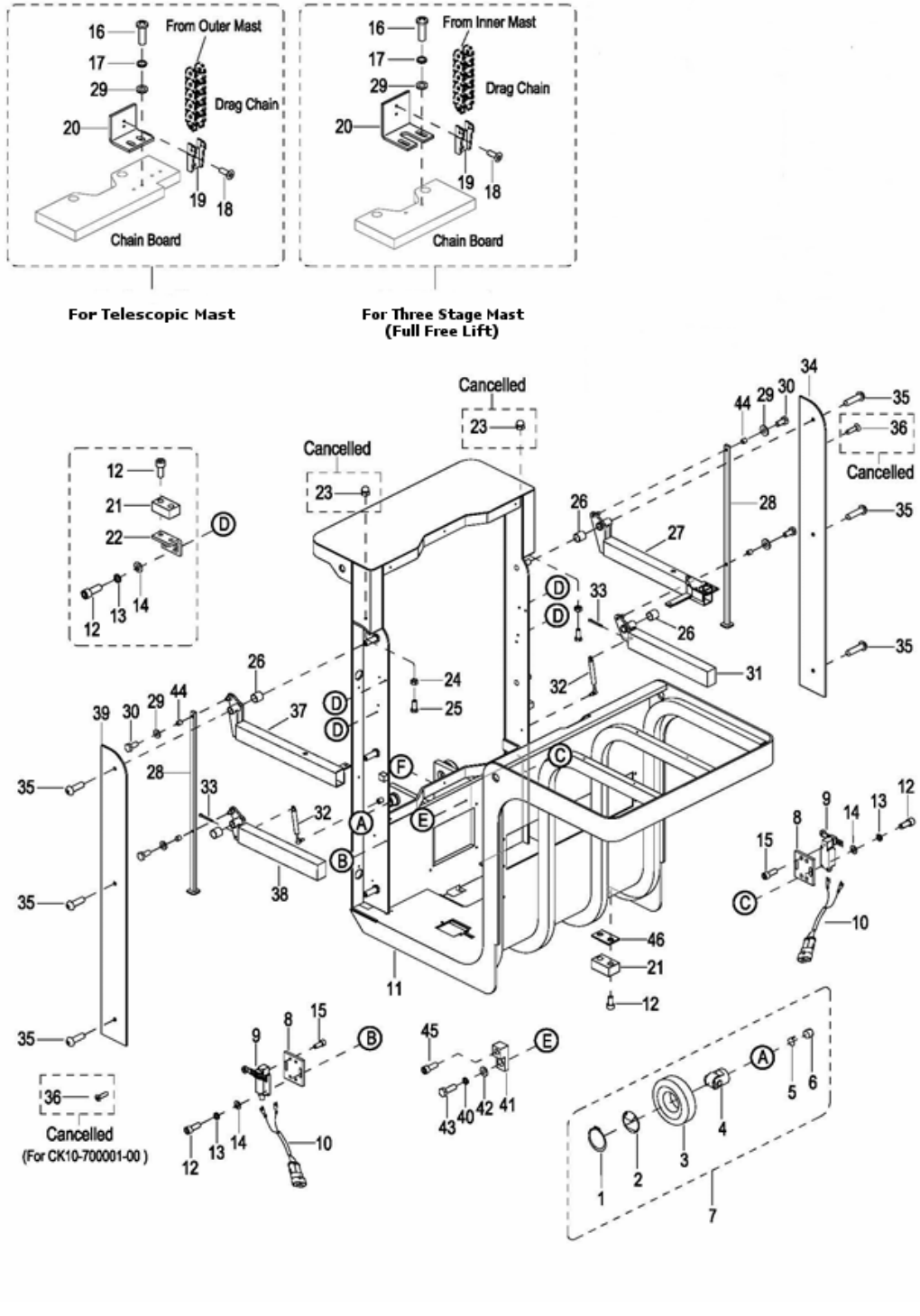

Figure 9-6 Platform Installation

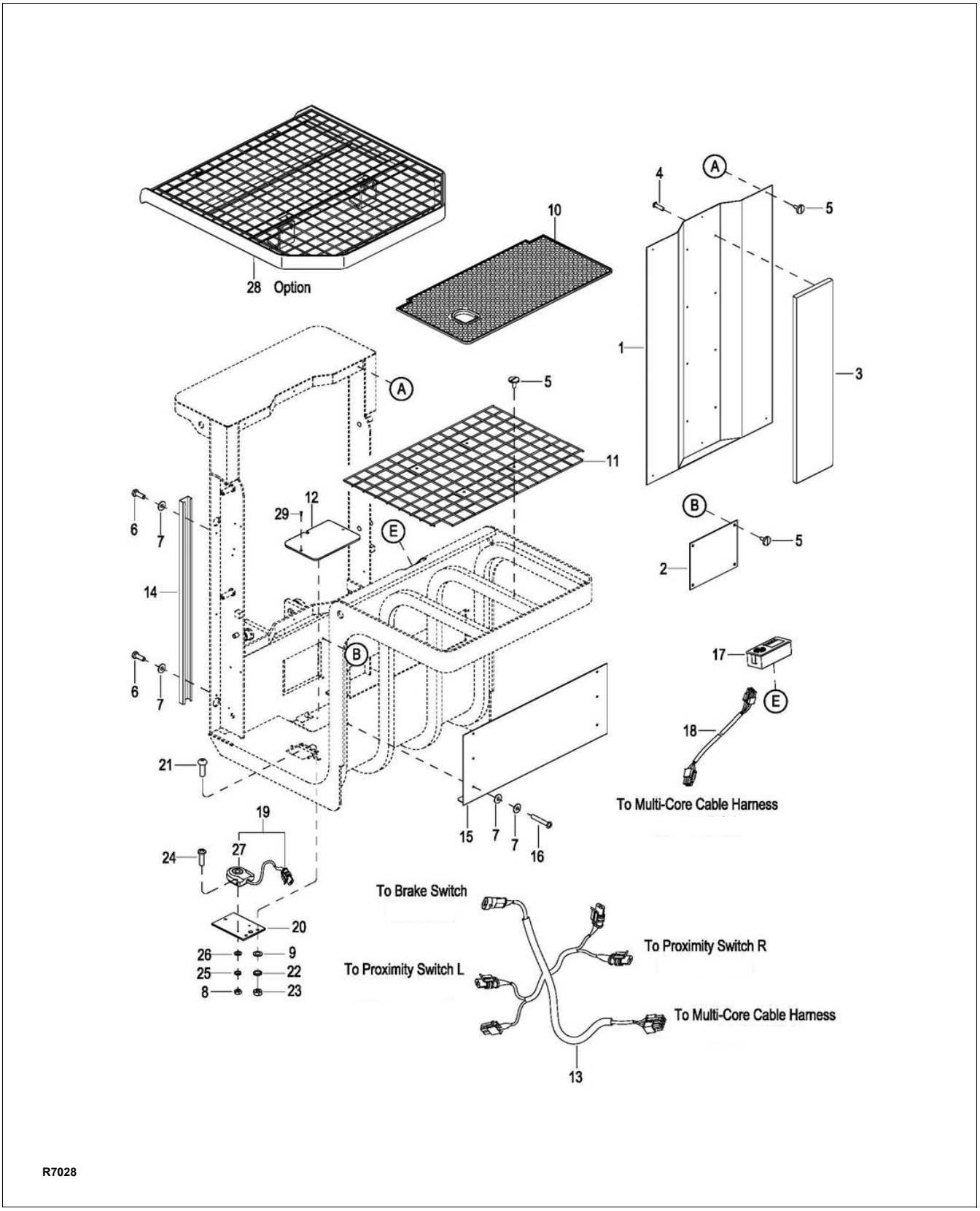

Figure 9-7 Platform Assembly

https://truckmanualshub.com/

NOTES

https://truckmanualshub.com/

SECTION 10
OPTIONAL EQUIPMENT

10-1. INDUSTRIAL BATTERY

Contact you authorized Big Joe dealer for information on optional batteries and battery chargers.

https://truckmanualshub.com/

NOTES

https://truckmanualshub.com/

SECTION 11
ILLUSTRATED PARTS BREAKDOWN

Following is an illustrated parts breakdown of assemblies and parts associated with the J1 task support vehicle.

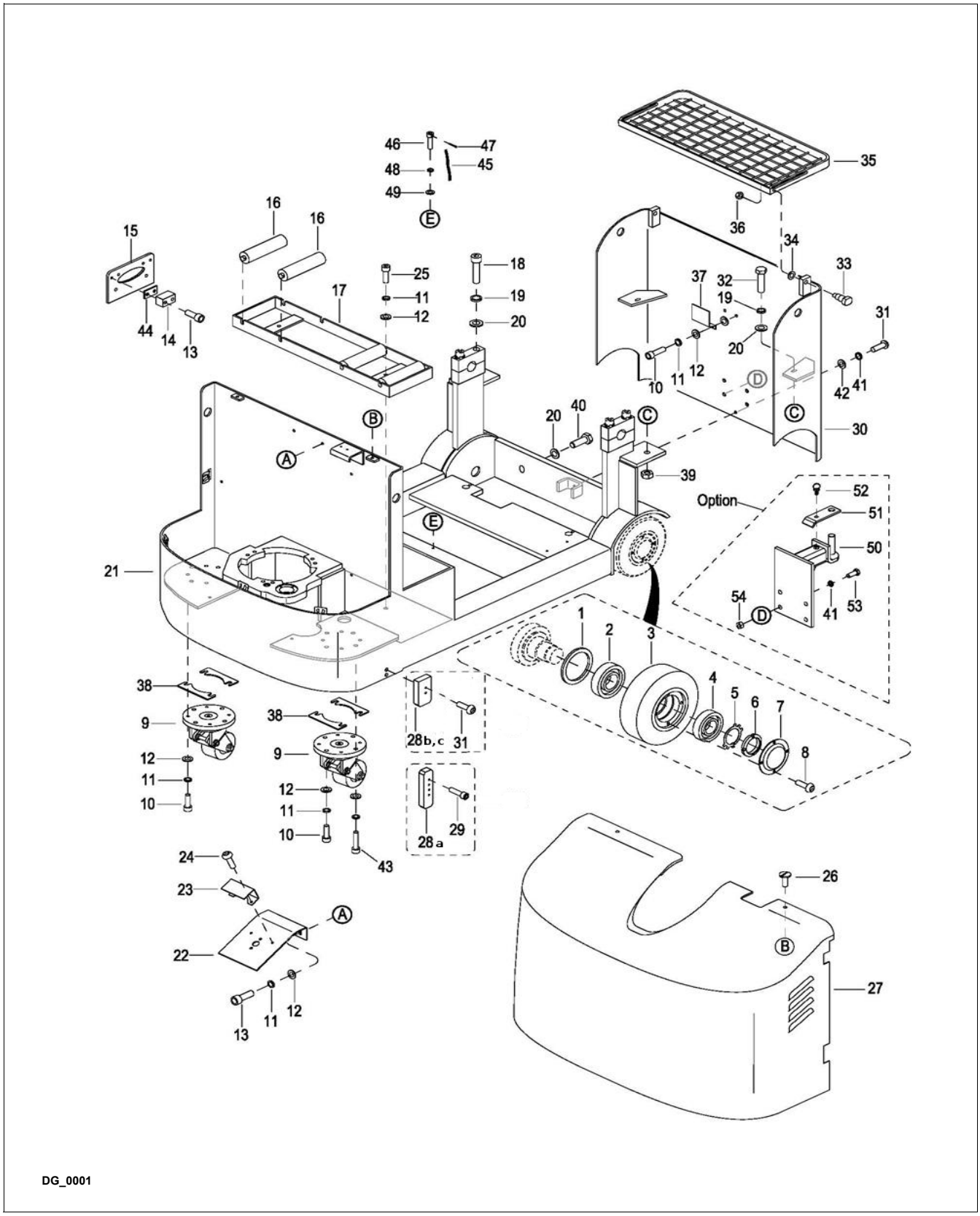

Figure 11-1 Frame

https://truckmanualshub.com/

Frame

POS.	PART NUMBER	DESCRIPTION	QTY. REQD.	NOTES
1	0000-000877-00	SEAL WASHER 60×85×8	2	
2	0000-000961-00	BEARING	2	
3	CK11-140001-10	LOAD WHEEL	2	Non Marking Rubber
4	0000-000936-00	BEARING	2	
5	0000-000928-00	CHECK WASHER Ø36	2	
6	0000-000927-00	NUT M36×1.5	2	
7	CK11-100005-00	COVER	2	
8	0000-000021-00	SCREW M6×12	8	
9	1118-140000-00	CASTER ASSEMBLY	2	Used up to Serial Number 225170105
9a	CK10-170000-00	CASTER ASSEMBLY	2	Used from Serial Number 225170106
10	0000-000322-00	SCREW M8×25	8	
11	0000-000159-00	LOCKWASHER Ø8	14	
12	0000-000176-00	FLATWASHER Ø8	18	
13	0000-000109-00	SCREW M8×16	6	
14	2125-600005-00	BUFFER BLOCK	2	
15	CK10-140001-1A	BAFFLE 190×140×8	1	
15a	CK10-140001-2A	BAFFLE 190×270×8	1	Optional. Used when truck has Industrial Battery
16	2125-102200-0A	ROLLER	4	
17	2125-102100-00	BATTERY ROLLER BED FRAME ASSY.	1	Used up to Serial Number 225160028
17a	2125-102100-0A	BATTERY ROLLER BED FRAME ASSY.	1	Used from Serial Number 225160029
18	0000-000432-00	SCREW M16×80	4	
19	0000-000191-00	LOCKWASHER Ø16	6	
20	CK10-100020-00	WASHER	8	
21	CK10-110000-00	FRAME	1	Used up to 06-13-2013
21a	CK10-110000-10	FRAME	1	Used between 06-14-2013 and Serial Number 226170005
21b	ck10-110000-1D	FRAME	1	Used from Serial Number 226170006
22	CK10-100001-00	BOARD	1	
23	CK10-100004-00	COVER	1	
24	0000-000179-00	SCREW M6×10	2	
25	0000-000321-00	SCREW M8×20	2	
26	0000-000185-00	SCREW M8×16	2	
27	CK10-100005-00-01	COVER	1	Black
27a	CK10-100005-00-02	COVER	1	Red
27b	CK10-100005-00-03	COVER	1	Yellow
28	CK10-100002-00	NYLON ROD	2	Used up to Serial # S2211058
28a	CK10-100008-00	BLOCK	2	Used between Serial # S2211059 - S2211064
28b	CK10-100009-00	BLOCK	2	Used from Serial # S2211065

https://truckmanualshub.com/

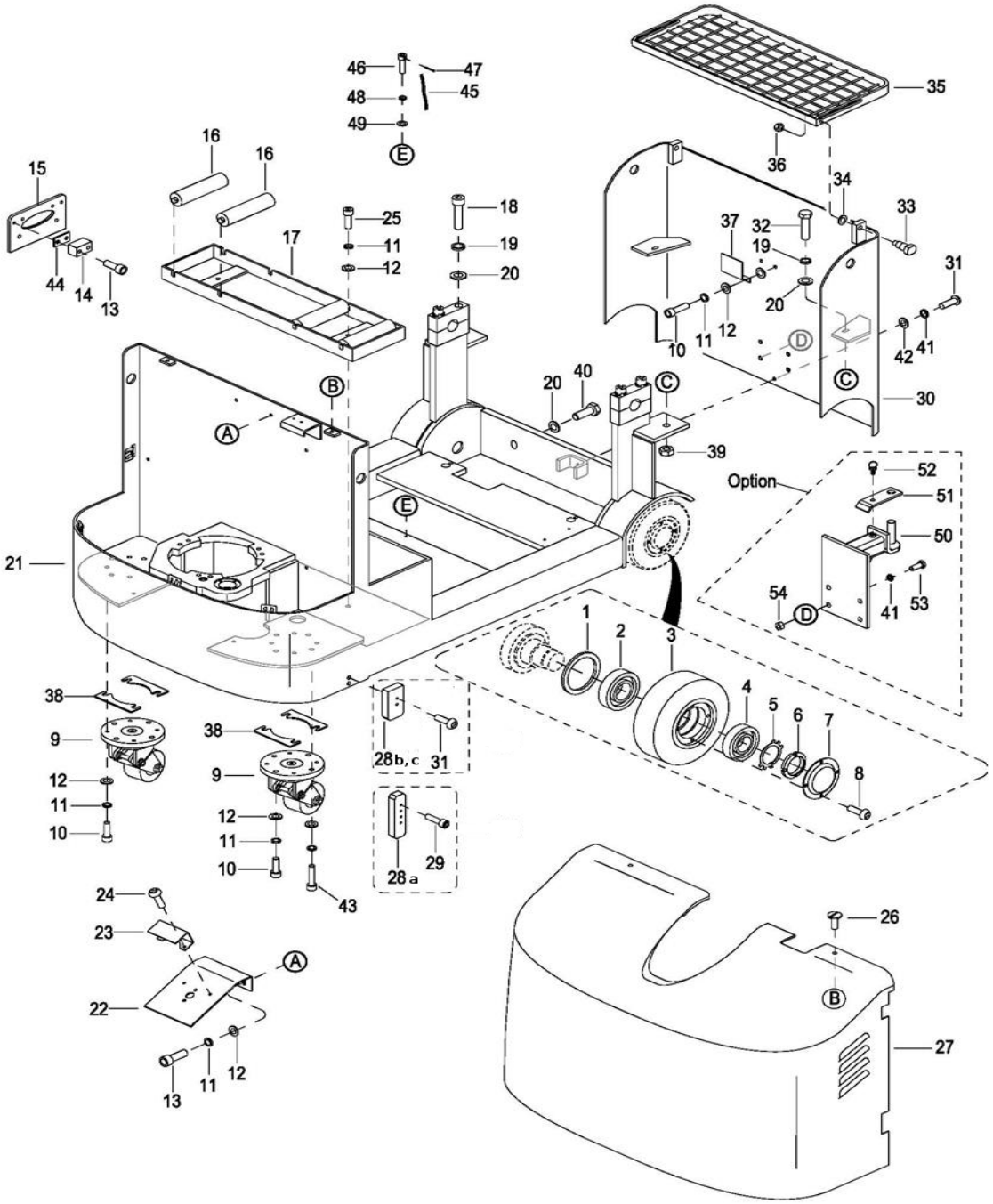

Figure 11-2 Frame - Continued

https://truckmanualshub.com/

Frame - Continued

POS.	PART NUMBER	DESCRIPTION	QTY. REQD.	NOTES
29	0000-000006-00	SCREW M6×30	4	Used up to Serial # S2211058
30	CK10-120000-00	MAST COVER	1	Used up to Serial # S2211058
30a	CK10-120000-0A	MAST COVER	1	Used between Serial # S2211059 & S2211064
30b	CK10-120000-0B	MAST COVER	1	Used between Serial # S2211065 & 226150242
30c	CK10-120000-0D	MAST COVER	1	Used between Serial # 226150243 - 2281000298
30d	CK10-180000-00	MAST COVER	1	Used from Serial # 2281000299
31	0000-000700-00	SCREW M8×16	1	Used up to Serial # S2211058
31a	0000-000655-00	SCREW M10×25	5	Used between Serial # S2211059 - S2211064
31b	0000-001410-00	SCREW M12×30	5	Used from Serial # S2211065
32	0000-000446-00	BOLT M16×50	2	Used up to Serial # S2211058
32a	0000-000375-00	BOLT M16×35	2	Used from Serial # S2211059
33	CK10-100003-0D	SCREW	2	Replaces all previous versions of part. Includes pos.# 36, nut 0000-000426-00.
34	0000-000222-00	FLATWASHER Ø12	2	
35	CK10-130000-00	TRAY	1	
36	--	NUT	2	Included in pos.# 33
37	CK10-100006-00	CLAMP PLATE	1	
38	2140-140005-00	WASHER	A.R.	As Required
39	0000-000232-00	NUT M16	2	Used up to Serial # S2211058
40	0000-000996-00	BOLT M16×45	2	
41	0000-000063-00	LOCKWASHER Ø10	1	Used up to Serial # S2211058
41a	0000-000060-00	LOCKWASHER Ø12	1	Used from Serial # S2211059
42	0000-000007-00	FLATWASHER Ø10	1	Used up to Serial # S2211058
42a	0000-000373-00	FLATWASHER Ø12	1	Used from Serial # S2211059
43	0000-000372-00	SCREW M8×40	2	Used from 05-15-2013
44	1220-100012-80	PLATE	A.R.	As Required - Used from Serial # S2211059
45	--	STATIC STRAP	1	Please contact factory with Serial #
46	--	SCREW M6×10(	1	Please contact factory with Serial #
47	--	PIN	1	Please contact factory with Serial #
48	--	LOCKWASHER Ø6	1	Please contact factory with Serial #
49	--	FLATWASHER Ø6	1	Please contact factory with Serial #
50	--	TOWING HOOK RACK	1	Please contact factory with Serial #
51	--	LOCK PLATE	1	Please contact factory with Serial #
52	--	FLAT HEAD SCREW M8X25	1	Please contact factory with Serial #
53	--	BOLT M12×35	4	Please contact factory with Serial #
54	--	NUT M12	4	Please contact factory with Serial #

https://truckmanualshub.com/

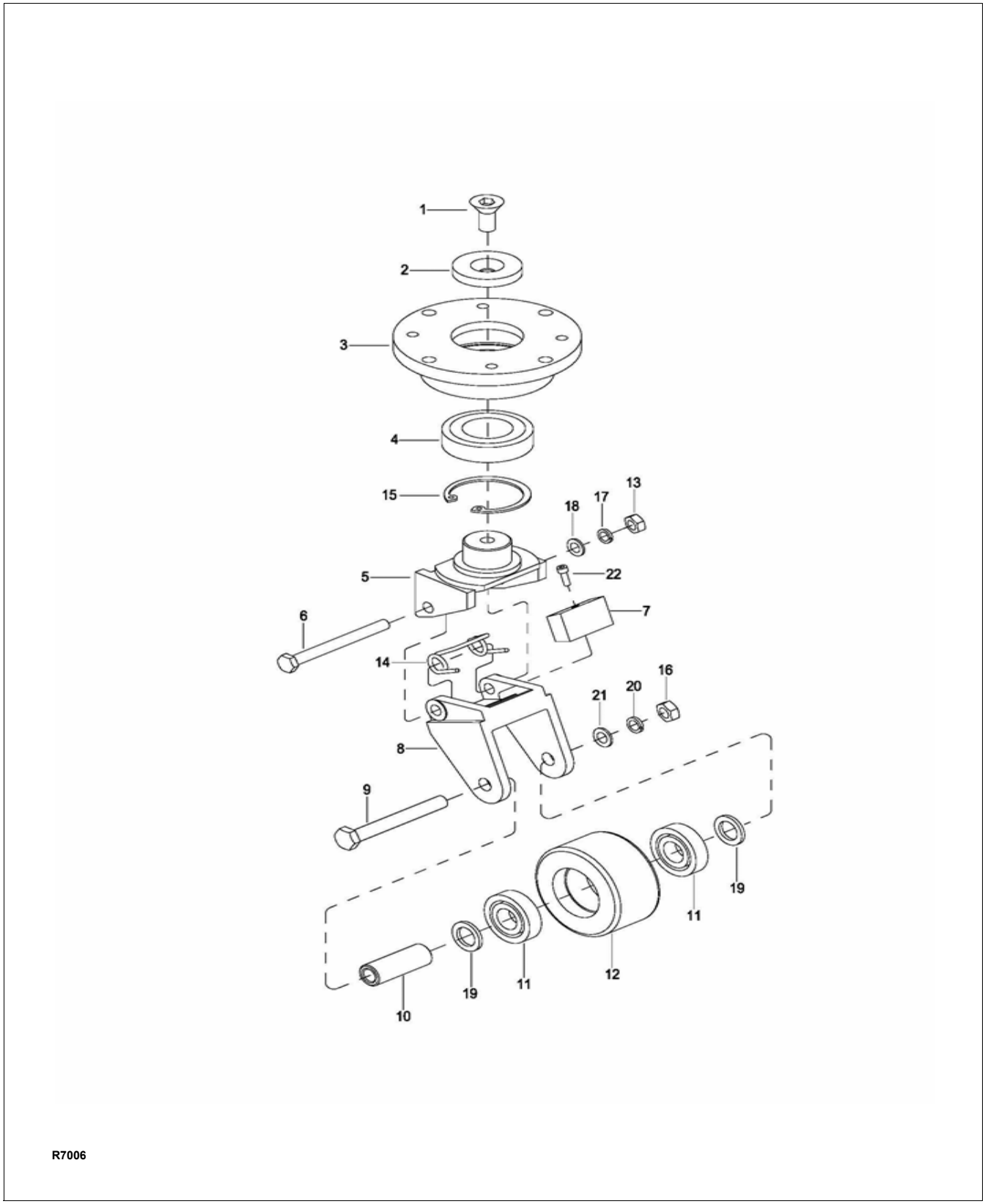

Figure 11-3 Caster Assembly - Used up to Serial Number 225170105

https://truckmanualshub.com/

Caster Assembly - Used up to Serial Number 225170105

POS.	PART NUMBER	DESCRIPTION	QTY. REQD.	NOTES
--	1118-140000-00	CASTER ASSEMBLY	2	2 per truck
1	0000-000985-00	SCREW M10×20	1	
2	1118-140003-00	PLATE	1	
3	1118-140001-00	CASTER SUPPORT	1	
4	0000-000986-00	BEARING	1	
5	1118-140002-00	CASTER SUPPORT	1	
6	0000-000168-00	BOLT M10×90	1	
7	1120-140003-00	PU BLOCK	1	
8	1120-142000-00	WHEEL BRACKET	1	
9	0000-000495-00	BOLT M12×85	1	
10	1120-143001-00	SHAFT	1	
11	0000-000020-00	BEARING	2	
12	1120-143003-00	CASTER WHEEL	1	
13	0000-000054-00	NUT M10	1	Used up to 02-25-2014
13a	0000-000426-00	NUT M10	1	Used from 02-26-2014 up to serial number 225170105
14	1120-140004-00	SPRING	1	
15	0000-000987-00	RETAINING RING Φ80	1	
16	0000-000165-00	NUT M12	1	Used up to 02-25-2014
16a	0000-000057-00	NUT M12	1	Used from 02-26-2014 up to serial number 225170105
17	0000-000063-00	LOCKWASHER Ø10	1	
18	0000-000007-00	FLATWASHER Ø10	1	
19	0000-000435-00	FLATWASHER Ø20	2	
20	0000-000060-00	LOCKWASHER Ø12	1	
21	0000-000373-00	FLATWASHER Ø12	1	
22	0000-000004-00	SCREW M5×12	1	

https://truckmanualshub.com/

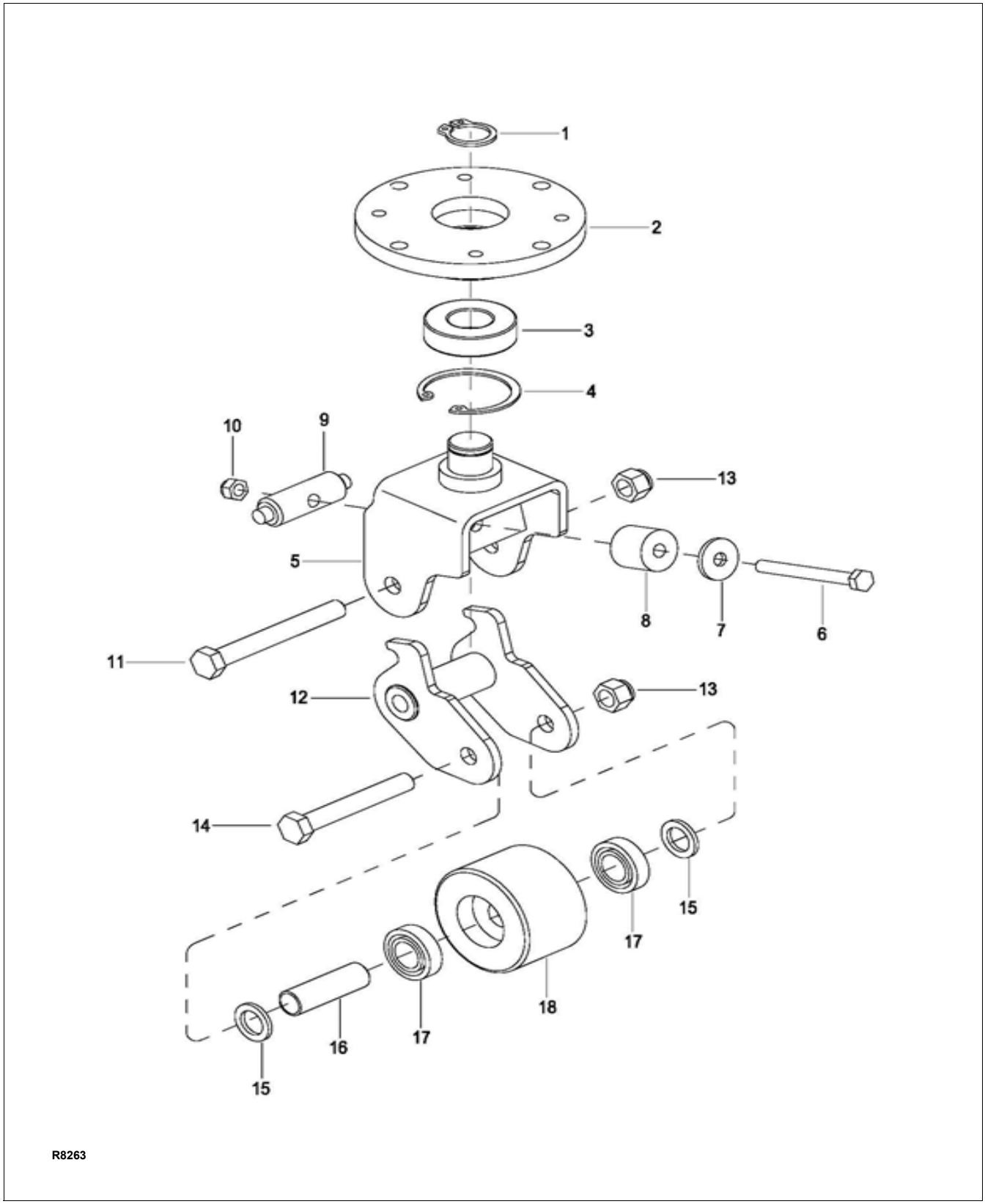

Figure 11-4 Caster Assembly - Used from Serial Number 225170106

https://truckmanualshub.com/

Caster Assembly - Used from Serial Number 225170106

POS.	PART NUMBER	DESCRIPTION	QTY. REQD.	NOTES
--	CK10-170000-00	CASTER ASSEMBLY	2	2 per truck
1	0000-000294-00	RETAINER RING Ø25	1	
2	CK10-171001-00	CASTER SUPPORT	1	
3	0000-000100-00	BEARING	1	
4	0000-000758-00	ELASTIC COLLAR Φ52	1	
5	1115-032300-A0	CASTER SUPPORT	1	
6	0000-000281-00	BOLT M8×80	1	
7	0000-000373-00	FLATWASHER Ø12	1	
8	1115-032002-A0	BUFFER BLOCK	1	Used between Serial Number 225170106 - 226180177
8a	CK10-171004-00	BUFFER BLOCK	1	Used from Serial Number 226180178
9	1115-032001-A0	ROD	1	
10	0000-000740-00	NUT M8	1	
11	0000-001413-00	BOLT M12×100	1	
12	1115-032200-A0	WHEEL BRACKET	1	
13	0000-001334-00	NUT M12	2	
14	0000-000495-00	BOLT M12×85	1	
15	0000-000435-00	FLATWASHER Ø20	2	
16	1120-143001-00	SHAFT	1	
17	0000-000020-00	BEARING	2	
18	1115-172101-H0	PU WHEEL	1	

https://truckmanualshub.com/

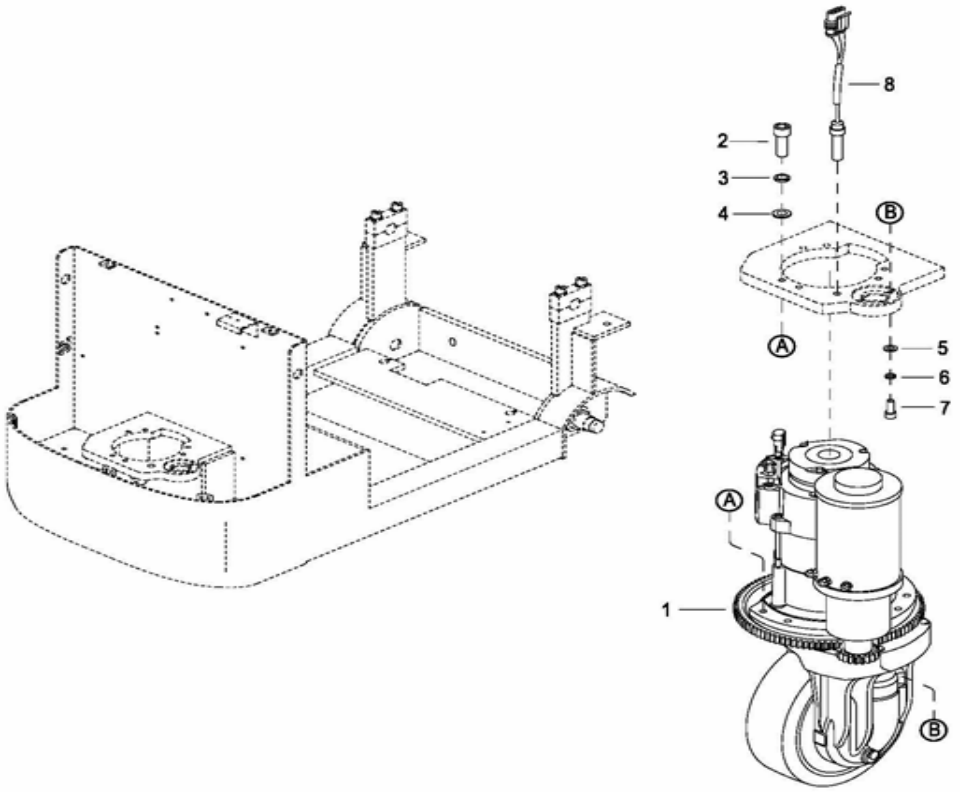

R7007

Figure 11-5 Drive System - Used up to Serial # S2213285

https://truckmanualshub.com/

Drive System - Used up to Serial # S2213285

POS.	PART NUMBER	DESCRIPTION	QTY. REQD.	NOTES
1	CK11-210000-00	DRIVE ASSEMBLY	1	
2	0000-000922-00	SCREW M10×35	6	
3	0000-000063-00	LOCKWASHER Ø10	6	
4	0000-000007-00	FLATWASHER Ø10	6	
5	0000-000176-00	FLATWASHER Ø8	3	
6	0000-000159-00	LOCKWASHER Ø8	3	
7	0000-000322-00	SCREW M8×25	3	
8	1280-520009-10-01	SWITCH WIRE HARNESS	1	

https://truckmanualshub.com/

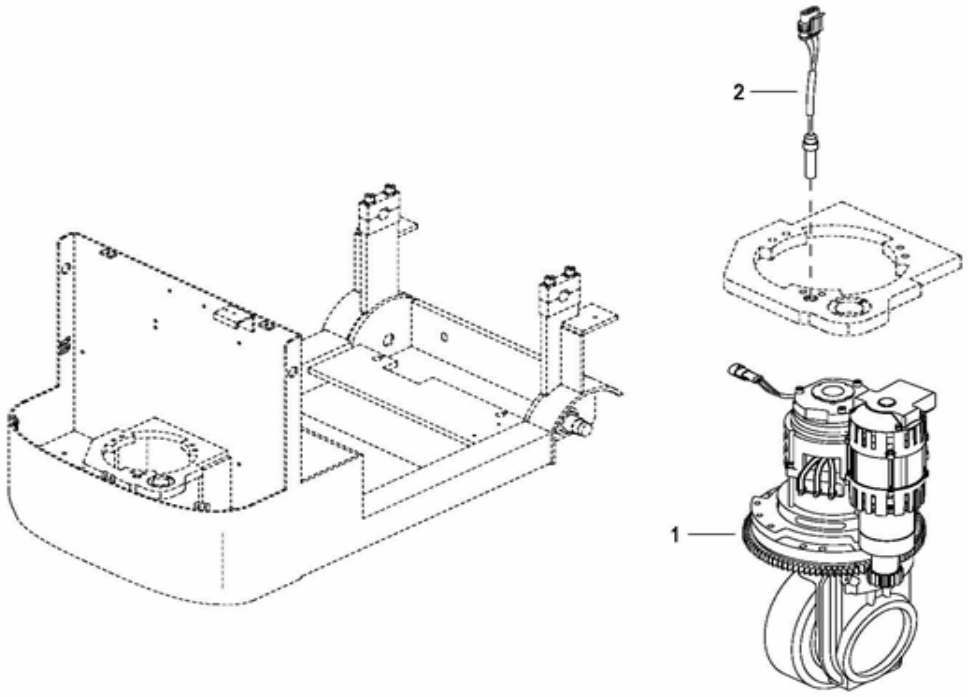

Figure 11-6 Drive System - Used from Serial # S2213286

https://truckmanualshub.com/

Drive System - Used from Serial # S2213286

POS.	PART NUMBER	DESCRIPTION	QTY. REQD.	NOTES
1	CK10-200000-10	DRIVE ASSEMBLY	1	Used from serial number S2213286 to S2215145
1a	CK10-200000-1A	DRIVE ASSEMBLY	1	Used from serial number S2215146 to 224190036
1	CK10-200000-1B	DRIVE ASSEMBLY	1	Used from serial number 224190037
2	1280-520009-10-01	SWITCH WIRE HARNESS	1	Used up to Serial Number 226170005
2a	1280-520009-1A-01	SWITCH WIRE HARNESS	1	Used from Serial Number 226170006

https://truckmanualshub.com/

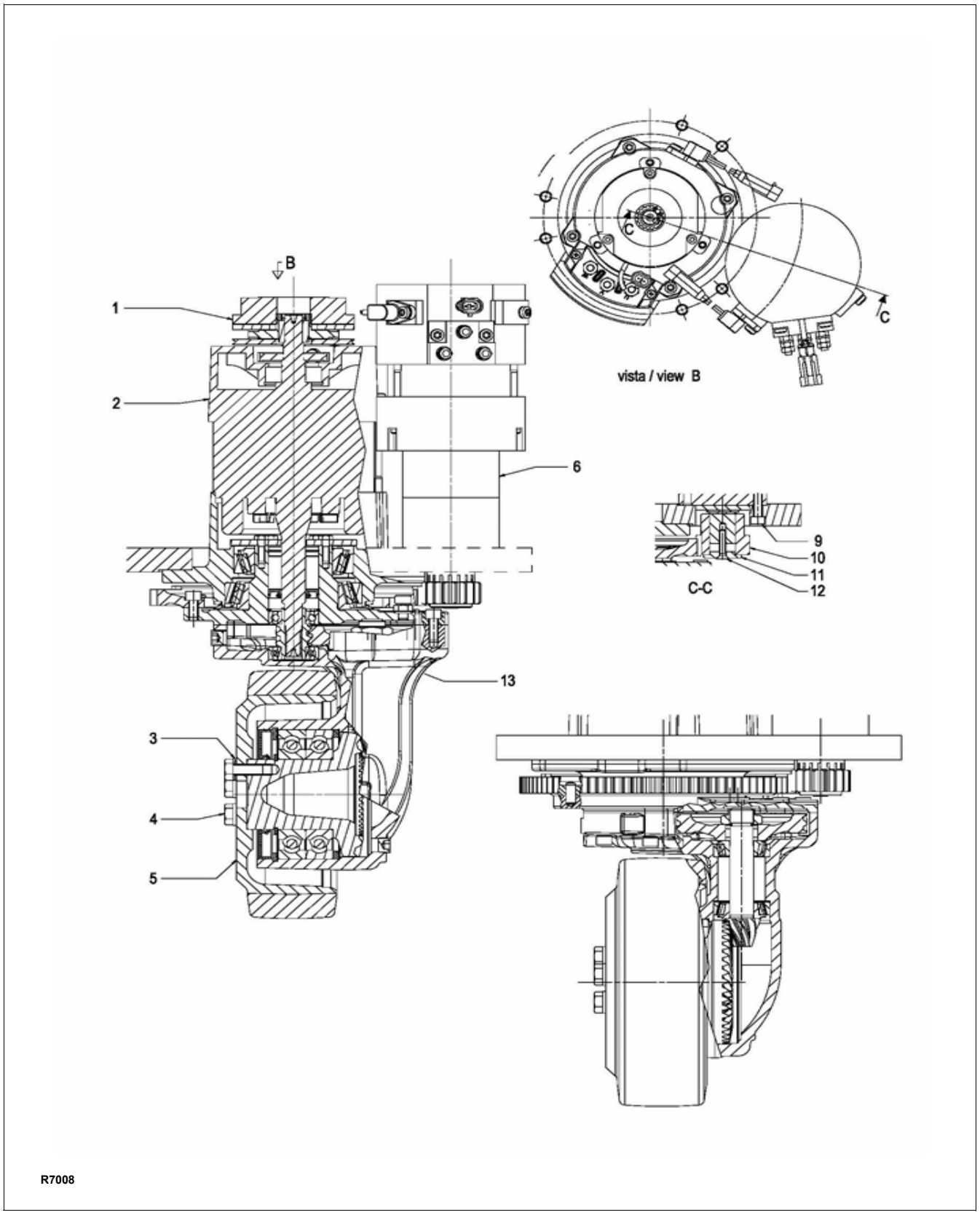

Figure 11-7 Transmission, Motor & Brake Assembly - Used up to Serial # S2213285

https://truckmanualshub.com/

Transmission, Motor & Brake Assembly - Used up to Serial # S2213285

POS.	PART NUMBER	DESCRIPTION	QTY. REQD.	NOTES
1	CK11-210037-00	BRAKE	1	
2	CK11-210036-00	DRIVE MOTOR	1	
3	0000-000063-00	LOCKWASHER Ø10	5	
4	0000-000251-00	BOLT M10×25	5	
5	CK11-210033-00	DRIVE WHEEL	1	
6	CK11-210039-00	STEER MOTOR	1	
9	0000-000322-00	SCREW M8×25	3	
10	CK11-210038-00	MOTOR GEAR	1	
11	CK11-210040-00	SNAP RING	1	
12	0000-000697-00	SCREW M6×30	1	
13	CK11-210043-00	GEAR CASE ASSEMBLY	1	

https://truckmanualshub.com/

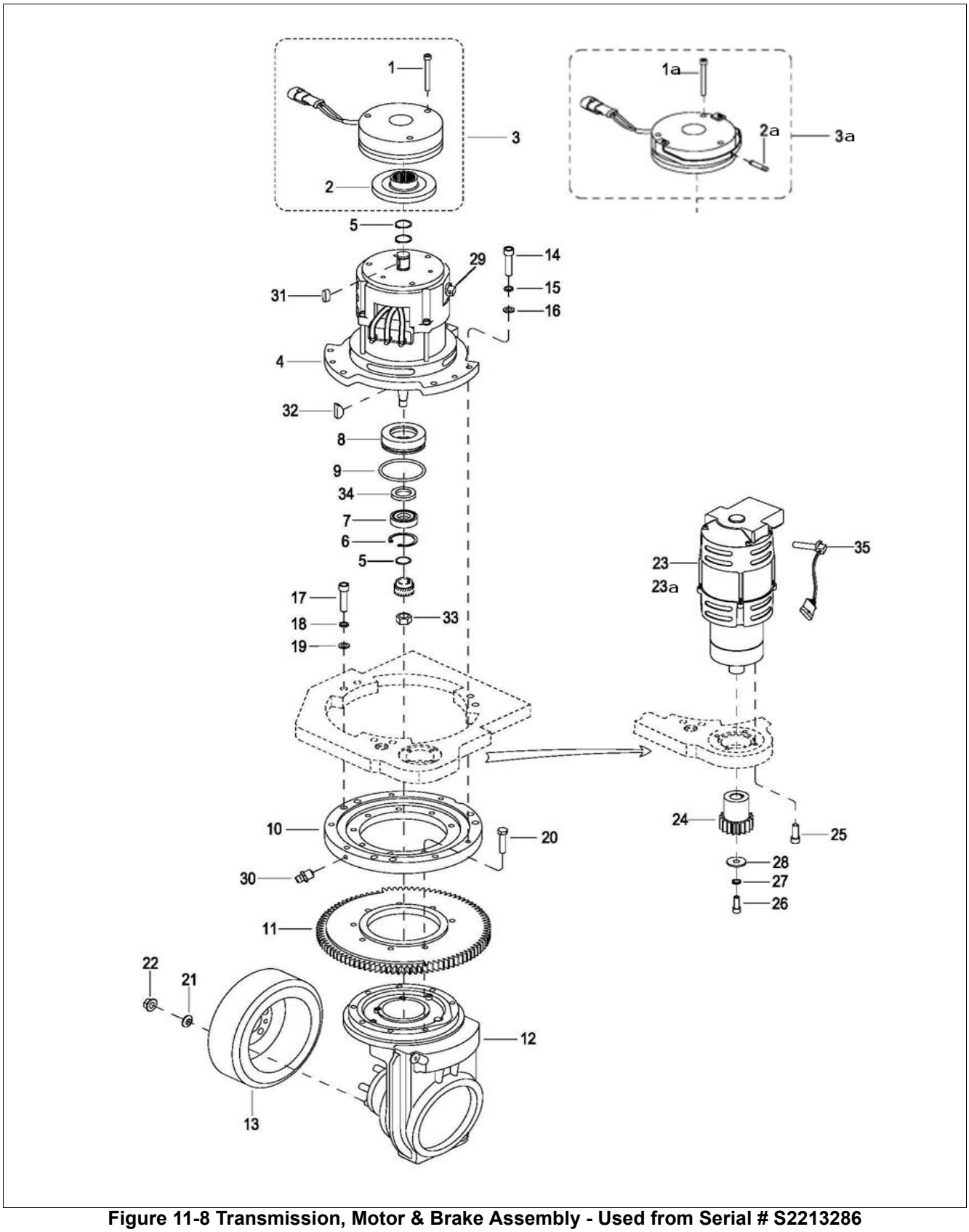

Figure 11-8 Transmission, Motor & Brake Assembly - Used from Serial # S2213286

https://truckmanualshub.com/

Transmission, Motor & Brake Assembly - Used from Serial # S2213286

POS.	PART NUMBER	DESCRIPTION	QTY. REQD.	NOTES
1	0000-001129-10	SCREW M5×45	3	Used from serial number S2213286 to 224190036
1a	CK10-250002-20	SCREW M5×55	3	Used from Serial # 224190037
2	CK10-250001-10	BRAKE LINING	1	Used from serial number S2213286 to 224190036
2a	CK10-250003-20	ROD	1	Used from Serial # 224190037
3	CK10-250000-10	BRAKE ASSEMBLY	1	Used from serial number S2213286 to 224190036
3a	CK10-250000-20	BRAKE ASSEMBLY	1	Used from Serial # 224190037
4	CK10-220000-10	DRIVE MOTOR	1	
5	0000-000293-00	RETAINER RING Ø20	3	
6	0000-000849-00	RETAINER RING Ø47	1	
7	CK10-220002-10	BALL BEARING	1	
8	CK10-220003-10	HUB FOR ENDSHIELD	1	
9	CK10-220004-10	O-RING Ø64.5×3.0	1	
10	1221-230000-00	BEARING	1	
11	1221-200003-00	GEAR	1	
12	4230-210000-00	GEAR CASE ASSEMBLY	1	Used from serial number S2213286 to S2215145
12a	1120-240000-10	GEAR CASE ASSEMBLY	1	Used from serial number S2215146
13	1120-200001-00	DRIVE WHEEL	1	Poly
14	0000-000154-00	SCREW M8×35	6	
15	0000-000159-00	LOCKWASHER Ø8	6	
16	0000-000176-00	FLATWASHER Ø8	6	
17	0000-000155-00	SCREW M10×40	6	
18	0000-000063-00	LOCKWASHER Ø10	6	
19	0000-000007-00	FLATWASHER Ø10	6	
20	0000-000869-00	BOLT M8×40	8	
21	0000-000025-00	LOCKWASHER Ø12	5	
22	0000-001131-10	NUT M12×1.5	5	
23	CK10-240000-10	STEER MOTOR	1	Used from Serial # S2213286 to S2316168
23a	CK10-240000-20	STEER MOTOR	1	Used from Serial # S2316169
24	CK10-200001-10	GEAR	1	
25	0000-000321-00	SCREW M8×20	4	
26	0000-000386-00	SCREW M6×20	1	

https://truckmanualshub.com/

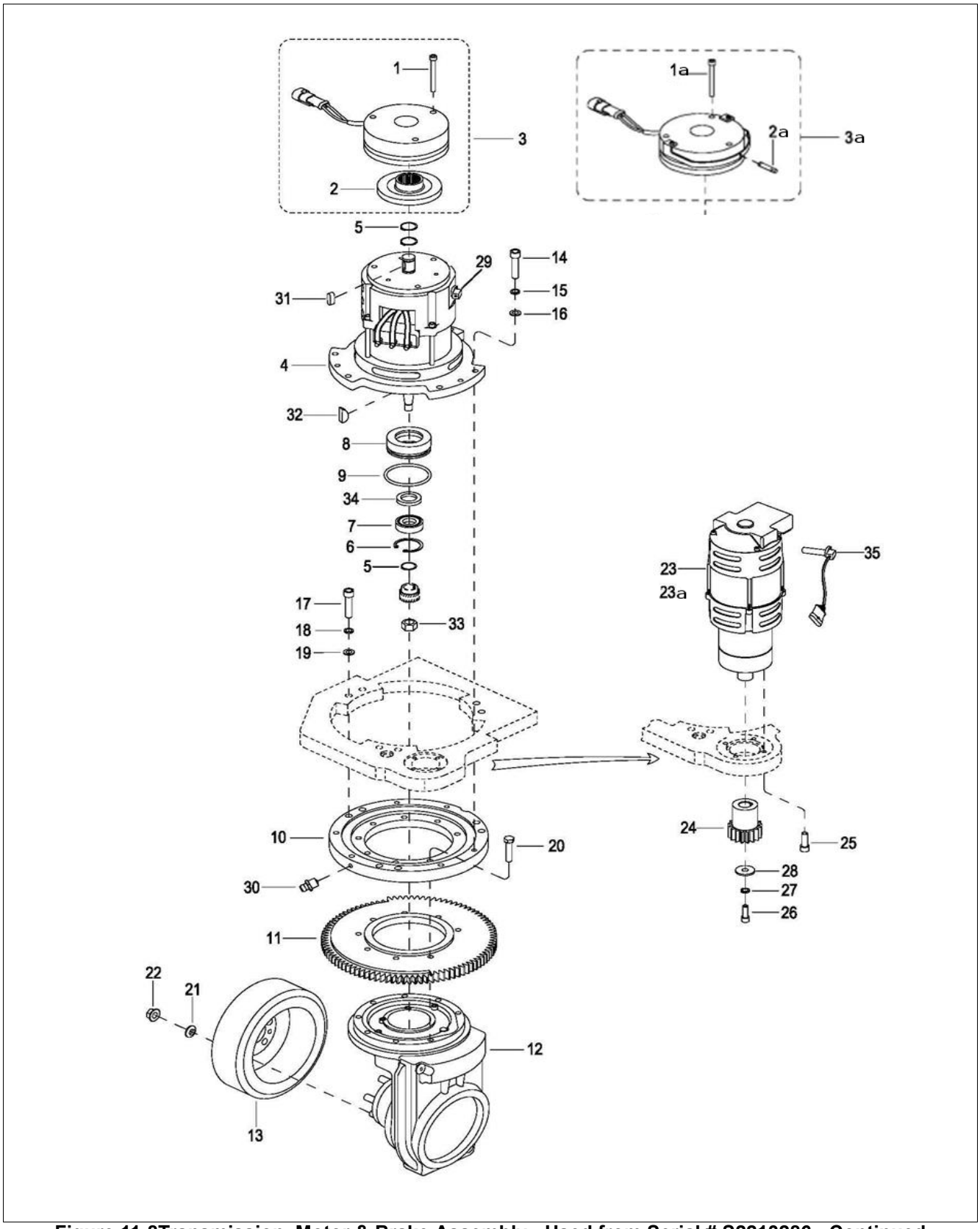

Figure 11-8Transmission, Motor & Brake Assembly - Used from Serial # S2213286 - Continued

https://truckmanualshub.com/

Transmission, Motor & Brake Assembly -Used from Serial # S2213286 - Continued

POS.	PART NUMBER	DESCRIPTION	QTY. REQD.	NOTES
27	0000-000056-00	LOCKWASHER Ø6	1	
28	CK10-200002-10	WASHER	1	
29	CK10-220005-10	KB-SENSOR	1	
30	0000-000013-00	GREASE FITTING M8	1	
31	0000-000226-00	KEY 6×6×16	1	
32	0000-000204-00	KEY 3×5×13	1	
33	0000-000583-00	NUT M12×1.5	1	Used up to 08-21-2013
33a	0000-000436-00	NUT M12×1.5	1	Used from 08-22-2013
34	CK10-220001-10	SHAFT SEAL Ø25×40×7	1	
35	CK10-240001-20	KB-SENSOR,STEER MOTOR	1	Used from Serial # S2316169

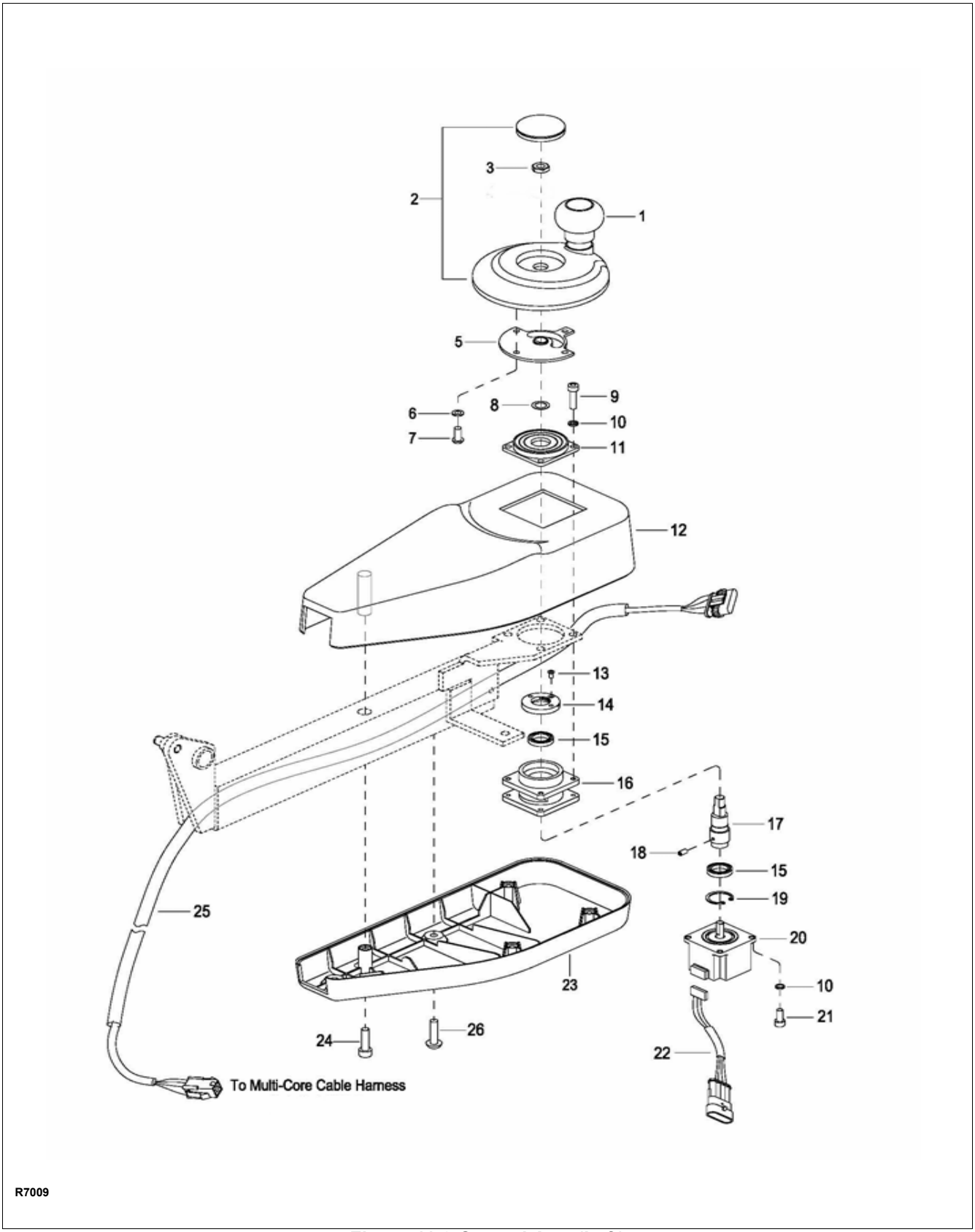

Figure 11-9 Control Arm (Left)

https://truckmanualshub.com/

Control Arm (Left)

POS.	PART NUMBER	DESCRIPTION	QTY. REQD.	NOTES
--	CK10-310000-00	OPERATING CONTROL ASSY. (LEFT)	1	
1	CK11-311000-00	HANDLE BALL	1	
2	CK11-310002-00	STEERING WHEEL	1	
3	0000-000951-00	NUT M10×1.5	1	
5	3316-311202-00	ROUND BOTTOM	1	
6	0000-000702-00	FLATWASHER Ø4	4	
7	0000-000646-00	SCREW M4×10	4	
8	3316-311204-00	WASHER	A.R.	As Required
9	0000-000035-00	BOLT M5×20	4	
10	0000-000206-00	LOCKWASHER Ø5	8	
11	3316-311203-00	DAMPENER STEERING BOX	1	
12	CK11-310003-00	UPPER COVER OF LEFT ARMREST	1	
13	0000-000939-00	SCREW M3×6	1	
14	3316-311205-00	NUT	1	
15	0000-000937-00	BEARING	2	
16	3316-311206-00	BEARING BLOCK	1	
17	3316-311201-00	AXLE	1	
18	3020-050000-17	SCREW M5×8	1	
19	0000-000941-00	RETAINING RING Φ26	1	
20	CK11-560002-00	STEER SENSOR	1	
21	0000-000004-00	SCREW M5×12	4	
22	CK11-520007-00	STEER SENSOR WIRE HARNESS	1	
23	CK11-310004-00	LOWER COVER OF LEFT ARMREST	1	
24	0000-000661-00	SCREW M5×20	4	
25	CK11-520002-00	WIRE HARNESS	1	
26	0000-000001-00	SCREW M6x20	2	

https://truckmanualshub.com/

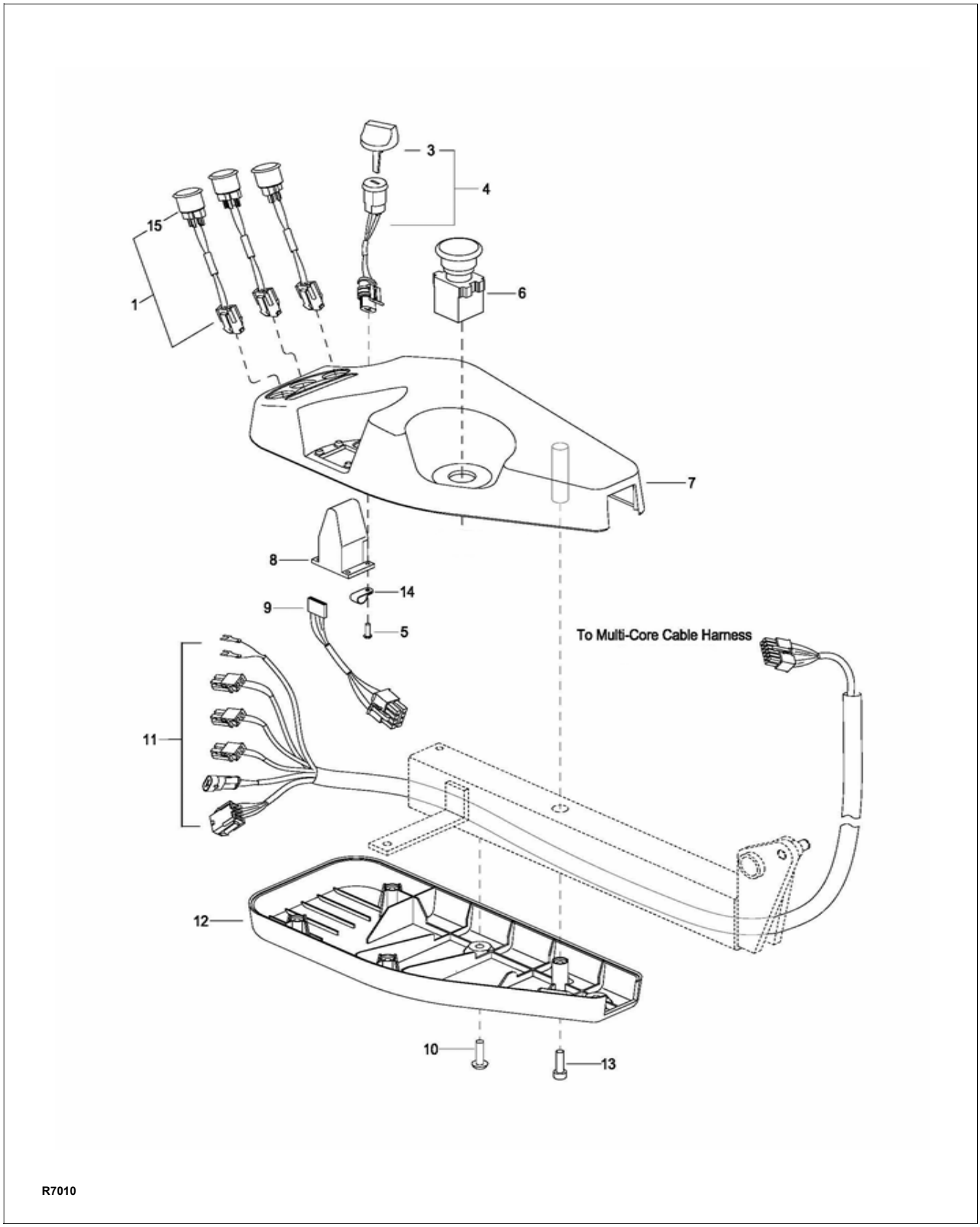

Figure 11-10 Control Arm (Right)

https://truckmanualshub.com/

Control Arm (Right)

POS.	PART NUMBER	DESCRIPTION	QTY. REQD.	NOTES
--	CK11-320000-00	OPERATING CONTROL ASSY. (RIGHT)	1	
1	CK11-520012-00	BUTTON ASSEMBLY	3	
3	1115-500016-00	2 WAY SWITCH KEY	2	
4	CK11-520009-00	POWER SWITCH ASSEMBLY	1	
5	0000-000998-00	SCREW M3×8	4	
6	3218-604000-00	EMERGENCY STOP SWITCH	1	
7	CK11-320001-00	UPPER COVER OF RIGHT ARMREST	1	
8	CK11-560003-00	FORWARD AND REVERSE SWITCH	1	Used up to Serial # 227210207
8a	CK11-560003-00-10	FORWARD AND REVERSE SWITCH	1	Used from Serial # 227210208 (Includes harness pos. # 9)
9	CK11-520008-00	FWD. / REV. SWITCH WIRE HARNESS	1	Used up to 05-08-2013
9a	CK11-520008-0A	FWD. / REV. SWITCH WIRE HARNESS	1	Used between 05-09-2013 and Serial # 227210207
10	0000-000001-00	SCREW M6×20	2	
11	CK10-520003-00	WIRE HARNESS	1	
12	CK11-320002-00	LOWER COVER OF RIGHT ARMREST	1	
13	0000-000661-00	SCREW M5×20	4	
14	0000-000490-00	HARNESS CLAMP	1	Used from 03-15-2013
15	1280-560004-00	BUTTON	3	

https://truckmanualshub.com/

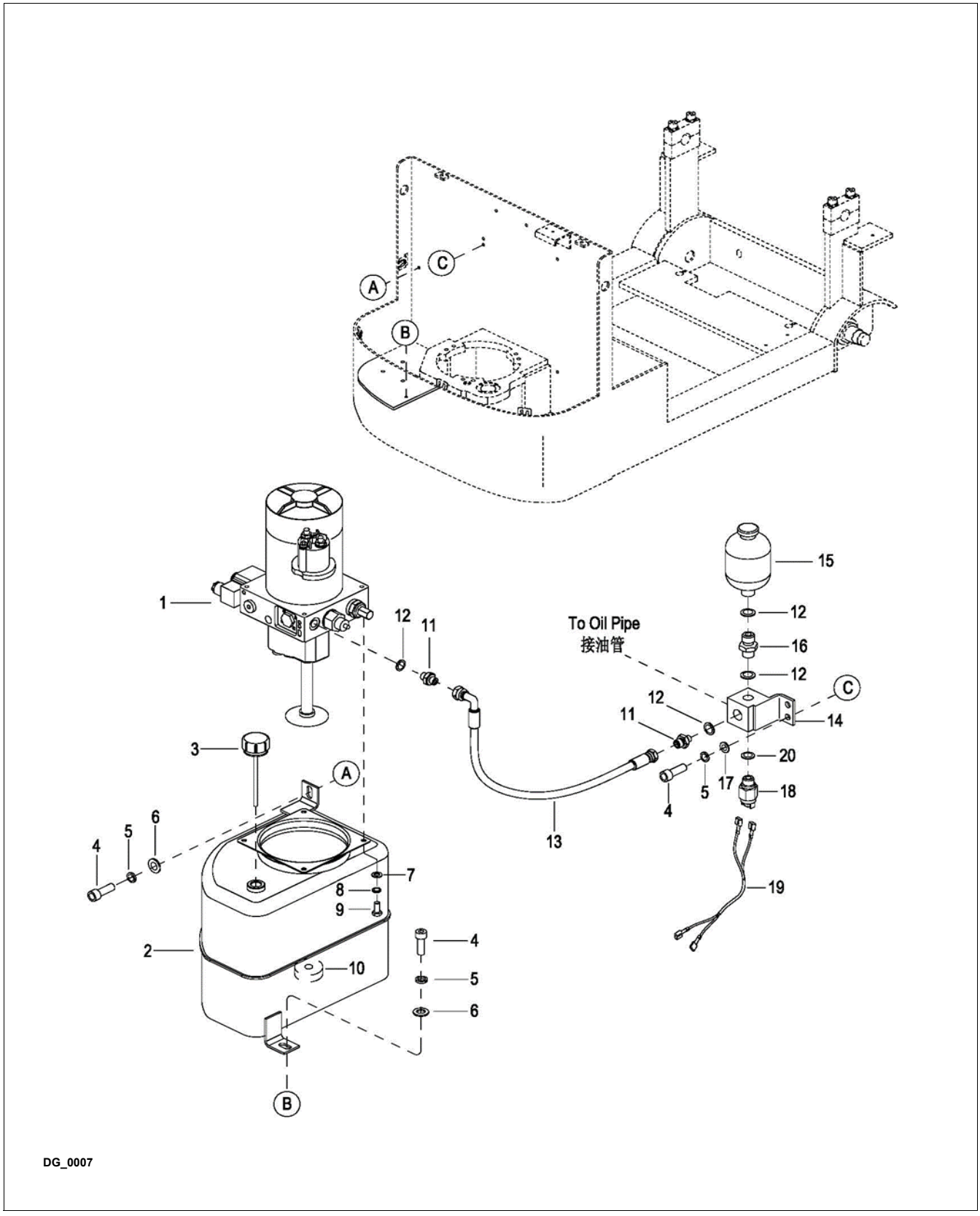

Figure 11-11 Hydraulic System - Overview

https://truckmanualshub.com/

Hydraulic System - Overview

POS.	PART NUMBER	DESCRIPTION	QTY. REQD.	NOTES
1	CK10-490000-30	HYDRAULIC PUMP ASSEMBLY	1	
2	CK11-131000-00	TANK	1	Used up to Serial # S2410170 - No Dipstick on Air Filter
2a	CK11-131000-10	TANK	1	Used between Serial # S2410171-227150139 - Fully interchangeable with old tank. This one has a Dipstick on Air Filter
2b	CK11-131000-20	TANK	1	Used from Serial # 227150140
3	CK10-400002-30	AIR FILTER	1	Used up to Serial # 227180209 - Fully interchangeable with old tank. This one has a Dipstick on Air Filter
3a	CK10-423000-30	AIR FILTER	1	Used from Serial Number 227180210 - This one has a redesigned Dipstick on Air Filter
4	0000-000433-00	SCREW M8×12	4	
5	0000-000159-00	LOCKWASHER Ø8	4	
6	0000-000194-00	FLATWASHER Ø8	2	
7	0000-000380-00	FLATWASHER Ø6	4	
8	0000-000056-00	LOCKWASHER Ø6	4	
9	0000-000620-00	BOLT M6×16	4	
10	2125-420001-00	MAGNET	1	
11	2702-141600-00	CONNECTOR G1/4-M16×1.5	2	
12	0000-000044-00	WASHER Ø14	4	
13	CK10-480000-30	OIL PIPE	1	
14	2112-440000-10	BLOCK CROSS	1	Used up to Serial # 225180128
14a	CK10-404000-30	BLOCK CROSS	1	Used from Serial # 225180129
15	CK11-450000-00	ACCUMULATOR	1	
16	2701-141400-00	CONNECTOR M14×1.5-M14×1.5	1	
17	0000-000176-00	FLATWASHER Ø8	2	
18	CK10-403000-30	PRESSURE SWITCH	1	Used from Serial # 225180129
19	CK10-520021-00	PRESSURE SWITCH WIRING	1	
20	0000-001674-00	WASHER Ø12	1	

https://truckmanualshub.com/

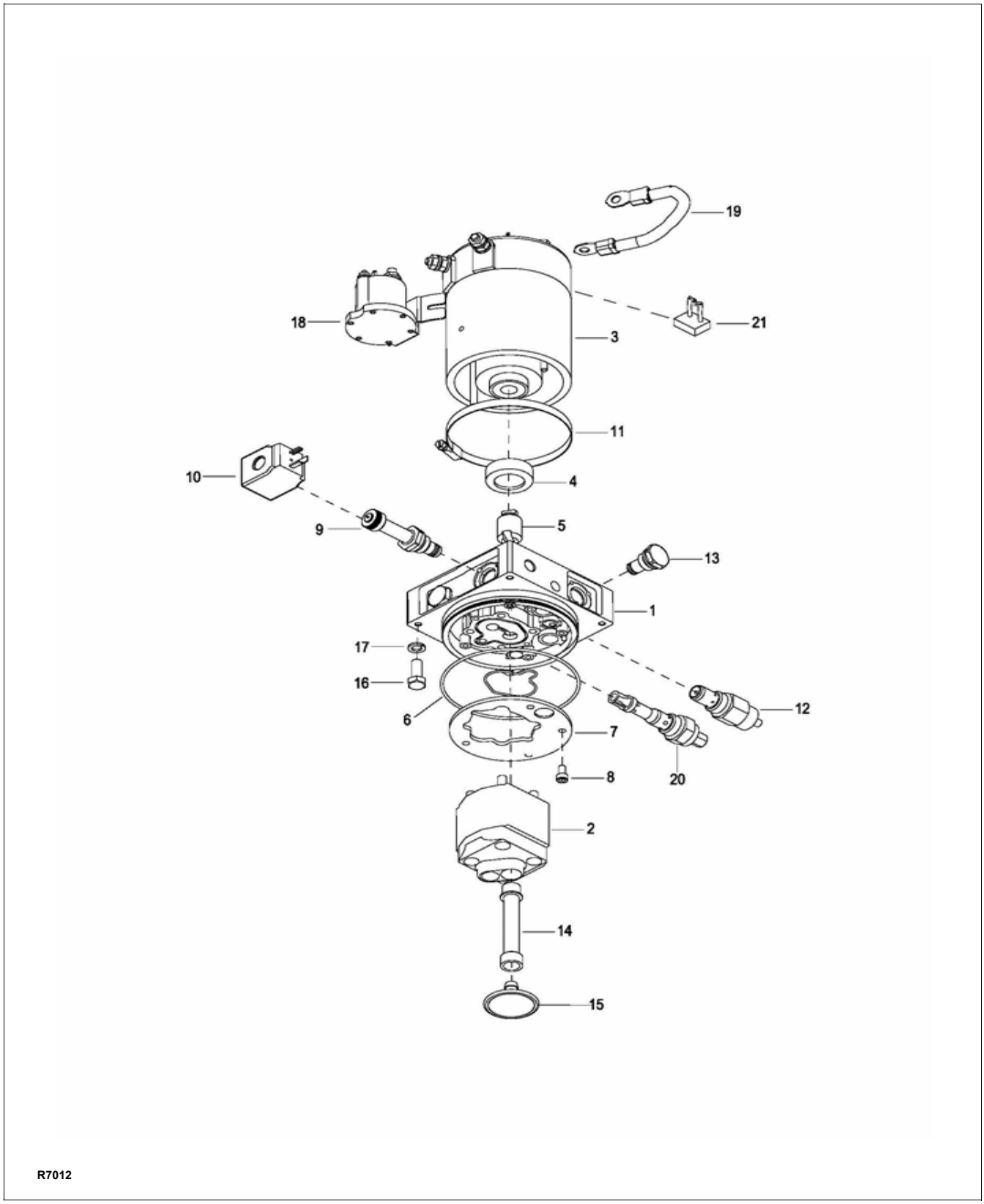

Figure 11-12 Hydraulic Pump Assembly

https://truckmanualshub.com/

Hydraulic Pump Assembly

POS.	PART NUMBER	DESCRIPTION	QTY. REQD.	NOTES
1	2125-430001-00	ADAPTER	1	
2	CK10-490001-30	PUMP	1	
3	2125-430003-00	MOTOR	1	
4	2125-430004-00	BUSH	1	
5	2125-430005-00	COUPLING	1	
6	2125-430006-00	SEAL KIT	1	
7	2125-430007-00	FILTER SCREEN	1	
8	0000-000077-00	SCREW M6×12	4	
9	CK10-490002-30	RELEASE VALVE	1	
10	2125-430010-00	SOLENOID VALVE	1	
11	2125-430022-00	STEEL CLAMP	1	
12	CK10-490003-30	VALVE	1	
13	2125-430013-00	VALVE CAVITY PLUG	1	
14	2130-430008-0A	TUBE PLASTIC	2	
15	2130-430009-0A	FILTER, STEEL	1	
16	0000-000620-00	BOLT M6X16	4	
17	0000-000056-00	LOCKWASHER Ø6	4	
18	1120-420017-00	CONTACTOR	1	
19	2130-430007-0A	CABLE INSULATED	1	
20	CK10-490004-30	RELIEF VALVE	1	
21	2125-430023-00	BRUSH	2	

https://truckmanualshub.com/

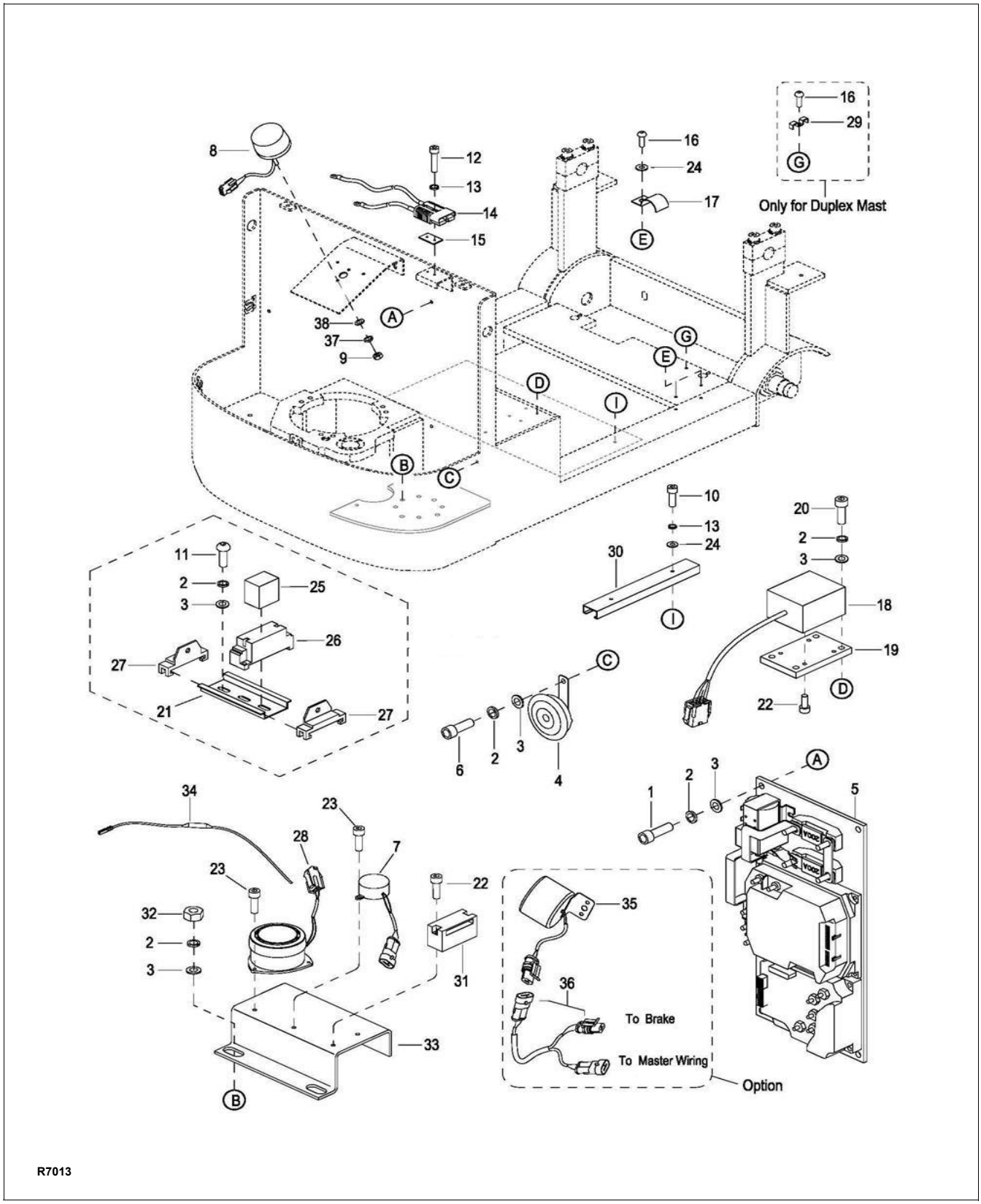

Figure 11-13 Electrical System

https://manuals.hub.com/

Electrical System

POS.	PART NUMBER	DESCRIPTION	QTY. REQD.	NOTES
1	0000-000255-00	BOLT M8×20	4	Used up to 03-14-2013
1a	0000-000321-00	SCREW M8×20	4	Used from 03-15-2013
2	0000-000159-00	LOCKWASHER Ø8	11	
3	0000-000194-00	FLATWASHER Ø8	11	
4	1120-500003-00	HORN	1	
5	--	CONTROL BOARD ASSEMBLY	1	See Control Panel Section
6	0000-000118-00	SCREW M8×10	1	
7	CK11-520011-00	BUZZER (LOWERING)	1	
8	CK10-520015-00	WARNING LAMP	1	Used up to Serial # 225170105.
8a	CK10-520015-10	WARNING LAMP	1	Used from Serial # 225170106
9	0000-000998-00	SCREW M3×8	2	Used up to Serial # 225170105
9a	0000-000139-00	NUT M4	2	Used from Serial # 225170106
10	0000-000384-00	SCREW M6×40	2	
11	0000-000700-00	SCREW M8×16	1	Used up to 05-15-2013
12	0000-000276-00	BOLT M6×45	2	Used up to 03-14-2013
12a	0000-000430-00	SCREW M6×50	2	Used from 03-15-2013
13	0000-000056-00	LOCKWASHER Ø6	4	
14	CK10-531100-00	CONNECTOR BATTERY ASSEMBLY	1	
15	1120-112008-00	PLATE	A.R.	As Required
16	0000-000179-00	SCREW M6×10	3	Telescopic Mast Only
17	CK10-510033-00	HARNESS CLAMP	2	
18	CK10-520009-00	LEVEL SENSOR	1	
19	CK10-510016-00	LEVEL SENSOR PLATE	1	
20	0000-000321-00	SCREW M8×20	4	
21	CK11-510009-00	RELAY PLATE	1	Used up to 05-15-2013
22	0000-000009-00	SCREW M4×12	4	
23	0000-000088-00	SCREW M4×8	2	Used up to 03-14-2013
23a	0000-000009-00	SCREW M4×12	2	Used from 03-15-2013
24	0000-000123-00	FLATWASHER Ø6	4	
25	2110-500005-00	RELAY	1	Used up to 05-15-2013
26	2110-500004-00	RELAY SET	1	Used up to 05-15-2013
27	2110-500003-00	RELAY SET CLIP	2	Used up to 05-15-2013
28	CK10-520011-00	BUZZER (LEVEL SENSOR)	1	
29	1220-100002-00	HARNESS CLAMP	1	Telescopic Mast Only
30	CK10-510032-00	WIRE GROOVE	1	Used up to Serial # 226210149
30a	CK10-510032-0A	WIRE GROOVE	1	Used from Serial # 226210150
31	CK10-560010-00	RELAY SET	1	Used between 05-15-2013 & 07-10-2013
32	0000-000550-00	NUT M8	1	Used from 05-15-2013
33	ck10-510030-40	BUZZER PLATE	1	Used from 05-15-2013
34	CK10-520019-00	ARMGUARD ALARM WIRING	1	Used up to 07-10-2013
35	3712-405000-00	ALARM BUZZER	1	Optional
36	CK10-520020-00	ALARM BUZZER WIRING	1	Optional
37	0000-000122-00	Lock Washer Ø4	2	Used from Serial # 225170106
38	0000-000702-00	Flat Washer Ø4	2	

https://truckmanualshub.com/

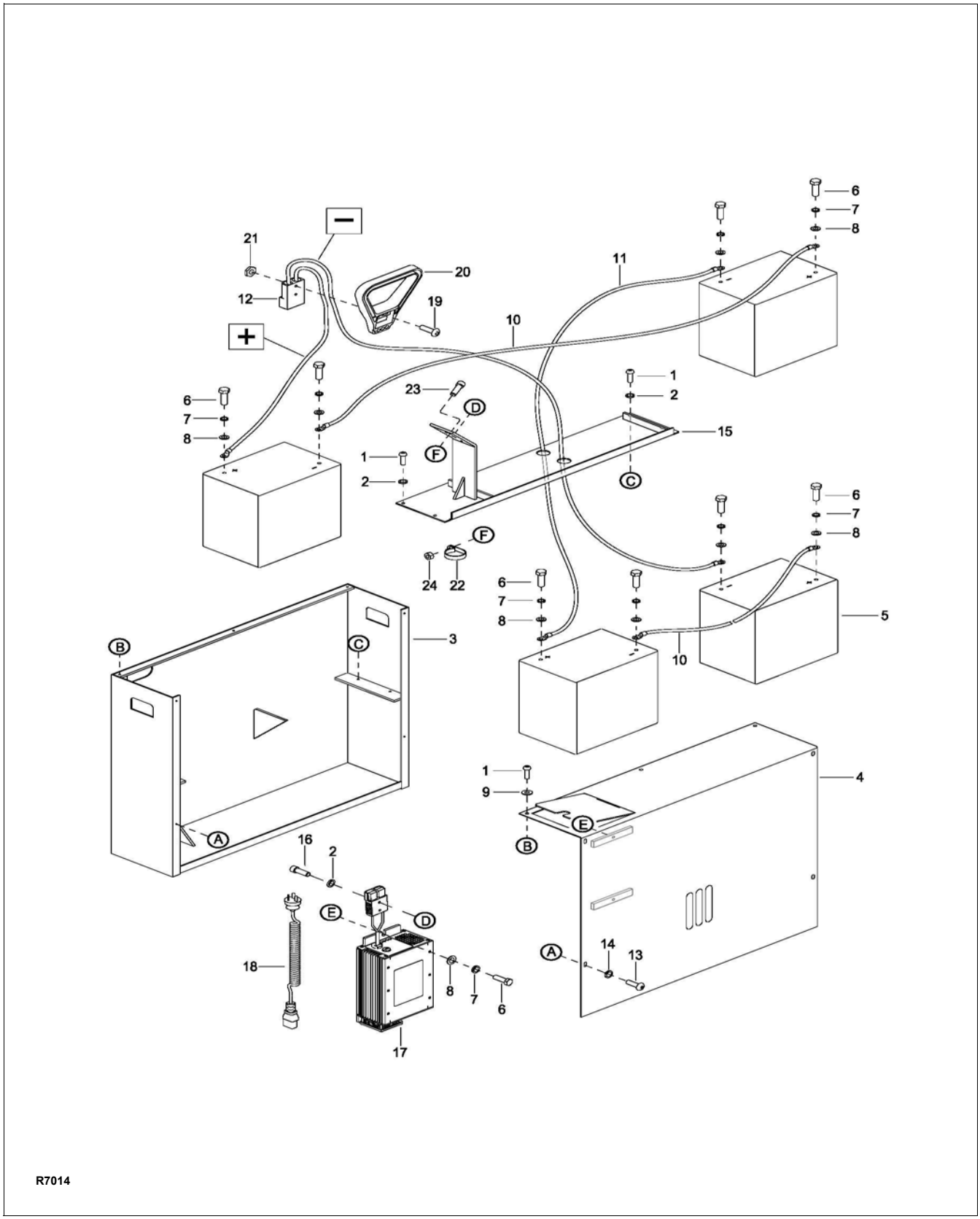

Figure 11-14 Battery Assembly - Used up to serial number S2410170

https://truckmanualshub.com/

Battery Assembly - Used up to serial number S2410170

POS.	PART NUMBER	DESCRIPTION	QTY. REQD.	NOTES
1	0000-000618-00	SCREW M6×12	7	
2	0000-000056-00	LOCKWASHER Ø6	6	
3	CK11-121000-00	BATTERY FRAME	1	
4	CK11-123000-00	BATTERY COVER	1	
5	003232	BATTERY	4	
6	0000-000242-00	BOLT M 8×16	10	
7	0000-000159-00	LOCKWASHER Ø8	10	
8	0000-000176-00	FLATWASHER Ø8	10	
9	0000-000123-00	FLATWASHER Ø6	3	
10	CK11-532001-00	M1 CABLE	2	
11	CK11-532002-00	M2 CABLE	1	
12	CK11-532100-00	CONNECTOR BATTERY ASSEMBLY	1	
13	0000-000381-00	SCREW M5×10	4	
14	0000-000206-00	LOCKWASHER Ø5	4	
15	CK11-122000-00	BATTERY SEPARATOR	1	
16	0000-000006-00	SCREW M6×30	2	
17	1120-560000-00	CHARGER 20A	1	**No longer available:** If replacing old charger you have to order Kit part # 1145-EP25-20, Charger part # 1120-560000-00-01 and Cord 1120-560002-00
18	1115-500006-10	CHARGER CABLE	1	
19	0000-000102-00	SCREW M6×45	2	
20	005450	PULLER HANDLE	1	
21	0000-000166-00	NUT M6(??)	2	
22	0000-001086-00	R HARNESS CLAMP	1	Used from 04-28-2013
23	0000-000323-00	SCREW M5×16	1	Used from 04-28-2013
24	0000-001026-00	NUT M5	1	Used from 04-28-2013

https://truckmanualshub.com/

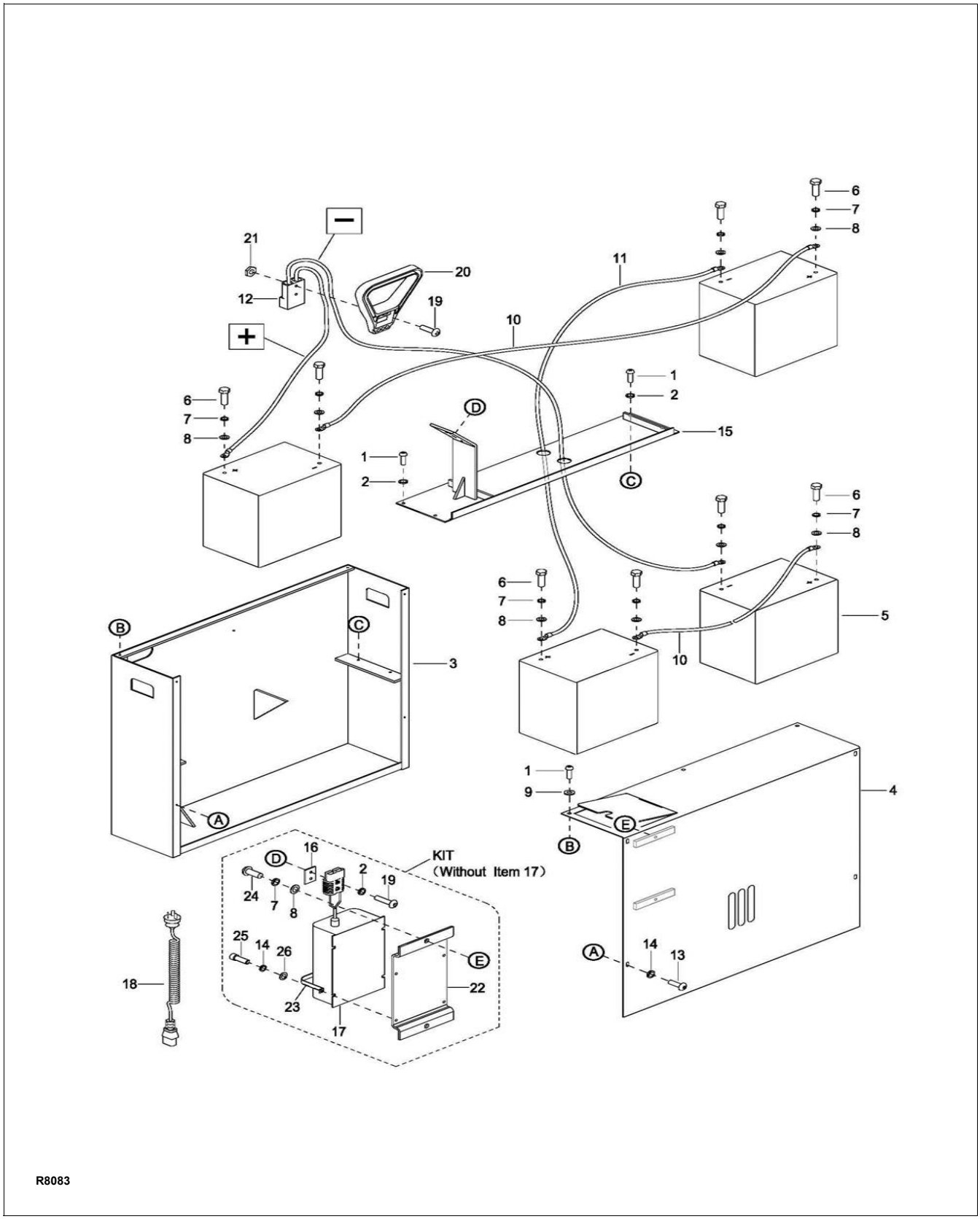

Figure 11-15 Battery Assembly - Used from serial number S2410171 to F24150003

https://truckmanualshub.com/

Battery Assembly - Used from serial number S2410171 to F24150003

POS.	PART NUMBER	DESCRIPTION	QTY. REQD.	NOTES
1	0000-000618-00	SCREW M6×12	7	
2	0000-000056-00	LOCKWASHER Ø6	6	
3	CK11-121000-00	BATTERY FRAME	1	
4	CK11-123000-00	BATTERY COVER	1	
5	003232	BATTERY	4	
6	0000-000242-00	BOLT M8×16	8	
7	0000-000159-00	LOCKWASHER Ø8	10	
8	0000-000176-00	FLATWASHER Ø8	10	
9	0000-000123-00	FLATWASHER Ø6	3	
10	CK11-532001-00	M1 CABLE	2	
11	CK11-532002-00	M2 CABLE	1	
12	CK11-532100-00	CONNECTOR BATTERY ASSEMBLY	1	
13	0000-000381-00	SCREW M5×10(	4	
14	0000-000206-00	LOCKWASHER Ø5	8	
15	CK11-122000-00	BATTERY SEPARATOR	1	
16	1120-112008-00	PLATE	1	
17	1120-560000-00-01	CHARGER, 25A	1	
18	1120-560002-00	CHARGER CABLE	1	
19	0000-000498-00	SCREW M6×30	4	
20	005450	PULLER HANDLE	1	
21	0000-000166-00	NUT M6	2	
22	1145-550011-00	PLATE	1	
23	1115-500009-00	CHARGER HOOP	2	
24	0000-000700-00	SCREW M8×16	2	
25	0000-000117-00	SCREW M5×10	4	
26	0000-000390-00	FLATWASHER Ø5	4	
KIT	1145-EP25-20	KIT FOR CHARGER INSTALLATION	1	Charger Not Included

https://truckmanualshub.com/

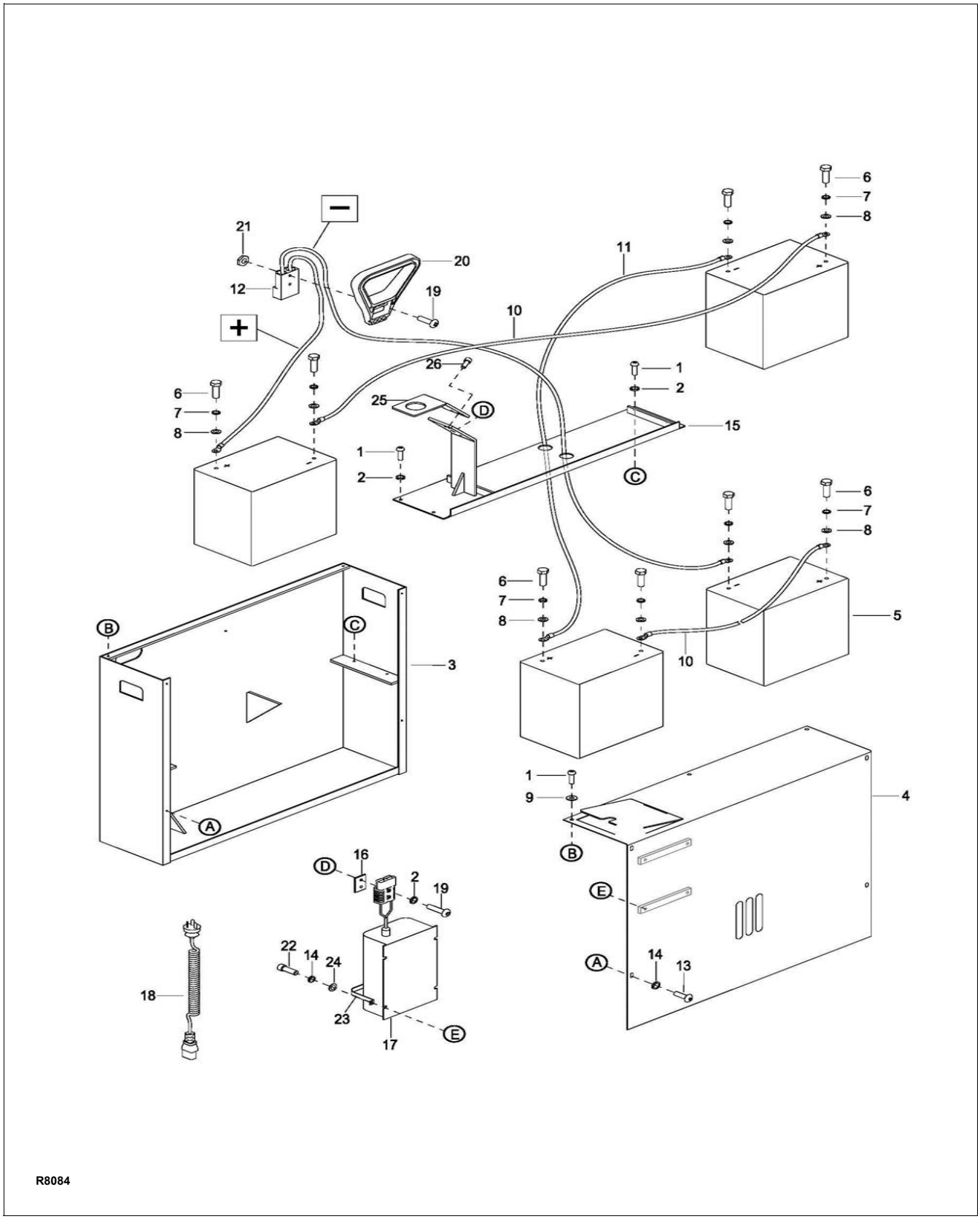

Figure 11-16 Battery Assembly - Used from serial number F24150004

https://truckmanualshub.com/

Battery Assembly - Used from serial number F24150004

POS.	PART NUMBER	DESCRIPTION	QTY. REQD.	NOTES
1	0000-000618-00	SCREW M6×12	7	
2	0000-000056-00	LOCKWASHER Ø6	6	
3	CK11-121000-00	BATTERY FRAME	1	
4	CK11-123000-10	BATTERY COVER	1	
5	003232	BATTERY	4	
6	0000-000242-00	BOLT M8×16	8	
7	0000-000159-00	LOCKWASHER Ø8	8	
8	0000-000176-00	FLATWASHER Ø8	8	
9	0000-000123-00	FLATWASHER Ø6	3	
10	CK11-532001-00	M1 CABLE	2	
11	CK11-532002-00	M2 CABLE	1	
12	CK11-532000-00	CONNECTOR BATTERY ASSEMBLY	1	
13	0000-000381-00	SCREW M5×10	4	
14	0000-000206-00	LOCKWASHER Ø5	8	
15	CK11-122000-00	BATTERY SEPARATOR	1	
16	1120-112008-00	PLATE	1	
17	1120-560000-00-01	CHARGER, 25A	1	
18	1120-560002-00	CHARGER CABLE	1	
19	0000-000498-00	SCREW M6×30	4	
20	005450	PULLER HANDLE	1	
21	0000-000166-00	NUT M6	2	
22	0000-000117-00	SCREW M5×10	4	
23	1115-500009-00	CHARGER HOOP	2	
24	0000-000390-00	FLATWASHER Ø5	4	
25	CK11-120001-00	PLATE	1	Used from Serial # 226190099
26	3020-010000-16	SCREW M6X12	2	

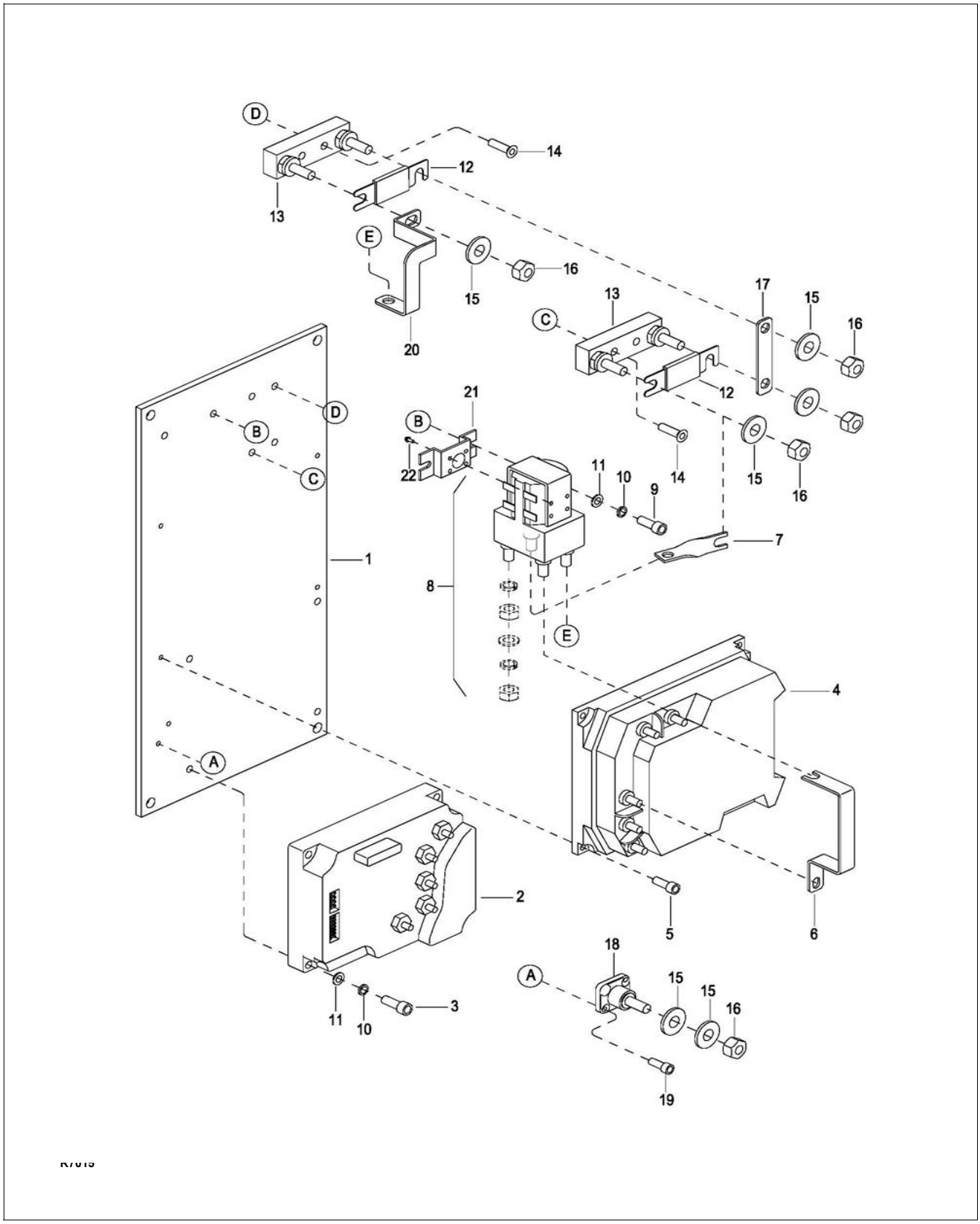

Figure 11-17 Control Panel

https://truckmanualshub.com/

Control Panel

POS.	PART NUMBER	DESCRIPTION	QTY. REQD.	NOTES
1	CK10-510001-00	BOARD	1	
2	1280-560002-00-00	EPS CONTROLLER	1	
3	0000-000032-00	SCREW M6×25	4	
4	SERIAL # REQUIRED	CONTROLLER ACO-SSL150A	1	Please contact Big Lift with a Serial # of the truck so that the correct part # can be quoted.
5	0000-000004-00	SCREW M5×12	4	
6	CK11-510002-00	AC0 COPPER CONDUCTOR	1	
7	1120-530006-00	COPPER CONDUCTOR	1	
8	CK10-560001-00	CONTACTOR	1	
9	0000-000077-00	SCREW M6×12	2	
10	0000-000056-00	LOCKWASHER Ø6	6	
11	0000-000380-00	FLATWASHER Ø6	6	
12	1120-540002-00	FUSE 200A	2	
13	1120-540001-00-B	FUSE HOLDER	2	
14	0000-000074-00	SCREW M6×20	4	
15	0000-000210-00	FLATWASHER Ø8	6	
16	0000-000196-00	NUT M8	5	
17	2322-510003-00	COPPER CONDUCTOR	1	
18	1220-500005-00	TERMINAL	1	
19	0000-000088-00	SCREW M4×8	2	
20	CK10-510002-00	COPPER CONDUCTOR	1	
21	CK10-560002-00	CONTACTOR BRACKET	1	Used from Serial # 2281000299
22	3020-270000-01	SCREW	2	Used from Serial # 2281000299

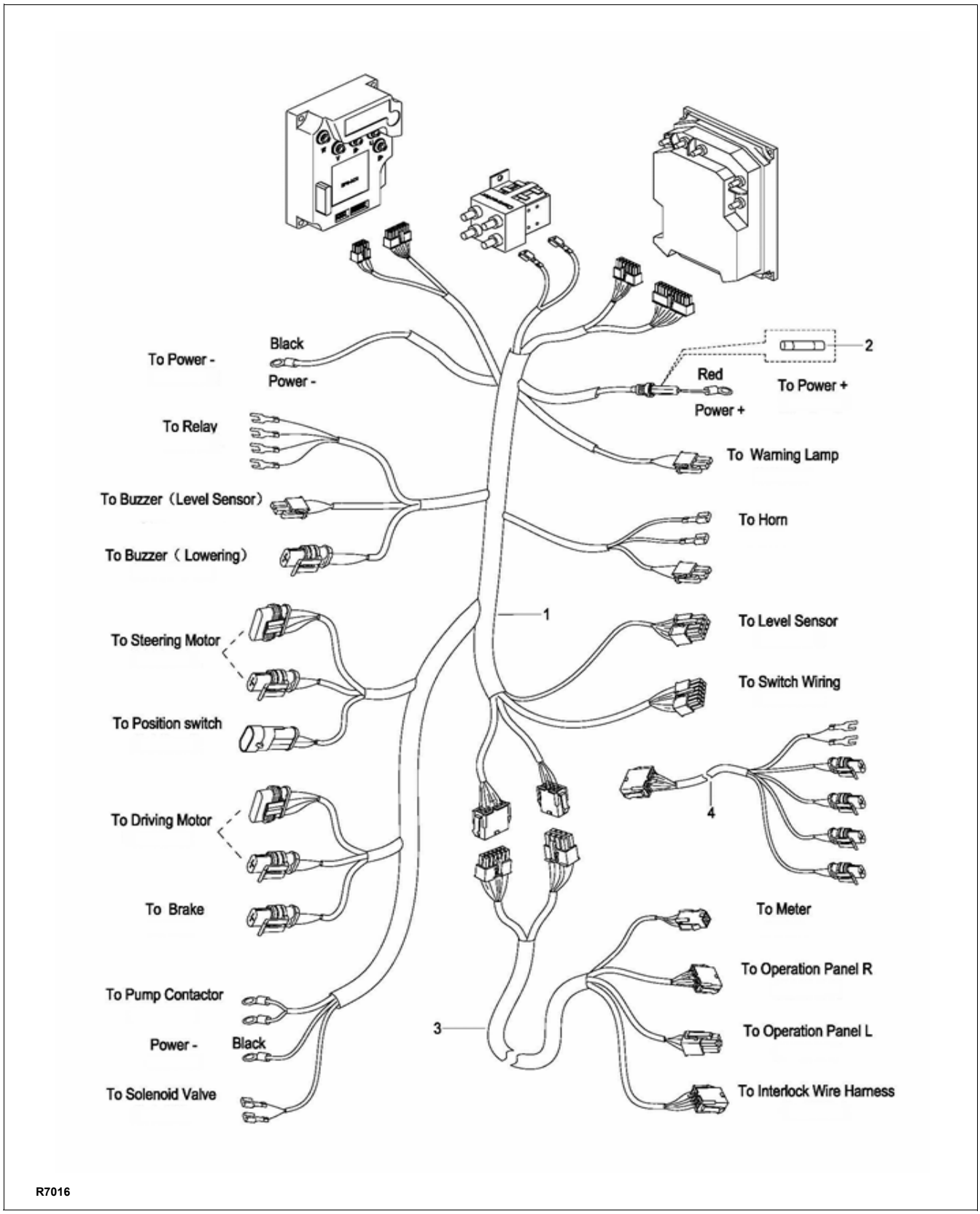

Figure 11-18 Wiring Harness

https://truckmanualshub.com/

Wiring Harness

POS.	PART NUMBER	DESCRIPTION	QTY. REQD.	NOTES
1	CK10-520001-00	MASTER WIRING HARNESS	1	Used up to Serial # S2211058
1a	CK10-520001-0A	MASTER WIRING HARNESS	1	Used from Serial # S2211059
2	1120-500010-00	FUSE 10A	1	
3	CK10-520010-00-01	WIRE HARNESS - TELESCOPIC MAST 86”	1	Wire Harness - Used on Telescopic mast (Duplex) - 86" Lift Height
3a	CK10-520010-00-02	WIRE HARNESS - TRIMAST 126”	1	Wire Harness - Used on Three Stage mast (Trimast) - 126" Lift Height
3b	CK10-520010-00-04	WIRE HARNESS - TRIMAST 162”	1	Wire Harness - Used on Three Stage mast (Trimast) - 162" Lift Height
4	CK10-520017-00	COMMUNICATION WIRING	1	Used from Serial # S2211059

https://truckmanualshub.com/

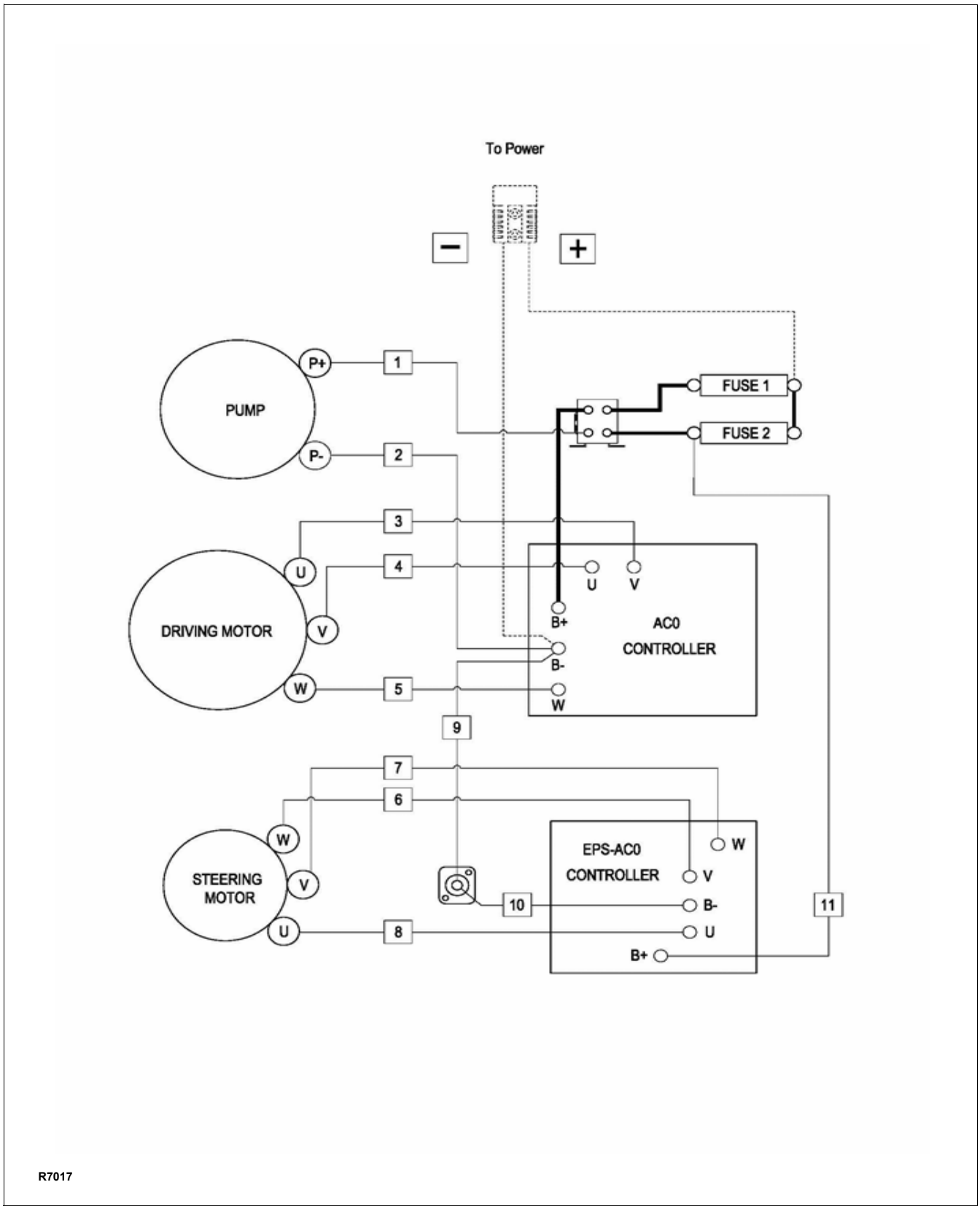

Figure 11-19 Wiring Cables - Used up to Serial Number S2213285

https://truckmanualshub.com/

Wiring Cables - Used up to Serial Number S2213285

POS.	PART NUMBER	DESCRIPTION	QTY. REQD.	NOTES
1	CK10-531009-00	PUMP POWER CABLE PA+	1	
2	CK10-531010-00	PUMP POWER CABLE PA -	1	
3	CK10-531001-00	DRIVE MOTOR CABLE U	1	
4	CK10-531002-00	DRIVE MOTOR CABLE V	1	
5	CK10-531003-00	DRIVE MOTOR CABLE W	1	
6	CK10-531006-00	STEER MOTOR CABLE W	1	
7	CK10-531005-00	STEER MOTOR CABLE V	1	
8	CK10-531004-00	STEER MOTOR CABLE U	1	
9	CK10-531013-00	(D-AC0) CABLE-	1	
10	CK10-531007-00	(D-EPS-AC0) CABLE-	1	
11	CK10-531008-00	(EPS-AC0) CABLE+	1	

https://truckmanualshub.com/

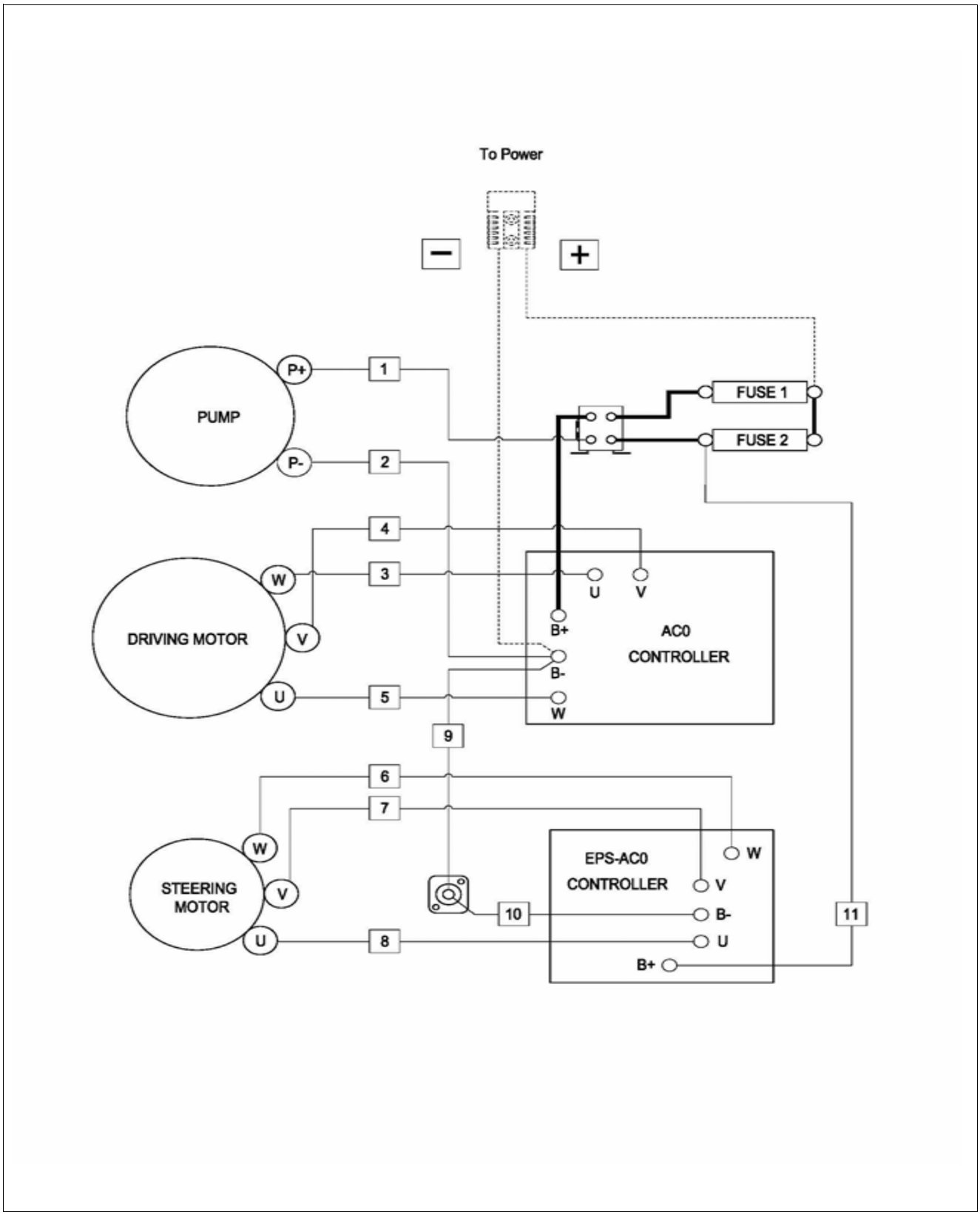

Figure 11-20 Wiring Cables - Used from Serial Number S2213286

https://truckmanualshub.com/

Wiring Cables - Used from Serial Number S2213286

POS.	PART NUMBER	DESCRIPTION	QTY. REQD.	NOTES
1	CK10-531009-00	PUMP POWER CABLE PA+	1	
2	CK10-531010-00	PUMP POWER CABLE PA -	1	
3	CK10-531001-00	DRIVE MOTOR CABLE U	1	
4	CK10-531002-00	DRIVE MOTOR CABLE V	1	
5	CK10-531003-00	DRIVE MOTOR CABLE W	1	
6	CK10-531006-10	STEER MOTOR CABLE W	1	
7	CK10-531005-10	STEER MOTOR CABLE V	1	
8	CK10-531004-10	STEER MOTOR CABLE U	1	
9	CK10-531013-00	(D-AC0) CABLE-	1	
10	CK10-531007-00	(D-EPS-AC0) CABLE-	1	
11	CK10-531008-00	(EPS-AC0) CABLE+	1	

https://truckmanualshub.com/

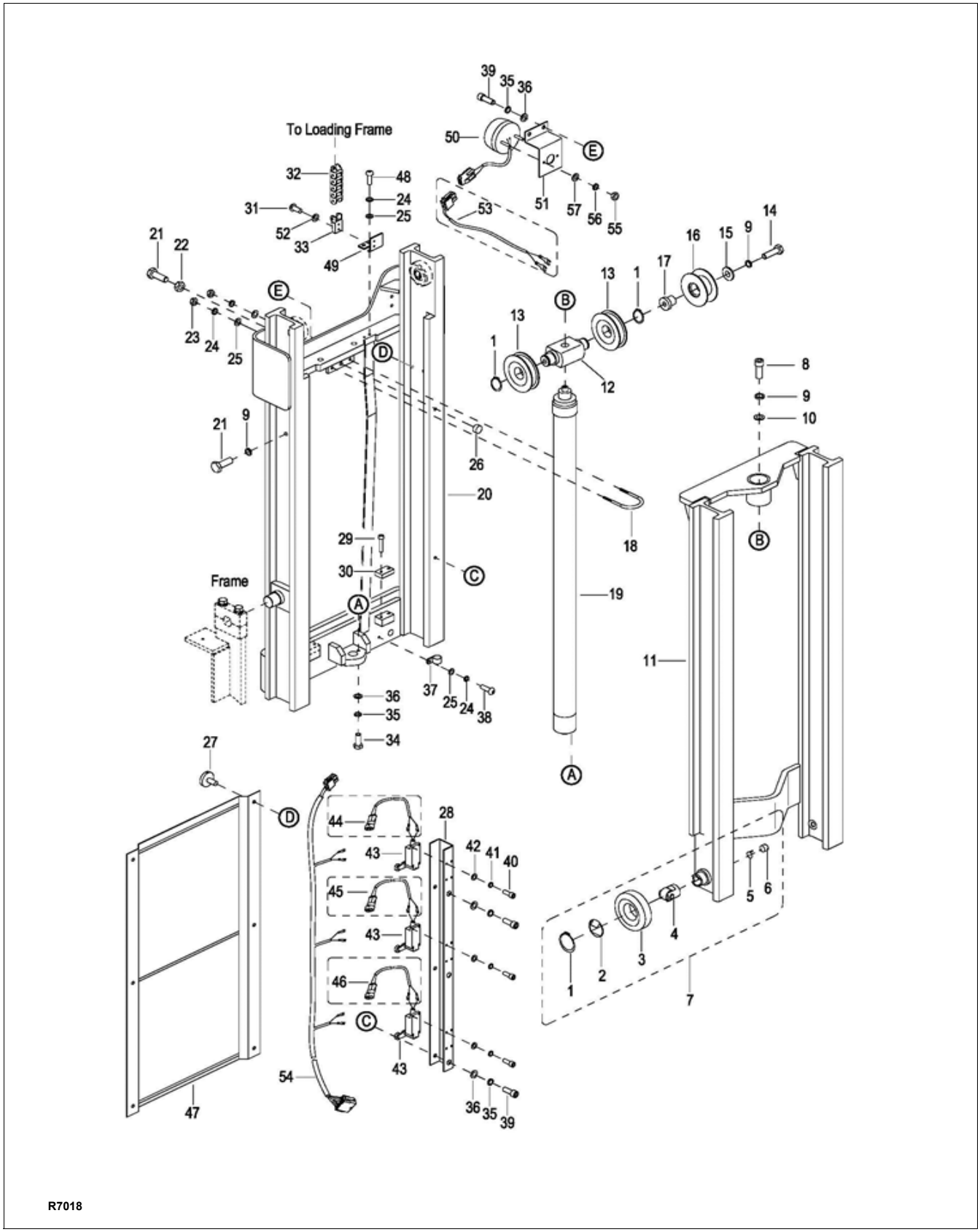

Figure 11-21 Elevation System (Telescopic)

https://truckmanualshub.com/

Elevation System (Telescopic)

POS.	PART NUMBER	DESCRIPTION	QTY. REQD.	NOTES
1	0000-000183-00	RETAINER RING Ø35	6	
2	2125-612005-00	DUST SNAP	4	
3	2125-612001-00	MAIN ROLLER Ø78.3	4	Used up to 03-14-2013
3a	CK10-612001-00	MAIN ROLLER Ø79.8	4	Used from 03-15-2013 to Serial # S2318200
3b	2125-612001-00	MAIN ROLLER Ø78.3	4	Used from Serial # S2318201
4	2125-612002-00	ASSISTANT ROLLER	4	
5	2125-612007-00	SNAP RING	4	
6	2125-612004-00	SCREW	4	
7	2125-612000-00	ROLLER ASSEMBLY Ø78.3	4	Used up to 03-14-2013
7a	CK10-612000-00	ROLLER ASSEMBLY Ø79.8	4	Used from 03-15-2013 to Serial # S2318200
7b	2125-612000-00	ROLLER ASSEMBLY Ø78.3	4	Used from Serial # S2318201
8	0000-000184-00	SCREW M12×60	1	
9	0000-000060-00	LOCKWASHER Ø12	4	
10	0000-000373-00	FLATWASHER Ø12	3	
11	CK10-620000-00	INNER MAST	1	
12	CK11-600002-00	CHAIN BRACKET	1	
13	2125-600002-00	CHAIN ROLLER	2	
14	0000-000613-00	BOLT M12×50	1	
15	0000-000438-00	FLATWASHER Ø12	1	
16	CK10-600001-00	ROLLER	1	
17	2125-600003-30	BUSHING	1	
18	2125-650000-00	CYLINDER HOOP	1	
19	CK10-410000-00	LIFT CYLINDER ASSEMBLY	1	
20	CK10-610000-00	OUTER MAST	1	
21	0000-000285-00	BOLT M12×35	3	
22	0000-000630-00	NUT M12	1	
23	0000-000108-00	NUT M6	2	
24	0000-000056-00	LOCKWASHER Ø6	5	
25	0000-000380-00	FLATWASHER Ø6	5	
26	2125-650002-00	BOLT BUSHING	1	
27	2108-100006-00	SCREW M6×10	6	
28	CK10-510013-00	FIXED PLATE	1	
29	0000-000739-00	SCREW M6×20	4	

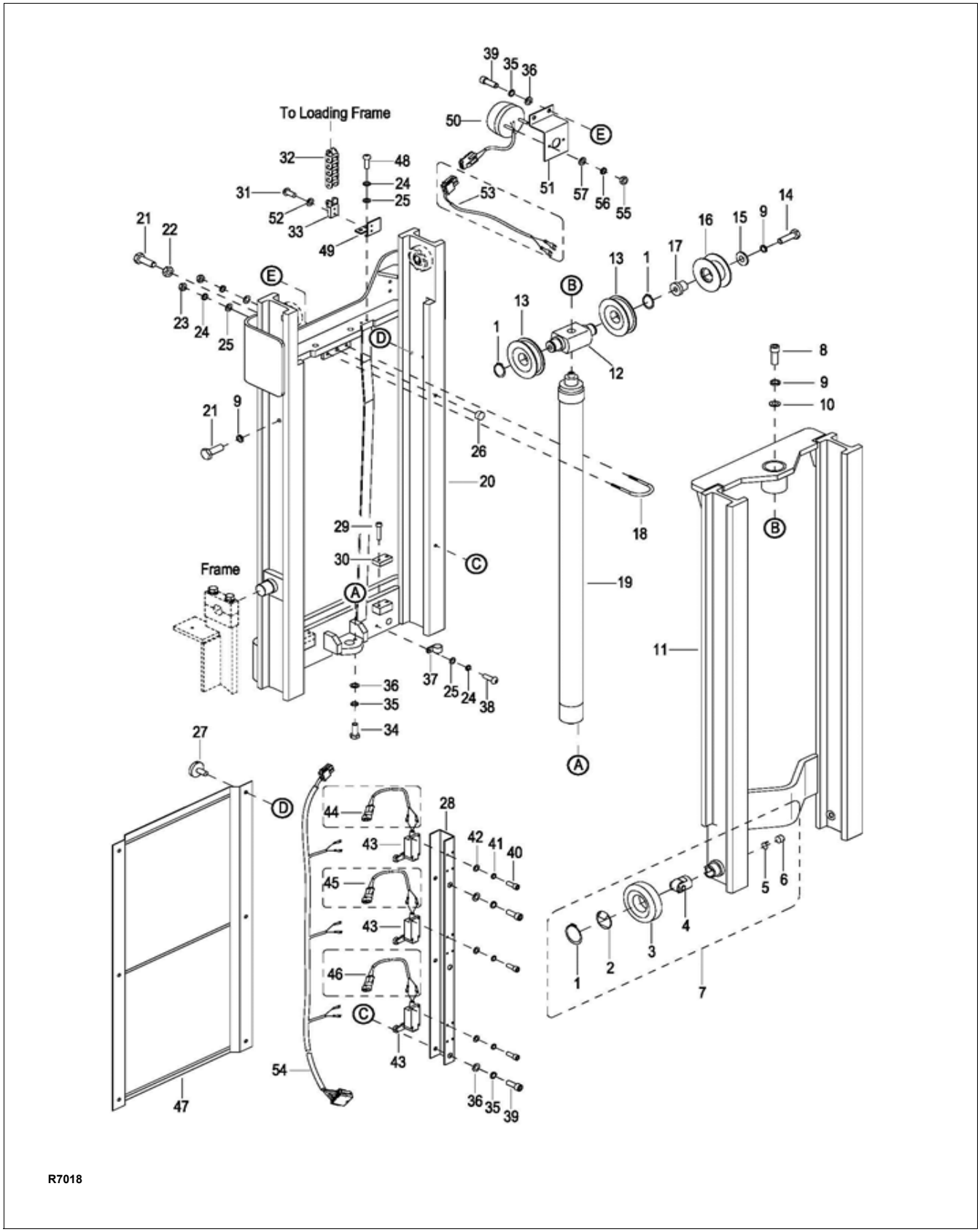

Figure 11-22 Elevation System (Telescopic) - Continued

https://truckmanualshub.com/

Elevation System (Telescopic) - Continued

POS.	PART NUMBER	DESCRIPTION	QTY. REQD.	NOTES
30	2125-600005-00	BUFFER BLOCK	2	
31	0000-000998-00	SCREW M3×8	4	
32	CK10-510003-00-02	DRAG CHAIN II	A.R.	As Required
33	CK10-510005-00	DRAG HEAD II	1	
34	0000-000279-00	BOLT M8×35	1	
35	0000-000159-00	LOCKWASHER Ø8	5	
36	0000-000176-00	FLATWASHER Ø8	5	
37	CK10-510015-00	HARNESS CLAMP	1	Used up to 03-14-2013
37a	0000-001058-00	HARNESS CLAMP	1	Used from 03-15-2013 to Serial # S2318200
38	0000-000179-00	SCREW M6×10	1	
39	0000-000109-00	SCREW M8×16	4	
40	0000-000004-00	SCREW M5×12	12	
41	0000-000206-00	LOCKWASHER Ø5	12	
42	0000-000390-00	FLATWASHER Ø5	12	
43	2125-500003-00	PROXIMITY SWITCH 8108	3	
44	CK10-520004-00	LIFTING PROXIMITY SWITCH WIRE	1	Used up to Serial # S2211058
45	CK10-520007-00	TRIMMING SPEED SWITCH WIRE III	1	Used up to Serial # S2211058
46	CK10-520006-00	TRIMMING SPEED SWITCH WIRE II	1	Used up to Serial # S2211058
47	CK10-640000-00	SEAL PLATE	1	
48	0000-000179-00	SCREW M6×10	2	
49	CK10-510030-00	DRAG CHAIN MOUNTING PLATE V	1	
50	CK10-520015-00	WARNING LAMP	1	Used up to Serial # 225170105
50a	CK10-520015-10	WARNING LAMP	1	Used from Serial # 225170106
51	CK10-510019-00	BOARD	1	
52	0000-000999-00	FLATWASHER Ø3	2	
53	CK10-520014-00	WARNING LAMP WIRE	1	Used up to Serial # S2211058
54	CK10-520016-20	SWITCH WIRING OF DUPLEX MAST	1	Used from Serial # S2211059
55	0000-000139-00	NUT M4	2	Used from Serial # 225170106
56	0000-000122-00	LOCKWASHER Ø4	2	
57	0000-000702-00	FLATWASHER Ø4	2	

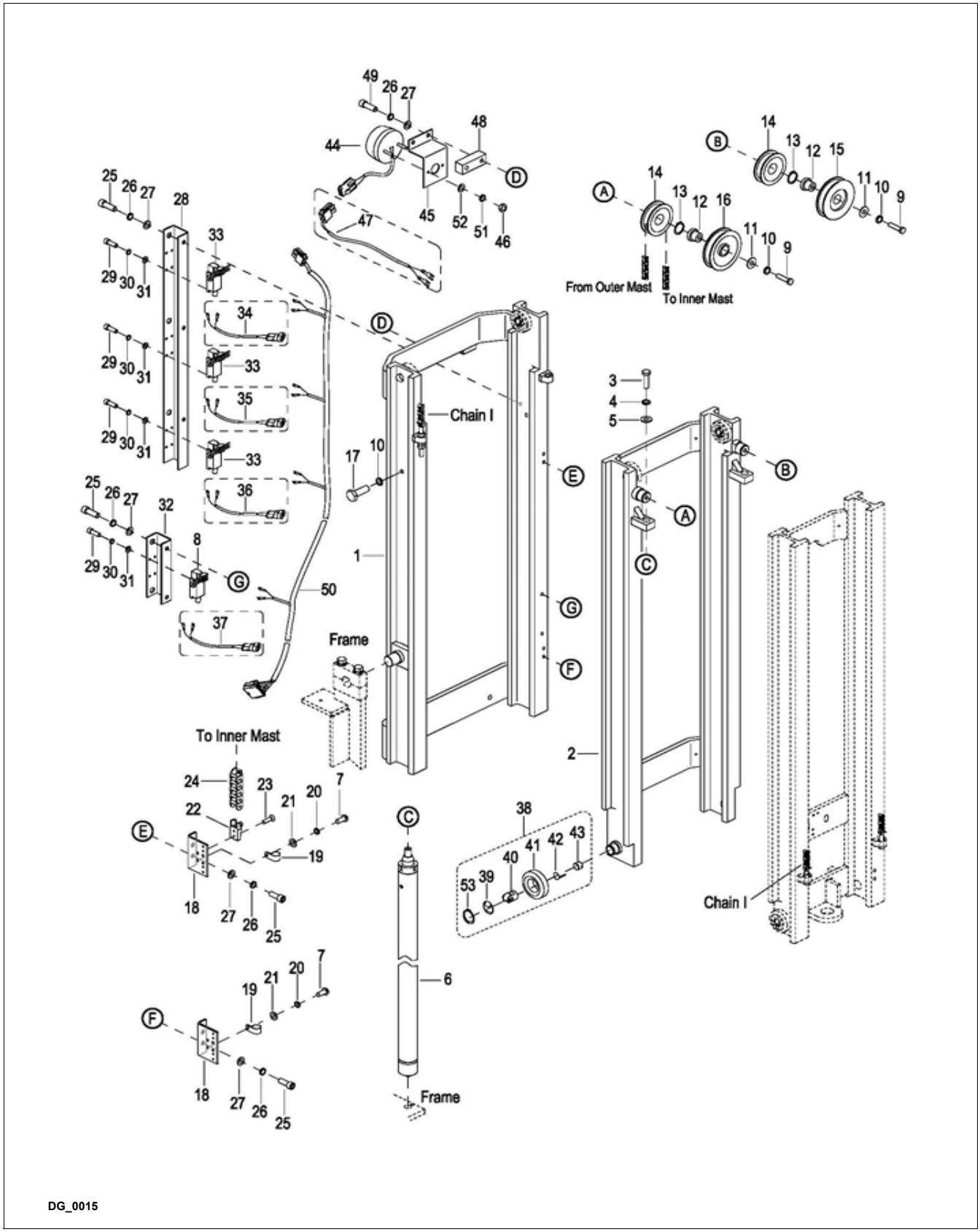

Figure 11-23 Elevation System (Three Stage Mast 126”- Part 1)

https://truckmanualshub.com/

Elevation System (Three Stage Mast 126”- Part 1)

POS.	PART NUMBER	DESCRIPTION	QTY. REQD.	NOTES
1	CK10-610000-30	OUTER MAST	1	Used up to Serial # 225180090
1a	CK10-610000-40	OUTER MAST	1	Used from Serial # 225180091
1b	CK10-610000-40-LD	OUTER MAST	1	Used from Serial # 225180091 - Special Color
2	CK10-620000-30	MIDDLE MAST	1	Used up to Serial # 225180090
2a	CK10-620000-40	MIDDLE MAST	1	Used from Serial # 225180091
2b	CK10-620000-40-LD	MIDDLE MAST	1	Used from Serial # 225180091 - Special Color
3	0000-000731-00	BOLT M10×25	2	
4	0000-000063-00	LOCKWASHER Ø10	2	
5	0000-000175-00	FLATWASHER Ø10	2	
6	CK10-410000-30-01	LIFT CYLINDER ASSEMBLY	2	Used up to Serial # S2314158
6a	CK10-410000-3A-01	LIFT CYLINDER ASSEMBLY	2	Used between Serial # S2314159 - 2281500212
6b	CK10-410000-3B-01	LIFT CYLINDER ASSEMBLY	2	Used from Serial # 2281500213
7	0000-000179-00	SCREW M6×10	3	
8	2125-500002-00	PROXIMITY SWITCH 8104	1	
9	0000-000613-00	BOLT M12×50	2	
10	0000-000060-00	LOCKWASHER Ø12	4	
11	0000-000438-00	FLATWASHER Ø12	2	
12	2125-600003-30	BUSHING	2	
13	0000-000183-00	RETAINER RING Ø35	2	
14	2214-600001-00	CHAIN ROLLER	2	
15	CK10-600001-30	NYLON WHEEL I	1	Used up to Serial number 226160080
15a	CK10-600005-3A	NYLON WHEEL I	1	Used from Serial number 226160081
16	2125-600002-30	ROLLER	1	Used up to Serial number 226160080
16a	2125-600002-3B	ROLLER	1	Used from Serial number 226160081
17	0000-000285-00	BOLT M12×35	2	
18	CK10-510014-00	DRAG CHAIN MOUNTING PLATE	2	

https://truckmanualshub.com/

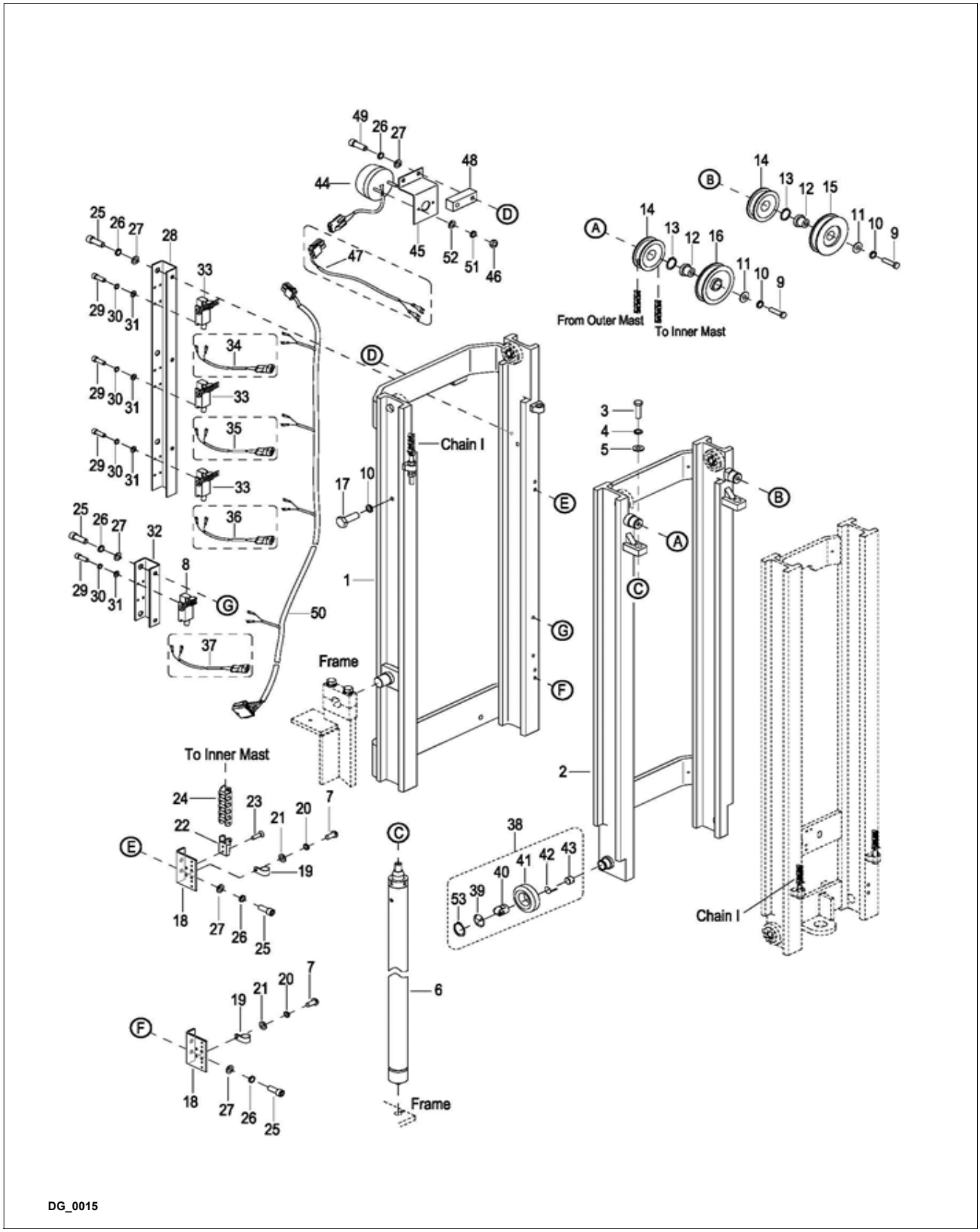

Figure 11-24 Elevation System (Three Stage Mast 126”- Part 1 - Continued)

https://truckmanualshub.com/

Elevation System (Three Stage Mast 126”- Part 1 - Continued)

POS.	PART NUMBER	DESCRIPTION	QTY. REQD.	NOTES
19	CK10-510015-00	HARNESS CLAMP	2	Used up to 03-14-2013
19a	0000-001058-00	HARNESS CLAMP	2	Used from 03-15-2013 to Serial # S2318200
23	0000-000416-00	SCREW M4×8	2	
20	0000-000056-00	LOCKWASHER Ø6	3	
21	0000-000380-00	FLATWASHER Ø6	3	
22	CK10-510005-00	DRAG HEAD II	1	
24	CK10-510003-00-05	DRAG CHAIN II	1	To Inner Mast
25	0000-000109-00	SCREW M8×16	8	
26	0000-000159-00	LOCKWASHER Ø8	10	
27	0000-000176-00	FLATWASHER Ø8	10	
28	CK10-510013-00	FIXED PLATE	1	Used up to Serial # S2213266
28a	CK10-510013-10	FIXED PLATE	1	Used from Serial # S2213267
29	0000-000117-00	SCREW M5×10	16	
30	0000-000206-00	LOCKWASHER Ø5	16	
31	0000-000390-00	FLATWASHER Ø5	16	
32	CK10-510018-00	FIXED PLATE	1	
33	2125-500003-00	PROXIMITY SWITCH 8108	3	
34	CK10-520004-00	LIFTING PROXIMITY SWITCH WIRE	1	Used up to Serial # S2211058
35	CK10-520007-00	TRIMMING SPEED SWITCH WIRE III	1	Used up to Serial # S2211058
36	CK10-520006-00	TRIMMING SPEED SWITCH WIRE II	1	Used up to Serial # S2211058
37	CK10-520005-00	TRIMMING SPEED SWITCH WIRE I	1	Used up to Serial # S2211058
38	2125-612000-00	ROLLER ASSEMBLY Ø78.3	6	Used up to Serial # 225180090
38a	CK10-613000-00	ROLLER ASSEMBLY Ø79.9-1S-00	6	Used from Serial # 225180091
39	2125-612005-00	DUST SNAP	6	Used up to Serial # 225180090
39a	CK10-613004-00	DUST SNAP	6	Used from Serial # 225180091
40	2125-612002-00	ASSISTANT ROLLER	6	Used up to Serial # 225180090
40a	CK10-613003-00	ASSISTANT ROLLER	6	Used from Serial # 225180091

https://truckmanualshub.com/

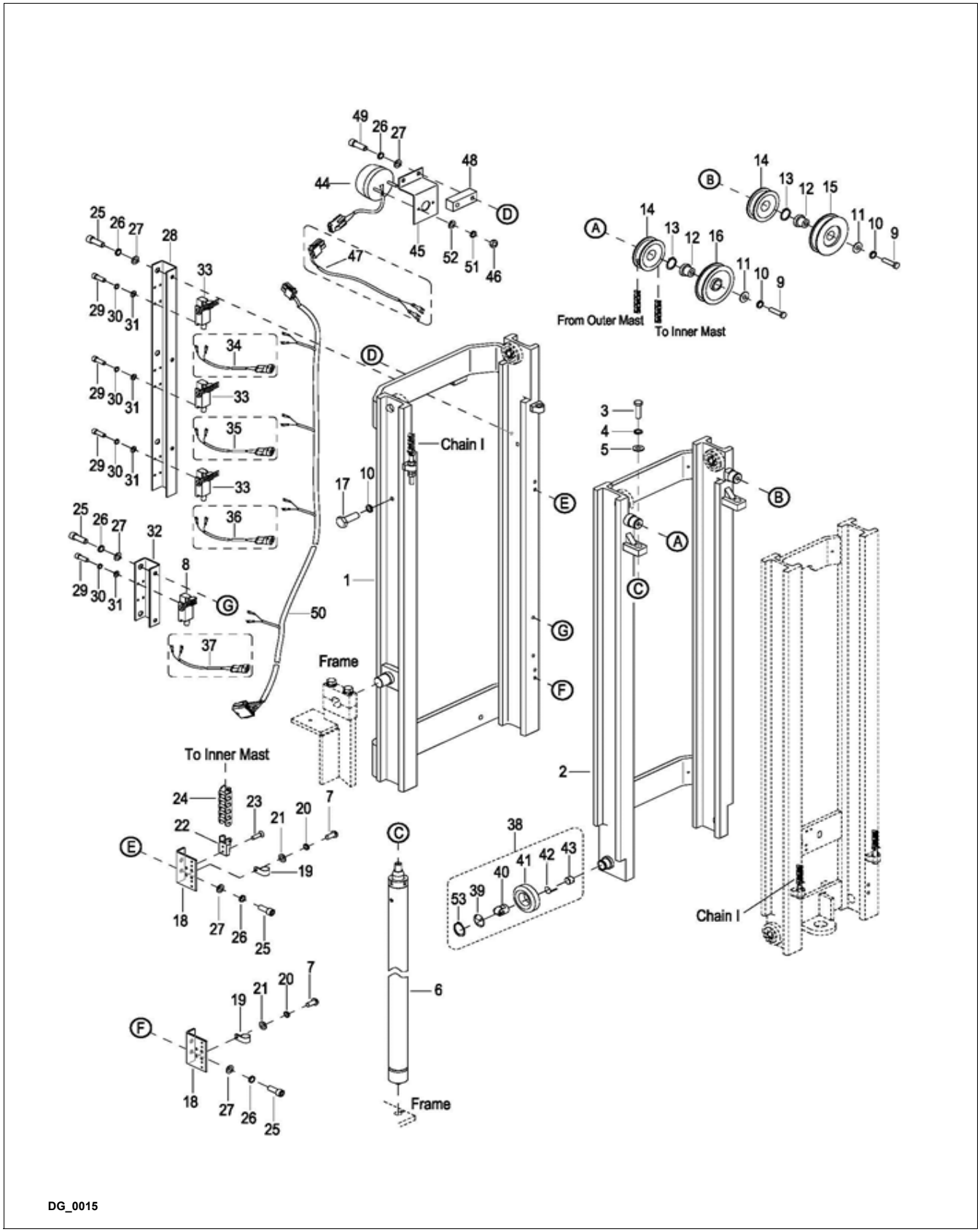

Figure 11-25 Elevation System (Three Stage Mast 126”- Part 1 - Continued)

https://truckmanualshub.com/

Elevation System (Three Stage Mast 126”- Part 1 - Continued)

POS.	PART NUMBER	DESCRIPTION	QTY. REQD.	NOTES
41	2125-612001-00	MAIN ROLLER Ø78.3	6	Used up to Serial # 225180090
41a	CK10-613002-00	ROLLER ASSEMBLY Ø79.9-1S-00	6	Used from Serial # 225180091
42	2125-612007-00	SNAP RING	6	Used up to Serial # 225180090
42a	CK10-613006-00	SNAP RING	6	Used from Serial # 225180091
43	2125-612004-00	SCREW	6	Used up to Serial # 225180090
43a	CK10-613005-00	SCREW	6	Used from Serial # 225180091
44	CK10-520015-00	WARNING LAMP	1	Used up to Serial # 225170105
44a	CK10-520015-10	WARNING LAMP	1	Used from Serial # 225170106
45	CK10-510019-00	BOARD	1	
46	0000-000998-00	SCREW M3×8	2	Used up to Serial # 225170105
46a	0000-000139-00	NUT M4	2	Used from Serial # 225170106
47	CK10-520014-00	WARNING LAMP WIRE	1	Used up to Serial # S2211058
48	CK10-610006-30	BLOCK	1	Used from Serial # S2213130
49	0000-000154-00	SCREW M8×35	2	Used from Serial # S2213130
50	CK10-520016-00	SWITCH WIRING OF TRIPLEX MAST	1	Used from Serial # S2211059
51	0000-000122-00	LOCKWASHER Ø4	2	Used from Serial # 225170106
52	0000-000702-00	FLATWASHER Ø4	2	
53	0000-000183-00	RETAINER RING Ø35	6	Used up to Serial # 225180090
53a	0000-001145-00	RETAINER RING Ø45	6	Used from Serial # 225180091

https://truckmanualshub.com/

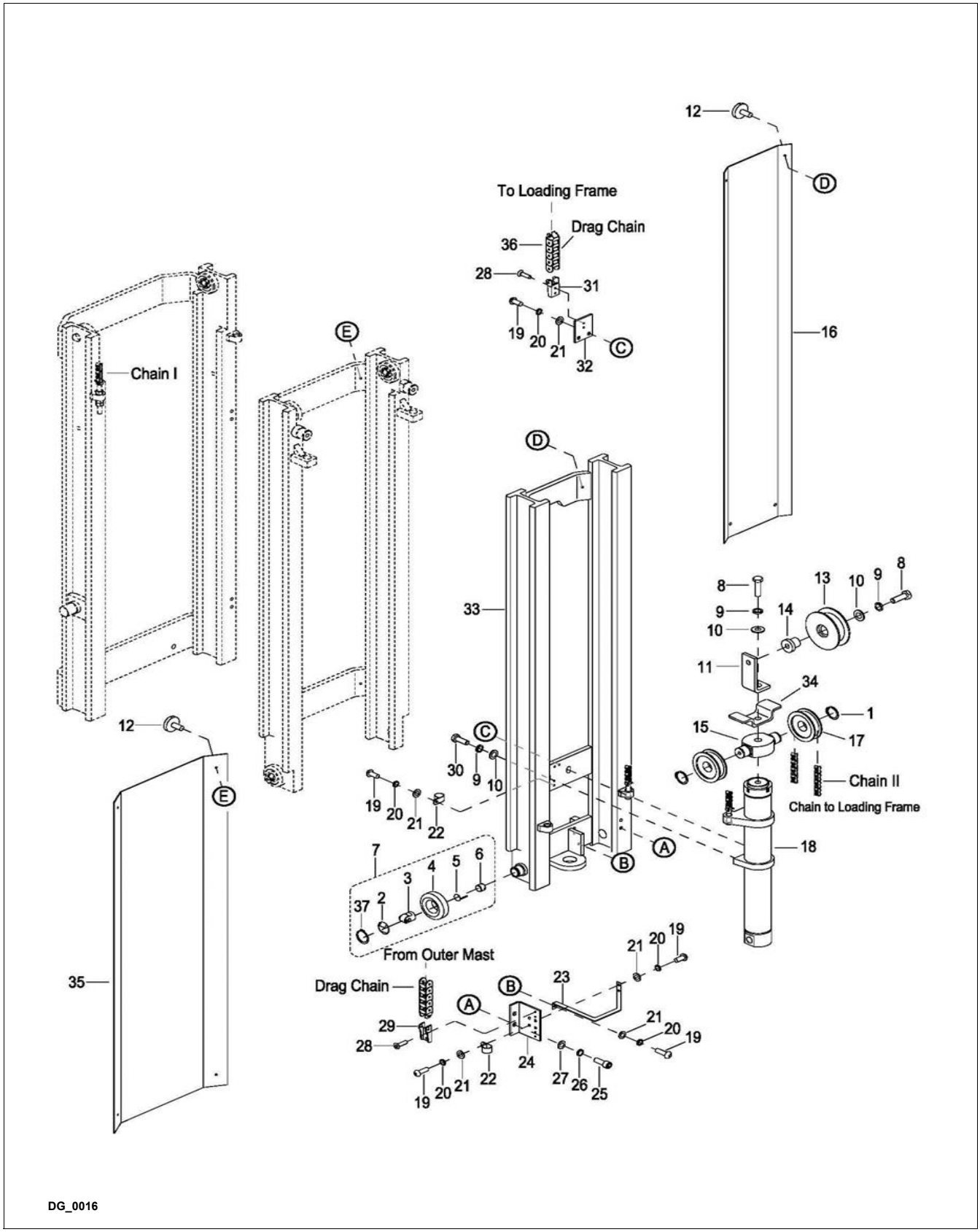

Figure 11-26 Elevation System (Three Stage Mast 126” - Part 2)

https://truckmanualshub.com/

Elevation System (Three Stage Mast 126” - Part 2)

POS.	PART NUMBER	DESCRIPTION	QTY. REQD.	NOTES
1	0000-000183-00	RETAINER RING Ø35	4	
2	2125-612005-00	DUST SNAP	2	Used up to Serial # 225180090
2a	CK10-613004-00	DUST SNAP	2	Used from Serial # 225180091
3	2125-612002-00	ASSISTANT ROLLER	2	Used up to Serial # 225180090
3a	CK10-613003-00	ASSISTANT ROLLER	2	Used from Serial # 225180091
4	2125-612001-00	MAIN ROLLER Ø78.3	2	Used up to Serial # 225180090
4a	CK10-613002-00	MAIN ROLLER Ø79.9-1S-00	2	Used from Serial # 225180091
5	2125-612007-00	SNAP RING	2	Used up to Serial # 225180090
5a	CK10-613006-00	SNAP RING	2	Used from Serial # 225180091
6	2125-612004-00	SCREW	2	Used up to Serial # 225180090
6a	CK10-613005-00	SCREW	2	Used from Serial # 225180091
7	2125-612000-00	ROLLER ASSEMBLY Ø78.3	2	Used up to Serial # 225180090
7a	CK10-613000-00	ROLLER ASSEMBLY Ø79.8	2	Used from Serial # 225180091
7b	2125-612000-00	ROLLER ASSEMBLY Ø78.3	2	Used between Serial # S2318201-225180090
7c	CK10-613000-00	ROLLER ASSEMBLY Ø79.8	2	Used from Serial # 225180091
8	0000-000613-00	BOLT M12×50	2	
9	0000-000060-00	LOCKWASHER Ø12	4	
10	0000-000438-00	FLATWASHER Ø12	4	
11	CK10-600004-30	FIXED ANGLE	1	
12	2108-100006-00	SCREW M6×10	8	
13	CK10-600005-30	NYLON WHEEL II	1	Used up to Serial # 226160080
13a	CK10-600005-3A	NYLON WHEEL II	1	Used from Serial # 226160081
14	2125-600003-30	BUSHING	1	
15	2125-600001-30	ROLLER BRACKET	1	Used up to Serial # S2120047
15a	CK10-600006-30	ROLLER BRACKET	1	Used from Serial # S2120048 (Excl. S2120050)

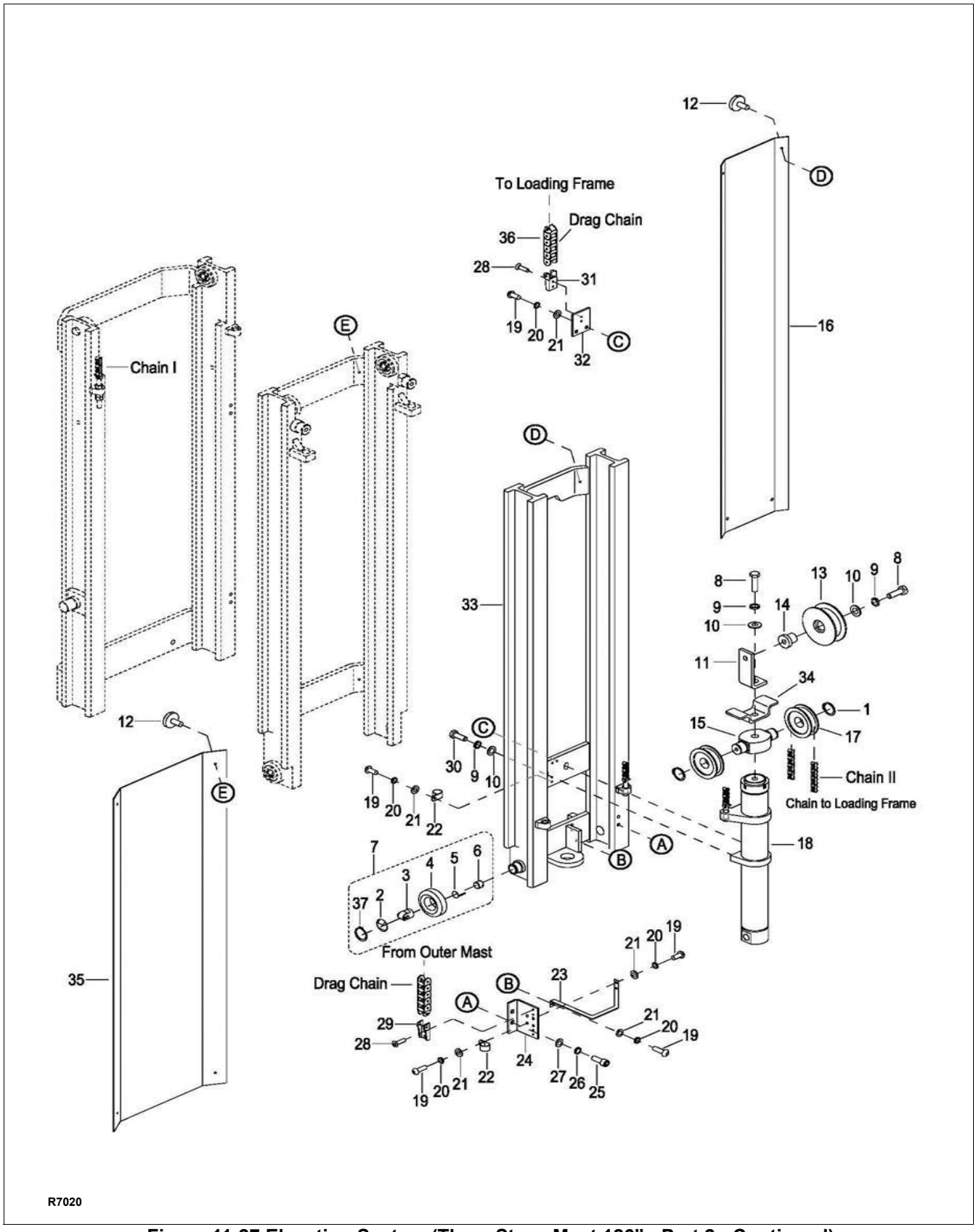

Figure 11-27 Elevation System (Three Stage Mast 126” - Part 2 - Continued)

https://truckmanualshub.com/

Elevation System (Three Stage Mast 126” - Part 2 - Continued)

POS.	PART NUMBER	DESCRIPTION	QTY. REQD.	NOTES
16	CK10-600003-3A	SEAL PLATE	1	
17	2214-600001-00	CHAIN ROLLER	2	
18	CK10-420000-3A-01	FREE LIFT CYLINDER ASSEMBLY	1	Used up to Serial # 2281300415
18a	CK10-420000-3B-01	FREE LIFT CYLINDER ASSEMBLY	1	Used from Serial # 2281300416
19	0000-000179-00	SCREW M6×10	7	
20	0000-000056-00	LOCKWASHER Ø6	7	
21	0000-000380-00	FLATWASHER Ø6	7	
22	CK10-510015-00	HARNESS CLAMP	3	Used up to 03-14-2013
22a	0000-001058-00	HARNESS CLAMP	3	Used from 03-15-2013 to Serial # S2318200
23	CK10-510010-00	BOARD	1	
24	CK10-510014-0A	DRAG CHAIN MOUNTING PLATE	1	
25	0000-000109-00	SCREW M8×16	2	
26	0000-000159-00	LOCKWASHER Ø8	2	
27	0000-000176-00	FLATWASHER Ø8	2	
28	0000-000416-00	SCREW M4×8	4	
29	CK10-510004-00	DRAG HEAD I	1	
30	0000-000285-00	BOLT M12×35	2	
31	CK10-510005-00	DRAG HEAD II	1	
32	CK10-510011-0A	DRAG CHAIN MOUNTING PLATE	1	
33	CK10-630000-30	INNER MAST	1	Used up to Serial # 225180090
33a	CK10-630000-40	INNER MAST	1	Used from Serial # 225180091
34	2125-600007-3B	CHAIN BRACKET	1	
35	CK10-600002-3A	SEAL PLATE	1	
36	CK10-510003-00	DRAG CHAIN II	A.R.	AS REQUIRED
37	0000-000183-00	RETAINER RING Ø35	2	Used up to Serial # 225180090
37a	0000-001145-00	RETAINER RING Ø45	2	Used from Serial # 225180091

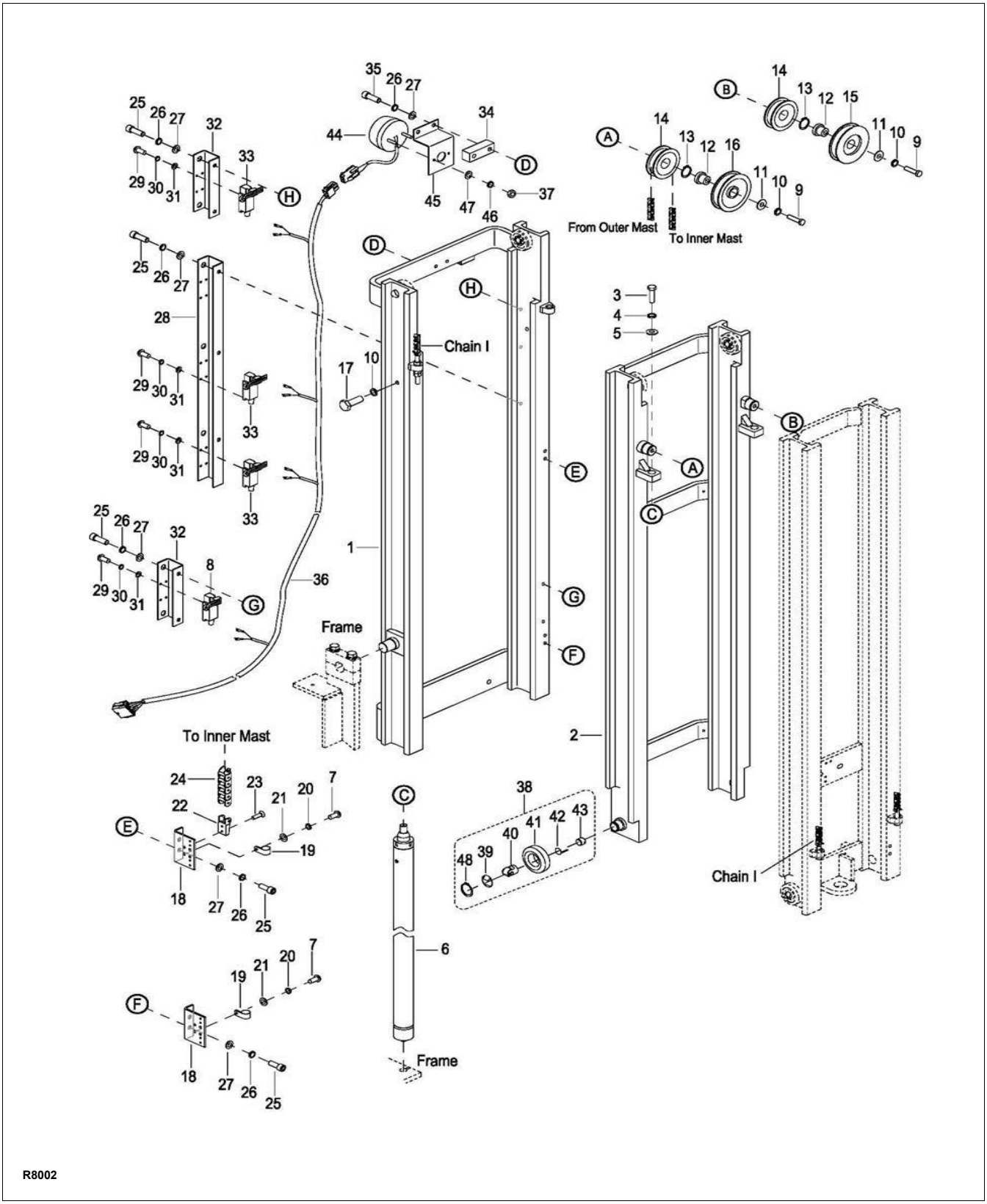

Figure 11-28 Elevation System (Three Stage Mast 162”- Part 1)

https://truckmanualshub.com/

Elevation System (Three Stage Mast 162”- Part 1)

POS.	PART NUMBER	DESCRIPTION	QTY. REQD.	NOTES
1	CK10-610000-50	OUTER MAST	1	Used up to Serial # S2318200
1a	CK10-610000-5A	OUTER MAST	1	Used between Serial # S2318201-F24120093
1b	CK10-610000-5B	OUTER MAST	1	Used between Serial # F24120094-226120087
1c	CK10-610000-80	OUTER MAST	1	Used from Serial # 226120088
1d	CK10-610000-80-LD	OUTER MAST	1	Used from Serial # 226120088 - Special Color
2	CK10-620000-50	MIDDLE MAST	1	Used up to Serial # S2318200
2a	CK10-620000-5A	MIDDLE MAST	1	Used between Serial # S2318201-F24120093
2b	CK10-620000-5B	MIDDLE MAST	1	Used between Serial # F24120094-226120087
2c	CK10-620000-80	MIDDLE MAST	1	Used from Serial # 226120088
2d	CK10-620000-80-LD	MIDDLE MAST	1	Used from Serial # 226120088 - Special Color
3	0000-000731-00	BOLT M10×25	2	
4	0000-000063-00	LOCKWASHER Ø10	2	
5	0000-000175-00	FLATWASHER Ø10	2	
6	CK10-410000-3A-03	LIFT CYLINDER ASSEMBLY	2	Used up to Serial # 2281500212
6a	CK10-410000-3B-03	LIFT CYLINDER ASSEMBLY	2	Used from Serial # 2281500213
7	0000-000179-00	SCREW M6×10	3	
8	2125-500002-00	PROXIMITY SWITCH 8104	1	
9	0000-000613-00	BOLT M12×50	2	
10	0000-000060-00	LOCKWASHER Ø12	4	
11	0000-000438-00	FLATWASHER Ø12	2	
12	2125-600003-30	BUSHING	2	
13	0000-000183-00	RETAINER RING Ø35	2	
14	2214-600001-00	CHAIN ROLLER	2	
15	CK10-600001-30	NYLON WHEEL I	1	Used up to Serial # 226160080
15a	CK10-600005-3A	NYLON WHEEL I	1	Used from Serial # 226160081
16	2125-600002-30	ROLLER	1	Used up to Serial # 226160080
16a	2125-600002-3B	ROLLER	1	Used from Serial # 226160081
17	0000-000285-00	BOLT M12×35	2	
18	CK10-510014-0A	DRAG CHAIN MOUNTING PLATE	2	
19	0000-001058-00	HARNESS CLAMP	2	
20	0000-000056-00	LOCKWASHER Ø6	3	
21	0000-000380-00	FLATWASHER Ø6	3	
22	CK10-510005-00	DRAG HEAD II	1	
23	0000-000416-00	SCREW M4×8	2	
24	CK10-510003-00-07	DRAG CHAIN II	1	To Inner Mast
25	0000-000109-00	SCREW M8×16	8	

https://truckmanualshub.com/

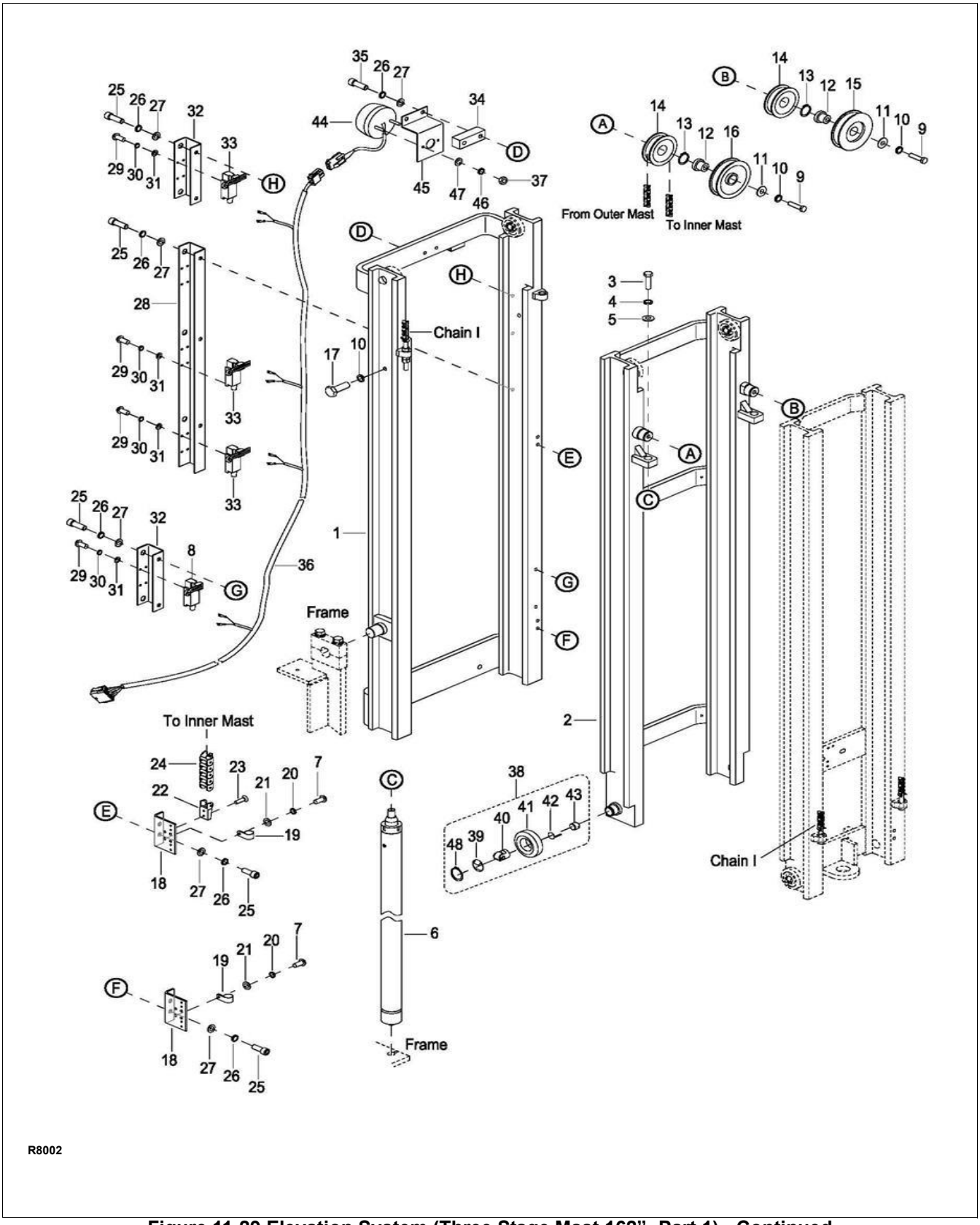

Figure 11-29 Elevation System (Three Stage Mast 162”- Part 1) - Continued

https://truckmanualshub.com/

Elevation System (Three Stage Mast 162”- Part 1) - Continued

POS.	PART NUMBER	DESCRIPTION	QTY. REQD.	NOTES
26	0000-000159-00	LOCKWASHER Ø8	10	
27	0000-000176-00	FLATWASHER Ø8	10	
28	CK10-510013-10	FIXED PLATE	1	
29	0000-000381-00	SCREW M5×10	16	
30	0000-000206-00	LOCKWASHER Ø5	16	
31	0000-000390-00	FLATWASHER Ø5	16	
32	CK10-510018-00	FIXED PLATE	2	
33	2125-500003-00	PROXIMITY SWITCH 8108	3	
34	CK10-600006-30	BLOCK	1	
35	0000-000154-00	SCREW M8×35	2	Used from Serial # S2213130
36	CK10-520016-40	SWITCH WIRING OF TRIPLEX MAST	1	
37	0000-000998-00	SCREW M3×8	2	Used up to Serial # 225170105
37a	0000-000139-00	NUT M4	2	Used from Serial # 225170106
38	2125-612000-00	ROLLER ASSEMBLY Ø78.3	6	Used up to Serial # S2318200
38a	CK10-612000-00	ROLLER ASSEMBLY Ø79.8	6	Used between Serial # S2318201-F24120093
38b	2125-612000-00	ROLLER ASSEMBLY Ø78.3	6	Used between Serial # F24120094-226120087
38c	CK10-613000-00	ROLLER ASSEMBLY Ø79.9-1S-00	6	Used from Serial # 226120088
39	2125-612005-00	DUST SNAP	6	Used up to Serial # 226120087
39a	CK10-613004-00	DUST SNAP	6	Used from Serial # 226120088
40	2125-612002-00	ASSISTANT ROLLER	6	Used up to Serial # 226120087
40a	CK10-613003-00	ASSISTANT ROLLER	6	Used from Serial # 226120088
41	2125-612001-00	MAIN ROLLER Ø78.3	6	Used up to Serial # S2318200
41a	CK10-612001-00	MAIN ROLLER Ø79.8	6	Used between Serial # S2318201-F24120093
41b	2125-612001-00	MAIN ROLLER Ø78.3	6	Used between Serial # F24120094-226120087
41c	CK10-613002-00	MAIN ROLLER Ø79.9-1S-00	6	Used from Serial # 226120088
42	2125-612007-00	SNAP RING	6	Used up to Serial # 226120087
42a	CK10-613006-00	SNAP RING	6	Used from Serial # 226120088
43	2125-612004-00	SCREW	6	Used up to Serial # 226120087
43a	CK10-613005-00	SCREW	6	Used from Serial # 226120088
44	CK10-520015-00	WARNING LAMP	1	Used up to Serial # 225170105
44a	CK10-520015-10	WARNING LAMP	1	Used from Serial # 225170106
45	CK10-510019-00	BOARD	1	
46	0000-000122-00	LOCKWASHER Ø4	2	Used from Serial # 225170106
47	0000-000702-00	FLATWASHER Ø4	2	
48	0000-000183-00	RETAINER RING Ø35	6	Used up to Serial # 226120087
48a	0000-001145-00	RETAINER RING Ø45	6	Used from Serial # 226120088

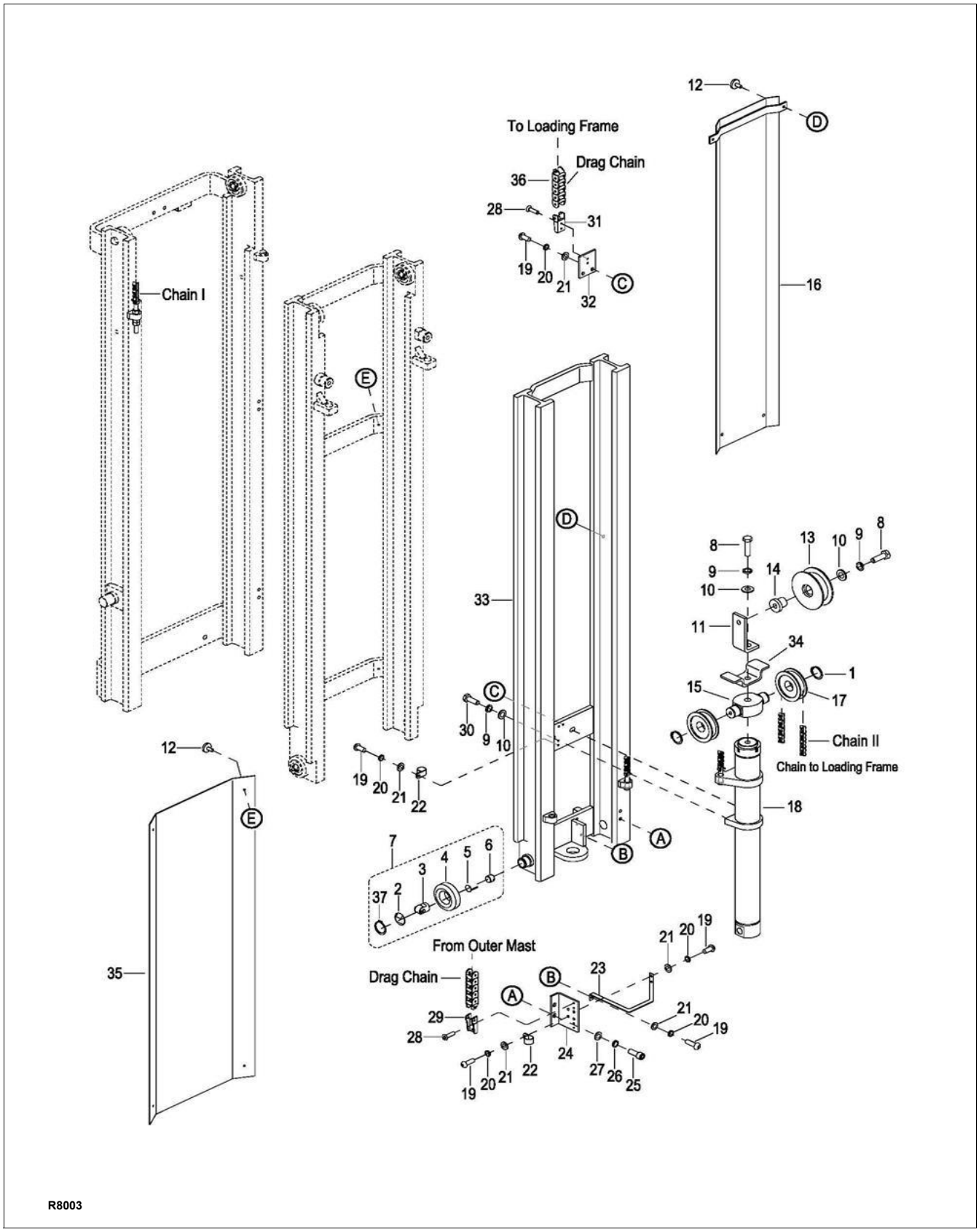

Figure 11-30 Elevation System (Three Stage Mast 162” - Part 2)

https://truckmanualshub.com/

Elevation System (Three Stage Mast 162” - Part 2)

POS.	PART NUMBER	DESCRIPTION	QTY. REQD.	NOTES
1	0000-000183-00	RETAINER RING Ø35	2	
2	2125-612005-00	DUST SNAP	2	Used up to Serial # 226120087
2a	CK10-613004-00	DUST SNAP	2	Used from Serial # 226120088
3	2125-612002-00	ASSISTANT ROLLER	2	Used up to Serial # 226120087
3a	CK10-613003-00	ASSISTANT ROLLER	2	Used from Serial # 226120088
4	2125-612001-00	MAIN ROLLER Ø78.3	6	Used up to Serial # S2318200
4a	CK10-612001-00	MAIN ROLLER Ø79.8	6	Used between Serial # S2318201-F24120093
4b	2125-612001-00	MAIN ROLLER Ø78.3	6	Used between Serial # F24120094-226120087
4c	CK10-613002-00	MAIN ROLLER Ø79.9-1S-00	6	Used from Serial # 226120088
5	2125-612007-00	SNAP RING	2	Used up to Serial # 226120087
5a	CK10-613006-00	SNAP RING	2	Used from Serial # 226120088
6	2125-612004-00	SCREW	2	
6a	CK10-613005-00	SCREW	2	
7	2125-612000-00	ROLLER ASSEMBLYØ78.3	6	Used up to Serial # S2318200
7a	CK10-612000-00	ROLLER ASSEMBLY Ø79.8	6	Used between Serial # S2318201-F24120093
7b	2125-612000-00	ROLLER ASSEMBLY Ø78.3	6	Used between Serial # F24120094-226120087
7c	CK10-613000-00	ROLLER ASSEMBLY Ø79.9-1S-00	6	Used from Serial # 226120088
8	0000-000613-00	BOLT M12×50	2	
9	0000-000060-00	LOCKWASHER Ø12	4	
10	0000-000438-00	FLATWASHER Ø12	4	
11	CK10-600004-30	FIXED ANGLE	1	
12	2108-100006-00	SCREW M6×10	8	
13	CK10-600005-30	NYLON WHEEL II	1	Used up to Serial number 226160080
13a	CK10-600005-3A	NYLON WHEEL II	1	Used from Serial number 226160081
14	2125-600003-30	BUSHING	1	
15	CK10-600006-30	ROLLER BRACKET	1	
16	CK10-600003-3A	SEAL PLATE	1	
17	2214-600001-00	CHAIN ROLLER	2	
18	CK10-420000-3A-03	FREE LIFT CYLINDER ASSEMBLY	1	Used up to Serial # 2281300415
18a	CK10-420000-3B-03	FREE LIFT CYLINDER ASSEMBLY	1	Used from Serial # 2281300416
19	0000-000179-00	SCREW M6×10	7	
20	0000-000056-00	LOCKWASHER Ø6	7	
21	0000-000380-00	FLATWASHER Ø6	7	
22	0000-001058-00	HARNESS CLAMP	3	

https://truckmanualshub.com/

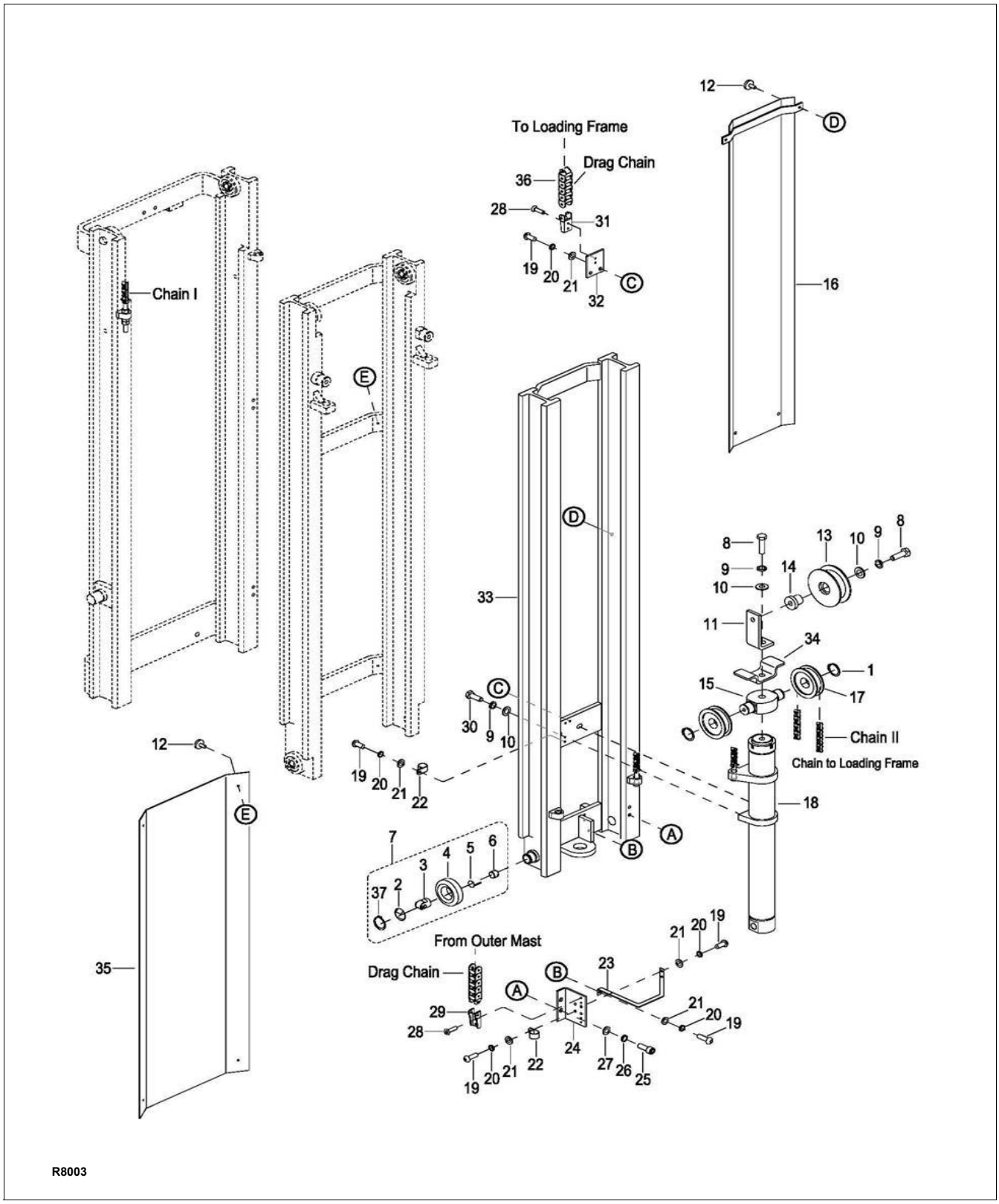

Figure 11-31 Elevation System (Three Stage Mast 162” - Part 2 - Continued)

https://truckmanualshub.com/

Elevation System (Three Stage Mast 162” - Part 2 - Continued)

POS.	PART NUMBER	DESCRIPTION	QTY. REQD.	NOTES
23	CK10-510010-00	BOARD	1	
24	CK10-510014-0A	DRAG CHAIN MOUNTING PLATE	1	
25	0000-000109-00	SCREW M8×16	2	
26	0000-000159-00	LOCKWASHER Ø8	2	
27	0000-000176-00	FLATWASHER Ø8	2	
28	0000-000416-00	SCREW M4×8	4	
29	CK10-510004-00	DRAG HEAD I	1	
30	0000-000285-00	BOLT M12×35	2	
31	CK10-510005-00	DRAG HEAD II	1	
32	CK10-510011-0A	DRAG CHAIN MOUNTING PLATE	1	
33	CK10-630000-50	INNER MAST	1	Used up to Serial # S2318200
33a	CK10-630000-5A	INNER MAST	1	Used between Serial # S2318201-F24120093
33b	CK10-630000-5B	INNER MAST	1	Used between Serial # F24120094-226120087
33c	CK10-630000-80	INNER MAST	1	Used from Serial # 226120088
34	2125-600007-3B	CHAIN BRACKET	1	
35	CK10-600001-50	SEAL PLATE	1	
36	CK10-510003-00	DRAG CHAIN II	A.R.	As Required
37	0000-000183-00	RETAINER RING Ø35	2	Used up to Serial # 226120087
37a	0000-001145-00	RETAINER RING Ø45	2	Used from Serial # 226120088

https://truckmanualshub.com/

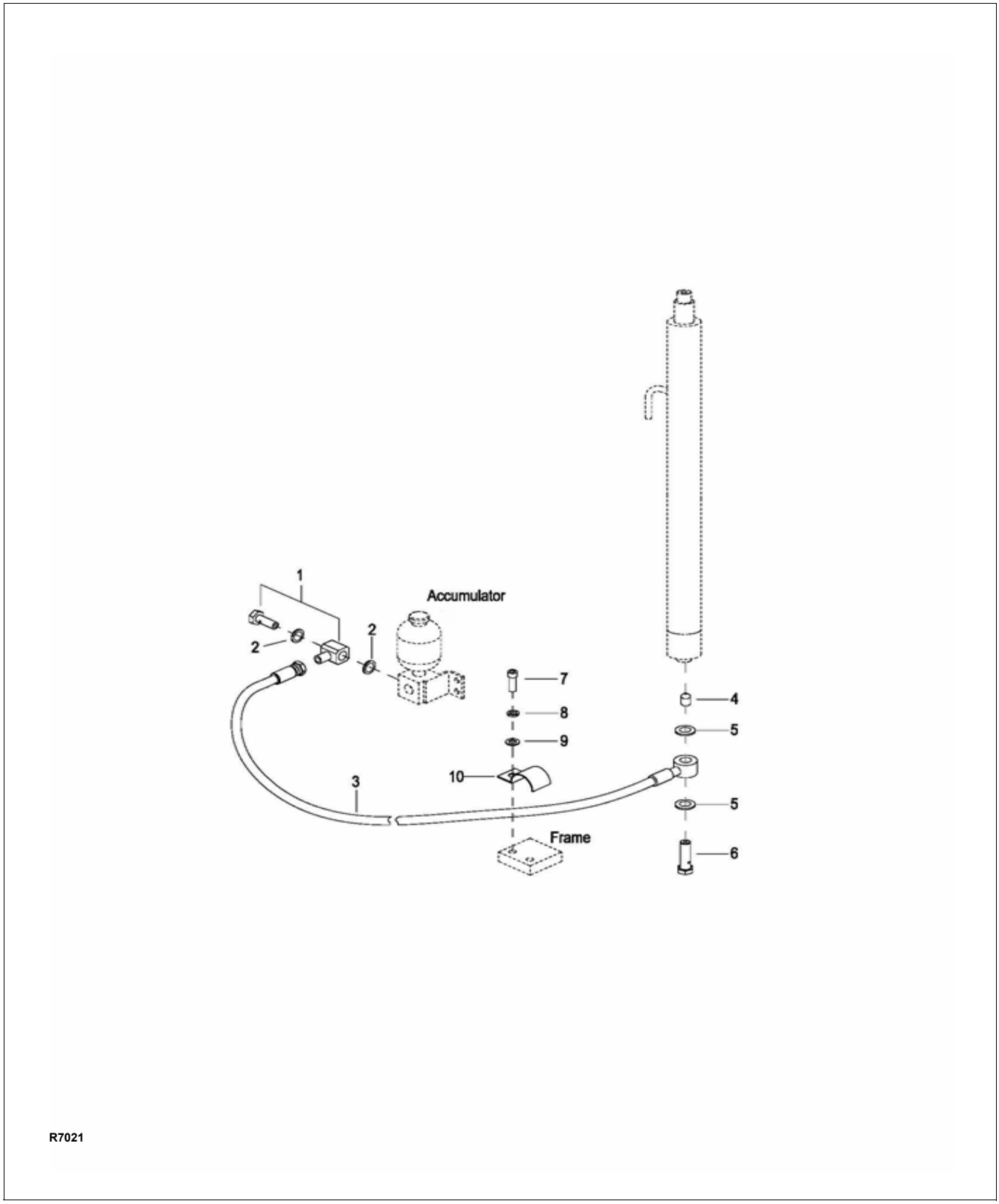

Figure 11-32 Hydraulic Lift (Telescopic)

https://truckmanualshub.com/

Hydraulic Lift (Telescopic)

POS.	PART NUMBER	DESCRIPTION	QTY. REQD.	NOTES
1	2707-141400-00	CONNECTOR G1/4-M14×1.5	1	
2	0000-000044-00	WASHER Ø14	2	
3	CK10-420000-00	OIL PIPE	1	
4	CK10-401000-00	FLOW CONTROL VALVE	2	Used up to Serial # S2318199
4a	CK10-402000-00	FLOW CONTROL VALVE	2	Used from Serial # S2318200
5	0000-000634-00	WASHER Ø18	2	
6	2402-383500-00	BOLT G3/8×35	1	
7	0000-000433-00	SCREW M8×12	1	
8	0000-000159-00	LOCKWASHER Ø8	1	
9	0000-000194-00	FLATWASHER Ø8	1	
10	3316-610001-10	HARNESS CLAMP	1	

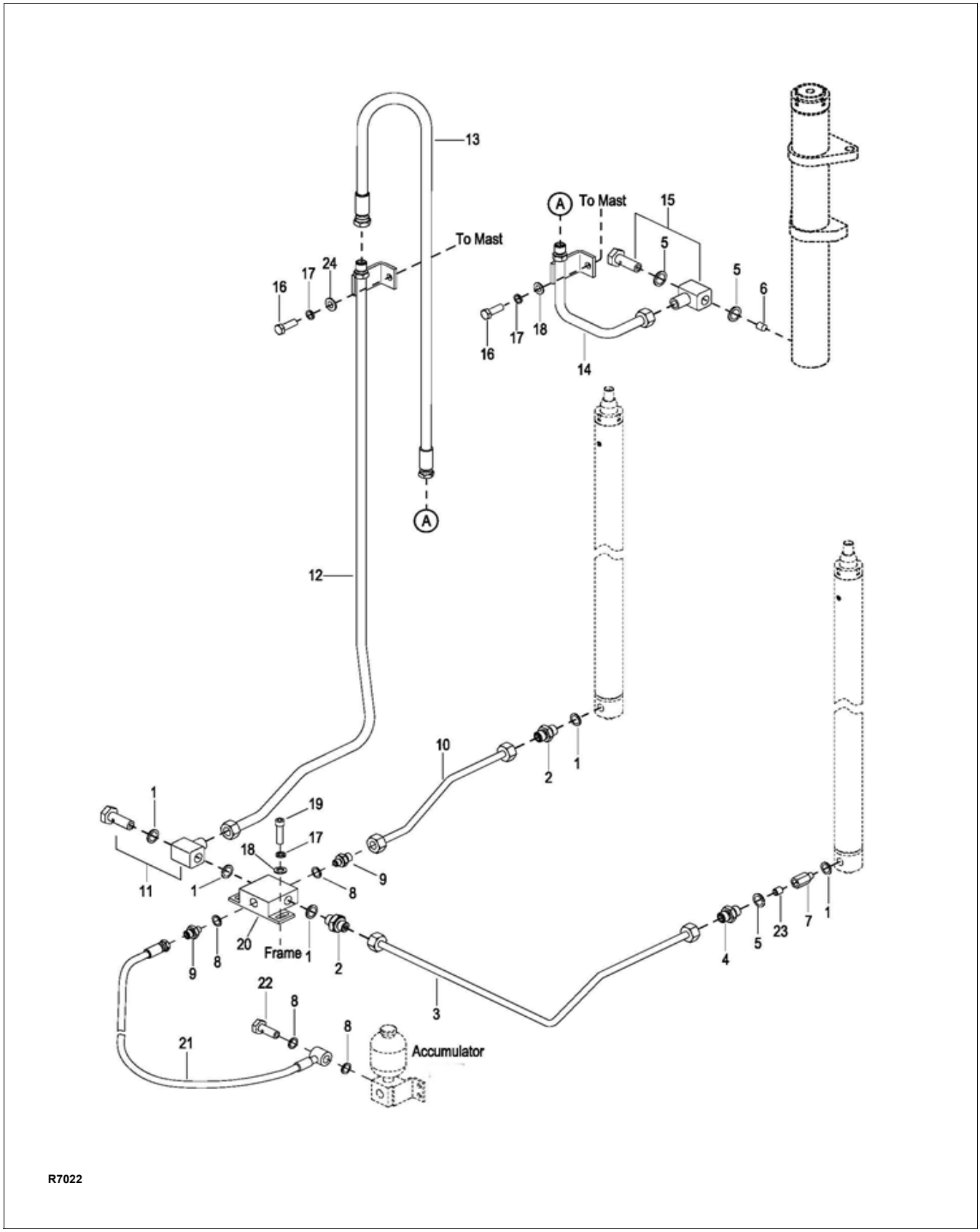

Figure 11-33 Hydraulic Lift (Three Stage Mast)

https://truckmanualshub.com/

Hydraulic Lift (Three Stage Mast)

POS.	PART NUMBER	DESCRIPTION	QTY. REQD.	NOTES
1	0000-000069-00	WASHER Ø16	5	
2	2701-161600-00	CONNECTOR M16×1.5-M16×1.5	2	
3	CK10-430000-30	METALLIC OIL PIPE R	1	
4	2702-381600-10	CONNECTOR G3/8-M16×1.5	1	
5	0000-000634-00	WASHER Ø18	3	
6	CK10-401000-00-01	FLOW CONTROL VALVE	1	Used up to Serial # S2318200
6a	CK10-402000-00	FLOW CONTROL VALVE	1	Used from Serial # S2318201
7	CK10-400001-30	CONNECTOR M16×1.5-G3/8	1	Used up to Serial # S2318200
7a	CK10-400001-3B	CONNECTOR M16×1.5-G3/8	1	Used from Serial # S2318201
8	0000-000044-00	WASHER Ø14	4	
9	2702-141600-00	CONNECTOR G1/4-M16×1.5	2	
10	CK10-440000-30	METALLIC OIL PIPE L	1	
11	2706-162000-00	CONNECTOR M16×1.5-M20×1.5	1	
12	CK10-460000-30	METALLIC OIL PIPE II	1	
13	2125-440000-3A-05	HOSE	1	Used up to Serial # S2213119Lift Height 126”
13a	CK10-402000-30-01	HOSE	1	Used from Serial # S2213120 Lift Height 126”
13b	CK10-402000-30-03	HOSE	1	Used on Lift Height 162”
14	CK10-450000-30	METALLIC OIL PIPE I	1	
15	2707-382000-00	CONNECTOR G3/8-M20×1.5	1	
16	0000-000242-00	BOLT M8×16	2	
17	0000-000159-00	LOCKWASHER Ø8	4	
18	0000-000176-00	FLATWASHER Ø8	3	
19	0000-000154-00	SCREW M8×35	2	Used up to Serial # S2213119
19a	0000-000321-00	SCREW M8×20	2	Used from Serial # S2213120
20	2125-400002-3A	BLOCK CROSS	1	Used up to Serial # S2213119
20a	CK10-401000-30	BLOCK CROSS	1	Used from Serial # S2213120
21	CK10-470000-30	OIL PIPE	1	
22	2402-143000-00	BOLT G1/4×30	1	
23	CK10-401000-00-02	FLOW CONTROL VALVE	1	Used up to Serial # S2318200
23a	CK10-402000-00	FLOW CONTROL VALVE	1	Used from Serial # S2318201
24	0000-000210-00	FLATWASHER Ø8	1	Used from 04-15-2013

https://truckmanualshub.com/

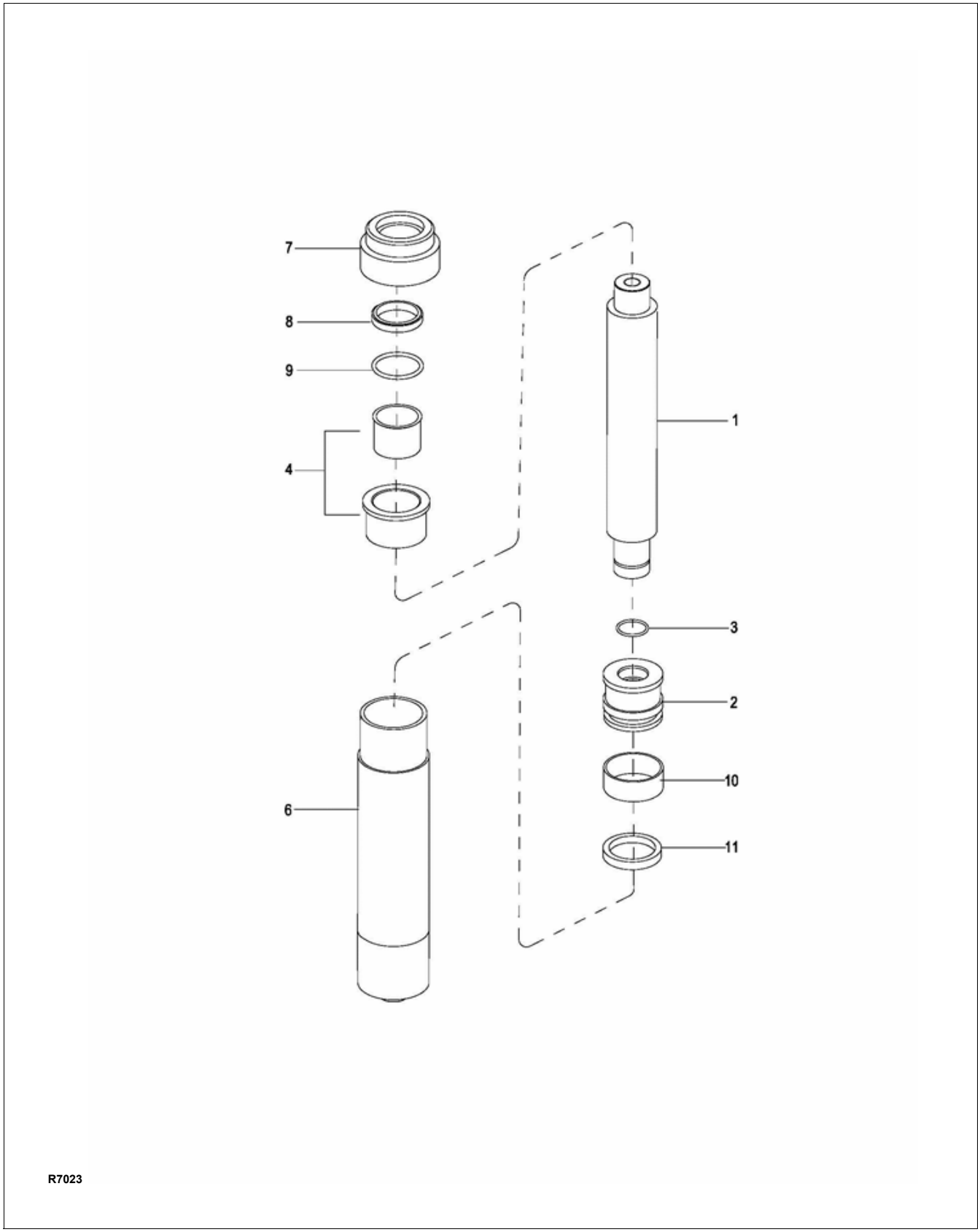

Figure 11-34 Lift Cylinder (Telescopic)

https://truckmanualshub.com/

Lift Cylinder (Telescopic)

POS.	PART NUMBER	DESCRIPTION	QTY. REQD.	NOTES
--	CK10-410000-00	LIFT CYLINDER ASSEMBLY	2	2 per truck
KIT	2125-ZZG-2A	SEAL KIT FOR LIFTING CYLINDER	1	Includes item 8,9,11
1	2125-410001-00	PISTON ROD	1	
2	2125-410002-00	PISTON	1	
3	2125-410003-00	COLLAR	1	
4	2125-410006-00	BUSHING	1	
6	CK10-411000-00	CYLINDER	1	
7	2125-410004-00	CAP	1	
8	0000-000084-00	RING WIPER 35×43×5-6.5	1	
9	0000-000370-00	O-RING 40×3.1	1	
10	2125-410005-00	RING BACK UP 50×20×2.5	1	
11	0000-000512-00	ROD PACKING 40×50×6	1	

https://truckmanualshub.com/

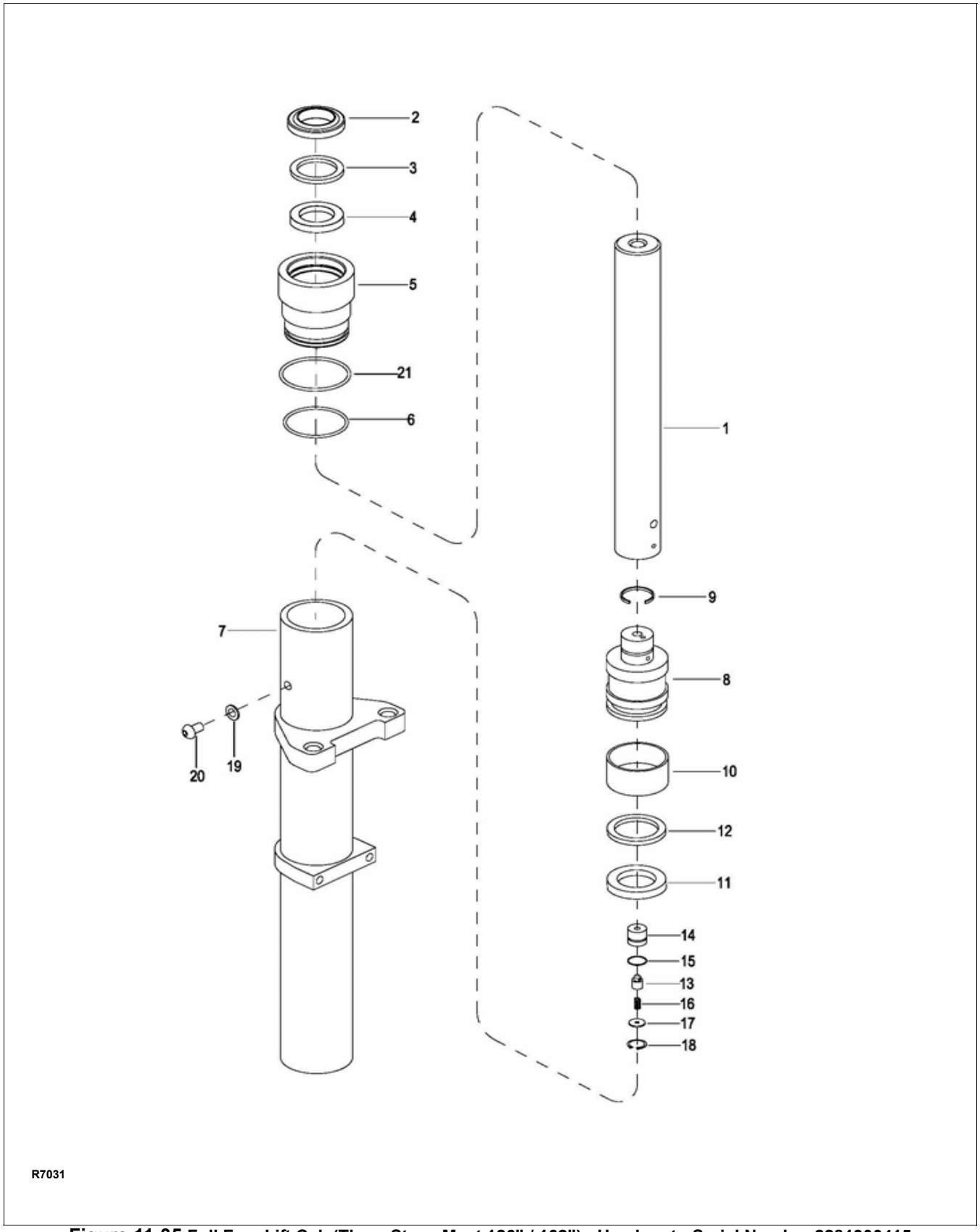

Figure 11-35 Full Free Lift Cyl. (Three Stage Mast 126” / 162”) - Used up to Serial Number 2281300415

https://truckmanualshub.com/

Full Free Lift Cyl. (Three Stage Mast 126” / 162”) - Used up to Serial Number 2281300415

POS.	PART NUMBER	DESCRIPTION	QTY. REQD.	NOTES
--	CK10-420000-3A-01	LIFT CYLINDER	1	Used on Lift Height 126”
--	CK10-420000-3A-03	LIFT CYLINDER	1	Used on Lift Height 162”
KIT	CK10-ZZG-3A	SEAL KIT FOR FREE LIFT CYLINDER	1	Includes items 2, 4, 6, 11, 15 & 21
1	CK10-420001-3A-01	PISTON ROD	1	Used on Lift Height 126”
1a	CK10-420001-3A-03	PISTON ROD	1	Used on Lift Height 162”
2	0000-001087-00	RING WIPER 50×58×5-6.5	1	
3	0000-001088-00	COLLAR 50×60×2	1	
4	0000-001089-00	ROD PACKING 50×60×6	1	
5	CK10-420002-3A	CAP	1	
6	0000-000690-00	O-RING 60×3.1	1	
7	CK10-421000-3A-01	CYLINDER TUBE	1	Used on Lift Height 126”
7a	CK10-421000-3A-03	CYLINDER TUBE	1	Used on Lift Height 162”
8	CK10-420003-3A	PISTON	1	
9	1280-430004-00	COLLAR 33×27×3	1	
10	CK10-420004-3A	RING BACK UP 55×20×2.5	1	
11	0000-001091-00	ROD PACKING 45×55×6	1	
12	0000-001090-00	COLLAR 45×55×2	1	
13	3218-420005-30	RELEASE VALVE	1	
14	3218-420004-30	SOLENOID VALVE	1	
15	0000-000344-00	O-RING 20×2.4	1	
16	CK10-420005-3A	SPRING	1	
17	3218-420006-30	COLLAR	1	
18	0000-000607-00	COLLAR Ø22	1	
19	0000-000133-00	WASHER Ø6	1	
20	0000-001137-00	SCREW M6×5	1	
21	0000-000685-00	O-RING 65×3.1	1	

https://truckmanualshub.com/

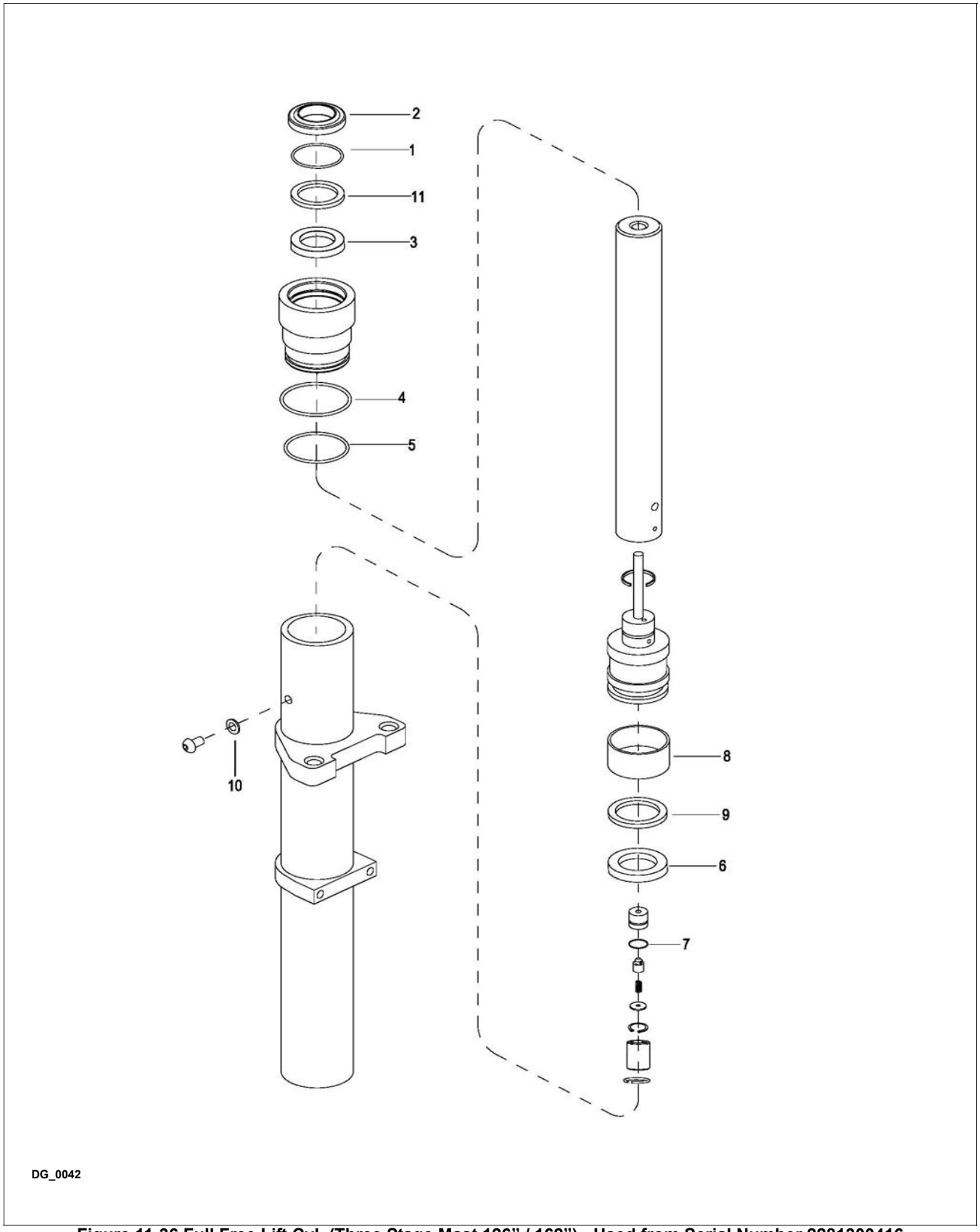

Figure 11-36 Full Free Lift Cyl. (Three Stage Mast 126” / 162”) - Used from Serial Number 2281300416

https://truckmanualshub.com/

Full Free Lift Cyl. (Three Stage Mast 126” / 162”) - Used from Serial Number 2281300416

POS.	PART NUMBER	DESCRIPTION	QTY. REQD.	NOTES
--	CK10-420000-3B-01	LIFT CYLINDER	1	Used on Lift Height 126”
--	CK10-420000-3B-03	LIFT CYLINDER	1	Used on Lift Height 162”
KIT	CK10-ZZG-3B	SEAL KIT FOR FREE LIFT CYLINDER	1	Includes items 1,2,3,4,5,6,7,8,9,10 & 11
1	--	O-ring 55×3.1		
2	--	Ring Wiper 50×58×5-6.5		
3	--	Rod Packing 50×60×6		
4	--	O-ring 65×3.1		
5	--	O-ring 60×3.1		
6	--	Rod Packing 45×55×6		
7	--	O-ring 20×2.4		
8	--	Ring Back Up 55×50×20		
9	--	Collar 45×55×2		
10	--	Washer ø6		
11	--	Collar 50×60×2		

https://truckmanualshub.com/

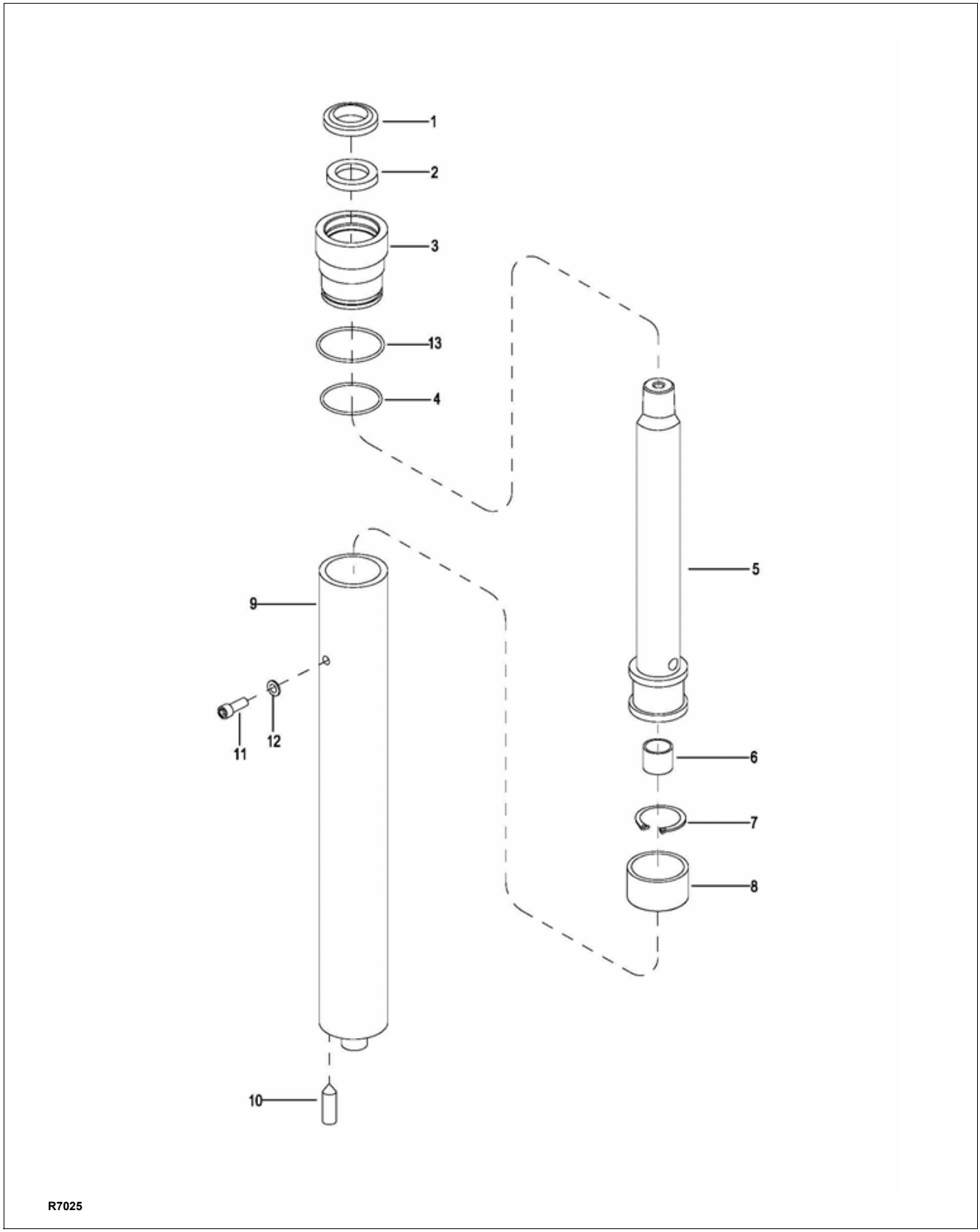

Figure 11-37 Lift Cylinder, Secondary (Three Stage Mast) - Used up to Serial Number 2281500212

https://truckmanualshub.com/

Lift Cylinder, Secondary (Three Stage Mast) - Used up to Serial Number 2281500212

POS.	PART NUMBER	DESCRIPTION	QTY. REQD.	NOTES
--	CK10-410000-3A-01	LIFT CYLINDER ASSEMBLY	2	Used on Lift Height 126”
--	CK10-410000-3A-03	LIFT CYLINDER ASSEMBLY	2	Used on Lift Height 162”
KIT	2125-ZBG-3A	SEAL KIT FOR LIFTING CYLINDER	1	Includes Item 1, 2, 4,& 13
1	0000-000084-00	RING WIPER 35×43×5-6.5	1	
2	0000-000085-00	ROD PACKING 35×45×6	1	
3	2125-410004-30	CAP	1	
4	0000-000519-00	O-RING 48×3.1	1	
5	CK10-410001-30-01	PISTON ROD	1	Used on Lift Height 126”
5a	CK10-410001-30-03	PISTON ROD	1	Used on Lift Height 162”
6	2125-410005-3A	BUSHING	1	
7	0000-000520-00	COLLAR Ø24	1	
8	2125-410002-30	RING BACK UP	1	
9	CK10-411000-30-01	CYLINDER TUBE	1	Used on Lift Height 126”
9b	CK10-411000-30-03	CYLINDER	1	Used on Lift Height 162”
10	3010-020000-16	BOLT M8X30	1	
11	0000-001092-00	SCREW M6×6	1	
12	0000-000133-00	WASHER Ø6	1	
13	0000-000609-00	O-RING 52.5×3.1	1	

https://truckmanualshub.com/

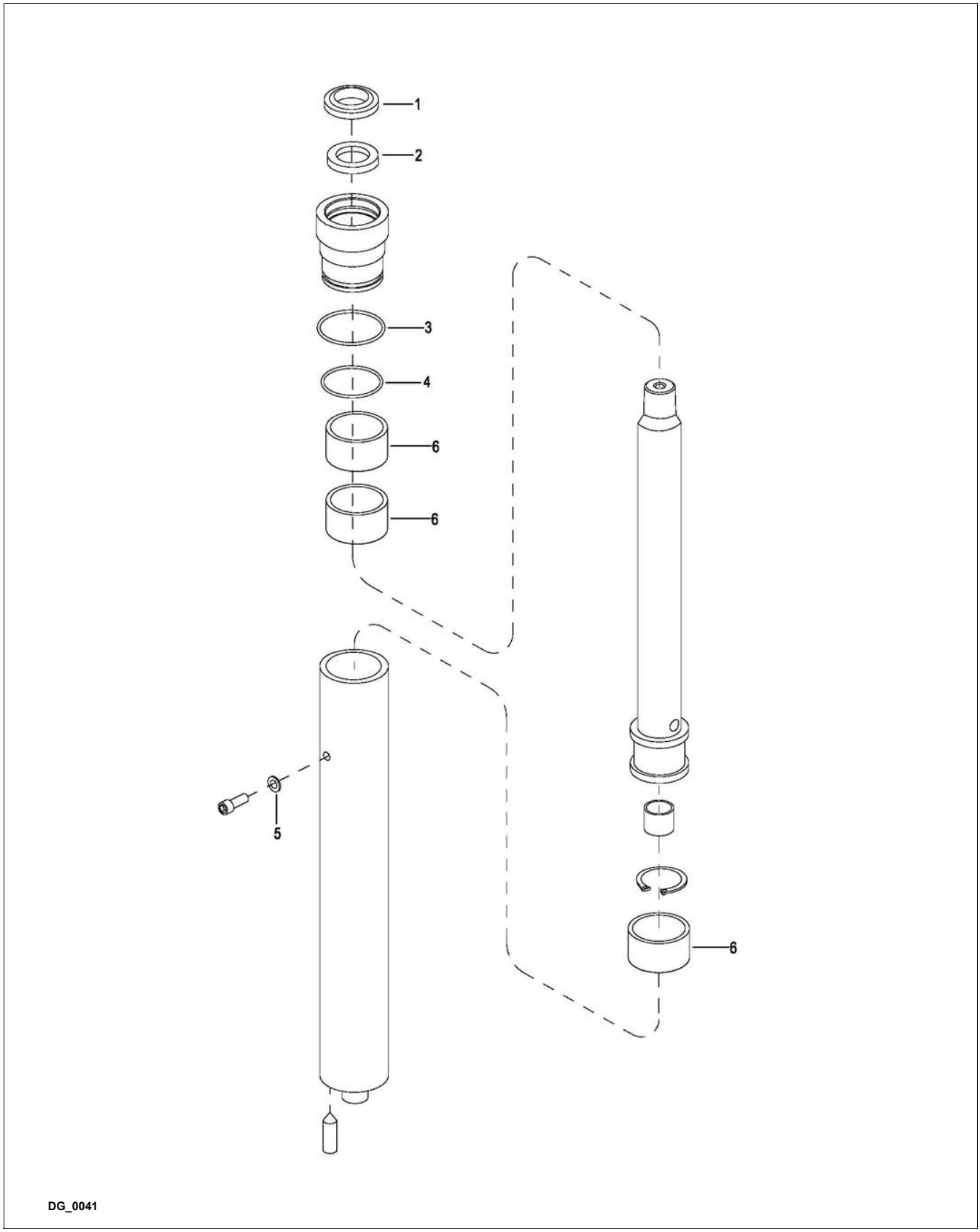

Figure 11-38 Lift Cylinder, Secondary (Three Stage Mast) - Used from Serial Number 2281500213

https://truckmanualshub.com/

Lift Cylinder, Secondary (Three Stage Mast) - Used from Serial Number 2281500213

POS.	PART NUMBER	DESCRIPTION	QTY. REQD.	NOTES
--	CK10-410000-3B-01	LIFT CYLINDER ASSEMBLY	2	Used on Lift Height 126”
--	CK10-410000-3B-03	LIFT CYLINDER ASSEMBLY	2	Used on Lift Height 162”
1	--	RING WIPER 35×43×5-6.5	1	
2	--	ROD PACKING 35×45×6	1	
3	--	O-RING 52.5×3.1	1	
4	--	O-RING 48×3.1	1	
5	--	WASHER Ø6	1	
6	--	RING BACK UP	1	
7	CK10-ZBG-3B	SEAL KIT FOR LIFTING CYLINDER	1	Includes Item 1, 2, 3,4,5 & 6

https://truckmanualshub.com/

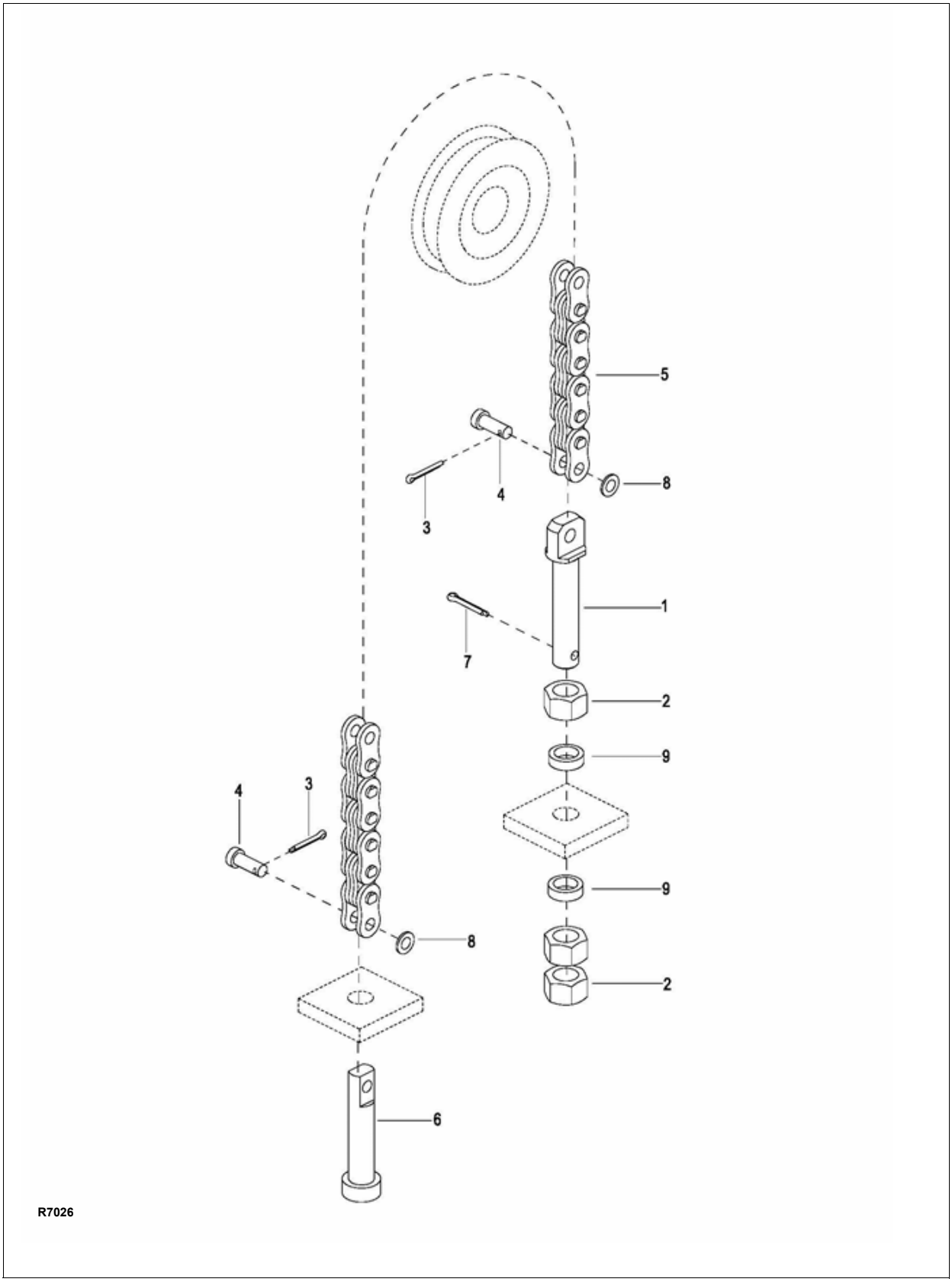

Chain Assembly

Figure 11-39 Chain Assembly

https://truckmanualshub.com/

Chain Assembly

POS.	PART NUMBER	DESCRIPTION	QTY. REQD.	NOTES
1	2125-640001-00	BOLT	1	
2	0000-000187-00	NUT M16×1.5	3	Used up to Serial # 226170084
2a	3030-250000-01	SPHERICAL NUT M16×1.5	2	Used from Serial # 226170085 - Only use the two bottom nuts.
3	3070-010000-12	COTTER PIN Ø2.5×30	2	
4	2125-640002-00	PIN	2	
5	CK10-630000-00	CHAIN ASSEMBLY	1	Used on Telescopic Mast - Lift Height 86”
5a	CK10-650000-30-01	CHAIN ASSEMBLY I - MAST CHAIN	1	Used on Three Stage Mast - Lift Height 126”
5b	CK10-660000-30-01	CHAIN ASSEMBLY II - PLATFORM CHAIN	1	Used on Three Stage Mast - Lift Height 126”
5c	CK10-650000-30-03	CHAIN ASSEMBLY I - MAST CHAIN	1	Used on Three Stage Mast - Lift Height 162”
5d	CK10-660000-30-03	CHAIN ASSEMBLY II - PLATFORM CHAIN	1	Used on Three Stage Mast - Lift Height 162”
6	2125-640003-00	CHAIN ANCHOR	1	
7	3070-010000-03	COTTER PIN Ø3.2×40	1	
8	0000-000176-00	FLATWASHER Ø8	2	
9	CK10-600007-00	WASHER	A.R.	As Required - Used from 07-10-2013

https://truckmanualshub.com/

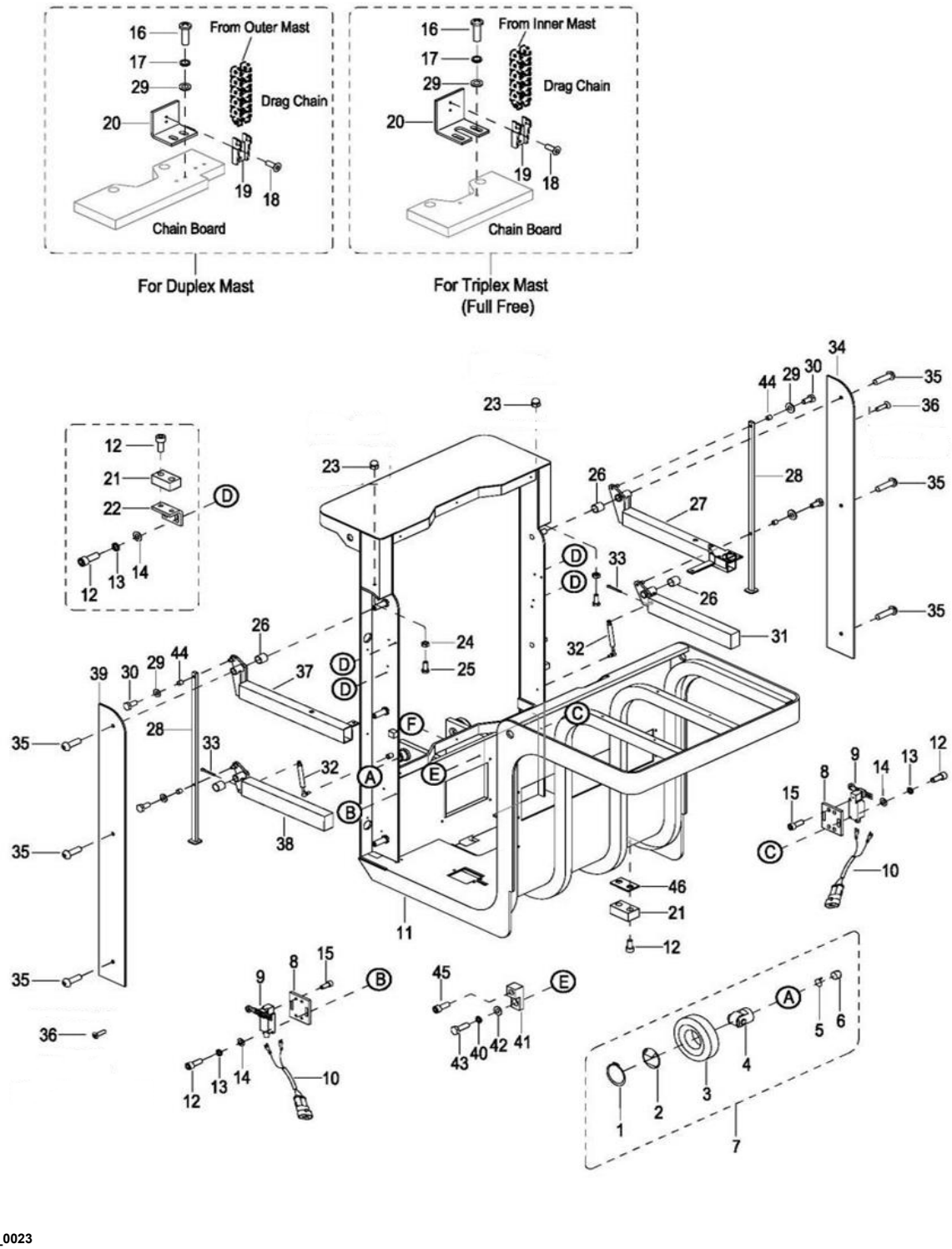

Figure 11-40 Platform Installation 86” / 126”

https://truckmanualshub.com/

Platform Installation 86” / 126”

POS.	PART NUMBER	DESCRIPTION	QTY. REQD.	NOTES
1	0000-000183-00	RETAINER RING Ø35	4	Used up to Serial # 225180090
1a	0000-001145-00	RETAINER RING Ø45	4	Used from Serial # 225180091
2	2125-612005-00	DUST SNAP	4	Used up to Serial # 225180090
2a	CK10-613004-00	DUST SNAP	4	Used from Serial # 225180091
3	2125-612001-00	MAIN ROLLER Ø78.3	4	Used up to Serial # 225180090
3a	CK10-613002-00	MAIN ROLLER Ø79.9-1S-00	4	Used from Serial # 225180091
4	2125-612002-00	ASSISTANT ROLLER	4	Used up to Serial # 225180090
4a	CK10-613003-00	ASSISTANT ROLLER	4	Used from Serial # 225180091
5	2125-612007-00	SNAP RING	4	Used up to Serial # 225180090
5a	CK10-613006-00	SNAP RING	4	Used from Serial # 225180091
6	2125-612004-00	SCREW	4	Used up to Serial # 225180090
6a	CK10-613005-00	SCREW	4	Used from Serial # 225180091
7	2125-612000-00	ROLLER ASSEMBLY Ø78.3	4	Used up to Serial # 225180090
7a	CK10-613000-00	ROLLER ASSEMBLY Ø79.8	4	Used from Serial # 225180091
8	CK10-510020-00	SWITCH MOUNTING PLATE	2	
9	2125-500003-00	PROXIMITY SWITCH	2	
10	CK10-520013-00	PROXIMITY SWITCH WIRING	2	
11	CK10-710000-00	LOADING FRAME	1	Telescopic Mast - Used up to Serial # S2316168
11a	CK10-710000-0A	LOADING FRAME	1	Telescopic Mast - Used from Serial # S2316169
11b	CK10-710000-30	LOADING FRAME FOR TRIPLEX	1	Three Stage Mast - Used up to Serial # S2316168
11c	CK10-710000-3A	LOADING FRAME	1	Three Stage Mast - Used between Serial # S2316169 - 225180090
11d	CK10-710000-40	LOADING FRAME	1	Three Stage Mast - Used from Serial # 225180091

https://truckmanualshub.com/

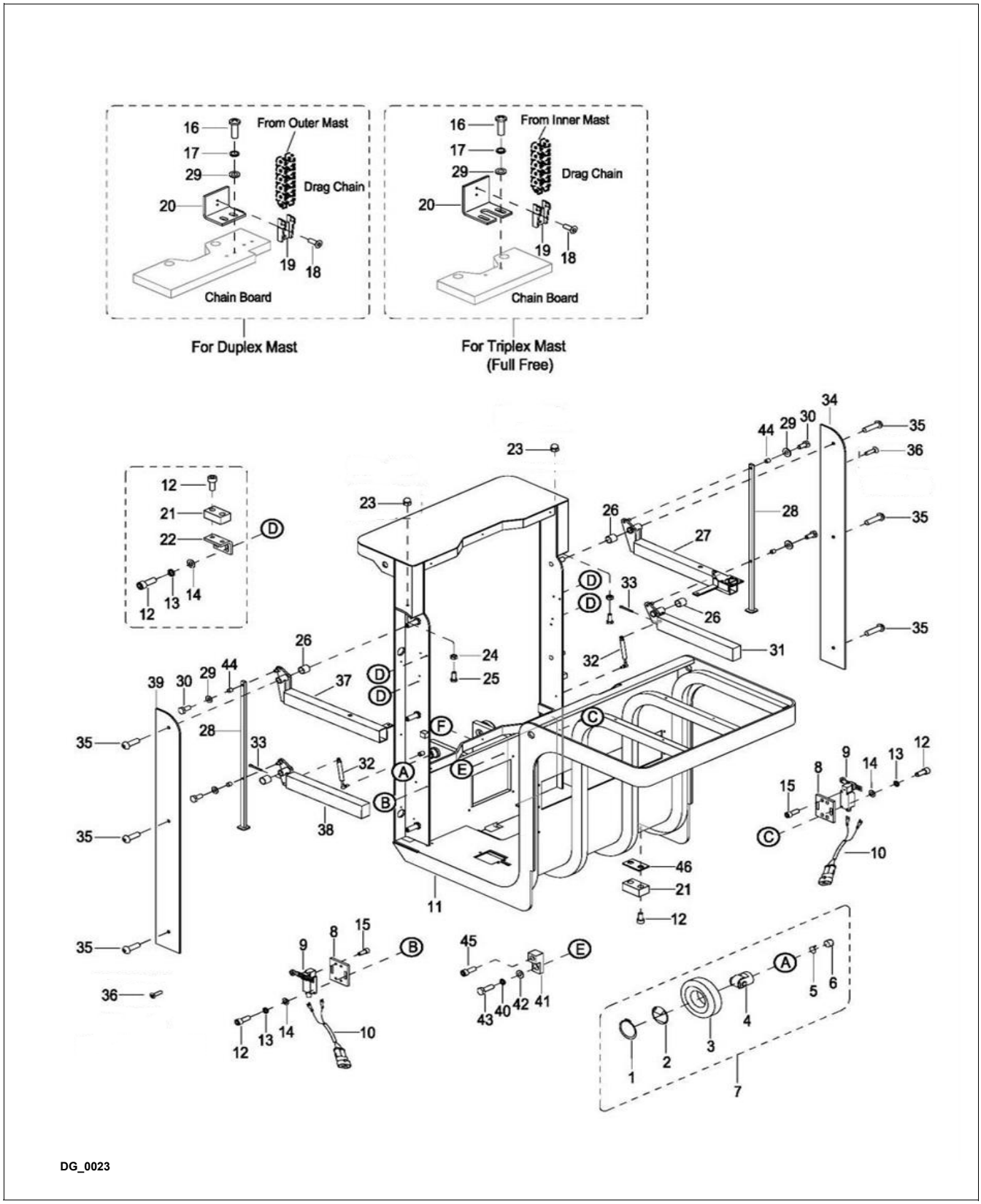

Figure 11-41 Platform Installation - Continued 86” / 126”

https://truckmanualshub.com/

Platform Installation - Continued 86” / 126”

POS.	PART NUMBER	DESCRIPTION	QTY. REQD.	NOTES
12	0000-000109-00	SCREW M8×16	28	
13	0000-000159-00	LOCKWASHER Ø8	12	
14	0000-000176-00	FLATWASHER Ø8	12	
15	0000-000004-00	SCREW M5×12	8	
16	0000-000618-00	SCREW M6×12	2	
17	0000-000056-00	LOCKWASHER Ø6	2	
18	0000-000651-00	SCREW M4×8	2	
19	CK10-510004-00	DRAG HEAD I	1	
20	CK10-510031-00	DRAG CHAIN MOUNTING PLATE VI	1	Used on Telescopic Mast
20a	CK10-510012-00	DRAG CHAIN MOUNTING PLATE VI	1	Used on Three Stage Mast
21	2125-600005-00	BUFFER BLOCK	8	
22	CK10-700006-00	MOUNTING PLATE	4	
23	0000-000866-00	NUT M12	2	Used up to Serial # S2316168
24	0000-000165-00	NUT M12	2	
25	0000-000623-00	BOLT M12 x 30	2	
26	CK11-700006-0A	BUSHING	4	
27	CK10-730000-10	LEFT ARMREST	1	
28	CK10-790000-00	SUPPORTING ROD	2	Used up to Serial # S2213129
28a	CK10-791000-00	SUPPORTING ROD	2	Used from Serial # S2213130
29	0000-000380-00	FLATWASHER Ø6	8	
30	0000-000264-00	BOLT M6×12	4	
31	CK10-750000-10	LEFT GATE	1	
32	CK11-700007-00	GAS SPRING	2	Used up to Serial # 226150177
32a	CK11-700007-10	GAS SPRING	2	Used from Serial # 226150178
33	0000-000296-00	COTTER PIN Ø2×20	2	
34	CK10-700001-00	COVER PLATE L	1	Used up to Serial # S2316168
34a	CK10-700001-0B	COVER PLATE L	1	Used from Serial # S2316169
35	0000-000655-00	SCREW M10×25	6	
36	0000-000090-00	SCREW M6×12	8	Used up to Serial # S2316168
37	CK10-740000-10	RIGHT ARMREST	1	
38	CK10-760000-10	RIGHT GATE	1	
39	CK10-700002-00	COVER PLATE R	1	Used up to Serial # S2316168
39a	CK10-700001-0B	COVER PLATE L	1	Used from Serial # S2316169
40	0000-000060-00	LOCKWASHER Ø12	1	
41	CK10-700008-00	PROXIMITY BLOCK	1	Used up to Serial # S2212053
41a	CK10-700008-0A	PROXIMITY BLOCK	1	Used from Serial # S2212054

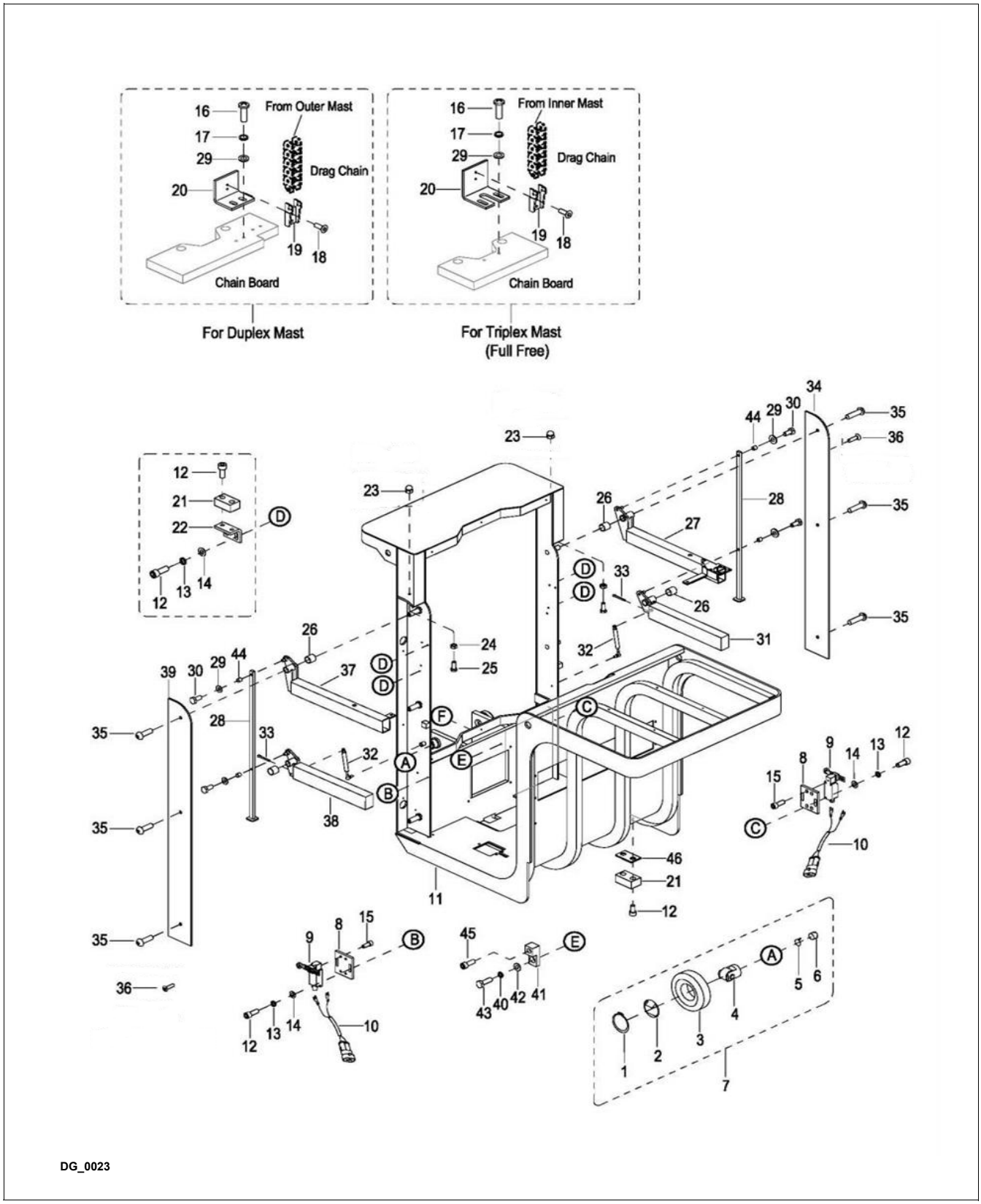

Figure 11-42 Platform Installation - Continued 86” / 126”

https://truckmanualshub.com/

Platform Installation - Continued 86” / 126”

POS.	PART NUMBER	DESCRIPTION	QTY. REQD.	NOTES
42	0000-000222-00	FLATWASHER Ø12	1	
43	0000-000285-00	BOLT M12×35	1	
44	2028-019000-70	BUSHING 1010	4	
45	0000-000322-00	SCREW M8×25	1	Used from Serial # S2212054
46	1220-100012-80	PLATE	A.R.	As Required - Used from Serial # S2211059

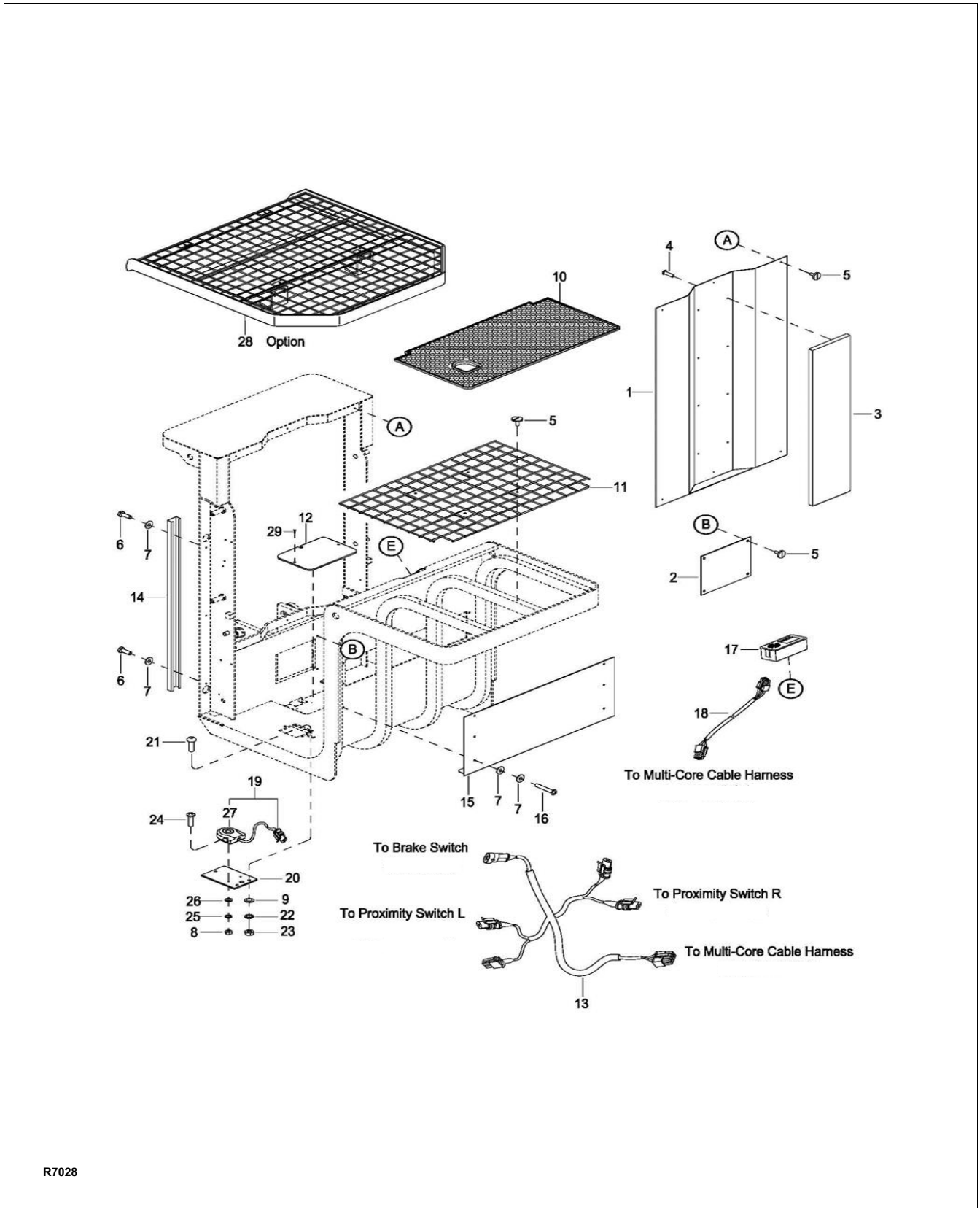

Figure 11-43 Platform Assembly 86” / 126”

https://truckmanualshub.com/

Platform Assembly 86” / 126”

POS.	PART NUMBER	DESCRIPTION	QTY. REQD.	NOTES
1	CK10-770000-0A	BOARD	1	
2	CK10-700005-00	SEAL PLATE	1	
3	4230-100004-00	CUSHION	1	
4	0000-000646-00	SCREW M4×10	8	
5	2108-100006-00	SCREW M6×10	14	
6	0000-000275-00	BOLT M6×30	4	
7	0000-000123-00	FLATWASHER Ø6	16	
8	0000-000924-00	NUT M3	2	Used up to Serial # S2212053
8a	0000-000209-00	NUT M4	2	Used from Serial # S2212054
9	0000-000380-00	FLATWASHER Ø6	3	
10	CK10-700004-00	FOOT PAN	1	
11	CK10-720000-00	NETWORK MASK	1	Used up to Serial # 226150177
11a	CK10-720000-50	NETWORK MASK	1	Used from Serial # 226150178
12	CK10-700003-00	COVER	1	Used up to Serial # 226150177
12a	CK10-700003-30	COVER	1	Used from Serial # 226150178
13	CK11-520004-00	INTERLOCK,PROXIMITY SWITCH WIRE	1	
14	CK11-700003-00	WIRE GROOVE	2	
15	CK10-700007-00	SEAL PLATE	1	Used up to Serial # 226150177
15a	CK10-700007-50	SEAL PLATE	1	Used from Serial # 226150178
16	0000-000993-00	SCREW M6×55	6	
17	CK11-560001-00	METER	1	
18	CK10-520008-00	METER WIRE HARNESS	1	
19	CK10-520012-00	BRAKE SWITCH ASSEMBLY	1	
20	CK10-510017-00	BRAKE SWITCH PLATE	1	Used up to Serial # S2212053
20a	CK11-510014-00	BRAKE SWITCH PLATE	1	Used from Serial # S2212054
21	0000-000498-00	SCREW M6×30	3	
22	0000-000056-00	LOCKWASHER Ø6	3	
23	0000-000166-00	NUT M6	3	
24	0000-000037-00	SCREW M3×12	2	Used up to Serial # S2212053
24a	3020-040000-05	SCREW M4×12	2	Used from Serial # S2212054
25	0000-000995-00	LOCKWASHER Ø3	2	Used up to Serial # S2212053
25a	0000-000122-00	LOCKWASHER Ø4	2	Used from Serial # S2212054
26	0000-000991-00	FLATWASHER Ø3	2	Used up to Serial # S2212053
26a	0000-000702-00	FLATWASHER Ø4	2	Used from Serial # S2212054
27	--	BRAKE SWITCH	1	See position # 19 (Assembly)
28	--	TRAY ASSEMBLY	1	This is an option that will derate the truck. Please contact the factory for information.
29	0000-000090-00	SCREW M6X12	2	

https://truckmanualshub.com/

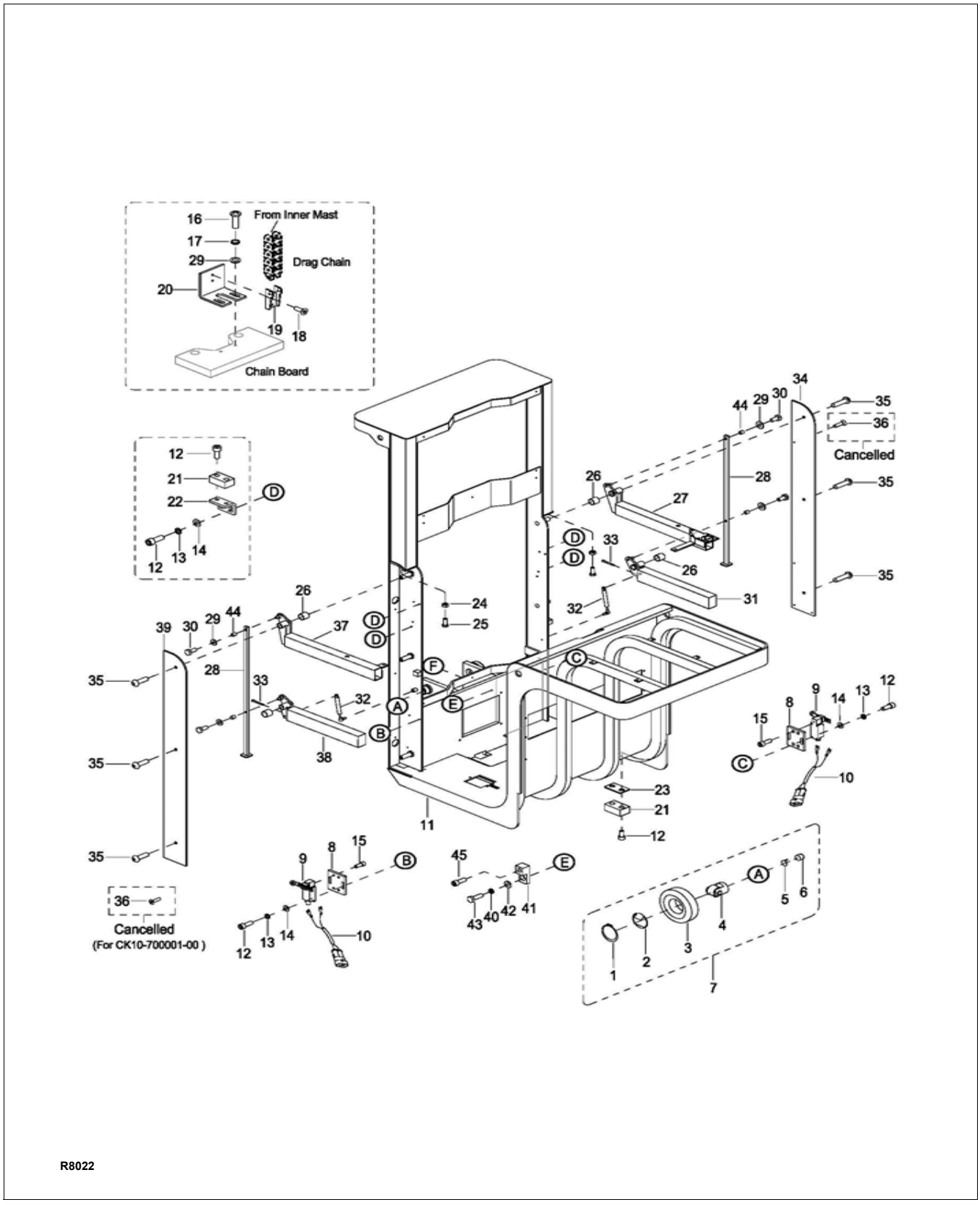

Figure 11-44 Platform Installation 162”

https://truckmanualshub.com/

Platform Installation 162”

POS.	PART NUMBER	DESCRIPTION	QTY. REQD.	NOTES
1	0000-000183-00	RETAINER RING Ø35	4	Used up to Serial # 226120087
1a	0000-001145-00	RETAINER RING Ø45	4	Used from Serial # 226120088
2	2125-612005-00	DUST SNAP	4	Used up to Serial # 226120087
2a	CK10-613004-00	DUST SNAP	4	Used from Serial # 226120088
3	2125-612001-00	MAIN ROLLER Ø78.3	6	Used up to Serial # S2318200
3a	CK10-612001-00	MAIN ROLLER Ø79.8	6	Used between Serial # S2318201 - F24120093
3b	2125-612001-00	MAIN ROLLER Ø78.3	6	Used between Serial # F24120094-226120087
3c	CK10-613002-00	MAIN ROLLER Ø79.9-1S-00	6	Used from Serial # 226120088
4	2125-612002-00	ASSISTANT ROLLER	4	Used up to Serial # 226120087
4a	CK10-613003-00	ASSISTANT ROLLER	4	Used from Serial # 226120088
5	2125-612007-00	SNAP RING	4	Used up to Serial # 226120087
5a	CK10-613006-00	SNAP RING	4	Used from Serial # 226120088
6	2125-612004-00	SCREW	4	Used up to Serial # 226120087
6a	CK10-613005-00	SCREW	4	Used from Serial # 226120088
7	2125-612000-00	ROLLER ASSEMBLY Ø78.3	6	Used up to Serial # S2318200
7a	CK10-612000-00	ROLLER ASSEMBLY Ø79.8	6	Used between Serial # S2318201 - F24120093
7b	2125-612000-00	ROLLER ASSEMBLY Ø78.3	6	Used between Serial # F24120094-226120087
7c	CK10-613000-00	ROLLER ASSEMBLY Ø79.9-1S-00	6	Used from Serial # 226120088
8	CK10-510020-00	SWITCH MOUNTING PLATE	2	
9	2125-500003-00	PROXIMITY SWITCH	2	
10	CK10-520013-00	PROXIMITY SWITCH WIRING	2	
11	CK10-710000-50	LOADING FRAME	1	Used up to Serial # S2316168
11a	CK10-710000-5A	LOADING FRAME	1	Used between Serial # S2316169 - 226120087
11b	CK10-710000-80	LOADING FRAME	1	Used from Serial # 226120088
12	0000-000109-00	SCREW M8×16	28	
13	0000-000159-00	LOCKWASHER Ø8	12	
14	0000-000176-00	FLATWASHER Ø8	12	
15	0000-000004-00	SCREW M5×12	8	
16	0000-000618-00	SCREW M6×12	2	
17	0000-000056-00	LOCKWASHER Ø6	2	
18	0000-000416-00	SCREW M4×8	2	
19	CK10-510004-00	DRAG HEAD I	1	
20	CK10-510012-00	FIXED ANGLE	1	

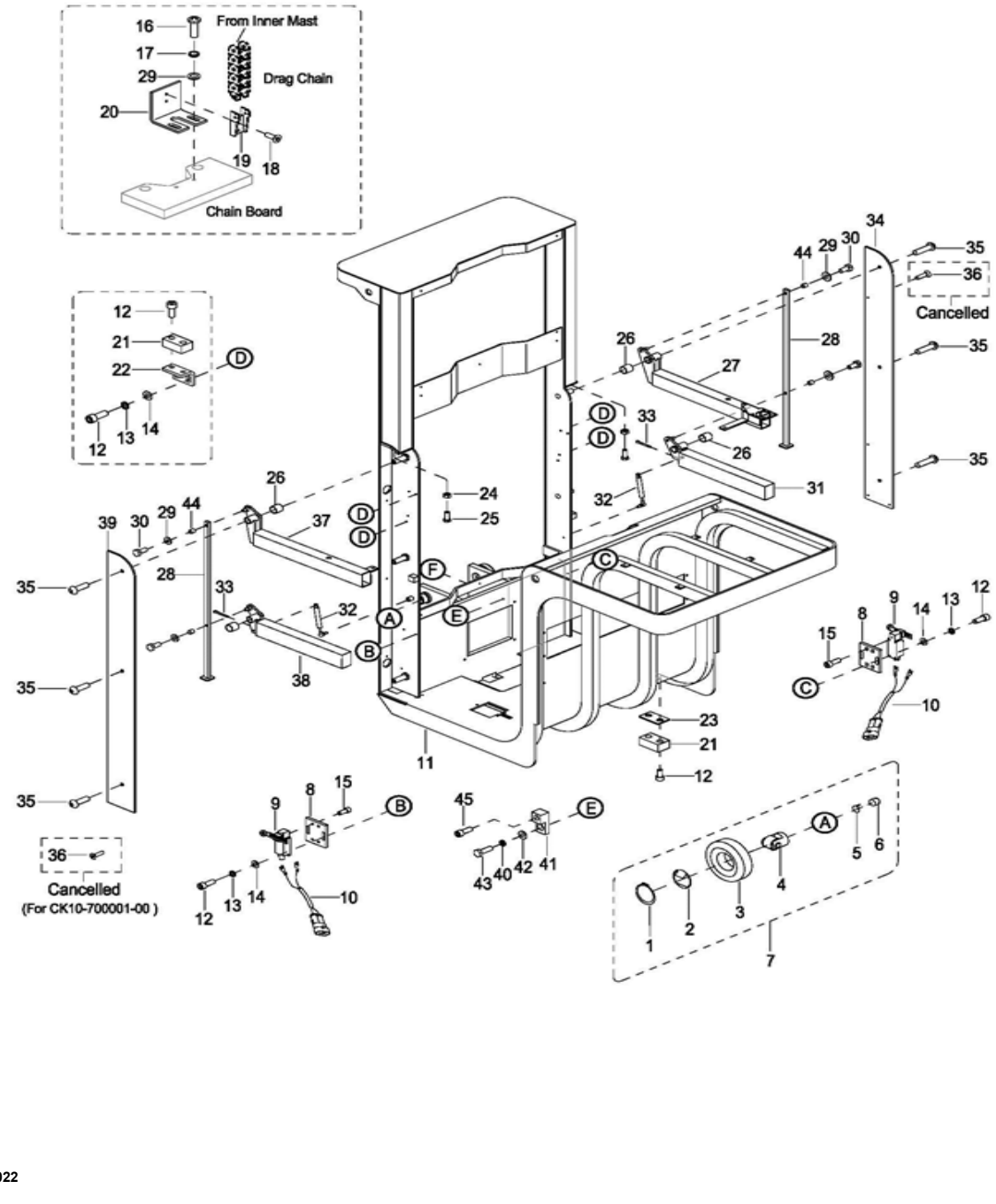

Figure 11-45 Platform Installation - Continued 162”

https://truckmanualshub.com/

Platform Installation - Continued 162”

POS.	PART NUMBER	DESCRIPTION	QTY. REQD.	NOTES
21	2125-600005-00	BUFFER BLOCK	8	
22	CK10-700006-00	MOUNTING PLATE	4	
23	CK10-100010-00	PLATE	A.R.	As Required - Used from Serial # S2211059
24	0000-000165-00	NUT M12	2	
25	0000-000623-00	BOLT M12×30	2	
26	CK11-700006-0A	BUSHING COB	4	
27	CK10-730000-10	LEFT ARMREST	1	
28	CK10-791000-00	SUPPORTING ROD	2	
29	0000-000380-00	FLATWASHER Ø6	8	
30	0000-000264-00	BOLT M6×12	4	
31	CK10-750000-10	SQUARE TUBE L	1	
32	CK11-700007-00	GAS SPRING	2	Used up to Serial # 226150177
32a	CK11-700007-10	GAS SPRING	2	Used from Serial # 226150178
33	0000-000296-00	COTTER PIN Ø2×20	2	
34	CK10-700001-00	COVER PLATE L	1	Used up to Serial # S2316168
34a	CK10-700001-0B	COVER PLATE L	1	Used from Serial # S2316169
35	0000-000655-00	SCREW M10×25	6	
36	0000-000090-00	SCREW M6×12	8	Used up to Serial # S2316168
37	CK10-740000-10	RIGHT ARMREST	1	
38	CK10-760000-10	SQUARE TUBE R	1	
39	CK10-700002-00	COVER PLATE R	1	Used up to Serial # S2316168
39a	CK10-700001-0B	COVER PLATE L	1	Used from Serial # S2316169
40	0000-000060-00	LOCKWASHER Ø12	1	
41	CK10-700008-0A	PROXIMITY BLOCK	1	
42	0000-000222-00	FLATWASHER Ø12	1	
43	0000-000285-00	BOLT M12×35	1	
44	CK10-700009-00	BUSHING 1010	4	Used from Serial # S2213130
45	0000-000322-00	SCREW M8×25	1	

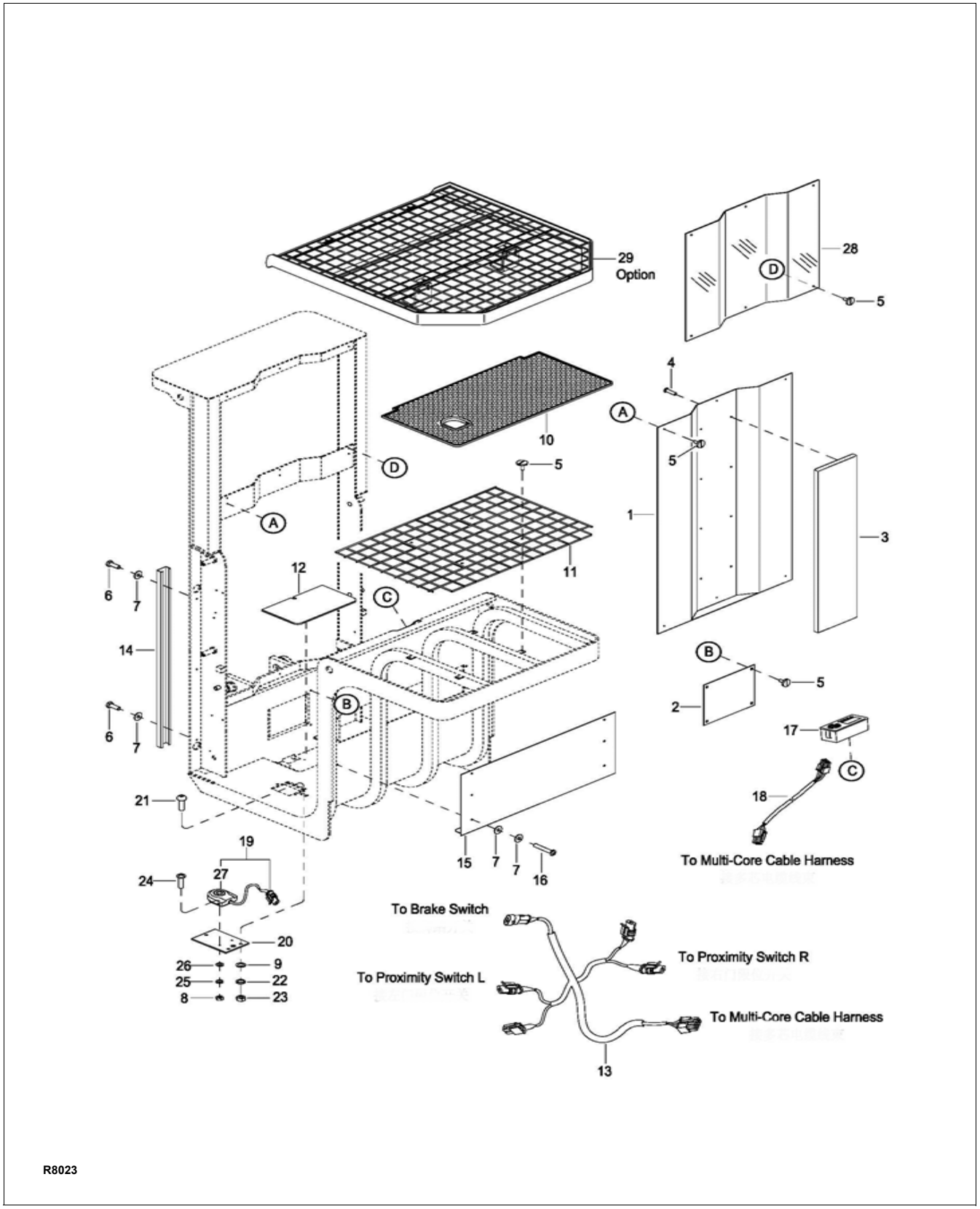

Figure 11-46 Platform Assembly 162”

https://truckmanualshub.com/

Platform Assembly 162”

POS.	PART NUMBER	DESCRIPTION	QTY. REQD.	NOTES
1	CK10-770000-0A	BOARD	1	
2	CK10-700005-00	SEAL PLATE	1	
3	4230-100004-00	CUSHION	1	
4	0000-000646-00	SCREW M4×10	8	
5	2108-100006-00	SCREW M6×10	18	
6	0000-000275-00	BOLT M6×30	4	
7	0000-000123-00	FLATWASHER Ø6	16	
8	0000-000209-00	NUT M4	2	
9	0000-000380-00	FLATWASHER Ø6	3	
10	CK10-700004-00	FOOT PAN	1	
11	CK10-720000-50	NETWORK MASK	1	
12	CK10-700003-50	COVER	1	Used up to Serial # 226180178
12a	CK10-700003-30	COVER	1	Used from Serial # 226180179
13	CK11-520004-00	INTERLOCK,PROXIMITY SWITCH WIRE	1	
14	CK11-700003-00	WIRE GROOVE	2	
15	CK10-700007-50	SEAL PLATE	1	
16	0000-000993-00	SCREW M6×55	6	
17	CK11-560001-00	METER	1	
18	CK10-520008-00	METER WIRE HARNESS	1	
19	CK10-520012-00	BRAKE SWITCH ASSEMBLY	1	
20	CK11-510014-00	BRAKE SWITCH PLATE	1	
21	0000-000498-00	SCREW M6×30	3	
22	0000-000056-00	LOCKWASHER Ø6	3	
23	0000-000166-00	NUT M6	3	
24	3020-040000-05	SCREW M4×12	2	
25	0000-000122-00	LOCKWASHER Ø4	2	
26	0000-000702-00	FLATWASHER Ø4	2	
27	CK10-560011-00	BRAKE SWITCH	1	
28	CK10-700001-50	WINDSHIELD	1	
29	--	TRAY ASSEMBLY	1	This is an option that will derate the truck. Please contact the factory for information.

https://truckmanualshub.com/

Big Lift LLC