https://truckmanualshub.com/

SkyTrak

LEGACY SERIES

OWNERS/OPERATORS MANUAL

Model 10054
(S/N 19080 thru 19987
and S/N 0160002340 thru 0160029586)

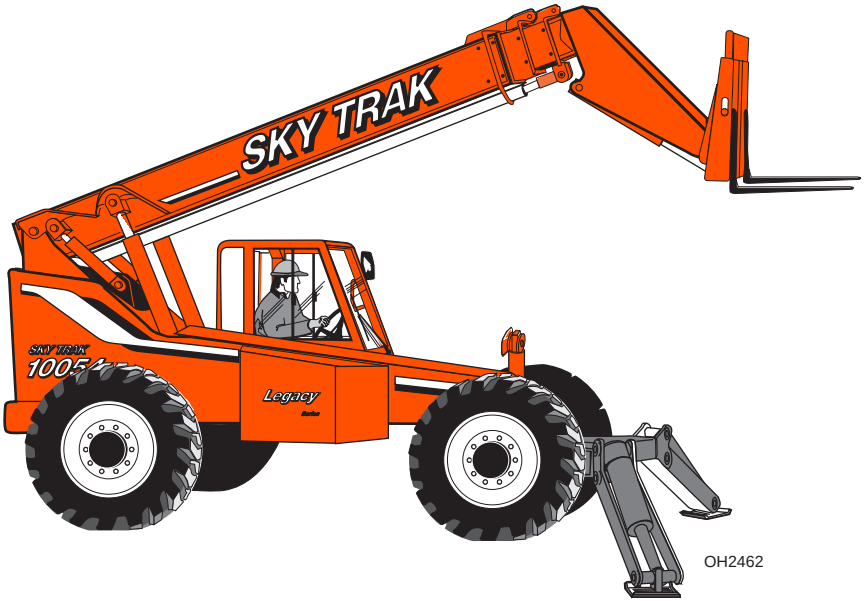

OH2462

Keep this manual with the vehicle at all times.

8990502 C
Printed in U.S.A. 2/07

https://truckmanualshub.com/

WARNING: **Improper operation of this vehicle can cause injury or death. Only trained and authorized operators should operate this vehicle.**

Before starting the engine, do the following:

1. **Read this owner/operators manual.**
2. **Read all the safety decals on the vehicle.**
3. **Clear the area of other persons.**

Learn and practice safe use of vehicle controls in a safe, clear area before you operate this vehicle on a worksite.

It is your responsibility to observe applicable laws and regulations and to follow manufacturer's instructions on vehicle operation and maintenance.

CALIFORNIA

Proposition 65 Warning

Diesel Engine exhaust and some of its constituents are known to the State of California to cause cancer, birth defects and other reproductive harm.

CALIFORNIA

Proposition 65 Warning

Battery posts, terminals and related accessories contain lead and lead compounds, chemicals known to the State of California to cause cancer and birth defects or other reproductive harm. Wash hands after handling.

https://truckmanualshub.com/

Table of Contents

Introduction
The Manual.....2
Replacement Parts.....2
Reports.....2

Safety Practices
Disclaimer.....3
Hazard Classification System.....3
Accident Prevention Tags.....5
New or Additional Operators 5
Instructional Symbols 6
Hazard Symbols 7
Avoidance Symbols.....8
Avoidance Symbols (cont'd).....9
Personal Considerations 10
Operational Considerations.....14
Equipment Considerations 21

Operation
Operator Controls.....24
Instruments and Indicators 37
Optional Controls.....47
Pre-Operation Inspection.....57
Normal Starting.....58
Cold Starting.....59
Jump Starting 60
Refueling 61
Stabil-TRAK System.....63
Operating.....68
Using The Capacity Chart 76
Fork Ratings 89
How To Pick, Carry & Place A Load.....90
Elevating Personnel.....90
Using Other Attachments 95
Shut-Off 96

Emergency Operations
Towing A Disabled Vehicle.....97
Emergency Boom Lowering 99

General Maintenance
General Maintenance 112
Maintenance Schedule And Checklist 113
1. Lubrication Points.....118
2. Air Cleaner And Restriction Indicator.....120
3. Engine Cooling System 124
4. Engine Oil And Filter 127
5. Engine Fuel System 131
6. Engine Fan Belt.....136
7. Hydraulic Oil and Filter.....137
8. Transmission Oil and Filter 141
9. Axle Oil.....144
10. Brake Disk Inspection 146
11. Wheel End Oil 150
12. Wheels and Tires 152
13. Batteries 154
14. Fuse and Relay Replacement 156
15. Boom Chains and Wear Pads 161
Storage and Transport 183
Storage.....183
Transport.....184

Test Procedures
Stabil-TRAK System Test.....185
Boom/Outrigger Interlock System Test 189
Parking Brake/Transmission De-Clutch Test Procedures....191
Four Wheel Steer Indexing Procedure.....193

Specifications
Fluid & Lubrication Capacities...194
Tires 195
Weights 195
Vehicle Dimensions.....196
Electrical System.....197
Engine 198

Index.....199
Accident Prevention Tags

© 2003 JLG Industries, Inc.

https://truckmanualshub.com/

The Manual

This Owners/Operators Manual provides the information you need to properly operate and maintain this vehicle.

IMPORTANT! *Before you operate this vehicle, read this manual completely and carefully so you will understand the safety instructions and the operation of the controls and safety equipment. You must comply with all* ***Danger****,* ***Warning****, and* ***Caution*** *notices. They are for your benefit.*

All reference to the right side, left side, front, or rear are given from the operator's seat looking in a forward direction.

JLG Industries, Inc. is hereinafter referred to as **JLG**.

Replacement Parts

For easy reference when ordering replacement parts or making service inquiries on this vehicle, record its model and serial number on the back cover of this manual. The serial number is stamped into the serial number plate (1) which is located on the vehicle's frame.

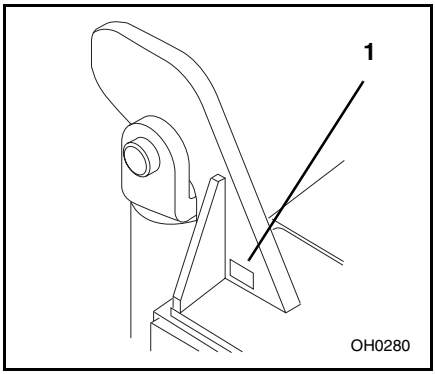

IMPORTANT! *The replacement of any part on this vehicle by anything other than a* ***JLG*** *authorized replacement part may adversely affect the performance, durability or safety of this vehicle and may void the warranty.* ***JLG*** *assumes no liability for unauthorized replacement parts which adversely affect the performance, durability or safety of this vehicle.*

Reports

IMPORTANT! *A Warranty Registration form must be filled out by the* ***Sky Trak*** *Distributor, signed by the purchaser, and returned to* ***JLG*** *once the product is sold and/or put into service. This report activates the warranty period, assuring that your claims during the warranty period will be processed promptly. To guarantee full warranty service, make sure your* ***Sky Trak*** *Distributor has returned the business reply card of this form to* ***JLG****.*

https://truckmanualshub.com/

Disclaimer

JLG reserves the right to make changes on and to add improvements upon its products at any time without public notice or obligation. **JLG** also reserves the right to discontinue manufacturing any product at its discretion at any time.

NOTICE: Under OSHA rules, it is the responsibility of the employer to provide operator training. Successful completion and certification of Safety Training for Rough Terrain Forklifts is required. Operator Training Kits are available by calling Ken Cook Company at (414) 466-6060. An order form for these kits is available through our website, http://www.jlg.com.

The information in this manual does not replace any safety rules and laws used in your area. Before operating this vehicle, learn the rules and laws for your area. Make sure the vehicle has the correct equipment according to these rules and laws.

Your safety and the safety of others in the worksite depend significantly upon your knowlege and understanding of all correct operating practices and procedures for this vehicle.

WARNING: **DO NOT** modify or alter (weld, drill, etc.) any part of this vehicle without consulting **JLG**. Modifications can weaken the structure creating a hazard that can cause death or serious personal injury.

Hazard Classification System

OP0330

This safety alert symbol is used with the following signal words to attract your attention to messages found within the manual and on hazard decals located on the vehicle. They are reproduced herein and pertain to proper operation and procedure messages contained throughout the manual. The message that follows the symbol contains important information about Safety. To avoid possible death or serious personal injury, carefully read and follow the messages! Be sure to fully understand the potential causes of death or injury.

https://truckmanualshub.com/

Signal Word

A signal word is a distinctive word located on hazard decals and used throughout this manual that alerts the viewer to the existence of and relative degree of the hazard.

DANGER:

The signal word "**DANGER**" indicates an imminently hazardous situation which, if not avoided, will result in death or serious personal injury.

WARNING:

The signal word "**WARNING**" indicates a potentially hazardous situation which, if not avoided, could result in death or serious personal injury.

CAUTION:

The signal word "**CAUTION**" indicates a potentially hazardous situation which, if not avoided, may result in minor or moderate injury.

CAUTION:

The signal word "**CAUTION**", used without the safety alert symbol, indicates a potentially hazardous situation which, if not avoided, may result in property damage.

For safe maintenance of the vehicle, read, understand and follow all DANGER, WARNING and CAUTION information.

https://truckmanualshub.com/

Accident Prevention Tags

Before beginning any maintenance or service, place an Accident Prevention Tag (1) on both the starter key switch (2) and the steering wheel (3), stating that the vehicle should not be operated. Actual Accident Prevention Tags, which can be punched out and used, are included as the last page of this manual. Retain these Accident Prevention Tags for reuse at a later date.

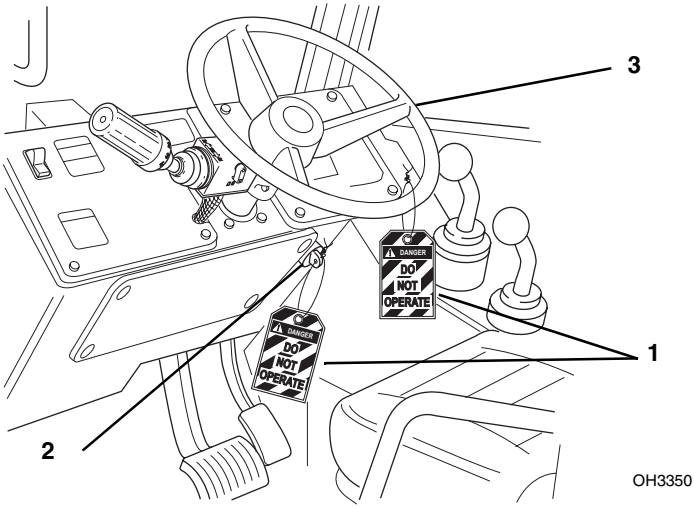

New or Additional Operators

At the time of original purchase, the purchaser of this vehicle was instructed by the seller on its proper use. If this vehicle is to be used by an employee or is loaned or rented to someone other than the purchaser, make certain that the new operator is trained, in accordance with the OSHA regulations referenced on page 3, and reads and understands this Operators Manual before operating the vehicle.

In addition, make sure that the new operator has completed a walk-around inspection of the vehicle, is familiar with all decals on the vehicle, and has demonstrated the correct use of all controls.

https://truckmanualshub.com/

Instructional Symbols

The following symbol definitions will help you understand all hazard related decals and load charts used on this vehicle.

OP0330

Safety Alert Symbol

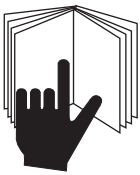

OH2100

Read Operator's Manual

OH2090

Fasten Seat Belt

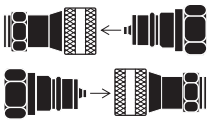

OH3100

This Symbol Signifies That Specific Attachments Must Only Be Used On Vehicles Equipped With Auxiliary Hydraulics.
Always Connect Couplers.

https://truckmanualshub.com/

Hazard Symbols

Lead Acid Batteries Generate Explosive Gases

Rotating Fan Blades Can Cut

Vehicle Tipover Can Crush

Rotating Belts Can Cut Or Entangle

Electrocution Can Cause Death Or Serious Injury

Vehicle Roll Away Can Cause Death Or Serious Injury

AVOID CRUSHING, Falling Off Vehicle Can Cause Death Or Serious Injury

ENGINE EXPLOSION Can Result In Death Or Serious Injury

Swinging Loads Can Cause Vehicle Tipover Which Can Result In Death Or Serious Injury

FALLING OFF ATTACHMENT Can Result In Death Or Serious Injury

VEHICLE TIPOVER, Outriggers Over Holes Or Voids Can Cause Death Or Serious Injury.

https://truckmanualshub.com/

Avoidance Symbols

OH2320

Keep Lit Cigarettes Away

OU1520

Stop Operation At This Point

OH2330

Keep Flames and Ignition Sources Away

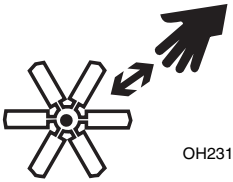

OH2310

Keep Away From Rotating Fan Blades

OU1510

Prohibition Symbol. DO NOT Operate

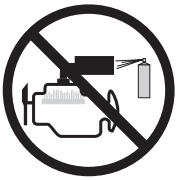

OU1460

DO NOT Use Ether Or Other High Energy Starting Aids. Engine Equipped With Grid Heating System.

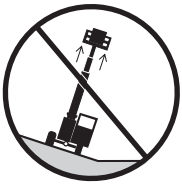

OH2280

Do Not Raise Boom While On A Slope

OH2270

Do Not Travel With Boom Raised

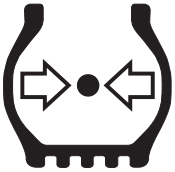

OH2290

Maintain Proper Air Pressure In Tire

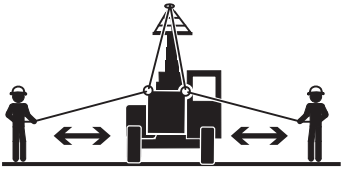

OH3120

To Avoid Vehicle Tipover ALWAYS:

- **Travel Slowly**
- **Rig Properly**
- **Use Two Tethers**

https://truckmanualshub.com/

Avoidance Symbols (cont'd)

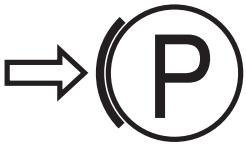

OH2260

Engage Parking Brake

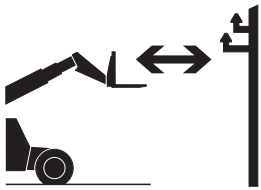

OH2250

Keep Clear Of Power Lines

OH2240

Do Not Travel With Personnel In Work Platform

OH2230

Carry No Riders

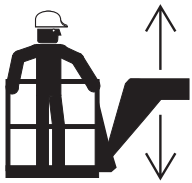

OH2170

Use Only Compliant Work Platforms To Raise Or Lower Personnel

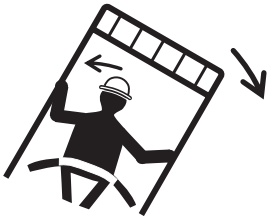

OH2220

DO NOT JUMP

- **Brace Yourself and Stay With Vehicle**
- **Keep Seat Belt Fastened**
- **Hold On Firmly**
- **Lean Away From The Point Of Impact**

OH3170

ALWAYS Fully Lower Outriggers Onto Solid Surfaces

https://truckmanualshub.com/

Personal Considerations

1. Seat Belt

Always fasten the seat belt before starting the engine.

2. Clothing and Safety Gear

DO NOT wear loose clothing or jewelry that can get caught on controls or moving parts. Wear protective clothing and personal safety gear issued or called for by job conditions.

3. Dismounting

DO NOT get off the vehicle until you:

- level the vehicle,
- ground the carriage,
- place the travel select lever in (N) NEUTRAL,
- place the neutral lock lever in (N) NEUTRAL LOCK,
- engage the parking brake switch,
- turn the engine OFF, if appropriate,
- unbuckle the seat belt,
- exit the vehicle using the hand holds.

OH1650

4. Chemical Hazards

A. Exhaust Fumes

Fumes from the engine exhaust can cause death or serious personal injury. **DO NOT** operate vehicle in an enclosed area without a ventilation system capable of routing the hazardous fumes outdoors.

B. Explosive Fuel

Engine fuel is ***flammable*** and can cause a fire and/or an explosion. Avoid danger by keeping sparks, open flames and smoking materials away from the vehicle and from fuel during refueling or when servicing the fuel system. Know where fire extinguishers are kept on the worksite and how to use them.

https://truckmanualshub.com/

C. Ether or High Energy Starting Aids

The engine utilizes a grid heating system inside the induction manifold for cold starting conditions.

WARNING: This diesel engine uses a grid heating system inside the induction manifold. **DO NOT** use ether or any high energy fuels to assist starting. An explosion may cause death or serious personal injury or engine damage.

DO NOT use ether or any other high energy starting aids during cold starting. An engine explosion can result in death or serious personal injury.

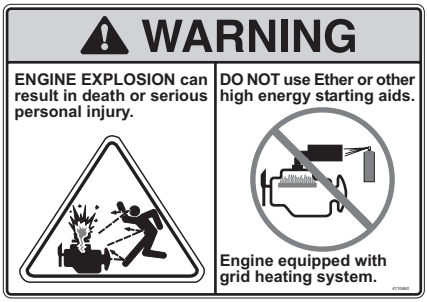

OU1470

D. Hydraulic Fluid

DO NOT attempt to repair or tighten any hydraulic hoses or fittings while the engine is running or when the hydraulic system is under pressure. Fluid in the hydraulic system is under enough pressure that it can penetrate the skin causing death or serious personal injuries.

HOT HYDRAULIC FLUID WILL CAUSE SEVERE BURNS. Wait for fluid to cool down before disconnecting lines.

DO NOT use your hand to check for leaks. Use a piece of cardboard or paper to search for leaks. Wear gloves to protect hands from spraying fluid.

Hydraulic fluid can cause permanent eye injury. Wear appropriate eye protection and stop engine. Relieve pressure before disconnecting lines by moving all joysticks back and forth through all functions.

If anyone is injured by or if any hydraulic fluid is injected into the skin, obtain medical attention immediately or gangrene may result.

https://truckmanualshub.com/

E. Batteries

The following WARNING is intended to supplement and does not replace the warnings and information provided on the battery by the battery manufacturer.

When jump starting the vehicle, carefully follow instructions found under “Jump Starting” on page 60.

OS0621

Keep sparks, flames and lit smoking materials away from the battery at all times. Lead acid batteries generate ***explosive*** gases. Severe chemical burns can result from improper handling of battery electrolyte. Wear safety glasses and proper protective gear when handling batteries to prevent electrolyte from coming in contact with eyes, skin or clothing.

Battery Electrolyte First Aid:

- **External Contact —** Flush with water.
- **Eyes —** Flush with water for at least 15 minutes and get medical attention immediately.
- **Internal Contact —** Drink large quantities of water. Follow with Milk of Magnesia, beaten egg or vegetable oil. Get medical attention immediately.

IMPORTANT! *In case of internal contact,* ***DO NOT*** *give fluids that would induce vomiting!*

https://truckmanualshub.com/

5. Moving Parts Hazard

DO NOT place limbs near moving parts. Severing of any body part can result.

Turn OFF engine and wait until fan and belts stop moving before servicing.

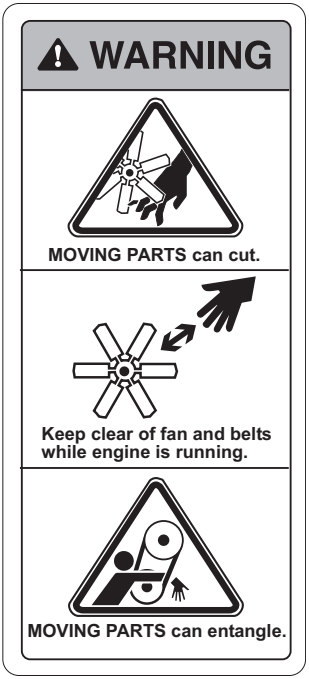

OT0810

6. Lowering Boom or Falling Load Hazard

DO NOT get under a raised boom unless it is blocked up safely. Always empty the attachment of any load and block the boom up before doing any servicing that would require the boom to be raised.

NEVER allow anyone to walk or stand under the boom. A lowering boom or falling load can result in death or serious personal injury.

https://truckmanualshub.com/

Operational Considerations

1. Preparation and Prevention

Know the location and function of all vehicle controls.

Make sure all persons are away from the vehicle and that the travel select lever is in the (N) NEUTRAL position with the parking brake switch engaged before starting the engine.

Holes, obstructions, debris and other worksite hazards can cause death or serious personal injury. Always walk around and look for these and other hazards before operating the vehicle in a new worksite.

Prevent accidents when you move the vehicle around the worksite. Know the rules for movement of people and vehicles on the worksite. Have a person act as a lookout for you. Follow the instructions of signals and signs.

DO NOT operate the vehicle unless all hazard and instructional decals are in place and readable. (Replace all missing, illegible, or damaged decals.)

2. Clearances

Look out for and avoid other personnel, machinery and vehicles in the area. Use a spotter if you do not have a clear view of conditions that affect clearances. Travel with the boom fully retracted and lowered as far as possible while still maintaining enough ground clearance for conditions.

Always check boom clearances carefully before driving underneath door openings, bridges, etc.

Always check for power lines when raising the boom. Beware of overhead wires. Contact with electrical power lines can result in electrocution. See “Electrocution Hazards” on page 15.

3. Visual Obstruction

Dust, smoke, fog, etc. can decrease vision and cause an accident. Always stop or slow the vehicle until the obstruction clears and the worksite is visible again. Have a lookout person assist you.

Where the load will obstruct the operator’s vision, it is recommended that the vehicle be operated in REVERSE, looking backwards in the direction of travel. Travel at a slower speed and get someone to direct you.

https://truckmanualshub.com/

4. Underground Hazards

Know the location of all underground hazards before operating this vehicle in a new area or worksite. Electrical cables, gas and water pipes, sewer, or other underground objects can cause death or serious personal injury. Contact your local underground utility service or diggers hotline to mark all underground hazards.

5. Electrocution Hazards

NEVER operate this vehicle in an area where overhead power lines, overhead or underground cables, or other power sources may exist without first requesting that the appropriate power or utility company de-energize the lines, or take other suitable precautions.

OS0063

https://truckmanualshub.com/

6. Elevating Personnel

Use only a compliant work platform meeting the ASME B56.6 standards for lifting and lowering personnel. **NEVER** transport personnel in a work platform for even the shortest distance.

Death or serious personal injury can occur if these rules are not obeyed. Riders can fall and be crushed or run over. Avoid accidents.

For other specific precautions, see “Elevating Personnel” on page 90.

OH3180

OU0620

7. Tip Over Hazard

OS0086

Traveling with the boom raised is dangerous and can cause tipover. Keep the boom as low as possible. Travel with extreme caution and at the slowest possible speed.

Keep the vehicle under control at all times. When negotiating turns, slow down and turn the steering wheel in a smooth sweeping motion. Avoid jerky turns, starts or stops. Reduce vehicle speed on rough ground and slopes.

https://truckmanualshub.com/

DO NOT exceed the rated lift capacity of the vehicle as structural damage and unstable conditions will result.

To ensure that the vehicle is positioned in the most stable condition before operating an attachment, use the frame sway control (frame tilt) to level the vehicle. The vehicle is level when the frame level indicator gauge reaches (0°) zero degrees.

If the vehicle cannot be leveled using the frame sway control, reposition the vehicle.

Frame swaying left or right with the boom raised above horizontal is dangerous. Always use the frame sway control to level the vehicle before raising the boom above horizontal, with or without a load. If the vehicle cannot be leveled using frame sway control, reposition the vehicle.

OH0801

Lowering outriggers over holes or on soft terrain can compromise the stability of the vehicle which could result in vehicle tipover. For optimum stability, lower the outriggers just far enough until the front of the vehicle starts to raise and maintains a firm footing.

NEVER attempt to move the vehicle after the outriggers have been lowered.

https://truckmanualshub.com/

8. Emergency Exit Rear Window

The rear window (1) in the enclosed cab can be used as an emergency exit by removing the latch pin (2) located on the window latch (3). The window is then free to swing open.

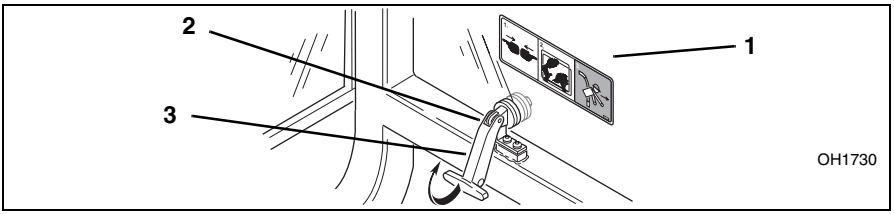

9. Tire Pressure

OS0085

MAINTAIN proper tire pressures at all times. An underpressurized tire(s) adversely affects vehicle stability. If proper tire pressures are not maintained, this vehicle can tip over.

To ensure proper vehicle stability, check all four tire pressures before operating the vehicle.

https://truckmanualshub.com/

10. Do Not Jump

OH3190

If a vehicle ever becomes unstable and starts to tip over:

- BRACE YOURSELF and STAY WITH THE VEHICLE,
- KEEP YOUR SEAT BELT FASTENED,
- HOLD ON FIRMLY and
- LEAN AWAY FROM THE POINT OF IMPACT.

Indecision and trying to escape from a tipping vehicle can result in death or serious personal injury.

11. Slopes

DO NOT park the vehicle on an incline and leave it unattended.

- Driving across a slope is dangerous, as unexpected changes in the slope can cause tipover. Ascend or descend slopes slowly and with caution.
- Ascend or descend slopes with the heavy end of the vehicle pointing up the slope.

NOTE: *The rear of the vehicle is normally considered the heavy end unless the carriage is fully loaded. In this case the front of the vehicle is now the heavy end.*

- Unloaded vehicles should be operated on all slopes with the carriage pointing down the slope.
- On all slopes, the load must be tilted back and raised only as far as necessary to clear the ground.
- When operating on a downhill slope, reduce travel speed and downshift to a low gear to permit compression braking by the engine and aid the application of the service brakes.

https://truckmanualshub.com/

12. Falling Load Hazard

DO NOT exceed the total rated load capacity of the specific type fork being used. Each fork is stamped with a maximum load capacity. If the capacity is exceeded, forks may break. See “Fork Ratings” on page 89.

DO NOT downshift at a high ground speed. Sudden slowing can cause the load to drop off the forks.

13. Ventilation

Sparks from the electrical system and the engine exhaust can cause an explosion. **DO NOT** operate this vehicle in an area with flammable dust or vapors unless good ventilation has removed the hazard.

Carbon monoxide fumes from the engine exhaust can cause suffocation in an enclosed area. Good ventilation is very important when operating this vehicle.

https://truckmanualshub.com/

Equipment Considerations

WARNING: **DO NOT** modify or alter (weld, drill, etc.) any part of this vehicle without first consulting **JLG**. Modifications can weaken the structure creating a hazard that can cause death or serious personal injury.

DO NOT by-pass or disconnect any electrical or hydraulic circuits. Consult the **JLG** Service Department or your local **Sky Trak** Distributor if any circuit is malfunctioning.

DO check for frayed or cut seat belt webbing, damaged buckles or loose mounting brackets. Replace immediately if required.

ALWAYS wear a seat belt when operating the vehicle.

DO check tire pressure on all four tires. Add air if required.

DO check the condition of all four rims. Check for bent flanges and/or bead mounting areas.

DO check the parking brake/transmission de-clutch operation. Refer to the test procedures on page 191. Repair immediately if required.

DO keep all non-skid surfaces clean and free of debris. Replace if worn, damaged or missing.

DO check the condition of decals. Replace decals if missing, damaged or illegible. The following pages show the proper location of the decals.

https://truckmanualshub.com/

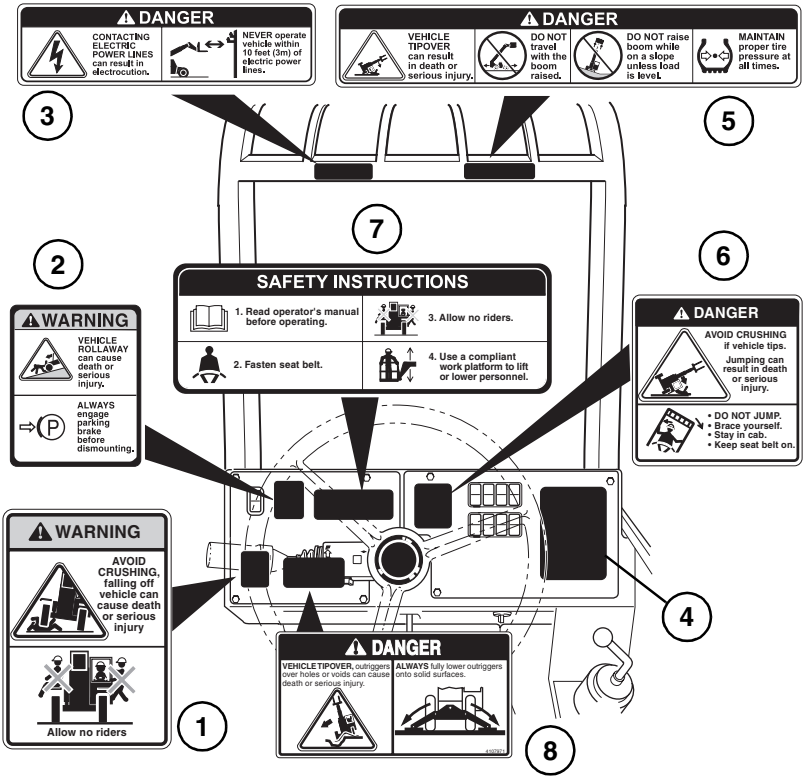

OH2733

Item	Part Number	Quantity	Decal Description
1	4110188	1	No Riders Warning
2	4110188	1	Vehicle Rollaway Warning
3	4108991	1	Electrocution Danger
4	7301678	1	Load Chart Booklet
5	4110137	1	Tipover danger
6	4110187	1	Do Not Jump Danger
7	4110188	1	Safety Instructions
8	4107971	1	Outrigger Over Holes Danger

https://truckmanualshub.com/

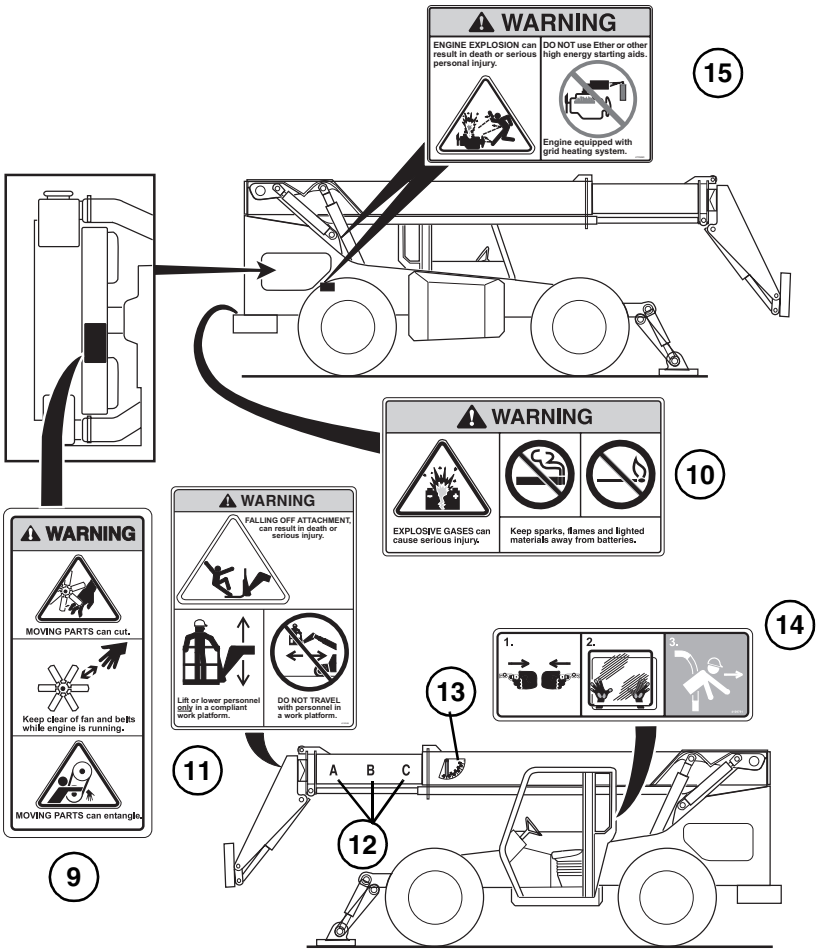

OH1754

Item	Part Number	Quantity	Decal Description
9	4110184	2	Moving Parts Warning
10	4110172	1	Explosive Gases Warning
11	4110389	1	Carrying Personnel Warning
12	4107442	1	Boom Extend Letters
13	4105262	1	Boom Angle Indicator
14	4109791	1	Emergency Exit (Enclosed Cab Only)
15	4110460	2	Ether Starting Warning

https://truckmanualshub.com/

Operator Controls

Accelerator Pedal

Pressing down the accelerator pedal (1) increases engine and hydraulic speed of the vehicle. The pedal is spring-loaded to return to idle speed.

NOTE: *The accelerator pedal is also used to activate the Cummins ECM Diagnostic system. With the ignition switch in the RUN position, depress and release the pedal three times to activate the system.*

Service Brake Pedal

Pressing down the brake pedal (2) decreases the speed of the vehicle by applying the service brakes located in the axles. In the event of engine power loss, the service brake pedal can also be used for braking. It also activates and locks the rear axle to frame lock system when boom angles are greater than 40°, as long as the pedal is depressed.

Steering Wheel

Turning the steering wheel (3) to the left or right steers the vehicle in the corresponding direction. Any one of the steering modes are selectable. Refer to “Steering Select Switch” on page 26.

Horn Button

Pressing the button (4) sounds the horn.

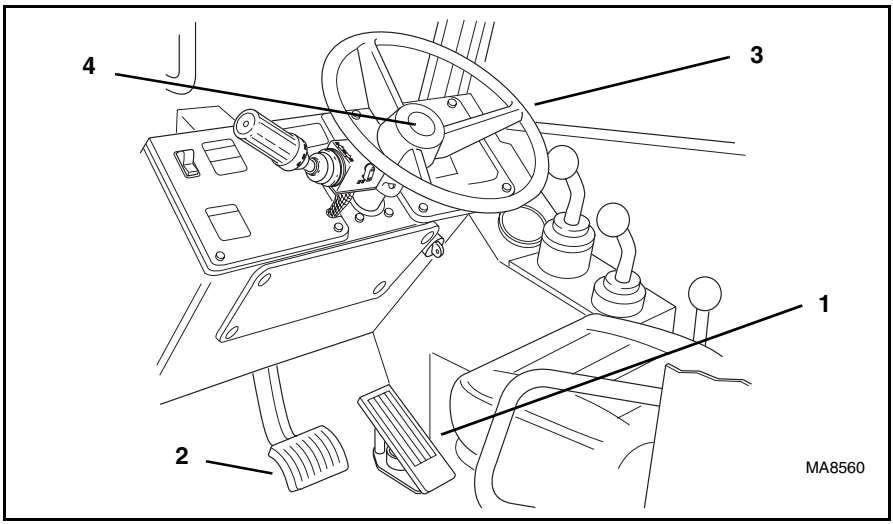

https://truckmanualshub.com/

Ignition Switch

Using the ignition switch key (5), the switch may be turned clockwise from the OFF (6) position to the RUN (7) and START (8) positions. The START position is spring-loaded to return to the RUN position and must be manually held in place for starting.

OFF position (6) — The entire electrical system is shut down.

RUN position (7) — All controls and indicators are operable.

START position (8) — Engages starter motor to crank the engine when the parking brake switch is engaged and the transmission is in NEUTRAL.

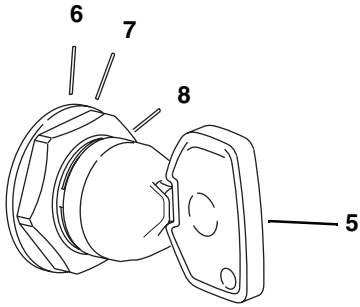

OT0680

https://truckmanualshub.com/

Steering Select Switch

This vehicle has one steering select switch (1) with three positions. The switch is located in the lower switch bank (2) on right side dash panel.

Refer to “Steering Modes” on page 70 for detailed information.

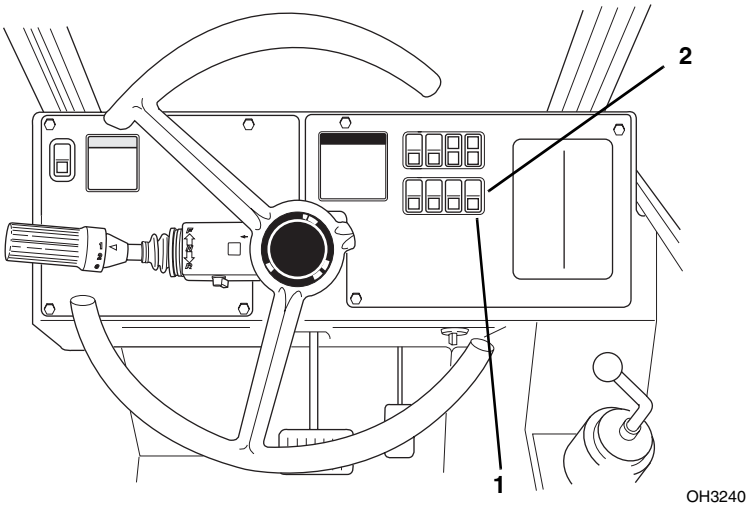

https://truckmanualshub.com/

Park Brake Switch

The Parking Brake Switch (3) has two positions:

ENGAGED .....toggle switch downward

OS0121 DISENGAGED.....toggle switch upward OS1323

The Parking Brake Switch (3) must be ENGAGED to permit engine starting. A red LED, on the parking brake switch, and a light in the instrument cluster will indicate the brake is ENGAGED.

The parking brake may be used to stop in an EMERGENCY situation. However, use caution because the stop will be abrupt and the operator and the load may be jolted forward unexpectedly.

With boom angles greater than 40°, this switch activates the locked mode of the Stabil-TRAK system.

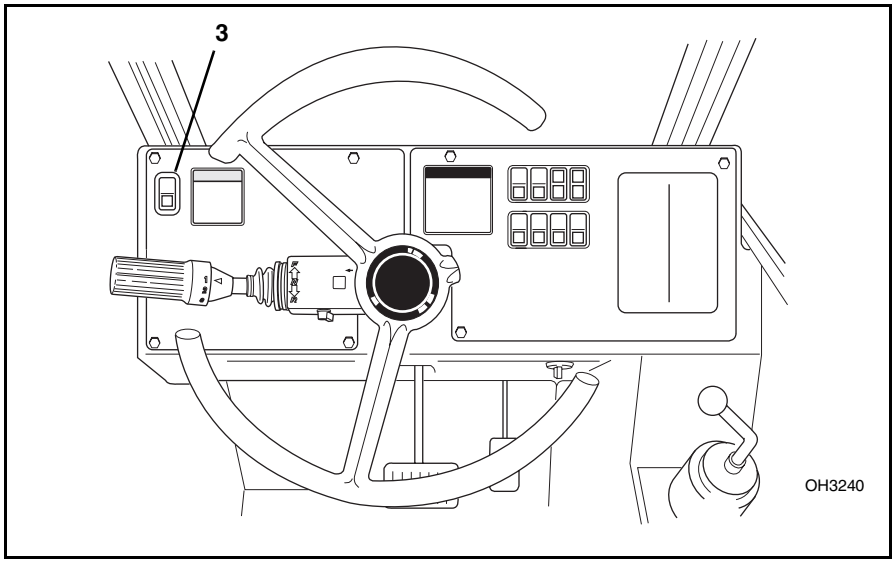

https://truckmanualshub.com/

Neutral Lock Lever

The Travel Select Lever (1) is equipped with a neutral lock. The Neutral Lock Lever (2) locks the Travel Select Lever in NEUTRAL or unlocks the Travel Select Lever so that it can be moved into the FORWARD or REVERSE drive position.

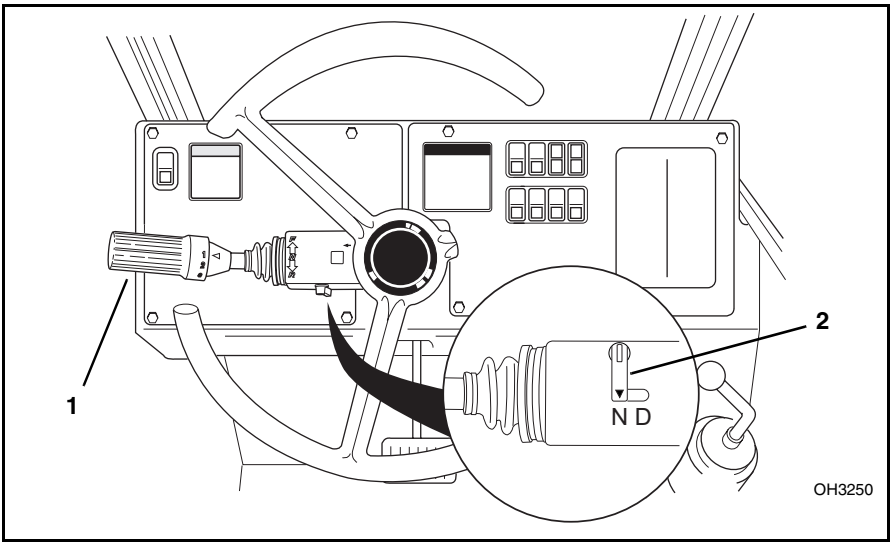

To lock the Travel Select Lever (1) in the NEUTRAL position, place the lever in the NEUTRAL position and move the Neutral Lock Lever (2) to the (N) NEUTRAL LOCK position.

To unlock, move the Neutral Lock Lever to the (D) DRIVE position.

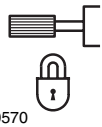

OT0570

N = NEUTRAL LOCK ..... all the way LEFT

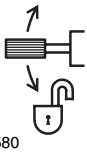

OT0580

D = DRIVE ..... all the way RIGHT

https://truckmanualshub.com/

Travel Select Lever

The Travel Select Lever (3) has three positions to select direction of travel:

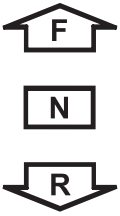

OS0340

F = FORWARD (4) ..... all the way FORWARD

N = NEUTRAL (5) ..... CENTER position

R = REVERSE (6).....all the way REARWARD

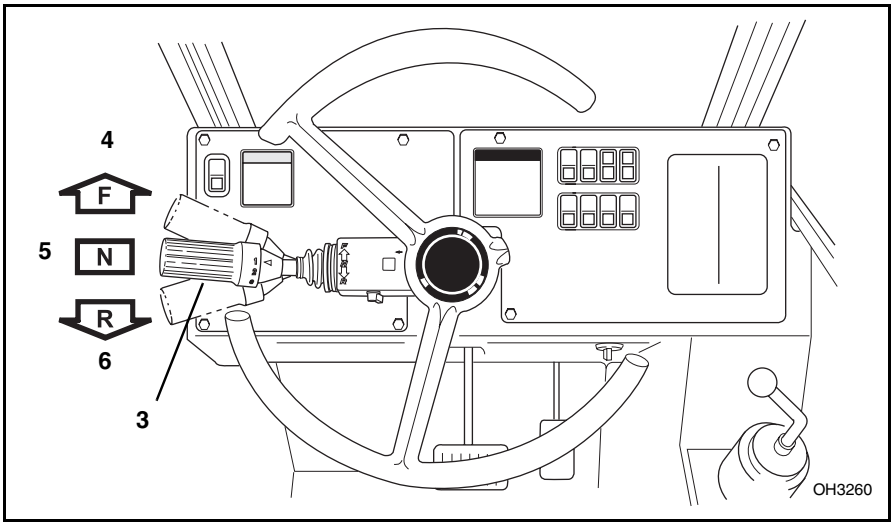

To change travel selections, move the lever FORWARD or REARWARD to the desired selection.

When the Travel Select Lever is shifted to REVERSE, the back-up alarm will automatically sound.

NOTE: *The Travel Select Lever must be in the (N) NEUTRAL position to permit engine starting and when boom angles are greater than 40°, shifting into NEUTRAL activates the locked mode of the Stabil-TRAK system.*

https://truckmanualshub.com/

Gear Select Lever

The Gear Select Lever (1) has a twist grip handle with four positions. Vehicles have four forward gears and three reverse gears.

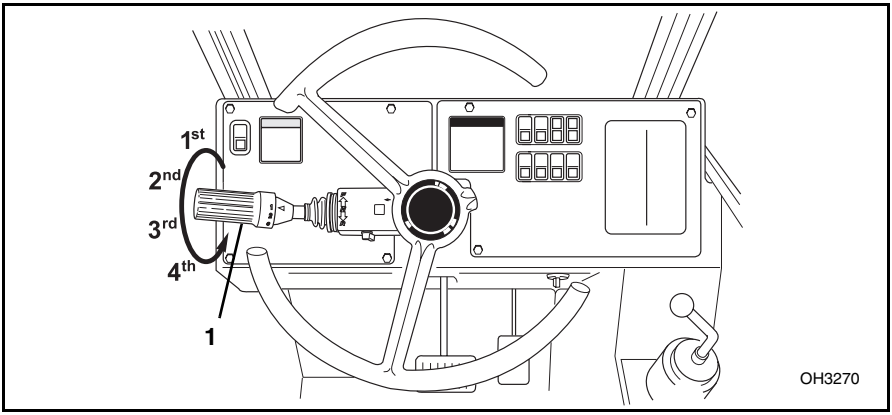

Use first gear for highest torque and pulling power. Use higher gears for higher ground speed. The recommendations listed in the table that follows are guidelines only. Always use good judgement when traveling with a load.

Recommended Gear/Speed for Various Load/Travel Conditions

Load Size	Surface	Gear	Speed
No Load	Smooth	4th*	0 to 20 mph (0 to 32 km/h)
	Improved	3rd	0 to 14 mph (0 to 23 km/h)
	Rough	2nd	0 to 6 mph (0 to 9,7 km/h)
Load up to 4,500 lbs (up to 2.041 kg)	Smooth	3rd	0 to 14 mph (0 to 23 km/h)
	Improved	2nd	0 to 6 mph (0 to 9,7 km/h)
	Rough	2nd	0 to 6 mph (0 to 9,7 km/h)
Load 4,500 to 8,000 lbs (2.041 to 3.629 kg)	Smooth	3rd	0 to 14 mph (0 to 23 km/h)
	Improved	2nd	0 to 6 mph (0 to 9,7 km/h)
	Rough	1st	0 to 3.5 mph (0 to 5,6 km/h)
Load 8,000 to 10,000 lbs (3.629 to 4.536 kg)	Smooth	2nd	0 to 6 mph (0 to 9,7 km/h)
	Improved	1st	0 to 3.5 mph (0 to 5,6 km/h)
	Rough	1st	0 to 3.5 mph (0 to 5,6 km/h)

*__NEVER__ travel in 4th gear when carrying a load.

https://truckmanualshub.com/

Boom Control Lever

The boom control lever (2) is a joystick with variable motion from the center to control the boom functions:

Boom Lift..... move lever backward

Boom Lower..... move lever forward

Boom Extend .....move lever to the right

Boom Retract.....move lever to the left

Two boom functions can be accomplished at the same time by moving the lever into the proper quadrant. For example: moving the lever forward and to the left will lower and retract the boom simultaneously.

The speed of the function depends directly upon the amount of lever travel in the corresponding direction. Increasing the engine speed will also increase the function speed.

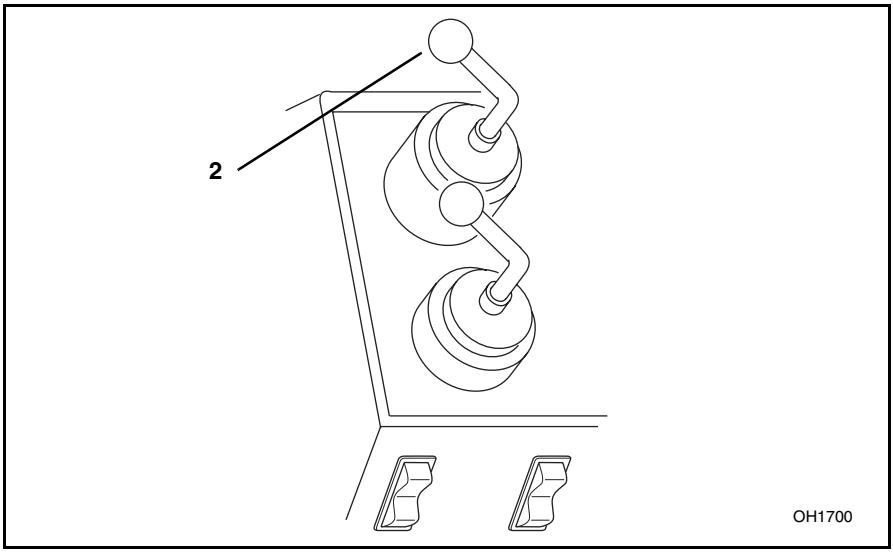

https://truckmanualshub.com/

Attachment Tilt and Frame Sway Control Lever

The attachment tilt and frame sway control is a joystick (1) with four perpendicular motions from the center to control two attachment tilt functions and two frame sway functions:

Frame Sway Left .....move lever to the left

Frame Sway Right .....move lever to the right

Attachment Tilt Down ..... move lever forward

Attachment Tilt Up..... move lever backward

The attachment is self leveling and will retain any set angle throughout boom raising, lowering, retracting or extending operations.

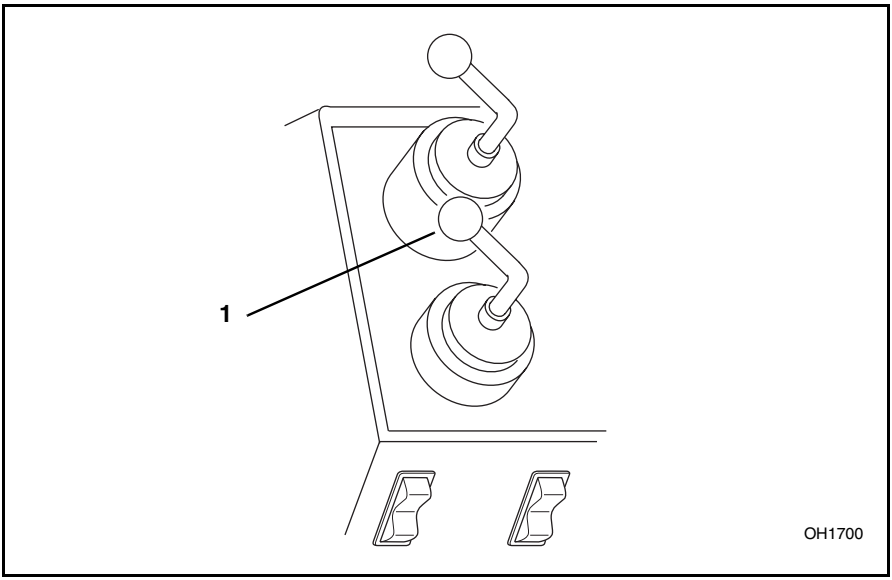

https://truckmanualshub.com/

Outrigger Control Switches

The left (2) and right (3) outrigger control switches raise or lower the corresponding outriggers. The rocker switches are spring loaded to return to the center (stop) position when released.

OH0420

Raise Left Outrigger..... press top of left side switch

Lower Left Outrigger ..... press bottom of left side switch

Raise Right Outrigger .....press top of right side switch

Lower Right Outrigger.....press bottom of right side switch

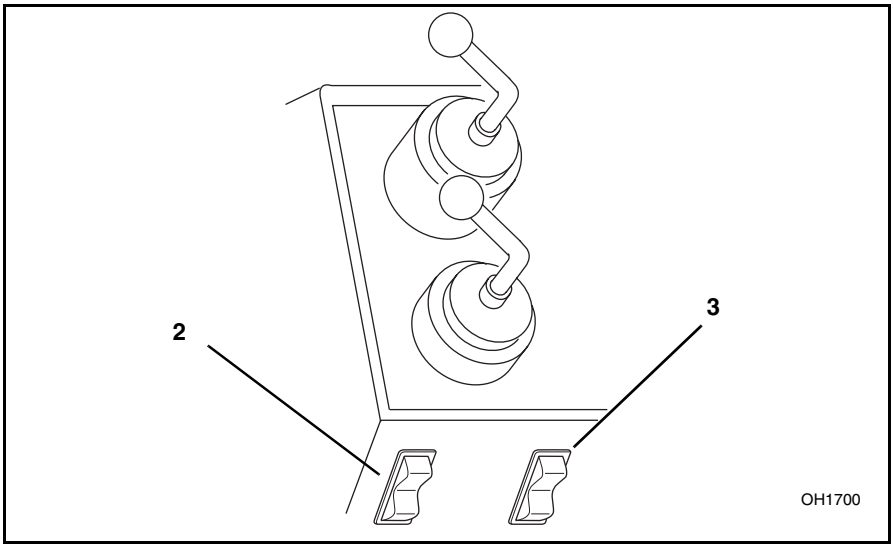

NOTE: *Outrigger position is critical to allow full extension of the boom. Refer to “Understanding the Boom/Outrigger Interlock System” on page 66 for a detailed explanation of the interlock.*

https://truckmanualshub.com/

IMPORTANT! *Outrigger equipped vehicles can be used with the outriggers in either the raised or lowered position. The operator must operate the vehicle within the limits specified on the appropriate capacity chart for the outrigger position (up or down).*

Procedure for Lowering of Outriggers

Secure and proper outrigger placement is critical for stability of the vehicle. Avoid holes or drop-offs and soft or excessively uneven terrain. Lower outriggers just far enough until the front of the vehicle starts to raise and maintain a level position. Use the following procedure to assure that both outriggers have been lowered securely.

IMPORTANT! *For optimum vehicle stability, never lower the outriggers to the point at which the tires come completely off the ground.*

1. Before locating the vehicle at the lift point, observe that the landing area for the outriggers is free of loose material or debris and that the terrain appears to be solid and free of holes.
2. Position the vehicle at the lift point and level the vehicle to zero degrees (0°). If the vehicle cannot be leveled, reposition the vehicle.
3. Lower the right outrigger until the right front tire just starts to raise and maintains this position.
4. Lower the left outrigger until the left front tire just starts to raise and again maintains this position.
5. Frame sway the vehicle back to level (0°) if necessary.

https://truckmanualshub.com/

Seat Belt

WARNING: Death or serious personal injury may result from failure to wear the seat belt installed on this vehicle. The seat belt is a critical component of the Operator's protective Structure, and is provided for the operator's protection in case of vehicle upset. The seat belt MUST be worn whenever this vehicle is operated.

IMPORTANT! *Inspect the seat belt every time it is used, looking for cut or worn webbing, or any defect in the latch assembly. If any wear or damage is noted,* ***DO NOT*** *operate the vehicle until the seat belt is replaced.*

Before the engine is started, adjust the seat as required for position and comfort. Then adjust the seat belt as follows:

1. Grasp both free ends of the belt and make certain that the belt webbing is not twisted or entangled in any portion of the seat assembly.
2. With your back straight in the seat, couple the retractable end or the male end of the belt into the receptacle (buckle) end of the belt.
3. With the belt buckle as low on your body as possible, pull the retractable end of the belt or the free end of the belt away from the buckle until it is tight across the lap.

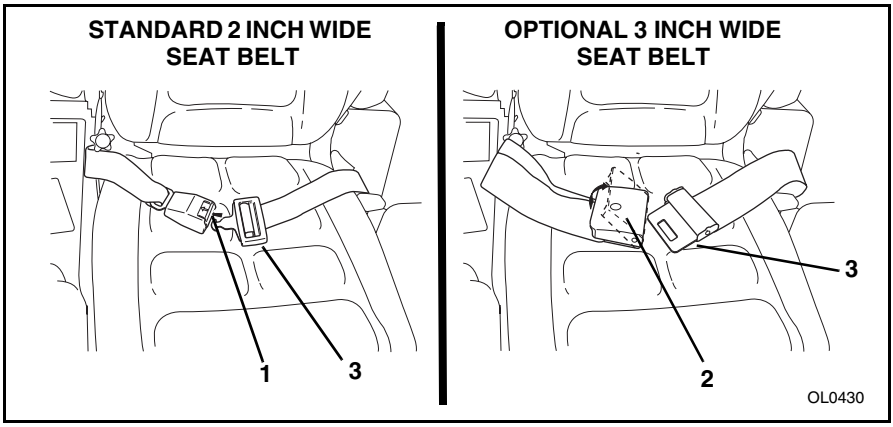

4. To release the belt latch, depress the red button (1) or lift the black cover (2) of the buckle (dependant on belt style installed), and pull the free end (3) from the buckle.

An optional 3 inch wide seat belt is available for those locations that require a 3 inch seat belt.

https://truckmanualshub.com/

Operator's Seat Adjustment

The operator's seat can be adjusted three ways:

A. Fore and Aft Adjustment

Pull the handle (1) outward to adjust the seats forward and backward. Release the handle to lock the seat in the desired position.

B. Suspension Adjustment

Turn the knob (2) on the front of the seat (3) to adjust the suspension to correspond with the operator's weight. Turn clockwise to increase stiffness. Turn counter-clockwise to reduce the stiffness.

C. Backrest Angle Adjustment

The angle of the seat backrest can be adjusted to suit the operator. Move the lever (4) located on the left side of the seat backrest (5) to adjust the angle.

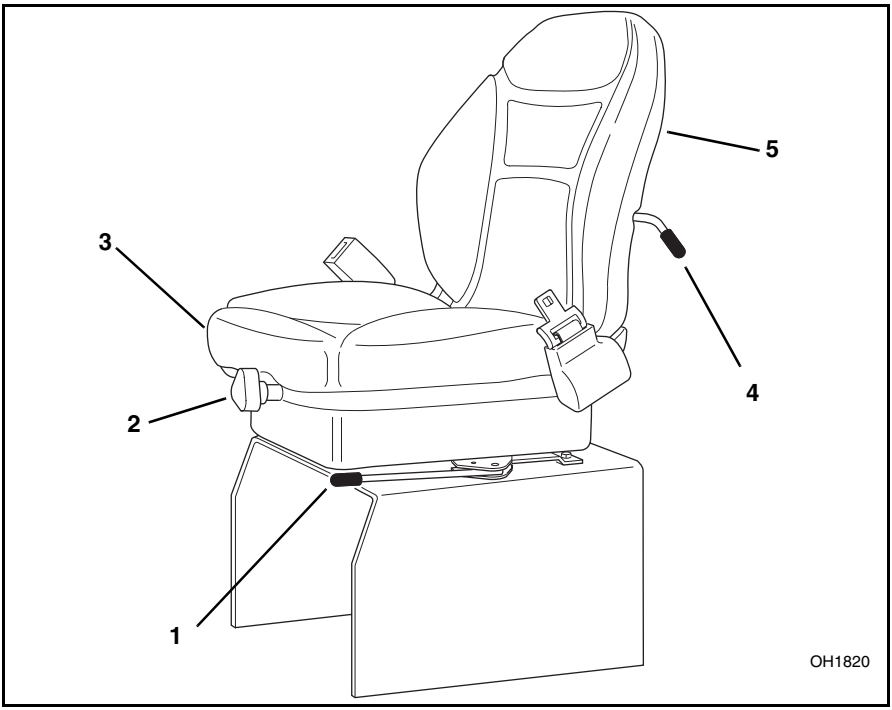

https://truckmanualshub.com/

Instruments and Indicators

Hourmeter

OS0260

The hourmeter (6) records engine operating hours and has a total readout of 9,999.99 hours. It is located at the lower portion of the instrument cluster (7) on the right side console.

Fuel Gauge

OH2470

The fuel gauge (8) indicates the quantity of fuel in the fuel tank. The gauge is located in the center of the instrument cluster on the right side console. Capacity of the fuel tank is 37 gallons (140 liters) total capacity with a usable capacity of 35.6 gallons (135 liters).

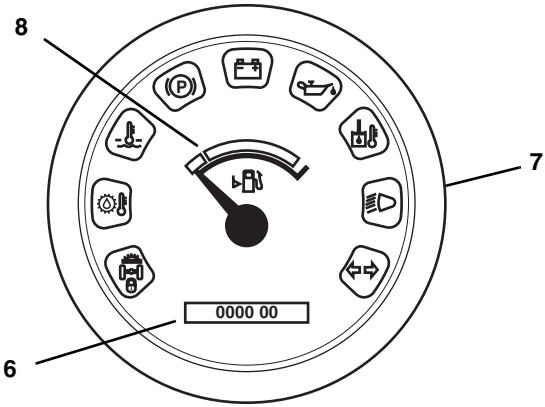

OH1810

https://truckmanualshub.com/

Instrument Cluster Light Test

Test the bulbs in the instrument cluster before starting the engine.

Turn the ignition switch to the RUN position, ALL nine lights in the instrument cluster will come ON for a few seconds and then go out. Replace any bulbs that DO NOT come ON during this test. These lights will warn the operator if an abnormal condition should arise during operation and will also inform the operator when the Stabil-TRAK system is active, road lights are on high beam or the turn signals are activated.

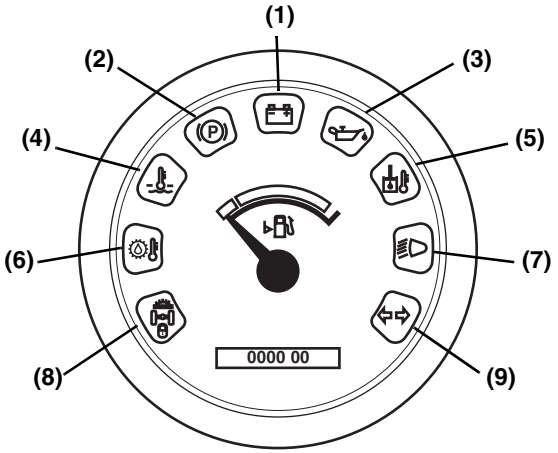

Position of corresponding lights:

- Alternator Charging Light (1)
- Park Brake Light (2)
- Engine Oil Pressure Light (3)
- Engine Coolant Temperature Light (4)
- Hydraulic Tank Temperature Light (5)
- Transmission Temperature Light (6)
- High Beam Light (7)
- Stabil-TRAK Light (8)
- Turn Signal Light (9)

https://truckmanualshub.com/

Function Indicator Lights

A. Stabil-TRAK Indicator Light

OH2500

The Stabil-TRAK light (8) will come ON when the system has been activated. The rear axle will lock when one or more of the following conditions exist with the boom above a 40° angle.

- Parking Brake Switch engaged
- Travel select lever in (N) NEUTRAL
- Service brake pedal depressed and held

The Stabil-TRAK Light will also come ON when the Boom/Outrigger Interlock system is active.

With the boom above a 40° angle and traveling in a forward or reverse drive gear, the Stabil-TRAK Light will go OFF. In this condition the rear axle is unlocked and is allowed to pivot, but will respond slowly to changes in terrain.

ALWAYS be sure the Stabil-TRAK system is functioning properly when operating vehicle. Refer to “Understanding the Stabil-TRAK System” later in this manual for a detailed explanation of this system.

DANGER: Vehicle tipover can result in death or serious injury. Traveling with the boom raised is dangerous and can cause vehicle tipover. Keep the load as low as possible. Travel with extreme caution and at the slowest possible speed.

https://truckmanualshub.com/

B. Park Brake Light

The park brake light (1) illuminates any time the park brake is applied and the ignition switch is in the RUN position.

OH2480

C. High Beam Light

(used with optional road light package only)

OH2490

The high beam light (2) illuminates when the road option headlights are on full (high) beam and will turn OFF when the headlights are switched to low beam.

D. Turn Signal Light

(used with optional road light package only)

OH2510

The turn signal light (3) will illuminate and flash when the road option turn signals are activated in either direction or when the road option hazard lights are activated.

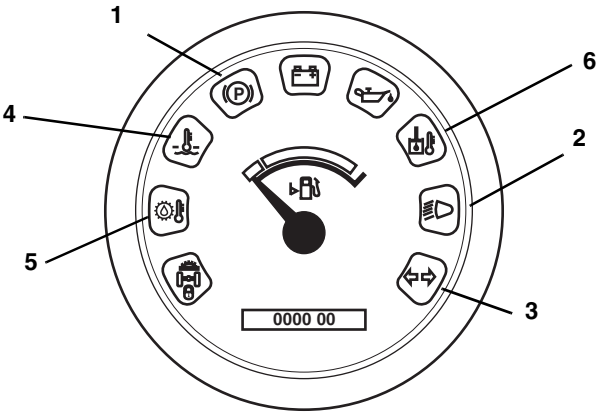

OH1810

https://truckmanualshub.com/

Warning Indicator Lights

There are five additional indicator lights in the instrument cluster that will illuminate during critical circumstances. All five warning indicator lights demand immediate attention and vehicle servicing. In many cases, the vehicle should be shut down AS SOON AS PRACTICAL to prevent serious mechanical failure.

The five warning indicator lights are:

A. Engine Coolant Temperature Warning Indicator Light

OH2520

The engine coolant temperature warning light (4) illuminates when the engine coolant temperature is too high; above 210° F (99° C). SHUT THE VEHICLE DOWN AS SOON AS PRACTICAL.

B. Transmission Temperature Warning Indicator Light

OH2530

The transmission temperature warning light (5) illuminates when the transmission oil temperature is too high; above 250° F (121° C). Stop and idle the vehicle in NEUTRAL, allowing time for cooling. If the light does not go out after two minutes, shut the vehicle down.

C. Hydraulic Oil Temperature Warning Indicator Light

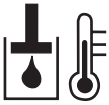

OH2540

The hydraulic oil temperature warning light (6) illuminates when the hydraulic oil temperature is too high; above 195° F (91° C). Stop and idle the engine, allowing time for cooling. If the light does not go out after five minutes, shut the vehicle down.

https://truckmanualshub.com/

D. Engine Oil Pressure Warning Indicator Light

OH2550

The engine oil pressure warning indicator light (1) will come ON during engine start-up and go OUT once the engine has started. This is normal. If the light comes ON while the engine is running, this indicates that the engine oil pressure is too low.
SHUT THE VEHICLE DOWN AS SOON AS PRACTICAL.

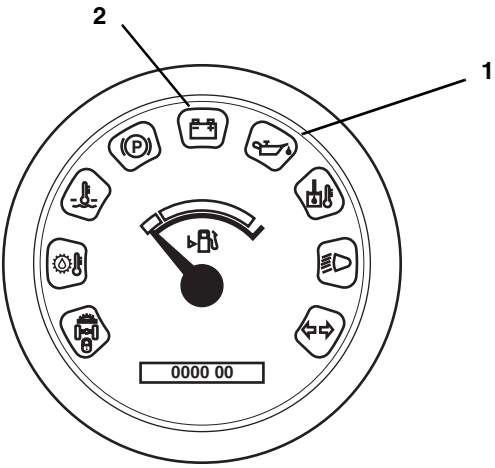

OH1810

E. Alternator Charging Warning Indicator Light

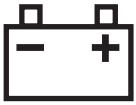

OH2560

The alternator charging warning light (2) illuminates when the charging system is not working properly. Service the engine alternator.

https://truckmanualshub.com/

Function Indicator Lights

There are two additional indicator lights located on the right side of the front dash.

A. Engine Air-Intake Heater Indicator

OU0040

The engine air-intake heater indicator light (3) located in the upper switch bank on the right side of the front dash. This light illuminates, with the ignition switch in the RUN position, any time the ambient temperature drops below 40° F (4° C). The engine grid heater then becomes active and the engine should not be cranked until the light goes OFF. Once the light goes OFF it indicates that the grid heater is at the proper temperature and the engine is ready to start.

NOTE: *This indicator light may come ON when the engine is running to indicate that the post heat function is active. This is a normal condition when ambient temperatures are below 40° F (4° C).*

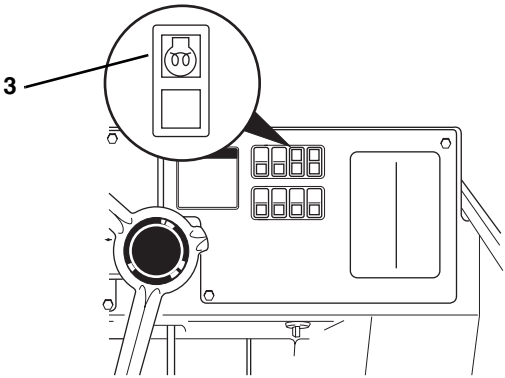

OH3490

https://truckmanualshub.com/

B. Engine Function Indicator Lights

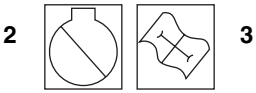

The engine function indicator lights (1) are located in the upper switch bank on the right side of the front dash. The light indicates any faults that arise in the engine during operation. The light contains a RED light (2) and a AMBER light (3).

If the RED light (2) comes ON during operation, STOP the engine IMMEDIATELY and diagnose the fault by activating the ECM diagnostic system. Activate the system with the accelerator pedal.

Activate the system and read the code as indicated by the RED light. Contact your local Cummins dealer for an explanation of these codes or refer to the Cummins Engine Owners Manual or call the Cummins Customer Assistance Center at 1-800-343-7357.

If the AMBER light (3) comes ON during operation, the engine diagnostic system has detected a fault within the engine. Stop the engine and diagnose the fault by activating the ECM diagnostic system.

Activate the system and read the code as indicated by the light. Contact your local Cummins dealer for an explanation of these codes or refer to the Cummins Engine Owners Manual or call the Cummins Customer Assistance Center at 1-800-343-7357.

Cummins ECM Diagnostic System Activation

With the engine OFF, turn the ignition switch to the RUN position. DO NOT start the engine.

Completely depress and release the accelerator pedal three times. This will activate the system, both the AMBER light and RED light will come ON momentarily and then both will begin to flash the code. If the system has been activated with the accelerator pedal and no faults are present, both the AMBER light and the RED light will come ON and stay ON.

ECM Light Code Identification

The AMBER light will flash one time to identify the start of the code followed by a one or two second pause. Then the RED light will flash the code sequence, pausing for one or two seconds between numbers. The AMBER light will flash once after the RED light has flashed the code to signify the end of that fault code.

https://truckmanualshub.com/

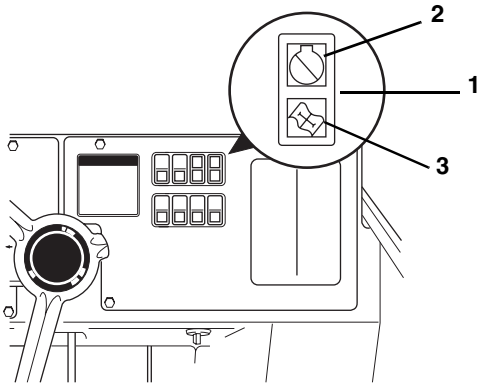

Frame Level Indicator

The indicator (4) is mounted on the top inside of the Operator's Protective Structure (cab). This is a bubble type indicator which allows the operator to tell if the vehicle has been positioned in a level condition. Always frame sway the vehicle either right or left until the indicator reads zero degrees (0°). If zero cannot be achieved, then reposition the vehicle until it is level before placing the load.

NOTE: *Maximum frame sway is 10° in either direction.*

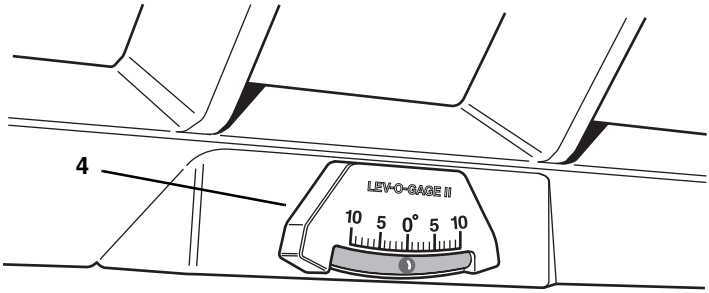

https://truckmanualshub.com/

Boom Angle Indicator

The boom angle indicator is a plumb arrow (1) with angular graduations (2) from minus 10° to plus 80°. It is located on the left side of the boom and is visible from the operator's position. Use this indicator to determine the boom angle when reading the capacity chart (see "Using The Capacity Chart").

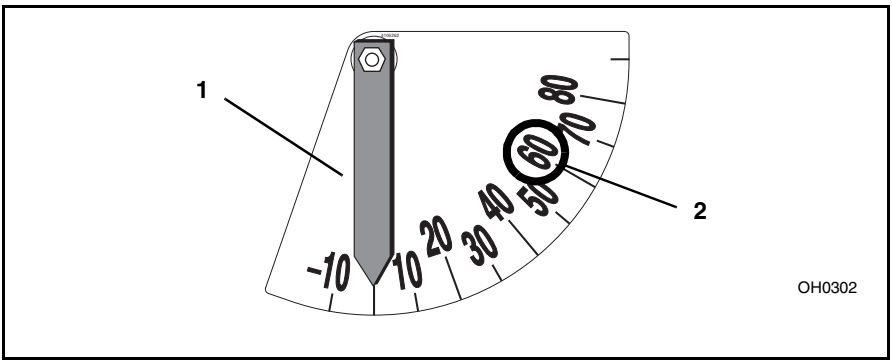

Rear View Mirrors

Two rear view mirrors are provided to aid the operator's rear vision. A rectangular flat lens mirror (3) is mounted on the upper left of the cab. A convex lens mirror (4) is mounted on the right side of the frame. Both mirrors are adjustable to obtain the best rear view by the operator.

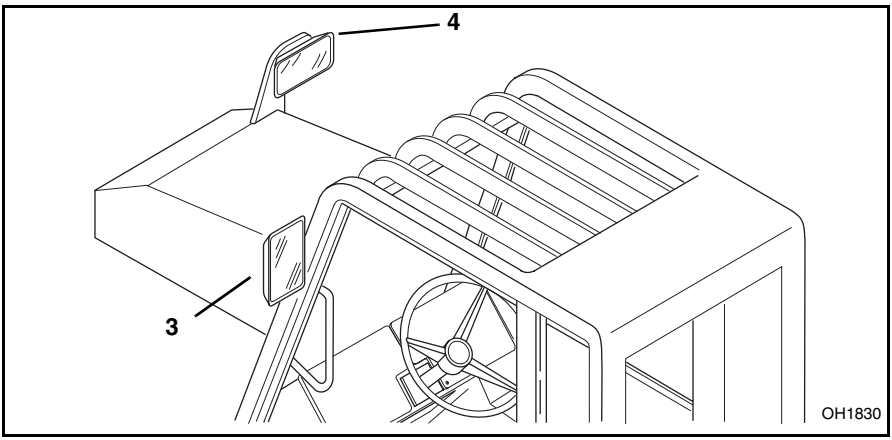

https://truckmanualshub.com/

Optional Controls

Auxiliary Attachment Control Lever

The auxiliary attachment control lever (5) controls the functions of an optional attachment that is mounted to the vehicle and requires a hydraulic supply for operation. Some of the optional attachments that require auxiliary hydraulics are: Side Tilt Carriage, Swing Carriage, Auger, and 3 Foot Truss Boom w/Winch.

OH0431

When the control lever is moved to the right it will provide hydraulic system pressure through the female disconnect coupling for the auxiliary attachment. Hydraulic fluid will return to the tank through the male disconnect coupling.

OH0451

When the control lever is moved to the left it will provide hydraulic system pressure to the male disconnect coupling for the auxiliary attachment. Hydraulic fluid will return to the tank through the female disconnect coupling.

The control lever will provide the following typical functions for each specific attachment if they are connected properly. Operation will be reversed if incorrectly connected. We recommend reversing the disconnect couplings on the hoses that are supplied with the attachment if operation is reversed.

Side Tilt Carriage Operation:
- Control Lever right.....tilt right
- Control Lever left.....tilt left

Swing Carriage Operation:
- Control Lever right.....swing right
- Control Lever left.....swing left

Auger Operation:
- Control Lever right.....auger dig
- Control Lever left.....auger retract

3 Foot Truss Boom w/Winch Operation:
- Control Lever right.....cable extends
- Control Lever left.....cable retracts

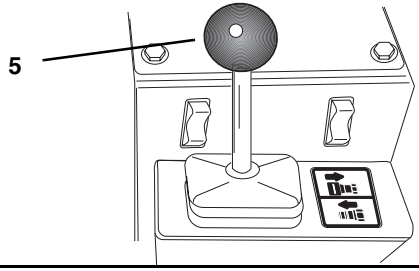

OH1710

https://truckmanualshub.com/

Worklight Switch (Front, Rear & Boom Worklights)

OH2570

This three position rocker switch (1) controls the front, rear and boom worklights. The switch is located in the upper switch bank on the right side dash panel. These lights will only operate when the ignition switch is in the RUN position.

- Push the top of the switch in to turn all the worklights OFF.

OH2591

- To turn the front and boom worklight ON, position the rocker switch to the center position.

OH2601

- Push the bottom of the switch in to turn all the worklights ON.

OH2611

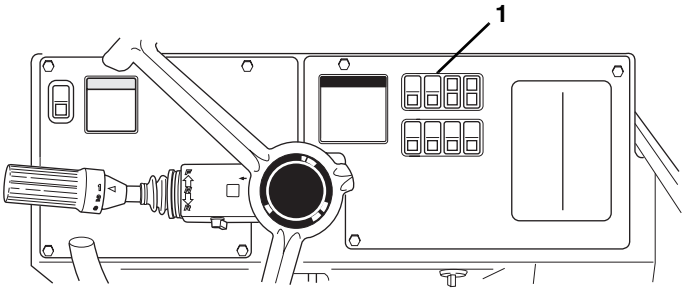

OH3300

https://truckmanualshub.com/

Beacon Light Switch

OH2580

This rocker switch (2) turns the beacon light ON and OFF. The switch is located in the lower switch bank on the right side dash panel. This light will only operate when the ignition switch is in the RUN position.

- Push the bottom of the switch in to turn the beacon light ON.

OH2611

- Push the top of the switch in to turn the beacon light OFF.

OH2591

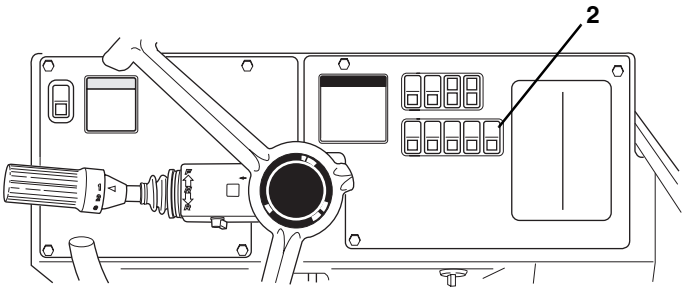

OH3310

https://truckmanualshub.com/

Worklight Switch (with Optional Road Lights)

OH2620

This rocker switch (1) activates the worklight system. The switch is located in the upper switch bank on the right side dash panel. This system will only operate when the ignition switch is in the RUN position. See “Parking Lights, Headlights & High/Low Beam Switch” on page 52 for operation of the road lights.

- Push the top of the switch IN to DEACTIVATE the entire the worklight system.

OH2591

- To ACTIVATE the boom worklight position the rocker switch to the center position.

OH2601

- Push the bottom of the switch IN to ACTIVATE the boom worklight and rear worklights.

OH2611

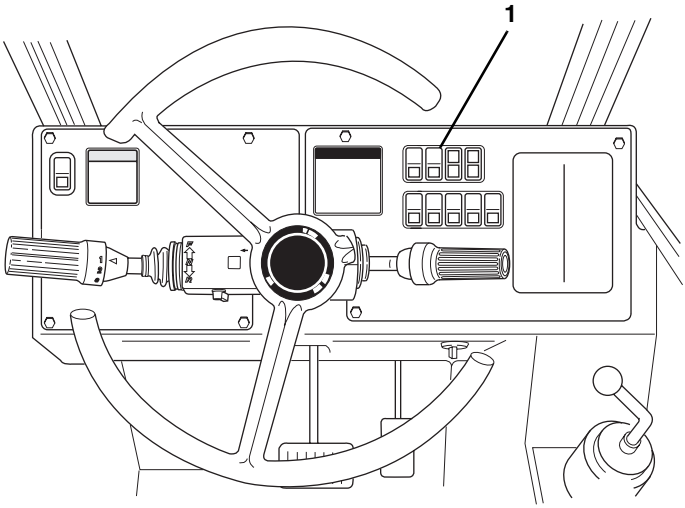

OH3320

https://truckmanualshub.com/

Emergency Flashers

OS1920

This switch (2) is located in the upper switch bank on the right side dash panel.

- To ACTIVATE the emergency flashers, push the bottom of the switch IN.

OH2611

- To DEACTIVATE the emergency flashers push the top of the switch IN.

OH2591

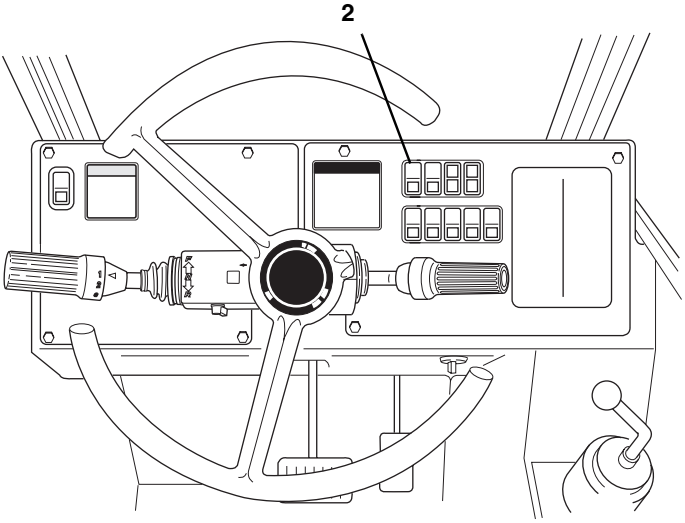

OH3320

https://truckmanualshub.com/

Turn Signals

OH2510

The directional signals are ACTIVATED from the lever (1) on the right side of the steering wheel and will only operate when the ignition switch is in the RUN position.

To activate the left turn signal (2), raise the lever. To activate the right turn signal (3), lower the lever. To deactivate either directional signal, the lever must be manually returned to the center position. The lever will not cancel automatically after a turn.

Parking Lights, Headlights & High/Low Beam Switch

With the ignition switch in the RUN position use the turn signal switch to control the high/low beam headlights, turn on the parking lights and the headlights. Turn the twist grip end of the turn signal switch counter-clockwise to the first position (4) to turn the parking lights ON. Turn the twist grip to the second position (5) to turn the headlights and parking lights ON. Turn the twist grip clockwise to the OFF position (6) to turn all the lights OFF. Pull the turn signal switch toward you to switch from low beam to high beam. When the high beam is ON the high beam indicator light will illuminate.

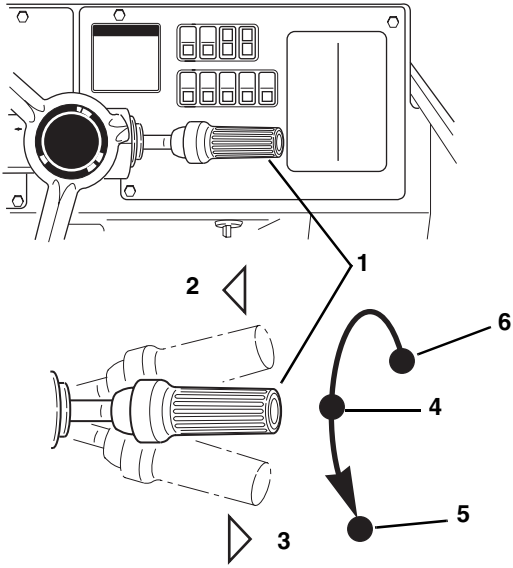

OH3330

https://truckmanualshub.com/

Windshield Wiper Control

OS1930

This three position rocker switch (7) controls the speed of the windshield wiper. This switch is located in the lower switch bank on the right side dash panel.

- To STOP the windshield wiper, push the top of the switch IN.

OH2591

- To OPERATE the windshield wiper at LOW speed, position the switch in the CENTER POSITION.

OH2601

- To OPERATE the windshield wiper at HIGH speed, push the bottom of the switch IN.

OH2611

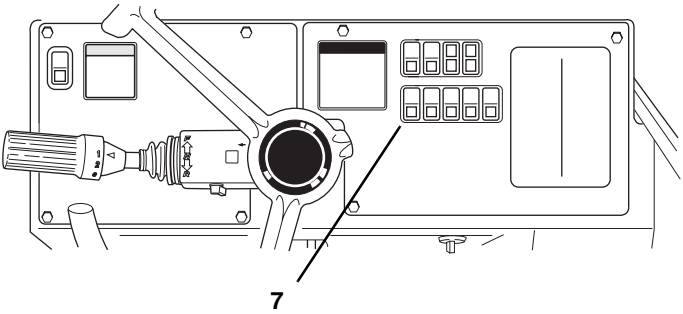

OH3310

https://truckmanualshub.com/

Skylight Wiper Control

OH1900

This rocker switch (1) turns the skylight wiper ON and OFF. This switch is located in the lower switch bank on the right side dash panel.

- Push the bottom of the switch IN to turn the skylight wiper ON.

OH2611

- Push the top of the switch IN to turn the skylight wiper OFF.

OH2591

Windshield & Skylight Washer Control

OS1940

OH1910

This rocker switch (2) is spring loaded to return to the OFF position when released. This switch is located in the lower switch bank on the right side dash panel.

- Pressing down on the bottom of the switch will dispense washer fluid to the windshield and skylight wiper at the same time. The switch must be held in place to activate the washer control.

OH2611

- Release the switch to deactivate the washer control.

OH2591

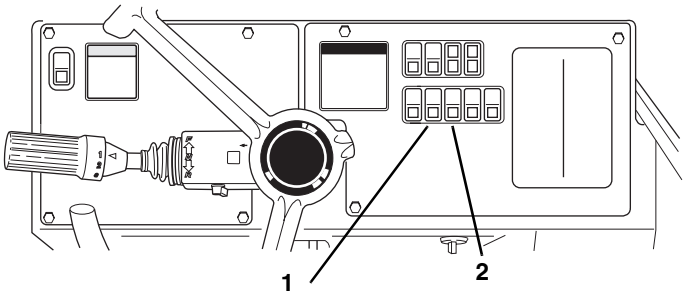

OH3310

https://truckmanualshub.com/

Cab Heater & Fan Control

OS1950

The cab heater controls (3) are located directly below the switch banks on the right side dash panel. The control panel consists of: a variable speed fan control knob (4) and a temperature control knob (5).

Control of air flow to the windshield is made by opening, closing or redirecting the air vent louver on the front dash. The cab is heated by the heater unit positioned under the operators seat.

To heat the cab:

OS1950

- Turn temperature control knob (5) to far right position (RED = HOT),
- Direct desired air flow by adjusting vent louvers,
- Turn fan control (4) to “3” (6) to assure rapid warm-up.

To defrost the cab:

OA1390

- Turn temperature control knob (5) to the far right position (RED = HOT),
- Direct desired air flow by adjusting vent louver,
- Turn fan control (4) to “3” (6) to assure rapid defrost.

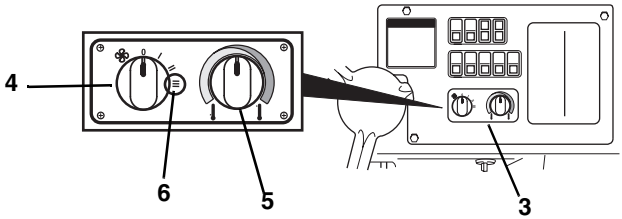

OH3340

https://truckmanualshub.com/

Rear Window Latch

The rear window (1) can be partially opened and secured in place with the rear window latch (2). To open the window, grab the latch handle and pull up and then push the window outward. To close and secure the window, pull the latch handle forward and down.

NOTE: *In an emergency situation, the operator can exit through the rear window opening by removing the latch pin (3) on the window latch. The window is then free to swing open.*

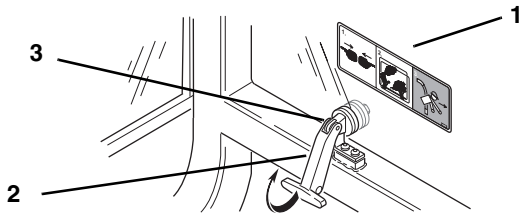

Door Latches

(not pictured)

There are two door latches. The outside latch is a key lockable pull-to-release type. The inside latch is also a pull-to-release latch.

Door Window Latch

(not pictured)

The door window can be swung open by releasing the window from inside the cab. Swing the window all the way open and lock in place on the outside of the cab. To release the window from the open position, push up the release on the lower side of the outside hold or release using the release on the side wall of the cab below the left side window.

https://truckmanualshub.com/

Pre-Operation Inspection

1. Check safety belt for damage. Check for frayed or cut seat belt webbing, damaged buckles or loose mounting brackets. Make any necessary repairs before operating the vehicle.
2. Check all four tires and rims for damage. Check for proper tire pressure, add air if required. Observe the condition of each tire looking specifically for punctures, cracks, cuts, gouges, bulges or any other damage. Check the condition of each rim for bent flanges or any other damage. Make any necessary repairs before operating the vehicle.
3. Check and add engine oil if required. This procedure is explained in greater detail on page 127.
4. Check and add transmission oil if required. This procedure is explained in greater detail on page 141.
5. Check the cooling system overflow bottle for coolant. Add coolant if required. This procedure is explained in greater detail on page 124. Remove any debris blocking the radiator cooling fins.
6. Check the hydraulic oil level sight glass and add hydraulic oil if required. This procedure is explained in greater detail on page 138.
7. Walk around the vehicle and check for oil leakage as well as damaged or missing parts. Make any necessary repairs before operating the vehicle.

https://truckmanualshub.com/

Normal Starting

1. Enter the cab using the hand holds and adjust the seat for comfortable operation.
2. Adjust the mirrors to obtain the best rear view from the operator's position.

WARNING: **DO NOT** start the engine unless you are in the seat with the seat belt fastened around you. Death or serious personal injury could result if the belt is not securely fastened.

3. Fasten the seat belt.
4. Make sure the parking brake switch is ENGAGED.
5. Place the travel select lever in (N) NEUTRAL and move the neutral lock lever to NEUTRAL LOCK position.
6. Turn the ignition switch to the START position (fully clockwise) to crank the engine. Release the key when the engine starts. If the engine fails to start on the first try, wait until the engine and starter come to a complete stop before cranking the engine again.

***IMPORTANT! DO NOT** crank the starting motor continuously for more than 30 seconds. Stop cranking the starter and allow the starter to cool for 2 minutes before engaging the starter again.*

7. After the engine starts, run engine at partial throttle for 30 to 60 seconds before operating the vehicle. Return to idle before engaging the travel or range select lever.
8. Move the Neutral Lock Lever to the (D) DRIVE position before you start operating.
9. Disengage the parking brake switch before you start operating.

https://truckmanualshub.com/

Cold Starting

The engine is equipped with a 120 volt 750 watt block heater. Block heaters are recommended when temperatures drop below 10° F (-12° C). (Temperature ranges will vary when using different oil weights. Consult the engine manufacturer's manual for other variables.)

WARNING: This diesel engine uses a grid heating system inside the induction manifold. **DO NOT** use ether or any high energy fuels to assist starting. An explosion may cause death or serious personal injury or engine damage.

The engine is equipped with a grid heater inside the induction manifold. If the temperature drops below 40° F (4° C) the air-intake heater system will be activated when the ignition switch is turned to the RUN position. When the system is active the air-intake heater light (see page 43) will illuminate on the front dash. **DO NOT** turn the ignition switch to START until the air-intake heater light goes OFF.

At temperatures below -10° F (-12° C), operate the engine at moderate speeds for 5 minutes before full loads are applied.

1. Enter the cab using the hand holds and adjust the seat for comfortable operation.
2. Adjust the mirrors to obtain the best rear view from the operator's position.

WARNING: **DO NOT** start the engine unless you are in the seat with the seat belt fastened around you. Death or serious personal injury could result if the belt is not securely fastened.

3. Fasten the seat belt.
4. Make sure the parking brake switch is ENGAGED.
5. Place the travel select lever in (N) NEUTRAL and move the neutral lock lever to NEUTRAL LOCK position.
6. Turn the ignition switch to the START position to crank the starter.

***IMPORTANT! DO NOT** crank the starting motor continuously for more than 30 seconds. Stop cranking the starter and allow the starter to cool for 2 minutes before engaging the starter again.*

7. As the engine starts, release the ignition switch to the RUN position. Depress the accelerator pedal enough to provide a smooth idle speed.

https://truckmanualshub.com/

8. The engine oil pressure warning indicator light should go OFF within five seconds after starting. If the light remains ON, turn the ignition switch OFF immediately and check the oil level or change to a lighter weight oil. Consult the engine manufacturer's manual for alternative oils for cold weather operation.

Jump Starting

Jump starting at the batteries or battery replacement is required when the batteries are discharged to the point where the batteries will not crank the starter.

WARNING: **NEVER** jump start the vehicle directly to the starter solenoid. Death or serious personal injury could result from the vehicle lurching forward or backward and running over the person attempting to jump start the vehicle directly to the starter.

WARNING: To avoid death or serious personal injury when jump starting with another vehicle, be certain that the two vehicles are not touching. Never jump start a frozen battery as it will explode. Keep sparks, flames and lighted smoking materials away from the battery. Lead acid batteries generate explosive gases when charging. Wear safety glasses when working near batteries.

The booster battery must be a 12 volt type. The vehicle used for jump starting must have a negative ground electrical system. To jump start the vehicle, proceed as follows:

1. Connect the positive (+) jumper cable to the positive (+) post of the discharged battery.
2. Connect the other end of the positive (+) jumper cable to the positive (+) post of the booster battery.
3. Connect one end of the negative (-) jumper cable to the negative (-) post of the booster battery.
4. Make the final cable connection to the furthest point from the batteries.
5. Follow the steps in "Normal Starting" on page 58.
6. Remove the jumper cables in the reverse order of their connection (i.e. negative cable ground connection first, etc.).

https://truckmanualshub.com/

Refueling

Make sure the vehicle is level to assure an accurate fuel level reading. The fuel tank is capable of holding 37 gallons (140 liters) of diesel fuel. The usable capacity of the fuel tank is 35.6 gallons (135 liters).

Fuel Types

OH0480

Use ASTM #2 diesel fuel with a minimum Cetane rating of 40. #2 diesel fuel gives the best fuel economy and performance under most operating conditions. Fuels with Cetane ratings higher than 40 may be needed in higher altitudes or extremely low ambient temperatures to prevent misfiring and excessive smoke.

- When operating at temperatures above 32° F (0° C), use standard #2 diesel fuel.
- When operating at temperatures below 32° F (0° C), use a blend of #1 & #2 diesel fuels, most commonly known as “winterized” #2 diesel.

WARNING: Engine fuel is ***flammable*** and can cause a fire or an explosion. Keep sparks and open flames away from the vehicle and **DO NOT** use smoking materials while refueling.

https://truckmanualshub.com/

Fuel Cap

Unlock the fuel cap (1) through the fuel cap access hole (2).

Slowly remove the fuel cap from the fuel fill neck.

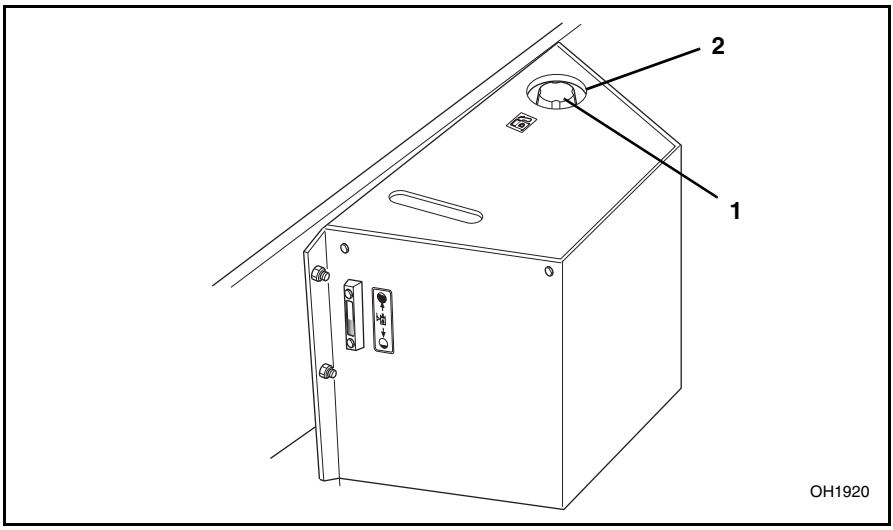

Fill fuel tank.

Reassemble the fuel cap onto the fill neck and turn to lock in place. Line up the locking tabs to reassemble a lock if desired.

https://truckmanualshub.com/

Stabil-TRAK System

Understanding the Stabil-TRAK System

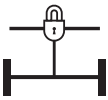

OS1970

The following describes the three basic modes of the patented Stabil-TRAK system. The vehicle may operate in any one of these three modes.

With the OUTRIGGERS RAISED, the unit may operate in any one of these three modes at any given time while the boom is within the OUTRIGGER UP extension limit.

Free Pivot Mode

With the boom below 40° (3), the Stabil-TRAK system is in the FREE PIVOT MODE (4) and the rear axle is allowed to pivot freely. The frame sway will function normally with or without the outriggers down. The Stabil-TRAK light will be OFF (5)

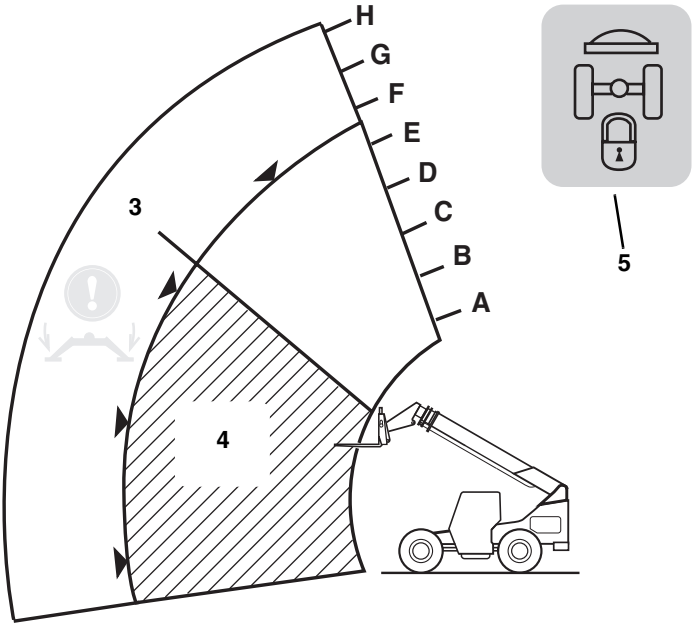

https://truckmanualshub.com/

Locked Mode

With the boom above 40° (1) and by activating one or more of the functions (as follows), the Stabil-TRAK system is in the LOCKED MODE (2). The rear axle is locked so it is rigid with the frame. The Stabil-TRAK light will be ON (3).

- Engaging the parking brake switch
- Placing the travel select lever in (N) NEUTRAL
- Depressing and holding the service brake pedal

The frame sway will function slower than normal in this mode with or without the outriggers down.

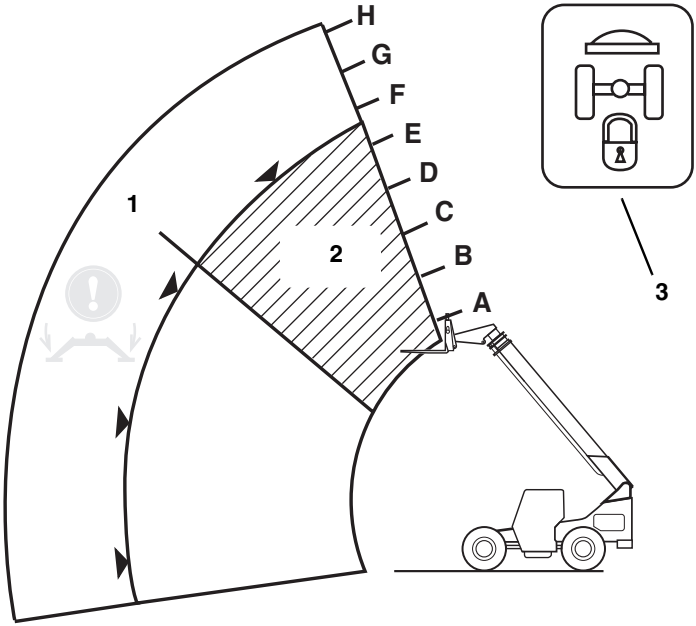

https://truckmanualshub.com/

Slow Pivot Mode

With the boom above 40° (4), the Stabil-TRAK System is now in the SLOW PIVOT MODE (5). In this mode the rear axle is UNLOCKED and is allowed to pivot but will respond SLOWLY to changes in terrain. The Stabil-TRAK light will be OFF (6).

The frame sway will function normally in this mode.

To check that the Stabil-TRAK System is functioning properly, refer to the test procedure on page 185 for the proper system function.

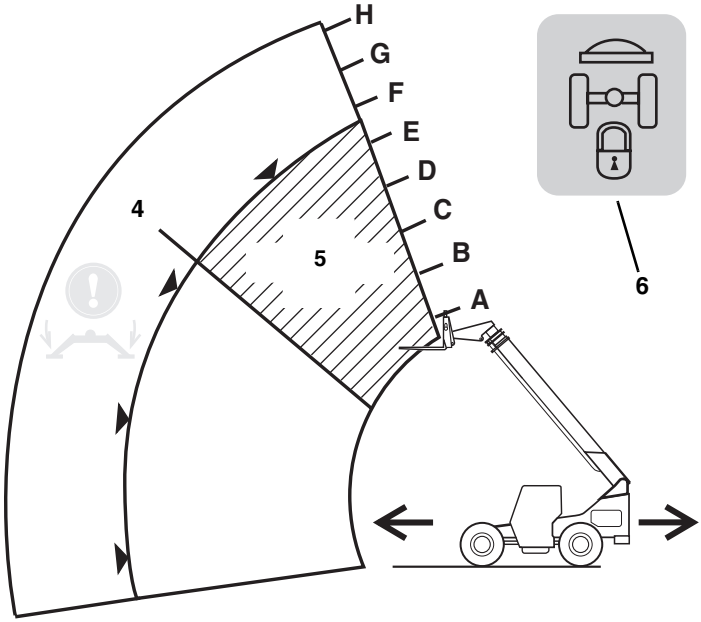

https://truckmanualshub.com/

Understanding the Boom/Outrigger Interlock System

The ultimate purpose of this interlock system is to add an extra measure of stability allowing the boom to be extended to its maximum limits. There are two modes to this interlock, the Extend Interlock and the Outrigger Interlock.

Extend Interlock Mode

The Extend Interlock Mode, limits boom extension (1) to a point after letter "E" has appeared on the side of the boom and before letter "F" appears. A sensor in the boom will automatically STOP the boom from extending past this point until the outriggers have been lowered onto firm terrain.

With the OUTRIGGERS RAISED (2) and the boom inside of the extension limit (1) the vehicle will function normally. The Stabil-TRAK system should perform as designed.

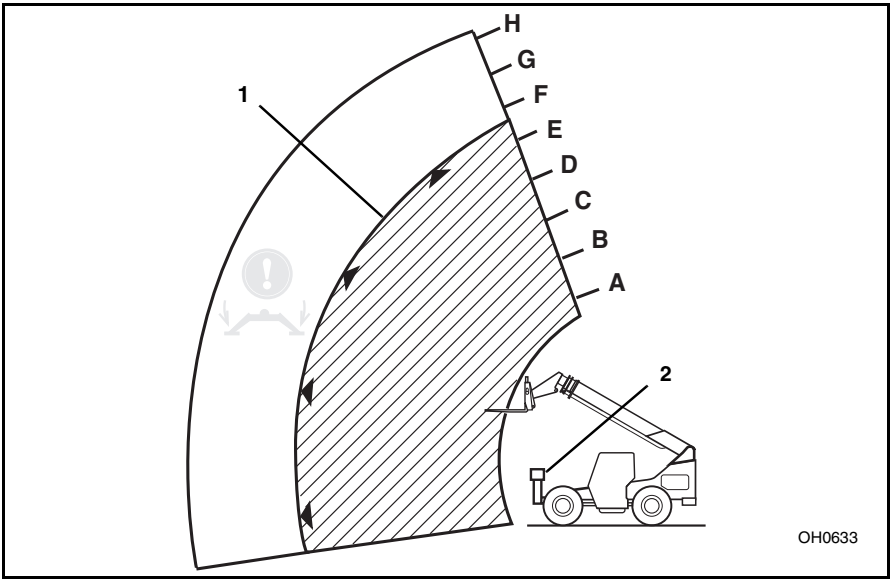

Outrigger Interlock Mode

The Outrigger Interlock Mode, allows for full boom extension (3) only as long as both outriggers (4) have been lowered onto firm terrain (OUTRIGGERS DOWN). Once this condition is met, the boom is allowed to extend to its full limits.

https://truckmanualshub.com/

***IMPORTANT!** As an added measure of safety, ALWAYS remember to shift the Travel Select Lever into (N) NEUTRAL, move the neutral lock lever to NEUTRAL LOCK position and engage the parking brake when outriggers are lowered.*

With the outrigger interlock engaged additional systems are automatically activated which enhance the stability of the vehicle:

- Stabil-TRAK is in the LOCKED Mode.
- Transmission has been DECLUTCHED.
- Parking brake is ENGAGED.
- Outrigger RAISE function is inoperable.
- Stabil-TRAK light will be ON (5)

Other effects you will experience while the outrigger interlock is engaged:

- With Stabil-TRAK active, frame sway will be slower than normal.
- Outriggers are still allowed to lower to adjust for any changes in outrigger footing.

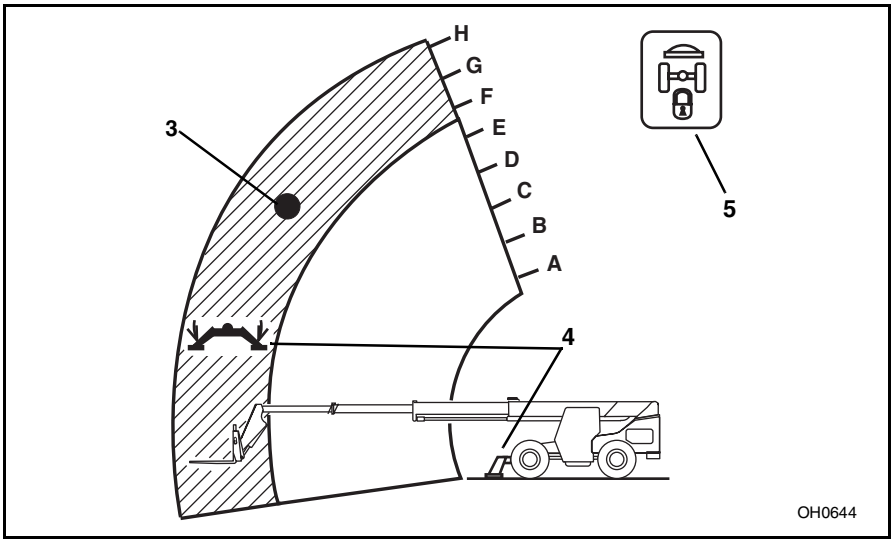

Not until the boom has been retracted past the extension limit will any of these conditions change.

It is important that you regularly check that this system is functioning properly. Refer to the “Boom/Outrigger Interlock System Test” on page 189 for proper system function.

https://truckmanualshub.com/

Operating

Starting Travel

1. Enter the operator cab, fasten the seat belt, start the engine, apply the service brake pedal and disengage the parking brake switch.
2. Rotate the twist grip of the range select lever (1) to 1st gear.
3. Move the travel select lever (2) to (F) FORWARD to travel in a forward direction or to (R) REVERSE to travel backward.
4. Slowly remove your foot from the service brake pedal and press the accelerator pedal to start travel.

IMPORTANT! *Check for warning lights frequently during operation. Any abnormal indication should be corrected as soon as practical.*

Changing Travel Direction

1. Stop the vehicle by applying the service brakes.
2. Grasp the travel select lever, pull it toward the steering wheel, then move the lever up or down in the opposite direction;
(R) REVERSE or (F) FORWARD.

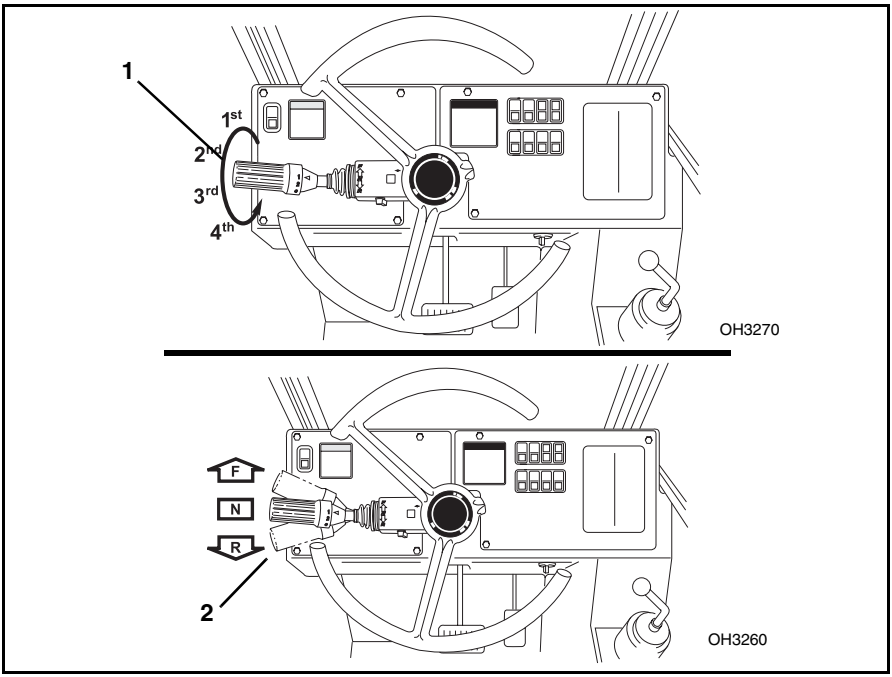

https://truckmanualshub.com/

Shifting Gears

1. Rotate the twist grip of the gear select lever to the next desired gear. The transmission has four forward gears and three reverse gears.
2. Use first gear for highest torque and pulling power. Use higher gears for higher ground speed. The recommendations listed in the table that follows are guidelines only. Always use good judgement when traveling with a load.

Recommended Gear/Speed for Various Load/Travel Conditions

Load Size	Surface	Gear	Speed
No Load	Smooth	4th*	0 to 20 mph (0 to 32 km/h)
	Improved	3rd	0 to 14 mph (0 to 23 km/h)
	Rough	2nd	0 to 6 mph (0 to 9,7 km/h)
Load up to 4,500 lbs (up to 2.041 kg)	Smooth	3rd	0 to 14 mph (0 to 23 km/h)
	Improved	2nd	0 to 6 mph (0 to 9,7 km/h)
	Rough	2nd	0 to 6 mph (0 to 9,7 km/h)
Load 4,500 to 8,000 lbs (2.041 to 3.629 kg)	Smooth	3rd	0 to 14 mph (0 to 23 km/h)
	Improved	2nd	0 to 6 mph (0 to 9,7 km/h)
	Rough	1st	0 to 3.5 mph (0 to 5,6 km/h)
Load 8,000 to 10,000 lbs (3.629 to 4.536 kg)	Smooth	2nd	0 to 6 mph (0 to 9,7 km/h)
	Improved	1st	0 to 3.5 mph (0 to 5,6 km/h)
	Rough	1st	0 to 3.5 mph (0 to 5,6 km/h)

*__NEVER__ travel in 4th gear when carrying a load.

NOTE: *Shifting to the next higher gear may be done while the vehicle is in motion.*

IMPORTANT! *When downshifting, allow the engine speed to slow down before shifting to the next lower gear.*

Stopping Travel

1. Apply the service brake pedal and downshift the vehicle to a lower gear if necessary to slow the vehicle until it comes to a complete stop.
2. Move the travel select lever to (N) NEUTRAL and engage the parking brake switch. For longer stops, place the neutral lock lever to NEUTRAL LOCK position and engage the parking brake switch.

https://truckmanualshub.com/

Steering Modes

***IMPORTANT! DO NOT** change steering modes unless you are at a complete stop and all four tires are in the "straight-ahead" position.*

The three steering modes are:

- Four Wheel Steering (1)
- Front Wheel Steering (2)
- Crab Steering (3)

The steering modes can be changed using a single rocker switch (4) located in the lower switch bank on the right side dash panel.

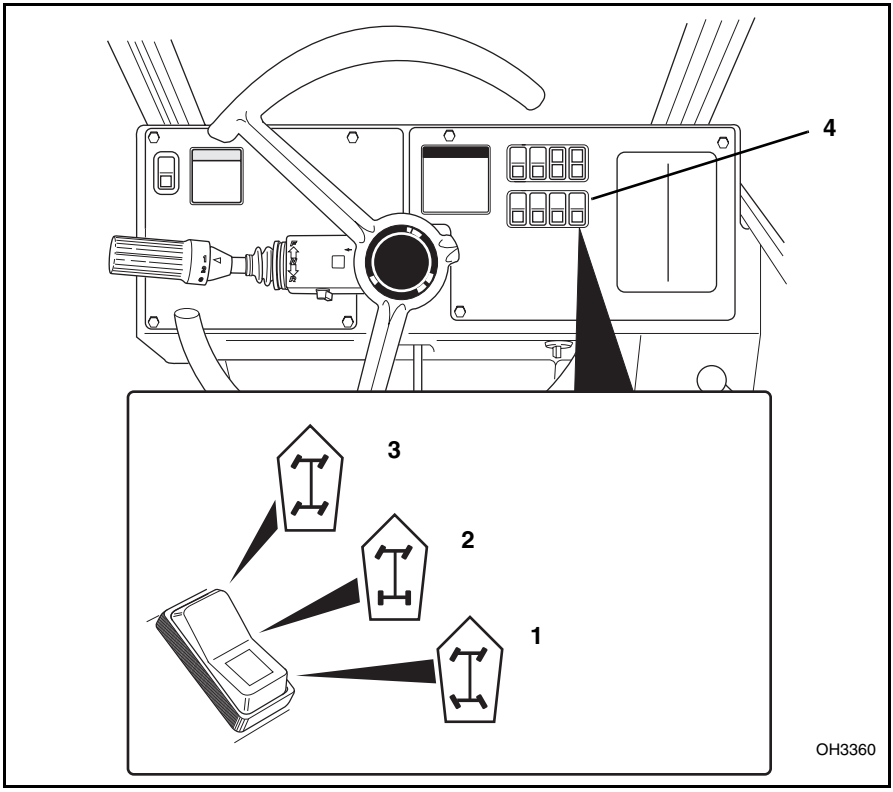

https://truckmanualshub.com/

Four Wheel Steer Indexing

If the vehicle does not drive “straight,” the steering could be ”out of phase.” Perform the “Four Wheel Steer Indexing Procedure” on page 193 to synchronize the front and rear steering.

1. Four Wheel Steering

WARNING: **NEVER** use the Four Wheel Steering Mode when traveling at high speed. Rapid turning in this mode can cause tipover. Use only the Front Wheel Steering Mode at higher speeds and slow the vehicle when turning.

The front wheels will steer in the direction that the steering wheel is turned; the rear wheels will steer in the opposite direction. This steering mode allows an extremely short turning radius and enables the rear wheels to follow the tracking of the front wheels which can be an advantage in mud and sand conditions.

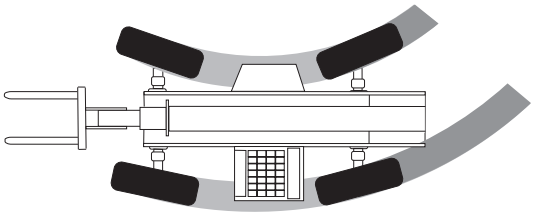

OH1660

https://truckmanualshub.com/

2. Front Wheel Steering

The front wheels will steer in the direction that the steering wheel is turned. The rear wheels will remain in a fixed forward position. This steering mode should be used when loading or unloading the vehicle from a trailer and for on-highway travel at higher speeds.

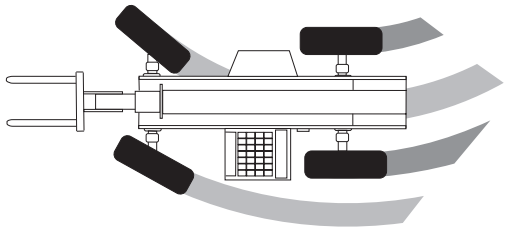

OH1670

3. Crab Steering

WARNING: **NEVER** use the Crab Steering Mode when traveling at high speed. Rapid turning in this mode can cause tipover. Use only the Front Wheel Steering Mode at higher speeds and slow the vehicle when turning.

All wheels will steer in the same direction that the steering wheel is turned. This steering mode allows the operator to move the vehicle “sideways” toward the landing point of a load. This is especially useful on a congested worksite in order to line up at the exact spot in front of the loading location.

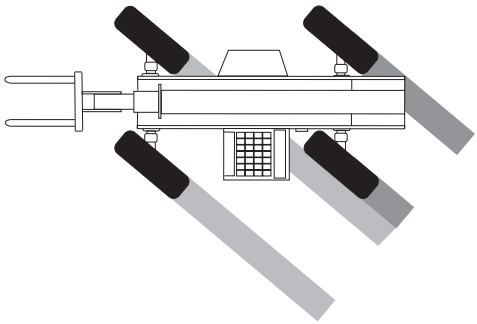

OH1680

https://truckmanualshub.com/

4. Maximum Fork Sweep

CAUTION: Allow for adequate clearance between the attachment and other objects when turning.
The attachment extends beyond the end of the vehicle (1). The operator must be aware of the maximum sweep (2) of the attachment when turning in order to avoid hitting personnel and other objects in the area.

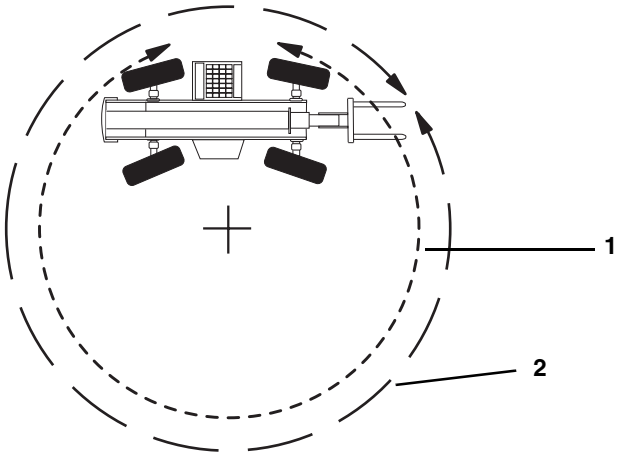

Leveling Frame

When placing a load while on a slope, use the frame sway control to keep the vehicle level. The operator should observe the frame level indicator to assure that the vehicle is level at all times.

DANGER: Use of the frame sway control with the boom raised above horizontal can cause tipover resulting in death or serious personal injury. Always use the frame sway control to level the vehicle before raising the boom above horizontal. If the vehicle cannot be leveled using the frame sway control, reposition the vehicle.

https://truckmanualshub.com/

Quick Attach

This vehicle is equipped with a quick attach system for easy attachment changing.

Attachment Removal

Be sure you are performing this procedure on level ground.

1. Place the travel select lever in (N) NEUTRAL, come to a complete stop, move the neutral lock lever to NEUTRAL LOCK position and engage the parking brake switch.
2. Extend the boom approximately 10 feet (3 meters) and tilt the carriage backward.
3. Exit the vehicle using the hand holds.

NOTE: *If you are removing a standard carriage with forks, spread the forks apart on the carriage shaft. This will provide the carriage adequate support to stand alone.*

4. Raise the quick attach pin lock lever (1) and pull out the pin (2) at the bottom of the quick attach link (3).

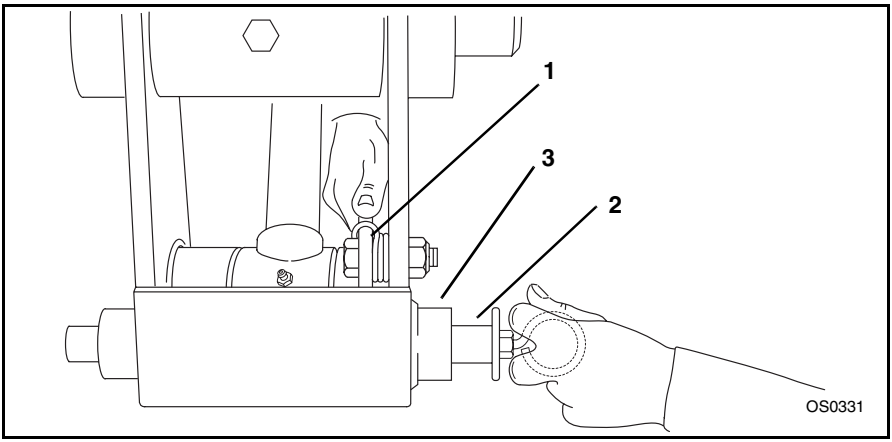

5. Return to the operators compartment, fasten the seat belt and lower the attachment to the ground in a level position. Tilt the attachment forward. This will rotate the quick attach link back away from the attachment.
6. Lower and then retract the boom until the attachment pivot pins have disconnected from the attachment.

https://truckmanualshub.com/

Attachment Reconnect

Be sure you are performing this procedure on level ground.

1. Position the vehicle directly behind the attachment to be mounted.
2. Tilt the quick attach backward.
3. Extend the boom approximately 10 feet (3 meters) and drive the vehicle forward until the attachment pivot pins are below and between the two hooks on the attachment.
4. Raise the boom until the attachment pivot pins have seated fully in the hooks of the attachment.
5. Tilt the attachment up slightly. The quick attach link should be tight against the rear of the attachment and the holes in the link and the attachment should be aligned.
6. Place the travel select lever in (N) NEUTRAL, move the neutral lock lever to NEUTRAL LOCK position, engage the parking brake switch and exit the vehicle using the hand holds.
7. Lift the quick attach lever (1). Insert the quick attach pin (2) completely through the attachment and the quick attach link (3). Be sure that the quick attach lock lever has lowered and seated itself into the groove in the quick attach pin.

WARNING: **DO NOT** operate this vehicle unless you are in the seat with the seat belt fastened around you. Death or serious personal injury could result if the belt is not securely fastened.

8. Return to the cab, fasten the seat belt and resume operation.

https://truckmanualshub.com/

Using The Capacity Chart

The individual capacity charts are located inside a booklet (1) on the right side of the front dash. Capacity charts are provided to assist the operator in determining how far in front, how high and at what angle a specific load can be safely handled with this vehicle.

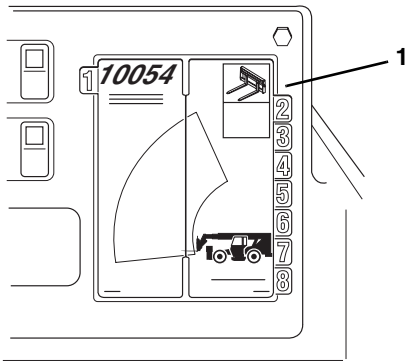

The vehicle is equipped with two indicators that will assist the operator in determining how to accurately use the capacity chart. These indicators are:

- Boom Extend Letters (2)
- Boom Angle Indicator (3)

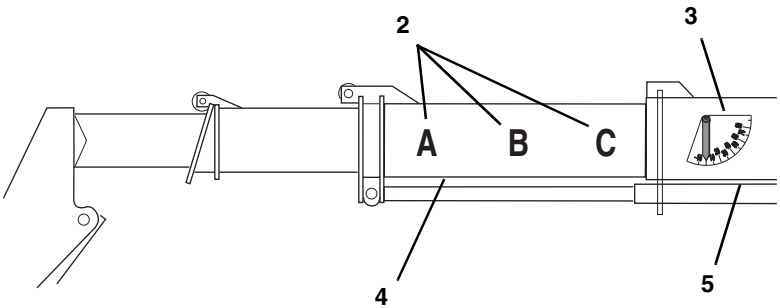

https://truckmanualshub.com/

As the boom is extended, boom extend letters (2) will appear on the left side of the primary intermediate boom (4) visible to the operator. The letters are graduated in four foot increments. These letters indicate the point of boom extension and correspond to the capacity chart. For example, when the letter “A” first appears, the boom is at the point of boom extension corresponding to the arc of line “A” throughout all the capacity charts that follow.

The boom angle indicator, located on the left side of the outer boom (5), indicates the angle of the boom and also corresponds with the angles indicated on the capacity chart.

To accurately use the capacity chart, the operator must first determine three important things:

1. Weight of the load being lifted.
2. Height of the structure where the load is to be placed.
3. Distance where the load will ultimately be placed in front of the front tires.

WARNING: **DO NOT** exceed rated capacities. Any attempt to lift or carry loads in excess of those shown on the capacity chart in the operator's compartment may cause vehicle tipover, loss of load or structural damage which could result in death or serious injury.

https://truckmanualshub.com/

Reading The Capacity Chart

Example (1):

1. The operator has placed the load onto the forks, fully retracted the boom, positioned the vehicle perpendicular to the structure and leveled the vehicle with the outriggers up.
2. The operator then determines that:
   - The load weight is 4,000 pounds (1.814 kg).
   - The height of the structure the load is to be placed upon is 27 feet (8,2 meters) from ground level.
   - The distance where the load will ultimately be placed in front of the vehicle is 17 feet (5,2 meters) from the front of the front tires.
3. After applying the height of the structure and the distance of load placement away from the vehicle to the capacity chart, the operator knows that it will be safe to place the load if the boom extend letter “D” has appeared and the boom angle indicator reading does not go below approximately 40°. This condition is however, a maximum limit for this weight, height and distance away from the vehicle. The operator could simply lower the outriggers onto firm terrain or move the vehicle closer to the structure to assure that the vehicle will not exceed the maximum limits for placing the load.

IMPORTANT! *As an added measure of safety, ALWAYS remember to shift the Travel Select Lever into (N) NEUTRAL, move the neutral lock lever to NEUTRAL LOCK position and engage the parking brake when outriggers are lowered.*

https://truckmanualshub.com/

Standard Carriage Capacity Chart - Outriggers Up

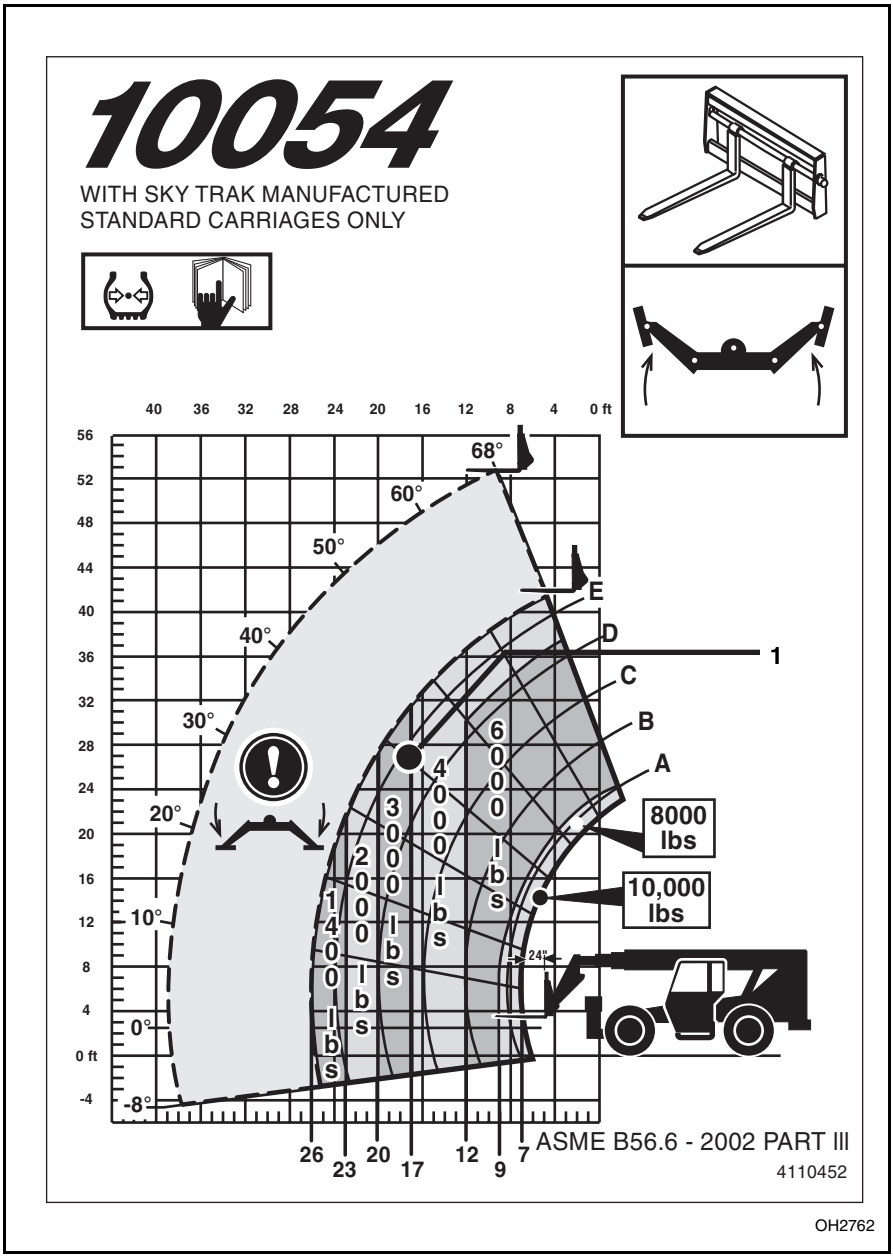

OH2762

https://truckmanualshub.com/

Standard Carriage Capacity Chart - Outriggers Down

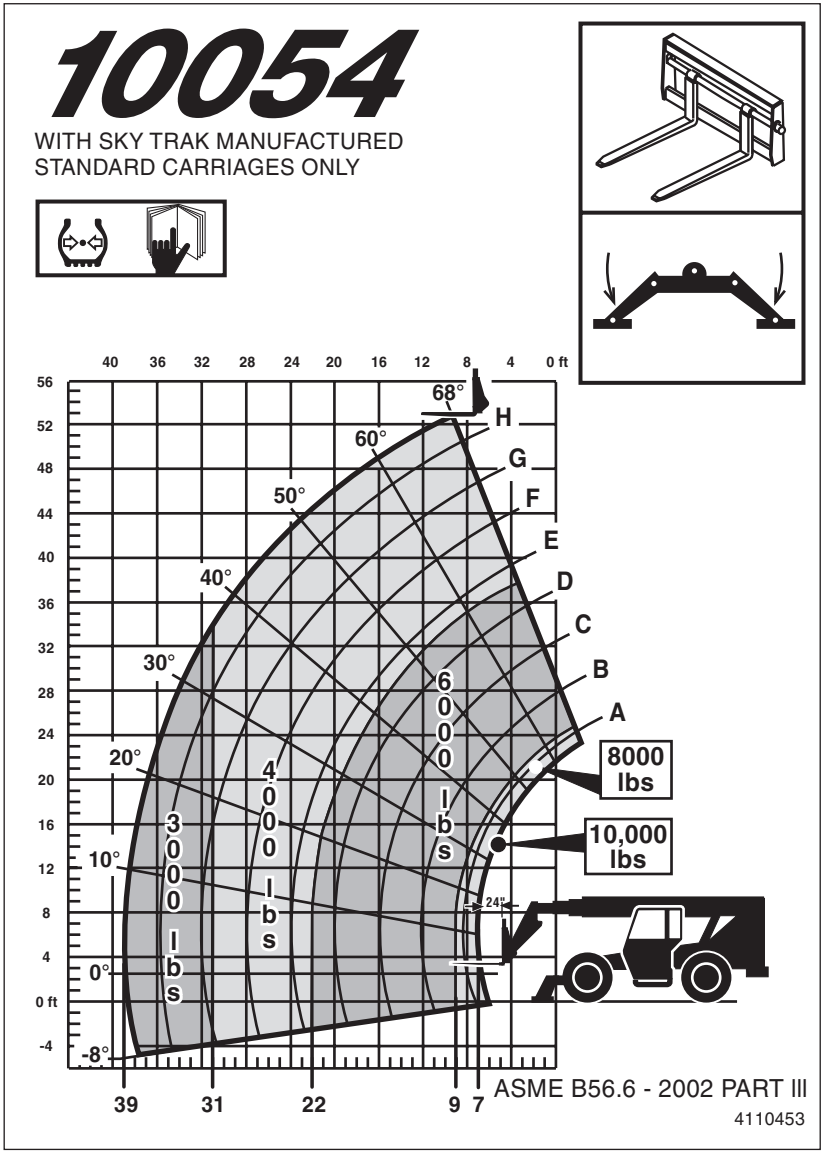

OH2772

https://truckmanualshub.com/

Side Tilt Carriage - Outriggers Up

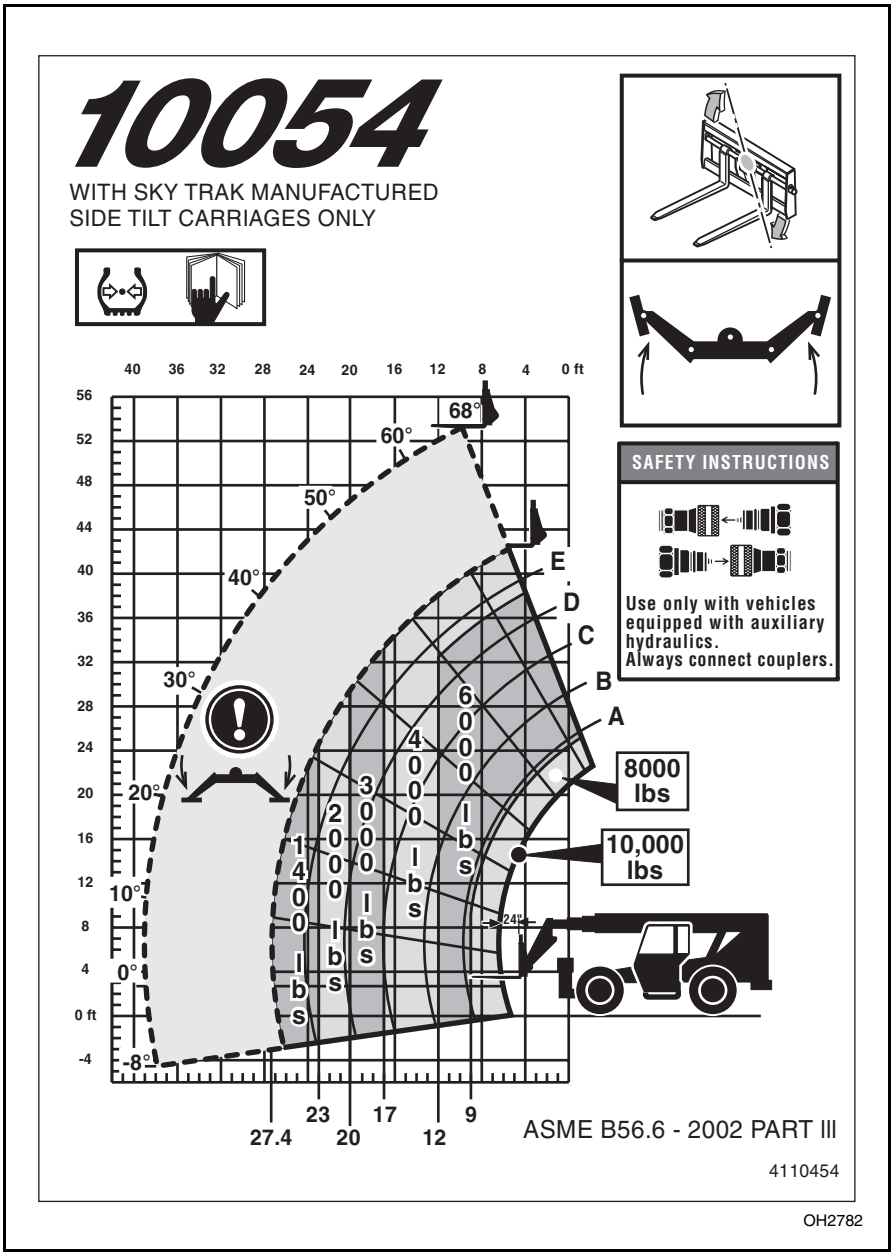

OH2782

https://truckmanualshub.com/

Side Tilt Carriage - Outriggers Down

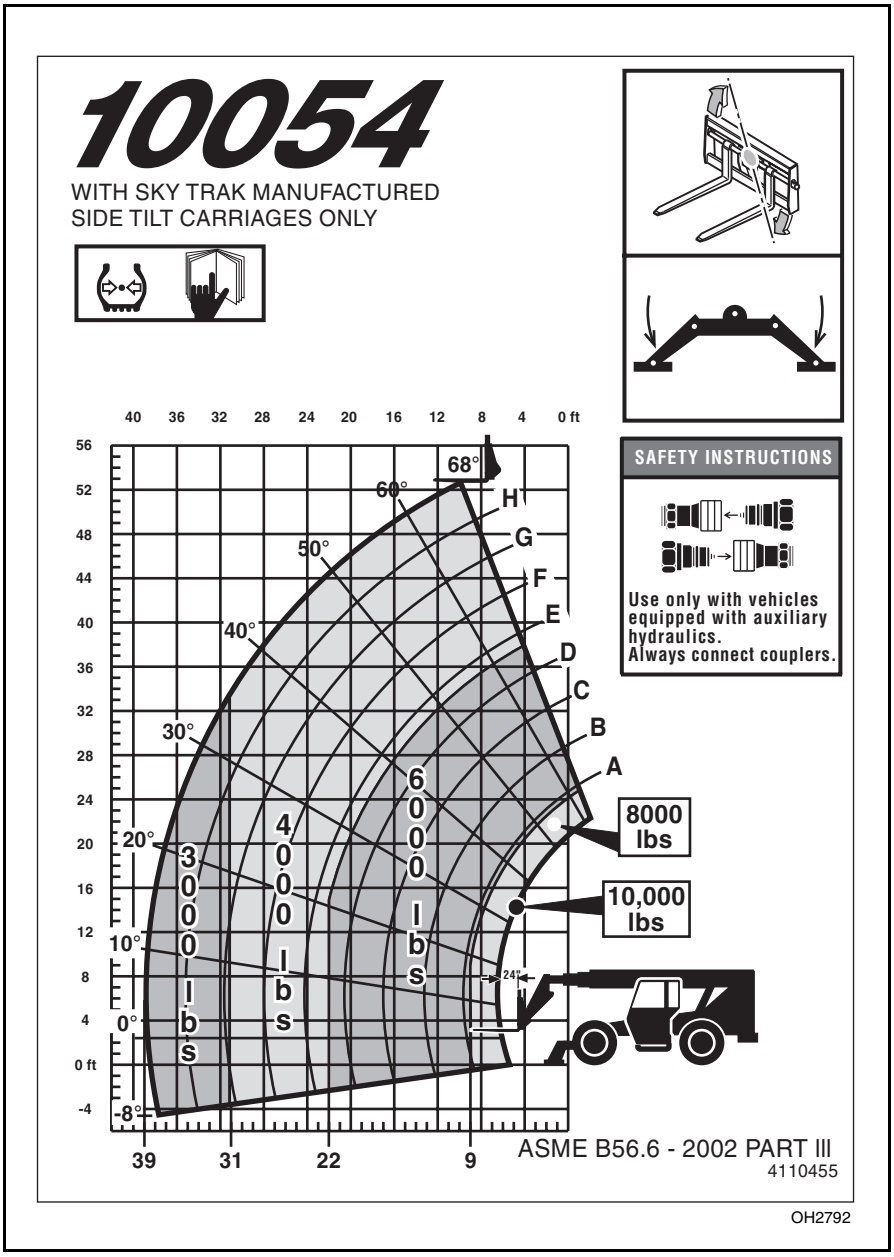

https://truckmanualshub.com/

Swing Carriage - Outriggers Up

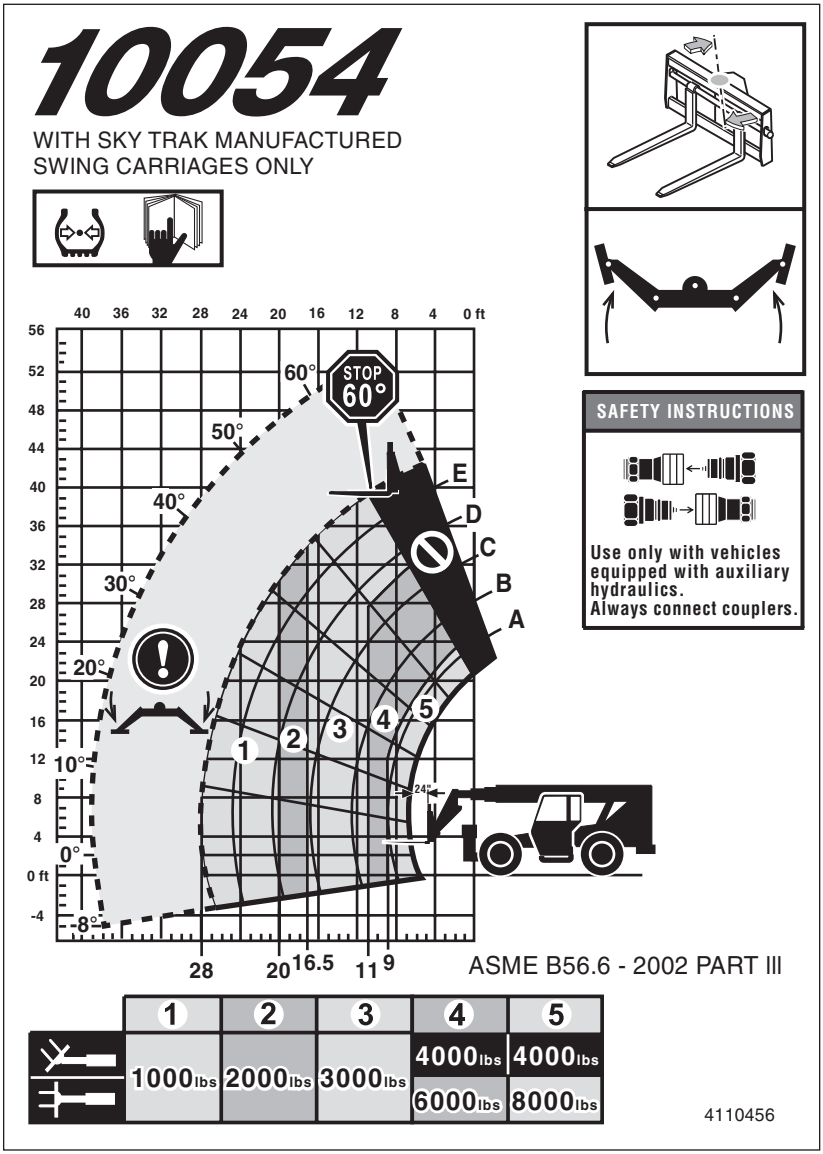

https://truckmanualshub.com/

Swing Carriage - Outriggers Down

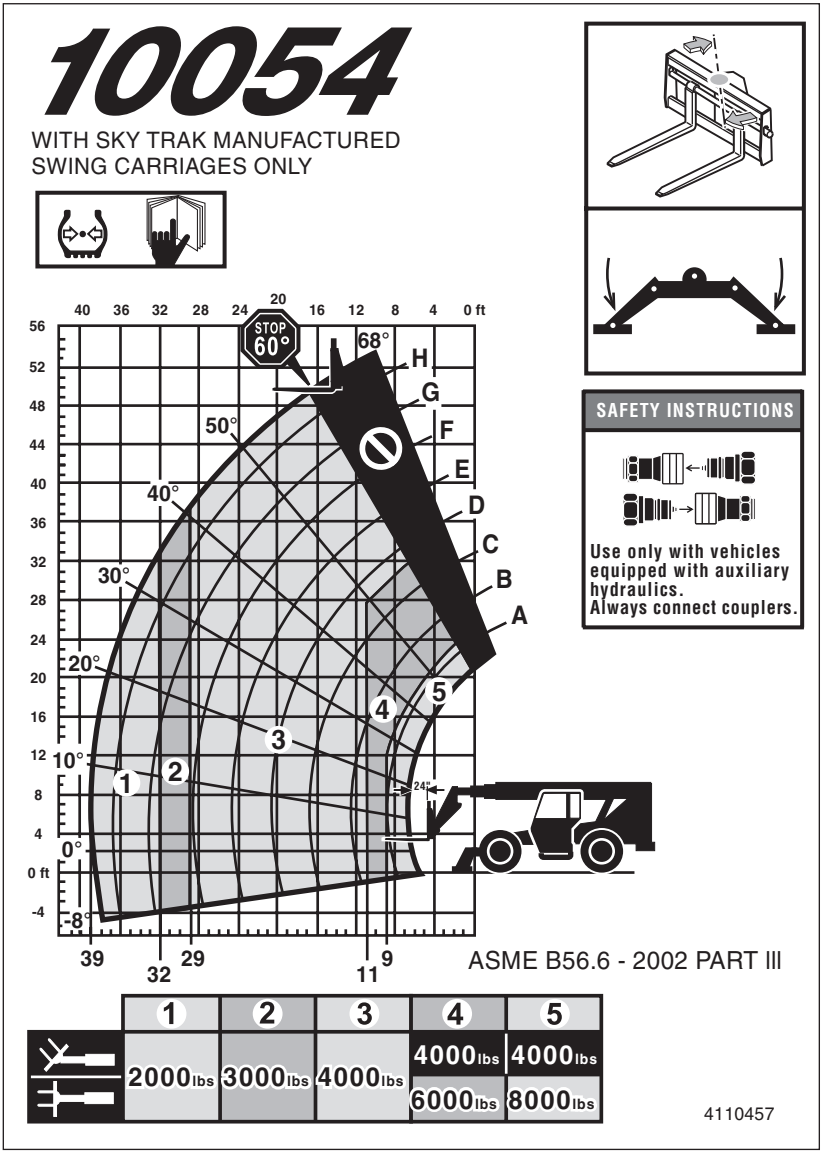

https://truckmanualshub.com/

15 Foot Truss Boom - Outriggers Up

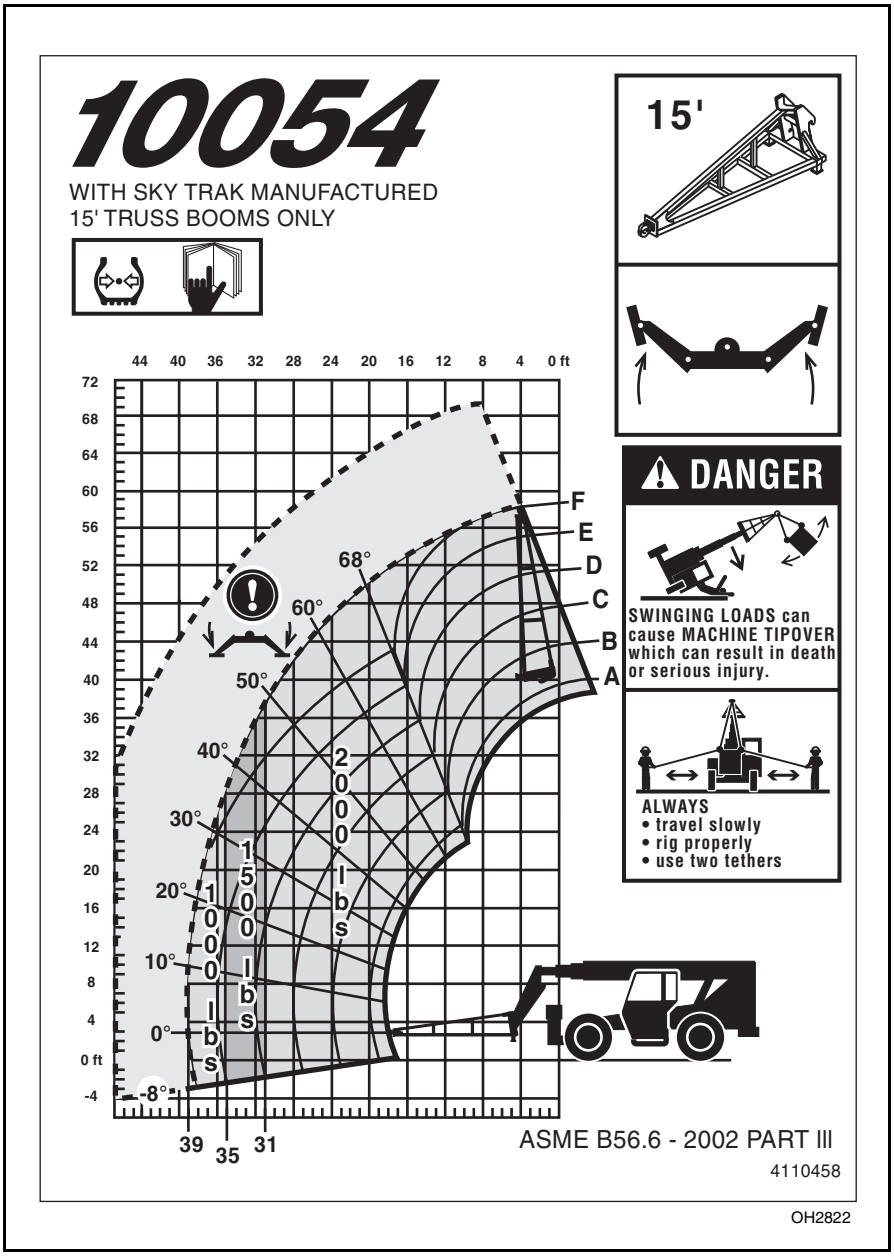

OH2822

https://truckmanualshub.com/

15 Foot Truss Boom - Outriggers Down

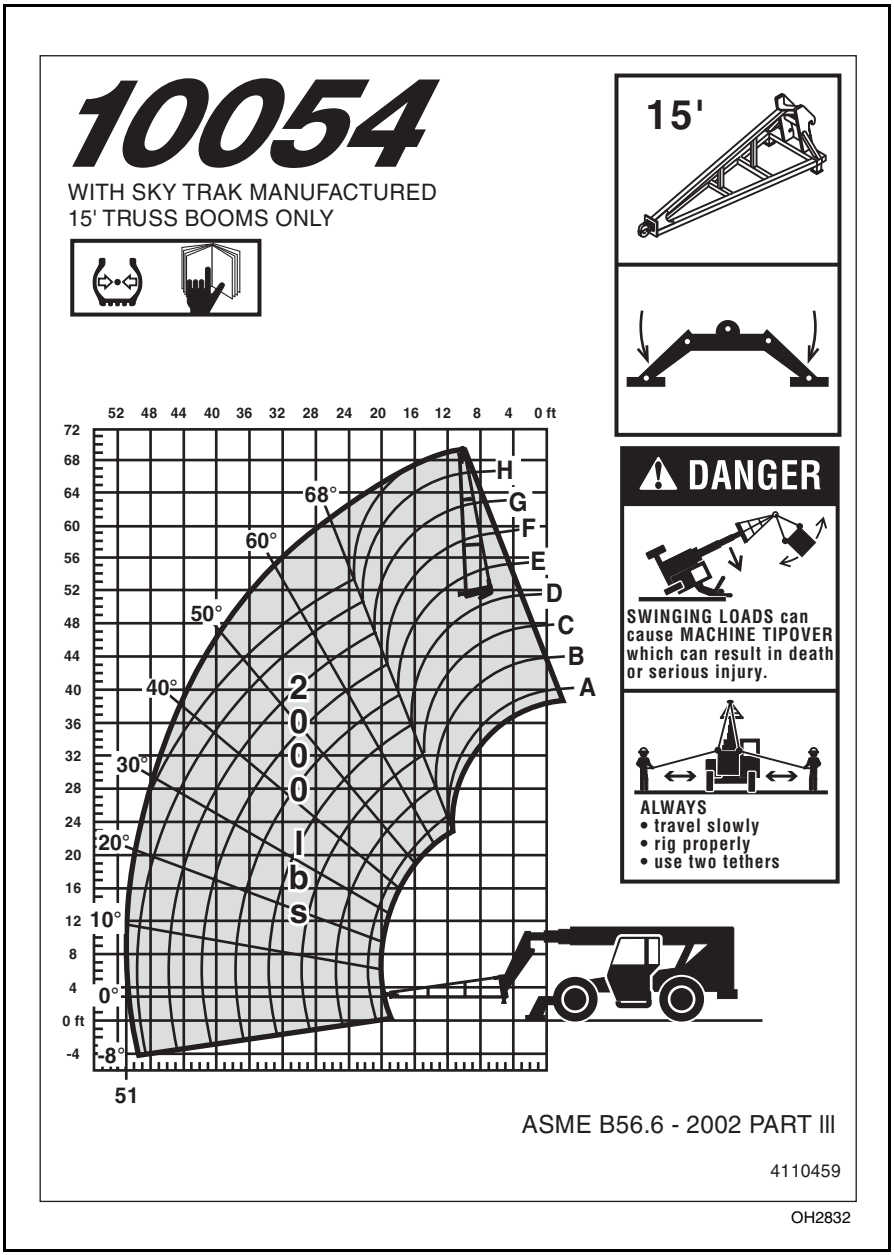

https://truckmanualshub.com/

3 Foot Truss Boom w/Winch - Outriggers Up

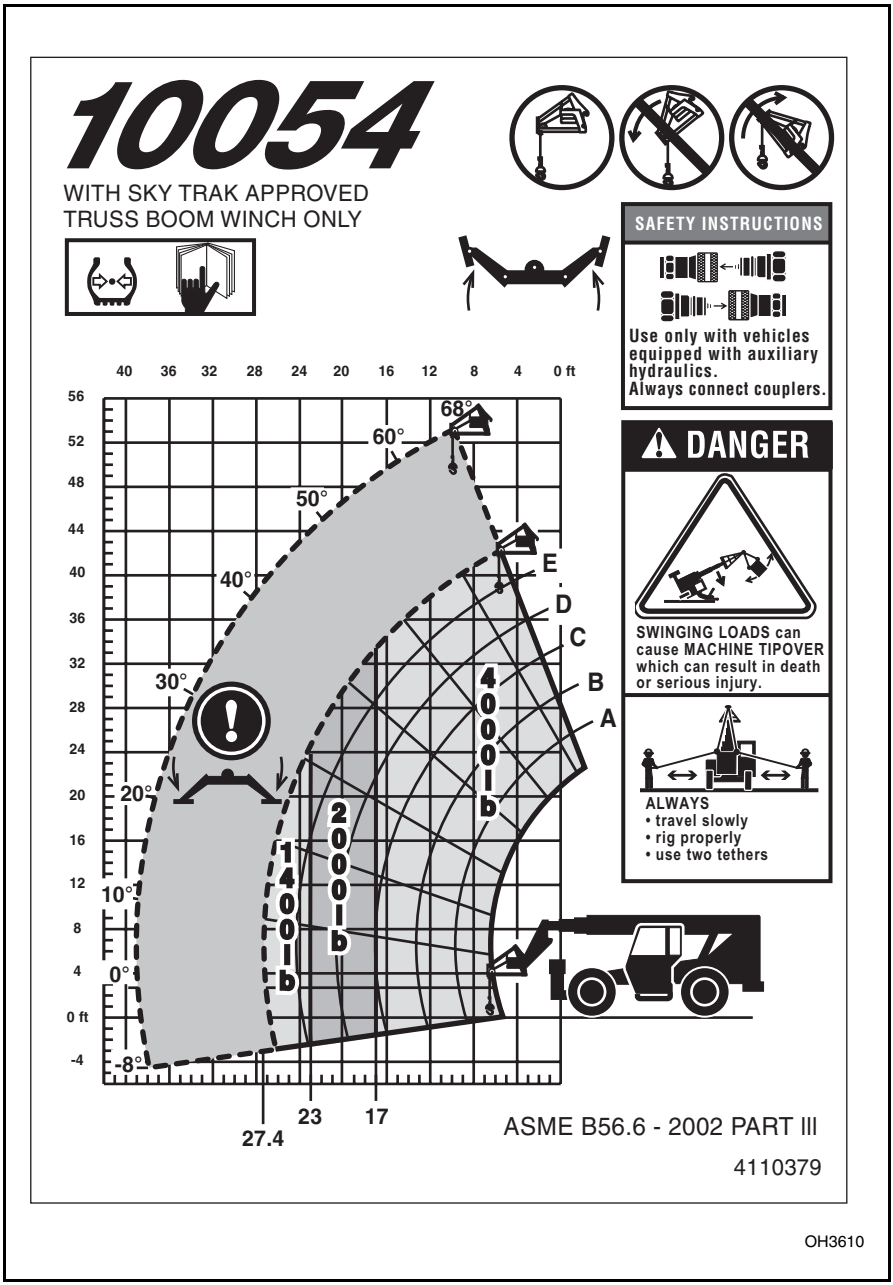

https://truckmanualshub.com/

3 Foot Truss Boom w/Winch - Outriggers Down

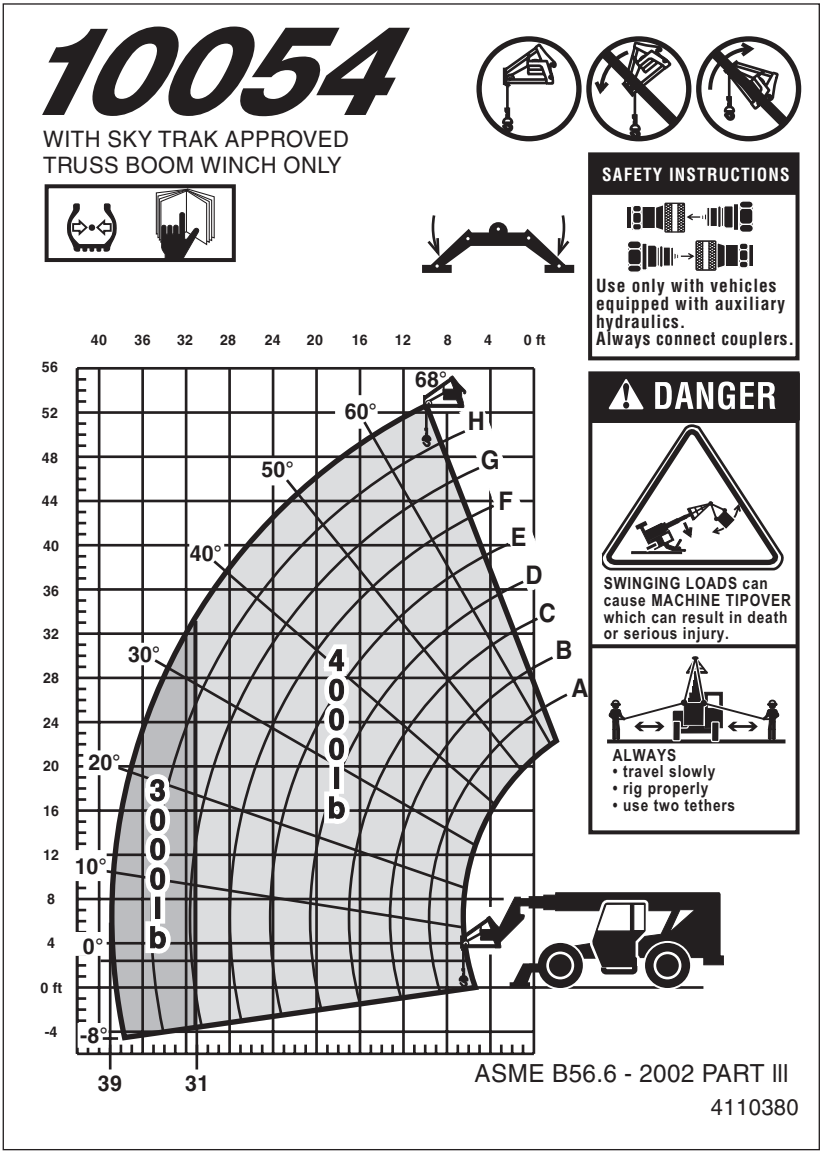

OH3620

https://truckmanualshub.com/

Fork Ratings

All approved forks for this vehicle are marked with a maximum load capacity rating. This rating is stamped on the left edge of the fork (1) just below the fork pivot shaft (2). The rating is listed in U.S. pounds and based upon a 24" (610 mm) load center (3). This rating specifies the maximum load capacity that the individual fork can safely carry at a maximum load center (4) of 24" (610 mm).

Since forks are always used in multiples, the total rating of any combination of forks will be the sum of their rated capacity. Other than block forks, all forks should be used in matched pairs. Block forks should be used in matched sets.

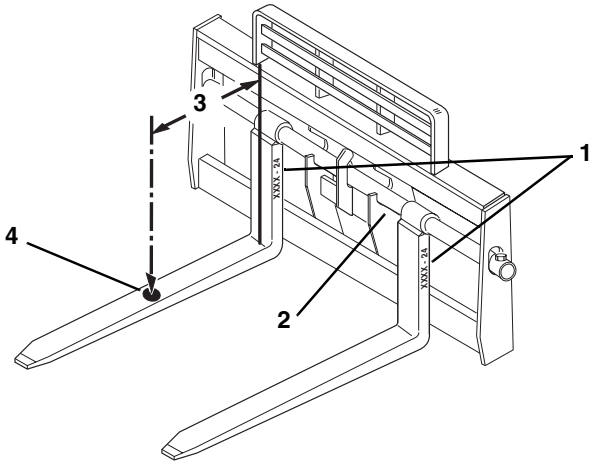

WARNING: **DO NOT** exceed the total rated capacity of the specific pair of forks being used. Forks can break causing loss of load and possible death or serious personal injury to the operator or personnel in the area. If the total rated capacity of the forks exceeds the capacity of the vehicle, the vehicle capacity should not be exceeded.

The maximum load capacity for this vehicle is 10,000 pounds (4.536 Kg). The matched pair or set of forks used on this vehicle should have total load ratings which equal or exceed 10,000 pounds (4.536 Kg). When the load rating of the vehicle differs from the load capacity of the forks, the lower value becomes the overall load capacity.

https://truckmanualshub.com/

How To Pick, Carry & Place A Load

To pick a load, tilt the carriage forward so the forks hang freely on the fork shaft. Move the forks inward or outward on the fork shaft so that they are aligned with the openings in the pallet. Tilt the carriage back and extend the boom slowly so the forks slide into the openings in the pallet. Raise the boom so that the load is lifted.

To carry a load, position the boom so that the load is as low as possible and the travel area is visible to the operator.

Before placing the load, determine whether the outriggers are to be in the raised or lowered position. Then use the capacity chart to determine safe boom extension range for the applicable load. To place a load, align the forks at the level the load is to be placed and then extend the boom slowly until the load is just above the area where it is to be placed. Lower the boom until the pallet rests in position and the forks are free to retract. Retract the forks slowly from under the load.

Elevating Personnel

This vehicle is designed to lift and transport materials and should not be used to elevate personnel except as explained in this section. Only equipment designed and approved for elevating personnel should be used.

If the vehicle must be used to elevate personnel, use only a compliant work platform. Refer to “Defining Platforms For Elevating Personnel” on page 90 for requirements. When using a work platform, the following precautions must be taken:

WARNING: Use only a compliant work platform to lift or lower personnel. **Never** drive the vehicle with the work platform in a raised position or with personnel on board, even for a short distance.

Defining Platforms For Elevating Personnel

The requirements for platforms shall include the following:

1. The platform floor must have a slip resistant surface not more than 8" (200 mm) above the normal load supporting surface of the forks.
2. The platform floor dimensions shall not exceed:
   a. Two times the load center distance as listed on the load chart that is attached to the vehicle. This floor dimension is measured parallel to the longitudinal center plane of the vehicle.

https://truckmanualshub.com/

b. Width of the platform shall not be wider than the width of the vehicle, measured across the load bearing tires plus 10" (250 mm) on each side.

c. Minimum space requirements for each person on the platform shall not be less than 18" (450 mm) in either direction.

3. The platform shall have a 4" (100 mm) minimum high toe plate around the perimeter of the platform. The toe plate may be omitted at the access opening.

4. Protection must be provided for the personnel on the work platform from any pinch points or moving parts while in their normal working position on the platform.

5. Information prominently indicated on the work platform shall include:

   a. Maximum work load including personnel and equipment.

   b. Weight of the empty platform.

6. Provide a means to securely mount and attach the platform so it can:

   a. Only be centered laterally on the vehicle and retained against the vertical face of the forks, carriage or the lifting mechanism.

   b. Prevent the platform from inadvertent pivoting.

7. The platform must have a restraining means such as a guardrail or a means of securing personnel such as a body belt or lanyard for each occupant of the platform.

8. The guardrail or similar structure shall have a nominal height to the platform floor of 42" (1066 mm) around the perimeter of the platform and include a midrail. The guardrail openings may be used to provide alternate access openings provided the opening can be easily made by hinging or removing sections, but must be easily put back into original position when alternate openings are no longer required.

9. The guardrail shall be capable of withstanding a concentrated horizontal force of 200 lb (890 N) applied at the point of least resistance without permanent deformation.

https://truckmanualshub.com/

10. A body belt and lanyard is to have an attaching point for freedom of movement, and its length is to limit free fall to 5 feet (1500 mm) measured from the point of attachment to the operator. The complete system shall be capable of withstanding three consecutive drop tests to simulate a 250 lb (113 kg) person falling 6 feet (1800 mm) without allowing the test weight to fall free to the ground. A deceleration device may be included.
11. Lanyards, when provided, shall be arranged so as not to cause a tripping hazard.
12. Body belts, when provided, should have a width of at least 1.75 in. (44 mm).
13. Structural safety factor - all load supporting structural elements of the work platform shall have a structural safety factor of not less than 2 to 1 based on the minimum yield strength of materials used.

Capacity Limitations

The combined mass (weight in pounds) of the platform, load and personnel shall not exceed one-third (33%) of the capacity of the related load center position indicated on the capacity chart. Refer to “Using The Capacity Chart” on page 76.

Preparation and Set-up

WARNING: **Never** allow anyone to alter or modify any part of the work platform. Any modification to the platform which could result in serious personal injury to anyone on the platform.

1. **DO NOT** alter or modify the work platform in any manner.
2. Make sure that the work platform is securely attached to the quick attach or forks. Follow the platform manufacturer’s instructions.
3. Make sure the platform, carriage and forks are secured to prevent them from pivoting from side to side.
4. On side tilt or swing carriages, the carriage must be centered and/or leveled horizontally and vertically. The hydraulic system quick disconnects must also be disconnected and plugged and the carriage securely fastened to prevent any tilting or side to side swinging motion.
5. Ensure the vehicle has a firm footing and is level.

https://truckmanualshub.com/

6. Be sure the vehicle is in a level position (side to side) before any operation is begun. Use the frame sway to level the vehicle. If the vehicle cannot be leveled, reposition the vehicle.
7. Place the travel select lever in the (N) NEUTRAL position and move the neutral lock lever to the NEUTRAL LOCK position.
8. Engage the parking brake switch. Blocking the wheels is also recommended.
9. Level the platform in both the side-to-side and front-to-back directions before use.
10. Before lifting or lowering personnel, be sure the vehicle lifting mechanism operates smoothly through the entire lifting and lowering of the platform and maintains its self leveling function. The vehicle must operate smoothly both empty and loaded.
11. Be sure any lift limiting devices and latches are functioning properly.
12. Any body belt, lanyard or deceleration devices which have sustained any deformation or damage must be replaced before using the work platform again.
13. Before elevating personnel, the area around and under the work platform should be marked to warn anyone on the ground that overhead work is being done.
14. Protection must be provided for the personnel on the work platform from any pinch points or moving parts while in their normal working position on the platform.
15. Provide any overhead protection device as required by worksite conditions or if requested by the user of the platform.

https://truckmanualshub.com/

Elevating Personnel

WARNING: **Never** operate the Attachment Tilt function to tilt the platform forward or rearward when elevating with personnel aboard. Death or serious personal injury could result.

DANGER: **Never** operate this or any equipment in an area in which overhead or underground cables or power sources exist without first requesting that the appropriate power company or utility company de-energize the lines or take other suitable precautions.

1. Make sure there are no overhead obstructions or electrical wires above the platform before lifting.
2. A trained operator must operate the controls from the operators compartment and must remain with the vehicle at all times. Using extreme caution, lift and lower personnel smoothly and only at their request. The operator should move the platform up and down only in response to instruction from personnel on the platform. If the operator must move the platform, the operator must alert the personnel aboard the platform before moving.
3. Personnel aboard the work platform must maintain a firm footing at all times.
4. Be certain the personnel and related equipment on the platform do not exceed the available space of the platform.
5. The platform shall be lowered to the ground level for personnel to enter or exit the platform through the appropriate platform access opening. Personnel must not climb on any part of the vehicle or over the platform guardrails in an attempt to enter or exit the platform.
6. Always position the platform in the travel position (approximately one foot above ground level) before moving the vehicle.

IMPORTANT! *Make sure that required restraining equipment such as railings, chains, cable, body belts with lanyards, etc. are in place and properly used. Never use railings, planks, ladders, etc. on the platform for the purpose of achieving additional reach or height.*

https://truckmanualshub.com/

Using Other Attachments

Numerous attachments, marketed by **JLG** are available for this vehicle. The capacity charts attached to this vehicles dash are to be used with **Sky Trak** approved attachments only. Hydraulically powered attachments must only be used on vehicles equipped with auxiliary hydraulics.

IMPORTANT! *This vehicle is intended for the function of lifting only. This vehicle is not designed to PULL, TOW or DRAG other objects.*

JLG makes no representations or warranties, expressed or implied, as to the design, manufacture or fitness for use with this vehicle of any third party source attachment. This vehicle is not intended to be used and should not be used with an attachment that would alter the center of gravity or stability of this vehicle. **JLG** assumes no liability for any third party attachment that would alter the center of gravity or stability.

IMPORTANT! DO NOT *use unapproved attachments.*

Following is a list of some of the attachments available through **JLG** for this vehicle model:

- 48" Standard Carriage
- 60" Standard Carriage
- 72" Standard Carriage
- 1-1/4 Cubic Yard Bucket

The standard capacity charts on page 79 & page 80 are applicable for the above listed attachments.

The attachments listed below are supplied with their own individual capacity chart:

- 48, 60 & 72" Side Tilt Carriage (on page 81 & page 82).
- 52 & 72" Swing Carriage (on page 83 & page 84).
- 15 Foot Truss Boom (on page 85 & page 86).
- 3 Foot Truss Boom w/Winch (page 87 & page 88).

Hydraulically actuated attachments also have a maximum hydraulic pressure rating. Ensure that the maximum rated hydraulic pressure of the attachment is equal to or slightly greater than 3,000 psi (206,8 bar), which is the maximum pressure of the vehicle's auxiliary hydraulics at the quick disconnect couplers.

https://truckmanualshub.com/

Shut-Off

1. Bring the vehicle to a complete stop using the service brakes.
2. Park the vehicle on level ground.

WARNING: To prevent death or serious personal injury, be certain to lower the boom, engage the parking brake switch, and shut off the engine prior to exiting the vehicle.

3. Place the travel select lever in (N) NEUTRAL, move the neutral lock lever to NEUTRAL LOCK position and engage the parking brake switch.
4. Lower the boom and ground the carriage.
5. Turn the ignition key to the OFF position and remove the key.

https://truckmanualshub.com/

Towing A Disabled Vehicle

Towing a disabled vehicle should only be attempted after exhausting all other options. Every effort should be made to repair the vehicle and move it under its own power. Towing the vehicle improperly can result in damage to the vehicle drivetrain.

IMPORTANT! *In the event the vehicle is disabled and cannot be moved under engine power, the situation must be properly evaluated and dealt with on an individual basis. Contact your local* ***Sky Trak*** *Distributor or the* ***JLG*** *Service Department at (877) 554-5438 or (717) 485-6657 for specific instructions for your particular situation.*

If it is necessary to tow the vehicle a short distance to avoid a potentially hazardous situation such as being in an unsafe area on the worksite or on a roadway, prepare the vehicle for towing as follows:

1. Remove the load from the vehicle.

WARNING: BLOCK ALL FOUR WHEELS. Failure to do so could result in death or serious injury from vehicle roll-away.

2. **Block all four wheels** to help prevent the vehicle from moving after the parking brake is disabled.
3. Remove the six hex nuts (1) securing the transmission covers (2) to the frame. Remove the covers.

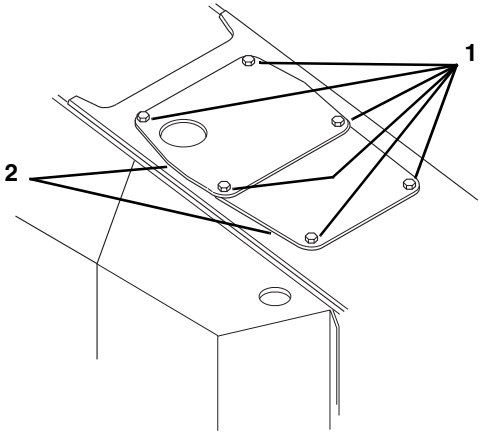

https://truckmanualshub.com/

4. Position the towing vehicle in place. Attach any chains needed to secure the disabled vehicle.
5. Attach a remote portable hydraulic pressurizing unit to the parking brake gauge port (1) on the secondary function manifold (2) mounted on the inside wall of the frame (3) on the left side next to the transmission.

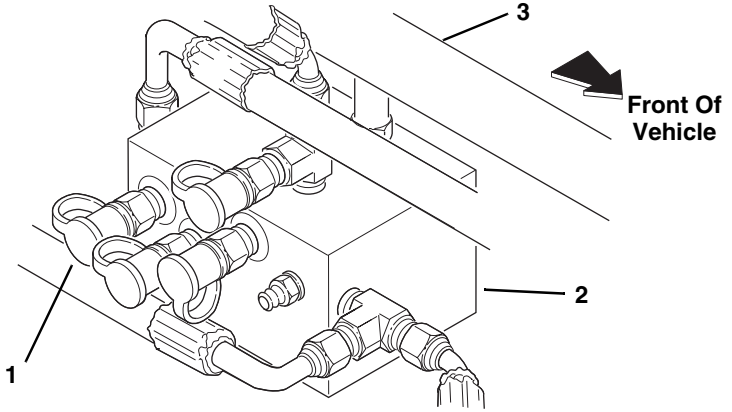

6. Turn the key switch to the ON position (with the engine not running), release the park brake (park brake switch OFF), and have an operator seated in the seat.

CAUTION: **DO NOT** exceed 575 psi (40 bar) when pressurizing the park brake. Applying too much pressure may damage the brake seals.

7. Pressurize the park brake with the pressurizing unit. Close the pump needle valve on the pressurizing unit.
8. Clear the area of all unnecessary personnel.
9. Carefully remove the wheel blocks from each of the four tires. Tow the vehicle to a secure location.

IMPORTANT! *Without engine power, service braking power is reduced. Only the rear service brakes will function when the brake pedal is depressed. Steering is not possible and the vehicle will only travel in the direction that the wheels were last truned.* ***Tow or push the vehicle at a very slow speed!***

https://truckmanualshub.com/

Emergency Boom Lowering

This section discusses emergency boom lowering procedures:

Part I *In case of loss of engine power or hydraulic pump failure.*

Part II *In case of hydraulic line failure.*

Part I

Loss of Engine Power or Hydraulic Pump Failure

IMPORTANT! *In the event of total loss of engine power or hydraulic pump failure with an elevated load, the situation must be properly evaluated and dealt with on an individual basis. Contact your local* ***Sky Trak*** *Distributor or the* ***JLG*** *Service Department at (877) 554-5438 or (717) 485-6657 for specific instructions for your particular situation.*

In any event, the vehicle should be secured until the situation has been properly evaluated. Secure the vehicle by following the procedures below:

1. Clear the area around the vehicle of all personnel.
2. Place the travel select lever in (N) NEUTRAL, move the neutral lock lever to NEUTRAL LOCK position and engage the parking brake switch.
3. Block all four wheels.
4. Section off a large area under the boom with string or tape to restrict any personnel from entering this potentially dangerous area.

WARNING: **DO NOT** get under a raised boom unless the boom is blocked up. Always block the boom before doing any servicing that requires the boom to be up.

5. Temporarily block up or support the outer boom so it cannot be lowered.
6. If the load is in a position where it can be removed safely, completely remove the load from the carriage and/or attachment, otherwise leave the load in place.
7. Place an accident prevention tag on both the ignition switch and steering wheel. Refer to “Accident Prevention Tags” on page 5. Actual accident prevention tags can be found as the last page of this manual. If you do not have a safety tag, tape over the ignition switch.

https://truckmanualshub.com/

Part II - Hydraulic Line Failure

In case of hydraulic line failure, there are step-by-step procedures available to assist you in safely retracting and then lowering the boom. Read Part II from start to finish before performing any of these procedures so you fully understand the process and the danger involved. If you are unsure about any part of these procedures contact your local **Sky Trak** Distributor or the **JLG** Service Department.

Every attempt should be made to repair the hydraulic line failure and to retract and then lower the boom in its normal fashion. We realize this is not always possible. Step-by-step procedures are also available when the boom must be retracted and lowered immediately and replacement parts are not available. Only resort to Steps 3 & 4 when absolutely necessary.

IMPORTANT! *Be aware that the boom must first be retracted and then lowered to avoid vehicle tipover.*

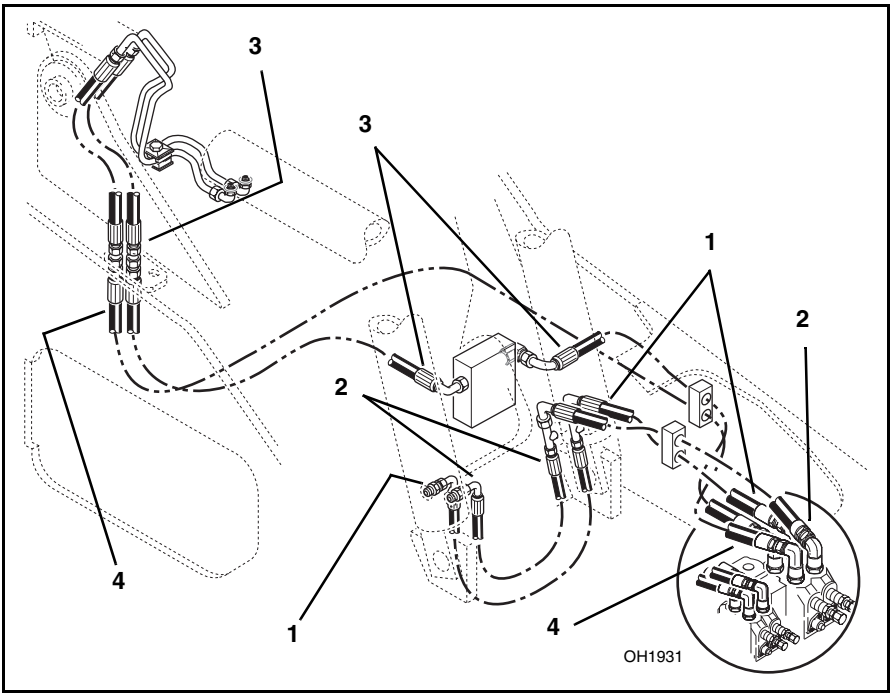

https://truckmanualshub.com/

In any case of hydraulic line failure, it is critical to correctly identify which hydraulic line has failed. Identify the hydraulic line that has failed and use the table that follows to determine which Step to follow to retract and lower the boom. The hydraulic lines are:

- Boom Lift Line (1)
- Boom Lower Line (2)
- Boom Extend Line (3)
- Boom Retract Line (4)

	NORMAL STEPS		EMERGENCY STEPS
HYDRAULIC LINE THAT FAILED	FOLLOW THIS STEP IF PARTS ARE AVAILABLE	FOLLOW THIS STEP IF PARTS ARE NOT AVAILABLE	OP0330 FOLLOW THIS STEP AS A LAST RESORT
BOOM **LIFT** LINES (LIFT CYLINDERS TO CONTROL VALVE)	STEP 1	STEP 2	
BOOM **LOWER** LINES (LIFT CYLINDERS TO CONTROL VALVE)	STEP 1		STEP 3
BOOM **EXTEND** LINE	STEP 1	STEP 2	
BOOM **RETRACT** LINE	STEP 1		STEP 4

https://truckmanualshub.com/

STEP 1

1. Clear the area of any unnecessary personnel.
2. Place the travel select lever in (N) NEUTRAL, move the neutral lock lever to NEUTRAL LOCK position and engage the parking brake switch.
3. Block all four wheels.

WARNING: **DO NOT** get under a raised boom unless the boom is blocked up. Always block the boom before doing any servicing that requires the boom to be up.

4. If the load is in a position where it can be removed safely, completely remove the load from the carriage and/or attachment; otherwise, leave the load in place.
5. Temporarily block up or support the outer boom.

WARNING: Wear protective clothing and proper eye protection when working with or around hydraulic oil. Wait for hydraulic oil to cool before attempting to repair the failure. Hot hydraulic oil can cause severe burns and other serious injury.

6. Replace the failed hydraulic line with a new part. The hydraulic lines are:
   - Boom Lift Line (1)
   - Boom Lower Line (2)
   - Boom Extend Line (3)
   - Boom Retract Line (4)
7. Check the hydraulic oil level, add oil if needed.
8. Remove the blocking or support from the outer boom.
9. Return to the cab, fasten your seat belt and start the engine.
10. Tilt the carriage and/or attachment upward if necessary for clearance before retracting the boom.
11. Slowly retract the boom.

https://truckmanualshub.com/

12. Slowly lower the boom and ground the carriage and/or attachment.
13. Shut off the engine.
14. Completely remove the load from the carriage and/or attachment if you haven't already done so.
15. Return to the cab, fasten your seat belt and start the engine.
16. Cycle the lift and extend cylinders several times to bleed air from the system. Check for leaks.
17. Recheck the hydraulic oil level. Add oil if necessary.

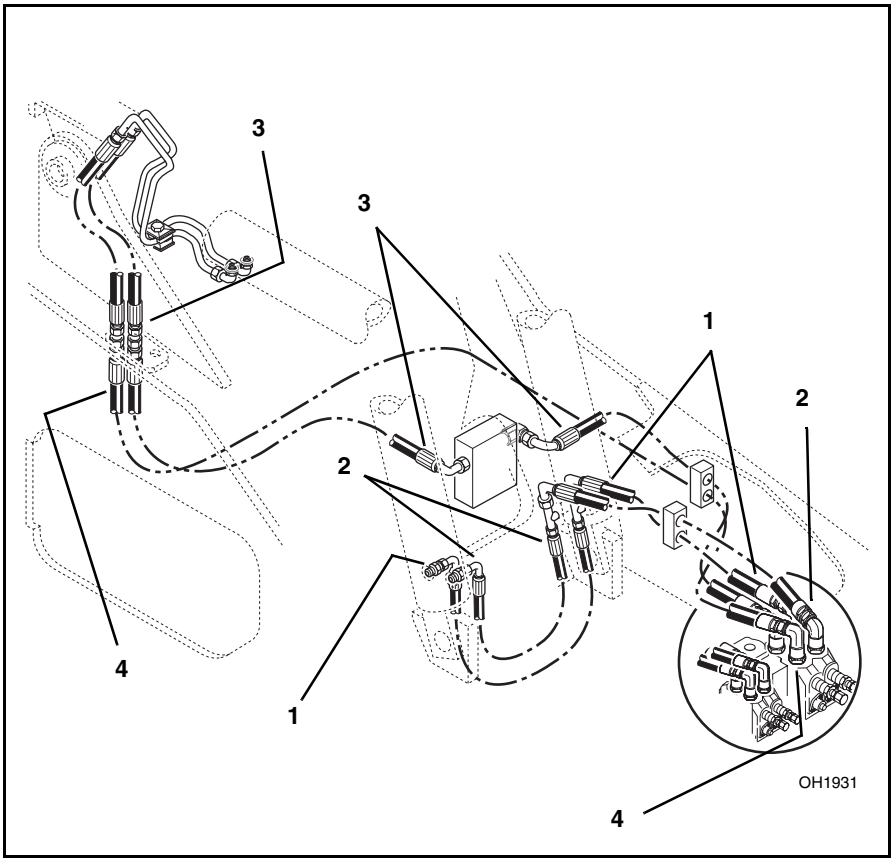

https://truckmanualshub.com/

STEP 2

USE IN CASE OF:

BOOM LIFT LINE FAILURE (Lift Cylinders to Control Valve)

BOOM EXTEND LINE FAILURE

1. Clear the area of any unnecessary personnel.
2. Place the travel select lever in (N) NEUTRAL, move the neutral lock lever to NEUTRAL LOCK position and engage the parking brake switch.
3. Block all four wheels.

WARNING: Wear protective clothing and proper eye protection when working with or around hydraulic oil. Wait for hydraulic oil to cool before attempting to repair the failure. Hot hydraulic oil can cause severe burns and other serious injury.

4. Place a container under the failed hose to catch any hydraulic oil that may escape during this procedure.
5. Return to the cab, fasten your seat belt and start the engine.
6. Slowly retract the boom.
7. Slowly lower the boom and ground the carriage and/or attachment.
8. Shut off the engine.
9. Completely remove the load from the carriage and/or attachment.
10. Place an accident prevention tag on both the ignition switch and steering wheel. Refer to “Accident Prevention Tags” on page 5. Actual accident prevention tags can be found as the last page of this manual. If you do not have a safety tag, tape over the ignition switch.
11. Have the vehicle serviced immediately. Replace any failed hydraulic lines with new parts. The hydraulic lines are:
    - Boom Lift Line (1)
    - Boom Lower Line (2)
    - Boom Extend Line (3)
    - Boom Retract Line (4)

https://truckmanualshub.com/

12. Return to the cab, fasten your seat belt and start the engine.
13. Cycle the lift cylinder several times to bleed air from the system. Check for leaks.
14. Recheck the hydraulic oil level. Add oil if necessary.
15. Transfer any waste oil to a container with a cover and label as used oil. Dispose of properly.

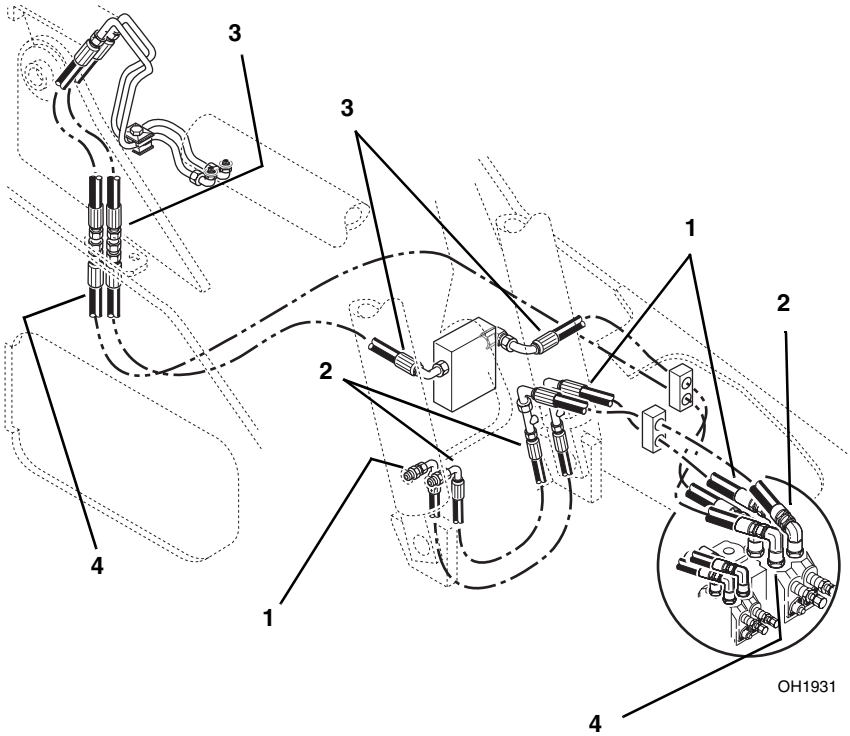

https://truckmanualshub.com/

STEP 3

BOOM LOWER LINE FAILURE (Lift Cylinders to Control Valve)

1. Clear the area of any unnecessary personnel.
2. Place the travel select lever in (N) NEUTRAL, move the neutral lock lever to NEUTRAL LOCK position and engage the parking brake switch.
3. Block all four wheels.

WARNING: **DO NOT** get under a raised boom unless the boom is blocked up. Always block the boom before doing any servicing that requires the boom to be up.

4. Temporarily block up or support the outer boom.
5. If the load is in a position where it can be removed safely, completely remove the load from the carriage and/or attachment; otherwise, leave the load in place.
6. Place a 10 gallon (40 liter) container under the vehicle to catch any hydraulic oil that will escape during this procedure.

WARNING: Wear protective clothing and proper eye protection when working with or around hydraulic oil. Wait for hydraulic oil to cool before attempting to repair the failure. Hot hydraulic oil can cause severe burns and other serious injury.

NOTE: *If a replacement hose is not available, the adjacent boom lift line (1) can be used to replace the failed boom lower line (2).*

7. Remove the individual failed boom lower line (2) from the circuit.
8. Remove and temporarily reposition the adjacent boom lift line (1) in place of the failed boom lower line (2).

IMPORTANT! *Once either boom lift line is removed and the boom is retracted during the remaining steps, hydraulic oil will drain out of the base end of the boom cylinder. The escaping oil should be deflected by some means (the failed hose could be used) directing the oil into the drain container.*

https://truckmanualshub.com/

9. Check the hydraulic oil level and add oil if needed.
10. Remove the blocking or support from the outer boom.
11. Return to the cab, fasten your seat belt and start the engine.

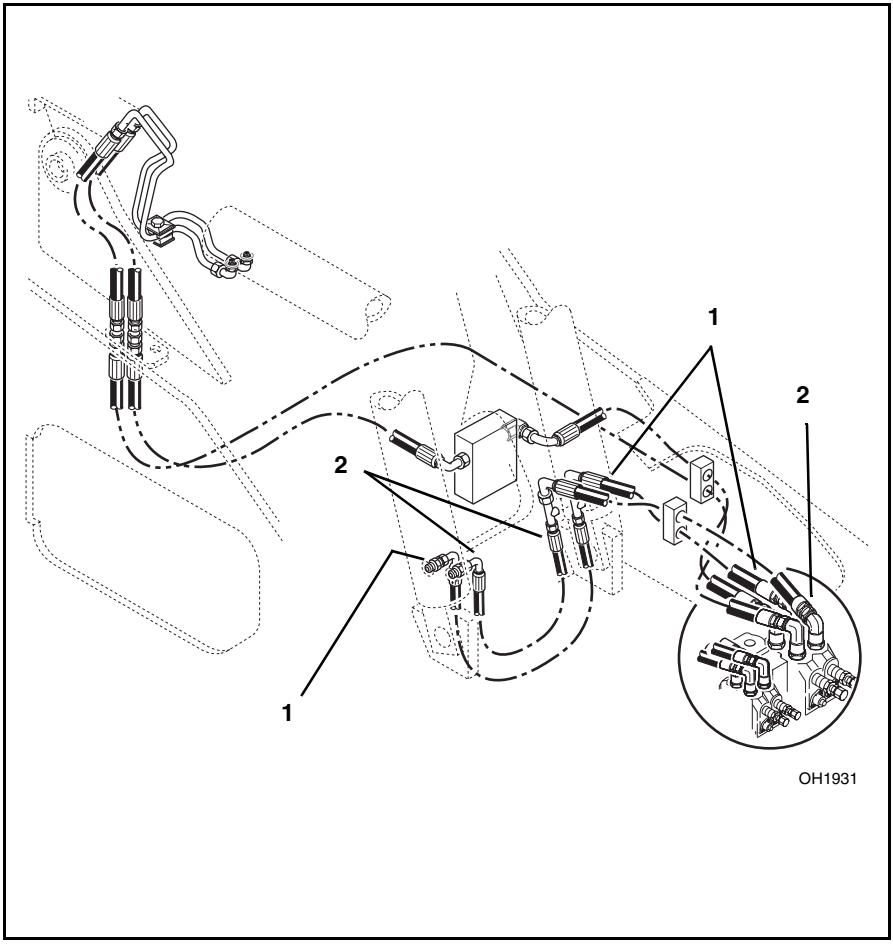

IMPORTANT! *Have the vehicle serviced and hoses replaced as soon as the boom has been lowered and the vehicle is in a secure location.*

https://truckmanualshub.com/

12. Tilt the carriage and/or attachment upward if necessary for clearance before retracting the boom.
13. **SLOWLY RETRACT** the boom.
14. **SLOWLY LOWER** the boom and ground the carriage.
15. Completely remove the load from the carriage and/or attachment if you haven't already done so.
16. Have the vehicle serviced immediately.
17. Replace any faulty hydraulic lines.
18. Return to the cab, fasten your seat belt and start the engine.
19. Cycle the lift cylinder several times to bleed air from the system. Check for leaks.
20. Transfer the waste oil to a container with a cover and label as used oil. Dispose of properly.
21. Recheck the hydraulic oil level. Add oil if necessary.

https://truckmanualshub.com/

STEP 4

BOOM RETRACT LINE FAILURE

1. Clear the area of any unnecessary personnel.
2. Place the travel select lever in (N) NEUTRAL, move the neutral lock lever to NEUTRAL LOCK position and engage the parking brake switch.
3. Block all four wheels.

WARNING: **DO NOT** get under a raised boom unless the boom is blocked up. Always block the boom before doing any servicing that requires the boom to be up.

4. If the load is in a position where it can be removed safely, completely remove the load from the carriage and/or attachment, otherwise leave the load in place.
5. Place a 10 gallon (40 liter) container under the vehicle to catch any hydraulic oil that will escape during this procedure.

https://truckmanualshub.com/

WARNING: Wear protective clothing and proper eye protection when working with or around hydraulic oil. Wait for hydraulic oil to cool before attempting to repair the failure. Hot hydraulic oil can cause severe burns and other serious injury.

NOTE: *If a replacement hose is not available, the adjacent boom extend line (1) can be used to replace the failed boom retract line (2).*

6. Remove the failed boom retract line (2) from the circuit.
7. Remove and temporarily reposition the adjacent boom extend line (1) in place of the failed boom retract line (2).

IMPORTANT! *During the remaining steps, hydraulic oil will drain out of the base end of the boom cylinder. The escaping oil should be deflected by some means (the failed hose could be used) directing the oil into the drain container.*

8. Check the hydraulic oil level and add oil if needed.
9. Return to the cab, fasten your seat belt and start the engine.
10. Tilt the carriage and/or attachment upward if necessary for clearance before retracting the boom.
11. **SLOWLY RETRACT** the boom.
12. **SLOWLY LOWER** the boom and ground the carriage and/or attachment.
13. Completely remove the load from the carriage and/or attachment if you haven't already done so.
14. Have the vehicle serviced immediately.
15. Replace any faulty hydraulic lines.
16. Return to the cab, fasten your seat belt and start the engine.
17. Cycle the extend cylinder several times to bleed air from the system. Check for leaks.
18. Transfer the waste oil to a container with a cover and label as used oil. Dispose of properly.
19. Recheck the hydraulic oil level. Add if necessary.

https://truckmanualshub.com/

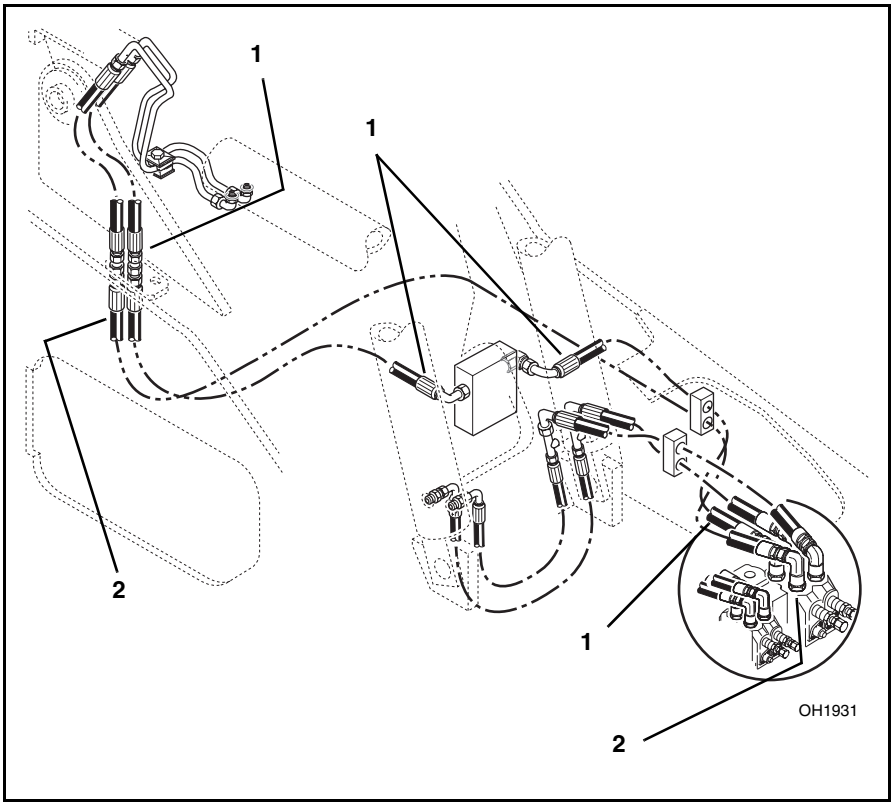

https://truckmanualshub.com/

General Maintenance

This section of the manual contains a maintenance schedule and checklist with references to pertinent procedures and instructions. To prevent problems before they occur, follow the maintenance schedule.

NOTE: *The Lubrication (1) and Maintenance Chart (2) decals are located inside the right side engine cover (3). They contain a general maintenance schedule that should be followed to maintain the vehicle in good operating condition. The same schedule information is presented in this manual, except it contains a more detailed account of how to perform these specific maintenance operations.*

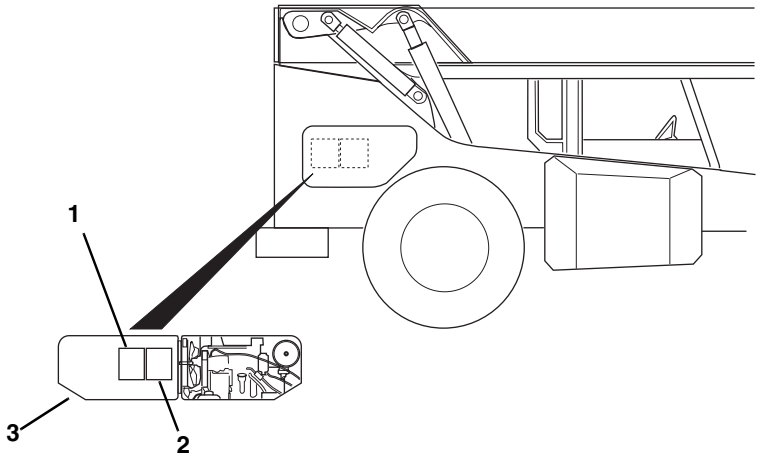

WARNING: **DO NOT** perform service or maintenance on the vehicle with the engine running, with the exception of the transmission level check. Contact with moving parts can cause death or serious personal injury.

https://truckmanualshub.com/

Maintenance Schedule And Checklist

10 Hour Intervals

OH1980

10

	Drain Fuel/ Water Separator	Check Engine Coolant Level	Check Engine Oil Level	Check Hydraulic Oil Level	Check Transmission Oil Level	Check Tire Pressure
Paragraph Ref.	5A	3A	4A	7B	8A	12A

OF1190

	Air Filter Restriction Indicator
Paragraph Ref.	2A

https://truckmanualshub.com/

General Maintenance

At First 50 Hours of Use

OM1460

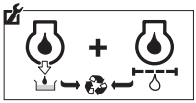

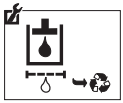

	Change Engine Oil and Filter	Change Transmission Filter	Change Hydraulic Filter	Check Wheel Lug Nut Torque
Paragraph Ref.	4B	8B	7C	12B

OH2000

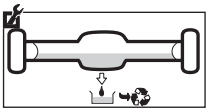

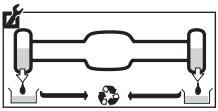

	Change Axle Oil	Change Wheel End Oil	Check Boom Chain Tension
Paragraph Ref.	9B	11B	15A & 15C

50 Hour Intervals

OH2010

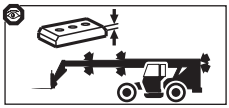

	Inspect Wear Pads	Lubricate Pivot Points
Paragraph Ref.	15G	1

https://truckmanualshub.com/

250 Hour Intervals

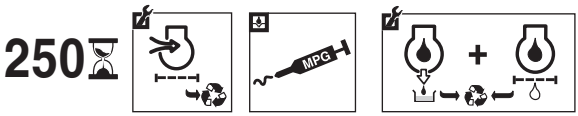

OH2021

	Change Air Filter	Lubricate Pivot Points	Change Engine Oil and Filter
Paragraph Ref.	2B	1	4B

OA1460

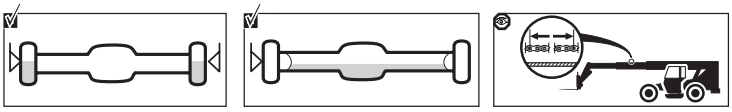

	Check Wheel End Oil Level	Check Axle Oil Level	Inspect Extend chains
Paragraph Ref.	11A	9A	15E

500 Hour Intervals

OH3150

	Change Fuel Filter
Paragraph Ref.	5B & 5C

https://truckmanualshub.com/

1000 Hour Intervals

1000

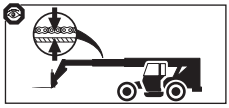
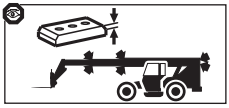
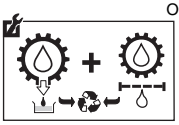

OH2040

	Check Boom Chain Tension	Inspect Wear Pads	Change Transmission Oil And Filter
Paragraph Ref.	15A & 15C	15G	8B

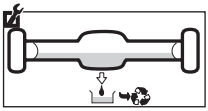
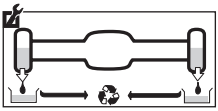
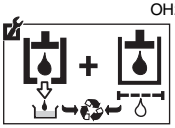

OH2050

	Change Axle Oil	Change Wheel End Oil	Change Hydraulic Oil And Filter
Paragraph Ref.	9B	11B	7C

OH2061

	Check Fan Belt	Check Air Intake System	Lubricate Pivot Points	Check Axle Brake Discs
Paragraph Ref.	6A	2C	1	10A

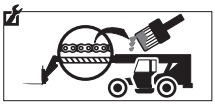

OA1470

	Lubricate Boom Chains
Paragraph Ref.	15F

https://truckmanualshub.com/

2000 Hour Intervals

2000

OH2070

	Change Engine Coolant
Paragraph Ref.	3B

https://truckmanualshub.com/

1. Lubrication Points

OH2680

Lubricate the following grease fittings using Multi-Purpose Grease (MPG):

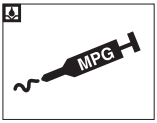

OS1750

A. Carriage pivot pins ..... (2 points)

B. Attachment tilt cylinder pins ..... (2 points)

C. Outrigger cylinder and pivot pins ..... (10 points)

D. Boom attachments ..... (all points)

E. Extend Chain Sheave ..... (2 points)

F. Retract Chain Sheave ..... (2 points)

OH2710

Lubricate the following grease fittings using Multi-Purpose Grease (MPG):

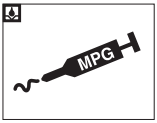

OS1750

G. Hydraulic cylinder pins ..... (12 points)

H. Drive shaft slip joints ..... (3 points)

I. Boom pivot pin ..... (2 points)

J. Axle U-Joints ..... (8 points)

K. Axle pivot pins ..... (2 points)

OH2690

Lubricate the following grease fittings using Multi-Purpose Grease (MPG):

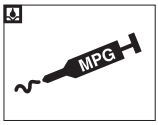

OS1750

L. Extend cylinder pins ..... (2 points)

NOTE: *Shorten the lubrication interval on all lube points when operating in severe conditions.*

https://truckmanualshub.com/

Lubrication Points

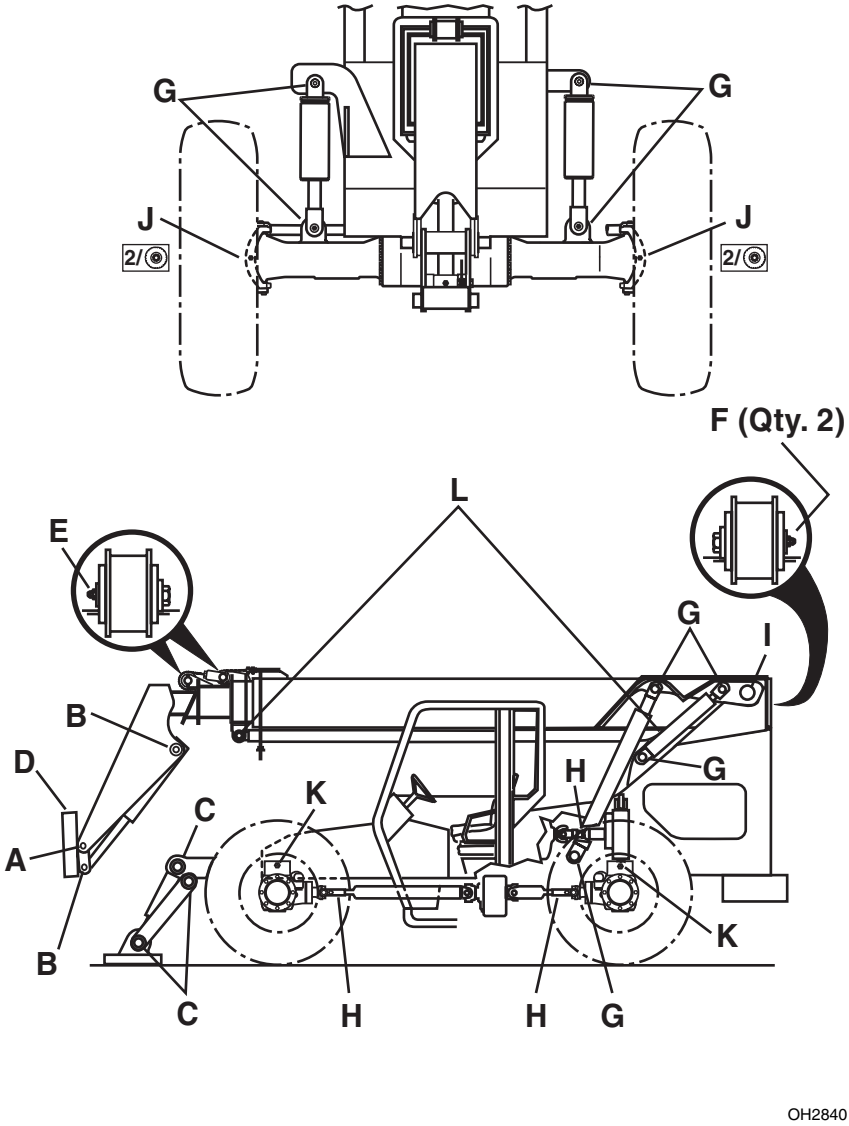

https://truckmanualshub.com/

2. Air Cleaner And Restriction Indicator

NEVER operate the vehicle without the air cleaner assembly and both filters in place.

A. Filter Check

OH2660

OF1190

1. Ground the carriage, place the travel select lever in (N) NEUTRAL, move the neutral lock lever to NEUTRAL LOCK position, engage the parking brake switch and shut off the engine.
2. Unlock and open the left rear engine access door to access air cleaner restriction indicator (1). Check indicator. If red band (2) has appeared, filter must be replaced.

NOTE: *Depress button (3) on top of indicator to reset indicator after servicing element.*

IMPORTANT! *Only remove canister cover to service the elements as restriction indicator indicates or during scheduled maintenance intervals. Excessive access to check an element can lead to premature element failure and increase the possibility of dirt entering the engine.*

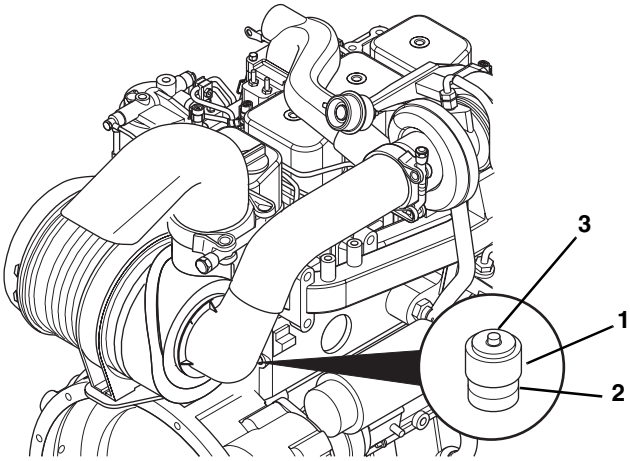

OH3370

https://truckmanualshub.com/

3. Remove dust from vacuator valve by squeezing bottom of vacuator (4) to allow loose particles to fall out. Replace elements, if required, as described in paragraph 2B.

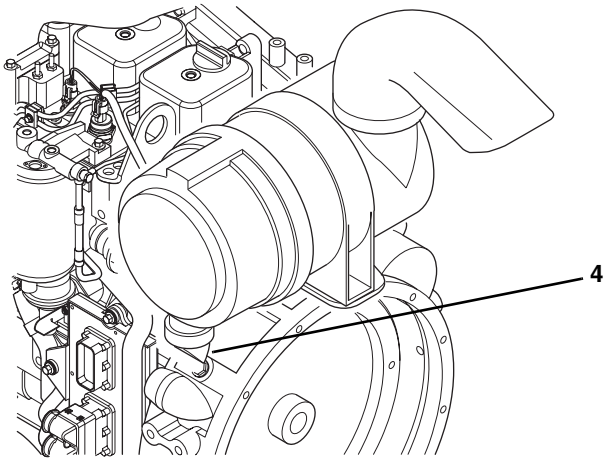

B. Element: Change

(As Restriction Indicator Indicates or)

OH2710

OS0790

Outer Primary Element

All air cleaner manufacturers agree that attempting to clean or wash an element increases the chance for element damage. It is highly recommended that you consider the value of cleaning an element against the risks which could lead to engine damage. Adopt the policy that all elements should be replaced with new and not cleaned.

Inner Safety Element

An inner safety element should never be washed or reused. Always install a new element. Replace inner safety elements after every third primary element change. **DO NOT** remove an inner safety element until you have thoroughly cleaned the inside of the air cleaner canister. This will prevent dirt, which could damage the engine, from entering the induction manifold.

CAUTION: **NEVER** run the engine with only the inner safety element installed. Severe engine damage will result from dust entering the engine.

https://truckmanualshub.com/

To change elements:

1. Pull the air cleaner cover lock (1) OUT, turn the air cleaner cover (2) counterclockwise and remove the cover from the air cleaner canister (3).

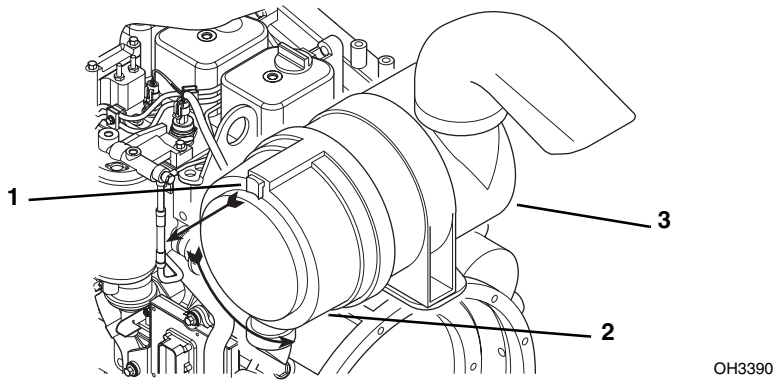

2. Remove the primary element (4). Inspect the element for damage. Damaged elements should not be reused.
3. Thoroughly clean the interior of the air filter canister (5) and vacuator valve (6).
4. If replacing the inner element (7) at this time, carefully slide the element out. Always discard this element and replace with a new element.
5. Slide the new primary element over the inner element making sure the sealing edge is flush with the base of the air cleaner.

***IMPORTANT! DO NOT** apply any type of petroleum product to the sealing surface of the filter in an attempt to get a more positive seal. This will cause sealing surface damage and allow dirt to by-pass the filter. Use liquid dishwashing soap (Ivory, Dawn, etc.) on the seal of the filter only.*

6. Position the canister cover (8) in place, turn clockwise to lock into position and secure in place by pushing the air cleaner cover lock (9) all the way in.

https://truckmanualshub.com/

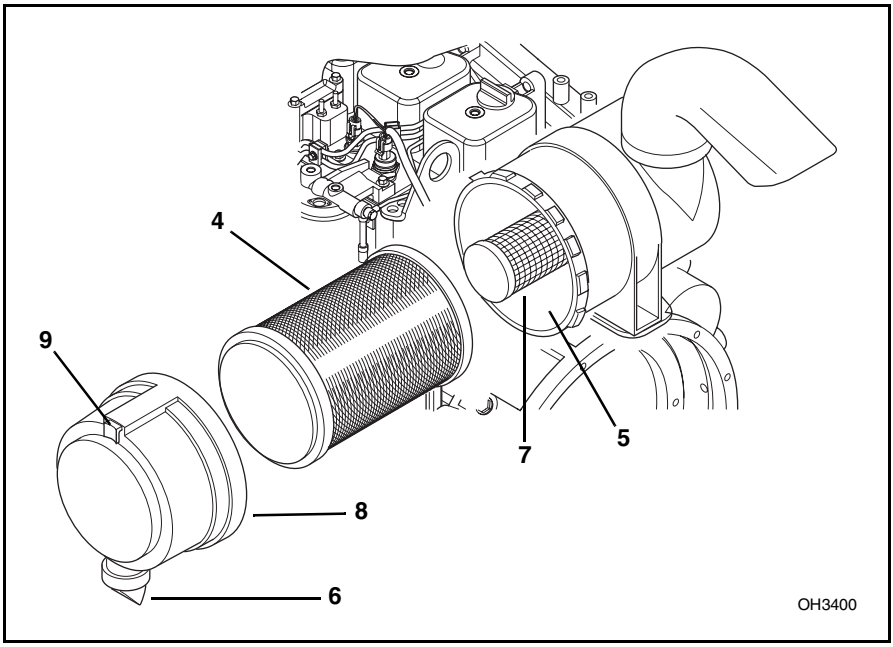

C. Air Intake System-Inspection

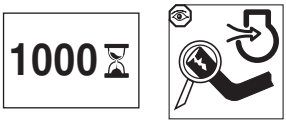

Inspect the intake piping for cracked hoses, loose clamps or punctures which can allow dirt or debris to enter the combustion chamber. If dirt or debris are allowed to enter the combustion chamber, they can severely damage the engine. If necessary, tighten or replace parts to prevent air intake system leakage.

https://truckmanualshub.com/

3. Engine Cooling System

A. Engine Coolant Level Check

OH2660

OS0800

1. Level the vehicle, ground the carriage, place the travel select lever in (N) NEUTRAL, move neutral lock lever to NEUTRAL LOCK position, engage the parking brake switch and shut off the engine.
2. Unlock and open the right rear engine access door. Check level of coolant in overflow bottle (1). When coolant is hot, bottle should be 1/2 to 3/4 full. When coolant is cool, bottle should be 1/4 to 1/2 full. Add coolant as required through the overflow bottle (50/50 mixture of ethylene glycol and water). Close and lock access door.

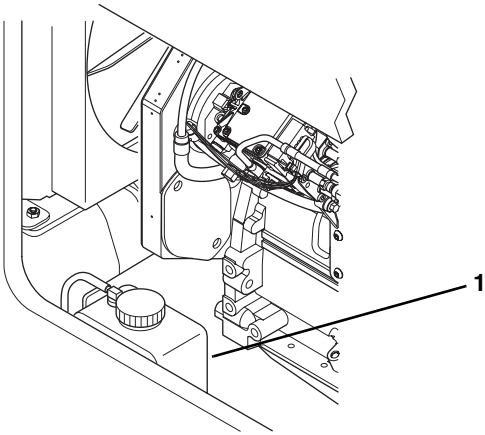

OH3410

https://truckmanualshub.com/

B. Drain And Flush Radiator

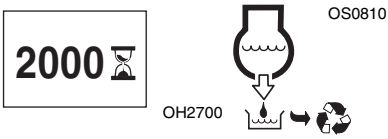

1. Level the vehicle, ground the carriage, place the travel select lever in (N) NEUTRAL, move neutral lock lever to NEUTRAL LOCK position, engage the parking brake switch and shut off the engine.

WARNING: **DO NOT** attempt this procedure when the engine is hot. Wait for the engine, muffler and tailpipes to cool down before proceeding. Failure to do so could result in severe burns.

2. Unlock and open the rear radiator access door. Allow time for the engine to cool down before proceeding. Draining and flushing the engine cooling system while the engine is still hot can cause cracks in the engine block.

WARNING: **NEVER** remove the radiator cap while the engine is hot. The cooling system is under pressure. Hot coolant can cause severe burns or eye injury. Wear protective clothing and safety glasses.

3. Remove radiator cap and open petcock (2) on the lower right side of radiator (3).

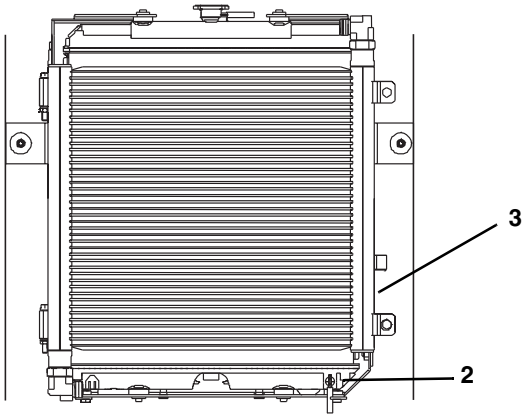

https://truckmanualshub.com/

NOTE: *Use the hose attached to the petcock to allow draining directly into a container.*

4. Allow coolant to drain from the radiator. Detach line from bottom of coolant overflow bottle and drain bottle.
5. Flush system with clean water and drain again.

NOTE: *On vehicles equipped with a cab heater option, a shut off valve is installed at the engine inlet. Disconnect hose from shut off valve to drain the heater.*

6. Transfer the coolant into a properly labelled container. Dispose of properly.
7. Reconnect line to bottom of overflow bottle and close petcock on the radiator. Reconnect heater hose.
8. Fill radiator completely with 50/50 mixture of ethylene glycol and water. Total System Capacity is 4 gallons (15 liter). Add coolant to overflow bottle until bottle is about 1/2 to 3/4 full. This “overfilling” will compensate for any air in the cooling system.
9. Clean dirt and debris from radiator fins and core, if required.
10. Start engine and run vehicle to normal operating temperature and then shut OFF the engine. While the engine is cooling, check for leaks.
11. Allow engine to cool to ambient temperature. Check radiator coolant level and top off completely. Replace radiator cap.
12. Overflow bottle should be 1/4 to 1/2 full. If it is not, add coolant to overflow bottle. Close and lock all access doors.

https://truckmanualshub.com/

4. Engine Oil And Filter

Engine Oil Recommendations

The use of quality engine oil combined with the appropriate oil and filter change intervals are critical factors in maintaining engine performance and durability.

Use 15W40 motor oil that at least meets the manufacturers minimum recommended oil specifications as defined in their operator manual.

A. Oil Level Check

OH2660

OS0820

1. Level the vehicle, raise the boom up to approximately 20°, place the travel select lever in (N) NEUTRAL, move neutral lock lever to NEUTRAL LOCK position, engage the parking brake switch and shut off the engine.
2. Unlock and open right rear engine access door.
3. Remove dipstick (1). Check the oil mark on dipstick. The oil should be between the full (2) and add (3) marks within the crosshatched area of the dipstick.

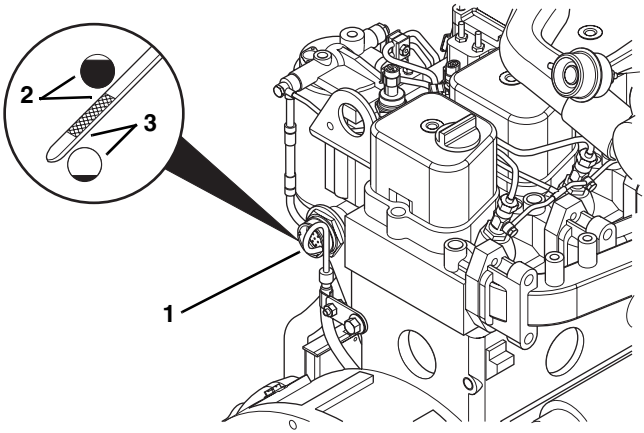

OU1270

https://truckmanualshub.com/

4. If oil is low, remove oil fill cap (1) and add 15W40 motor oil that at least meets the manufacturers minimum recommended oil specifications as defined in their operator manual to bring oil up to the FULL mark (2) in the crosshatched area. Add oil through the opening under the boom. Replace oil fill cap and dipstick (3). Close and lock access door.

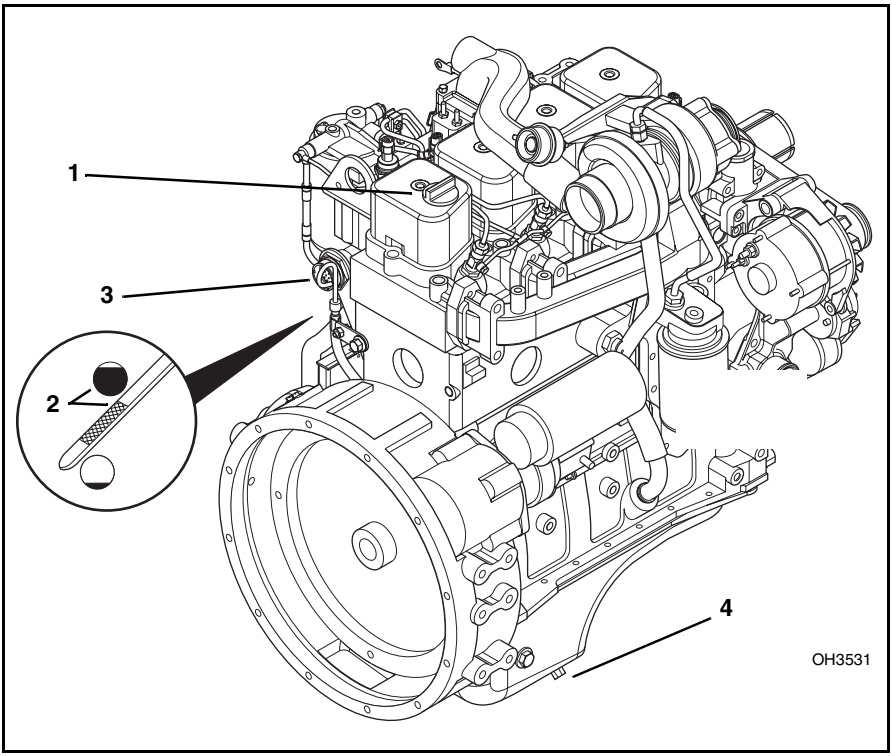

https://truckmanualshub.com/

B. Oil And Filter Change

OH2670

OH2710

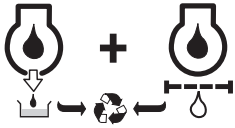

OS0830

1. Operate the engine until warm (approximately 5 minutes).
2. Level the vehicle,raise the boom up to approximately 20°, place the travel select lever in (N) NEUTRAL, move neutral lock lever to NEUTRAL LOCK position, engage the parking brake switch and shut off the engine.
3. Place receptacle under engine oil pan drain plug (4).
4. Remove the drain plug (4) and drain the oil from the engine oil pan.
5. Allow oil to drain completely into a receptacle. Transfer the oil to a container with a cover and label the container as used oil. Dispose of the used oil at an approved recycling facility.
6. Unlock and open the left engine access door. Remove oil filter (5). A strap or chain filter wrench may be required.

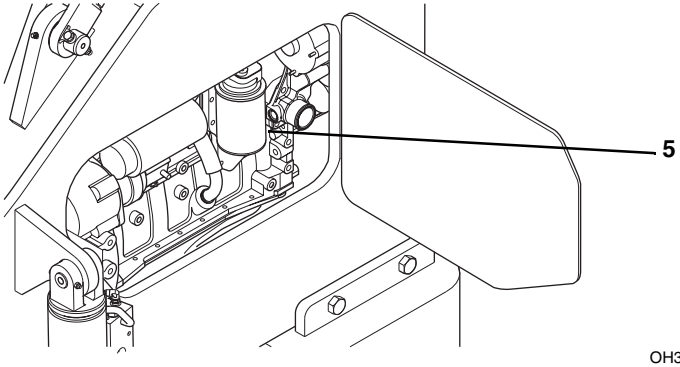

OH3450

7. Clean filter sealing surface. Make sure the o-ring seal from the filter comes off the sealing surface.

NOTE: *The filter o-ring may stick to the filter head. Make sure the old o-ring is removed before installing the new filter.*

8. Apply a thin coat of clean engine oil to seal on new filter.
9. Install the new oil filter and hand tighten 1/2 turn after initial contact.

https://truckmanualshub.com/

10. Install the drain plug (1) into the oil pan and tighten securely.
11. Unlock and open right side engine access door.
12. Remove oil fill cap (2) and add 15W40 motor oil that at least meets the manufacturers minimum recommended oil specifications as defined in their operator manual. (Reference engine manufacturer's manual for recommended oil types to be used in various temperature limits.) Fill oil through the opening under the boom. DO NOT over fill. Engine oil capacity with filter change is 10.5 qts. (10 liters).
13. Reinstall the oil fill cap (2). Start engine and run for several minutes.
14. Stop engine. Let the oil drain back for a few minutes. Check oil level on dipstick (3) and check for leaks at filter and drain plug. Tighten as necessary.
15. Add oil to bring oil level up to the FULL mark in the crosshatched area. Replace dipstick and oil fill cap. Close and lock access door.

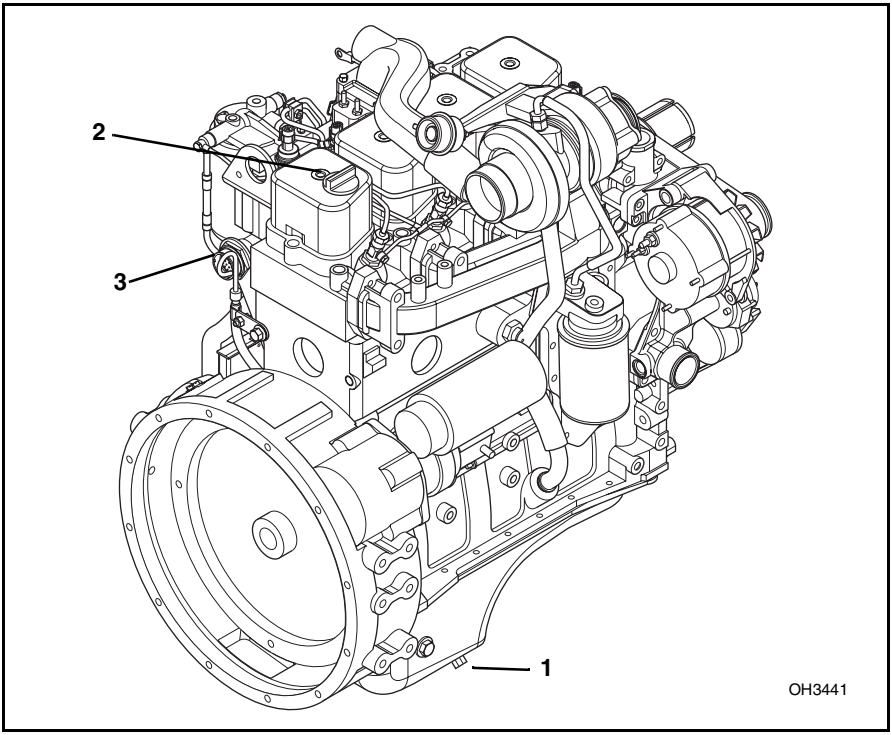

https://truckmanualshub.com/

5. Engine Fuel System

A. Drain Water From Fuel Water Separator/Filter

OH2660

OS0851

Unlock and open the right rear engine access door. Loosen drain cock (4) on underside of the fuel filter (5) and allow all water to drain into a glass until clear fuel is visible. Tighten drain cock after draining. Close and lock access door.

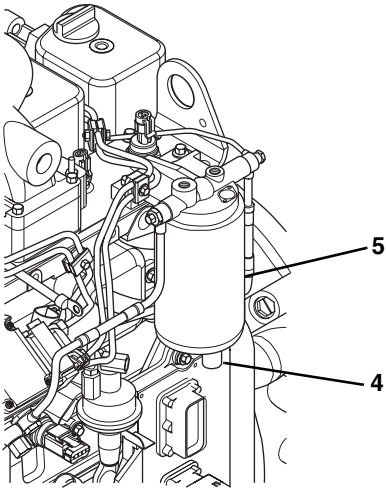

OU1290

https://truckmanualshub.com/

B. Change Fuel Filter

OT1150

OS0870

The fuel filter (1) must be changed at shorter intervals with water evidence or contaminated fuel.

1. Unlock and open the right rear engine access door.
2. Clean around the fuel filter head (2).
3. Unscrew the fuel filter and dispose of properly.
4. Clean the gasket surface of the filter head and replace the o-ring.

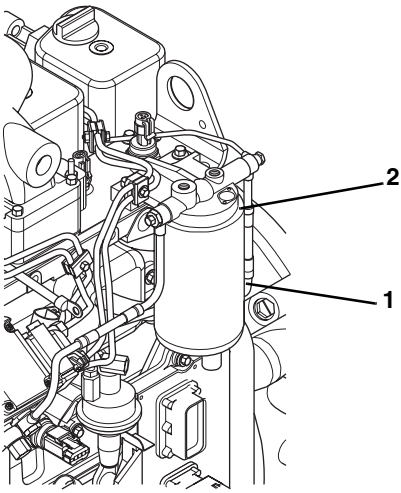

OU1290

5. Fill the new fuel filter with clean No. 2 diesel fuel.
6. Lubricate the o-ring seal with clean No. 2 diesel fuel.
7. Install the fuel-filled filter and hand tighten. **DO NOT** overtighten.

NOTE: *Mechanical over-tightening may distort the threads or damage the sealing ring.*

8. Close and lock the right rear engine access door.

Controlled venting is provided at the injection pump through the fuel drain manifold. Small amounts of air introduced by changing the fuel filter element will be vented automatically as long as the element was filled with fuel prior to installation.

https://truckmanualshub.com/

C. Replace In-line Fuel Strainer

500

OT1150

1. Unlock and open the right rear engine access door.
2. The in-line fuel strainer (3) is located down line from the engines lift pump (4). Loosen the two hose clamps (5) that secure the strainer in place.
3. Remove the old in-line fuel strainer and dispose of properly.
4. Install the new in-line fuel strainer with arrow (6) pointing toward the lift pump.
5. Assemble the hoses to the in-line fuel strainer and tighten the hose clamps.
6. Remove air from the fuel system (see “Bleeding Fuel System” on page 134).
7. Close and lock the right rear engine access door.

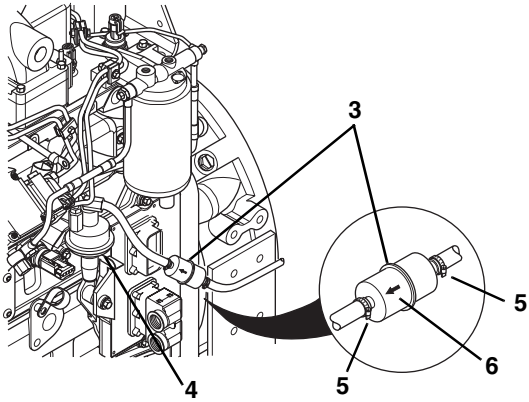

OH3460

https://truckmanualshub.com/

D. Bleeding Fuel System

Air must be vented from the fuel system whenever any component between the fuel tank and the injection pump has been disconnected, or when the system has been emptied or run out of fuel.

WARNING: **DO NOT** bleed the fuel system of a hot engine. Doing so could create a fire hazard. Allow the engine to cool before bleeding the fuel system.

***IMPORTANT! DO NOT** attempt to start the engine until the injection pump has been filled and primed with fuel. Serious damage to the lift pump will result due to lack of proper lubrication.*

1. To vent the low pressure lines and fuel filter, open the vent screw (1) located on the filter head.
2. Operate the hand plunger (2) on the lift pump (3) until fuel flowing from the fitting is free of air.
3. Tighten the vent screw and torque to 7 lb-ft (9 Nm).

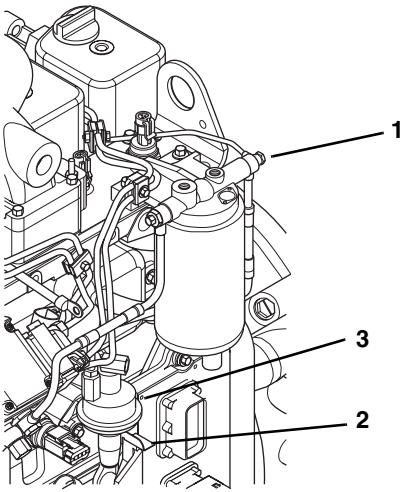

https://truckmanualshub.com/

The process to vent the high pressure fuel lines involves energizing the starter motor to rotate the crankshaft which will, in turn, pump any unwanted air from the fuel lines.

CAUTION: When using the starting motor to vent the fuel system, **DO NOT** energize the starter solenoid or crank the engine for more than 15 seconds at a time; wait two minutes between engagements.

WARNING: **KEEP CLEAR** of spraying fuel. Fuel can spray when venting high pressure lines. The fuel pressure is sufficient to penetrate the skin and cause serious bodily injury. Wear protective clothing and safety glasses.

1. To vent the high pressure fuel lines (4), loosen one fitting (5) at the injector (6).
2. Turn the ignition key to the START position and crank the engine for a maximum of 15 seconds or until fuel, free of air, comes out of the injector fitting.
3. Tighten the fitting. Torque to 22 lb-ft (30 Nm).
4. Repeat Steps 1-3 for each fitting until the engine runs smoothly.
5. With the engine running, visually check for leaks. Turn ignition switch OFF.

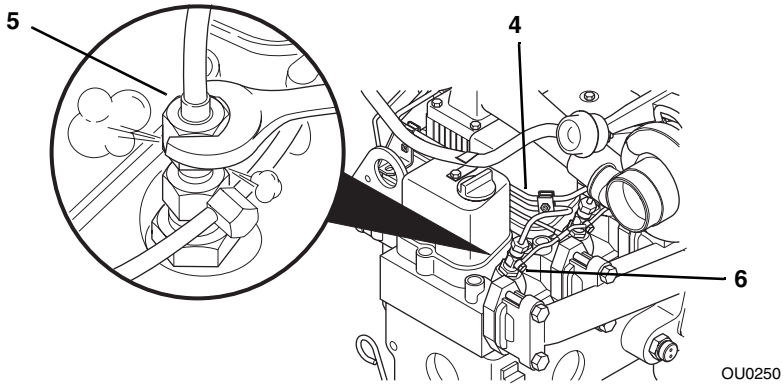

https://truckmanualshub.com/

6. Engine Fan Belt

A. Engine Fan Belt Check

1000

OH2690

OS08802

1. Ground the carriage, place the travel select lever in (N) NEUTRAL, move the neutral lock lever to NEUTRAL LOCK position, engage the parking brake switch and shut off the engine.
2. Unlock and open the left engine access door.
3. Inspect the fan belt (1). Replace if cracked or frayed.
4. This engine is equipped with an automatic belt tensioner (2). Inspect the tensioner bearing. Spin the bearing and check for rough spots under hand pressure.
5. Spin the fan and check for wobble or excessive play. Maximum play should be .006 inch (0,15 mm).
6. To install the fan belt (1); first position the belt over the fan pulley (3), crankshaft pulley (4), alternator pulley (5) and onto the tensioner pulley (2) then, while holding the tensioner (2) toward the center of the engine, slide the belt over the water pump pulley (6). Release the tensioner to apply tension on the belt. To hold the tensioner toward the center of the engine, insert a 3/8" breaker bar into the square hole (7) in the tensioner arm.
7. Close and lock the left engine access door.

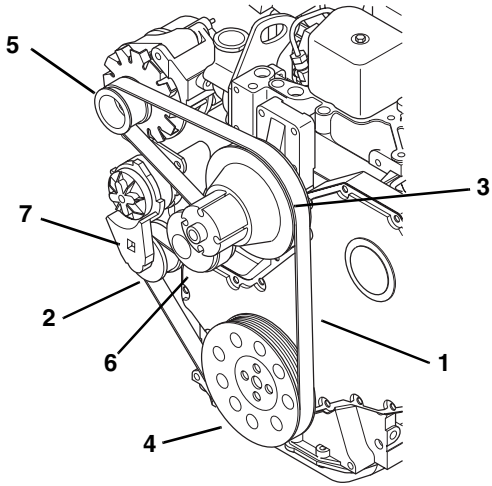

OU0240

https://truckmanualshub.com/

7. Hydraulic Oil and Filter

A. Hydraulic System Oil

OH2630

Hydraulic system oil can be either a hydraulic oil meeting the requirements of ISO Grade 46 or a 10W motor oil meeting the requirements of U.S. Ordinance Specifications MIL-L-2104C. See table below.

ISO Grade 46 Hydraulic Oil	MIL-L-2104C 10W Motor Oil*
Gulf Harmony 46 AW	Castrol Deusol CRD
Amoco Rykon 46	Esso Essolube D-3HP
Mobil DTE-25	Esso Essolube XD-3
Arco Duro AW S-215	Castrol Agricastrol HDD
Shell Tullus 46	Shell Rimula CT
Benz Petraulic 46-7C	Shell Rimula X
Sun Sunvis 821 WR	Shell Rimula TX
Chevron AW 46	* 5W20 Motor Oil may be substituted for -30° F to 70° F (-34 to 21° C) only
Texaco Rando HD 46	
Citgo Pacemaker XD-46	

https://truckmanualshub.com/

B. Hydraulic Oil Level Check

OH2660

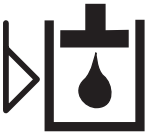

OS0660

1. Be sure all cylinders are fully retracted and oil is at room temperature.
2. Level the vehicle, ground the carriage, place travel select lever in (N) NEUTRAL, move the neutral lock lever to NEUTRAL LOCK position, engage the parking brake switch and shut OFF the engine.
3. Check level of hydraulic oil in tank at the sight gauge (1) on the back side of the hydraulic tank (2).
4. The oil level should be visible in the gauge window.
5. If it is not, add ISO-46 or MIL-L-2104C oil (see table on page 137).
   a. Remove the four capscrews (3) holding the hydraulic oil tank cover (4) to the tank, remove the cover.
   b. Turn the hydraulic oil cap (5) and remove from the filler neck. Add hydraulic oil as needed. The hydraulic oil level should be within 1/2 inch of the upper mark on the sight gauge.
6. Install hydraulic oil cap (5). Reposition the cover (4) on the tank and secure in place with the four capscrews (3).

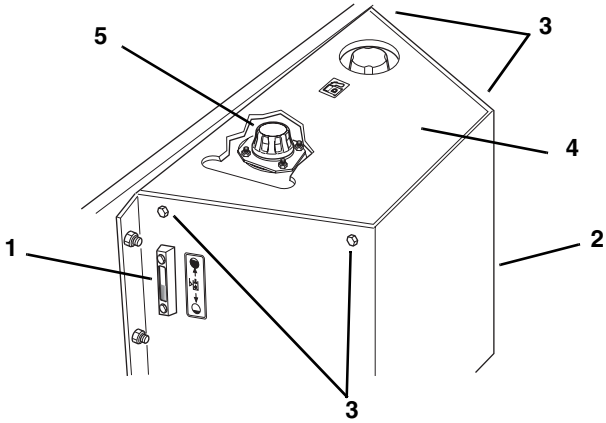

OH2340

https://truckmanualshub.com/

C. Hydraulic Oil & Filter Change

(Filter Only)

OH2670

OT08402

(Oil & Filter)

OH2690

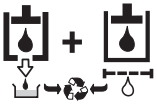

OS08402

Change the hydraulic oil filter after the first 50 hours of operation and change the hydraulic oil and filter every 1000 hours of operation thereafter.

Other than the 1000 hour interval, the hydraulic oil must be changed when a hydraulic component has contaminated the system.

1. Level the vehicle, ground the carriage, place travel select lever in (N) NEUTRAL, move the neutral lock lever to NEUTRAL LOCK position, engage the parking brake switch.
2. Fully retract all cylinders and shut OFF the engine.
3. Remove the four capscrews (3) holding the hydraulic oil tank cover (4) to the tank (2), remove the cover.

https://truckmanualshub.com/

4. Clean area around filter head (1). Loosen but do not remove the nuts that secure the filter head to the hydraulic tank (2).
5. Rotate and remove the filter head (1).
6. Remove the seal (3) and the element (4) from the filter head. Dispose of properly.
7. Clean the filter head sealing surfaces.
8. Place a receptacle under the hydraulic reservoir magnetic drain plug. The receptacle must be large enough to hold 38 gallons (144 liters) of oil. Remove magnetic drain plug and allow oil to drain into receptacle. Clean loose particles attached to the drain plug. Transfer the oil to a container with a cover and label the container as used oil. Dispose of properly.
9. Re-install magnetic drain plug into the reservoir.
10. Re-install the top seal (3) and push a new filter element (4) all the way onto the filter head (1) until it seats. Slide the assembly into the reservoir and secure.
11. Remove reservoir cap (5) and fill the reservoir with ISO-46 or MIL-L-2104C Oil (see table on page 137) until the oil level is filled to the minimum oil level as described in section 7B on page 138. Reservoir capacity is 32.2 gals. (122 liter).
12. Reassemble the hydraulic oil tank cover and tighten the hardware securely.
13. Run vehicle and operate all hydraulic functions. Cycle all modes of controls to purge air from the system.
14. Check for leaks. Replace hydraulic tank cover.

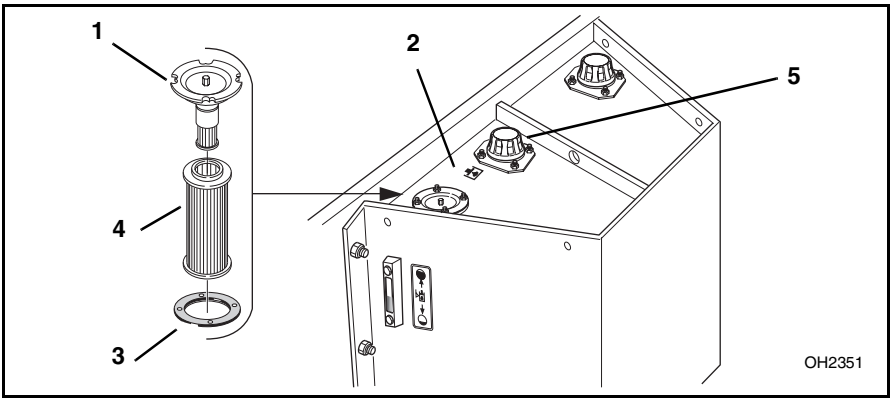

https://truckmanualshub.com/

8. Transmission Oil and Filter

APPROVED UNIVERSAL TRACTOR FLUIDS	
JOHN DEERE	JDM J20C (HY-GARD)
FORD / NEW HOLLAND	ESN-M2C134-D (HYDRAULIC OIL134)
MASSEY FERGUSON	M-1141 (PERMATRAN III)
CHEVRON	CHEVRON 1000 THF

A. Transmission Oil Level Check

OH2660

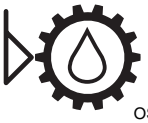
OS0890

1. Level the vehicle, ground the carriage, place travel select lever in (N) NEUTRAL, move neutral lock lever to NEUTRAL LOCK position and engage the parking brake switch.
2. Check oil level with engine running at idle and oil at normal operating temperature.
3. Remove transmission dipstick (6) through access hole (7) in transmission covers (8) and check reading.
4. Add Universal Tractor Fluid to transmission as required to bring up to full mark.

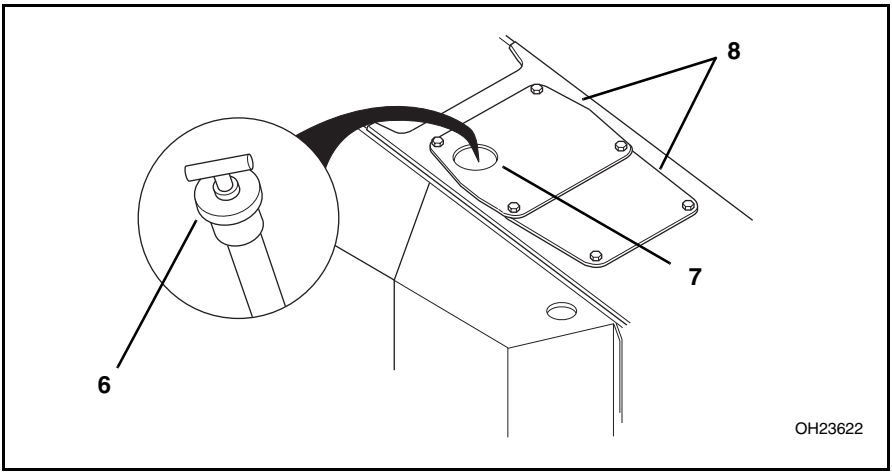

https://truckmanualshub.com/

B. Transmission Oil & Filter Change

(Filter Only)

OH2670 OT08302

(Oil & Filter)

OH2690 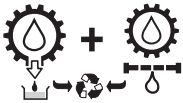 OS09502

Change the transmission oil filter after the first 50 hours of operation and change the transmission oil and filter every 1000 hours of operation thereafter.

1. Level the vehicle, ground the carriage, place travel select lever in (N) NEUTRAL, move neutral lock lever to NEUTRAL LOCK position, engage the parking brake switch and shut OFF the engine.
2. Remove the six hex nuts (1) securing the transmission covers (2) to the frame. Remove the covers.

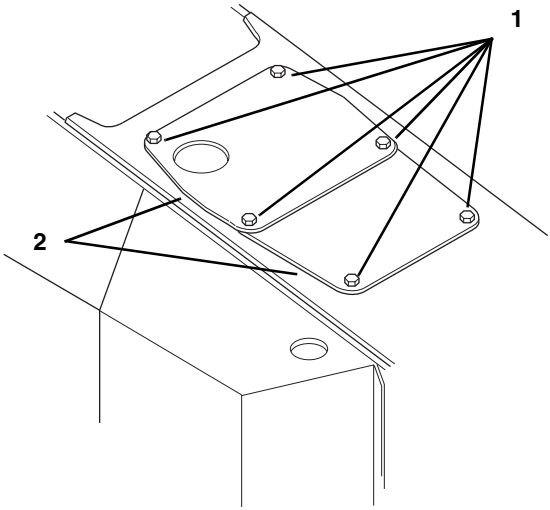

OH2372

https://truckmanualshub.com/

3. Allow the transmission to cool.
4. Place a receptacle under the transmission drain plug (3). Remove the drain plug and allow the Universal Tractor Fluid to drain into the receptacle. Transfer the used oil into a suitable container with a cover and label the container as used oil. Dispose of properly.
5. Clean and re-install the drain plug (3) into the transmission housing.
6. Remove the filter (4) from the filter mount on the front side of the transmission (5). Dispose of the filter properly. Clean the mating surface where the filter mounts.
7. Apply a thin film of clean Universal Tractor Fluid to the new filter gasket. Carefully install a new filter.

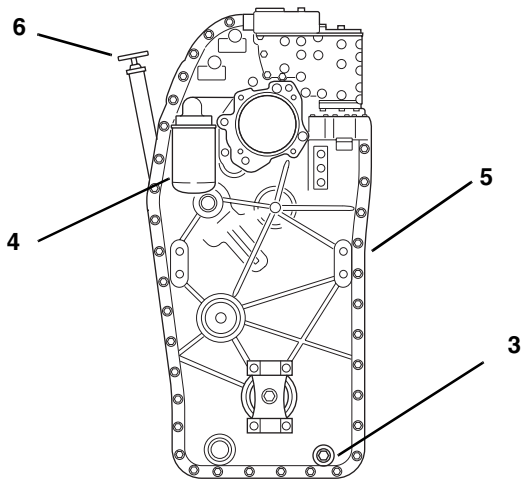

8. Remove the dipstick (6) and fill with Universal Tractor Fluid approximately 2.6 gallons (9,8 liters). Re-install the dipstick
9. Check the transmission level and add Universal Tractor Fluid as required following the procedures outlined in “Transmission Oil Level Check” on page 141.
10. Reassemble the transmission covers (2) and secure in place with the six hex nuts (1), washers and lockwashers. Tighten securely.

https://truckmanualshub.com/

9. Axle Oil

A. Axle Oil Level Check

250

OH2710

OT0460

APPROVED UNIVERSAL TRACTOR FLUIDS	
JOHN DEERE	JDM J20C (HY-GARD)
FORD / NEW HOLLAND	ESN-M2C134-D (HYDRAULIC OIL134)
MASSEY FERGUSON	M-1141 (PERMATRAN III)
CHEVRON	CHEVRON 1000 THF

1. Level the vehicle, ground the carriage, place the travel select lever in (N) NEUTRAL, move neutral lock lever to NEUTRAL LOCK position, engage the parking brake switch and shut off the engine.
2. Clean the area around the axle fill plug (1) and the axle level plugs (2) and remove the plugs from the axle housing.
3. Add Universal Tractor Fluid to bring the oil level up and even with the plug holes. See chart of approved fluids above.
4. Re-install the axle fill plug (1) and the axle level plugs (2).

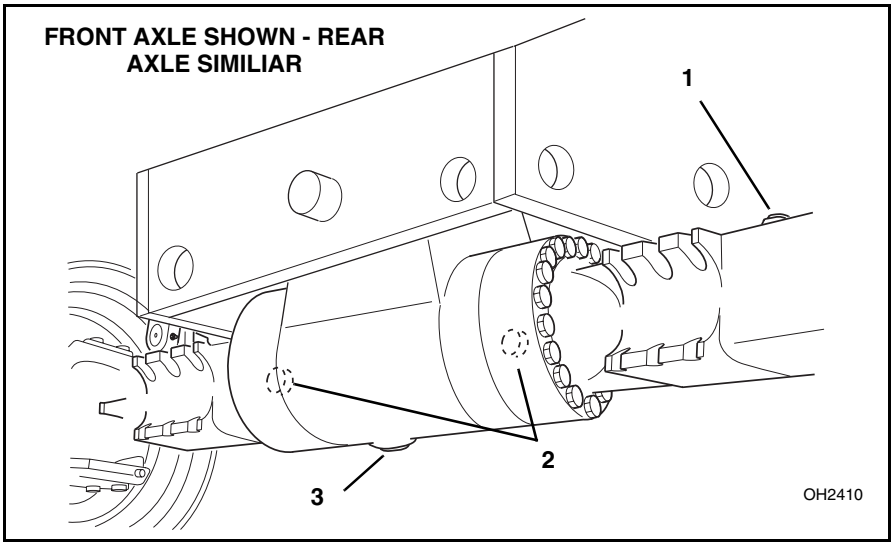

https://truckmanualshub.com/

B. Axle Oil Change

OH2670

OH2690

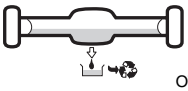
OT0440

NOTE: *At the 1000 Hour Interval Oil Change also inspect the brake disk wear. Refer to "Brake Disk Inspection" on page 146 and follow the inspection procedure. After brake disk inspection is complete, reassemble the level plugs using new o-rings.*

1. Level the vehicle, ground the carriage, place the travel select lever in (N) NEUTRAL, move neutral lock lever to NEUTRAL LOCK position, engage the parking brake switch and shut off the engine.
2. Clean the area around the axle drain plug (3), the axle fill plug (1) and the axle level plugs (2).
3. Place a receptacle under the axle drain plug (3). Remove the plug from the axle housing and allow the oil to drain completely.
4. Transfer the oil to a container with a cover and label the container as used oil. Dispose of properly.
5. Clean off the axle drain plug (3) and re-install. Remove the axle fill plug (1) and the axle level plugs (2) from the axle housing. Check brake disk wear at this time. Refer to "Brake Disk Inspection" on page 146.
6. Fill the axle with Universal Tractor Fluid through the axle fill hole (1) until the oil level is even with both axle level holes (2). See chart of approved fluids on page 144. The axle capacity is:

   Front Axle.....9.5 quarts (9 liters)

   Rear Axle .....10.6 quarts (10 liters)

   Fill axle slowly, the oil has to run across the differential. Allow time for the oil to run across the differential. Axle level is correct when oil is up to both level plugs.
7. Reassemble the level plugs (2) using new o-rings.
8. Re-install the axle fill (1) and axle level plugs (2) into axle housing.

https://truckmanualshub.com/

10. Brake Disk Inspection

A. Brake Disk Wear Check

(1000 Hour Intervals)

OH2690

MT2830

Check the brake disks for wear every 1,000 hours of operation or yearly.

If the brake disks require service due to wear, the axle should be checked, serviced and repaired only by experienced service technicians who are aware of all safety instructions and particular component features.

A. Front Axle

WARNING: BLOCK ALL FOUR WHEELS. Failure to do so could result in death or serious injury from vehicle roll-away

1. **Block all four wheels** to help prevent the vehicle from moving after the parking brake is disabled.
2. Remove the six hex nuts (1) securing the transmission covers (2) to the frame. Remove the covers.

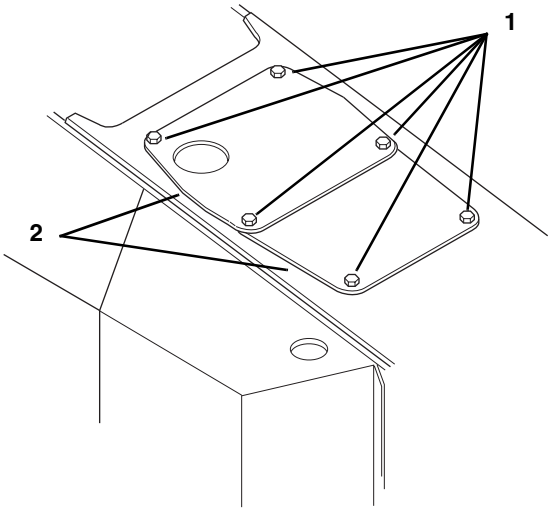

OH2372

https://truckmanualshub.com/

3. Attach a remote portable hydraulic pressurizing unit to the parking brake gauge port (3) on the secondary function manifold (4) mounted on the inside wall of the frame (5) on the left side next to the transmission.

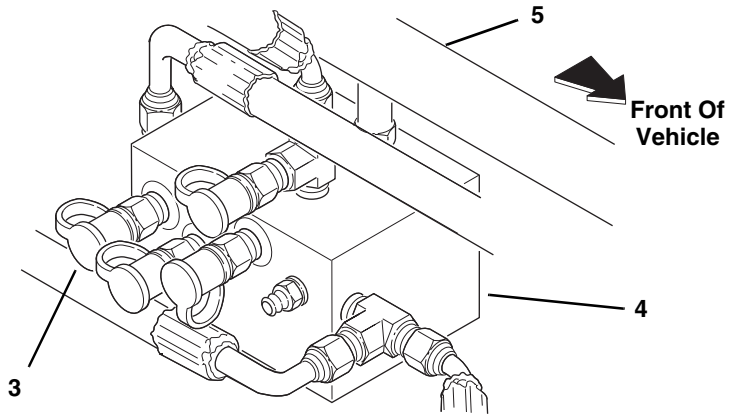

4. Turn the key switch to the ON position (with the engine not running), release the park brake (park brake switch OFF), and have an operator seated in the seat.

CAUTION: **DO NOT** exceed 575 psi (40 bar) when pressurizing the park brake. Applying too much pressure may damage the brake seals.

https://truckmanualshub.com/

5. Pressurize the park brake with the pressurizing unit. Close the pump needle valve on the pressurizing unit.
6. Working through the level plug hole (1), carefully use a screwdriver to spread the brake disks apart.

***IMPORTANT! DO NOT** damage the surfaces of the brake disks when spreading the brake disks.*

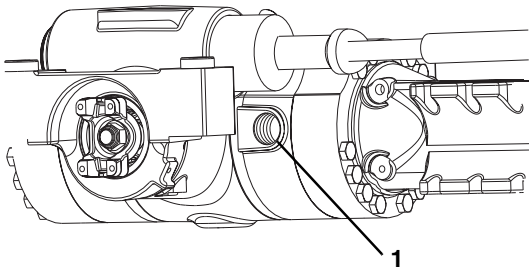

7. Using a feeler gauge, check the gap (2) between the brake disks (3). If the gap is greater than .26" (6,75 mm), replace the brake disks.

***NOTE:** If the brake disks are worn beyond .26" (6,75 mm), the brake disk must be replaced on both sides of the axle at the same time.*

8. Repeat step 6 and step 7 for the other side of the axle.
9. Continue with step 6 of “B. Axle Oil Change” on page 145.

https://truckmanualshub.com/

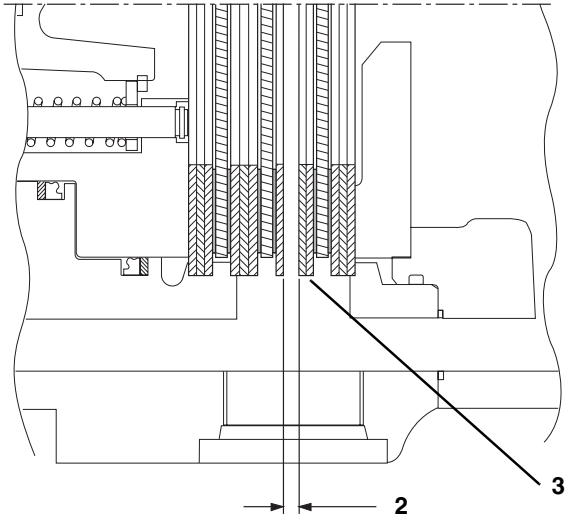

B. Rear Axle

1. Working through the level plug hole (1), carefully use a screwdriver to spread the brake disks apart.

***IMPORTANT! DO NOT** damage the surfaces of the brake disks when spreading the brake disks.*

2. Using a feeler gauge, check the gap (2) between the brake disks (3). If the gap is greater than .167" (4,25 mm), replace the brake disks.

***NOTE:** If the brake disks are worn beyond .167" (4,25 mm), the brake disk must be replaced on both sides of the axle at the same time.*

3. Repeat step 1 and step 2 for the other side of the axle.
4. Continue with step 6 of “B. Axle Oil Change” on page 145.

https://truckmanualshub.com/

11. Wheel End Oil

WARNING: **DO NOT** perform service or maintenance on this vehicle with the engine running. Contact with moving parts can cause death or serious personal injury.

APPROVED UNIVERSAL TRACTOR FLUIDS	
JOHN DEERE	JDM J20C (HY-GARD)
FORD / NEW HOLLAND	ESN-M2C134-D (HYDRAULIC OIL134)
MASSEY FERGUSON	M-1141 (PERMATRAN III)
CHEVRON	CHEVRON 1000 THF

A. Wheel End Oil Level Check

250 OH2710

1. Position the vehicle on level ground, move the vehicle forward or backward enough to ensure that the lower edge of the wheel end (1) fill/drain plug hole (2) is positioned horizontally (3).
2. Ground the carriage, place the travel select lever in (N) NEUTRAL, move neutral lock lever to NEUTRAL LOCK position, engage the parking brake switch and shut off the engine.
3. Clean the area around the wheel end fill/drain plug (2). Slowly remove the plug. Check the oil level.
4. Add Universal Tractor Fluid to bring the oil level up and even with the plug hole (2). See the above chart for approved fluids.
5. Clean and re-install the wheel end fill/drain plug (2).

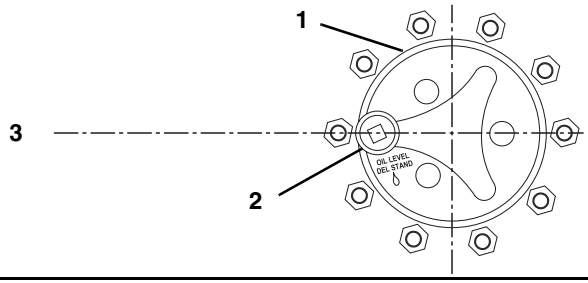

https://truckmanualshub.com/

B. Wheel End Oil Change

OH2670

OH2690

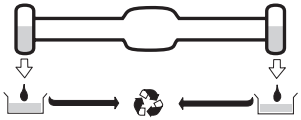

OT0450

1. Position the vehicle on level ground, move the vehicle forward or backward enough to ensure that the wheel end fill/drain plug (4) is in the 6 o'clock position (5).

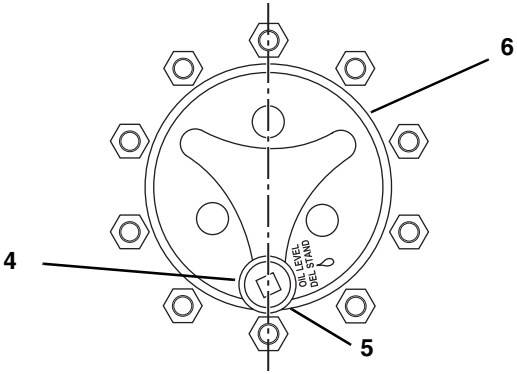

OT0290

2. Ground the carriage, place the travel select lever in (N) NEUTRAL, move neutral lock lever to NEUTRAL LOCK position, engage the parking brake switch and shut off the engine.
3. Clean the area around the wheel end fill/drain plug (4). Slowly loosen the plug. Hold a receptacle under the wheel end and remove the plug from the wheel end (6).
4. Allow the oil to drain completely into the receptacle. Transfer the oil to a container with a cover and label the container as used oil. Dispose of properly.
5. Reposition the vehicle so the wheel end fill/drain plug (2) is positioned horizontally (3).
6. Fill the wheel end with Universal Tractor Fluid to the level of the drain plug. See chart of approved fluids on page 150. Wheel end capacity is approximately:

   Front Axle..... 1.7 quarts (1,6 liters)

   Rear Axle ..... 1.3 quarts (1,2 liters)
7. Clean and re-install the wheel end fill/drain plug.

https://truckmanualshub.com/

12. Wheels and Tires

A. Tire Air Pressure Check

OH2660

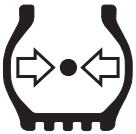
OS0900

DANGER: **LOW TIRE PRESSURE** can result in tipover. **MAINTAIN** proper tire pressure at all times.

Check all four tires:

1. Remove the valve stem cap.
2. Check tire pressure using a good quality gauge. You cannot tell if a tire is properly inflated simply by looking at it.
3. Add air if required. Fill the tire(s) to:

   Standard Tires 17.5 - 25 (12 Ply) .....60 psi (414 kPa)

   Optional Radial Tire 17.5R25 One Star.....73 psi (503 kPa)
4. **DO NOT** overinflate.
5. Replace the valve stem cap.

https://truckmanualshub.com/

B. Wheel Lug Nut Torque Check

OH2670

OM14001

1. Wire brush the area around the lug nuts if necessary.There are separate lockwashers (1) under the lug nuts (2). Be sure the lockwashers are installed under each lug nut.
2. Using the torque sequence (A thru K) shown below, alternately check the torque of each of the ten lug nuts. The recommended torque should be 430-470 lb-ft (583-637 Nm).

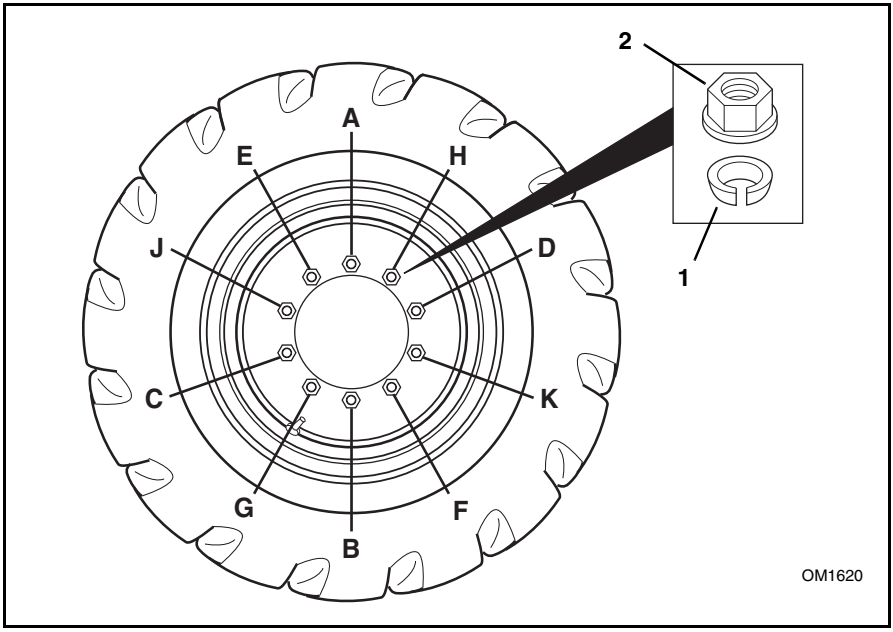

C. Replacing Tires

WARNING: Mis-matched tire sizes and PLY ratings may compromise vehicle stability and may result in vehicle tipover.

IMPORTANT! *The Standard Tire size and ply rating for this vehicle is: 17.5 - 25, 12 PLY. Make sure any replacement tire including optional tires, are of the same size and ply or star rating.* ***DO NOT*** *use lower PLY or star rated tires on this vehicle.*

https://truckmanualshub.com/

13. Batteries

WARNING: Lead-acid batteries produce flammable and potentially explosive gases. To avoid personal injury when checking, testing or charging batteries:
- **DO NO**T use smoking materials near batteries.
- Keep arcs, sparks and open flames away from batteries.
- Provide ventilation and wear safety glasses.

The batteries in this vehicle are maintenance free type batteries. They are shipped in the vehicle filled with electrolyte and charged. A warning indicator light will illuminate on the display panel when the alternator is no longer able to charge the batteries. To service the batteries:

1. Level the vehicle, ground the carriage, place the travel select lever in (N) NEUTRAL, move neutral lock lever to NEUTRAL LOCK position, engage the parking brake switch and shut off the engine.
2. Unlock and open the rear door. The batteries (1) are located inside the frame directly below the radiator and oil cooler.
3. Wearing safety glasses, visually inspect the batteries. Check terminals for corrosion. Replace a battery if it has a cracked, melted or damaged case.
4. Close and lock rear door

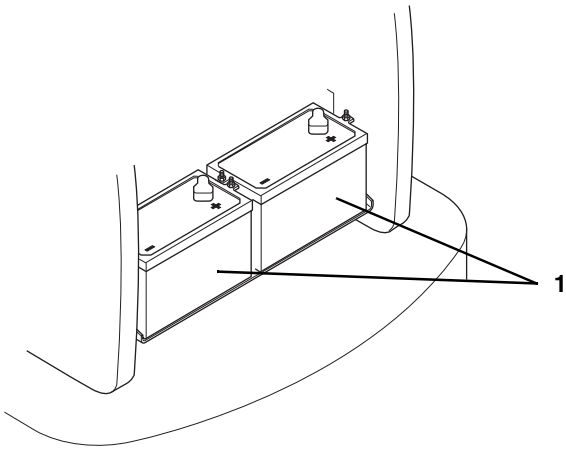

https://truckmanualshub.com/

WARNING: Fluid in electric storage batteries contains sulfuric acid which is **POISON** and can cause **SEVERE CHEMICAL BURNS**. Avoid all contact of fluid with eyes, skin or clothing. Use protective gear when handling batteries. **DO NOT** tip a battery beyond a 45° angle in any direction. If contact does occur, follow the First Aid suggestions that follows.

Battery Electrolyte First Aid:

- **External Contact —** Flush with water.
- **Eyes —** Flush with water for at least 15 minutes and get medical attention immediately.
- **Internal Contact —** Drink large quantities of water. Follow with Milk of Magnesia, beaten egg or vegetable oil. Get medical attention immediately.

IMPORTANT! *In case of internal contact,* ***DO NOT*** *give fluids that would induce vomiting!*

Battery Charging

WARNING: **DO NOT** charge a frozen battery, it may explode and cause serious injury. Let the battery thaw out before putting on a battery charger

Under normal conditions, the engine alternator will have no problem keeping the batteries charged. The only condition in which the batteries may cause a problem is when they have been completely discharged for an extended period of time. Under this condition, the alternator may not be able to recharge the batteries. A battery charger will be required for recharging.

Before using a battery charger, an attempt can be made to recharge the batteries using the engine alternator by first starting the vehicle and letting the engine run. See “Jump Starting” instructions on page 60.

https://truckmanualshub.com/

14. Fuse and Relay Replacement

The fuses and relays in this vehicle protect the electrical system. The fuses most often fail if there is a short or grounded wire in the applicable circuit. The fuses will have to be replaced if they fail. If fuses continually fail, check the system for shorts, grounds or defective electrical components.

The fuses and relays are mounted inside the right side console in the operators cab. To gain access, remove the screws (1) that secure the access panel (2) in place. Refer to the following pages for the locations of fuses and relays within the fuse block.

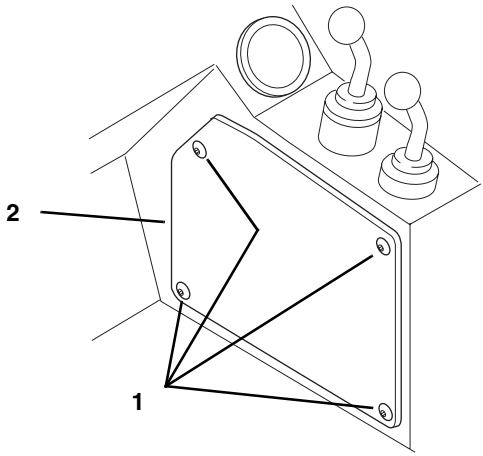

OH2430

https://truckmanualshub.com/

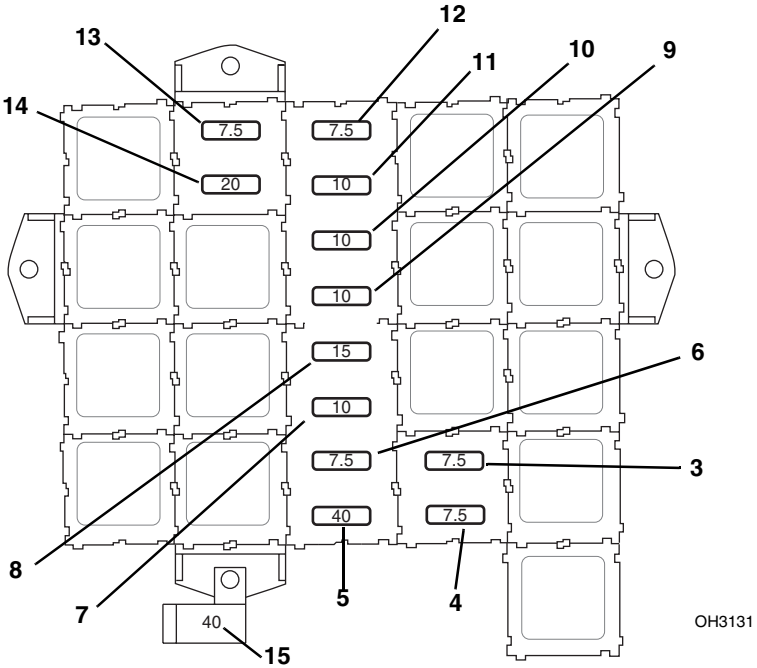

No.	Amp	Color	Circuit Protected
3	7.5 Amp	Brown	Boom/Outrigger Interlock
4	7.5 Amp	Brown	Boom/Outrigger Interlock
5	40 Amp	Orange	Main
6	7.5 Amp	Brown	Light Switch Relay
7	10 Amp	Red	Instrument Cluster
8	15 Amp	Blue	Horn/Heater
9	10 Amp	Red	Steer Select Switch
10	10 Amp	Red	Stabil-TRAK System
11	10 Amp	Red	Optional Washer/Wipers
12	7.5 Amp	Brown	Outriggers & ECM Indicator Light
13	7.5 Amp	Brown	Transmission
14	20 Amp	Yellow	Optional Lights
15	40 Amp	Orange	Optional Road/Work Lights

https://truckmanualshub.com/

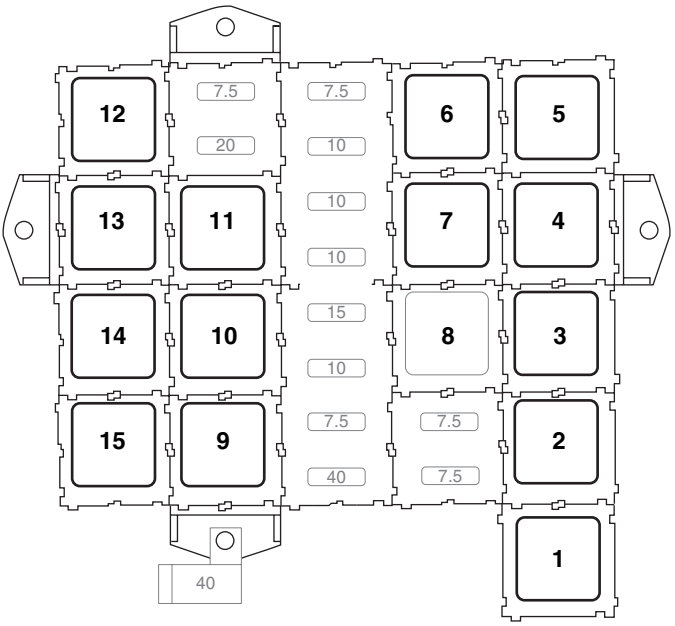

No.	Volt	Circuit Controlled
1	12 Volt	Left Outrigger Lock Relay
2	12 Volt	Right Outrigger Lock Relay
3	12 Volt	Boom Extend Interlock Relay
4	12 Volt	Stabil-TRAK Lock Up Relay
5	12 Volt	Stabil-TRAK Interlock Relay
6	12 Volt	Park Brake Interlock Relay
7	12 Volt	Boom Extend Lockout Relay
8	–	Open
9	12 Volt	Backup Relay
10	12 Volt	Neutral Start Relay
11	12 Volt	Park Brake Disengage Relay Relay
12	12 Volt	Optional Headlight Switch Relay
13	12 Volt	Light Switch Relay
14	12 Volt	Stabil-TRAK Lock relay
15	12 Volt	Boom Switch Relay

https://truckmanualshub.com/

Cold Start Grid Heater Fuses

The two 125 amp fuses (16) that protect the cold start grid heater are located inside the frame on the left side.

1. Unlock and open the left engine access door.
2. To access the fuses, open the protective covers (17). Allow the covers to rotate on the tethers on the holder (18).
3. Remove the two hex nuts (19) and lockwashers (20) securing the fuse (16) and wires to the fuse holder (18). Remove the fuse and replace with a new fuse.
4. Place the new fuse and then the wires onto the studs of the holder. Secure the fuse and wires in place with the lockwashers (20) and hex nuts (19). Torque the hex nuts to 7-9 lb-ft (10-12 Nm).
5. Snap the protective cover back in place. Be sure the cover snaps securely in place on the holder.
6. Close and lock the left side engine access door when complete.

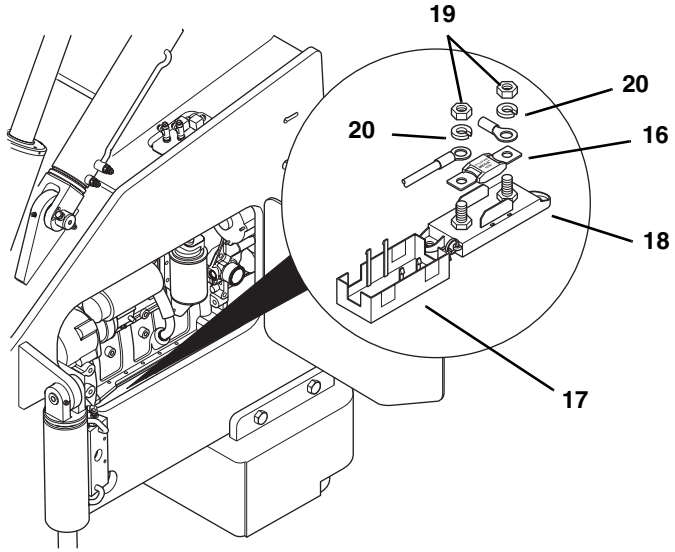

https://truckmanualshub.com/

ECM Fuses and Relays

The three fuse holders (1), that protect the ECM diagnostic system, are located inside the frame on the left side of the engine and are tie wrapped to the wire harness. One holder contains one 7.5 amp fuse (brown), one contains three 7.5 amp fuses (brown) and the other holder contains three 10 amp fuses (red).

1. Unlock and open the left engine access door.
2. Locate the three fuse holders. Remove the clear plastic protective cover (2) from the holder (1).
3. Remove the failed fuse from the holder and replace with a new fuse.
4. Reassemble the plastic cover onto the fuse holder and securely snap the cover in place. Replace any tie wraps that were removed, securing the fuse holders to the wire harness.
5. Close and lock the left side engine access door when complete.
6. To gain access the relay, unlock and open the right side engine access door. Locate the relay (3) inside the frame. This 12 volt relay controls the engine fuel pump.

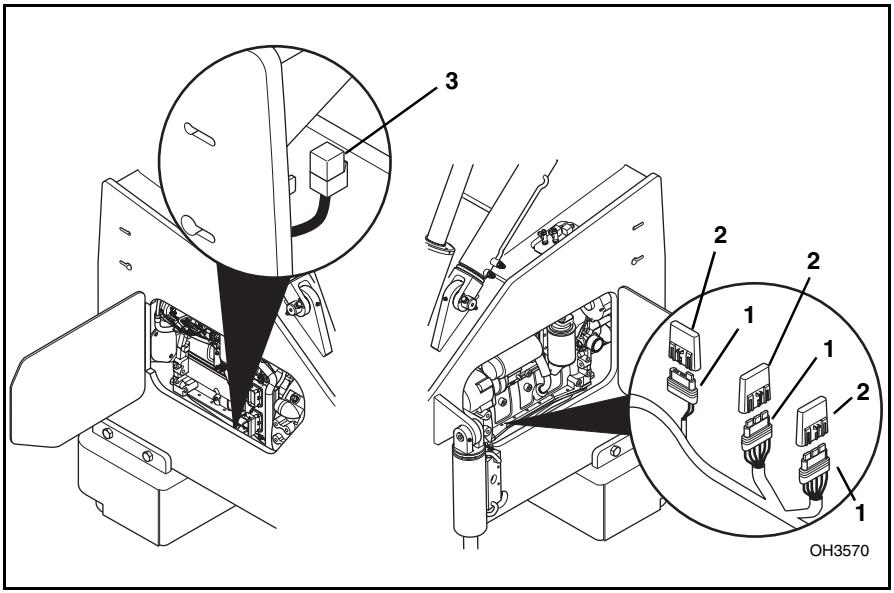

https://truckmanualshub.com/

15. Boom Chains and Wear Pads

A. Intermediate Boom Chains Tension Check

OH2670

OH2690

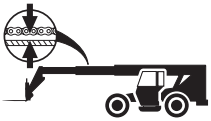
OH2390

Check the intermediate boom chain tension by measuring the intermediate boom extend chain sag.

1. Park the vehicle on level ground. Place the travel select lever in (N) NEUTRAL, move neutral lock lever to NEUTRAL LOCK position, engage the parking brake switch and raise the boom to a horizontal (level) position.
2. Lower both outriggers completely. Fully extend the boom, then retract it 2" (51 mm). Turn the vehicle OFF.

https://truckmanualshub.com/

3. Measure the sag (1) in the intermediate boom extend chains (2) between the bottom of the chains and the top of the primary intermediate boom (3) at their closest point. Acceptable intermediate boom chain sag is between 1.5" (38 mm) and 2.5" (64 mm). If the measurement is less than 1.5" (38 mm) or more than 2.5" (64 mm), the boom chains need to be adjusted.

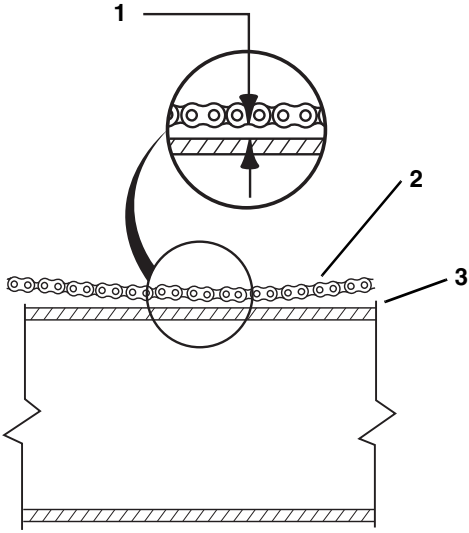

Before making any adjustments to the intermediate boom extend chains, check the following measurement at the rear of the boom.

4. Start the vehicle, retract the boom completely and turn the vehicle OFF.

https://truckmanualshub.com/

5. Go to the back of the vehicle and remove the rear cover from the back of the boom.
6. Check the measurement (4) from the top rear edge of the primary intermediate boom (5) to the top rear edge of the secondary intermediate boom (6). Measurement should be between 8.5" (216 mm) - 11" (279 mm).

NOTE: *If the measurement is less than 8.5" (216 mm) the boom may require extensive adjustment and/or repair. Contact your local* ***Sky Trak*** *Distributor.*

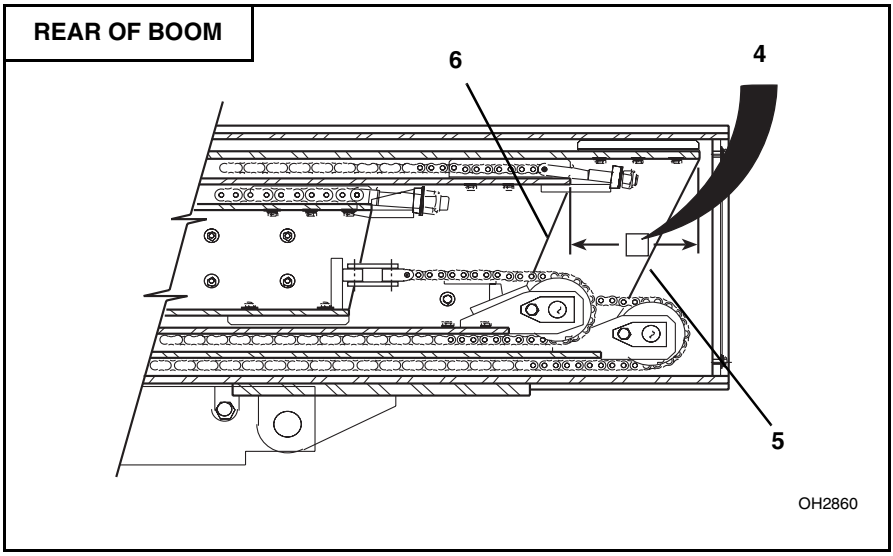

https://truckmanualshub.com/

7. If the measurement is more than 11" (279 mm), tighten the retract chain locknut (1) located on the bottom of the outer boom (2).

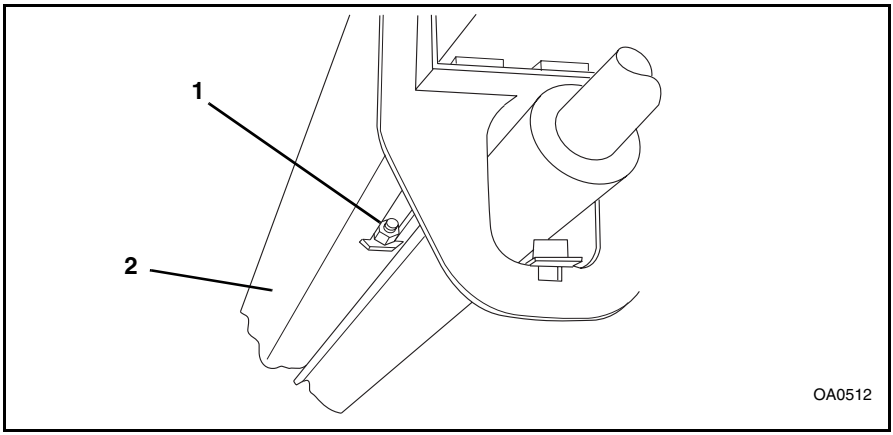

8. Start the vehicle, with the outriggers lowered completely, cycle the boom in and out several times. Then with the boom horizontal, retract the boom completely. Turn the vehicle OFF.
9. Recheck the measurement at the rear of the boom between the top rear edge of the primary intermediate boom and the top rear edge of the secondary intermediate boom. If the measurement is still more than 8.5" (216 mm) - 11" (279 mm), repeat steps 7 through 8.

NOTE: *If, by adjusting the retract locknut, you cannot get the measurement within the range of 8.5" (216 mm) - 11" (279 mm), the boom may require extensive adjustment and/or repair. Contact your local* ***Sky Trak*** *Distributor.*

If the measurement is within 8.5" (216 mm) - 11" (279 mm) measure the intermediate boom extend chain sag again.

10. Start the vehicle, with the outriggers lowered completely, cycle the boom in and out several times. With the boom horizontal, fully extend the boom and then retract it 2" (51 mm). Turn the vehicle OFF.

https://truckmanualshub.com/

11. Measure the sag (3) in the intermediate boom extend chains (4) between the bottom of the chains and the top of the primary intermediate boom (5) at their closest point. Acceptable boom chain sag is between 1.5" (38 mm) and 2.5" (64 mm). If the measurement is less than 1.5" (38 mm) or more than 2.5" (64 mm), the intermediate boom chains need to be adjusted. See “Intermediate Boom Chain Tension Adjustment” on page 166.

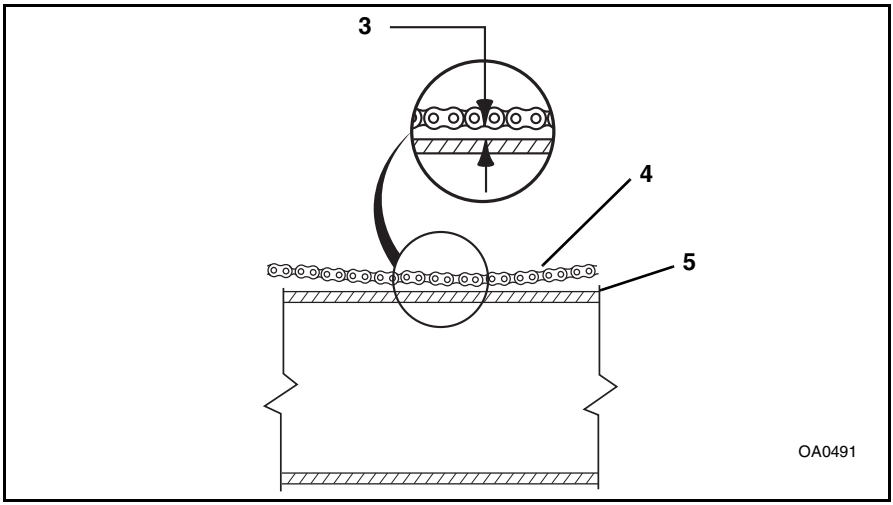

https://truckmanualshub.com/

B. Intermediate Boom Chain Tension Adjustment

(As required)

NOTE: *Always perform the "Intermediate Boom Chain Tension Check" starting on page 161 before adjusting the boom chain tension.*

1. Park the vehicle on level ground. Place the travel select lever in (N) NEUTRAL, move neutral lock lever to NEUTRAL LOCK position, engage the parking brake switch and raise the boom to a horizontal position. Retract the boom completely and turn the vehicle OFF.
2. Adjust the intermediate boom extend chains (1) by tightening the locknuts (3) located at the rear of the boom. Be sure each locknut is tightened equally so that each chain maintains the same tension.
3. Equal chain tension can be checked by the position of the yoke (2) on the outer boom. The front of the yoke should be parallel with the front edge of the boom.

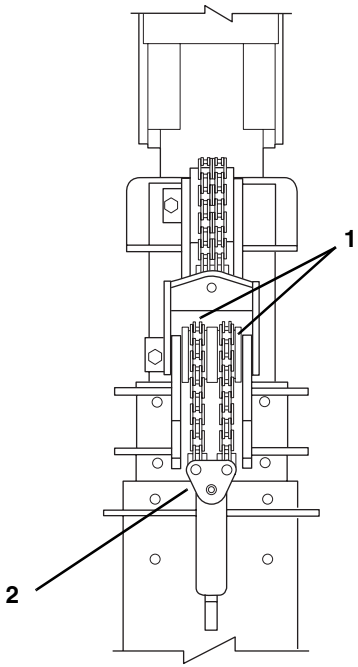

https://truckmanualshub.com/

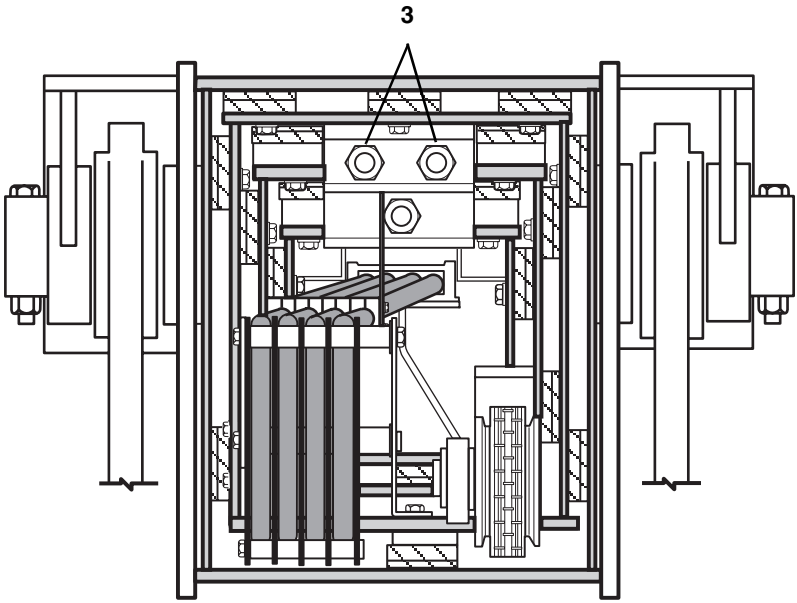

4. Start the vehicle, with the outriggers lowered completely, cycle the boom in and out several times. With the boom horizontal, fully extend the boom and then retract it 2" (51 mm). Turn the vehicle OFF.

5. Measure the intermediate boom chain sag. Acceptable intermediate boom chain sag is between 1.5" (38 mm) and 2.5" (64 mm). If the chain sag is less than 1.5" (38 mm) or more than 2.5" (64 mm), repeat steps 1 through 5 until the sag is within the acceptable range.

NOTE: *If the intermediate boom extend chain sag cannot be adjusted within the acceptable range of 1.5" (38 mm) to 2.5" (64 mm), the boom may require extensive adjustment and/or repair. Contact your local* ***Sky Trak*** *Distributor.*

6. Replace the rear outer boom cover.

https://truckmanualshub.com/

C. Inner Boom Chain Tension Check

OH2670

OH2690

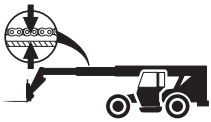

OH2390

Check the inner boom chain tension by measuring the inner boom extend chain sag.

1. Park the vehicle on level ground. Place the travel select lever in (N) NEUTRAL, move neutral lock lever to NEUTRAL LOCK position, engage the parking brake switch and raise the boom to a horizontal (level) position.
2. Lower both outriggers completely. Fully extend the boom, then retract it 2" (51 mm). Turn the vehicle OFF.
3. Measure the sag (1) in the inner boom extend chain (2) between the bottom of the chain and the top of the secondary intermediate boom (3) at the closest point. Acceptable inner boom chain sag is between 1.5" (38 mm) and 2.5" (64 mm). If the measurement is not between 1.5" (38 mm) and 2.5" (64 mm), the boom chain needs to be adjusted.

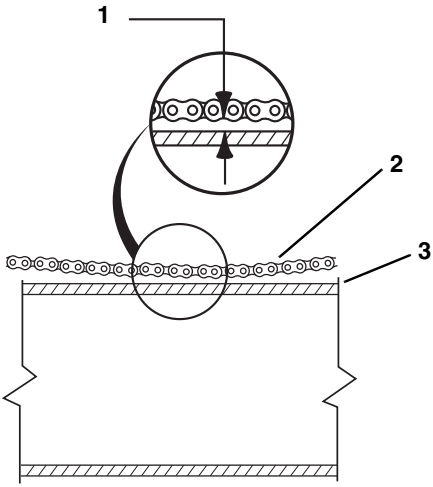

OA0491

https://truckmanualshub.com/

Before making any adjustments to the inner boom extend chain, check the following measurement at the rear of the boom.

4. Start the vehicle, retract the boom completely and turn the vehicle OFF.
5. Go to the back of the vehicle and remove the rear cover from the back of the boom.
6. Check the measurement (4) from the top rear edge of the secondary intermediate boom (5) to the top rear edge of the inner boom (6). This measurement should be between 13.75" (349 mm) - 14.25" (362 mm).

NOTE: *If the measurement is less than* 13.75" (349 mm) *the boom may require extensive adjustment and/or repair. Contact your local* ***Sky Trak*** *Distributor.*

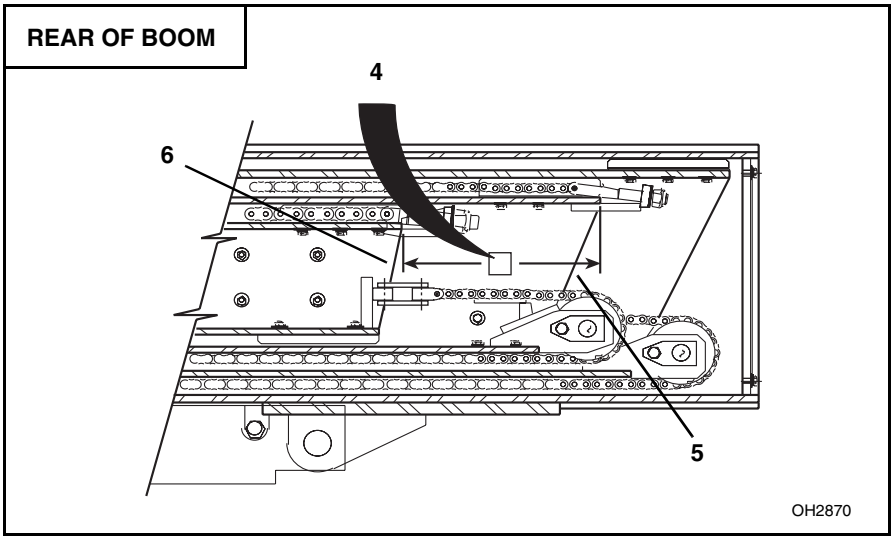

https://truckmanualshub.com/

7. If the measurement is more than 14.25" (362 mm), tighten the inner boom retract chain locknut (1) located on the bottom of the primary intermediate boom (2). Extend the boom far enough to expose the inner boom retract chain locknut (1).

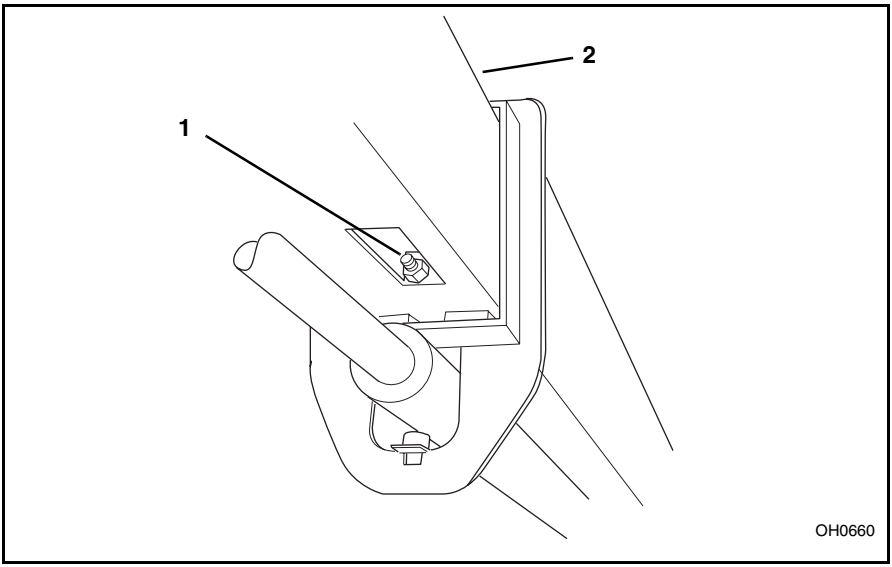

8. Start the vehicle, with the outriggers lowered completely, cycle the boom in and out several times. Then with the boom horizontal, retract the boom completely. Turn the vehicle OFF.
9. Recheck the measurement at the rear of the boom between the top rear edge of the secondary intermediate boom and the top rear edge of the inner boom. If the measurement is still more than the ranges listed above, repeat steps 7 through 8.

NOTE: *If, by adjusting the inner boom retract chain locknut, you cannot get the measurement within the range of 13.75" (349 mm) - 14.25" (362 mm), the boom may require extensive adjustment and/or repair. Contact your local* ***Sky Trak*** *Distributor.*

https://truckmanualshub.com/

If the measurement is within the range of 13.75" (349 mm) - 14.25" (362 mm) measure the inner boom extend chain sag again.

10. Start the vehicle, with the outriggers lowered completely, cycle the boom in and out several times. With the boom horizontal, fully extend the boom and then retract it 2" (51 mm). Turn the vehicle OFF.

11. Measure the sag (3) in the inner boom extend chain (4) between the bottom of the chain and the top of the secondary intermediate boom (5) at the closest point. Acceptable boom chain sag is between 1.5" (38 mm) and 2.5" (64 mm). If the measurement is less than 1.5" (38 mm) or more than 2.5" (64 mm), the inner boom extend chain needs to be adjusted. See “Inner Boom Chain Tension Adjustment” on page 172.

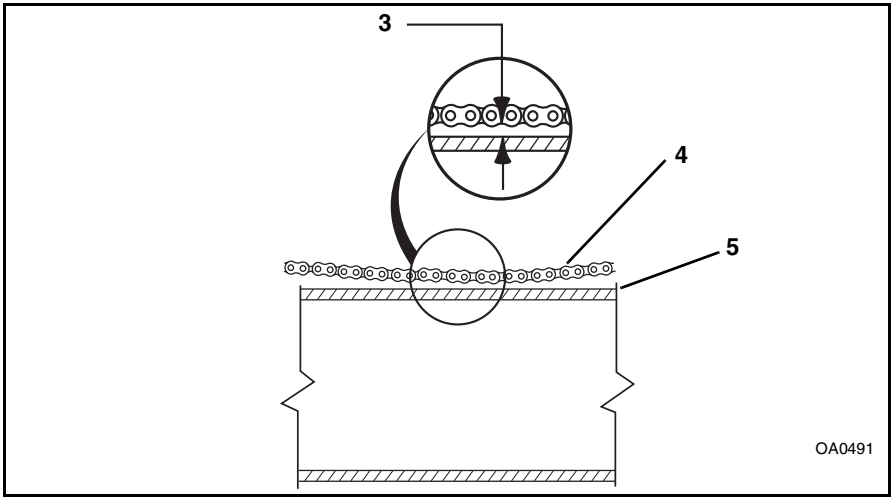

https://truckmanualshub.com/

D. Inner Boom Chain Tension Adjustment

(As required)

NOTE: *Always perform the "Inner Boom Chain Tension Check" starting on page 168 before adjusting the boom chain tension.*

1. Park the vehicle on level ground. Place the travel select lever in (N) NEUTRAL, move neutral lock lever to NEUTRAL LOCK position, engage the parking brake switch and raise the boom to a horizontal position. Retract the boom completely and turn the vehicle OFF.
2. Adjust the inner boom extend chain (1) by tightening the locknut (2).

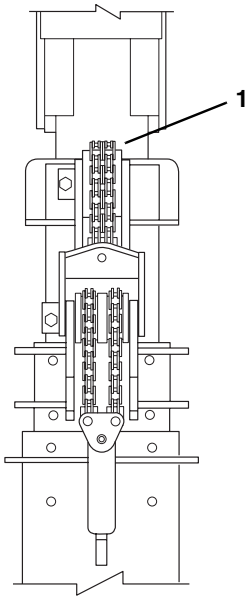

https://truckmanualshub.com/

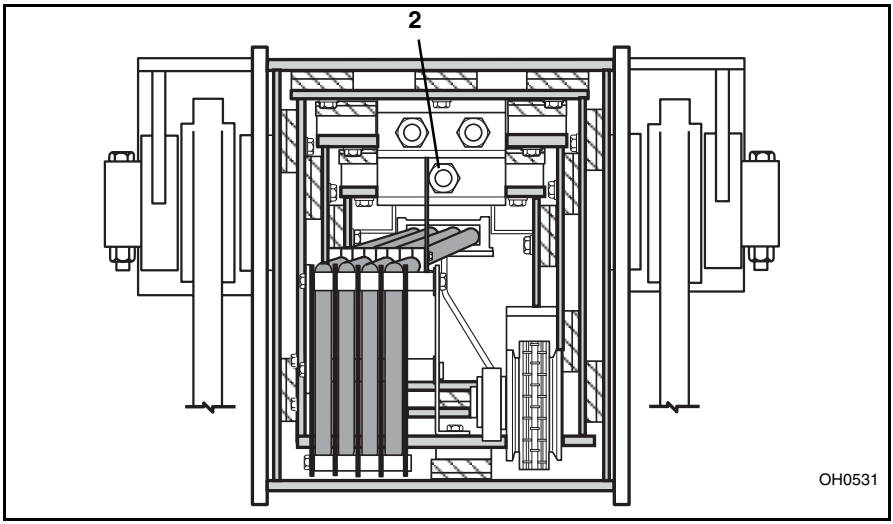

3. Start the vehicle, with the outriggers lowered completely, cycle the boom in and out several times. With the boom horizontal, fully extend the boom and then retract it 2" (51 mm). Turn the vehicle OFF.
4. Measure the inner boom chain sag. Acceptable inner boom chain sag is between 1.5" (38 mm) and 2.5" (64 mm). If the chain sag is less than 1.5" (38 mm) or more than 2.5" (64 mm), repeat steps 1 through 4 until the sag is within the acceptable range.

NOTE: *If the inner boom extend chain sag cannot be adjusted within the acceptable range of 1.5" (38 mm) to 2.5" (64 mm), the boom may require extensive adjustment and/or repair. Contact your local* ***Sky Trak*** *Distributor.*

5. Replace the rear outer boom cover.

https://truckmanualshub.com/

E. Boom Chain Inspection

(250 Hour Intervals)

OH2710

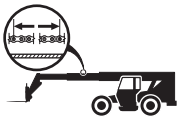

OA1490

WARNING: Worn pins, stretched or cracked links or corrosive environments can cause chain failure. A chain failure could result in uncontrolled boom movement, loss of load or vehicle instability and could cause death or serious injury and/or property damage.

Under normal operating conditions the boom chains will need to be inspected every 250 hours of operation. The retract chains need to be exposed and inspected every 1000 hours of operation. Refer to the Service Manual for the proper procedure. Environmental conditions and dynamic impulse/shock loads can drastically affect normal operating conditions and require more frequent inspection intervals.

Environments in which material handling vehicles operate can vary widely from outdoor moisture to temperature to mildly corrosive or highly corrosive industrial atmospheres, in addition to abrasive exposures such as sand and grit. Some effects can be as follows:

- Moisture - Corrosive rusting reduces chain strength by pitting and cracking.
- Temperature - Low temperature reduces chain strength by embrittlement. Going in and out of cold storage results in moisture from condensation.
- Chemical Solutions or Vapors - Corrosive attack on the chain components and/or the mechanical connections between the chain components. Cracking can be (and often is) microscopic. Going from microscopic cracking to complete failure can be either abrupt or may require an extended period of time.
- Abrasives - Accelerated wearing and scoring of the articulating members of the chain (pins and plates), with a corresponding reduction in chain strength. Due to the inaccessibility of the bearing surfaces (pin surfaces and plate apertures), wear and scoring are not readily noticeable to the naked eye.

https://truckmanualshub.com/

Following are some examples of dynamic shock loading which can impose abnormal loads above the endurance limit of a leaf chain.

- High velocity movement of load, followed by sudden, abrupt stops.
- Carrying loads in suspension over irregular surfaces such as railroad tracks, potholes, and rough terrain.
- Attempting to “inch” loads which are beyond the rated capacity of the vehicle.

The above load cycles and environmental conditions make it impossible to predict chain life. It is therefore necessary to conduct frequent inspections until replacement life can be predicted.

The boom chain’s normal life expectancy can be expressed as a maximum percent of elongation. This is generally 3%. As the chain flexes back and forth over the sheave, the bearing joints (pins and inside link plates) gradually incur wear due to articulation.

https://truckmanualshub.com/

Inspection Guidelines

1. Park the vehicle on level ground. Place the travel select lever in (N) NEUTRAL, place the neutral lock lever in the (N) NEUTRAL LOCK position, engage the parking brake switch and raise the boom to a horizontal (level) position.
2. Fully extend the boom until the extend chain is taut. Shut the engine off.

   The extend chains will be visible for inspection with the vehicle in this state.

   While doing the chain inspection, check all chain clevis ends for distortion or cracking and sheaves for bearing wear or grooving from the chain.
3. Inspect the retract chains every 1000 hours of operation. Refer to the Service Manual for proper procedure.
4. Inspect the chains for the following conditions:

Edge Wear

Check the chain for wear on the link plate edges caused by running back and forth over the sheave. The maximum reduction of material should not exceed 5%. This can be compared to a normal link plate height by measuring a portion of chain that does not run over the sheave.

Double Extend Chains:

For inspection of the retract chains, refer to the Service Manual.

The new chain link measures .713" (18 mm) (1). If the measurement of the worn chain is less than .677" (17 mm) (2), the chain should be replaced.

Single Extend Chains:

The new chain link measures .950" (24 mm) (1). If the measurement of the worn chain is less than .902" (23 mm) (2), the chain should be replaced.

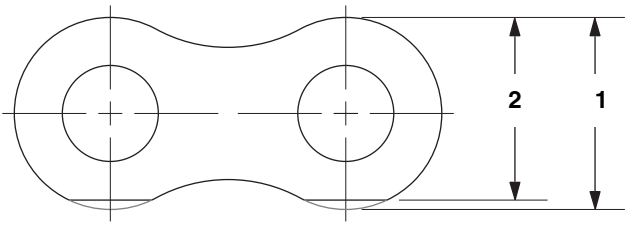

MM2051

https://truckmanualshub.com/

Elongation

Double Extend Chains:

When the original length (3) of 12.00" (305 mm) per foot of new chain has elongated from wear to a length (4) of 12.36" (313 mm), the chain should be discarded and replaced.

Single Extend Chains:

When the original length (3) of 12.00" (305 mm) per foot of new chain has elongated from wear to a length (4) of 12.36" (313 mm), the chain should be discarded and replaced.

It is important to measure the chain in the section that moves over the sheaves because it receives the most frequent articulation. Measuring the chain near its clevis terminals could give an inaccurate reading. The ends of the chains, near the clevis terminal, will not have flexed as frequently, if at all, as nearer the middle of the chains.

Double Extend Chains: Measure across a span of 17 pins at the center of the extend chain. Measure from pin center to pin center. Because the retract chain is inside the boom you will not be able to measure the chain.

Single Extend Chains: Measure across a span of 13 pins at the center of the extend chain. Measure from pin center to pin center. Because the retract chain is inside the boom you will not be able to measure the chain.

All Chains: The maximum measurement allowed is 12.36" (313 mm). If the measurement is more than 12.36" (313 mm), the chain should be replaced.

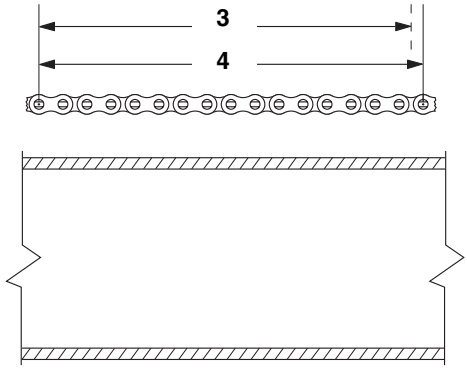

MM2120

https://truckmanualshub.com/

Turning or Protruding Pins

Highly loaded chain, operating with inadequate lubrication can generate abnormal frictional forces between pin and link plates. When chain is allowed to operate in this condition, a pin or series of pins, can begin to twist out of a chain, resulting in failure.

Examine the pin head rivets to determine if the “VEE” flats are still in correct alignment (1). Chain with rotated/displaced heads (2) or abnormal pin protrusion (3) should be replaced immediately.

DO NOT attempt to repair the chain by welding or driving the pin(s) back into the chain. Once the press fit integrity between outside plates and pins has been altered, it cannot be restored.

Any wear pattern on the pin heads or the sides of the link plates indicates misalignment in the system. This condition damages the chain as well as increases frictional loading and should be corrected.

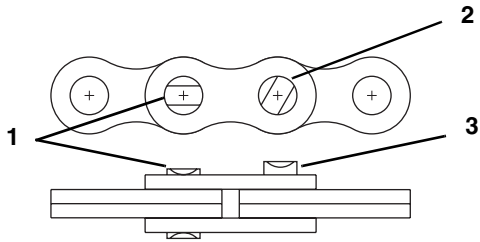

Distorted or Battered Link Plates

Distorted or battered link plates (4) on a leaf chain can cause tight joints and prevent flexing.

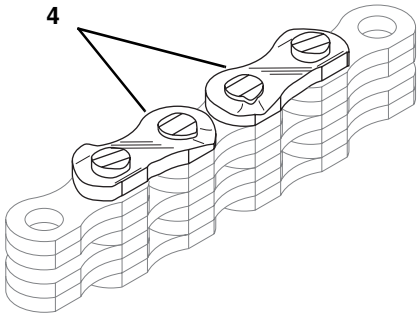

https://truckmanualshub.com/

Cracked Plates

Inspect the chains very carefully, front and back as well as side to side, for any evidence of cracked plates. If any one crack is discovered, the chain should be replaced in its entirety.

It is important, however to determine the cause of the crack before installing a new chain so the condition does not repeat itself.

The types of cracks are:

- **Fatigue Cracking** - Fatigue cracks (5) are a result of repeated cyclic loading beyond the chain's endurance limit.

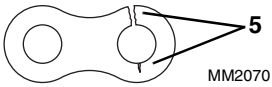

- **Stress Corrosion Cracking** - The outside link plates are particularly susceptible to stress corrosion cracking (6).

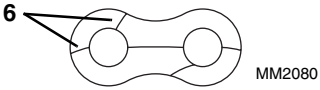

- **Corrosion Fatigue Cracking** - Corrosion fatigue cracks are very similar to fatigue cracks in appearance. Corrosion fatigue is the combined action of an aggressive environment and cyclic stress.

Other Modes of Failure

- **Ultimate Strength Failure** - These types of failures are caused by overloads far in excess of the design load. Either fractured plates (7) or enlarged holes (8) can occur. If either of these failures occurs, the chain should be replaced immediately.

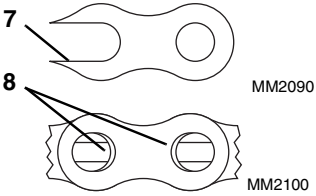

- **Tight Joints** - All joints in the chain should flex freely. Tight joints (9) resist flexing.
  If the problem is caused by dirt or foreign substance packed in the joints, clean and lubricate thoroughly before re-installing the chain.
  If the problem is caused by corrosion and rust or bent pins, replace the chain.

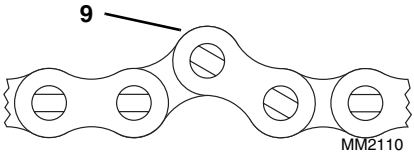

https://truckmanualshub.com/

F. Chain Lubrication

(1000 Hour Intervals)

OH2690

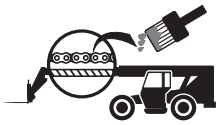

OA1510

After inspection and before being returned to service, chains must be lubricated with a quality chain lubricant (“LUBRIPLATE” Chain & Cable Fluid, “LPS3” or equivalent).

The lubricant must penetrate the chain joint to prevent wear. Applying lubricant to the external surfaces will prevent rust, but the chains should be articulated to make sure the lubricant penetrates to the working surfaces between the pins and links.

To prepare the chain for lubrication, the chain plates should be brushed with a stiff brush or wire brush to clear the space between the plates so that lubricant can penetrate to the working surfaces.

Lubricant may be applied with a narrow paint brush or directly poured on, but the chain should be well flooded with lubricant and the boom should be extended and retracted to be sure that the lubricant penetrates to the working surfaces. All surplus lubricant should be wiped away from the external surfaces. DO NOT use a solvent for this wiping operation.

Regular application of lubricant is necessary to make sure that all working surfaces are adequately lubricated. In extremely dusty conditions, it may be necessary to lubricate the chains more often.

Lubrication of chains on vehicles working consistently in extreme hot or cold conditions requires special consideration. It is important that a reputable lubrication specialist, a **Sky Trak** Distributor or the vehicle distributor be consulted for guidance.

https://truckmanualshub.com/

G. Wear Pad Inspection

(50 Hour Intervals)

OH2680

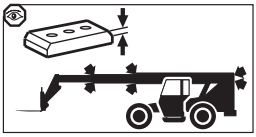
OH2400

Visually inspect boom wear pads between the boom sections at the rear and front of the boom for excessive wear at every 50 hour interval.

The average expected life of boom pads will vary depending upon vehicle use, weight of loads, operating conditions, and the location of boom pads inside the boom.

If the vehicle is used continuously and the weights of the loads are at or near maximum capacity, or if you are operating in very dusty or dirty conditions, the boom pads will wear much faster. The pads that are under the most stress from the weight of the load will also wear faster than other pads. For example the lower pads at the front of the boom and the upper pads at the rear of the boom are under more stress than pads attached to any other surface of the boom. Consequently, the lower pads at the front and the upper pads at the rear will require service more often.

https://truckmanualshub.com/

H. Wear Pad Replacement

(As Wear Pad Indicators Indicate)

Each boom pad (1) is manufactured with a convenient wear pad indicator. This is the angled cut (2) at each end of all wear pads. The total thickness (3) of a new wear pad is .625" (16 mm). The angled cut will provide a total wear thickness (4) of .25" (6 mm). This will leave approximately .375" (10 mm) of total unused base material.

The pads must never be worn past the angled cut indicator because the metal pad insert (5), that holds the pads in place, will begin to wear into the boom pad sliding surfaces. If the pad wears past this point, the metal insert in the pad will begin to gouge the boom plate surfaces. Contact your local **Sky Trak** Distributor.

Replacement of boom wear pads must be performed by your local **Sky Trak** Distributor when the wear pads indicate.

IMPORTANT! *The boom has been factory lubricated for proper wear pad break-in and will normally not require further lubrication. However, after replacing any wear pad(s) or after prolonged periods of inoperation, light lubrication with "LPS3" or "LUBRIPLATE" chain or cable fluid (or equivalent) of the boom wear surfaces is recommended to keep the wear pads and boom wear surfaces lubricated properly. Light lubricating of the boom wear surfaces is also recommended in salt air climates, after cleaning with pressure washer using solvents or when the vehicle is to be put in storage, to prevent rusting.*

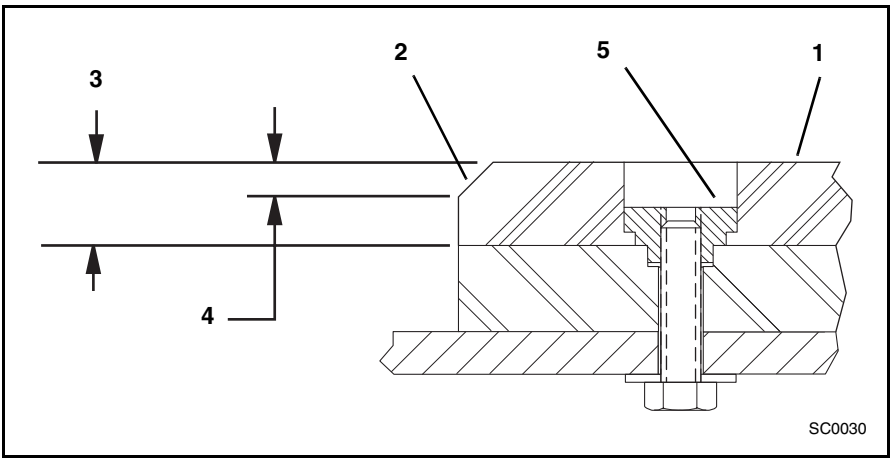

https://truckmanualshub.com/

Storage and Transport

Storage

A. Before Storing

Perform the following steps prior to placing the vehicle in storage:

1. Clean the entire vehicle.
2. Lubricate all grease fittings as described in “Lubrication Points” on page 118.
3. Prepare the engine for storage (refer to the engine manual).
4. Apply rust inhibiting lubricant to all exposed hydraulic cylinder rods.
5. Disconnect the battery cables. Remove the batteries from the vehicle and store in a dry place where they are not subject to temperatures near or below freezing.
6. If the ambient temperature is expected to drop below freezing at anytime during the storage period, make sure the engine coolant is either completely drained from the radiator and engine block or that the amount of anti-freeze in the system is adequate to keep the coolant from freezing.
7. Preferably, store the vehicle inside where it will remain dry. If it must be stored outside, park it on lumber laid on flat level ground or on a concrete slab and cover with a tarp.

B. Removing From Storage

After removing the vehicle from storage and before operating it, perform the following steps:

1. Reinstall properly charged batteries. Secure the hold-down bracket and attach cables.
2. Change the engine oil and filter to remove condensation or other residuals.
3. If the vehicle has been stored for two years or more, drain the coolant from the engine block and radiator and refill with a 50/50 mixture of fresh anti-freeze and water. For detailed information, see “Drain and Flush Radiator” on page 125.
4. Wipe off any rust inhibiting lubricant that was applied to vehicles hydraulic cylinder rods prior to storing.
5. Refer to “Maintenance Schedule And Checklist” on page 113. Perform all the maintenance checks listed under the 10 Hour Intervals.

https://truckmanualshub.com/

6. Review and familiarize yourself and any other operator with all the safe and proper operating procedures contained in this manual.

Transport

When transporting the vehicle, make use of all four tiedown/lift point locations on the vehicles frame.

TIE DOWN/LIFT POINT LOCATIONS

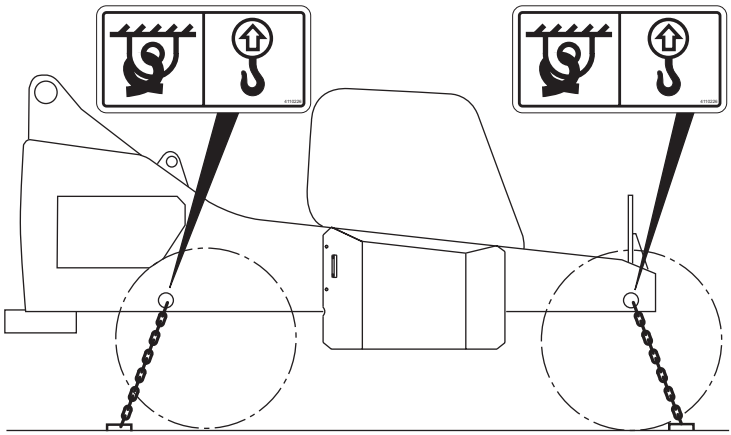

OH2441

NOTE: *The user assumes all responsibility for choosing the proper method of transportation, and the proper selection and use of transportation and tie-down devices, making sure the equipment used is capable of supporting the weight of the vehicle being transported and that all manufacturer's instructions and warnings, regulations and safety rules of their employer, the Department of Transportation and/or any other state or federal laws are followed.*

https://truckmanualshub.com/

Stabil-TRAK System Test

To test the function of the Stabil-TRAK system, read the Stabil-TRAK system test instructions on this page and follow steps 1 through 9 of the Stabil-TRAK System Test Procedure.

Stabil-TRAK System Test Instructions

- Test the Stabil-TRAK system with the vehicle on a level surface.
- Remove any attachment from the quick attach before performing the test.
- **DO NOT** extend the boom at any time during the test. Perform the test with the boom fully retracted.
- **DO NOT** raise the boom above 60° for steps 3 through 6.
- **DO NOT** raise the boom above 45° for steps 7 through 9.
- Test vehicles with outriggers in the RAISED position.
- Follow steps 1 through 9 of the Stabil-TRAK system test procedure exactly as written.

IMPORTANT! *If the Stabil-TRAK light goes OFF and the front left tire lowers to the ground at any time during steps 4 through 7, the test was not performed properly or the Stabil-TRAK system is not functioning properly. Carefully repeat the steps starting with step 1.*

If the Stabil-TRAK light goes OFF and the front left tire lowers to the ground consistently during steps 4 through 7, the Stabil-TRAK system is not functioning properly and the test should be stopped immediately. Contact your local ***Sky Trak*** *Distributor immediately to repair the system.*

WARNING: **DO NOT** operate this vehicle unless you are in the seat with the seat belt fastened around you. Death or serious personal injury could result if the belt is not securely fastened.

https://truckmanualshub.com/

Stabil-TRAK System Test Procedures		
FREE PIVOT MODE	**Step 1**	
	a.	Place the vehicle on a level surface with 0° sway.
	b.	Have the boom fully retracted and horizontal.
	c.	Place an 8" (203 mm) wood or cement block in front of the front left tire.
	d.	Enter the vehicle.
	e.	Fasten the seat belt.
	f.	Turn the key to the RUN position.
	g.	Check to be sure the Stabil-TRAK light is OFF. OH2500
	Step 2	
	a.	Start the engine.
	b.	Turn the parking brake switch OFF.
	c.	Move the range select lever to (1) FIRST gear.
	d.	Move the travel select lever to the (F) FORWARD position.
	e.	Drive the vehicle up on the block.
	f.	Use the frame sway control to level the vehicle back to 0°.
	Step 3	
	a.	Depress the service brake pedal.
	b.	Move the travel select lever to the (N) NEUTRAL position.
	c.	Raise the boom to exactly 60°. The Stabil-TRAK light should come ON when the boom angle is at about 40° and remain ON.
LOCKED MODE Service Brake Test ▶	**Step 4**	
	a.	Use your left foot to depress the service brake pedal.
	b.	With the range select lever in (2) SECOND gear, move the travel select lever to the (R) REVERSE position.
	c.	Ease your left foot partially off the service brake pedal, make sure that the Stabil-TRAK light remains ON.
	d.	With your right foot, increase the engine rpm slightly, as necessary, just enough to back the vehicle off the block. While backing off the block, the front left tire should remain off the ground.

https://truckmanualshub.com/

Stabil-TRAK System Test Procedures		
LOCKED MODE		***IMPORTANT!*** *Perform Steps 5 thru 9 with the engine rpm at idle.*
Neutral Test ▶		**Step 5**
	a.	Keep the service brake pedal depressed.
	b.	Move the travel select lever to the (N) NEUTRAL position.
	c.	Take your foot off the service brake pedal. The Stabil-TRAK light should remain ON and the front left tire should remain off the ground.
Park Brake Test ▶		**Step 6**
	a.	With the travel select lever in the (N) NEUTRAL position, engage the parking brake switch.
	b.	Move the travel select lever to the (F) FORWARD position. The Stabil-TRAK light should remain ON and the front left tire should remain off the ground.
		Step 7
	a.	With the parking brake switch ON, move the travel select lever to the (N) NEUTRAL position.
	b.	Lower the boom to exactly 45°.
	c.	Frame sway the vehicle no more than 5° to the left.
	d.	Frame sway the vehicle back to 0°.
	e.	Frame sway the vehicle no more than 5° to the right. ***NOTE:*** *Observe that frame sway will be slower than normal during this test.*
	f.	The Stabil-TRAK light should remain ON and the front left tire should remain off the ground. The front left tire should not raise or lower during frame sway.
	g.	Frame sway back toward 0°, leaving the vehicle swayed to the right approximately 1° to 2°.
		Step 8
	a.	Depress the service brake pedal.
	b.	Disengage the parking brake switch.
	c.	With the range select lever in (1) FIRST gear, move the travel select lever to the (R) REVERSE position.
	d.	Release the service brake pedal to deactivate the Stabil-TRAK system.

https://truckmanualshub.com/

Stabil-TRAK System Test Procedures		
	Step 8 (Continued)	
SLOW PIVOT MODE	e.	The Stabil-TRAK light should go OFF.
	f.	The front left tire should return to the ground while the vehicle travels in reverse.
LOCKED MODE	g.	Depress the service brake pedal to stop the vehicle.
	Step 9	
SLOW PIVOT MODE	a.	With the service brake pedal depressed and the boom angle at exactly 45°, move the range select lever to (3) THIRD gear.
	b.	Move the travel select lever to (F) FORWARD.
	c.	Release the service brake pedal to deactivate the Stabil-TRAK system. The Stabil-TRAK light should go OFF.
	d.	Slowly drive the vehicle forward against the block to stop the vehicle from moving forward.
	e.	With the front left tire against the block, frame sway the vehicle no more than 5° to the left.
	f.	Check that the front left tire remains on the ground. It is normal for the front left tire to raise slightly when swaying to the left, but the tire should immediately lower when the frame sway function is stopped.
	g.	Frame sway the vehicle back to 0° and pause briefly.
	h.	Frame sway the vehicle no more than 5° to the right.
	i.	Check that the front right tire remains on the ground. It is normal for the front right tire to raise slightly when swaying to the right, but the tire should immediately lower when the frame sway function is stopped.
	j.	Frame sway the vehicle back to 0°.
	k.	Depress the service brake pedal.
	l.	Shift the travel select lever to (N) NEUTRAL.
	m.	Lower the boom.

If steps 1 through 9 prove positive, the Stabil-TRAK system is functioning properly and the vehicle can be returned to service. If any of these steps indicate that the Stabil-TRAK system is not functioning properly, contact your local **Sky Trak** Distributor immediately to repair the system.

https://truckmanualshub.com/

Boom/Outrigger Interlock System Test

To test the function of the Boom/Outrigger Interlock System perform the "Stabil-TRAK System Test" begining on page 185 before performing the following test.

Boom/Outrigger Interlock System Test Procedures		
	Step 1	
BOOM EXTEND MODE 1	a.	Place the vehicle with no load on a hard, level surface such as blacktop or concrete.
	b.	Fasten your seat belt.
	Step 2	
BOOM EXTEND MODE 2	a.	With the outriggers in the raised position and the boom in a horizontal position, extend the boom. The boom should extend until the letter "E" appears and then should STOP. If the boom extends beyond the letter "F", retract the boom fully and have the system repaired before using the vehicle again.
	b.	Attempt to frame sway the vehicle to the right and left; it should frame sway normally.
	Step 3	
BOOM EXTEND MODE 3	a.	Lower both outriggers to the ground. **DO NOT** lift the front wheels of the vehicle off the ground at this time. The Stabil-TRAK light should come ON when the outriggers are lowered.
	b.	With the boom still in a horizontal position, extend the boom.
	c.	Attempt to raise both outriggers; they should not rise. If the outriggers rise, **STOP** and retract the boom and have the system repaired before using the vehicle again.
	d.	If the outriggers cannot be raised, attempt to lower the outriggers fully until both front wheels are off the ground; the outriggers should lower.
	Step 4	
	a.	Place the travel select lever in the (F) FORWARD position and the gear select lever in the (1) FIRST gear position.
	b.	Attempt to accelerate the vehicle; the vehicle should not move.
	c.	If the vehicle attempts to move, **STOP** and have the system repaired before using the vehicle again.

https://truckmanualshub.com/

Boom/Outrigger Interlock System Test Procedures		
	IMPORTANT! *Perform Steps 5 thru 9 with the engine rpm at idle.*	
BOOM EXTEND MODE 3	**Step 5**	
		a. Attempt to frame sway the vehicle to the right and left; it should frame sway, but at a slower speed than normal.
		b. The Stabil-TRAK light should remain ON.
		c. Return the vehicle to a level position.
	Step 6	
		a. Place the travel select lever in the (N) NEUTRAL position, move the neutral lock lever to the NEUTRAL LOCK position.
BOOM EXTEND MODE 1		b. Fully retract the boom.
		c. Raise the outriggers.
		d. Engage the parking brake switch, shut the engine OFF and remove the key.
		e. Exit the vehicle using both handholds.

If steps 1 through 5 prove positive, the Boom/Outrigger Interlock System is functioning properly and the vehicle can be returned to service. If any of these steps indicate that the Boom/Outrigger Interlock System is not functioning properly, contact your local **Sky Trak** Distributor immediately to repair the system.

https://truckmanualshub.com/

Parking Brake/Transmission De-Clutch Test Procedures

To check that the parking brake/transmission de-clutch system is functioning properly, perform the following tests.

IMPORTANT! *These tests should be performed in (1) FIRST gear only.*

WARNING: **DO NOT** operate this vehicle unless you are in the seat with the seat belt fastened around you. Death or serious personal injury could result if the belt is not securely fastened.

Test 1 - Transmission De-Clutch

Step 1:

a. Place the vehicle on a level surface.

b. Clear the area in front and behind the vehicle of any obstacles.

c. Fasten your seat belt.

d. Turn the key and start the engine.

e. With the parking brake applied, move the range select lever to (1) FIRST gear.

f. Move the travel select lever to (F) FORWARD.

g. Depress the throttle pedal fully. The unit should not move.

Step 2:

a. Remove your foot from the throttle pedal.

b. Move the travel select lever to (R) REVERSE.

c. Depress the throttle pedal fully. The unit should not move.

d. Remove your foot from the throttle pedal.

e. Move the travel select lever to (N) NEUTRAL.

Test 2 - Transmission De-Clutch/Parking Brake Activation

a. Disengage the parking brake.

b. Move the travel select lever to (F) FORWARD.

c. Move the unit **slowly** in a forward direction (approximately 1 mph [1,6 kmh]).

d. Engage the parking brake. The unit should stop abruptly.

https://truckmanualshub.com/

Test 3 - Park Brake Hold Performance

a. With the rated load of 10,000 lbs (4.536 Kg) on the forks, drive the vehicle forward up a 15% grade (15 ft. rise over 100 ft. run).

b. Stop the vehicle using the service brakes, apply the park brake, shift the transmission into NEUTRAL (N).

c. Take your foot off the service brake pedal. The vehicle should not move.

d. Apply the service brakes, shift the transmission into REVERSE (R), move the park brake switch to the OFF position and back down off the grade.

e. Repeat “Test 3” by backing up the grade and checking the park brake holding performance.

If the parking brake or transmission de-clutch does not pass these tests, do the following.

1. **Immediately** remove the vehicle from service.

WARNING: **BLOCK ALL FOUR WHEELS.** Failure to do so could result in death or serious personal injury from vehicle roll away.

2. Block all four wheels to prevent the vehicle from moving.

3. Place the accident prevention tags (1) on the ignition switch (2) and the steering wheel (3).

Service the parking brake immediately or contact your local **Sky Trak** Distributor to repair the system.

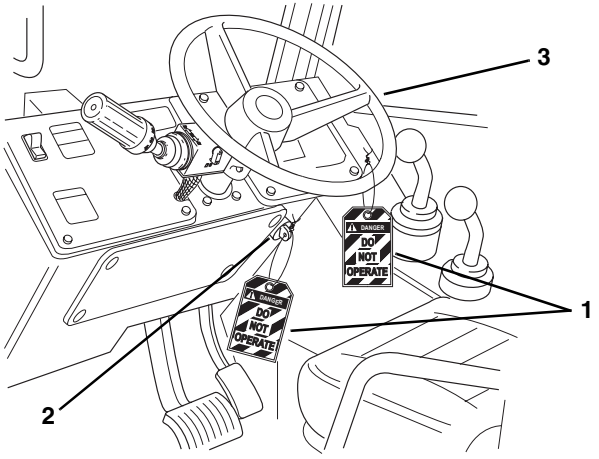

https://truckmanualshub.com/

Four Wheel Steer Indexing Procedure

If the vehicle does not drive “straight,” the steering could be out-of-phase. Perform the following Four Wheel Steer Indexing Procedure to synchronize the front and rear steering.

1. With the steering select switch (4) in the Four Wheel Steer position (5), turn the steering wheel full left.
2. While holding the steering wheel full left, toggle the steer select switch to the Front Wheel Steer position (6) and steer the front wheels back to center.
3. Toggle the steer select switch back to Four Wheel Steer position (5) and turn the steering wheel full left.
4. Toggle the steer select switch back to Front Wheel Steer position (6) and steer the front wheels full left.
5. Toggle the switch to the Four Wheel Steer position (5) and return to center.

The vehicle should now be properly indexed in Four Wheel Steering. If the wheels are still out-of-phase, repeat the above procedure.

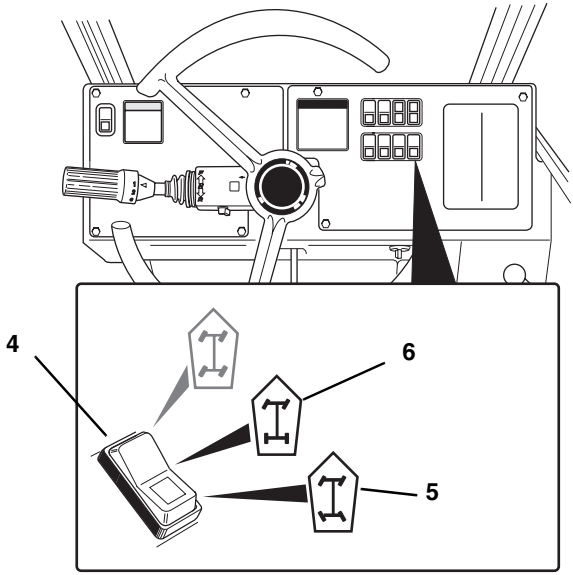

https://truckmanualshub.com/

Fluid & Lubrication Capacities

Engine Crankcase Oil:

Capacity with Filter Change ..... 10.5 quarts (10 liters)

Filter Capacity .....0.85 quart (0,80 liters)

Type Of Oil.....15W40

Fuel Tank:

Total Capacity.....37 gallons (140 liters)

Usable Capacity .....35.6 gallons (135 liters)

Type of Fuel

Below 32° F (0° C)..... Winterized #2 Diesel

Above 32° F (0° C) .....Standard #2 Diesel

Cooling System:

Cooling System Capacity (w/o heater) .....4 gallons (15 liters)

Overflow Bottle Capacity ..... 3 quarts (2,8 liters)

Type of Coolant .....50/50 ethylene glycol and water

Hydraulic System:

System Capacity .....64 gallons (242 liters)

Reservoir Capacity to Full Mark .....32.2 gallons (122 liters)

Type of Oil .....ISO Grade 46 Hydraulic Oil or MIL-L-2104C 10W Motor Oil

(See Chart On page 137)

Transmission:

Capacity with filter change .....3 gallons (11,8 liters)

Type of Fluid ..... Universal Tractor Fluid (see chart on page 141)

Axles:

Differential Housing Capacity (Front Axle)..... 9.5 quarts (9 liters)

Differential Housing Capacity (Rear Axle) ..... 10.6 quarts (10 liters)

Type of Fluid ..... Universal Tractor Fluid (see chart on page 144)

https://truckmanualshub.com/

Wheel Ends:

Wheel End Capacity (Front Axle).....1.7 quarts (1,6 liters)

Wheel End Capacity (Rear Axle) .....1.3 quarts (1,2 liters)

Type of Fluid.....Universal Tractor Fluid (see chart on page 150)

Tires

Air Pressure:

Standard Tires 17.5 - 25, 12 ply (minimum).....60 psi (414 kPa)

Optional Radial Tires 17.5R25 One Star .....73 psi (503 kPa)

Tire Ballast (Minimum per Tire):

Optional Foam Filled Tire 17.5 - 25, 12 ply..... 1,075 lbs (488 Kg)

Wheel Lug Nut Torque: ..... 430-470 lb-ft (583-637 Nm)

Maximum Ground Pressure (w/full load):

Standard Tires 17.5 - 25, 12 ply.....77 psi (531 kPa)

Footprint (w/full load):

Standard Tire 17.5 - 25, 12 ply ..... 244 sq. in.(1574 cm^2)

Weights

Basic Vehicle:

Model 10054 Curb Weight (with Open Cab) ..... 27,323 lbs (12.393 Kg)

Model 10054 Curb Weight (with Enclosed Cab) .... 27,523 lbs (12.484 Kg)

Maximum Rated Capacity:

Model 10054 ..... 10,000 lbs (4.536 Kg)

https://truckmanualshub.com/

Vehicle Dimensions

With Standard 17.5 - 25 Tires:

(A) Length (less forks) ..... 239 inches (6.071 mm)

(B) Width (outriggers up) ..... 102 inches (2.591 mm)

(C) Width (outriggers down) ..... 156.75 inches (3.981 mm)

(D) Height ..... 101 inches (2.565 mm)

(E) Wheelbase..... 119.5 inches (3.035 mm)

(F) Ground Clearance ..... 18 inches (457 mm)

(G) Tread Center ..... 84.25 inches (2.140 mm)

(H) Turning Clearance ..... 184.5 inches (4,7 meters)

(J) Maximum Lift Height .....53 feet 2 inches (16,2 meters)

(K) Max. Forward Reach .....38 feet 9 inches (11,8 meters)

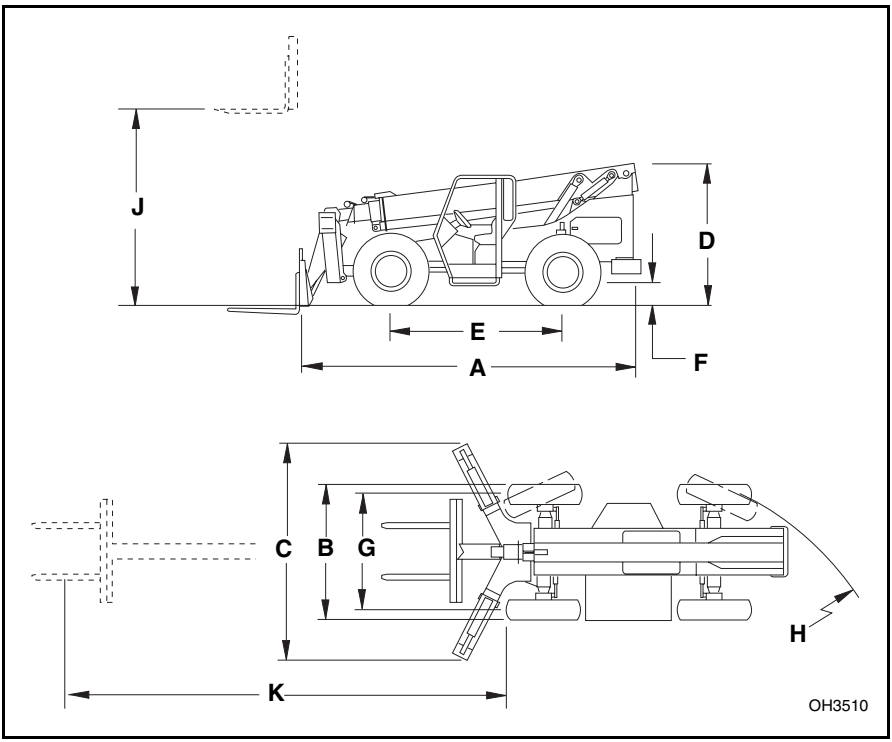

https://truckmanualshub.com/

Electrical System

Rating: ..... 12V DC Negative Ground

Number of Batteries: ..... Two

Type of Batteries:

Maintenance Free .....850 Cold Cranking Amps (Each Battery)

Series of Batteries:..... Series 27

Fuse Ratings:

Main ..... 40 Amp

Light Switch Relay ..... 7.5 Amp

Instrument Cluster ..... 10 Amp

Horn/Heater ..... 15 Amp

Steer Select Switch..... 10 Amp

Stabil-TRAK System ..... 10 Amp

Optional Washer/Wipers ..... 10 Amp

Outriggers & ECM Indicator Light ..... 7.5 Amp

Optional Lights ..... 20 Amp

Transmission ..... 7.5 Amp

Boom/Outrigger Interlock..... 7.5 Amp

Optional Road/Work Lights ..... 40 Amp

https://truckmanualshub.com/

Relay Ratings:

Park Brake Disengage 12V
Optional Headlight Switch 12V
Light Switch 12V
Neutral Start 12V
Stabil-TRAK Lock 12V
Boom Switch 12V
Backup 12V
Park Brake Interlock 12V
Boom Extend Lockout 12V
Stabil-TRAK Interlock 12V
Stabil-TRAK Lock Up 12V
Boom Extend Interlock 12V
Right Outrigger Lock 12V
Left Outrigger Lock 12V
Engine Fuel Pump (Located Inside Engine Compartment) 12V

Grid Heater Fuse Ratings:

125 Amp ..... Qty. 2

ECM Fuse Ratings:

7.5 Amp ..... Qty. 4
10 Amp ..... Qty. 3

Engine

Cummins:

Model QSB4.5T
Horsepower ..... 110 hp @ 2500 rpm

https://truckmanualshub.com/

A

Accelerator Pedal 24
Accident Prevention Tags 5
Air Cleaner 120
Air Intake System 123
Air Pressure 195
Alternator Charging Warning Indicator Light 42
Attachment Reconnect 75
Attachment Removal 74
Attachment Tilt 32
Auger Operation 47
Auxiliary Attachment Control Lever 47
Avoidance Symbols 8
Axle Oil 144
Axle Oil Change 145
Axle Oil Level 144
Axles 194

B

Batteries 12, 154
Battery Charging 155
Battery Electrolyte First Aid 12, 155
Beacon Light Switch 49
Before Storing 183
Bleeding Fuel System 134
Boom Angle Indicator 46, 76
Boom Chain Inspection 174
Boom Chains 161
Boom Control Lever 31
Boom Extend Letters 76
Boom/Outrigger Interlock System Test 189
Brake Disk Inspection 146

C

Cab Heater 55
Capacities 194
Capacity Limitations 92
Chain Lubrication 180
Change Elements 122
Change Fuel Filter 132
Changing Direction 68
Changing Travel Direction 68
Chemical Hazards 10
Clearances 14
Clothing and Safety Gear 10
Cold Start Grid Heater Fuses 159
Cold Starting 59
Cooling System 194
Crab Steering 72

D

Dismounting 10
Door Latches 56
Door Window Latch 56
Drain And Flush Radiator 125

E

ECM Diagnostic System Activation 44
ECM Fuses and Relays 160
ECM Light Code Identification 44
Electrical System 197
Electrocution Hazards 15
Elevating Personnel 90, 94
Emergency Boom Lowering 99
Emergency Exit 18
Emergency Flashers 51
Engine 198
Engine Air-Intake Heater Indicator 43
Engine Coolant Level Check 124
Engine Coolant Temperature Warning Indicator Light 41
Engine Cooling System 124
Engine Crankcase Oil 194
Engine Fan Belt 136
Engine Fan Belt Check 136
Engine Fuel 10
Engine Fuel System 131
Engine Function Indicator Lights 44
Engine Oil And Filter 127
Engine Oil Pressure Warning Indicator Light 42
Engine Oil Recommendations 127
Ether or High Energy Starting Aids 11

https://truckmanualshub.com/

Exhaust Fumes 10
Extend Interlock Mode 66

F

Falling Load Hazard 13, 20
Fan Control 55
Filter Change 129
Filter Check 120
Footprint (w/full load) 195
Fork Ratings 89
Fork Sweep 73
Four Wheel Steer Indexing 71
Four Wheel Steer Indexing
Procedure 193
Four Wheel Steering 71
Frame Level Indicator 45
Frame Sway Control Lever 32
Free Pivot Mode 63
Front Wheel Steering 72
Front, Rear & Boom Worklights 48
Fuel 61
Fuel Cap 62
Fuel Filter 132
Fuel Gauge 37
Fuel Tank 194
Fuel Water Separator/Filter 131
Function Indicator Lights 39
Fuse 156
Fuse Ratings 197

G

Gear Select Lever 30

H

Hazard Classification System 3
Hazard Symbols 7
Headlights 52
High Beam Light 40
High/Low Beam Switch 52
Horn 24
Hourmeter 37
Hydraulic Fluid 11
Hydraulic Line Failure 100
Hydraulic Oil & Filter Change 139
Hydraulic Oil and Filter 137
Hydraulic Oil Level 138
Hydraulic Oil Temperature
Warning Indicator Light 41
Hydraulic Pump Failure 99
Hydraulic System 194
Hydraulic System Oil 137

I

Ignition Switch 25
In-line Fuel Strainer 133
Inner Boom Chain Sag 168
Inner Boom Retract Chain
Locknut 170
Inner Safety Element 121
Instructional Symbols 6
Instrument Cluster Light Test 38
Instruments and Indicators 37
Intermediate Boom Chain Sag 162
Intermediate Boom Chain Tension
Adjustment 166
Intermediate Boom Chains
Tension Check 161

J

Jump Starting 60

L

Leveling Frame 73
Locked Mode 64
Loss of Engine Power 99
Lowering Boom Hazard 13
Lowering of Outriggers 34
Lubrication Points 118

M

Maintenance Schedule 113
Maximum Ground Pressure
(w/full load) 195
Maximum Rated Capacity 195
Moving Parts Hazard 13

N

Neutral Lock Lever 28
New or Additional Operators 5
Normal Starting 58

O

Oil Level Check 127

https://truckmanualshub.com/

Operating 68
Operator's Seat Adjustment 36
Outer Primary Element 121
Outrigger Control Switches 33
Outrigger Interlock Mode 66

P

Park Brake Light 40
Park Brake Switch 27
Parking Brake 191
Parking Brake Test Procedures ...191
Parking Lights 52
Pick, Carry & Place A Load 90
Pre-Operation Inspection 57
Preparation and Prevention 14
Primary Element 121

Q

Quick Attach 74

R

Reading The Capacity Chart 78
Rear View Mirrors 46
Rear Window Latch 56
Refueling 61
Relay 156
Relay Ratings 198
Removing From Storage 183
Replacement Parts 2
Replacing Tires 153
Reports 2
Restriction Indicator 120

S

Safety Element 121
Seat Belt 10, 35
Service Brake Pedal 24
Shifting Gears 69
Shut-Off 96
Side Tilt Carriage - Outriggers Down 82
Side Tilt Carriage - Outriggers Up ..81
Side Tilt Carriage Operation 47
Skylight Wiper Control 54
Slopes 19
Slow Pivot Mode 65
Stabil-TRAK Indicator Light 39
Stabil-TRAK System 63
Stabil-TRAK System Test 185
Stabil-TRAK System Test Instructions 185
Standard Carriage Capacity Chart - Outriggers Down 80
Standard Carriage Capacity Chart - Outriggers Up 79
Starting Travel 68
Steering Modes 70
Steering Select Switch 26
Steering Wheel 24
Stopping Travel 69
Storage 183
Swing Carriage - Outriggers Down 84
Swing Carriage - Outriggers Up 83
Swing Carriage Operation 47

T

Tip Over Hazard 16
Tire Air Pressure 152
Tire Ballast (Minimum per Tire) 195
Tire Pressure 18
Tires 152, 195
To Defrost The Cab 55
To Heat The Cab 55
Towing A Disabled Vehicle 97
Transmission 194
Transmission De-Clutch 191
Transmission Oil and Filter 141
Transmission Oil Level 141
Transmission Temperature Warning Indicator Light 41
Transport 184
Travel Direction 68
Travel Select Lever 29
Truss Boom - Outriggers Down 86
Truss Boom - Outriggers Up 85
Truss Boom w/Winch - Outriggers Down 88

https://truckmanualshub.com/

Truss Boom w/Winch -
Outriggers Up 87
Truss Boom w/Winch Operation 47
Turn Signal Light 40
Turn Signals 52

U

Underground Hazards 15
Understanding the Boom/Outrigger
Interlock System 66
Using Other Attachments 95
Using The Capacity Chart 76

V

Vehicle Dimensions 196
Ventilation 20
Visual Obstruction 14

W

Warning Indicator Lights 41
Wear Pad Inspection 181
Wear Pad Replacement 182
Wear Pads 161
Weights 195
Wheel End Oil 150
Wheel End Oil Change 151
Wheel End Oil Level 150
Wheel Ends 195
Wheel Lug Nut Torque 153, 195
Wheels 152
Windshield & Skylight
Washer Control 54
Windshield Wiper Control 53
Worklight Switch 48

https://truckmanualshub.com/

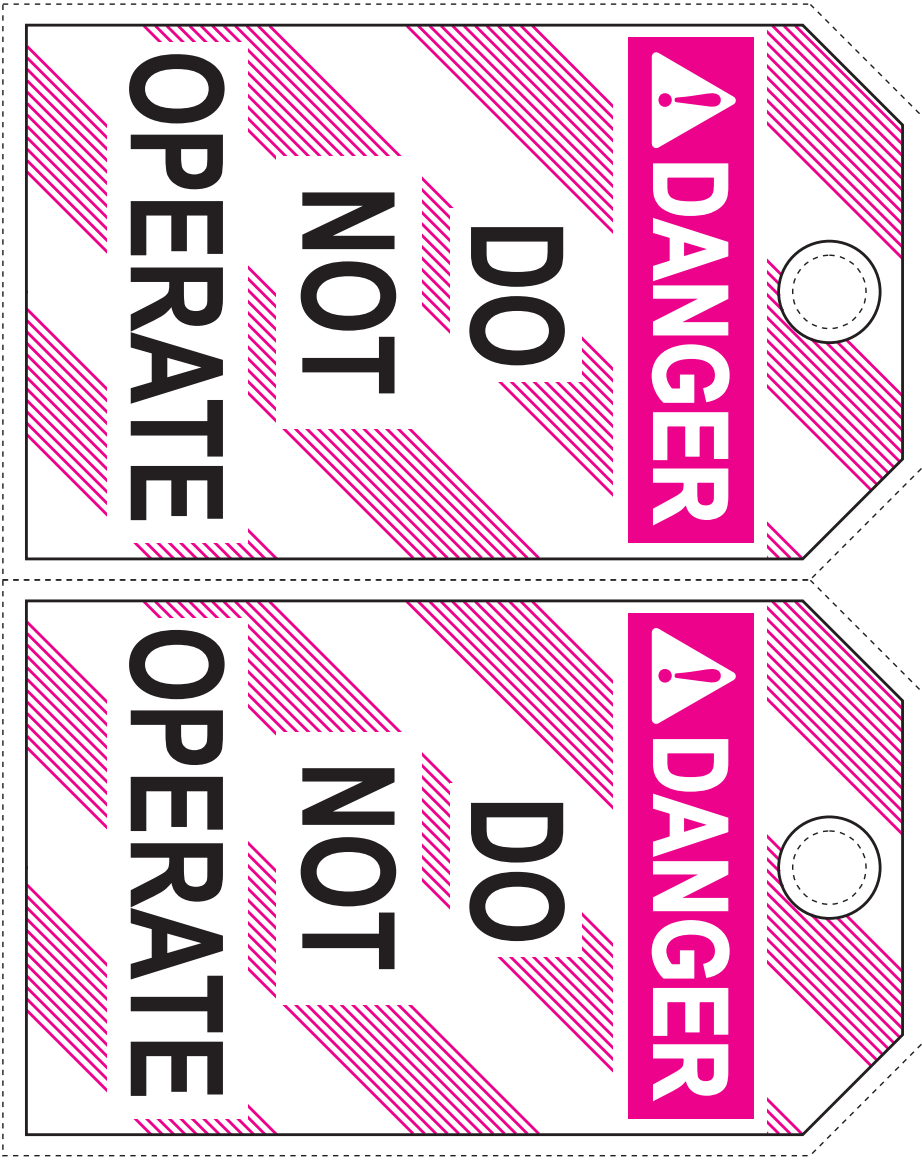

https://truckmanualshub.com/

Accident Prevention Tags

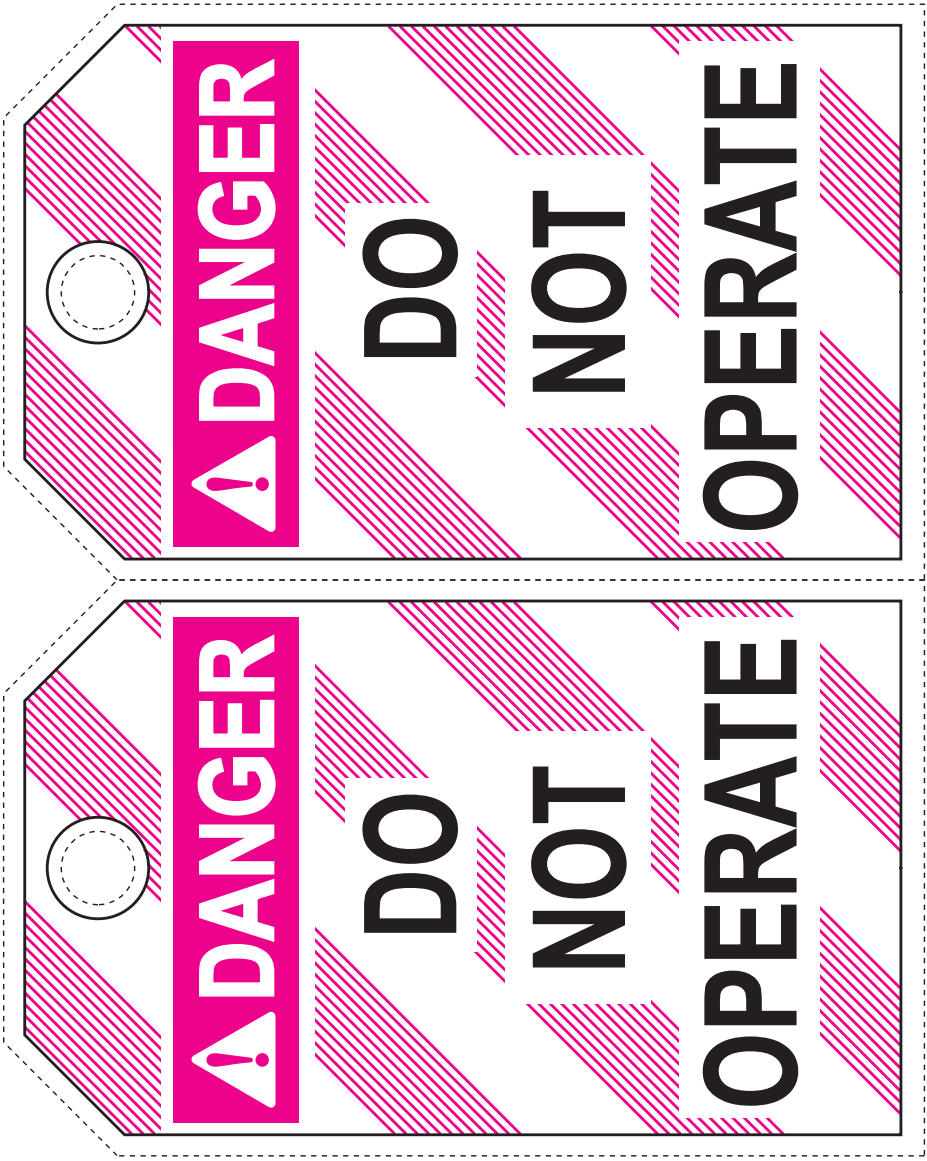

https://truckmanualshub.com/

Replacement Manuals

If the owner/operator or safety manuals that were originally shipped with your vehicle are lost, stolen or need replacement, contact your local distributor for replacement manuals.

If for any reason your distributor cannot supply the manuals you need; write, call or send a fax to the following address for ordering information.

JLG Industries, Inc.
1 JLG Drive
McConnellsburg, PA 17233-9533 USA

Phone: (877) 554-5438 or (717) 485-6472

Parts Fax: (800) 733-8939 or (717) 485-6441

Be sure to include the following information:

1. Type of manual requested (owner/operator or safety)
2. Vehicle Name
3. Model and Serial Number

Visit our Web Site at: http://www.jlg.com

https://truckmanualshub.com/

Model No. _____

Serial No. _____

CORPORATE OFFICE
JLG INDUSTRIES, INC.
1 JLG Drive
McConnellsburg, PA. USA
17233-9533
Phone: (717) 485-5161
Toll Free: (877) 554-5438
Fax: (717) 485-6417

Service Direct: (717) 485-6657 Service Fax: (717) 485-6488 or (717) 485-6815
Parts Direct: (717) 485-6472 Parts Fax: (800) 733-8939 or (717) 485-6441

JLG Industries (Australia)
P.O. Box 5119
11 Bolwarra Road
Port Macquarie
N.S.W. 2444
Australia
Phone: (61) 2 65 811111
Fax: (61) 2 65 810122

JLG Industries (UK)
Unit 12, Southside
Bredbury Park Industrial
Estate
Bredbury
Stockport
SK6 2sP
England
Phone: (44) 870 200 7700
Fax: (44) 870 200 7711

JLG Deutschland GmbH
Max Planck Strasse 21
D-27721 Ritterhude/Ihlpohl
Bei Bremen
Germany
Phone: (49) 421 693 500
Fax: (49) 421 693 5035

JLG Industries (Italia)
Via Po. 22
20010 Pregnana Milanese-MI
Italy
Phone: (39) 02 9359 5210
Fax: (39) 02 9359 5845

JLG Latino Americana Ltda.
Rua Eng. Carlos Stevenson,
80-Suite71
13092-310 Campinas-SP
Brazil
Phone: (55) 19 3295 0407
Fax: (55) 19 3295 1025

JLG Europe B.V.
Jupiterstraat 234
2132 HJ Hoofddorp
The Netherlands
Phone: (31) 23 565 5665
Fax: (31) 23 557 2493

JLG Industries (Norge AS)
Sofeimyrveien 12
N-1412 Sofienyr
Norway
Phone: (47) 6682 2000
Fax: (47) 6682 2001

JLG Polska
Ul. Krolewska
00-060 Warsawa
Poland
Phone: (48) 91 4320 245
Fax: (48) 91 4358 200

JLG Industries (Europe)
Kilmartin Place,
Tannochside Park
Uddingston G71 5PH
Scotland
Phone: (44) 1 698 811005
Fax: (44) 1 698 811055

JLG Industries (Pty) Ltd.
Unit 1, 24 Industrial Complex
Herman Street
Meadowdale
Germiston
South Africa
Phone: (27) 11 453 1334
Fax: (27) 11 453 1342

Plataformas Elevadoras
JLG Iberica, S.L.
Trapadella, 2
P.I. Castellbisbal Sur
08755Castellbisbal
Spain
Phone: (34) 93 77 24700
Fax: (34) 93 77 11762

JLG Industries (Sweden)
Enkopingsvagen 150
Box 704
SE - 175 27 Jarfalla
Sweden
Phone: (46) 8 506 59500
Fax: (46) 8 506 59534

Visit our Web Site at: http://www.jlg.com