https://truckmanualshub.com/

DAEWOO

65.99892-8051

Operation Manual

GENERATOR DIESEL ENGINE

DE12T

POLUS

P126TI

https://truckmanualshub.com/

FOREWORD

This manual has been prepared to help you use and maintain the DE12T/ P126TI generator diesel engines in a safe and correct manner.

These economical and high-performance diesel engines (OMEGA combustion system) have been designed and manufactured for generator application. They meet all the requirements such as low noise, fuel economy, high engine speed, and durability.

Nonetheless, to obtain the best performance and long life of an engine, it is essential to operate it appropriately and to carry out periodic checks as instructed in this manual. We strongly urge you to thoroughly read this manual from cover to cover and to acquaint yourself fully with all the information contained in this manual.

Please contact your authorized DAEWOO dealer for the answers to any questions you may have about your DE12T/ P126TI generator engine's features, operation, or manuals.

In order to operate the engine in the optimal conditions and to maintain its best performances, the contents in this instruction are to be thoroughly understood and observed.
In addition refer to the INSTALLATION manual about DAEWOO generator engine installation instructions.
All warranty claims to be addressed to;

Engine Export Team,
DAEWOO Heavy Industries LTD.
DAEWOO Center 541
Namdaemun-ro 5-ga, Chung-gu
Seoul, Korea
TEL : (82-2-726-3205~8), FAX: (82-2-726-3168)

Or to your local DEALER or DISTRIBUTOR.

DAEWOO Heavy Industries LTD.
July. 1999

https://truckmanualshub.com/

CONTENTS

1. General information 1
1.1. Engine specification
1.2. Engine assembly

2. Safety regulations 6
2.1. General notes
2.2. Regulations designed to prevent accidents
2.3. Regulations designed to prevent damage
2.4. Regulations designed to prevent pollution
2.5. Notes on safety in handling used engine oil

3. Technical information 10
3.1. Engine model and serial number
3.2. Engine type
3.3. Engine timing
3.4. Valves
3.5. Lubrication system
3.6. Air cleaner
3.7. Intercooler
3.8. Fuel system
3.9. Cooling system
3.10. V-belt tension check and adjust
3.11. Turbocharger
3.12. Electrical equipment

4. Commissioning and operation 26
4.1. Preparation
4.2. Breaking-in
4.3. Inspection after starting
4.4. Operation in winter
4.5. Tuning the engine

5. Inspection and maintenance 30
5.1. Periodical inspection and maintenance
5.2. Lubrication system
5.3. Cooling system
5.4. Air intake system
5.5. Fuel system
5.6. Injection nozzle maintenance
5.7. Turbocharger

6. Checking and setting 42
6.1. Adjustment of valve clearance
6.2. Adjustment of injection timing
6.3. Tightening the cylinder head bolts
6.4. Cylinder compression pressure
6.5. V-belts

- **Appendix** 49
- **WORLDWIDE NETWORK**

https://truckmanualshub.com/

1. General information

1.1. Engine specification

Items \ Engine Model		DE12T		P126TI		P126TI-I
Engine type		Water-cooled, 4 cycle in-line type Turbo charged		Water-cooled, 4 cycle in-line type Turbo charged & intercooled		
Combustion chamber type		Direct injection type				
Cylinder liner type		Replaceable dry liner				
Timing gear system		Gear driven type				
No. of piston ring		Compression ring 2, oil ring 1				
No. of cylinder-bore x stroke (mm)		4 - 123 x 155				
Total piston displacement (cc)		11,051				
Compression ratio		17.1 : 1				
Engine dimension (length x width x height) (mm)		1,365.5 x 870 x 1,046		1,383 x 870 x 1,207		
Engine weight (kg)		910				
Rotating direction (from flywheel)		Counter clockwise				
Fuel injection order		1 - 5 - 3 - 6 - 2 - 4				
Fuel injection timing (B.T.D.C static)		12°				
Injection pump type		Zexel in-line “P” type				
Governor type		Mechanical governor type(RSV)		Electric governor type(GAC)		
Injection nozzle type		Multi-hole type (5 hole)		Multi-hole type (5 hole)		
Fuel injection pressure (kg/cm^2)		220		1st : 160, 2nd : 220		
Compression pressure (kg/cm^2)		28 (at 200 rpm)				
Power (ISO 3046)	Condition	50Hz (1,500rpm)	60Hz (1,800rpm)	50Hz (1,500rpm)	60Hz (1,800rpm)	60Hz (1,800rpm)
	Continuous	-	-	280PS (206kW)	336PS (247kW)	-
	Prime	205PS (151kW)	245PS (180kW)	328PS (241kW)	378PS (278kW)	356PS (262kW)
	Stand by	226PS (166kW)	270PS (199kW)	370PS (272kW)	405PS (298kW)	392PS (288kW)
Intake and exhaust valve clearance (at cold) (mm)		0.3				
Intake valve	Open at	18° (B.T.D.C)				
	Close at	34° (A.B.D.C)				
Exhaust valve	Open at	46° (B.B.D.C)				
	Close at	14° (A.T.D.C)				
Lubrication method		Full forced pressure feed type				
Oil pump type		Gear type driven by crankshaft				
Oil filter type		Full-flow, Cartridge type				
Lubricating oil capacity (max./min.) (lit)		23/20				
Oil cooler type		Water cooled				
Water pump		Gear driven impeller type				
Cooling Method		Pressurized circulation				
Cooling water capacity (engine only) (lit)		19				
Thermostat type		Wax pallet type (83 ~ 95 °C)				
Alternator voltage - capacity (V - A)		24 - 45				
Starting Motor voltage - output (V - kW)		24 - 6.0				

https://truckmanualshub.com/

1.2. Engine assembly

1.2.1. Engine sectional view (Longitudinal)

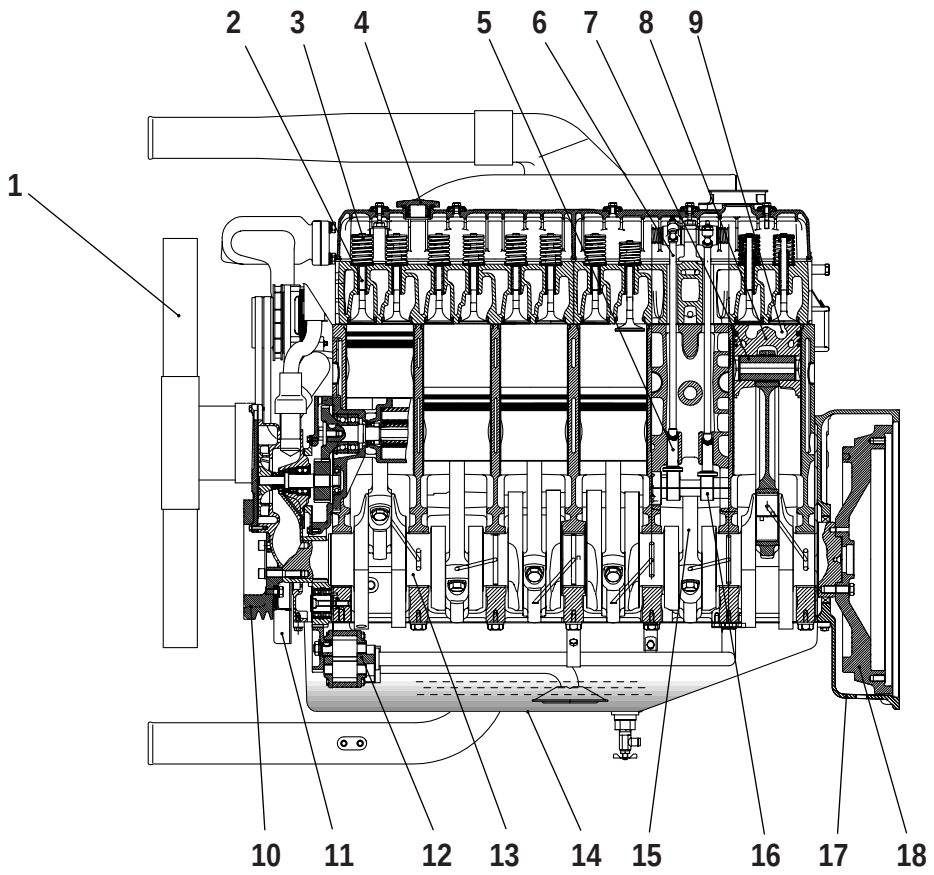

EA8M1002

1. Cooling fan
2. Exhaust valve
3. Valve spring
4. Oil filter
5. Tappet
6. Push rod
7. Piston pin
8. Piston
9. Combustion chamber
10. Crankshaft pulley
11. Vibration damper
12. Oil pump
13. Crankshaft
14. Oil pan
15. Connecting rod
16. Camshaft
17. Flywheel housing
18. Flywheel

https://truckmanualshub.com/

1.2.2. Engine sectional view (Cross)

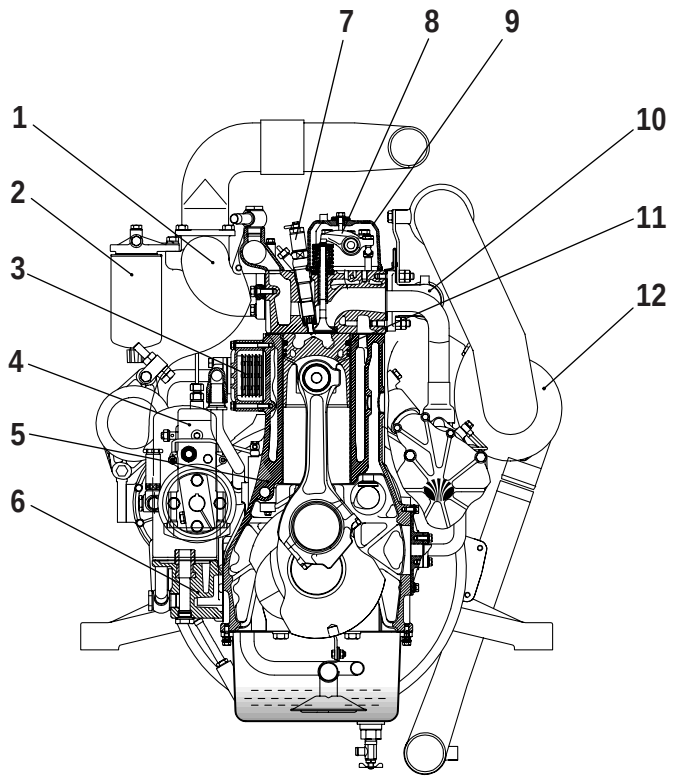

EA8M1003

1. Intake manifold
2. Fuel filter
3. Oil cooler
4. Injection pump
5. Cylinder block
6. Oil filter
7. Injection nozzle assembly
8. Rocker arm
9. Cylinder head cover
10. Exhaust manifold
11. Piston ring
12. Turbocharger

https://truckmanualshub.com/

1.2.3. Engine assembly views

1) DE12T

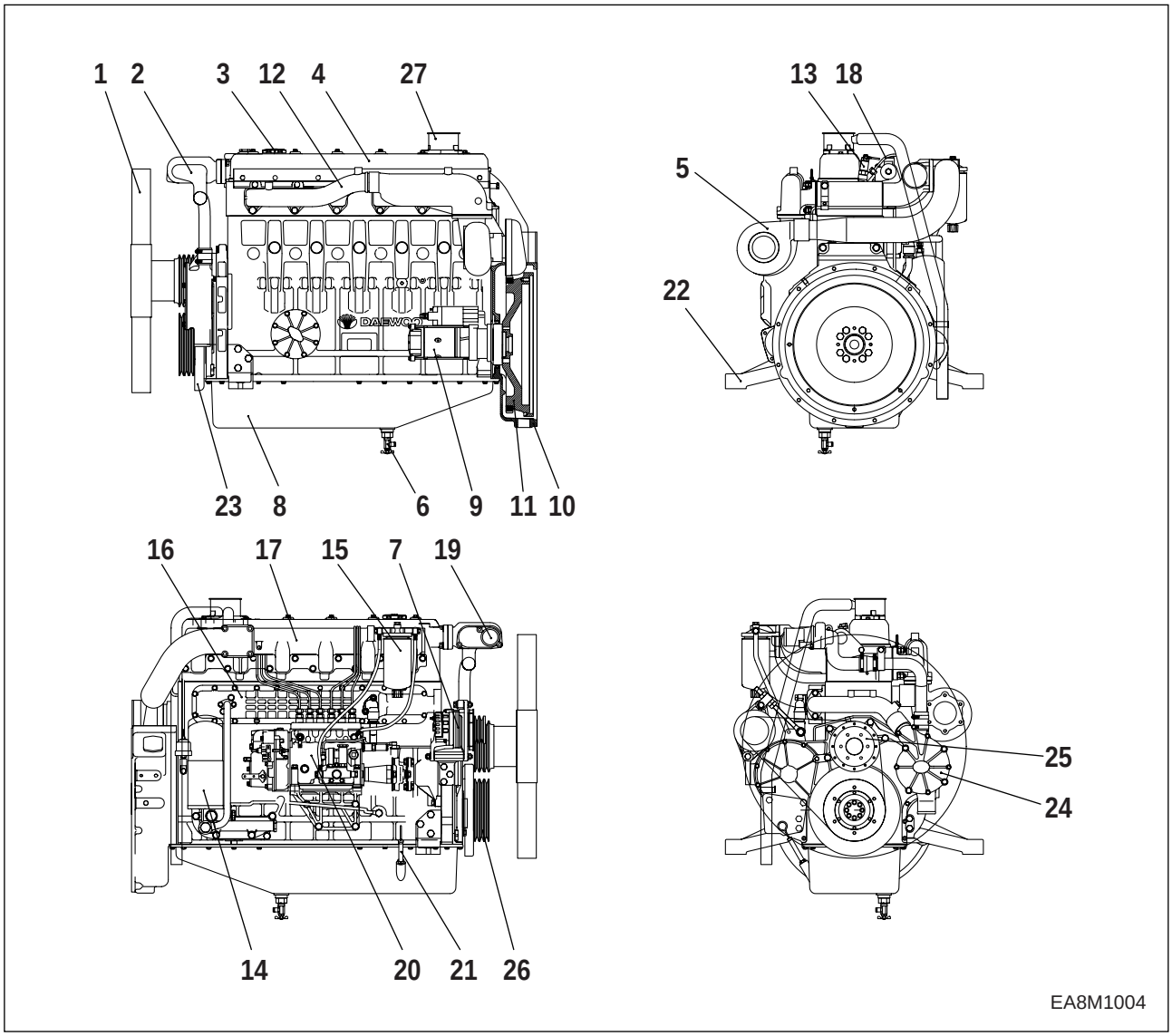

1. Cooling fan
2. Cooling water pipe
3. Oil filler cap
4. Cylinder head cover
5. Turbocharger
6. Oil drain valve
7. Alternator
8. Oil pan
9. Starter
10. Flywheel housing
11. Flywheel
12. Exhaust manifold
13. Injection nozzle assembly
14. Oil filter
15. Fuel filter
16. Oil cooler
17. Intake manifold
18. Injection pipe
19. Thermostat
20. Injection pump
21. Oil level gauge
22. Mounting bracket
23. Vibration damper
24. Water pump
25. Fan drive
26. Crankshaft pulley
27. Breather

https://truckmanualshub.com/

2) P126TI

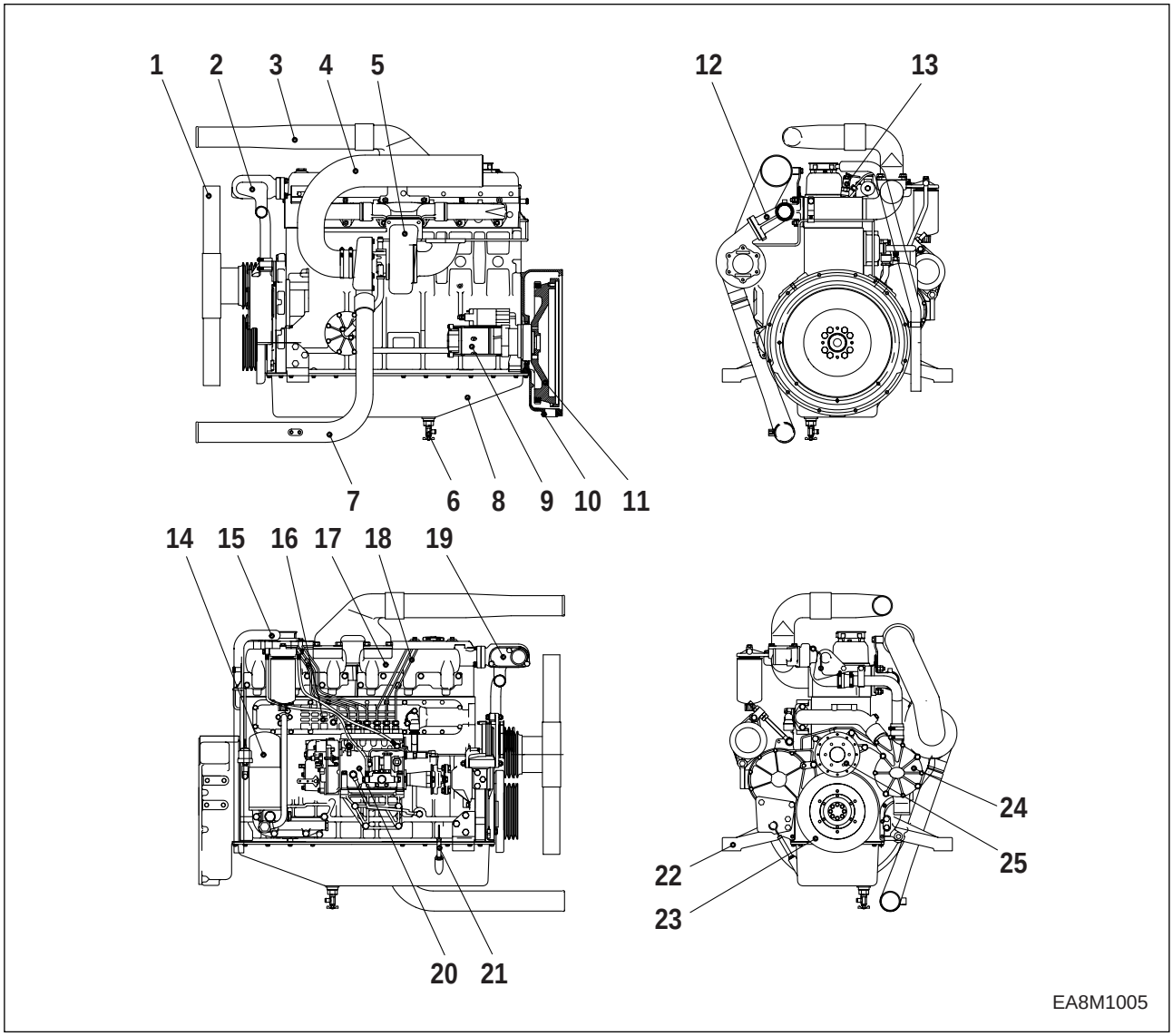

1. Cooling fan
2. Cooling water pipe
3. Air pipe
   (Intercooler ⟶ Intake manifold)
4. Air pipe
   (Air cleaner ⟶ Turbocharger)
5. Turbocharger
6. Oil drain valve
7. Air pipe
   (Intercooler ⟶ Intake manifold)
8. Oil pan
9. Starter
10. Flywheel housing
11. Flywheel
12. Exhaust manifold
13. Injection nozzle assembly
14. Oil filter
15. Breather hose
16. Oil cooler
17. Intake manifold
18. Injection pipe
19. Thermostat
20. Injection pump
21. Oil level gauge
22. Mounting bracket
23. Vibration damper
24. Water pump
25. Fan drive

https://truckmanualshub.com/

2. Safety regulations

2.1. General notes

Day-to-day use of power engines and the service products necessary for running them presents no problems if the persons occupied with their operation, maintenance and care are given suitable training and think as they work.

This summary is a compilation of the most important regulations. These are broken down into main sections which contain the information necessary for preventing injury to persons, damage to property and pollution. In addition to these regulations those dictated by the type of engine and its site are to be observed also.

Important :
If, despite all precautions, an accident occurs, in particular through contact with caustic acids, fuel penetrating the skin, scalding from oil, antifreeze being splashed in the eyes etc., consult a doctor immediately.

2.2. Regulations designed to prevent accidents

2.2.1. During commissioning, starting and operation

Before putting the engine into operation for the first time, read the operating instructions carefully and familiarize yourself with the “critical” points, If you are unsure, ask your DAEWOO representative.

- For reasons of safety we recommend you attach a notice to the door of the engine room prohibiting the access of unauthorized persons and that you draw the attention of the operating personal to the fact that they are responsible for the safety of persons who enter the engine room.
- The engine must be started and operated only by authorized personnel. Ensure that the engine cannot be started by unauthorized persons.
- When the engine is running, do not get too close to the rotating parts. Wear close-fitting clothing.
- Do not touch the engine with bare hands when it is warm from operation risk of burns.
- Exhaust gases are toxic. Comply with the installation instructions for the installation of DAEWOO generator diesel engines which are to be operated in enclosed spaces. Ensure that there is adequate ventilation and air extraction.
- Keep vicinity of engine, ladders and stairways free of oil and grease.
  Accidents caused by slipping can have serious consequences.

2.2.2. During maintenance and care

- Always carry out maintenance work when the engine is switched off. If the engine has to be maintained while it is running, e.g. changing the elements of change-over filters, remember that there is a risk of scalding. Do not get too close to rotating parts.
- Change the oil when the engine is warm from operation.

Caution :
There is a risk of burns and scalding. Do not touch oil drain valve or oil filters with bare hands.

- Take into account the amount of oil in the sump. Use a vessel of sufficient size to ensure that the oil will not overflow.
- Open the coolant circuit only when the engine has cooled down. If opening while the engine is still warm is unavoidable, comply with the instructions In the chapter entitled “Cooling”.
- Neither tighten up nor open pipes and hoses (lube oil circuit, coolant circuit and any additional hydraulic oil circuit) during the operation. The fluid which flow out can cause injury.
- Fuel is inflammable. Do not smoke or use naked lights in its vicinity. The tank must be filled only when the engine is switched off.
- Keep service products (anti-freeze) only in containers which can not be confused with drinks containers.
- Comply with the manufacturer’s instructions when handling batteries.

Caution :
Accumulator acid is toxic and caustic. Battery gases are explosive.

2.2.3. When carrying out checking, setting and repair work

- Checking, setting and repair work must be carried out by authorized personnel only.
- Use only tools which are in satisfactory condition. Slip caused by the worn open-end wrench could lead to Injury.
- When the engine is hanging on a crane, no-one must be allowed to stand or pass under it. Keep lifting gear in good condition.
- When checking injectors, do not put your hands under the jet of fuel.
  Do not inhale at atomized fuel.
- When working on the electrical system disconnect the battery earth cable first. Connect it up again last in prevent short circuits.

2.3. Regulations designed to prevent damage to engine and premature wear

1) Never demand more of the engine than it was designed to yield for its intended purpose. Detailed information on this can be found in the sales literature. The injection pump must not be adjusted without prior written permission of DAEWOO.

2) If faults occur, find the cause immediately and have it eliminate in order to prevent more serious of damage.
3) Use only genuine DAEWOO spare parts. DAEWOO will accept no responsibility for damage resulting from the installation of other parts which are supposedly “just as good”.
4) In addition to the above, note the following points.
   - Never let the engine run when dry, i.e. without lube oil or coolant. Use only DAEWOO-approved service products (engine oil, anti-freeze and anticorrosion agent).
   - Pay attention to cleanliness, The Diesel fuel must be free of water. See “Maintenance and care”.
   - Have the engine maintained at the specified intervals.
   - Do not switch off the engine immediately when it is warm, but let it run without load for about 5 minutes so that temperature equalization can take place.
   - Never put cold coolant into an overheated engine. See “Maintenance and care”.
   - Do not add so much engine oil that the oil level rises above the max. marking on the dipstick. Do not exceed the maximum permissible tilt of the engine. Serious damage to the engine may result if these instructions are not adhered to.
   - Always ensure that the testing and monitoring equipment (for battery charge, oil pressure, and coolant temperature) function satisfactorily.
   - Comply with instructions for operation of the alternator. See “Commissioning and operation”.
   - Do not let the water pump run dry. If there is a risk of frost, drain the water when the engine switched off.

2.4. Regulations designed to prevent pollution

2.4.1. Engine oil, filter element, fuel filter

- Take old oil only to an oil collection point. Take strict precautions to ensure that oil does not get into the drains or into the ground.
- The drinking water supply may be contaminated.
- Oil and fuel filter elements are classed as dangerous waste and must be treated as such.

2.4.2. Coolant

- Treat undiluted anti-corrosion agent and / or antifreeze as dangerous waste.
- When disposing of spent coolant comply with the regulations of the relevant local authorities.

2.5. Notes on safety in handling used engine oil

Prolonged or repeated contact between the skin and any kind of engine oil decreases the skin. Drying, irritation or inflammation of the skin may therefore occur. Used engine oil also contains dangerous substances which have caused skin cancer in animal experiments. If the basic rules of hygiene and health and safety at work are observed, health risks are not to the expected as a result of handling used engine oil.

https://truckmanualshub.com/

Health precautions

- Avoid prolonged or repeated skin contact with used engine oil.
- Protect your skin by means of suitable agents (creams etc.) or wear protective gloves.
- Clean skin which has been in contact with engine oil.
  - Wash thoroughly with soap and water, A nailbrush is an effective aid.
  - Certain products make it easier to clean your hands.
  - Do not use petrol, Diesel fuel, gas oil, thinners or solvents as washing agents.
- After washing apply a fatty skin cream to the skin.
- Change oil-soaked clothing and shoes.
- Do not put oily rags into your pockets.

Ensure that used engine oil is disposed of properly.
- Engine oil can endanger the water supply -

For this reason do not let engine oil get into the ground, waterways, the drains or the sewers. Violations are punishable. Collect and dispose of used engine oil carefully.
For information on collection points please contact the seller, the supplier or the local authorities.

https://truckmanualshub.com/

3. Technical information

3.1. Engine model and serial number

The engine model and serial number is located on the engine as illustrated. These numbers are required when requesting warranty and ordering parts. They are also referred to as engine model and serial number because of their location.

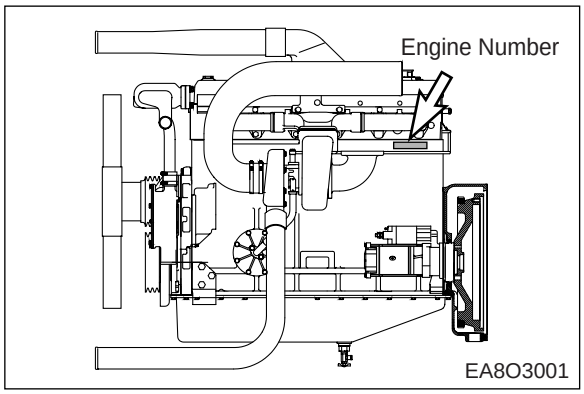

- **Engine serial No. (example 1 : DE12T)**

EBHGA900001

Serial No.
Production Year(19x9)
Engine Model Suffix

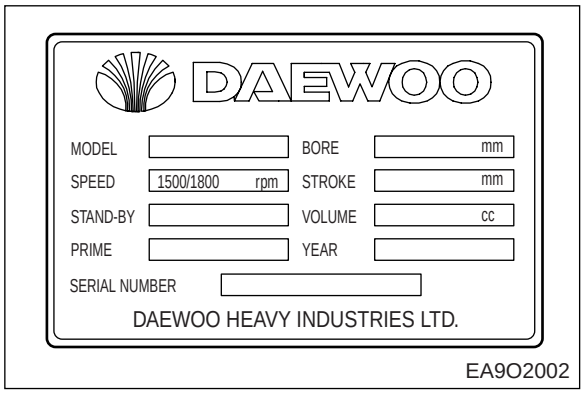

< Name Plate : General >

- **Engine serial No. (example 2 : P126TI)**

EDIGA900001

Serial No.
Production Year(1999)
Engine Model Suffix

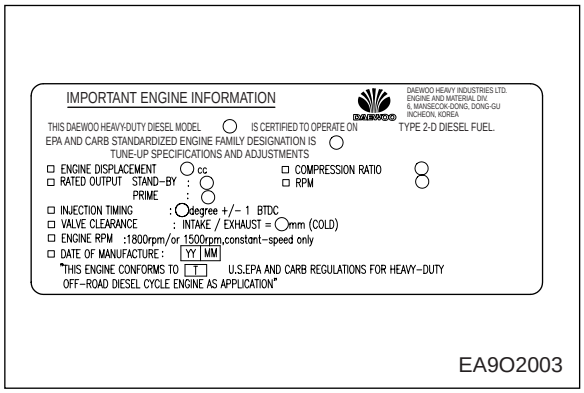

< Name Plate : EPA & CARB >

3.2. Engine type

The Engines DE12T/ P126TI are in-line vertical water-cooled 6-cylinder four-stroke diesel engines with direct injection. DE12T is turbo-charged engine, and P126TI model is turbo-charged and inter-cooled engine.

3.2.1. Cylinder block

The cylinder block is a single piece of alloy cast iron. To increase its stiffness, it is extended to a level below the crankshaft center line. The engine has replaceable dry cylinder liners and individual cylinder heads with struck-in valve seat rings and replaceable valve guides,

3.2.2. Piston con-rod / crankshaft

The forged crankshaft is a ingrate type (Counterweight is integrated with crank shaft body). Radial oil seal on crankshaft and flywheel are provided to seal the flywheel housing inside penetrations.
The con-rods (connecting rods) are die-forged, diagonally split and can be removed through the top of the cylinders together with the pistons. Crankshaft and connecting rods run in steel-backed lead bronze ready-to fit type bearings.

https://truckmanualshub.com/

3.3. Engine timing

Camshaft, oil pump and injection pump are driven by a gear train arranged at the front end.

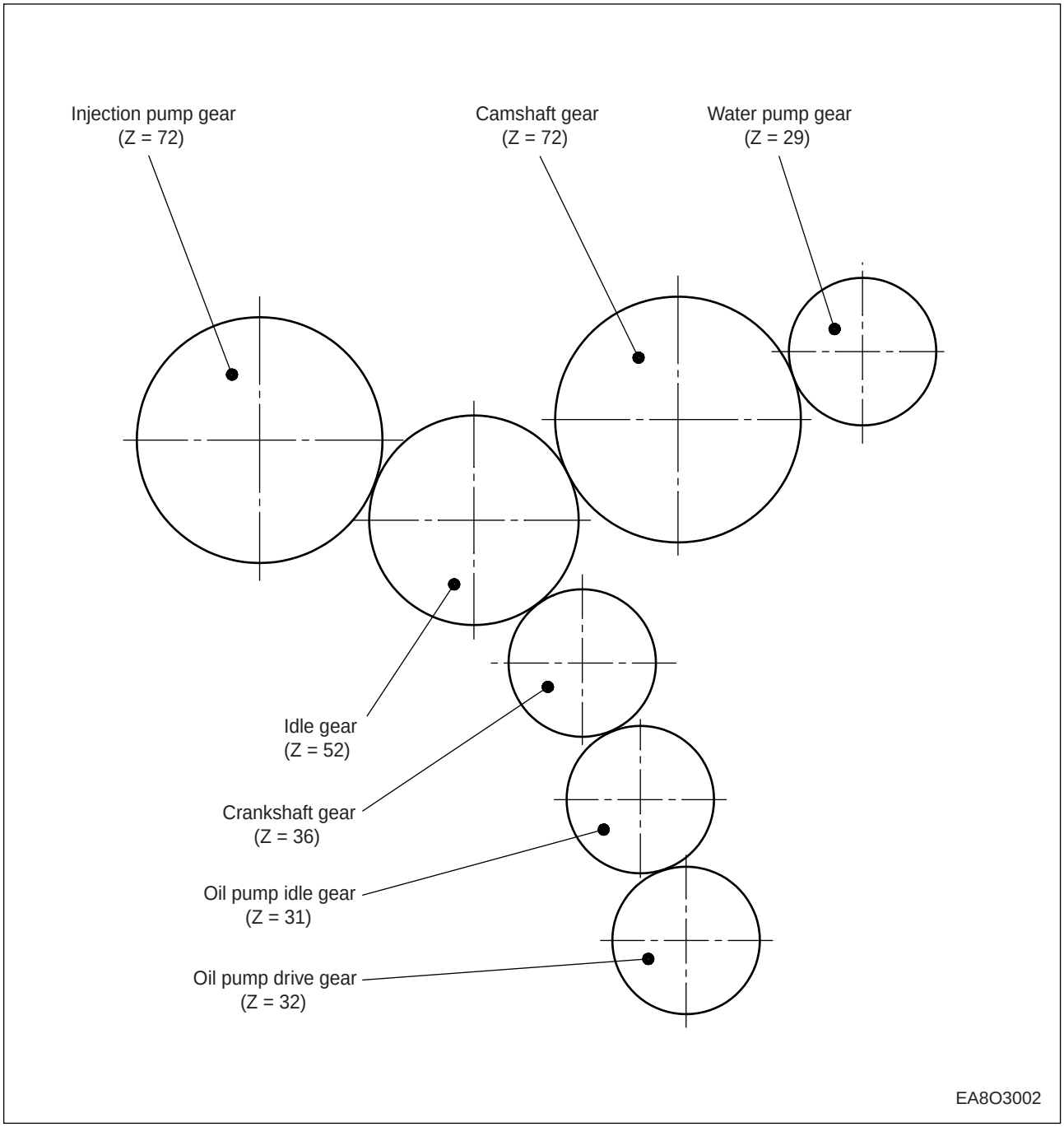

3.4. Valves

The overhead valves are actuated via chilled cast iron tappets, push rods and rocker arms from the camshaft.

3.5. Lubrication system

The engine is equipped with force-feed lubrication.
The pressure is produced by a gear pump whose drive gear is in direct mesh with the crankshaft gear at the front end of cylinder block.
The oil pump draws the oil from the oil sump and delivers it through the oil cooler and oil filter to the main distributor gallery and from there to the main bearings, big-end bearings and camshaft bearings as well as to the small-end bearings and the rocker arms.
The injection pump and the turbocharger are also connected to the engine lubricating system.
The cylinder walls and timing gears are splash-lubricated.
Each cylinder has an oil jet provided for cooling the underside of the pistons.
The lube oil is cleaned in a full-flow oil filter.

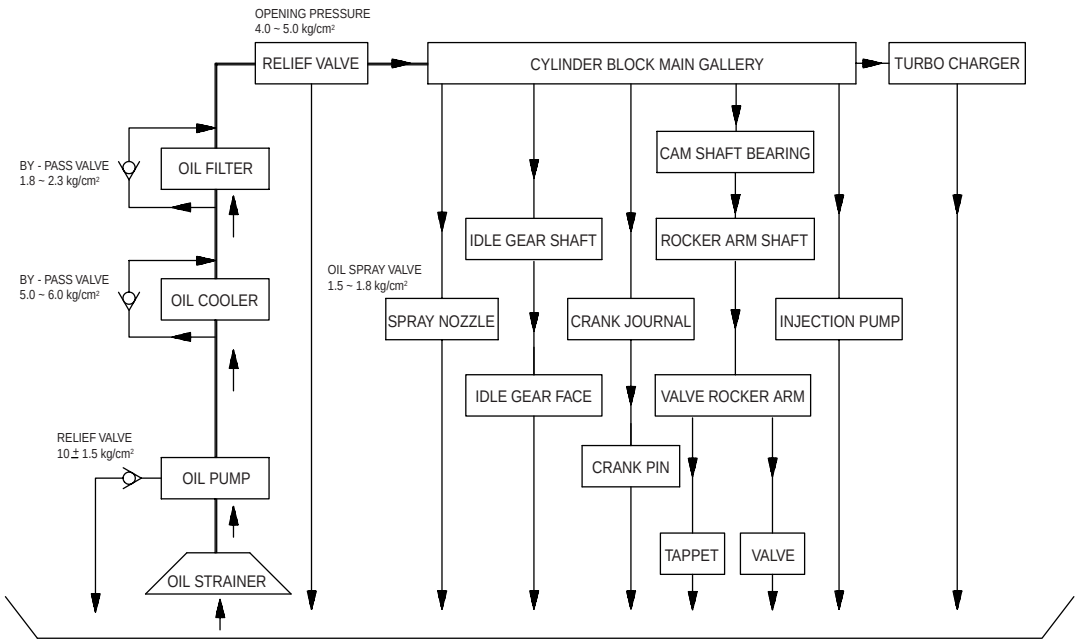

EA8O3003

3.5.1. Recommend of lubricating oil

Initial factory fill is high quality break-in oil for API Service CD. During the break-in period (50 hours), frequently check the oil level. Somewhat higher oil consumption is normal until piston rings are seated. The oil level should be maintained in the safe range between the Min. and Max. marks on the dipstick. The safe range between the marks represents approximately 3 liters. To obtain the best engine performance and engine life, grade of engine oil is recommended. Engine oils are specified by API Service, letter designations and SAE viscosity numbers. If the specified motor oil is not available, use a reputable brand of engine oil labeled for API Service CD and SAE viscosity 30 or 15w40. Refer to oil identification symbol on the container.
Engine oil should be changed at the specified intervals. (800hr)

https://truckmanualshub.com/

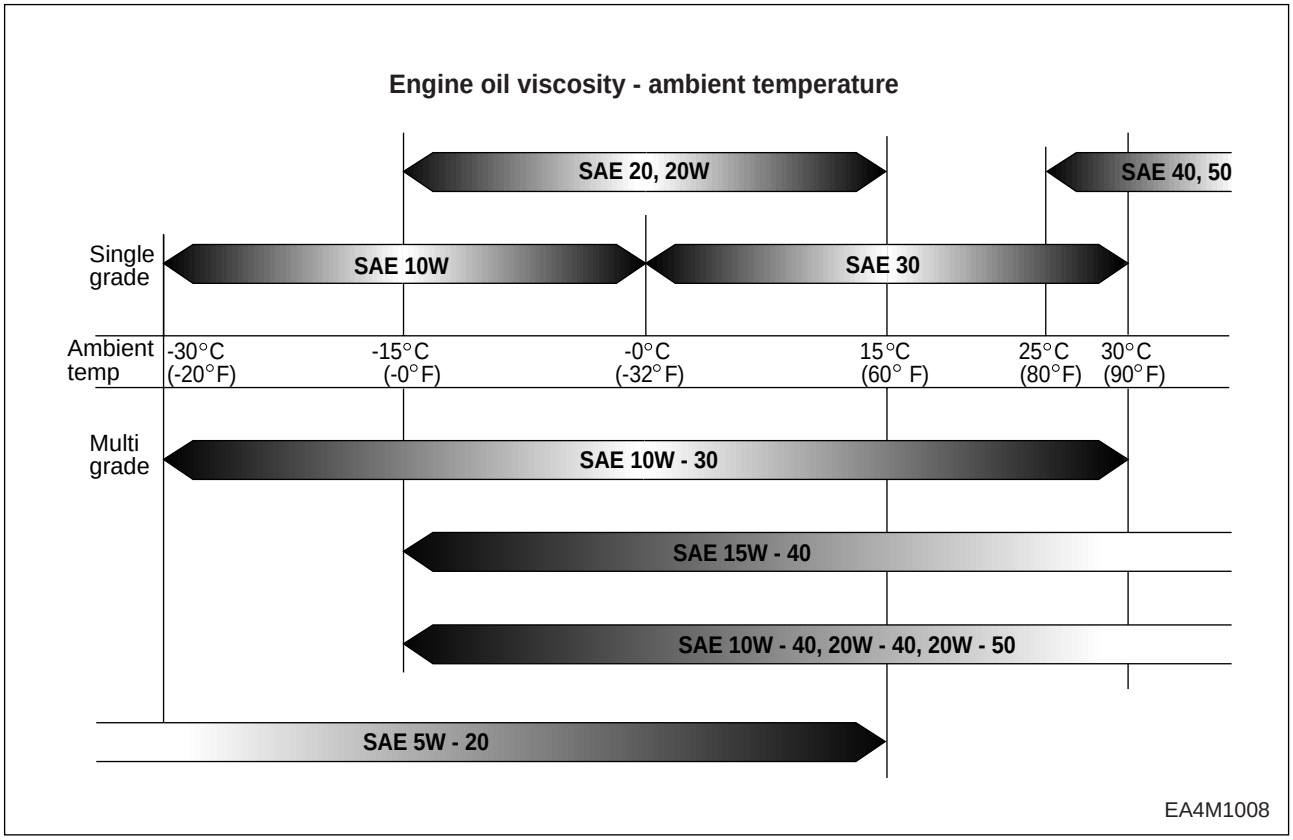

3.5.2. Oil cooler

An oil cooler is provided between the oil filter and the cylinder block. This cooler is a flat tube type with turbulence inserts and operated by the coolant.

3.5.3. Oil filter

Check for oil pressure and oil leaks, and repair or replace the oil filter if necessary. Change the oil filter cartridge simultaneously at every replacement of engine oil.

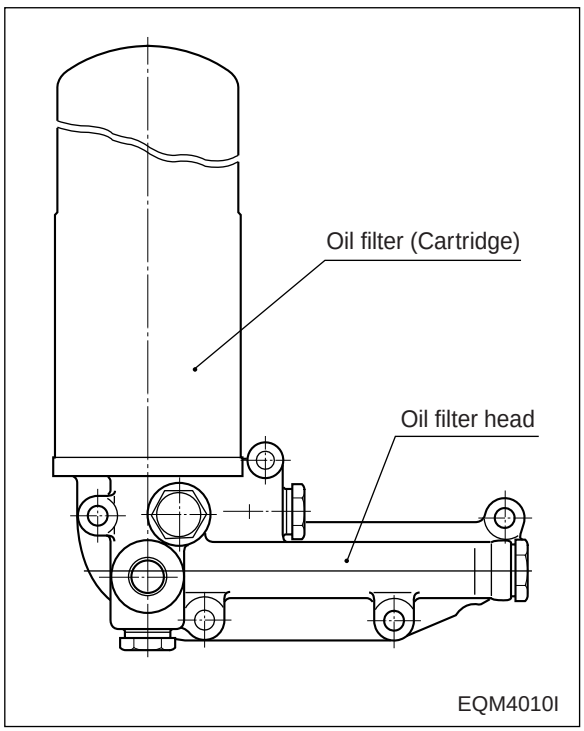

https://truckmanualshub.com/

3.6. Air cleaner

In case that elements are deformed, damaged or if the air cleaner has a crack, replace it.
By the definite interval, the elements must be cleaned and replaced.

- Cleaning of air cleaner element: Every 200 hours.
- Changing of air cleaner element: Every 600 hours.

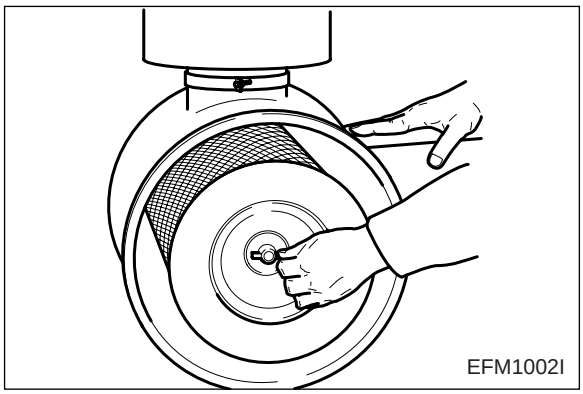

3.7. Intercooler

The intercooler is air to air type and has a large cooling fan capacity. The intercooler life and performance depends on the intake air condition greatly. Fouled air pollutes and clogs the air fins of intercooler. As a result of this, the engine output is decreased and engine malfunction is occurred. So you always check whether the intake air systems like air filter element are worn or polluted.

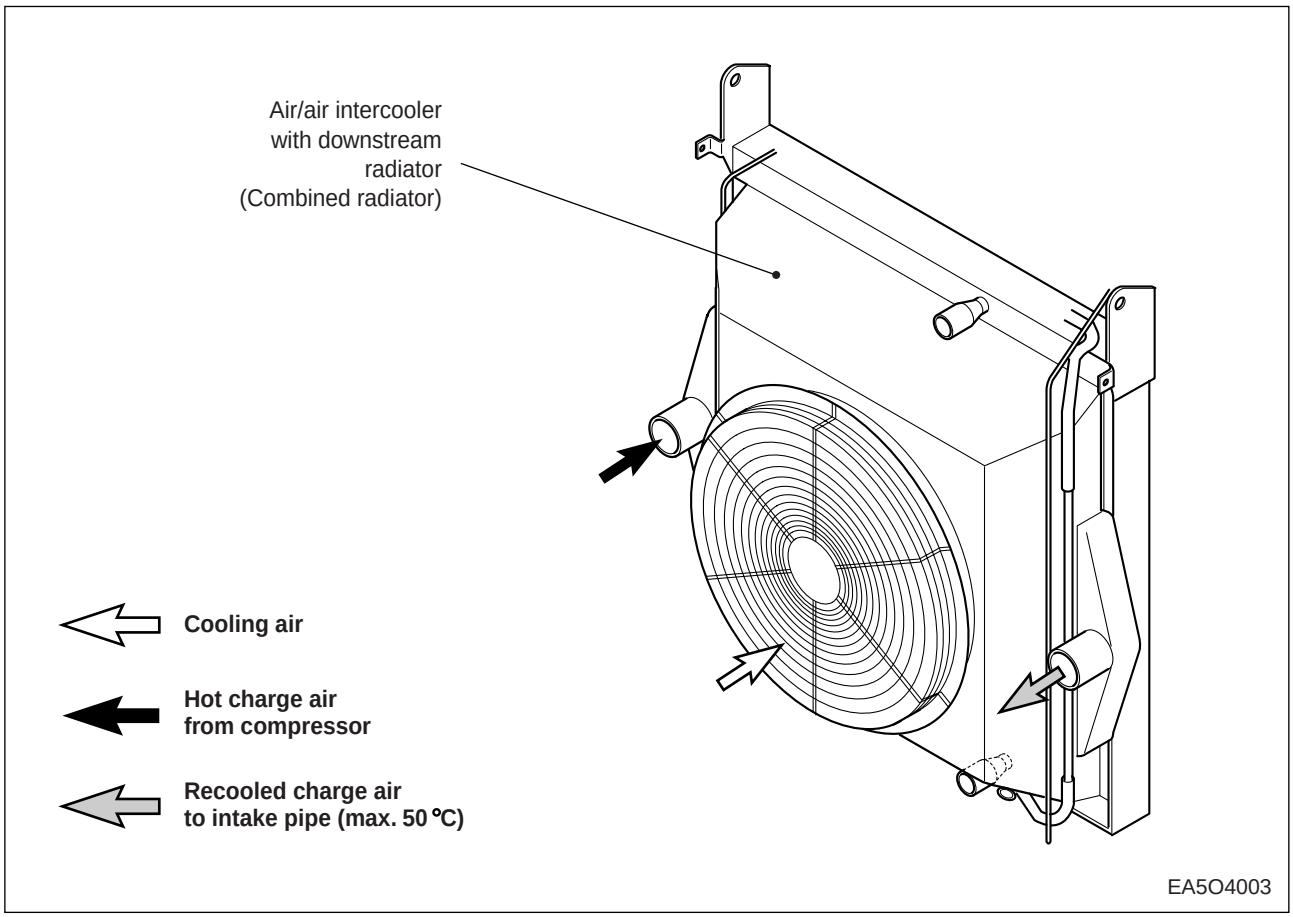

- Cleaning of intercooler fins: Every 600 hours.

https://truckmanualshub.com/

3.8. Fuel system

The fuel is delivered by the fuel feed pump via the fuel filter to the injection pump and from there to the injection nozzles.

The fuel is sprayed into the cylinders through nozzles fitted in screw-fit injection nozzle holders in the cylinder heads.

Excessively delivered fuel and leak fuel from the nozzle flow through the return pipe back to the tank.

A strainer is arranged ahead of the fuel feed pump.

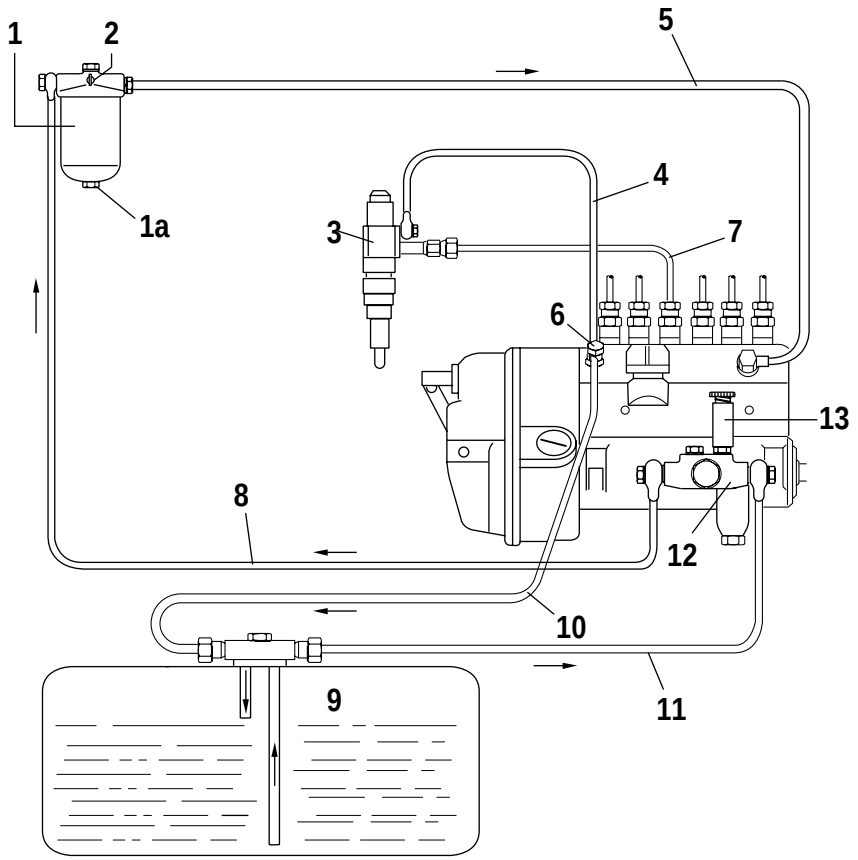

1. Fuel filter
1a. Full water drain plug
2. Air bleeding screw (for fuel filter)
3. Injection nozzle
4. Overflow tube
5. Fuel pipe (filter → injection pump)
6. Overflow valve
7. Delivery pipe
8. Fuel pipe (manual pump → filter)
9. Fuel tank
10. Fuel return pipe
11. Suction pipe
12. Feed pump
13. Injection pump

3.8.1. Injection pump

The in-line injection pump is driven via gears from the crankshaft. It is connected to the force feed lubricating system of the engine and consequently maintenance-free. The governor flange-mounted on the pump casing is a variable range governor designed to keep the speed set by the speed control unit constant under conditions of varying load.

Governor system for fuel injection pump consists of “Integral Actuator” and “ Speed Control Unit”.

1) Integral Actuator

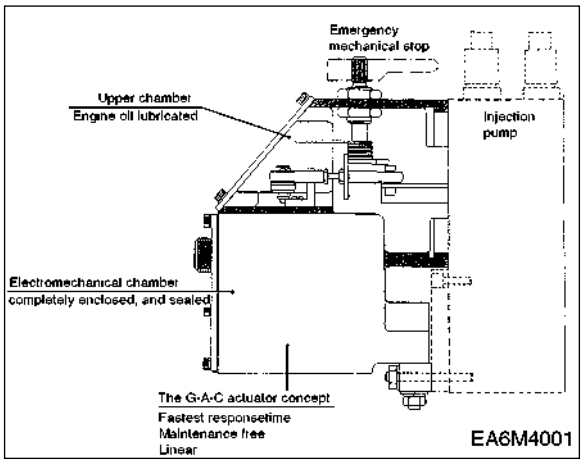

2) Speed control unit for governor system

The ESD5550 Series speed control unit is an all electronic device designed to control engine speed with fast and precise response to transient load changes. This closed loop control, when connected to a proportional electric actuator and supplied with a magnetic speed sensor signal, will control a wide variety of engines in an isochronous or droop mode. It is designed for high reliability and built ruggedly to withstand the engine environment.

Simplicity of installation and adjustment was foremost in the design. Non-interacting performance controls allow near optimum response to be easily obtained.

The primary features of the ESD5550 Series speed control unit are the engine STARTING FUEL and SPEED RAMPING adjustments. The use of these features will minimize engine exhaust smoke experienced prior to attaining engine operating speed.

Other features include adjustable droop and idle operation, inputs for accessories used in multi-engine or special applications, protection against reverse battery voltage, transient voltages, accidental short circuit of the actuator and fail safe design in the event of loss of speed sensor signal or battery supply.

Engine model	P126TI
GAC governor model	ACE 175A
Speed control unit model	ESD5550

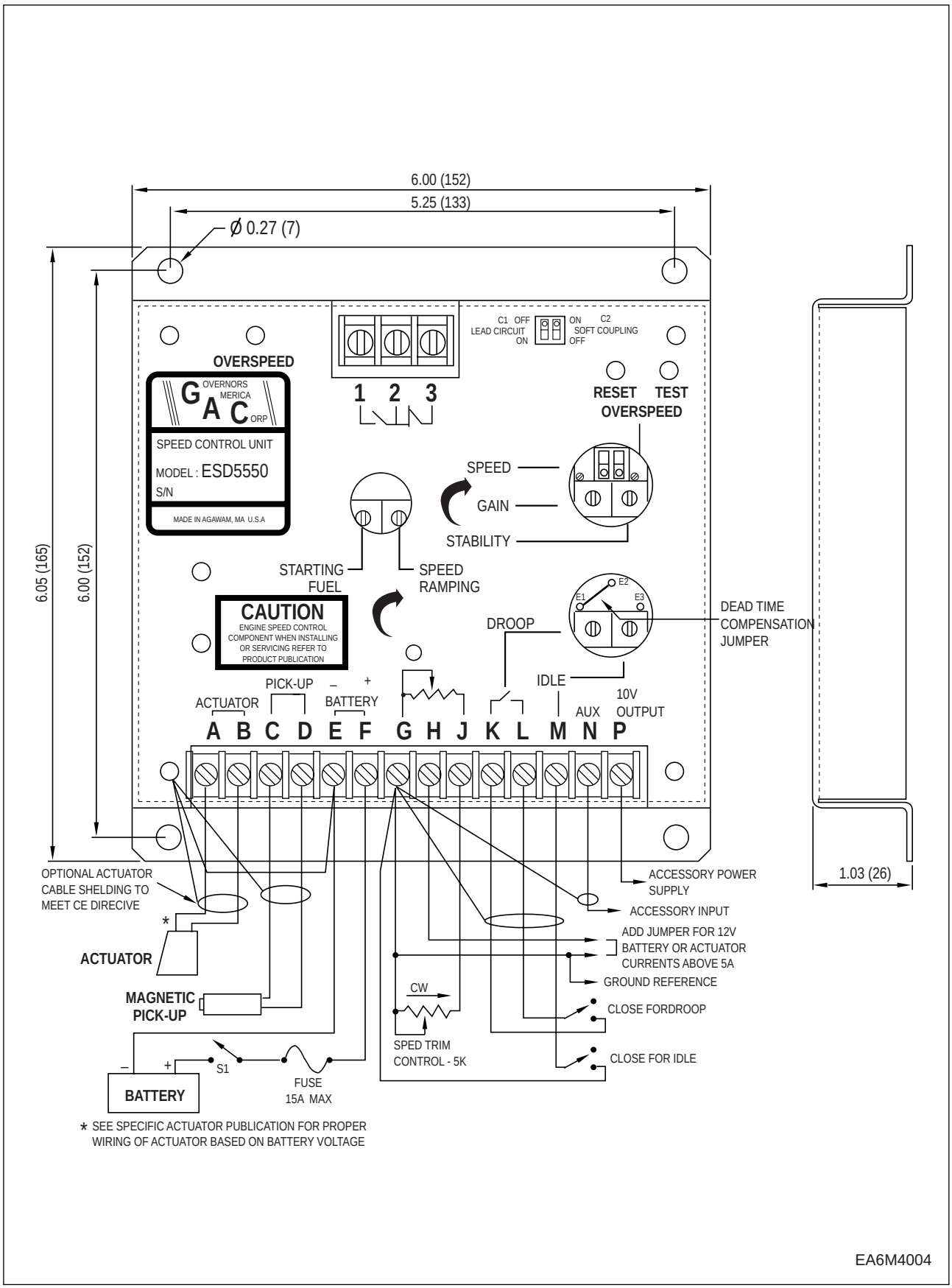
6.00 (152)
5.25 (133)
Ø 0.27 (7)
6.05 (165)
6.00 (152)
1.03 (26)
C1 OFF
LEAD CIRCUIT
ON
ON
C2
SOFT COUPLING
OFF
OVERSPEED
GOVERNORS AMERICA CORP
SPEED CONTROL UNIT
MODEL : ESD5550
S/N
MADE IN AGAWAM, MA U.S.A
1 2 3
RESET
TEST
OVERSPEED
SPEED
GAIN
STABILITY
STARTING FUEL
SPEED RAMPING
CAUTION
ENGINE SPEED CONTROL COMPONENT WHEN INSTALLING OR SERVICING REFER TO PRODUCT PUBLICATION
E1
E2
E3
DEAD TIME COMPENSATION JUMPER
DROOP
IDLE
ACTUATOR
PICK-UP
BATTERY
AUX
10V OUTPUT
A B C D E F G H J K L M N P
OPTIONAL ACTUATOR CABLE SHELDING TO MEET CE DIRECIVE
ACTUATOR
MAGNETIC PICK-UP
BATTERY
S1
FUSE 15A MAX
CW
SPED TRIM CONTROL - 5K
ACCESSORY POWER SUPPLY
ACCESSORY INPUT
ADD JUMPER FOR 12V BATTERY OR ACTUATOR CURRENTS ABOVE 5A
GROUND REFERENCE
CLOSE FORDROOP
CLOSE FOR IDLE
* SEE SPECIFIC ACTUATOR PUBLICATION FOR PROPER WIRING OF ACTUATOR BASED ON BATTERY VOLTAGE
EA6M4004

https://truckmanualshub.com/

3.8.2. Fuel filter

This fuel filter has two functions not only oil filtering but also water separating.
Before entering the suction chamber of the injection pump, the fuel is cleaned in a strainer of fuel feed pump and a fuel filter.
Drain water in cartridge with loosening the cock under filter manually (6) from time to time.
The fuel filter should be replaced at every 1,200 hours.

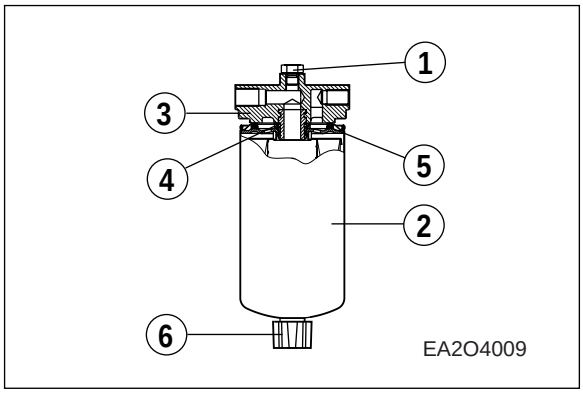

3.8.3. Fuel requirements

DAEWOO marine diesel engines was designed to use Number 2-D diesel fuel or equivalent that meets specification DIN 51601-DK. For maximum fuel economy, Number 2-D fuel whenever possible. When temperatures are below -7˚C(20˚F), use Number 1-D fuel. If Number 1-D fuel is not available, the mixture of one kerosene to two gallons of Number 2-D fuel can be used. Once kerosene has been added, the engine should be run for several minutes to mix the fuel.

3.8.4. How to select fuel oil

Fuel quality is an important factor in obtaining satisfactory engine performance, long engine life, and acceptable exhaust emission levels. DAEWOO engines are designed to operate on most diesel fuels marketed today. In general, fuels meeting the properties of ASTM Designation D975 (grades 1-D and 2-D) have provided satisfactory performance.
The ASTM 975 specification, however, does not in itself adequately define the fuel characteristics needed for assurance of fuel quality.
The properties listed in the fuel oil selection chart below have provided optimum engine performance. Grade 2-D fuel is normally available for generator service. Grade 1-D fuel should not be used in pleasure craft engines, except in an emergency.

Fuel oil selection chart

General Fuel Classification	ASTM Test	No. 1 ASTM 1-D	No. 2 ASTM 2-D	DIN 51601
Gravity,˚API #)	D 287	40 ~ 44	33 ~ 37	0.815 ~ 0.855
Flash Point Min. ˚F (˚C)	D 93	100 (38)	125 (52)	131 (55)
Viscosity, Kinematic CST 100 ˚F (40 ˚C)	D 445	1.3 ~ 2.4	1.9 ~ 4.1	1.8 ~ 10
Cloud Point ˚F #)	D 2500	See Note 1)	See Note 1)	See Note 1)
Sulfur Content wt%, Max.	D 129	0.5	0.5	0.15
Carbon Residue on 10%, wt%, Max.	D 524	0.15	0.35	0.1
Accelerated Stability Total Insolubles mg/100 ml, Max. #)	D 2274	1.5	1.5	
Ash, wt%, Max.	D 482	0.01	0.01	
Cetane Number, Min. +)	D 613	45	45	> 45
Distillation Temperature, ˚F(˚C)	D 86			
IMP, Typican #)		350(177)	375(191)	
10% Typical #)		385(196)	430(221)	
50% Typical #)		45(218)	510(256)	680(360)
90% +)		500 (260) Max.	625(329) Max.	
End Point #)		550(288) Max.	675(357) Max.	
Water & Sediment %, Max.	D 1796	0.05	0.05	0.05

#) Not specified In ASTM D 975

+) Differs from ASTM D 975

Note : *1.The cloud point should be 6˚C(10˚F) below the lowest expected fuel temperature to prevent clogging of fuel fitters by crystals.*

https://truckmanualshub.com/

3.9. Cooling system

The engine has a liquid-cooling system. The fresh water pump is a maintenance-free by gear from the crankshaft.
Depending on the agreed extent of delivery and the design of the engine, the coolant circuit can be equipped with temperature monitors which, in the event of loss of coolant, shut the engine down.

- Check the coolant level of the expansion tank by removing the expansion tank filler cap, and add coolant if necessary.
- When injecting antifreeze solution, first drain out the old coolant from the cylinder block and radiator, and then clean them with cleaning solution.
- Be sure to mix soft water with antifreeze solution.

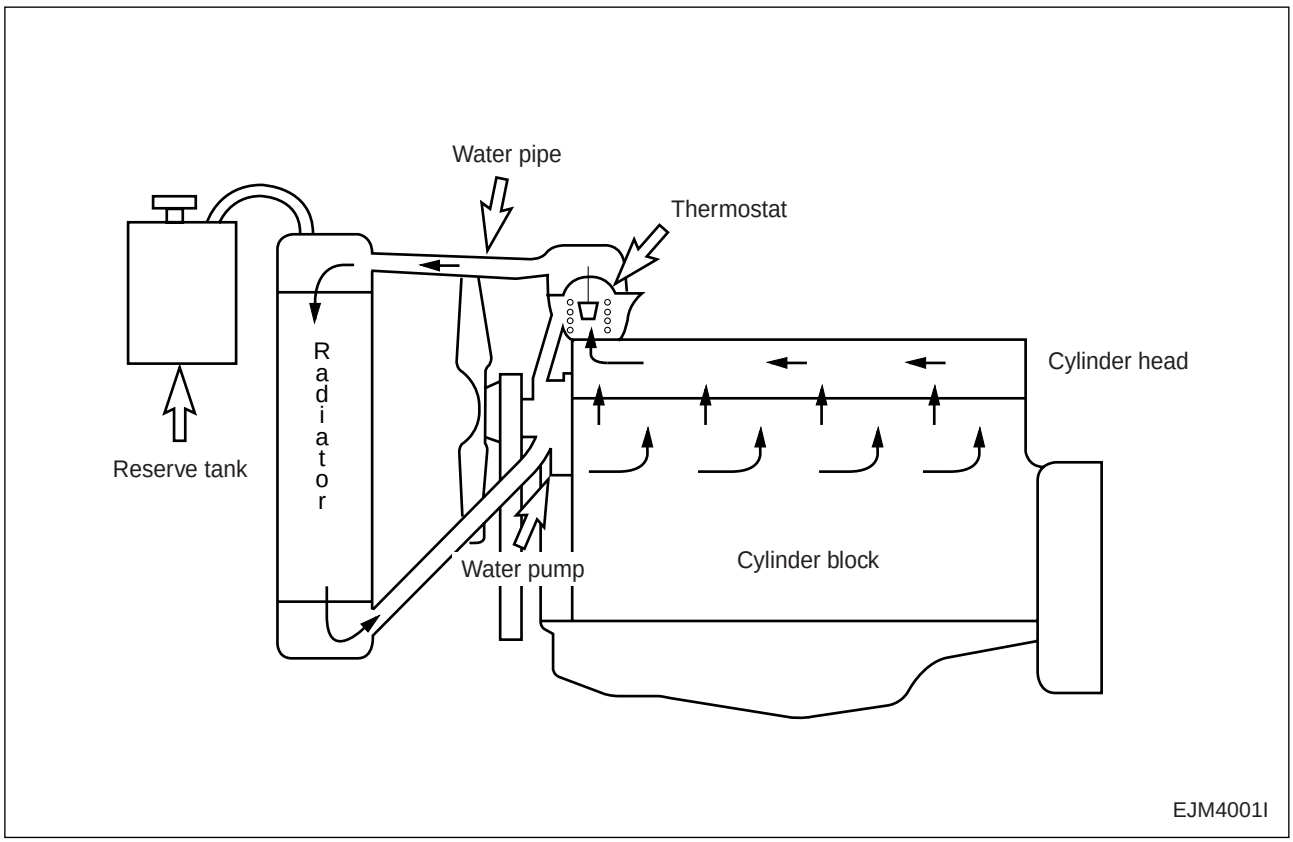

3.9.1. Coolant pressure cap

Check the pressure valve opening pressure using a expansion tank cap tester. Replace the filler cap assembly if the measured valve does not reach the specified limit. (pressure valve opening pressure : 0.9 kg/cm²)

Note : *Because it is dangerous to open the pressure cap quickly when coolant is hot, after lowering the inside pressure of the tank by slow-opening at first open it fully.*

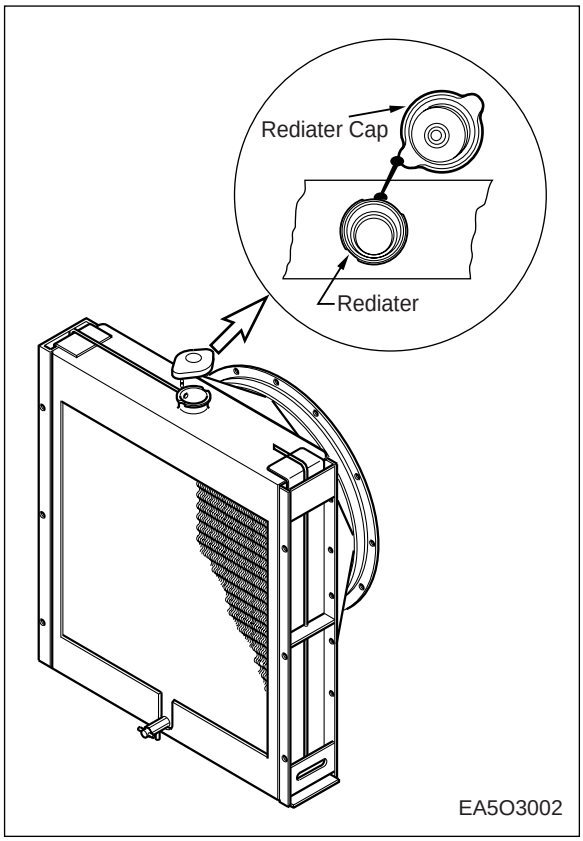

3.9.2. Anti-freeze

The anti-freeze, 50% of the whole coolant,
is always to be used to prevent the cooling system from the corrosion. And in winter the amount of anti-freeze shown in the following table should be used in accordance with the ambient temperature.
As the individual freezing points corresponding to the proportions of antifreeze in the table are subject to change slightly according to the kind of antifreeze, you must follow the specifications provided by the antifreeze manufacturer.

Ambient Temperature (˚C)	Cooling water (%)	Anti-freeze (%)
Over -10	85	15
-10	80	20
-15	73	27
-20	67	33
-25	60	40
-30	56	44
-40	50	50

As the ratio of antifreeze in the mixture decrease each time new coolant is added to make up for the loss coolant resulting from engine operation, Check the mix ratio with every replenishment of coolant, and top up as necessary.

3.10. V-belt tension check and adjust

By the finger-pressure the belt is pressed by 10mm ~ 15mm between the fan pulley and the alternator pulley in normal condition. For the adjustment of the tension, loosen the adjusting bolts which support the alternator, adjust the tension and tighten the bolts again.

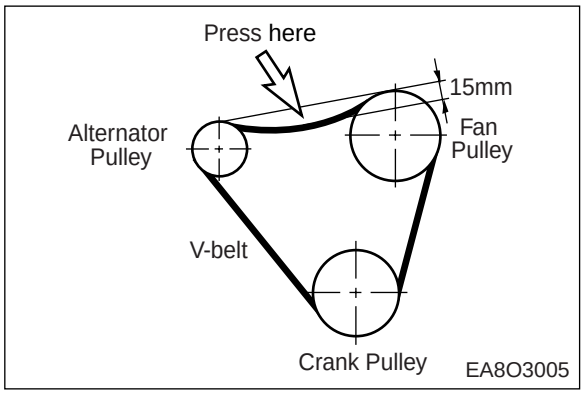

3.11. Turbocharger

The exhaust gases of the engine are passed through the turbine rotor of the turbocharger. Air compressor impeller mounted on the same shaft draws in fresh air and delivers it at a higher pressure to the cylinders.

The turbocharger is naturally air-cooled. Lubrication of the main bearing is by oil under pressure from the engine lubricating system.

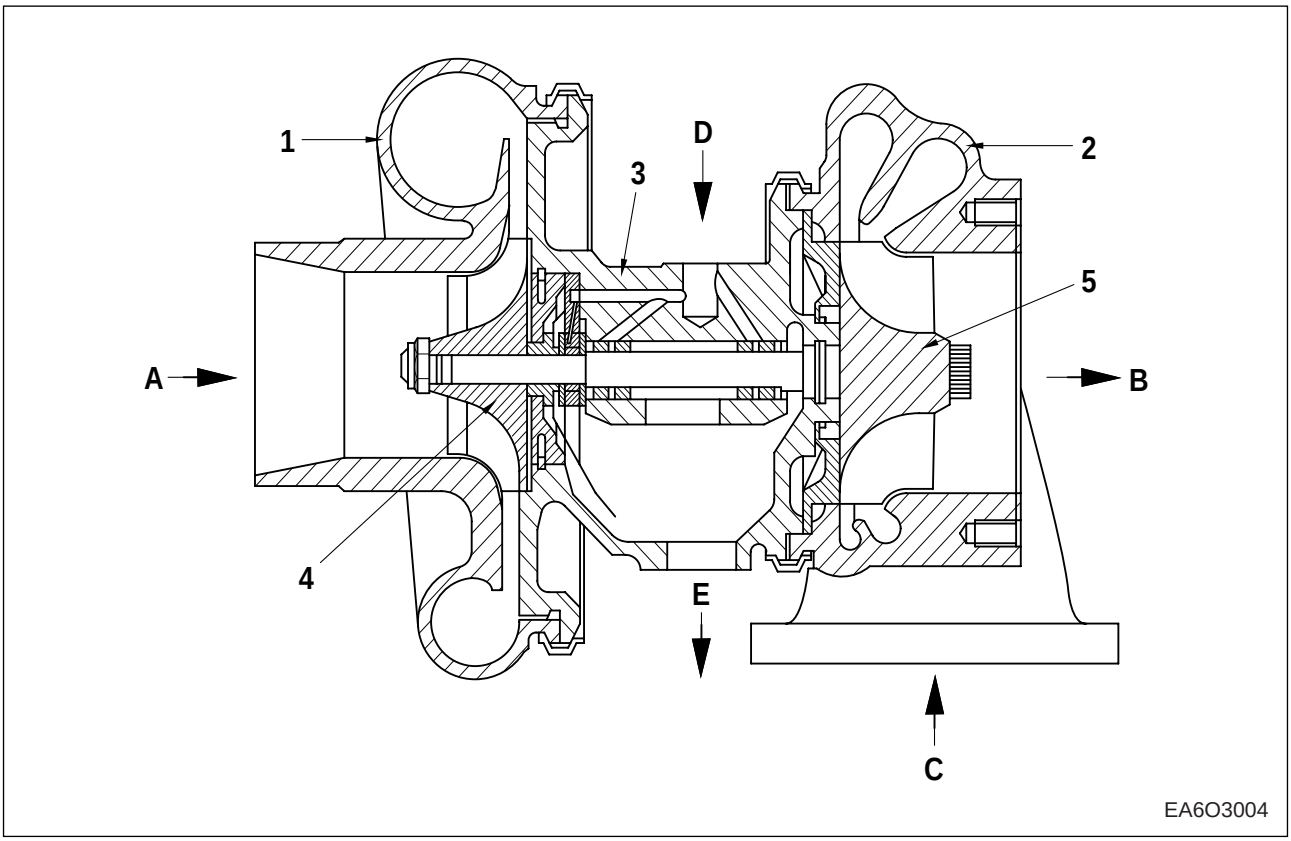

1. Compressor casing
2. Turbine casing
3. Compressor wheel
4. Impeller
5. Turbine

A. Air inlet
B. Gas outlet
C. Gas inlet
D. Oil supply
E. Oil return

https://truckmanualshub.com/

3.12. Electrical equipment

3.12.1. Alternator

The alternator is fitted with integral silicon rectifiers. A transistorized regulator mounted on the alternator body interior limits the alternator voltage. The alternator should not be operated except with the regulator and battery connected in circuit to avoid damage to the rectifier and regulator.

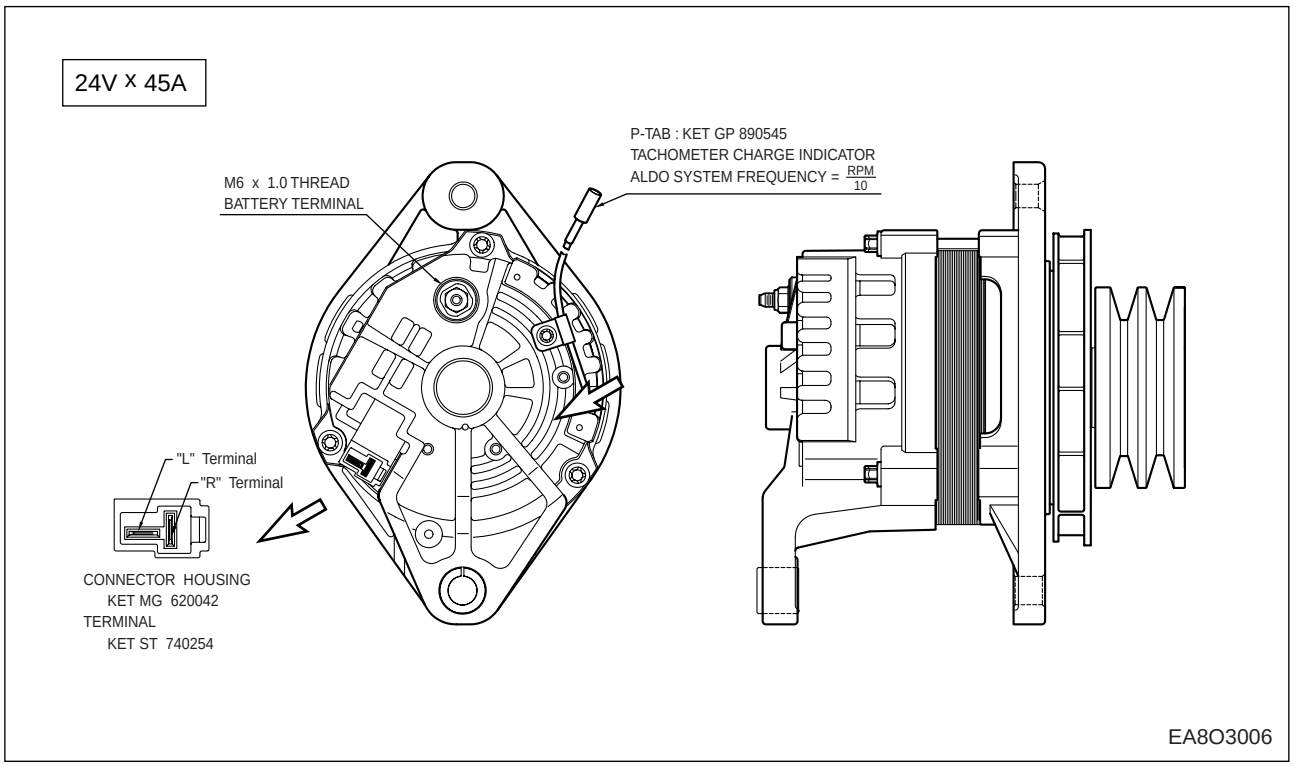

The alternator is maintenance-free, nevertheless, it must be protected against dust and, above all, against moisture and water.

Operate the alternator according to the instructions given in the chapter.

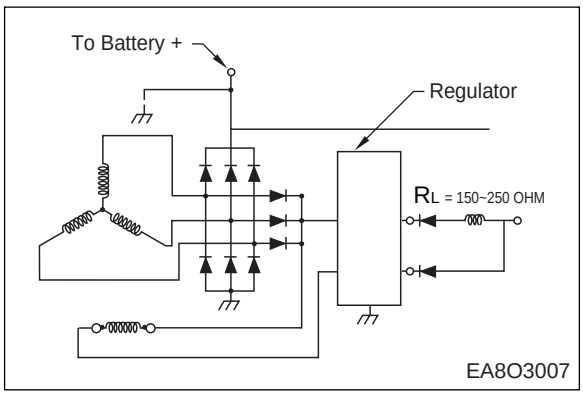

3.12.2. Starter motor

The sliding-gear starter motor is flanged to the rear of the flywheel housing on the left-hand side. As parts of every engine overhaul, the starter pinion and ring gear should be cleaned with a brush dipped in fuel and then a coat of grease should be applied again.

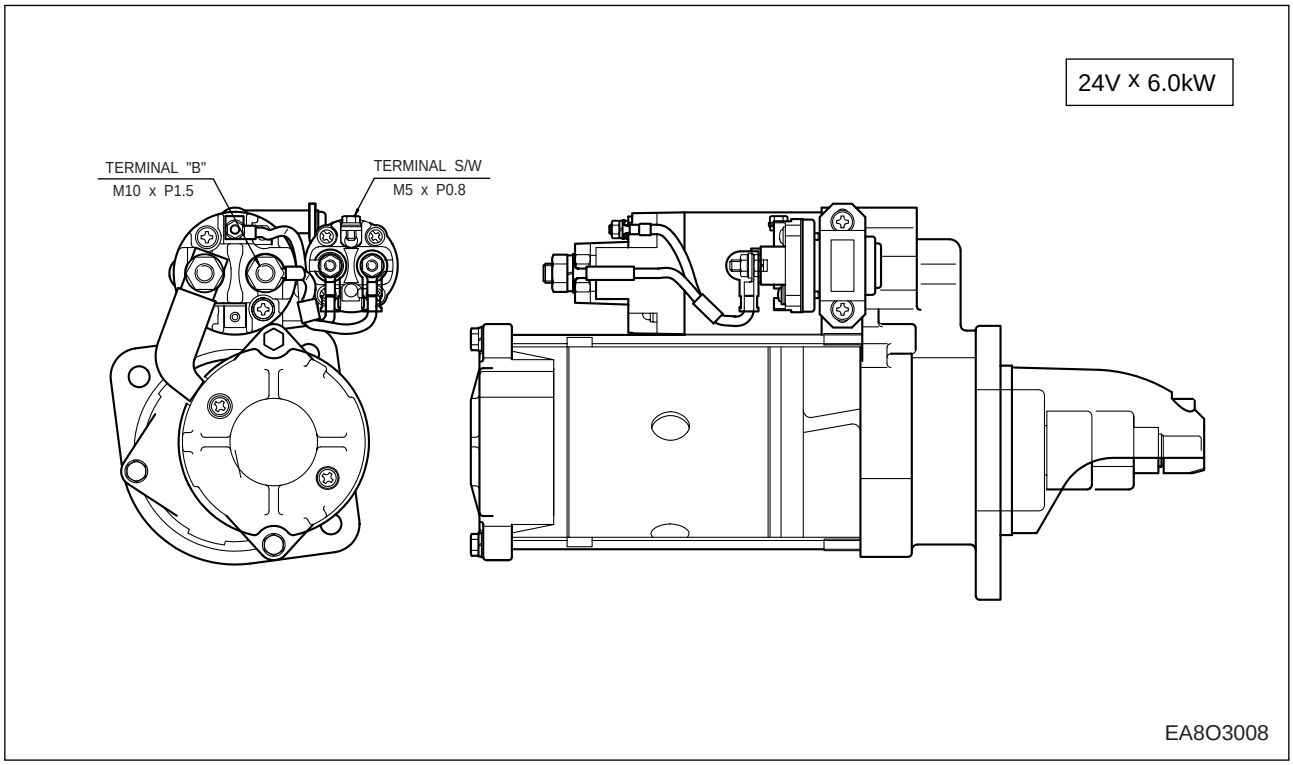

Always protect starter motor against moisture.

Warning : *Always disconnect the battery earth cable before starting work on the electrical system. Connect up the earth cable last, as there is otherwise a risk of short-circuits.*

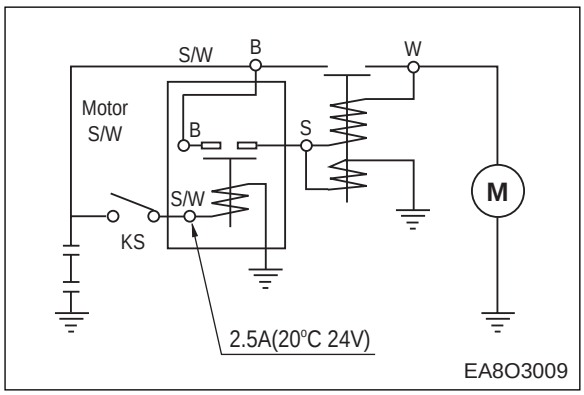

https://truckmanualshub.com/

4. Commissioning and operation

4.1. Preparation

At the time of initial commissioning of a new or overhauled engine make sure to have observed the “Technical Information for the installation DAEWOO generator engines”.

- Oil filler neck on cylinder head cover
  Before daily starting of the engine, check the fuel, coolant and oil level, replenish if necessary.
  The notches in the dipstick indicate the highest and lowest permissible oil levels
  The oil required in the sump is specified in the “Engine Specification”.

Note : *The oil required to fill the oil fillers and pipes depends upon the engine and use and must be determined individually at the time of initial commissioning. (Make the Max and Min. marks of the determined quantity on the oil level gauge.)*

- Cleanliness
  Ensure outmost cleanliness when handling fuels, lubricants and coolants.

4.2. Breaking-in

4.2.1. Operation of a new engine (Break-In)

Because the sliding surfaces of a new engine are not lapped enough, the oil film can be destroyed easily by overload or overspeed and the engine life-time may be shortened. Therefore the following things must be obeyed by all means.

Up to the first 2,000km (150 hours)

- Engine should be run at fast idling until the temperature of the engine becomes normal operating condition.
- Overload or continuous high speed operation should be avoided.
- High speed operation with no load should be prevented.
- Abrupt start and stop of the engine should be avoided.
- Engine speed must be under 70% of its maximum speed.
- Maintenance and inspection must be accomplished thoroughly.

https://truckmanualshub.com/

4.2.2. Check points for break-in

During the break-in (the initial running of the engine) period, be particularly observant as follows:

a) Check engine oil level frequently. Maintain oil level in the safe range, between the “min.” and “max.” marks on dipstick.

Note : *If you have a problem getting a good oil level reading on dipstick, rotate dipstick 180° and re-insert for check.*

b) Watch the oil pressure warning lamp. If the lamp blinks, it may be the oil pick-up screen is not covered with oil. Check oil dipstick. Add oil to the oil pan, if required. Do not overfill. If level is correct and the status still exists, see your DEALER for possible switch or oil pump and line malfunction.

Note : *Oil pressure will rise as RPM increases, and fall as RPM decreases. In addition, cold oil will generally show higher oil pressure for any specific RPM than hot oil. Both of these conditions reflect normal engine operation.*

c) Watch the engine water temperature gauge and be sure there is proper water circulation. The water temperature gauge needle will fluctuate if water level in expansion tank is too low.
At the end of the break-in period, remove break-in oil and replace the oil filter. Fill oil pan with recommended engine oil. Refer to following table.

<Engine Oil capacity>

	Oil pan (only)
DE12T	23 liter
P126TI	23 liter

4.2.3. Operating after break-in

When starting a cold engine, always allow the engine to warm up gradually. Never run the engine at full throttle until the engine is thoroughly warmed up. Be sure to check the oil level frequently during the first 50 hours of operation, since the oil consumption will be high until the piston rings are properly seated.

4.3. Inspections after starting

During operation the oil pressure in the engine lubrication system must be monitored. If the monitoring devices register a drop in the lube oil pressure, switch off the engine immediately. And the charge warning lamp of the alternator should go out when the engine is running.

- Do not disconnect the battery or pole terminals or the cables!
- If, during operation, the battery charge lamp suddenly lights up, stop the engine immediately and remedy the fault in the electrical system!
- Engine should be stopped if the color, the noise or the odor of exhaust gas is not normal.
- Confirm the following things through warning lamps and gauge panel.

4.3.1. Pressure of lubricating oil

The normal pressure comes up to 1 kg/cm^2 (1.0 bar) at idling and 3 ~ 5 kg/cm^2 (3.0 ~ 4.9 bar) at maximum speed. If the pressure fluctuates at idling or does not reach up to the expected level at high speed, shut down the engine immediately and check the oil level and the oil line leakage.

4.3.2. Temperature of cooling water

The cooling water temperature should be 78 ~ 85˚C in normal operating conditions. Abnormally high cooling water temperature could cause the overheating of engine and the sticking of cylinder components. And excessively low cooling water temperature increases the fuel consumption, accelerates the wears of cylinder liners and shortens the engine life-time.

4.4. Operation in winter time

Pay special attention to the freezing of cooling water and the viscosity of lubricating oil.

4.4.1. Prevention against the freeze of cooling water

When not using anti-freeze, completely discharge the whole cooling water after engine running. The freeze of cooling water causes the fatal damages of the engine. Because the anti-freeze is used to prevent cooling water from freeze, consult “The amount of anti-freeze”.

4.4.2. Prevention against excessive cooling

Drop of thermal efficiency caused by excessive cooling increases fuel consumption, therefore prevent the engine from excessive cooling. If the temperature of coolant does not reach to normal condition (78 ~ 85˚C) after continuous operation, examine the thermostat or the other cooling lines.

4.4.3. Lubricating oil

As cold weather leads to the rise of oil viscosity, engine speed becomes unstable after starting. Therefore the lubricating oil for winter should be used to prevent this unstability. Refer to “Lubricating System section”.

4.5. Tuning the engine

The purpose of an engine tune-up is to restore power and performance that's been lost through wear, corrosion or deterioration of one or more parts or components. In the normal operation of an engine, these changes can take place gradually at a number of points, so that it's seldom advisable to attempt an improvement in performance by correction of one or two items only. Time will be saved and more lasting results will be obtained by following a definite and thorough procedure of analysis and correction of all items affecting power and performance.

Economical, trouble-free operation can better be ensured if a complete tune-up is performed once every years, preferably in the spring. Components that affect power and performance to be checked are:

- Components affecting fuel injection ;
  Nozzle, delivery valve, fuel filter, water separator, etc.
- Components affecting Intake & exhaust ;
  Air filter, inter-cooler, turbo, silencer, etc.
- Components affecting lubrication & cooling ;
  Air & oil filter, anti- freeze, etc.

https://truckmanualshub.com/

5. Maintenance and care

5.1. Periodical inspection and maintenance

In order to insure maximum, trouble-free engine performance at all times, regular inspection, adjustment and maintenance are vital.

- Daily inspections in below figure should be checked every day.
- The maintenance should be executed thoroughly at regular internals.
  (refer to appendix “General Engine Inspection Cycle”.)

5.2. Lubrication system

5.2.1. Exchanging of lubrication oil

Engine oil and the oil filter are important factors affecting engine life. They affect ease of starting, fuel economy, combustion chamber deposits and engine wear. Refill and drain oil pan every 50 hours of operation or 6 months whichever occurs first. At the end of the break-in period (50 hours), change the oil sump oil and replace the oil filter.

5.2.2. Oil level

Check the oil level in the engine sump daily with a dipstick.

- The notches in dipstick must indicate the oil level between the max. and the min. permissible.
- The oil level should be checked with the engine horizontal and only after it has been shut down for about 5 minutes.
- Examining the viscosity and the contamination of the oil smeared at the dipstick replace the engine oil if necessary.

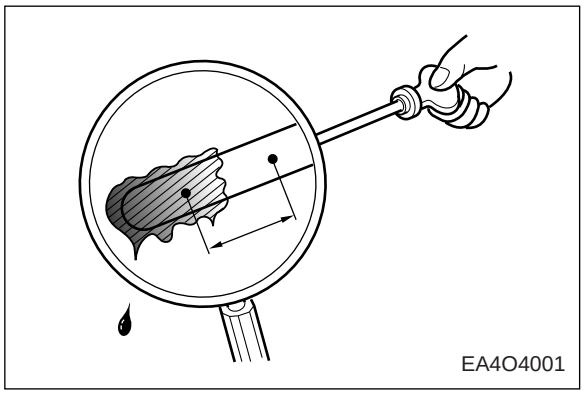

Caution : *Do not add so much engine oil that the oil level rises above the max. marking on the dipstick. Over lifting will result in damage to the engine.*

https://truckmanualshub.com/

5.2.3. Oil exchange procedure

While the oil is still hot, exchange oil as follows:

- Take out the oil dip dipstick.
- Remove the drain valve from oil pan and the drain plug form oil filter head, then drain out the engine oil into a container.

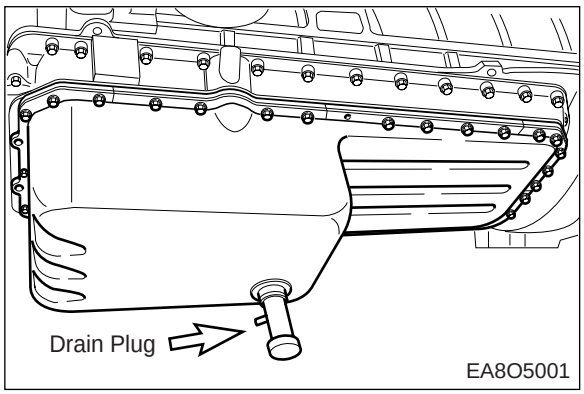

- Reassemble the drain valve with the oil pan and the drain plug with oil filter head after draining out the engine oil.

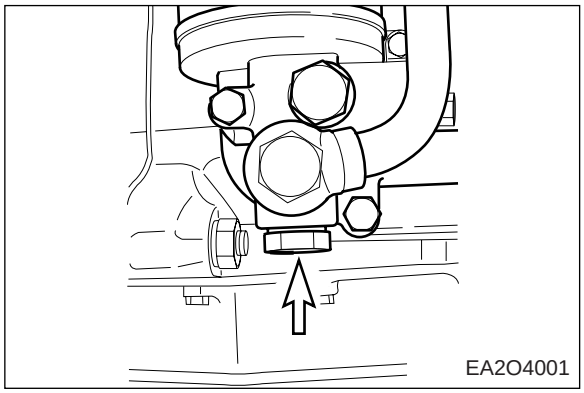

- Refill with new engine oil at the oil filler neck on the head cover and the lubricating oil in accordance with the oil capacity of the engine through oil filler. Be careful about the mixing of dust or contaminator during the supplement of oil. Then confirm that oil level gauge indicates the vicinity of its maximum level.
- For a few minutes, operate the engine at idling in order to circulate oil through lubrication system.

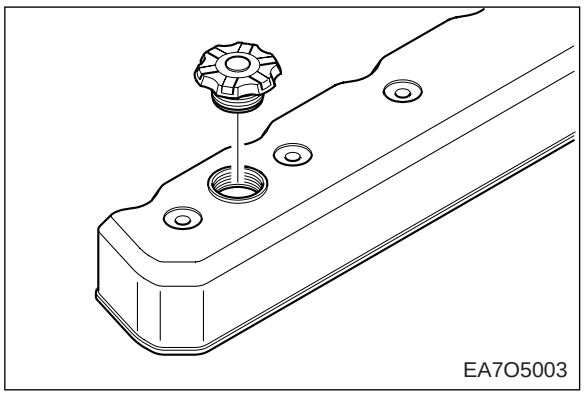

- Thereafter shut down the engine. After waiting for about 10 minutes measure the quantity of oil and refill the additional oil if necessary.

https://truckmanualshub.com/

5.2.4. Replacement of oil filter cartridge

At the same times of oil exchanges, replace the oil filter cartridge.

- Drain engine oil by loosening the drain plug on the filter head.

Caution : *Don't forget tightening the drain plug after having drained engine oil.*

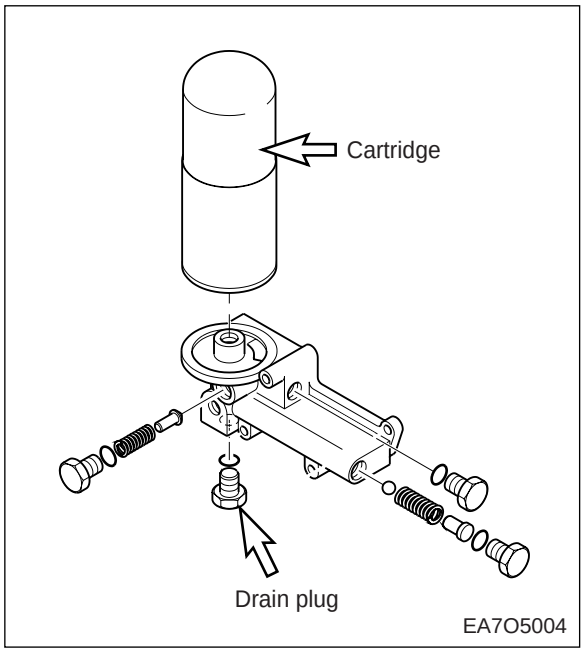

- Loosen the oil filter by turning it counter-clockwise with a filter wrench.
- With a rag wipe clean the fitting face of the filter body and the oil filter body so that new oil filter cartridge can be seated properly.
- Lightly oil the O-ring and turn the oil filter until sealing face is fitted against the O-ring. Turn 1-1/4 turns further with the filter wrench.

Note : *It is strongly advisable to use DAEWOO genuine oil filter cartridge for replacement.*

5.3. Cooling system

The coolant must be changed at intervals of 1,200 hours operation or six months whichever comes first. If the coolant is being fouled greatly, it will lead an engine overheat or coolant blow off from the expansion tank.

5.3.1. Coolant draining

a) Remove the pressure cap.
b) Open the drain valve at the radiator lower part to drain the coolant as the right figure.

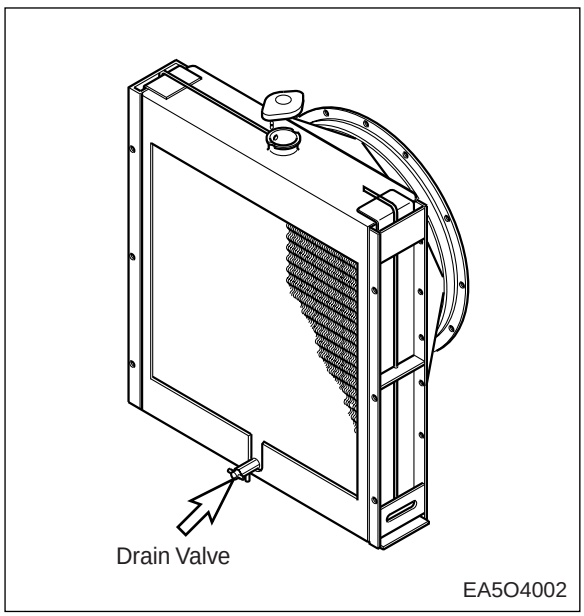

c) Loosen the coolant drain plug.
Loosen the coolant drain plug of the cylinder block.

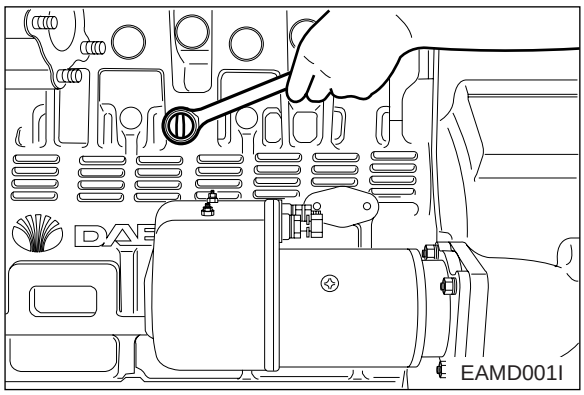

Caution : *When removing the pressure filler cap while the engine is still hot, cover the cap with a rag, then turn it slowly to release the internal steam pressure This will prevent a person from scalding with hot steam spouted out from the filler port.*

5.3.2. Cleaning of the cooling inside system circuit (by authorized specialist personnel)

When the cooling system circuit are fouled with water scales or sludge particles, the cooling efficiency will be lowered.
Investigations have shown that in many cases the poor condition of the coolant and /or the cooling system accounts for damage to the water pump mechanical seal, The poor condition of the cooling system is normally due to use of unsuitable or no anti-freezing agents and corrosion inhibitor or defect, not early enough replaced covers for filler neck and working valves.
If twice in a short time the water pump of an engine develops leases or the coolant is heavily contaminated (dull, brown, mechanically contaminated, grey or black sings of a leakage on the water pump casing) clean the cooling system prior to removing that water pump as follows.

a) Drain coolant.
b) Remove thermostats, so that the whole cooling system is immediately flown through when cleaned.
c) Fill the cooling system with a mixture of potable water and 1.5% by volume of cleaner. (Henkel P3T5175)
d) Warm up engine under load. After a temperature of 60˚C is reached, run engine for a further 15 minutes.
e) Drain cleaning fluid.
f) Repeat steps c) and d).
g) Flush cooling system.
h) Replace drain plug by drain plug with a bore of 8mm diameter.
i) Fill cooling system with hot water.
j) Run engine at idle for 30 minutes. At the same time continuously replenish the water leaking from the bore in drain plug by adding fresh water.

Periodically clean the circuit interior with a cleaner.
- Cooling system cleaning interval: Every 1,200 hours.

https://truckmanualshub.com/

5.3.3. Intercooler

The intercooler is air to air type and has a large cooling fan capacity. The intercooler life and performance depends on the intake air condition greatly. Fouled air pollutes and clogs the air fins of intercooler. As a result of this, the engine output is decreased and engine malfunction is occurred. So you always check whether the intake air systems like air filter element are worn or polluted.

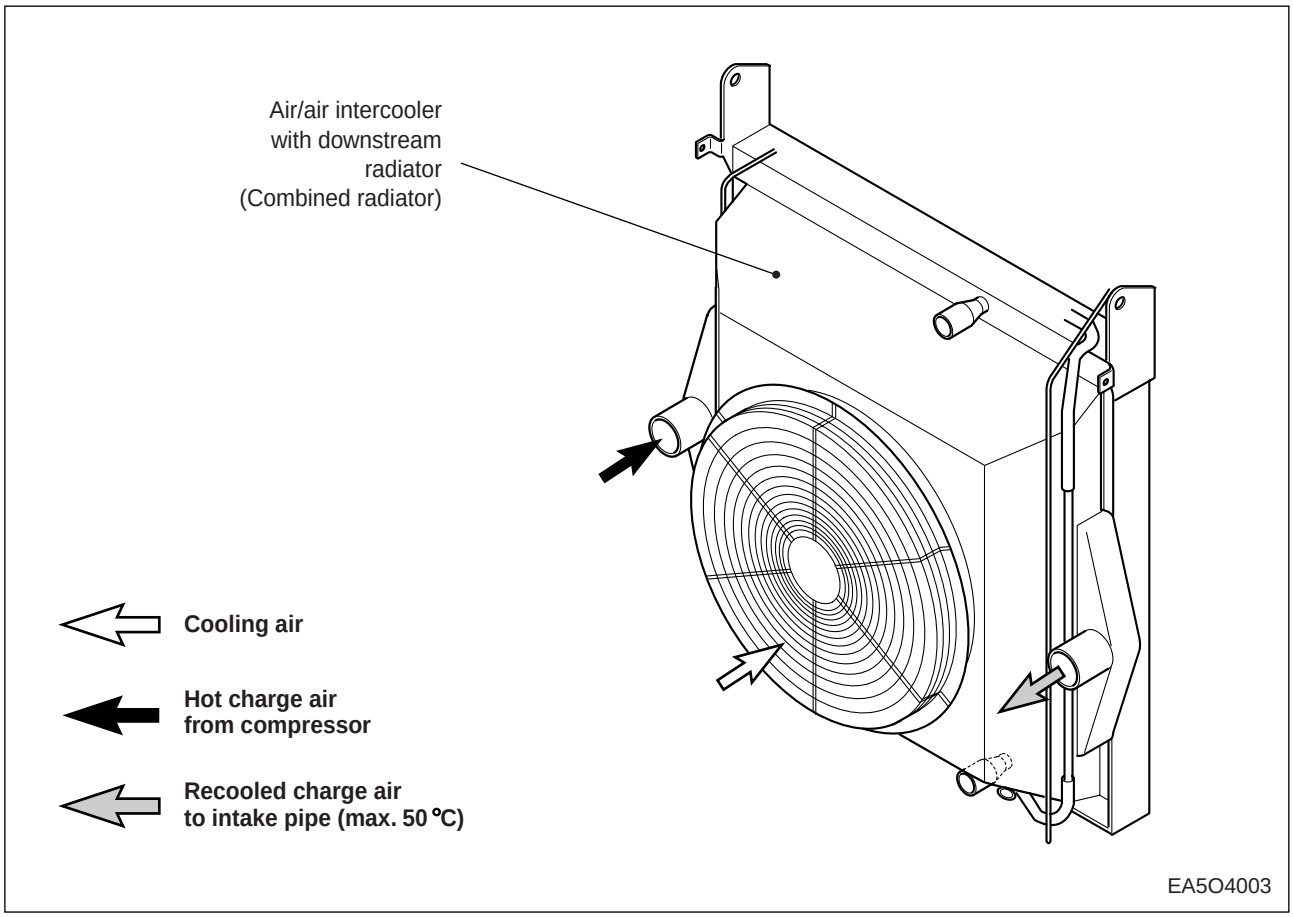

- **Cleaning**

  In order to maintain the heat transfer efficiency of the intercooler, it is necessary to clean it at regular intervals.

Cleaning of intercooler fins : Every 600 hours.

https://truckmanualshub.com/

5.4. Air intake system

1. Connection port, fouling indicator
2. Cleaner housing
3. Clamp
4. Element
5. Hexagon nut
6. Cover
7. Dust bowl

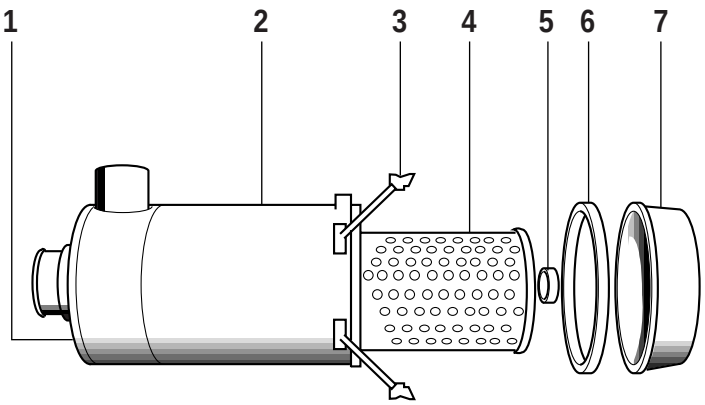

EA6O5012

5.4.1. Maintenance (only when engine is switched off)

Empty the dust bowl (7) regularly. The bowl should never be filled more than halfway with dust.

On slipping off the two clamps (3), the dust bowl can be removed. Take off the cover (6) of the dust bowl and empty.

Be careful to assemble cover and bowl correctly.

There is a recess in the cover rim and a lug on the collector which should register. Where the filter is installed horizontally, watch for “top” mark on cleaner bowl.

5.4.2. Changing filter element

Caution : *Do not allow dirt to get into the clean air end.*

On removing the hexagon nut, take out the dirty cartridge and renew or clean.

Wipe the cleaner housing with a damp cloth, in particular the sealing surface for the element.

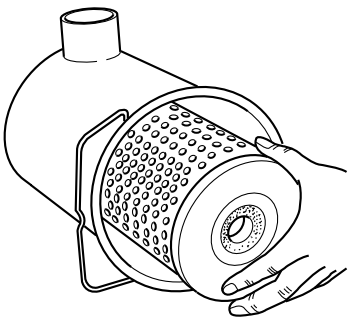

EA6O5013

Notice : *Unless the maximum number of cleanings (up to 5 x) have been done, the filter cartridge should be renewed every two years or 4,000 hours operation.*

https://truckmanualshub.com/

5.4.3. Cleaning filter elements

- **By compressed air (Wear goggles)**

  For the purpose, the air gun should be fitted with a nozzle extension which is bent 90˚ at the discharge end and which is long enough to reach down inside to the bottom of the element.

  Moving the air gun up and down, blow out the element from the inside (maximum 500kPa - 5 bar) until no more dust comes out of the filter pleats.

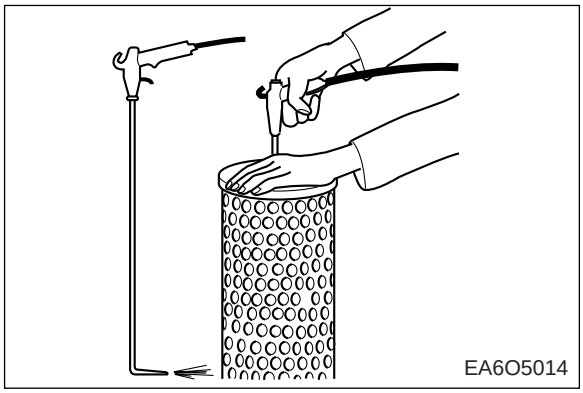

- **By washing**

  Before washing, the element should be precleaned by means of compressed air, as described above.

  Then allow the element to soak in lukewarm washing solvent for 10 minutes, and then move it to and for in the solvent for about 5 minutes.

  Rinse thoroughly in clean water, shake out and allow drying at room temperature. The cartridge must be dry before it is reinstalled.

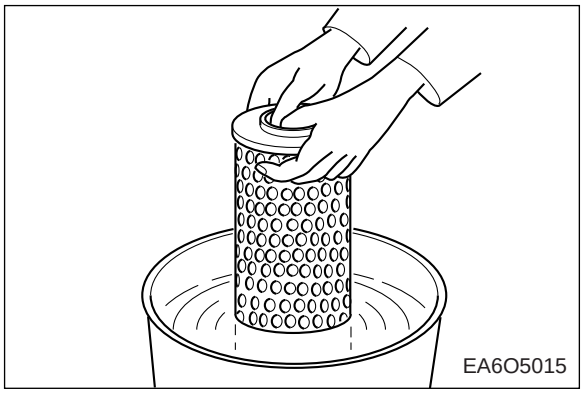

  Never use steam sprayers, petrol (gasoline), alkalis or hot liquids etc. to clean the filter elements.

- **Knocking out dirt by hand**

  In emergencies, when no compressed air or cleaning agent is available, it is possible to clean the filter cartridge provisionally by hitting the end disk of the cartridge with the ball of one's thumb.

  Under no circumstances should the element be hit with a hard object or knocked against a hard surface to loosen dirt deposits.

- **Checking the filter cartridge**

  Before reinstalling the cartridge, it must be checked for damage e.g. to the paper pleats and rubber gaskets, or for bulges and dents etc. in the metal jacket.

  Cracks and holes in the paper pleating can be established by inspecting the cartridge with a flashlight.

  Damaged cartridges should not be reused under any circumstances. In cases of doubt, discard the cartridge and install a new one.

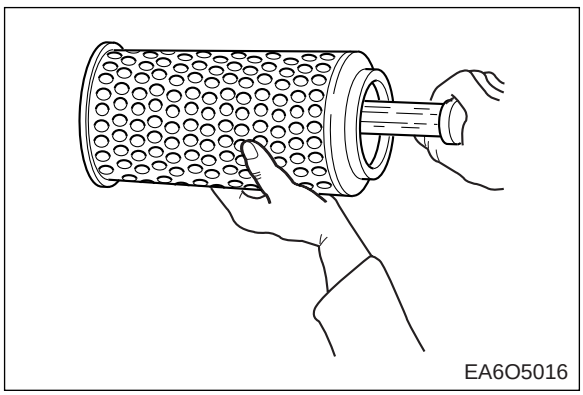

https://truckmanualshub.com/

5.5. Fuel system

5.5.1. Fuel filter

- After every 1,200 hour of operation, drain the water and sediment from the fuel-water separator.
- Shut off the engine. Use your hand to open the drain valve ⑥ .
- Turn the valve counter clockwise approximately 2 ~ 3 turns until draining occurs. Drain the filter sump of water until close fuel is visible.
- Turn the valve clockwise to close the drain valve. Do not over tighten the valve, overtightening can damage the threads.

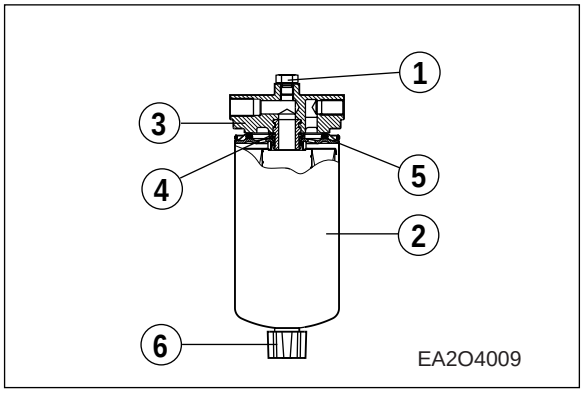

5.5.2. Replacement of fuel filter

- Clean the area around the fuel filter head ③ .
- Remove the fuel filter ② by turning it counter-clockwise with filter wrench. (Discard the used filter.)
- Remove the fuel filter thread adapter seal ring ④ .
- Use a clean lint free cloth to clean the gasket surface of the fuel filter head ③ .
- Install the new thread adapter seal ring ④ supplied with the new filter.

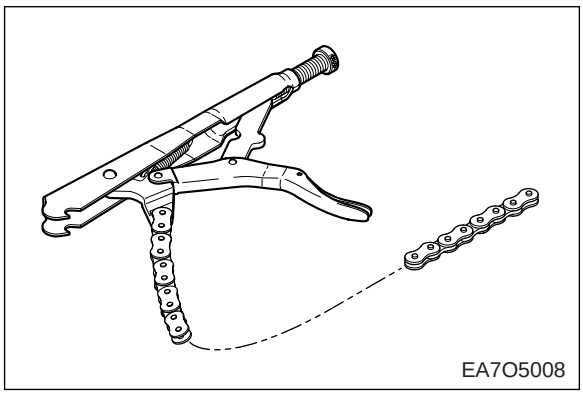

- Use clean oil to lubricate the filter seal ⑤ , and fill the new filter with clean fuel.
- Install the filter on the filter head ③ .
- Tighten the filter until the gasket contacts the filter head surface.
- Tighten the filter on additional one-half to three-fourths of a turn with the filter wrench, on as specified by the filter manufacturer.

Notice : *Mechanical over tightening of the filter can distort the thread or damage the filter element seal.*

https://truckmanualshub.com/

5.5.3. Fuel system checks

Fill the tank with the recommended fuel. Keeping tanks full reduces water condensation and helps keep fuel cool, which is important to engine performance.
Make sure fuel supply valves (if used) are open.
To insure prompt starting and even running, the fuel system must be primed with the fuel feed pump manually before starting the engine the first time, or after a fuel filter change.
Refill at the end of each day's operation to prevent condensation from contaminating the fuel. Condensation formed in a partially filled tank promotes the growth of microbial organisms that can clog fuel filters and restrict fuel flow.

If the engine is equipped with a fuel water separator, drain off any water that has accumulated. Water in fuel can seriously affect engine performance and may cause engine damage. **DAEWOO recommends installation of a fuel water separator on generator units.**

5.5.4. Fuel Contamination and water trap

In the generator environment, the most likely fuel contaminants are water and microbial growth (black "slime"). Generally, this type of contamination is the result of poor fuel handling practices.
Black "slime" requires water in the fuel to form and grow, so the best prevention is to keep water content to a minimum in storage tanks.
If diesel fuel which contains moisture is used the injection system and the cylinder liners / pistons will be damaged. This can be prevented to same extent by filling the tank as soon as the engine is switched off while the fuel tank is still warm (formation of condensation is prevented). Drain moisture from storage tanks regularly. Installation of a water trap upstream of the fuel filter is also advisable.

Notice : *A galvanized steel tank should never be used for fuel storage, because the fuel oil reacts chemically with the zinc coating to form powdery flakes which can quickly clog the fuel filters and damage the fuel pump and injection nozzles.*

5.5.5. Priming pump strainer cleaning

Clean the priming pump strainer every 200 operation hours.
The strainer is incorporated in the priming pump inlet side joint bolt.
Clean the strainer with the compressed air and rinse it in the fuel oil.

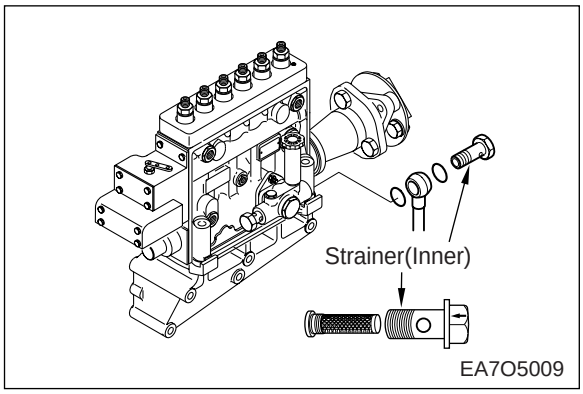

https://truckmanualshub.com/

5.5.6. Bleeding the fuel system

After the cleaning of the fuel filter or after the engine stop by the lack of fuel, the bleeding of the fuel system must be executed by all means.

Bleed the system by manually operating the priming pump with fuel filter outlet joint bolt and injection pump bleeder screw loosened.

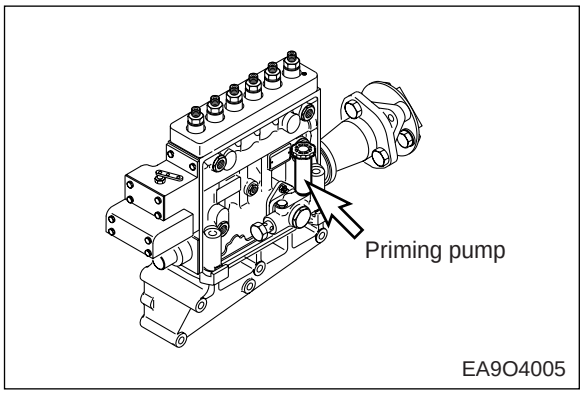

- Press the feed pump cap repetitively until the fuel without bubbles comes out from the bleeding valves.
- After the whole air is pulled out, close the valve of the filter.
- Confirm the resistance of fuel delivery by the repetition pressing of the feed pump cap, Pressure and turn the feed pump cap simultaneously to close it.

5.5.7. Injection pump

- Check the fuel injection pump housing for cracks or breaks, and replace if damaged.
- Check and see if the lead seal for idling control and speed control levers have not been removed.
- No alterations must be made to the injection pump. If the lead seal is damaged the warranty on the engine will become null and void.
- We strongly recommended that any faults developing in the injection pump should be taken care of by authorized specialist personnel.

5.6. Injection Nozzle Maintenance (by authorized specialist personnel)

The injectors are designed to spray the fuel delivered by the injection pump directly into the spherical combustion chamber in the piston crown.

The injector consists of the nozzle and the nozzle holder.

A copper seal fitted to the injector ensures gas-tight seating and good heat dissipation.

The opening pressure of the nozzle is adjusted by means of shims at the compression spring.

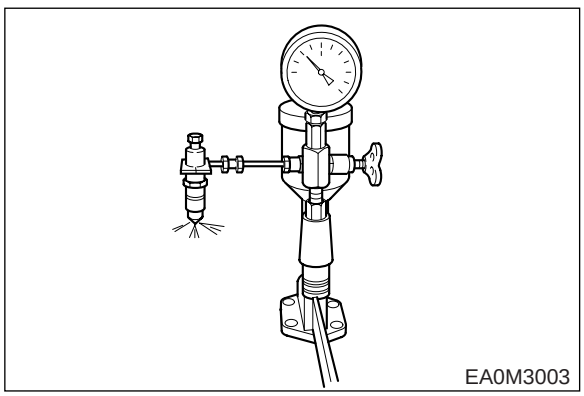

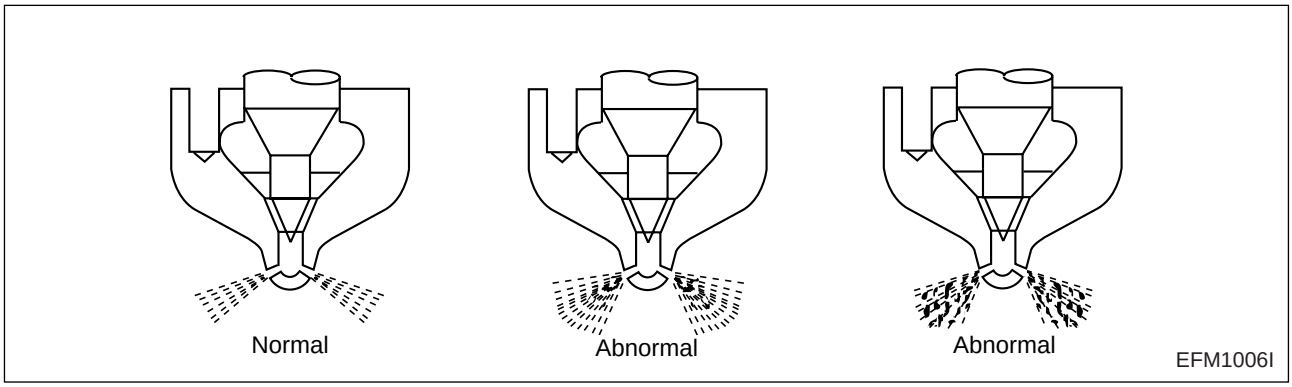

- Install a nozzle to a nozzle tester.
- Check injection pressure, and adjust the nozzle using the adjusting shim if the pressure does not meet the specified limit.
- Check nozzle spray patterns and replace if damaged.

	DE12T	P126TI
Injection Nozzle pressure	220kg/cm^2	1st : 160kg/cm^2 2nd : 220kg/cm^2

Caution : *The injection lines are designed for high operating pressures and should thus be handled with particular care.*

- When mounting the pipes to the engine take care of good fitness.
- Do not bend pipes to permanent deformation (not for replacing the nozzles either).
- Do not mount any heavily bent pipes.
- Avoid bending the pipes at the ends by more than 2 to 3 degrees.

In case of faults in the injection system which might have resulted in excessive operating pressures, not only the failed part but also the injection line has to be replaced.

5.7. Turbocharger

5.7.1. Maintenance (by authorized specialist personnel)

The turbochargers do not call for any specific maintenance.
The only points to be observed are the oil pipes which should be checked at every oil change for leakage and restrictions.
The air cleaners should be carefully serviced.
Furthermore, a regular check should be kept on charge air exhaust gas pipes. Any leakages should be attended to at once because they are liable to cause overheating of the engine.
When operating in highly dust or oil-laden atmospheres, cleaning of the air impeller may be necessary from time to time. To this end, remove compressor casing **(Caution : Do not skew it!**) and clean in a non-acid solvent, if necessary using a plastic scraper.
If the air compressor should be badly fouled, it is recommended that the wheel be allowed to

soak in a vessel with solvent and to clean it then with a stiff brush. In doing so, take care to see that only the compressor wheel is immersed and that the turbocharger is supported on the bearing casing and not on the wheel.

5.7.2. Special hints

It is recommended that the radial and axial clearances of the rotor be checked after every 3,000 hours operation.
This precaution will enable any wear of the Measuring of axial clearance bearings to be detected in good time before serious damage is caused to the rotor and bearings.

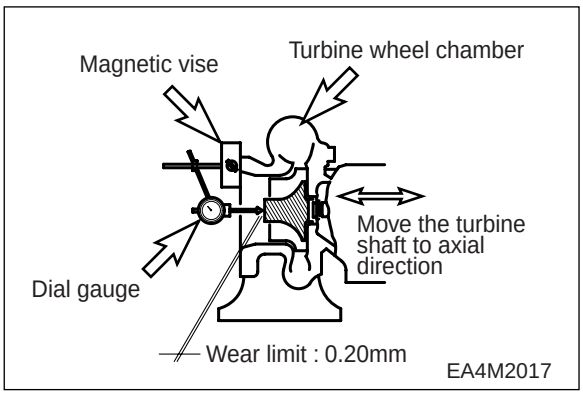

- Measuring rotor axial clearance

Axial clearance	0.2 mm

- Measuring radial clearance

Radial clearance	0.65 mm

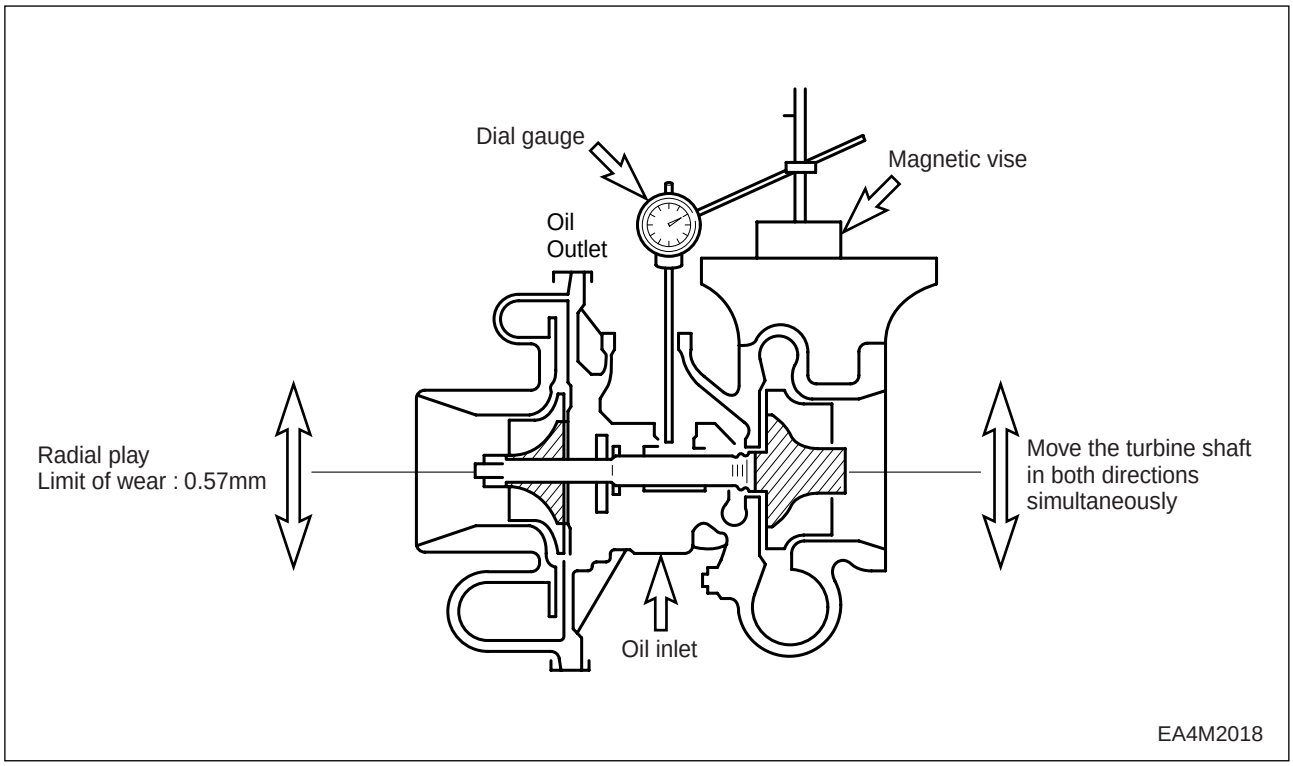

https://truckmanualshub.com/

6. Checking and setting

6.1. Adjustment of valve clearance

6.1.1. General information

The valve clearances are to be adjusted at the times of the following situations.

- After initial 50 hour's operation.
- When the engine is overhauled and the cylinder heads are disassembled.
- When severe noise comes from valve train.
- When the engine is not normally operated, even though there is no trouble in the fuel system.
  The valve clearance of the cold engine are as follows.
  - Intake valves : 0.3mm
  - Exhaust valves : 0.3mm

6.1.2. Adjusting order of the valve clearance

1) After letting the #1 cylinder's piston come at the compression top dead center by turning the crankshaft, adjust the valve clearances.
2) Loosen the lock nuts of rocker arm adjusting screws and push the feeler gauge of specified value between a rocker arm and a valve stem and adjust the clearance with adjusting screw respectively and then tighten with the lock nut.
3) As for the valve clearance, adjust it when in cold, as follow.

Model	Intake Valve	Exhaust Valve
DE12T P126TI	0.3 mm	0.3 mm

- By cranking the engine, let #6 cylinder's valves overlap.
- In time, adjust the valve clearance corresponding to " ⇨ "of lower lists.
- Adjust the valve clearance corresponding to " ➡ " of lower lists.
- After reinsuring the valve clearances, retighten if necessary.

4) No. 1 Cylinder is located at the side where flywheel was installed.

https://truckmanualshub.com/

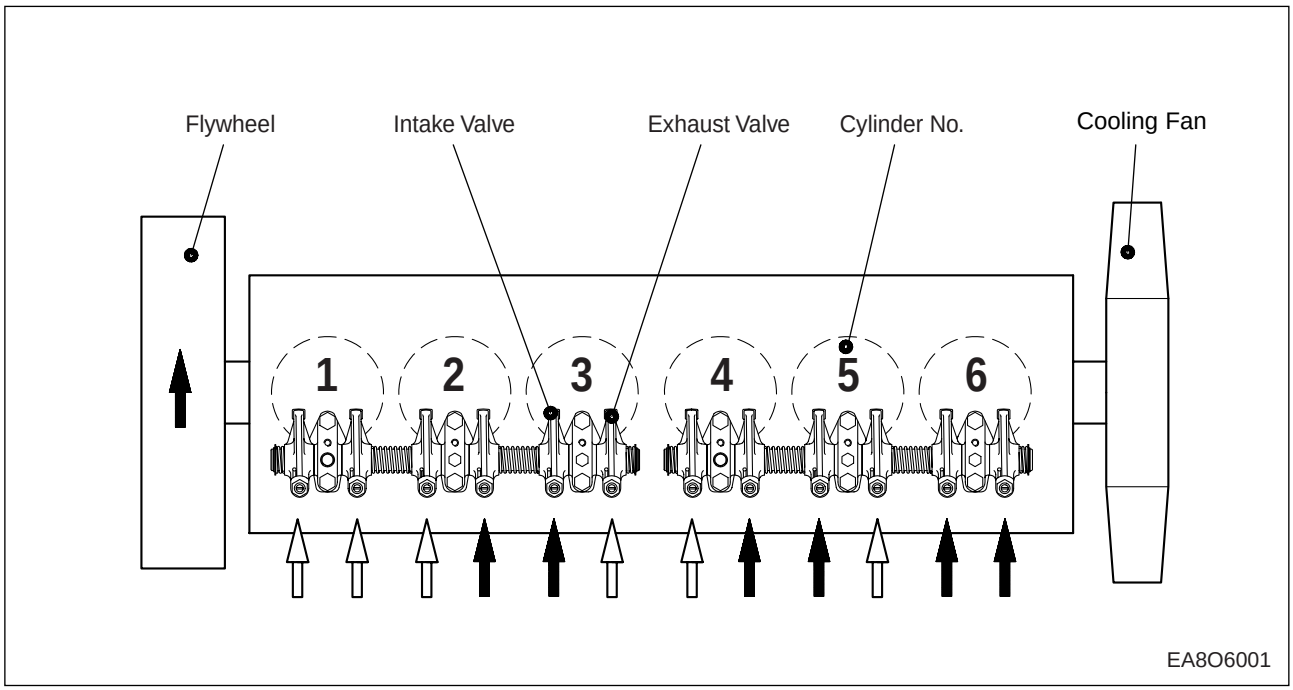

6.1.3 Method of adjusting the valve clearance

1) Loosen the lock-nuts ① using a ring spanner.
2) Insert a thickness gauge of 0.3mm between valve stem ② and rocker arm ③.
3) Turn the adjusting bolts ④ using a screw driver until the gauge can be pulled out with some restriction.
4) After the adjustment fix the adjusting bolt not to rotate and tighten the lock-nut at the same time.
5) Measure the clearance one more time and if necessary adjust again.

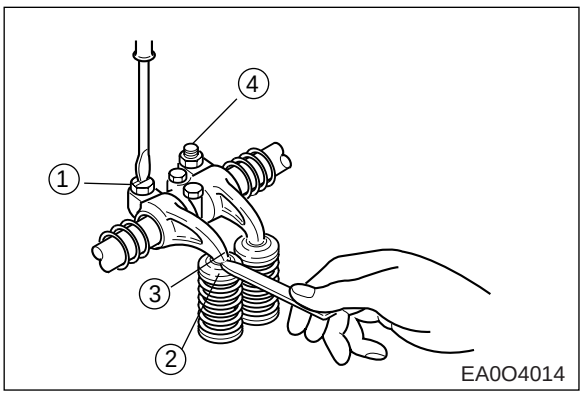

https://truckmanualshub.com/

6.2. Adjustment of injection timing

6.2.1. Method of adjusting injection timing

- Turn the flywheel until No. 1 piston is placed in the “OT” position of notch marks on the flywheel, and then turn again the flywheel clockwise until showing the notch mark of the right figure corresponding to the injection timing is aligned with the pointer (↓) on the flywheel housing.

	DE12T	P126TI
Fuel injection timing (B.T.D.C static)	12°	12°

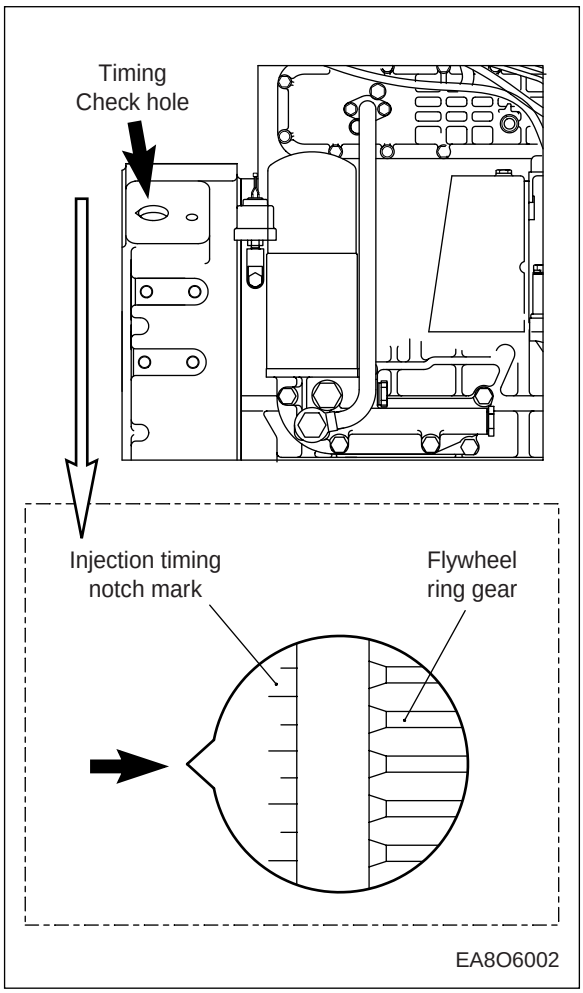

- Turn the timer until the notch mark of the indicator plate attached to the fuel injection pump is aligned with the notch mark of the timer.

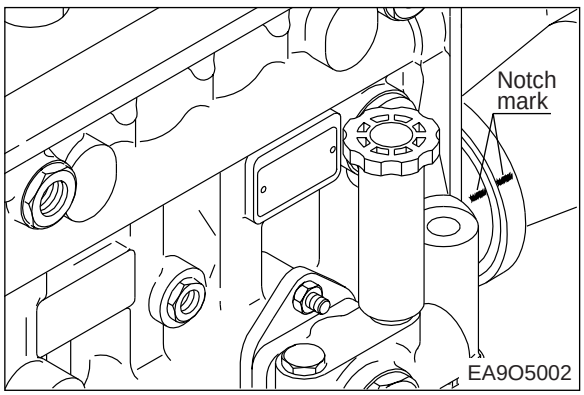

- Tighten the coupling fixing bolts and nuts to specified torque.

Torque	6.0 kg•m

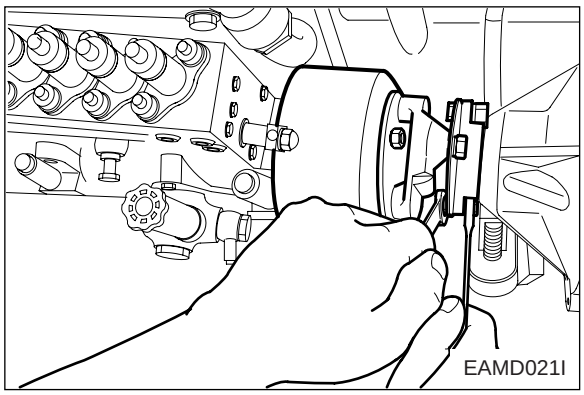

- Tighten the drive shaft connecting flange fixing bolts to specified torque.

Torque	7.5 ~ 8.5 kg•m

- Install the oil delivery pipe and return pipe.

6.3. Tightening the cylinder head bolts

- The cylinder head bolts are to be tightened in the sequence shown in the illustrations, First tighten the bolts slightly, then slightly more again and finally tighten with a torque wrench.

<Cylinder Head Bolts>

	Type 1	Type 2
Specification	TY 12.9T M14x1.5x153	TY 10.9T M14x1.5x150
Torque	24.5 kg.m	6 kg.m +180°+150°

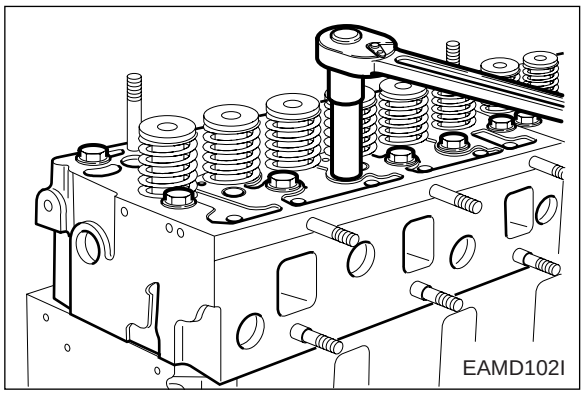

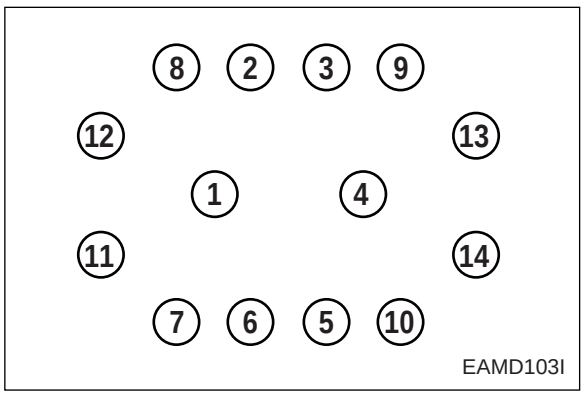

- The tightening by excessive torque may cause the damages of the cylinder head gaskets, the flanges of cylinder liners and the cylinder head bolts, therefore obey the regular torque.

https://truckmanualshub.com/

6.4. Cylinder compression pressure

1) Stop the engine after warming it up, then remove the nozzle assemblies.

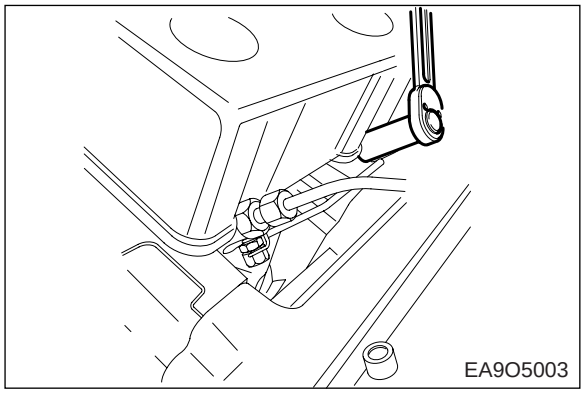

2) Install a special tool (gauge adapter) in nozzle holder hole and connect the compression pressure gauge to the adapter.

3) Cut off fuel circulation, rotate the starter, then measure compression pressure of each cylinder.

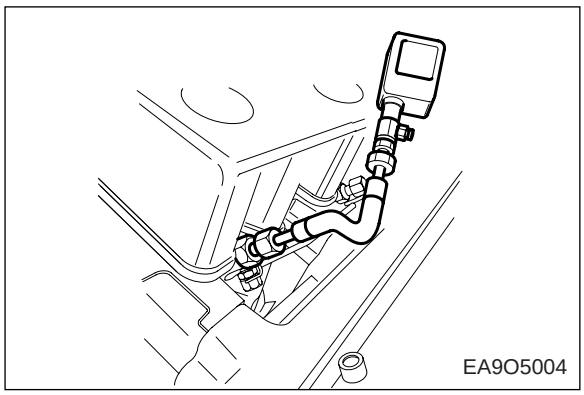

Standard	24~28 kg/cm^2
Limit	24 kg/cm^2 or less
Allowance among cylinders	±10% or less

- Testing conditions : at water temperature of 20 °C and speed of 200 rpm (10 turns)

https://truckmanualshub.com/

6.5. V-belts

The tension of the V-belts should be checked after every 2,000 hours of operation.

(1) Change the V-belts if necessary

If in the case of a multiple belt drive, wear or differing tensions are found, always replace the complete set of belts.

(2) Checking condition

Check V-belts for cracks, oil, overheating and wear.

(3) Testing by hand

The tension is correct if the V-belts can be pressed in by about the thickness of the V-belt. (no more midway between the belt pulleys)

A more precise check of the V-belt tension is possible only by using a V-belt tension tester.

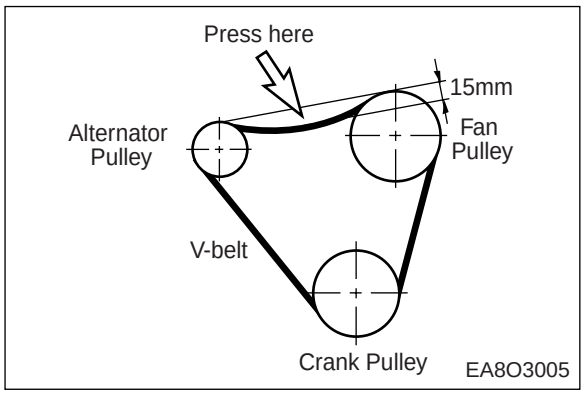

(4) Measuring tension

① Lower indicator arm (1) into the scale.

- Apply tester to belt at a point midway between two pulleys so that edge of contact surface (2) is flush with the V-belt.
- Slowly depress pad (3) until the spring can be heard to disengage. This will cause the indicator to move upwards.

If pressure is maintained after the spring has disengaged a false reading will be obtained!

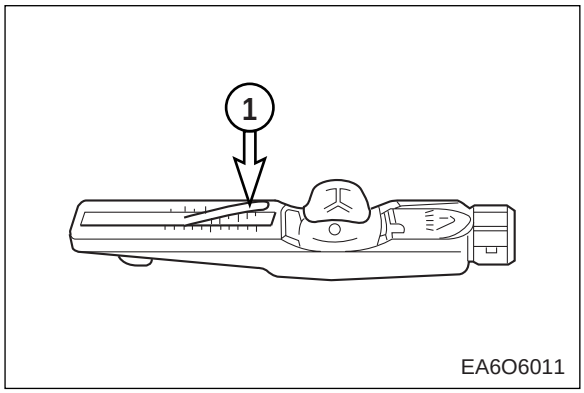

② Reading of tension

- Read of the tensioning force of the belt at the point where the top surface of the indicator arm (1) intersects with the scale.
- Before taking readings make ensure that the indicator arm remains in its position.

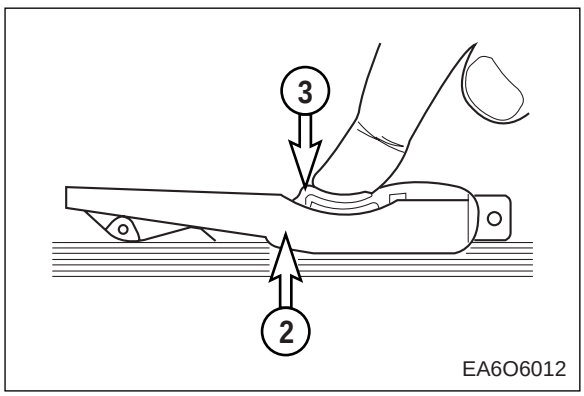

https://truckmanualshub.com/

Type	Drive belt width	Tensioning forces on the tester		
		new installation		When servicing after long running time
		Installation	After 10 min. running time	
M	9.5 mm	50 kg	45 kg	40 kg
A *	**11.8 mm**	**55 kg**	**50 kg**	**45 kg**
B	15.5 mm	75 kg	70 kg	60 kg
C	20.2 mm	75 kg	70 kg	60 kg

*** : Adopted in DE12T and P126TI**

(5) Tensioning and changing V-belt

- Remove fixing bolts. (1)
- Remove lock nut. (2)
- Adjust nut (3) until V-belts have correct tensions.
- Retighten lock nut and fixing bolts.

To change the V-belts loosen mounting bolts (1) and lock nut (2) and push tension pulley inwards by turning adjusting nut (3).

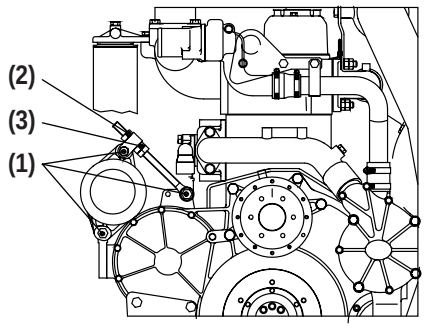

EA8O6004

https://truckmanualshub.com/

● Appendix

1. General engine inspection cycle

○ : Check & adjust ● : Replace

Inspection		Daily	Every 50hrs	Every 200hrs	Every 600hrs	Every 800hrs	Every 1200hrs	Remark
Cooling System	Check for leakage(hoses, clamp)	○						
	Check the water level	○						
	Change the coolant water						●	
	Adjust the V-belt tension	○						Every 2,000hrs
	Clean the radiator						○	
Lubrication System	Check for leakage	○						
	Check the oil level gauge	○						
	Change the lubricating oil		● 1st			○		
	Replace the oil filter cartridge		● 1st			○		
Intake & Exhaust System	Check the leakage for intercooler (hoses, clamp)	○						
	Clean and change the air cleaner element			○ clean	●			
	Clean the inter-cooler air fins				○			
	Clean the turbo-charger							Every 2,000hrs
Fuel System	Check the leakage fuel line	○						
	Clean the fuel strainer of fuel feed pump						○	
	Remove sediment from fuel tank						○	
	Drain the water in separator			○				
	Replace the fuel filter element						●	
	Check fuel Injection timing			○				When necessary
	Check the injection nozzles			○				When necessary
Engine Adjust	Check the state of exhaust gas	○						
	Check the battery charging	○						
	Check the compression pressure						○	When necessary
	Adjust Intake/Exhaust valve clearance		○ 1st					When necessary

https://truckmanualshub.com/

2. Diagnosis and remedy

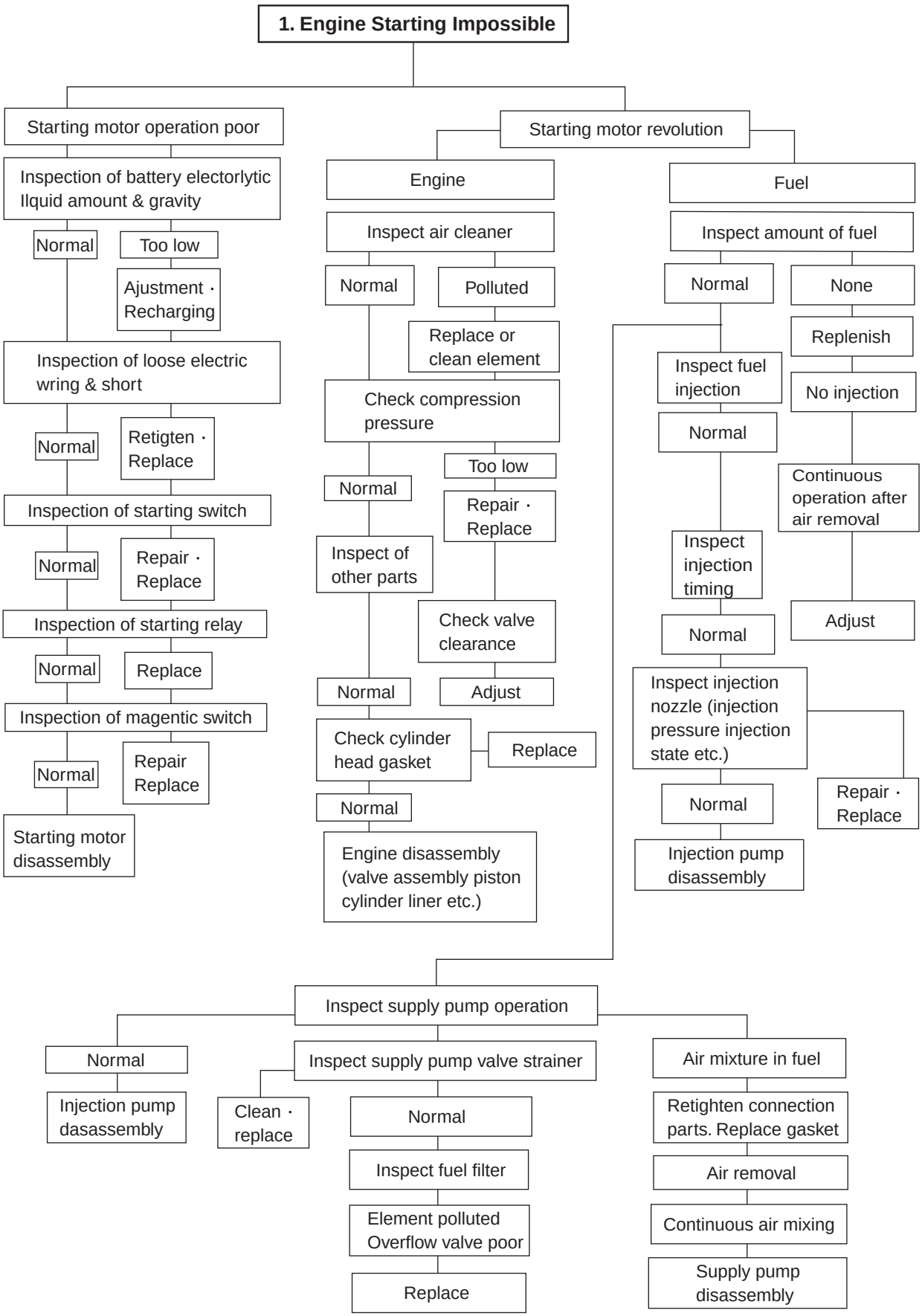

https://truckmanualshub.com/

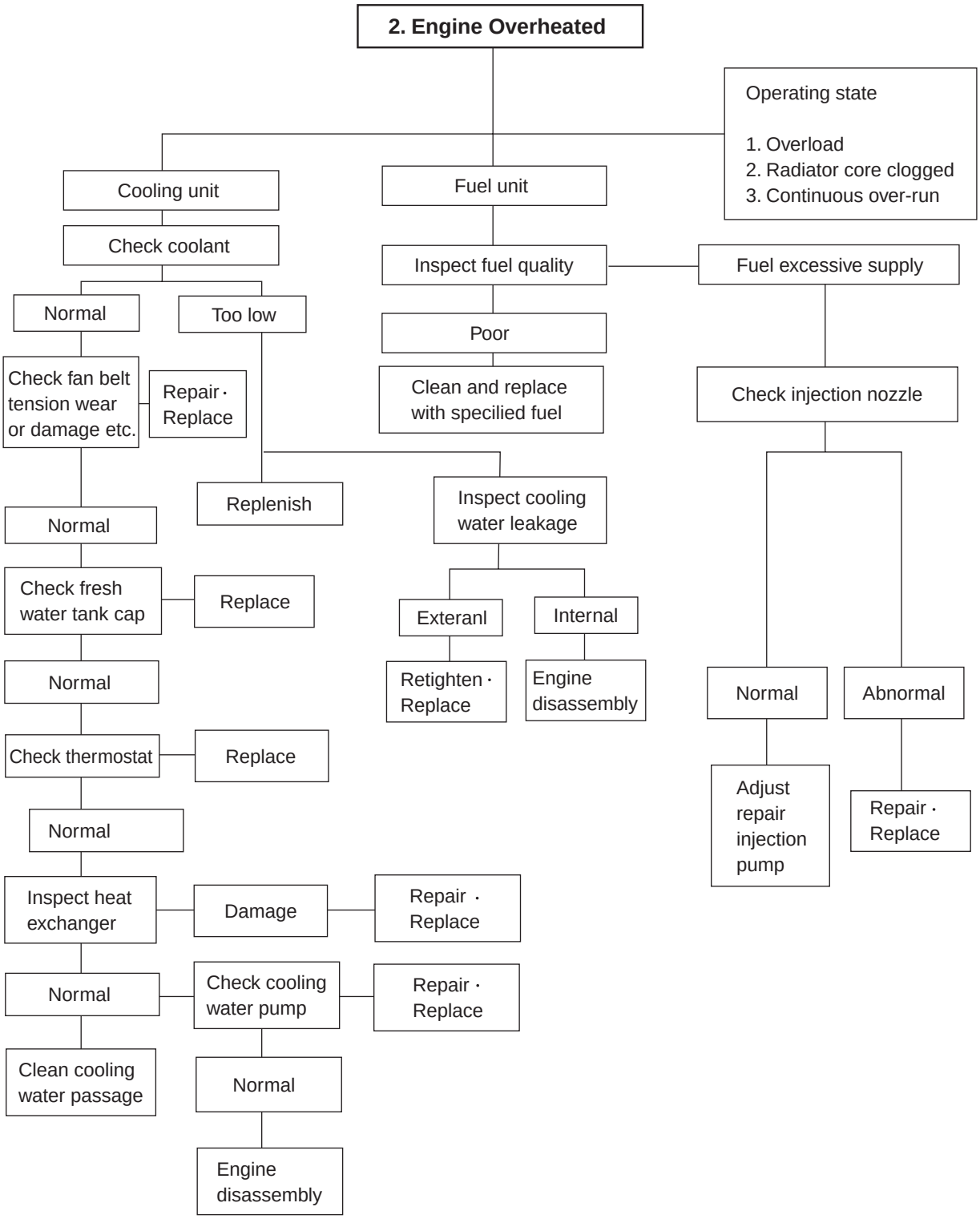

https://truckmanualshub.com/

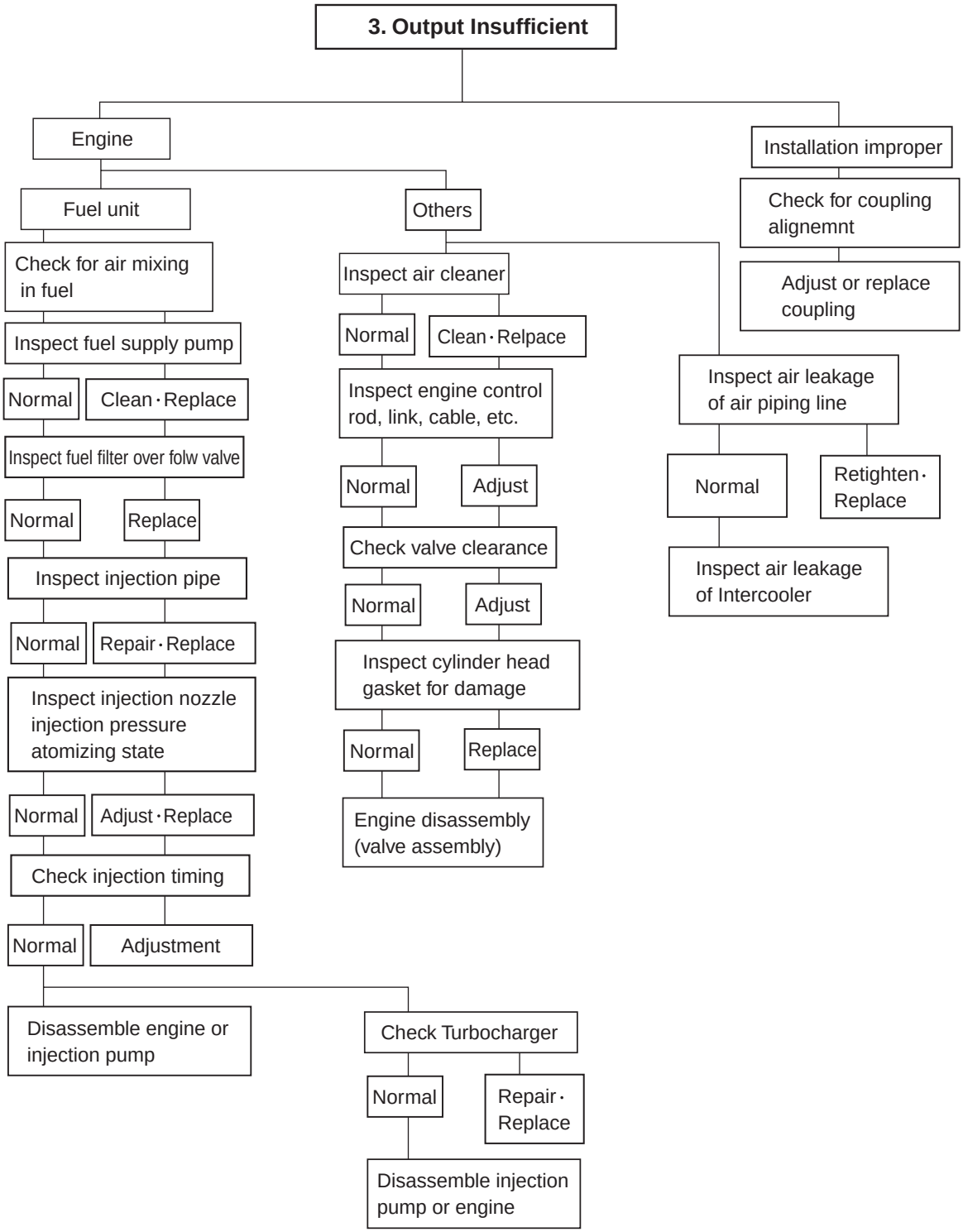

https://truckmanualshub.com/

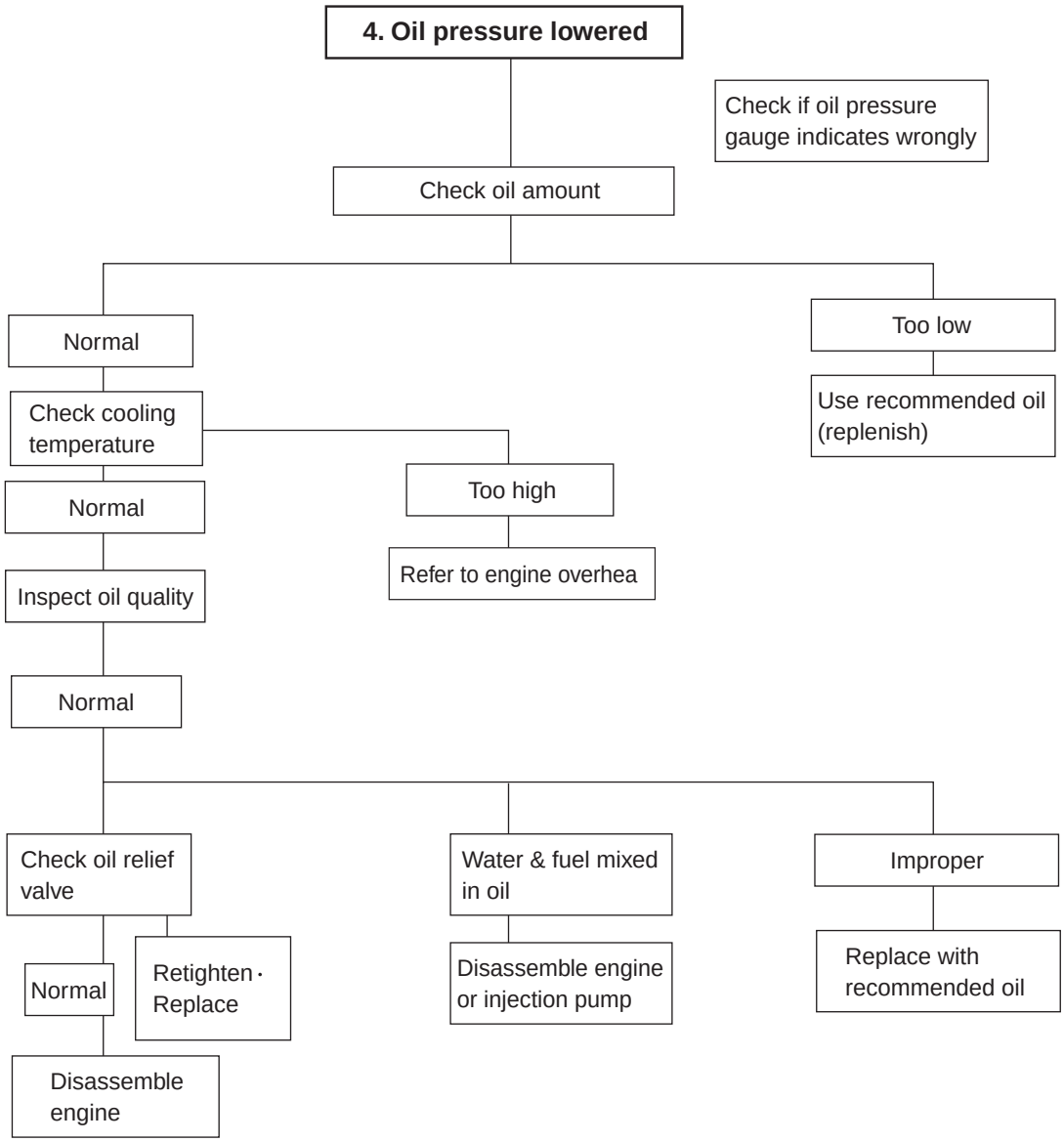

https://truckmanualshub.com/

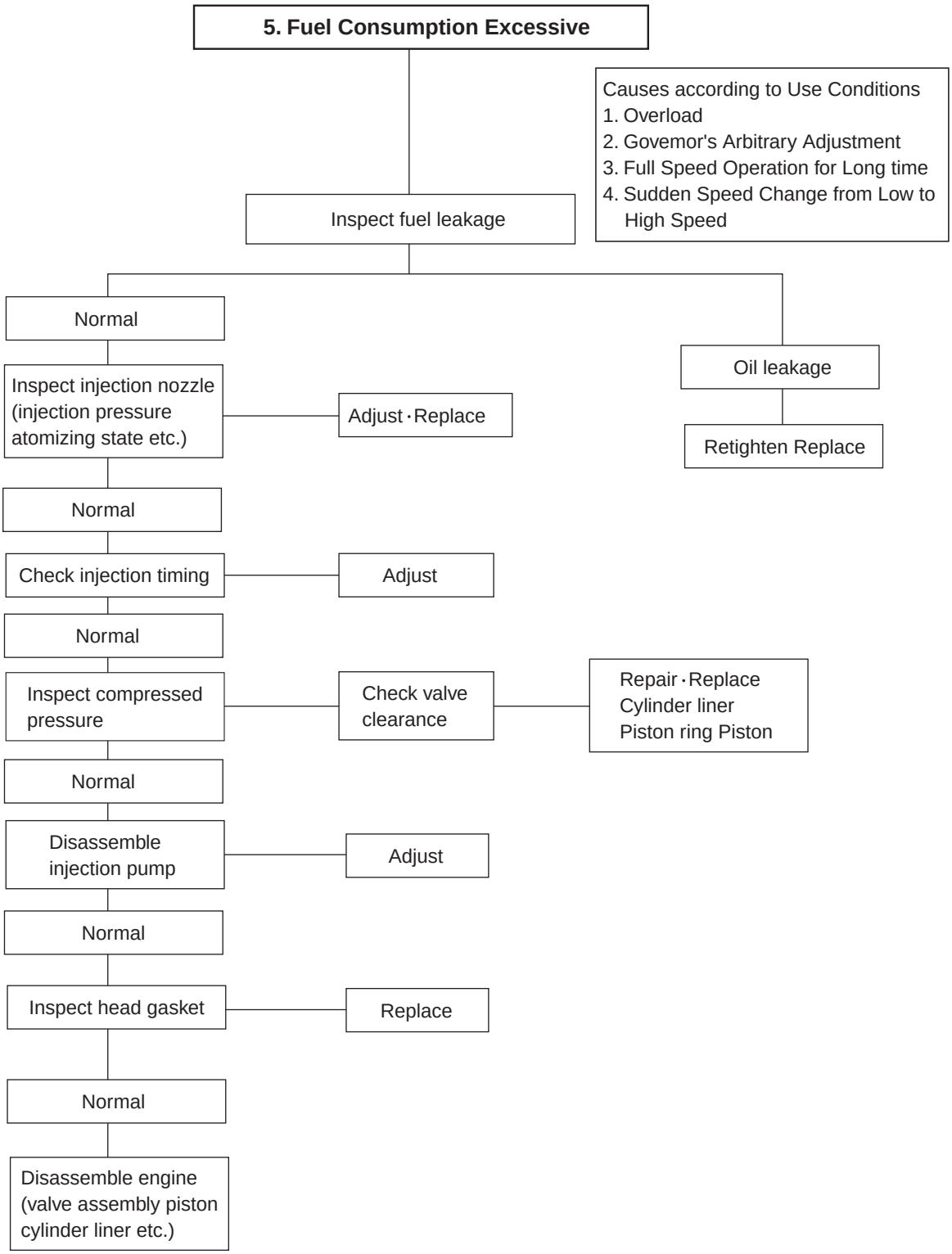

6. Oil Consumption Excessive

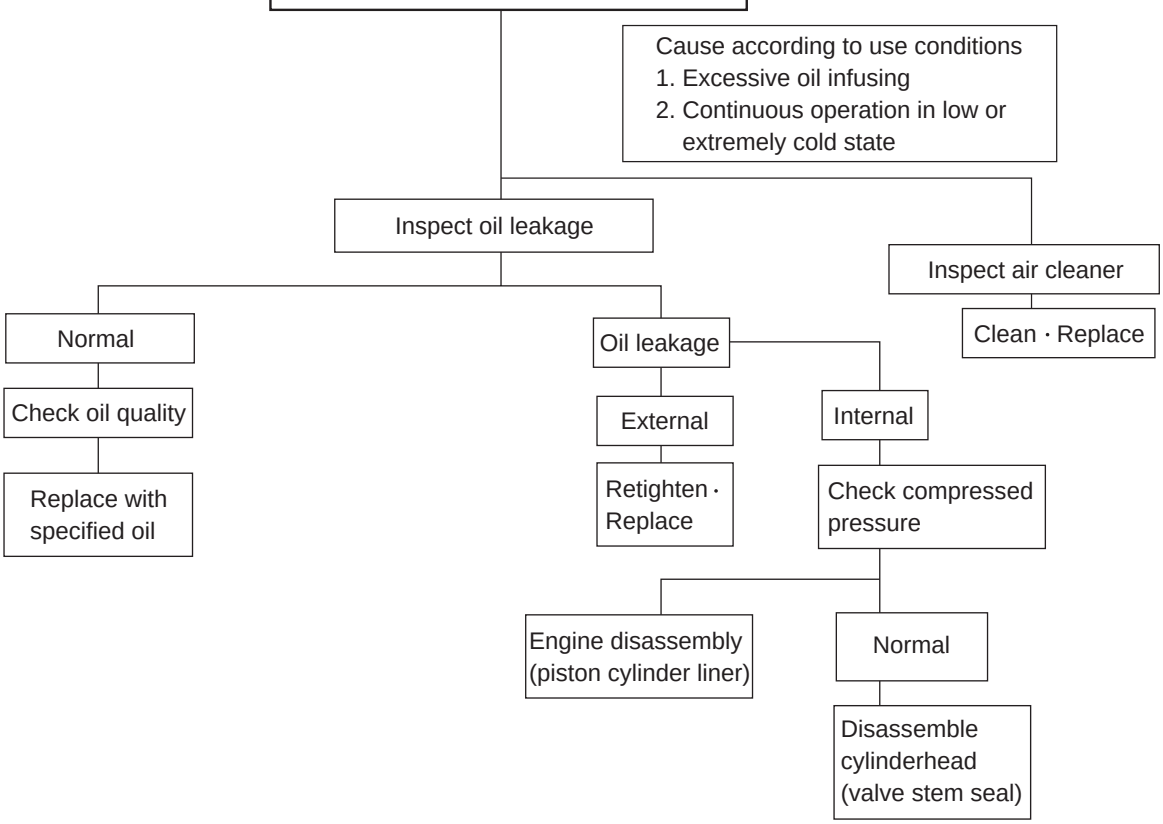

7. Engine Knocking

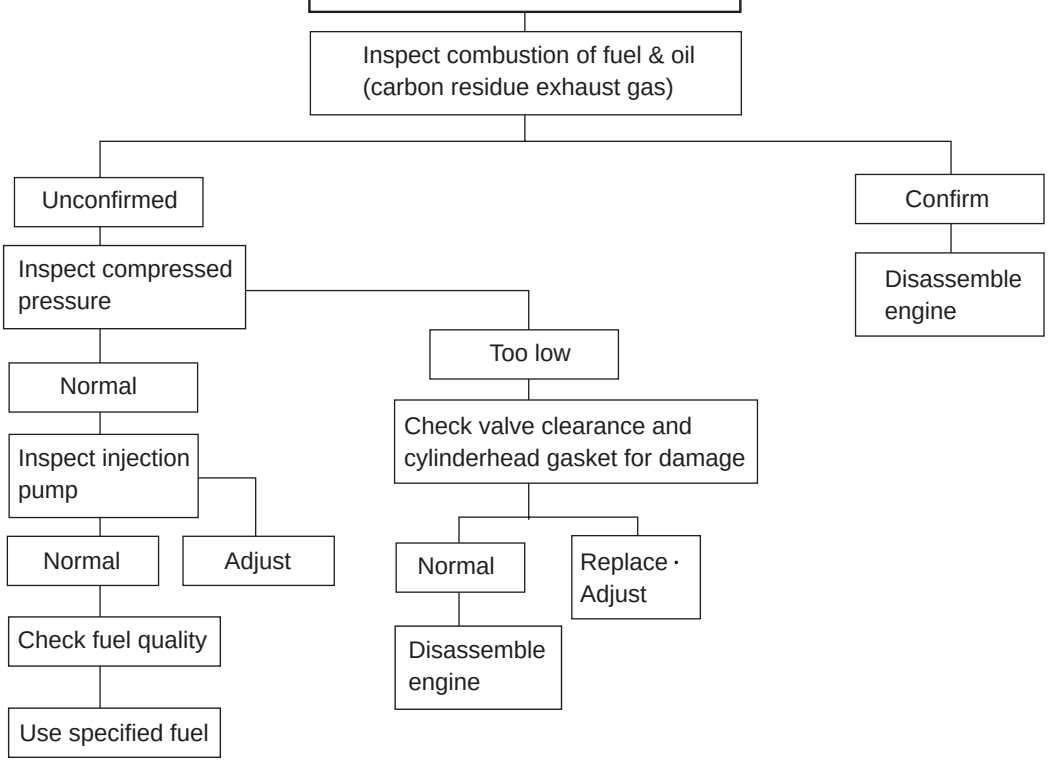

https://truckmanualshub.com/

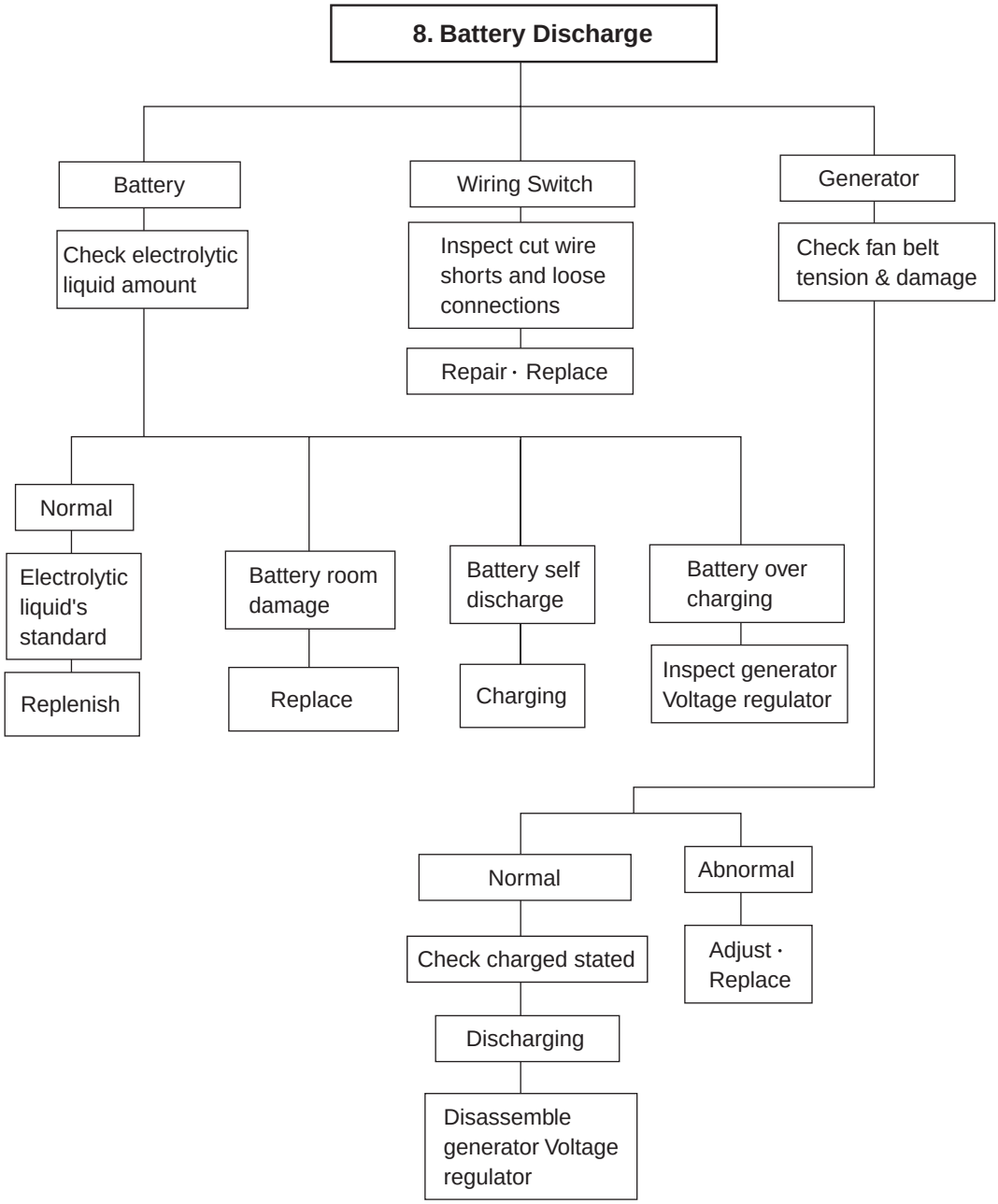

Condition	Causes	Remedies
1) Starting difficult (1) Compression pressure	• Valve's poor shut, stem distortion • Valve spring damage • Cylinder head gasket's leak • Wear of piston, piston ring or liner	Repair or replace Replace valve spring Replace gasket Adjust
2) Idle operation abnormal	• Injection timing incorrect • Air mixing at injection pump	Adjust Remove air
3) Engine output insufficient (1) Continuous output insufficient	• Valve clearance incorrect • Valve tightness poor • Cylinder head gasket's leak • Wear, stick, damage of piston ring • Injection timing incorrect • Fuel injection amount insufficient • Nozzle injection pressure improper or stuck • Supply pump's function lowered • Fuel pipe system clogged • Air suction amount insufficient • Supercharger poor	Adjust Repair Replace gasket Replace piston ring Adjust Adjust injection pump Adjust or replace Repair or replace Repair Clean or replace air cleaner Repair or replace
(2) Output insufficient when in acceleration	• Compression pressure insufficient • Injection timing incorrect • Fuel injection amount insufficient • Injection pump timer's function insufficient • Nozzle infection pressure, infection angle improper • Supply pump's function lowered • Air intake amount insufficient cleaner	Disassemble engine Adjust Adjust injection pump Repair or replace Repair, replace Repair or replace Clean or replace air
4) Overheating	• Engine oil insufficient or poor • Cooling water insufficient • Fan belt loosened, worn, damaged • Cooling water pump's function lowered • Water temp. regulator's operation poor • Valve clearance incorrect • Exhaust system's resistance increased	Replenish or replace Replenish or replace Adjust or replace Repair or replace Replace Adjust Clean or replace

Condition	Cause	Remedies
5) Engine noisy	For noises arise compositely such asrota ting parts, lapping parts etc., there is nec essity to search the cause of noises accu rately.	
(1) Crankshaft	• As the wear of bearing or crankshaft progress, the oil clearances increase. • Lopsided wear of crankshaft • Oil supply insufficient due to oil passage clogging • Stuck bearing	Replace bearing & grind crankshaft Grind or replace Clean oil passage Replace bearing & Grind
(2) Con rod and Con rod bearing	• Lopsided wear of con rod bearing • Lopsided wear of crank pin • Connecting rod distortion • Stuck bearing • Oil supply insufficiency as clogging at oil passage progresses	Replace bearing Grind crankshaft Repair or replace Replace & grind crankshaft Clean oil passage
(3) Piston, piston pin & piston ring	• Piston clearance increase as the wear of piston and piston ring progresses • Wear of piston or piston pin • Piston stuck • Piston insertion poor • Piston ring damaged	Replace piston & piston ring Replace Replace piston Replace piston Replace piston
(4) Others	• Wear of crankshaft, thrust bearing bearing • Camshaft end play increased • Idle gear end play increased • Timing gear backlash excessive • Valve clearance excessive • Abnormal wear of tappet, cam • Supercharger inner part damaged	Replace thrust Replace thrust plate Replace thrust washer Repair or replace Adjust valve clearance Replace tappet, cam Repair or replace
6) Fuel Consumption Exttive	• Injection timing incorrect • Fuel injection amount excessive	Adjust Adjust injection pump

Condition	Cause	Remedies
7) Oil Consumption Excessive		
(1) Oil level elevated	• Clearance between cylinder iner & piston	Replace
	• Wear of piston ring, ring groove • Piston ring's damage, stick, wear • Piston ring opening's disposition improper • Piston skirt part damaged or abnormal wear • Oil ring's oil return hole clogged • Oil ring's contact poor	Replace piston, piston ring Replace piston ring Correct position Replace piston Replace piston ring Replace piston ring
(2) Oil level lowered	• Looseness of valve stem & guide • Wear of valve stem seal • Cylinder head gasket's leak	Replace in set Replace seal Replace gasket
(3) Oil leak	• Looseness of connection parts • Various parts' packing poor • Oil seal poor	Replace gasket, repair Replace packing Replace oil seal

https://truckmanualshub.com/

https://truckmanualshub.com/

DAEWOO HEAVY INDUSTRIES & MACHINERY LTD. AROUND THE WORLD

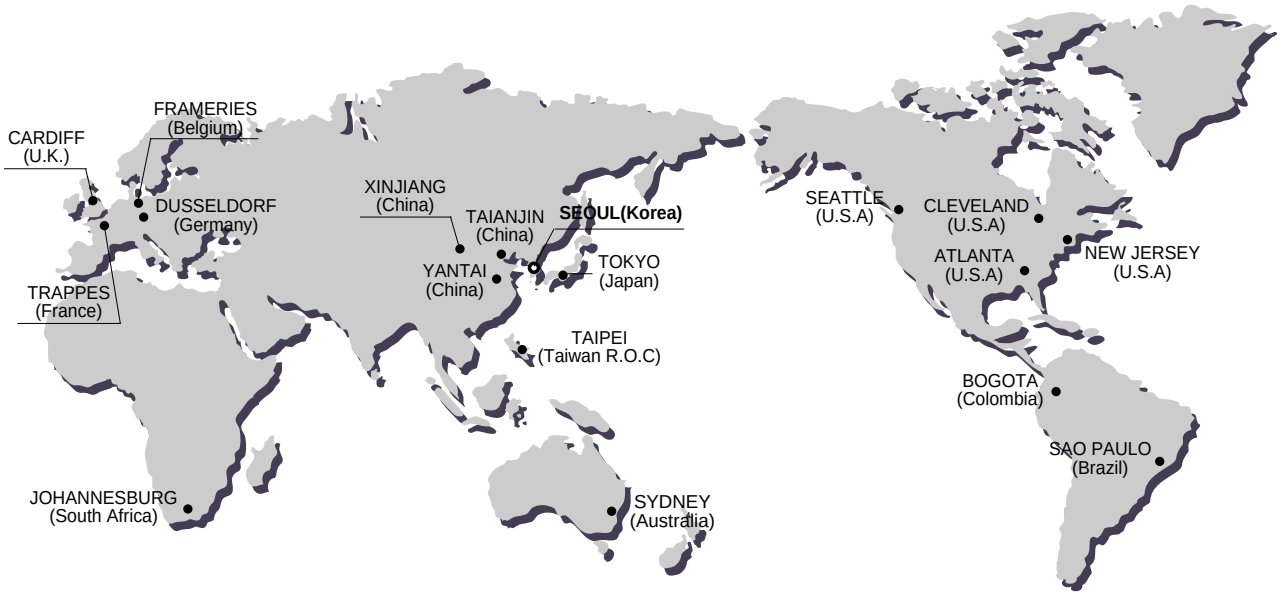

Head Office
Hwasu-Dong 7-11, Dong-Gu, Incheon, Korea.
Tel : 82-32-760-1114 Fax : 82-32-762-1546

Seoul Office
8th floor Daewoo Heavy Industries & Machinery Bidg, 14-34, Youido-Dong, Youngdungpo-Gu, Seoul, Korea
Tel : 82-2-2167-3114 Fax : 82-2-785-2677

ASIA & OCEANIA

Daewoo Heavy Industries Australia Pty. Ltd
Suite 5, Level 4,20 Charles St., Parramatta NSW 2150, Australia
Tel : 61-2-9633-4544 Fax : 61-2-9633-5266

Daewoo Machinery Co., Ltd
No.83 WenHwa 1st. Road, Kueishan Hsiang, Taoyuan Hsien, Taiwan R.0.C
Tel : 886-3-327-5576 Fax : 886-3-327-3013

Xinjiang Daewoo Machinery Co., Ltd
No, 178, Hetanbei Road, Wurumuqi, Xinjiang, China
Tel : 86-991-463-2217 Fax : 86-991-461-8641

Dajian(Tianjin) Mechanical Construction Co., Ltd
No.87 Gongxing Road, Tanggu, Tianjin, china
Tel : 86-222-521-0540 Fax : 86-222-521-0714

Daewoo Heavy Industries Yantai Co., Ltd
#28, Wuzhishan Road, Eco. & Tech, Development Zone, Yantai, Shandong, China
Tel : 86-535-638-2000 Fax : 86-535-638-2004

Daewoo Construction Machinery Co., Ltd
3rd Floor, k-1 Bld.,19-4, Nishi-shinbashi 2-Chome, Minato-Ku, Tokyo, Japan
Phone : 81-3-3433-8400 Fax : 81-3-3433-8648

NORTH AMERICA

Daewoo Heavy Industries America Corp.
2905 Shawnee Industrial Way, Suwanee, Georgia 30024, U. S. A
Tel : 1-770-831-2200 Fax : 1-770-831-0480

Daewoo Heavy Industries America N.J. Office
8 York Avenue, West Caldwell, N.J. 07006, U.S.A
Tel : 1-973-618-2500 Fax : 1-973-618-2501

Daewoo Heavy Industries America Cleveland Office
4530 Renaissance Parkway, Warrensville Heights, OH 44128, U.S.A
Tel : 1-216-595-1212 Fax : 1-216-595-1214

Daewoo Rep. C/O Boeing Co.
P.O.Box 3707 M/S 39-AH, Seattle, WA 98124-2207, U.S.A
Tel : 1-425-266-0478 Fax : 1-425-266-0518

EUROPE

Euro Daewoo U,K Ltd
Daewoo House, Unit 6.3 Nantgarw Park, Cardiff CF47QU, U.K. / Tel : 44-1443-84-2273 Fax : 44-1443-84-1933

Daewoo Maschinen Vertriebs GmbH
Hans-Bockler strasse 29, D-40764, Langenfeld-Fuhrkamp, Germany / Tel : 49-2173-8509-20 Fax : 49-2173-8509-60

Euro Daewoo S. A
1A Rue Achille Degrace 7080 Frameries Belgium
Tel : 32-65-61-3231 Fax : 32-65-61-3238

Euro Daewoo S. A France
2Eme Etage, 1/3 Avenue Pavlov, Z.A.I. Des Bruyeres 78190 Trappes France
Tel : 33-1-3016-2140
Fax : 33-1-3016-2144

SOUTH AMERICA

Daewoo Maquinas I Equipamentos Ltda
AV Tres Andradas 519- Jd. Piratininga - CEP 06230-050- Osasco - SP - Brazil
Phone : 55-11-3686-0177 Fax : 55-11-3686-0970

DHIAC Colombia Liaison Office
Diagonal127 A No. 17-34 Oficina 302
Bogota, Colombia

AFRICA

Daewoo Heavy Industries South Africa Pty. Ltd
60C Electron Road Isando 1600, Johannesburg, South Africa
Phone : 27-11-974-2095 Fax : 27-11 -974-2778

https://truckmanualshub.com/

DAEWOO

65.99897-8050

Maintenance Manual

GENERATOR DIESEL ENGINE

DE12T

POLUS

P126TI

https://truckmanualshub.com/

FOREWORD

This maintenance manual is designed to serve as a reference for DAEWOO Heavy Industries Ltd's (here after DAEWOO's) customers and distributors who wish to gain basic product knowledge on DAEWOO's DE series generator diesel engines (DE12T and POLUS P126TI)
These economical and high-performance diesel engines (6 cylinders, 4 strokes, in-line, direct injection type) have been so designed and manufactured to be used for the generator application. They meet all the requirements such as low noise, fuel economy, high engine speed, and durability.
To maintain the engine in optimum condition and retain maximum performance for a long time, CORRECT OPERATION and PROPER MAINTENANCE are essential.

In this manual, the following symbols are used to indicate the type of service operations to be performed.

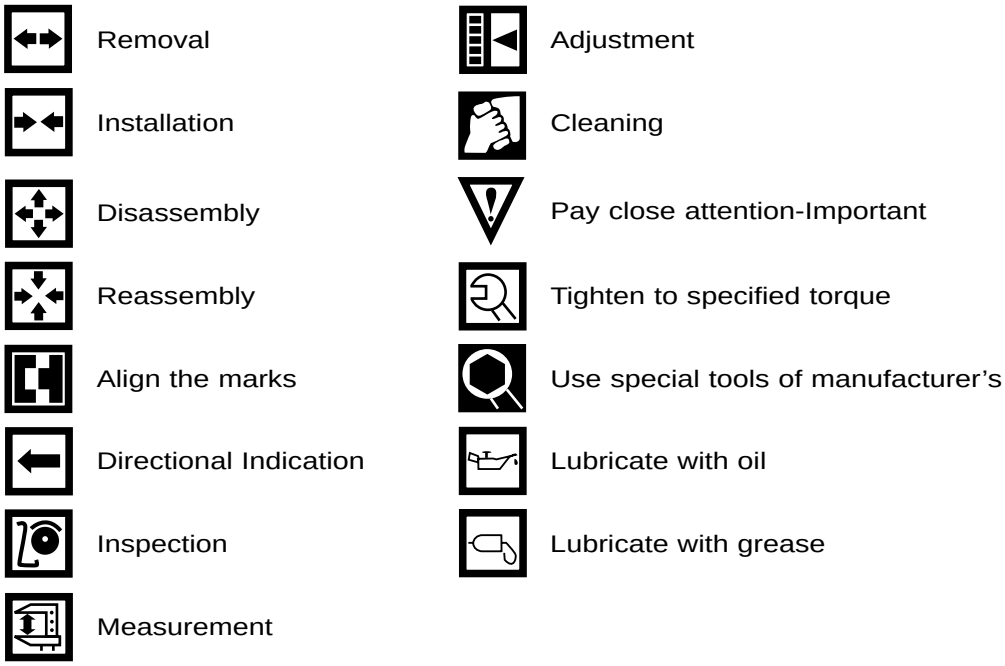

During engine maintenance, please observe following instructions to prevent environmental damage;

- Take old oil to an old oil disposal point only.
- Ensure without fail that oil and diesel fuel will not get into the sea or rivers and canals or the ground.
- Treat undiluted anti-corrosion agents, antifreeze agents, filter element and cartridges as special waste.
- The regulations of the relevant local authorities are to be observed for the disposal of spent coolants and special waste.

https://truckmanualshub.com/

If you have any question or recommendation in connection with this manual, please do not hesitate to contact our head office, dealers or authorized service shops near by your location for any services.

For the last, the content of this maintenance instruction may be changed without notice for some quality improvement. Thank you.

DAEWOO Heavy Industries LTD.
July. 1999

https://truckmanualshub.com/

CONTENTS

1. GENERAL INFORMATION 1

1.1. General repair instructions
1.2. Engine characteristics
1.3. Engine assembly
1.4. Engine specifications

2. MAJOR MAINTENANCE 8

2.1. Preventive maintenance
2.2. Diagnosis and remedy
2.3. Engine inspection

3. DISASSEMBLY AND REASSEMBLY OF MAJOR COMPONENTS 28

3.1. Disassembly
3.2. Inspection
3.3. Reassembly
3.4. Breaking-in

4. MAINTENANCE OF MAJOR COMPONENTS 81

4.1. Cooling system
4.2. Lubricating system
4.3. Fuel injection pump
4.4. Turbocharger

5. SPECIAL TOOL LIST 127

- **Appendix 130**
- **Worldwide Network**

https://truckmanualshub.com/

1. General information

1.1 General repair instructions

1. Before Performing service operation, disconnect the grounding cable from the battery for reducing the chance of cable damage and burning due to short-circuiting.
2. Use covers for preventing the components from damage or pollution.
3. Engine oil and anti-freeze solution must be handled with reasonable care as they cause paint damage.
4. The use of proper tools and special tools where specified is important to efficient and relaible service operation.
5. Use genuine DAEWOO parts necessarily.
6. Used cotter pins, gaskets, O-rings, oil seals, lock washer and self-lock nuts should be discarded and new ones should be prepared for installation as normal function of the parts can not be maintained if these parts are reused.
7. To facilitate proper and smooth reassemble operation, keep disassembled parts neatly in groups. Keeping fixing bolts and nut separate is very important as they vary in hardness design depending on position of Installation.
8. Clean the parts before inspection or reassembly. Also clean oil ports, etc. using compressed air to make certain they are free from restrictions.
9. Lubricate rotating and sliding faces of parts with oil or grease before installation.
10. When necessary, use a sealer on gaskets to prevent leakage.
11. Carefully observe all specifications for bolts and nuts torques.
12. When service operation is completed, make a final check to be sure service has been done property.

https://truckmanualshub.com/

1.2. Engine characteristics

1.2.1 OMEGA combustion bowl

The OMEGA combustion bowl is a unit designed to perform high efficiency, low emission combustion. As the rim around the combustion bowl port of the upper of the piston has been machined in a smaller size than the interior of the combustion bowl, strong swirl is produced in the combustion bowl and strong squish flow makes the fuel be mixed more sufficiently with air.
Due to the application of OMEGA combustion system and optimal utilization of intake and exhaust port configuration within the cylinder head, the POLUS P126TI and DE12T (DE12 series) generator diesel engines discharge very low level of hazardous exhaust gases such as smoke, nitrogen oxide, hydrocarbon, or carbon monoxide and thus ensure high performance and low fuel consumption.

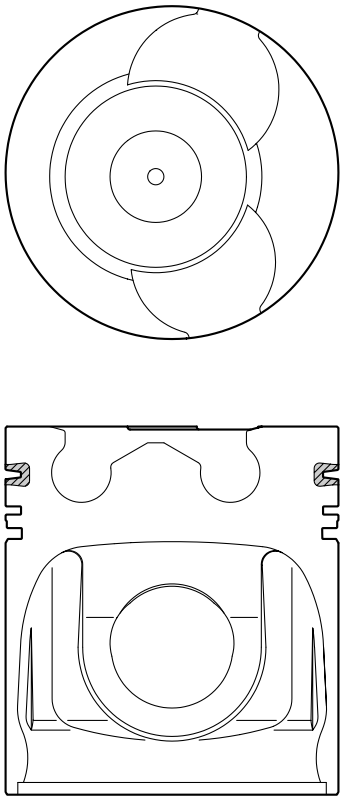

EA8M1001

1.2.2. Oil gallery cooling type pistion(P126TI)

Oil gallery cooling is used for the piston of P126TI generator engine.
When thermal loading is high, piston cooling by means of an oil gallery in the crown is normally necessary to prevent crown cracking and ring sticking. The design of the gallery, the design and location of the oil spary nozzel and the quantity of oil flowing in the gallery are critical in order to achieve the desired temperature reduction. The cross section shape of the gallery should be designed to achieve sufficient oil movement to maximize cooling efficiency.

EA7M1001

https://truckmanualshub.com/

1.3. Engine assembly

1.3.1. Engine sectional view (longitudinal)

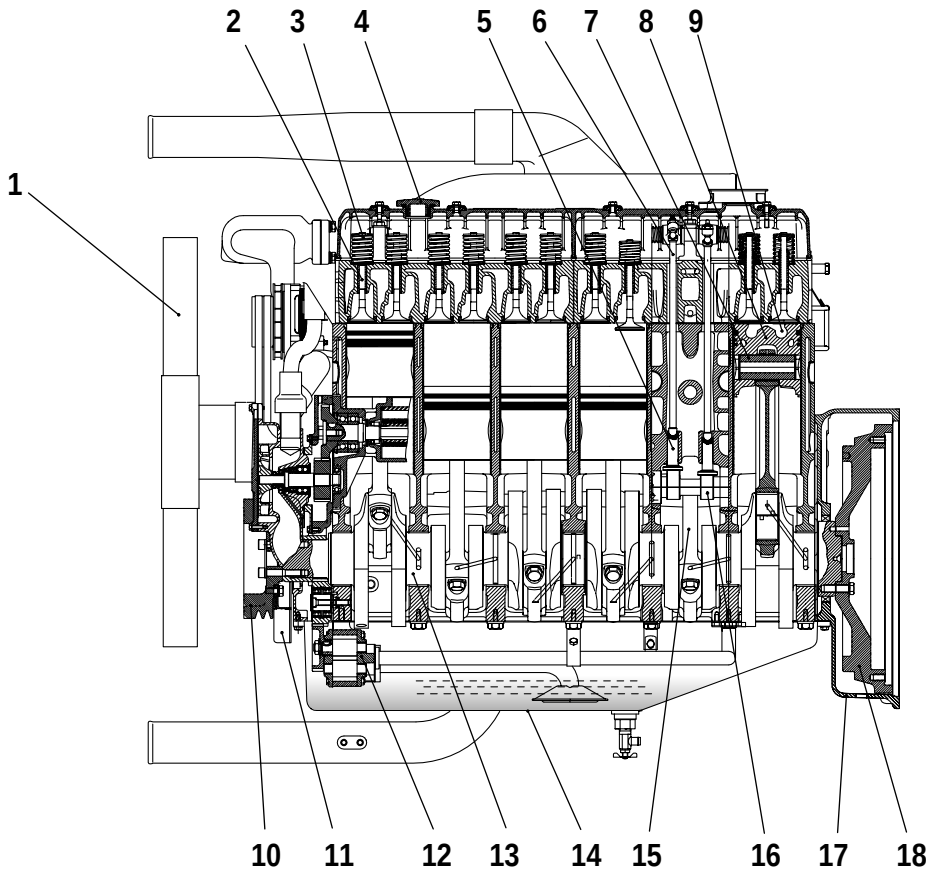

EA8M1002

1. Cooling fan
2. Exhaust valve
3. Valve spring
4. Oil filter
5. Tappet
6. Push rod
7. Piston pin
8. Piston
9. Combustion chamber
10. Crankshaft pulley
11. Vibration damper
12. Oil pump
13. Crankshaft
14. Oil pan
15. Connecting rod
16. Camshaft
17. Flywheel housing
18. Flywheel

https://truckmanualshub.com/

1.3.2. Engine sectional view (cross)

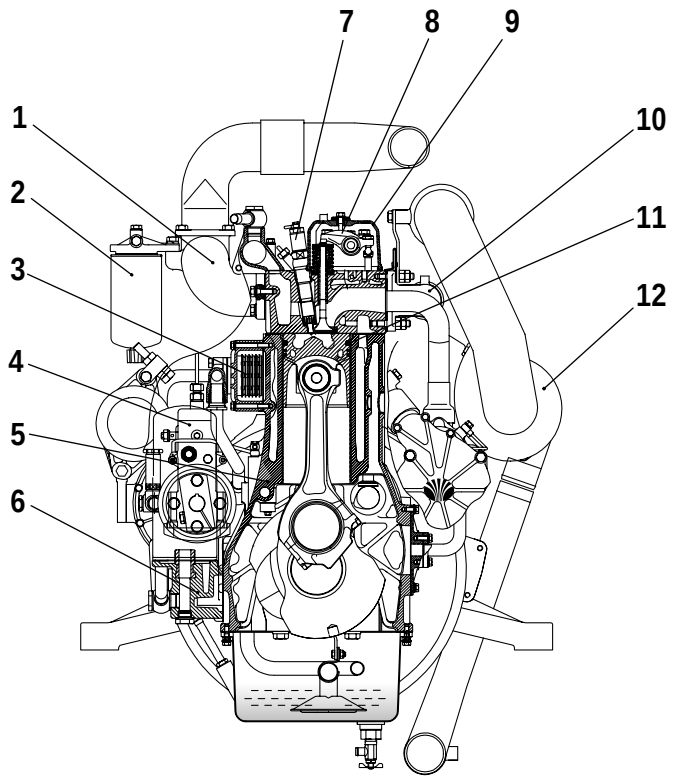

EA8M1003

1. Intake manifold
2. Fuel filter
3. Oil cooler
4. Injection pump
5. Cylinder block
6. Oil filter
7. Injection nozzle assembly
8. Rocker arm
9. Cylinder head cover
10. Exhaust manifold
11. Piston ring
12. Turbocharger

https://truckmanualshub.com/

1.3.3. Engine assembly views

1) DE12T

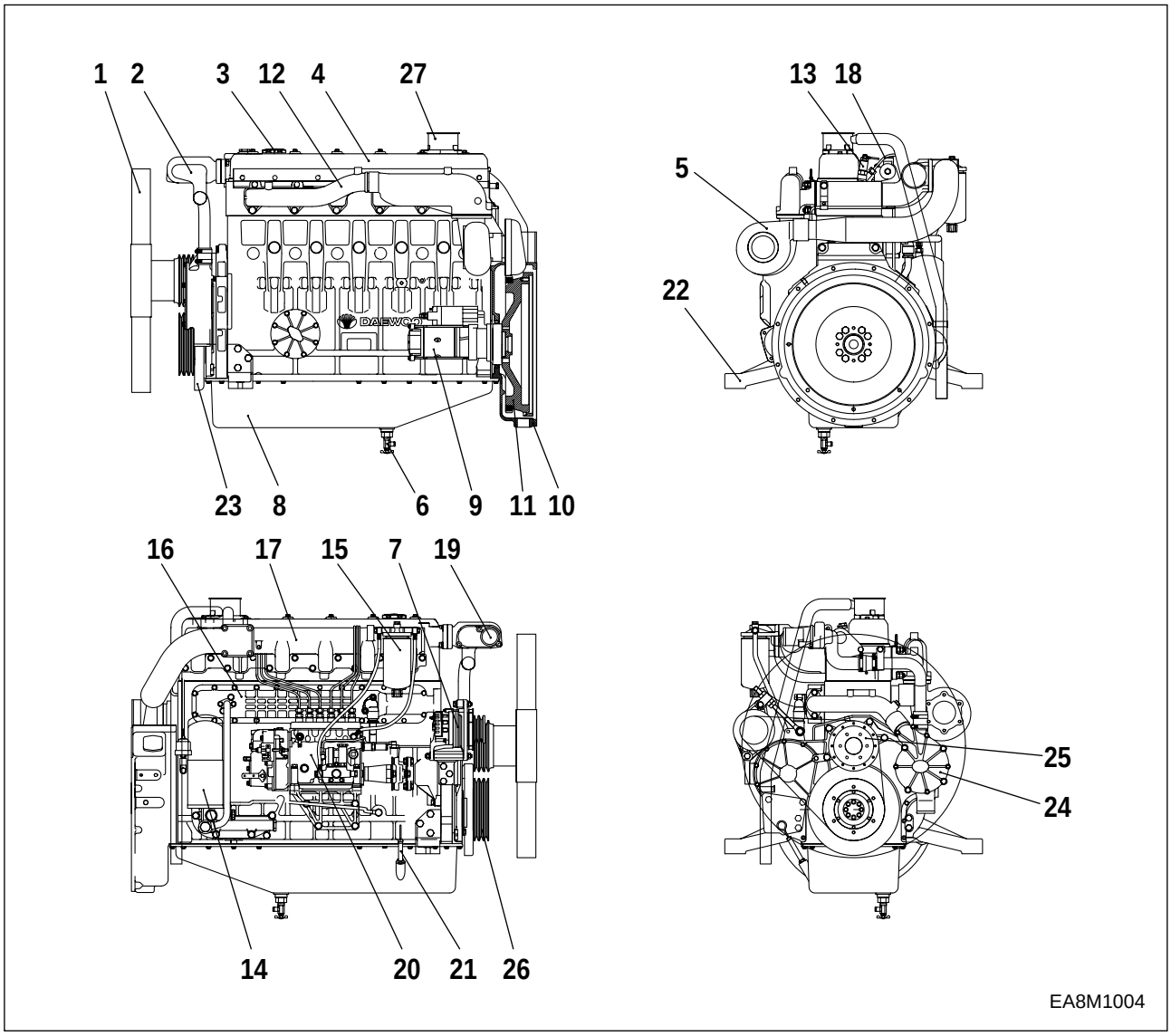

1. Cooling fan
2. Cooling water pipe
3. Oil filler cap
4. Cylinder head cover
5. Turbocharger
6. Oil drain valve
7. Alternator
8. Oil pan
9. Starter
10. Flywheel housing
11. Flywheel
12. Exhaust manifold
13. Injection nozzle assembly
14. Oil filter
15. Fuel filter
16. Oil cooler
17. Intake manifold
18. Injection pipe
19. Thermostat
20. Injection pump
21. Oil level gauge
22. Mounting bracket
23. Vibration damper
24. Water pump
25. Fan drive
26. Crankshaft pulley
27. Breather

https://truckmanualshub.com/

2) P126TI

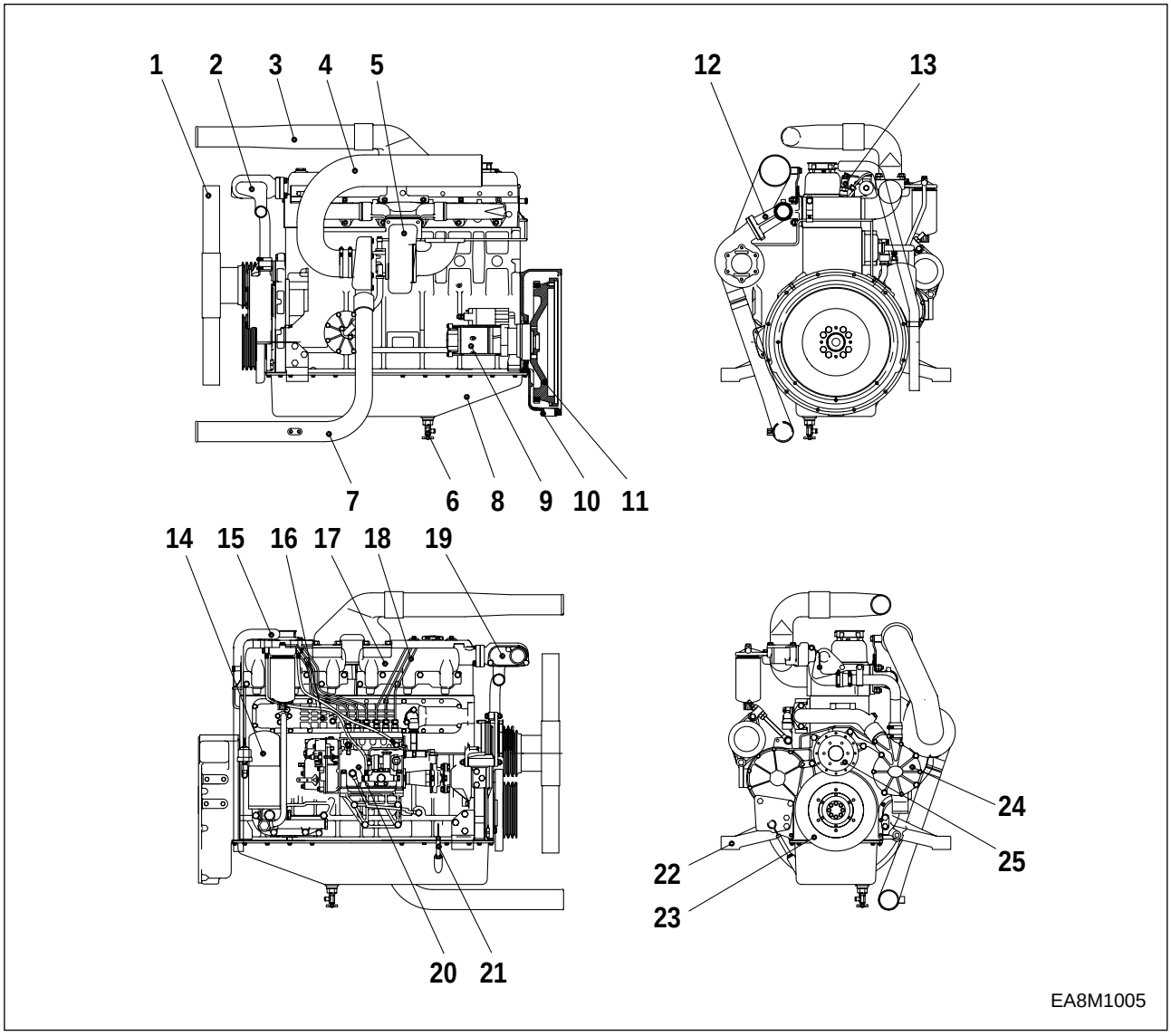

1. Cooling fan
2. Cooling water pipe
3. Air pipe
   (Intercooler ⟶ Intake manifold)
4. Air pipe
   (Air cleaner ⟶ Turbocharger)
5. Turbocharger
6. Oil drain valve
7. Air pipe
   (Intercooler ⟶ Intake manifold)
8. Oil pan
9. Starter
10. Flywheel housing
11. Flywheel
12. Exhaust manifold
13. Injection nozzle assembly
14. Oil filter
15. Breather hose
16. Oil cooler
17. Intake manifold
18. Injection pipe
19. Thermostat
20. Injection pump
21. Oil level gauge
22. Mounting bracket
23. Vibration damper
24. Water pump
25. Fan drive

1.4. Engine specifications

Items \ Engine Model		DE12T		P126TI		P126TI-I
Engine type		Water-cooled, 4 cycle in-line type Turbo charged		Water-cooled, 4 cycle in-line type Turbo charged & intercooled		
Combustion chamber type		Direct injection type				
Cylinder liner type		Replaceable dry liner				
Timing gear system		Gear driven type				
No. of piston ring		Compression ring 2, oil ring 1				
No. of cylinder-bore x stroke (mm)		4 - 123 x 155				
Total piston displacement (cc)		11,051				
Compression ratio		17.1 : 1				
Engine dimension (length x width x height) (mm)		1,365.5 x 870 x 1,046		1,383 x 870 x 1,207		
Engine weight (kg)		910				
Rotating direction (from flywheel)		Counter clockwise				
Fuel injection order		1 - 5 - 3 - 6 - 2 - 4				
Fuel injection timing (B.T.D.C static)		12°				
Injection pump type		Zexel in-line “P” type				
Governor type		Mechanical governor type(RSV)		Electric governor type(GAC)		
Injection nozzle type		Multi-hole type (5 hole)		Multi-hole type (5 hole)		
Fuel injection pressure (kg/cm^2)		220		1st : 160, 2nd : 220		
Compression pressure (kg/cm^2)		28 (at 200 rpm)				
Power (ISO 3046)	Condition	50Hz (1,500rpm)	60Hz (1,800rpm)	50Hz (1,500rpm)	60Hz (1,800rpm)	60Hz (1,800rpm)
	Continuous	-	-	280PS (206kW)	336PS (247kW)	-
	Prime	205PS (151kW)	245PS (180kW)	328PS (241kW)	378PS (278kW)	356PS (262kW)
	Stand by	226PS (166kW)	270PS (199kW)	370PS (272kW)	405PS (298kW)	392PS (288kW)
Intake and exhaust valve clearance (at cold) (mm)		0.3				
Intake valve	Open at	18° (B.T.D.C)				
	Close at	34° (A.B.D.C)				
Exhaust valve	Open at	46° (B.B.D.C)				
	Close at	14° (A.T.D.C)				
Lubrication method		Full forced pressure feed type				
Oil pump type		Gear type driven by crankshaft				
Oil filter type		Full-flow, Cartridge type				
Lubricating oil capacity (max./min.) (lit)		23/20				
Oil cooler type		Water cooled				
Water pump		Gear driven impeller type				
Cooling Method		Pressurized circulation				
Cooling water capacity (engine only) (lit)		19				
Thermostat type		Wax pallet type (83 ~ 95 °C)				
Alternator voltage - capacity (V - A)		24 - 45				
Starting Motor voltage - output (V - kW)		24 - 6.0				

https://truckmanualshub.com/

2. Major maintenance

2.1. Preventive maintenance

The preventive maintenance means that the operator performs the servicing of engine to obtain long life and best performance from DAEWOO diesel engine.

2.1.1. Cooling water

- Regarding the cooling water that is to be used for engine, the soft water not the hard water must be used.
- The engine cooling water can be used diluting it with antifreezing solution 40% and the additive for rust prevention (DCA4) 3 ~ 5 %.
- The density of above solution and additive must be inspected every 500 hours to maintain it properly.

Note : *The proper density control of antifreezing solution and rust preventing additive will be able to prevent the rusting effectively and maintain the stable quality of engine. For the improper control might give the fatal damage to the cooling water pump and cylinder liners, detail care is needed.*

- Since DE12T and POLUS P126TI (generator diesel engine of DE12 series) cylinder liner is dry type, particularly the cooling water control should be applied thoroughly.
- The density of antifreezing solution and additive for rust prevention is able to be confirmed by the cooling water test kit. (Fleetguard CC2602M)
- How to use the cooling water test kit

1) When the cooling water temp. of engine is in the range of 10 ~ 55 °C, loosen the plug for cooling water discharge and fill the plastic cup about a half.

Note : *In taking the cooling water sample, if the water in auxiliary tank were taken, it is hard to measure the accurate density. Take the cooling water sample necessarily loosening the cooling water discharge plug.*

2) At the state of a test paper soaked in the sampled water, after taking the paper out through water agitation, shake off the water.
3) Wait for about 45 sec. till the color change of test paper.

Note : *However, it should not elapse longer than 75 sec, and if it did, the hue would change.*

4) Make the numerical value by comparing the test paper which hue has changed with the color list of label on storage bottle.
5) By comparing the hue changed into yellowish green or so with the green color indication of test paper storage bottle, confirm the density. (Then, the density indication must be in the hue range of 33% to 50%).
6) The brown at the middle of test paper and the lower pink color indication represent the additive state for rust prevention, and the proper range is that the meeting numerical value of brown (vertical) and pink color (horizontal) locates in the range of 0.3 to 0.8 at the color list of label on the test paper storage bottle.
7) In case of less than 0.3, replenish the additive for rust prevention (DCA4), and in case of more than 0.8, pour out the cooling water about 50% and then readjust the density after refilling with clean fresh water.

● **Amount of Anti-freeze in winter**

Ambient Temperature (˚C)	Cooling water (%)	Anti-freeze (%)
Over -10	85	15
-10	80	20
-15	73	27
-20	67	33
-25	60	40
-30	56	44
-40	50	50

2.1.2. Fan belt

- Use a fan belt of specified dimensions, and replace if damaged, frayed, or deteriorated.
- Check the fan belt for belt tension.
  If belt tension is lower than the specified limit, adjust the tension by relocating the alternator. (specified deflection: 10 ~ 15 mm when pressed down with thumb)

2.1.3. Engine oil

- Check oil level with the oil level gauge and replenish if necessary.
- Check the oil level with the engine cooled. If the engine is warm, allow time for 5 ~ 10 minutes for oil drain into the crankcase before checking oil level. The oil level must be between Max and Min. lines on the gauge.
- Engine oil should be changed at the specified intervals. (800 hr) Oil in the oil filter should be changed simultaneously.
  - First oil change : 50 hr operating
- The oil viscosity grades should be selected SAE NO.15W40 and API CD or CE.

https://truckmanualshub.com/

2.1.4. Oil filter

- Check for oil pressure and oil leaks, and repair or replace the oil filter if necessary.
- Change the oil filter cartridge simultaneously at every replacement of engine oil.

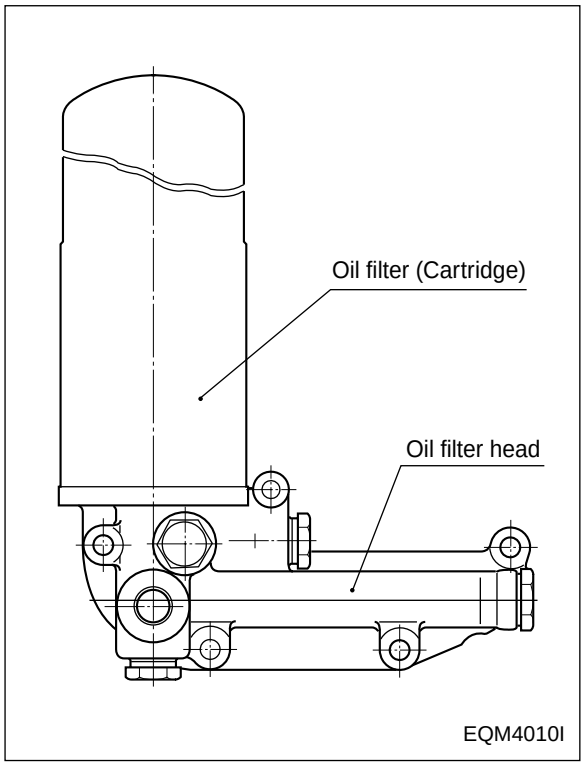

2.1.5. Fuel filter

- Drain water in cartridge with loosening the cock under filter manually (6) from time to time.
- The fuel filter should be replaced at every 1,200 hours.

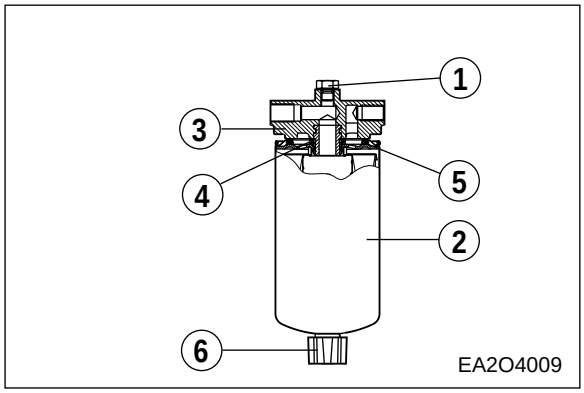

2.1.6. Air cleaner

- In case that elements are deformed, damaged or if the air cleaner has a crack, replace it.
- By the definite interval, the elements must be cleaned and replaced.

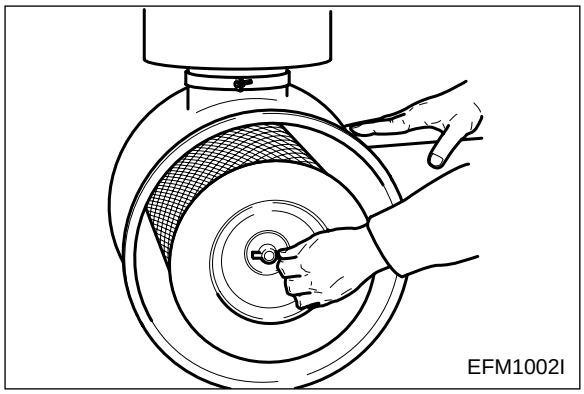

https://truckmanualshub.com/

2.1.7. Intercooler

The intercooler is air to air type and has a large cooling fan capacity. The intercooler life and performance depends on the intake air condition greatly. Fouled air pollutes and clogs the air fins of intercooler. As a result of this, the engine output is decreased and engine malfunction is occurred. So you always check whether the intake air systems like air filter element are worn or polluted.

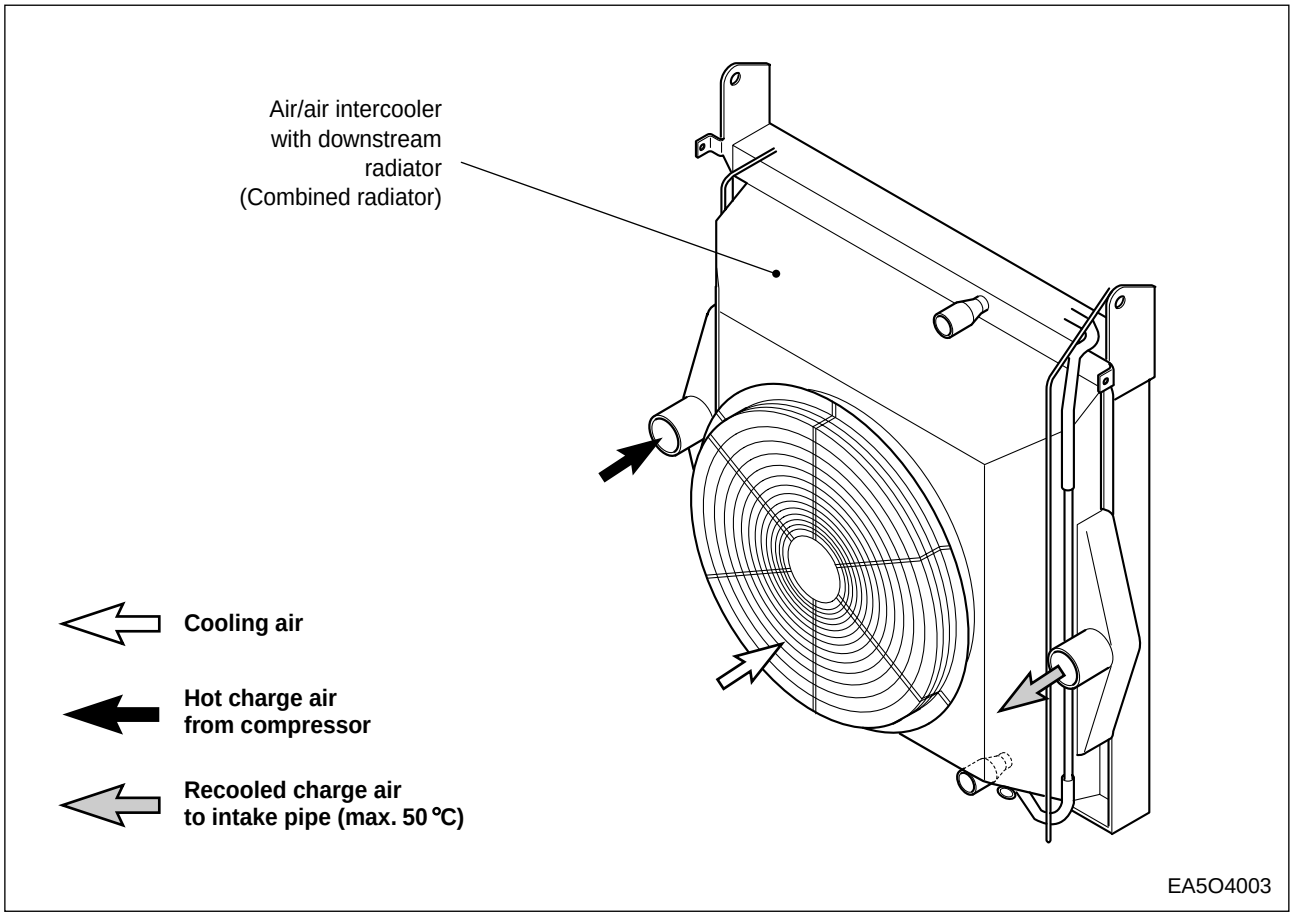

- Cleaning of intercooler fins: Every 600 hours.

2.1.8. Valve clearance adjust procedure

- After letting the #1 cylinder's piston come at the compression top dead center by turning the crankshaft, adjust the valve clearances.

- Loosen the lock nuts of rocker arm adjusting screws and push the feeler gauge of specified value between a rocker arm and a valve stem and adjust the clearance with adjusting screw respectively and then tighten with the lock nut.

https://truckmanualshub.com/

- As for the valve clearance, adjust it when in cold, as follow.

Model	Intake Valve	Exhaust Valve
DE12T P126TI	0.3 mm	0.3 mm

- By cranking the engine, let #6 cylinder's valves overlap.
- In time, adjust the valve clearance corresponding to " ⇨ " of lower lists.
- Adjust the valve clearance corresponding to " ➔ " of lower lists.
- After reinsuring the valve clearances, retighten if necessary.

- No. 1 Cylinder is located at the side where flywheel was installed.

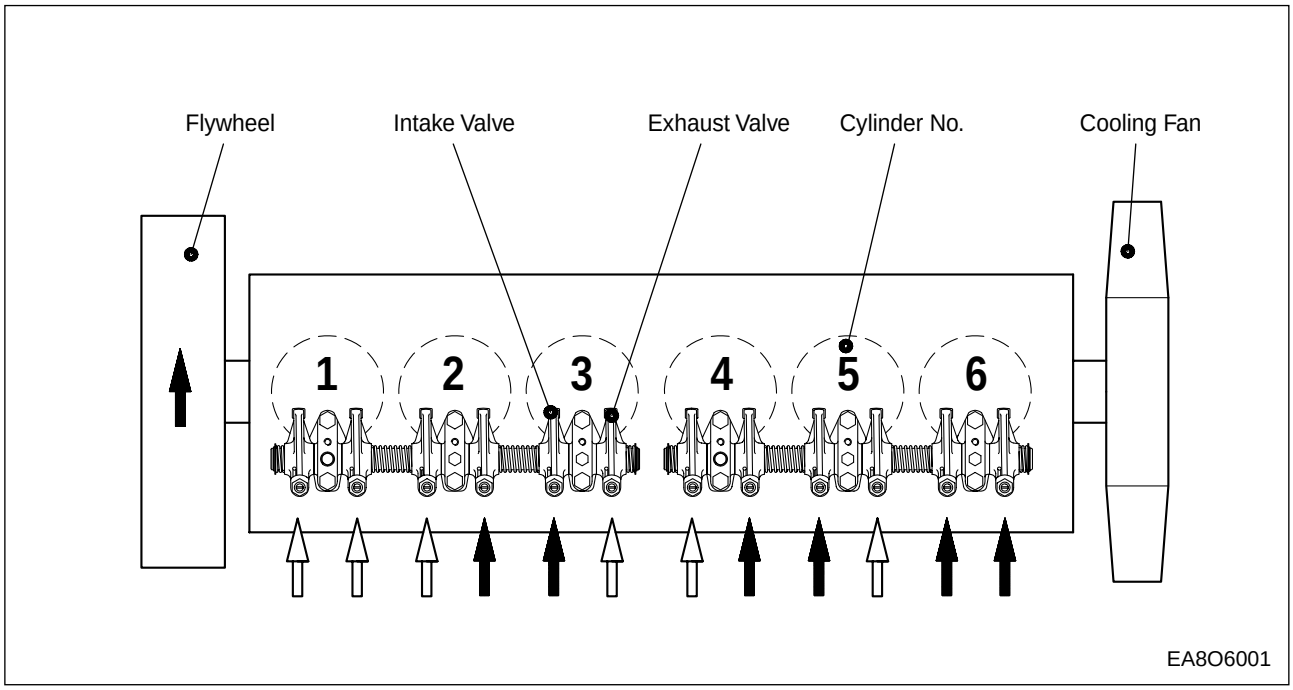

2.1.9. Cylinder compression pressure

- Stop the engine after warming up, and take out nozzle holder assembly.

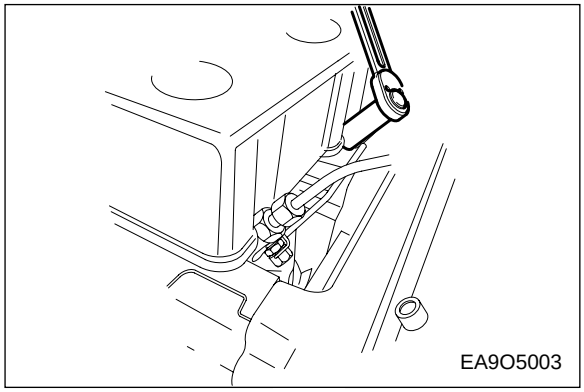

- Install the special tool (compression gauge adapter) at the nozzle holder hole, and connect the compression pressure gauge there.

Standard value	28kg/cm² over
Limit value	24kg/cm²
Difference between each cylinder	Within ± 10 %

- Condition : Water temperature 20˚C, Engine rotation 200rpm (10 rotation)

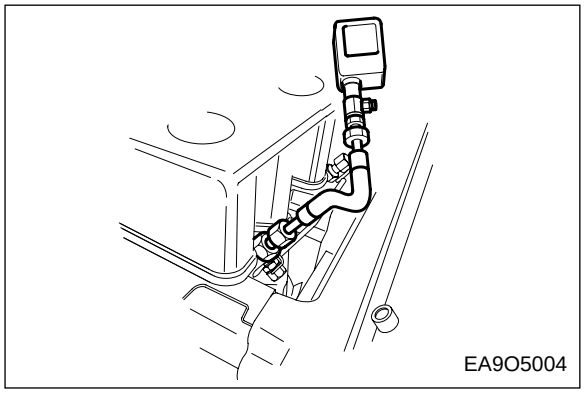

2.1.10. Injection nozzle

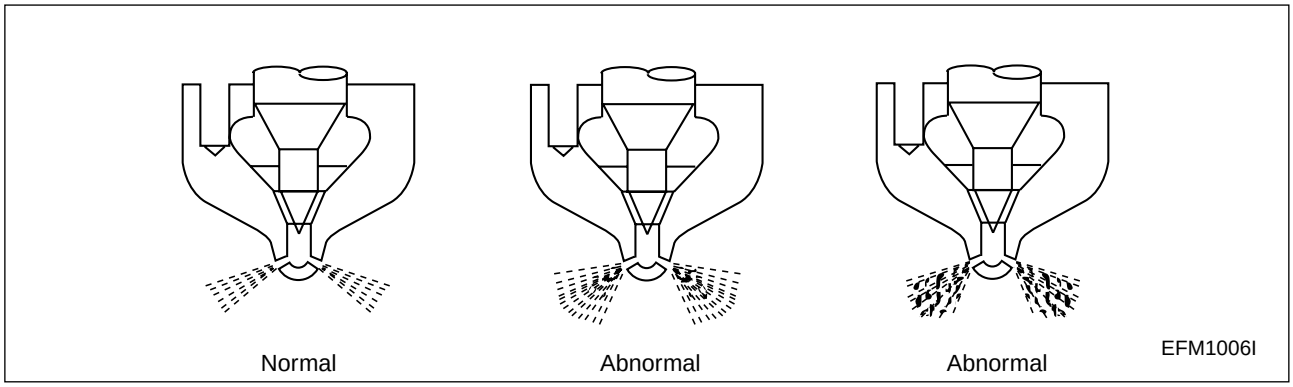

- IInstall a nozzle on the nozzle tester.
- If the inspected injection pressure is less than the specified value, adjust using the adjusting shims.

Engine Model	DE 12T	P126TI
Injection nozzle pressure	220kg/cm²	1st : 160kg/cm² 2nd : 220kg/cm²

- Check the atomizing state and repiace it if abnormal.

https://truckmanualshub.com/

2.1.11. Fuel injection pump

- ICheck the housing crack, damage etc. and replace it if abnormal.
- Check if the idle operation and speed regulating lever's sealing is removed.
- The adjustment and testing of fuel injection pump should necessarily be done at the test bench.

2.1.12. Battery

- Inspect for any leakage of electrolytic solution owing to battery crack, and replace the battery in case of poor condition.
- Inspect for amount of electrolytic solution, and replenish if insufficient.
- Measure the gravity of electrolytic solution, if less than specified value (1.12 ~ 1.28), replenish.

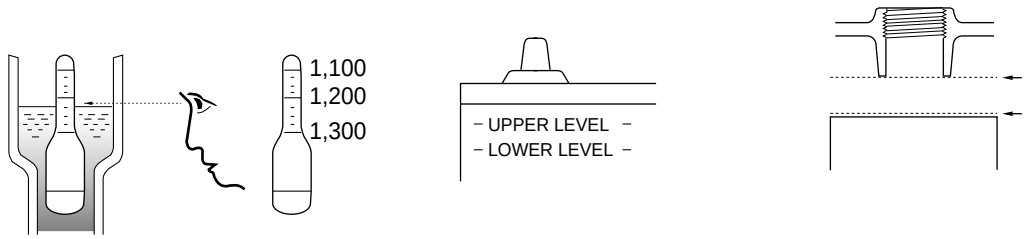

EFM1007I

2.1.13. Air removal of fuel system

The suction room of fuel injection pump has the function of air removal continuously during the operation through a relief valve.

In case that the suction room lacks fuel at all, for instance, in case of new installation of injection pump, after loosening the air removing screws of cartridge filter respectively, remove the air by operating the manual pump of fuel supply pump until bubble will disappear.

2.1.14. Fuel supply pump

Every time of engine oil replacement, the fuel strainer installed at the fuel supply pump should be removed and cleaned.

https://truckmanualshub.com/

2.1.15. Supercharger

The supercharger needs not arty special equipment

Every time of engine replacement, a leakage or clogging of oil pipes should be inspected. Air cleaner should be maintained carefully for nut or foreign material not to get in. Periodic inspection should be applied on the compressed air and exhaust gas pipes, For leaking air will bring the overheat engine, an immediate repair must be done.

During the operation that is surrounded by the dust and oil mixed air, frequent cleaning must be done on the impellers. Tear down the impeller casing (attention: be careful not to bend) and must clean with non-acid solvent solution. If necessary, use plastic scraper If impeller is severely polluted, dip the impeller into solution and may be better to clean it with stiff brush.

Then one thing to beware is to dip only impeller part and so do not support by impeller but bearing housing.

2.1.16. Starting motor

In case of engine maintenance, clean pinion and ring gear thoroughly putting in the fuel, and coat them with grease.

Also, In case of washing car and so forth, inspect the wiring state being careful for not to get.

2.2. Diagnosis and remedy

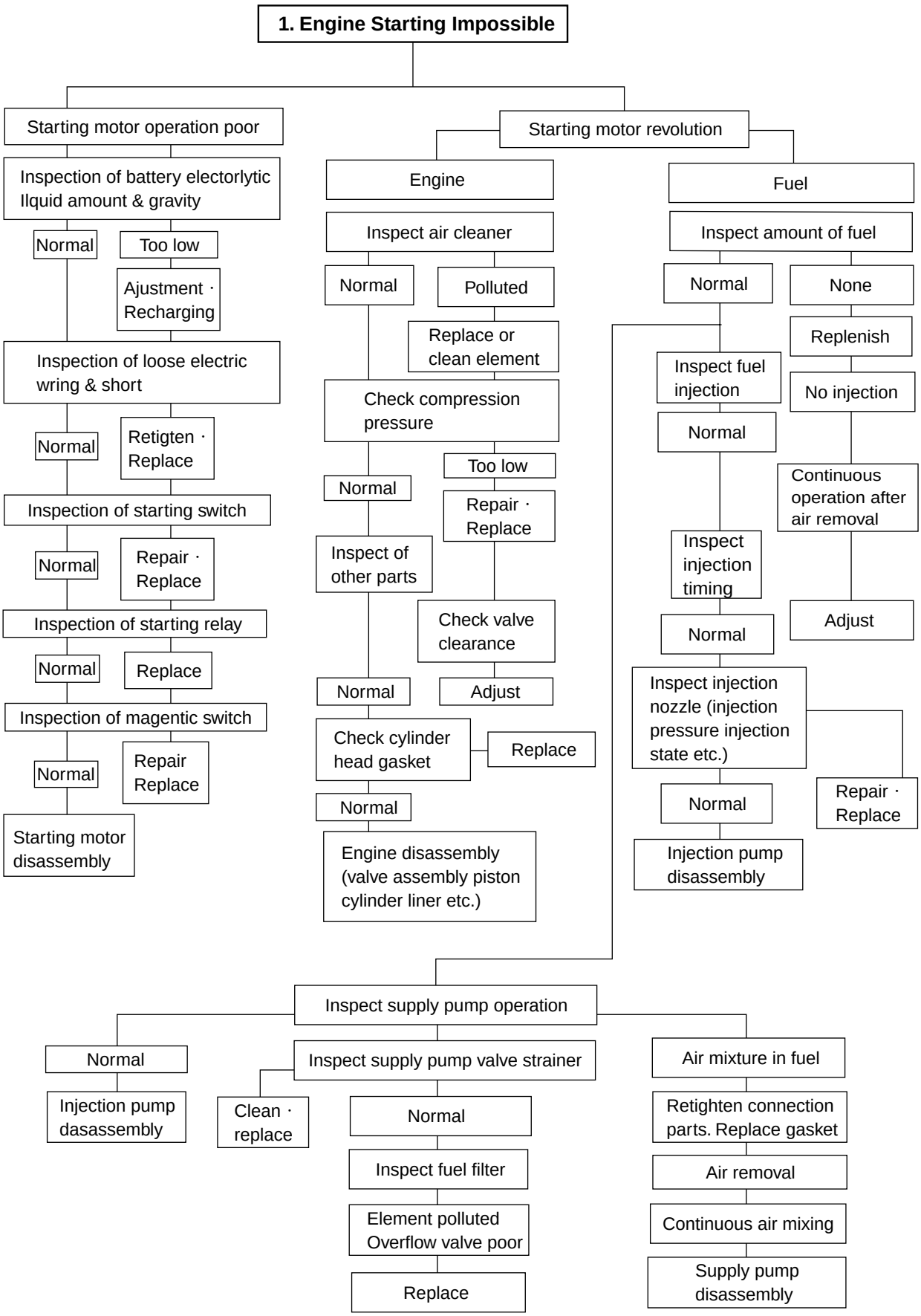

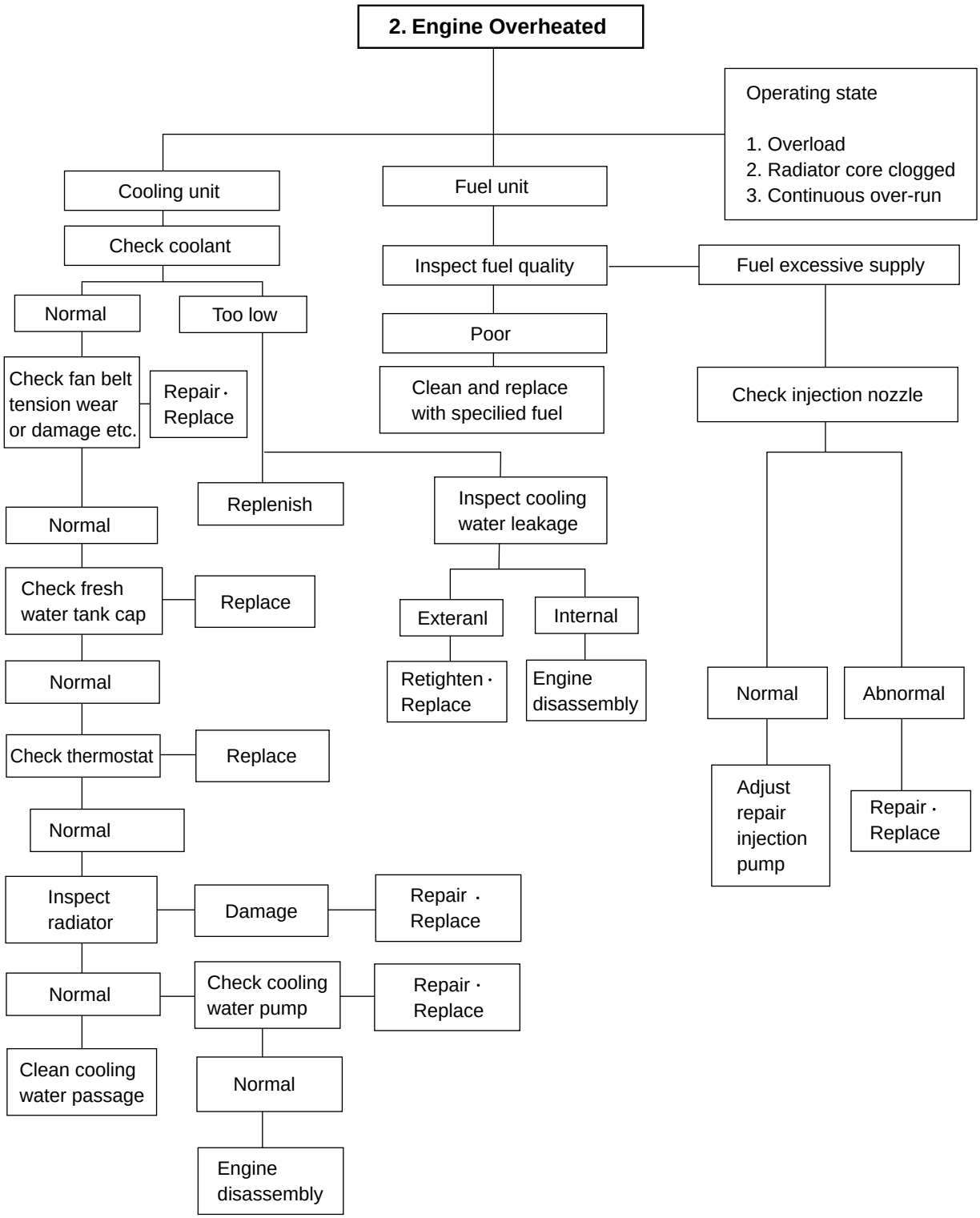
2. Engine Overheated
Operating state
1. Overload
2. Radiator core clogged
3. Continuous over-run
Cooling unit
Fuel unit
Check coolant
Inspect fuel quality
Fuel excessive supply
Normal
Too low
Poor
Check fan belt tension wear or damage etc.
Repair · Replace
Clean and replace with specilied fuel
Check injection nozzle
Replenish
Inspect cooling water leakage
Normal
Check fresh water tank cap
Replace
Exteranl
Internal
Normal
Abnormal
Normal
Retighten · Replace
Engine disassembly
Check thermostat
Replace
Adjust repair injection pump
Repair · Replace
Normal
Inspect radiator
Damage
Repair · Replace
Normal
Check cooling water pump
Repair · Replace
Clean cooling water passage
Normal
Engine disassembly

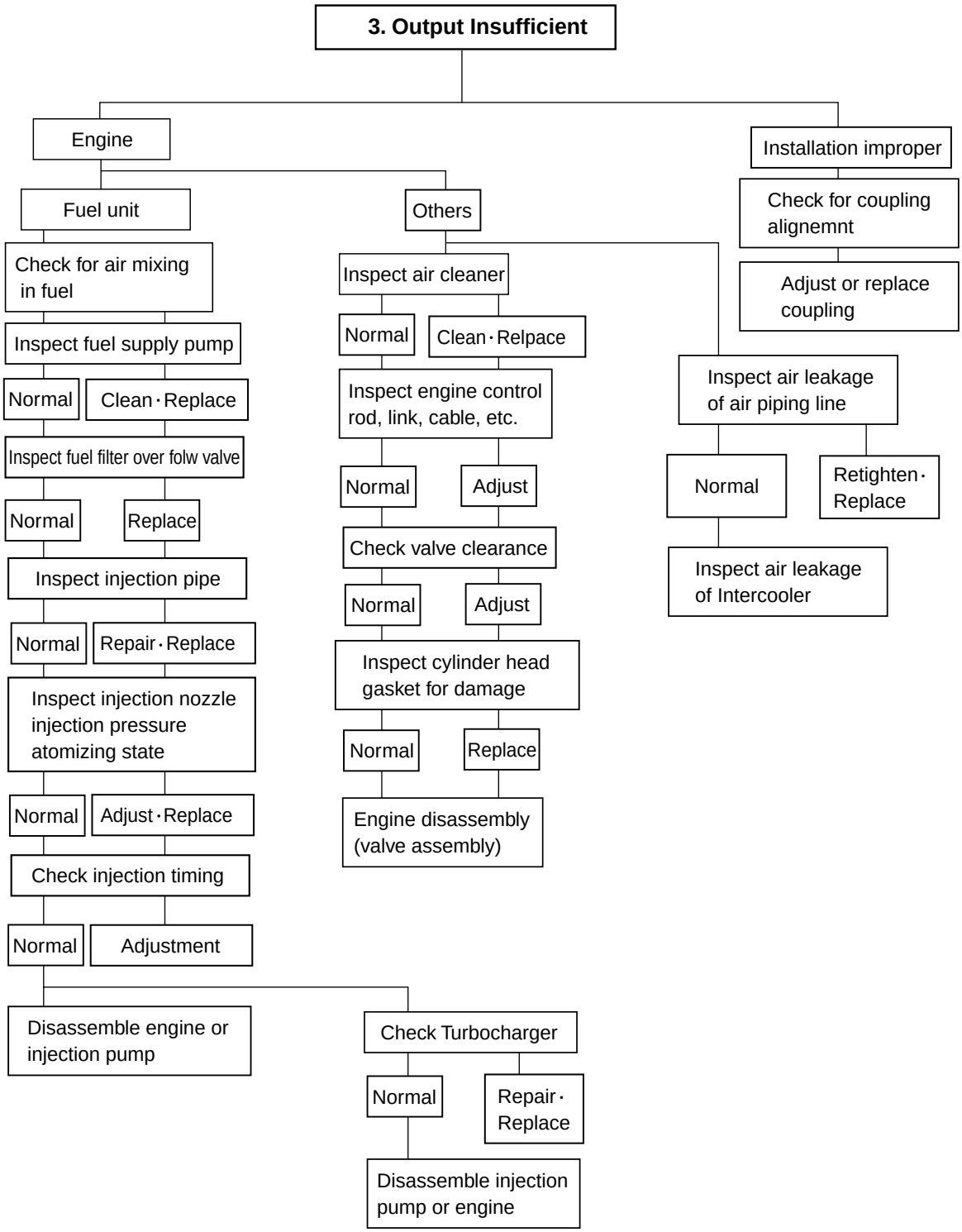
3. Output Insufficient
Engine
Installation improper
Fuel unit
Others
Check for coupling alignemnt
Adjust or replace coupling
Check for air mixing in fuel
Inspect fuel supply pump
Normal
Clean・Replace
Inspect fuel filter over folw valve
Normal
Replace
Inspect injection pipe
Normal
Repair・Replace
Inspect injection nozzle injection pressure atomizing state
Normal
Adjust・Replace
Check injection timing
Normal
Adjustment
Disassemble engine or injection pump
Check Turbocharger
Normal
Repair・Replace
Disassemble injection pump or engine
Inspect air cleaner
Normal
Clean・Relpace
Inspect engine control rod, link, cable, etc.
Normal
Adjust
Check valve clearance
Normal
Adjust
Inspect cylinder head gasket for damage
Normal
Replace
Engine disassembly (valve assembly)
Inspect air leakage of air piping line
Normal
Retighten・Replace
Inspect air leakage of Intercooler

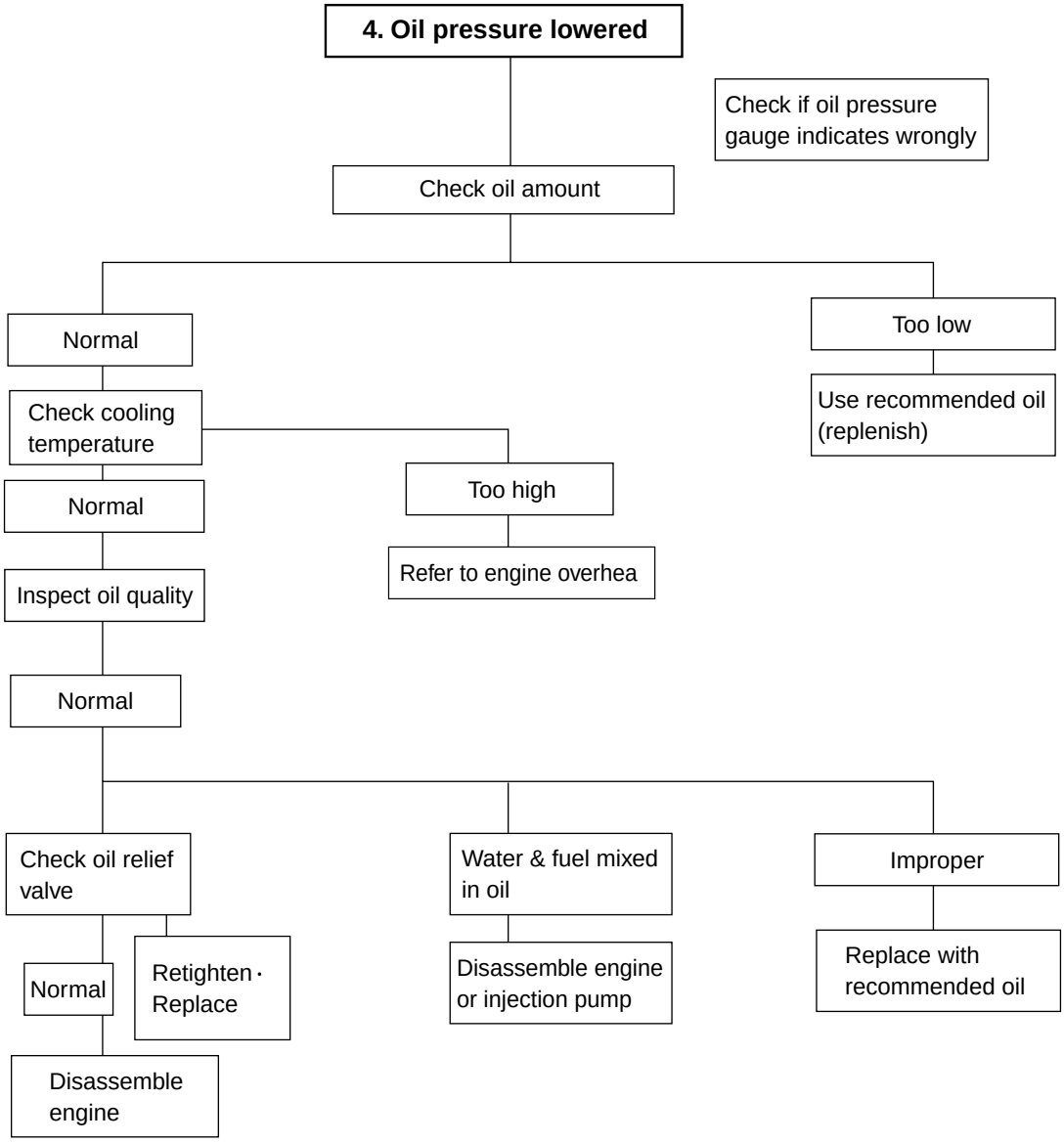
4. Oil pressure lowered
Check if oil pressure gauge indicates wrongly
Check oil amount
Normal
Too low
Use recommended oil (replenish)
Check cooling temperature
Normal
Too high
Refer to engine overhea
Inspect oil quality
Normal
Check oil relief valve
Water & fuel mixed in oil
Improper
Normal
Retighten・Replace
Disassemble engine or injection pump
Replace with recommended oil
Disassemble engine

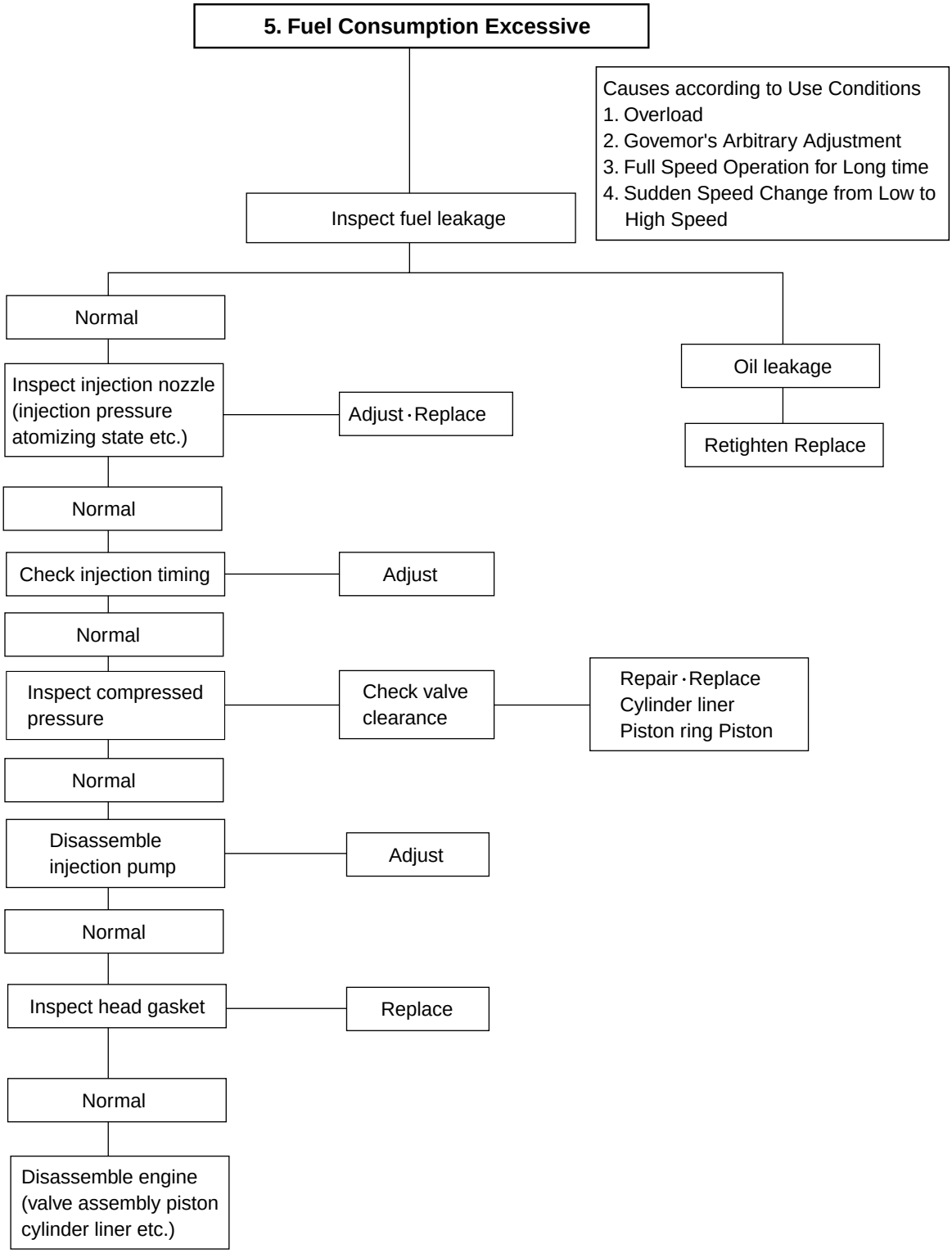
5. Fuel Consumption Excessive
Causes according to Use Conditions
1. Overload
2. Govemor's Arbitrary Adjustment
3. Full Speed Operation for Long time
4. Sudden Speed Change from Low to High Speed
Inspect fuel leakage
Normal
Oil leakage
Inspect injection nozzle (injection pressure atomizing state etc.)
Adjust · Replace
Retighten Replace
Normal
Check injection timing
Adjust
Normal
Inspect compressed pressure
Check valve clearance
Repair · Replace
Cylinder liner
Piston ring Piston
Normal
Disassemble injection pump
Adjust
Normal
Inspect head gasket
Replace
Normal
Disassemble engine (valve assembly piston cylinder liner etc.)

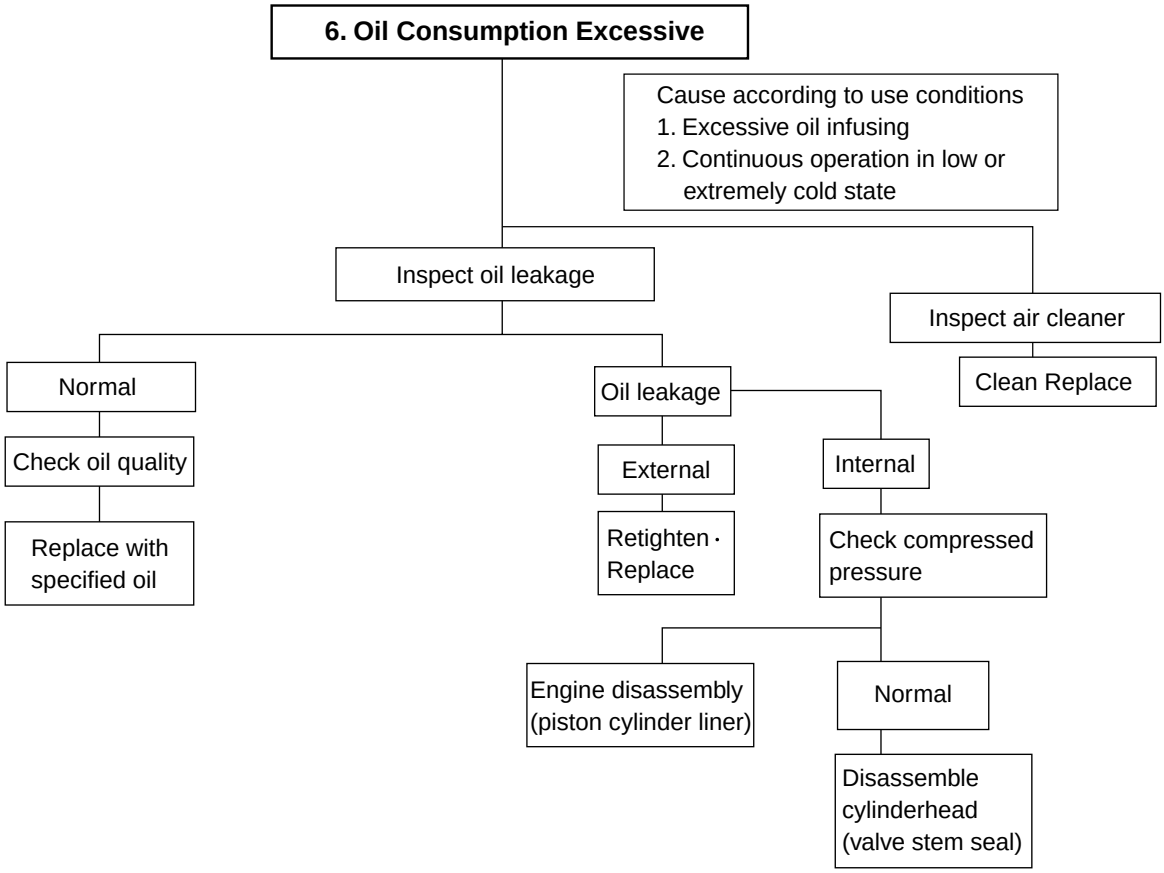
6. Oil Consumption Excessive
Cause according to use conditions
1. Excessive oil infusing
2. Continuous operation in low or extremely cold state
Inspect oil leakage
Inspect air cleaner
Clean Replace
Normal
Check oil quality
Replace with specified oil
Oil leakage
External
Retighten · Replace
Internal
Check compressed pressure
Engine disassembly (piston cylinder liner)
Normal
Disassemble cylinderhead (valve stem seal)

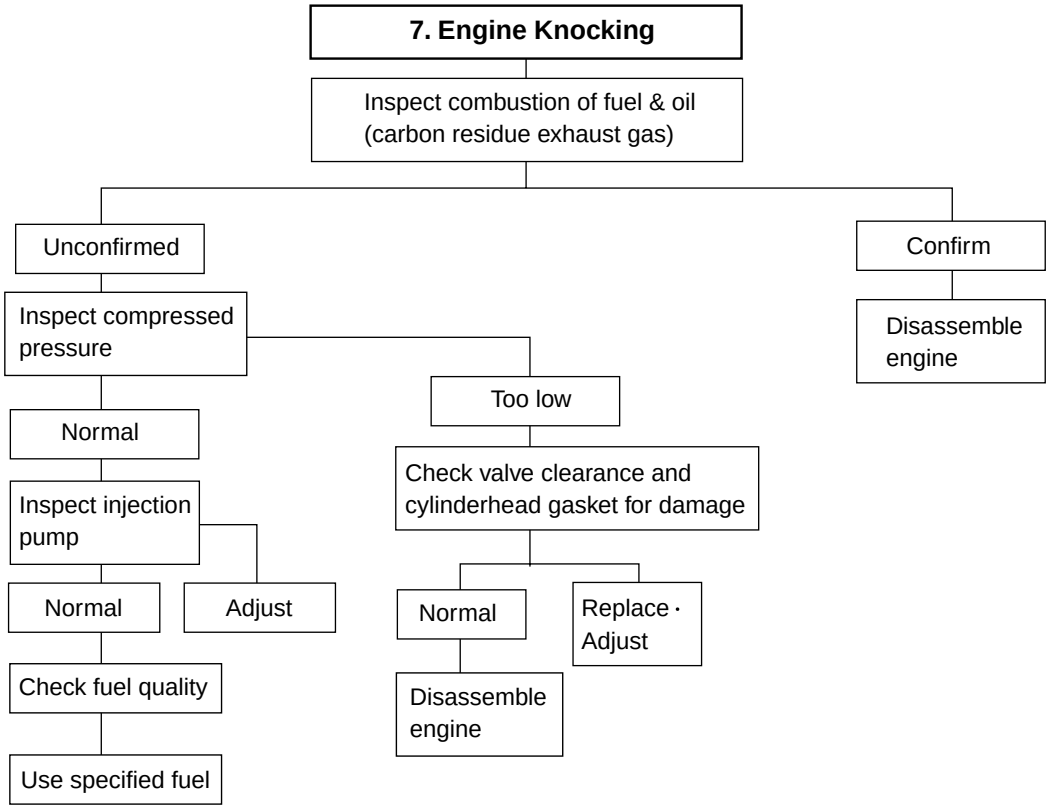
7. Engine Knocking
Inspect combustion of fuel & oil (carbon residue exhaust gas)
Unconfirmed
Confirm
Disassemble engine
Inspect compressed pressure
Too low
Check valve clearance and cylinderhead gasket for damage
Normal
Inspect injection pump
Normal
Adjust
Check fuel quality
Use specified fuel
Normal
Replace · Adjust
Disassemble engine

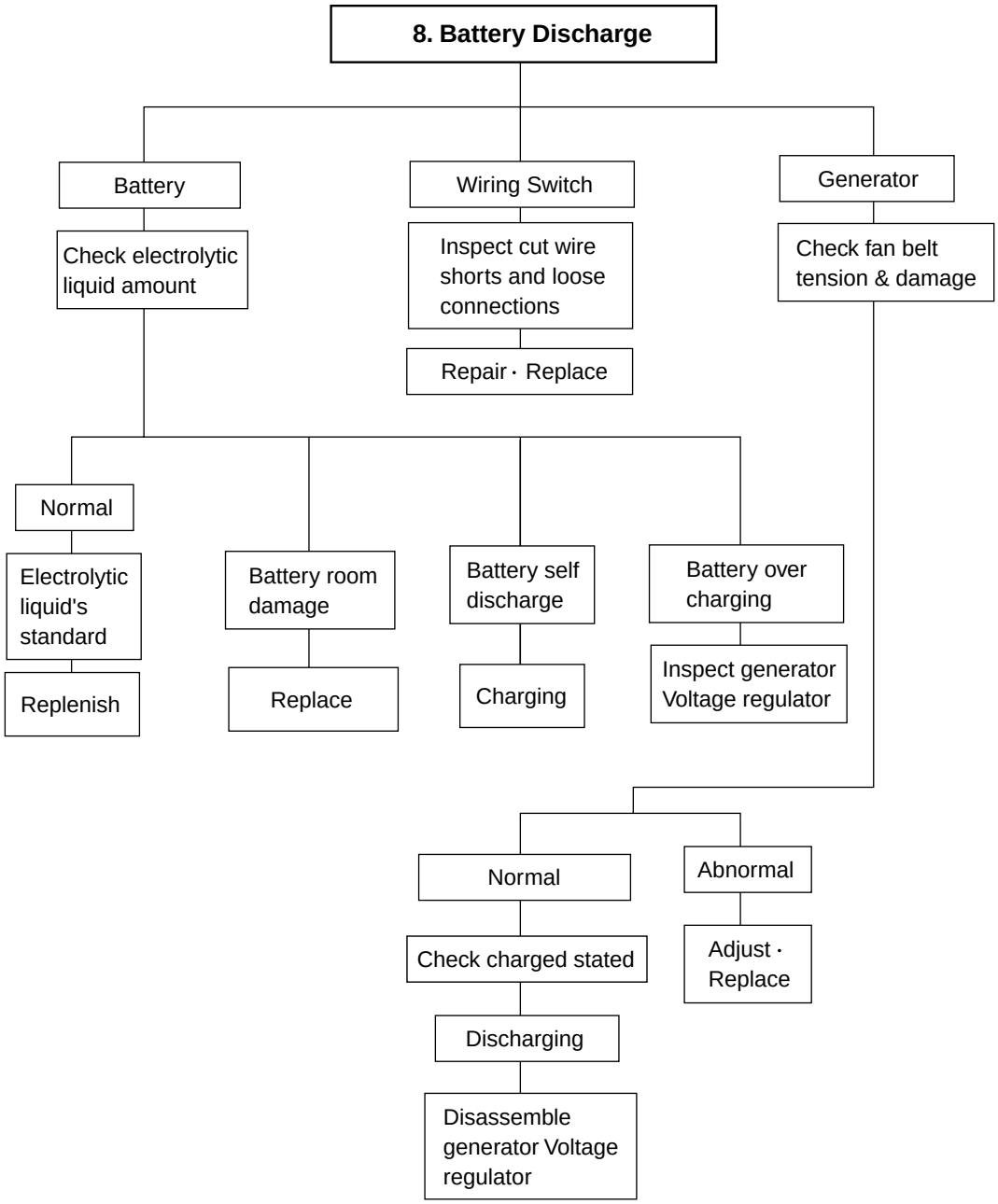
8. Battery Discharge
Battery
Wiring Switch
Generator
Check electrolytic liquid amount
Inspect cut wire shorts and loose connections
Check fan belt tension & damage
Repair · Replace
Normal
Electrolytic liquid's standard
Replenish
Battery room damage
Replace
Battery self discharge
Charging
Battery over charging
Inspect generator Voltage regulator
Normal
Check charged stated
Discharging
Disassemble generator Voltage regulator
Abnormal
Adjust · Replace

Condition	Causes	Remedies
1) Starting difficult (1) Compression pressure	• Valve's poor shut, stem distortion • Valve spring damage • Cylinder head gasket's leak • Wear of piston, piston ring or liner	Repair or replace Replace valve spring Replace gasket Adjust
2) Idle operation abnormal	• Injection timing incorrect • Air mixing at injection pump	Adjust Remove air
3) Engine output insufficient (1) Continuous output insufficient	• Valve clearance incorrect • Valve tightness poor • Cylinder head gasket's leak • Wear, stick, damage of piston ring • Injection timing incorrect • Fuel injection amount insufficient • Nozzle injection pressure improper or stuck • Supply pump's function lowered • Fuel pipe system clogged • Air suction amount insufficient • Supercharger poor	Adjust Repair Replace gasket Replace piston ring Adjust Adjust injection pump Adjust or replace Repair or replace Repair Clean or replace air cleaner Repair or replace
(2) Output insufficient when in acceleration	• Compression pressure insufficient • Injection timing incorrect • Fuel injection amount insufficient • Injection pump timer's function insufficient • Nozzle infection pressure, infection angle improper • Supply pump's function lowered • Air intake amount insufficient	Disassemble engine Adjust Adjust injection pump Repair or replace Repair, replace Repair or replace Clean or replace air
4) Overheating	• Engine oil insufficient or poor • Cooling water insufficient • Fan belt loosened, worn, damaged • Cooling water pump's function lowered • Water temp. regulator's operation poor • Valve clearance incorrect • Exhaust system's resistance increased	Replenish or replace Replenish or replace Adjust or replace Repair or replace Replace Adjust clean or replace

Condition	Cause	Remedies
5) Engine noisy	For noises arise compositely such asrota ting parts, lapping parts etc., there is nec essity to search the cause of noises accu rately.	
(1) Crankshaft	• As the wear of bearing or crankshaft progress, the oil clearances increase. • Lopsided wear of crankshaft • Oil supply insufficient due to oil passage clogging • Stuck bearing	Replace bearing & grind crankshaft Grind or replace Clean oil passage Replace bearing & Grind
(2) Con rod and Con rod bearing	• Lopsided wear of con rod bearing • Lopsided wear of crank pin • Connecting rod distortion • Stuck bearing • Oil supply insufficiency as clogging at oil passage progresses	Replace bearing Grind crankshaft Repair or replace Replace & grind crankshaft Clean oil passage
(3) Piston, piston pin & piston ring	• Piston clearance increase as the wear of piston and piston ring progresses • Wear of piston or piston pin • Piston stuck • Piston insertion poor • Piston ring damaged	Replace piston & piston ring Replace Replace piston Replace piston Replace piston
(4) Others	• Wear of crankshaft, thrust bearing bearing • Camshaft end play increased • Idle gear end play increased • Timing gear backlash excessive • Valve clearance excessive • Abnormal wear of tappet, cam • Supercharger inner part damaged	Replace thrust Replace thrust plate Replace thrust washer Repair or replace Adjust valve clearance Replace tappet, cam Repair or replace
6) Fuel Consumption Exttive	• Injection timing incorrect • Fuel injection amount excessive	Adjust Adjust injection pump

Condition	Cause	Remedies
7) Oil Consumption Excessive		
(1) Oil level elevated	• Clearance between cylinder iner & piston	Replace
	• Wear of piston ring, ring groove • Piston ring's damage, stick, wear • Piston ring opening's disposition improper • Piston skirt part damaged or abnormal wear • Oil ring's oil return hole clogged • Oil ring's contact poor	Replace piston, piston ring Replace piston ring Correct position Replace piston Replace piston ring Replace piston ring
(2) Oil level lowered	• Looseness of valve stem & guide • Wear of valve stem seal • Cylinder head gasket's leak	Replace in set Replace seal Replace gasket
(3) Oil leak	• Looseness of connection parts • Various parts' packing poor • Oil seal poor	Replace gasket, repair Replace packing Replace oil seal

https://truckmanualshub.com/

2.3. Engine inspection

2.3.1. Stopping Engine

Cut off the main circuit breaker of the generator control panel. After checking the engine for any unusual condition at the idling speed, then press the stop button to stop the engine.

2.3.2. General Engine inspection cycle

○ : Check & adjust ● : Replace

Inspection		Daily	Every 50hrs	Every 200hrs	Every 600hrs	Every 800hrs	Every 1200hrs	Remark
Cooling System	Check for leakage(hoses, clamp)	○						
	Check the water level	○						
	Change the coolant water						●	
	Adjust the V-belt tension	○						Every 2,000hrs
	Clean the radiator						○	
Lubrication System	Check for leakage	○						
	Check the oil level gauge	○						
	Change the lubricating oil		● 1st			○		
	Replace the oil filter cartridge		● 1st			○		
Intake & Exhaust System	Check the leakage for intercooler (hoses, clamp)	○						
	Clean and change the air cleaner element			○ clean	●			
	Clean the inter-cooler air fins				○			
	Clean the turbo-charger							Every 2,000hrs
Fuel System	Check the leakage fuel line	○						
	Clean the fuel strainer of fuel feed pump						○	
	Remove sediment from fuel tank						○	
	Drain the water in separator			○				
	Replace the fuel filter element						●	
	Check fuel Injection timing			○				When necessary
	Check the injection nozzles			○				When necessary
Engine Adjust	Check the state of exhaust gas	○						
	Check the battery charging	○						
	Check the compression pressure						○	When necessary
	Adjust Intake/Exhaust valve clearance		○ 1st					When necessary

https://truckmanualshub.com/

2.3.3. Use of original parts for repair and replacement

For engine is being mechanically harmonized with many parts, only when the original parts that the manufacture recommends to use is used, the engine trouble would be preventively maintained and capable to keep up the maximum performances.

For the analogous parts not the original parts are poor in qualities and gives ill performances, it may rather bring early engine failure.

https://truckmanualshub.com/

3. Disassembly and reassembly of major components

3.1. Disassembly

3.1.1. General precautions

- Maintenance operation should be carried out in a bright and clean place.
- Before disassembly, provide parts racks for storage of various tools and disassembled parts.
- Arrange the disassembled parts in the disassembly sequence and use care to prevent any damage to them.

3.1.2. Cooling water

- Remove the radiator cap. Open the drain plug at the radiator lower part to drain the coolant as the right figure.

CAUTION : *When removing radiator filler cap while the engine is still hot, cover the cap with a rag, then turn it slowly to release the internal steam pressure This will prevent a person from scalding with hot steam spouted out from the filler port.*

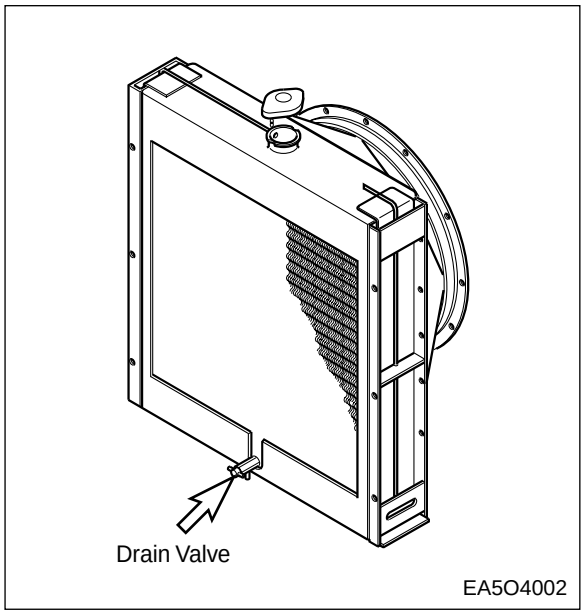

- Remove the drain plug from the cylinder block and drain out the cooling water into a container.

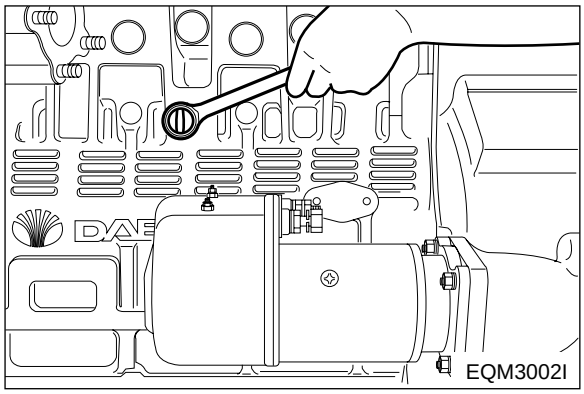

https://truckmanualshub.com/

3.1.3. Engine oil

- Take out the oil dip dipstick.
- Remove the oil drain valve of oil pan and drain out the engine oil into a prepared container.

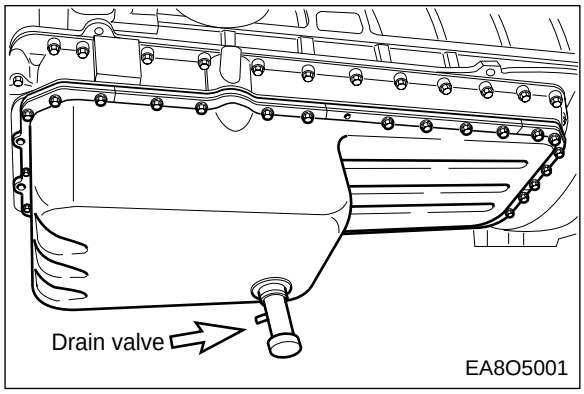

3.1.4. Alternator belt

- Loosen the tension adjusting nut installed on the alternator bracket, and take off the alternator belt.

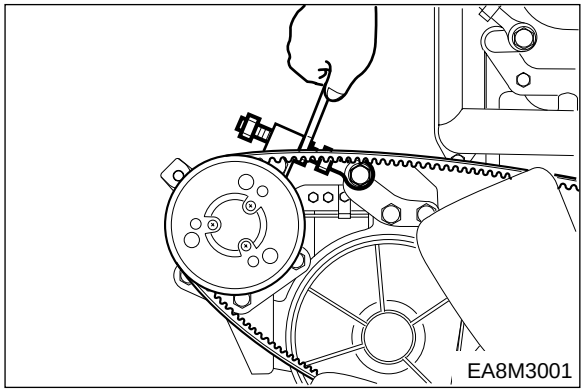

3.1.5. Cooling fan

- Remove the flange fixing bolts, then take off the flange and cooling fan.

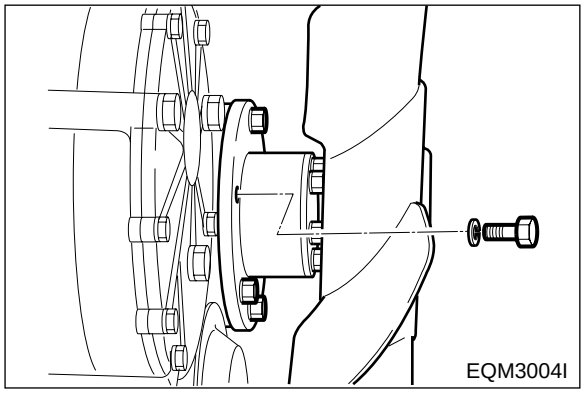

3.1.6. Alternator

- Remove the alternator fixing bolt and disassemble the alternator.
- Remove the tension adjusting bolt and bracket.

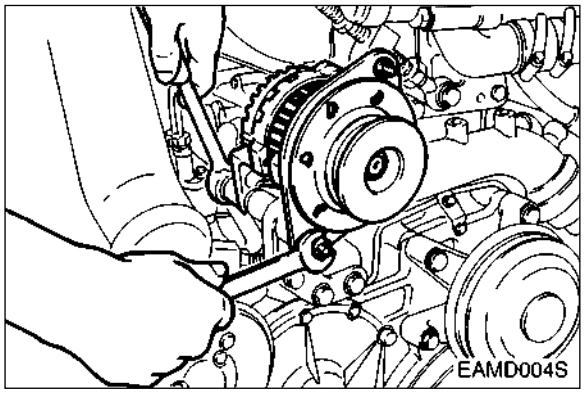

https://truckmanualshub.com/

3.1.7. Oil level gauge guide tube

- Loosen the flange nut installed on the oil pan to remove the guide tube.

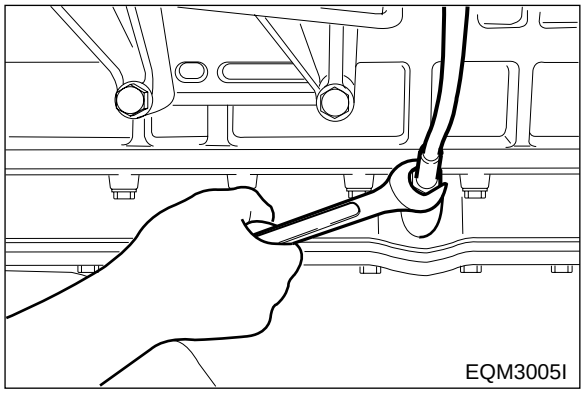
EQM3005I

3.1.8. Fuel filter

- Remove fuel hoses connected to the fuel injection pump, take off the bracket fixing bolts, then disassemble the fuel filter.

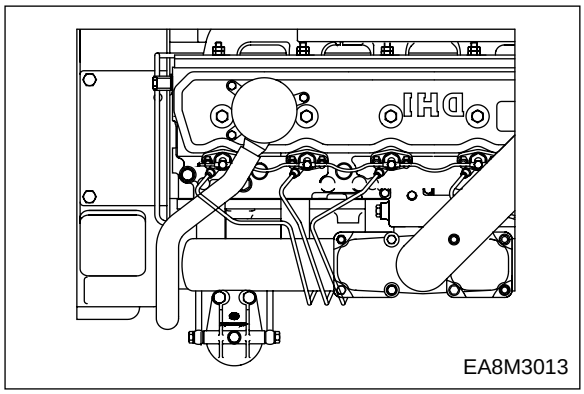
EA8M3013

3.1.9. Breather

- Loosen the clamp screw to remove the rubber hose.

3.1.10. Intercooler

- Tear down the various hoses and air pipes from the inter cooler.
- Remove the intercooler fixing bolts and tear it down.

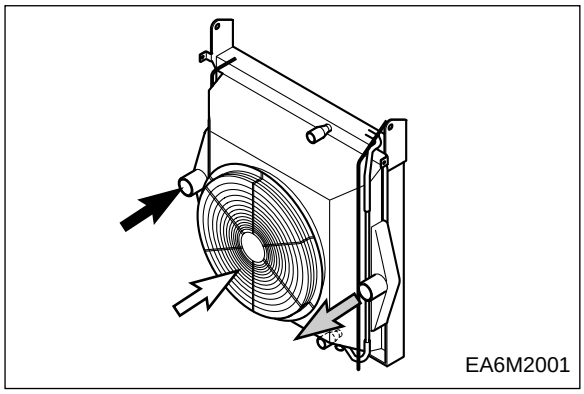
EA6M2001

https://truckmanualshub.com/

3.1.11. Injection pipe

- Unscrew the hollow screws to disassemble the fuel return pipe.
- Remove the nuts installed on the fuel injection pump and nozzles, then disassemble the injection pipe.

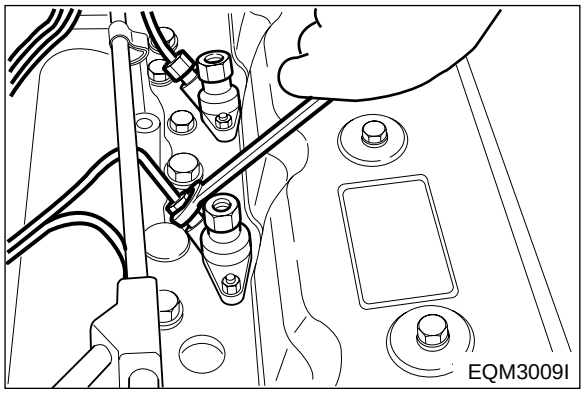

3.1.12. Intake manifold

- Remove the air hose connected to the fuel injection pump.
- Loosen the intake manifold fixing bolts, then disassemble the intake manifold.

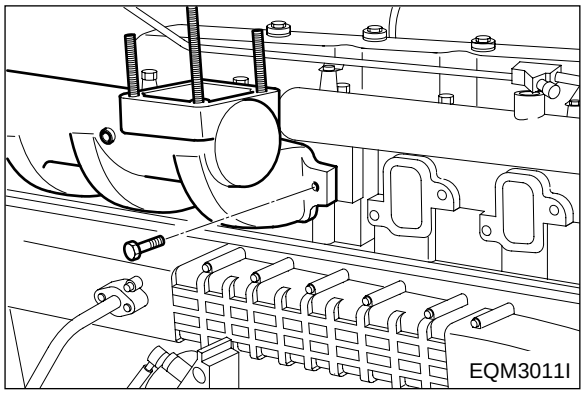

3.1.13. Turbo charger

- Release the clamp screw of the rubber hose connected to the intake manifold, and take off the intake pipes both simultaneously.
- Unscrew the exhaust pipe bracket fixing bolts, release the nuts installed on the turbocharger, then disassemble the exhaust pipe.
- Remove the turbocharger after removing the oil supply pipe and return pipe and releasing the fixing nuts.

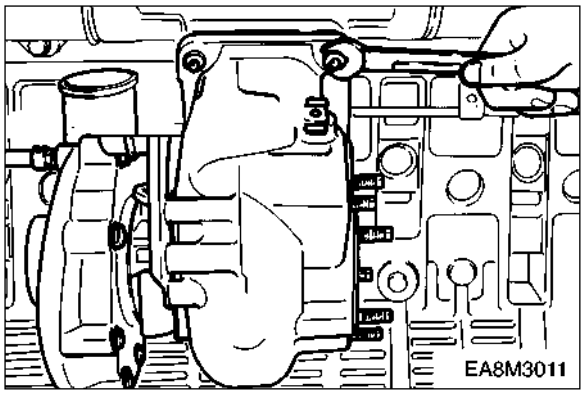

https://truckmanualshub.com/

3.1.14. Exhaust manifold

- Release the exhaust manifold fixing bolts, disassemble the exhaust manifold, then remove the heat shield and gasket.

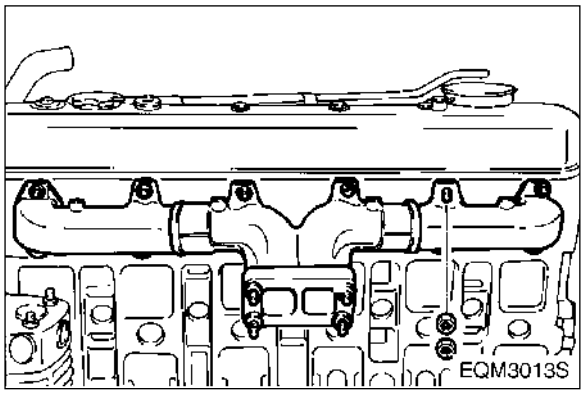

NOTE : *Make sure to release the nuts one after another because the exhaust manifold will be removed if you unscrew two nuts simultaneously.*

3.1.15. Thermostat

- Remove the by-pass pipe connected to the water pump, unscrew the thermostat fixing bolts, then disassemble the thermostat housing.
- Disassemble the thermostat housing and remove the thermostat.
- Disassemble the water pipe by unscrewing the bolts and nuts installed on the cylinder head.

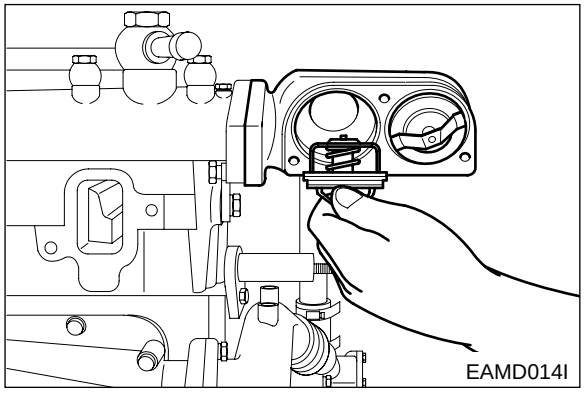

3.1.16. Starter

- Unscrew the starter fixing bolts, then disassemble the starter.

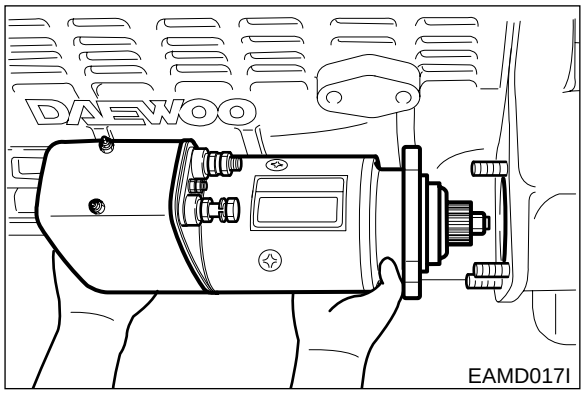

https://truckmanualshub.com/

3.1.17. Water pump

- Remove the water pipe connected to the expansion tank.
- Remove the water pipe and hoses connected to the water pump.
- Unscrew the water pump fixing bolts and remove the water pump.

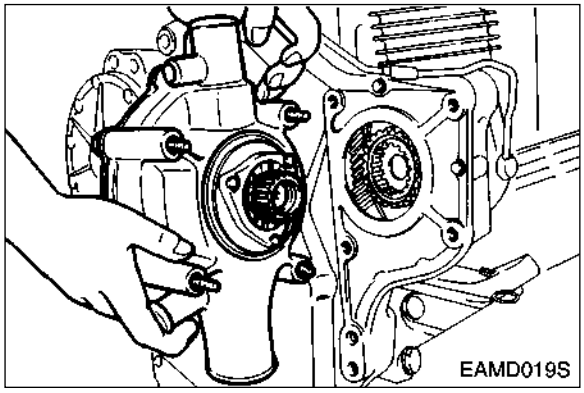

3.1.18. Injection pump

- Remove the oil supply pipe and return pipe connected to the fuel injection pump.
- Unscrew the bolts connecting the coupling and drive shaft, loosen the injection pump attaching bolts, then disassemble the injection pump.

NOTE : *As far as possible, place the No.1 cylinder in 'OT' position to disassemble the injection pump.*

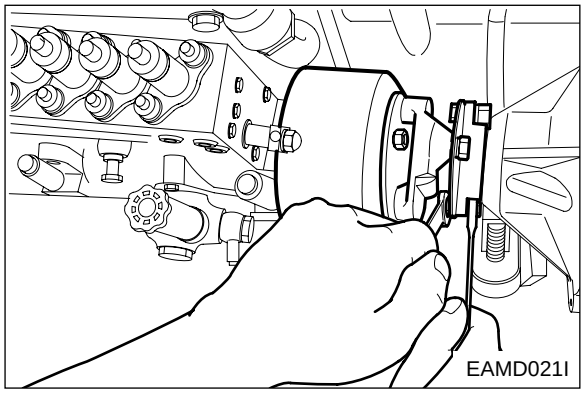

- Release the pump fixing bracket bolts to disassemble the bracket from the cylinder block.

NOTE : *Do not interchange the shims as they must be installed in their original positions at reassembly.*

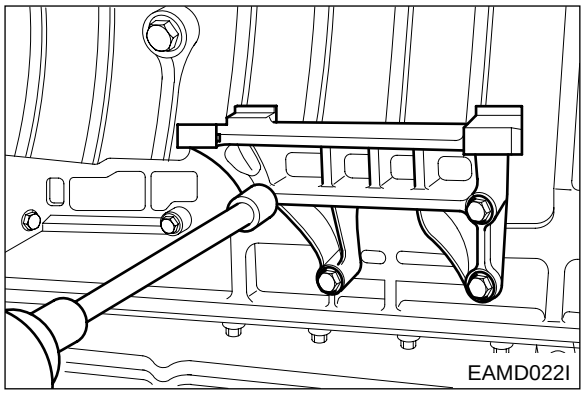

3.1.19. Oil filter

- Using a filter remover wrench, remove the oil filter cartridge.
- Remove the pipe connected to the oil cooler.
- Loosen the oil filter fixing bolts and disassemble the oil filter head from the cylinder block.

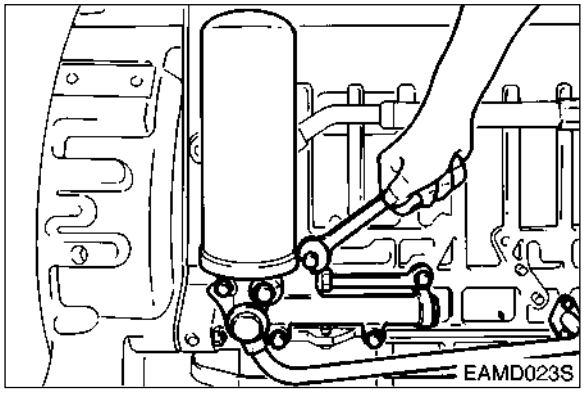

3.1.20. Fan drive pulley

- Remove the bolts and disassemble the fan drive pulley.

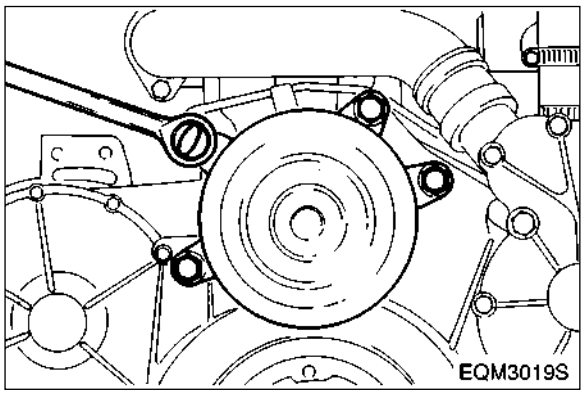

3.1.21. Vibration damper

- Unscrew the pulley fixing bolts and disassemble the pulley-vibration damper assembly.
- Unscrew the vibration damper fixing bolts and disassemble the damper from the pulley.

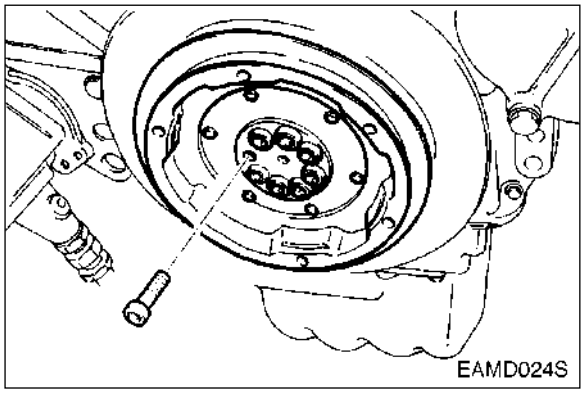

3.1.22. Timing gear case cover

- Disassemble the oil seal using an oil seal removing jig.
- Remove the cover fixing bolts and disassemble the cover from the timing gear case.

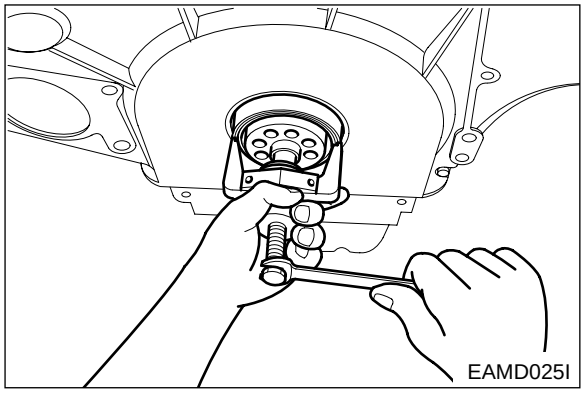

3.1.23. Idle gear

- Unscrew the idle gear fixing bolts and disassemble the thrust washer and idle gear.
- Disassemble the idle gear pin using a rubber hammer to prevent damage to them.

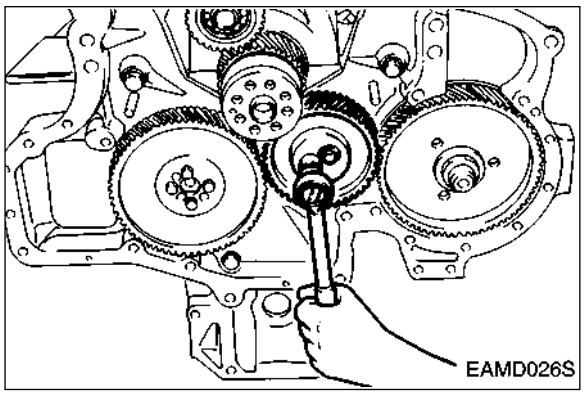

https://truckmanualshub.com/

3.1.24. Fuel injection pump drive assembly

- Unscrew the injection pump drive shaft bearing housing fixing bolts and remove the injection pump drive assembly which the shaft, gear, bearings, and housing are put together.

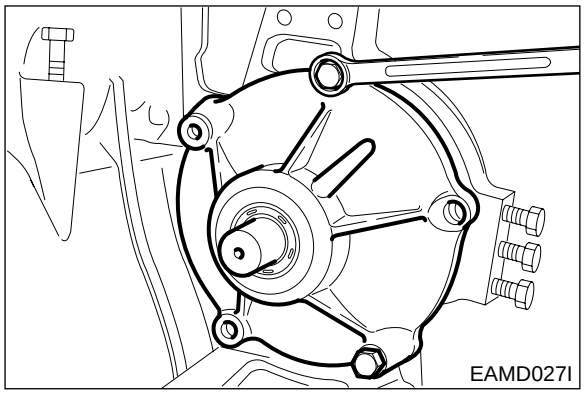

3.1.25. Cylinder head cover

- Unscrew the cover fixing bolts and disassemble the cover.
- Keep the bolts in an assembly state so that the packings and washers may not be lost, and keep the cover packing as assembled with the cover.

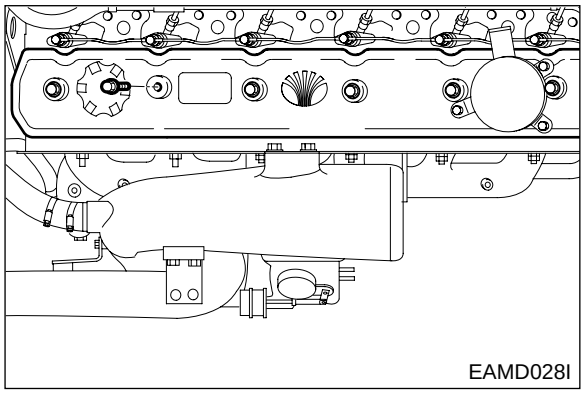

3.1.26. Rocker arm assembly

- Unscrew the rocker arm bracket bolts and remove the rocker arm assembly.
- Take off the snap rings to remove the washers and rocker arm, then unscrew the bracket fixing bolts to take off the bracket and springs.
- Take out the push rods.

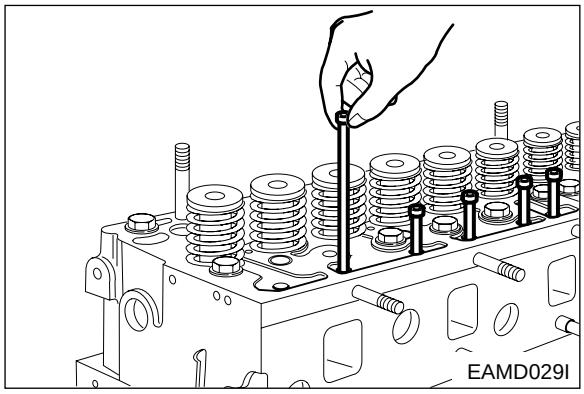

3.1.27. Injection nozzle

- Remove the nozzle fixing nuts and extract the nozzles.
- Remove the nozzle tube using nozzle tube removing jig.

Do not perform disassembly operation unless coolant, gas, etc. leak out.

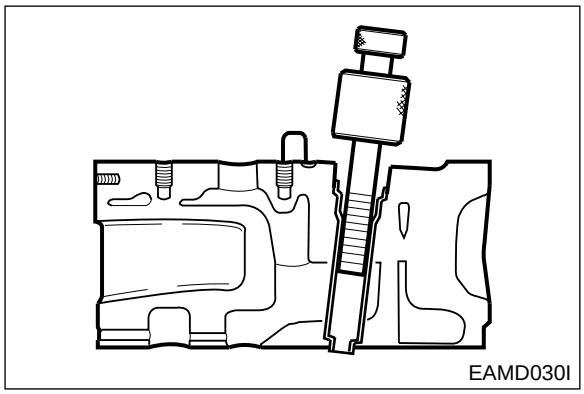

https://truckmanualshub.com/

3.1.28. Cylinder head

- Unscrew the cylinder head fixing borts and take off the cylinder head.
- Remove the cylinder head gasket.

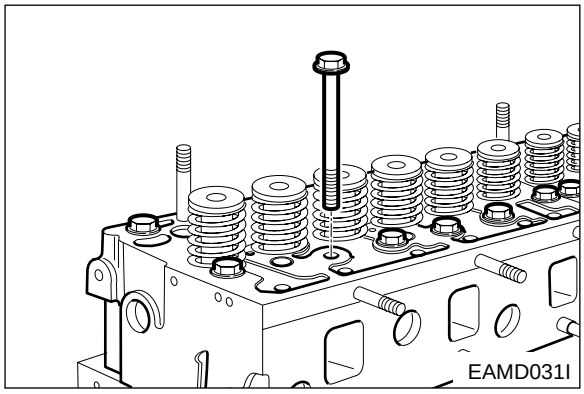

3.1.29. Valve and valve stem seal

- Compress the valve spring retainer using a jig and take off the valve cotter pins.
- Disassemble the valve springs and retainers.
- Take off the valves.
- Remove and discard the valve stem seal using a general tool as it should not be re-used.

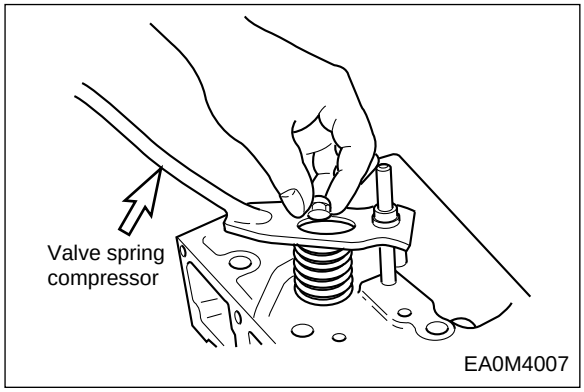

3.1.30. Oil cooler

- Remove the water pipe connected to the water pump.
- Remove the oil pipe connected to the cylinder block.
- Unscrew the oil cooler cover fixing bolts and disassemble the oil cooler assembly from the cylinder block.
- Unscrew the oil cooler fixing bolts and remove the oil cooler from the oil cooler cover.

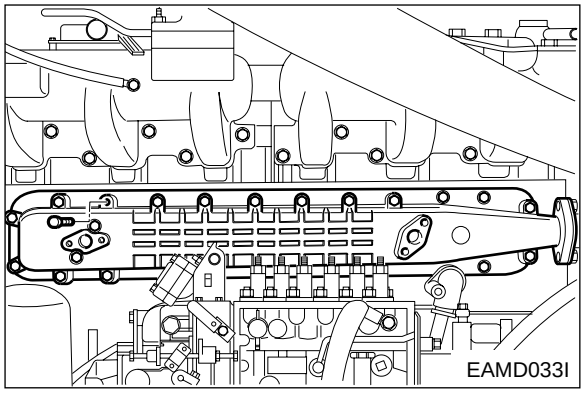

https://truckmanualshub.com/

3.1.31. Oil pan

- Stand the engine with the flywheel housing facing the bottom.
- Release the oil pan fixing bolts, remove the stiffeners then disassemble the oil pan.

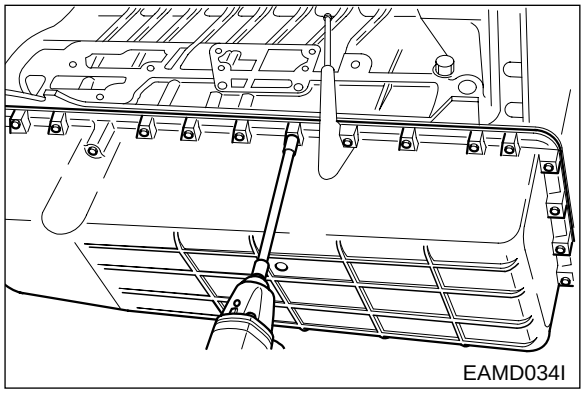

3.1.32. Oil pump and oil pipe

- Unscrew the oil suction pipe bracket bolts, releasing the pipe fixing bolts, then disassemble the oil suction pipe assembly.
- Disassemble the oil pipe feeding oil from the oil pump to the cylinder block.
- Unscrew the oil pump fixing borts and disassemble the oil pump.

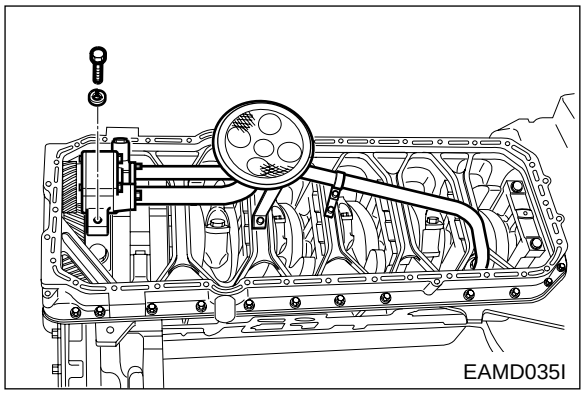

3.1.33. Relief valve

- Disassemble the relief valve.

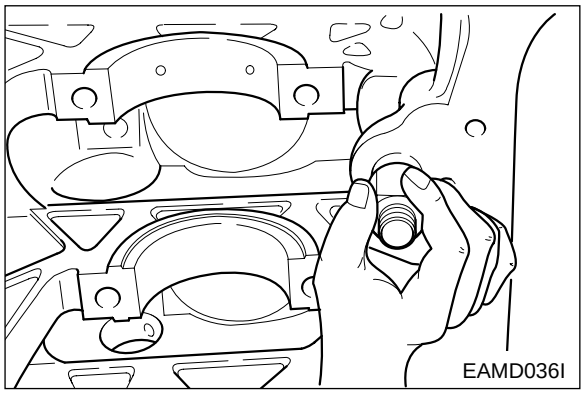

3.1.34. Piston and connection rod

- Disassemble the pistons by two cylinders while turning the crankshaft.
- Unscrew the connecting rod fixing bolts and take off the pistons and connecting rods in the direction of piston.

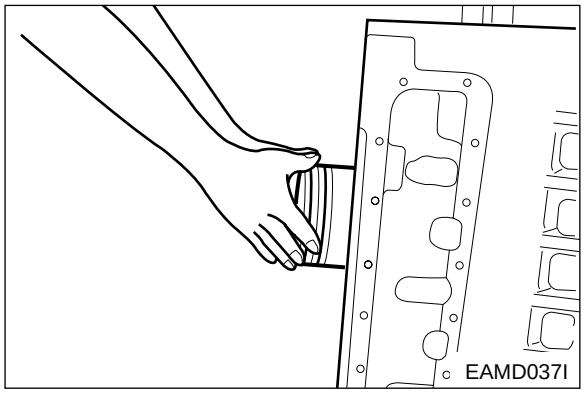

- Remove the piston pin snap rings, take off the piston pin, then disconnect the connecting rod from the piston.

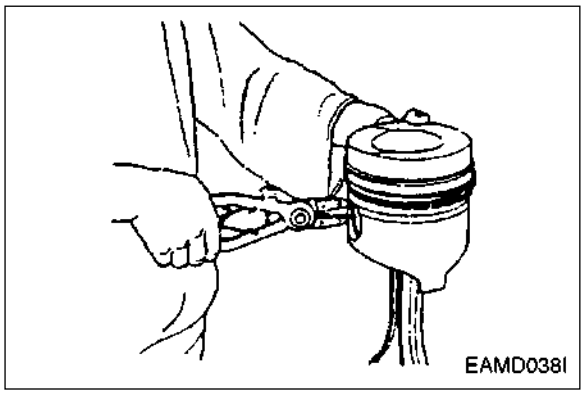

- Disassemble the piston rings using ring pliers.
- Use care not to interchange the disassembled parts and keep them in the sequence of cylinder No.

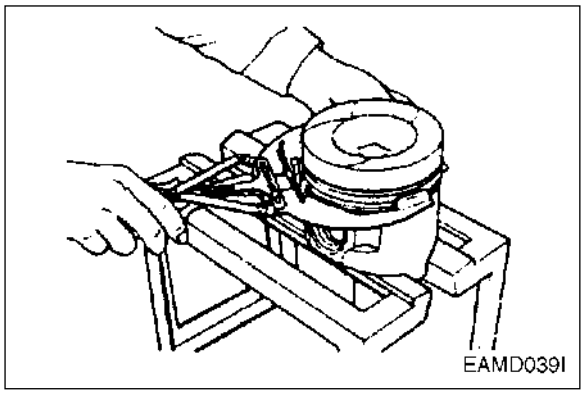

3.1.35. Cylinder liner

- Disassemble the cylinder liner using a liner puller.

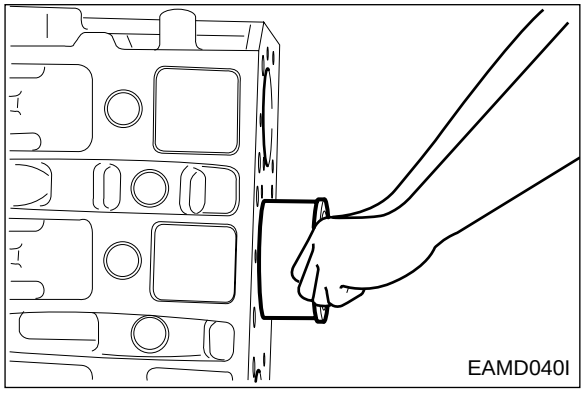

3.1.36. Flywheel

- Position the engine so that the head installing surface of the cylinder block faces down.
- Unscrew the flywheel fixing bolts and fit a dowel pin.
- Install flywheel disassembling bolts in the bolt holes machined on the flywheel, and disassemble the flywheel.

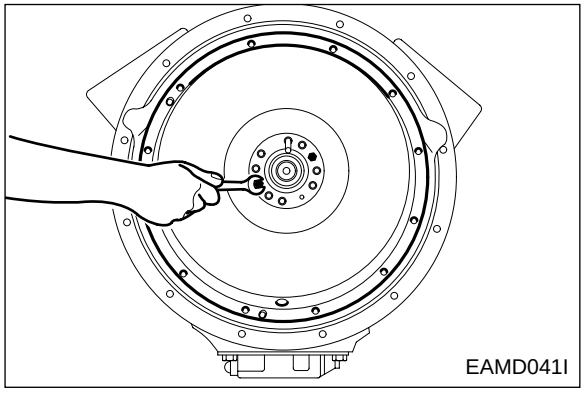

https://truckmanualshub.com/

3.1.37. Oil seal

- Take off the rear oil seal using an oil seal disassembling jig.
- If only the inside guide ring is removed, use a special tool to take off the outside seal.

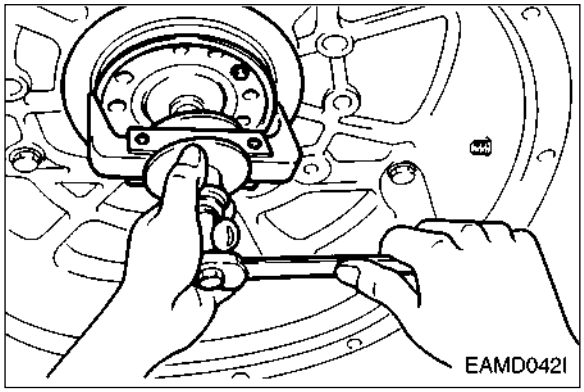

3.1.38. Flywheel housing

- Loosen the housing fixing bolts disassemble the flywheel housing.

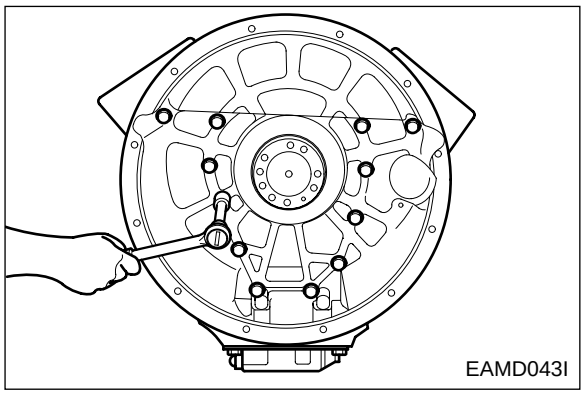

3.1.39. Cam shaft and tappet

- Remove the cam shaft gear.
- Take off the cam shaft gear thrust washer.
- Take out the cam shaft using care not to damage the cam shaft.
- Slide out the tappets by hand.

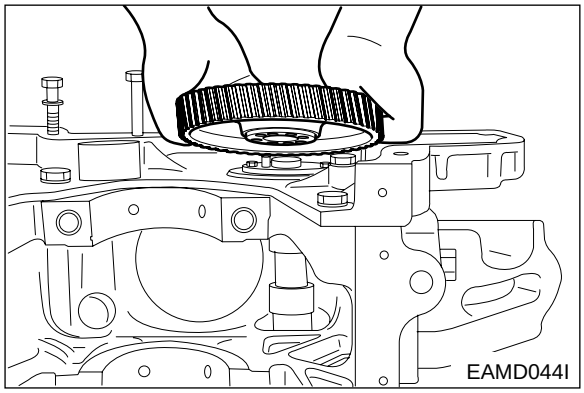

3.1.40. Crankshaft gear and oil pump idle gear

- Loosen the socket head bolts and take out the oil pump idle gear.
- Use a puller to remove the crankshaft gear.

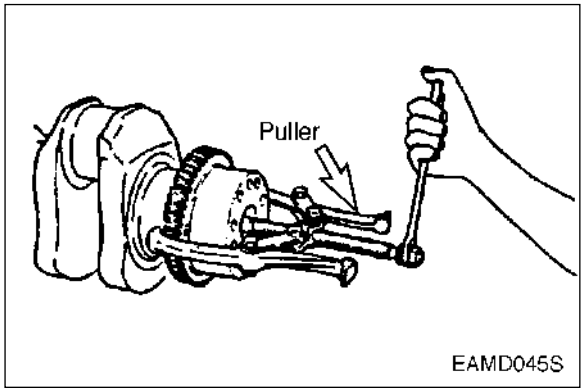

https://truckmanualshub.com/

3.1.41. Timing gear case

- Unscrew the case fixing bolts and disassemble the timing gear case.

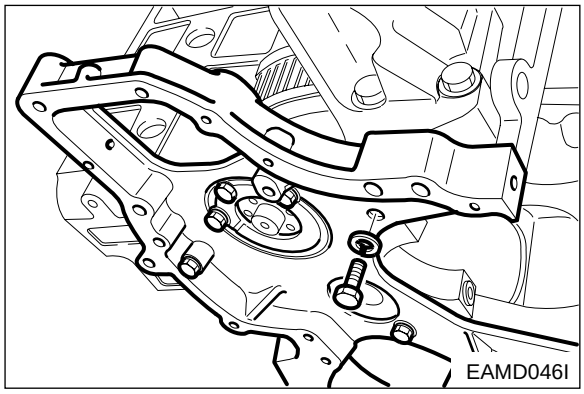

3.1.42. Crankshaft

- Remove the bolts from bearing caps.
- Remove the main bearing cap fixing bolts in the order of assembling.
- (Remove them in the same way of the cylinder head bolts.)
- Maintain the removed bearing caps in the order of cylinders.
- Temporarily install the bolts at the both side of crankshaft, and lift the shaft with a rope.

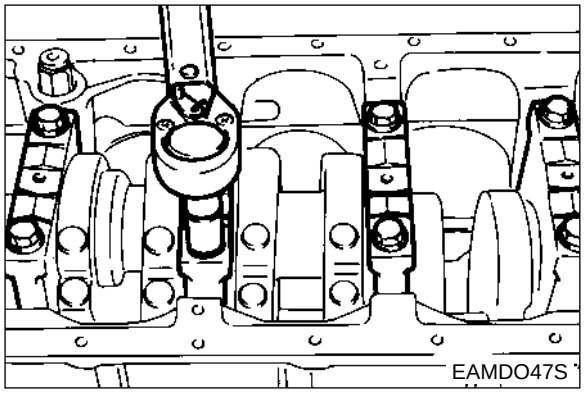

NOTE : *Do not mingle with the metal bearings and bearing caps randomly. To prevent mixing, temporarily assemble the metal bearings to the corresponding bearing caps in turn.*

3.1.43. Oil spray nozzle

- Unscrew the fixing bolt and remove the oil spray nozzles.

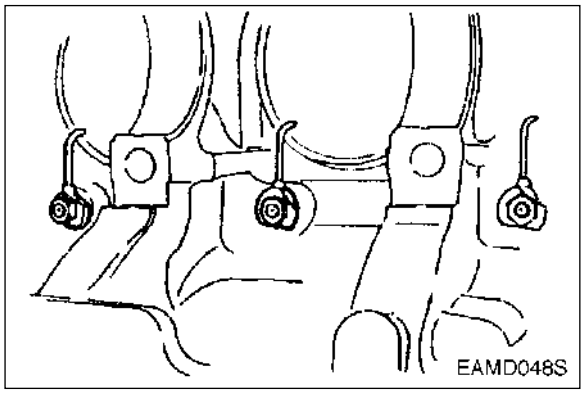

https://truckmanualshub.com/

3.2. Inspection

3.2.1. Cylinder block

1) Clean the cylinder block thoroughly and make a visual inspection for cracks or damage.
2) Replace if cracked or severely damaged, and correct if slightly damaged.
3) Check oil and water flow lines for restriction or corrosion.
4) Make a hydraulic test to check for any cracks or air leaks.(Hydraulic test) :
   Stop up each outlet port of water/oil passages in the cylinder block, apply air pressure of about 4kg/cm^2 against the inlet ports, then immerse the cylinder block in water for about 1 minute to check any leaks. (Water temperature: 70 ˚C)

3.2.2. Cylinder head

1) Inspection

- Carefully remove carbon from the lower lace of the cylinder head using nonmetallic material to prevent scratching of the valve seat faces.
- Check the entire cylinder head for very fine cracks or damage invisible to ordinary sight using a hydraulic tester or a magnetic flaw detector.

2) Distortion at the lower face

- Measure the amount of distortion using a straight edge and a feeler gauge at six positions (A ~ F) as shown in the right figure.
- If the measured value exceeds the standard value, retrace the head with grinding paper of fine grain size to correct such defect.
- If the measured value exceeds the maximum allowable limit, replace the cylinder head.

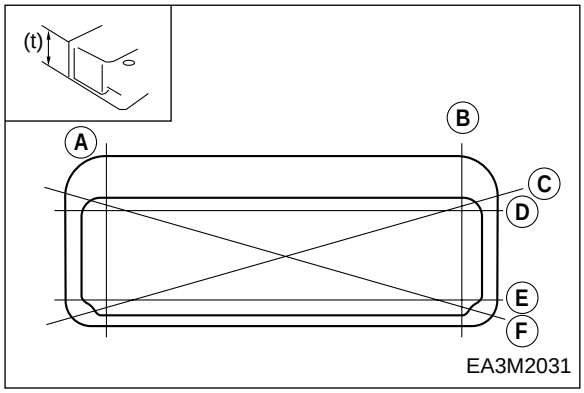

EA3M2031

Lower face warpage and height

	Standard	Limit
Warpage	0.2 mm or less	0.3 mm
Thickness : t (reference)	114.95 ~ 115.0 mm	113.9 mm

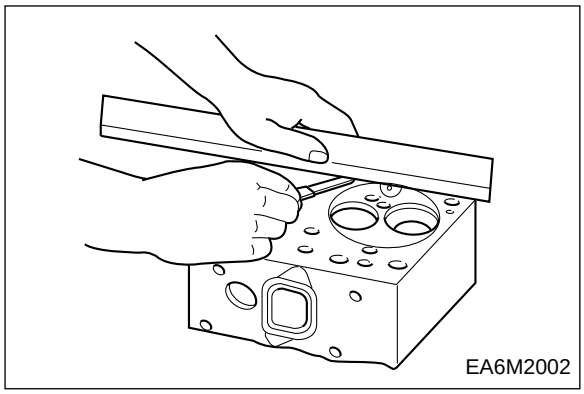
EA6M2002

3) flatness

Measure flatness of the intake/exhaust manifolds fitting surfaces on the cylinder head using a straight edge and a feeler gauge.

Standard	Limit
0.05 mm	0.2 mm

4) Hydraulic test

Hydraulic test method for the cylinder head is same as that for cylinder block.

3.2.3. Valve and valve guide

1) Valve

Clean the valves with clean diesel oil, then inspect them as follows:

- **Valve stem outer diameter**

Measure the valve stem outer diameter at 3 positions. (top, middle, and bottom) If the amount of wear is beyond the limit, replace the valve.

Dimension / Description	Standard	Limit
Intake valve stem	ø10.950 ~ ø10.970 mm	ø10.87 mm
Exhaust valve stem	ø10.935 ~ ø10.955 mm	ø10.84 mm

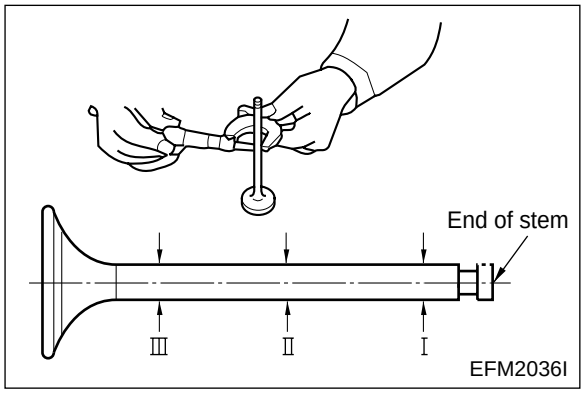

- **Valve seat contacting faces**

Check the valve seat contacting faces for scratches or wear, and correct the faces with grinding paper as necessary. Replace if severely damaged.

https://truckmanualshub.com/

- **Valve head thickness**

  Measure the valve head thickness, and replace the valve if the measured value is beyond the limit.

Dimension / Description	Standard	Limit
Intake valve	1.5 mm	1 mm or less
Exhaust valve	1.5 mm	0.9 mm or less

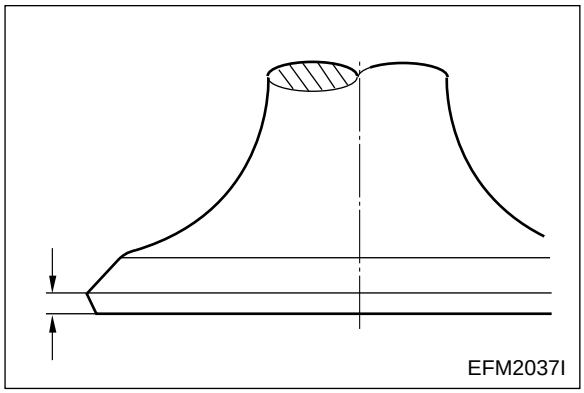

2) Valve guide

- Install the valve into the valve guide and measure the clearance between them by valve movement. If the clearance is excessive, measure the valve and replace either the valve or the valve guide, whichever worn more.

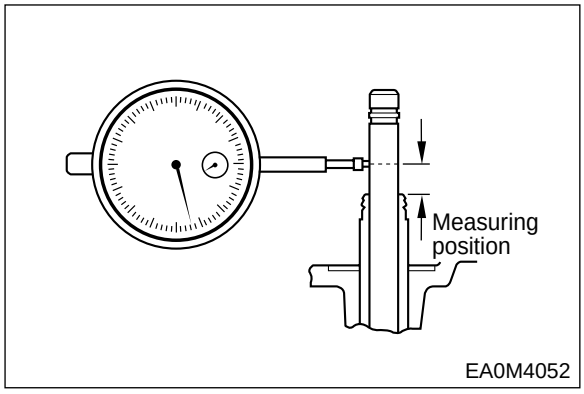

Valve stem end play

	Standard	Limit
Intake valve	0.04 ~ 0.07 mm	0.2 mm
Exhaust valve	0.06 ~ 0.09 mm	0.25 mm

- Install the valve into the cylinder head valve guide, then check and see if it is centered with the valve seat using a special tool.

https://truckmanualshub.com/

3) Valve seat

- **Contacting face amount**

  Measure the contacting face between the intake valve seat and exhaust valve seat for valve seat wear, and replace if the measured value exceeds the specified limit.

- Install the valve into the valve seat on the cylinder head, and check the amount of depression of the valve from the lower portion of the cylinder head using a dial gauge.

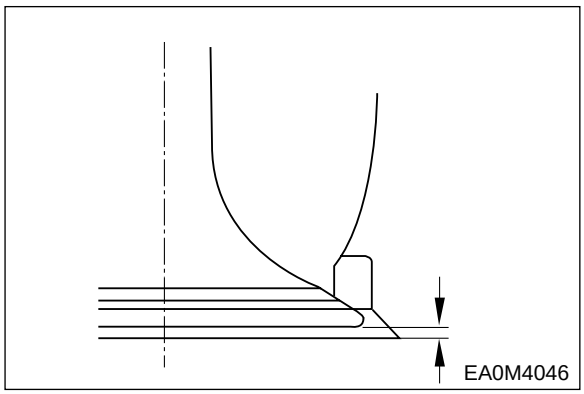

Valve depression

	Standard	Limit
Intake & Exhaust	0 ~ 0.3 mm	0.55 mm

If the amount of depression is beyond the specified limit, replace the valve seat.

- For removal of the valve seat, apply arc welding work to two points of valve seat insert, and pull out the valve seat insert with inner extractor.

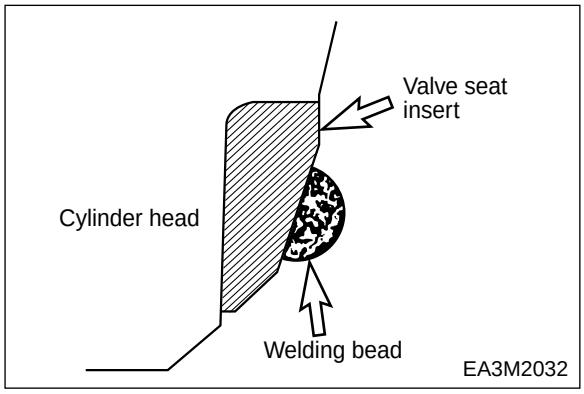

- Undercool a new valve seat with dry ice for about 2 hours and press the valve seat insert into position in the cylinder head using a special tool (bench press).
- Apply valve lapping compound to the valve head seating face on the valve seat and lap the valve seat by turning it until it is seated in position, then wipe out the lapping compound.

https://truckmanualshub.com/

4) Valve spring

- **Visual check**

  Visually check the exterior of the valve springs for damage, and replace if necessary.

- **Functional check**
  - Measure free length and spring tension with a valve spring tester.
    (Refer to appendix)
  - Measure the spring inclination with a square.
  - Compare the measured value with the standard value to determine whether to replace or repair.

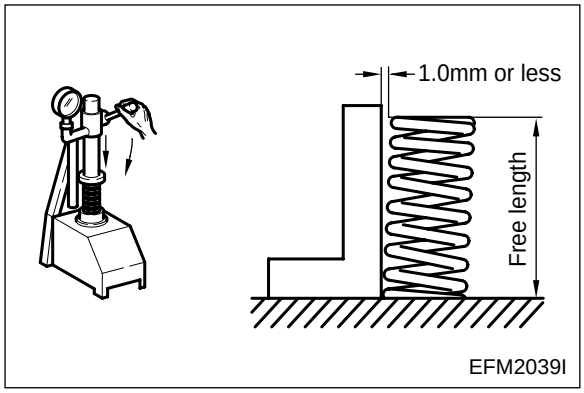

	Standard	Limit
Valve spring inclination	1.0 mm	2.0 mm

3.2.4. Rocker arm shaft assembly

1) Rocker arm shaft

- **Rocker arm shaft run-out**

  Place the rocker arm shaft on two V blocks and inspect the shaft for bend using a dial gauge.

  If the amount of this run-out is small, press the shaft with a bench press to correct the run-out Replace the shaft if the measured value exceeds the limit.

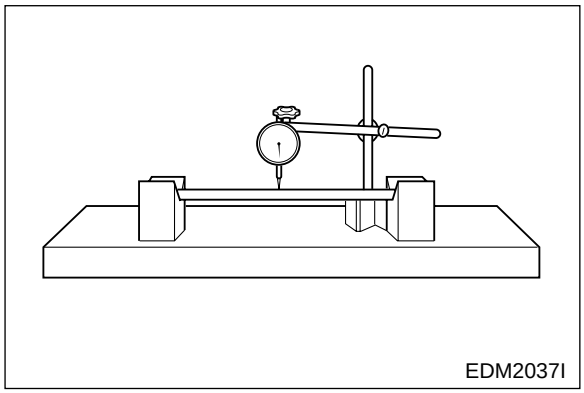

Limit	0.2 mm

- **Rocker arm shaft diameter**

  With an outside micrometer, measure the rocker arm shaft diameter at the point where the rocker arms have been installed.

  Replace the rocker arm if the amount of wear is beyond the specified limit.

Standard	Limit
ø23.978 ~ ø23.959 mm	ø23.75 mm

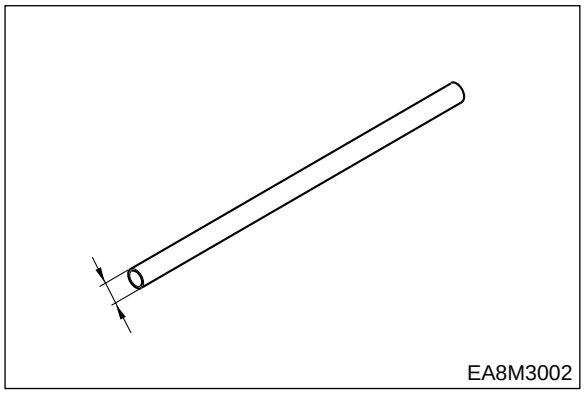

2) Rocker arm

- **Visual check**

  Visually check the face of the rocker arm in contact with the valve stem end for scores and step wear. If the wear is small, correct it with an oil stone or grinding paper of fine grain size. Rocker arm with a considerable amount of step wear should be replaced.

- **Diameter of the rocker arm bushing**

  Measure the inside diameter of the rocker arm bushing with an inside micrometer or vernier calipers, and compare the measured values with the rocker arm shaft diameter. If the clearance exceeds the limit, replace either bushing or shaft, whichever worn more.

  <Clearance>

Standard	Limit
0.020 ~ 0.093 mm	0.2 mm

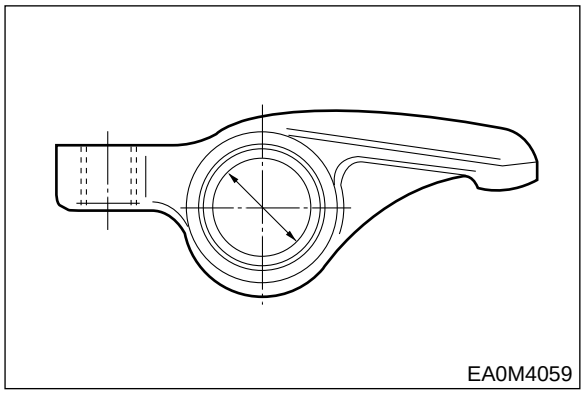

3) Tappet and push rod

- **Clearance**

  Measure the clearance of the tappet and tappet holes of the cylinder block. If the value is beyond the specified limit, replace tappets.

Standard	Limit
0.035 ~ 0.077 mm	0.15 mm

https://truckmanualshub.com/

- **Visual check of tappet**

  Visually check the face of the tappets in contact with the cam for pitting, scores or cracks, and replace if severely damaged. If the amount of cracks or pitting is small, correct with an oil stone or grinding paper.

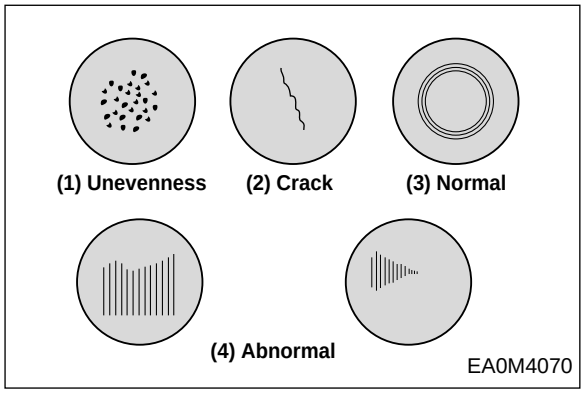

- **Outside diameter**

  With an outside micrometer, measure the tappet outside diameter If the measured value is beyond the limit, replace tappets.

Tappet Dia	∅19.944 ~ ∅19.965 mm

	Standard	**Limit**
Tappet Clearance	0.035~0.077mm	0.15mm

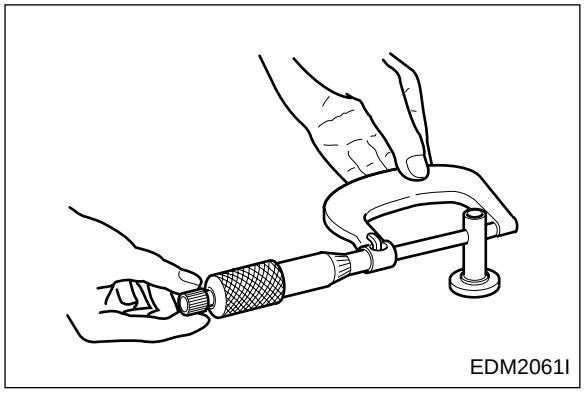

- **Push rod run-out**

Limit	0.3 mm or less

Use a feeler gauge to measure the push rod run-out.
Roll the push rod along a smooth flat surface as shown in the figure.

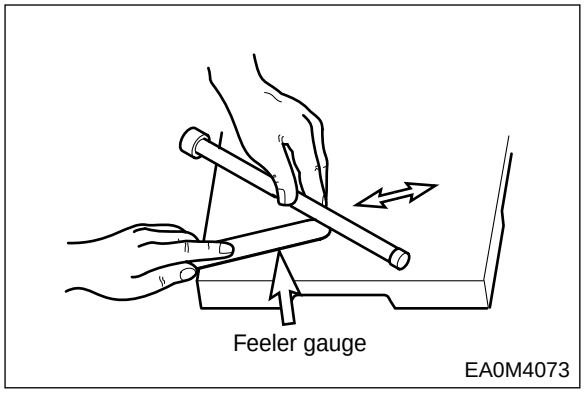

3.2.5. Cam shaft

1) Cam

- **Cam lobe height**

		Standard	Limit
Cam lobe height (C)	Intake	ø50.50~ ø50.70 mm	ø49.5 mm
	Exhaust	ø50.70~ ø50.90 mm	
Cam journal diameter(A,B)		ø59.86~ ø59.8 mm	ø59.52 mm

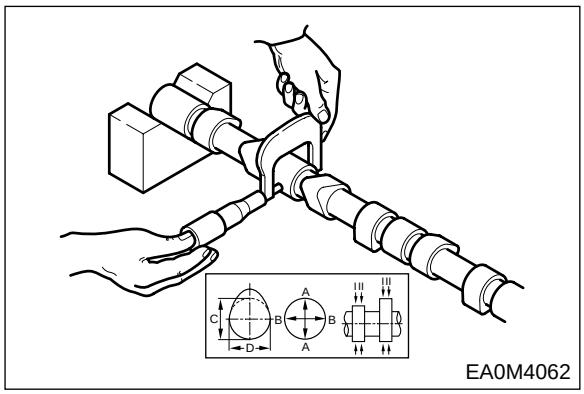

Use a micrometer to measure the cam lobe height and journal diameter.
If the measured number is less than the specified limit, the camshaft must replaced.

- **Cam surface**

Inspect the cam face for scratch or damage.
Slight step wear or damage on the cam face may be corrected with oil stone or oiled grinding paper. But, replace if severely damaged.

2) Cam shaft

- **Clearance between camshaft journal and camshaft bush**
  - With an outside micrometer, measure the camshaft journal diameter.
  - Measure the inside diameter of the camshaft bushing on the cylinder block using a cylinder bore indicator, and compare the measured value with the camshaft outside diameter to determine the clearance.

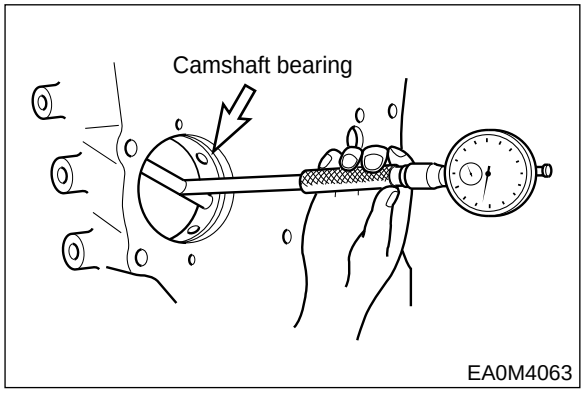

<Clearance>

Standard	Limit
0.050 ~ 0.128 mm	0.2 mm

Replace the bushing if the measured value is beyond the specified limit.

- **Run-out**

  Support the camshaft on two V blocks and check for run-out using a dial indicator. Correct or replace the cam shaft if the amount of run-out is beyond the value indicating need for servicing.

Standard	Limit
0.05 mm	0.2 mm

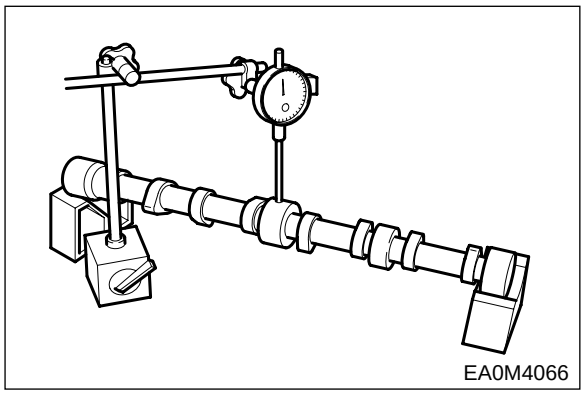
EA0M4066

3) Cam shaft end play

- Push the thrust plate toward the cam gear.
- With a feeler gauge, measure the clearance between the thrust plate and camshaft journal.
- If the end play is excessive, replace the thrust plate.

Standard	Limit
0.13 ~ 0.27 mm	0.2 mm

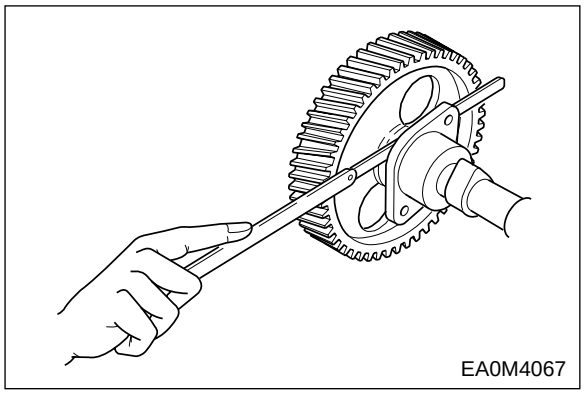
EA0M4067

3.2.6. Crank shaft

1) Defect check

- Visually check the crankshaft journal and crank pins for scores or cracks.
- Using a magnetic particle test and color check, inspect the crankshaft for cracks, and replace the crankshaft which has cracks.

2) Wear

- With an outside micrometer measure the diameter of the crankshaft journals and pins in the directions as shown, and compare the measured values to determine the amount of wear.
- If the amount of wear is beyond the limit, have the crankshaft ground and install undersize bearings. However, if the amount of wear is within the limit, you can correct the wear using an oil stone or oiled grinding paper of fine grain size. (Be sure to use grinding paper which has been immersed in oil.)

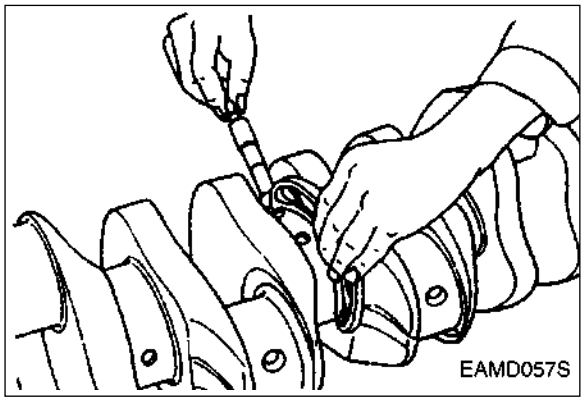

	Standard	Limit
Journal diameter	ø95.966 ~ ø95.988 mm	ø94.966 mm
Pin diameter	ø82.966 ~ ø82.988 mm	ø81.966 mm

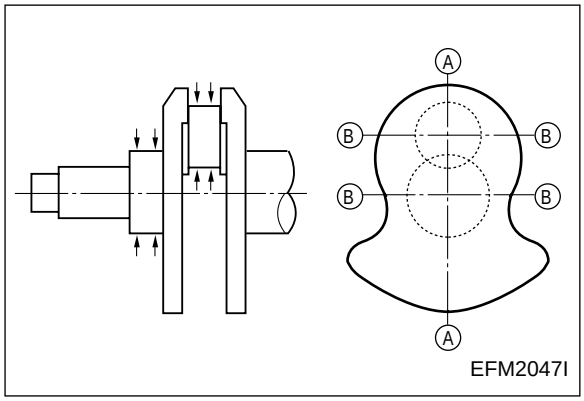

*** Undersize bearings available**

- Standard
- 0.25 (Inside diameter is 0.25 mm lesser than the standard size.)
- 0.50 (Inside diameter is 0.50 mm lesser than the standard size.)
- 0.75 (Inside diameter is 0.75 mm lesser than the standard size.)
- 1.00 (Inside diameter is 1.00 mm lesser than the standard size.)

Undersize bearings are available in 4 different sizes as indicated above, and the crankshaft can be reground to the above sizes.

Note : *When regrinding the crankshaft as described below, the fillet section 'R' should be finished correctly. Avoid sharp corners or insufficient fillet.*

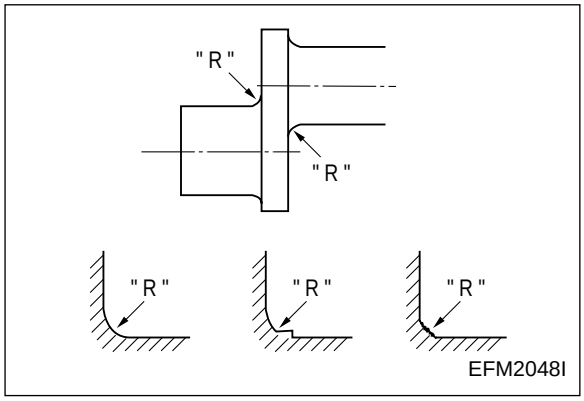

*** Standard values of 'R'**

① Crankshaft Pin 'R': 4.5

② Crankshaft journal 'R': 4

3) Crankshaft run-out

- Support the crankshaft on V blocks.
- Turn the crankshaft with a dial indicator placed on the surface plate and take the amount of crankshaft run-out.

Standard	Limit
0.05 mm	0.1 mm

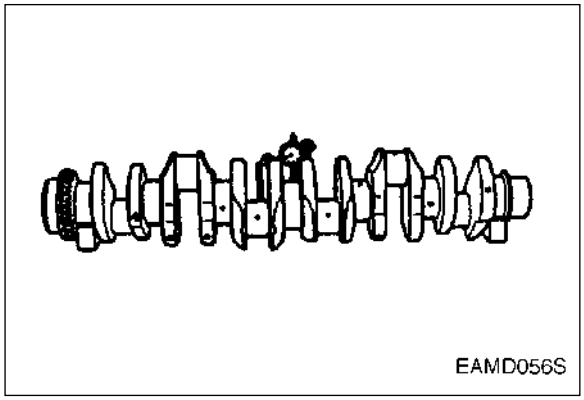

3.2.7. Crank shaft bearing and connection rod bearing

1) Visual check

Visually check the crankshaft bearing and connecting rod bearing for scores, uneven wear or damage.

2) Oil clearance between crankshaft and bearing.

- Main bearing clearance

Install the main bearing in the cylinder block, tighten the bearing cap to specified torque, then measure the inside diameter.

Torque	30 kg•m

Standard Dia.	ø96.06~ø96.108 mm

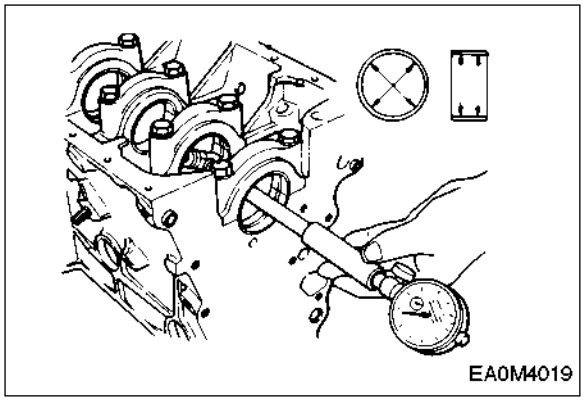

Compare the two values obtained through measurement of main bearing inside diameter with the outside diameters of crankshaft journals to determine the oil clearance.

<Main bearing oil clearance>

Standard	Limit
0.072 ~ 0.142 mm	0.25 mm

- **Connecting rod bearing clearance**

Install the connecting rod bearing in the connecting rod bearing cap, tighten the connecting rod cap bolts to the specified torque, then measure the inside diameter.

Torque	28 kg•m

Standard Dia.	∅83.02~∅83.092 mm

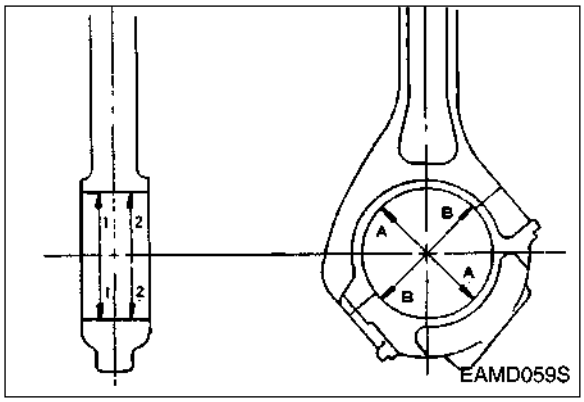

Compare the two values obtained through measurement of connecting rod bearing inside diameter with the outside diameters of crankshaft pins to determine the oil clearance.

Standard	Limit
0.049 ~ 0.119 mm	0.20 mm

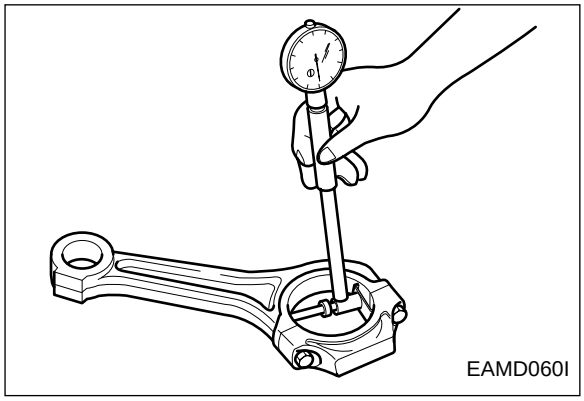

- *If the clearance deviates from the specified range, have the crankshaft journals and pins ground and install undersize bearings.*

3) Bearing spread and crush

- **Inspection**

Check to see that the bearing requires a considerable amount of finger pressure at reassembly operation.

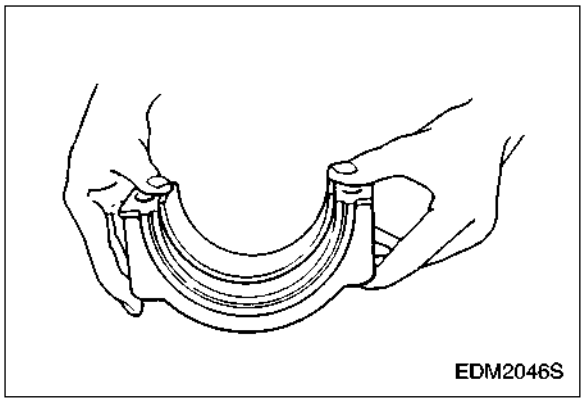

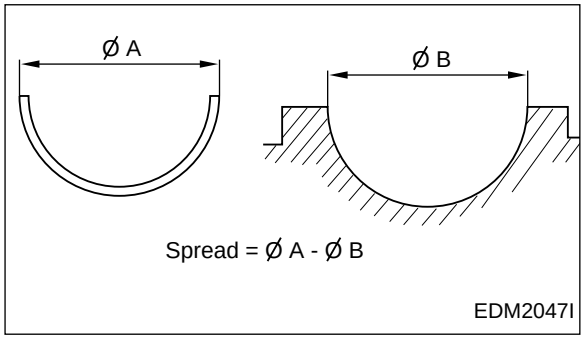

● **Crankshaft bearing crush**

Install the bearing and cap in the cylinder block, retighten the bolts to specified torque, unscrew out one bolt completely, then measure the clearance between the bearing cap and cylinder block using a feeler gauge.

Standard Dia.	0.15 ~ 0.25 mm

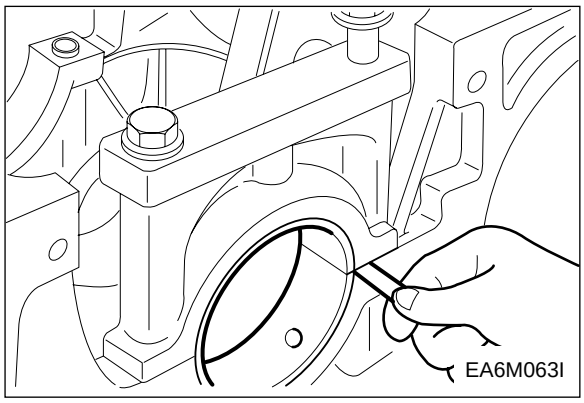

● **Connecting rod bearing crush**

Install the bearing and cap in the connecting rod big end, retighten the bolts to specified torque, unscrew out one bolt completely, then measure the clearance between the bearing cap and connecting rod big end using a feeler gauge.

Standard	0.086 ~ 0.116 mm

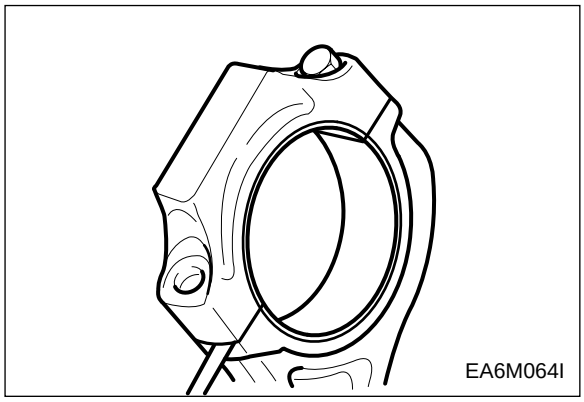

4) crank shaft end play

- Assemble the crankshaft to the cylinder block.
- With a dial gauge, measure crankshaft end play.

Standard	Limit
0.15 ~ 0.325 mm	0.5 mm

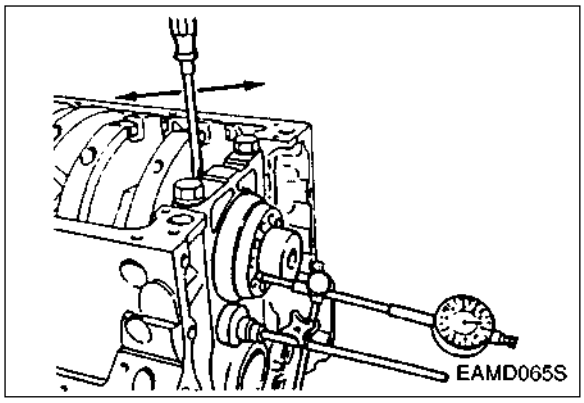

3.2.8. Piston

1) Visual check

Visually check the pistons for cracks, scuff or wear, paying particular attention to the ring groove.

2) Clearance between the piston and cylinder liner

- With an outside micrometer, measure the piston outside diameter at a point 18mm away from the lower end of piston skirt in a direction at a right angle to the piston pin hole.

Standard	∅122.854 ~ ∅122.886 mm

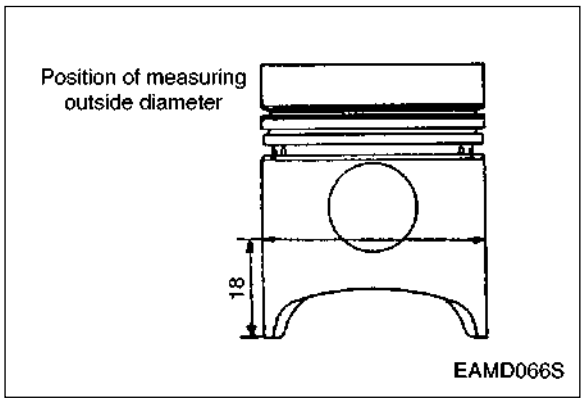

- Using a cylinder bore gauge, measure cylinder liner inside diameter at 3 points (cylinder top ring contacting face, middle, and oil ring contacting face on BDC) in a direction at an angle of 45(. Take the mean value with the largest and smallest values excepted.

Standard	Limit
∅123 ~ ∅123.023 mm	∅123.223 mm

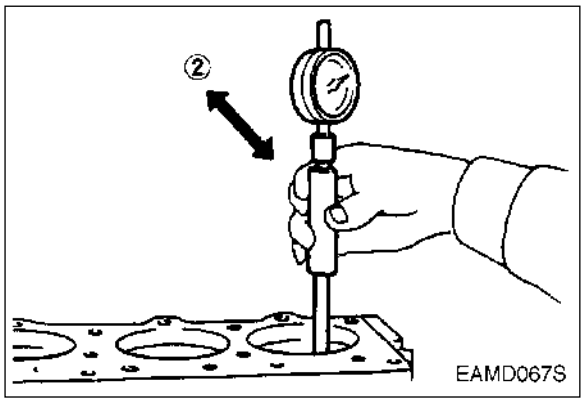

- The clearance is computed by subtracting the piston outside diameter from the cylinder liner inside diameter. Replace either piston or cylinder liner, whichever damaged more, if the clearance is beyond the specified limit.

Clearance between piston and liner

Standard	0.114 ~ 0.169 mm

https://truckmanualshub.com/

3.2.9. Piston rings

1) Visual check

Replace the piston rings with new ones if detected worn or broken when the engine is overhauled.

2) Piston ring gap

- Insert the piston ring into the upper portion of the cylinder liner bore so that it is held at a right angle to the cylinder liner wall.
- Measure the piston ring gap with a feeler gauge.

	Standard	Limit
Top ring	0.30 ~ 0.45 mm	1.5 mm
2nd ring	0.35 ~ 0.50 mm	1.5 mm
Oil ring	0.30 ~ 0.50 mm	1.5 mm

Replace piston rings with new ones if the gap is beyond the limit

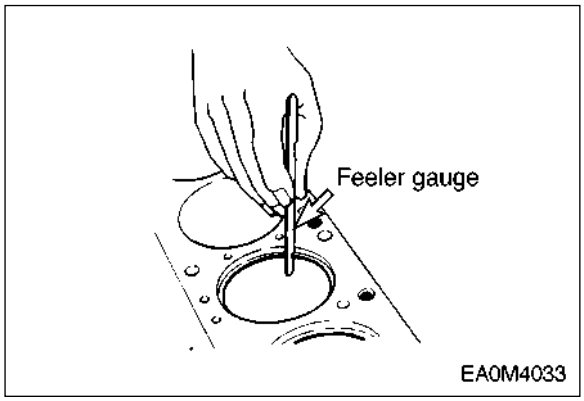

3) Piston ring side clearance

- Fit the compression ring and oil ring in the piston ring groove.
- With a feeler gauge, measure side clearance of each ring, and replace either the ring or piston if the measured value is beyond the specified limit.

	Standard	Limit
Top ring	-	
2nd ring	0.07 ~ 0.102 mm	0.15 mm
Oil ring	0.05 ~ 0.085 mm	0.15 mm

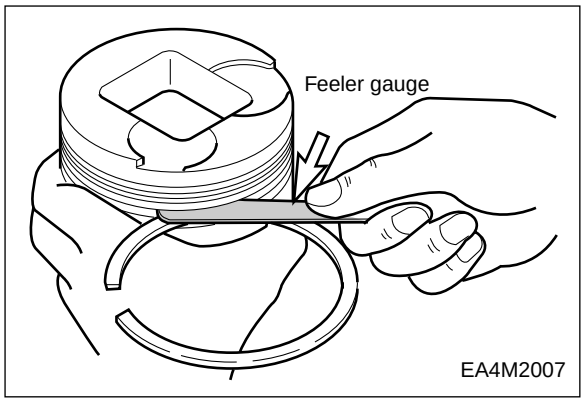

4) Piston ring tension

With a tension tester, measure piston ring tension. Replace the piston ring if the measured value is beyond the limit.

	Standard
Top ring	2.27 ~ 3.41 kg
2nd ring	2.0 ~ 3.0 kg
Oil ring	4.03 ~ 5.57 kg

3.2.10. Piston pin

1) Wear

Measure the amount of wear on the piston pin at the points as shown. The measured values are beyond the limit (0.005 mm or greater), replace the pin

Standard	Limit
∅44.995 ~ ∅45 mm	∅44.990 mm or less

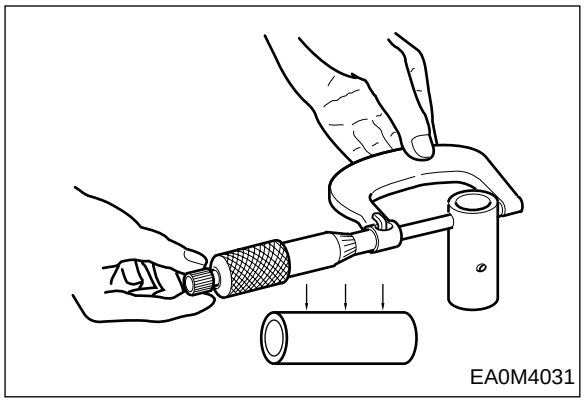
EA0M4031

2) Clearance

Measure the clearance between the piston pin and connecting rod bushing, and replace either of them, whichever damaged more, if the measured value is beyond the limit.

Limit	0.011 mm

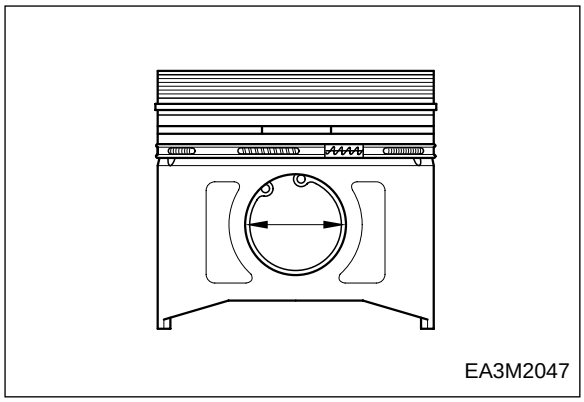
EA3M2047

3) Condition check

Check the engaged condition of the piston and piston pin. If it is possible to force the pin into the piston heated with piston heater, the piston is normal. When replacing the piston, be sure to replace the piston pin together.

https://truckmanualshub.com/

3.2.11. Connecting rod

1) Distorsion

Check the connecting rod for distortion. As shown in the figure below, install the connecting rod to the connecting rod tester, and check for distortion using a feeler gauge. If the connecting rod is found distorted, never re-use it but replace with a new one.

2) Holes alignment (parallelism)

Measure the alignment of the connecting rod piston pin bushing holes with connecting rod big end holes. At this time also, use both connecting rod tester and feeler gauge.

Standard	Limit
0.05 mm	0.1 mm or less

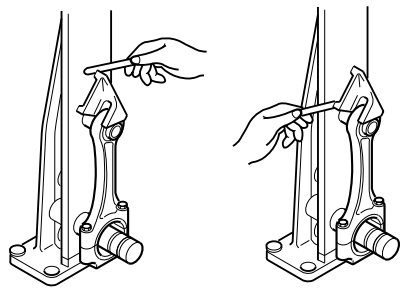

EA0M4034

3) Wear

- Assemble the connecting rod to the crankshaft and measure connecting rod big end side clearance using a feeler gauge.
- Assemble the connecting rod to the piston and measure connecting rod small end side clearance.
- If the measured values are beyond the limit, replace the connecting rod.

Limit	0.5 mm

https://truckmanualshub.com/

3.3. Reassembly

3.3.1. General precautions

- Wash clean all the disassembled parts, particularly oil and water ports, using compressed air, then check that they are free from restrictions.
- Arrange the general and special tools in order for engine assembly operation.
- To wet each sliding part, prepare the clean engine oil.
- Prepare service materials such as sealant, gaskets, etc.
- Discard used gaskets, seal rings, and consumable parts, and replace with new ones.
- Apply only the specified torque for bolts in the specified tightening order and avoid over-tightening.
- Be sure to check that all the engine parts operate smoothly after being reassembled.
- Check the bolts for looseness after preliminary reassembly.
- After completing the engine reassembly operation, check if there is missing parts or shortage of parts.
- Keep your hands clean during the working.

3.3.2. Cylinder block

Cover the floor of the workshop with wood plate or thick paper to prevent damage to the cylinder head and place the cylinder block with the head fitting surface facing downward.

3.3.3. Oil spray nozzle

Tighten and assemble the oil spray nozzle flange with fixing bolts using the spray nozzle jig.

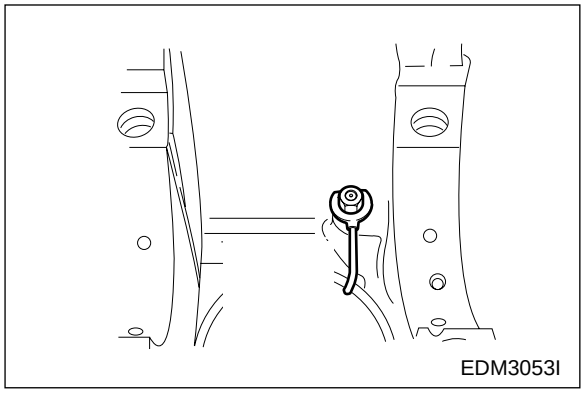

3.3.4. Tappet and cam shaft

- Undercool a new bush with dry ice for about 2 hours and press it into position in the cylinder block using a bench press. After the pressing operation, measure the inside diameter of the cam bush to check if it is not deformed.

- Apply engine oil to the entire face of the tappets and slide them into the tappet holes on the cylinder block.

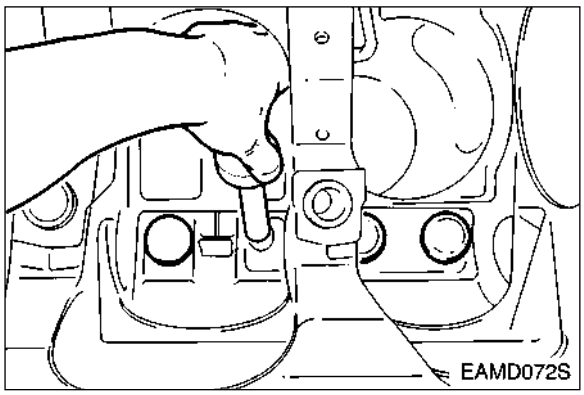

- Wet the cam bush inside diameter and camshaft with oil, and carefully assemble them while turning the camshaft.
- Check to see that the camshaft rotates smoothly.

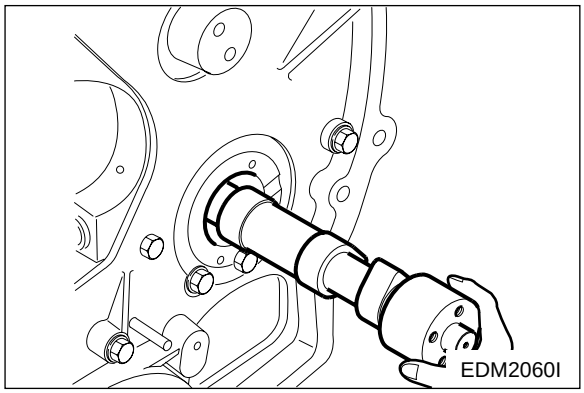

3.3.5. Crankshaft

- Install the main bearing machined with two holes in the cylinder block so that the key is aligned with the key groove, then apply oil to the bearing surface.

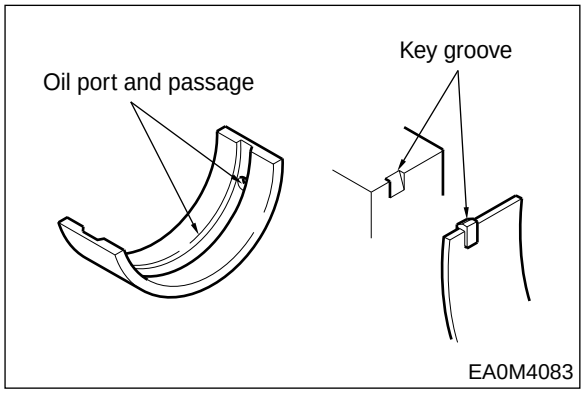

- Heat the crankshaft gear for at least 10 minutes to 120˚C, then apply sealant (Loctite # 641) to the inside wall of the heated crankshaft gear evenly before inserting it to the end of crankshaft.

.

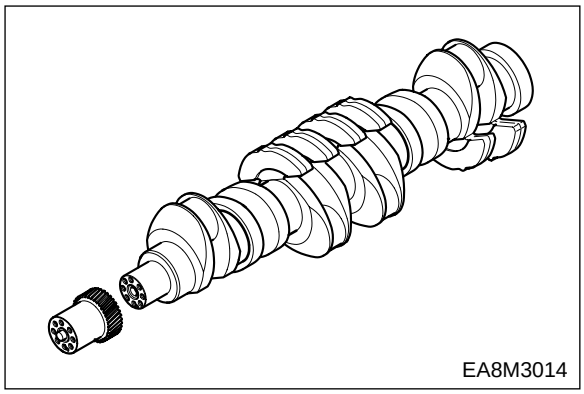

- Semi-tighten a bolt at both sides of the crankshaft, apply engine oil to journals and pins, then assemble the crankshaft with the cylinder block by tightening the fixing bolts.

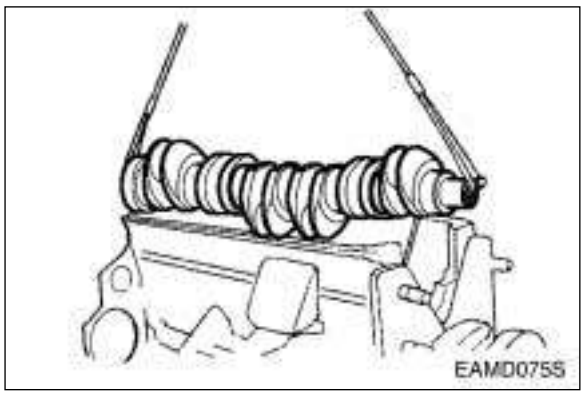

- nstall the oiled thrust washers with the oil groove facing outward.

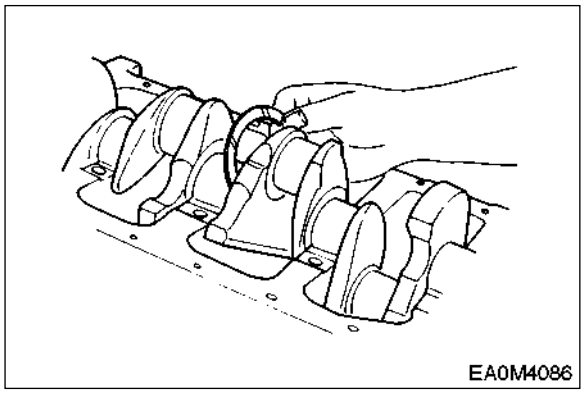

- Install the bearing and thrust washers to the bearing cap and apply oil to the bearing and thrust washers.

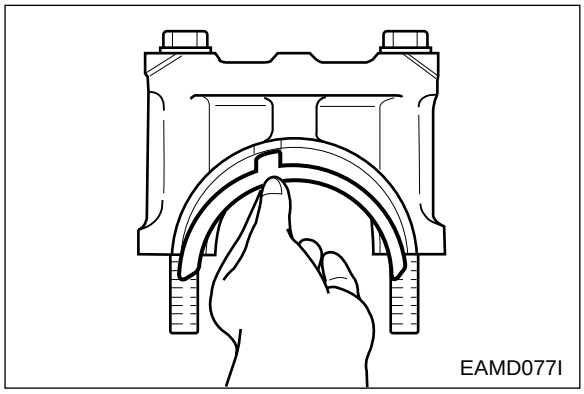

- Install the bearing cap by matching the cylinder block No. with the bearing cap No.

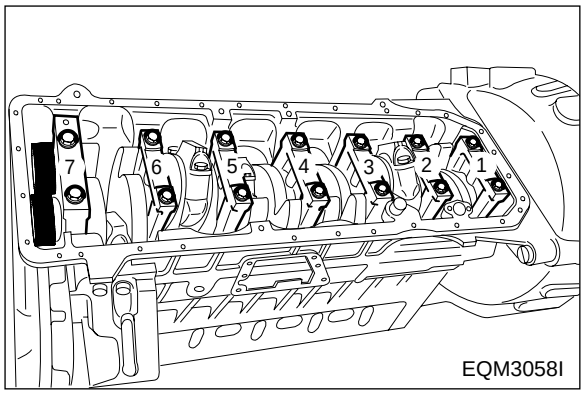

- Apply oil to the entire part of the bearing cap bolts, then tighten in tightening sequence to specified torque.

Torque	30 kg•m

- After semi-tightening both bolts evenly, tighten them diagonally to about 15kg.m for the first stage and 25 kg.m for the second stage respectively, then tighten them completely to the specified torque using a torque wrench.
- Tighten the bearing cap in the sequence of 4-3-5-2-6-1-7.
- Check to see that the assembled crank-shaft turns smoothly.

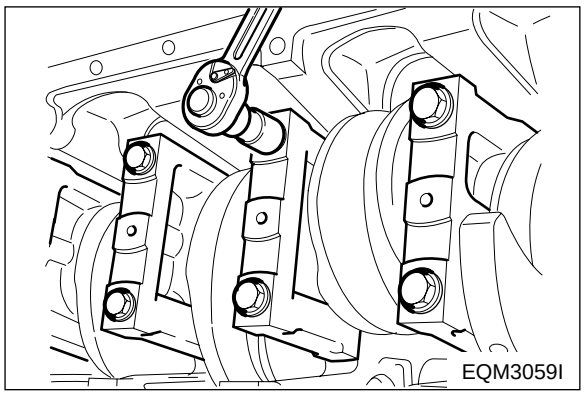

3.3.6. Flywheel housing

- Temporarily install the guide bar on the cylinder block.
- Apply gasket to the cylinder block.
- Using the dowel pin and guide bar, install the flywheel housing and tighten the fixing bolts in a diagonal sequence to specified torque.

Torque	12 kg•m

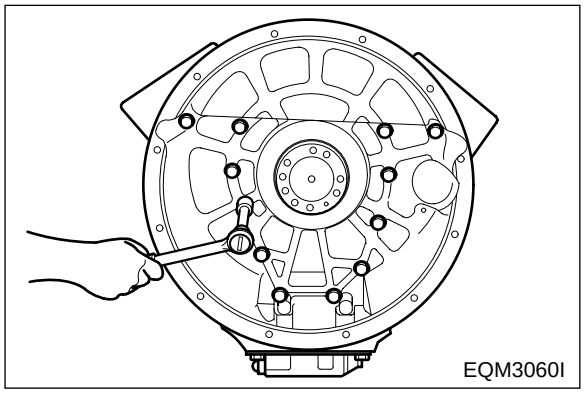

3.3.7. Rear oil seal

- Apply lubricating oil to the outside of theoil seal and flywheel housing inside diameter and fit them over the crank shaft, then assemble the oil seal using an oil seal fitting jig.

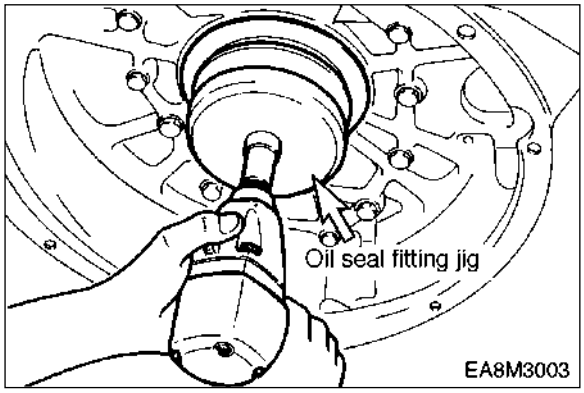

https://truckmanualshub.com/

3.3.8. Flywheel

- Install a guide bar into a bolt hole on the crank shaft, and lift the flywheel to align the dowel pin with the pin hole on the flywheel for temporary assembly operation.
- Install bolts in the remaining holes, take out the guide bar, then install a bolt in the hole where the guide bar had been inserted.
- Tighten the fixing bolts using a torque wrench in a diagonal sequence to specified torque.

Torque	18 kg•m

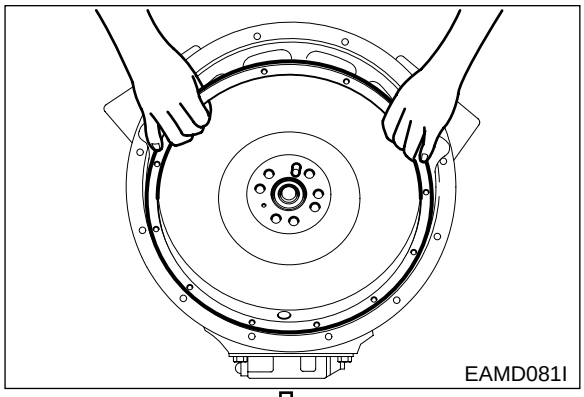

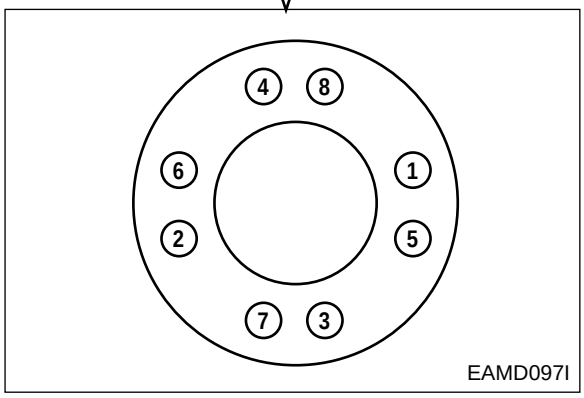

3.3.9. Timing gear case

- Mount gasket using dowel pin on the cylinder block.
- Install the timing gear case by aligning the dowel pin with the dowel pin hole on the timing gear case.

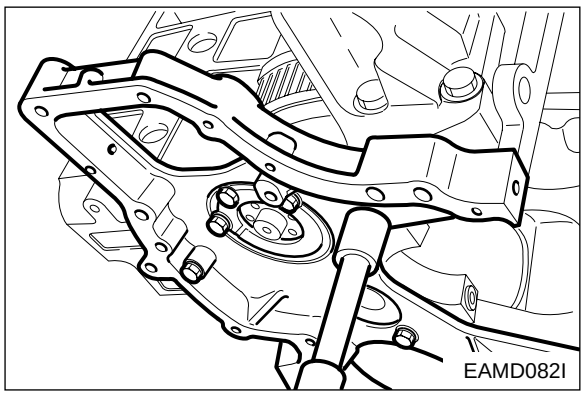

3.3.10. Fuel injection pump drive gear assembly

- Mount gasket by aligning the bolt holes with the pin holes on the bearing housing.
- Tighten up the fixing bolts in the direction of fuel injection pump.

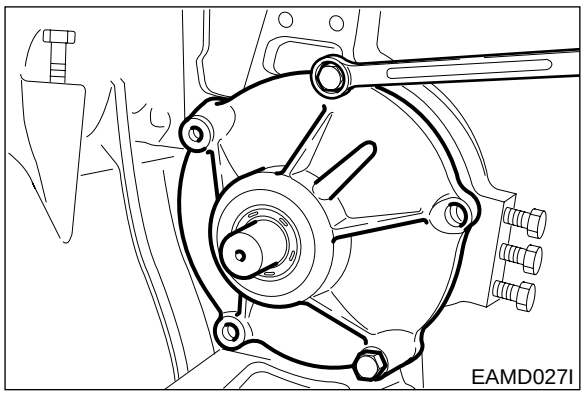

3.3.11. Timing gear

- Install the oil pump idle gear onto the No.7 bearing cap.
- Install a thrust washer over the camshaft and assemble the cam gear by aligning it with camshaft key groove.

Torque	2.2 kg•m

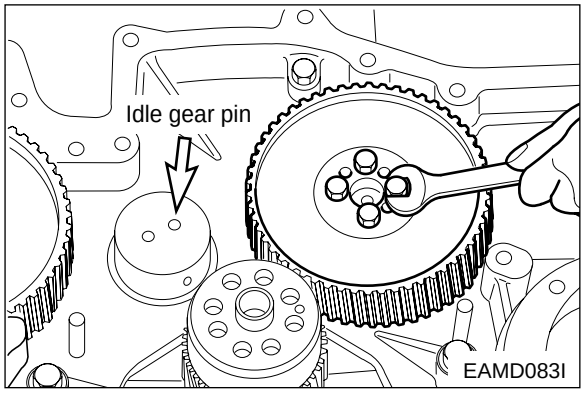

- With the oil port on the idle gear pin facing the cylinder block, install the idle gear pin.

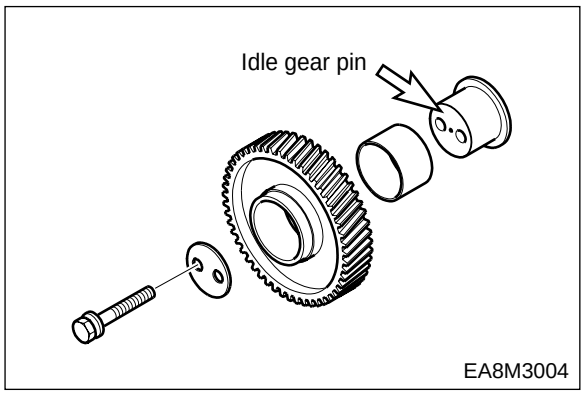

- Install the idle gear by coinciding the marks impressed on the crank gear, cam gear, fuel injection pump drive gear, and idle gear.
- Install a thrust washer on the idle gear and tighten to specified torque.

Torque	6.2 kg•m

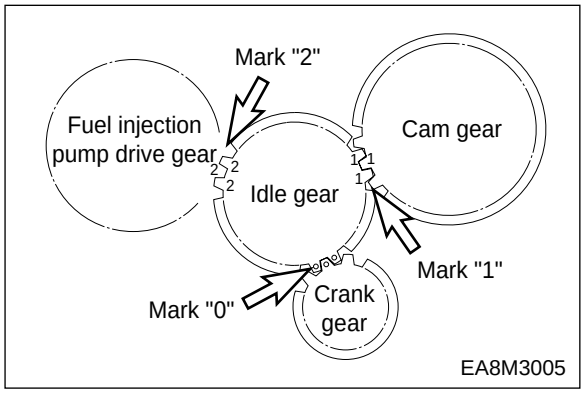

- Check and adjust the amount of backlash between gears using a feeler gauge.

Backlash	0.15 ~ 0.25 mm

3.3.12. Timing gear case cover

- Install dowel pin on the timing gear case.
- Mount a gasket by aligning the fixing bolt holes with those on the gasket.
- Align the dowel pin with the cover pin hole, then install the cover with light tap.
- Tighten the fixing bolts beginning with the oil pan fitting face.

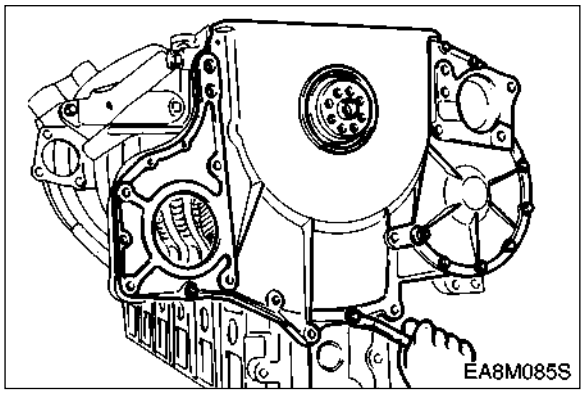

3.3.13. Front oil seal

- Apply lubricating oil to the outside of the oil seal and timing gear case inside diameter and fit them over the crankshaft, then assemble the oil seal using an oil seal fitting jig.

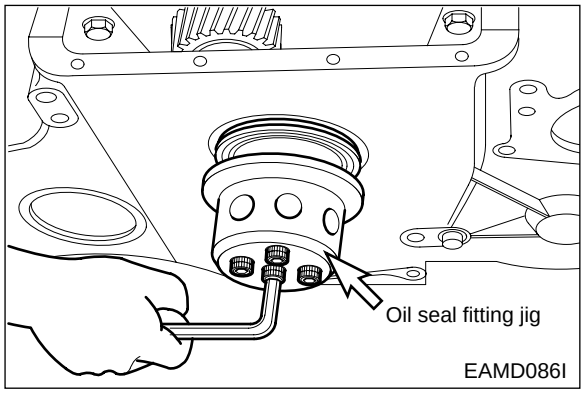

3.3.14. Cylinder liner

- Stand the cylinder block so that the flywheel faces downward.
- Thoroughly clean the liner flange fitting surface and bore inside with compressed air to prevent the entry of foreign substances.
- After the cleaning operation, make the cylinder liner dried up and push it into the cylinder block by hand.
- Wet the liner inside diameter with engine oil.

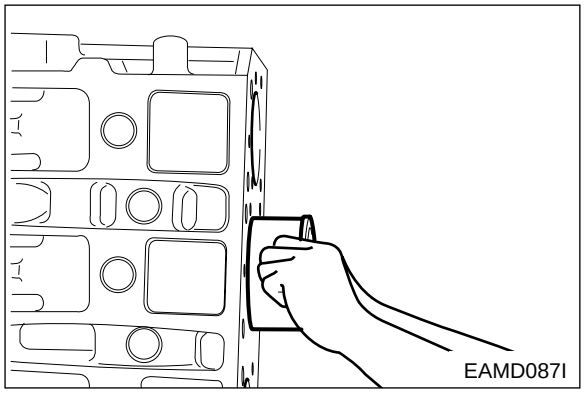

https://truckmanualshub.com/

3.3.15. Piston and connecting rod

- Use a piston heater to heat the piston approximately 100 ˚C (212 ˚F) for 5 minutes.

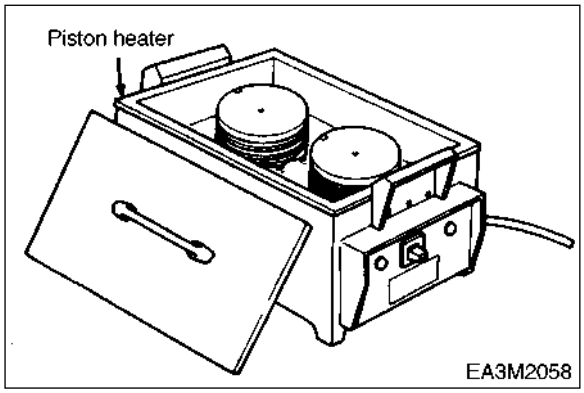

- Align the piston pin hole with the oiled connecting rod small end and press the piston pin (by lightly tapping with a rubber hammer) to assemble the connecting rod with the piston.

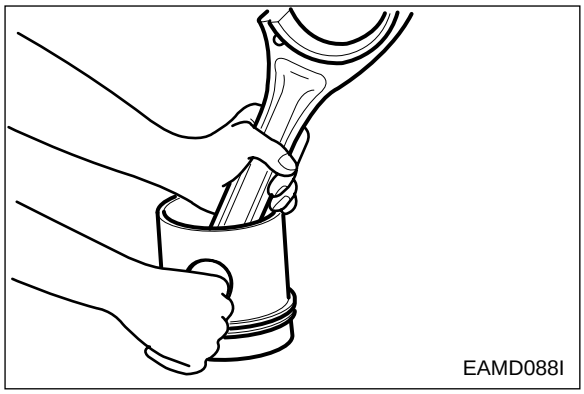

- Noting the direction of the piston, make the longer side (machined with key groove on the bearing) of the connecting rod big end and the mark of ‘ ’ impressed on the inside of the piston face each other in opposite directions. On the piston head surface, the longer side of connecting rod big end is in opposite direction from the valve seating surface as well as in the same direction with the narrow margin of combustion chamber.

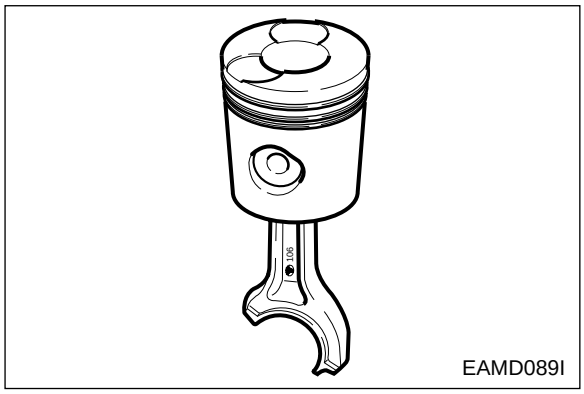

- nstall the snap rings and check to see that it is securely assembled.

- Install the piston ring in the piston using piston ring pliers.

https://truckmanualshub.com/

- Identify the mark “Y” or “TOP” on the ring end to prevent the top and bottom of the piston ring from being interchanged and make the marked portion face upward.

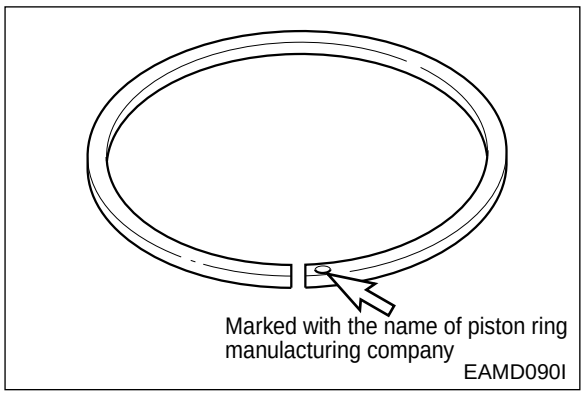

- Adjust the angle among individual piston ring gaps to 90(and fit a piston assembling jig onto the piston, Use care not to match the ring gaps with the pin direction.
- Install the bearing by aligning it with the connecting rod key groove and apply oil to the bearing and piston.

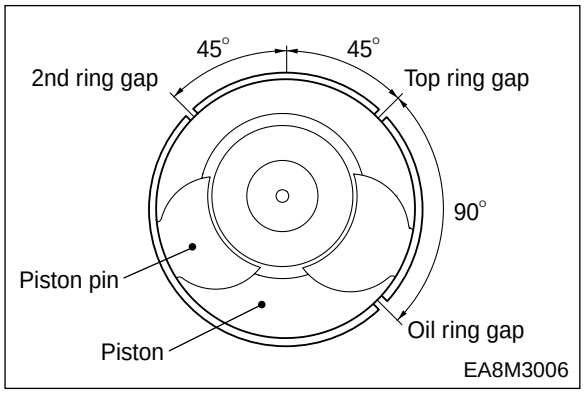

- Position the valve seating surface toward the tappet hole and insert the piston with hand.
  Use care not to damage the cylinder liner and piston, and slightly lift and insert the piston into the cylinder so that the ring may not be damaged by the fillet of the liner.

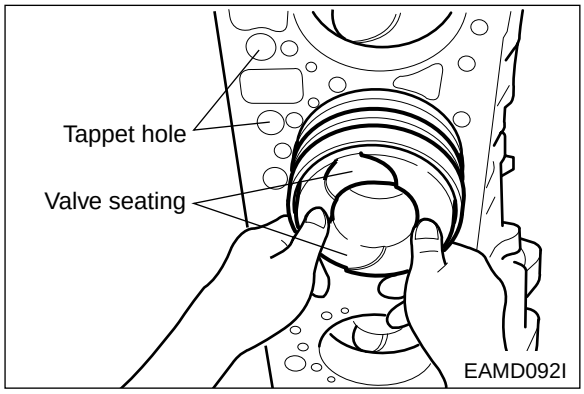

- Install the bearing in the connecting rod cap and apply oil.
- Make sure that the manufacture serial numbers impressed on the connecting rod cap and connecting rod big end are identical, and install the connecting rod cap by aligning it with dowel pin.
- Wet the fixing bolts with oil, semi-tightenthem with hand, tighten them to 15 kg.m for 1st stage and 22 kg.m for 2nd stage respectively, and finally to specified torque.

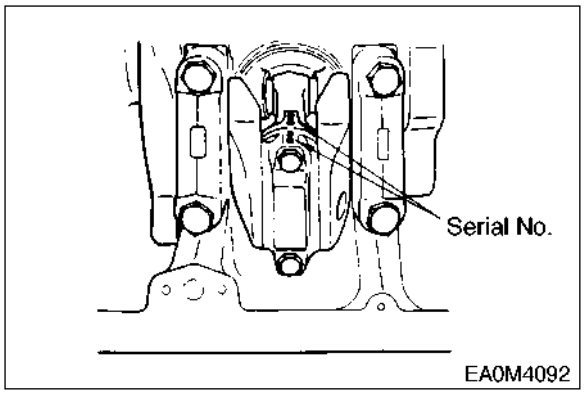

Torque	28 kg•m

- Move the bearing cap with hand, and release and reassemble it if no movement is detected.

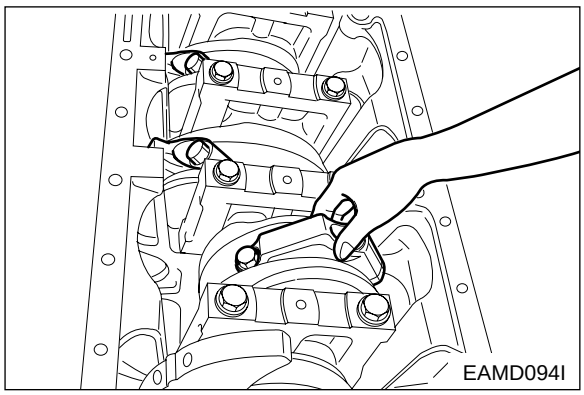

3.3.16. Relief valve

- Assemble the relief valve.

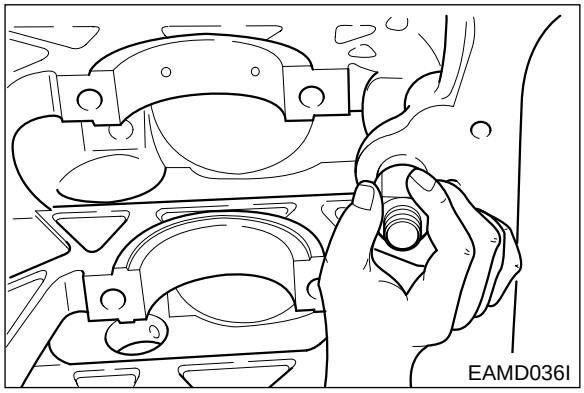

3.3.17. Oil pump and oil pipe

- Install a dowel pin in the No.7 bearing cap, then assemble the oil pump with specified torque.

Torque	4.4 kg•m

- Assemble the oil suction pipe with the delivery pipe, then install the bracket on the bearing cap.

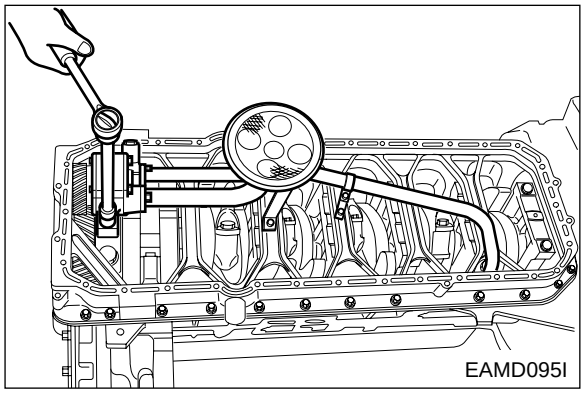

https://truckmanualshub.com/

3.3.18. Oil pan

- Mount gasket and put the oil pan thereon.
- Place stiffeners and tighten bolts.
- Align the bolt holes with gasket holes to prevent damage to the gasket and tighten to specified torque.

Torque	2.2 kg•m

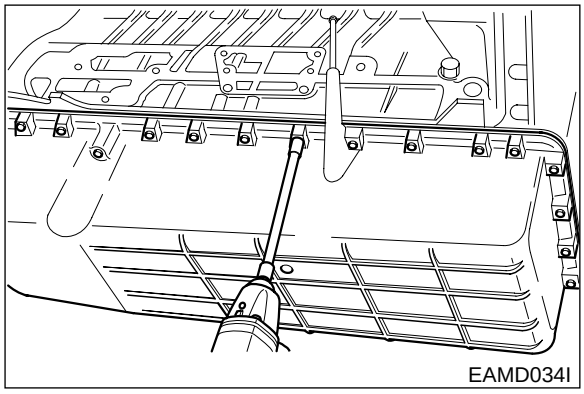

3.3.19. Intake and exhaust valves

- Identify the marks of “IN” and “EX” impressed on the valve head before assembling the valve with the valve head.

- With a valve stem seal fitting jig, assemble the valve stem seal with the valve guide.

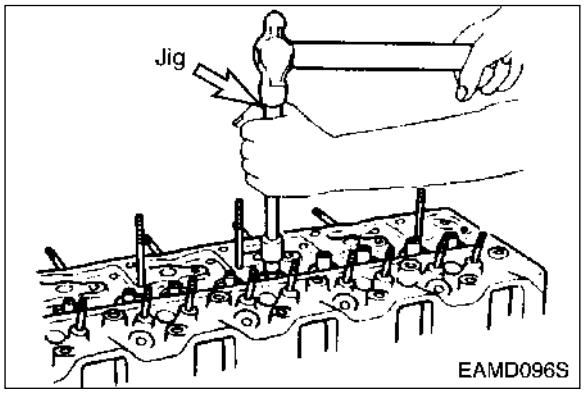

- After installing valve springs and spring retainer, press the retainer with a jig, then install cotter pin.
- Tap the valve stem lightly with a rubber hammer to check that the valve is assembled correctly.

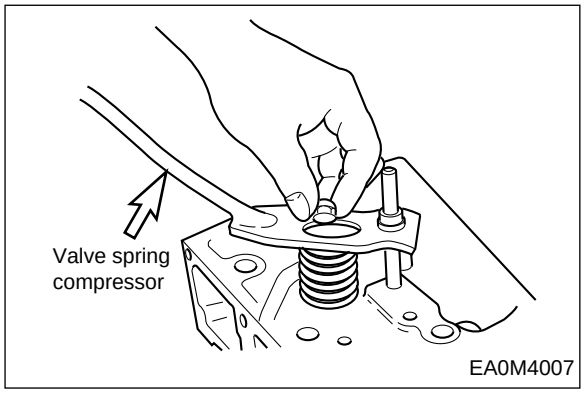

https://truckmanualshub.com/

3.3.20. Nozzle tube

- Apply sealant (LOCTITE # 620) to the nozzle tube and place the O-ring over the cylinder head fitting face on the nozzle tube, then install the nozzle tube in the cylinder head.

- Install a guider of the nozzle tube insert ass'y (Guider + Expander) the cylinder head, then tighten the nozzle fixing nuts.

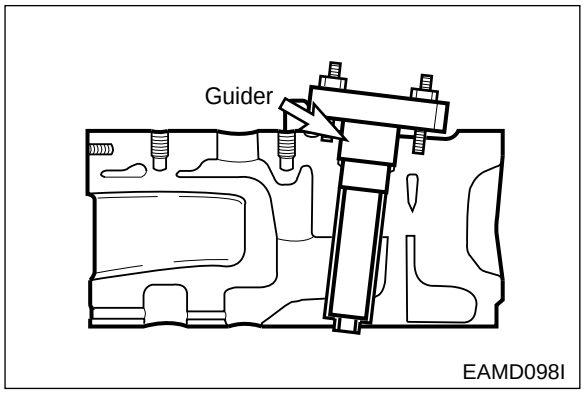

- Apply engine oil to an expander and install it onto the special tool (guider).
- Tighten the bolts until the expander is forced out of the cylinder head bottom.

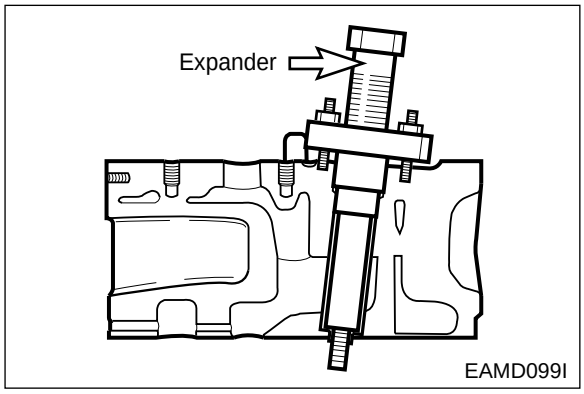

- After mounting the nozzle tube, make a hydraulic test to check for water leaks.

Test pressure	2 kg/cm^2

3.3.21. Cylinder head

- Install the injection nozzle fixing stud bolts and water pipe fixing stud bolts.
- Clean the head bolt holes on the cylinder block with compressed air to remove foreign substances and thoroughly clean the gasket fitting face of the cylinder block.

- Install head gasket, with 'TOP' mark facing upward, on the cylinder block by aligning the holes with dowels.

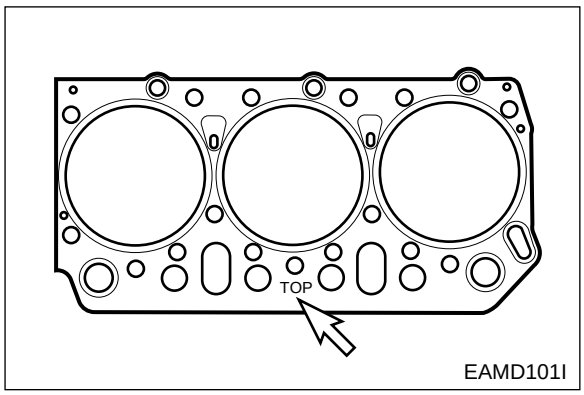

- Check the inside of combustion chamber for foreign substances, and carefully mount the cylinder head assembly in the block by aligning the dowel pin with the dowel pin hole. Be careful not to damage the head gasket. If the dowel pin is not in alignment, lift the cylinder head again and then remount it.

- Coat the head bolts with engine oil, then tighten them in proper sequence to the specified torque.

<Cylinder Head Bolts>

	Type 1	Type 2
Specification	TY 12.9T M14x1.5x153	TY 10.9T M14x1.5x150
Torque	24.5 kg.m	6 kg.m +180°+150°

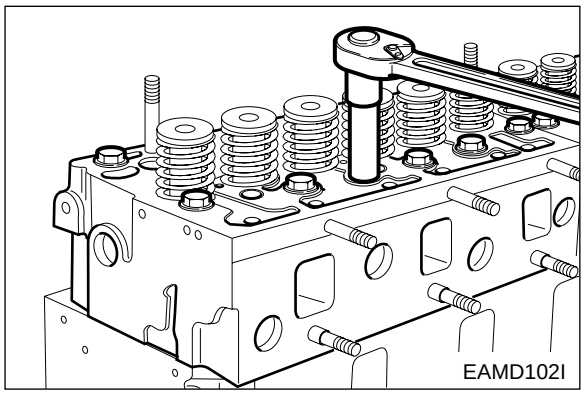

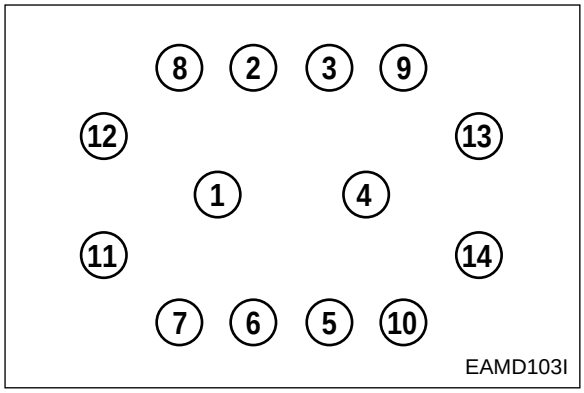

- Coat the push rod with engine oil and insert it into the push rod hole.

https://truckmanualshub.com/

- Adjust the valve clearance as following guide.

<Guide for valve clearance adjustment>

◆ After letting the #1 cylinder's piston come at the compression top dead center by turning the crankshaft, adjust the valve clearances.

◆ Loosen the lock nuts of rocker arm adjusting screws and push the feeler gauge of specified value between a rocker arm and a valve stem and adjust the clearance with adjusting screw respectively and then tighten with the lock nut.

◆ As for the valve clearance, adjust it when in cold, as follow.

Model	Intake Valve	Exhaust Valve
DE12T P126TI	0.3 mm	0.3 mm

- By cranking the engine, let #6 cylinder's valves overlap.
- In time, adjust the valve clearance corresponding to " ⇨ " of lower lists.
- Adjust the valve clearance corresponding to " ➔ " of lower lists.
- After reinsuring the valve clearances, retighten if necessary.

◆ No. 1 Cylinder is located at the side where flywheel was installed.

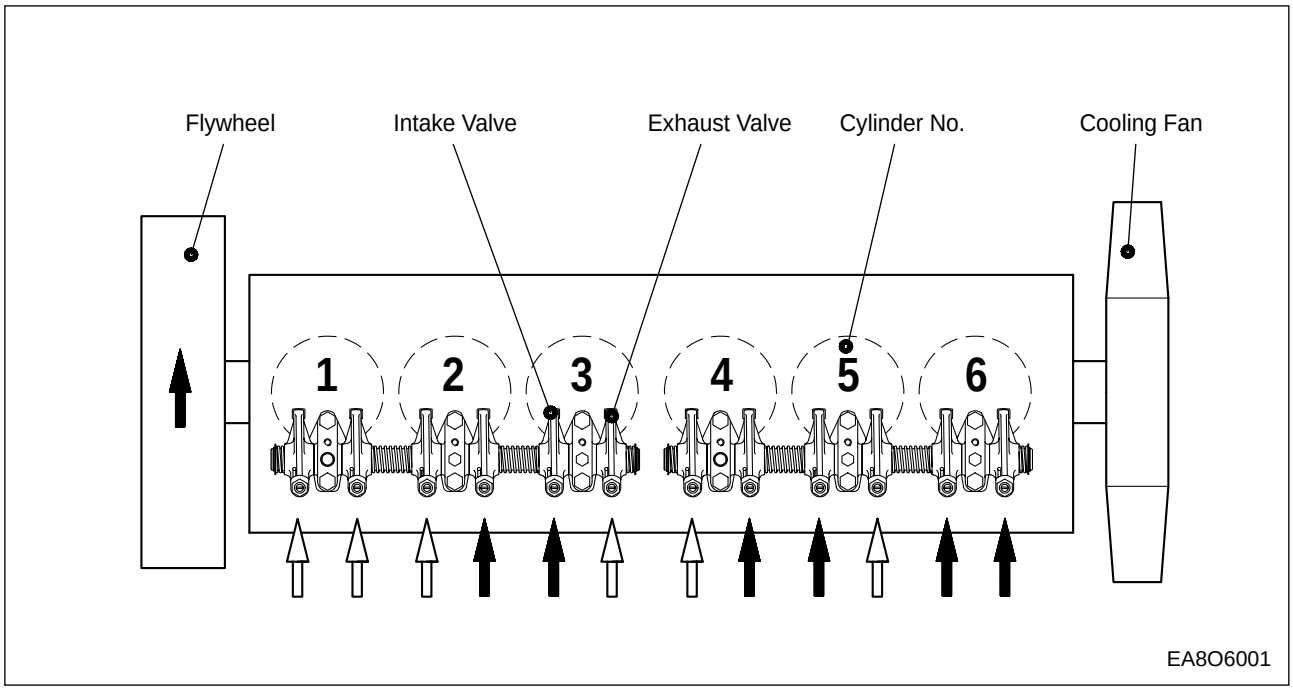

- Adjust valve clearance with a feeler gauge and tighten the fixing nuts to specified torque.

Torque	4.4 kg•m

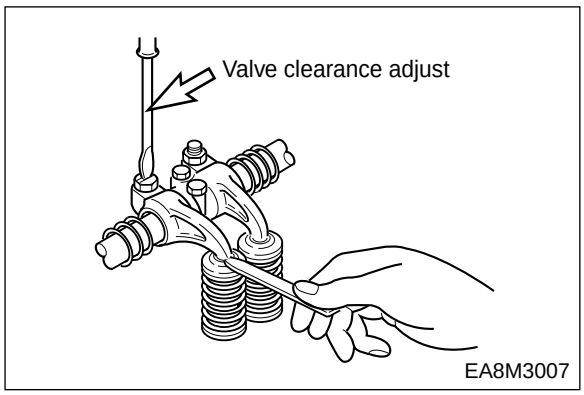

3.3.22. Rocker arm assembly

- Apply lubricating oil to the rocker arm bush and shaft, and assemble the intermediate bracket with the rocker arm using fixing bolts.

Torque	4.4 kg•m

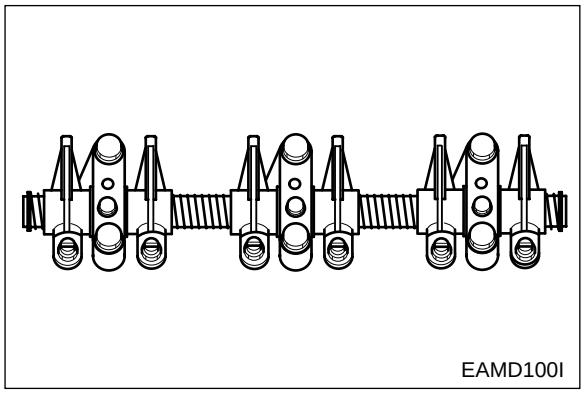

- Semi-install valve clearance adjusting bolts onto the rocker arm.

- Install the spring, rocker arm, bracket, rocker arm, spring, washer, and snap ring in the described sequence.
- Install the rocker arm and bracket in the same direction.

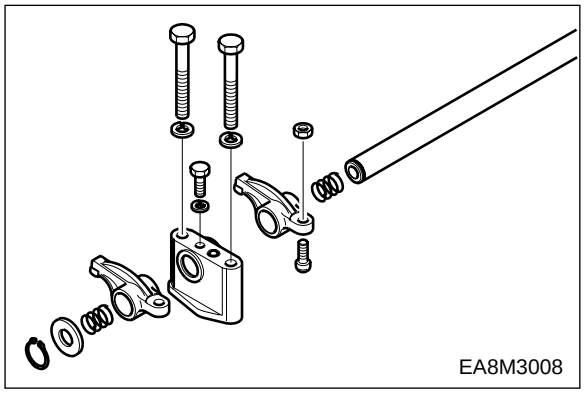

3.3.23. Injection nozzle

- Install the dust seal with its round portion facing downward.
- Mount a seal ring (0.5 mm) on the seal ring seating surface of the nozzle tube and assemble nozzle holder assembly with the stud bolt with the nozzle pipe installing direction facing outward.
- Be sure to follow the specified torque.

Torque	1.0 kg•m

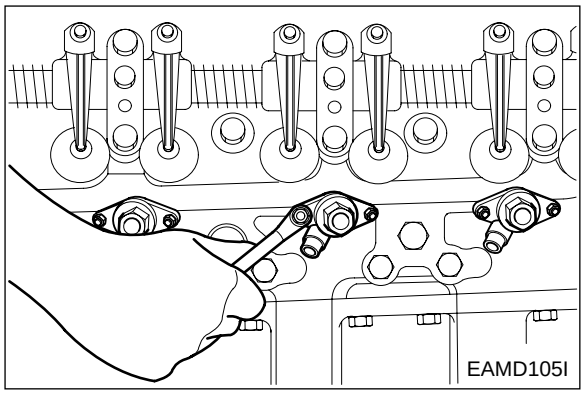

https://truckmanualshub.com/

3.3.24. Oil cooler

- Install the oil cooler onto the oil cooler cover.
- Carefully apply the gasket to prevent oil leakage.
- Do not damage the gasket and install the cover onto the cylinder block.
- Connect a connection pipe between the water pump and oil cooler.

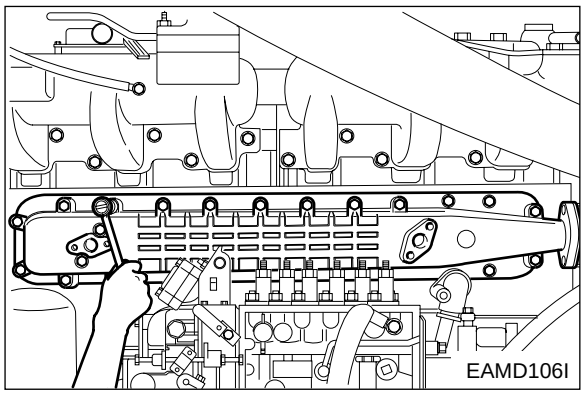

3.3.25. Oil filter

- Install the oil filter onto the cylinder block, and tighten the fixing bolts.
- With the hollow screw, assemble the oil pipe connected between the oil cooler and cylinder block.
- Install a connection pipe between the oil cooler and oil filter.
- Install the oil cooler connecting pipe.
- Install packing and assemble the cartridge using a filter wrench.

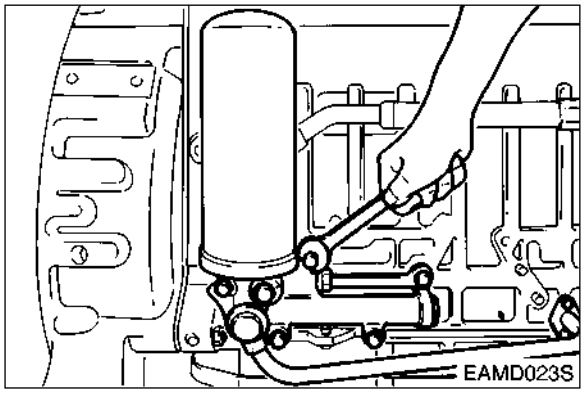

3.3.26. Injection pump

- Install the injection pump bracket in the cylinder block.
- After measuring the amount of run-out with an alignment setting jig, disassemble the bracket, adjust the shims, then reassemble it.

Run out	0.2 mm or less

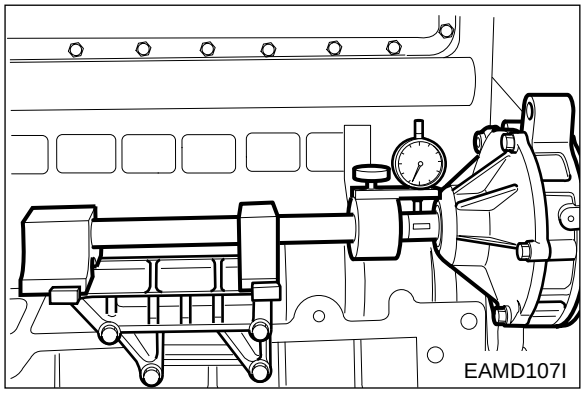

- Mount the top/bottom adjusting shims in the bracket and then mount the fuel injection pump.

- Tighten the fixing bolts in a diagonal sequence to specified torque.

Torque	4.4 kg•m

https://truckmanualshub.com/

- Turn the flywheel until No. 1 piston is placed in the “OT” position of notch marks on the flywheel, and then turn again the flywheel clockwise until showing the notch mark of the right figure corresponding to the injection timing is aligned with the pointer (↓) on the flywheel housing.

	DE12T	P126TI
Fuel injection timing (B.T.D.C static)	12°	12°

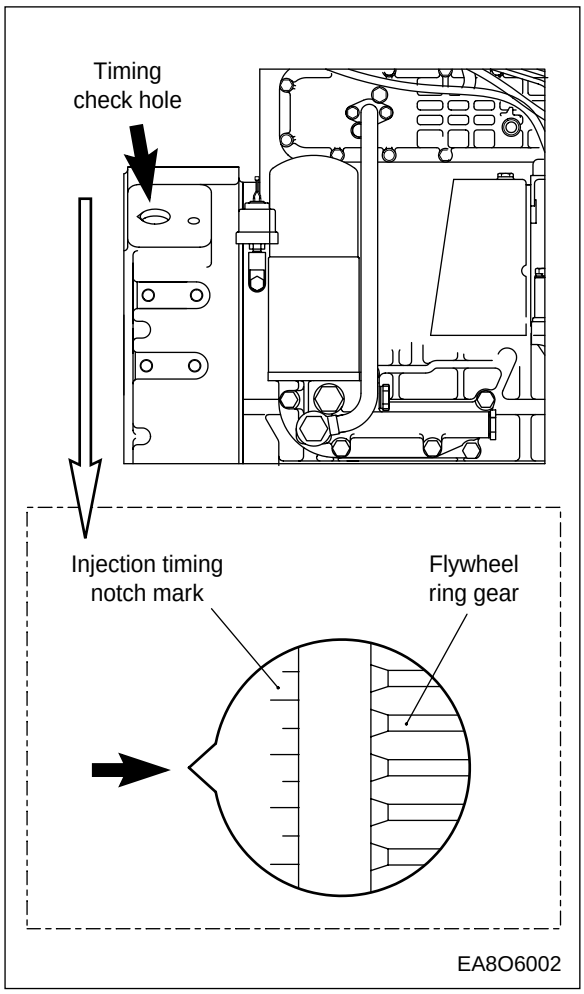

- Turn the timer until the notch mark of the indicator plate attached to the fuel injection pump is aligned with the notch mark of the timer.

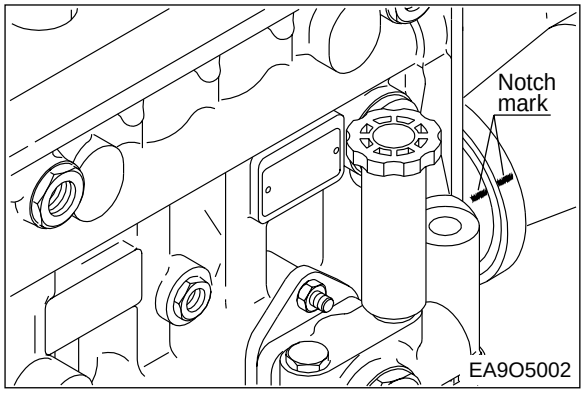

- Tighten the Coupling fixing bolts and nuts to specified torque.

Torque	6.0 kg•m

- Tighten the drive shaft connecting flange fixing bolts to specified torque

Torque	7.5 ~ 8.5 kg•m

- Install the oil delivery pipe and return pipe.

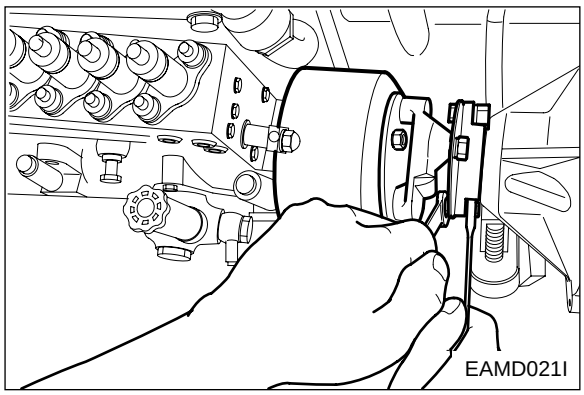

3.3.27. Vibration damper end pulley

- Install the vibration damper on the crankshaft pulley.
- Install the crankshaft pulley assembly on the crankshaft, then tighten the bolts and thrust washers.

Torque	13.4 kg•m

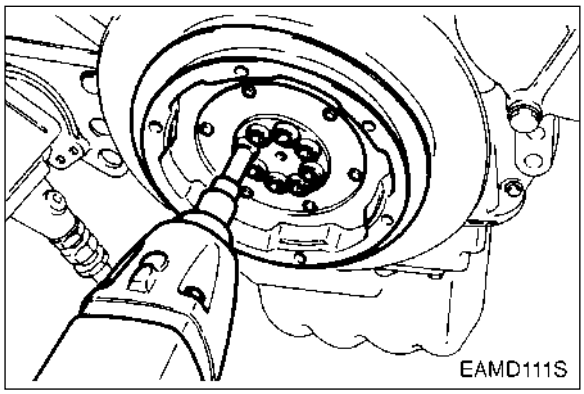

3.3.28. Fan drive pulley

- Install the fan drive pulley onto the timing gear case cover.

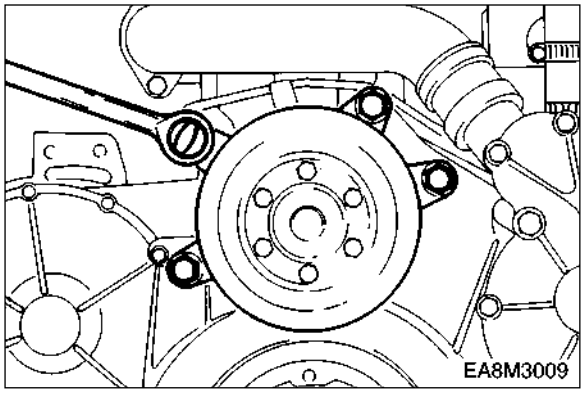

3.3.29. Water pump

- Mount a new O-ring.
- Install the water pump drive pinion over the PTO (power take-off) spline.
- Connect water pipes and by-pass pipe to the water pump.
- Connect a water pipe to the expansion tank.

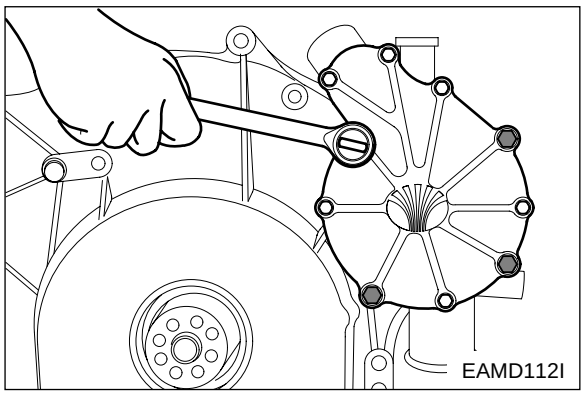

3.3.30. Power take-off

- Assemble the power take-off sub assembly.

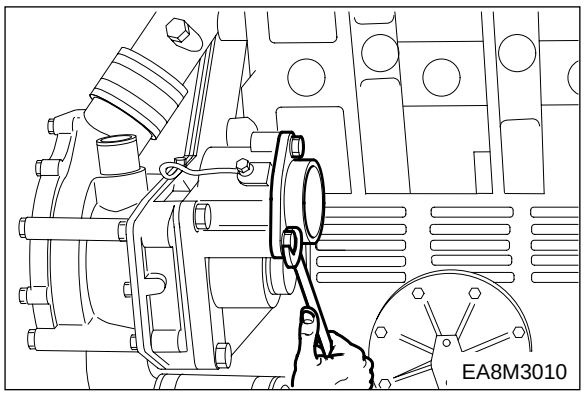

3.3.31. Exhaust manifold

- Install the exhaust manifold gasket over the stud bolts by aligning the gasket with the exhaust port on the cylinder head so that the face and back of the gasket can be positioned correctly.
- Semi-assemble the exhaust manifold and install the heat resisting plate.
- First, install the nuts and then place an additional nut on each of them to prevent looseness.

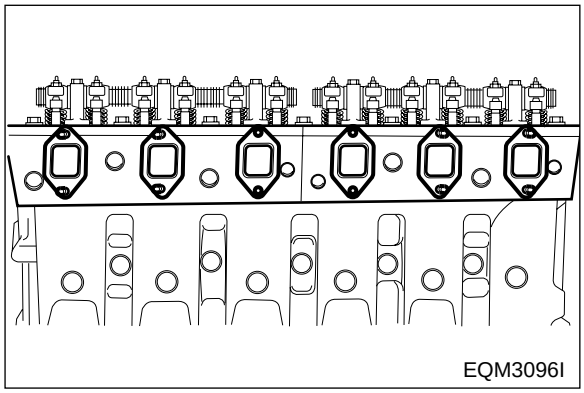

3.3.32. Turbocharger

- Fit a new gasket over the stud bolts of the exhaust manifold before tightening those turbocharger fixing bolts.
- Install the oil supply pipe and return pipe.

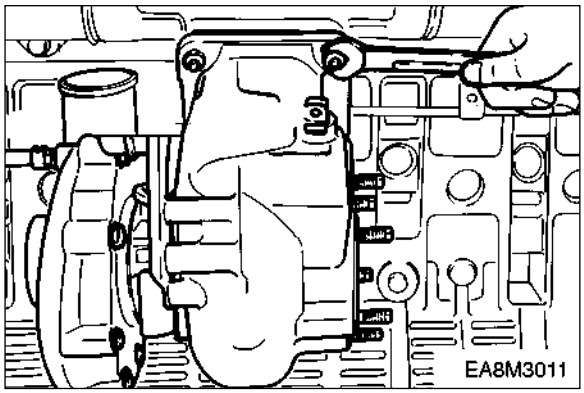

- Semi-assemble the bracket to the intake pipe, connect a rubber hose between the turbocharger and intake pipe using rubber hose, then assemble the bracket completely.

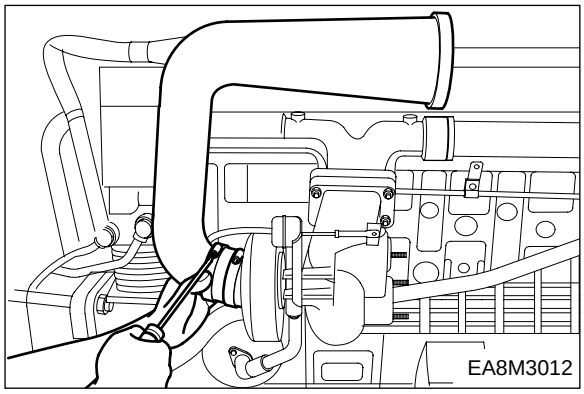

https://truckmanualshub.com/

3.3.33. Starter

- Assemble the starter in position on the flywheel housing.

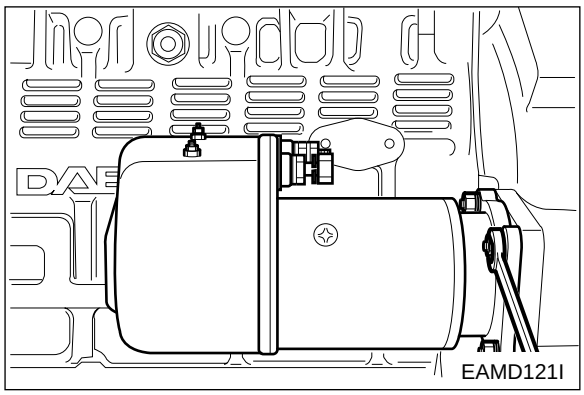

3.3.34. Intake manifold

- Fit a gasket on the intake manifold before assembling the intake manifold.

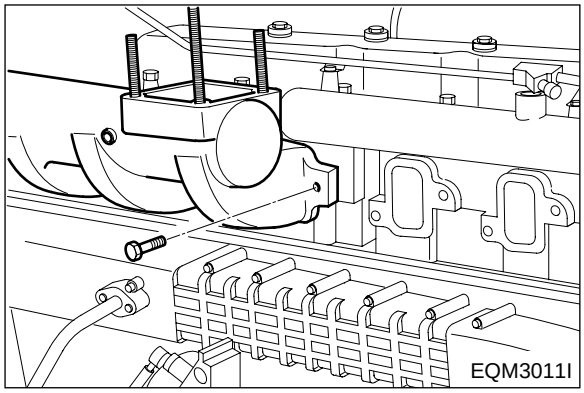

3.3.35. Injection pipe

- Semi-assemble a nut at both ends of the fuel high pressure pipe and tighten them up one by one to specified torque.

Torque	13.4 kg•m

- Tighten hollow screws to assemble the fuel return pipe.
- Assemble the fuel return hose on the fuel injection pump.

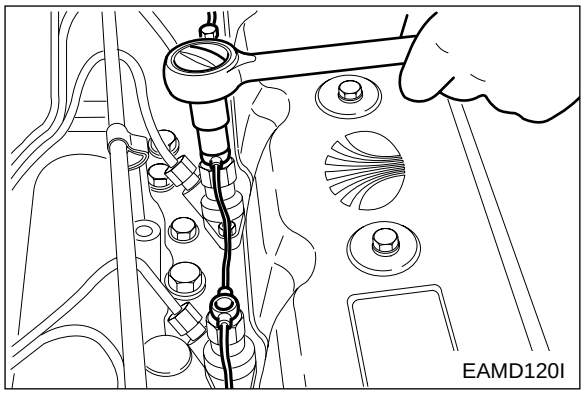

https://truckmanualshub.com/

3.3.36. Fuel filter

- Assemble the fuel filter with the intake manifold.
- Assemble the fuel feed hose according to the direction of an arrow impressed on the fuel filter head so that fuel can be fed in the sequence of **FUEL FEED PUMP** → **FUEL FILTER** → **FUEL INJECTION PUMP.**

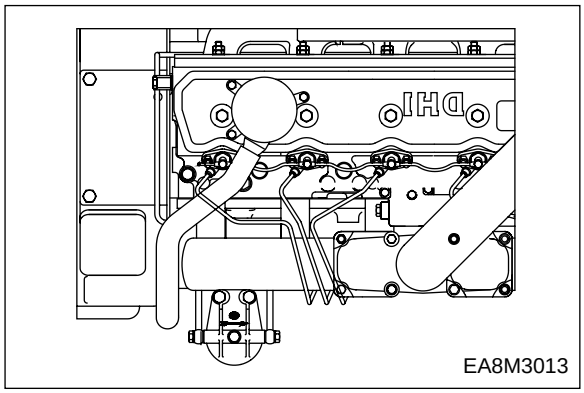

3.3.37. Cylinder head cover

- Assemble the cover packing with the cover, install the cover on the head, then tighten the fixing bolts in sequence to specified torque.

Torque	1.5 kg•m

- Assemble the breather hose with PCV valve.

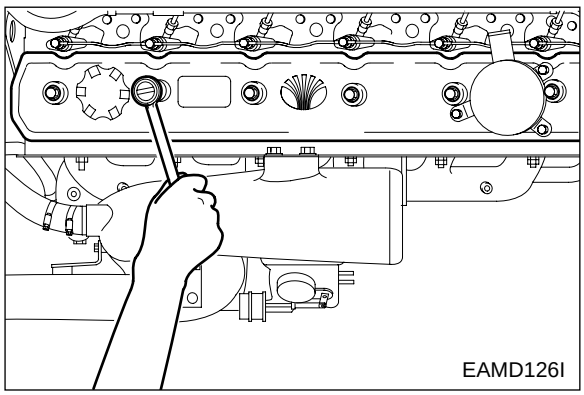

3.3.38. Alternator

- Install the alternator mounting bracket.
- Install the alternator with fixing bolts to the mounting bracket.

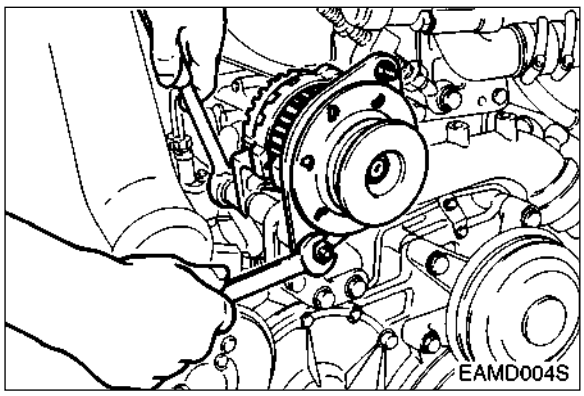

https://truckmanualshub.com/

3.3.39. Cooling fan

- Install the cooling fan and flange, then tighten the fixing boltd.

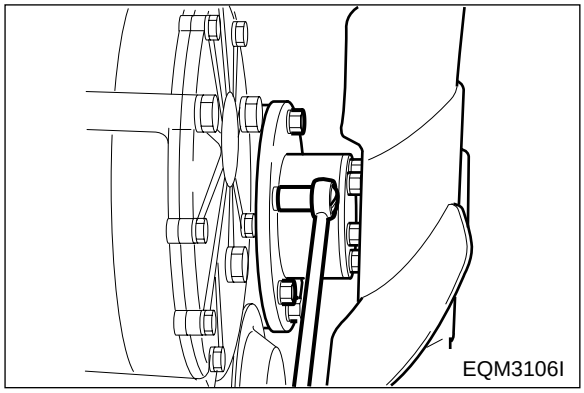

3.3.40. V- belt

- Install the V-belt on the crank pulley, alternator pulley and fan drive pulley.
- Adjust the V-belt tension using the tension adjusting bolt.

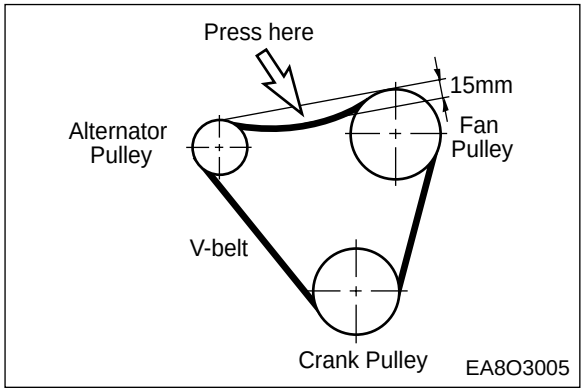

3.3.41. Oil level gauge

- Assemble the oil level gauge and guide tube on the oil pan.

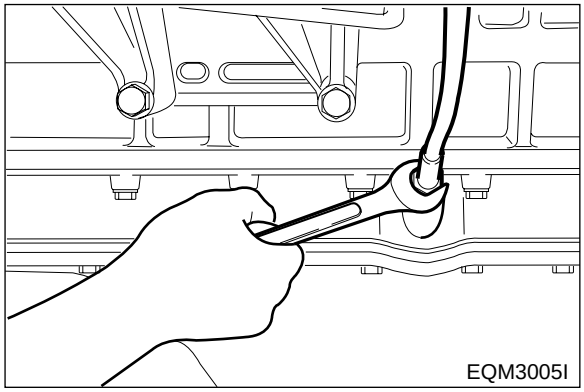

https://truckmanualshub.com/

3.4. Breaking-in

3.4.1. Operation of a new engine (Break-In)

Because the sliding surfaces of a new engine are not lapped enough, the oil film can be destroyed easily by overload or overspeed and the engine life-time may be shortened. Therefore the following things must be obeyed by all means.

Up to the first 2,000km(150 hours)

- Engine should be run at fast idling until the temperature of the engine becomes normal operating condition.
- Overload or continuous high speed operation should be avoided.
- High speed operation with no load should be prevented.
- Abrupt start and stop of the engine should be avoided.
- Engine speed must be under 70% of its maximum speed.
- Maintenance and inspection must be accomplished thoroughly.

3.4.2. Check points for break-in

During the break-in (the initial running of the engine) period, be particularly observant as follows:

a) Check engine oil level frequently. Maintain oil level in the safe range, between the “min.” and “max.” marks on dipstick.

NOTE : *If you have a problem getting a good oil level reading on dipstick, rotate dipstick 180(and re-insert for check.*

b) Watch the oil pressure warning lamp. If the lamp blinks, it may be the oil pick-up screen is not covered with oil. Check oil dipstick. Add oil to the oil pan, if required. Do not overfill. If level is correct and the status still exists, see your DEALER for possible switch or oil pump and line malfunction.

NOTE : *Oil pressure will rise as RPM increases, and fall as RPM decreases. In addition, cold oil will generally show higher oil pressure for any specific RPM than hot oil. Both of these conditions reflect normal engine operation.*

c) Watch the engine water temperature gauge and be sure there is proper water circulation. The water temperature gauge needle will fluctuate if water level in expansion tank is too low.

At the end of the break-in period, remove break-in oil and replace the oil filter. Fill oil pan with recommended engine oil. Refer to following table.

<Engine Oil capacity>

	Oil pan (only)
DE12T	23 liter
P126TI	23 liter

https://truckmanualshub.com/

4. Maintenance of major components

4.1. Cooling system

4.1.1. General information

This engine is water-cooling type. Heat from the combustion chamber and engine oil heat are cooled down by coolant and radiated to the outside, resulting in the normal operation of the engine.

Looking into the cooling system, the water pumped up by the water pump circulates around the oil cooler through the water pipe to absorb the oil heat, and then flows through the water jacket of the cylinder block and water passage of the cylinder head to absorb the heat of the combustion chamber.

The water absorbing the oil heat and combustion chamber heat goes on to the thermostat through the water pipe, and circulates to the water pump if water temperature is lower than the valve opening temperature on the thermostat, while circulating to the radiator at water temperature higher than the valve opening temperature. At the radiator, the heat absorbed in the coolant is radiated to cool down and the coolant recirculates to the water pump.

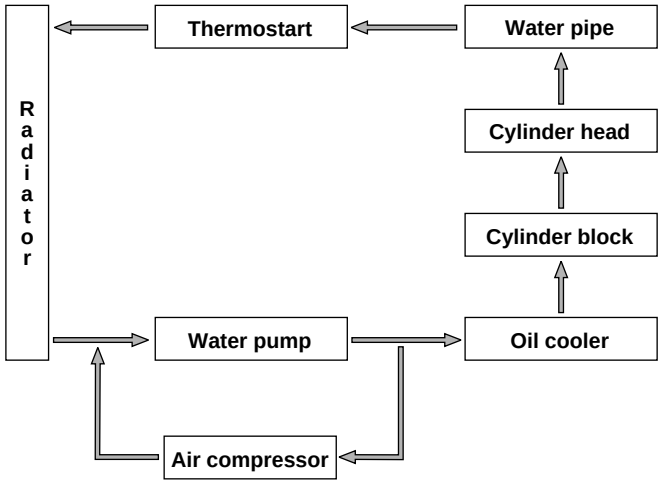

EQM4001I

● **Specification**

Item	Specification
1. Water pump	Centrifugal type
type	
Delivery	About 350 liter/min
Pumping speed	2,100 rpm
Pumping back pressure	760 mmHg
2. Thermostat	
Operating temperature	83 ~ 95˚C
3. Cooling fan and belt Fan diameter - Number of blades	I755 - 7
Fan belt tension	15mm/ deflection by thumb

https://truckmanualshub.com/

4.1.2. Water pump

- Loosen the bolt (16) to disassemble the housing cover (15).
- Heat the impeller (6) slightly, then remove it using a puller jig.
- Remove the mechanical seal.
- Unscrew the socket bolt (12) and remove the shaft and bearing assembly from the housing.
- With a press, remove the spline shaft and bearing.
- Reverse the disassembly sequence for reassembly operation.
- Replace the oil seal (7) with a new one at reassembly.
- To reassemble the impeller, maintain a constant gap (0.3 ~ 0.6 mm) between the impeller and pump housing using a feeler gauge.

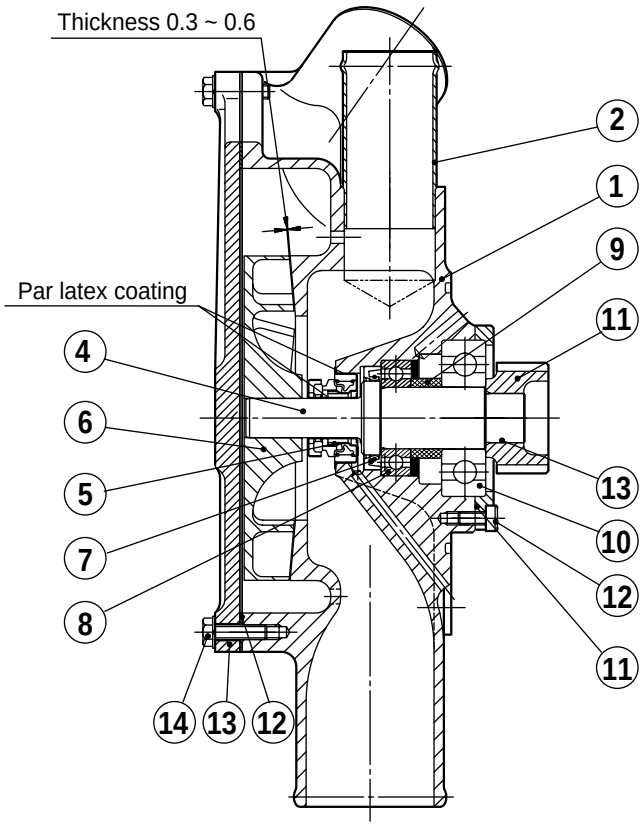

EAMC001I

<Construction of water pump>

1.Water pump housing	8.Ball bearing	13.Spline shaft
4.Shaft	9.Space	14.Gasket
5.Mechanical seal	10.Ball bearing	15.Housing cover
6.Impeller	11.Bearing cover	16.Bolt
7.Oil seal	12.Socket bolt	

https://truckmanualshub.com/

4.1.3. Thermostat

● General descriptions and main data

The thermostat maintains a constant temperature of coolant (90 ~ 95˚C) and improves thermal efficiency of the engine by preventing heat loss.

Namely, when the temperature of coolant is low, the thermostat valve is closed to make the coolant bypass to directly enter the water pump; when the coolant temperature rises to open wide the thermostat valve, the bypass circuit is closed and the water passage to the radiator is opened so that the coolant is forced to flow into the radiator.

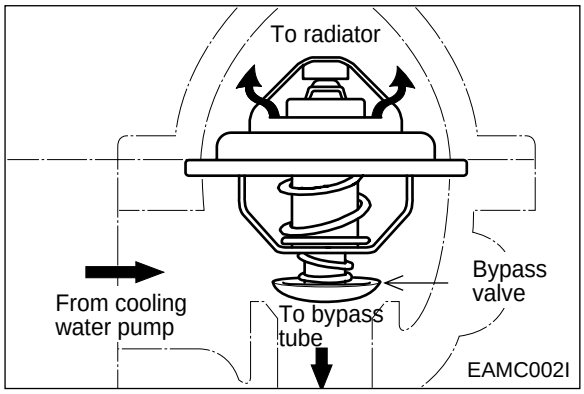

Item	Specifications
Type	Wax-pallet type
Open at	83 ˚C
Open wide at	95 ˚C
Valve lift	8 mm or more

● Inspecting

(1) Check the wax pallet and spring for damage.

(2) Put the thermostat in a container of water, then heat the water slowly and check temperature with a thermometer. If the valve lift is 0.1 mm (starting to open) at temperature of 83 ˚C and 8 mm or more (opening wide) at temperature of 95 ˚C, the thermostat is normal.

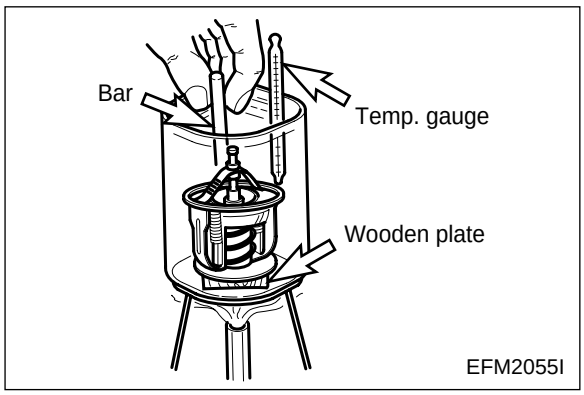

● Replacing thermostat and precautions for handling

(1) Precautions for handling

The wax pallet type thermostat does not react as quickly as bellows type one to a variation of temperature of coolant. Such relatively slow reaction is mainly due to the large heat capacity of the wax pellet type thermostat. Therefore, to avoid a sharp rise of coolant temperature, it is essential to idle the engine sufficiently before running it. In cold weather, do not run the engine at overload or overspeed it immediately after starting off.

(2) When draining out or replenishing coolant, do it slowly so that air is bled sufficiently from the entire cooling system.

(3) Replacing thermostat

If the thermostat is detected defective, retrace with a new one.

4.1.4. Diagnostics and troubleshooting

Complaints	Possible causes	Corrections
1. Engine overheating	● Lack of coolant	● Replenish coolant
	● Radiator cap pressure valve spring weakened	● Replace cap
	● Fan belt loosened or broken	● Adjust or replace fan belt
	● Fan belt fouled with oil	● Replace fan belt
	● Thermostat inoperative	● Replace thermostat
	● Water pump defective	● Repair or replace
	● Restrictions in water passages due to deposit of scales	● Clean radiator and water passages
	● Injection timing incorrect rectly	● Adjust injection timing cor
	● Restriction in radiator core	● Clean exterior of radiator
	● Gases leaking into water jacket due to broken cyli nder head gasket	● Replace cylinder head gasket
2. Engine overcooling	● Thermostat inoperative	● Replace thermostat
	● Ambient temperature too low	● Install radiator curtain
3. Lack of coolant	● Radiator leaky	● Correct or replace
	● Radiator hoses loosely connected or damaged	● Retighten clamps or replace hoses
	● Radiator cap valve spring weakened	● Replace cap
	● Water pump leaky	● Repair or replace
	● Heater hoses loosely connected or broken	● Tighten or replace hoses
	● Cylinder head gasket leaky	● Replace cylinder head gasket
	● Cylinder head or cylinder block cracked	● Replace cylinder head block
4. Cooling system noisy	● Water pump bearing defective	● Replace bearing
	● Fan loosely fitted or bent	● Retighten or replace fan
	● Fan out of balance	● Replace fan
	● Fan belt defective	● Replace fan belt

https://truckmanualshub.com/

4.2. Lubricating system

4.2.1. General descriptions and main data

- **General descriptions**

  All the engine oil pumped up from the oil pan by the gear type oil pump is filtrated through the oil cooler and oil filter, and this filtrated oil is forced through the main oil gallery in the cylinder block from where it is distributed to lubricate the various sliding parts, and fuel injection pump in order to ensure normal engine performance.

- **Specifications**

Item	Specifications	Item	Specifications
Lubricating system	Forced pressure circulation	Oil filter type	Full flow
Oil pump type	Gear type	Bypass for filter element	
Relief valve opening pressure	10±1.5 kg•cm²	Valve opening pressure	1.8 ± 2.3 kg•cm²
Bypass for oil cooler		Bypass for entire oil filter	
Opening pressure	5+1 kg•cm²	Valve opening pressure	4.0 ~ 4.8 kg•cm²
Adjusting valve for spray nozzle			
Opening pressure	1.5 ~ 1.8 kg•cm²		

- **Diagram of lubricating system**

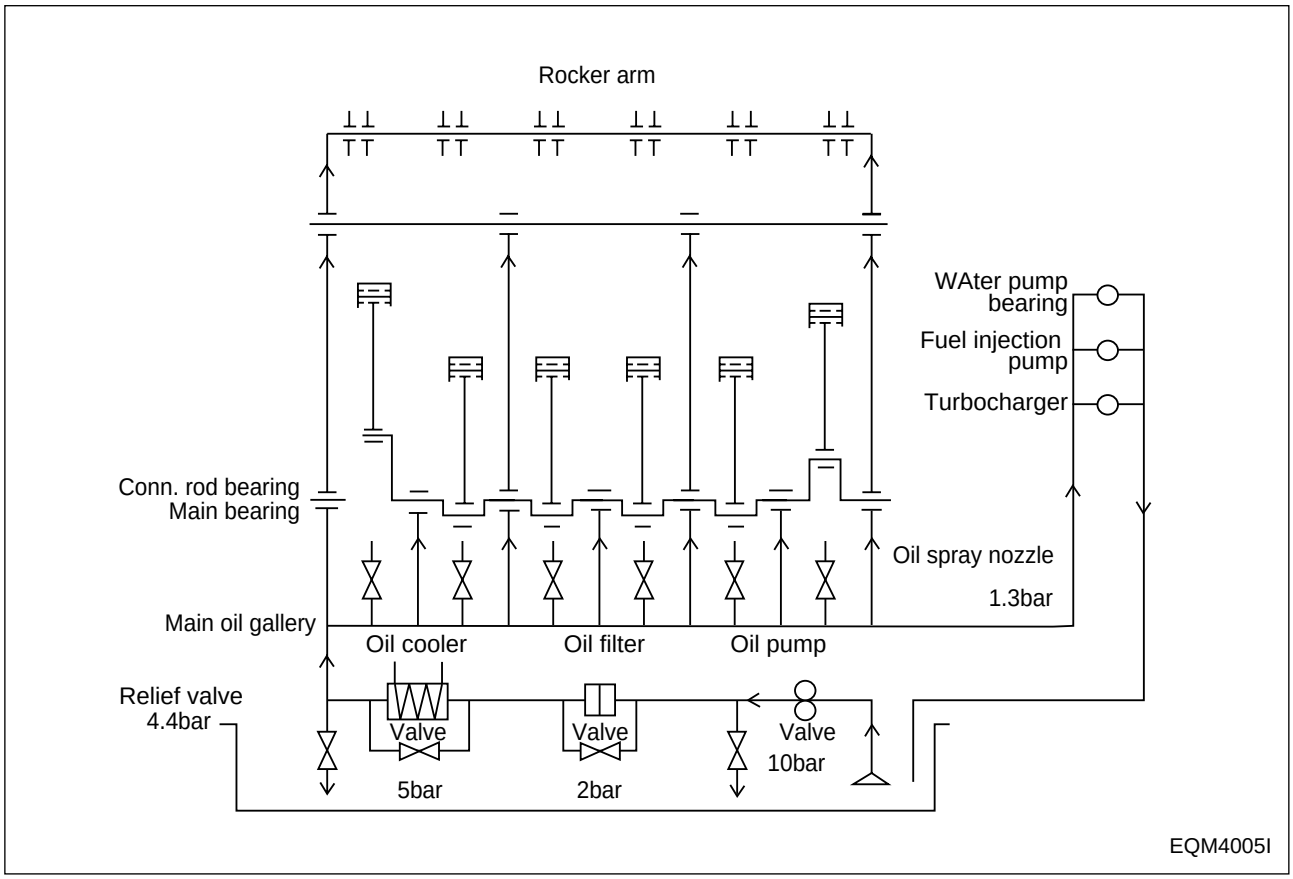

https://truckmanualshub.com/

4.2.2. Oil pump

● **Disassembly**

(1) Disassembly of oil pump drive gear

a .Unscrew the screw and disassemble the oil relief valve.

b. Unfold the washer for the oil pump drive gear fixing nut and remove the nut.

c. Disassemble the drive gear.

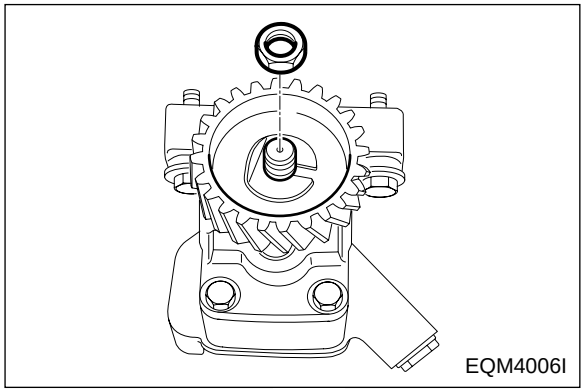

(2) Remove the oil pump cover fixing nuts and disassemble the oil pump cover. The oil pump cover is fixed with the two dowel pins.

(3) Disassemble the drive gear and driven gear.

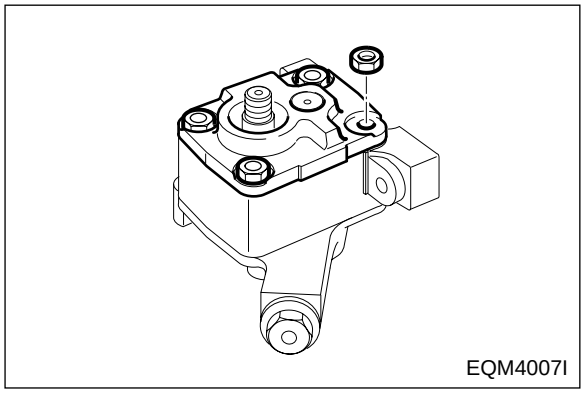

● **Inspection and correction**

(1) With steel rule and feeler gauge, measure the axial end play of the oil pump gear. Replace if the measured value is beyond the limit.

End play	0.025 ~ 0.089 mm

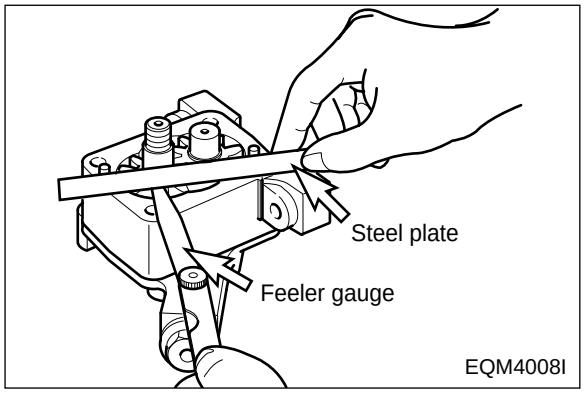

(2) With a feeler gauge, measure the amount of backlash between the oil pump drive gear and driven gear. Replace if the measured value is beyond the limit.

Backlash	0.50 ~ 0.64 mm

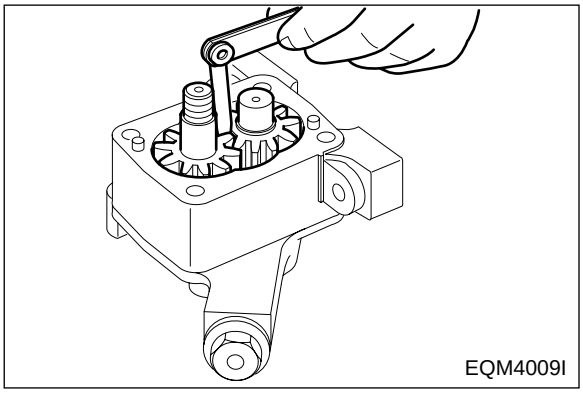

https://truckmanualshub.com/

(3) Measuring clearance between drive shaft and bushing

a. Measure the outside diameters of the drive shaft and driven shaft, and replace if the measured values are less than the limit.

Standard	ø16.95 ~ ø16.968 mm

b. Measure the inside diameter of the pump body bushing to determine the clearance between the bushing and shaft, and compare the measured value with the standard value to determine whether to replace or not.

Clearance	0.032 ~ 0.077 mm

● **Reassembly**

(1) For reassembly, reverse the disassembly sequence.

4.2.3. Oil filter

The oil filter mounted in this engine is of cartridge type, so it is necessary to replace it with a new one at the specified intervals.

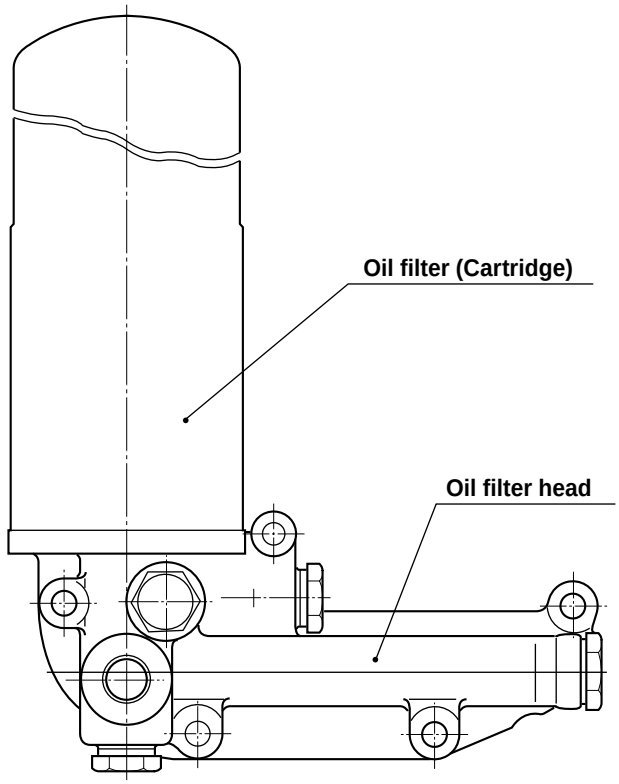

EQM4010I

4.2.4. Diagnostics and troubleshooting

Complaints	Possible causes	Corrections
1. Oil consumption excessive	● Poor oil ● Oil seal or packing leaky ● Pistons or piston rings worn ● Cylinder liner worn ● Piston rings sticking ● Valve guide oil seals or valve guides, or valve stem worn	● Use suggested oil ● Replace ● Replace pistons and/or piston rings ● Replace cylinder liner ● Replace pistons and/or piston rings ● Replace
2. Oil pressure too low	● Poor oil ● Relief valve sticking ● Restrictions in oil pump strainer ● Oil pump gear worn ● Oil pump feed pipe cracked ● Oil pump defective ● Oil pressure gauge defective ● Various bearings worn	● Use suggested oil ● Replace ● Clean strainer ● Replace ● Replace ● Correct or replace ● Correct or replace ● Replace
3. Oil deteriorates quickly	● Restriction in oil filter ● Gases leaking ● Wrong oil used	● Replace filter element ● Replace piston rings and cylinder liner ● Use suggested oil

https://truckmanualshub.com/

4.3. Fuel injection pump

4.3.1. General information of fuel system

The fuel system consists of the fuel tank, injection pump, injection nozzle, fuel filter, and fuel lines such as pipes and hoses necessary to connect those components.

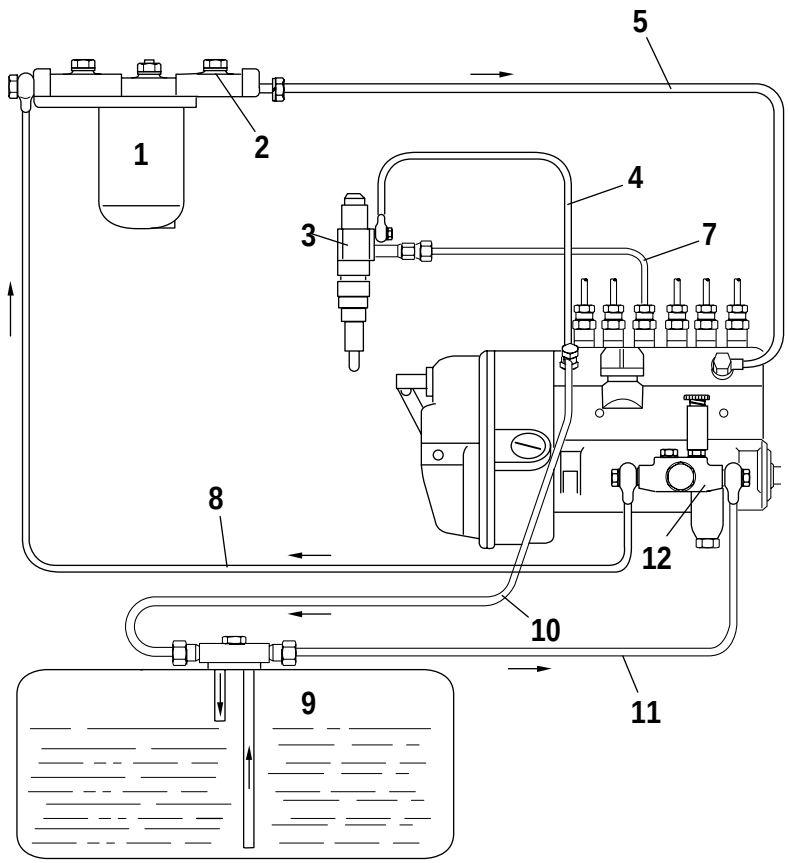

1. Fuel filter
1a. Fuel water drain plug
2. Air bleeding screw (for fuel filter)
3. Injection nozzle
4. Overflow tube
5. Fuel pipe (filter ⟶ injection pump)
6. Overflow valve
7. Delivery pipe
8. Fuel pipe (manual pump ⟶ filter)
9. Fuel tank
10. Fuel return pipe
11. Suction pipe
12. Feed pump
13. Injection pump

4.3.2. Injection pump

The components relating to the injection pump should be serviced at regular intervals as the plunger and delivery valve may be worn after a given length of time for use and cause the deterioration of the engine.
Make sure that servicing should be performed at the professional maintenance shop as authorized by Bosch or Zexel Company.
For adjustment of fuel injection volume, refer to the 'Specifications of fuel injection pump' described on the following pages.

1) DE12T

(1) Main data and specifications

Part No.	: 65.11101-7222(106672-9920)
Model	: NP-PE6P120/720RS3000(106061-7250)
Governor	: NP-EP/RSV200-1200PD36C311(105407-4720)
Timer	: without timer
Plunger	: ∅12, right hand helix 30 lead
Delivery valve	: 120 mm^3/st(∅8 x 2.4mm)
Fuel feed pump	: NP-FP/K-P(105207-1400)
Pre-stroke	: 4.7 mm

(2) Nozzle holder assembly : 65.10101-7300(105160-4351)
(3) Nozzle : 65.10102-6046(105029-1330)
(4) Injection pipe : 65.10301-7004B
(5) Injection order : 1-5-3-6-2-4
(6) Injection timing : BTDC 12˚C
(7) Calibration data

Adjusting point	Rack position (mm)	Pump speed (rpm)	Injection volume (mm3/1,000st)	Variation rate (%)	Basic point	Fixing point	Ref.
A	10.8	900	129±2	±2			
B	11	875	(135)±3	-			
C	Approx. 6.4	250	14.5±1.5	±15			
D	-	100	193.5±10	-			

	Content	Specification	Engine Application
Adjusting conditions	Nozzle holder assembly	105780-8140	65.10101-7300
	Nozzle	105780-0000	65.10102-6046
	Nozzle holder	105780-2080	-
	Opening pressure	175 kg•cm^2	220 kg•cm^2
	Injection pipe	∅8 x ∅3 - 600 mm	∅6 x ∅2.2 - 650 mm
	Fuel delivery pressure	1.6 kg•cm^2	-
	Fuel temperature	35 ~ 45 ˚C	35 ~ 45 ˚C

https://truckmanualshub.com/

(8) Governor adjustment

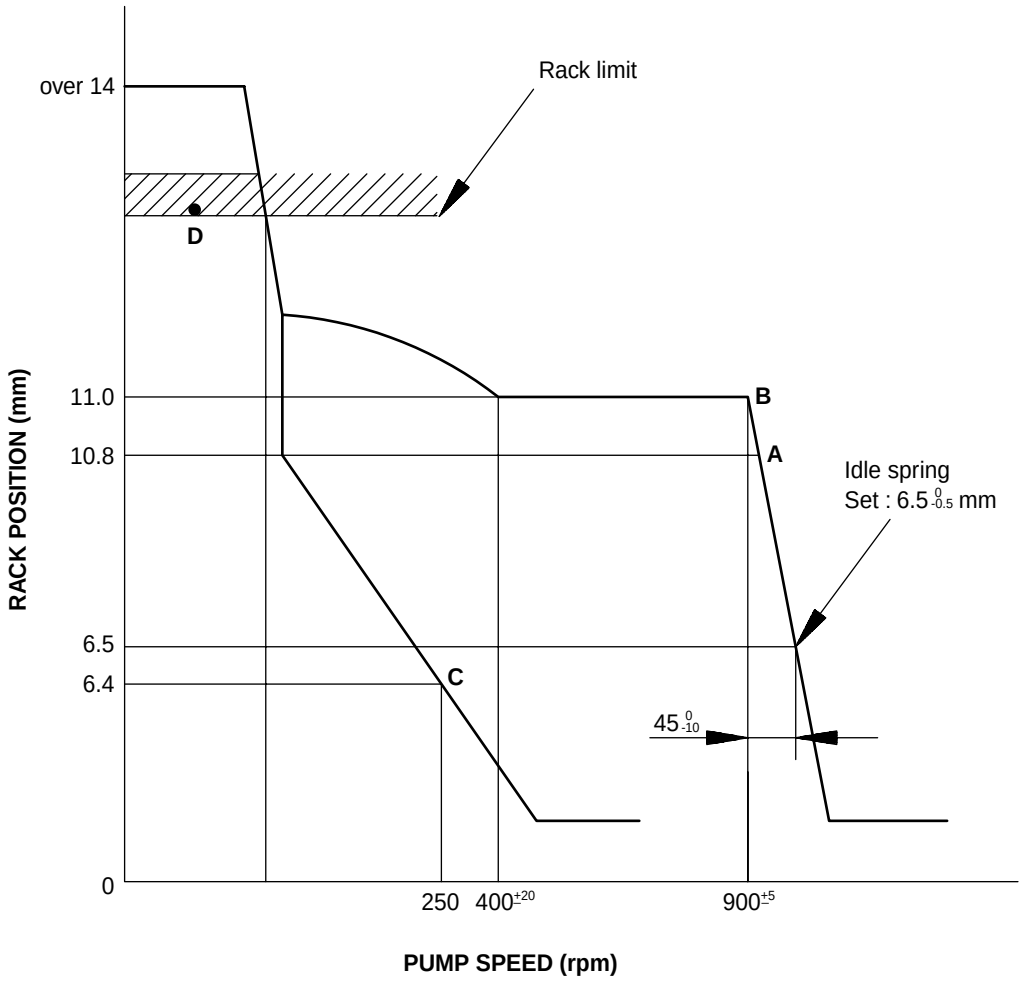

EA8M4001

2) P126TI

(1) Main data and specifications

Part No.	: 65.11101 -7310 (106674-4130 ZEXEL)
Model	: NP-PE6P120/700RS3S (106067-6020)
Governor	: GAC electric (65.11501-7002A)
Plunger & barrel	: ∅12, right hand double helix 30 lead
Delivery valve	: 90mm²/st (∅7 x 2.35mm)
Fuel feed pump	: NP-FP/KD-PS (105237-5470)
Pre-stroke	: 3.9 ± 0.05 mm
(2) Nozzle holder assembly	: 65.10101-7054 (10501-8520)
(3) Nozzle	: 65.10102-6048 (105019-2450)
(4) Injection pipe	: 65.10301-6042, 65.10301-6043
(5) Injection order	: 1-5-3-6-2-4
(6) Injection timing	: BTDC 12°

(A) Test condition for injection pump	Nozzle & Holder Ass'y	105780-8130	Opening pressure : 175 kg•cm²
	Injection pipe(ID ,OD ,L)	-	∅3.0 x ∅8.0 - 600 mm
	Test oil	ISO4113	Temperature :40±5°C
(B) Engine standard parts	Nozzle & holder Ass'y	65.10101-7054	Nozzle (5 x ∅0.37)
		65.10102-6048	1st pressure : 160 kg•cm² 2nd pressure : 220 kg•cm²
	Injection pipe(ID, OD ,L)	65.10301-6042 65.10301-6043	∅2.2 x ∅6 - 600mm

Rack diagram and setting valve at each point

	Check point	Rack position (mm)	Pump speed (rpm)	Injection Q'ty on RIG (mm3 / 1,000 st)		Press. (mmHg)
				(A) Test condition for inj. pump	(B) Engine standard parts	
Standby power	B		900		240±3	-
	-	-	-	-	-	-
	-	-	-	-	-	-
	-	-	-	-	-	-
	-	-	-	-	-	-

4.3.3. Governor system (P126TI)

Governor system for fuel injection pump consists of “Integral Actuator” and “ Speed Control Unit”.

(1) Integral Actuator

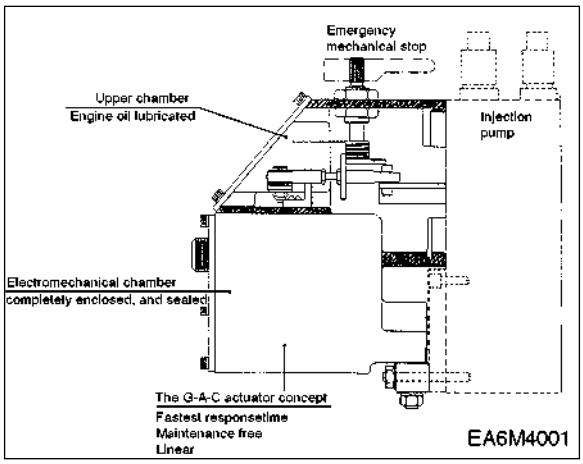

<Side View>

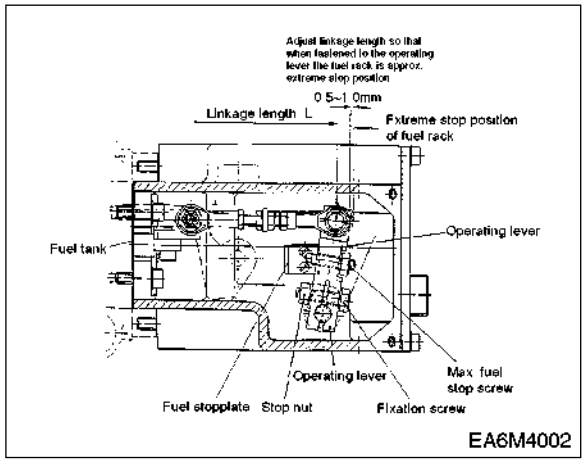

<Top View>

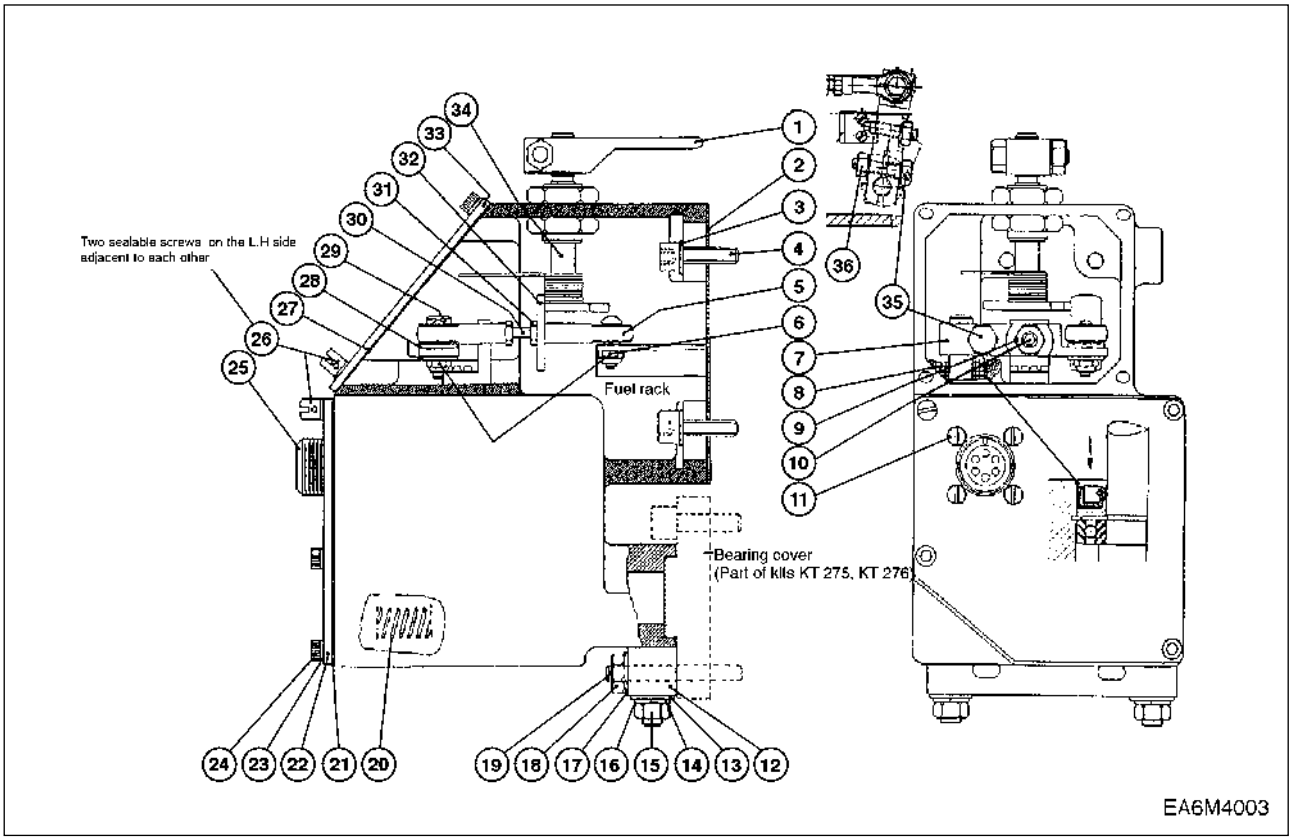

Fig. No.	Description	Q'ty	Remark
1	stop lever (emergency)	1	
2	pump gasket	1	
3	washer	4	
4	allen screw	4	7 ~ 9 N.m
5	ball link	2	*
6	stop nut	2	3.5 ~ 4.0 N.m *
7	operating lever	1	
8	oil seal	1	
9	counter nut	1	4.5 ~ 6.0 N.m
10	stop screw	1	
11	connector screw	4	
12	mounting bar	1	
13	flat washer	2	
14	lock washer	2	
15	nut	2	17 ~ 21 N.m
16	flat washer	2	
17	lock washer	2	
18	nut	2	7 ~ 9 N.m
19	threaded bolt (part of bearing kit)	2	
20	actuator spring	1	
21	gasket, lower cover	1	
22	lower cover	1	
23	washer	8	
24	allen screw	6	2.0 ~ 3.0 N.m
25	receptacle	1	
26	sealing screw	2	3.5 ~ 4.5 N.m
27	gasket, upper cover	1	
28	flat washer	2	
29	screw, ball link	2	*
30	connecting rod	1	*
31	nut	2	*
32	stop plate	1	*
33	top cover	1	
34	manual stop device complete	1	
*	linkage complete comprise pos. 5,6,28,29,30,31,32	1	
35	fixing screw	1	12.5 ~ 13.0 N.m
36	stop nut	1	12.5 ~ 13.0 N.m

https://truckmanualshub.com/

(2) Speed control unit for governor system

The ESD5550 Series speed control unit is an all electronic device designed to control engine speed with fast and precise response to transient load changes. This closed loop control, when connected to a proportional electric actuator and supplied with a magnetic speed sensor signal, will control a wide variety of engines in an isochronous or droop mode. It is designed for high reliability and built ruggedly to withstand the engine environment.

Simplicity of installation and adjustment was foremost in the design. Non-interacting performance controls allow near optimum response to be easily obtained.

The primary features of the ESD5550 Series speed control unit are the engine STARTING FUEL and SPEED RAMPING adjustments. The use of these features will minimize engine exhaust smoke experienced prior to attaining engine operating speed.

Other features include adjustable droop and idle operation, inputs for accessories used in multi-engine or special applications, protection against reverse battery voltage, transient voltages, accidental short circuit of the actuator and fail safe design in the event of loss of speed sensor signal or battery supply.

Engine model	**P126TI**
GAC governor model	ACE 175A
Speed control unit model	ESD5550

(A) Specification

PERFORMANCE	
Isochronous Operation/steady State Stability	±0.25% or better
Speed Range/Governor	±1 K ~ 7.5 KHz continuous
Speed Drift with Temperature	±1% Maximum
Idle Adjust CW	60% of set speed
Idle Adjust CCW	Less than 1,200 Hz.
Droop Range	1 ~ 5 % regulation*
Droop Adj. Max. (K-L Jumpered)	400 Hz ± 75 Hz per 1.0 A change
Droop Adj. Min. (K-L Jumpered)	15 Hz ± 6 Hz. per 1.0 A change
Speed Trim Range	± 200 HZ
Remote Variable Speed Range	500 ~ 7.5 Hz or any part thereof
Terminal Sensitivity	
J	100 Hz ± 15 Hz/Volt @ 5.0 K Impedance
L	735 Hz ± 60 Hz/Volt @ 65 K Impedance
N	148 Hz ± 10 Hz/Vo1t @ 1 Meg. Impedance
P	10 VDC Supply @ 20 ma Max.
Speed switch adjustment range	1,000 ~ 10,000 Hz
ENVIRONMENTAL	
Ambient Operating Temperature Range	- 40 ˚F to 180˚F (- 40 ˚C to + 85 ˚C)
Relative Humidity	up to 95 %
All Surface Finishes	Fungus Proof and Corrosion Resistant
INPUT POWER	
Supply	12 or 24 VDC Battery Systems (Transient and Reverse Voltage Protected)**
Polarity	Negative Ground (Case Isolated)
Power Consumption	50 ma continuous plus actuator current
Actuator Current Range @ 77 ˚F (25 ˚C) -(Inductive Load)	Min.2.5 Amps/ Max. 10 Amps continuous ***
Speed Sensor Signal	0.5 ~ 120 Volts RMS
Speed switch relay contacts (N.O. and N.C.)	10 Amps
RELIABILITY	
Vibration	1G @ 20 ~ 100 Hz
Testing	100% Functionally Tested
PHYSICAL	
Dimensions	See Outline
Weight	1.8 lbs (820 grams)
Mounting	Any Position, Vertical Preferred

Note :

** Droop is based on a speed sensor frequency of 4,000 Hz and an actuator current change of 1 amp from no load to full load. Applications with higher speed sensor signals will experience less percentage of droop. Applications with more actuator current change will experience higher percentages of droop. See droop description for specific details on operation of droop ranges.*

*** Protected against reverse voltage by a series diode. A 15 Amp. fuse must be Installed in the positive battery lead,*

**** Protected against short circuit to actuator (shuts off current to actuator), unit automatically turns back on when shorts is removed.*

(B) Diagram

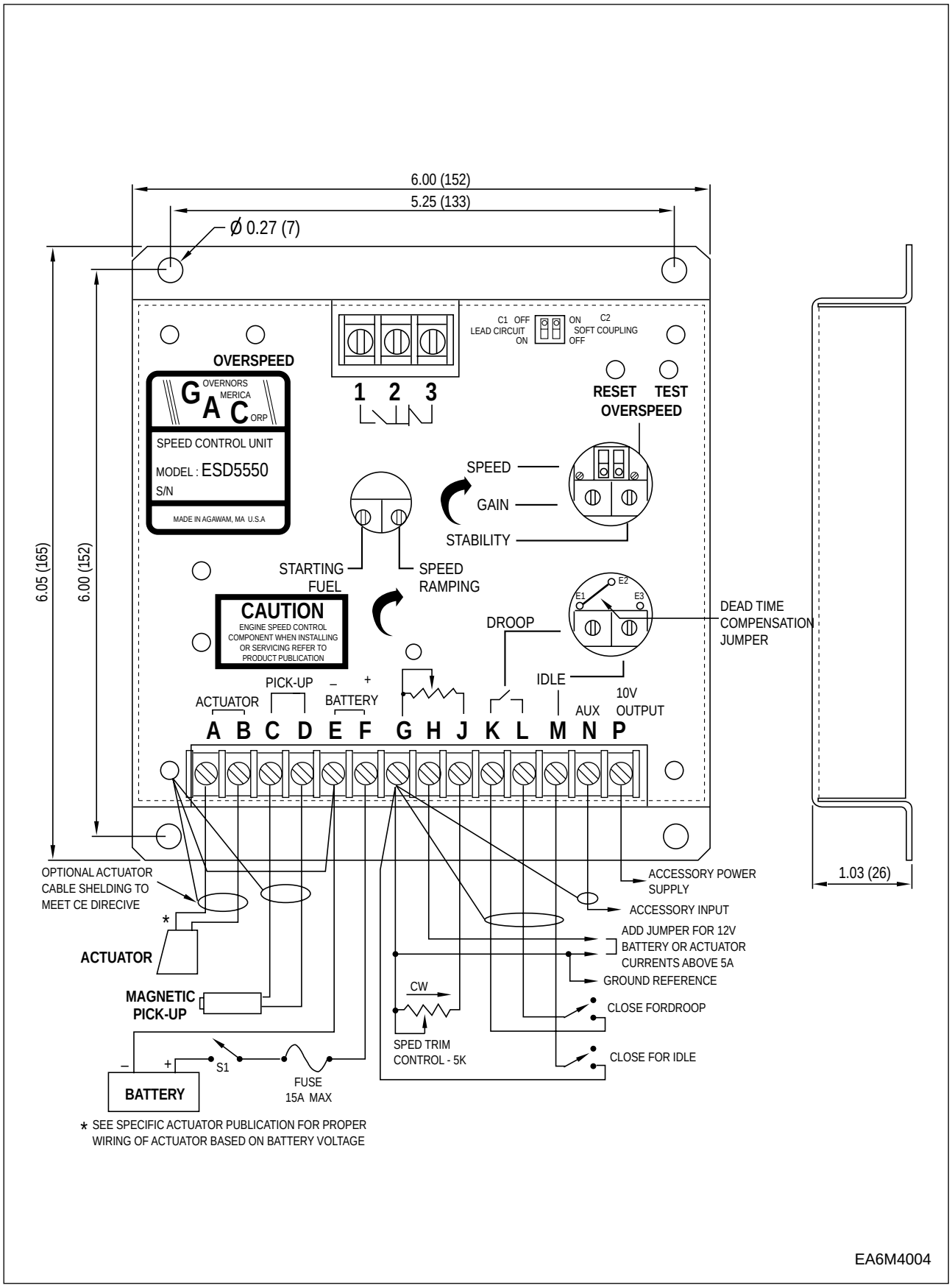
6.00 (152)
5.25 (133)
Ø 0.27 (7)
6.05 (165)
6.00 (152)
1.03 (26)
OVERSPEED
GAC OVERNORS AMERICA CORP
SPEED CONTROL UNIT
MODEL : ESD5550
S/N
MADE IN AGAWAM, MA U.S.A
1 2 3
C1 OFF
LEAD CIRCUIT ON
ON
C2
SOFT COUPLING OFF
RESET
TEST
OVERSPEED
SPEED
GAIN
STABILITY
STARTING FUEL
SPEED RAMPING
CAUTION
ENGINE SPEED CONTROL COMPONENT WHEN INSTALLING OR SERVICING REFER TO PRODUCT PUBLICATION
E1
E2
E3
DEAD TIME COMPENSATION JUMPER
DROOP
IDLE
PICK-UP
ACTUATOR
BATTERY
AUX
10V OUTPUT
A B C D E F G H J K L M N P
OPTIONAL ACTUATOR CABLE SHELDING TO MEET CE DIRECIVE
ACCESSORY POWER SUPPLY
ACCESSORY INPUT
ADD JUMPER FOR 12V BATTERY OR ACTUATOR CURRENTS ABOVE 5A
GROUND REFERENCE
CLOSE FORDROOP
CLOSE FOR IDLE
ACTUATOR
MAGNETIC PICK-UP
CW
SPED TRIM CONTROL - 5K
S1
FUSE 15A MAX
BATTERY
* SEE SPECIFIC ACTUATOR PUBLICATION FOR PROPER WIRING OF ACTUATOR BASED ON BATTERY VOLTAGE
EA6M4004

Note :

** If wire leads are longer than 3 meters (10 ft), a shielded cable should be used. Ground shield at ONE END ONLY.*

** The speed control unit is rugged enough to be placed in a control cabinet or engine mounted enclosure with other dedicated control equipment. If water, mist, or condensation may come in contact with the controller, it should be mounted vertically. This will allow the fluid to drain away from the speed control unit.*

** EXTREMEly heat should be avoided.*

Caution :

An overspeed shutdown device, independent of the governor system, should be provided to prevent loss of engine control which may cause personal injury or equipment damage. Do not rely exclusively on the governor system electric actuator to prevent overspeed. A secondary shutoff device, such as a fuel solenoid must be used.

(C) Wiring

Basic electrical connections are illustrated above. Actuator and battery connections to Terminals A, B, E, and F should be #16 AWG (1.3 mm^2) or larger. Long cables require an increased wire size to minimize voltage drops.

The battery positive (+) input, Terminal F, should be fused for 15 amps as illustrated.

Magnetic speed sensor connections to Terminals C and D MUST BE TWISTED AND/OR SHIELDED for their entire length. The speed sensor cable shield should only be connected to terminal D. The shield should be insulated to insure no other part of the shield comes in contact with engine ground, otherwise stray speed signals may be introduced to the speed control unit. With the engine stopped, adjust the gap between the magnetic speed sensor and the ring gear teeth. The gap should not be any smaller than 0.020 in, (0.45 mm). Usually, backing out the speed sensor 3/4 turn after touching the ring gear tooth will achieve a satisfactory air gap. The magnetic speed sensor voltage should be at least 1 VAC RMS during cranking.

https://truckmanualshub.com/

(D) System Trouble shooting

- **SYSTEM INOPERATIVE**

  If the engine governing system does not function, the fault may be determined by performing the voltage tests described in Steps 1, 2, 3, and 4. (+) and (-) refer to meter polarity. Should normal values be indicated as a result of following the trouble shooting steps, the fault may be with the actuator or the wiring to the actuator See the actuator publication for testing details.

Step	Terminals	Normal Reading	Probable Cause Of Abnorma Reading
1	F(+) & E(-)	Battery supply voltage (12 or 24 VDC)	1. DC battery power not connected. Check for blown fuse 2. Low battery voltage. 3. Wiring error.
2	C & D	1.0 VAC RMS min., while cranking	1. Gap between speed sensor and gear teeth too great. Check gap. 2. Improper or defective wiring to the speed sensor. Resistance between terminals C and D should be 30 to 1,200 ohms. 3. Defective speed sensor.
3	P(+) & G(-)	10 VDC, Internal Supply	1. Short on terminal P (This will cause a defective unit.) 2. Defective Speed Control.
4	F(+) & A(-)	1.0~ 2.0 VDC while cranking	1. SPEED adjustment set too low 2. Short/open in actuator wiring. 3. Defective speed control. 4. Defective actuator.

● **UNSATISFACTORY PERFORMANCE**

If the governing system functions poorly, perform the following tests.

Symptom	Test	Probable Fault
Engine over-speeds	1. Do not crank. Apply DC power to the governor system	1. Actuator goes to full fuel. Then, disconnect speed sensor at Terminals C & D. If actuator still at full fuel speed control unit defective. If actuator at minimum fuel position - erroneous speed signal. Check speed sensor data.
	2. Manually hold the engine at the desired running speed. Measure the DC voltage between Terminals A(-) & F(+) on the speed control unit.	1. If the voltage reading is 1.0 to 2.0 VDC. a) SPEED adjustment set above desired speed. b) Defective speed control unit.
		2. If the voltage reading is above 2.0 VDC, a) Actuator or linkage binding.
		3. If the voltage reading is below 1.0 VDC, a) Defective speed control unit.
		4. Gain set too low.
Actuator does not energize fully.	1. Measure the voltage at the battery while cranking.	1. If the voltage is less than 7V for a 12V system, or14V for a 24V system, replace the battery if it is weak or undersized.
	2. Momentarily connect Terminals A and F The actuator should move to the full fuel position.	1. Actuator or battery wiring in error.
		2. Actuator or linkage binding.
		3. Defective actuator.
		4. Fuse opens. Check for short in actuator or actuator wiring harness.
Engine remains below desired governed speed.	1. Measure the actuator output. Terminals A & B, while running under governor control.	1. If voltage measurement is within approximately 2 volts of the battery supply voltage, then fuel control restricted from reaching full fuel position. Possibly due to interference from the mechanical governor, carburetor spring or linkage alignment.
		2. Speed setting too low.

4.3.4. Fuel feed pump

1) General descriptions and construction

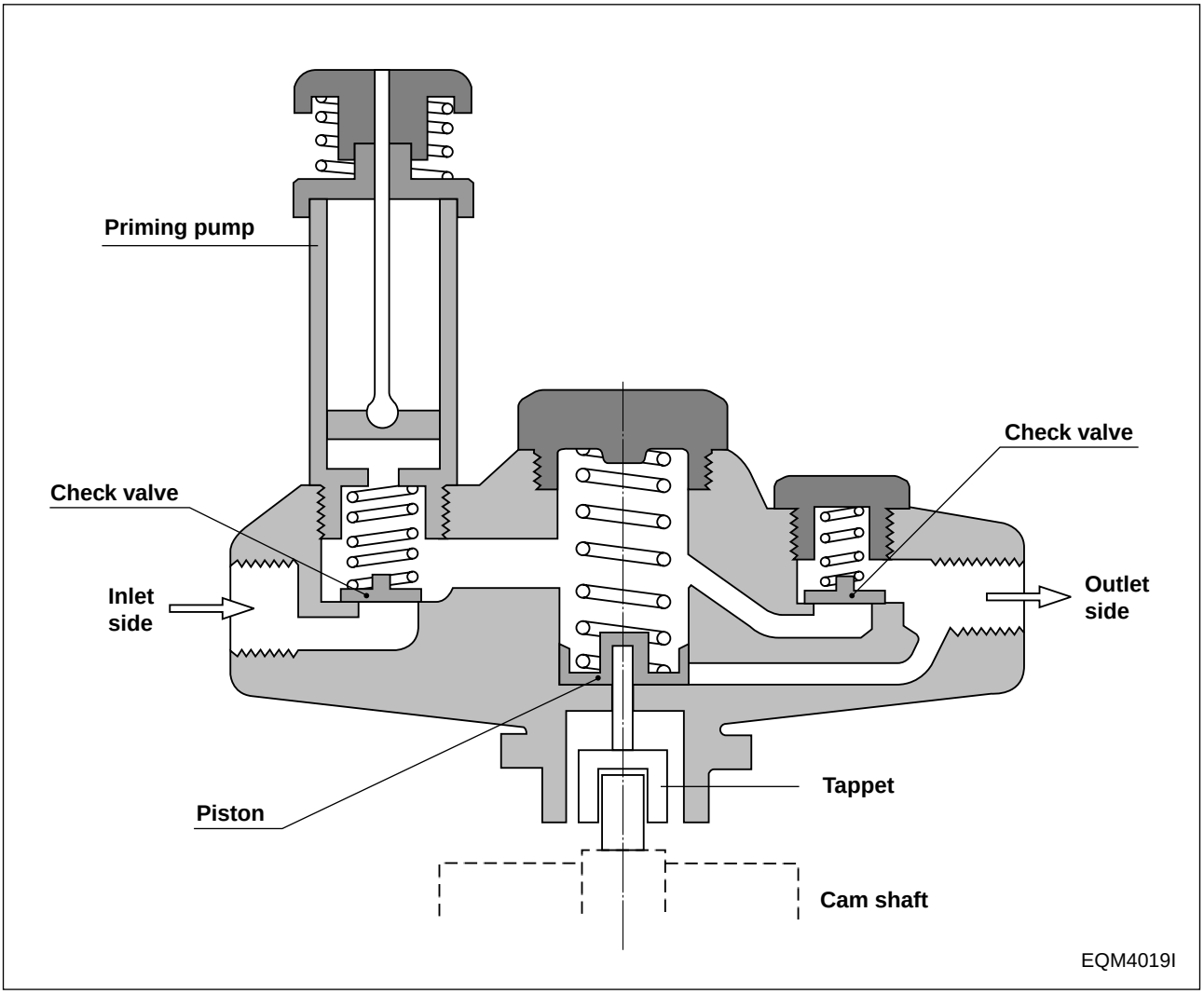

The P-type injection pump is mounted with K-ADS or KP type feed pump. These pumps have the same basic construction and operation, and the general descriptions of the KP type pump are given below:

The figures show its construction (right figure) and operation (below figure). The piston in the fuel feed pump is driven by the push rod and tappet via the camshaft of injection pump and performs reciprocating operation to control the suction and delivery of fuel. When the cam reaches the Bottom Dead Center as shown in the figure, the fuel is drawn in through the check valve on the inlet side.

The fuel pressurized as the cam rotates on flows through the check valve on the outlet side as shown in (B). If the feeding pressure increases abnormally, the spring is compressed, resulting in interrupting further delivery of fuel as shown in (C).

https://truckmanualshub.com/

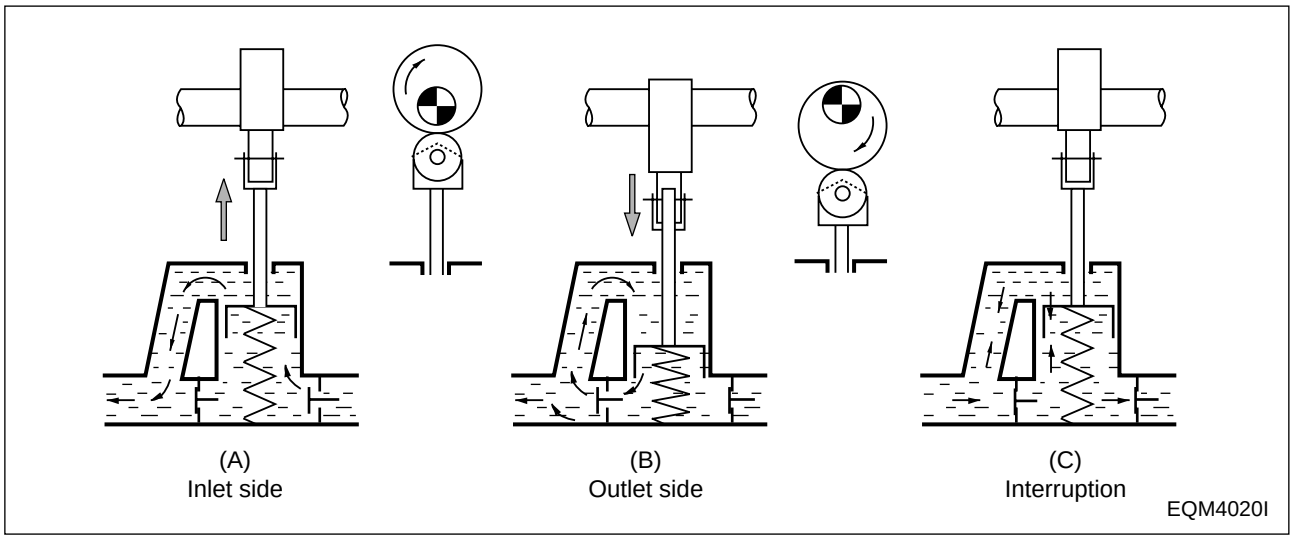

This feed pump is mounted with a priming pump designed to permit manual feeding of fuel from the fuel tank with the injection pump mounted in the engine. During the manual feeding operation, air must be bled from the fuel lines.
When using the priming pump, fix it securely to prevent the possible entry of moisture or other foreign substances in the inside of feed pump.

In addition, a strainer is fitted into joint bolt on the inlet side of the fuel feed pump to filtrate any foreign substances possibly mixed in fuel.

2) disassembly

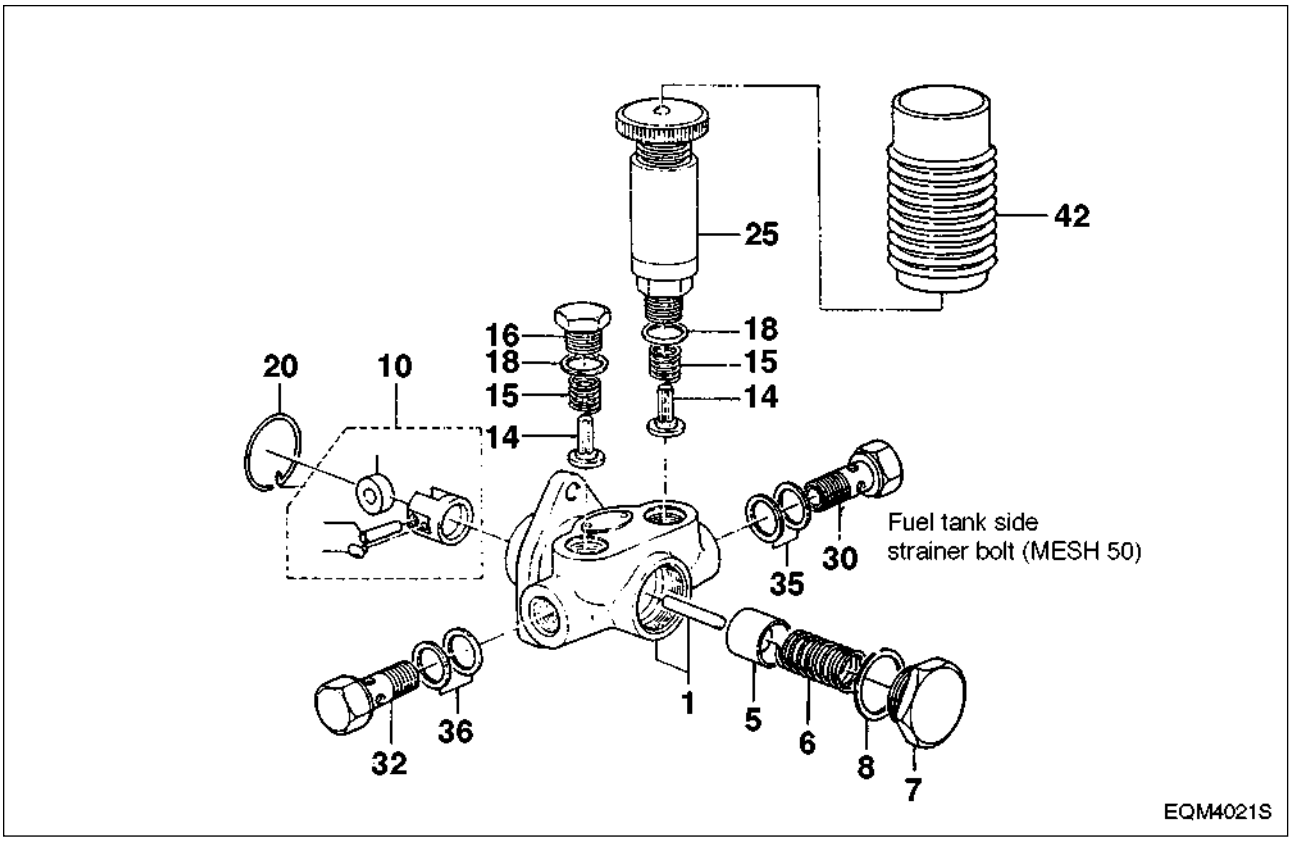

- Clamp the feed pump with a vise and disassemble the plugs (30, 32), strainer (31) and gaskets (35, 36).
- Take off the priming pump (25), plug (16), both gaskets (18), spring (15), and check valve (14).
- Take off the prig (7), gasket (8), spring (6), and piston (5) on the piston side.
- Pull out the snap ring (20) holding the tappet (10).
- Disassemble the snap ring, then take off the tappet (10) and push rod (1).

3) Inspection

- If the check valve is damaged or scored on its seat face, replace it with a new one.
- Inspect the piston and tappet for damage.
- Replace the push rod if excessively worn, and replace together with the pump housing if required. The inspection for wear should be performed in the same procedure as for suction pressure test described below.

4) Reassembly

Reassembly operation is performed in reverse order of disassembly. All the gaskets must be replaced with new ones at reassembly.

https://truckmanualshub.com/

5) Testing

(1) Suction capacity test

Connect one end of a hose to the inlet side of the feed pump and immerse the other end of it into the fuel tank as illustrated.

Hold the feed pump in position about 1 m above the level of fuel in the fuel tank.

Operate the tappet at the rate of 100 rpm and check to see if fuel is drawn in and delivered for 40 seconds or so.

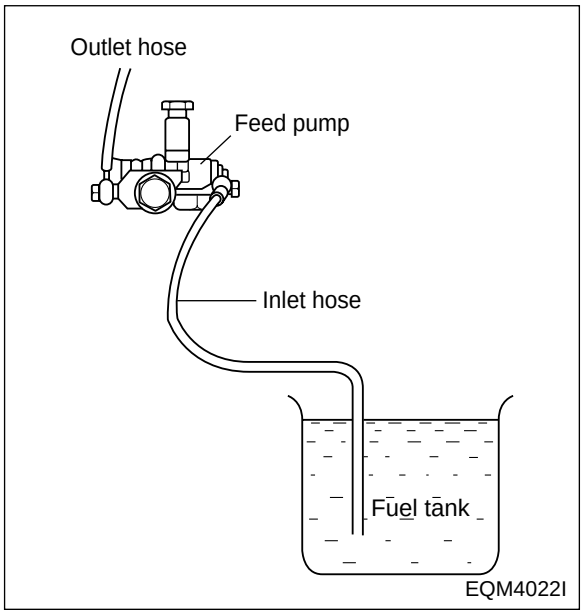

(2) Delivery test

Make a test with the feed pump mounted on a pump tester as illustrated. Operate the pump at the rate of 1,000 rpm and check to see if the pump delivery is more than 405 cc/15 seconds.

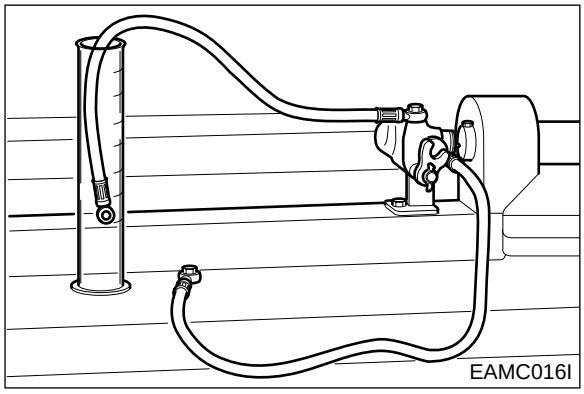

(3) Sealing test

Plug up the delivery port on the feed pump and apply compressed air of 2 kg/cm2 into the inlet side.

Submerge the feed pump in a container of diesel fuel and check for air leak.

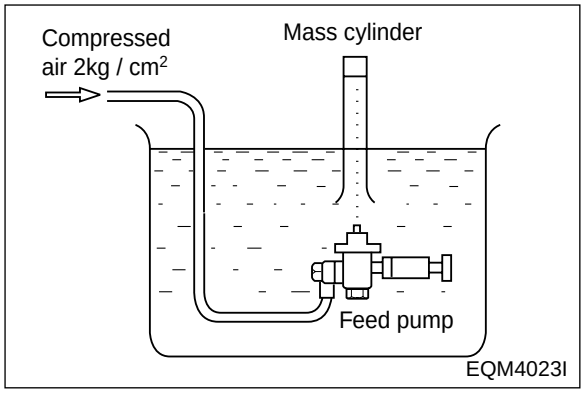

4.3.5. Injection nozzle

1) General descriptions

Pressurized fuel delivered from the fuel injection pump is sprayed into the combustion chamber past the injection nozzle at proper spray pressure and spray angle, then burnt completely to achieve effective engine performance.

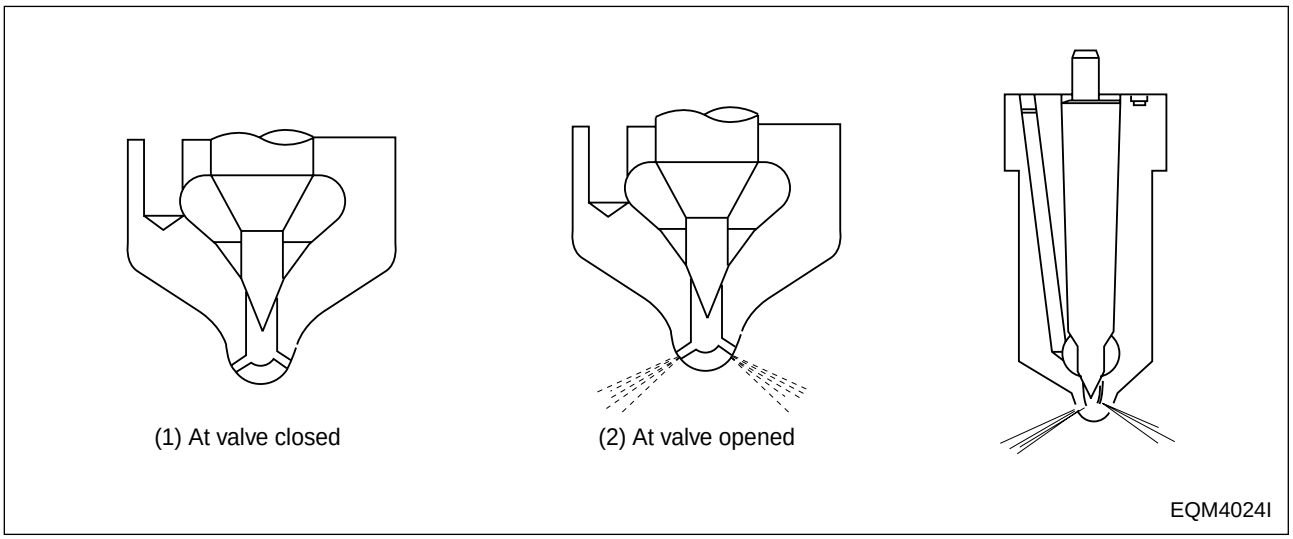

2) 1-spring type

(1) Disassembly

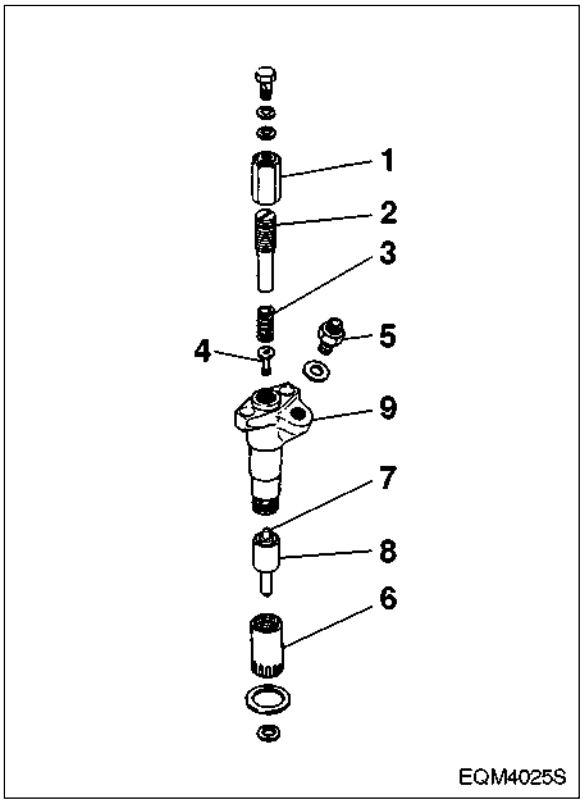

1. Cap nut
2. Adjusting screw
3. Spring
4. Push rod
5. Connector
6. Retaining nut
7. Needing valve
8. Nozzle
9. Nozzle holder

(2) Reassembly

- After removing carbon deposit, submerge the nozzle in diesel oil and clean it.
- Replace all the gaskets with new ones.
- Assemble the parts and tighten them to specified torque.

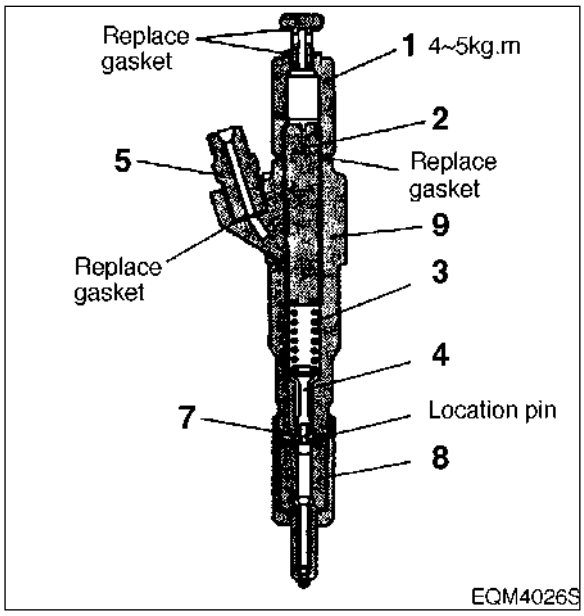

(3) Adjustment

- Remove the cap nut and assemble a nozzle to a nozzle tester.
- With the adjusting screw loosened, operate the nozzle 2 ~ 3 times to bleed it.
- Operate the nozzle tester lever at the specified rate.
- Adjust the injection pressure to the standard pressure using the adjusting screw.
- After adjusting the injection pressure, tighten the cap nut to specified torque.
- Re-check the injection pressure and see if the spray pattern is normal.

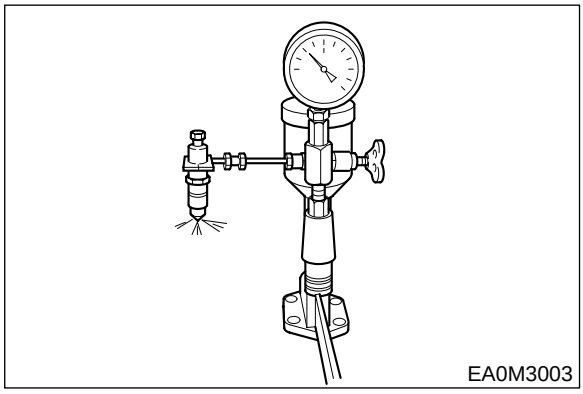

(4) Testing

With the nozzle assembled to a nozzle tester and pressure of 20 ~ 21 MPa (200 ~ 210 bar) applied, check the nozzle for fuel leakage.

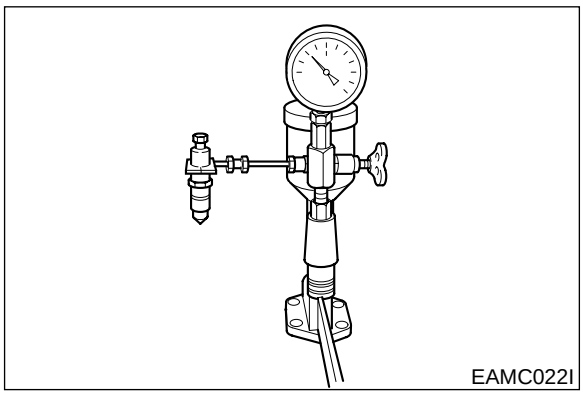

https://truckmanualshub.com/

3) 2-spring type

(1) Disassembly

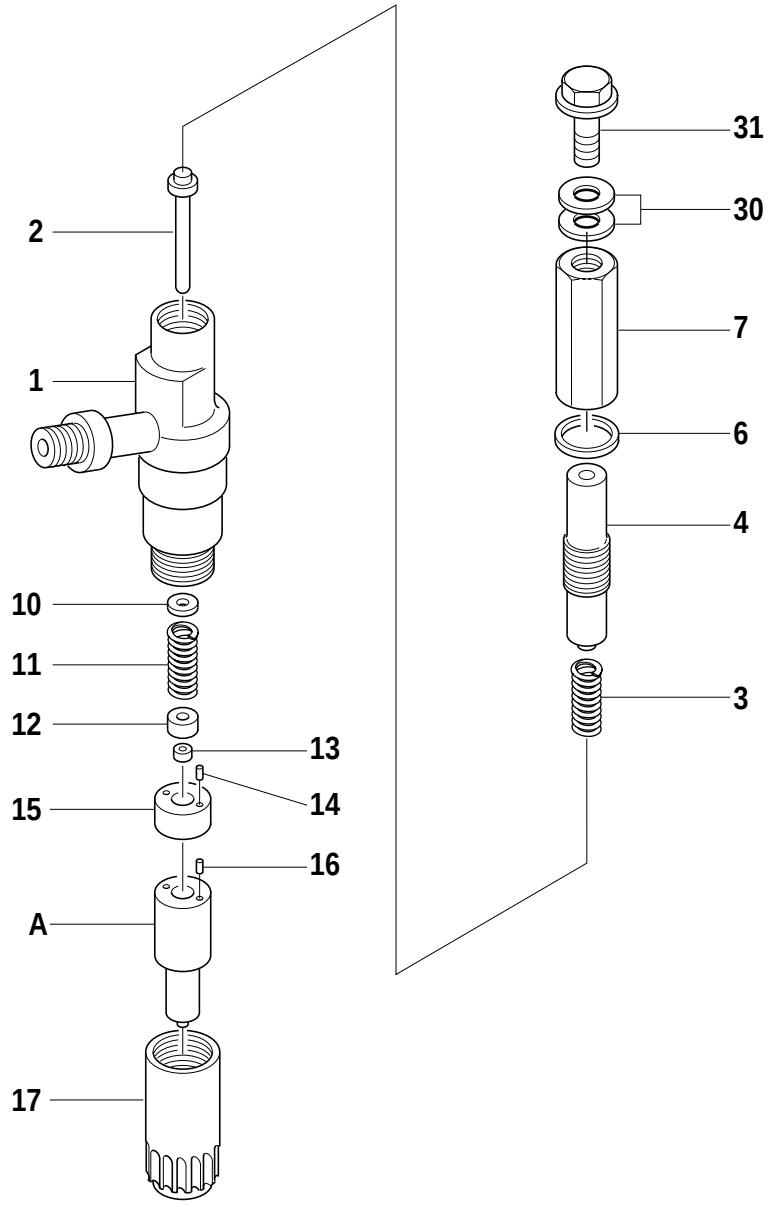

1. Nozzle holder body
2. Push rod
3. Primary spring
4. Adjusting screw
6. Gasket
7. Cap nut
10. Adjusting shim
11. Scondary spring
12. Spring Seat
13. Lift pin
14. Pin
15. Spacer
16. Pin
17. Retaining nut
30. Gasket
31. Eve bolt
A. Nozzle

https://truckmanualshub.com/

(2) Inspection and adjustment

Adjusting the primary opening pressure a. Install the plate of plate assembly (157944-9520) onto a vise.

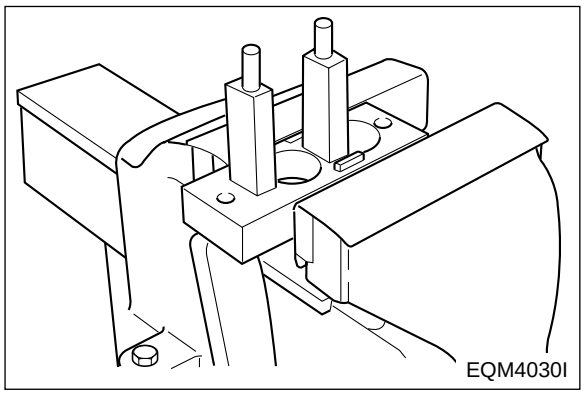

NOTE : *Use the plate assembly (157944-9520) in fixing a nozzle holder having a flange. A nozzle holder without flange should be directly installed onto a vise.*

b. With the nut, install the two pins on the plate.

c. Install the nozzle holder body (1) onto the plate with the cap nut side facing downward.

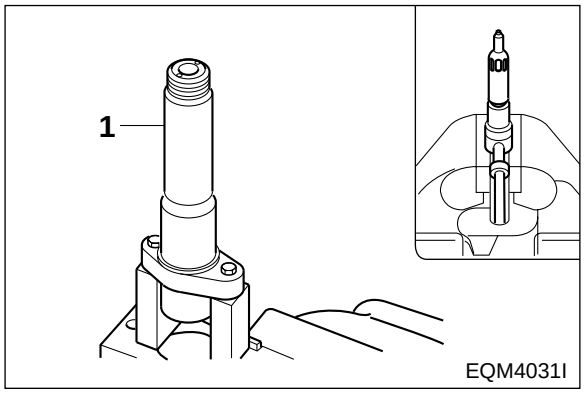

d. Assemble adjusting shim (10), secondary spring (11), and spring seat (12) on the nozzle holder body in the order as described.

Note: *The secondary spring is the same one as the primary spring.*

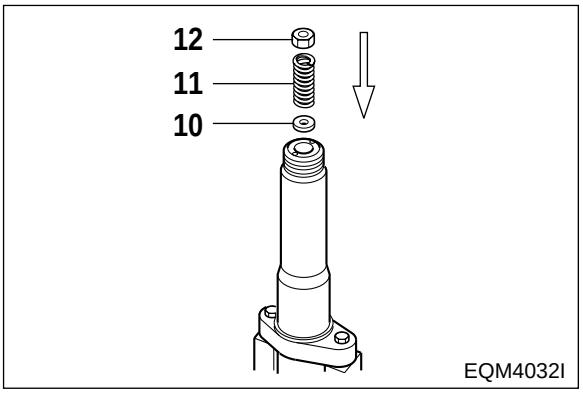

e. Assemble the pin (14), lift piece (13), and spacer (15) with the nozzle holder body.

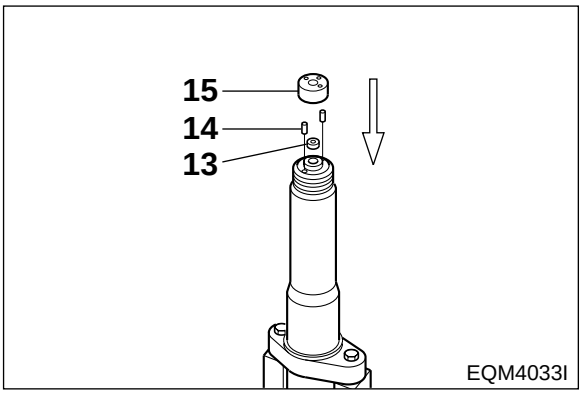

f. Install the pin (16) and nozzle (A) onto the spacer.

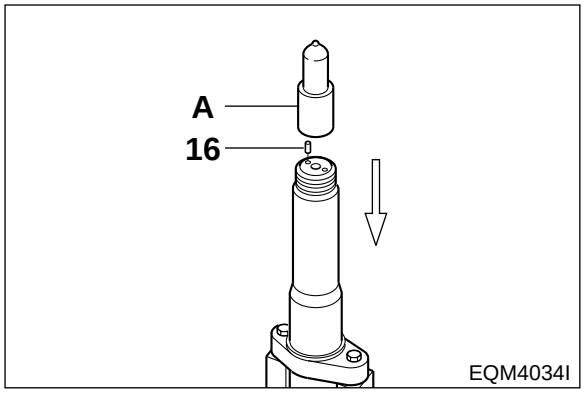

g. After installing the gasket (157892-1500) on the nozzle, use the cap nut (157892-4000 : SW22mm) to fix the nozzle onto the nozzle holder.

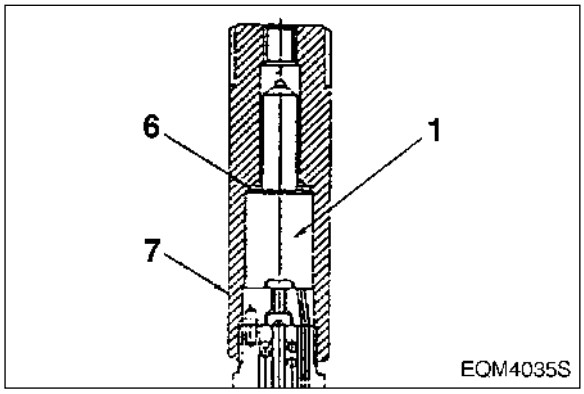

Note : *While tightening the cap nut, keep checking to see if the lock pin comes all the way into the nozzle.*

Note : *Tighten the retaining nut until it resists hand tightening, then further tighten it using a torque wrench.*

h. Be sure to follow the specified torque rating when tightening the adjusting retaining nut.

Torque	6.0 ~ 8.0 kg•m

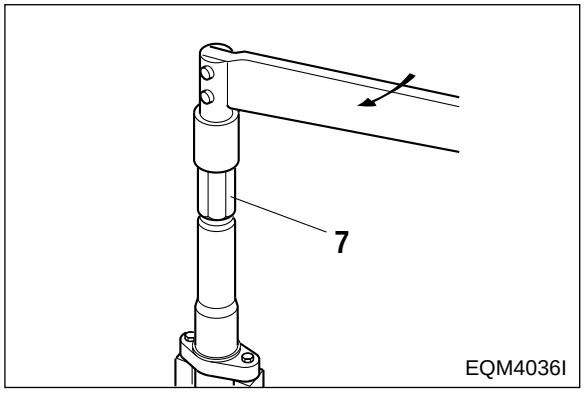

i. With the cap nut facing upward, install the nozzle holder on the plate.

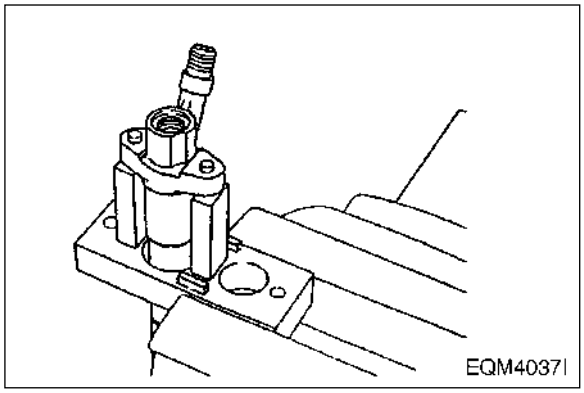

https://truckmanualshub.com/

j. Assemble the push rod (2), primary spring (3), and adjusting screw (4) on the nozzle holder in the order described.

k. Install the gasket and cap nut onto the adjusting screw.

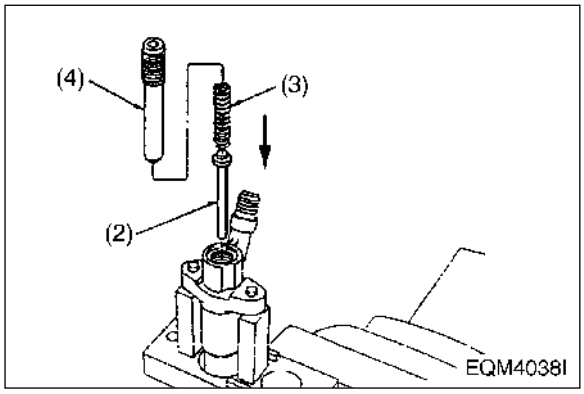

l. Assemble the nozzle and nozzle holder assembly to the nozzle tester (105785-1010).

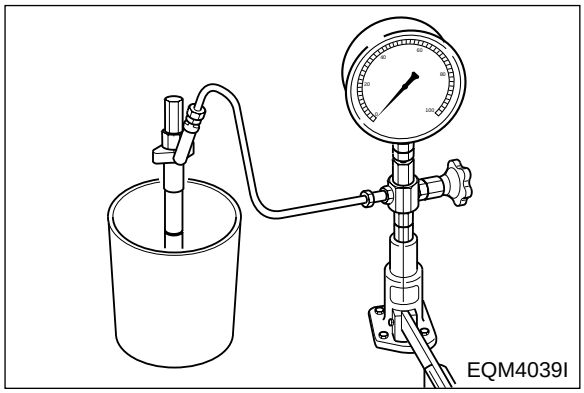

m. Adjust the primary opening pressure to the specified pressure using the adjusting screw (4).

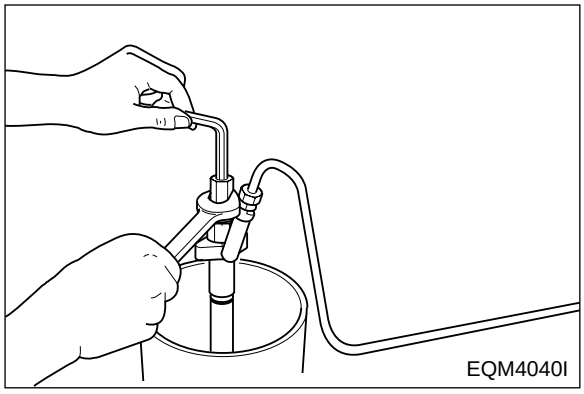

n. With a monkey wrench, fix the nozzle holder securely and tighten the cap nut (SW 19mm) to specified torque.

Torque	3.0 ~ 4.0 kg•m

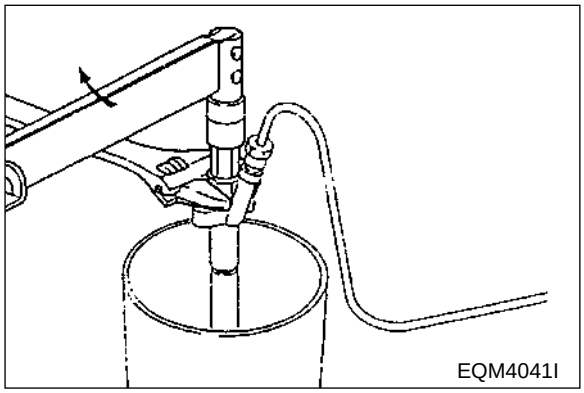

● **Inspecting the needle valve for full lift**

a. Install gasket (026508-1140) and plug (157892-1600 : SW12mm) onto the adjusting retaining nut (157892-1400).

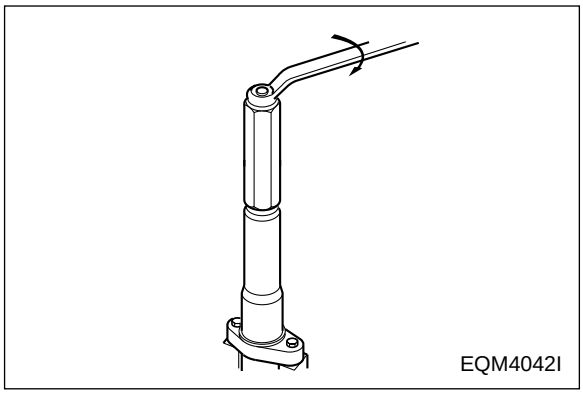

b. Install the nozzle holder on the plate with the cap nut facing upward.

c. Install the holder into the cap nut.

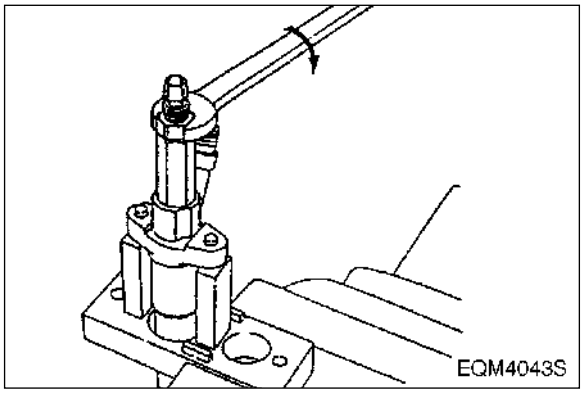

d. Install a nut (157892-1000 : SW 17mm) on the holder.

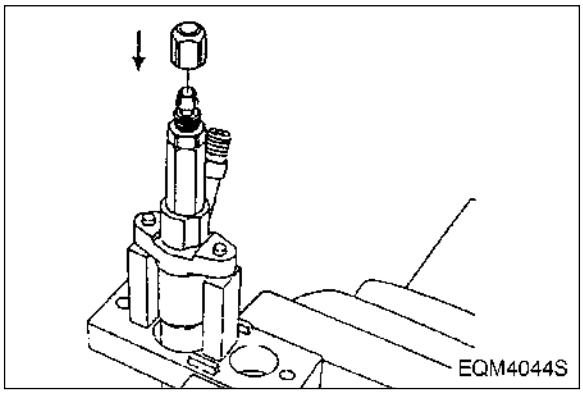

e. Assemble the pin (157892-4200 or 157892-4300) to the dial gauge (157954-3800).

Part No.	L (mm)
157892-4200	160
157892-4300	110

Note : *"L" means the length of the pin except the threaded portion.*

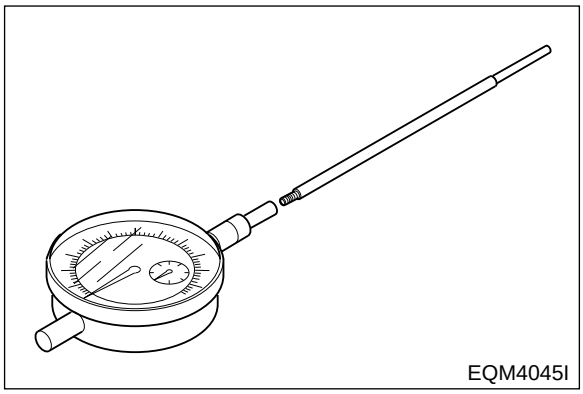

f. Install the dial gauge on the holder assembly so that the pin is brought into contact with the upper end of the push rod, then fix the pin with the nut.

Note 1 : *Fix the dial gauge so that a stroke of 2 mm or so can be measured.*

Note 2 : *Overtightening the nut may cause a sticking of the dial gauge seat.*

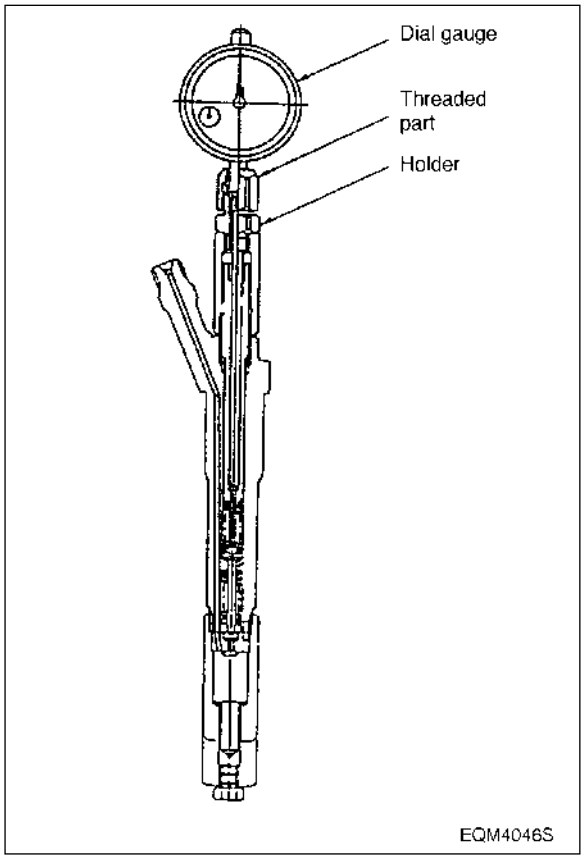

g. Assemble the nozzle and nozzle holder assembly to the nozzle tester and zero the dial gauge.

h. Operate the nozzle tester, bleed the retaining nut, and check for fuel leakage.

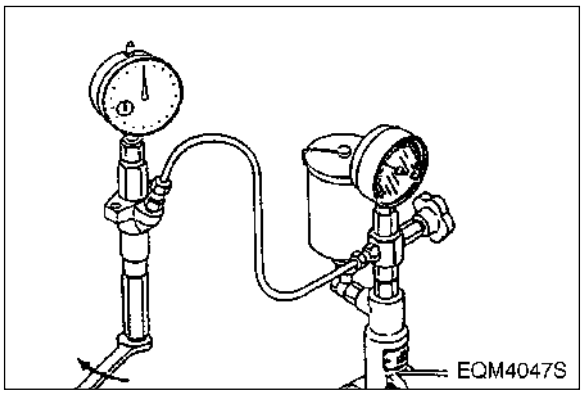

I. Operate the nozzle tester and increase the tester pressure up to 350 ~ 450kgf•cm^2 in order that the needle valve can be fully lifted. Then, record the full lift value “L”.

Note : *This testing is to be made in order to check the nozzle seat portion for unusual wear or whether the nozzle assembly is a standard item.*

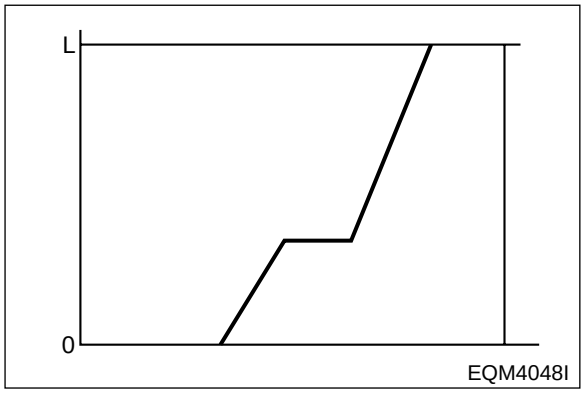

● Inspection of pre-lift

a. If the nozzle tester handle is released with the needle valve engaged in a full lift condition, the tester pressure drops, being accompanied by decrease in the needle valve lift value (indicated value on the dial gauge).

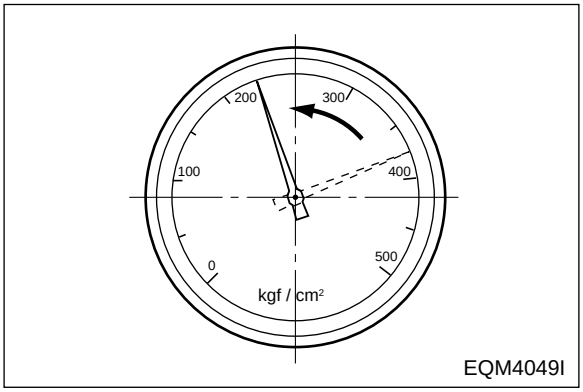

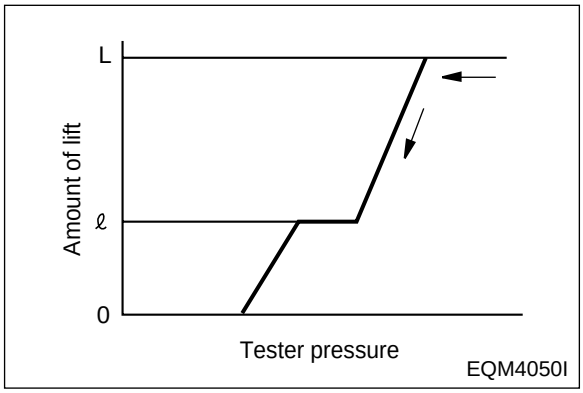

b. Take the indicated value on the dial gauge at the point of time when the secondary spring completes its operation and the needle valve puts an end to descent (the position of needle valve lift value "ℓ" as shown in the above and right figures) and check that the value is within the specified limit.

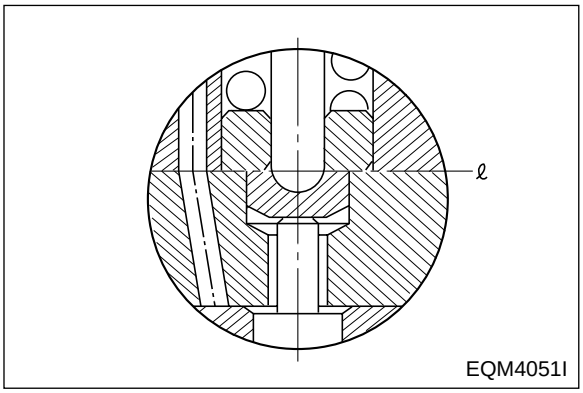

Measuring point for pre-lift

Take the indicated value on the dial gauge at a point of primary opening pressure + approx. 1 0 kgf•cm².

Note : *Locate the point of primary opening pressure + approx. 10kgf•cm² while dropping the pressure.*

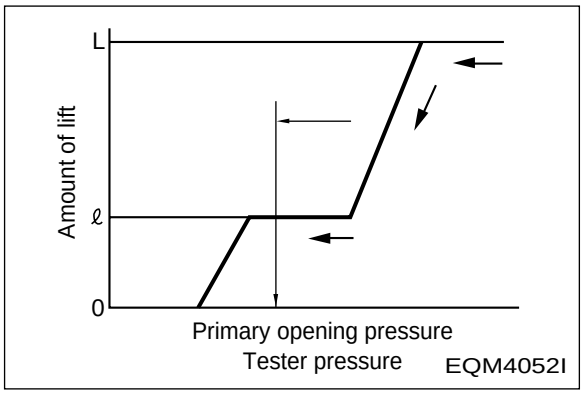

https://truckmanualshub.com/

c. If the measured pre-lift value deviates from the specified limit, replace the pin (14, 16), lift piece (13), spacer (15), and nozzle assembly (A) with a new “nozzle service kit”.

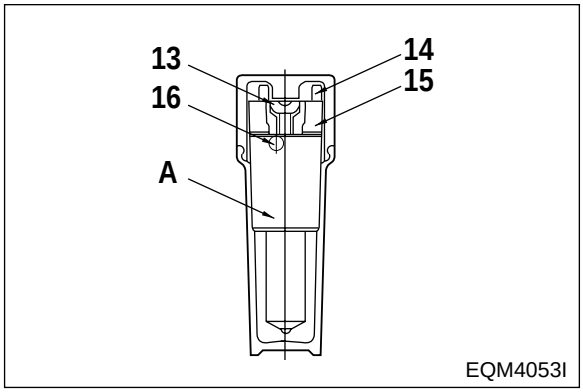

● **Inspection of secondary opening pressure**

a. After confirming the pre-lift, operate the nozzle tester and increase the internal pressure up to 350 ~ 450 kgf/cm² to fully lift the needle valve.

b. Release the nozzle tester handle to decrease the tester pressure, then take a note of the movements of the dial gauge.

c. Take the indicated value on the pressure gauge at the point of time when the needle of the dial gauge indicates the specified needle valve lift value. (In general, pre-lift “ℓ“ + 0.05mm. Refer to following figure.)

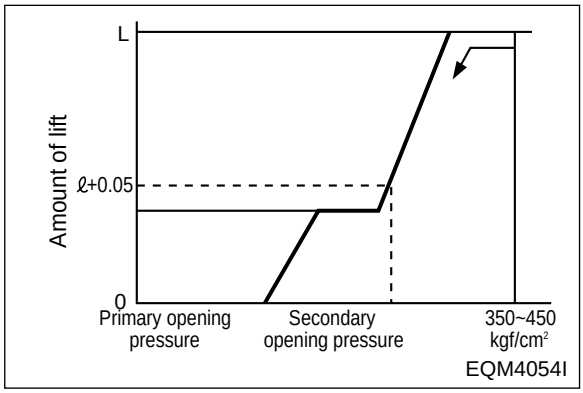

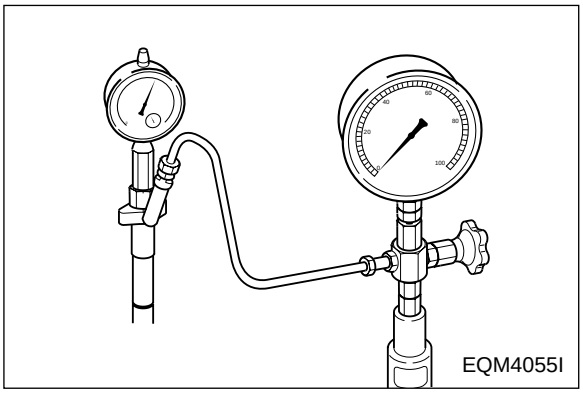

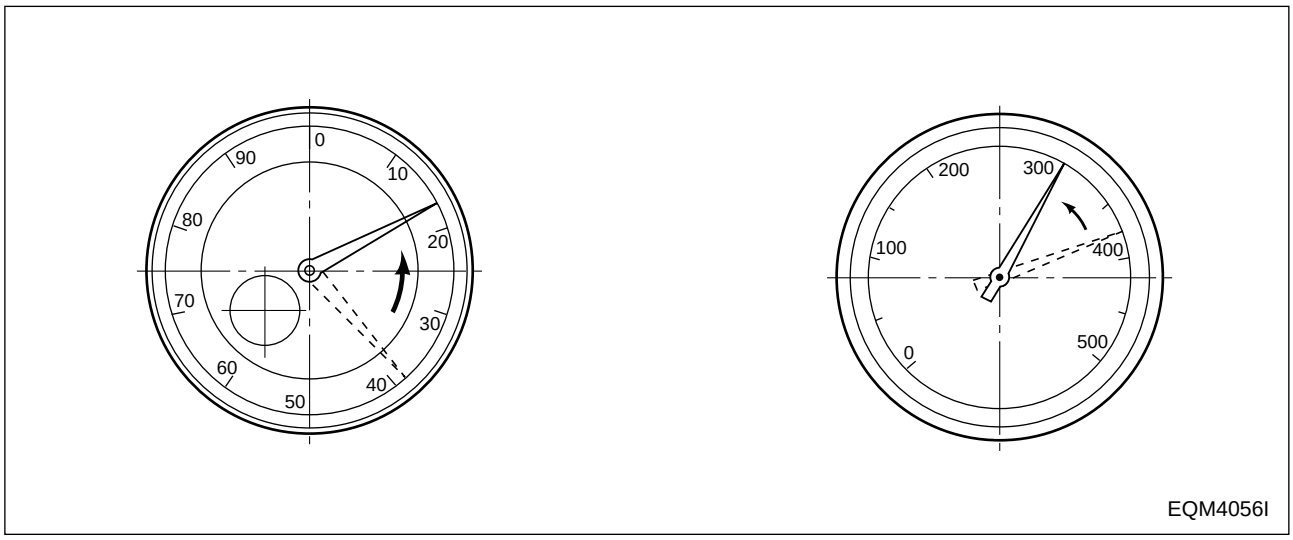

https://truckmanualshub.com/

● **Adjusting secondary opening pressure**

a. In the event that the measured value deviates from the specified limit, readjust the primary opening pressure if the amount of deviation is small. (to the standard range of the primary opening pressure)
   - If the secondary opening pressure is lower than the standard value: Adjust the primary opening pressure up to the top limit of the standard vague, and then measure the secondary opening pressure.
   - If the secondary opening pressure is higher than the standard value: In a reverse manner, readjust the primary opening pressure down to the bottom limit of the standard value.

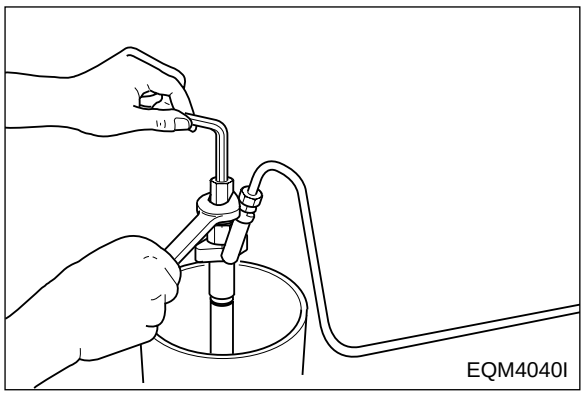

b. If the secondary opening pressure still deviates from the specified limit in spite of the readjusting the primary opening pressure, take off the nozzle fixing portion from the nozzle holder and remove the adjusting shim (10).

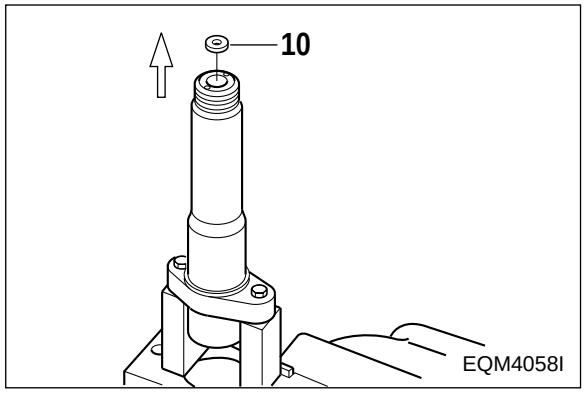

c. If the secondary opening pressure is higher than the standard value, fit a thinner adjusting shim than the existing one.
d. After replacing the existing adjusting shim, measure the secondary opening pressure and continue the adjustment until a value satisfying the standard value.

Adjusting shim for secondary opening pressure

(Out diameter = ∅9.5 , Inner diameter = ∅4.5)

Part No.	Thickness(mm)	Part No.	Thickness(mm)
1505380-4900	0.40	1505380-5300	0.56
1505380-5000	0.50	1505380-5400	0.58
1505380-5100	0.52	1505380-5500	0.60
1505380-5200	0.54	1505380-5600	0.70

- **Retaining nut**

a. Take out the dial gauge, nut, holder and gasket from the cap nut.

b. Remove the adjusting retaining nut and gasket, and install the original retaining nut. (SW 19mm)

Torque	6.0 ~ 8.0 kg•m

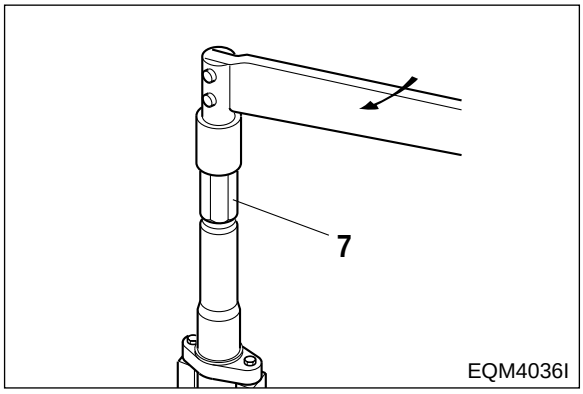

- **Inspection at completion**

a. Assemble the nozzle holder to a nozzle tester and check the primary opening pressure, spray patterns, oil tightness of seat portion, and oil leakage from each part.

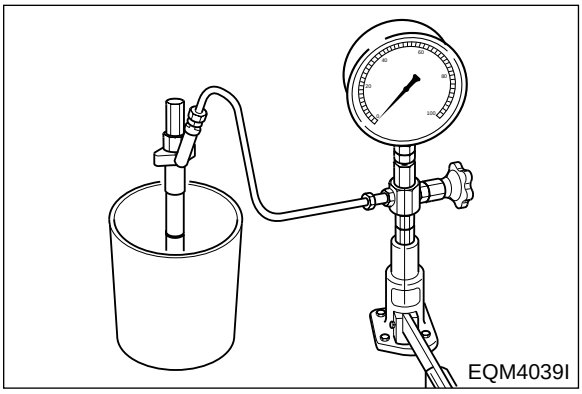

b. When replacing the nozzle, replace it with a new “nozzle service kit” integrated with a nozzle, lift piece, and spacer as a complete set.

Note : *If only a nozzle is replaced, the amount of pre-lift will deviate from the specified value.*

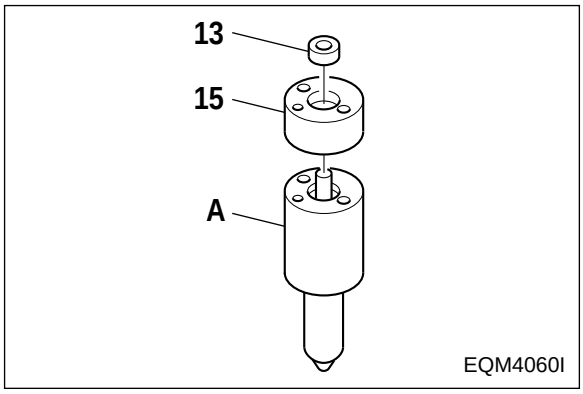

4.3.6. Diagnostics and troubleshooting

Complaints	Possible causes	Corrections
1. Engine won't start 1) Fuel not being pumped out from feed pump	(1) Fuel pipes clogged or air into pipe line (2) Feed pump valve defective (3) Feed pump piston or push rod sticking	Correct Replace Disassemble, correct
2) Fuel not being injected from injection pump	(1) Fuel filter element restricted (2) Air in fuel filter or injection pump (3) Plunger and/or delivery valve sticking or defective	Clean Bleed Disassemble, correct
3) Fuel injection timing incorrect	(1) Injection pump not properly installed on pump bracket (2) Injection pump tappet incorrectly adjusted (3) Cams on cam shaft worn excessively	Check, correct Check, correct Replace
4) Injection nozzles inoperative	(1) Needle valves sticking (2) Fuel leaking past clearance between nozzle and needle valve (3) Injection pressure incorrect	Correct or replace Correct or replace Adjust
2. Engine starts but stalls immediately	(1) Pipe from feed pump to injection pump clogged or filter clogged (2) Air in fuel (3) Feed pump delivery insufficient (4) Fuel delivery insufficient due to clogging of fuel tank air breather	Clean Bleed Disassemble, correct Replace breather
3. Engine lacks power	(1) Plunger worn excessively (2) Injection timing incorrect (3) Delivery valves defective (4) Nozzle leaks excessively (5) Nozzle not working normally	Replace Adjust Replace Correct or replace Disassemble, correct
4. Engine knocking	(1) Injection timing too fast (2) Nozzle injection pressure too high (3) Nozzles not working normally	Adjust Adjust Disassemble, correct
5. Engine knocks seriously producing excessive exhaust smoke	(1) Injection timing incorrect (2) Nozzle injection pressure too low (3) Nozzle spring broken (4) Nozzles not working normally (5) Plungers worn excessively (6) Delivery valves seat defective (7) Supply of fuel excessively	Adjust Adjust Replace Replace Adjust Replace Check feed pump

https://truckmanualshub.com/

Complaints	Possible causes	Corrections
6. Engine output unstable	(1) Supply of fuel insufficient (2) Air in fuel (3) Water in fuel (4) Operation of plungers unsmooth (5) Movement of control rack sluggish (6) Nozzles defective (7) Injection starting pressure of each barrel incorrect (8) Automatic timer defective	Check feed pump Bleed Replace fuel Disassemble, correct Disassemble, correct Disassemble, correct Adjust Disassemble, correct Disassemble, correct
7. Engine does not reach maximum speed	(1) Nozzles not working normally (2) Governor defective	Disassemble, correct Disassemble, correct
8. Engine idling unstable	(1) Movement of control rod sluggish (2) Operation of plungers unsmooth (3) Control pinions not engaged with control rod correctly	Disassemble, correct Disassemble, correct

4.4. Turbocharger

4.4.1. Main data and specifications

1) Main data and specifications

Specification		DE12T	P126TI
Turbocharger Model		T45	TV51
At maximum output	Air pressure at compressor outlet	Approx. 1.257 kg/cm^2	Approx.1.9 kg/cm^2
	Air suction volume	Approx. 19.0m^3/min	Approx. 26.0m^3/min
	Speed of turbine revolution	Approx. 95,00 rpm	Approx. 91,000rpm
Maximum allowable speed		110,000rpm	105,414rpm
Max. allowable temperature of exhaust gas at turbine inlet		750˚C	750˚C
Lubricating system		External oil supply	External oil supply
Weight		14kg	14kg

2) Operating principle

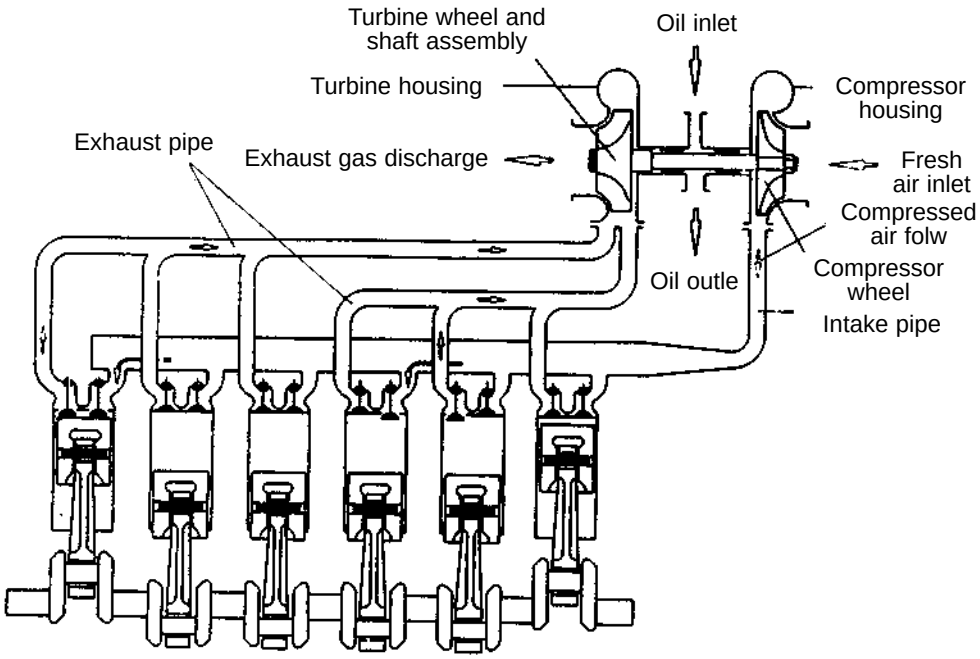

EM0A8001

The turbocharger is a system designed to make use of the engine exhaust gas energy to charge high-density air into the cylinders, thereby to increase the engine output.

3) Construction

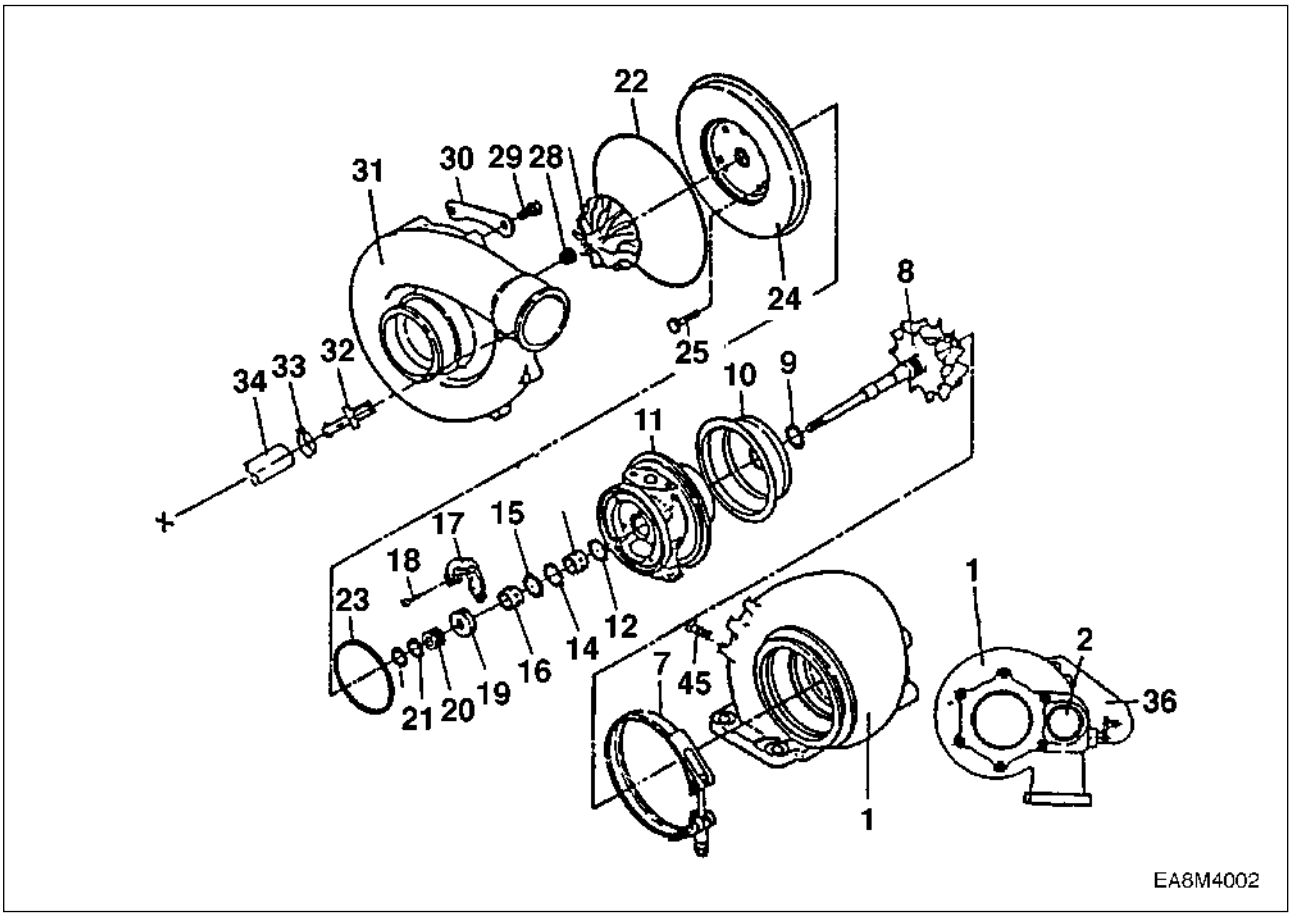

1.	Turbine housing	15.	Retainer ring	25.	Bolt
2.	Plug	16.	Bearing	26.	O-ring
5.	Crank	17.	Thrust collar	27.	Compressor wheel
7.	V-band	18.	Screw	28.	Nut
8.	Wheel	19.	Thrust bearing	29.	Bolt
9.	Piston ring	20.	Thrust space	30.	Clamp
10.	Wheel shroud	21.	Piston ring	31.	Compressor housing
11.	Center housing	22.	Seal ring	32.	Elbow
12.	Retainer ring	23.	Seal ring	38.	Retainer
13.	Bearing	24.	Rear plate	45.	Bolt
14.	Retainer ring				

4.4.2. General descriptions

The engine output is determined by the fuel delivery volume and engine efficiency.

To burn the supplied fuel completely to change into effective power for the engine, the volume of air enough to burn the fuel completely should be supplied into the cylinders.

Therefore, the engine output is determined substantially by the cylinder capacity, and a greater volume of compressed air is charged into cylinders of given capacity, the greater engine output can be obtained as a greater volume of air charged into the cylinders burns so much more fuel.

As explained, the compressing of air to supply into the cylinders is called “Supercharging” and the making use of the energy of exhaust gas discharged from the combustion chamber to charge the compressed air into the cylinders is called “Turbocharging”.

4.4.3. Functions

1) Turbine

Exhaust gas discharged from the combustion chamber distributes its own energy to the turbine blades while passing the inside of the turbine housing, with the result that the turbine shaft can get rotating force. This is the operating principle of ‘turbine’, which is mounted with seal rings and heat protector to prevent exhaust gas from affecting the bearings adversely.

2) Compressor

The compressor, which is connected to the turbine over the one and same shaft to form a rotating body, takes in and compresses ambient air with rotating force transmitted from the turbine shaft. Then, the compressed air is delivered to the intake stake. This is the operating principle of the compressor.

3) Bearings

(1) Thrust bearing

The turbine wheel creates thrust force. Therefore, exercise care so that the shaft is not deviated from its the original position due to this thrust.

(2) Journal bearing

This journal bearing of floating type forms a dual oil film on both the inside and outside of the bearing so that the bearing can rotate independently. As the dual oil film plays a role as a damper, the sliding speed of the bearing surface becomes lower than the rotating speed of the shaft, resulting in assurance of stability in its movement.

4) Sealing-Compressor shaft

The compressor is of a dual construction type composed of seal plate and seal ring to prevent the leak of compressed air or lubricating oil.

https://truckmanualshub.com/

4.4.4. Precautions for operation

1) Precautions for operation of engine

The following precautions should be observed when starting, operating, or stopping the engine:

Operations	Precautions	Reasons
When starting the engine	1) Check oil level 2) Crank the engine with starter to check the increase in oil pressure(until the needle of pressure gauge starts to move or pressure indicator lamp is actuated) before starting the engine. 3) When having replaced oil, oil filter element, or lubricating parts, or when having stopped the engine for extended period of time, or in a cold place, loosen the oil pipe connections and operate the starter motor until oil is discharged. After completing the operation, be sure to retighten the oil pipe connections portion before starting the engine.	2) Abrupt starting of the engine causes the engine to rotate with oil not being distributed not only to each part but also to the turbocharger, resulting in abnormal wear or seizure on the bearing due to insufficient supply of oil. 3) In the case of the engine stopped for extended time or in a cold place, oil fluidity within the pipes can be deteriorated.
Immediately after starting	1) Run the engine at idle for 5 minutes after starting off.	1) Applying load abruptly If load is abruptly applied with the engine and turbocharger rotating unsmoothly, such parts that a sufficient amount of oil has not reached can be seized up.
Immediately after starting	2) Check each part for leakage of oil, gas, and air, and take proper measure.	2) Leakage of oil, gas, and air (especially, oil leak) causes drop in oil pressure and loss of oil. resulting in seizure of the bearing.
During operation	Check the followings: 1) Oil pressure At idle: 0.8kg/cm^2 or more At full load: 3.0~4.8kg/cm^2 2) If unusual sound or vibration is heard or felt, reduce engine revolutions slowly and locate the cause.	1) Excessively low oil pressure causes unusual wear or seizure of the bearing. Too high pressure causes oil leakage. 2) The engine is operated continuously with unusual sound or vibration not corrected, it can be damaged beyond repair.
When stopping the engine	1) Run the engine at idle for 5 minutes before stopping.	1) If the engine is put to a stop after being operated at high load, heat from the red-hot turbine blades is transmitted to the bearing portion and burns oil to cause seizure of the bearing metal and rotating shaft.

4.4.5. Walk-around check and servicing

As the condition of turbocharger depends greatly on how well the engine is serviced, it is very important to maintain the engine in accordance with the specified maintenance procedure.

1) Intake system

Pay particular attention to the air cleaner when servicing the intake system.

In the case of wet-type air cleaner, if the level of oil surface is lower than specified, cleaning effect is poor; if too high, the cleaner draws in oil to foul the case.

Especially, if the rotor is fouled, the sophisticatedly-tuned balance is broken to create vibration and to cause seizure and unusual wear to the bearing.

Therefore, it is very important to use a good quality air cleaner all the time.

In the case of dry-type air cleaner, it is essential to clean it to reduce intake resistance as much as possible.

2) Exhaust system

Pay particular attention to prevent gas leaks and seizure when servicing the exhaust system because leakage of exhaust gas from discharge pipes, turbocharger fixing portions, etc. lowers charging effect.

As such components as turbine chamber that becomes red-hot during operation use heat resisting steel nuts, do not interchange these nuts with ordinary steel nuts. In addition, apply anti-seizure coating to fixing nuts on the portions as designated.

3) Fuel system

If the full load stopper regulating the maximum injection volume and the maximum speed stopper regulating the maximum speed in the fuel injection pump are adjusted without using a pump tester, the turbocharger rotates at excessively rapid speed and may suffer damage.

Besides of it, if spray pattern from the fuel injection nozzles is bad or the injection timing is incorrect, temperature of exhaust gas rises up to affect the turbocharger adversely. To avoid such trouble, be sure to make a nozzle test.

4) Lubricating system

Pay particular attention to oil quality and oil filter change intervals when servicing the lubricating system. Deteriorated engine oil affects adversely not only the engine but torso the turbocharger. Suggested engine oils for the turbocharger-mounted engine are as follows:

- SAE 15W30
- API grade CD or CE

https://truckmanualshub.com/

4.4.6. Periodical checking and servicing

Make it a rule to check the turbocharger assembly for condition and contamination periodically.

1) Guide for checking the rotor for rotating condition

The inspection of the rotor assembly for rotating condition should be performed by the degree of unusual sound. If a sound detecting bar is used, install its tip on the turbocharger housing and increase the engine revolutions slowly. If a high-pitch sound is heard continuously, it means that the rotor assembly is not normal. In this case, as the metal bearing and rotor are likely to be in abnormal conditions, the turbocharger should be replaced or repaired.

2) Guide for checking rotor end play

Disassemble the turbocharger from the engine, then check the rotor axial play and radial play.

When disassembling the turbocharger, be sure to plug the oil inlet and outlet ports with taps, etc.

(1) Rotor axial play

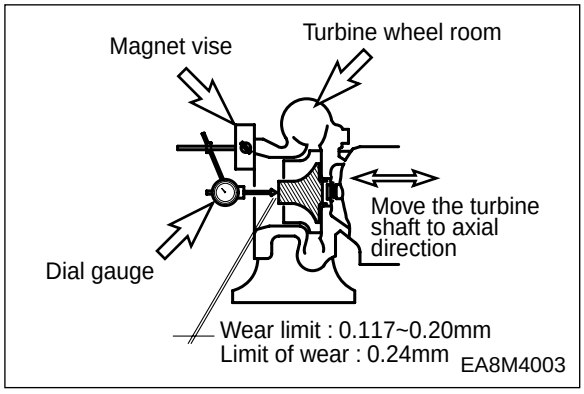

(2) Rotor radial play

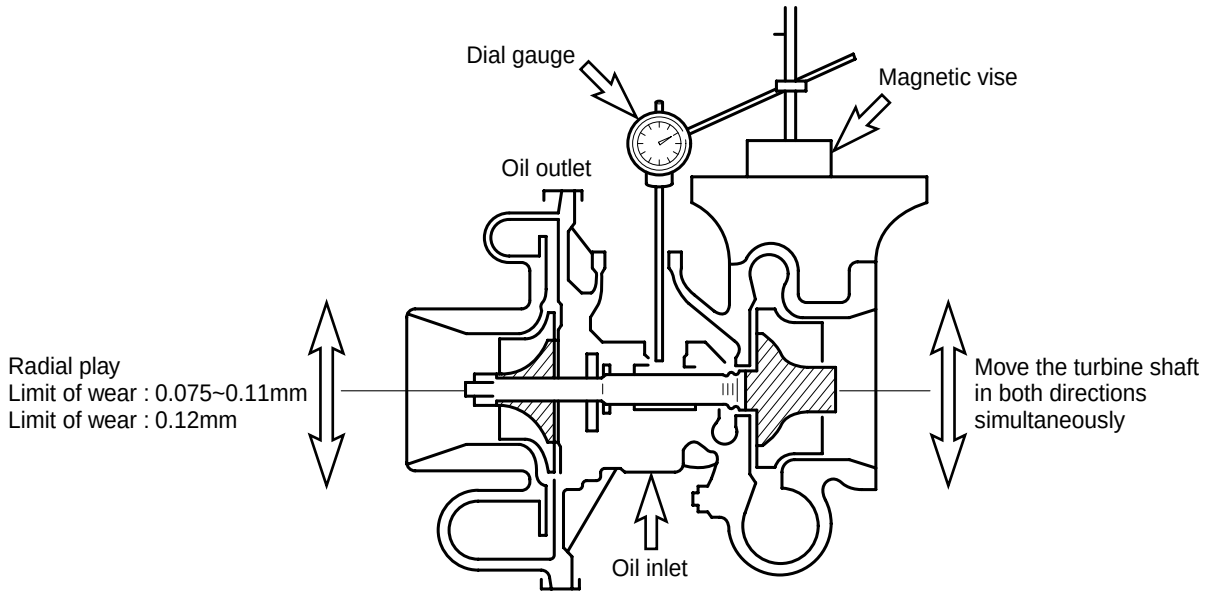

(3) If the measured axial and radial plays are beyond the limit of wear, replace or repair the turbocharger.

3) Guide for disassembling/cleaning and checking the turbocharger

First, disassemble the turbocharger from the engine and clean/check it with the oil inlet and outlet plugged with tape and so on.

4) Precautions for reassembling the tarbocharger onto the engine

For reassembly of the turbocharger or handling it after reassembly operation, be sure to observe the following precautions:

Especially, exercise extreme care to prevent foreign matters from entering the inside of the turbocharger.

(1) Lubricating system

- Before reassembling the turbocharger onto the engine, inject new oil in the oil inlet port and lubricate the journal and thrust bearings by rotating them with hand .
- Clean not only the pipes installed between the engine and oil inlet port but also the oil outlet pipe and check them for damage or foreign matters.
- Assemble each joint on oil pipes securely to prevent oil leaks.

(2) Intake system

- Check the inside of the intake system for foreign matters.
- Assemble each joint on the intake duct and air cleaner securely to prevent air leaks.

(3) Exhaust system

● Check the inside of the exhaust system for foreign matters.

● Be sure to use heat resisting steel bolts and nuts. Do not interchange them with ordinary steel bolts and nuts when performing reassembly operation. Apply anti-seizure coating to the bolts and nuts.

● Assemble each joint on the exhaust pipes securely to prevent gas leaks

4.4.7. Diagnostics and troubleshooting

Complaints	Possible causes	Corrections
1. Excessive black smoke	1) Air cleaner element clogged 2) Restrictions in air duct 3) Leakage at intake manifold 4) Turbocharger seized up and not rotating 5) Turbine blades and compressor blades coming in contact with each other or damaged 6) Exhaust piping deformed or clogged	Replace or clean Check and correct Check and correct Disassemble/repair or replace Disassemble/repair or replace Check and correct
2. Excessive white smoke	1) Oil leak into turbine and compressor 2) Worn or damaged seal ring due to excessive wear of bearing	Disassemble/repair or replace Disassemble/repair or replace
3. Low engine output	1) Gas leak at each part of exhaust system 2) Air cleaner element restricted 3) Turbocharger fouled or damaged 4) Leakage at discharge port on compressor side	Check and correct Replace or clean Disassemble/repair or replace Check and correct
4. Unusual sound or vibration	1) Rotor assembly coming in contact 2) Unbalanced rotation of rotor 3) Seized up 4) Each joint loosened	Disassemble/repair or replace Disassemble/repair or replace Disassemble/repair or replace Check and correct

https://truckmanualshub.com/

5. Special tool list

No.	Description	Part No.	Illustration
1	Nozzle tube Insert ass'y	DPN-5337	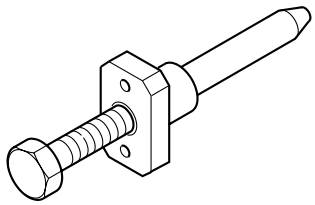
2	Valve stern oil seal installer	EF.123-082	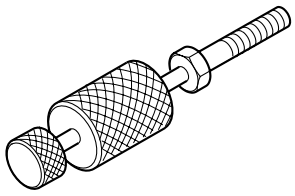
3	Injection pump setting ass'y	EF.123-015	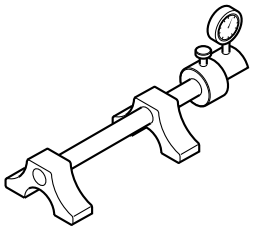
4	Oil seal insert ass'y(FR)	EF.123-127	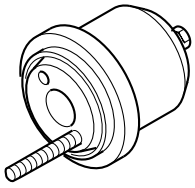
5	Oil seal insert ass'y(RR)	EF.123-053	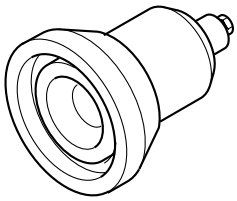
6	Oil seal puller ass'y(FR)	EF.123-052	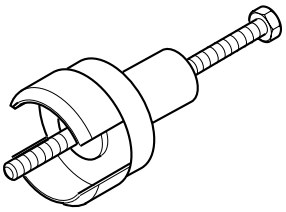 EA8M5001

https://truckmanualshub.com/

No.	Description	Part No.	Illustration
7	Oil seal puller ass'y(RR)	EF.123-048	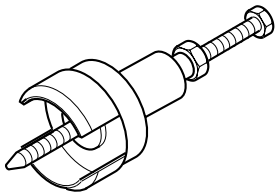
8	Cylinder pressure tester adapter	EU.2-0531	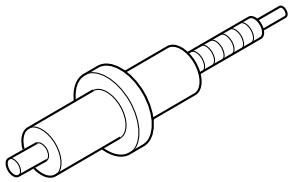
9	Cylinder liner puller ass'y	EU.123-087	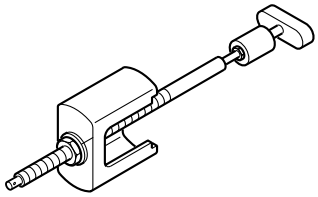
10	Valve stem seal punch	EF.123-066	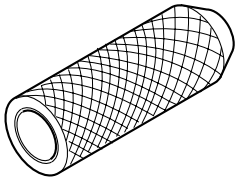
11	Valve clearance adjust ass'y	EU.2-0131	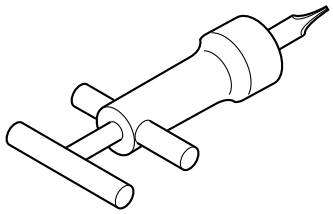
12	Valve spring press	EF.123-065	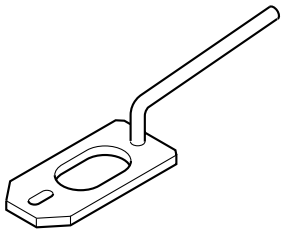 EA8M5001

https://truckmanualshub.com/

No.	Description	Part No.	Illustration
13	Crankshaft gear punch	EU.2-0647	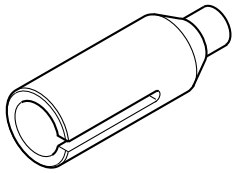
14	Feeler gauge	60.99901-0027	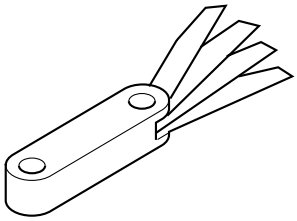
15	Snap ring plier	T7610001E	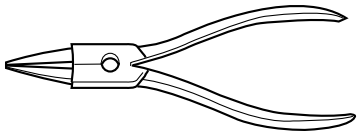
16	Piston ring plier	T7621010E	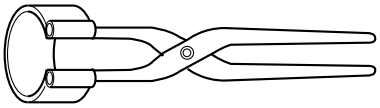

https://truckmanualshub.com/

Appendix

●Tightening torque for major parts

Major Parts	Screw (diameter x pitch)	Strength (Grade)	Tightening torque	Remarks
Cylinder head bolt	M14 x 1.5	12.9T	6 kg•m+180°**+150°** Angle	
Connecting rod bearing cap bolt	M14 x 1.5	12.9T	28.0 kg•m	
Crankshaft main bearing cap bolt	M16 x 1.5	12.9T	30.0 kg•m	
Balance weight fixing bolt	M14 x 1.5	10.9T	9.0 kg•m	
Flywheel fixing bolt	M14 x 1.5	10.9T	18.0 kg•m	
Crankshaft gear fixing bolt	M12 x 1.5	10.9T	13.4 kg•m	

●Tightening torque for injection pump system

Parts	Tightening Torque
Injection pump delivery valve holder	2.0 ~ 3.0 kg•m
Nozzle holder fixing cap nut	7.0 kg•m
Nozzle fixing cap nut	6.0 ~ 8.0 kg•m
High pressure injection pipe fixing cap nut	Max. 3.0 ~ 5.0 kg•m

●Standard bolt tightening torque table

Refer to the following table for bolts other than described above.

Diameter x pitch (mm)	Degree of strength										
	3.6	4.6	4.8	5.6	5.8	6.6	6.8	6.9	8.8	10.9	12.9
	(4A)	(4D)	(4S)	(5D)	(5S)	(6D)	(6S)	(6G)	(8G)	(10K)	(12K)
	Limit value for elasticity (kg/mm²)										
	20	24	32	30	40	36	48	54	64	90	108
	Tightening torque (kg•m)										
M5	0.15	0.16	0.25	0.22	0.31	0.28	0.43	0.48	0.50	0.75	0.90
M6	0.28	0.30	0.45	0.40	0.55	0.47	0.77	0.85	0.90	1.25	0.5
M7	0.43	0.46	0.70	0.63	0.83	0.78	1.20	1.30	1.40	1.95	2.35
M8	0.70	0.75	1.10	1.00	1.40	1.25	1.90	2.10	2.20	3.10	3.80
M8×1	0.73	0.80	1.20	1.10	1.50	1.34	2.10	2.30	2.40	3.35	4.10
M10	1.35	1.40	2.20	1.90	2.70	2.35	3.70	4.20	4.40	6.20	7.40
M10×1	1.50	1.60	2.50	2.10	3.10	2.80	4.30	4.90	5.00	7.00	8.40
M12	2.40	2.50	3.70	3.30	4.70	4.20	6.30	7.20	7.50	10.50	12.50
M12×1.5	2.55	2.70	4.00	3.50	5.00	4.60	6.80	7.70	8.00	11.20	13.40
M14	3.70	3.90	6.00	5.20	7.50	7.00	10.00	11.50	12.00	17.00	20.00
M14×1.5	4.10	4.30	6.60	5.70	8.30	7.50	11.10	12.50	13.00	18.50	22.00
M16	5.60	6.00	9.00	8.00	11.50	10.50	17.90	18.50	18.00	26.00	31.00
M6×1.5	6.20	6.50	9.70	8.60	12.50	11.30	17.00	19.50	20.00	28.00	33.00
M18	7.80	8.30	12.50	11.00	16.00	14.50	21.00	24.20	25.00	36.00	43.00
M18×1.5	9.10	9.50	14.50	12.50	18.50	16.70	24.50	27.50	28.00	41.00	49.00
M20	11.50	12.00	18.00	16.00	22.00	19.00	31.50	35.00	36.00	51.00	60.00
M20×1.5	12.80	13.50	20.50	18.00	25.00	22.50	35.00	39.50	41.00	58.00	68.00
M22	15.50	16.00	24.50	21.00	30.00	26.00	42.00	46.00	49.00	67.00	75.00
M22×1.5	17.00	18.50	28.00	24.00	34.00	29.00	47.00	52.00	56.00	75.00	85.00
M24	20.50	21.50	33.00	27.00	40.00	34.00	55.00	58.00	63.00	82.00	92.00
M24×1.5	23.00	25.00	37.00	31.00	45.00	38.00	61.00	67.00	74.00	93.00	103.00

Others:

1. The above torque rating have been determined to 70% or so of the limit value for bolt elasticity.
2. Tension is calculated by multiplying tensile strength by cross section of thread.
3. Special screws should be tightened to 85% or so of the standard value.
   For example, a screw coated with MoS2 should be tightened to 60% or so of the standard value.

https://truckmanualshub.com/

●Maintenance specification table

Group	Part	Check		Standard value for assembly	Limit for use	Correction	Remarks
Engine body	Cylinder block & liner	Inside diameter of Cylinder. liner for wear		ø123~ø123.023	ø123.223	Replace liner	Measure unworn portion beneath the rim of upper side
		Projected portion of liner		0.03~0.08	-		
		The upper surface of cylinder block for distortion		0.05	-	Correct with a surface grinder	Per distortion length for 200mm
		Hydraulic test for 1 minute (kg/cm²)		4	-		
	Cylinder head & valve	Valve seat depression	Intake	0~0.3	0.55		In case of new valve and seat
			Exhaust	0~0.3	0.55		
		Height		114.95~115	113.9	Replace cyl. head	
		Hydraulic test for 1 minute (kg/cm²)		4	-	Replace if leaky	Water temp : 70˚C
Major moving parts	Piston	Piston diameter (18mm from the lower side)		ø122.854~ø122.886	-		
		Clearance between piston and liner		0.114~0.169	-		
		Width of piston ring grooves	Tor ring	3.5	-	Replace piston if groove width is beyond specified value	
			2nd ring	3.060~3.080	-		
			Oil ring	4.040~4.060	-		
		Piston projection from cylinder block upper surface		0~0.12	-		Measure unworn portion beneath the rim of upper side
		Permissible weight difference of each piston		± 15g	96g		
	Piston ring	Piston ring gap	Top ring	0.30~0.45	1.5		Standard gauge inside diameter : ø123
			2nd ring	0.35~0.50	1.5		
			Oil ring	0.30~0.50	1.5		
		Piston ring groove clearance	Top ring	-	-	Replace ring or piston	Limit for use if for standard clearance
			2nd ring	0.07~0.102	0.15		
			Oil ring	0.05~0.085	0.15		
		Direction of ring gap		-	-	Install ring by 120°	

https://truckmanualshub.com/

Group	Part	Check	Standard value for assembly	Limit for use	Correction	Remarks
Major moving parts	Crank shaft	Axial run-out of journal and pin	0.05	0.1	Correct with a grinder	In horizontal and vertical directions
		Outside diameter of journal	ø95.966~ø95.988	ø94.966	Replace crank shaft	ø96 g6
		Outside diameter of pin	ø82.966~ø82.988	ø81.966	Replace crank shaft	ø83 g6
		Out of round of journal & pin	0.008	0.025		
		Permissible radial run-out of journal & pin	0.01	0.03		
		Permissible taper of journal & pin	0.01	0.03		
		Clearance between crank shaft & bearing	0.072~0.142	0.25	Replace bearing	Measure in the position of crown
		End play of crank shaft	0.15~0.325	0.5	Replace thrust bearing	
		Run-out of crank shaft	0.05	0.1 or less	Adjust by a press if bent	No.4 bearing(holding Nos. 1 & 7)
		Balance of crank shaft	60	60 or less	Check dynamic balance	Measure at 400 rpm
		Tightening torque of journal bearing cap bolt(kg.m)	30	-	Apply oil to bolt	No foreign matters on bearing cap installing surface
		Journal bearing crush	0.15~0.25	-		Measure by tightening metal cap and then loosening one stud bolt
		Oil seal for wear	-	-	Replace oil seal if oil leaking	Replace with new one, use shim
	Conn. rod	Clearance between conn. bearing & crank pin	0.049~0.119	0.20	Replace bearing	
		End play of con. rod crush	0.22~0.319	0.5	Replace conn. rod	
		Clearance between small end bush & piston pin	0.050~0.080	0.12		
		Conn. rod bearing crush height	0.086~0.116	-		After completing installation of bearing, loosen one stud bolt and measure
		Permissible weight difference of each conn. rodrod	± 18g	-		
		Tightening torque of con-rod bearing cap bolt (kg•m)	28	-	Apply oil to bolt	
	Cam shaft	Outside diameter of cam shaft	ø59.860~ø59.880	ø59.52		ø60
		Clearance between cam shaft and bush	0.050~0.128	0.20		
		Axial play of camshaft	0.13~0.27	0.3	Replace thrust plate	
	Timing gear	Clearance between idle gear shaft and inserting hole	0.025~0.091	0.15		
		End play of idle gear shaft	0.043~0.167	0.3	Replace thrust collar	

https://truckmanualshub.com/

Group	Part	Check			Standard value for assembly	Limit for use	Correction	Remarks
Valve system	Timing gear	Between crank gear & idle gear			0.10~0.20	-	Replace gear	
		Between idle gear & cam shaft gear			0.10~0.20	-		
	Valve	Outside diameter of intake valve stem			∅10.950~∅10.970	∅10.87	Replace valve & valve guide	Replace valve guide together when replacing valve
		Outside diameter of exhaust valve stem			∅10.935~∅10.955	∅10.84		
		Clearance between valve stem and valve guide	Intake		0.030~0.065	0.15	Replace & valve guide	
			Exhaust		0.045~0.080	0.18	Replace	
		Thickness of valve	Intake		1.5	1 or more	Replace	
			Exhaust		1.5	0.9 or more		
		Perm. radial run-out between valve stem & valve head	Intake		0.04~0.07	0.2	Replace	
			Exhaust		0.06~0.09	0.25		
		Clearance between valve guide & cyl. head installing hole			0.01~0.39	-		Apply oil to valve guide and press in
		Clearance between valve guide & valve spring seat	Intake		22	-		
			Exhaust		22	-		
		Intake Spring	Free length		75.5	72		
			Spring tension(set length : 37mm) kg		61.8~68.3	61.8		
			Straightness(against free length)		1.0	2.0		
		Exhaust Spring	Inner	Free length	65	61.75		
				Spring tension(set length : 34mm) kg	36.1~39.9	36.1	Replace valve spring	
				Straightness(against free length)	1.0	2.0		
			Outer	Free length	75.5	72		
				Spring tension(set length : 37mm) kg	61.8~68.3	61.8	Replace valve spring	
				Straightness(against free length)	1.0	2.0		
		Valve clearance (at cold)	Intake		0.3	-	Adjust	
			Exhaust		0.3	-		
		Contacting face of valve stem & rocker arm			-	-	Correct or replace if severely pitted on tip of arm and stem	

https://truckmanualshub.com/

Group	Part	Check		Standard value for assembly	Limit for use	Correction	Remarks
Valve System		Clearance between rocker arm shaft & rocker arm bush		0.020~0.093	0.2	Replace bush or shaft	
		Rocker arm shaft for wear		ø23.978~ø23.959	ø23.75	Replace	
		Permissible taper of push rod		0.3	-	Replace	
	Tappet	Clearance between tappet & cyl. block		0.035~0.077	0.15	Replace tappet	
		Outside diameter of tappet		ø19.944~ø19.965	-	Replace tappet	
		Contacting face of tappet & cam		-	-	Replace if excessively worn or deformed	
Lubricating System	Oil Pressure	Oil pressure(nominal speed) kg/cm²		4.5 or less	3.5	Correct oil leakage and clearance between each part	
		Oil pressure(idling) kg/cm²		0.8~1.4	0.6	Use suggested oil	
	Oil temp	Max. permissible oil temperature ˚C		-	105		Temperature above this not allowable
		Permissible oil temperature in short time ˚C		-	120		
	Oil pump	Axial play of oil pump gear		0.055~0.105	-	Replace gear or cover	
		Clearance between gear shaft & oil pump over hole		0.032~0.068	-		
		Clearance between drive gear bushing & cover hole		0.040~0.082	-	Replace bushing or cover	
		Outside diameter of gear shaft		ø16.950~ø16.968	-	Replace gear	ø17e7
		Outside diameter of drive gear bushing		ø27.939~ø27.960	-	Replace bushing	ø28e7
		Backlash	Between crank gear & oil pump drive gear	0.15~0.25	0.8	Adjust backlash	
			Between oil pump drive gear and intermediate gear	0.15~0.25	0.8		
	Valve opening pressure	Oil pressure control valve (kg/cm²)		4.3~4.7	-	Replace valve	
		By-pass valve for filter element (kg/cm²)		1.8~2.3	-		
		By-pass valve for full oil filter (kg/cm²)		4.0~4.8	-		
		By-pass valve for oil cooler (kg/cm²)		5~6	-		
		Relief valve for oil pump (kg/cm²)		8.5~11.5	-		
		Control valve for spray nozzle (kg/cm²)		1.5~1.8	-		
	Oil filter	Oil filter element for damage		-	-	Clean or replace	

https://truckmanualshub.com/

Group	Part	Check	Standard value for assembly	Limit for use	Correction	Remarks
Cooling system	Radiator	Radiator & water pump for corrosion, damage & improper connecting	-	-	Correct or replace	
		Test for leakage(air pressure) kg/cm²	1.0	-	Submerge in water and replace if air bubbles found	
		Pressure valve for opening pressure kg/cm²	0.5	-		
		Negative pressure valve for opening pressure (kg/cm²)	0.2	-		
	Water pump	Delivery volume l/min Engine speed 1,800rpm Water temp 24˚C Back pressure:1kg/cm²	Approx. 270	-		
		Clearance between pump impeller & pump body	0.3~0.6	-	Replace if contacted impeller and pump body	
	Cooling water temp	Operating temperature(permissible temp.) ˚C	90~95	95	Temperature above this not	
		Permissible temperature in a short time ˚C	103	103		allowable
	Thermostat	Thermostat opening temp. (under atmospheric pressure) ˚C	83	-	Replace if defective	
		Full opening temp. ˚C	95 or lower	-	Stroke : minimum 8mm	
Fuel System	Piping and the other	Fuel pipe, injection pipe & Nozzle holder for damage, cracks, looseness, bad packing	-	-	Correct or replace	
		Fuel filter element for damage	-	-	Clean or replace	
	Injection pressure of injection nozzle (kg/cm²)		220	-	Adjust by shim	1st : 160, 2nd : 220
	Opening pressure of overflow valve (kg/cm²)		1.6	-	Replace valve	
	Height of projected nozzle on the cyl. head (mm)		4.3	-	Replace cyl. head and nozzle	
	Clearance between injection pump coupling and coupling (mm)		0.2~0.4	-		
Inspection at completion	Running-in the engine		-	-	Refer to supplement “running-in”	Retighten head bolt after running in
	Cylinder pressure	Cylinder compression Pressure of cylinder(kg/cm²)	24~28	24 or more	Overhaul the engine	
		Compression pressure difference of each cylinder	± 10% or less against average	-	Correct	at 200rpm or more (20˚C)

DAEWOO HEAVY INDUSTRIES & MACHINERY LTD. AROUND THE WORLD

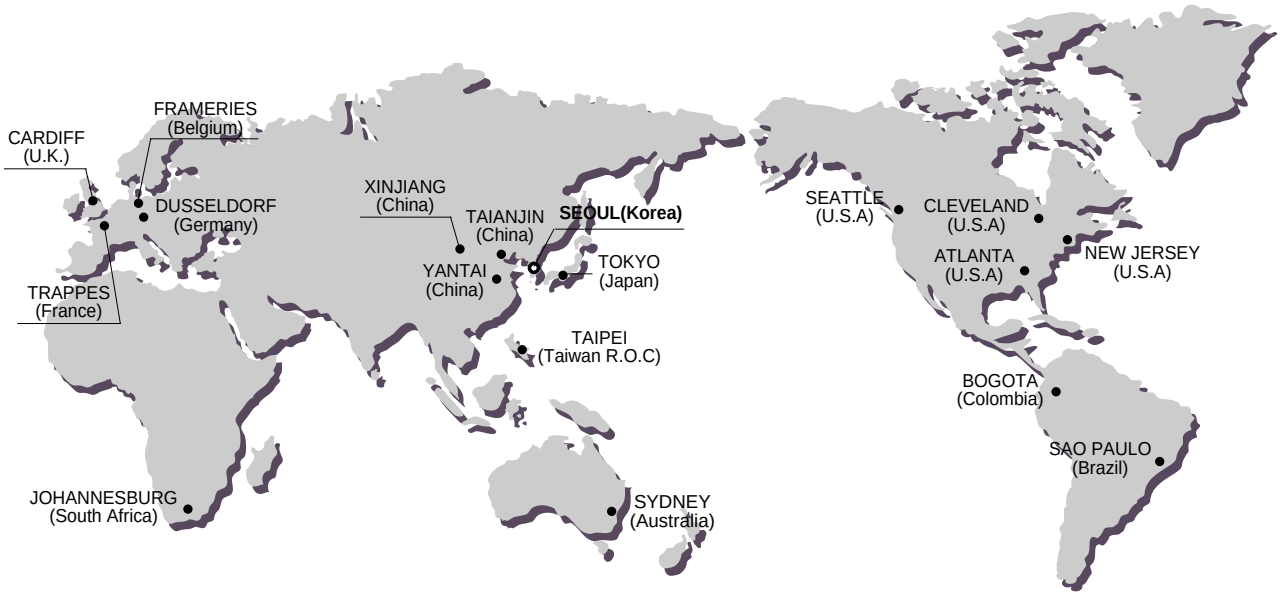

Head Office
Hwasu-Dong 7-11, Dong-Gu, Incheon, Korea.
Tel : 82-32-760-1114 Fax : 82-32-762-1546

Seoul Office
8th floor Daewoo Heavy Industries & Machinery Bidg, 14-34, Youido-Dong, Youngdungpo-Gu, Seoul, Korea
Tel : 82-2-2167-3114 Fax : 82-2-785-2677

ASIA & OCEANIA

Daewoo Heavy Industries Australia Pty. Ltd
Suite 5, Level 4,20 Charles St., Parramatta NSW 2150, Australia
Tel : 61-2-9633-4544 Fax : 61-2-9633-5266

Daewoo Machinery Co., Ltd
No.83 WenHwa 1st. Road, Kueishan Hsiang, Taoyuan Hsien, Taiwan R.0.C
Tel : 886-3-327-5576 Fax : 886-3-327-3013

Xinjiang Daewoo Machinery Co., Ltd
No, 178, Hetanbei Road, Wurumuqi, Xinjiang, China
Tel : 86-991-463-2217 Fax : 86-991-461-8641

Dajian(Tianjin) Mechanical Construction Co., Ltd
No.87 Gongxing Road, Tanggu, Tianjin, china
Tel : 86-222-521-0540 Fax : 86-222-521-0714

Daewoo Heavy Industries Yantai Co., Ltd
#28, Wuzhishan Road, Eco. & Tech, Development Zone, Yantai, Shandong, China
Tel : 86-535-638-2000 Fax : 86-535-638-2004

Daewoo Construction Machinery Co., Ltd
3rd Floor, k-1 Bld.,19-4, Nishi-shinbashi 2-Chome, Minato-Ku, Tokyo, Japan
Phone : 81-3-3433-8400 Fax : 81-3-3433-8648

NORTH AMERICA

Daewoo Heavy Industries America Corp.
2905 Shawnee Industrial Way, Suwanee, Georgia 30024, U. S. A
Tel : 1-770-831-2200 Fax : 1-770-831-0480

Daewoo Heavy Industries America N.J. Office
8 York Avenue, West Caldwell, N.J. 07006, U.S.A
Tel : 1-973-618-2500 Fax : 1-973-618-2501

Daewoo Heavy Industries America Cleveland Office
4530 Renaissance Parkway, Warrensville Heights, OH 44128, U.S.A
Tel : 1-216-595-1212 Fax : 1-216-595-1214

Daewoo Rep. C/O Boeing Co.
P.O.Box 3707 M/S 39-AH, Seattle, WA 98124-2207, U.S.A
Tel : 1-425-266-0478 Fax : 1-425-266-0518

EUROPE

Euro Daewoo U,K Ltd
Daewoo House, Unit 6.3 Nantgarw Park, Cardiff CF47QU, U.K. / Tel : 44-1443-84-2273 Fax : 44-1443-84-1933

Daewoo Maschinen Vertriebs GmbH
Hans-Bockler strasse 29, D-40764, Langenfeld-Fuhrkamp, Germany / Tel : 49-2173-8509-20 Fax : 49-2173-8509-60

Euro Daewoo S. A
1A Rue Achille Degrace 7080 Frameries Belgium
Tel : 32-65-61-3231 Fax : 32-65-61-3238

Euro Daewoo S. A France
2Eme Etage, 1/3 Avenue Pavlov, Z.A.I. Des Bruyeres 78190 Trappes France
Tel : 33-1-3016-2140
Fax : 33-1-3016-2144

SOUTH AMERICA

Daewoo Maquinas I Equipamentos Ltda
AV Tres Andradas 519- Jd. Piratininga - CEP 06230-050- Osasco - SP - Brazil
Phone : 55-11-3686-0177 Fax : 55-11-3686-0970

DHIAC Colombia Liaison Office
Diagonal127 A No. 17-34 Oficina 302
Bogota, Colombia

AFRICA

Daewoo Heavy Industries South Africa Pty. Ltd
60C Electron Road Isando 1600, Johannesburg, South Africa
Phone : 27-11-974-2095 Fax : 27-11 -974-2778