AUDIO

TABLE OF CONTENTS

page

AUDIO
DESCRIPTION 1
OPERATION 2
DIAGNOSIS AND TESTING - AUDIO 2
SPECIAL TOOLS
AUDIO SYSTEMS 4
ANTENNA BODY & CABLE
DESCRIPTION 4
OPERATION 4
DIAGNOSIS AND TESTING - ANTENNA 5
REMOVAL 6
INSTALLATION 6
RADIO CHOKE RELAY
DESCRIPTION 7
OPERATION 8
DIAGNOSIS AND TESTING - RADIO CHOKE RELAY 8
REMOVAL 8
INSTALLATION 9
INSTRUMENT PANEL ANTENNA CABLE
REMOVAL 9
INSTALLATION 9
RADIO
DESCRIPTION 10
OPERATION 10
DIAGNOSIS AND TESTING - RADIO 10
REMOVAL 11
INSTALLATION 11
RADIO NOISE SUPPRESSION COMPONENTS
DESCRIPTION 12
DIAGNOSIS AND TESTING - RADIO NOISE SUPPRESSION COMPONENTS 12

page

ENGINE-TO-BODY GROUND STRAP
REMOVAL 12
INSTALLATION 13
CAB-TO- BED GROUND STRAP
REMOVAL 13
INSTALLATION 14
HEATER CORE GROUND STRAP
REMOVAL 14
INSTALLATION 14
REMOTE SWITCHES
DESCRIPTION 14
OPERATION 15
DIAGNOSIS AND TESTING - REMOTE SWITCHES 15
REMOVAL 16
INSTALLATION 16
SPEAKER
DESCRIPTION 17
OPERATION 17
DIAGNOSIS AND TESTING - SPEAKER 17
A-PILLAR TWEETER SPEAKER
REMOVAL 18
INSTALLATION 19
FRONT DOOR SPEAKER
REMOVAL 19
INSTALLATION 19
REAR CAB SIDE PANEL SPEAKER
REMOVAL 20
INSTALLATION 20
REAR DOOR SPEAKER
REMOVAL 20
INSTALLATION 21

AUDIO

DESCRIPTION

An audio system is standard factory-installed equipment on this model, unless the vehicle is ordered with an available radio delete option. The standard equipment audio system includes an AM/FM/cassette (RAS sales code) receiver, and speakers in four locations. Several combinations of radio receivers and speaker systems are offered as optional equipment on this model. The audio system uses an ignition switched source of battery current so that the system will only operate when the ignition switch is in the On or Accessory positions. The audio system includes the following components:

- Antenna
- Clockspring (with remote radio switches only)
- Filter, choke and speaker relay (with premium speaker system only)
- High-line or premium Central Timer Module (CTM) (with remote radio switches)
- Radio noise suppression components
- Radio receiver
- Remote radio switches (optional with RAZ radio receiver only)
- Speakers

Refer to Electrical, Restraints for more information on the clockspring. Refer to Electrical, Body Control/ Central Control Module for more information on the Central Timer Module. Refer to the appropriate wiring information. The wiring information includes wir-

AUDIO (Continued)

ing diagrams, proper wire and connector repair procedures, details of wire harness routing and retention, connector pin-out information and location views for the various wire harness connectors, splices and grounds. Following are general descriptions of the remaining major components in the standard and optional factory-installed audio systems.

OPERATION

See the owner's manual in the vehicle glove box for more information on the features, use and operation of each of the available audio systems.

CENTRAL TIMER MODULE

The high-line or premium Central Timer Module (CTM) can also control some features of the audio system when the vehicle is equipped with the optional RAZ radio receiver and remote radio switches. A high-line CTM is used on high-line versions of this vehicle. A premium CTM is used on vehicles equipped with the optional heated seats. The CTM combines the functions of a chime/buzzer module, an intermittent wipe module, an illuminated entry module, a remote keyless entry module, and a vehicle theft security system module in a single unit.

The high-line or premium CTM also controls and integrates many of the additional electronic functions and features included on models with this option. The RAZ radio receiver with a remote radio switch option is one of the features that the CTM controls. The CTM is programmed to send switch status messages over the Chrysler Collision Detection (CCD) data bus to control the volume, seek, and pre-set station advance functions of the RAZ radio receiver. The CTM monitors the status of the remote radio switches located on the steering wheel through a hard wired circuit. The CTM then sends the proper switch status messages to the radio receiver. The electronic circuitry within the radio receiver responds to the switch status messages it receives by adjusting the radio settings as requested.

Refer to Electrical, Body Control/Central Timer Module for more information on the high-line CTM. Refer to Remote Radio Switch in Description and Operation for more information on this component. In addition, radio receivers connected to the CCD data bus have several audio system functions that can be diagnosed using a DRBIII® scan tool. Refer to the proper Diagnostic Procedures manual for more information on DRBIII® testing of the audio systems.

DIAGNOSIS AND TESTING - AUDIO

WARNING: ON VEHICLES EQUIPPED WITH AIRBAGS, REFER TO ELECTRICAL, RESTRAINTS BEFORE ATTEMPTING ANY STEERING WHEEL, STEERING COLUMN, OR INSTRUMENT PANEL COMPONENT DIAGNOSIS OR SERVICE. FAILURE TO TAKE THE PROPER PRECAUTIONS COULD RESULT IN ACCIDENTAL AIRBAG DEPLOYMENT AND POSSIBLE PERSONAL INJURY.

Audio System Diagnosis		
CONDITION	POSSIBLE CAUSE	CORRECTION
NO AUDIO	1. Fuse faulty.	1. Check radio fuses in junction block. Replace faulty fuses, if required.
	2. Radio connector faulty.	2. Check for loose or corroded radio connections. Repair, if required.
	3. Wiring faulty.	3. Check for battery voltage at radio connector. Repair wiring, if required.
	4. Ground faulty.	4. Check for continuity between radio chassis and a known good ground. There should be continuity. Repair ground, if required.
	5. Radio faulty.	5. Refer to Radio in the Diagnosis and Testing section of this group.
	6. Speakers faulty.	6. Refer to Speaker in the Diagnosis and Testing section of this group.
	7. Amplifier faulty (if equipped).	7. Refer to Speaker in the Diagnosis and Testing section of this group.

AUDIO (Continued)

Audio System Diagnosis		
CONDITION	POSSIBLE CAUSE	CORRECTION
NO DISPLAY	1. Fuse faulty.	1. Check radio fuses in junction block. Replace faulty fuses, if required.
	2. Radio connector faulty.	2. Check for loose or corroded radio connections. Repair, if required.
	3. Wiring faulty.	3. Check for battery voltage at radio connector. Repair wiring, if required.
	4. Ground faulty.	4. Check for continuity between radio chassis and a known good ground. There should be continuity. Repair ground, if required.
	5. Radio faulty.	5. Refer to Radio in the Diagnosis and Testing section of this group.
CLOCK WILL NOT KEEP SET TIME	1. Fuse faulty.	1. Check ignition-off draw fuse. Replace faulty fuse, if required.
	2. Radio connector faulty.	2. Check for loose or corroded radio connections. Repair, if required.
	3. Wiring faulty.	3. Check for battery voltage at radio connector. Repair wiring, if required.
	4. Ground faulty.	4. Check for continuity between radio chassis and a known good ground. There should be continuity. Repair ground, if required.
	5. Radio faulty.	5. Refer to Radio in the Diagnosis and Testing section of this group.
POOR RADIO RECEPTION	1. Antenna faulty.	1. Refer to Antenna in the Diagnosis and Testing section of this group.
	2. Ground faulty.	2. Check for continuity between radio chassis and a known good ground. There should be continuity. Repair ground, if required.
	3. Radio faulty.	3. Refer to Radio in the Diagnosis and Testing section of this group.
	4. Faulty EMI or RFI noise suppression.	4. Refer to Radio Frequency Interference in the Diagnosis and Testing section of this group.
NO/POOR TAPE OPERATION	1. Faulty tape.	1. Insert known good tape and test operation.
	2. Foreign objects behind tape door.	2. Remove foreign objects and test operation.
	3. Dirty cassette tape head.	3. Clean head with Mopar Cassette Head Cleaner.
	4. Faulty tape deck.	4. Exchange or replace radio, if required.
NO COMPACT DISC OPERATION	1. Faulty CD.	1. Insert known good CD and test operation.
	2. Foreign material on CD.	2. Clean CD and test operation.
	3. Condensation on CD or optics.	3. Allow temperature of vehicle interior to stabilize and test operation.
	4. Faulty CD player.	4. Exchange or replace radio, if required.

AUDIO (Continued)

SPECIAL TOOLS

AUDIO SYSTEMS

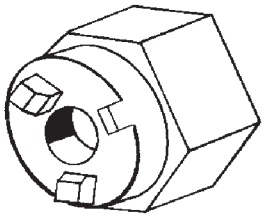

Antenna Nut Wrench C-4816

ANTENNA BODY & CABLE

DESCRIPTION

The antenna body and cable are not readily visible in their installed positions in the vehicle. The most visible component of the antenna body and cable are the antenna adapter and the antenna cap nut, which are located on the top of the right front fender panel of the vehicle, near the right end of the cowl plenum. The antenna body and cable are secured below the fender panel by the antenna cap nut through a prefabricated and dedicated mounting hole in the top of the right front fender. The primary coaxial antenna cable is then routed beneath the fender sheet metal and through a prefabricated and dedicated cable entry hole in the right cowl side panel into the interior of the vehicle. Inside the vehicle, the primary coaxial cable is connected to a secondary instrument panel antenna coaxial cable with an in-line connector that is located behind the right end of the instrument panel. The secondary coaxial cable is then routed behind the instrument panel to the back of the radio.

The factory-installed radio antenna body and cable consists of the following components:

- **Antenna adapter** - The antenna adapter is sometimes also referred to as the antenna bezel or escutcheon.
- **Antenna body** - The die cast white metal antenna body is the mating structure between the antenna mast and the primary antenna coaxial cable.
- **Antenna cable** - This vehicle uses a two-piece antenna coaxial cable. The primary antenna cable is integral to the antenna body, and the secondary antenna cable connects the primary cable to the radio.
- **Antenna cap nut** - The antenna cap nut is a special, bright-plated threaded fastener that captures the antenna adapter and retains the antenna body to the fender sheet metal.

The components of the radio antenna body and cable cannot be adjusted or repaired. All factory-installed radios automatically compensate for radio antenna trim. Therefore, no antenna trimmer adjustment is required or possible after replacing the antenna body and cable or the radio. If an antenna body and cable component is damaged or faulty, it must be replaced. Other than the primary antenna cable, which is integral to the antenna body, the individual components of the antenna are available for service replacement.

OPERATION

The antenna body and cable connects the antenna mast to the radio. The radio antenna is an electromagnetic circuit component used to capture radio frequency signals that are broadcast by local commercial radio stations in both the Amplitude Modulating (AM) and Frequency Modulating (FM) frequency ranges. These electromagnetic radio frequency signals induce small electrical modulations into the antenna as they move past the mast. The antenna body transfers the weak electromagnetic radio waves induced into the rigid antenna mast into the center conductor of the flexible primary antenna coaxial cable. The braided outer shield of the antenna coaxial cable is grounded through both the antenna body and the radio chassis, effectively shielding the radio waves as they are conducted to the radio. The radio then tunes and amplifies the weak radio signals into stronger electrical signals in order to operate the audio system speakers.

The antenna body includes an integral flange that mates with and grounds the antenna body to the underside of the fender panel sheet metal. Above the fender panel, the antenna body has a short nipple that is externally threaded to accept the antenna cap nut. Inside the nipple is a plastic insulator tube, and inside this insulator is an internally threaded metal receptacle that accepts the adapter stud on the bottom of the antenna mast. The antenna adapter serves as an above fender interface to mount and secure the antenna body to the vehicle. The antenna adapter is a black molded plastic component that provides a functional transition between the top of the fender and the antenna cap nut, while concealing the edges of the antenna mounting hole and protecting the painted finish of the fender from marring as the antenna cap nut is tightened. The adapter is installed over and shrouds the threaded nipple of the antenna body, which is installed from under and protrudes through the top of the mounting hole in the fender. The antenna cap nut is installed on top of the antenna adapter and tightened onto the external threads of the antenna body nipple to effectively secure and ground the antenna body to the fender.

ANTENNA BODY & CABLE (Continued)

Three notches on the outer circumference of the cap nut are engaged by matching projections of an antenna nut wrench (Special Tool C-4816) to facilitate the removal and installation of this special fastener. Proper tightening of the antenna cap nut is critical to ensuring proper grounding of the antenna body to the fender sheet metal, which is necessary for clear radio signal reception.

A short length of coaxial cable serves as the primary antenna cable. The center conductor of the cable is connected to the antenna mast receptacle. The outer wire mesh of the cable is connected to and grounded through the antenna body. One end of the primary antenna cable is securely crimped to the lower end of the antenna body, while the opposite end features a simple push/pull-type male coaxial cable connector that serves as the in-line connector to the instrument panel (secondary) antenna coaxial cable. The primary coaxial cable includes a grommet that seals the cable to an entry hole in the right cowl side outer panel where the cable passes into the passenger compartment of the vehicle. The secondary antenna cable has a push/pull-type male coaxial cable connector on the radio end, and a push/pull-type female coaxial cable connector on the opposite end, which serves as the in-line connector to the primary antenna cable. In the passenger compartment the primary cable is routed to the lower right side of the instrument panel, where it is connected to the secondary instrument panel antenna cable. The instrument panel antenna cable is routed near the instrument panel wire harness through the instrument panel to the radio and is secured to the instrument panel structural support with small metal push-on retainers. This two-piece antenna cable arrangement allows the instrument panel or the antenna body and cable to be removed or installed without disturbing the radio.

DIAGNOSIS AND TESTING - ANTENNA

WARNING: ON VEHICLES EQUIPPED WITH AIRBAGS, REFER TO ELECTRICAL, RESTRAINTS BEFORE ATTEMPTING ANY STEERING WHEEL, STEERING COLUMN, OR INSTRUMENT PANEL COMPONENT DIAGNOSIS OR SERVICE. FAILURE TO TAKE THE PROPER PRECAUTIONS COULD RESULT IN ACCIDENTAL AIRBAG DEPLOYMENT AND POSSIBLE PERSONAL INJURY.

The following four tests are used to diagnose the antenna with an ohmmeter:

- **Test 1** - Mast to ground test
- **Test 2** - Tip-of-mast to tip-of-conductor test
- **Test 3** - Body ground to battery ground test
- **Test 4** - Body ground to coaxial shield test.

The ohmmeter test lead connections for each test are shown in Antenna Tests (Fig. 1).

NOTE: This model has a two-piece antenna coaxial cable. Tests 2 and 4 must be conducted in two steps to isolate a coaxial cable problem; from the coaxial cable connection under the right end of the instrument panel near the right cowl side inner panel to the antenna base, and then from the coaxial cable connection to the radio receiver chassis connection.

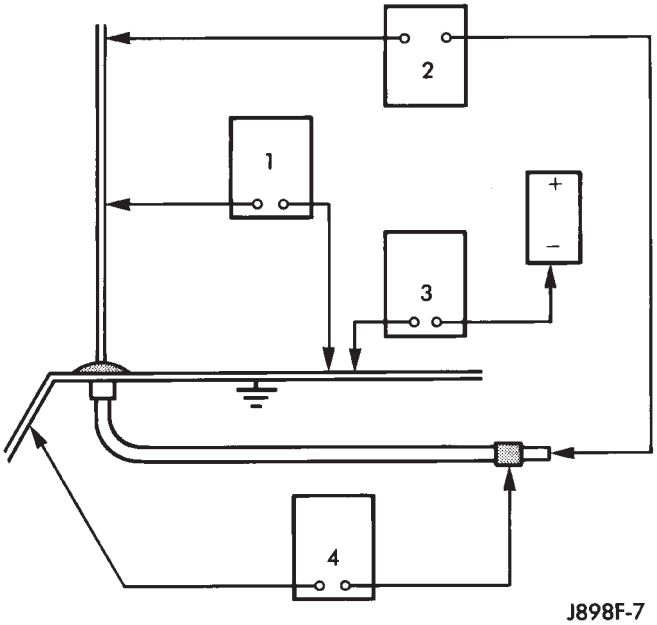

Fig. 1 Antenna Tests

TEST 1

Test 1 determines if the antenna mast is insulated from the base. Proceed as follows:

(1) Disconnect and isolate the antenna coaxial cable connector from the radio receiver chassis.

(2) Connect one ohmmeter test lead to the tip of the antenna mast. Connect the other test lead to the antenna base. Check for continuity.

(3) There should be no continuity. If continuity is found, replace the faulty or damaged antenna base and cable assembly.

TEST 2

Test 2 checks the antenna for an open circuit as follows:

(1) Disconnect the antenna coaxial cable connector from the radio receiver chassis.

(2) Connect one ohmmeter test lead to the tip of the antenna mast. Connect the other test lead to the center pin of the antenna coaxial cable connector.

(3) Continuity should exist (the ohmmeter should only register a fraction of an ohm). High or infinite resistance indicates damage to the base and cable

ANTENNA BODY & CABLE (Continued)

assembly. Replace the faulty or damaged antenna base and cable, if required.

TEST 3

Test 3 checks the condition of the vehicle body ground connection. This test should be performed with the battery positive cable removed from the battery. Disconnect both battery cables, the negative cable first. Reconnect the battery negative cable and perform the test as follows:

(1) Connect one ohmmeter test lead to the vehicle fender. Connect the other test lead to the battery negative terminal post.

(2) The resistance should be less than one ohm.

(3) If the resistance is more than one ohm, check the braided ground strap(s) connected to the engine and the vehicle body for being loose, corroded, or damaged. Repair the ground strap connections, if required.

TEST 4

Test 4 checks the condition of the ground between the antenna base and the vehicle body as follows:

(1) Connect one ohmmeter test lead to the vehicle fender. Connect the other test lead to the outer crimp on the antenna coaxial cable connector.

(2) The resistance should be less then one ohm.

(3) If the resistance is more then one ohm, clean and/or tighten the antenna base to fender mounting hardware.

REMOVAL

(1) Disconnect and isolate the battery negative cable.

(2) Reach under the passenger side of the instrument panel near the right cowl side inner panel to disengage the coaxial cable connector from the retainer clip located on the bottom of the heater-A/C housing (Fig. 2).

(3) Remove the foam tape to access the coaxial cable connector. Disconnect the connector by pulling it apart while twisting the metal connector halves. Do not pull on the cable.

(4) Securely tie a suitable length of cord or twine to the antenna half of the coaxial cable connector. This cord will be used to pull or “fish” the cable back into position during installation.

(5) Reach above the Powertrain Control Module (PCM) on the right side of the dash panel in the engine compartment to disengage the antenna coaxial cable grommet from the hole in the dash panel (Fig. 3).

(6) Pull the antenna coaxial cable out of the passenger compartment and into the engine compartment through the hole in the dash panel.

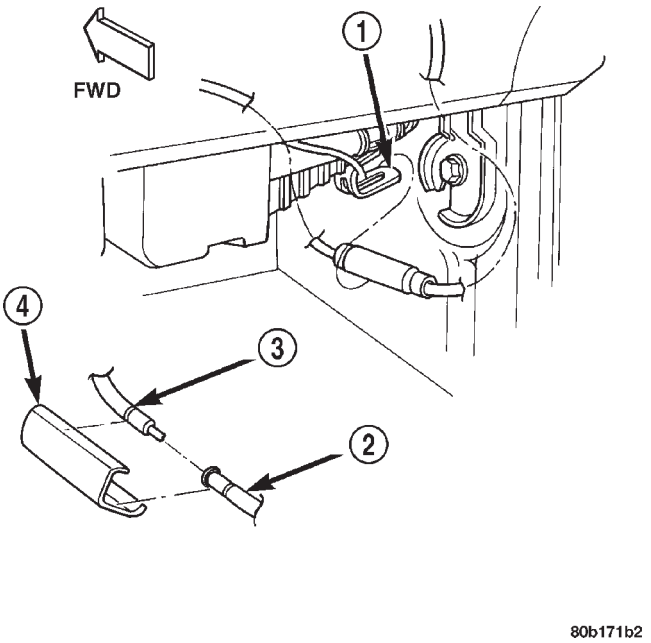

Fig. 2 Antenna Coaxial Cable Connector

1 - RETAINER CLIP
2 - TO RADIO
3 - TO ANTENNA
4 - FOAM TAPE

(7) Raise the sleeve on the antenna mast far enough to access and unscrew the antenna mast from the antenna body (Fig. 4).

(8) Remove the antenna cap nut using an antenna nut wrench (Special Tool C-4816) (Fig. 5).

(9) Remove the antenna adapter from the top of the fender.

(10) Lower the antenna body and cable assembly through the top of the fender.

(11) Pull the antenna body and cable out through the opening between the right cowl side outer panel and the top of the fender, while feeding the antenna coaxial cable out of the engine compartment through the hole in the right cowl side reinforcement.

(12) Untie the cord or twine from the antenna body and cable coaxial cable connector, leaving the cord or twine in the place of the cable through the vehicle.

(13) Remove the antenna body and cable from the vehicle.

INSTALLATION

(1) Tie the end of the cord or twine that was used during instrument panel antenna cable removal securely to the connector on the end of the antenna cable being installed into the instrument panel. This cord will be used to pull or “fish” the cable back into position.

ANTENNA BODY & CABLE (Continued)

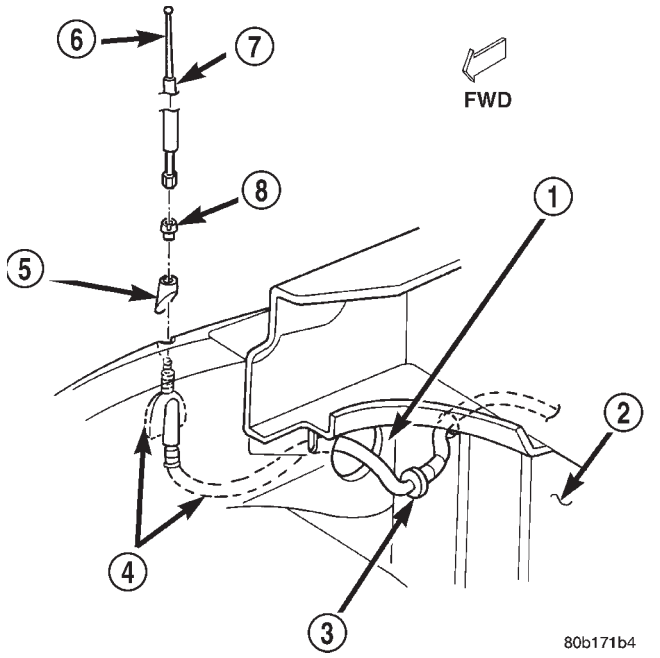

Fig. 3 Antenna Mounting

1 - COWL SIDE REINFORCEMENT
2 - DASH PANEL
3 - GROMMET
4 - ANTENNA BODY AND CABLE
5 - ADAPTER
6 - MAST
7 - SLEEVE
8 - NUT

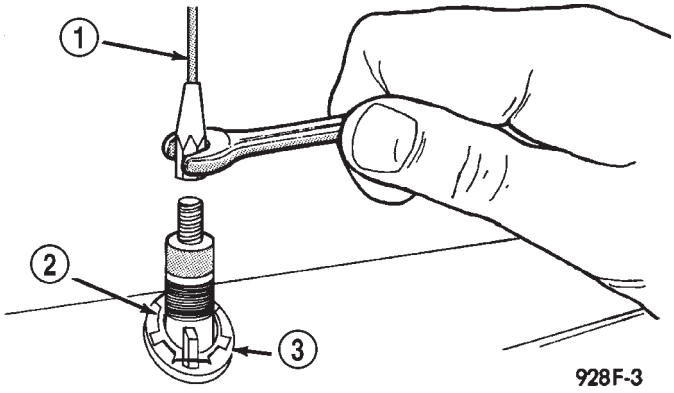

Fig. 4 Antenna Mast Remove/Install - Typical

1 - ANTENNA MAST
2 - CAP NUT
3 - ADAPTER

(2) Using the cord or twine, pull the antenna cable through the radio receiver opening from under the instrument panel.

(3) Install the radio receiver onto the instrument panel.

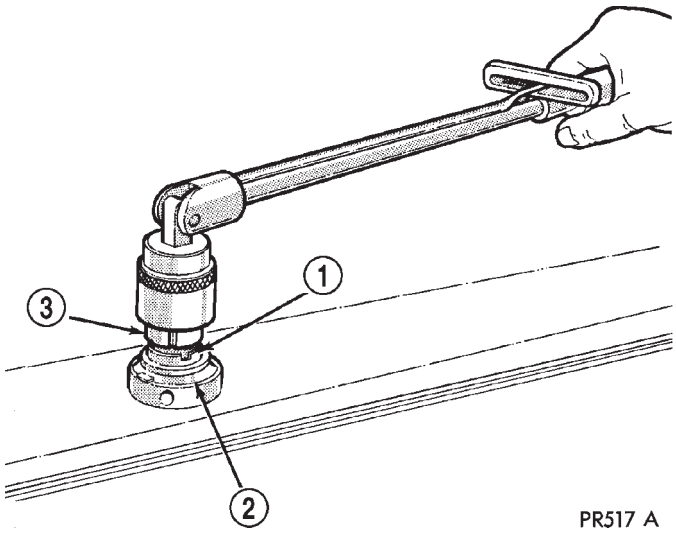

Fig. 5 Antenna Cap Nut Remove/Install - Typical

1 - CAP NUT
2 - ANTENNA ADAPTER
3 - TOOL

(4) Reach through the glove box opening to engage the antenna cable with the retainer clips on the back of the instrument panel.

(5) Install the glove box onto the instrument panel.

(6) Untie the cord or twine from the instrument panel antenna cable connector.

(7) Reach under the passenger side of the instrument panel near the right cowl side inner panel to reconnect the two halves of the radio antenna coaxial cable connector. Wrap the connection with a piece of foam tape.

(8) Engage the coaxial cable connector with the retainer clip located on the bottom of the heater-A/C housing.

(9) Reconnect the battery negative cable.

RADIO CHOKE RELAY

DESCRIPTION

Models equipped with the Infinity premium speaker package have a filter, choke, and speaker relay unit. The filter, choke, and speaker relay unit is mounted to the lower instrument panel center brace, inboard of the Central Timer Module (CTM) and directly above the 16-way data link connector. The filter, choke, and speaker relay unit can be accessed for service without instrument panel disassembly or removal.

The filter, choke, and speaker relay unit should be checked if there is no sound output noted from the speakers. The filter, choke, and speaker relay unit cannot be repaired or adjusted and, if faulty or damaged, the unit must be replaced.

RADIO CHOKE RELAY (Continued)

OPERATION

The filter, choke, and speaker relay unit is used to control the supply of fused battery current to the front door speaker-mounted dual amplifiers. The speaker relay is energized by a fused 12 volt output from the radio receiver whenever the radio is turned on. For complete circuit diagrams, refer to the appropriate wiring information. The wiring information includes wiring diagrams, proper wire and connector repair procedures, details of wire harness routing and retention, connector pin-out information and location views for the various wire harness connectors, splices and grounds.

DIAGNOSIS AND TESTING - RADIO CHOKE RELAY

The filter, choke and speaker relay is used to switch power to the individual speaker amplifiers used with the Infinity premium speaker package. The choke and relay are serviced only as a unit. If all of the speakers are inoperative the filter, choke and speaker relay unit should be considered suspect. However, before replacement make the following checks of the filter, choke and speaker relay circuits. For complete circuit diagrams, refer to the appropriate wiring information. The wiring information includes wiring diagrams, proper wire and connector repair procedures, details of wire harness routing and retention, connector pin-out information and location views for the various wire harness connectors, splices and grounds.

(1) Check the fused B(+) fuse in the junction block. If OK, go to Step 2. If not OK, replace the faulty fuse.

(2) Check for battery voltage at the fused B(+) fuse in the junction block. If OK, go to Step 3. If not OK, repair the open fused B(+) circuit to the battery as required.

(3) Disconnect the instrument panel wire harness connector from the filter, choke and speaker relay unit. Check for battery voltage at the fused B(+) circuit cavity of the instrument panel wire harness connector for the filter, choke and speaker relay unit. If OK, go to Step 4. If not OK, repair the open fused B(+) circuit to the junction block fuse as required.

(4) Probe the ground circuit cavity of the instrument panel wire harness connector for the filter, choke and speaker relay unit. Check for continuity to a good ground. There should be continuity. If OK, go to Step 5. If not OK, repair the open ground circuit to ground as required.

(5) Turn the ignition switch to the On position and turn the radio on. Check for battery voltage at the radio 12-volt output circuit cavity of the instrument panel wire harness connector for the filter, choke and speaker relay unit. If OK, go to Step 6. If not OK, repair the open radio 12-volt output circuit to the radio as required.

(6) Turn the radio and ignition switches to the Off position. Reconnect the instrument panel wire harness connector to the filter, choke and speaker relay unit. Check for battery voltage at the amplified speaker (+) circuit cavity of the instrument panel wire harness connector for the filter, choke and speaker relay unit. There should be zero volts. Turn the ignition and radio switches to the On position. There should now be battery voltage. If OK, repair the open amplified speaker (+) circuits to the speaker-mounted amplifiers as required. If not OK, replace the faulty filter, choke and speaker relay unit.

REMOVAL

(1) Disconnect and isolate the battery negative cable.

(2) Reach under the driver side of the instrument panel near the 16-way data link connector and inboard of the ash receiver to access the filter, choke, and speaker relay (Fig. 6) .

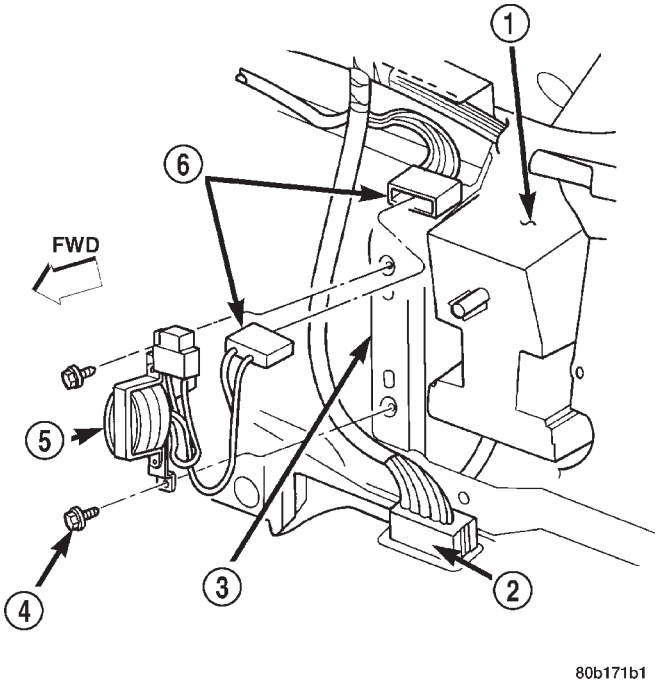

Fig. 6 Filter, Choke, and Speaker Relay Remove/ Install

1 - ASH RECEIVER HOUSING
2 - DATA LINK CONNECTOR
3 - CENTER BRACE
4 - SCREW
5 - CHOKE AND RELAY
6 - WIRE HARNESS CONNECTORS

(3) Disconnect the instrument panel wire harness connector from the filter, choke and speaker relay wire harness connector.

RADIO CHOKE RELAY (Continued)

(4) Remove the two screws that secure the filter, choke, and speaker relay mounting bracket to the instrument panel center brace.

(5) Remove the filter, choke, and speaker relay unit from under the instrument panel.

INSTALLATION

(1) Position the filter, choke, and speaker relay unit under the instrument panel.

(2) Install and tighten the two screws that secure the filter, choke, and speaker relay mounting bracket to the instrument panel center brace. Tighten the screws to 2.7 N·m (24 in. lbs.).

(3) Reconnect the instrument panel wire harness connector to the filter, choke and speaker relay wire harness connector.

(4) Reconnect the battery negative cable.

INSTRUMENT PANEL ANTENNA CABLE

REMOVAL

(1) Disconnect and isolate the battery negative cable.

(2) Reach under the passenger side of the instrument panel near the right cowl side inner panel to disengage the coaxial cable connector from the retainer clip located on the bottom of the heater-A/C housing.

(3) Remove the foam tape to access the coaxial cable connector. Disconnect the connector by pulling it apart while twisting the metal connector halves. Do not pull on the cable.

(4) Securely tie a suitable length of cord or twine to the instrument panel half of the antenna coaxial cable connector. This cord will be used to pull or “fish” the cable back into position during installation.

(5) Roll down the glove box from the instrument panel. Refer to Body, Instrument Panel for the procedures.

(6) Reach through the glove box opening to disengage the antenna cable from the retainer clips on the back of the instrument panel (Fig. 7).

(7) Remove the radio receiver from the instrument panel. Refer to Audio, Radio for the procedures.

(8) Pull the antenna cable out through the radio receiver opening in the instrument panel.

(9) Untie the cord or twine from the instrument panel antenna cable connector, leaving the cord or twine in place of the cable in the instrument panel.

(10) Remove the antenna cable from the instrument panel.

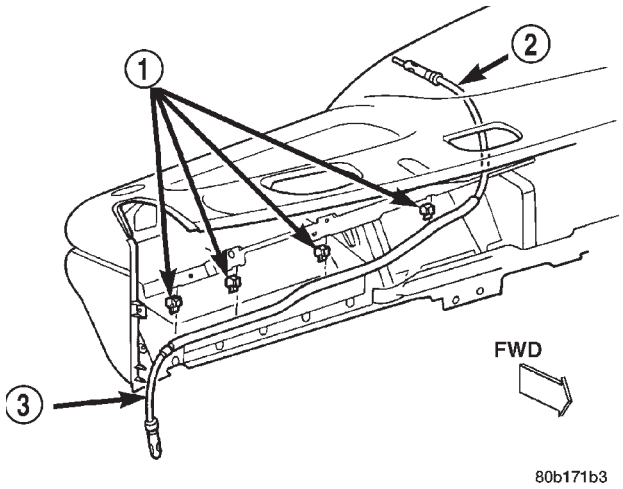

Fig. 7 ANTENNA CABLE ROUTING

1 - RETAINER CLIPS
2 - TO RADIO
3 - TO ANTENNA

INSTALLATION

(1) Tie the end of the cord or twine that was used during instrument panel antenna cable removal securely to the connector on the end of the antenna cable being installed into the instrument panel. This cord will be used to pull or “fish” the cable back into position.

(2) Using the cord or twine, pull the antenna cable through the radio receiver opening from under the instrument panel.

(3) Install the radio receiver onto the instrument panel. Refer to Audio, Radio for the procedures.

(4) Reach through the glove box opening to engage the antenna cable with the retainer clips on the back of the instrument panel.

(5) Install the glove box onto the instrument panel. Refer to Body, Instrument Panel for the procedures.

(6) Untie the cord or twine from the instrument panel antenna cable connector.

(7) Reach under the passenger side of the instrument panel near the right cowl side inner panel to reconnect the two halves of the radio antenna coaxial cable connector. Wrap the connection with a piece of foam tape.

(8) Engage the coaxial cable connector with the retainer clip located on the bottom of the heater-A/C housing.

(9) Reconnect the battery negative cable.

RADIO

DESCRIPTION

Available factory-installed radio receivers for this model include an AM/FM/cassette (RAS sales code), an AM/FM/CD/3-band graphic equalizer (RBR sales code), or an AM/FM/CD/cassette/3-band graphic equalizer (RAZ sales code). The factory-installed RAZ sales code radio receivers can also communicate on the Chrysler Collision Detection (CCD) data bus network through a separate two-way wire harness connector. All factory-installed receivers are stereo Electronically Tuned Radios (ETR) and include an electronic digital clock function.

These radio receivers can only be serviced by an authorized radio repair station. See the latest Warranty Policies and Procedures manual for a current listing of authorized radio repair stations.

All vehicles are equipped with an Ignition-Off Draw (IOD) fuse that is removed when the vehicle is shipped from the factory. This fuse feeds various accessories that require battery current when the ignition switch is in the Off position, including the clock. The IOD fuse is removed to prevent battery discharge during vehicle storage.

When removing or installing the IOD fuse, it is important that the ignition switch be in the Off position. Failure to place the ignition switch in the Off position can cause the radio display to become scrambled when the IOD fuse is removed and replaced. Removing and replacing the IOD fuse again, with the ignition switch in the Off position, will correct the scrambled display condition.

The IOD fuse should be checked if the radio or clock displays are inoperative. The IOD fuse is located in the junction block. Refer to the fuse layout label on the back of the instrument panel fuse access panel for IOD fuse identification and location.

OPERATION

The radio receiver operates on fused battery current that is available only when the ignition switch is in the On or Accessory positions. The electronic digital clock function of the radio operates on fused battery current supplied through the IOD fuse, regardless of the ignition switch position.

For more information on the features, setting procedures, and control functions for each of the available factory-installed radio receivers, see the owner's manual in the vehicle glove box. For complete circuit diagrams, refer to the appropriate wiring information. The wiring information includes wiring diagrams, proper wire and connector repair procedures, details of wire harness routing and retention, connector pin-out information and location views for the various wire harness connectors, splices and grounds.

DIAGNOSIS AND TESTING - RADIO

If the vehicle is equipped with the optional remote radio switches located on the steering wheel and the problem being diagnosed is related to one of the symptoms listed below, be certain to check the remote radio switches and circuits. Refer to Audio, Remote Radio Switch prior to attempting radio diagnosis or repair.

- Stations changing with no remote radio switch input
- Radio memory presets not working properly
- Volume changes with no remote radio switch input
- Remote radio switch buttons taking on other functions
- CD player skipping tracks
- Remote radio switch inoperative.

For complete circuit diagrams, refer to the appropriate wiring information. The wiring information includes wiring diagrams, proper wire and connector repair procedures, details of wire harness routing and retention, connector pin-out information and location views for the various wire harness connectors, splices and grounds.

WARNING: ON VEHICLES EQUIPPED WITH AIRBAGS, REFER TO ELECTRICAL, RESTRAINTS BEFORE ATTEMPTING ANY STEERING WHEEL, STEERING COLUMN, OR INSTRUMENT PANEL COMPONENT DIAGNOSIS OR SERVICE. FAILURE TO TAKE THE PROPER PRECAUTIONS COULD RESULT IN ACCIDENTAL AIRBAG DEPLOYMENT AND POSSIBLE PERSONAL INJURY.

CAUTION: The speaker output of the radio receiver is a "floating ground" system. Do not allow any speaker lead to short to ground, as damage to the radio receiver may result.

(1) Check the fused B(+) fuse in the junction block. If OK, go to Step 2. If not OK, repair the shorted circuit or component as required and replace the faulty fuse.

(2) Check for battery voltage at the fused B(+) fuse in the junction block. If OK, go to Step 3. If not OK, repair the open fused B(+) circuit to the Power Distribution Center (PDC) as required.

(3) Check the fused ignition switch output (acc/run) fuse in the junction block. If OK, go to Step 4. If not OK, repair the shorted circuit or component as required and replace the faulty fuse(s).

(4) Turn the ignition switch to the On position. Check for battery voltage at the fused ignition switch output (acc/run) fuse in the junction block. If OK, go to Step 5. If not OK, repair the open fused ignition

RADIO (Continued)

switch output (acc/run) circuit to the ignition switch as required.

(5) Turn the ignition switch to the Off position. Disconnect and isolate the battery negative cable. Remove the radio receiver from the instrument panel, but do not disconnect the wire harness connectors. Check for continuity between the radio receiver chassis and a good ground. There should be continuity. If OK, go to Step 6. If not OK, repair the open ground circuit to ground as required.

(6) Connect the battery negative cable. Turn the ignition switch to the On position. Check for battery voltage at the fused ignition switch output (acc/run) circuit cavity of the left (gray) radio wire harness connector. If OK, go to Step 7. If not OK, repair the open fused ignition switch output (acc/run) circuit to the junction block fuse as required.

(7) Turn the ignition switch to the Off position. Check for battery voltage at the fused B(+) circuit cavity of the left (gray) radio wire harness connector. If OK, replace the faulty radio receiver. If not OK, repair the open fused B(+) circuit to the junction block fuse as required.

REMOVAL

(1) Disconnect and isolate the battery negative cable.

(2) Remove the cluster bezel from the instrument panel.

(3) Remove the two screws that secure the radio receiver to the instrument panel (Fig. 8).

(4) Pull the radio receiver out from the instrument panel far enough to access the instrument panel wire harness connectors and the antenna coaxial cable connector (Fig. 9).

(5) Disconnect the instrument panel wire harness connectors and the antenna coaxial cable connector from the receptacles on the rear of the radio receiver.

(6) If so equipped, remove the screw that secures the ground wire to the back of the radio receiver chassis.

(7) Remove the radio receiver from the instrument panel.

INSTALLATION

(1) Position the radio receiver to the instrument panel.

(2) If so equipped, install and tighten the screw that secures the ground wire to the back of the radio receiver chassis. Tighten the screw to 7 N·m (65 in. lbs.).

(3) Reconnect the instrument panel wire harness connectors and the antenna coaxial cable connector to the receptacles on the rear of the radio receiver.

(4) Position the radio receiver into the mounting hole in the instrument panel.

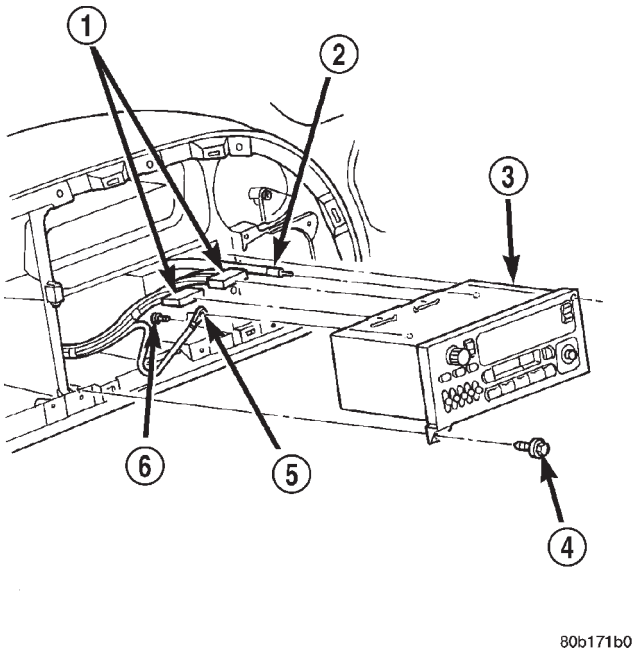

Fig. 8 Radio Receiver Remove/Install

1 - WIRE HARNESS CONNECTORS
2 - ANTENNA COAXIAL CABLE
3 - RADIO
4 - SCREW
5 - GROUND WIRE
6 - SCREW

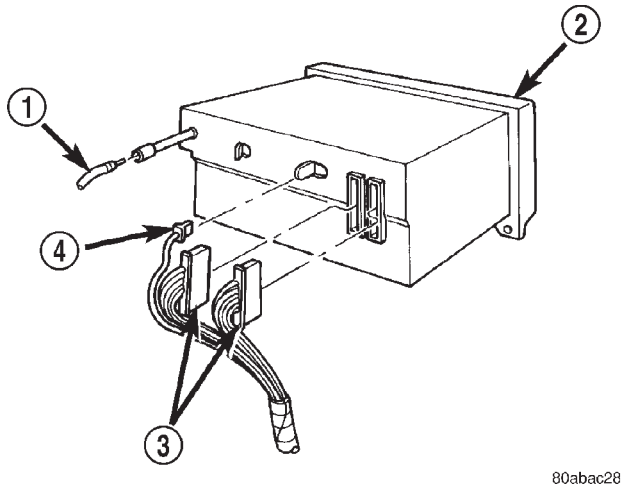

Fig. 9 Radio Receiver Connections - Typical

1 - ANTENNA CABLE
2 - RADIO
3 - INSTRUMENT PANEL WIRING
4 - GROUND WIRE

(5) Install and tighten the two screws that secure the radio receiver to the instrument panel. Tighten the screws to 5 N·m (45 in. lbs.).

(6) Install the cluster bezel onto the instrument panel.

(7) Reconnect the battery negative cable.

RADIO NOISE SUPPRESSION COMPONENTS

DESCRIPTION

Radio Frequency Interference (RFI) and Electro-Magnetic Interference (EMI) noise suppression is accomplished primarily through circuitry internal to the radio receivers. These internal suppression devices are only serviced as part of the radio receiver.

External suppression devices that are used on this vehicle to control RFI or EMI noise include the following:

- Radio antenna base ground
- Radio receiver chassis ground wire or strap
- Engine-to-body ground straps
- Cab-to-bed ground strap
- Heater core ground strap
- Resistor-type spark plugs
- Radio suppression-type secondary ignition wiring.

For more information on the spark plugs and secondary ignition components, refer to Electrical, Ignition Control.

DIAGNOSIS AND TESTING - RADIO NOISE SUPPRESSION COMPONENTS

WARNING: ON VEHICLES EQUIPPED WITH AIRBAGS, REFER TO ELECTRICAL, RESTRAINTS BEFORE ATTEMPTING ANY STEERING WHEEL, STEERING COLUMN, OR INSTRUMENT PANEL COMPONENT DIAGNOSIS OR SERVICE. FAILURE TO TAKE THE PROPER PRECAUTIONS COULD RESULT IN ACCIDENTAL AIRBAG DEPLOYMENT AND POSSIBLE PERSONAL INJURY.

For complete circuit diagrams, refer to the appropriate wiring information. The wiring information includes wiring diagrams, proper wire and connector repair procedures, details of wire harness routing and retention, connector pin-out information and location views for the various wire harness connectors, splices and grounds. Inspect the ground paths and connections at the following locations:

- Blower motor
- Cab-to-bed ground strap
- Electric fuel pump
- Engine-to-body ground straps
- Generator
- Ignition module
- Heater core ground strap
- Radio antenna base ground
- Radio receiver chassis ground wire or strap
- Wiper motor.

If the source of RFI or EMI noise is identified as a component on the vehicle (i.e., generator, blower motor, etc.), the ground path for that component should be checked. If excessive resistance is found in any ground circuit, clean, tighten, or repair the ground circuits or connections to ground as required before considering any component replacement.

For service and inspection of secondary ignition components, refer to Electrical, Ignition Control. Inspect the following secondary ignition system components:

- Distributor cap and rotor
- Ignition coil
- Spark plugs
- Spark plug wire routing and condition.

Reroute the spark plug wires or replace the faulty components as required.

If the source of the RFI or EMI noise is identified as two-way mobile radio or telephone equipment, check the equipment installation for the following:

- Power connections should be made directly to the battery, and fused as closely to the battery as possible.
- The antenna should be mounted on the roof or toward the rear of the vehicle. Remember that magnetic antenna mounts on the roof panel can adversely affect the operation of an overhead console compass, if the vehicle is so equipped.
- The antenna cable should be fully shielded coaxial cable, should be as short as is practical, and should be routed away from the factory-installed vehicle wire harnesses whenever possible.
- The antenna and cable must be carefully matched to ensure a low Standing Wave Ratio (SWR).

Fleet vehicles are available with an extra-cost RFI-suppressed Powertrain Control Module (PCM). This unit reduces interference generated by the PCM on some radio frequencies used in two-way radio communications. However, this unit will not resolve complaints of RFI in the commercial AM or FM radio frequency ranges.

ENGINE-TO-BODY GROUND STRAP

REMOVAL

(1) Remove the screw that secures the engine-to-body ground strap eyelet to the dash panel (Fig. 10).

(2) Remove the screw that secures the engine-to-body ground strap eyelet to the back of the engine cylinder head (Fig. 11) or (Fig. 12).

ENGINE-TO-BODY GROUND STRAP (Continued)

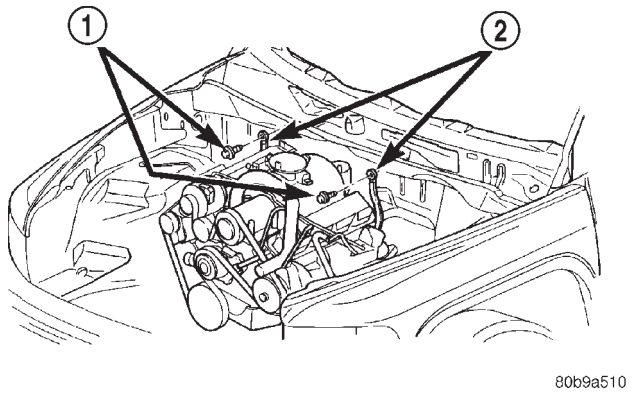

Fig. 10 Engine-To-Body Ground

1 - SCREWS (2)
2 - GROUND STRAPS

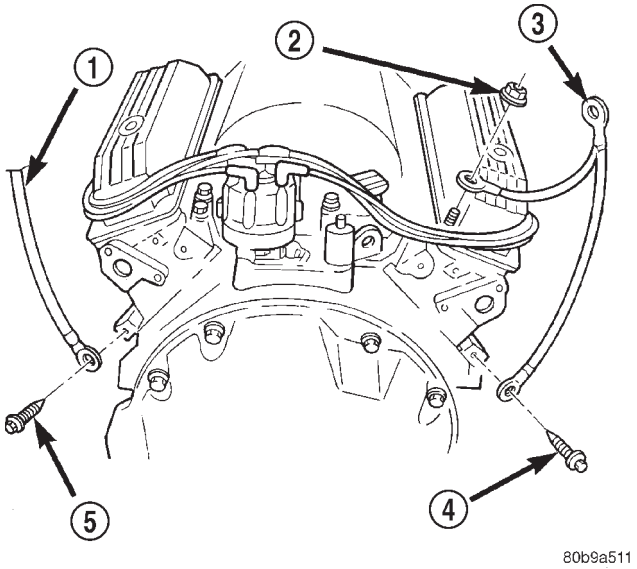

Fig. 11 Engine-To-Body Ground Strap Remove/ Install - V6 & V8 Engine

1 - GROUND STRAP
2 - NUT
3 - GROUND STRAP
4 - SCREW
5 - SCREW

(3) For the right side only on vehicles equipped with a 3.9L, 5.2L or 5.9L engine, remove the nut that secures the engine-to-body ground strap eyelet to the right rear valve cover stud.

(4) Remove the engine-to-body ground strap from the engine compartment.

INSTALLATION

(1) Position the engine-to-body ground strap to the back of the engine cylinder head.

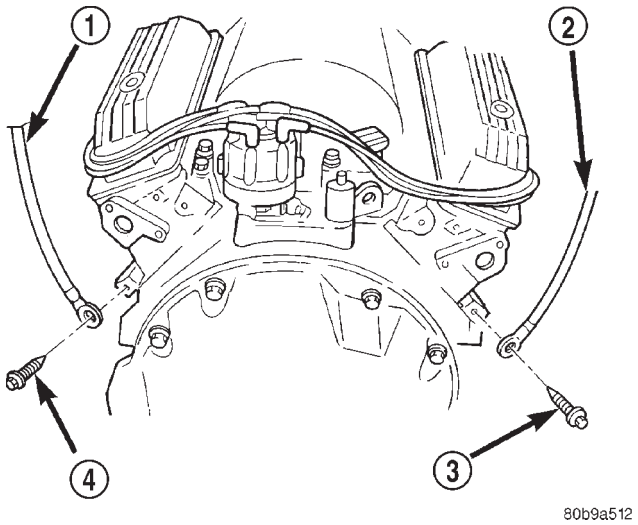

Fig. 12 Engine-To-Body Ground Strap Remove/ Install - V10 Engine

1 - GROUND STRAP
2 - GROUND STRAP
3 - SCREW
4 - SCREW

(2) Install and tighten the screw that secures the engine-to-body ground strap eyelet to the back of the engine cylinder head. Tighten the screw to 10.6 N·m (95 in. lbs.).

(3) For the right side only on vehicles equipped with a 3.9L, 5.2L or 5.9L engine, position the engine-to-body ground strap eyelet over the right rear valve cover stud.

(4) For the right side only on vehicles equipped with a 3.9L, 5.2L or 5.9L engine, install and tighten the nut that secures the engine-to-body ground strap eyelet to the right rear valve cover stud. Tighten the nut to 3.9 N·m (35 in. lbs.).

(5) Position the engine-to-body ground strap to the dash panel.

(6) Install and tighten the screw that secures the engine-to-body ground strap eyelet to the dash panel. Tighten the screw to 3.9 N·m (35 in. lbs.).

CAB-TO-BED GROUND STRAP

REMOVAL

(1) Raise and support the vehicle.

(2) Remove the screw that secures the cab-to-bed ground strap eyelet to the front crossmember of the cargo bed (Fig. 13).

(3) Remove the screw that secures the cab-to-bed ground strap eyelet to the cab floor panel.

(4) Remove the cab-to-bed ground strap from the vehicle.

CAB-TO-BED GROUND STRAP (Continued)

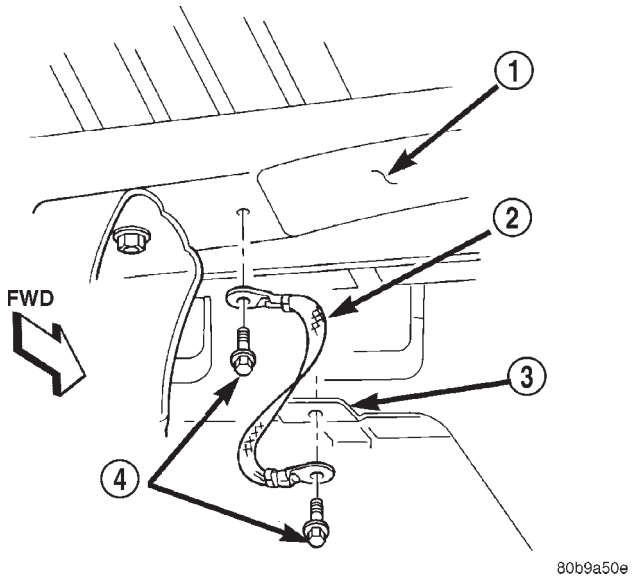

Fig. 13 Cab-To-Bed Ground Strap Remove/Install

1 - BED CROSSMEMBER
2 - GROUND STRAP
3 - CAB FLOOR PANEL
4 - SCREWS

INSTALLATION

(1) Position the cab-to-bed ground strap to the cab floor panel.

(2) Install and tighten the screw that secures the cab-to-bed ground strap eyelet to the cab floor panel. Tighten the screw to 3.9 N·m (35 in. lbs.).

(3) Position the cab-to-bed ground strap to the front crossmember of the cargo bed.

(4) Install and tighten the screw that secures the cab-to-bed ground strap eyelet to the front crossmember of the cargo bed. Tighten the screw to 3.9 N·m (35 in. lbs.).

(5) Lower the vehicle.

HEATER CORE GROUND STRAP

REMOVAL

(1) Disconnect and isolate the battery negative cable.

(2) Remove the glove box from the instrument panel. Refer to Body, Instrument Panel for the procedures.

(3) Reach through the instrument panel glove box opening to access and remove the nut that secures the heater core ground strap eyelet to the stud on the dash panel (Fig. 14).

(4) Remove the heater core ground strap eyelet from the stud on the dash panel.

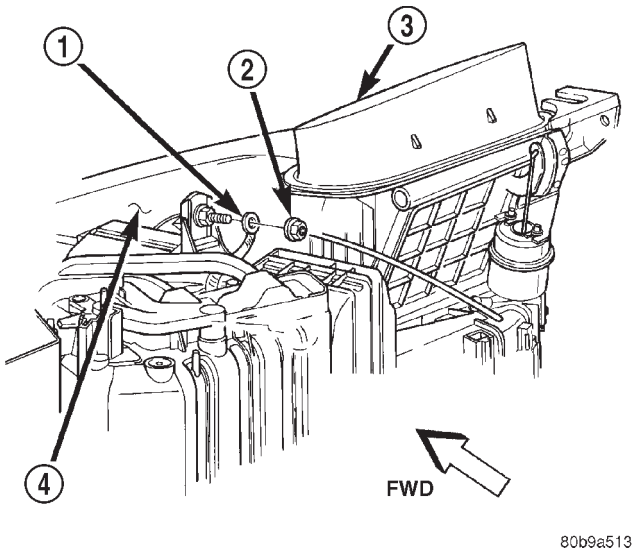

Fig. 14 Heater Core Ground Strap Remove/Install

1 - GROUND STRAP
2 - NUT
3 - HEATER-A/C HOUSING
4 - DASH PANEL

(5) Remove the screw that secures the heater core ground strap eyelet and the heater core tube retaining strap to the top of the heater-A/C housing.

(6) Remove the heater core ground strap from the top of the heater-A/C housing.

INSTALLATION

(1) Position the heater core ground strap and the heater core tube retaining strap to the top of the heater-A/C housing.

(2) Install and tighten the screw that secures the heater core ground strap eyelet and the heater core tube retaining strap to the top of the heater-A/C housing. Tighten the screw to 2.2 N·m (20 in. lbs.).

(3) Position the heater core ground strap eyelet over the stud on the dash panel.

(4) Install and tighten the nut that secures the heater core ground strap eyelet to the stud on the dash panel. Tighten the nut to 3.9 N·m (35 in. lbs.).

(5) Install the glove box onto the instrument panel. Refer to Body, Instrument Panel for the procedures.

(6) Reconnect the battery negative cable.

REMOTE SWITCHES

DESCRIPTION

A remote radio switch option is available on models equipped with the AM/FM/CD/cassette/3-band graphic equalizer (RAZ sales code) radio receiver and the high-line Central Timer Module (CTM). Refer to

REMOTE SWITCHES (Continued)

Electrical, Body Control/Central Timer Module for more information on this component.

Two rocker-type switches (Fig. 15) are mounted in the sides of the rear (instrument panel side) steering wheel trim cover. The switch on the left side is the seek switch and has seek up, seek down, and preset station advance functions. The switch on the right side is the volume control switch and has volume up, and volume down functions. The two switches are retained in mounting holes located on each side of the rear steering wheel trim cover by four latches that are integral to the switches.

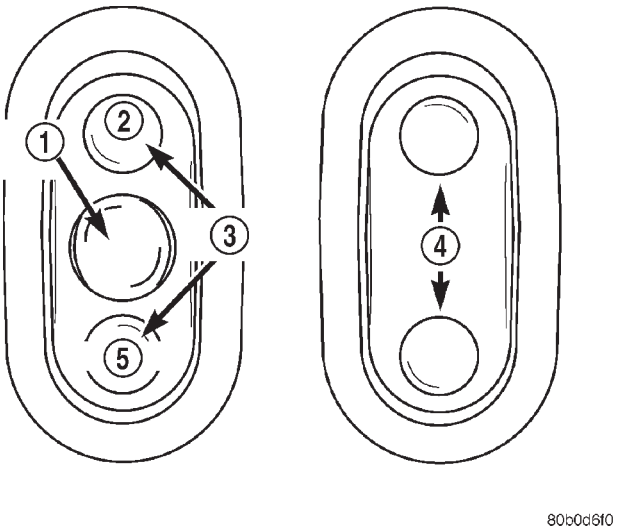

Fig. 15 Remote Radio Switches

1 - PRESET SEEK
2 - UP
3 - SEEK
4 - VOLUME
5 - DOWN

The remote radio switches share a common steering wheel wire harness with the vehicle speed control switches. The steering wheel wire harness is connected to the instrument panel wire harness through the clockspring. Refer to Electrical, Clockspring for more information on this component.

OPERATION

The remote radio switches are resistor multiplexed units that are hard wired to the high-line or premium CTM through the clockspring. The CTM monitors the status of the remote radio switches and sends the proper switch status messages on the Chrysler Collision Detection (CCD) data bus network to the radio receiver. The electronic circuitry within the radio is programmed to respond to these remote radio switch status messages by adjusting the radio settings as requested.

For diagnosis of the CTM or the CCD data bus, the use of a DRBIII® scan tool and the proper Diagnostic Procedures manual are recommended. For more information on the features and control functions for each of the remote radio switches, see the owner's manual in the vehicle glove box. For complete circuit diagrams, refer to the appropriate wiring information. The wiring information includes wiring diagrams, proper wire and connector repair procedures, details of wire harness routing and retention, connector pin-out information and location views for the various wire harness connectors, splices and grounds.

DIAGNOSIS AND TESTING - REMOTE SWITCHES

For complete circuit diagrams, refer to the appropriate wiring information. The wiring information includes wiring diagrams, proper wire and connector repair procedures, details of wire harness routing and retention, connector pin-out information and location views for the various wire harness connectors, splices and grounds.

WARNING: ON VEHICLES EQUIPPED WITH AIRBAGS, REFER TO ELECTRICAL, RESTRAINTS BEFORE ATTEMPTING ANY STEERING WHEEL, STEERING COLUMN, OR INSTRUMENT PANEL COMPONENT DIAGNOSIS OR SERVICE. FAILURE TO TAKE THE PROPER PRECAUTIONS COULD RESULT IN ACCIDENTAL AIRBAG DEPLOYMENT AND POSSIBLE PERSONAL INJURY.

(1) Remove the remote radio switch(es) (Fig. 16) from the steering wheel.

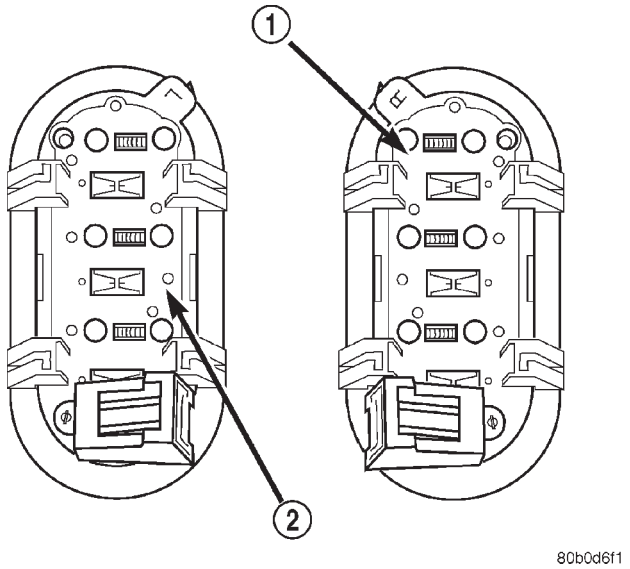

Fig. 16 Remote Radio Switches

1 - WHITE REAR SWITCH
2 - BLACK REAR SWITCH

REMOTE SWITCHES (Continued)

(2) Use an ohmmeter to check the switch resistances as shown in the Remote Radio Switch Test chart. If the remote radio switch resistances check OK, go to Step 3. If not OK, replace the faulty switch.

REMOTE RADIO SWITCH TEST		
SWITCH	SWITCH POSITION	RESISTANCE
Right (White)	Volume Up	7320 Ohms
Right (White)	Volume Down	1210 Ohms
Left (Black)	Seek Up	4530 Ohms
Left (Black)	Seek Down	2050 Ohms
Left (Black)	Pre-Set Station Advance	10 Ohms

(3) Check for continuity between the ground circuit cavity of the remote radio switch wire harness connector and a good ground. There should be continuity. If OK, go to Step 4. If not OK, repair the open ground circuit to ground as required.

(4) Disconnect the 18-way wire harness connector from the Central Timer Module (CTM). Check for continuity between the radio control mux circuit cavity of the remote radio switch wire harness connector and a good ground. There should be no continuity. If OK, go to Step 5. If not OK, repair the shorted radio control mux circuit as required.

(5) Check for continuity between the radio control mux circuit cavities of the remote radio switch wire harness connector and the 18-way CTM wire harness connector. There should be continuity. If OK, refer to the proper Diagnostic Procedures manual to test the CTM and the Chrysler Collision Detection (CCD) data bus. If not OK, repair the open radio control mux circuit as required.

REMOVAL

(1) Disconnect and isolate the battery negative cable.

(2) Remove the driver side airbag module from the steering wheel. Refer to Electrical, Restraints for the procedures.

(3) Remove the speed control switch located on the same side of the steering wheel as the remote radio switch that is being serviced. Refer to Electrical, Speed Control for the procedures.

(4) Disconnect the steering wheel wire harness connector from the connector receptacle of the remote radio switch (Fig. 17).

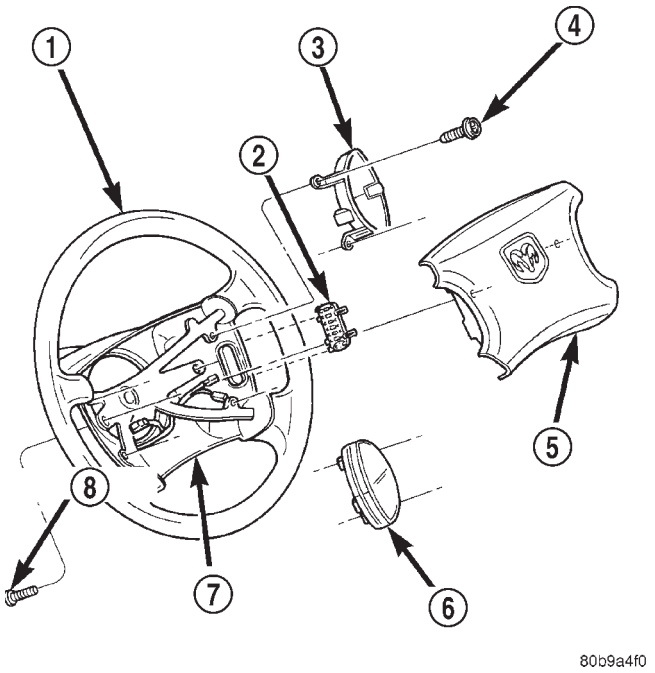

Fig. 17 Remote Radio Switches Remove/Install

1 - STEERING WHEEL
2 - REMOTE RADIO SWITCH
3 - SPEED CONTROL SWITCH
4 - SCREW (2)
5 - DRIVER SIDE AIRBAG MODULE
6 - SPEED CONTROL SWITCH
7 - REAR TRIM COVER
8 - SCREW (2)

(5) Disengage the four remote radio switch latches that secure the switch to the inside of the mounting hole in the steering wheel rear trim cover.

(6) From the outside of the steering wheel rear trim cover, remove the remote radio switch from the trim cover mounting hole.

INSTALLATION

(1) Position the remote radio switch to the mounting hole on the outside of the steering wheel rear trim cover. Be certain that the connector receptacle is oriented toward the bottom of the switch and pointed toward the center of the steering wheel.

(2) Press firmly and evenly on the remote radio switch until each of the switch latches is fully engaged in the mounting hole of the steering wheel rear trim cover.

(3) Reconnect the steering wheel wire harness connector to the connector receptacle of the remote radio switch.

(4) Install the speed control switch onto the steering wheel. Refer to Electrical, Speed Control for the procedures.

REMOTE SWITCHES (Continued)

(5) Install the driver side airbag module onto the steering wheel. Refer to Electrical, Restraints for the procedures.

(6) Reconnect the battery negative cable.

SPEAKER

DESCRIPTION

STANDARD

The standard equipment speaker system includes speakers in four locations. One full-range 15.2 by 22.9 centimeter (6.0 by 9.0 inch) speaker is located in each front door. There is also one full-range 13.3 centimeter (5.25 inch) diameter speaker located in each rear cab side panel for the standard cab and the club cab models, or in each rear door of the quad cab models.

PREMIUM

The optional premium speaker system features Infinity model speakers in six locations. Each of the standard front door speakers are replaced with Infinity model speakers that include integral dual 30 watt amplifiers. Each of the standard rear speakers is also replaced by an Infinity model speaker. The premium speaker system also includes an additional Infinity tweeter mounted in the A-pillar garnish molding. The total available power of the premium speaker system is about 120 watts.

OPERATION

STANDARD

Each of the four full-range speakers used in the standard speaker system is driven by the amplifier that is integral to the factory-installed radio receiver. For complete circuit diagrams, refer to the appropriate wiring information. The wiring information includes wiring diagrams, proper wire and connector repair procedures, details of wire harness routing and retention, connector pin-out information and location views for the various wire harness connectors, splices and grounds.

PREMIUM

The Infinity speakers used in the premium speaker system are driven by dual amplifiers that are integral to each of the front door speakers. One of these dual amplifiers drives the front door speaker and the A-pillar mounted tweeter for that side of the vehicle, while the other amplifier drives the rear speaker for that side of the vehicle. For complete circuit diagrams, to refer to the appropriate wiring information. The wiring information includes wiring diagrams, proper wire and connector repair procedures, details of wire harness routing and retention, connector pin-out information and location views for the various wire harness connectors, splices and grounds.

DIAGNOSIS AND TESTING - SPEAKER

For complete circuit diagrams, refer to the appropriate wiring information. The wiring information includes wiring diagrams, proper wire and connector repair procedures, details of wire harness routing and retention, connector pin-out information and location views for the various wire harness connectors, splices and grounds.

WARNING: ON VEHICLES EQUIPPED WITH AIRBAGS, REFER TO ELECTRICAL, RESTRAINTS BEFORE ATTEMPTING ANY STEERING WHEEL, STEERING COLUMN, OR INSTRUMENT PANEL COMPONENT DIAGNOSIS OR SERVICE. FAILURE TO TAKE THE PROPER PRECAUTIONS COULD RESULT IN ACCIDENTAL AIRBAG DEPLOYMENT AND POSSIBLE PERSONAL INJURY.

CAUTION: The speaker output of the radio receiver is a “floating ground” system. Do not allow any speaker lead to short to ground, as damage to the radio receiver may result.

(1) Turn the ignition switch to the On position. Turn the radio receiver on. Adjust the balance and fader controls to check the performance of each individual speaker. Note the speaker locations that are not performing correctly. If only an Infinity A-pillar or an Infinity rear speaker is inoperative, go to Step 8. If any other speaker is inoperative, go to Step 2.

NOTE: If the vehicle is equipped with the Infinity premium speaker package and all of the speakers are inoperative, refer to Filter, Choke, and Speaker Relay in the Diagnosis and Testing section of this group.

(2) Turn the radio receiver off. Turn the ignition switch to the Off position. Disconnect and isolate the battery negative cable. Remove the radio receiver from the instrument panel. Check both the feed (+) circuit and return (–) circuit cavities for the inoperative speaker location(s) in the radio receiver wire harness connectors for continuity to ground. In each case, there should be no continuity. If OK, go to Step 3. If not OK, repair the shorted speaker feed (+) and/or return (–) circuit(s) to the speaker as required.

(3) If the inoperative speaker is an Infinity-amplified speaker, go to Step 5. If the vehicle is equipped with the standard speaker system, check the resistance between the speaker feed (+) circuit and return

SPEAKER (Continued)

(–) circuit cavities of the radio receiver wire harness connectors for the inoperative speaker location(s). The meter should read between 2.5 and 4 ohms (speaker resistance). If OK, go to Step 4. If not OK, go to Step 5.

(4) Install a known good radio receiver. Connect the battery negative cable. Turn the ignition switch to the On position. Turn on the radio receiver and test the speaker operation. If OK, replace the faulty radio receiver. If not OK, turn the radio receiver off, turn the ignition switch to the Off position, disconnect and isolate the battery negative cable, remove the test radio receiver, and go to Step 5.

(5) Disconnect the wire harness connector at the inoperative standard speaker system speaker or at the Infinity-amplified front door-mounted speaker. Check for continuity between the speaker feed (+) circuit cavities of the radio receiver wire harness connector and the speaker wire harness connector for the inoperative speaker location. Repeat the check between the speaker return (–) circuit cavities of the radio receiver wire harness connector and the speaker wire harness connector for the inoperative speaker location. In each case, there should be continuity. If OK with an Infinity-amplified front door-mounted speaker, go to Step 6. If OK with the standard speaker system, replace the faulty speaker. If not OK, repair the open speaker feed (+) and/or return (–) circuit(s) as required.

(6) Check for continuity between the ground circuit cavity in the body half of the wire harness connector for the Infinity-amplified front door-mounted speaker on the same side of the vehicle as the inoperative speaker and a good ground. There should be continuity. If OK, go to Step 7. If not OK, repair the open ground circuit to ground as required.

(7) Install the radio receiver. Connect the battery negative cable. Turn the ignition switch to the On position. Turn the radio receiver on. Check for battery voltage at the radio choke output circuit cavity of the wire harness connector for the Infinity-amplified front door-mounted speaker on the same side of the vehicle as the inoperative speaker. If OK, go to Step 8. If not OK, repair the open radio choke output circuit to the filter, choke, and speaker relay as required.

(8) Turn the radio receiver off. Turn the ignition switch to the Off position. Disconnect and isolate the battery negative cable. Disconnect the wire harness connector for the Infinity-amplified front door-mounted speaker on the same side of the vehicle as the inoperative speaker. Check both the amplified feed (+) circuit and amplified return (–) circuit cavities for the inoperative speaker location in the body half of the front door speaker wire harness connector for continuity to ground. In each case, there should be no continuity. If OK, go to Step 9. If not OK, repair the shorted amplified feed (+) and/or amplified return (–) circuit(s) as required.

(9) Disconnect the wire harness connector at the inoperative speaker. Check for continuity between the amplified feed (+) circuit cavities in the body half of the wire harness connector for the Infinity-amplified front door-mounted speaker on the same side of the vehicle as the inoperative speaker and the inoperative speaker wire harness connector. Repeat the check between the amplified return (–) circuit cavities in the body half of the wire harness connector for the Infinity-amplified front door-mounted speaker on the same side of the vehicle as the inoperative speaker and the inoperative speaker wire harness connector. In each case, there should be continuity. If OK, go to Step 10. If not OK, repair the open amplified feed (+) and/or amplified return (–) circuit(s) as required.

(10) Check the resistance between the amplified feed (+) circuit and amplified return (–) circuit cavities for the inoperative speaker in the body half of the wire harness connector for the Infinity-amplified front door-mounted speaker on the same side of the vehicle as the inoperative speaker. The meter should read between 2.5 and 4 ohms (speaker resistance). If OK, replace the faulty front door-mounted Infinity speaker and amplifier unit. If not OK, replace the faulty A-pillar or rear-mounted Infinity speaker.

A-PILLAR TWEETER SPEAKER

REMOVAL

The A-pillar-mounted tweeters are used only with the optional Infinity premium speaker package.

(1) Disconnect and isolate the battery negative cable.

(2) If the vehicle is so equipped, remove the grab handle from the A-pillar. Refer to Body, Interior for the procedures.

(3) Disengage the trim from the A-pillar. Refer to Body, Interior for the procedures.

(4) Pull the trim away from the A-pillar far enough to access the tweeter wire harness connector (Fig. 18).

(5) Disconnect the body wire harness connector from the A-pillar tweeter wire harness connector.

(6) Remove the trim and tweeter from the A-pillar as a unit.

(7) Disengage the tweeter wire harness retainers from the heat stakes on the back of the A-pillar trim.

(8) Disengage the tweeter from the A-pillar trim by pushing out on the tweeter firmly and evenly from the inside of the trim until it unsnaps from the mounting hole.

A-PILLAR TWEETER SPEAKER (Continued)

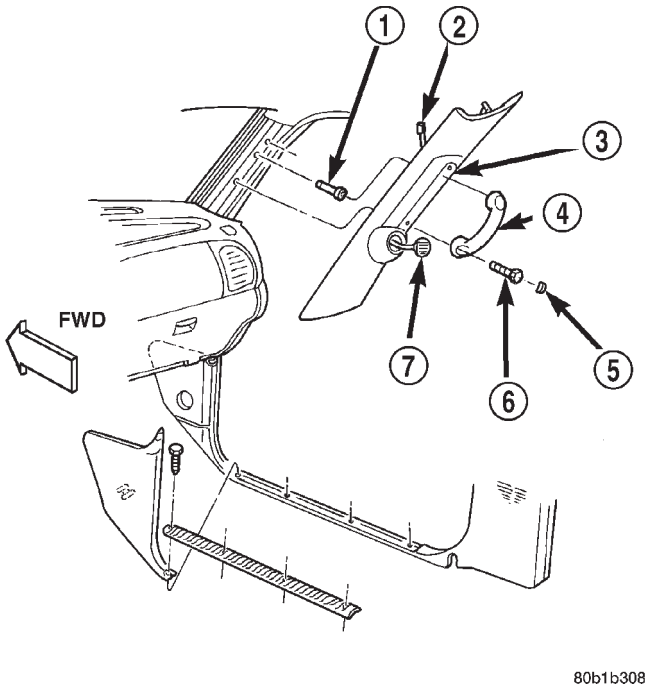

Fig. 18 A-Pillar Tweeter Remove/Install

1 - NUT
2 - WIRE HARNESS CONNECTOR
3 - MOULDING
4 - HANDLE
5 - PLUG
6 - SCREW
7 - TWEETER

(9) Remove the tweeter from the mounting hole in the A-pillar trim.

INSTALLATION

(1) Position the tweeter into the mounting hole in the A-pillar trim.

(2) Install the tweeter onto the A-pillar trim by pushing in on the tweeter firmly and evenly from the outside of the trim until it snaps into the mounting hole.

(3) Use a suitable tape or adhesive to secure the tweeter wire harness to the inside of the A-pillar trim.

(4) Position the trim and tweeter to the A-pillar as a unit.

(5) Reconnect the body wire harness connector to the A-pillar tweeter wire harness connector.

(6) Engage the trim onto the A-pillar. Refer to Body, Interior for the procedures.

(7) If the vehicle is so equipped, install the grab handle onto the A-pillar. Refer to Body, Interior for the procedures.

(8) Reconnect the battery negative cable.

FRONT DOOR SPEAKER

REMOVAL

(1) Disconnect and isolate the battery negative cable.

(2) Remove the trim panel from the front door. Refer to Body, Door Front for the procedures.

(3) Remove the four screws that secure the speaker to the front door inner panel (Fig. 19).

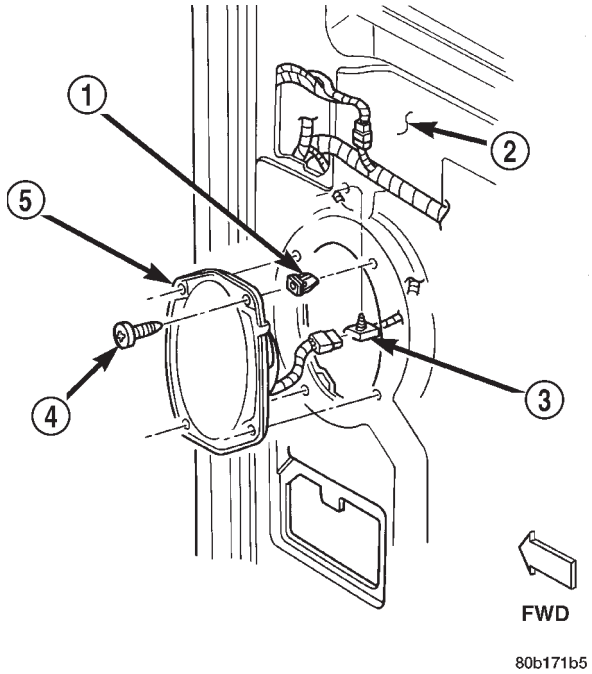

Fig. 19 Front Door Speaker Remove/Install

1 - CLIP
2 - FRONT DOOR INNER PANEL
3 - WIRE HARNESS CONNECTOR
4 - SCREW
5 - SPEAKER

(4) Pull the speaker away from the mounting hole in the front door inner panel far enough to access the speaker wire harness connector.

(5) Disconnect the speaker wire harness connector from the front door wire harness connector.

(6) Remove the speaker from the front door inner panel.

INSTALLATION

(1) Position the speaker to the front door inner panel.

(2) Reconnect the speaker wire harness connector to the front door wire harness connector.

(3) Position the speaker into the mounting hole in the front door inner panel.

FRONT DOOR SPEAKER (Continued)

(4) Install and tighten the four screws that secure the speaker to the front door inner panel. Tighten the screws to 4 N·m (35 in. lbs.).

(5) Install the trim panel onto the front door. Refer to Body, Door Front for the procedures.

(6) Reconnect the battery negative cable.

REAR CAB SIDE PANEL SPEAKER

REMOVAL

(1) Disconnect and isolate the battery negative cable.

(2) Remove the trim from the rear cab side panel. Refer to Body, Interior for the procedures.

(3) Remove the two screws that secure the speaker to the cab side inner panel (Fig. 20) or (Fig. 21).

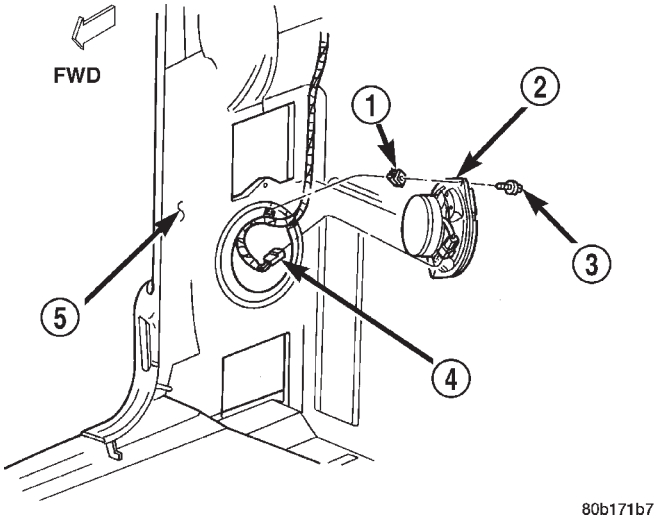

Fig. 20 Rear Speaker Remove/Install - Standard Cab

1 - CLIP
2 - SPEAKER
3 - SCREW
4 - WIRE HARNESS CONNECTOR
5 - CAB SIDE INNER PANEL

(4) Pull the speaker away from the mounting hole in the cab side inner panel far enough to access the body wire harness connector.

(5) Disconnect the body wire harness connector from the speaker connector receptacle.

(6) Remove the speaker from the cab side inner panel.

INSTALLATION

(1) Position the speaker to the cab side inner panel.

(2) Reconnect the body wire harness connector to the speaker connector receptacle.

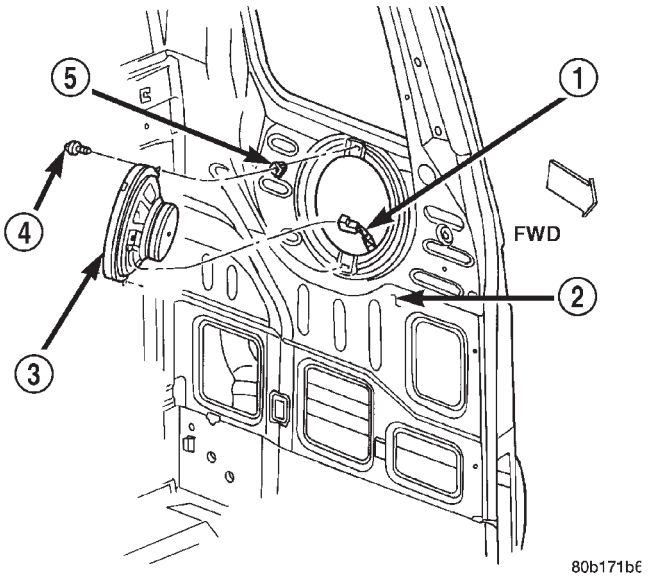

Fig. 21 Rear Speaker Remove/Install - Club Cab

1 - WIRE HARNESS CONNECTOR
2 - CAB SIDE INNER PANEL
3 - SPEAKER
4 - SCREW
5 - CLIP

(3) Position the speaker into the mounting hole in the cab side inner panel.

(4) Install and tighten the two screws that secure the speaker to the cab side inner panel. Tighten the screws to 4 N·m (35 in. lbs.).

(5) Install the trim onto the rear cab side panel. Refer to Body, Interior for the procedures.

(6) Reconnect the battery negative cable.

REAR DOOR SPEAKER

REMOVAL

(1) Disconnect and isolate the battery negative cable.

(2) Remove the trim panel from the rear door.

(3) Remove the two screws that secure the speaker to the rear door inner panel (Fig. 22).

(4) Pull the speaker away from the mounting hole in the rear door inner panel far enough to access the door wire harness connector.

(5) Disconnect the door wire harness connector from the speaker connector receptacle.

(6) Remove the speaker from the rear door inner panel.

REAR DOOR SPEAKER (Continued)

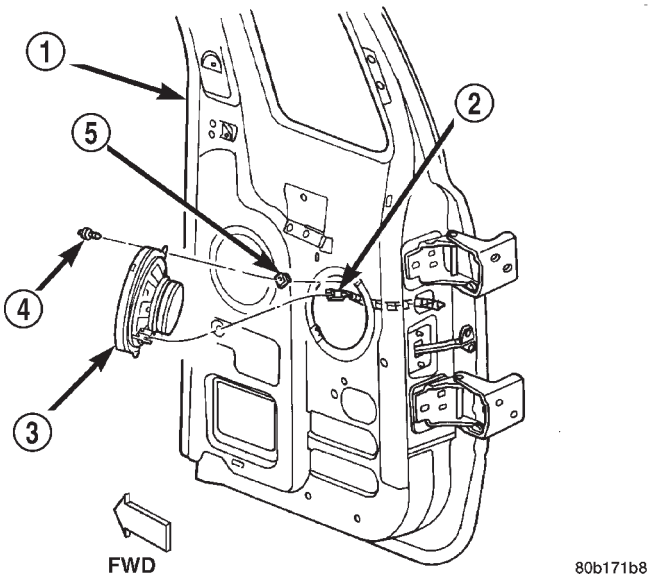

Fig. 22 Rear Door Speaker Remove/Install - Quad Cab

1 - REAR DOOR INNER PANEL
2 - WIRE HARNESS CONNECTOR
3 - SPEAKER
4 - SCREW
5 - CLIP

INSTALLATION

(1) Position the speaker to the rear door inner panel.

(2) Reconnect the door wire harness connector to the speaker connector receptacle.

(3) Position the speaker into the mounting hole in the rear door inner panel.

(4) Install and tighten the two screws that secure the speaker to the rear door inner panel. Tighten the screws to 4 N·m (35 in. lbs.).

(5) Install the trim panel onto the rear door.

(6) Reconnect the battery negative cable.