https://truckmanualshub.com/

TRÄDGÅRDSTEKNIK

BEVATTNINGSTEKNIK

GM2800B

5-Unit Rotary Mower

Service manual

BARONESS®

Quality on Demand

Serial No.10001-

Ver.1.0

BEVATTNINGSTEKNIK AB
Helsingborgsvägen 578, Varalöv
262 96 ÄNGELHOLM, SWEDEN

Telefon: +46 431 22250
Email : info@bevattningsteknik.se eller philip@bevattningsteknik.se
www.bevattningsteknik.se

https://truckmanualshub.com/

Introduction

This manual describes about the procedures of maintenance and malfunction diagnosis etc. of this machine.
Items of description are categorized per system for representative maintenance contents.
As for repair items specified by the manufacturers in the hydraulic system, engine, etc., their respective disassembling and maintenance procedures are not described.
For repair, please contact your sales dealer or Kyoeisha.
For operation, handling and adjustment instruction, please refer to the Owner's Operating Manual.
Be sure to also read the Owner's Operating Manual for the engine, battery, etc.
See the parts catalog for required parts.

Kyoeisha Co., Ltd.

Caution

The information described in this manual is subject to change for improvement without prior notice.
When replacing parts, be sure to use genuine Baroness parts or parts designated by Kyoeisha.
Note that the Baroness product warranty may not apply to defects caused by the use of parts from other companies.

Warning Symbols

This manual uses the following warning symbols for handling precautions that are important for your safety.

696cq5-001	Warning symbol

This symbol indicates the articles regarding “Danger,” “Warning,” or “Caution.”
Those articles describe important safety precautions and so read them carefully to understand completely before operating the machine.
Failure to adequately follow these safety precautions may cause an accident.

Danger

This symbol indicates that serious injury or death will occur if the warning is ignored.

Warning

This symbol indicates that serious injury or death may occur if the warning is ignored.

Caution

This symbol indicates that injury or damage to property may occur if the warning is ignored.

Important

This symbol indicates precautions on the mechanism of the machine.

https://truckmanualshub.com/

Contents

Safety..... Page 1-1

Safe Operating Practices.....Page 1-2
Safety Signs and Instruction Signs..... Page 1-5

Disposal..... Page 2-1

Waste Disposal.....Page 2-2

Maintenance standards and maintenance....Page 3-1

Unit conversion..... Page 3-2
Maintenance standards..... Page 3-4
Tightening torques..... Page 3-5
Jacking up the machine..... Page 3-9
Greasing..... Page 3-11

Engine..... Page 4-1

Maintenance..... Page 4-2
Specifications.....Page 4-2
Special Tool..... Page 4-2
General inspection and repair.....Page 4-3
Inspection and repair of each section..... Page 4-4
Removal and installation of each section..... Page 4-16

Hydraulic system..... Page 5-1

Maintenance..... Page 5-2
Specifications.....Page 5-3
General instructions.....Page 5-11
Hydraulic circuit flow..... Page 5-17
Special Tool..... Page 5-24
Measurement.....Page 5-29
Adjustment.....Page 5-46
General inspection and repair.....Page 5-48
Inspection and repair of each section..... Page 5-51
Removal and installation of each section..... Page 5-54

Electrical system.....Page 6-1

Maintenance..... Page 6-2
Specifications.....Page 6-2
Special Tool..... Page 6-6
Measurement.....Page 6-6
Adjustment.....Page 6-8
Electrical components.....Page 6-10
General inspection and repair.....Page 6-29

Main body..... Page 7-1

Maintenance..... Page 7-2
Specifications.....Page 7-2
Special Tool..... Page 7-5
Adjustment.....Page 7-11
Removal and installation of each section..... Page 7-18
Inspection and repair of each section..... Page 7-44

Operating Machine and Mower Units.....Page 8-1

Maintenance..... Page 8-2
Specifications.....Page 8-2
Special Tool..... Page 8-3
Adjustment.....Page 8-5
Removal and installation of each section..... Page 8-5
Inspection and repair of each section..... Page 8-15

Troubleshooting.....Page 9-1

Relating to the Engine..... Page 9-2
Relating to Traveling.....Page 9-5
Relating to Steering..... Page 9-8
Relating to Operating Machine and Mower Unit.....Page 9-9

Reference.....Page 10-1

Specifications.....Page 10-2
Maintenance Schedule..... Page 10-3
Hydraulic circuit diagram..... Page 10-5
Electrical circuit diagram.....Page 10-6
Electric wiring diagram.....Page 10-7
List of Consumables..... Page 10-9
RT mechanical brake manual..... Page 10-11

https://truckmanualshub.com/

Contents

https://truckmanualshub.com/

Safe Operating Practices..... Page 1-2

Training.....Page 1-2
Preparation..... Page 1-2
Operation.....Page 1-3
Maintenance and storage..... Page 1-4

Safety Signs and Instruction Signs..... Page 1-5

About Safety Signs and Instruction Signs.....Page 1-5

https://truckmanualshub.com/

Safety

Failure to adequately follow these safety precautions may cause an accident resulting in injury or death.

Danger

This machine is designed to ensure safe operation and has been tested and inspected thoroughly before shipment from the factory.
The machine is equipped with safety devices to prevent accidents.
However, whether the machine demonstrates its original performance level depends on the manner in which it is operated and handled, as well as the manner in which it is managed on a daily basis.
Inappropriate use or management of the machine may result in injury or death.
Observe the following safety instructions to ensure safe operation.

Safe Operating Practices

The following instructions include the ones from CEN standard EN 836: 1997, ISO standard 5395: 1990, and ANSI B71.4-2004.

Training

1. Read the Owner's operating Manual and other training material carefully. Be familiar with the controls, safety signs, and the proper use of the equipment.
2. If the operator or mechanic can not read English it is the owner's responsibility to explain this material to them.
3. All operators and mechanics should seek and obtain professional and practical instruction.
   The owner is responsible for training the users.
   Such instruction should emphasize.
   [1] The need for care and concentration when working with ride-on machines.
   [2] Control of a ride-on machine sliding on a slope will not be regained by the application of the brake.
   The main reasons for loss of control are
   - Insufficient wheel grip
   - Being driven too fast
   - Inadequate braking
   - The type of machine is unsuitable for its task
   - Lack of awareness of the effect of ground conditions, especially slopes
   - Incorrect hitching and load distribution
4. Never allow children or people unfamiliar with these instructions to use or service the machine.
   Local regulations may restrict the age of the operator.
5. The owner/use can prevent and is responsible for accidents or injuries occurring to themselves, other people, or property.
6. Keep in mind that the owner, operator, and mechanic are responsible for accidents or hazards occurring to other people or their property.

Preparation

1. Evaluate the terrain to determine what accessories and attachments are needed to properly and safety perform the job.
   Only use accessories and attachments approved by the manufacturer.
2. While operating, always wear substantial footwear, long trousers, hard hat, safety glasses, and ear protection.
   Long hair, loose clothing, or jewelry may get tangled in moving parts.
   Do not operate the equipment when barefoot or wearing open sandals.
3. Inspect the area where the equipment is to be used and remove all objects such as rocks, toys and wire which can be thrown by the machine.
4. Exercise care in the handling of fuel.

Warning

Warning-Fuel is highly flammable.
Take the following precautions.

[1] Store fuel in containers specifically designed for this purpose.
[2] Add fuel before starting the engine.
Never remove the cap of the fuel tank or add fuel while the engine is running or when the engine is hot.
[3] Refuel outdoors only and do not smoke while refueling.

https://truckmanualshub.com/

[4] If fuel is spilled, do not attempt to start the engine but move the machine away from the area of spillage and avoid creating any source of ignition until petrol vapours have dissipated.

[5] Replace all fuel tanks and container caps securely.

5. Check that operator's presence controls, safety switches and shields are attached and functioning properly.
   Do not operate unless they are functioning properly.
6. If the brake operation is faulty or the parking brake lever has noticeable play, be sure to adjust or repair them before operating the machine.
7. Replace faulty mufflers.
8. Before using, always visually inspect to see that the blades, blade bolts, and cutting assembly are not worn or damaged.
   Replace worn or damaged blades and bolts in sets to preserve balance.
9. On multi-blanded machines, take care as rotating one blade can cause other blades to rotate.

Operation

1. Do not operate the engine in a confined space where dangerous carbon monoxide fumes can collect.
2. Only operate in good light, keeping away from holes and hidden hazards.
3. Before attempting to start the engine, disengage all attachments, shift into neutral, and engage the parking brake.
   Only start engine from the operator's position.
   Use seat belts if provided.
4. Remember there is no such thing as a safe slope.
   Travel on grass slopes requires particular care.
   To guard against overturning:

   [1] Do not stop or start suddenly when going up or downhill.

   [2] Engage clutch slowly, always keep machine in gear, especially when traveling downhill.

   [3] Machine speeds should be kept low on slopes and during tight turns.

   [4] Stay alert for humps and hollows and other hidden hazards.

   [5] Never operate across the face of the slope, unless the machine is designed for this purpose.

   [6] Never drive the machine on a slope with an angle of gradient that is greater than that specified or in a place where there is a danger of the machine slipping.
5. Never raise deck with the blades running.
6. Never operate with the discharge deflector raised, removed or altered, unless using a grass catcher.
   Do not crawl under the machine while it is in operation.
7. Never operate with the discharge deflector raised, removed or altered, unless using a grass catcher.
8. Do not change the engine governor settings or overspeed the engine.
   Operating the engine at excessive speed may increase the hazard of personal injury.
9. Do the following before leaving the operator's position.

   [1] Stop on level ground.

   [2] Disengage the power take-off and lower the attachments.

   [3] Change into neutral and set the parking brake.

   [4] Stop the engine and remove the key.
10. Disengage the drive to attachments, stop the engine, and remove the ignition key in the following conditions.

    [1] Before refueling.

    [2] Before removing the grass catcher/ catchers;

    [3] Before making height adjustment unless adjustment can be made from the operator's position:

    [4] Before cleaning blockages.

    [5] Before checking, cleaning or working the machine.

    [6] After striking a foreign object or if an abnormal vibration occurs.
    Inspect the machine for damage and make repairs before restarting and operating the equipment.
11. Keep hands and feet away from the cutting units and the rotating parts.

https://truckmanualshub.com/

12. Look behind and down before backing up to be sure of a clear path.
13. Do not carry passengers.
14. Never operate while people, especially children, or pets are nearby.
15. Slow down and use caution when making turns and crossing roads and sidewalks.
16. Stop the blades rotating before crossing surfaces other than grass.
17. Disengage drive to attachments when transporting or not in use.
18. When using any attachments, never direct discharge of material toward bystanders nor allow anyone near the machine while in operation.
19. Do not operate the machine under the influence of alcohol or drugs.
20. Take care when loading or unloading the machine into a trailer or a truck.
    Load or unload the machine in a flat and safe place.
    Before loading or unloading, set the parking brake on the truck or trailer, stop the engine, and chock the wheels.
    When transporting the machine on a truck or a trailer, set the parking brake, stop the engine, and fasten the machine to the truck with a rope or other suitable restraining device that has sufficient strength.
    When using a running board, select one with sufficient strength, length, and width and that will not cause the machine to slip.
21. Close the fuel valve before transporting the machine.
22. Use care when approaching blind corners, shrubs, trees, or other objects that may obscure vision.
23. Do not take your eyes off the road ahead.
    Do not operate the machine with no hands.
24. Reduce the throttle setting during engine run-out and, if the engine is provided with a shut-off valve, turn the fuel off at the conclusion of operation.

Maintenance and storage

1. Disengage drives on level ground, lower the atattachments, set parking brake, stop engine and remove key from ignition.
   Wait for all movement to stop before adjusting, cleaning or repairing.
2. When machine is to be parked, stored, or left unattended, lower the cutting units unless a positive mechanical lock is provided.
3. To reduce the fire hazard, keep the engine, silencer/muffler, battery compartment fuel storage area, cutting units and drives free of grass, leaves, or excessive grease.
   Clean up oil or fuel spillage.
4. Allow the engine to cool before storing in any enclosure.
5. Only cover the machine with a sheet after hot parts have sufficiently cooled down.
6. Never store the equipment with fuel in the tank inside a building where fumes may reach an open flame or spark.
7. If the engine is provided with a shut-off valve, shut off valve while storing or transporting.
8. Do not store fuel near flames.
9. Never allow untrained personnel to service machine.
10. Allow the engine/muffler to cool before checking/maintenance.
11. Appropriately manage and correctly use the tools necessary for servicing or adjusting the machine.
12. Use jack stands to support components when required.
13. Carefully release pressure from components with stored energy.
14. Be sure to depressurize the hydraulic system before performing maintenance operations on it such as removing hydraulic equipment.
15. Check whether line connectors in the hydraulic system are properly tightened.
    Before applying hydraulic pressure, check the connections of the hydraulic pressure lines and the condition of the hoses.
16. When checking the hydraulic circuit for pinhole leaks or oil leakage from nozzles, do not use your hands.
    Use items such as paper or corrugated cardboard to find leakage points.
    Be extremely careful with high-pressure oil as it may pierce your skin, result.
    If fluid is injected into the skin it must be surgically removed within a few hours by a doctor familiar with this form of injury or gangrene may result.

https://truckmanualshub.com/

17. Disconnect battery before making any repairs.
    Disconnect the negative terminal first and the positive last.
    Reconnect positive first and negative last.
18. Make sure that parts such as wires are not touching each other and that their covers have not come off.
19. Use care when checking the blades.
    [1] Wrap the blades or wear gloves, and use caution when servicing them.
    [2] Only replace blades.
    [3] Never straighten or weld them.
20. On multi-bladed machines, take care as rotating one blade can cause other blades to rotate.
21. Keep hands and feet away from moving parts.
    If possible, do not make adjustments with the engine running.
22. Charge batteries in an open well ventilated area, away from spark and flames.
    Unplug charger before connecting or disconnecting from battery.
    Wear protective clothing and use insulated tools.
23. Keep all parts in good working condition and all hardware tightened.
    Replace all worn or damaged decals.
24. Keep all nuts, bolts and screws tight to be sure the equipment is in safe working condition.
25. Check the grass catcher frequently for wear or deterioration.
26. If the fuel tank has to be drained, do this outdoors.

Safety Signs and Instruction Signs

About Safety Signs and Instruction Signs

⚠ Warning

Safety decals and instruction decals are attached to this machine.
Make sure that they are preserved in their entirety. If they are damaged, become dirty, or peel off, replace them with new ones.

Part numbers for decals that need to be replaced are listed in the parts catalog.
Order them from a Baroness dealer or Kyoeisha.

https://truckmanualshub.com/

https://truckmanualshub.com/

Disposal

Waste Disposal..... Page 2-2

About the Waste disposal.....Page 2-2

https://truckmanualshub.com/

Disposal

Waste Disposal

About the Waste disposal

Make sure that waste generated when servicing or repairing the machine is disposed of in accordance with local regulations.
(e.g. waste oil, antifreeze batteries, rubber products, and wires etc.)

https://truckmanualshub.com/

Maintenance standards and maintenance

Unit conversion.....Page 3-2

Inch-millimeter conversion table..... Page 3-2
US unit-SI unit conversion table.....Page 3-3

Maintenance standards.....Page 3-4

List of Maintenance Specifications..... Page 3-4

Tightening torques..... Page 3-5

Standard tightening torques..... Page 3-5
Principal tightening torques ..... Page 3-8

Jacking up the machine..... Page 3-9

About the Jacking up the machine..... Page 3-9
Jack-up Points..... Page 3-10

Greasing..... Page 3-11

About Greasing.....Page 3-11
Greasing Points..... Page 3-11

https://truckmanualshub.com/

Unit conversion

Inch-millimeter conversion table

1 mm = 0.03937 in
1 in = 25.4 mm

Fractions			Decimals	mm	Fractions			Decimals	mm
		1/64	0.015625	0.397			33/64	0.515625	13.097
	1/32		0.03125	0.794		17/32		0.53125	13.494
		3/64	0.046875	1.191			35/64	0.546875	13.891
1/16			0.0625	1.588	9/16			0.5625	14.288
		5/64	0.078125	1.984			37/64	0.578125	14.684
	3/32		0.9375	2.381		19/32		0.59375	15.081
		7/64	0.109275	2.778			39/64	0.609375	15.478
1/8			0.1250	3.175	5/8			0.6250	15.875
		9/64	0.140625	3.572			41/64	0.640625	16.272
	5/32		0.15625	3.969		21/32		0.65625	16.669
		11/64	0.171875	4.366			43/64	0.671875	17.066
3/16			0.1875	4.762	11/16			0.6875	17.462
		13/64	0.203125	5.159			45/64	0.703125	17.859
	7/32		0.21875	5.556		23/32		0.71875	18.256
		15/64	0.234375	5.953			47/64	0.734375	18.653
1/4			0.2500	6.350	3/4			0.7500	19.050
		17/64	0.265625	6.747			49/64	0.765625	19.447
	9/32		0.28125	7.144		25/32		0.78125	19.844
		19/64	0.296875	7.541			51/64	0.796875	20.241
5/16			0.3125	7.938	13/16			0.8125	20.638
		21/64	0.328125	8.334			53/64	0.828125	21.034
	11/32		0.34375	8.731		27/32		0.84375	21.431
		23/64	0.359375	9.128			55/64	0.859375	21.828
3/8			0.3750	9.525	7/8			0.8750	22.225
		25/64	0.390625	9.922			57/64	0.890625	22.622
	13/32		0.40625	10.319		29/32		0.90625	23.019
		27/64	0.421875	10.716			59/64	0.921875	23.416
7/16			0.4375	11.112	15/16			0.9375	23.812
		29/64	0.453125	11.509			61/64	0.953125	24.209
	15/32		0.46875	11.906		31/32		0.96875	24.606
		31/64	0.484375	12.303			63/64	0.984375	25.003
1/2			0.5000	12.700	1			1.000	25.400

https://truckmanualshub.com/

US unit-SI unit conversion table

To Convert			Into		Multiply By
Linear Measurement	Miles	mi	Kilometers	km	1.609
	Yards	yd	Meters	m	0.9144
	Feet	ft	Meters	m	0.3048
	Feet	ft	Centimeters	cm	30.48
	Inches	in	Meters	m	0.0254
	Inches	in	Centimeters	cm	2.54
	Inches	in	Millimeters	mm	25.4
Area	Square Miles	$mile^2$	Square Kilometers	km^2	2.59
	Square Feet	ft^2	Square Meters	m^2	0.0929
	Square Inches	in^2	Square Centimeters	cm^2	6.452
	Acre	ac	Hectare	ha	0.4047
Volume	Cubic Yards	yd^3	Cubic Meters	m^3	0.7646
	Cubic Feet	ft^3	Cubic Meters	m^3	0.02832
	Cubic Inches	in^3	Cubic Centimeters	cm^3	16.39
Weight	Tons (Short)	sh tn	Metric Tons	ton	0.9078
	Pounds	lb	Kilograms	kg	0.4536
	Ounces (Avdp.)	oz	Grams	g	28.3495
Pressure	Pounds/Sq. In.	psi	Kilopascal	kPa	6.895
	Pounds/Sq. In.	psi	Bar	$mdyn/cm^2$	0.069
Work	Foot-pounds	lb-ft	Newton-Meters	N-m	1.356
	Foot-pounds	lb-ft	Kilogram-Meters	kgf-m	0.1383
	Inch-pounds	lb-in	Kilogram-Centimeters	kgf-cm	1.152144
Liquid Volume	Quarts	qt (us)	Liters	l	0.9463
	Gallons	gal (us)	Liters	l	3.785
Liquid Flow	Gallons/Minute	gal/min	Liters/Minute	l/min	3.785
Temperature	Fahrenheit	°F	Celsius	°C	1. Subract 32° 2. Multiply by 5/9

https://truckmanualshub.com/

Maintenance standards and maintenance

Maintenance standards

List of Maintenance Specifications

GM2800B

Engine	Engine model	Kubota V2403-M-T-E3B (Diesel Turbo)	
	No load rpm	1,425 - 2,850 rpm	
	Quantity of engine oil	9.7 dm^3 (9.7 L) (2.56 U.S. gal.) (including filter)	API Service grade class CF or higher, SAE Viscosity grade 10W-30
	Coolant capacity	12.0 dm^3 (12.0 L) (3.17 U.S. gal.) (including reserve tank)	
Main body (including hydraulic and electrical systems)	Fuel tank capacity	51.0 dm^3 (51.0 L) (13.47 U.S. gal.)	JIS No. 2 diesel fuel
	Hydraulic tank capacity	44.0 dm^3 (44.0 L) (11.62 U.S. gal.)	Shell Tellus S2M46 or equivalent (ISO VG46)
	Parking brake switch	Slight clearance	A clearance between the switch contact point and the brake lever when the parking brake lever is at the 5th notch
	Proximity sensor	Outer ends of mower units #4/#5 400 mm (15.75 in) from the ground	Proximity sensor detection position (#4/#5 mower arm fulcrum cams)
		1 - 4 mm (0.04 - 0.16 in)	Distance for #4/#5 mower arm fulcrum cams
	Assist valve	Low pressure side: 2.4 MPa (348.08 psi)	
		High pressure side: 3.0 MPa (435.10 psi)	
	Battery	105D31R	
	Tire pneumatic pressure	Front wheel: 150 kPa (21.83 lb-in^2)	29 x 14.00 - 15 6P
		Rear wheel: 140 kPa (20.37 lb-in^2)	20 x 12.00 - 10 4P
	Toe-in	0±5 mm (0±0.20 in)	
	Traveling pedal rod distance (between the centers of the rod ends)	1,065 mm (41.93 in)	Front wheel rod
		1,065 mm (41.93 in)	Rear wheel rod
		221 mm (8.70 in)	Neutral adjustment rod
	Spring compression distance (forward rod part)	83 mm (3.27 in)	Compression spring on pedal side
		82 mm (3.23 in)	Compression spring on pump side
	Spring compression length (neutral adjustment)	55 mm (2.17 in)	Compression spring

* The factory default maximum engine rpm is 2,400 rpm.

https://truckmanualshub.com/

Tightening torques

Standard tightening torques

Bolts and Nuts

> **Important**
>
> A number of bolts are used in each part of this machine.
> Be sure to re-tighten the bolts and nuts, because they may be loosened at the earlier stage of the use.

As to the bolts and nuts without any special instruction, tighten them in appropriate tightening torque with proper tool.
Too much tightening may cause the looseness or damage of the screw.
The strength of tightening is determined by types of screws, strength, the friction of thread face or base face and others.
The table below is for the galvanized or parkerized bolts.
In case that the strength of internal thread is weak, it is not applied.
Do not use rusty or sand attached "screw."
Otherwise, it may cause insufficient tightening even if you apply the specified tightening torque.
The friction of the screw face becomes higher and the tightening torque is canceled out by the friction, therefore sufficient tightening cannot be applied.
If "screw" is wet by water or oil, do not tighten it with normal tightening torque.
If the screw is wet, the torque coefficient will get smaller and it may result in too much tightening.
Too much tightening may cause looseness by the screw stretched or result in damage.
Do not use a bolt experienced too much burden.
Using the impact wrench requires the skill.
Do exercise as much as possible for steady tightening.

Nominal diameter	General bolt		
	Strength classification 4.8		
	tib3yb-001		
	N-m	kgf-cm	lb-in
M5	3 - 5	30.59 - 50.99	26.55 - 44.26
M6	7 - 9	71.38 - 91.77	61.96 - 79.66
M8	14 - 19	142.76 - 193.74	123.91 - 168.17
M10	29 - 38	295.71 - 387.49	256.68 - 336.34
M12	52 - 67	530.24 - 683.20	460.25 - 593.02
M14	70 - 94	713.79 - 958.52	619.57 - 831.99
M16	88 - 112	897.34 - 1142.06	778.89 - 991.31
M18	116 - 144	1,182.85 - 1,468.37	1,026.72 - 1,274.54
M20	147 - 183	1,498.96 - 1,866.05	1,301.10 - 1,619.73
M22	295	3,008.12	2,611.05
M24	370	3,772.89	3,274.87
M27	550	5,608.35	4,868.05
M30	740	7,545.78	6,549.74

https://truckmanualshub.com/

Maintenance standards and maintenance

Nominal diameter	Heat-treated bolt					
	Strength classification 8.8			Strength classification 10.9		
	tib3yb-002			tib3yb-003		
	N-m	kgf-cm	lb-in	N-m	kgf-cm	lb-in
M5	5 - 7	50.99 - 71.38	44.26 - 61.96	7 - 10	71.38 - 101.97	61.96 - 88.51
M6	8 - 11	81.58 - 112.17	70.81 - 97.36	14 - 18	142.76 - 183.55	123.91 - 159.32
M8	23 - 29	234.53 - 295.71	203.57 - 256.68	28 - 38	285.52 - 387.49	247.83 - 336.34
M10	45 - 57	458.87 - 581.23	398.30 - 504.51	58 - 76	591.43 - 774.97	513.36 - 672.68
M12	67 - 85	683.20 - 866.75	593.02 - 752.34	104 - 134	1,060.49 - 1,366.40	920.50 - 1186.03
M14	106 - 134	1,080.88 - 1,366.40	938.21 - 1,186.03	140 - 188	1,427.58 - 1,917.04	1,239.14 - 1,663.99
M16	152 - 188	1,549.94 - 1,917.04	1,345.35 - 1,663.99	210 - 260	2,141.37 - 2,651.22	1,858.71 - 2,301.26
M18	200 - 240	2,039.40 - 2,447.28	1,770.20 - 2,124.24	280 - 340	2,855.16 - 3,466.98	2,478.28 - 3,009.34
M20	245 - 295	2,498.27 - 3,008.12	2,168.50 - 2,611.05	370 - 450	3,772.89 - 4,588.65	3,274.87 - 3,982.95
M22	-	-	-	530	5,404.41	4,691.03
M24	-	-	-	670	6,831.99	5,930.17
M27	-	-	-	1,000	10,197.00	8,851.00
M30	-	-	-	1,340	14,628.78	11,860.34

Note:
The same values are applied to "fine screw thread."

https://truckmanualshub.com/

Hydraulic hose

The tightening torques for union joints and union adaptors with parallel pipe threads (G, PF) are shown in the table below.
A union joint or adaptor will not become loose or leak as long as it is tightened by the specified torque.
If fluid leaks from the sealed portion, do not attempt to tighten the union joint or adaptor forcibly.
Examine whether any foreign matter or scratches are present on the seat surface.
Tightening a union joint or adaptor forcibly could damage the connection of the joints.
When tightening a union joint or adaptor, use a torque wrench where possible and firmly tighten it by an appropriate torque.

Nominal diameter of the hose size	Nominal diameter of the parallel pipe threads (PF)	Tightening torque		
		N-m	kgf-cm	lb-in
6	1/4	24.50	250	221.28
9	3/8	49.03	500	564.91
12	1/2	58.84	600	677.89
15	3/4	117.68	1200	1,355.78
19	3/4	117.68	1200	1,355.78
25	1	137.30	1400	1,581.74
32	1-1/4	166.72	1700	1,920.69
38	1-1/2	205.94	2100	2,372.61
50	2	245.17	2500	2,824.54

Fittings with parallel threads (O-ring seal type)

The tightening torques for fittings with parallel threads (O-ring seal method) are shown in the table below.
Tightening an adjustable joint forcibly with a spanner or other such tool to secure it to a set position could damage the adjustable joint, its washers, and other parts. Be sure to tighten an adjustable joint to the torque appropriate to its size.

Nominal diameter of thread	Tightening torque		
	N-m	kgf-cm	lb-in.
1/4	34.32 - 49.03	350 - 500	309.79 - 442.55
3/8	68.65 - 78.45	700 - 800	619.57 - 708.08
1/2	98.07 - 117.68	1000 - 1200	885.10 - 1,062.12
3/4	147.10 - 176.52	1500 - 1800	1,327.65 - 1,593.18
1	245.17 - 274.59	2500 - 2800	2,212.75 - 2,478.28
1-1/4	294.20	3000	2,655.30
1-1/2	294.20	3000	2,655.30
2	392.27	4000	3,540.40

https://truckmanualshub.com/

Maintenance standards and maintenance

Principal tightening torques

Tightening Torque by Model

GM2800B
Tighten the following bolts and nuts at the torque specified in the table.
For thread locking adhesive, apply a middle strength thread locker (ThreeBond 1322 anaerobic adhesives).

Location		Code	Part name	Tightening torque			Thread locking adhesive
				N-m	kgf-cm	lb-in	
Front wheel	Motor housing	K0014160402	Bolt, 11T, heat-treated M16-40P1.5	152 - 188	1549.94 - 1917.04	1345.35 - 1663.99	—
	Motor	K0013140502	Bolt, heat-treated M14-50	100	1019.7	885.1	—
	Wheel mounting base	1 1/4-18UNF	Slotted nut (Hydraulic motor)	200	2039.40	1770.20	—
	Disc brake	K0024080401	Bolt, w/hexagon hole, M8-40	28 - 38	285.52 - 387.49	247.83 - 336.34	—
	Wheel	K0014120652	Bolt, heat-treated M12-65P1.5	67 - 85	683.20 - 833.75	593.02 - 752.34	—
Rear wheel	Motor	K0010120502	Bolt, 11T, heat-treated M12-50	52 - 67	530.42 - 683.20	460.25 - 593.02	
	Wheel mounting base	K0138240002	24 slotted nut high P1.5	180 - 200	1835.46 - 2039.40	1593.18 - 1770.20	—
	Wheel	K0014120652	Bolt, heat-treated M12-65P1.5	67 - 85	683.20 - 866.75	593.02 - 752.34	—
Front axle		K0015200702	Bolt, heat-treated M20-70P1.5	370 - 450	3772.89 - 4588.65	3274.87 - 3982.95	—
Brake ass'y		K1720000190	Bolt, heat-treated M12P1.75	150 ± 15	1529.55 ± 152.96	1327.65 ± 132.77	○
Engine		K0012120352	Bolt, heat-treated M12-35P1.25	67 - 134	683.20 - 1366.40	593.02 - 1186.03	—
		K0015120552	Bolt, heat-treated M12-55P1.25	67 - 134	683.20 - 1366.40	593.02 - 1186.03	—
		K0011100502	Bolt, heat-treated M10-50P1.25	45 - 76	458.87 - 774.97	398.30 - 672.68	—
		K0013121102	Bolt, heat-treated M12-110	67 - 134	683.20 - 1366.40	593.02 - 1186.03	○
Flywheel adapter		K0011100302	Bolt, heat-treated M10-30P1.25	45 - 76	458.87 - 774.97	398.30 - 672.68	—
		K0011100202	Bolt, heat-treated M10-20P1.25	45 - 76	458.87 - 774.97	398.30 - 672.68	○
Joint		K0024100401	Bolt, 12T, w/hexagon hole, M10-40	80	815.76	708.08	—
		K0013100352	Bolt, heat-treated M10-35	45 - 76	458.87 - 774.97	398.30 - 672.68	○
Kingpin stopper		K0013120552	Bolt, 11T, heat-treated M12-45	52 - 67	530.24 - 683.20	460.25 - 593.02	—

https://truckmanualshub.com/

Location	Code	Part name	Tightening torque			Thread locking adhesive
			N-m	kgf-cm	lb-in	
Tie rod	K1610000020	Tie rod end slotted nut	45	458.87	398.30	—
	K1611000020	Tie rod end slotted nut	45	458.87	398.30	—
Piston pump	K0013120502	Bolt, heat-treated M12-50	67 - 134	683.20 - 1366.40	593.02 - 1186.03	—
Tandem pump	Accessories	3/8-24 UNC 11T 10	29 - 38	295.71 - 387.49	256.68 - 336.34	—
Mower rotating fitting	K0011100302	Bolt, heat-treated M10-30P1.25	29 - 38	295.71 - 387.49	256.68 - 336.34	—
Pedal stopper	K0013101202	Bolt, heat-treated M10-120	29 - 38	295.71 - 387.49	256.68 - 336.34	—
Rotation sensor	K0015120351	Bolt, heat-treated M12-35P1.25	67 - 134	683.20 - 1366.40	593.02 - 1186.03	—
Diff-lock valve	K0024100151	Bolt, w/hexagon hole, M10-15	29 - 38	295.71 - 387.49	256.68 - 336.34	—
Knife guide	K0010120302	Bolt, heat-treated M12-30	67 - 85	683.20 - 866.75	593.02 - 752.34	—
Shoulder bolt	GM2800-0207Z2	Shoulder bolt	52 - 67	530.24 - 683.20	460.25 - 593.02	—
Arm guide	K0013101002	Bolt, heat-treated M10-100	45 - 76	458.87 - 774.97	398.30 - 672.68	—
Bumper	K0010120302	Bolt, heat-treated M12-30	67 - 134	683.20 - 1366.40	593.02 - 1186.03	—
Cover mounting bracket	K0000080202	Bolt, M8-25	9 - 14	91.77 - 142.76	61.96 - 123.91	—
Valve V5267	K0013080902	Bolt, 11T, heat-treated M8-90	14 - 19	142.76 - 193.74	123.91 - 168.17	—
Solenoid valve V5266	K0013101202	Bolt, 11T, heat-treated M10-90	29 - 38	295.71 - 387.49	256.68 - 336.34	—

Jacking up the machine

About the Jacking up the machine

Warning

When replacing a tire or beginning any other maintenance or repairs, be sure to chock the wheels to prevent the machine from moving. Before jacking up the machine, park it on a hard, flat surface such as a concrete floor and remove any obstacles that could prevent you from performing the work safely. When necessary, use an appropriate chain block, hoist, or jack. Support the machine securely with jack stands or appropriate blocks. Failure to do so may cause the machine to move or fall, resulting in injury or death.

Use the jack-up points identified in this manual when jacking up the machine.
Only place a jack under the jack-up points specified. Placing a jack at any other point could result in damage to the frame or other parts.

https://truckmanualshub.com/

Maintenance standards and maintenance

Jack-up Points

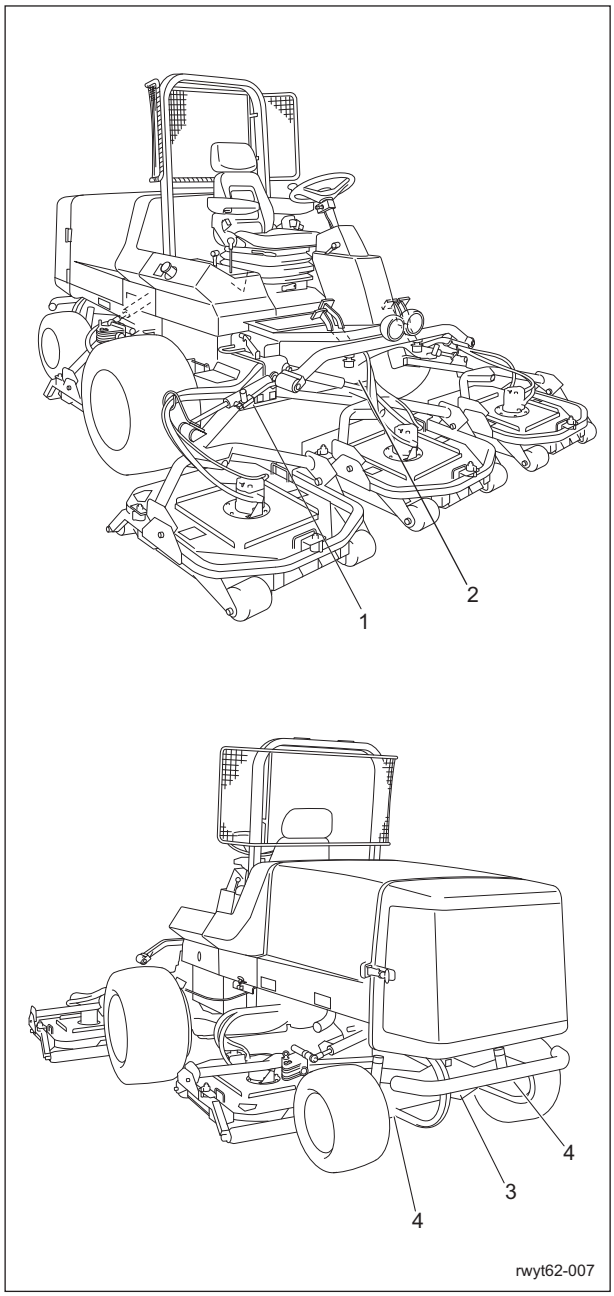

Jack-up Points_001

	Jack-up points
1	Front right frame
2	Front left frame
3	Center of pivot
4	Below rear wheel motors

1. Front right frame

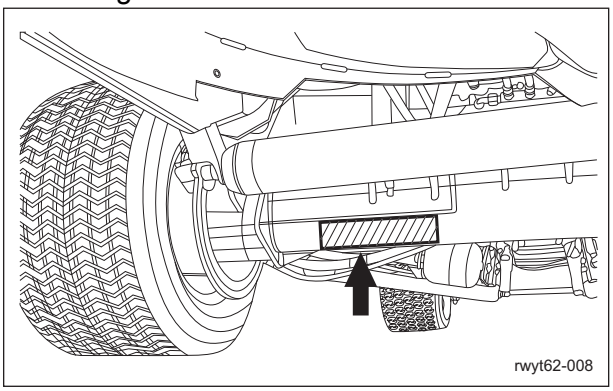

Jack-up Points_002

2. Front left frame

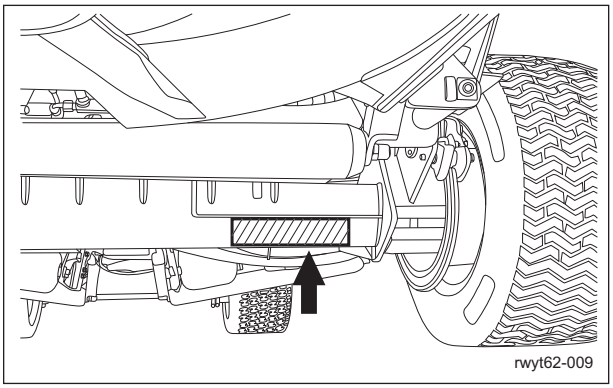

Jack-up Points_003

3. Center of pivot

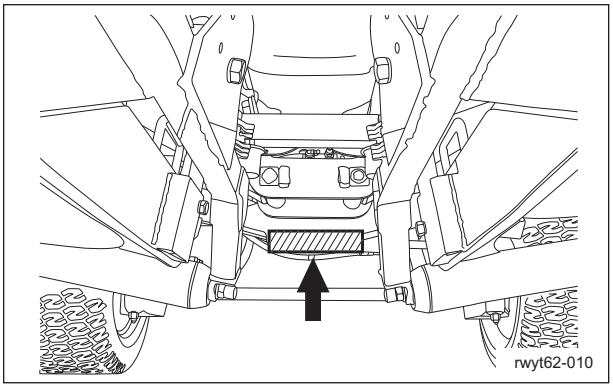

Jack-up Points_004

4. Below rear wheel motors
   Two locations

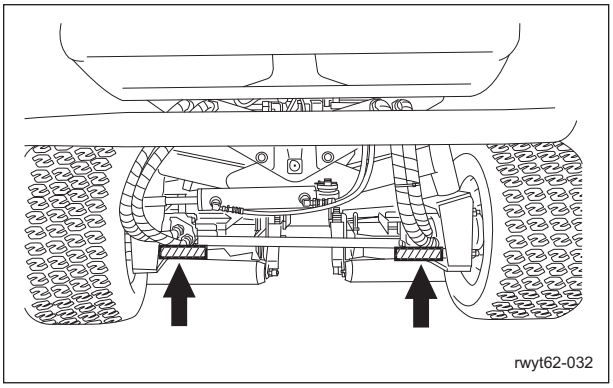

Jack-up Points_005

https://truckmanualshub.com/

Greasing

About Greasing

Since there may be adhesion or damage due to lack of grease on moving parts, they must be greased.
Add urea-based No. 2 grease in accordance with the Maintenance Schedule.
Other locations where the specified grease or lubricant is used are indicated in "Greasing Points".
Add grease using the specified grease or lubricant.

Greasing Points

Grease nipples are installed in the following locations.
Add grease every 50 hours of operation.

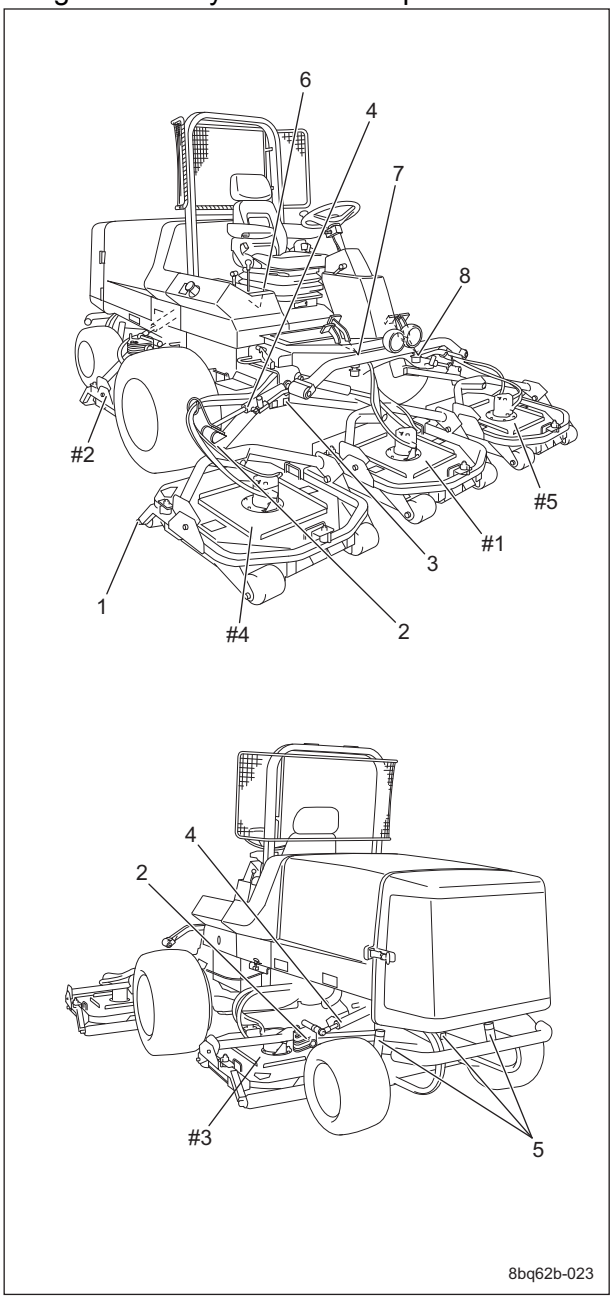

Greasing Points_001

https://truckmanualshub.com/

	Portion	No. of Greasing Points
1	Rear roller	10
2	Mower arm fulcrum	5
3	Lift arm fulcrum	5
4	Lift arm cylinder fulcrum	12
5	Pivot	3
6	Neutral position area	2
7	Traveling pedal shaft fulcrum	2
8	Foot brake	3

1. Rear roller
   There is one greasing point each on the left and right of each mower unit.

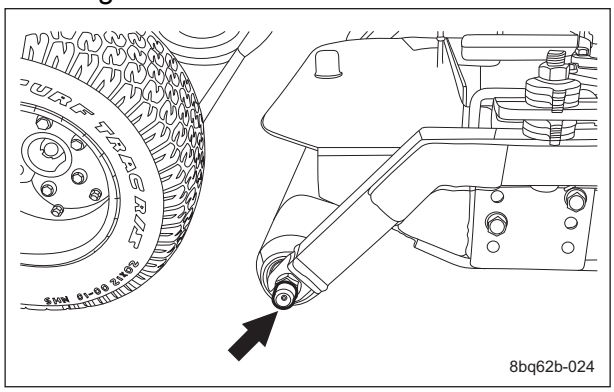

Greasing Points_002

2. Mower arm fulcrum
   There is one greasing point on the arm connected to each mower unit.

   Mower units #1, #4 and #5

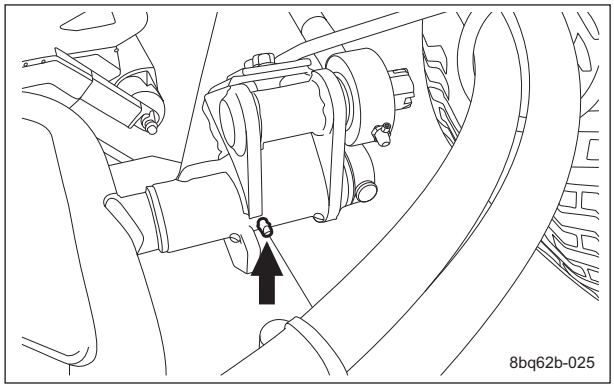

Greasing Points_003

   Mower units #2 and #3

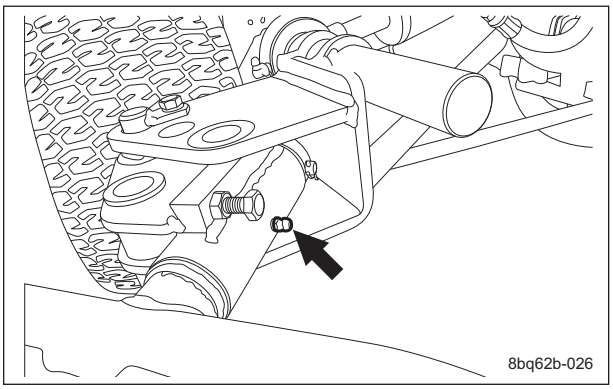

Greasing Points_004

3. Lift arm fulcrum
   There is one greasing point on the arm connected to each mower unit.
   Lower the mower units before greasing the lift arm fulcrums.

   Mower units #1 and #4

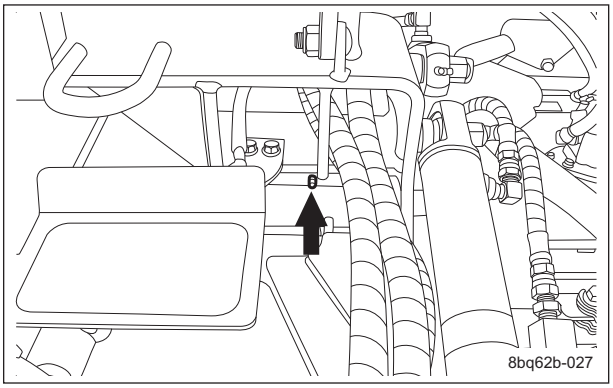

Greasing Points_005

   Mower units #2 and #3

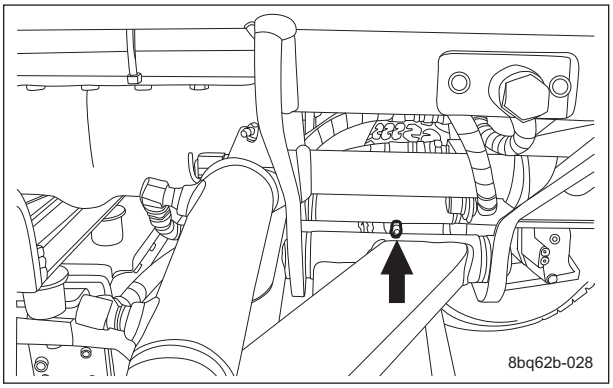

Greasing Points_006

https://truckmanualshub.com/

Mower unit #5

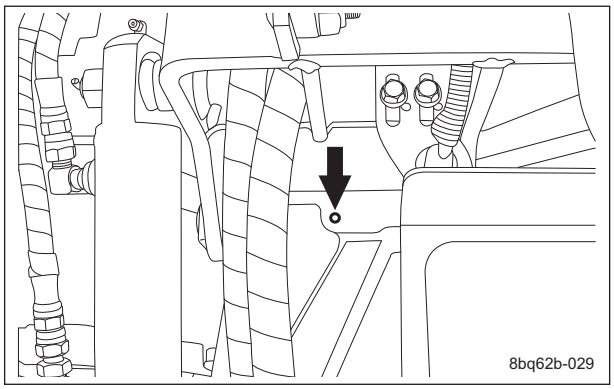

Greasing Points_007

4. Lift arm cylinder fulcrum
   This is on each cylinder of the arms connected to each mower unit.

   Mower units #1, #4 and #5
   There are two greasing points on each cylinder.

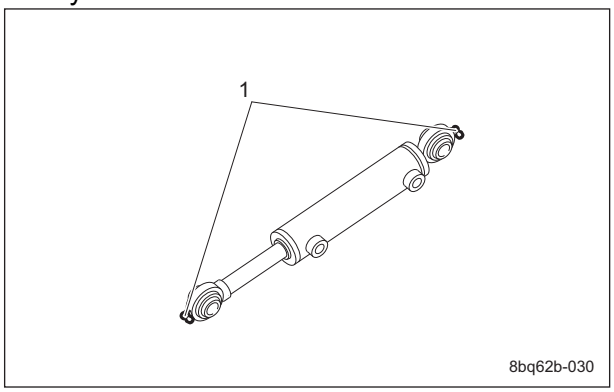

Greasing Points_008

1	Grease nipple (2 locations)

   Mower units #2 and #3
   There are three greasing points on each cylinder.

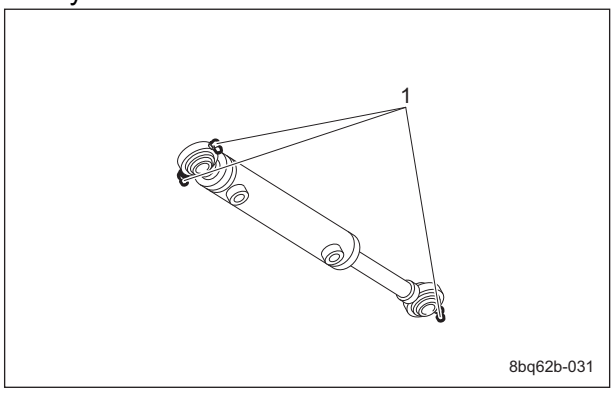

Greasing Points_009

1	Grease nipple (3 locations)

5. Pivot

   Middle between the rear wheels

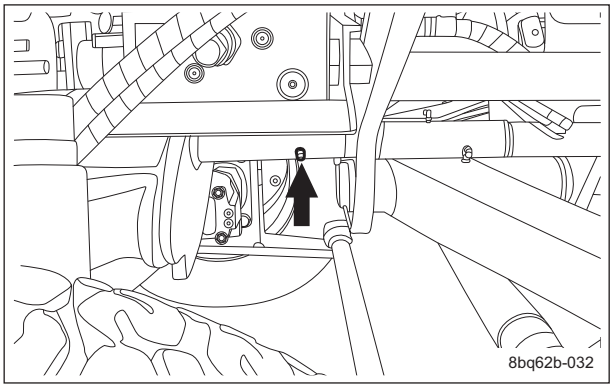

Greasing Points_010

   Rear left wheel

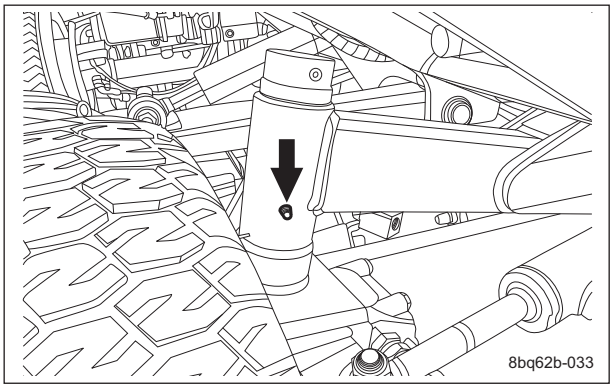

Greasing Points_011

   Rear right wheel

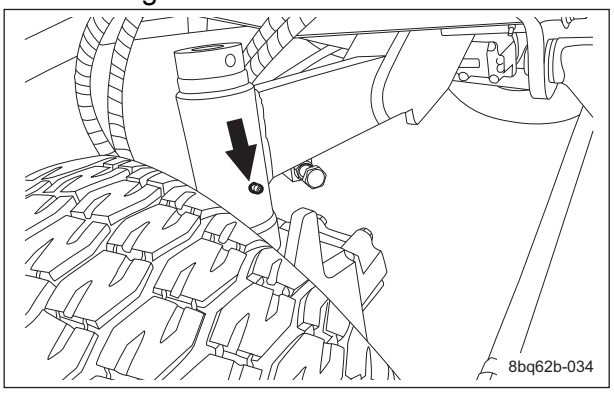

Greasing Points_012

https://truckmanualshub.com/

6. Neutral position area
   There are two locations.

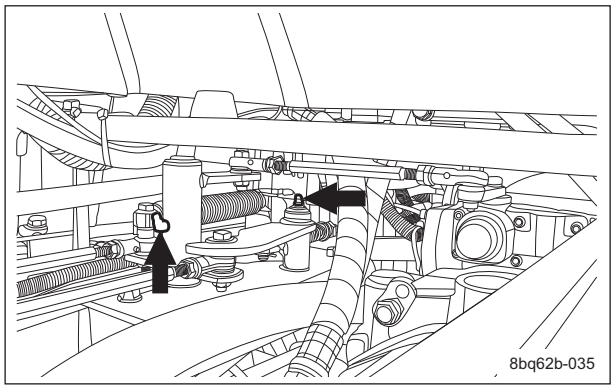

Greasing Points_013

7. Traveling pedal shaft fulcrum
   There are two locations.

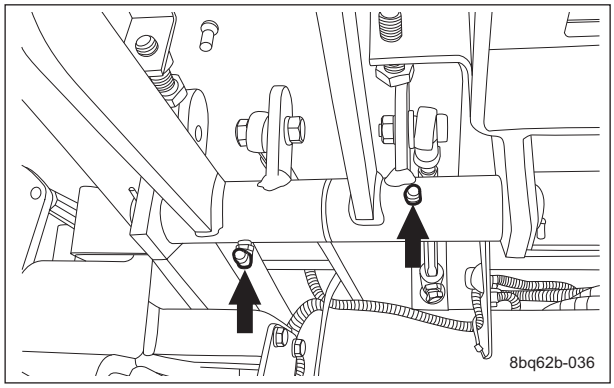

Greasing Points_014

8. Foot brake
   There are three locations.

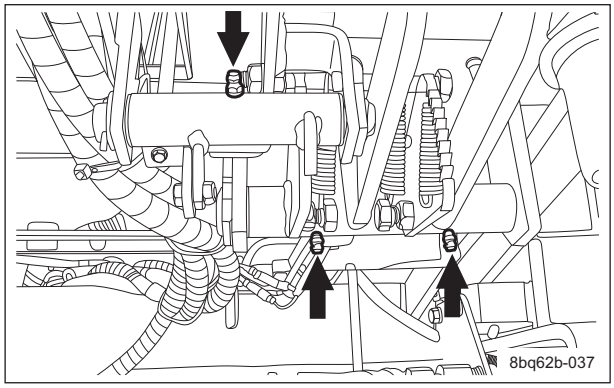

Greasing Points_015

https://truckmanualshub.com/

Maintenance..... Page 4-2

About Maintenance.....Page 4-2

Specifications..... Page 4-2

Specifications.....Page 4-2

Special Tool.....Page 4-2

Special tools list.....Page 4-2

General inspection and repair..... Page 4-3

Cooling system..... Page 4-3
Air cleaner.....Page 4-4
Fuel Tank.....Page 4-4
Muffler.....Page 4-4

Inspection and repair of each section..... Page 4-4

Cooling system..... Page 4-4
Radiator Cover.....Page 4-5
Radiator..... Page 4-6
Coolant..... Page 4-6
Oil cooler.....Page 4-8
Fan, Fan Belt..... Page 4-9
Air Cleaner.....Page 4-10
Fuel filter.....Page 4-11
Fuel pipe.....Page 4-12
Engine Oil..... Page 4-12
Engine oil filter..... Page 4-16

Removal and installation of each section..... Page 4-16

Engine.....Page 4-16
Radiator..... Page 4-20

https://truckmanualshub.com/

Engine

Maintenance

About Maintenance

This machine is equipped with the Kubota vertical 4-cycle diesel engine V2403-M-T-E3B. For details, please refer to the separate Engine Handling Manual and Service Manual.

Specifications

Specifications

Model	V2403-M-T-E3B
Type	Vertical 4-cycle liquid-cooled diesel
Number of Cylinders	4
Bore Stroke	87.0 mm x 102.4 mm (3.43" x 4.031")
Total Displacement	2,434 cc (148.5 cu. in.)
Weight (Dry)	224.0 kg (493.8 lbs)
SAE Gross Intermittent	41.7 kW/2,600 rpm (56.7 PS/2,600 rpm)
Maximum Bare Speed	2,850 rpm
Minimum Bare Idling Speed	1,425±50 rpm
Combustion Chamber	Spherical type (E-TVCS)
Intake System	Turbocharged
Direction of Rotation	Counter-clockwise (viewed from flywheel side)
Fuel Injection Pump	Bosch K-type mini pump
Governor	All speed mechanical governor
Injection Nozzle	DENSO OPD Mini Nozzle
Firing Order	1 (gear case side) -3-4-2 (flywheel side)
Compression Ratio	23 : 1
Fuel	Diesel Fuel No. 2-D (ASTM D975)
Lubricating System	Forced lubrication by trochoid pump
Lubricating Oil	Class CF lubricating oil as per API classification is recommended.
Lubricating Oil Capacity (including filter)	9.7 dm^3 (9.7 L) (2.56 U.S. gals)
Opening temperature (When the valve starts to open)	71 °C (159.8 °F)
Opening temperature (When the valve opened completely)	85 °C (185 °F)
Cooling System Capacity (including reserve tank)	12.0 dm^3 (12.0L) (3.17 U.S. gals)
Starting Motor	12 V, 1.4 kW
Charging Alternator	12 V, 40 A

* Conversion Formula: HP = 0.746 kW, PS = 0.7355 kW
* The factory default maximum engine rpm is 2,400 rpm.

Special Tool

Special tools list

No use of special tools is required.

https://truckmanualshub.com/

General inspection and repair

Cooling system

Water-cooled Engine

Water cooling device consists of a water jacket, radiator, water pump, thermostat, cooling fan, radiator hose, etc. to maintain the engine temperature at appropriate levels.
To prevent the engine from overheating, always keep the radiator, oil cooler, radiator cover, and the surface of related parts clean.
Note:
Refer to the Owner's Operating Manual for the cleaning frequency and procedure etc.

Warning

In case that the engine overheats, steam may spout from the radiator or reserve tank, and could cause burns.

Caution

Do not stop the engine abruptly.
First, shut off the load, then run a cooling operation (such as idling), and then stop the engine.

Important

If the radiator, oil cooler, or radiator cover is dirty and you start the engine, the engine may overheat and malfunction.
It may also cause malfunction of the hydraulic system.

Important

Do not wash the engine using a washer.
Otherwise, water may enter the fuel system.

1. Move the machine to a level surface.
   Apply the parking brake, stop the engine, then remove the ignition key.

Warning

Never touch the engine or exhaust system.
Due to high temperatures, doing so could cause burns.
Make sure that the engine is cool enough before you start operation.

Caution

Make sure that the engine and radiator are cool enough before you start operation.

Important

Rotate and loosen the cap slowly up to the first stop, release all pressure, and then rotate it further to remove it.

2. Open the radiator cap, and then check to make sure that the coolant level is up to the opening.
3. If a reserve tank is attached, check to make sure that the coolant level is between the "LOW" and "FULL" marks on the reserve tank.
4. If the coolant levels in the radiator and the reserve tank are insufficient, fill them with clean water like tap water etc.

https://truckmanualshub.com/

Air cleaner

A contaminated air cleaner element may cause malfunction of the engine.
To maximize the life of the engine, clean the air cleaner properly.

> **Important**
>
> Properly maintained air cleaners protect the internal components of the engine against dust particles in air.
> Make sure that the air cleaner is handled in a manner strictly following the precautions.
> Failure to do so may allow dirt or dust to be sucked in the engine, mixed with oil to form grinding composite in the oil, which may cause wear of rotation parts instead of protecting them.
> Make sure that the air cleaner are inspected and cleaned.

Note:
For cleaning cycle and procedures, please refer to the separate Owner's Operating Manual.

Fuel Tank

> **Danger**
>
> Fuel is extremely high flammable. Handle it with care. Refuel outdoors only and keep fire away while refueling. Refuel outdoors only and do not smoke while refueling.
> Never remove the cap of the fuel tank while the engine is running or when the engine is hot.
> Be sure to complete refueling before starting operation.
> Do not start the engine on the spot where fuel has been spilled.
> Push and move the machine away from the area of spill before starting the engine. Spilled fuel must be disposed properly.
> Replace the caps of fuel tank and container securely.

Checking of the fuel line and connection

Check the fuel line and its connection regularly. Check for deterioration, damage, leakage or poor connections, and replace the hose, stopper and connector part as appropriate.

Draining of fuel and cleaning of the fuel tank

> **Important**
>
> Make sure that fuel is drained outside.

Drain fuel and clean the fuel tank regularly.
Drain fuel and clean the fuel tank if the fuel system is dirty or if equipment is to be stored for a long time.
Use a pure solvent such as kerosene to clean the fuel tank and fuel hose. Sediment causes the fuel tank to get dirty.

Muffler

> **Warning**
>
> Never touch the engine or exhaust system. Otherwise, you may get burned due to high temperatures. Make sure that the engine is cool enough before you start operation.

> **Important**
>
> Do not wash the engine using high-pressure water. Otherwise, water may enter the fuel system.

Make sure that there is no cracks or damage in the welded part of the muffler mounting bracket or muffler adopter. Make sure that the joint of the muffler is not cracked, that no internal component is loosened, or that there is no cracks in the welded part. If it is damaged, replace it.
Be sure to keep the surrounding area around the muffler free from dirt or dust and keep the muffler inspected and cleaned.

Inspection and repair of each section

Cooling system

Precautions for Cleaning System

Clean the engine, oil cooler, radiator and radiator cover every day.
More frequent cleaning may be necessary if the dirt is severe.
Inspect tension of the fan belt.
Remove grasses accumulated especially around V belt and engine immediately.
Failure to do so may result in fire.

https://truckmanualshub.com/

About the Cooling System

> **Caution**
>
> Do not use water to clean any engine parts.
> Clean only with brushes, dry cloths or compressed air.
> Water may contaminate the fuel system.

After the long duration of operation for mowing dry grass or operation in dirty air, the cooling system may be blocked especially by debris of grass, straw and dust etc.
Continuing operation with the cooling system blocked may damage the engine by overheating.
In order to reduce the risk of overheating and prevent accumulated dirt from catching fire, periodically remove dirt from the engine after it has cooled down.

Radiator Cover

Inspection of Radiator Cover

1. Make sure that there is no damage to the radiator cover.
2. Make sure that the radiator cover is not contaminated.

Cleaning of Radiator Cover

> **Important**
>
> An unclean radiator cover may cause overheating or damage to the engine.
> It may also cause malfunction of the hydraulic system.

If the radiator cover has been contaminated with dust, be sure to clean it.
After operating the machine in a dusty environment, it is important to remove dust from the cover as soon as possible.

1. Open the radiator cover.

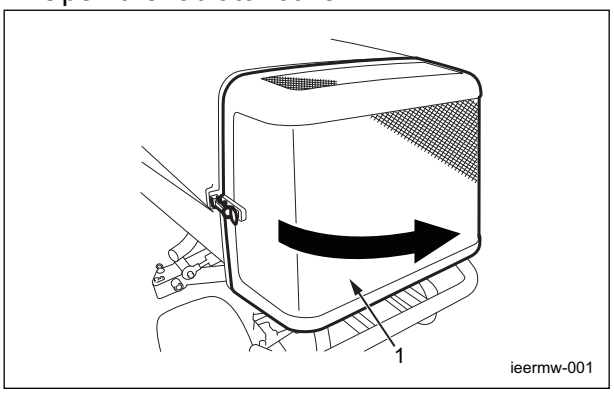

Cleaning of Radiator Cover_001

1	Radiator cover

2. Carefully clean the front and back of the radiator cover with water or compressed air.

https://truckmanualshub.com/

Radiator

Inspection of Radiator

For details on handling the engine, please refer to the separate Engine Operating Manual.

1. Make sure that there is no damage to the radiator.
2. Make sure that the radiator is not contaminated.

Cleaning of Radiator

For details on handling the engine, please refer to the separate Engine Operating Manual.

Important

An unclean radiator may cause overheating or damage to the engine.
It may also cause malfunction of the hydraulic system.

Important

Do not use solid objects, such as a spatula or screwdriver, or high-pressure water to clean the radiator or oil cooler.
Otherwise, special fins or tubes may be damaged, possibly resulting in reduced cooling performance or coolant leakage.

If the radiator has been contaminated with dust, be sure to clean it.
After operating the machine in a dusty environment, it is important to remove dust as soon as possible.

1. Open the radiator cover.
2. Unlock the rubber catches on the left and right of the oil cooler, and then tilt the oil cooler.

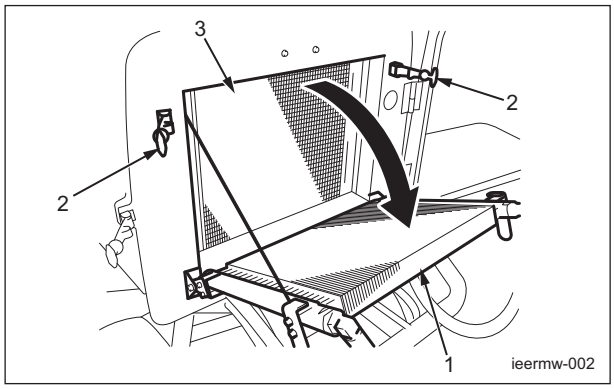

Cleaning of Radiator_001

1	Oil cooler
2	Rubber catch
3	Radiator

3. Carefully clean the front and back of the radiator with water or compressed air.

Coolant

Inspection of Coolant

For details on handling the engine, please refer to the separate Engine Operating Manual.

Warning

Do not touch the radiator or coolant during engine operation or right after the engine has been turned off.
Due to high temperatures, doing so could cause burns.

Caution

Inspection should take place after the engine has well cooled down.

1. Make sure that the coolant level in the reserve tank is between "Full" and "Low."

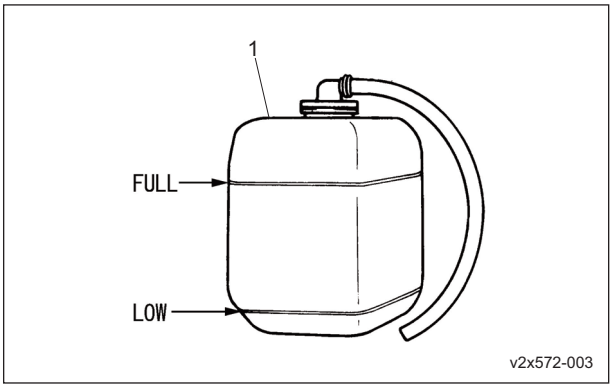

Inspection of Coolant_001

1	Reserve tank

https://truckmanualshub.com/

Coolant Supply

For details on handling the engine, please refer to the separate Engine Operating Manual.

Warning

Do not touch the radiator or coolant during engine operation or right after the engine has been turned off.
Due to high temperatures, doing so could cause burns.
After the radiator has well cooled down, open the radiator cap.

Caution

Supply coolant after the engine has well cooled down.

Caution

The radiator cap is pressurized.
If you remove the radiator cap while the engine is overheated, hot steam will burst out, possibly resulting in burns.
Make sure that the water temperature and pressure are reduced, and then grab the cap with a thick cloth and gradually open the cap.

Important

When you supply coolant, be sure to use clean water, such as tap water.
During winter, remove coolant. Alternatively, mix long-life coolant and clean water, and then pour it into the radiator and reserve tank.

Relationship between concentration of long-life coolant (LLC) and freezing temperature

Freezing temperature	LLC concentration (volume %)
Down to -10 °C (14 °F)	20%
Down to -15 °C (5°F)	30%
Down to -20 °C (-4 °F)	35%
Down to -25 °C (-13 °F)	40%

1. If the coolant level in the reserve tank is lower than the "LOW" mark, open the reserve tank cap and fill the tank with clean water up to the "FULL" mark.

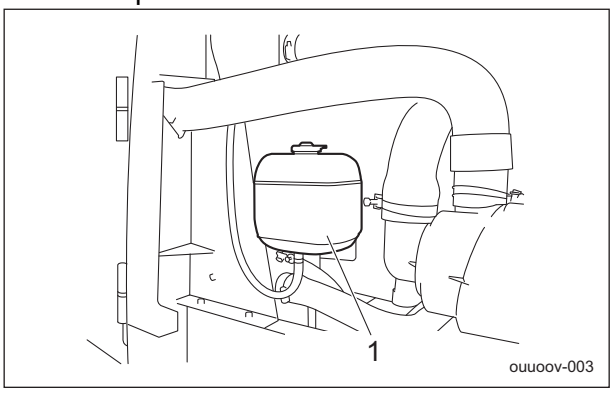

Coolant Supply_001

1	Reserve tank

2. If no coolant is in the reserve tank, follow the steps below to fill the tank with clean water.
   [1] Open the radiator cap, and then supply clean water up to the opening.
   [2] Open the reserve tank cap, and then supply clean water up to the "FULL" mark.

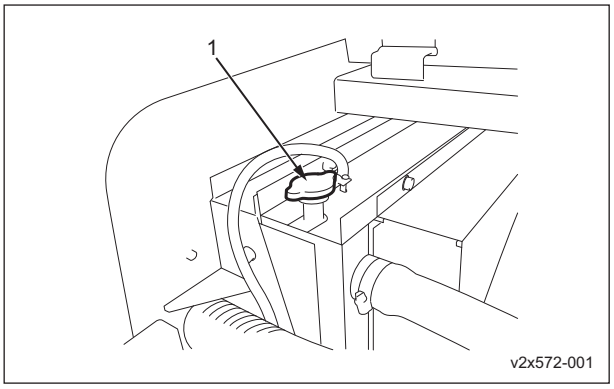

Coolant Supply_002

1	Radiator cap

https://truckmanualshub.com/

Change of Coolant

For details on handling the engine, please refer to the separate Engine Handling Manual.

Warning

When you replace the coolant, be sure to drain it into a bowl and discard it in accordance with local laws and regulations.

Warning

Do not touch the radiator or coolant during engine operation or right after the engine has been turned off.
Otherwise, you may get burned due to high temperatures.
After the radiator has well cooled down, open the radiator cap.

Caution

Change coolant after the engine has well cooled down.

Important

When you change coolant, be sure to use clean water, such as tap water.
During winter, remove coolant. Alternatively, mix long-life coolant and clean water, and then pour it into the radiator and reserve tank.

For details on changing coolant, please refer to the separate Engine Operating Manual.
Coolant quantity, including that of the reserve tank, is 12.0 dm^3 (12.0 L).

Oil cooler

Inspection of Oil Cooler

1. Make sure that there is no damage to the oil cooler.
2. Make sure that the oil cooler is not contaminated.

Cleaning of Oil Cooler

Caution

An unclean oil cooler may cause overheating or damage to the engine.
It may also cause malfunction of the hydraulic system.

Important

Do not use solid objects, such as a spatula or screwdriver, or high-pressure water to clean the radiator or oil cooler.
Otherwise, special fins or tubes may be damaged, possibly resulting in reduced cooling performance or coolant leakage.

If the oil cooler has been contaminated with dust, be sure to clean it.
After operating the machine in a dusty environment, it is important to remove dust as soon as possible.

1. Open the radiator cover.
2. Unlock the rubber catches on the left and right of the oil cooler, and then tilt the oil cooler.

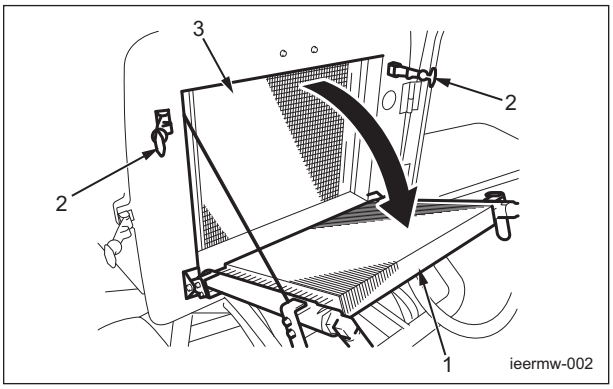

Cleaning of Oil Cooler_001

1	Oil cooler
2	Rubber catch
3	Radiator

3. Carefully clean the front and back of the oil cooler with water or compressed air.

https://truckmanualshub.com/

Fan, Fan Belt

Inspection of Fan and Fan Belt

> **Caution**
>
> The engine must be stopped when the belt is inspected.

> **Caution**
>
> If you have removed the cover during inspection and maintenance, make sure that you replace it in the original position securely. If the cover remains removed, the operator may come in contact with the rotating objects or belt, possibly resulting in injuries.

> **Important**
>
> A slacking or damaged belt or damaged fan may cause overheating or lack of a battery charge.

Inspect the fan and fan belt with the engine stopped and before starting it.

1. Follow the steps below to perform the inspection and repair procedure, according to the periodic inspection schedule.
   [1] Inspect the belt for cracks or peeling and inspect the fan blades for scratches or cracks, and then replace with a new one if there is any damage.
   [2] If a shield was installed, securely re-attach it.
   [3] Adjust the belt tension so that the belt slacks by approximately 7 - 9 mm (0.28 - 0.35 in) when you press the middle of the belt with your finger at 98.07 N (10 kgf, 22.05 lbf).
   [4] If there is too much slack, loosen bolts A and B (that fix the alternator), and then move the alternator to adjust the tension. After making adjustments, firmly tighten bolts A and B.

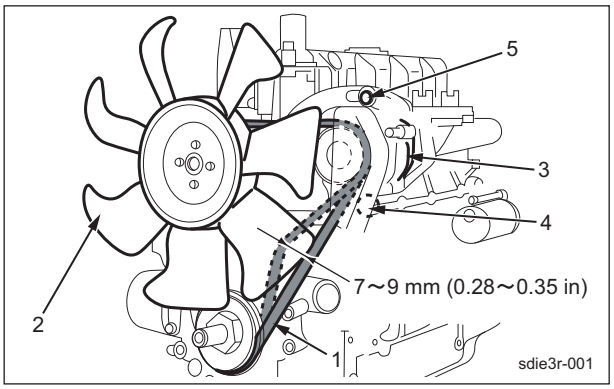

Inspection of Fan and Fan Belt_001

1	Belt
2	Blade
3	Alternator
4	Bolt A
5	Bolt B

https://truckmanualshub.com/

Air Cleaner

Inspection of Air Cleaner

For details on handling the engine, please refer to the separate Engine Operating Manual.
The air cleaner is a component that removes dirt from the intake air to prevent wear of the cylinder liners and piston rings so that the engine will always operate smoothly.
A contaminated air cleaner element may cause malfunction of the engine.

1. Inspect the air cleaner by checking the vacuum indicator.
   If the air cleaner element is contaminated, the vacuum indicator will display a red ring.

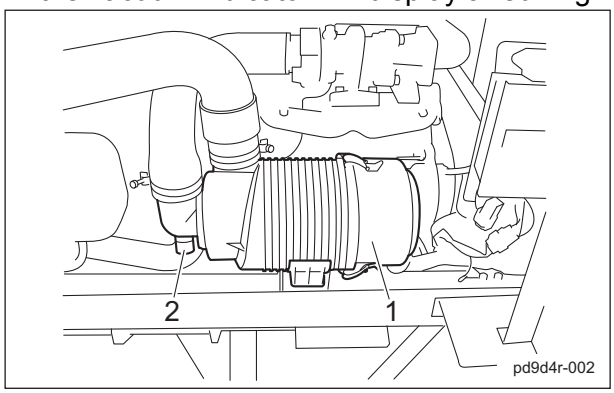

Inspection of Air Cleaner_001

1	Air cleaner
2	Vacuum indicator

2. Make sure that there is no damage to the air cleaner.
3. Make sure that the air cleaner is not contaminated.

Cleaning of Air Cleaner

For details on handling the engine, please refer to the separate Engine Operating Manual.
A contaminated air cleaner element may cause malfunction of the engine.
To maximize the life of the engine, clean the air cleaner properly.

1. Follow the steps below to clean the air cleaner.
   [1] Remove the clips from the two locations, remove the air cleaner cap, and then remove the air cleaner element.
   [2] While paying close attention not to damage the air cleaner element, tap a solid portion of the air cleaner element or blow air from its inside to remove dust and dirt.
   If the air cleaner element is extremely contaminated, replace it with a new one.
   [3] Attach the air cleaner element to the air cleaner body.
   [4] Re-place the air cleaner cap, and then affix it securely using the clips.

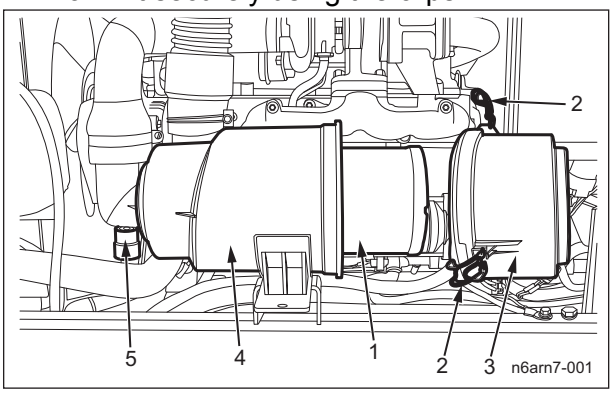

Cleaning of Air Cleaner_001

1	Air cleaner element
2	Clip
3	Air cleaner cap
4	Air cleaner body
5	Vacuum indicator

2. Press the reset button for the vacuum indicator.

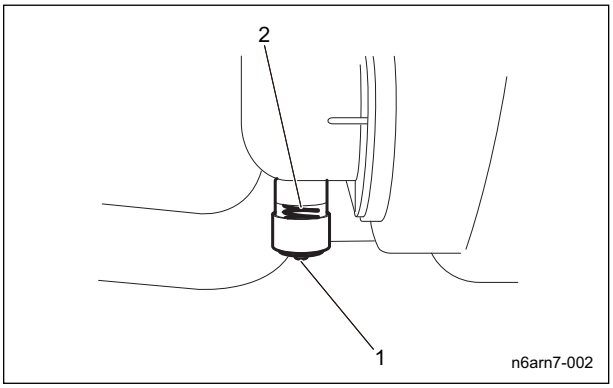

Cleaning of Air Cleaner_002

1	Reset button
2	Vacuum indicator

https://truckmanualshub.com/

Change of Air Cleaner

For details on handling the engine, please refer to the separate Engine Operating Manual.
A contaminated air cleaner element may cause malfunction of the engine.
To maximize the life of the engine, replace the air cleaner element at the appropriate times.

1. The timing for replacing the air cleaner element is described below.
   [1] Replace the air cleaner element in accordance with the Maintenance Schedule.
   [2] If it is significantly contaminated, replace it, even if the hours of operation do not exceed the specified time.
   [3] Even if the hours of operation do not exceed the specified time, change it at least once per year.
2. Replace the air cleaner element in the same manner as cleaning the air cleaner. (See "Cleaning of Air Cleaner" (Page 4-10) .)

Fuel filter

Replacement of Fuel Filter

> **Important**
>
> When installed, be careful that it is not contaminated with dirt or dust.
> If the fuel is contaminated with dirt or dust etc., the fuel injection pump and injection nozzle will become worn.

Since the fuel filter is a cartridge, it cannot be disassembled or cleaned.
Every 500 hours or when the fuel flow becomes insufficient, replace the fuel filter.

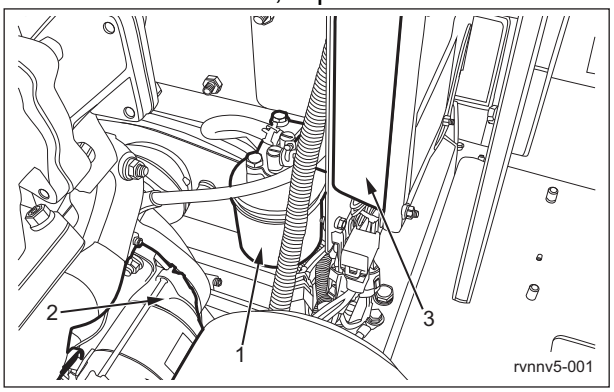

Replacement of Fuel Filter_001

1	Fuel filter
2	Starter
3	Relay box

1. Follow the steps below to replace the fuel filter.
   [1] Using a filter wrench, remove the fuel filter cartridge.
   [2] Lightly apply fuel to the packing of the new cartridge, and then properly hand-tighten the cartridge, without using the filter wrench.

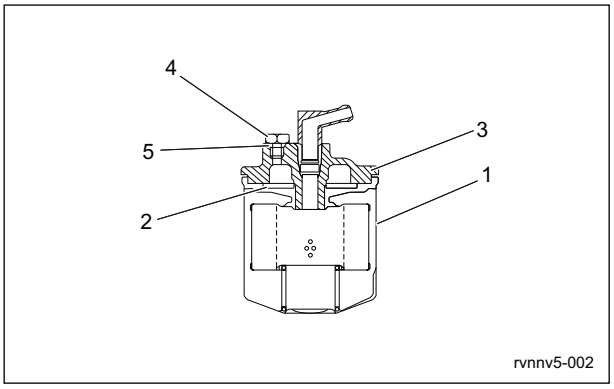

Replacement of Fuel Filter_002

https://truckmanualshub.com/

1	Cartridge
2	Packing
3	Cover
4	Air-bleeding plug
5	O-ring

2. If the key is turned to the "ON" position and the fuel pump is operated after replacement, air bleeding will occur automatically.

Fuel pipe

Inspection of Fuel Hose

Danger

A damaged fuel hose may result in fuel leakage or fire.

Inspect the fuel hose and the tightening state of the fuel hose clamp after the first 50 hours of operation, then after every 100 hours of operation or every 6 months, whichever comes first.

1. Follow the steps below to perform the inspection and repair procedure, according to the periodic inspection schedule.
   [1] If the clamp is loose, apply oil to the threaded end, and then firmly tighten it.
   [2] If the fuel hose or clamp is damaged or the fuel hose is not securely installed, repair or replace it as soon as possible.
   [3] The fuel hose is made of rubber and is a consumable that ages, even if it is not used.
   Replace it with a new one every 2 years. At the same time, also replace the clamp with a new one and firmly tighten it.
   Note:
   Air bleeding is not necessary with this machine. Air bleeding will occur automatically.

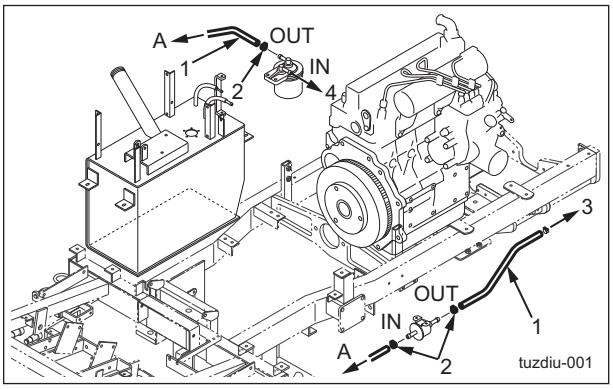

Inspection of Fuel Hose_001

1	Fuel hose
2	Clamp
3	Engine
4	Fuel tank

Engine Oil

Recommended Oil

Do not use special additives.
Be sure to use Grade CF or higher when using Kubota genuine oil.
Use D10W-30 Super CF (all-season) at temperatures less than 15 °C, and use D30 Super CF or D10W-30 Super CF at temperatures of 15 °C or more.

Important

Do not mix different types of engine oil.

Be sure to use engine oil that is classified as API Service Grade CF or higher, with an SAE viscosity that is appropriate for the operating environment (ambient temperature).

Inspection of Engine Oil

Important

Securely tighten the oil level gauge and oil filler cap.

1. Stop the engine, wait for 10 to 20 minutes for the engine to cool down, and then check the oil level.

https://truckmanualshub.com/

2. Position the machine so that the engine will be level, and then insert the oil level gauge all the way to check the oil level.

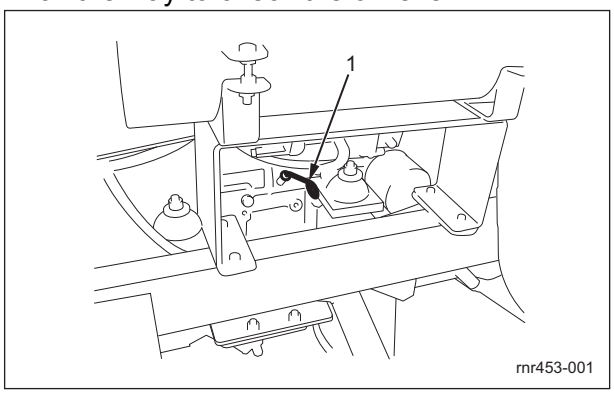

Inspection of Engine Oil_001

1	Oil gauge

3. The appropriate oil level should be between the upper and lower limit lines on the gauge.

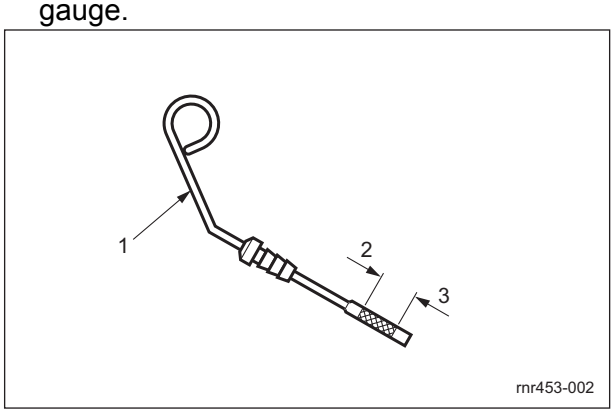

Inspection of Engine Oil_002

1	Oil level gauge
2	Upper limit
3	Lower limit

Supply of Engine Oil

For details on handling the engine, please refer to the separate Engine Handling Manual.

Important

Do not fill too much engine oil. Otherwise, the engine may be damaged.

Important

Do not mix different types of engine oil.

Important

Be sure to use engine oil that is classified as API Service Grade CF or higher, with an SAE Viscosity that is appropriate for the operating environment (ambient temperature).

Important

Securely tighten the oil level gauge and oil filler cap.
If they are insufficiently tightened or there is an insufficient seal, negative pressure inside the crankcase cannot be maintained, causing the oil to rise, possibly resulting in the production of white smoke and damage to the engine.

1. If the engine oil level is lower than the lower limit line on the oil level gauge, supply engine oil through the oil filling port. Remove the oil filler cap, and then supply new engine oil until the oil reaches a level in between the upper and lower limit lines on the oil level gauge.
2. Re-place the oil filler cap.

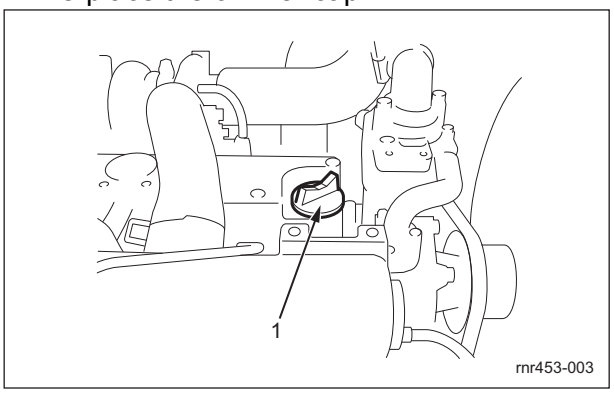

Supply of Engine Oil_001

1	Oil filler cap

https://truckmanualshub.com/

3. It will take a while for the supplied engine oil to descend into the oil pan.
   Check the oil level again 10 to 20 minutes after supplying the oil.

Change of Engine Oil

For details on handling the engine, please refer to the separate Engine Operating Manual.

Warning

When you change the engine oil, be sure to drain it into a bowl and discard it in accordance with local laws and regulations.

Caution

Be careful with hot oil, which could cause burns if it contacts your skin.

Important

Be sure to use engine oil that is classified as API Service Grade CF or higher, with an SAE Viscosity that is appropriate for the operating environment (ambient temperature).

Important

Securely tighten the oil level gauge and oil filler cap.
If they are insufficiently tightened or there is an insufficient seal, negative pressure inside the crankcase cannot be maintained, causing the oil to rise, possibly resulting in the production of white smoke and damage to the engine.

Change the engine oil more frequently, if the engine oil is contaminated, and especially if you use the machine in dusty areas or operate the engine at high loads or in high temperatures.

1. Move the machine onto a level surface, stop the engine, remove the drain plug while the engine oil is warm, and then drain the oil into a bowl.

https://truckmanualshub.com/

2. Re-place the drain plug in the engine.

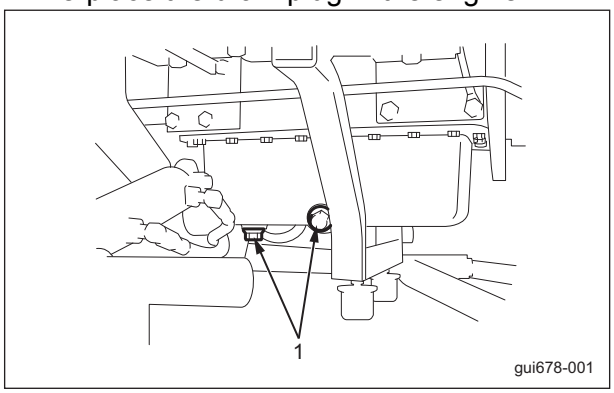

Change of Engine Oil_001

1	Drain plug

3. Through the oil filling port, supply new engine oil until the oil reaches a level in between the upper and lower limit lines on the oil level gauge.
   Engine oil quantity is approximately 10.0 dm^3 (10.0 L).
4. Re-place the oil filler cap.

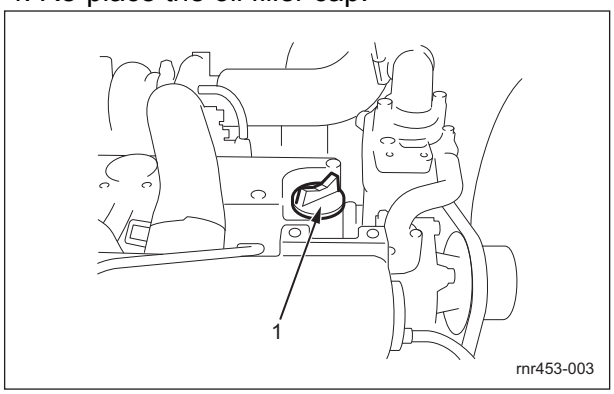

Change of Engine Oil_002

1	Oil filler cap

5. It will take a while for the supplied engine oil to descend into the oil pan.
   Check the oil level again 10 to 20 minutes after supplying the oil.

■Timing for Replacing Engine Oil

Periodically replace the engine oil.

Timing for Replacing	First time	After 50 hrs of operation
	Second time and later	Every 100 hrs of operation
Viscosity	Normally (outside air temperature of 15 °C or more)	SAE 30 SAE 10W-30
	Winter (outside air temperature of less than 15 °C)	SAE 10W-30
Grade	API Service Grade CF or higher for diesel engines	
Tank capacity	When only replacing oil	9.5 L (2.51 U.S. gals)
	When replacing together with filter	9.7 L (2.56 U.S. gals)

https://truckmanualshub.com/

Engine oil filter

Replacement of Engine Oil Filter

> ⚠ Caution
>
> Be careful with hot oil, which could cause burns if it contacts your skin.

1. Remove the oil filter.

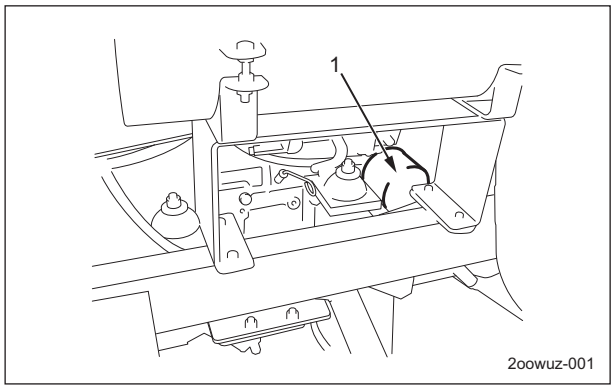

Replacement of Engine Oil Filter_001

1	Oil filter

2. Apply engine oil lightly to the gasket of a new oil filter, then screw in the oil filter by hand until the gasket touches the adapter. Use a wrench to further screw in the oil filter by a one-half or three-quarter rotation.
3. Check the oil level 10 to 20 minutes after changing the oil filter.
   If the oil level is insufficient, add engine oil until the oil reaches a level in between the upper and lower limit lines on the oil level gauge.

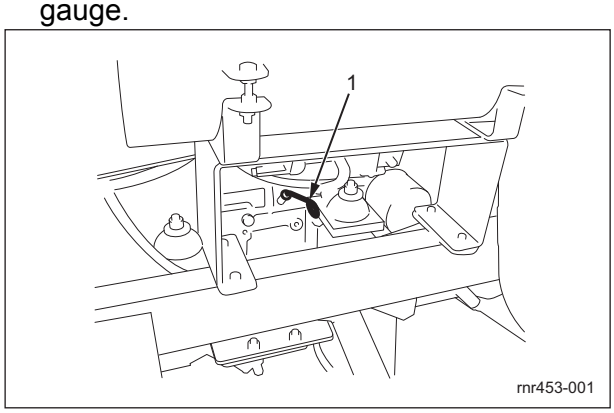

Replacement of Engine Oil Filter_002

1	Oil level gauge

4. Start the engine, and check for any oil leakage.

▪Engine Oil Filter Replacement Frequency

Replace the engine oil filter periodically.

Timing	First time	After 50 hours of operation
	Second time and afterwards	Every 100 hours of operation

Removal and installation of each section

Engine

Removal of Engine

1. Disconnect the negative battery terminal.
2. Remove the rear cover. (See "Removal of Rear Cover" (Page 7-34) .)

> Important
>
> Be careful that removed parts do not fall into the engine.

3. Follow the steps below to remove the throttle wire.
   [1] Remove the cotter pin from the speed adjustment lever on the engine.
   [2] Remove the washer and the flat-head pin.
   [3] Remove the nut.
   [4] Remove the throttle wire.

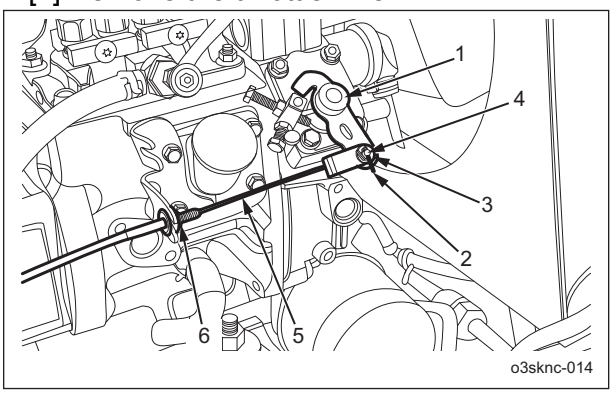

Removal of Engine_001

1	Speed adjustment lever
2	Cotter pin
3	Washer
4	Flat-head pin
5	Throttle wire
6	Nut

https://truckmanualshub.com/

4. Remove the four bolts.

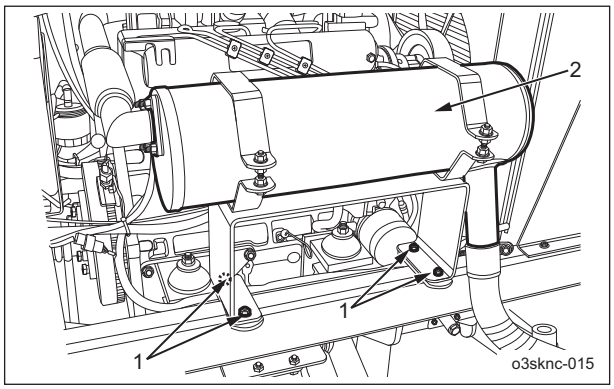

Removal of Engine_002

1	Bolt
2	Muffler

5. Remove the four bolts from the muffler exhaust pipe on the left side of the machine, and then remove the muffler and muffler exhaust pipe at the same time.

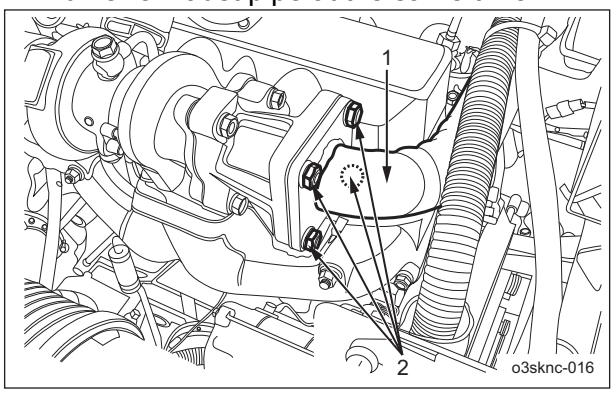

Removal of Engine_003

1	Muffler exhaust pipe
2	Bolt

6. Disconnect the wire from the stop solenoid.

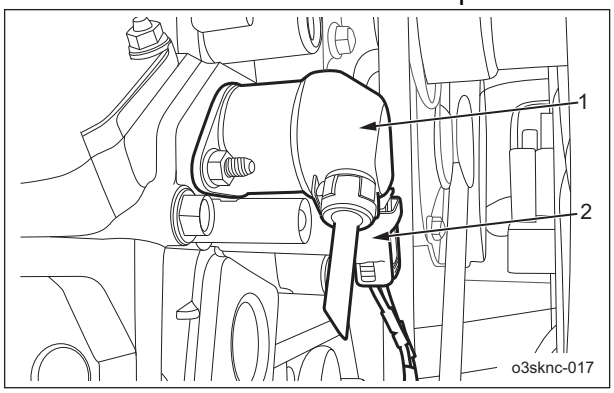

Removal of Engine_004

1	Stop solenoid
2	Wire

7. Disconnect the battery ground wire and the ground wire.

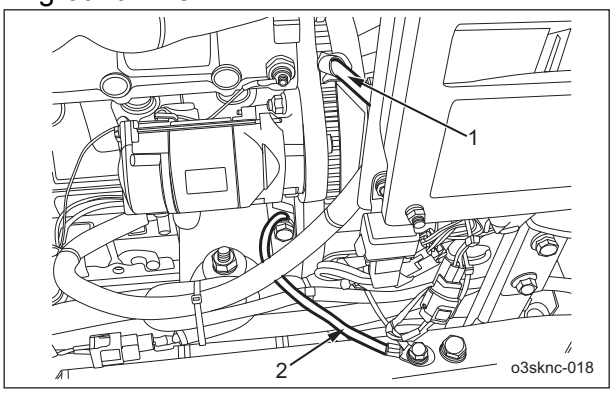

Removal of Engine_005

1	Battery ground wire
2	Ground wire

8. Disconnect the glow wire, the wire for tachometer sensor, and the wire for water temperature gauge sensor.

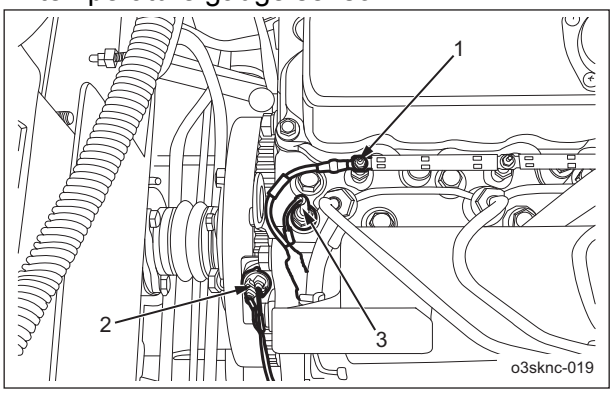

Removal of Engine_006

1	Glow wire
2	Wire for tachometer sensor
3	Wire for water temperature gauge sensor

https://truckmanualshub.com/

9. Disconnect the water temperature sensor wire for the buzzer and the alternator wires.

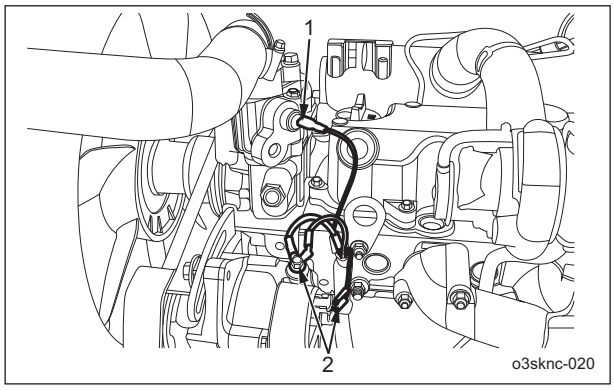

Removal of Engine_007

1	Water temperature sensor wire for buzzer
2	Alternator wires

10. Disconnect the oil pressure switch wire and the starter wire.

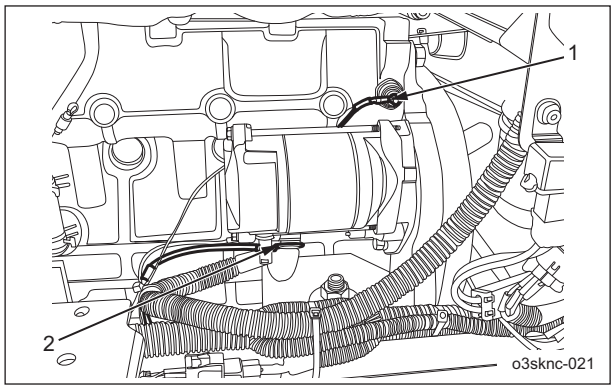

Removal of Engine_008

1	Oil pressure switch wire
2	Starter wire

11. Remove the fuel hoses, and then plug the openings so that there is no fuel leakage.

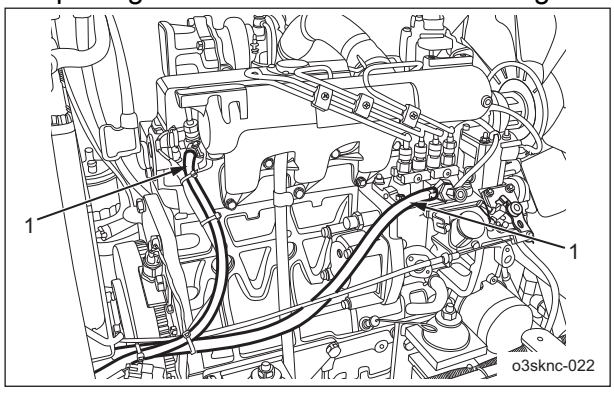

Removal of Engine_009

1	Fuel hoses

12. Follow the steps below to remove the air cleaner.
    [1] Remove the hoses.
    [2] Remove the bolt, and then remove the air cleaner.

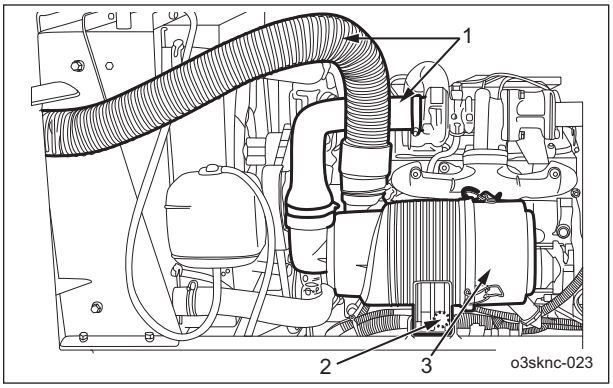

Removal of Engine_010

1	Hoses
2	Bolt
3	Air cleaner

13. Remove the bolt and the spring washer, and then separate the engine flywheel and flywheel adapter.

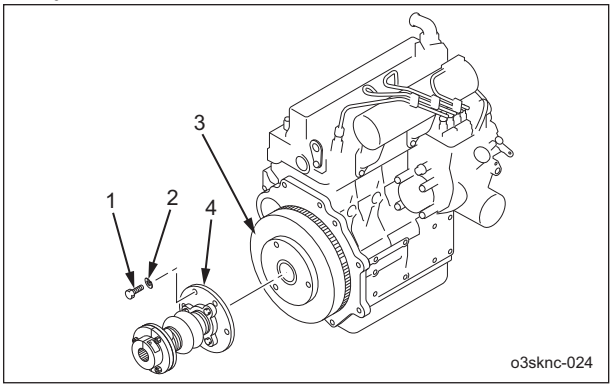

Removal of Engine_011

1	Bolt
2	Spring washer
3	Flywheel
4	Flywheel adapter

https://truckmanualshub.com/

Important

When removing the adjustment washers, check their positions and the quantity.

14. Remove the nuts, spring washers, washers, bolts, engine mounts and adjustment washers securing the four engine brackets, two each on the left and right sides of the engine.

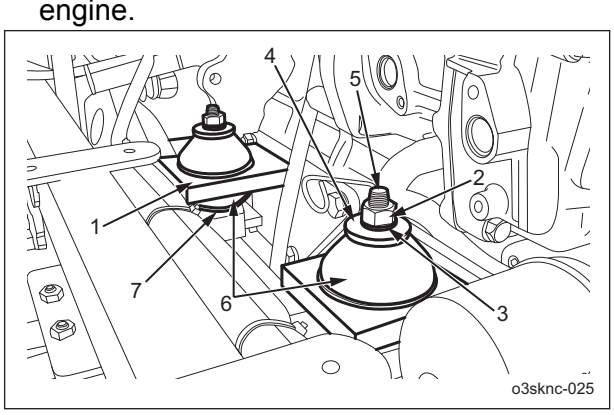

Removal of Engine_012

1	Engine bracket
2	Nut
3	Spring washer
4	Washer
5	Bolt
6	Engine mount
7	Adjustment washer

Important

Be sure to use hooks and hoist fittings that are adequately strong.

Important

Make sure that the wires and hoses etc. have been removed from the engine.

15. Secure the hooks to the engine lifting lugs, and then raise the engine to remove it.

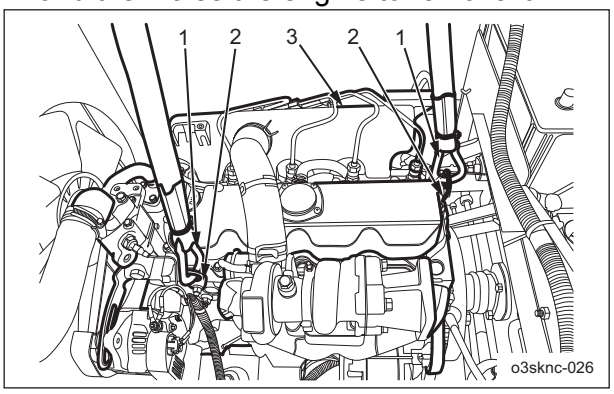

Removal of Engine_013

1	Lifting lugs
2	Hook
3	Engine

Installation of Engine

Caution

See the list in "Tightening torques" (Page 3-5) .
Note that the Baroness product warranty may not apply to defects caused by incorrect or overtorque tightening etc.

Important

Be careful not to pinch wires or hoses.

Important

Be sure to install the same quantity of adjustment washers at their original positions.

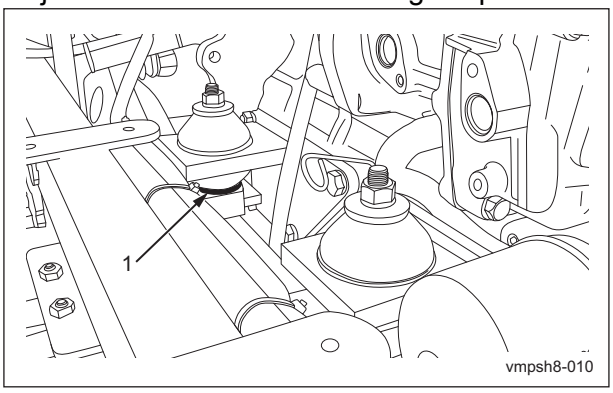

Installation of Engine_001

1	Adjustment washer

For installation, reverse the removing procedure.

https://truckmanualshub.com/

Radiator

Removal of Radiator

> **Warning**
>
> Do not touch the radiator, coolant, engine or muffler during engine operation or right after the engine has been turned off.
> Otherwise, you may get burned due to high temperatures.
> Make sure that the engine is cool enough before you start the operation.

1. Remove the rear cover. (See "Removal of Rear Cover" (Page 7-34) .)
2. Remove the muffler. (See "Removal of Engine" (Page 4-16) .)
3. Remove the air cleaner. (See "Removal of Engine" (Page 4-16) .)

> **Warning**
>
> Do not touch the radiator or coolant during engine operation or right after the engine has been turned off.
> Otherwise, you may get burned due to high temperatures.
> After the radiator has well cooled down, open the radiator cap.

> **Warning**
>
> When you replace the coolant, be sure to drain it into a bowl and discard it in accordance with local laws and regulations.

4. Remove the coolant. (See "Change of Coolant" (Page 4-8) .)
5. Follow the steps below to remove the reserve tank.
   [1] Loosen the hose bands, and then remove the upper water hose, lower water hose, reserve tank hose and radiator drain hose A from the radiator.
   [2] Lift up the reserve tank to remove it.

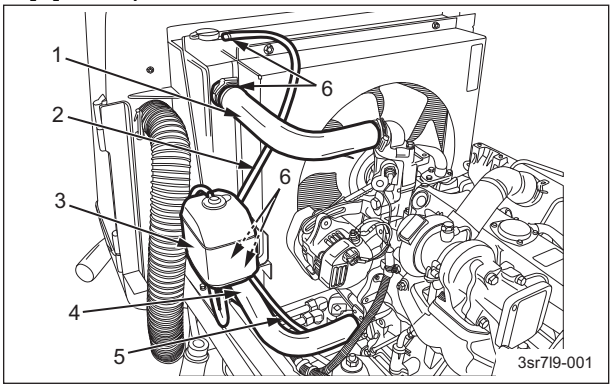

Removal of Radiator_001

1	Upper water hose
2	Reserve tank hose
3	Reserve tank
4	Lower water hose
5	Radiator drain hose A
6	Hose band

6. Follow the steps below to remove the shroud.
   [1] Loosen the hose band, and then remove the radiator drain hose B from the radiator.
   [2] Remove bolts A, and then remove the shroud from the radiator.

https://truckmanualshub.com/

[3] Remove bolts B, the washers and the spring washers.

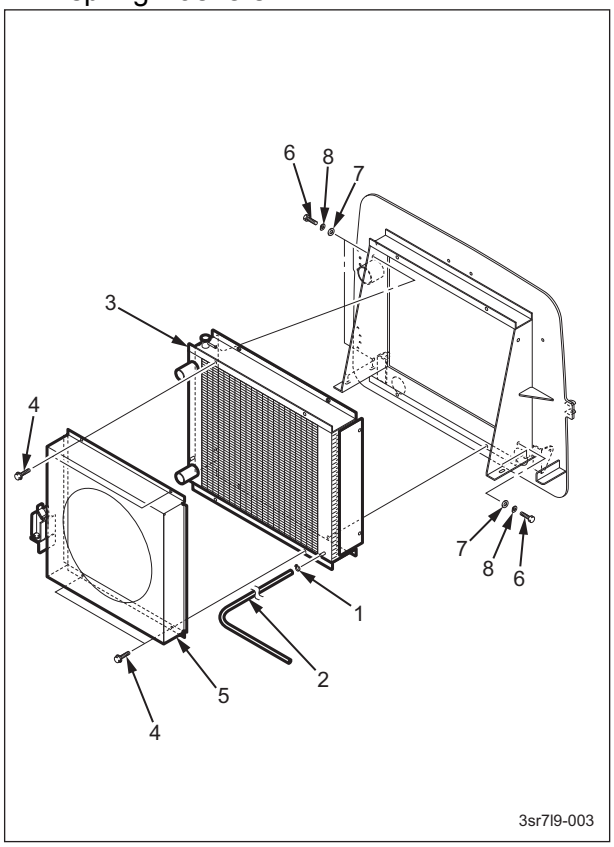

Removal of Radiator_002

1	Hose band
2	Radiator drain hose B
3	Radiator
4	Bolt A
5	Shroud
6	Bolt B
7	Washer
8	Spring washer

7. Follow the steps below to remove the cable.
   [1] Unlock rubber hook A, and then open the radiator cover.
   [2] Unlock rubber hooks B on the left and right sides, and then open the oil cooler.
   [3] Remove the nut, spring washer, washers and the bolt, and then remove the cable.

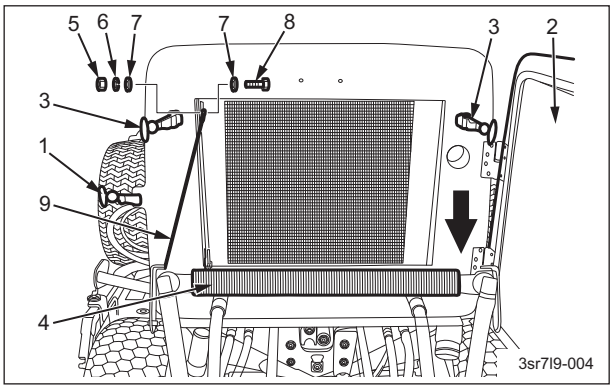

Removal of Radiator_003

1	Rubber hook A
2	Radiator cover
3	Rubber hook B
4	Oil cooler
5	Nut
6	Spring washer
7	Washer
8	Bolt
9	Cable

8. Remove the two bolts A at the top of the radiator mounting frame.

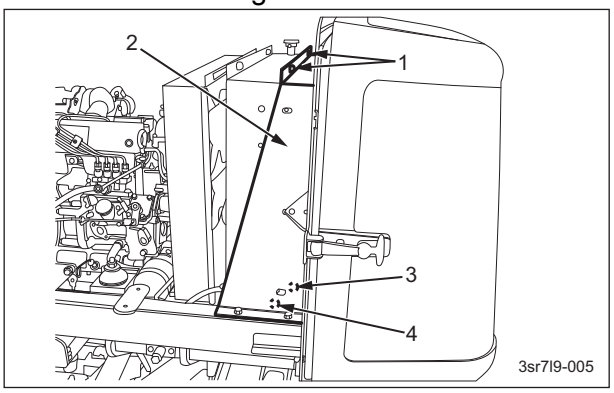

Removal of Radiator_004

1	Bolt A
2	Radiator mounting frame
3	Bolt B
4	Bolt C

https://truckmanualshub.com/

9. Tilt the shroud as shown, insert your hand at the area indicated by the arrow, and then remove bolt B at the lower right of the radiator.

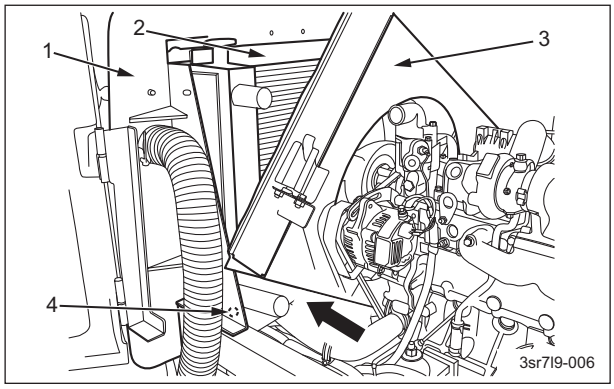

Removal of Radiator_005

1	Radiator mounting frame
2	Radiator
3	Shroud
4	Bolt B

10. Return the oil cooler to its original position, securely lock the rubber hooks, insert your hand at the area indicated by the arrow, and then remove bolt C on the radiator.

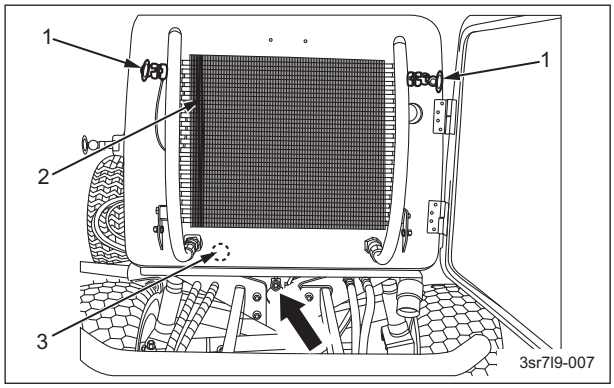

Removal of Radiator_006

1	Rubber hook
2	Oil cooler
3	Bolt C

Caution

When lifting the radiator, be careful that the radiator core is not damaged.

Important

Make sure not to forget to remove any bolts.

11. Move the shroud as far forward as possible, and then lift the radiator in the direction of the arrow to remove it.

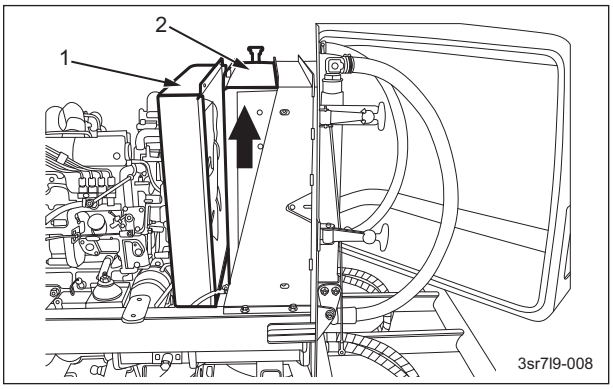

Removal of Radiator_007

1	Shroud
2	Radiator

https://truckmanualshub.com/

Installation of Radiator

Caution

See the list in "Tightening torques" (Page 3-5) .
Note that the Baroness product warranty may not apply to defects caused by incorrect or overtorque tightening etc.

Important

Supply coolant. (Refer to the Engine Operating Manual.)

Important

Install the cable with enough clearance that it can move freely, and then tighten the lock nut.

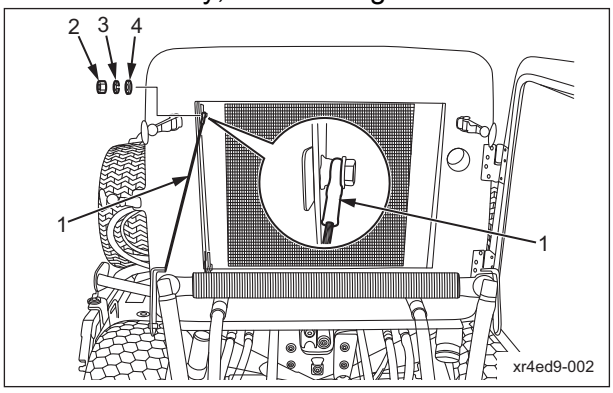

Installation of Radiator_001

1	Cable
2	Lock nut
3	Spring washer
4	Washer

For installation, reverse the removing procedure.

https://truckmanualshub.com/

https://truckmanualshub.com/

Hydraulic system

Maintenance..... Page 5-2

About Maintenance.....Page 5-2

Specifications..... Page 5-3

Specifications.....Page 5-3
Adjusted Value..... Page 5-4
Hydraulic System Layout.....Page 5-5
Flow of Hydraulic Oil.....Page 5-8

General instructions.....Page 5-11

Hydraulic hose..... Page 5-11
Hydraulic fitting..... Page 5-11
Towing..... Page 5-16
Neutral..... Page 5-16
Depressurization.....Page 5-16
Hydraulic circuit failure.....Page 5-16

Hydraulic circuit flow..... Page 5-17

Traveling circuit.....Page 5-17
Raise/lower circuit.....Page 5-19
Steering circuit..... Page 5-21
Rotary Knife Rotation Circuit..... Page 5-23

Special Tool.....Page 5-24

Special Tools List.....Page 5-24

Measurement.....Page 5-29

Note..... Page 5-29
Traveling Circuit.....Page 5-30
Up/Down circuit.....Page 5-33
Steering Circuit..... Page 5-35
Charge Circuit.....Page 5-37
Rotary Knife Rotation Circuit..... Page 5-39
Rotary Knife Rotation Motor Circuit..... Page 5-43

Adjustment..... Page 5-46

Assist Valve..... Page 5-46

General inspection and repair..... Page 5-48

Note..... Page 5-48
Hydraulic hose, piping..... Page 5-49
Hydraulic Oil..... Page 5-49
Air bleeding.....Page 5-50

Inspection and repair of each section..... Page 5-51

Hydraulic Oil..... Page 5-51
Hydraulic oil filter..... Page 5-53

Removal and installation of each section..... Page 5-54

Gear Motor.....Page 5-54
Slow Return Valve..... Page 5-62
Raise/lower cylinder.....Page 5-63
Assist Valve..... Page 5-65
Wheel motor..... Page 5-66
Control Valve..... Page 5-71
Diff-lock valve..... Page 5-72
Gear Pump..... Page 5-74
Piston pump.....Page 5-75
Rotary Knife Rotation Valve..... Page 5-78
2WD/4WD Changeover Valve..... Page 5-79
Oil cooler.....Page 5-81
Steering Cylinder..... Page 5-83
Charge Control Valve..... Page 5-85
Fuel Port Breather..... Page 5-86
Orbitrol.....Page 5-87
Hydraulic tank.....Page 5-88

https://truckmanualshub.com/

Maintenance

About Maintenance

This chapter provides descriptions of the main inspection and maintenance operations for the GM2800B hydraulic system.
For information on daily checks, maintenance and handling of the machine, please refer to the separate GM2800B Owner's Operating Manual and Parts Catalog.
In order to maintain the integrity of the hydraulic device, it cannot be disassembled and repaired.
For those parts that must be repaired by the manufacturer, the disassembly and repair procedure is not described in this manual.
Request repairs for those parts from your dealer or Baroness.
Please note that our product warranty may be void if you disassemble or repair the device.

https://truckmanualshub.com/

Specifications

Specifications

HST	EATON 72400		
	Piston pump	Displacement	0 - 49.2 cm^3/rev (0 - 3.0 in^3/rev)
		High-pressure relief set pressure	24.1 MPa (3,495.28 psi)
	Charge pump	Displacement	17.2 cm^3/rev (1.05 in^3/rev)
		Charge relief set pressure	1.7 - 2.1 MPa (246.54 - 304.55 psi)
Gear pump	EATON PBB55RK513 gear pump		
	Front (P1)	Displacement	19.0 cm^3/rev (1.16 in^3/rev)
	Rear (P2)	Displacement	19.0 cm^3/rev (1.16 in^3/rev)
	Engine area (P3)	Displacement	8.14 cm^3/rev (0.50 in^3/rev)
Wheel motor	EATON orbit motor		
	Front wheel motor	Displacement	495.0 cm^3/rev (30.05 in^3/rev)
	Rear wheel motor	Displacement	195.0 cm^3/rev (11.90 in^3/rev)
Rotary motor	EATON MB gear motor		
	Gear motor MB6LK389	Displacement	22.2 cm^3/rev (1.35 in^3/rev)
Steering control unit	LC-D1-E w/EATON VP31XM070B		
	Orbitrol LC-D1-E	Displacement	96.0 cm^3/rev (5.83 in^3/rev)
		Relief set pressure	6.9 MPa (1,000.73 psi)
Knife rotation valve	EATON V5342		
		Relief set pressure	20.7 MPa (3,002.19 psi)
		Flow	42.0 L/min (11.1 US gallons/min)
Solenoid valve	EATON V4205		
		Relief set pressure	3.1 MPa (449.60 psi)
		Flow	150.0 L/min (39.75 US gallons/min)

https://truckmanualshub.com/

Hydraulic system

Control valve (Mower unit up/ down)	EATON		
		Relief set pressure	15.2 MPa (2,204.51 psi)
		Flow	16.5 L/min (4.34 US gallons/min)
Hydraulic tank capacity	44.0 L (11.62 US gallons)		
Hydraulic line filter	10μm cartridge type		
Hydraulic oil	Shell Tellus S2M46 or equivalent (ISO VG46)		

Adjusted Value

Assist valve	Low pressure side: 2.4 MPa (348.08 psi)	Under the driver's seat
	High pressure side: 3.0 MPa (435.10 psi)	

Adjustment of Assist Valve

See ("Adjustment" (Page 5-46)) for method for adjustment.

https://truckmanualshub.com/

Hydraulic System Layout

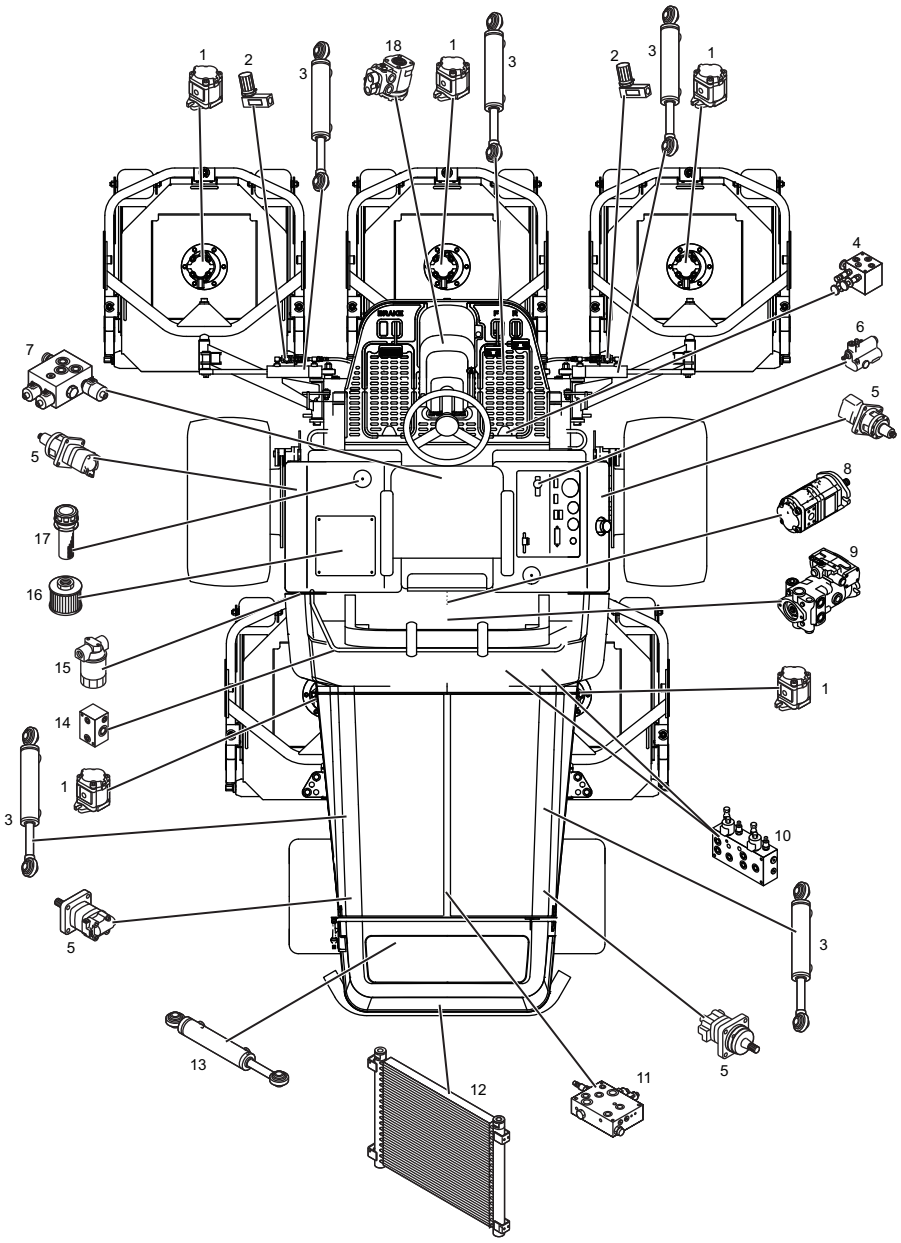

Hydraulic System Layout_001

1	Gear motor	7	Diff-lock valve (V4200)	13	Steering cylinder
2	Slow return valve	8	Gear pump	14	Charge control valve (V5267)
3	Up/down cylinder	9	Piston pump	15	Cartridge filter
4	Assist valve (V5266)	10	Rotary knife rotation valve (V5342)	16	Suction filter
5	Wheel motor	11	2WD/4WD changeover valve (V4205)	17	Filler neck breather
6	Control valve	12	Oil cooler	18	Orbitrol

https://truckmanualshub.com/

Hydraulic system

1. Gear motor
   This is located in each unit to rotate the rotary knife. These convert the fluid energy from the pump to mechanical energy (rotation motion) by using two gears.
2. Slow return valve
   These valves control the flow by changing the size of the aperture in the hydraulic circuit and control the speed of the actuator (hydraulic cylinder).
3. Up/down cylinder
   This is located in each unit arm to raise and lower the unit. These convert the fluid energy from the pump to mechanical energy (reciprocating motion).
4. Assist valve (V5266)
   Using a relief valve to maintain a constant pressure in the up/down cylinders, this switches between two stages, depending on the travel fluid pressure.
   In addition, a solenoid valve enables the fluid to bypass in order to relieve the pressure.
   This is located under the seat.
5. Wheel motor
   This converts the fluid energy from the pump to mechanical energy (rotation motion) in order to directly drive the machine.
   This is located at each wheel.
6. Control Valve
   This is located within reach at the right side of the seat and used for raising and lowering the units. This decreases the operating force by activating the internal spool valve using the fluid energy from the manual switch valve.
7. Diff-lock valve (V4200)
   When fluid energy is to be distributed over two or more lines, this valve divides the flow at a fixed ratio, regardless of the pressure in each line.
   This is located above the front axle of the front wheel.
8. Gear pump
   This converts the mechanical energy (rotation motion) of the engine to fluid energy by using two gears.
   This is located behind the main pump.
9. Piston pump
   This converts the mechanical energy of the engine to fluid energy by using the reciprocating motion of the piston.
   This is located at the center of the machine in front of the engine.
10. Rotary knife rotation valve (V5342)
    Depending on whether the solenoid valves are opened or closed, these valves operate to rotate or to stop the rotary knives.
    These valves are equipped with a counterbalance valve that controls braking for the rotation of the rotary knife when it is stopped.
    These are located behind the seat and to the right.
    *Solenoid valve
    Turning on/off electricity causes this combination of an electromagnet and a valve to stop, circulate or change the flow direction of fluid.
11. 2WD/4WD changeover valve (V4205)
    This valve controls the vehicle drive with multiple valves switching the passage of fluid energy from the piston pump to wheel motors at either four wheels or two wheels in parallel.
    This is located between the rear wheels.
12. Oil cooler
    This cools the high-temperature oil.
    This is located behind the engine, at the tail end of the machine.
13. Steering cylinder
    This is located between the rear wheels.
    According to the control valve that is activated depending on the steering operation, the flow of the fluid from the hydraulic pump is changed to steer the vehicle to the left or right.
14. Charge control valve (V5267)
    This valve maintains the pressure by integrating another flow in order to avoid negative pressure if the flow is insufficient when the rotary knife rotation is in a closed circuit. This is located under the center of the machine and toward the left.
15. Cartridge filter
    This removes dirt or dust in the outgoing fluid.
    This fulfills an essential role since elements that could cause major problems may be circulated if there was no filter.
    This is located behind the left front wheel.

https://truckmanualshub.com/

16. Suction filter
    Installed at the suction side of the pump, this fulfills the major role of preventing the oil from being contaminated with impurities.
    This is located in the hydraulic tank.
17. Filler neck breather
    While hydraulic mechanisms are functioning, the oil level is regularly raised and lowered. In addition, due to atmospheric pressure fluctuations as well as the temperature, air is flowing in and out of the hydraulic tank. Therefore, the vent at the top of the hydraulic tank has an air breather so fresh air can flow in.
18. Orbitrol
    In a fully hydraulic power steering unit, switching of the internal valve depending on the rotational input from the steering wheel causes oil from the hydraulic pump to be fed to the steering cylinder.
    This is located at the center, inside the front cover.

https://truckmanualshub.com/

Hydraulic system

Flow of Hydraulic Oil

Flow of Oil during Forward Traveling

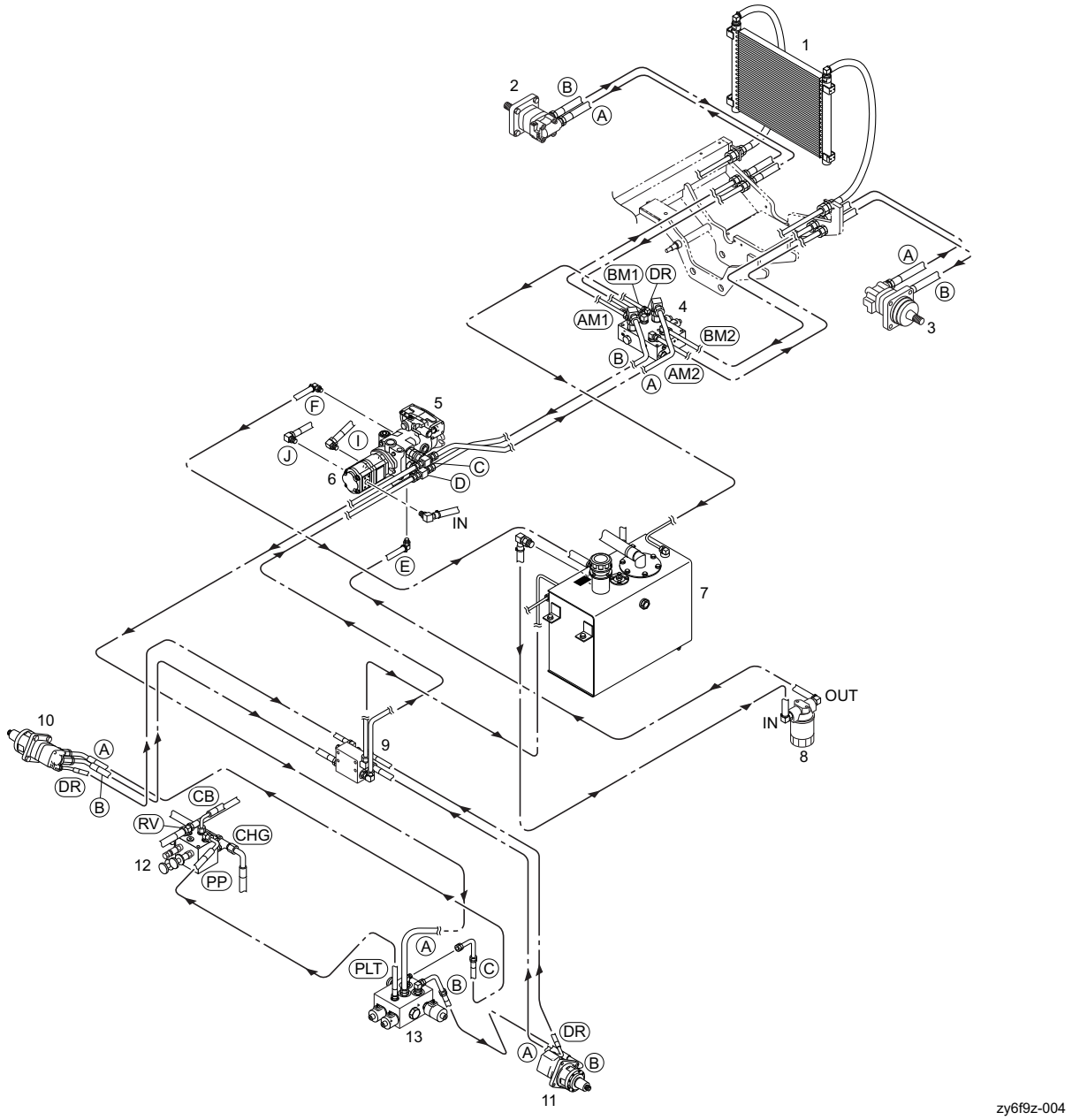

Flow of Oil during Forward Traveling_001

shows flow of oil.

The flow of oil shows that for 4WD forward traveling.

shows port name.

1	Oil cooler	6	Gear pump	11	Wheel motor (front left)
2	Wheel motor (rear right)	7	Oil tank	12	Assist valve
3	Wheel motor (rear left)	8	Oil filter	13	Diff-lock valve
4	2WD/4WD changeover valve	9	Manifold (traveling)		
5	Piston pump	10	Wheel motor (front right)		

https://truckmanualshub.com/

Flow of Oil during Raising Mower Unit, with Power Steering Turning to Left

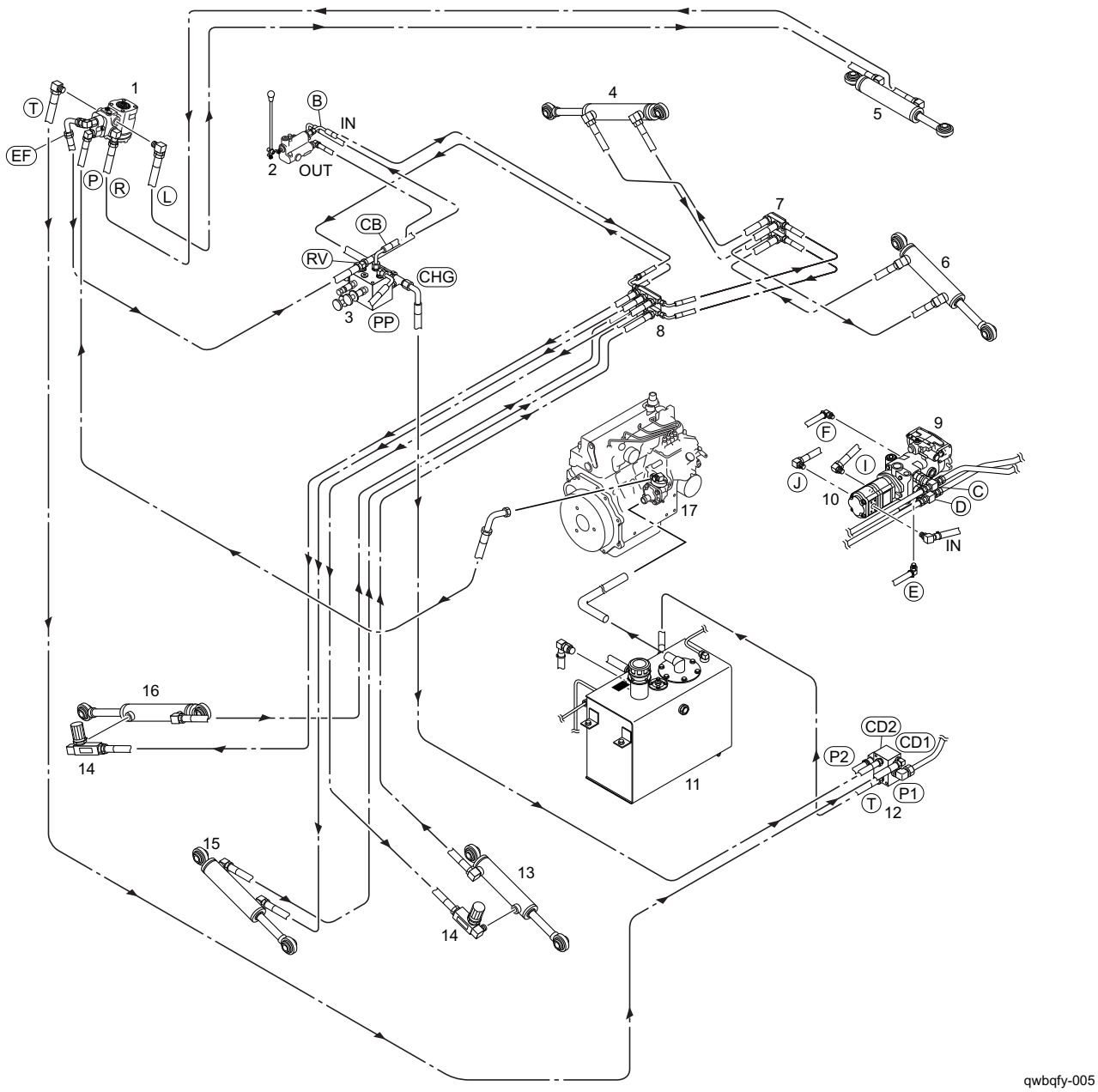

Flow of Oil during Raising Mower Unit, with Power Steering Turning to Left_001

→ shows flow of oil.

The flow of oil shows that for raising the mower unit, turning the power steering to left.

⬭ shows port name.

1	Orbitrol	7	Manifold (rear)	13	#5 cylinder
2	Control Valve	8	Manifold (front)	14	Slow return valve
3	Assist valve	9	Piston pump	15	#1 cylinder
4	#2 cylinder	10	Gear pump	16	#4 cylinder
5	Power steering cylinder	11	Oil tank	17	Pump (engine)
6	#3 cylinder	12	Valve V5267		

https://truckmanualshub.com/

Hydraulic system

Flow of Oil during Cutting with Mower Unit

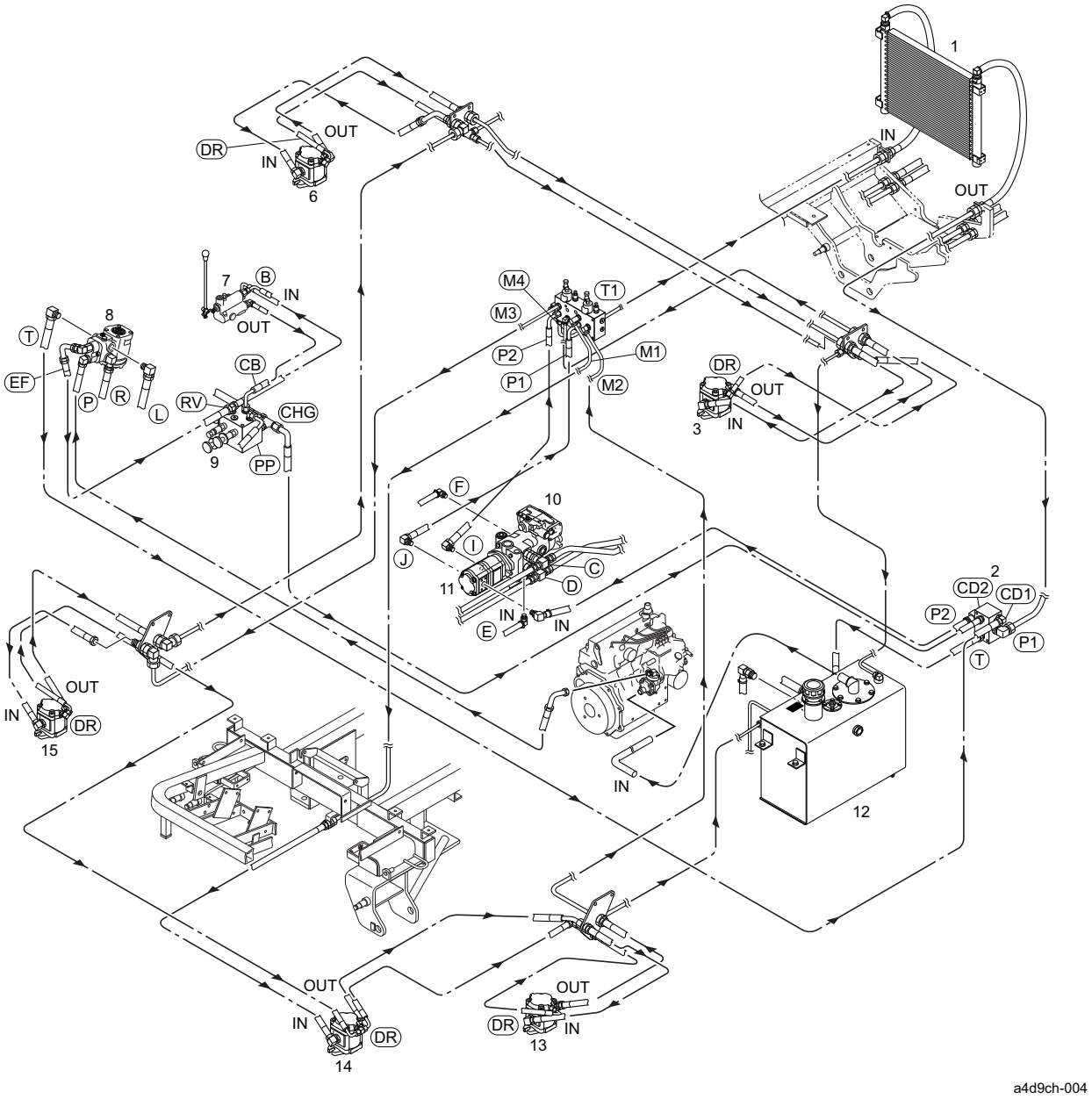

Flow of Oil during Cutting with Mower Unit_001

→ - - shows flow of oil.

The flow of oil shows that for cutting with the mower unit.

◯ shows port name.

1	Oil cooler	6	#2 motor	11	Gear pump
2	Valve V5267	7	Control valve	12	Oil tank
3	#3 motor	8	Orbitrol	13	#5 motor
4	Knife rotation valve	9	Assist valve	14	#1 motor
5	Gear pump (engine)	10	Piston pump	15	#4 motor

https://truckmanualshub.com/

General instructions

Hydraulic hose

Hydraulic hoses are subjected to excessive load when weathered, exposed to the sun or chemicals, stored in a very hot storage environment, or handled roughly during operation or maintenance work. These factors may cause damage to hoses or facilitate their deterioration. Since a hydraulic hose is more sensitive to external conditions than other components, check it frequently for damage, deterioration or the like of.
When replacing the hydraulic hose, check that the hose is straight (not twisted before fitting).
When replacing the hydraulic hose, use two wrenches. First, support the hose at a designated point with the first wrench. Next, fasten the hose swing nut to the fitting with the second wrench.

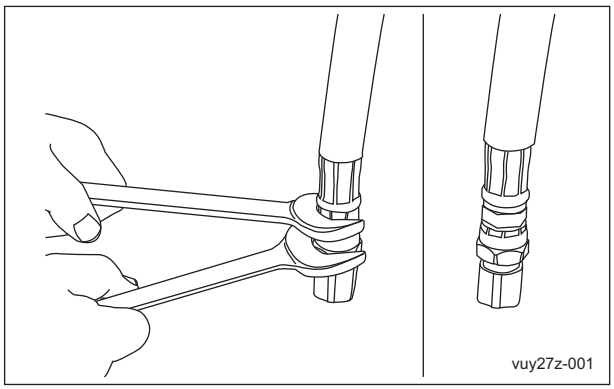

Hydraulic hose_001

Warning

Be sure to depressurize the hydraulic system before maintaining or repairing it.
Stop the engine, and lower the rake.
When checking for pinhole leakage of the hydraulic circuit or oil leakage of the nozzle, search for a leakage point using something like paper or cardboard, never with your bare hands. Be careful about high-pressure oil which may pierce your skin, resulting in physical injury.

Hydraulic fitting

Bite type tube fitting

Preliminary tightening (Preset)

1. Cut the tube at the designated length at a right angle.

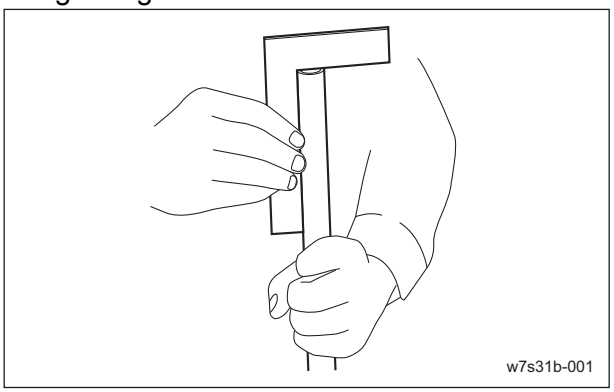

Bite type tube fitting_001

2. Remove burrs on the inside and outside of the tube with a file or the like of.

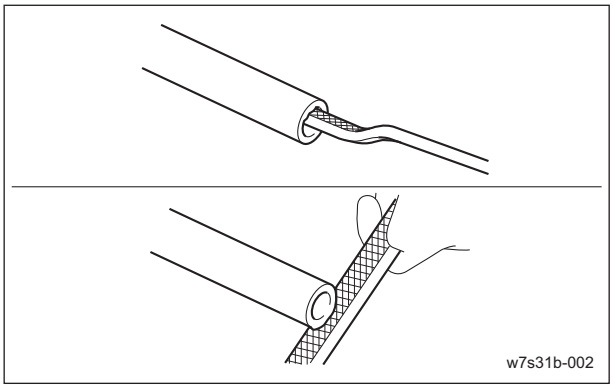

Bite type tube fitting_002

3. Insert the nut and sleeve into the tube. Note the direction of the sleeve.

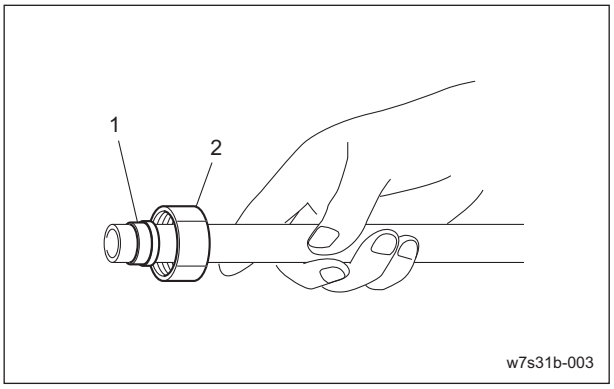

Bite type tube fitting_003

1	Sleeve
2	Nut

https://truckmanualshub.com/

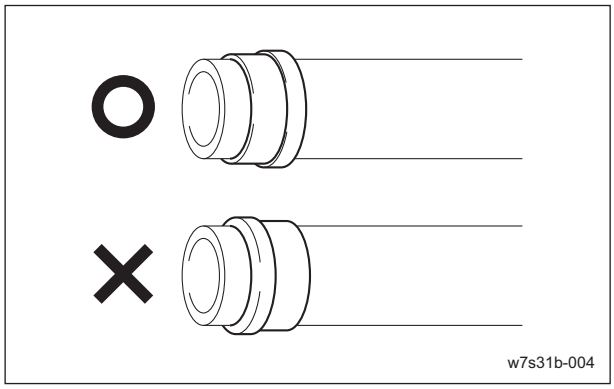

Bite type tube fitting_004

4. Fix the temporary tightening jig onto the vise and apply hydraulic oil to the threads, tapered part, and sleeve.

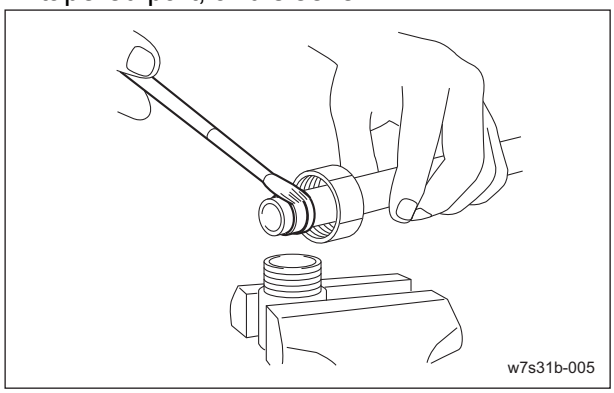

Bite type tube fitting_005

5. Put the tube end onto the hole bottom of the temporary tightening jig and tighten the nut slowly to the point where the tube can no longer be rotated by hand. This point is called the “zero point.”

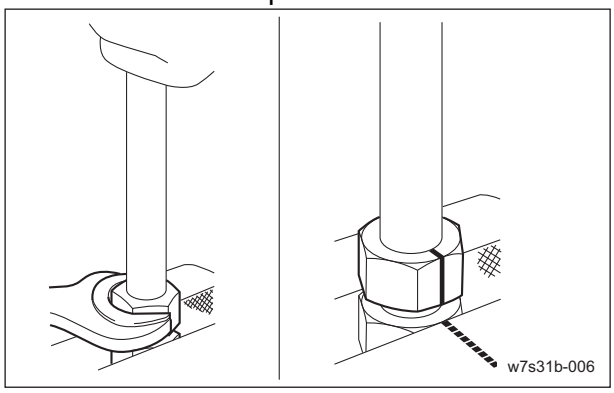

Bite type tube fitting_006

6. Matchmark the zero point and further tightening of 3/4 to one turn will cause the sleeve to bite into the tube.

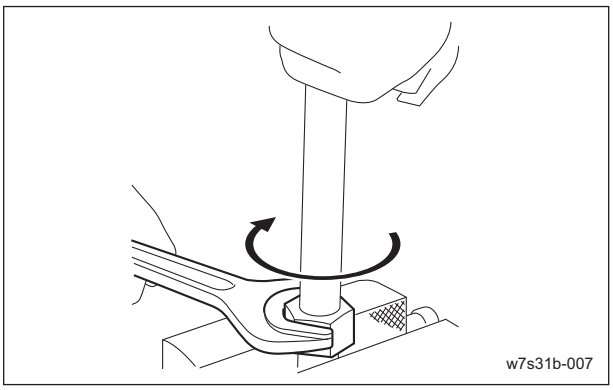

Bite type tube fitting_007

7. Fasten the nut and check that the sleeve end is a few mm apart from the tube end and the sleeve will not move in axial direction (it is allowed to move in the circumferential direction).

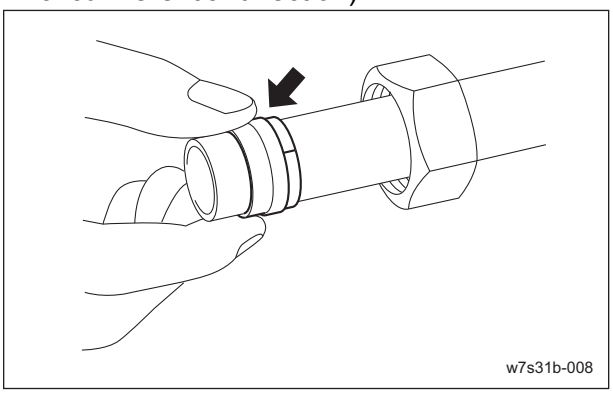

Bite type tube fitting_008

Final tightening (Reset)

Fit the preliminary tightened tube onto the fitting body. Tighten with a spanner to the point where some resistance is suddenly felt, then further tighten with the nut for a 1/4 turn.

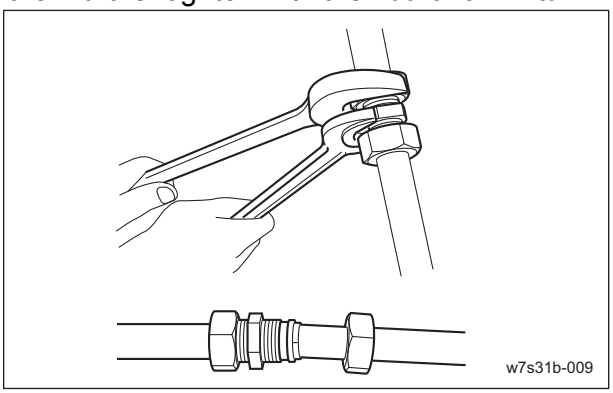

Bite type tube fitting_009

https://truckmanualshub.com/

Note:
For direct tightening, use the fitting body to follow procedures 1 to 5 when using a temporary tightening jig, and set the zero point. Further tighten for 1/4 to 1 turn from the zero point.

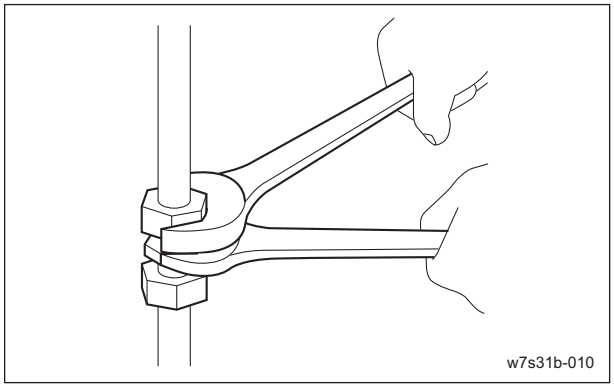

Bite type tube fitting_010

Reuse of piping
Bite type fitting can be reused if an inspection finds no flaw or other damage on the sleeve surface. Done properly, disassembly and retightening can be carried out up to five times or so.

Fitting with parallel pipe threads (O-ring sealing system)

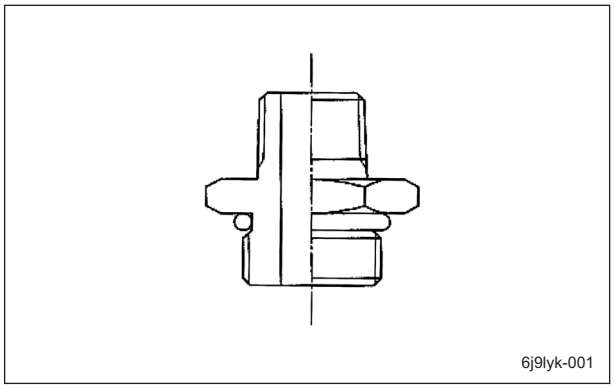

Fitting with parallel pipe threads (O-ring sealing system)_001

1. Check to see if the O-ring is properly fitted to the groove of the main body.
2. Check to see that the thread part, seat surface of O-ring port and O-ring are free from flaws or foreign matter.
3. Before fitting, apply hydraulic oil or grease to the O-ring.
4. For fitting, screw in by hand till the main body touches the other side lightly, then tighten securely with a tool such as a spanner.

■Adjustable Elbow

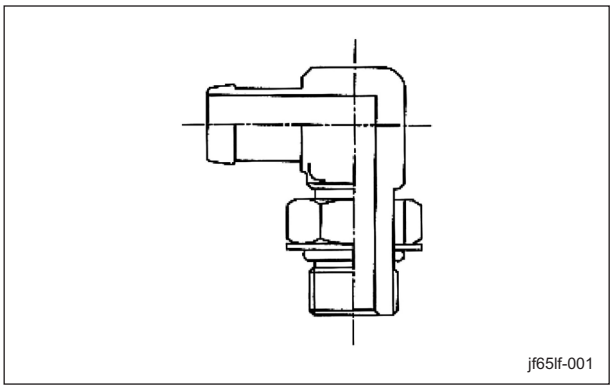

Adjustable Elbow_001

1. Make sure that the positions of the nut, washer, and O-ring are correct.
   If they are in the correct positions, the washer is pressed into the upper end of the groove of the main body.

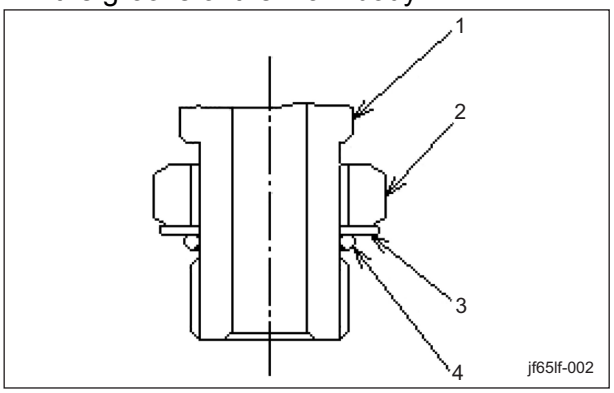

Adjustable Elbow_002

1	Main body
2	Lock nut
3	Washer
4	O-ring

https://truckmanualshub.com/

2. Make sure that the thread portion, sheet surface of the O-ring port, and O-ring are not contaminated with foreign objects. Apply oil or grease to the sheet surface and O-ring before installation.

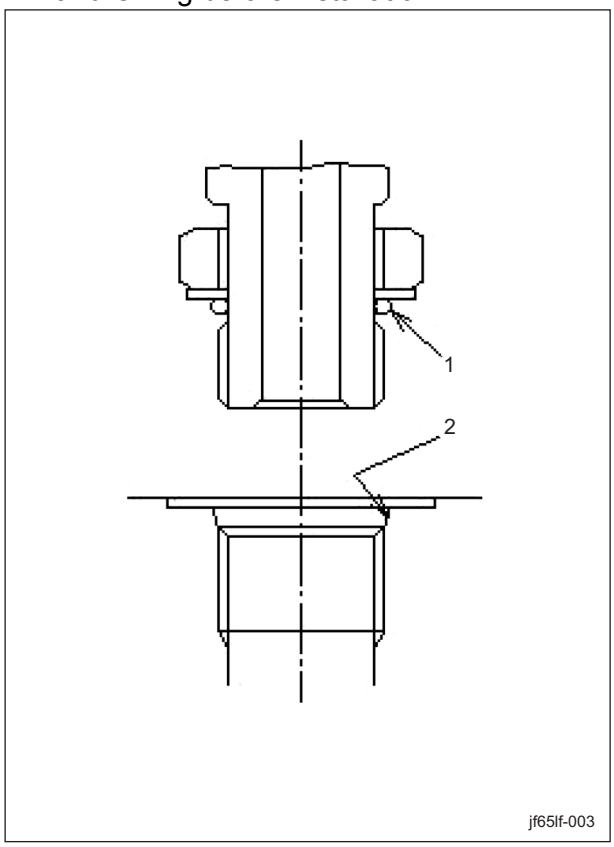

Adjustable Elbow_003

1	O-ring
2	Sheet surface

Caution

Be careful to never give the locknut more than one turns. If you give it more than one turn, the thread fit between the other side port and locknut becomes loose, which reduces the thread strength.
If the washer goes too deeply into the other side port, the washer gets deformed, which leads to oil leakage.
Rough installation makes the main body and nut overloaded, which leads to deformation.
Be sure to observe the installation procedure.

3. To fit, screw the main body by hand till the washer face touches lightly, and turn from that position in the loosening direction to the setting position.

4. After fitting the opposite screw, tighten the lock nut while holding the main body with a spanner etc. to ensure that the setting position does not change.

Taper Pipe (PT) Thread Joint (Sealing Tape Method)

1. Make sure that the taper thread portion is not damaged or contaminated with foreign objects.

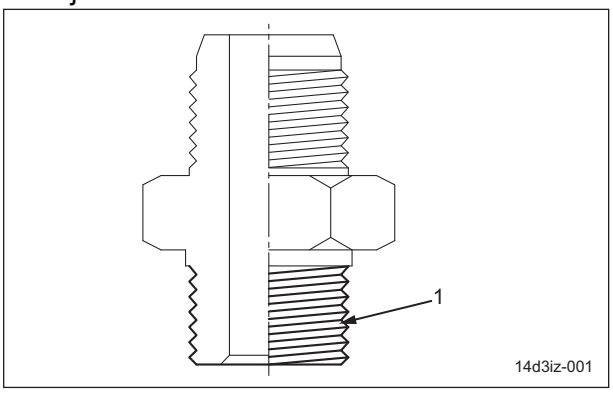

Taper Pipe (PT) Thread Joint (Sealing Tape Method)_001

1	Taper (PT) thread portion

Important

If a used taper pipe (PT) thread joint retains the residue of old sealing tape, using it again for assembly may cause machine problems or oil leakage.

Important

If you remove a taper thread joint, remove the sealing tape residue from the joint and connecting portion, so that the tape residue will not enter the hydraulic system.

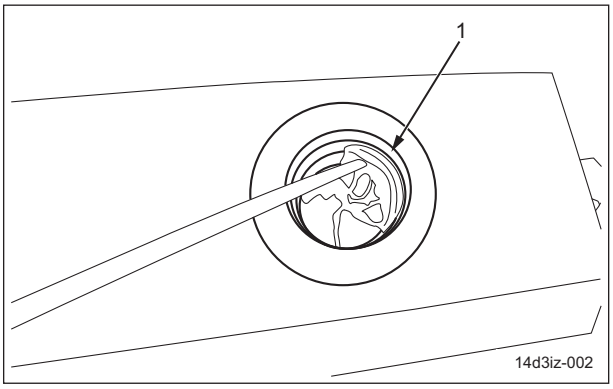

Taper Pipe (PT) Thread Joint (Sealing Tape Method)_002

1	Taper (PT) thread connecting portion

https://truckmanualshub.com/

2. Before connecting the joint, wind sealing tape on the taper thread portion. (See "How to Use the Sealing Tape" (Page 5-15) .)

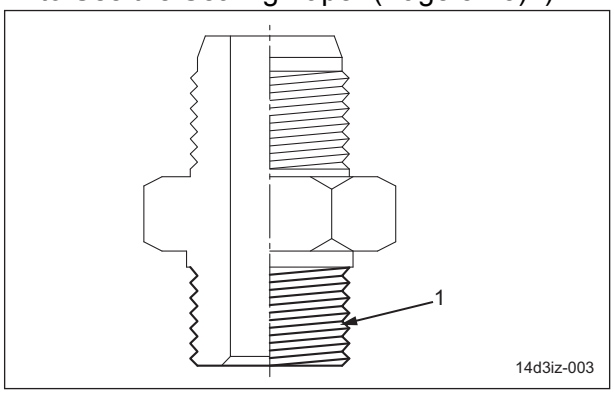

Taper Pipe (PT) Thread Joint (Sealing Tape Method)_003

1	Taper (PT) thread portion

■How to Use the Sealing Tape

> **Important**
>
> Using the sealing tape with its end out of the edge face may cause a trouble of the machine due to its debris invading the hydraulic circuit.

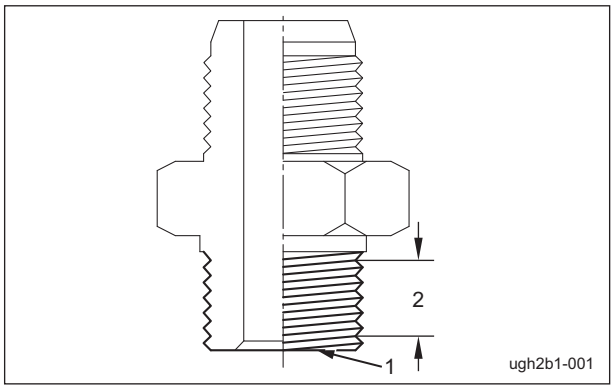

How to Use the Sealing Tape_001

1	Edge face
2	Sealing area

> **Important**
>
> Loosening again the taper thread joint which has been tightened may reduce its sealing effect to cause leakage of oil.

Note:
Pay attention to the following precautions when you use the sealing tape.

- Slightly pull the sealing tape (as tight as you can clearly see the thread mark on the tape) while you wrap it and overlap a half of its width to the previous round.
- Wrap it in clockwise direction (direction to tighten the screw).
  Wrapping in the opposite direction may cause the tape to be easily peeled off.

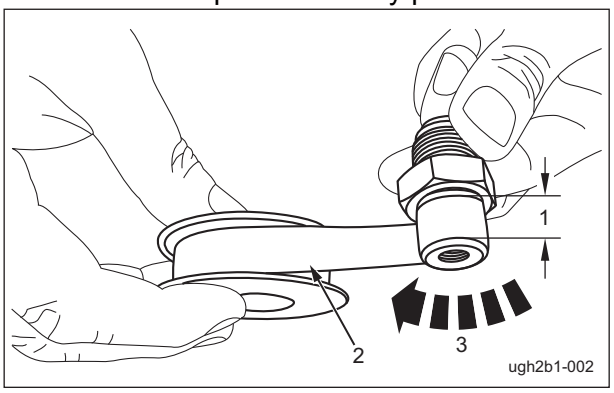

How to Use the Sealing Tape_002

1	Sealing area
2	Sealing tape
3	Clockwise direction

1. Wrap it in clockwise direction (direction to tighten the screw) about 1.5 to 2 turns from edge to root, starting from the point of 1 to 2 threads apart from the edge face of the thread.

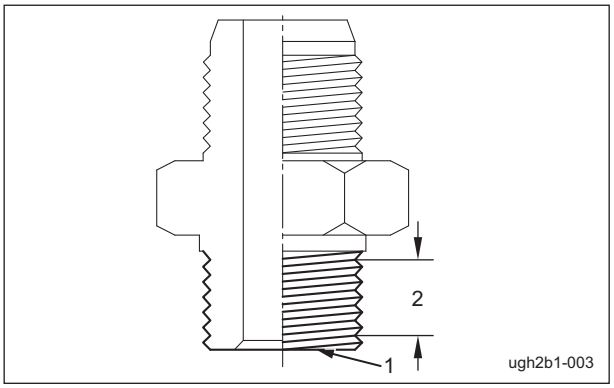

How to Use the Sealing Tape_003

1	Edge face
2	Sealing area

https://truckmanualshub.com/

Hydraulic system

Towing

Important

Going over the limit of towing may lead to the failure of hydraulic equipment.
Also, if the machine is towed at high speed, the wheel may cease its motion.
Stop towing in case of wheel lock.
Resume towing at low speed after the pressure has been stabilized.

In the event of loss of mobility due to engine trouble or the like of, movement is possible through towing or hand driving.
Take the shortest route when towing or hand driving the machine.
Transport the machine on a trailer if you have to transport it a long way.
For the towing method, see the Owner's manual.

Neutral

If the machine goes forward or in reverse without pressing on the forward/reverse pedals, the neutral is not working. Adjust accordingly.
Refer to the Owner's manual for adjustment of the neutral.

Depressurization

Be sure to depressurize the hydraulic system before inspecting or repairing it.
When performing depressurization, move the machine to level surface.
Apply the parking brake, and then lower the operating machine.
Then, stop the engine and remove the key.
To depressurize the hydraulic circuit, set the traveling pedal and all the drives of the operating machine to the neutral position.
To depressurize the steering circuit, turn the steering wheel side to side.

Hydraulic circuit failure

The hydraulic traveling circuit of this equipment is made up of a closed circuit.
In the event of failure of the hydraulic equipment of the hydraulic circuit, debris and contaminant from the faulty hydraulic equipment will circulate to every part of the circuit.
Since this contaminant causes damage to other hydraulic equipment, such debris and contaminant must be removed to prevent further failure of other hydraulic equipment.
In the event that failure of hydraulic equipment is found in the hydraulic circuit, remove hydraulic hoses and piping of the whole hydraulic circuit and clean them well with kerosene.
Drain all the hydraulic oil from hydraulic tank and hydraulic equipment other than the hydraulic hoses and piping and clean them well.
We recommend to replace the hydraulic oil, hydraulic oil filter and defective hydraulic equipment with new ones.

https://truckmanualshub.com/

Hydraulic circuit flow

Traveling circuit

Forward traveling (4WD)

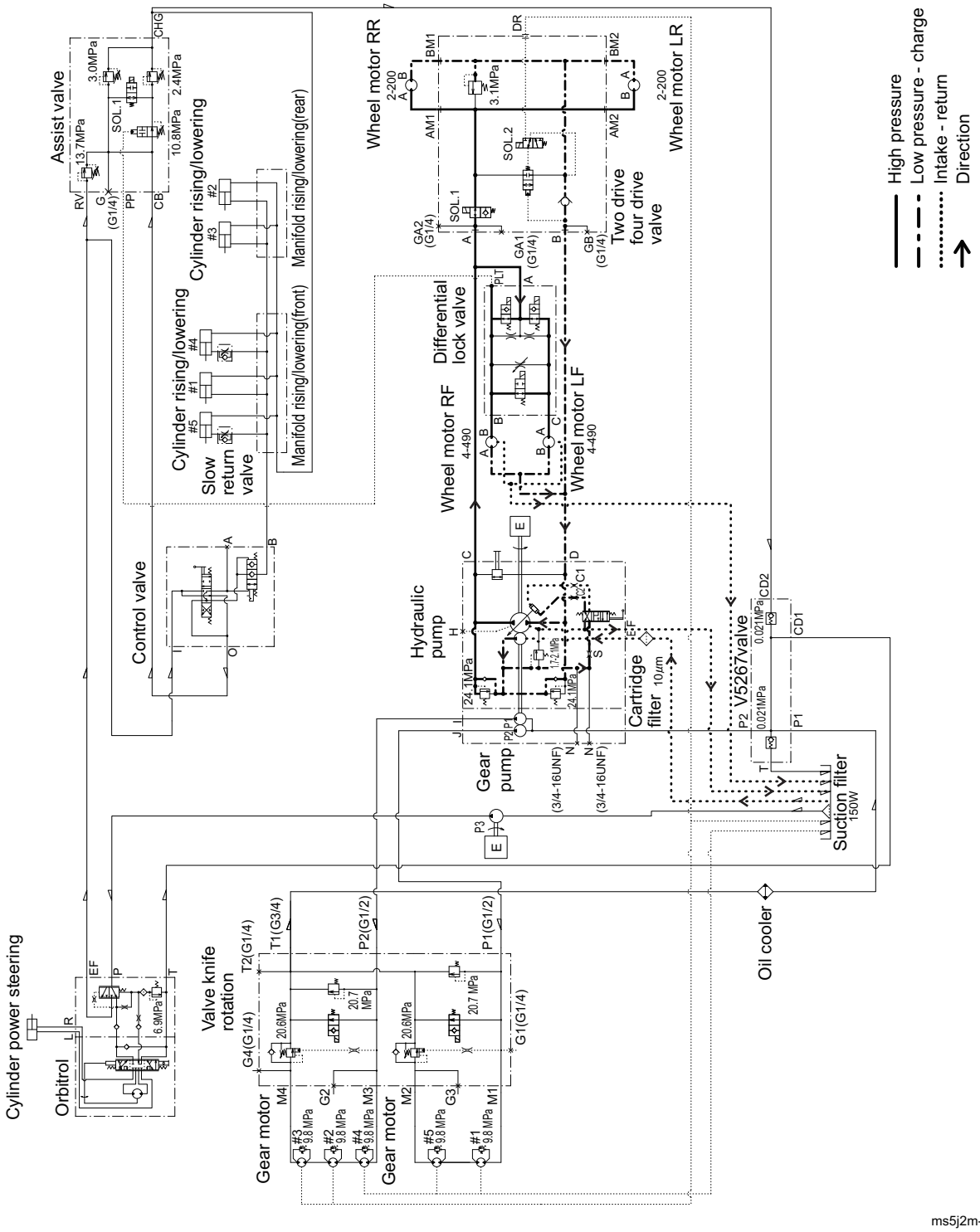

ms5j2m-006

Forward traveling (4WD)_001

https://truckmanualshub.com/

Hydraulic system

Backward

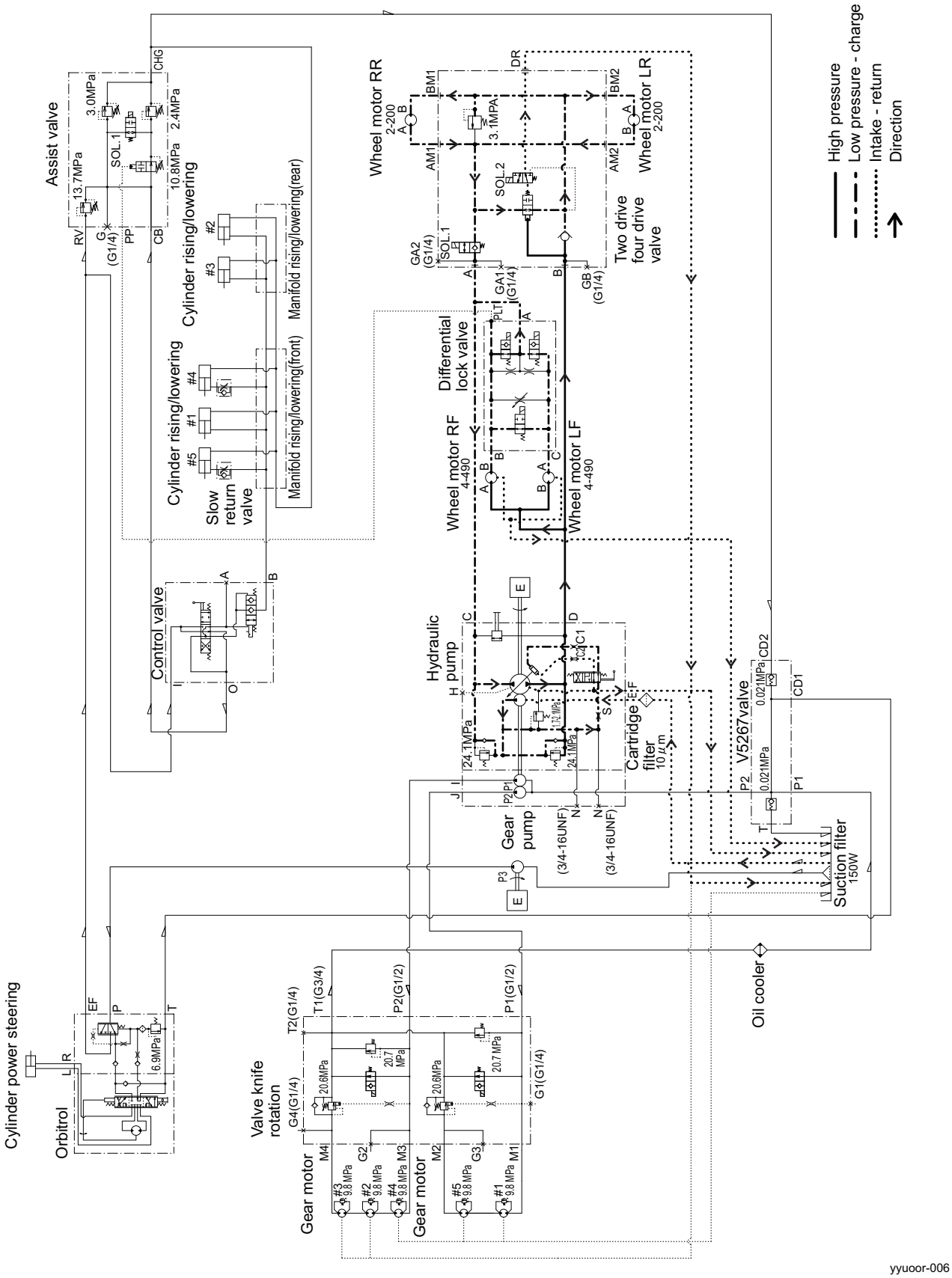

Backward_001

https://truckmanualshub.com/

Raise/lower circuit

Rising of up/down cylinder

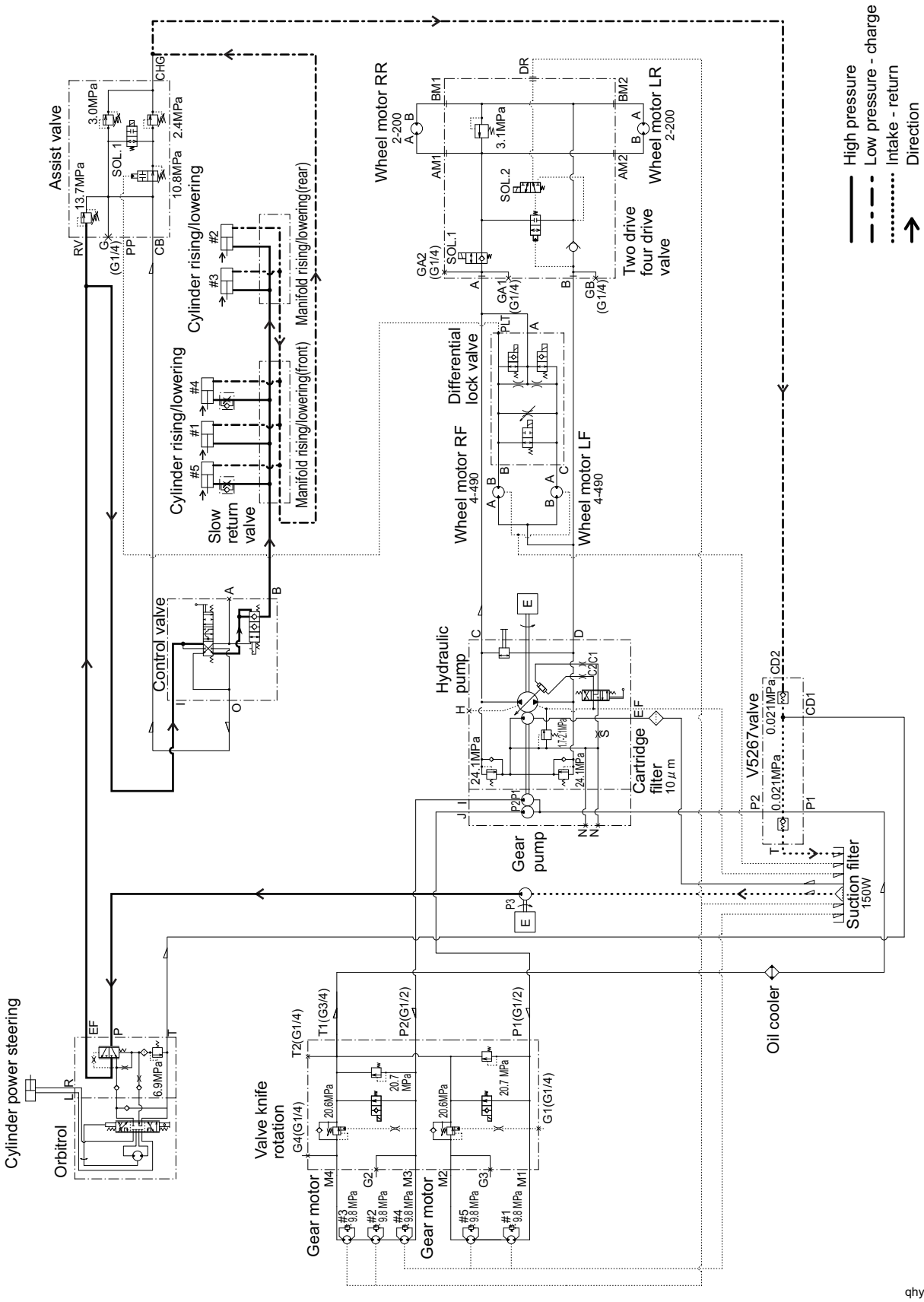

Rising of up/down cylinder_001

https://truckmanualshub.com/

Hydraulic system

Up/down cylinder lowering (operation)

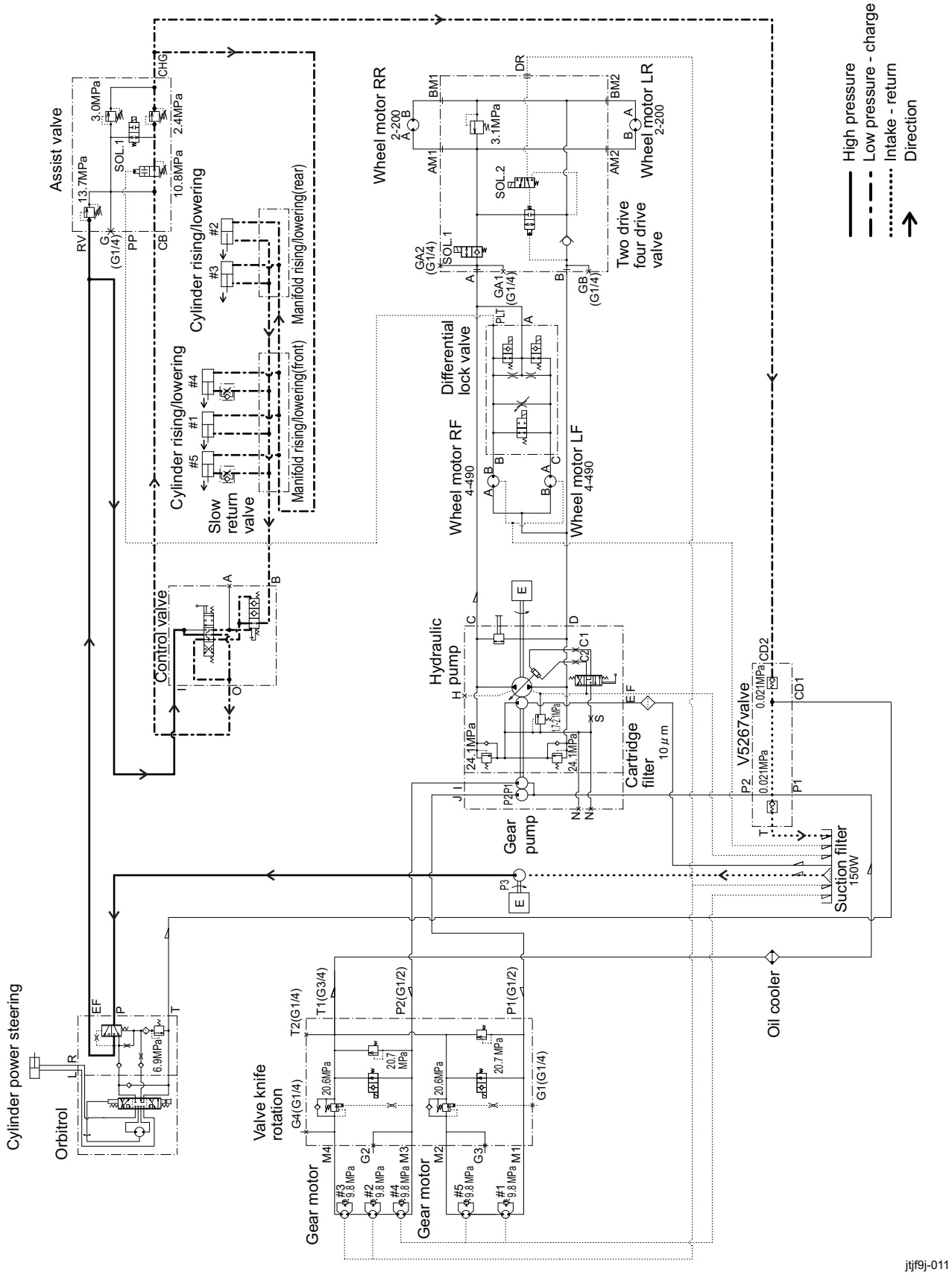

Up/down cylinder lowering (operation)_001

https://truckmanualshub.com/

Steering circuit

Steering cylinder counter-clockwise turning

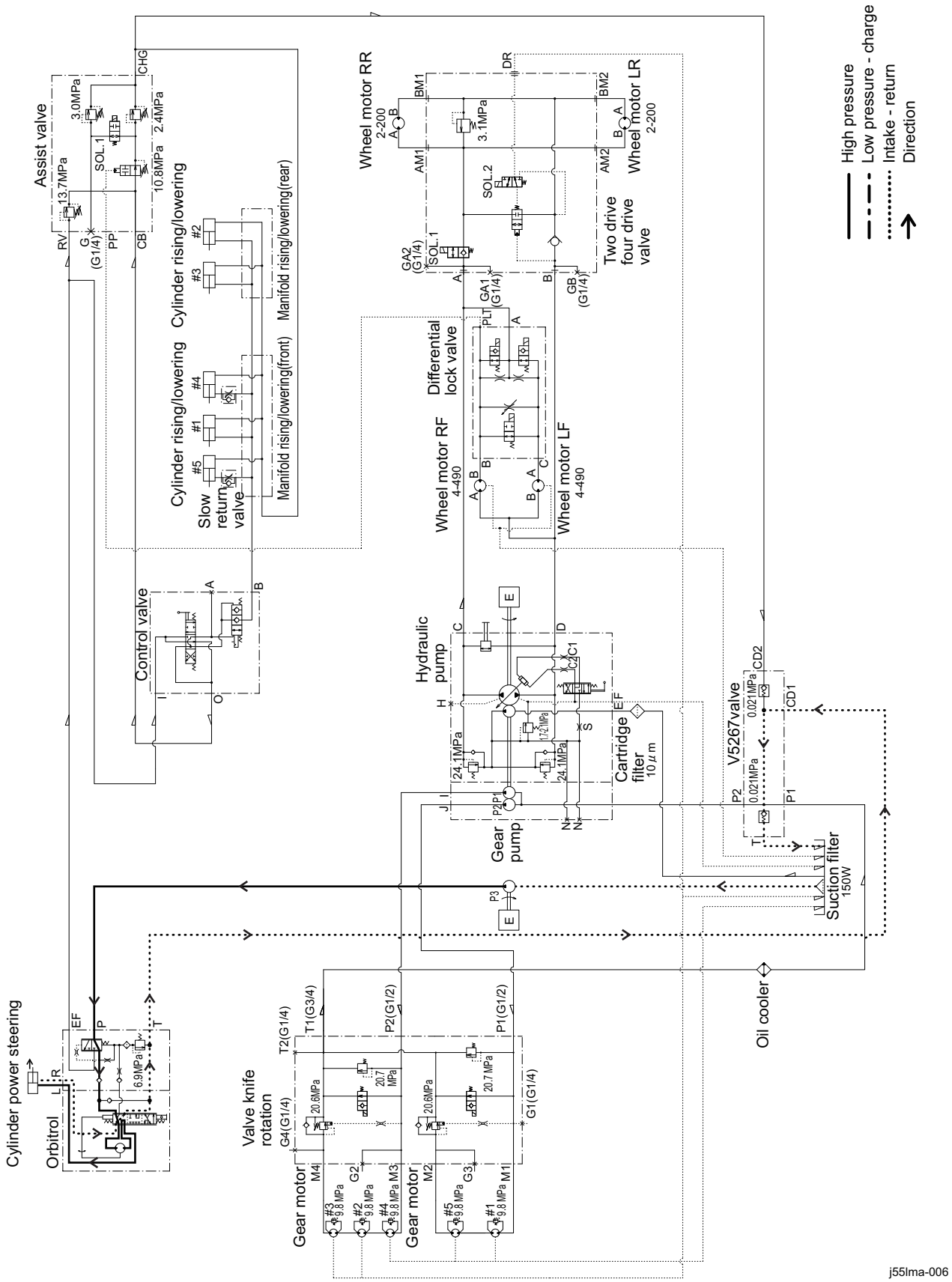

Steering cylinder counter-clockwise turning_001

https://truckmanualshub.com/

Hydraulic system

Steering cylinder clockwise turning

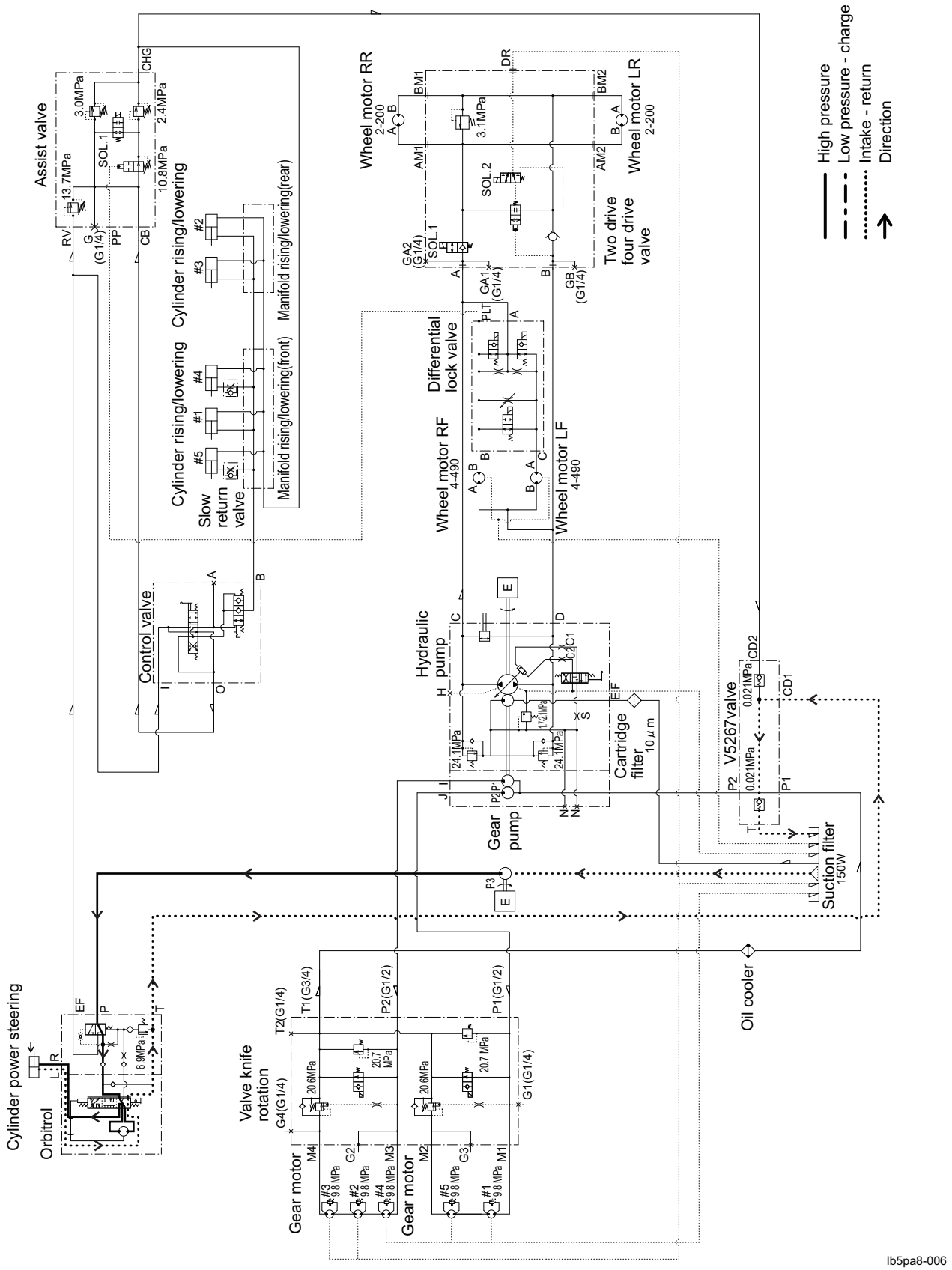

lb5pa8-006

Steering cylinder clockwise turning_001

https://truckmanualshub.com/

Rotary Knife Rotation Circuit

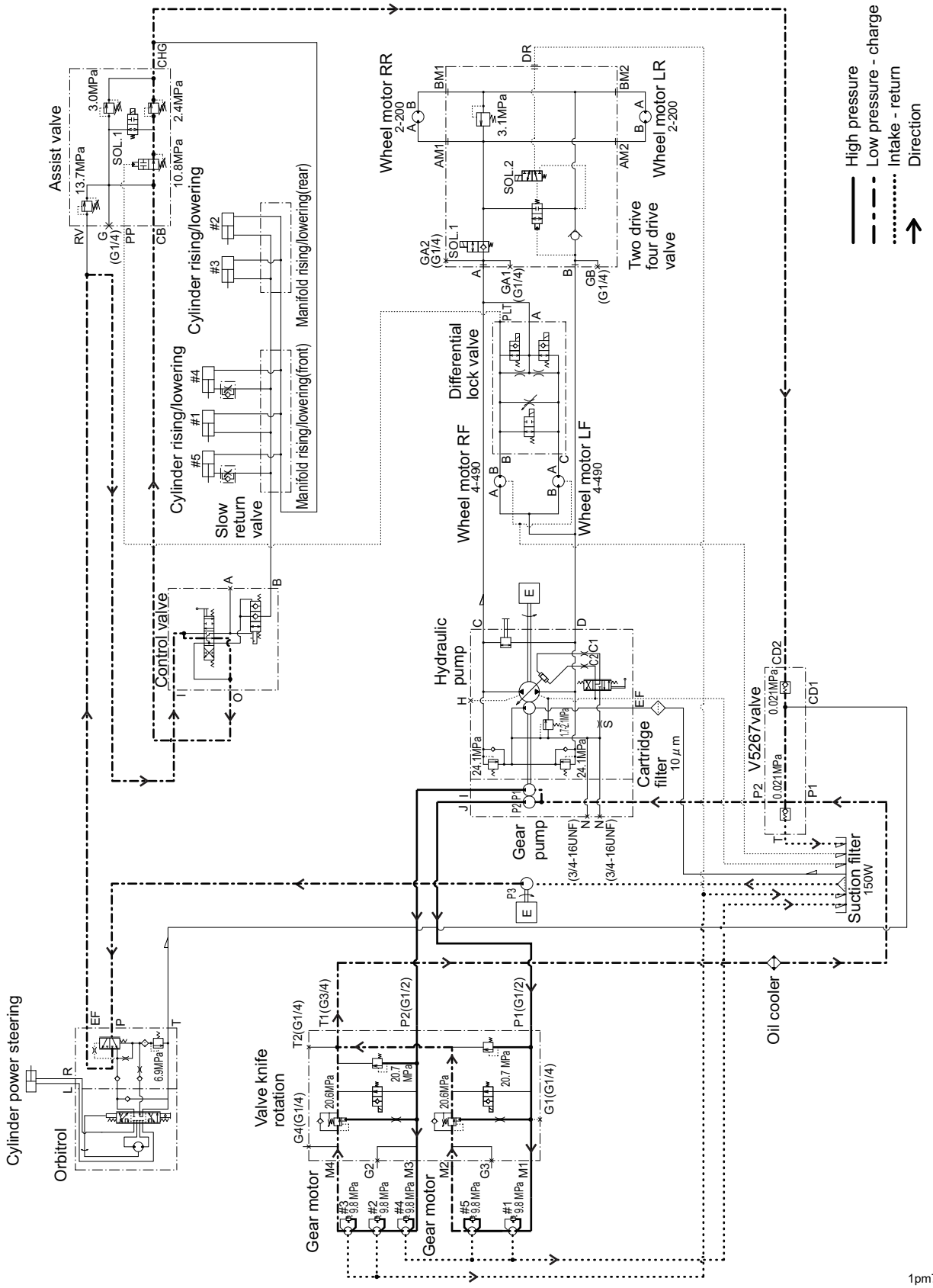

Rotary Knife Rotation Circuit_001

https://truckmanualshub.com/

Special Tool

Special Tools List

Pressure gauge for high pressure measurements 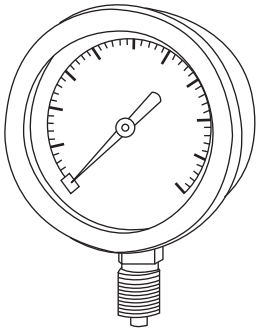 vasdfi-004	K4701000010	Pressure: For the range of 0 - 35 MPa For the range of 0 - 5,076.40 psi For the range of 0 - 356.90 kgf/cm^2 Primarily used for measuring the pressure of high-pressure parts.
Pressure gauge for low pressure measurements 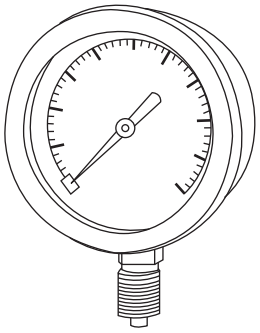 vasdfi-004	K4701000020	Pressure: For the range of 0 - 15 MPa For the range of 0 - 2,175.60 psi For the range of 0 - 152.96 kgf/cm^2 Primarily used for measuring the pressure of low-pressure parts.
Pressure gauge for extremely low pressure measurements 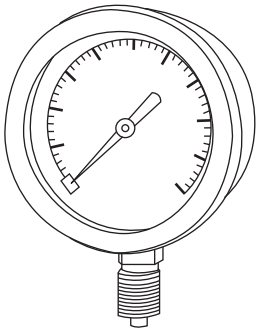 vasdfi-004	K4701000030	Pressure: For the range of 0 - 5 MPa For the range of 0 - 725.20 psi For the range of 0 - 50.99 kgf/cm^2 Primarily used to measure the pressure of extremely-low-pressure parts.

https://truckmanualshub.com/

Pressure gauge seal 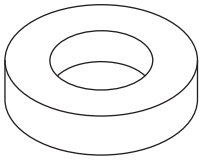 vasdfi-005	K4701000050	Inserted between the pressure gauge and the gauge joint.
Gauge valve 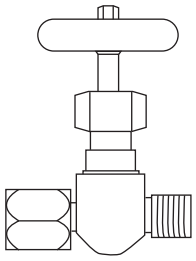 vasdfi-016	K4701000060	Used to temporarily shut off the fluid to be measured during maintenance, check, or repair etc. of the pressure gauge.
Pressure gauge joint 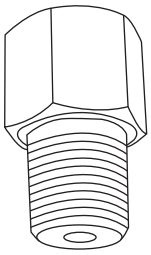 vasdfi-006	K4701000040	Used as a joint for pressure pipes.
Female connector 1015-04 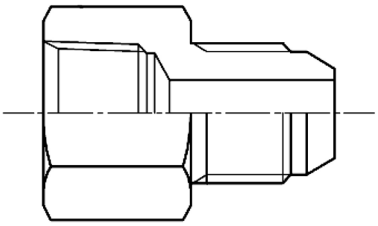 vasdfi-007	K3009000290-Y	Used as a connector to attach the hydraulic hose to the pressure gauge.

https://truckmanualshub.com/

Cast iron T-joint PT3/8 PF3/8 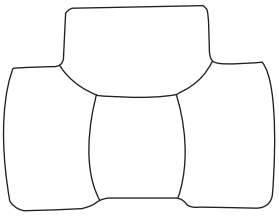 vasdfi-013	K3024000042-Y	Used to insert the pressure gauge between the hydraulic hoses.
Special adapter PF1/4 PT3/8 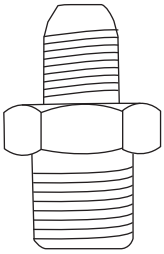 vasdfi-015	K3009000042-Y	Used as an elbow for the T-joint during pressure measurements.
Special adapter 1013-9 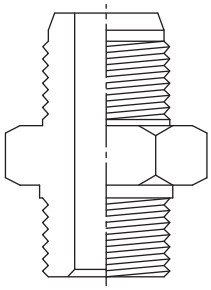 q9c6v6-008	K3009000002-Y	Two of these are used as an elbow for the T-joint during pressure measurements.
WP280-6 hose 1-600 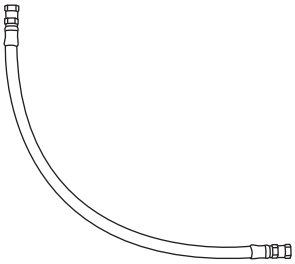 vasdfi-008	K3107210600	Used as a hydraulic hose for high pressure to extremely low pressure measurements.

https://truckmanualshub.com/

WP210-9 hose 1-490 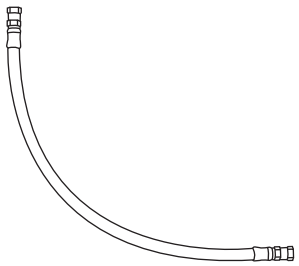 vasdfi-008	K3105310490	Used as a hydraulic hose for high pressure to extremely low pressure measurements.
Screw cap (male) PF1/2 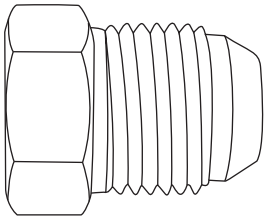 q9c6v6-001	K3008000542-Y	Used as a plug when the hydraulic hose is removed.
Screw cap (female) PF1/2 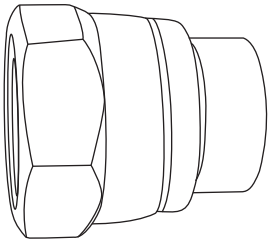 q9c6v6-002	K3008000502-Y	Used as a plug when the hydraulic hose is removed.
Special bushing 3/4-16UNFPT1/4 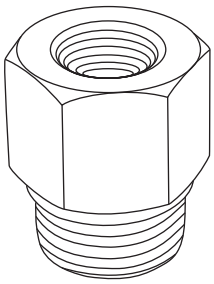 q9c6v6-003	K3029000272-Y	Used as a bushing when installing the pressure gauge to the hydraulic measurement port.

https://truckmanualshub.com/

45 elbow 1035-6 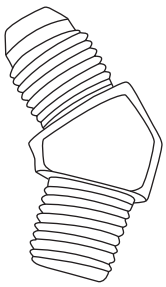 q9c6v6-004	K3003060002-Y	Used as an elbow for the special bushing during pressure measurements.
O-ring connector 1096-6 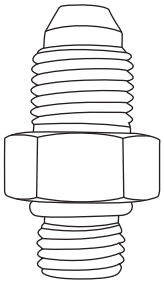 q9c6v6-005	K3008000342-Y	Used as a connector when installing the pressure gauge to the pressure measurement port.
O-ring connector PF1/4PF1/4 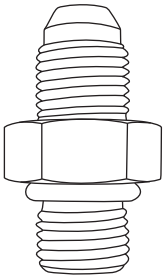 q9c6v6-006	K3008000232-Y	Used as a connector when installing the pressure gauge to the pressure measurement port.
GM2800 knife fixture 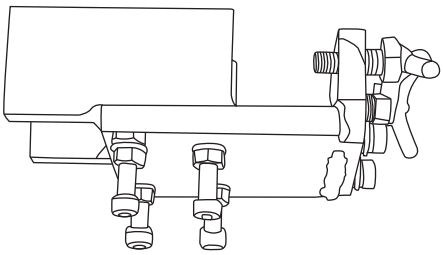 q9c6v6-007	K4802000550	Used to lock the rotary knife during pressure measurements.

https://truckmanualshub.com/

Measurement

Note

The most effective way of solving problems in the hydraulic system is to use a measuring instrument such as a pressure gauge for measurement.
Before hydraulic measurement

> **Important**
>
> Before concluding that the problem in the hydraulic system is caused by the hydraulic equipment, every part of the hydraulic system must be checked for issues related to oil fill, oil filter, loosening of fasteners, lack of adjustment and so on.

Note on hydraulic measurement

> **⚠ Warning**
>
> As mentioned in the testing procedure, the use of a pressure gauge not meeting the pressure measurement standard may result in damage to the pressure gauge or leakage of high-pressure oil. Be extremely careful with high-pressure oil as it may pierce your skin, resulting in personal accidents.
> Carry out hydraulic measurement with two or more persons. One person should be in the driver's seat to operate the machine and the other person should engage in measurement and recording.

> **⚠ Caution**
>
> When checking the hydraulic circuit for pinhole leaks or oil leakage from nozzles, never use your hands. Use items such as paper or corrugated cardboard to find leakage points. Be extremely careful with high-pressure oil as it may pierce your skin, resulting in personal accidents.

1. Always clean the machine before hydraulic measurement. Remember that the machine must always be kept clean for hydraulic measurement. Contamination may lead to clogging or breakage of the hydraulic circuit.
2. Review the measuring method before starting measurement.
3. Before measurement, check for maladjustment, clogging or breakage.
4. Warm up the hydraulic oil before starting hydraulic measurement.

> **⚠ Warning**
>
> Be sure to depressurize the hydraulic system before inspecting or repairing it.

5. When hydraulic equipment is removed, cap or plug it to prevent contamination of the hydraulic system.
6. When using a measuring instrument such as a pressure gauge, connect the in/out hoses correctly. Never connect the other way round to prevent breakage of the hydraulic system and measuring instrument.
7. Screw in the hydraulic fitting by hand till it touches the other side lightly, then fasten it with a wrench.
8. Fit hoses and measuring instruments in such a way as to avoid contact with the driving part of the machine.
9. After connecting a measuring instrument, check the amount of oil in the hydraulic tank.
10. Check to see that the engine is in good condition. Carry out hydraulic measurement with the engine running at maximum speed.
11. In case there is any problem in the traveling circuit, carry out the following measurement.
    [1] Charge relief valve pressure
    [2] Traveling relieve valve pressure
12. In case there is any problem in the raise/lower or steering circuit, carry out the following inspection.
    [1] Relief valve pressure
    [2] Oil leakage inside the hydraulic cylinder

https://truckmanualshub.com/

Hydraulic system

Traveling Circuit

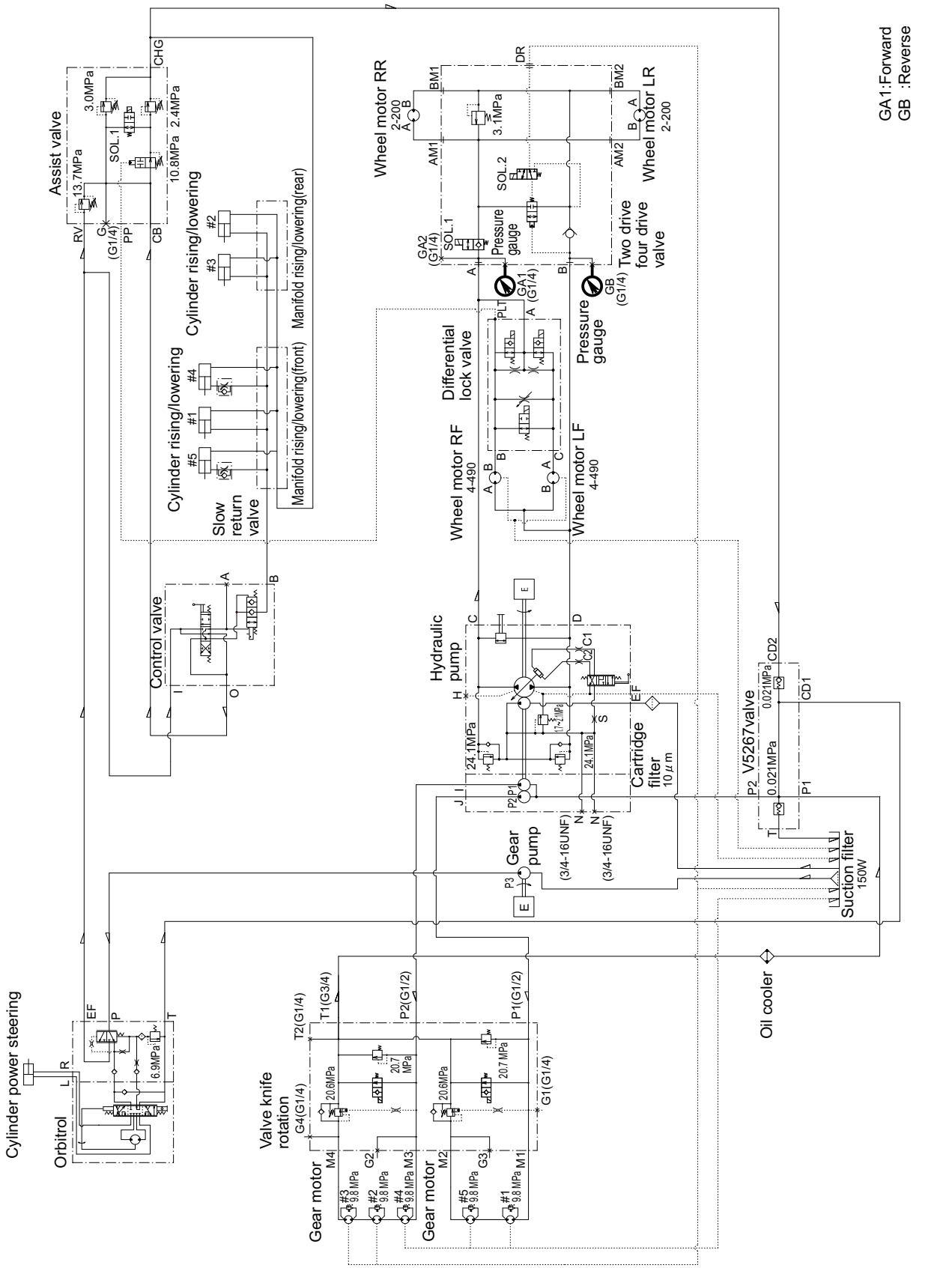

Traveling Circuit_001

https://truckmanualshub.com/

Forward

> **Caution**
>
> Before starting pressure measurement, make sure that there is no people around the machine.

1. Remove the plug of the forward side measuring port of the 2WD/4WD valve which is located above the center of the pivot of the main body.

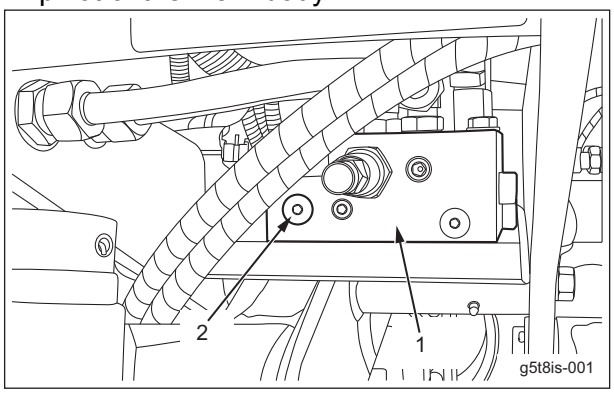

Forward_001

1	2WD/4WD valve
2	Plug

2. Attach the O-ring connecter on the forward side measuring port.

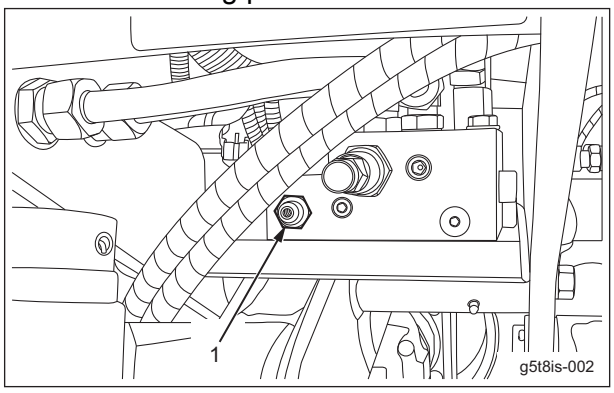

Forward_002

1	O-ring connecter (1096-6)

3. Attach the high pressure gauge on the O-ring connecter on the forward side measuring port.

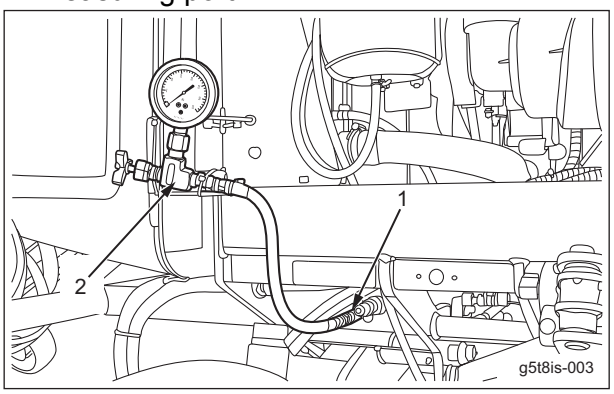

Forward_003

1	Forward side measuring port
2	High pressure gauge

4. Apply resistance on the machine using a webbing sling, etc. on the rear bumper.

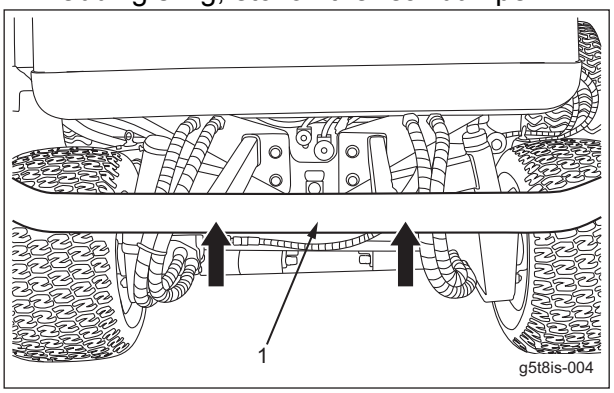

Forward_004

1	Bumper

5. Make sure that the parking brake is applied, then start the engine, and rev it up to the maximum rpm.
   Depress the forward pedal, and it is normal if the pressure becomes 24.1 MPa (3,495.29 psi) with the tires locked without slipping.

https://truckmanualshub.com/

Reverse

> ⚠ Caution
>
> Before starting pressure measurement, make sure that there is no people around the machine.

1. Remove the plug of the reverse side measuring port of the 2WD/4WD valve which is located above the center of the pivot of the main body.

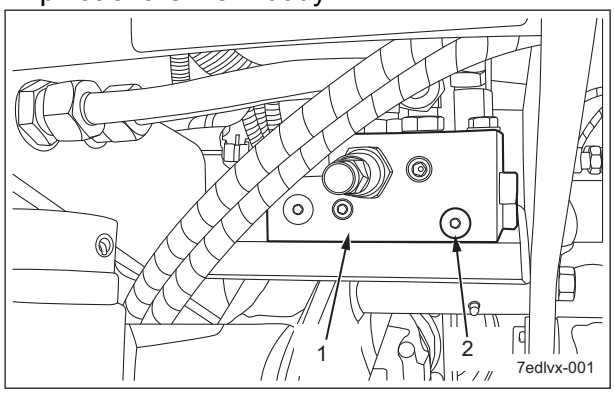

Reverse_001

1	2WD/4WD valve
2	Plug

2. Attach the O-ring connecter on the reverse side measuring port.

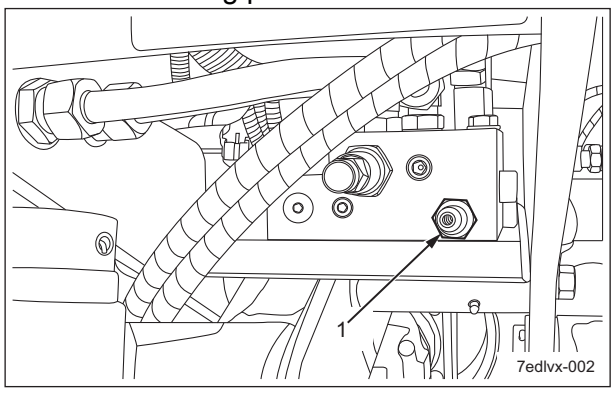

Reverse_002

1	O-ring connecter (1096-6)

3. Attach the high pressure gauge on the O-ring connecter on the reverse side measuring port.

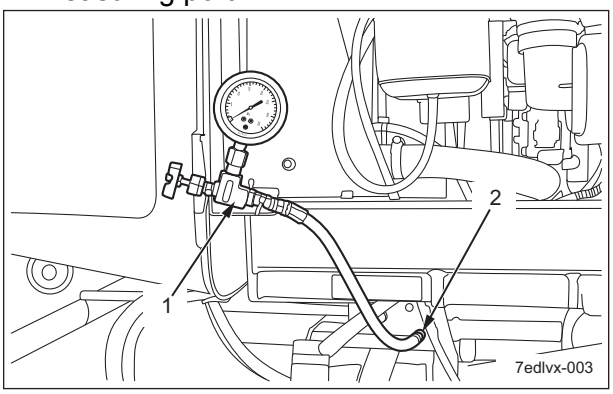

Reverse_003

1	Reverse side measuring port
2	High pressure gauge

4. Apply resistance on the machine using a webbing sling, etc, on the front axle in the front section of the machine.
   The positions for a sling are at the left and right of the front axle.

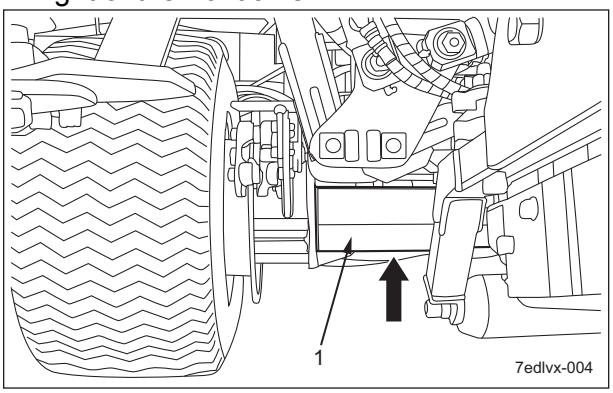

Reverse_004

1	Front axle

5. Make sure that the parking brake is applied, then start the engine, and rev it up to the maximum rpm.
   Depress the reverse pedal, and it is normal if the pressure becomes 24.1 MPa (3,495.29 psi) with the tires locked without slipping.

https://truckmanualshub.com/

Up/Down circuit

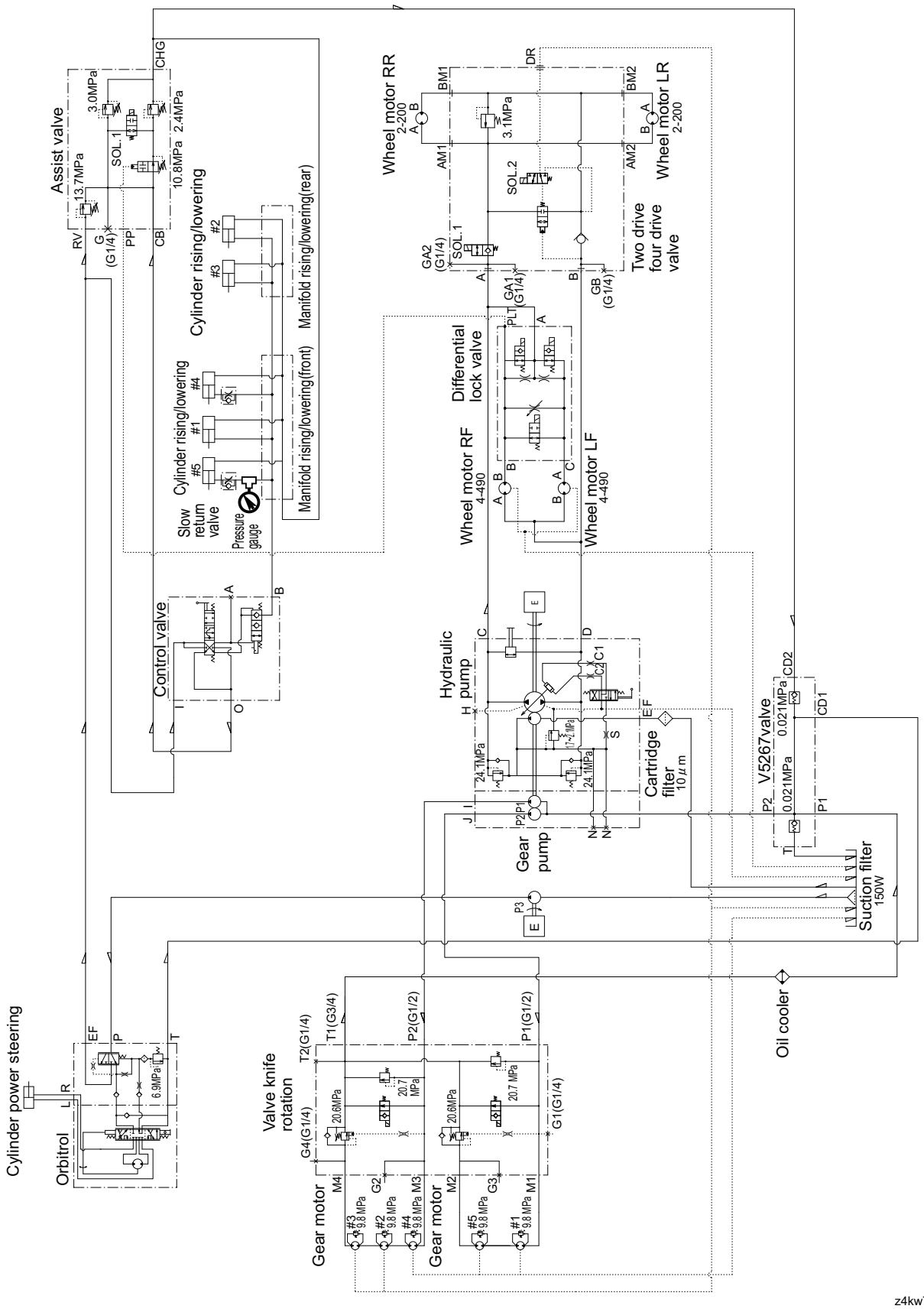

Up/Down circuit_001

https://truckmanualshub.com/

> **Caution**
>
> Before starting pressure measurement, make sure that there are no people around the machine.

1. Lower the mower units, and then remove the hydraulic hose from the adapter attached to the hydraulic cylinder.

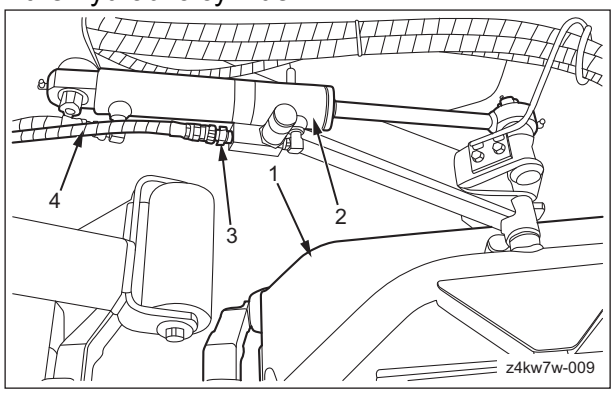

Up/Down circuit_002

1	Mower unit
2	Cylinder
3	Adapter
4	Hydraulic hose

2. Install the pressure gauge for high pressure measurements between the removed hose and adapter.

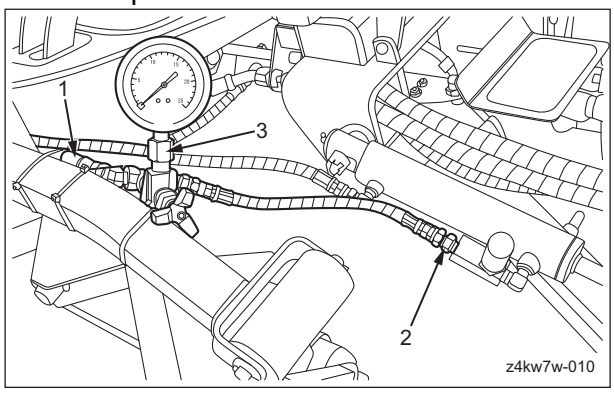

Up/Down circuit_003

1	Hydraulic hose
2	Adapter
3	Pressure gauge for high pressure measurements

3. Make sure that the parking brake is applied, and then start the engine and raise the mower units.

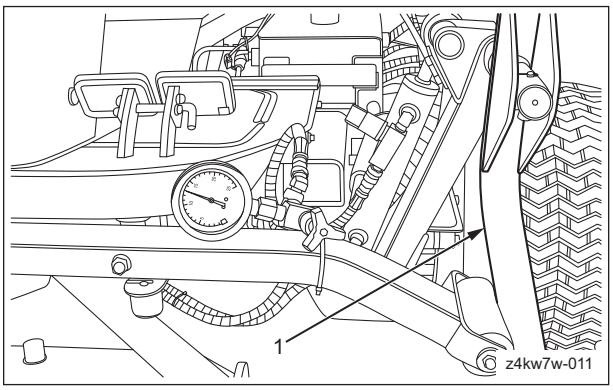

Up/Down circuit_004

1	Mower unit

4. Rev the engine up to the maximum rpm. The normal pressure is 13.7 MPa (1,986.95 psi) when the up/down lever is shifted to the "UP" position and the up/down cylinder is retracted to its maximum.

https://truckmanualshub.com/

Steering Circuit

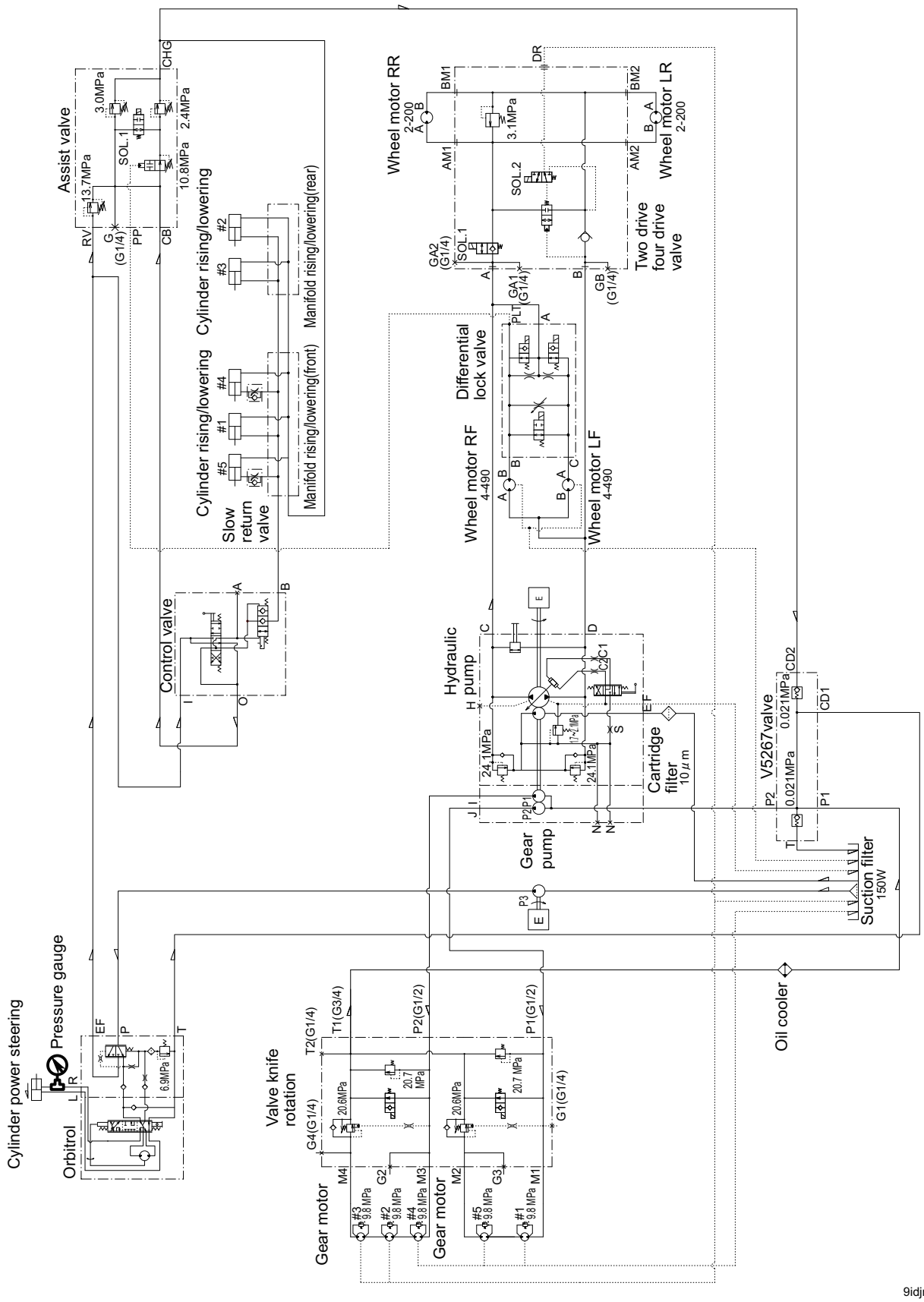

9idjnn-021

Steering Circuit_001

https://truckmanualshub.com/

Caution

Before starting pressure measurement, make sure that there are no people around the machine.

1. Remove the hydraulic hose from the elbow attached to the cylinder.

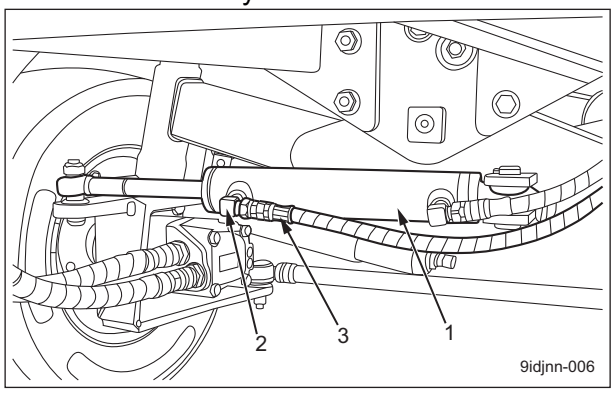

Steering Circuit_002

1	Cylinder
2	Elbow
3	Hydraulic hose

2. Install the pressure gauge for high pressure measurements between the removed hose and elbow.

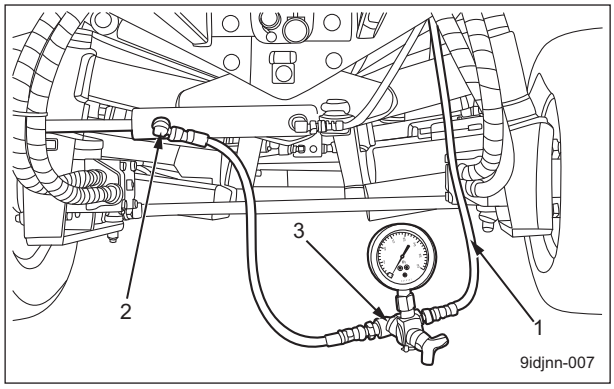

Steering Circuit_003

1	Hydraulic hose
2	Elbow
3	Pressure gauge for high pressure measurements

3. Make sure that the parking brake is applied, and then start the engine and rev it up to the maximum rpm.
   The normal pressure is 6.9 MPa (1,000.73 psi) when the handle is turned rightward completely.

https://truckmanualshub.com/

Charge Circuit

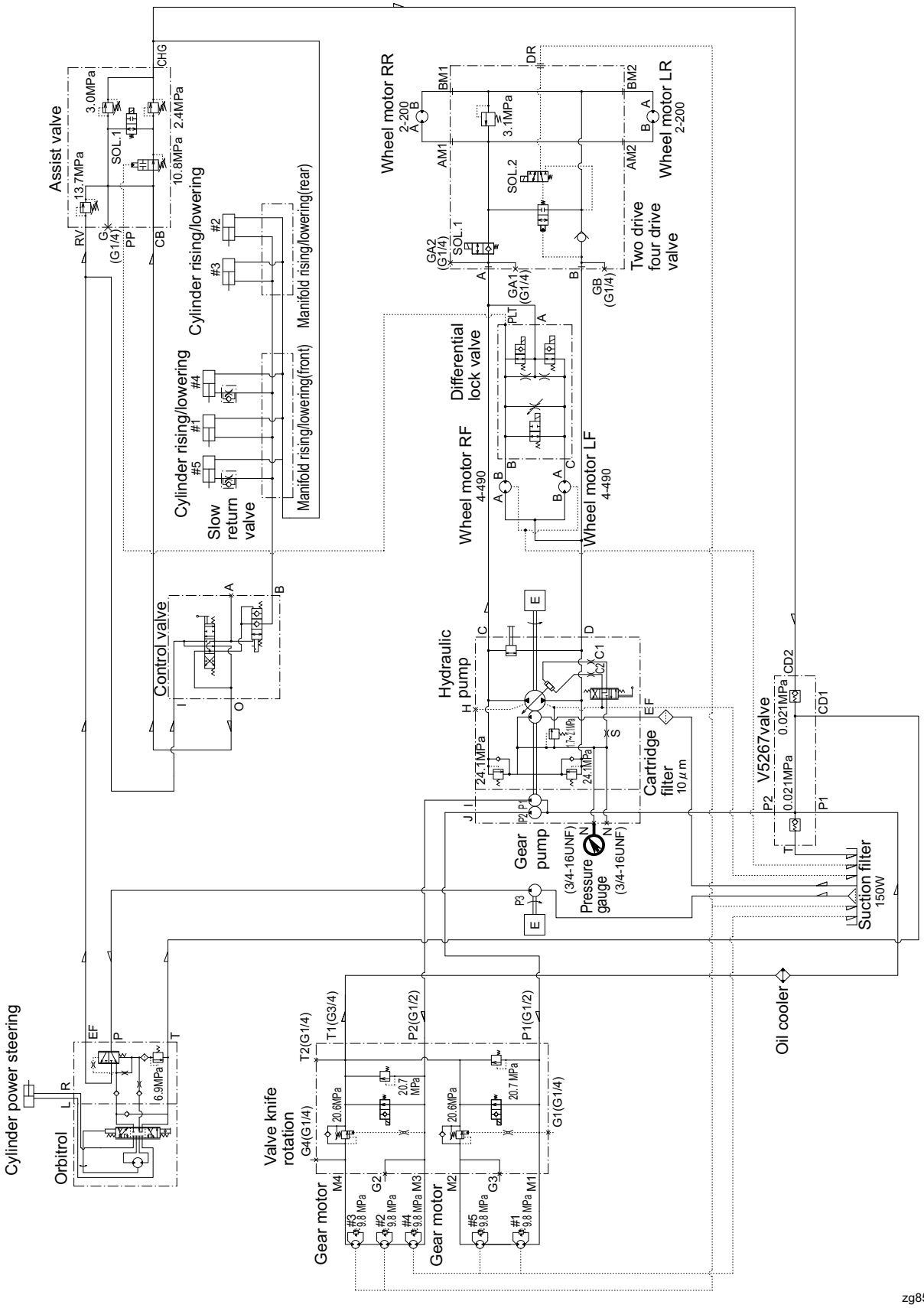

zg85f8-021

Charge Circuit_001

https://truckmanualshub.com/

Caution

Before starting pressure measurement, make sure that there are no people around the machine.

1. Remove the plug of the piston pump.

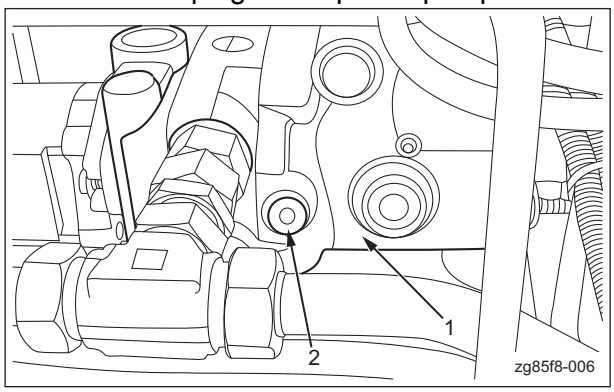

Charge Circuit_002

1	Piston pump
2	Plug

2. Attach the special bushing fitted with elbow to the piston pump, and then install the hydraulic hose and pressure gauge for low pressure measurements, in order.

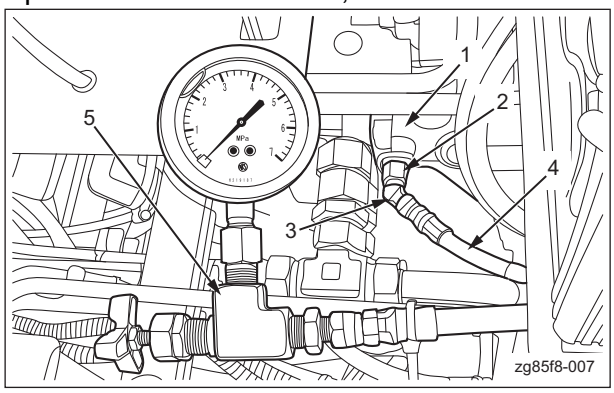

Charge Circuit_003

1	Piston pump
2	Special bushing (3/4-16NFPT1/4)
3	45 elbow (1035-6)
4	Hydraulic hose
5	Pressure gauge for low pressure measurements

3. Make sure that the parking brake is applied, and then start the engine and rev it up to the maximum rpm.
   The normal pressure is 1.7 to 2.1 MPa (246.56 - 304.57 psi).

https://truckmanualshub.com/

Rotary Knife Rotation Circuit

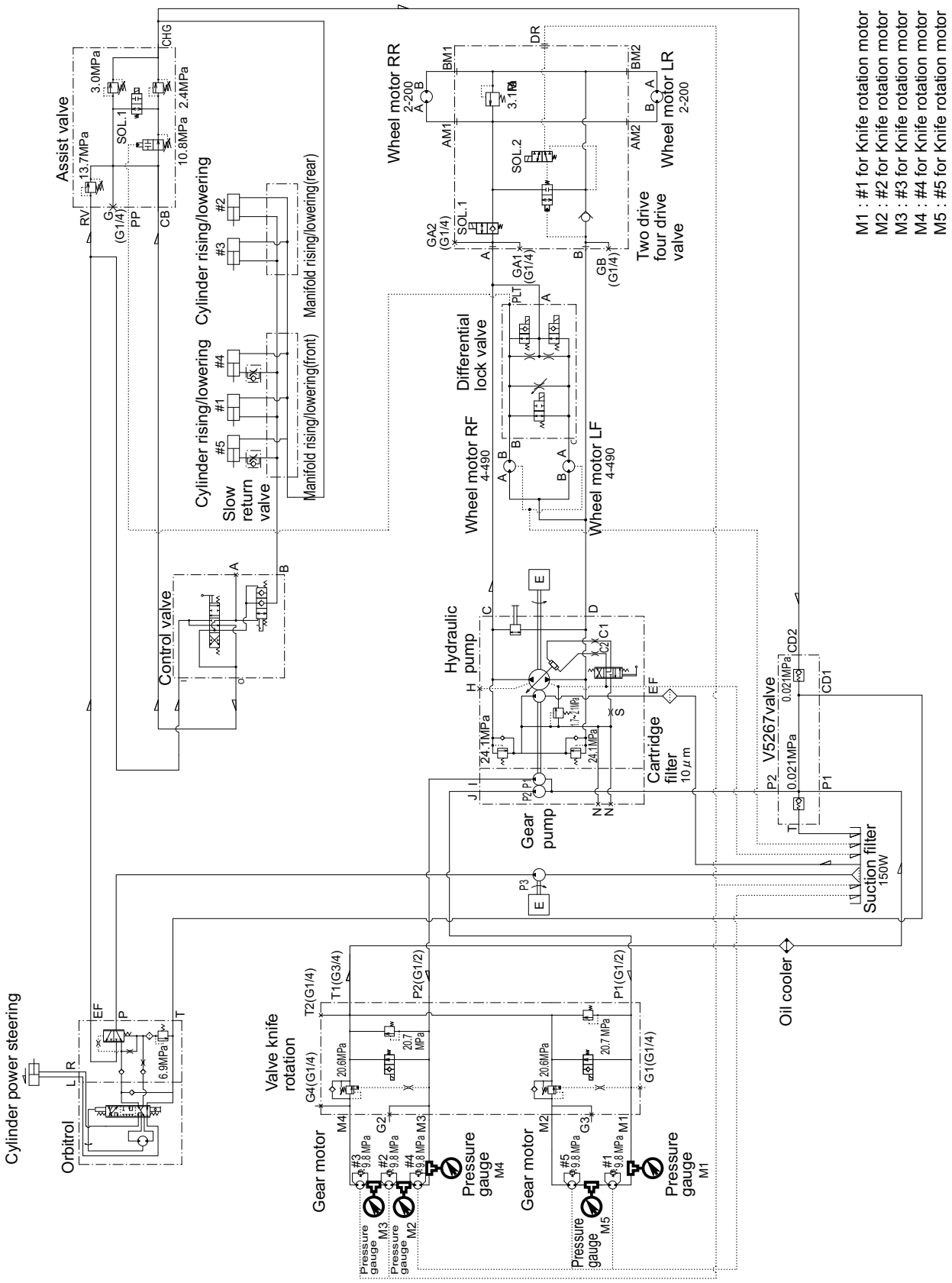

yj7zki-004

Rotary Knife Rotation Circuit_001

https://truckmanualshub.com/

Mower Units #1/#5

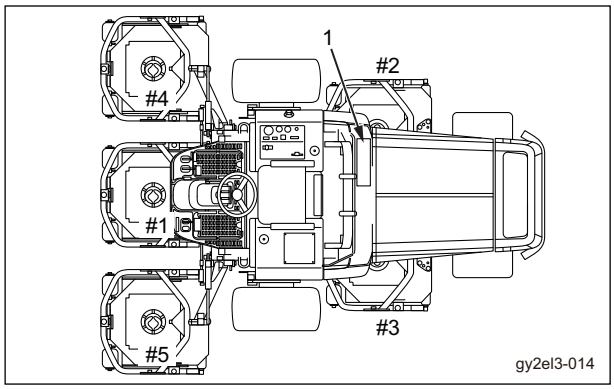

Mower Units #1/#5_001

1	Rotary knife rotation valve

Caution

Before starting pressure measurement, make sure that there are no people around the machine and that there are no objects under the mower units.

1. Move the machine onto a level surface, apply the parking brake, lower all mower units, and then stop the engine.
2. Remove the hydraulic hose from the elbow on the gear motor of mower unit #1.

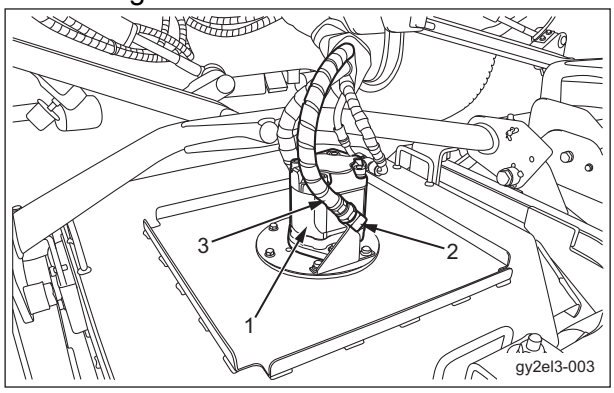

Mower Units #1/#5_002

1	Gear motor
2	Elbow
3	Hydraulic hose

3. Install a screw cap (male) onto the removed hydraulic hose, and then install a screw cap (female) onto the elbow.

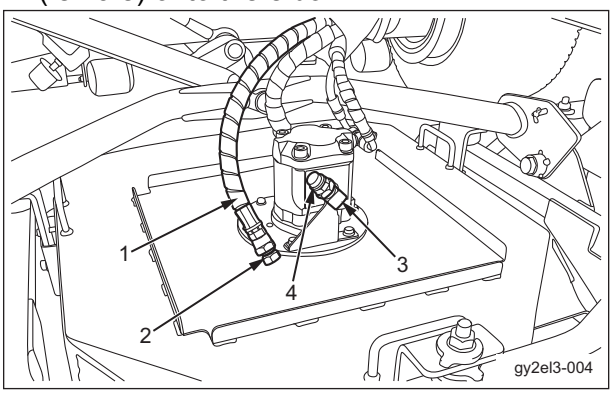

Mower Units #1/#5_003

1	Hydraulic hose
2	Male screw cap (PF1/2)
3	Elbow
4	Female screw cap (PF1/2)

4. Attach the hydraulic hose of the pressure gauge for high pressure measurements to the measuring port of the rotary knife rotation valve.

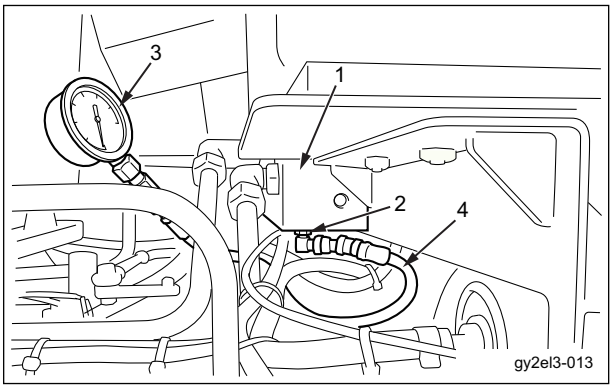

Mower Units #1/#5_004

1	Rotary knife rotation valve
2	Measuring port
3	Pressure gauge for high pressure measurements
4	Hydraulic hose

https://truckmanualshub.com/

> **Caution**
>
> Be careful since the rotary knives of mower units #2/#3/#4 will rotate when the rotary knife rotation valve for mower units #1/#5 is being measured.

5. Make sure that the parking brake is applied, and then start the engine and rev it up to the maximum rpm.
   The normal pressure is 20.7 MPa (3,002.18 psi) when the rotary knife rotation switch (ROTATION) is set to the "ON" position.

Mower Units #2/#3/#4

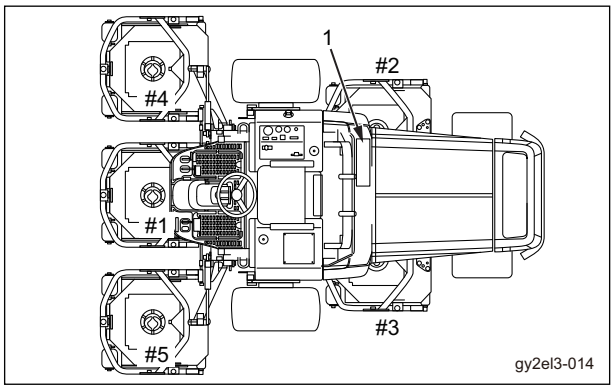

Mower Units #2/#3/#4_001

1	Rotary knife rotation valve

> **Caution**
>
> Before starting pressure measurement, make sure that there are no people around the machine and that there are no objects under the mower units.

1. Move the machine onto a level surface, apply the parking brake, lower all mower units, and then stop the engine.
2. Remove the hydraulic hose from the elbow on the gear motor of mower unit #4.

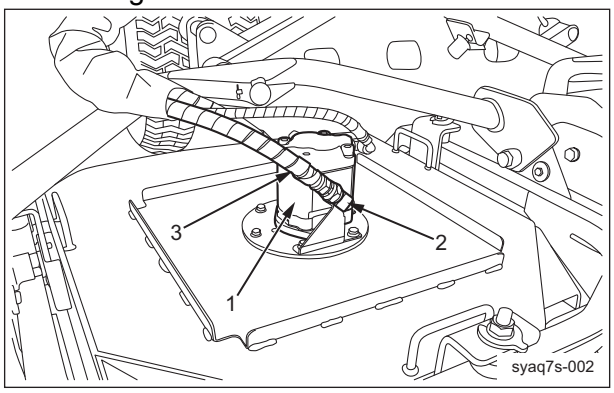

Mower Units #2/#3/#4_002

1	Gear motor
2	Elbow
3	Hydraulic hose

3. Install a screw cap (male) onto the removed hydraulic hose, and then install a screw cap (female) onto the elbow.

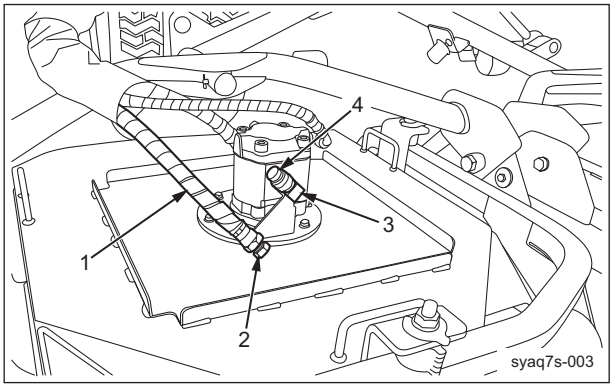

Mower Units #2/#3/#4_003

1	Hydraulic hose
2	Male screw cap (PF1/2)
3	Elbow
4	Female screw cap (PF1/2)

https://truckmanualshub.com/

4. Attach the hydraulic hose of the pressure gauge for high pressure measurements to the measuring port of the rotary knife rotation valve.

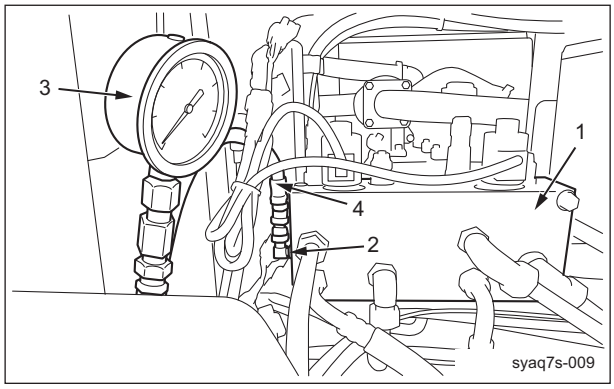

Mower Units #2/#3/#4_004

1	Rotary knife rotation valve
2	Measuring port
3	Pressure gauge for high pressure measurements
4	Hydraulic hose

Caution

Be careful since the rotary knives of mower units #1/#5 will rotate when the rotary knife rotation valve for mower units #2/#3/#4 is being measured.

5. Make sure that the parking brake is applied, and then start the engine and rev it up to the maximum rpm.
   The normal pressure is 20.7 MPa (3,002.18 psi) when the rotary knife rotation switch (ROTATION) is set to the "ON" position.

https://truckmanualshub.com/

Rotary Knife Rotation Motor Circuit

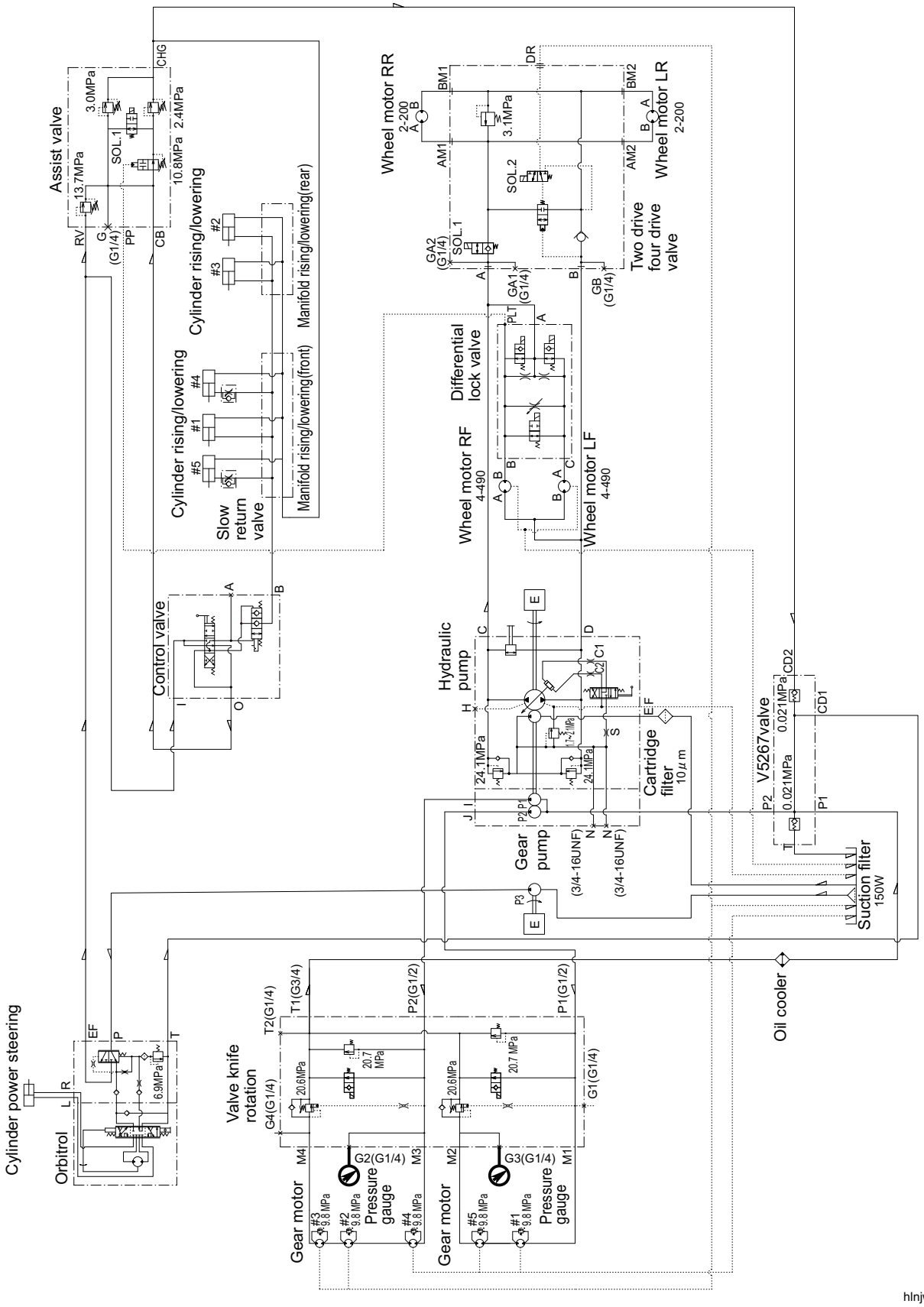

hlnjwg-015

Rotary Knife Rotation Motor Circuit_001

https://truckmanualshub.com/

Caution

Before starting pressure measurement, make sure that there are no people around the machine and that there are no objects under the mower units.

1. Move the machine onto a level surface, apply the parking brake, and then stop the engine.
2. Secure the rotary knife of the mower unit to be measured with the knife stopper.

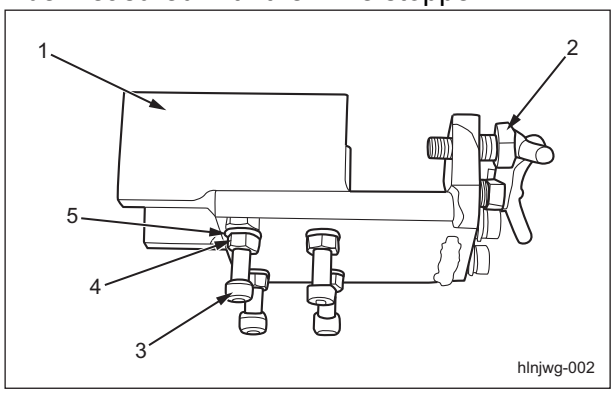

Rotary Knife Rotation Motor Circuit_002

1	Knife stopper
2	Wing bolt
3	Bolt, w/hexagon hole
4	Nut
5	Spring washer

3. Install the knife stopper onto the cutting height adjusting holes at the front of the mower unit.

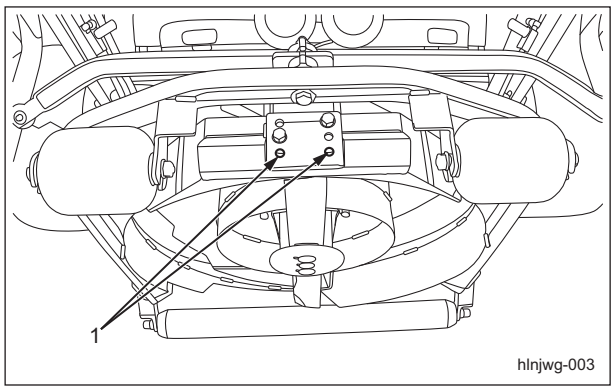

Rotary Knife Rotation Motor Circuit_003

1	Cutting height adjusting hole

4. Loosen the wing bolts of the knife stopper, insert it onto the rotary knife, and then tighten the wing bolts in the cutting height adjusting holes.

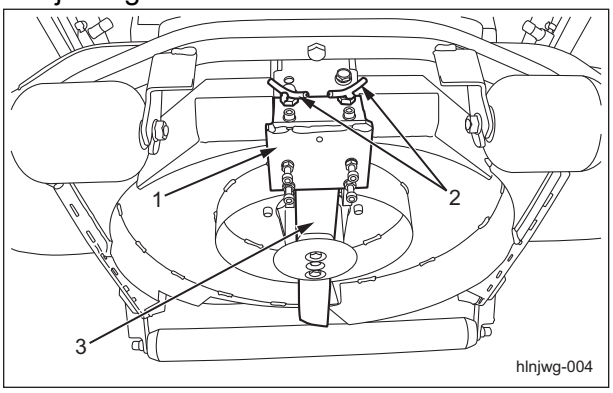

Rotary Knife Rotation Motor Circuit_004

1	Knife stopper
2	Wing bolt
3	Rotary knife

5. Adjust the knife stopper with the four bolts w/ hexagon holes so that the stopper is level with the ground when the mower unit is lowered, and then secure the stopper with the nuts.

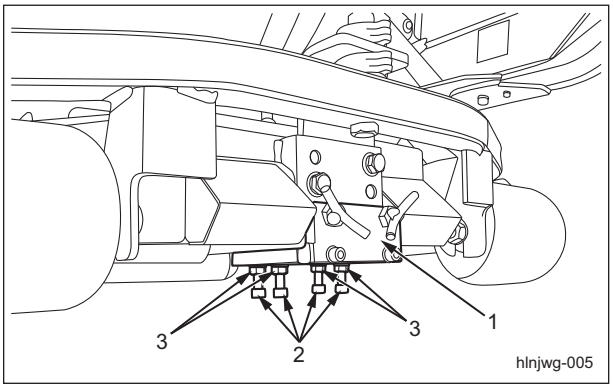

Rotary Knife Rotation Motor Circuit_005

1	Knife stopper
2	Bolt, w/hexagon hole
3	Nut

https://truckmanualshub.com/

6. Remove the hydraulic hose from the elbow on the gear motor of the mower unit.

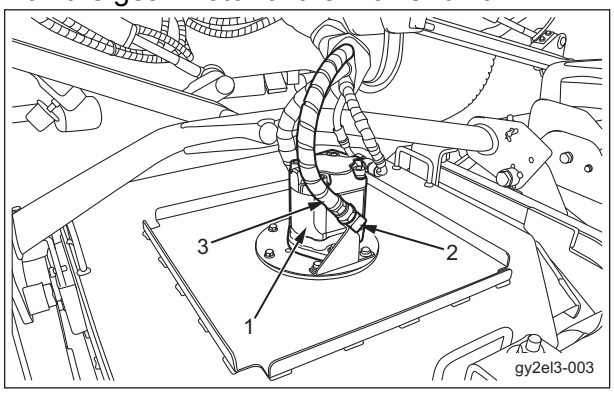

Rotary Knife Rotation Motor Circuit_006

1	Gear motor
2	Elbow
3	Hydraulic hose

7. Use a tee and hydraulic hose between the removed hose and elbow to install the pressure gauge for high pressure measurements.

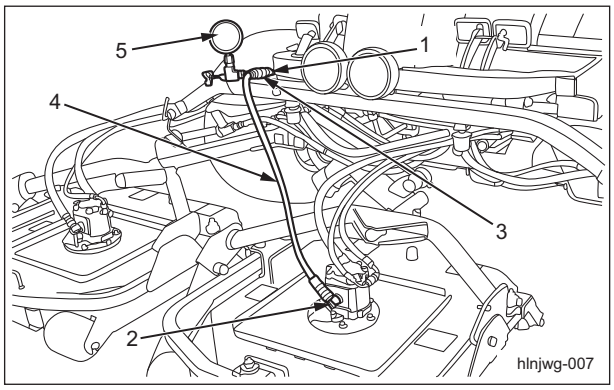

Rotary Knife Rotation Motor Circuit_007

1	Hydraulic hose
2	Elbow
3	Tee
4	Hydraulic hose
5	Pressure gauge for high pressure measurements

8. Make sure that the parking brake is applied, and then start the engine and rev it up to the maximum rpm.
   The normal pressure is 20.7 MPa (3,002.18 psi) when the rotary knife rotation switch (ROTATION) is set to the "ON" position.

https://truckmanualshub.com/

Adjustment

Assist Valve

Adjustment of Assist Valve

> **Caution**
>
> The following adjustment procedure applies to assist valves that are in their factory default state.

1. Before starting the adjustment, perform the following operations.
   [1] Park the machine on a level, paved surface.
   [2] Set the rotary knife rotation switch (ROTATION) to the "OFF" position and lower all mower units completely.
   [3] Apply the parking brake, stop the engine, and then remove the key.
2. Set the traction assist switch to the "ON" position.

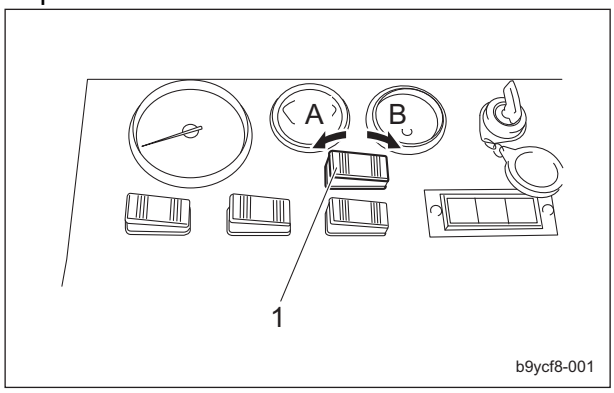

Adjustment of Assist Valve_001

1	Traction assist switch
A	ON
B	OFF

3. Lift the seat, and then remove the screw cap (female) of the pressure measurement port.

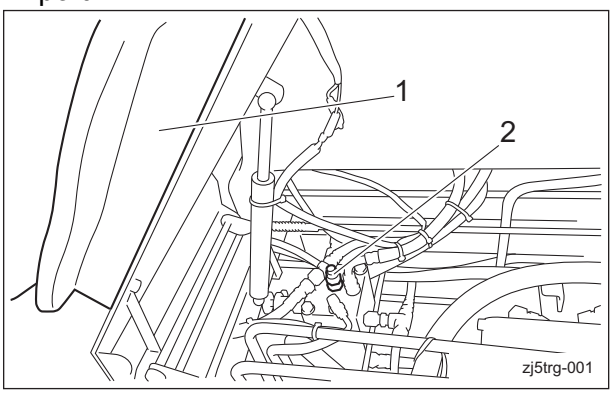

Adjustment of Assist Valve_002

1	Seat
2	Screw cap (female)

4. Install the pressure gauge for low pressure measurements onto the O-ring connector of the pressure measurement port.

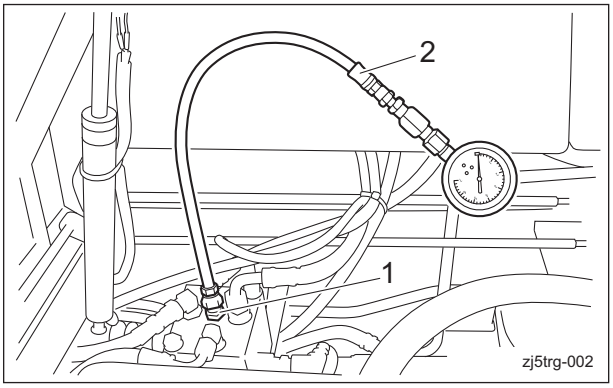

Adjustment of Assist Valve_003

1	O-ring connector
2	Pressure gauge for low pressure measurements

> **Important**
>
> Run the machine for approximately ten minutes to stabilize the hydraulic oil temperature.

5. Start the engine, and rev it up to the maximum rpm.
6. Set the rotary knife rotation switch (ROTATION) to the "OFF" position, and then apply the parking brake.

https://truckmanualshub.com/

7. Loosen the lock knobs on the low-pressure valve and the high-pressure valve. Alternately turn the adjustment knobs for the low-pressure valve and the high-pressure valve clockwise, little by little, until the pressure reaches 3.1 MPa (435.10 psi).

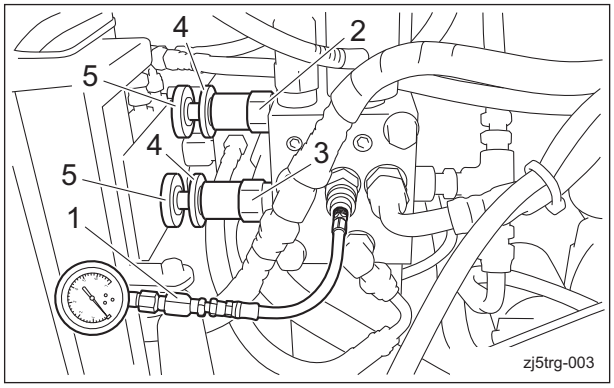

Adjustment of Assist Valve_004

1	Pressure gauge for low pressure measurements
2	Low-pressure valve
3	High-pressure valve
4	Lock knob
5	Adjustment knob

8. Follow the steps below to adjust the high-pressure valve settings.
   [1] Turn the adjustment knob for the high-pressure valve counterclockwise to set the pressure to 3.0 MPa (435.10 psi).
   [2] Tighten the lock knob for the high-pressure valve to lock the adjustment knob.

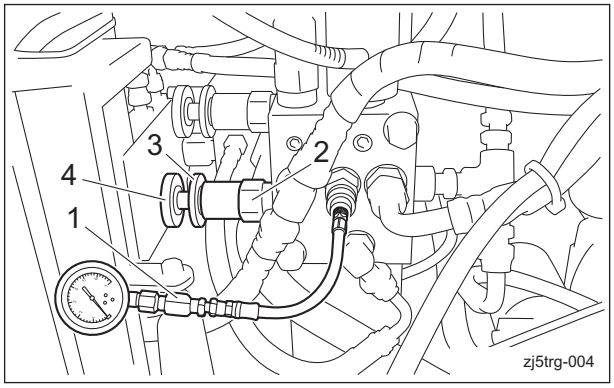

Adjustment of Assist Valve_005

1	Pressure gauge for low pressure measurements
2	High-pressure valve
3	Lock knob
4	Adjustment knob

9. Follow the steps below to adjust the low-pressure valve settings.
   [1] Make sure that the pressure gauge for low pressure measurements reads 3.0 MPa (435.10 psi).
   [2] Turn the adjustment knob for the low-pressure valve counterclockwise to set the pressure to 2.4 MPa (348.08 psi).
   [3] Tighten the lock knob for the low-pressure valve to lock the adjustment knob.

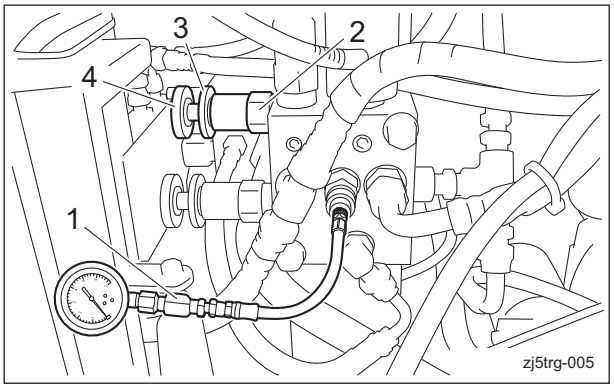

Adjustment of Assist Valve_006

1	Pressure gauge for low pressure measurements
2	Low-pressure valve
3	Lock knob
4	Adjustment knob

Important

Run the machine for approximately ten minutes to stabilize the hydraulic oil temperature.

10. Before checking the settings, perform the following operations.
    [1] Start the engine, and rev it up to the maximum rpm.
    [2] Set the rotary knife rotation switch (ROTATION) to the "OFF" position and lower all mower units completely.
    [3] Apply the parking brake, stop the engine, and then remove the key.
    [4] Install the pressure gauge for low pressure measurements onto the O-ring connector of the pressure measurement port.
    [5] Start the engine, and rev it up to the maximum rpm.

https://truckmanualshub.com/

11. Follow the steps below to check the settings.
    [1] If the pressure at the pressure measurement port of the assist valve is 2.4 MPa (348.08 psi), the low pressure setting is normal.
    [2] Sit on the seat, set the 2WD/4WD changeover switch (DRIVE) to the "2WD" position, and then firmly depress the brake pedal.
    [3] If slowly depressing the forward pedal switches the pressure at the pressure measurement port of the assist valve from a low pressure of 2.4 MPa (348.08 psi) to a high pressure of 3.0 MPa (435.10 psi), the setting is normal.

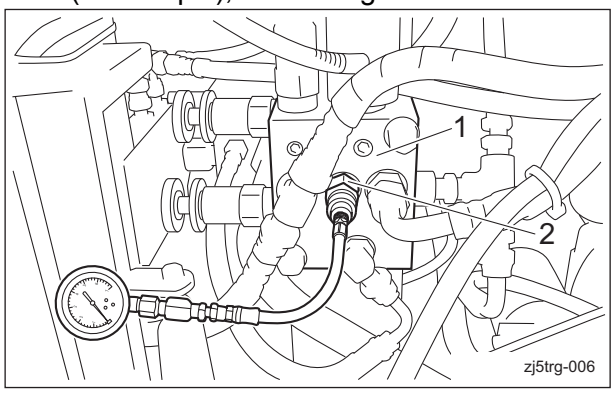

Adjustment of Assist Valve_007

1	Assist valve
2	Pressure measurement port

General inspection and repair

Note

Before inspection and repair

1. Move the machine to level surface.
2. Apply the parking brake, and then lower the operating machine.
3. Stop the engine, and then remove the key.
4. Clean the machine.
   Be sure to clean parts such as the piping, hoses, and hydraulic fittings.
   Remember that cleaning is always necessary upon inspection and repair of hydraulic systems.

> **Warning**
> Be sure to depressurize the hydraulic system before inspecting or repairing it.

5. When piping and hoses are removed, put a cap or plug in its place to prevent contamination of the hydraulic systems.
6. Attach labels or other identifications to the removed piping and hoses so that they can be correctly refitted.
7. When removing piping and hoses, pay special attention to the connection part.
   If necessary, mark the piping and hoses to ensure correct fitting.

After inspection and repair

> **Caution**
> After the installation, check if there is no hydraulic oil leakage in each part.
> See the list in "Tightening torques" (Page 3-5) .
> Note that the Baroness product warranty may not apply to defects caused by incorrect or overtorque tightening etc.

1. Check the amount of oil in the hydraulic tank. Add as necessary.
   In the event that failure or contamination is found in the hydraulic circuit, replace the hydraulic oil and filter.
2. When fitting hydraulic fittings, apply hydraulic oil onto the O-ring and seal.
3. Fit hoses and hydraulic fittings only after removing the cap and plug.
4. When fitting hoses and hydraulic fittings, follow the proper procedure for tightening.
5. After repair, check to see whether the hydraulic system functions normally and whether there are any broken parts.
6. When the hydraulic system has been repaired or replaced, operate the machine slowly, idling the engine, to allow the air to go out of the circuit.
7. Make sure that there is no oil leakage.
   In the event of leakage, stop the engine, set the oil stopper, and check the amount of oil in the hydraulic tank.
   Add oil if necessary.

https://truckmanualshub.com/

Hydraulic hose, piping

Warning

When checking for pinhole leakage of the hydraulic circuit or oil leakage of the nozzle, search for a leakage point using something like paper or cardboard, never with your bare hands. Be careful about high-pressure oil which may pierce your skin, resulting in physical injury.

Check the piping and hose every day for oil leakage, damage to the circuit, looseness, abrasion, loosening of connecting part, weather-related deterioration and chemical-related deterioration. If necessary, repair before operating the machine.

Hydraulic Oil

Important

In the event of hydraulic circuit failure, be sure to clean the circuit.

In the event of contamination or failure of the hydraulic circuit, clean and/or replace the parts. Since the hydraulic circuit is a closed circuit, any contaminant will remain within the circuit and may lead to other failures unless cleaned.

Caution

Be careful with hot oil, which could cause burns if it contacts your skin.

1. Drive and maneuver the machine and warm up the hydraulic oil.
2. Move the machine to level surface.
3. Apply the parking brake, and then lower the operating machine.
4. Stop the engine, and then remove the key.

Warning

Be sure to depressurize the hydraulic system before inspecting or repairing it.

Important

Be sure to clean the circuit connecting part to be repaired.

5. Drain the oil from the hydraulic tank.
6. Drain the oil from the hydraulic hoses and piping while the oil is still warm.
7. Replace the hydraulic oil and filter.
8. Check the hydraulic tank and clean.
9. Fit the hydraulic hoses, piping and hydraulic fittings that have been removed.

Caution

Use only the specified hydraulic oil.
Use of other hydraulic oil may lead to the failure of hydraulic circuit or the like.

10. Supply new hydraulic oil.
11. Make sure that the traveling pedal and all the drives of the operating machine are in neutral position.
12. Start and run the engine for 10 seconds to check that there is no oil leakage or else. Perform this operation twice.
13. Start the engine.
    Let it run idle for at least two minutes, then run at the maximum speed for one minute.
14. Raise and lower the operating machine, and turn the steering wheel side to side.
15. Stop the engine, and check for any oil leakage.
    Check the amount of hydraulic oil. Add as necessary.
16. Operate for two hours under normal operating conditions.
17. Check the condition of hydraulic oil.
    If it is contaminated, repeat the procedures from 1 through 15 until the oil becomes clean.
18. If no abnormality is found, operate normally and maintain according to the maintenance schedule.

https://truckmanualshub.com/

Air bleeding

Caution

When you replace or repair the motor, pump, cylinder, etc, make sure that the hydraulic system is properly connected.
Make sure that air is bled to avoid malfunction.

Important

When you replace or repair hydraulic parts, be sure to replace the oil filter.

1. Move the machine to level surface.
2. Apply the parking brake, and then lower the operating machine.
3. Stop the engine, and then remove the key.
4. Make sure that the hydraulic equipments and hydraulic fittings are securely tightened.
5. When there is any malfunction of the hydraulic system or any dirt, clean the hydraulic system and the hydraulic tank, and then replace the hydraulic oil.
6. Check the amount of hydraulic oil. Add as necessary.
7. Make proper adjustment and connection, and make sure that there are neither broken parts nor oil leakage.
8. Make sure that the traveling pedal and all the drives of the operating machine are in neutral position.
9. Start and run the engine for 10 seconds to check that there is no oil leakage or else. Perform this operation twice.

Warning

Check " "Jacking up the machine" (Page 3-9) " when you jack up the machine.

10. Raise all the wheels of the machine, and then use jack stands or any proper blocks to support it firmly.
11. Make sure that the traveling pedal and all the drives of the operating machine are in neutral position.
12. Start the engine and depress the traveling pedal while it is running at low rpm.
    The charge pump sucks oil, air in the hydraulic system will be bled in about 30 seconds,and then the circuit will be filled with oil.
13. After the hydraulic circuit is filled with oil, operate the up/down lever and switches to operate the up/down cylinder several times.
    Stop the engine immediately when the cylinder does not move within 10 to 15 seconds or if there is any noise from the pump. And then check the cause.
    Then carry out the following inspections.
    [1] Loose, malfunction of the filter or suction line
    [2] Loose, malfunction of the pump coupler
    [3] Block of the suction line
    [4] Block of the charge relief valve
    [5] Malfunction of the charge pump
14. Proceed to the following operation when the up/down cylinder moves within 10-15 seconds.
15. Operate the traveling pedal for forward and reverse to check if the wheels rotate in correct direction.
    [1] When the wheels rotate in wrong direction, stop the engine and then swap the lines for the motor to correct rotation direction.
    [2] Stop the engine when the rotation direction is correct.
16. Return the traveling pedal into the neutral position.
17. Check neutral of the traveling and make adjustment. (See the Owner's Operating Manual)
18. Lower the machine to the ground.
19. Carry out the following operations when the traveling pump or the wheel motor has been removed.
    [1] Run for 10 minutes so as to rotate the wheels slowly.
    [2] Then, gradually increase operation load while running for 10 minutes.
    [3] Stop the machine, check the amount of hydraulic oil and add it as necessary. Make sure that there is no oil leakage. Check all of the connections.

https://truckmanualshub.com/

[4] Check that the traveling is in neutral position.
When any adjustment is needed, raise all wheels of the machine, and then use jack stands or any proper blocks to support it firmly.

Inspection and repair of each section

Hydraulic Oil

Inspection of Hydraulic Oil

1. Raise the mower units and maintain that position on a level surface.
2. Make sure that the oil level is at the middle of the oil gauge.

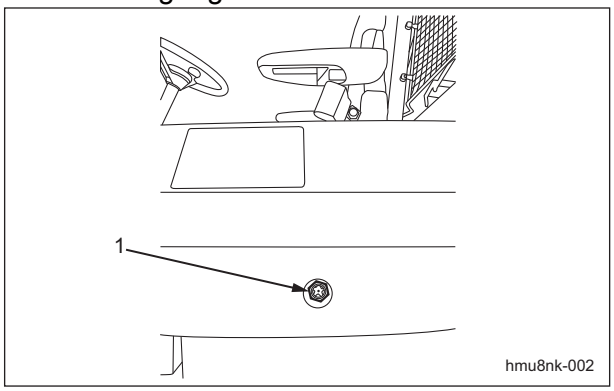

Inspection of Hydraulic Oil_001

1	Oil gauge

3. Check underneath the machine for oil leakage.

Hydraulic Oil Supply

> **Important**
> Do not mix different types of oil.

> **Important**
> Use Shell Tellus S2M46 (or equivalent) as hydraulic oil.

1. If the oil level is low, remove the left tank cover, and then open the tank cap and supply oil.

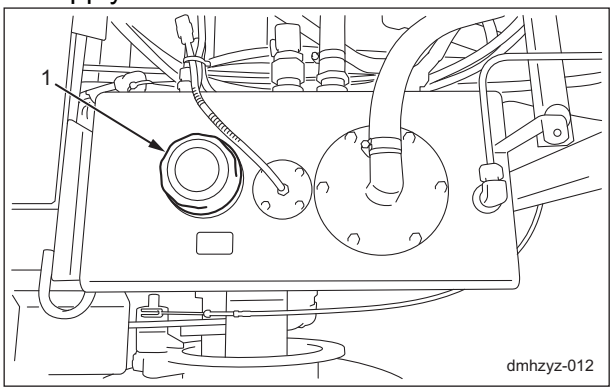

Hydraulic Oil Supply_001

1	Tank cap

2. Tighten the tank cap securely.
3. Start the engine, raise and lower the mower units, and turn the steering wheel left and right.
Move forward and reverse repeatedly several times.
4. Raise the mower units and maintain that position on a level surface, and then check to see if the oil level is at the middle of the oil gauge. If necessary, supply oil.
5. Check underneath the machine for oil leakage.
6. Attach the left tank cover.

https://truckmanualshub.com/

Change of Hydraulic Oil

Warning

When you change the hydraulic oil, be sure to drain it into a bowl and discard it in accordance with local laws and regulations.

Caution

If the oil emulsifies or if it becomes even slightly less transparent, change the oil immediately.

Important

Use Shell Tellus S2M46 (or equivalent) as hydraulic oil.

1. Follow the steps below to remove the old oil.
   [1] Start and run the engine to warm up the oil. On a level surface, remove the drain plug of the hydraulic tank, and then drain the old oil into a container.
   [2] Wind new sealing tape on the drain plug, and then attach it to the hydraulic tank.

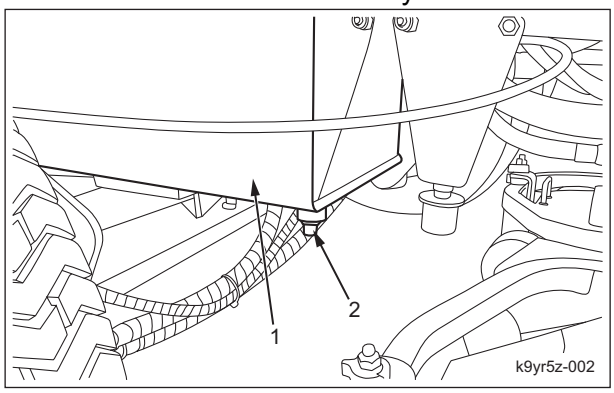

Change of Hydraulic Oil_001

1	Hydraulic tank
2	Drain plug

2. Remove the left tank cover, open the tank cap, pour new oil from the fill port until the oil level reaches the middle of the oil gauge on the hydraulic tank, and then install the tank cap.
   The hydraulic tank capacity is approximately 44.0 dm^3 (44.0 L).

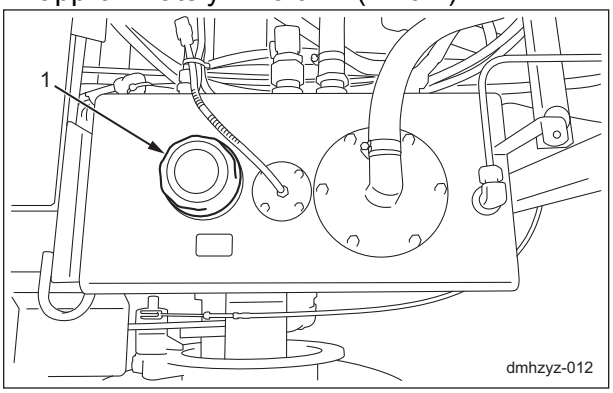

Change of Hydraulic Oil_002

1	Tank cap

3. Start the engine, raise and lower the mower units, and turn the steering wheel left and right.
   Move forward and reverse repeatedly several times.
4. Raise the mower units and maintain that position on a level surface, and then check to see if the oil level is at the middle of the oil gauge. If necessary, supply oil.
5. Check underneath the machine for oil leakage.
6. Attach the left tank cover.

▪Timing for Raplacing Hydraulic Oil

Important

Contamination of hydraulic oil may cause malfunction of the hydraulic system.

Periodically replace the hydraulic oil.

Timing for replacing	First time	After 100 hrs of operation
	Second time and later	Every 500 hrs of operation
Specified hydraulic oil	Shell Tellus S2M46 (or equivalent)	
Tank capacity	44 L (11.62 US gallons)	

https://truckmanualshub.com/

Hydraulic oil filter

Replacement of Hydraulic Oil Filter

1. Remove the old cartridge filter

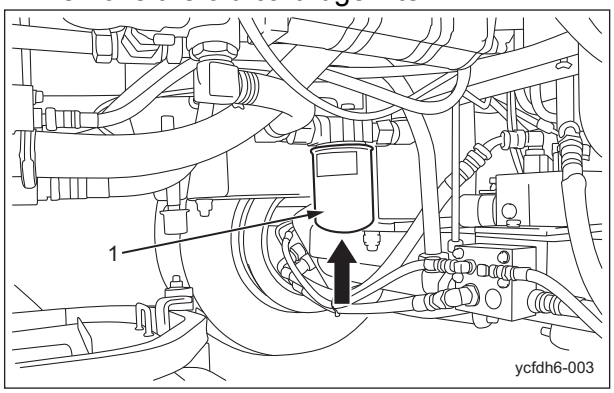

Replacement of Hydraulic Oil Filter_001

1	Cartridge filter

2. Apply clean hydraulic oil on the packing of the new cartridge filter.
3. Screw in the filter by hand until the packing contacts the mounting surface.
   Then tighten additional 1/2 turn from that point.
4. After the installation, start the engine. After the oil is warmed up, stop the engine and then check that there is no oil leakage.

■Replacing Timing of Hydraulic Oil Filter

> **Important**
>
> Contamination of hydraulic oil filter may cause malfunction of the hydraulic system.

Replace the hydraulic oil filter periodically.

Timing of replacing	The first time	After 100 hours of operation
	The second time or after	Every 500 hours of operation

Replacement of Suction Filter

1. Remove the left tank cover. (See "Removal of Left Tank Cover" (Page 7-36) .)

> **Important**
>
> Take note of the installed direction when removing the hydraulic intake port.

> **Important**
>
> Liquid gasket is applied at intake port packing. Wipe out all of the old liquid gasket when removing it.

2. Follow the steps below to remove the suction filter.
   [1] Remove the bolt, spring washer and washer from the hydraulic tank, and then remove the intake hose joint fitting.
   [2] Remove the old suction filter and intake port packing from the intake hose joint fitting.
   [3] Wipe out all of the old liquid gasket from the hydraulic tank, the intake hose joint fitting and the intake port packing.

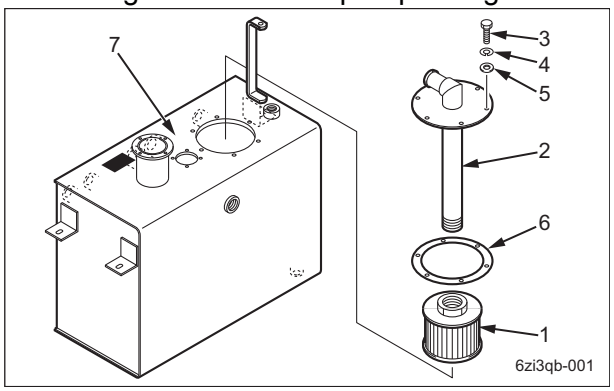

Replacement of Suction Filter_001

1	Suction filter
2	Intake hose joint fitting
3	Bolt
4	Spring washer
5	Washer
6	Intake port packing
7	Hydraulic tank

https://truckmanualshub.com/

Important

Install without damaging filtering face of the suction filter.

Important

If removed intake port packing is damaged, replace it with a new one.

3. Apply the liquid gasket on the intake port packing, and then install it on the intake hose joint fitting.
4. Install the new suction filter on the intake hose joint fitting.

Important

"Tightening torques" (Page 3-5) See the list table.
Note that the Baroness product warranty may not apply to defects caused by incorrect or overtorque tightening etc.

5. Install the intake hose joint fitting and the left tank cover in the procedure reversing the removal.
6. After the installation, check if there is no hydraulic oil leakage in each part.

Removal and installation of each section

Gear Motor

Removal of Gear Motor

- Mower Units #1/#4/#5

Important

Before removing the hydraulic hoses, check their installation positions.

1. Remove the hydraulic hoses from the gear motor.

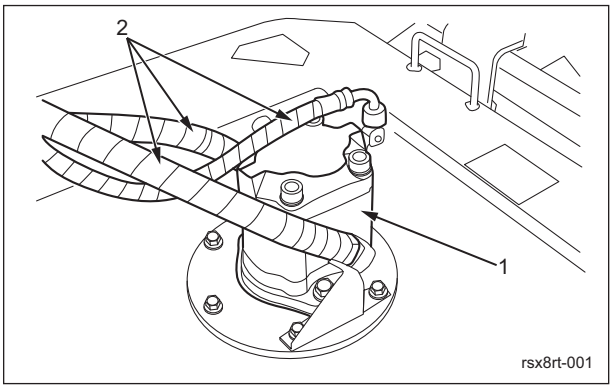

Mower Units #1/#4/#5_001

1	Gear motor
2	Hydraulic hoses

Important

The gear motor orientation differs depending on the mower unit.
Before removing the gear motors, check their installation orientation.

2. Remove the two bolts used to install the gear motor, and then pull out the gear motor.

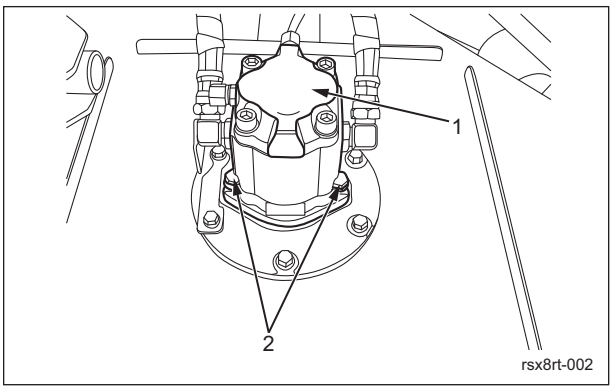

Mower Units #1/#4/#5_002

https://truckmanualshub.com/

1	Gear motor
2	Bolt

■Mower Units #2/#3

1. Remove the clip pin installed on the mower arm, and then pull out the grip pin.

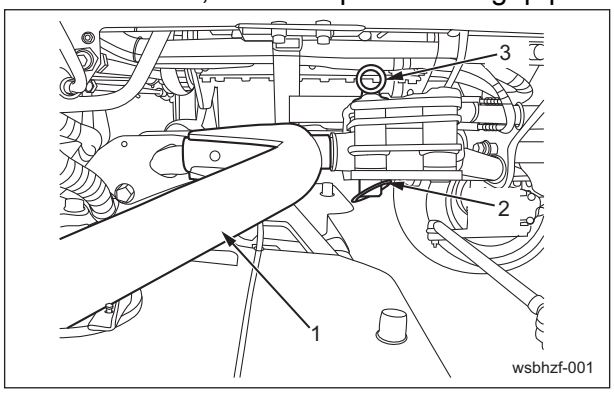

Mower Units #2/#3_001

1	Mower arm
2	Clip pin
3	Grip pin

2. Pull out the mower unit.

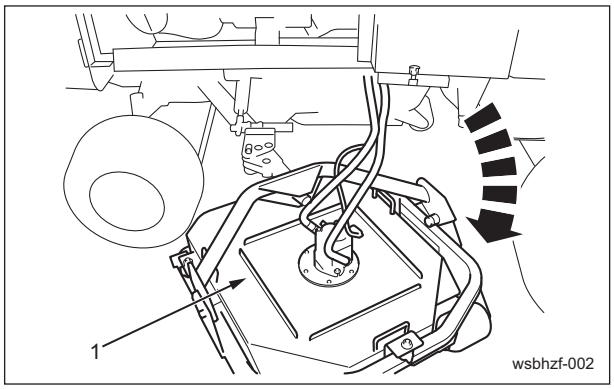

Mower Units #2/#3_002

1	Mower unit

3. Install the grip pin and clip pin in the locking hole for maintenance.

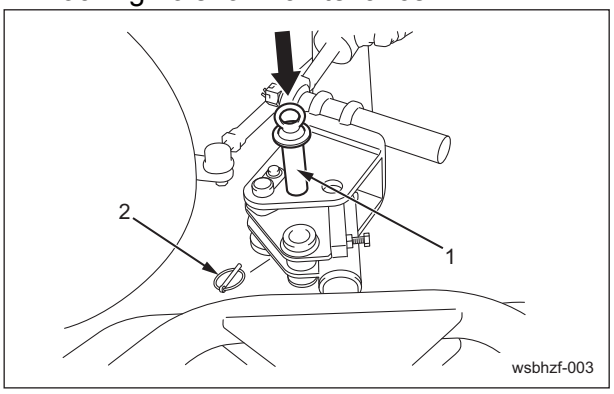

Mower Units #2/#3_003

1	Grip pin
2	Clip pin

Important

Take note of the installation position when removing the hydraulic hose.

4. Remove the hydraulic hose from the gear motor.

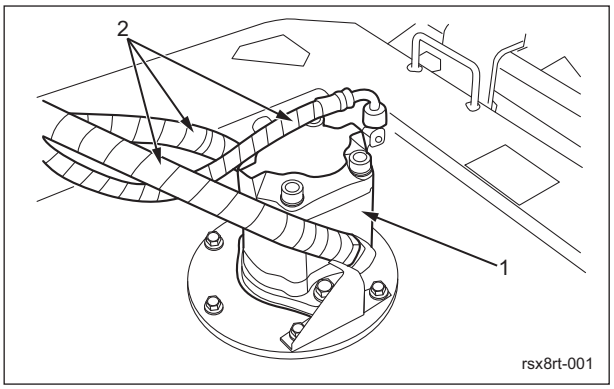

Mower Units #2/#3_004

1	Gear motor
2	Hydraulic hoses

https://truckmanualshub.com/

Important

Directions of the gear motors differ depending on the mower unit.
Take note of the installed direction when removing the gear motor.

5. Remove the two bolts used to install the gear motor, and then pull out and remove the gear motor.

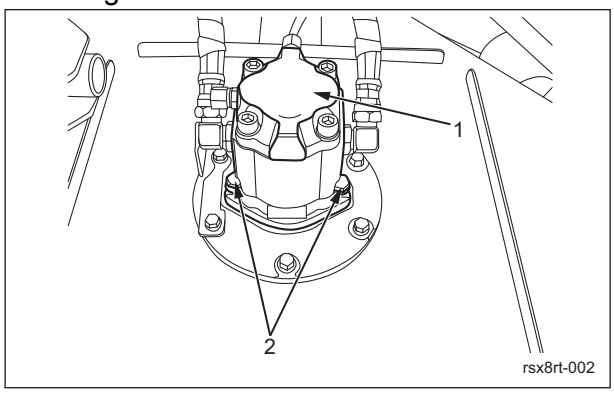

Mower Units #2/#3_005

1	Gear motor
2	Bolt

▪Reference

Follow the procedure below to remove the gear motor if it is difficult to remove.

Mower unit #1

1. Have ready an M10×10 (P 1.5) bolt.

Important

Before removing the hydraulic hoses, check their installation positions.

2. Remove the hydraulic hoses from the gear motor.

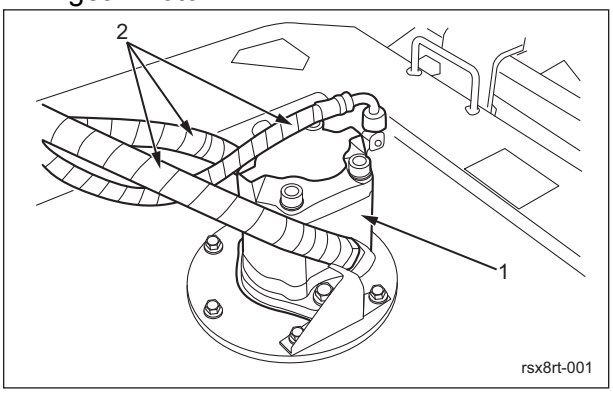

Mower unit #1_001

1	Gear motor
2	Hydraulic hoses

3. Start the engine, and then raise the mower units.
4. Stop the engine, and then remove the key.
5. Lift the mower unit at the front.

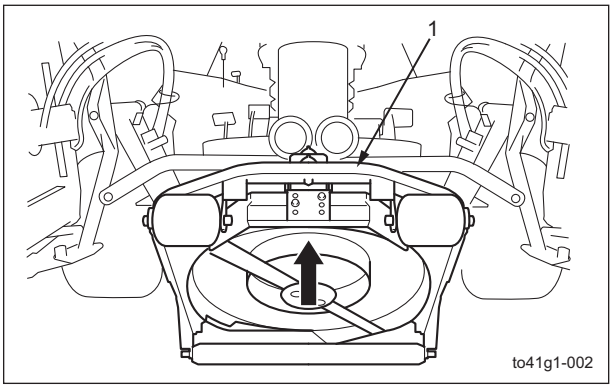

Mower unit #1_002

1	Mower unit

https://truckmanualshub.com/

6. Remove the cotter pin and hardened roundhead pin inserted at a, and then insert them at b.

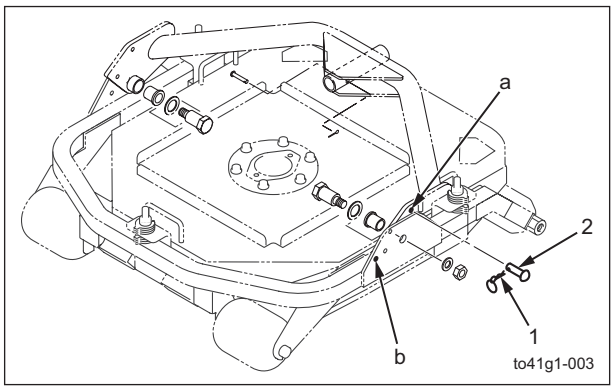

Mower unit #1_003

1	Cotter pin
2	Hardened roundhead pin

Important

The gear motor orientation differs depending on the mower unit.
Before removing the gear motors, check their installation orientation.

7. Remove the two bolts used to install the gear motor.

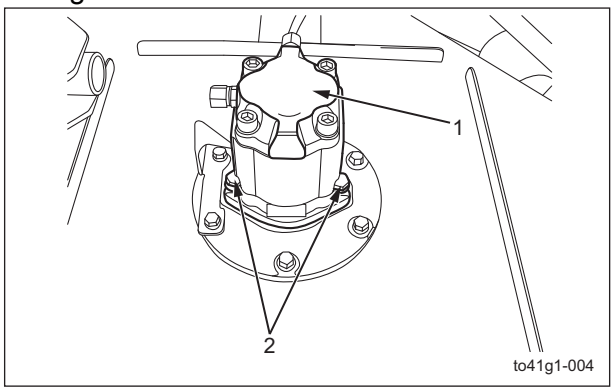

Mower unit #1_004

1	Gear motor
2	Bolt

8. Remove the bolt used to install the rotary knife.

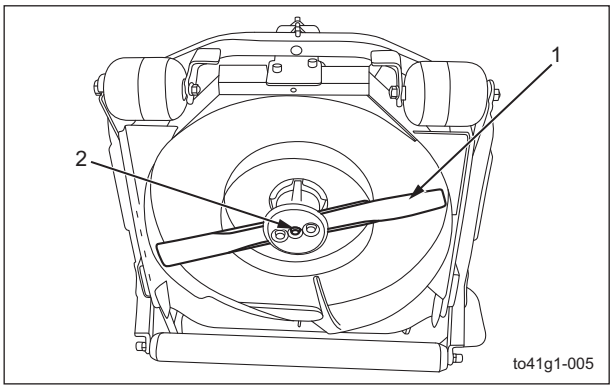

Mower unit #1_005

1	Rotary knife
2	Bolt

Caution

Two people should work together to push out the gear motor and firmly support it so that it is not dropped.

9. Insert the readied M10×10 (P 1.5) bolt, and then push out the gear motor to remove it.

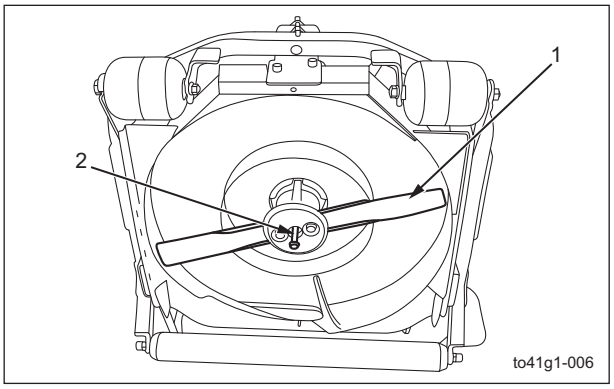

Mower unit #1_006

1	Rotary knife
2	Bolt

https://truckmanualshub.com/

Mower Units #2/#3

1. Have ready an M10×10 (P 1.5) bolt.
2. Remove the clip pin installed on the mower arm, and then pull out the grip pin.

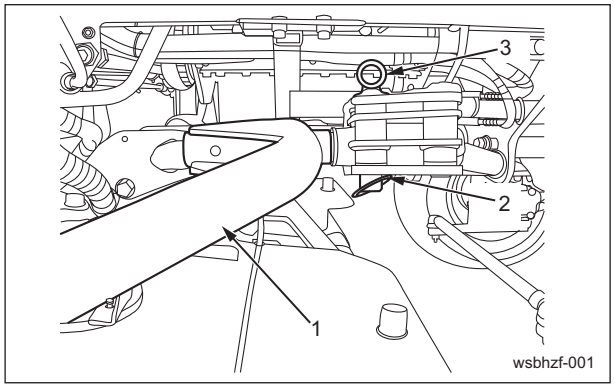

Mower Units #2/#3_001

1	Mower arm
2	Clip pin
3	Grip pin

3. Pull out the mower unit.

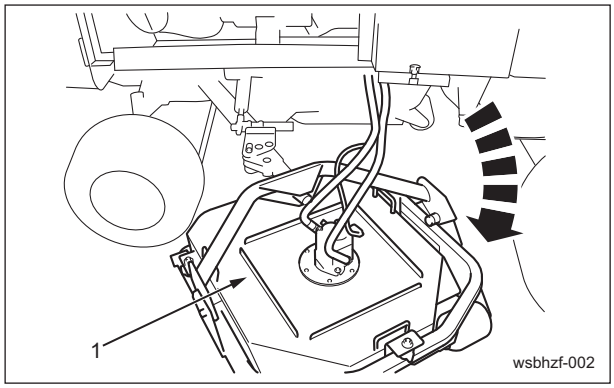

Mower Units #2/#3_002

1	Mower unit

4. Install the grip pin and clip pin in the locking hole for maintenance.

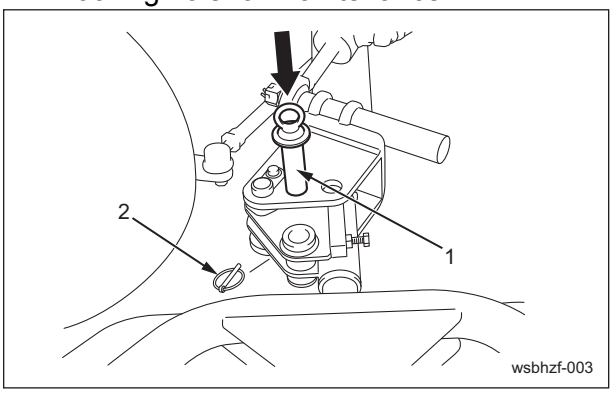

Mower Units #2/#3_003

1	Grip pin
2	Clip pin

5. Remove the hydraulic hoses from the gear motor.

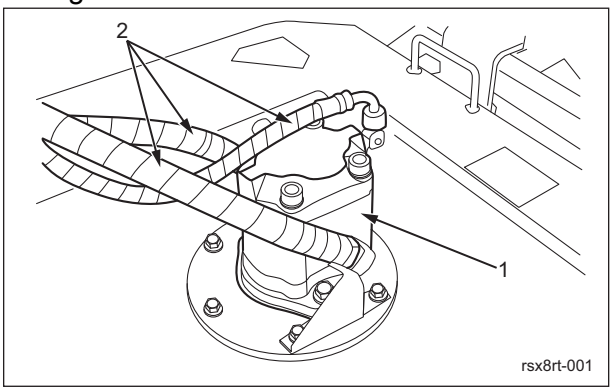

Mower Units #2/#3_004

1	Gear motor
2	Hydraulic hoses

6. Start the engine, and then raise the mower units.
7. Stop the engine, and then remove the key.
8. Lift the mower unit at the front.

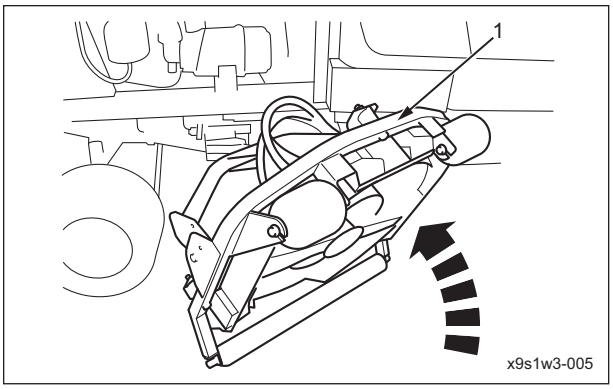

Mower Units #2/#3_005

1	Mower unit

https://truckmanualshub.com/

9. Remove the cotter pin and hardened roundhead pin inserted at a, and then insert them at b.

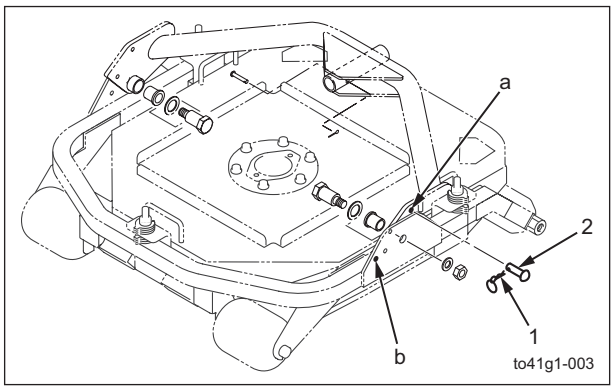

Mower Units #2/#3_006

1	Cotter pin
2	Hardened roundhead pin

Important

The gear motor orientation differs depending on the mower unit.
Before removing the gear motors, check their installation orientation.

10. Remove the two bolts used to install the gear motor.

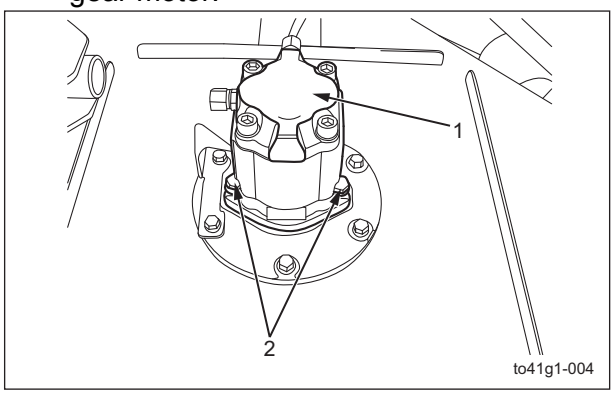

Mower Units #2/#3_007

1	Gear motor
2	Bolt

11. Remove the bolt used to install the rotary knife.

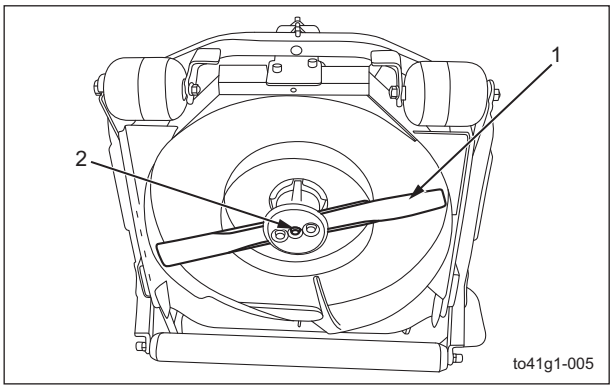

Mower Units #2/#3_008

1	Rotary knife
2	Bolt

Caution

Two people should work together to push out the gear motor and firmly support it so that it is not dropped.

12. Insert the readied M10×10 (P 1.5) bolt, and then push out the gear motor to remove it.

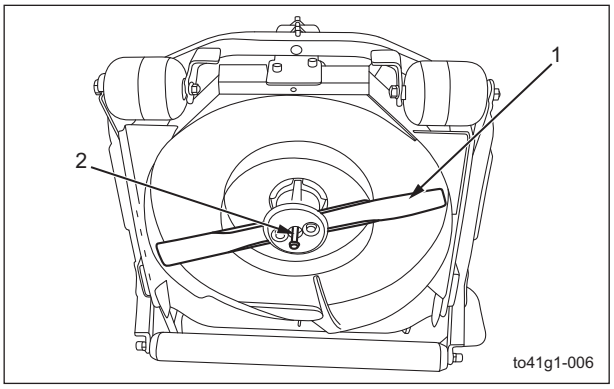

Mower Units #2/#3_009

1	Rotary knife
2	Bolt

https://truckmanualshub.com/

Mower Units #4/#5

1. Prepare a M10 (P1.5） x 10 bolt

> **Important**
>
> Check and mark the installation position when removing the hydraulic hose.

2. Remove the hydraulic hose from the gear motor.

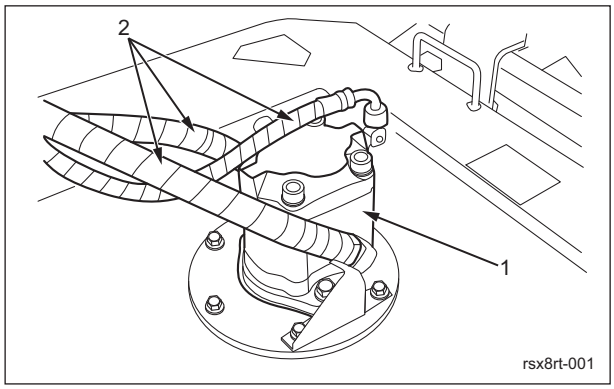

Mower Units #4/#5_001

1	Gear motor
2	Hydraulic hoses

3. Start the engine, and then raise the mower units.

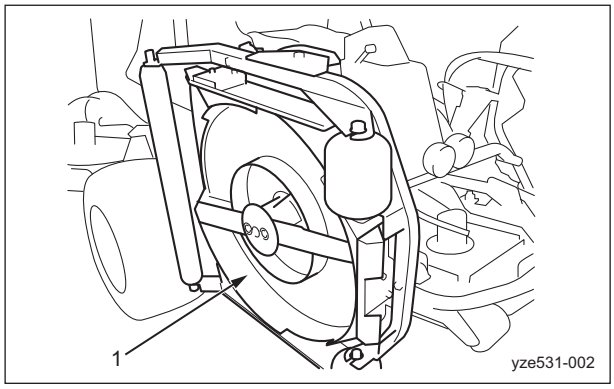

Mower Units #4/#5_002

1	Mower unit

4. Stop the engine, and then remove the key.

5. Remove the cotter pin and hardened roundhead pin inserted at a, and then insert them at b.

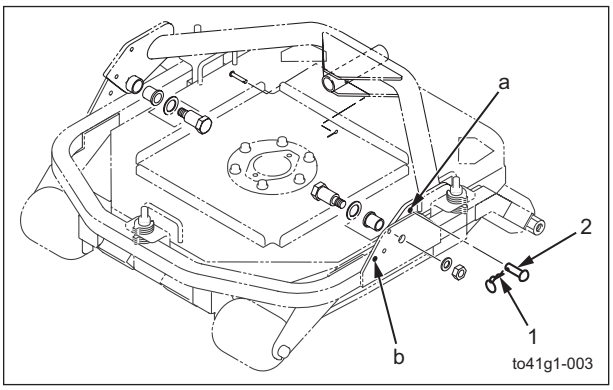

Mower Units #4/#5_003

1	Cotter pin
2	Hardened roundhead pin

> **Important**
>
> Directions of the gear motors differ depending on the mower unit.
> Check and mark the installed direction when removing the gear motor.

6. Remove the two bolts used to install the gear motor.

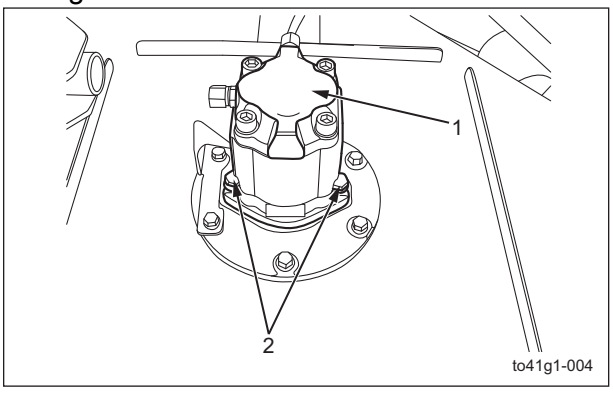

Mower Units #4/#5_004

1	Gear motor
2	Bolt

https://truckmanualshub.com/

7. Remove bolts used to install the rotary knife.

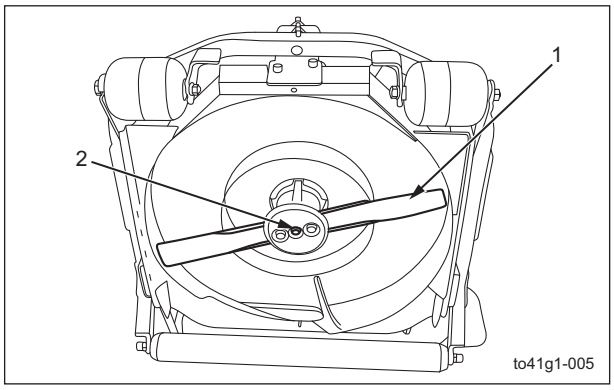

Mower Units #4/#5_005

1	Rotary knife
2	Bolt

Caution

Two persons are needed to push out the gear motor and it must be supported securely so as not to drop it.

8. Insert the prepared M10 (P1.5) x 10 bolt to push the gear motor, and then remove it.

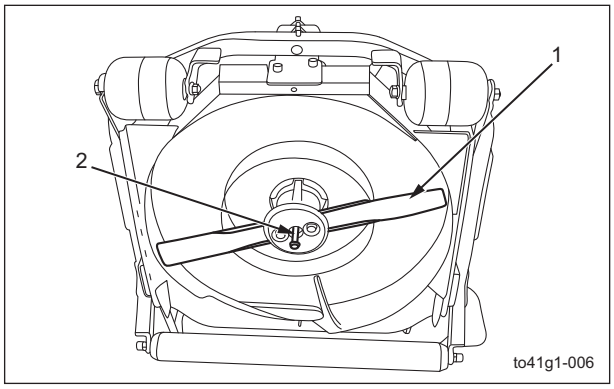

Mower Units #4/#5_006

1	Rotary knife
2	Bolt

Installation of Gear Motors

Caution

After installation, check each part for oil leakage.

Caution

See the list in "Tightening torques" (Page 3-5) .
Note that the Baroness product warranty may not apply to defects caused by incorrect or overtorque tightening etc.

Important

Make sure of the installing location of the hydraulic hoses and do not install them at the wrong locations.

Important

The gear motor orientation differs according to the mower unit.
Install it in the correct orientation.

1. Install the packing, fit the gear motor on the mower unit, and then attach it with the two bolts.

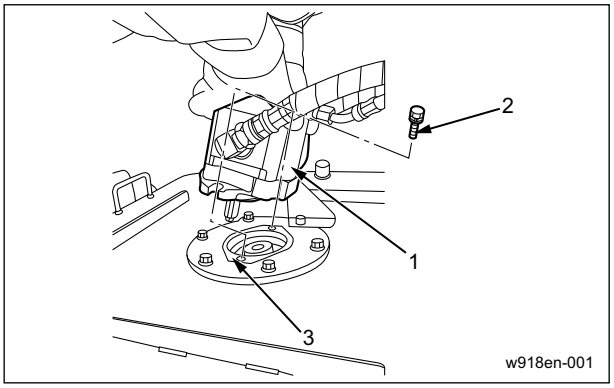

Installation of Gear Motors_001

1	Gear motor
2	Bolt
3	Packing

https://truckmanualshub.com/

Important

The stopper differs depending on the mower unit.
Be careful of the difference.

2. Loosen the stopper bolts, arrange the adjuster elbow so that it is aligned with the stopper, and then tighten the bolts.

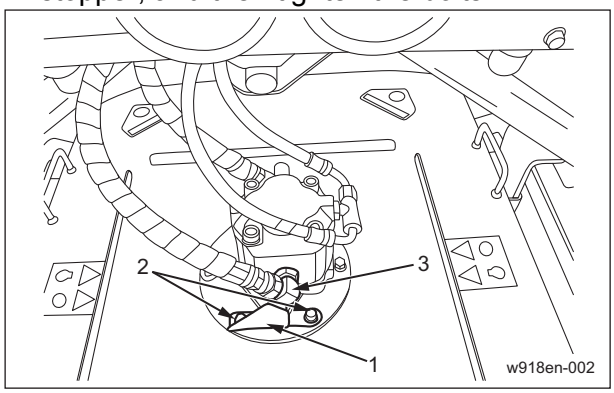

Installation of Gear Motors_002

1	Stopper
2	Bolt
3	Adjuster elbow

Slow Return Valve

Removal of Slow Return Valve

Important

A slow return valve is installed on the up/down cylinder of mower units #4/#5.

1. Start the engine, and then lower all mower units.
2. Stop the engine, and then remove the key.

Important

Before removing the hydraulic hoses, check their installation positions.

Important

The slow return valves have a specific installation orientation.
Before removing the slow return valves, check their installation orientation.

3. Remove the hydraulic hose (attached to the slow return valve) from the adapter.

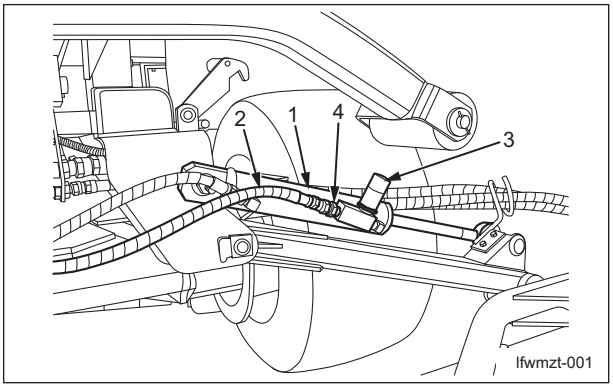

Removal of Slow Return Valve_001

1	Up/down cylinder
2	Hydraulic hoses
3	Slow return valve
4	Adapter

https://truckmanualshub.com/

4. Follow the steps below to remove the slow return valve.
   [1] Together with the adapter and elbow, remove the slow return valve from the up/down cylinder.
   [2] Remove the adapter and elbow from the slow return valve.

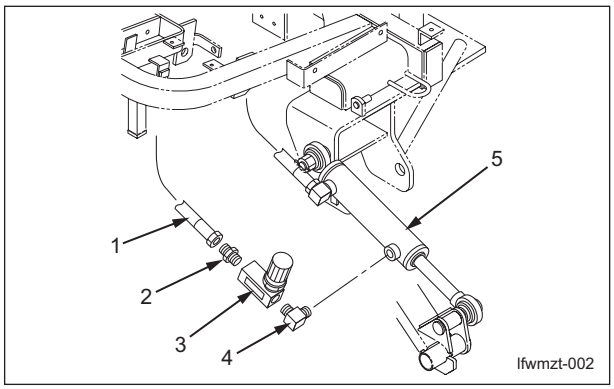

Removal of Slow Return Valve_002

1	Hydraulic hoses
2	Adapter
3	Slow return valve
4	Elbow
5	Up/down cylinder

Installation of Slow Return Valve

Caution

After the installation, check if there is no oil leakage in each part.

Caution

See "Tightening torques" (Page 3-5) .
Note that the Baroness product warranty may not apply to defects caused by incorrect or overtorque tightening etc.

Important

Make sure of the installing location of the hydraulic hose and do not install it at the wrong location.

Important

Make sure of the installing direction of the slow return valve and do not install it in the wrong direction.

For installing it, reverse the removing procedure.

Raise/lower cylinder

Removal of Up/down Cylinder

▪Mower Units #1/#2/#3

Caution

Be careful when handling the hydraulic cylinder since it is heavy.

1. Start the engine, and then lower all mower units.
2. Stop the engine, and then remove the key.

Important

Before removing the hydraulic hoses, check their installation positions.

3. Follow the steps below to remove the up/down cylinders.
   [1] Remove the hydraulic hose attached to the up/down cylinder.
   [2] Remove the cotter pins, slotted nuts and washer.
   [3] Remove the up/down cylinder.

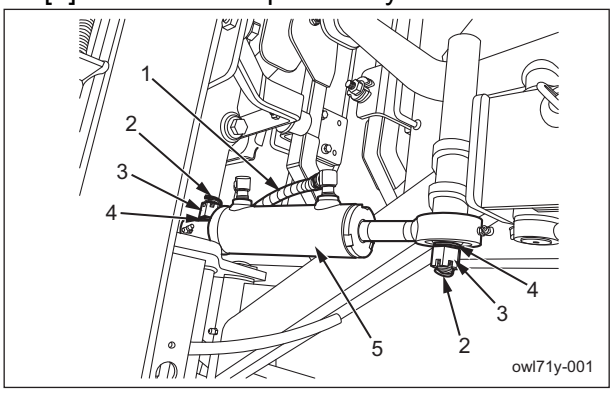

Mower Units #1/#2/#3_001

1	Hydraulic hoses
2	Cotter pin
3	Slotted nut
4	Washer
5	Up/down cylinder

https://truckmanualshub.com/

4. Remove the elbow from the up/down cylinder.

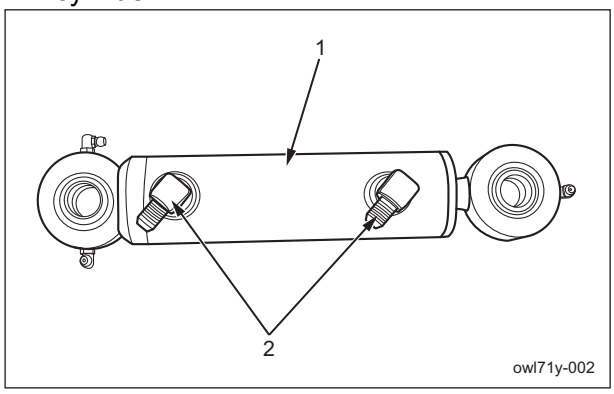

Mower Units #1/#2/#3_002

1	Up/down cylinder
2	Elbow

▪Mower Units #4/#5

Caution

Perform the operation very carefully since the hydraulic cylinder is heavy.

1. Start the engine, and then lower all mower units completely.
2. Stop the engine, and then remove the key.

Important

If you remove the hydraulic hoses, first take note and remember the positions in which they are installed.

3. Remove two hydraulic hoses attached to the up/down cylinder.

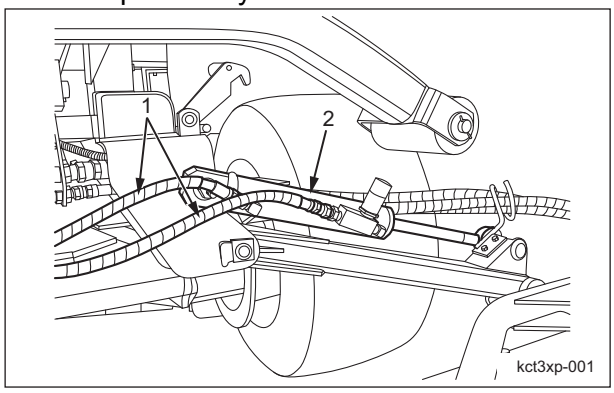

Mower Units #4/#5_001

1	Hydraulic hoses
2	Up/down cylinder

4. Remove the cotter pins, slotted nuts, and spring washers, and then remove the up/down cylinder.

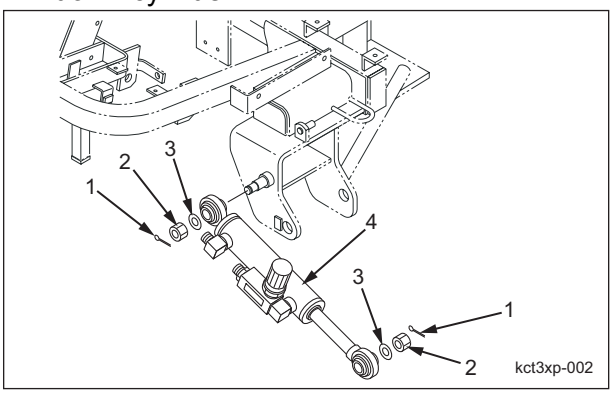

Mower Units #4/#5_002

1	Cotter pin
2	Slotted nut
3	Spring washer
4	Up/down cylinder

5. Follow the steps below to remove the parts attached to the up/down cylinder.
   [1] Remove elbow B from the up/down cylinder.
   [2] Remove elbow A, the slow return valve, and the adapter together from the up/down cylinder.

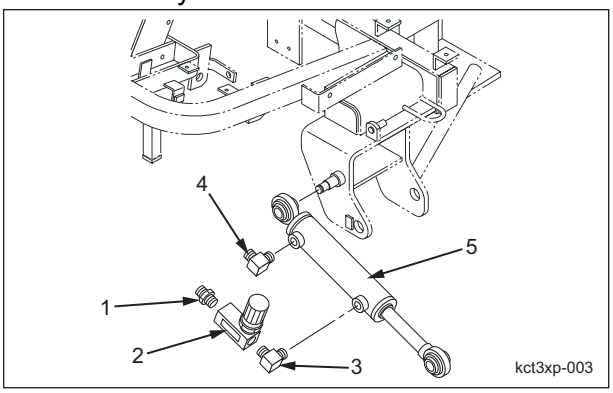

Mower Units #4/#5_003

1	Adapter
2	Slow return valve
3	Elbow A
4	Elbow B
5	Up/down cylinder

https://truckmanualshub.com/

Installation of Up/down Cylinder

> **Caution**
>
> After the installation, check if there is no oil leakage in each part.

> **Caution**
>
> See "Tightening torques" (Page 3-5) .
> Note that the Baroness product warranty may not apply to defects caused by incorrect or overtorque tightening etc.

> **Important**
>
> Make sure of the installing location of the hydraulic hose and do not install it at the wrong location.

For installing it, reverse the removing procedure.

Assist Valve

Removal of Assist Valve

1. Start the engine, and then lower all mower units.
2. Stop the engine, and then remove the key.
3. Pull the lever toward the front of the machine to lift up the seat in the direction of the arrow.

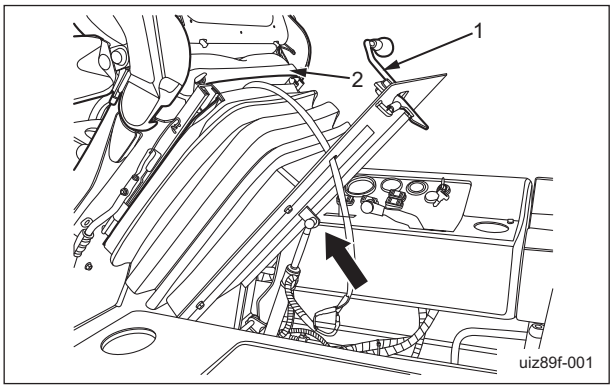

Removal of Assist Valve_001

1	Lever
2	Seat

> **Important**
>
> Before removing the hydraulic hoses, check their installation positions.

4. Remove the hydraulic hoses.

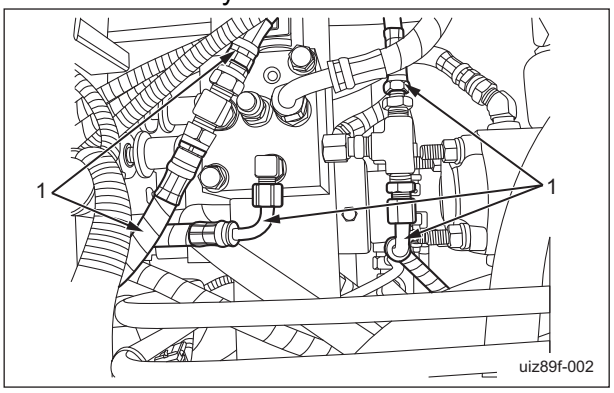

Removal of Assist Valve_002

1	Hydraulic hoses

https://truckmanualshub.com/

5. Remove the bolt, spring washer and washer, and then remove the traction assist valve.

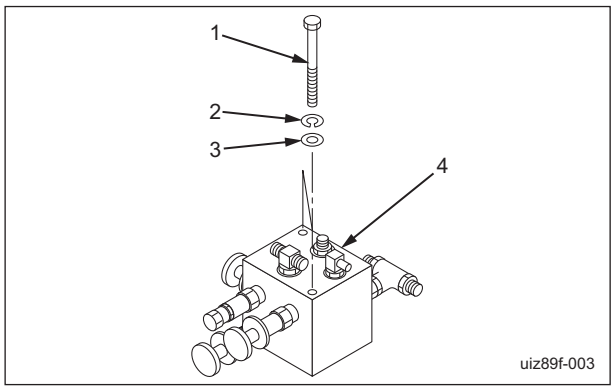

Removal of Assist Valve_003

1	Bolt
2	Spring washer
3	Washer
4	Traction assist valve

6. Remove the tee, adapters, nipple and bushing from the traction assist valve.

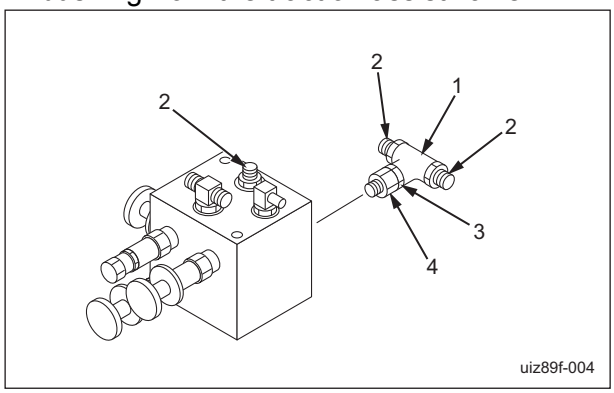

Removal of Assist Valve_004

1	Tee
2	Adapter
3	Nipple
4	Bushing

Installation of Assist Valve

Caution

After the installation, check if there is no oil leakage in each part.

Caution

See "Tightening torques" (Page 3-5) .
Note that the Baroness product warranty may not apply to defects caused by incorrect or overtorque tightening etc.

Important

Make sure of the installing location of the hydraulic hose and do not install it at the wrong location.

For installing it, reverse the removing procedure.

Wheel motor

Removal of Front Wheel Motor

Important

Take note of the installation position when removing the hydraulic hose.

Important

Make sure that no dirt or dust enters the ports of the hydraulic system.

1. Remove the front wheel. (See "Removal of Front Wheel" (Page 7-18) .)
2. Remove the caliper. (See "Removal of Caliper" (Page 7-21) .)
3. Remove the brake disc. (See "Removal of Brake Disc" (Page 7-20) .)
4. Remove the wheel mounting base. (See "Removal of Wheel Mounting Base" (Page 7-22) .)

https://truckmanualshub.com/

5. Remove the three hydraulic hoses.

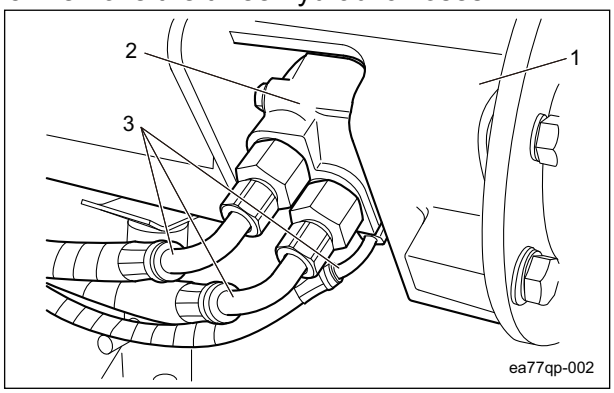

Removal of Front Wheel Motor_001

1	Frame
2	Wheel motor
3	Hydraulic hose

6. Remove the two adapters.

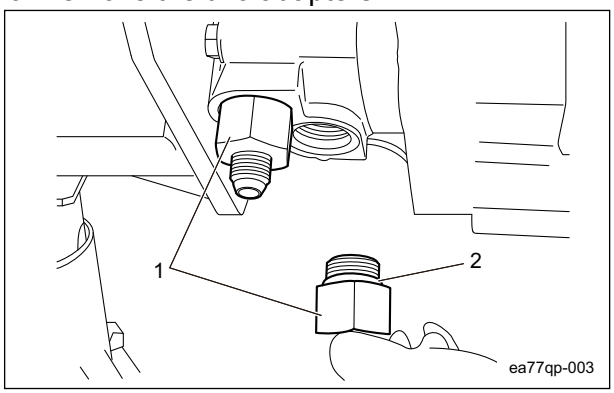

Removal of Front Wheel Motor_002

1	Adapter
2	O-ring

7. Install the screw caps to the hydraulic hoses.

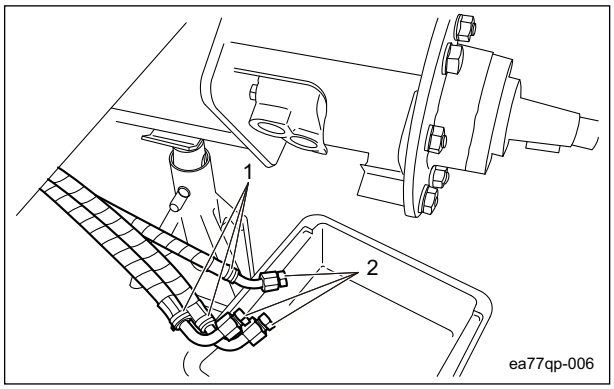

Removal of Front Wheel Motor_003

1	Hydraulic hose
2	Screw cap

8. Remove the wheel motor from the frame, and then remove the return adapter.

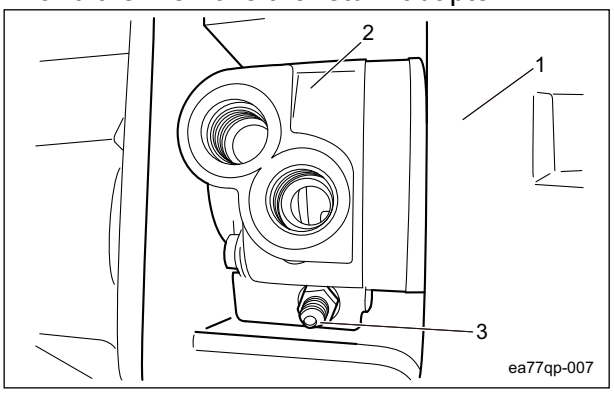

Removal of Front Wheel Motor_004

1	Frame
2	Wheel motor
3	Return adapter

Caution

Two people should work together on the wheel motor since it is heavy.

9. Remove the four bolts, washers, and spring washers used to install the frame and the wheel motor, and pull out the wheel motor to remove it.

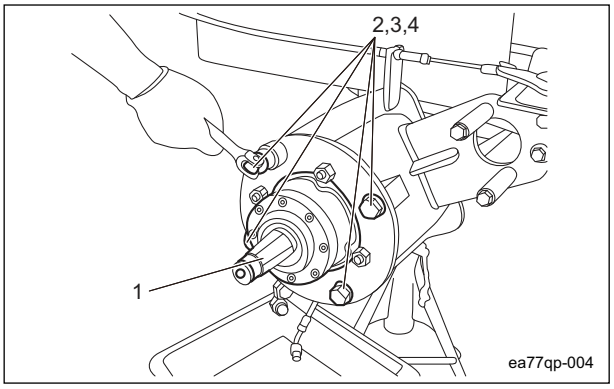

Removal of Front Wheel Motor_005

1	Wheel motor
2	Bolt
3	Washer
4	Spring washer

https://truckmanualshub.com/

10. Remove the return adapter.

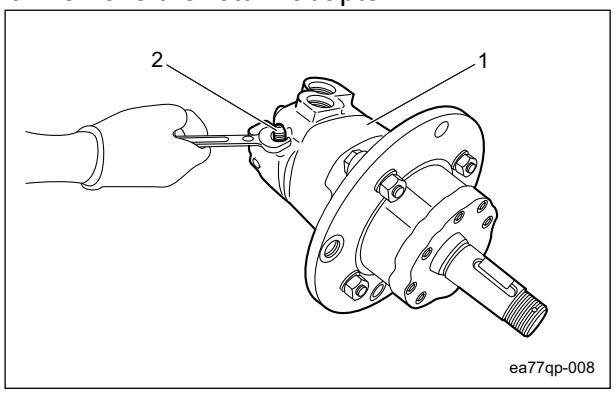

Removal of Front Wheel Motor_006

1	Wheel motor
2	Return adapter

11. Remove the four bolts, spring washers, and nuts used to install the motor, and then remove the motor mounting disk.

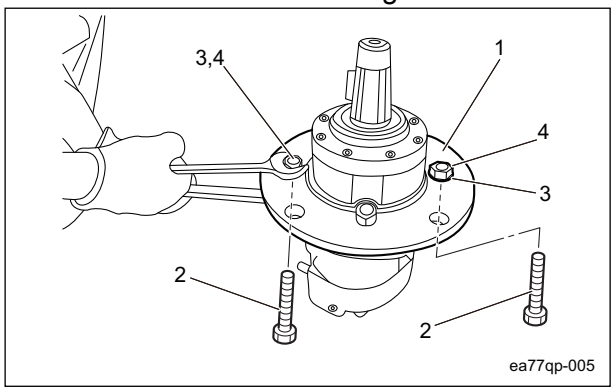

Removal of Front Wheel Motor_007

1	Motor mounting disk
2	Motor mounting bolt
3	Spring washer
4	Nut

Installation of Front Wheel Motor

Caution

After the installation, check if there is no oil leakage in each part.

Caution

See the list in "Tightening torques" (Page 3-5) .
Note that the Baroness product warranty may not apply to defects caused by incorrect or overtorque tightening etc.

Important

Make sure of the installing locations of the hydraulic hoses and do not install them at the wrong locations.

Important

Replace O-rings on the adapter and other parts with new ones.

Important

When you re-use the wheel motor or adopter, completely remove the seal tape which remains on the thread portion.

For installation, reverse the removing procedure.

https://truckmanualshub.com/

Removal of Rear Wheel Motor

> **Caution**
>
> Two people should work together on the wheel motor since it is heavy.

1. Remove the rear wheel.(See "Removal of Rear Wheel" (Page 7-19) .)
2. Remove the cotter pin attached to the slotted nut.

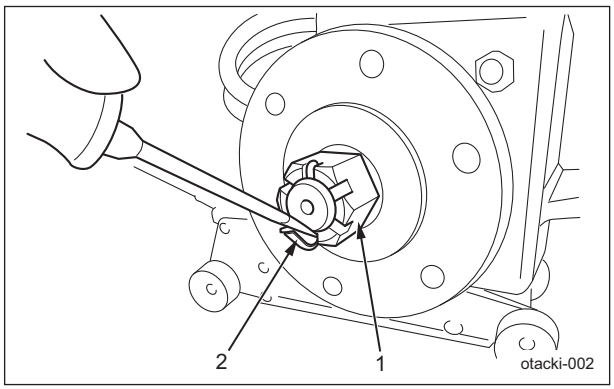

Removal of Rear Wheel Motor_001

1	Slotted nut
2	Cotter pin

3. Use the bolt hole in the rear wheel mounting base to attach wheel mounting base bracket R with the bolt.

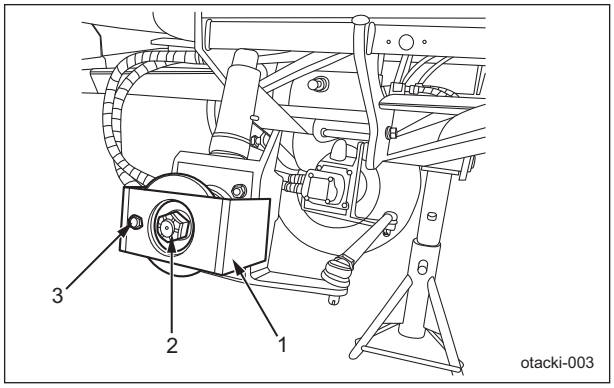

Removal of Rear Wheel Motor_002

1	Wheel mounting base bracket R
2	Rear wheel mounting base
3	Bolt

4. Loosen the slotted nut to create about 10 mm of play with the washer.

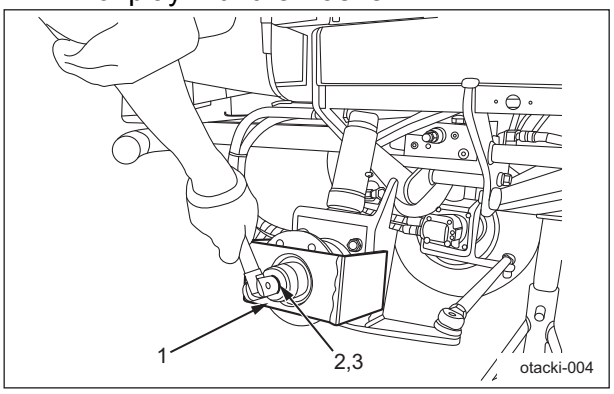

Removal of Rear Wheel Motor_003

1	Wheel mounting base bracket R
2	Slotted nut
3	Washer

5. Remove the bolt, and then remove wheel mounting base bracket R.

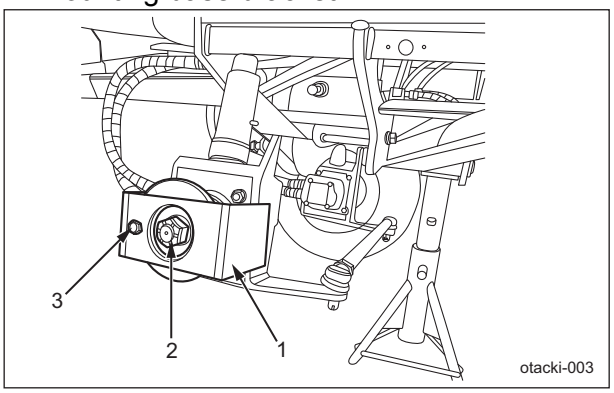

Removal of Rear Wheel Motor_004

1	Wheel mounting base bracket R
2	Rear wheel mounting base
3	Bolt

6. Follow the steps below to remove the rear wheel mounting base.
   [1] Secure the gear puller to the rear wheel mounting base, and then tighten it.
   [2] Separate the wheel motor shaft and the rear wheel mounting base.

https://truckmanualshub.com/

[3] Remove the slotted nut, washer and rear wheel mounting base.

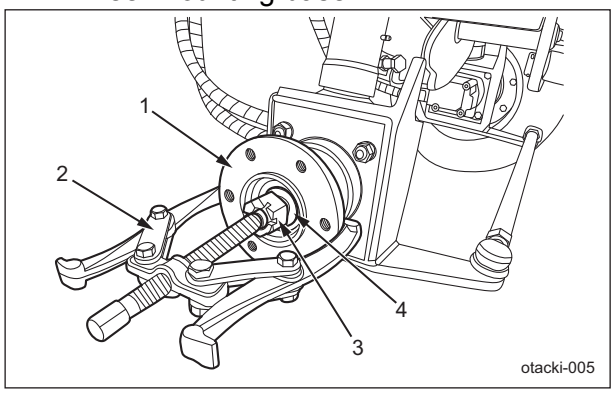

Removal of Rear Wheel Motor_005

1	Rear wheel mounting base
2	Gear puller
3	Slotted nut
4	Washer

Important

Before removing the hydraulic hoses, check their installation positions.

7. Follow the steps below to remove the wheel motor.
   [1] Remove the three hydraulic hoses attached to the wheel motor, and then plug the oil with a screw cap.
   [2] Remove the bolt, spring washer and nut used to install the wheel motor and kingpin.
   [3] Remove the wheel motor.
   [4] Remove the adapter.

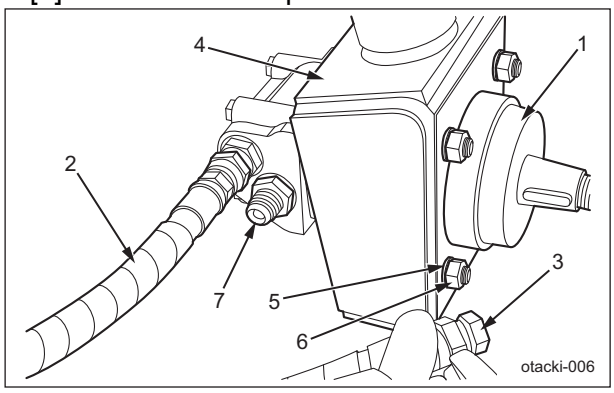

Removal of Rear Wheel Motor_006

1	Wheel motor
2	Hydraulic hoses
3	Screw cap
4	Kingpin
5	Spring washer
6	Nut
7	Adapter

Installation of Rear Wheel Motor

Caution

After the installation, check if there is no oil leakage in each part.

Caution

See "Tightening torques" (Page 3-5) .
Note that the Baroness product warranty may not apply to defects caused by incorrect or overtorque tightening etc.

Important

Make sure of the installing locations of the hydraulic hoses and do not install them at the wrong locations.

Important

When you re-use the wheel motor or adapter, completely remove the seal tape which remains on the thread portion.

For installation, reverse the removing procedure.

https://truckmanualshub.com/

Control Valve

Removal of Control Valve

1. Remove the right tank cover. (See "Removal of Right Tank Cover" (Page 7-36) .)
2. Remove the meter panel. (See "Removal of Meter Panel" (Page 7-37) .)

> **Important**
>
> Check and mark the installation position when removing the hydraulic hose.

3. Follow the steps below to remove the control valve.
   [1] Remove the hydraulic hoses.
   [2] Remove cotter pin, washer B, and then remove the rod.
   [3] Remove bolt, spring washer, washer A, and then remove the control valve.

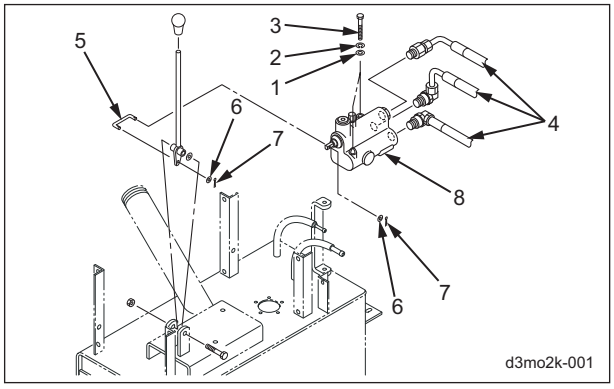

Removal of Control Valve_001

1	Washer A
2	Spring washer
3	Bolt
4	Hydraulic hoses
5	Rod
6	Washer B
7	Cotter pin
8	Control valve

4. Remove UNF, adapter, connector, and elbow installed on the control valve.

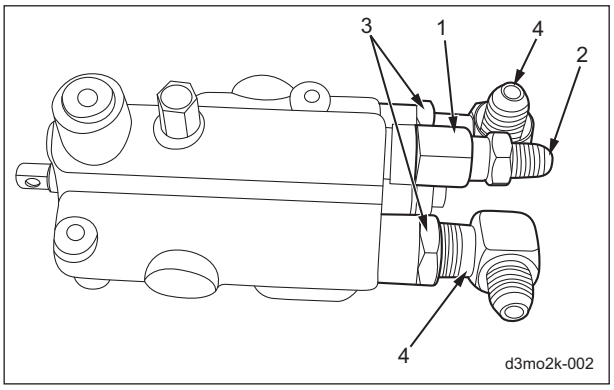

Removal of Control Valve_002

1	UNF
2	Adapter
3	Connector
4	Elbow

Installation of Control Valve

> **Caution**
>
> After the installation, check if there is no oil leakage in each part.

> **Caution**
>
> See "Tightening torques" (Page 3-5) .
> Note that the Baroness product warranty may not apply to defects caused by incorrect or overtorque tightening etc.

> **Important**
>
> Make sure of the installing locations of the hydraulic hoses and do not install them at the wrong locations.

For installation, reverse the removing procedure.

https://truckmanualshub.com/

Diff-lock valve

Removal of Diff-lock Valve

1. Remove mower unit #1. (See "Removal of Mower Unit" (Page 8-5) .)
2. Jack up the both front wheels and support them with jack stands. (See "Jack-up Points" (Page 3-10) .)
3. Pull the lever toward you, and then lift the seat in the direction of the arrow.

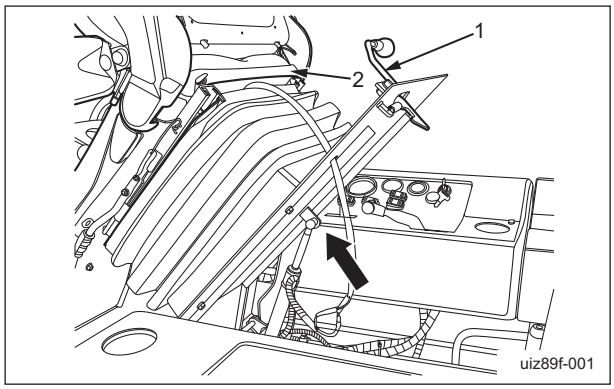

Removal of Diff-lock Valve_001

1	Lever
2	Seat

4. Remove the center cover. (See "Removal of Center Cover" (Page 7-35) .)
5. Remove three diff-lock valve connectors located in the lower left of the seat supporting area.

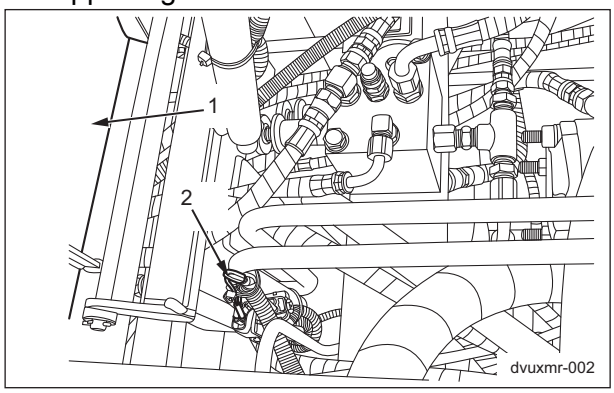

Removal of Diff-lock Valve_002

1	Seat
2	Diff-lock valve connector

Important

If you remove the hydraulic hoses and pipes, first remember the positions in which they are installed.

6. Remove the hydraulic hoses and pipes from the diff-lock valve.

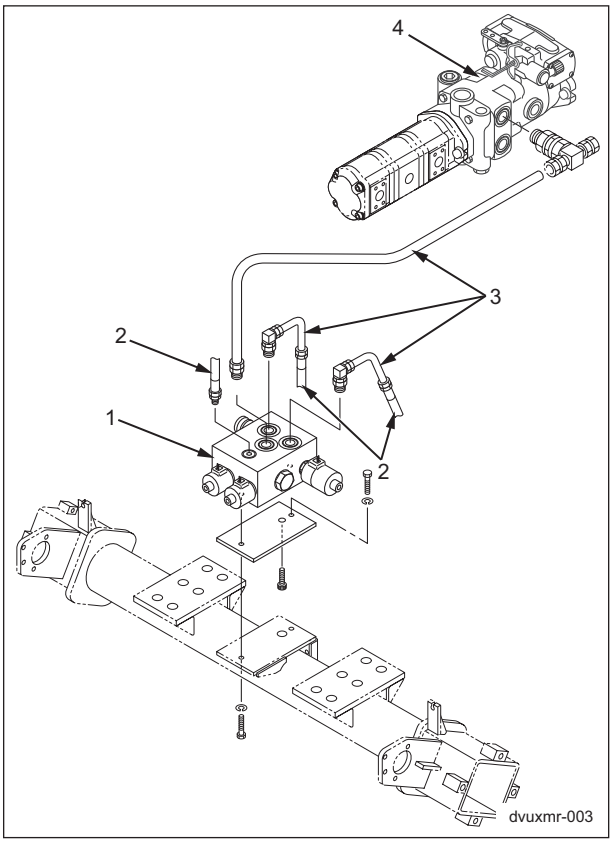

Removal of Diff-lock Valve_003

1	Diff-lock valve
2	Hydraulic hose
3	Hydraulic pipe
4	Piston pump

https://truckmanualshub.com/

7. Remove the bushings, connector, elbows, and special adapter from the diff-lock valve.

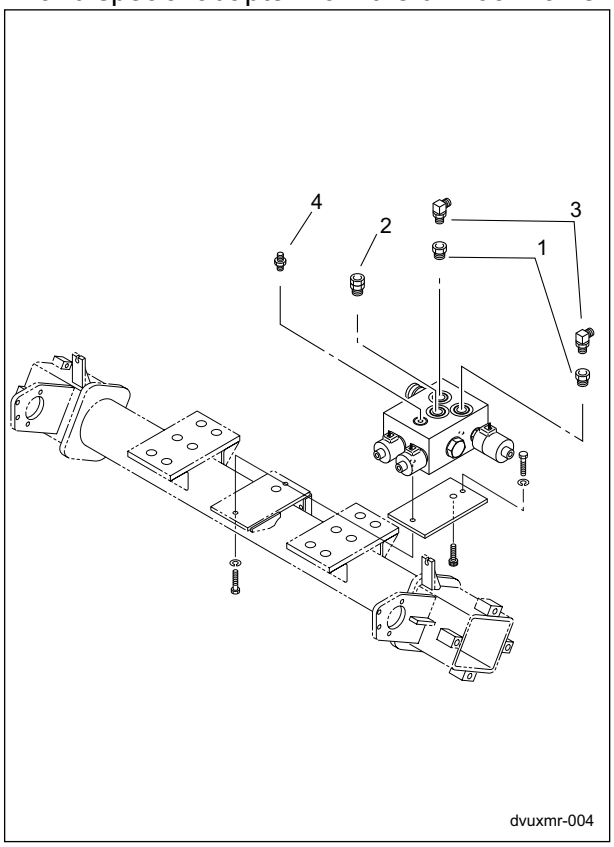

Removal of Diff-lock Valve_004

1	Bushing
2	Connector
3	Elbow
4	Special adapter

8. Remove bolt A, bolt B, and spring washers, and then remove the diff-lock valve mounting bracket.

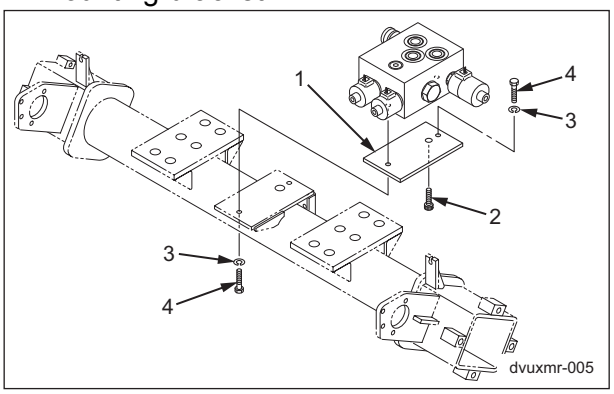

Removal of Diff-lock Valve_005

1	Diff-lock valve mounting bracket
2	Bolt A
3	Spring washer
4	Bolt B

Installation of Diff-Lock Valve

Caution

After installation, check each part for oil leakage.

Caution

See "Tightening torques" (Page 3-5) .
Note that the Baroness product warranty may not apply to defects caused by incorrect or overtorque tightening etc.

Important

Make sure of the installing locations of the hydraulic hoses and pipes and do not install them at the wrong locations.

For installation, reverse the removing procedure.

https://truckmanualshub.com/

Gear Pump

Removal of Gear Pump

Important

The gear pump is attached to the piston pump.

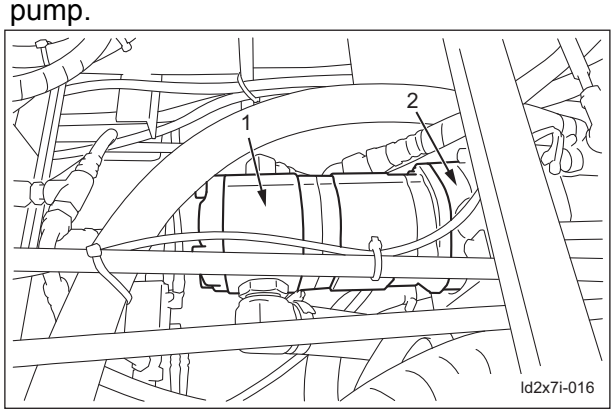

Removal of Gear Pump_001

1	Gear pump
2	Piston pump

1. Remove the left tank cover.(See "Removal of Left Tank Cover" (Page 7-36) .)
2. Remove the seat.(See "Removal of Seat" (Page 7-31) .)
3. Remove the center cover.(See "Removal of Center Cover" (Page 7-35) .)

Important

Before removing the hydraulic hoses and pipes, check their installation positions.

4. Follow the steps below to remove the hydraulic hoses.
   [1] Remove the two hydraulic hoses attached to the gear pump.
   [2] Loosen the hose band, and then remove the suction hose.

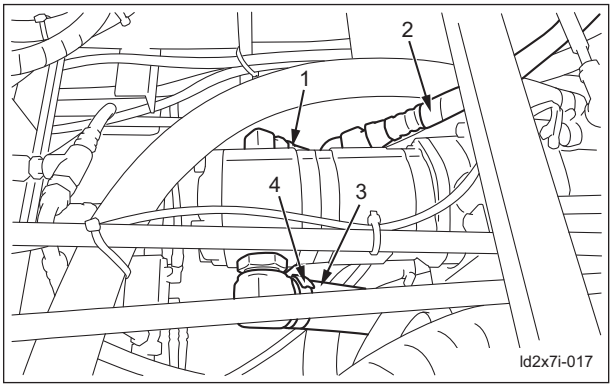

Removal of Gear Pump_002

1	Hydraulic hose (rotary knife rotation valve, P2 pump)
2	Hydraulic hose (rotary knife rotation valve, P1 pump)
3	Suction hose (valve unit)
4	Hose band

⚠ Caution

Be careful when handling the gear pump since it is heavy.
Also, be careful not to pinch your fingers, etc.

5. Follow the steps below to remove the gear pump.
   [1] Loosen the left and right special bolts and washers.

https://truckmanualshub.com/

[2] Pull the gear pump away from the piston pump to remove it together with the special bolts and washers.

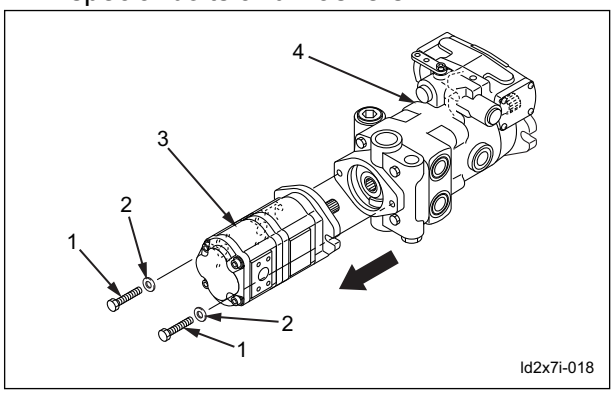

Removal of Gear Pump_003

1	Special bolt
2	Washer
3	Gear pump
4	Piston pump

Installation of Gear Pump

Caution

After the installation, check if there is no oil leakage in each part.

Caution

See "Tightening torques" (Page 3-5) .
Note that the Baroness product warranty may not apply to defects caused by incorrect or overtorque tightening etc.

Important

Make sure of the installing locations of the hydraulic hoses and do not install them at the wrong locations.

Important

Be sure to install an O-ring at the mating surfaces of the piston pump and gear pump.

For installation, reverse the removing procedure.

Piston pump

Removal of Piston Pump

1. Drain the hydraulic oil. (See "Hydraulic Oil" (Page 5-51) .)
2. Remove the left tank cover. (See "Removal of Left Tank Cover" (Page 7-36) .)
3. Remove the seat. (See "Removal of Seat" (Page 7-31) .)
4. Remove the center cover. (See "Removal of Center Cover" (Page 7-35) .)
5. Remove the nut, spring washer B, spring washer A and bolt, in order, and then remove the screw rod from the trunnion lever of the piston pump.

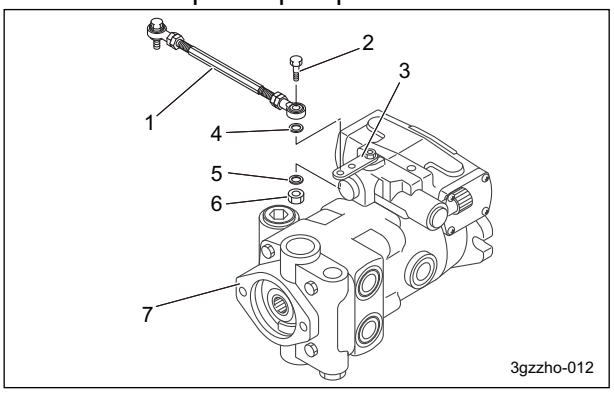

Removal of Piston Pump_001

1	Screw rod
2	Bolt
3	Trunnion lever
4	Spring washer A
5	Spring washer B
6	Nut
7	Piston pump

https://truckmanualshub.com/

Important

Before removing the hydraulic hoses and pipes, check their installation positions.

6. Loosen the hose band, and then remove the suction hose.

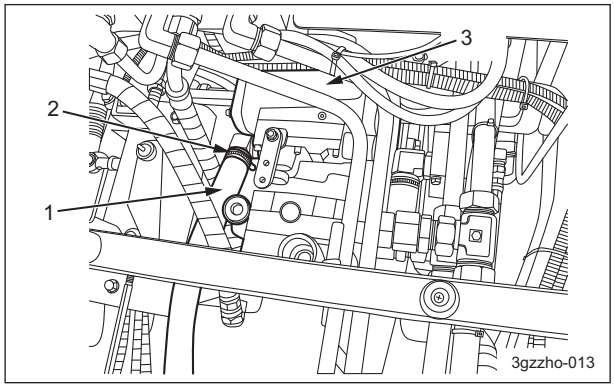

Removal of Piston Pump_002

1	Suction hose (hydraulic tank)
2	Hose band
3	Piston pump

7. Follow the steps below to remove the hydraulic pipes.
   [1] Loosen the nut of the tee, and then remove the upper and lower pipes.
   [2] Remove connectors A, connectors B and the tees from the piston pump.

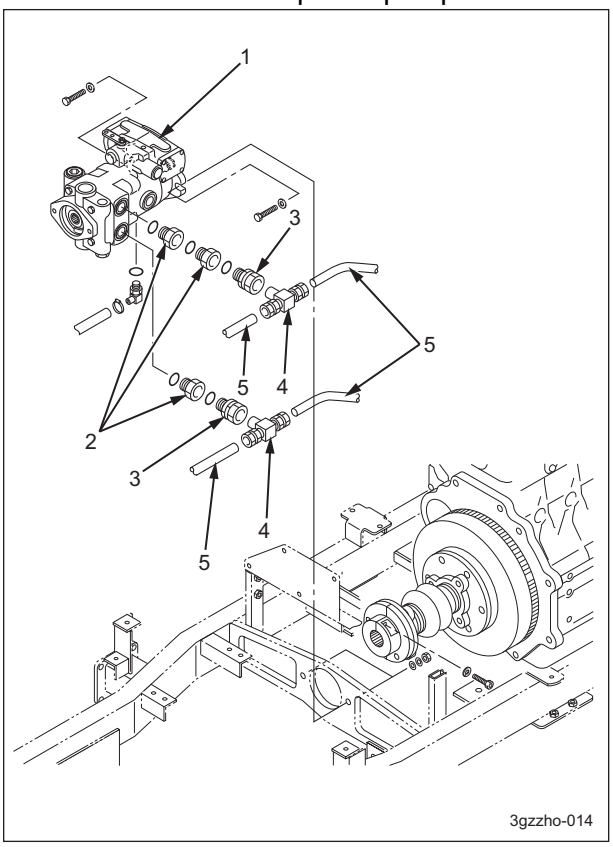

Removal of Piston Pump_003

1	Piston pump
2	Connector A
3	Connector B
4	Tee
5	Hydraulic pipe

8. Follow the steps below to remove the suction hose.
   [1] Loosen the hose band, and then remove the suction hose.

https://truckmanualshub.com/

[2] Remove the elbow from the piston pump.

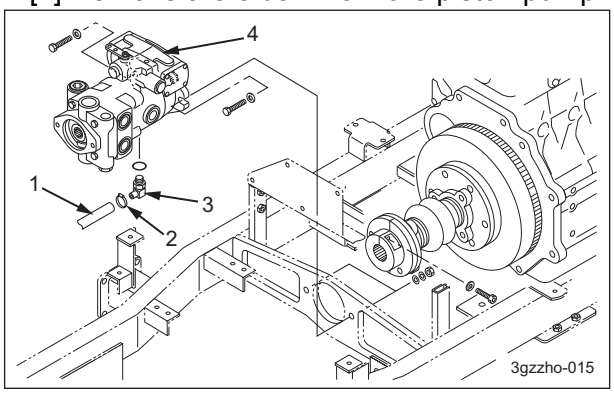

Removal of Piston Pump_004

1	Suction hose (valve unit)
2	Hose band
3	Elbow
4	Piston pump

9. Remove the bolt and spring washer from the drive disc on the pump side, which connects the piston pump and the engine.

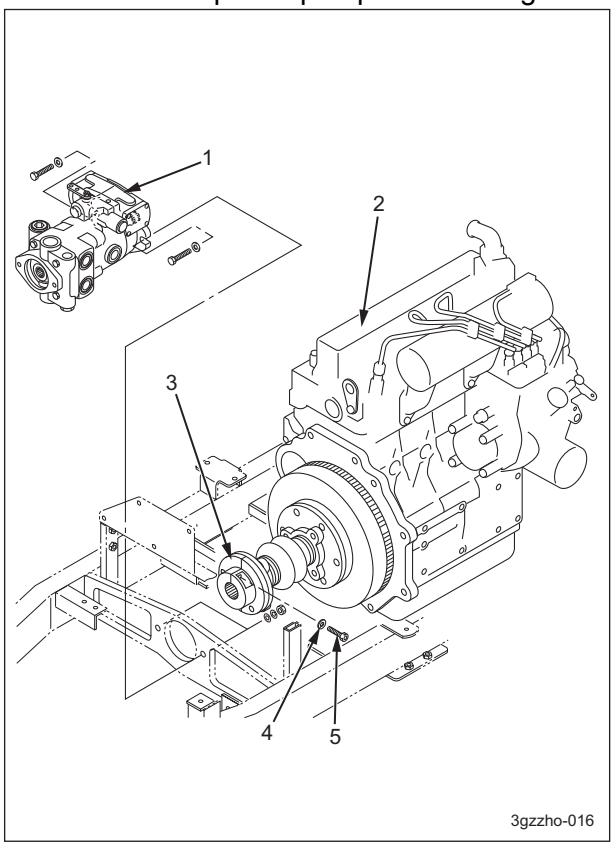

Removal of Piston Pump_005

1	Piston pump
2	Engine
3	Drive disc on pump side
4	Spring washer
5	Bolt

Caution

Be careful when handling the piston pump since it is heavy.
Be sure to use safety equipment so it is not dropped.

10. Remove the nuts, spring washers, washers and bolts, and then remove the piston pump.

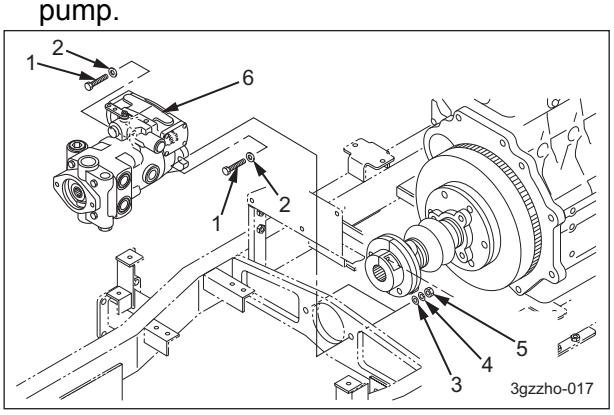

Removal of Piston Pump_006

1	Bolt
2	Washer
3	Washer
4	Spring washer
5	Nut
6	Piston pump

Installation of Piston Pump

Caution

After the installation, check if there is no oil leakage in each part.

Caution

See "Tightening torques" (Page 3-5) .
Note that the Baroness product warranty may not apply to defects caused by incorrect or overtorque tightening etc.

Important

Make sure of the installing locations of the hydraulic hoses and pipes and do not install them at the wrong locations.

For installation, reverse the removing procedure.

https://truckmanualshub.com/

Rotary Knife Rotation Valve

Removal of Rotary Knife Rotation Valve

1. Pull up the lever and tilt the seat forward to open the cover.

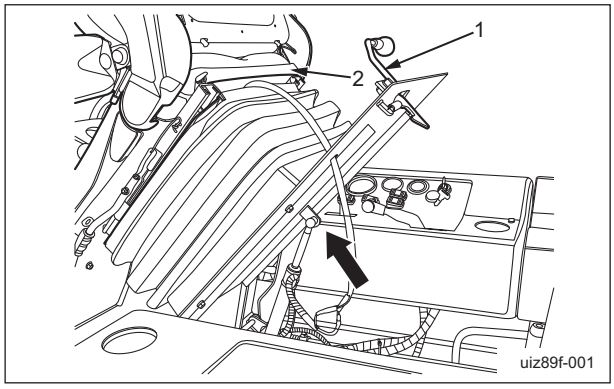

Removal of Rotary Knife Rotation Valve_001

1	Lever
2	Seat

2. Remove the center cover.(See "Removal of Center Cover" (Page 7-35) .)

> **Important**
>
> Before removing the wires, check their installation positions.

3. Remove the couplers of the solenoid valve wires.

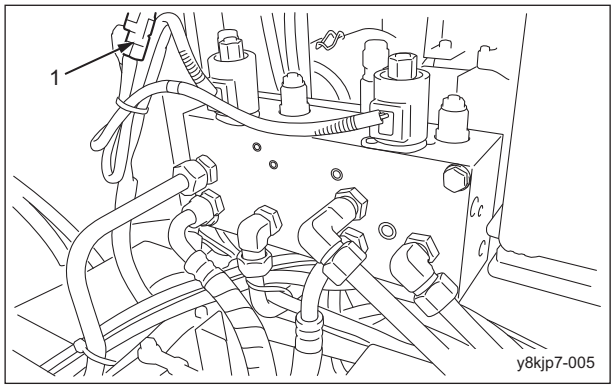

Removal of Rotary Knife Rotation Valve_002

1	Solenoid valve wire coupler

> **Important**
>
> Before removing the hydraulic hoses and pipes, check their installation positions.

4. Remove the hydraulic hoses and hydraulic pipes attached to the rotary knife rotation valve.

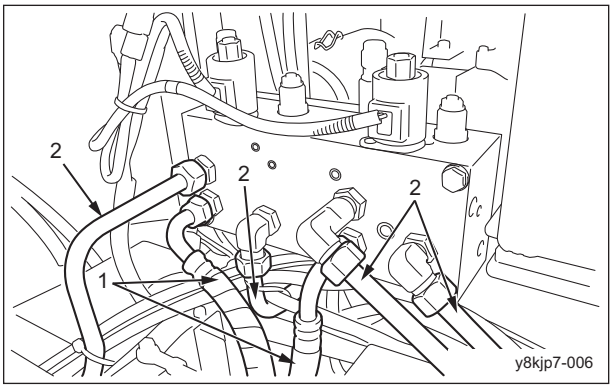

Removal of Rotary Knife Rotation Valve_003

1	Hydraulic hose
2	Hydraulic pipe

5. Remove the bolts, spring washers and washers, and then remove the rotary knife rotation valve.

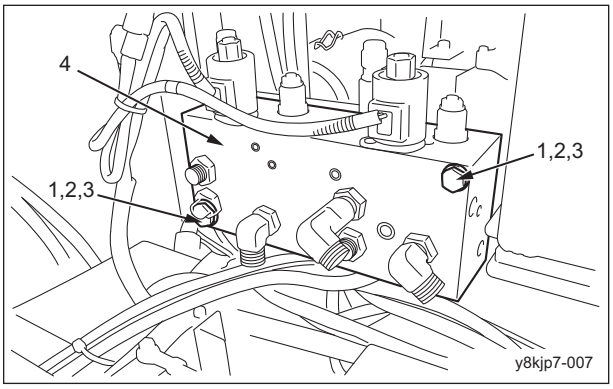

Removal of Rotary Knife Rotation Valve_004

1	Bolt
2	Spring washer
3	Washer
4	Rotary knife rotation valve

https://truckmanualshub.com/

6. Remove the elbow nipples, adjustable elbow, adapter and connector from the rotary knife rotation valve.

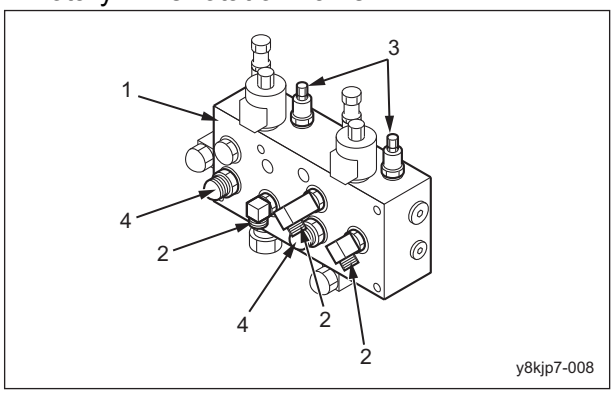

Removal of Rotary Knife Rotation Valve_005

1	Rotary knife rotation valve
2	Elbow nipple
3	Adjustment bolt
4	Adapter

Installation of Rotary Knife Rotation Valve

Caution

After installation, check each part for oil leakage.

Caution

"Tightening torques" (Page 3-5) See .
Note that the Baroness product warranty may not apply to defects caused by incorrect or overtorque tightening etc.

Important

Make sure of the installing locations of the hydraulic hoses and pipes and do not install them at the wrong locations.

Important

Make sure of the installing locations of the wires and do not install them at the wrong locations.

For installation, reverse the removing procedure.

2WD/4WD Changeover Valve

Removal of 2WD/4WD Changeover Valve

1. Remove the rear cover. (See "Removal of Rear Cover" (Page 7-34) .)
2. Remove the center cover. (See "Removal of Center Cover" (Page 7-35) .)
3. Pull the lever toward the front of the machine to lift up the seat in the direction of the arrow.

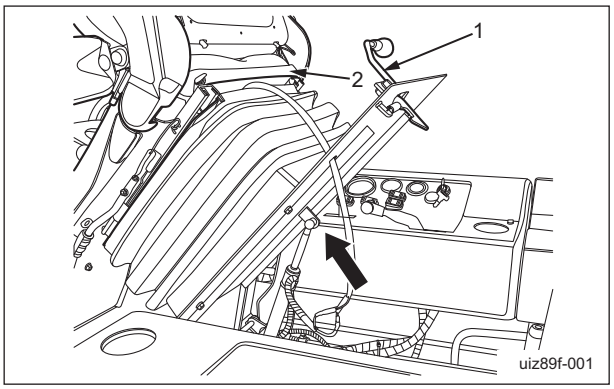

Removal of 2WD/4WD Changeover Valve_001

1	Lever
2	Seat

4. Remove the radiator. (See "Removal of Radiator" (Page 4-20) .)
5. Disconnect the two connectors of the solenoid.

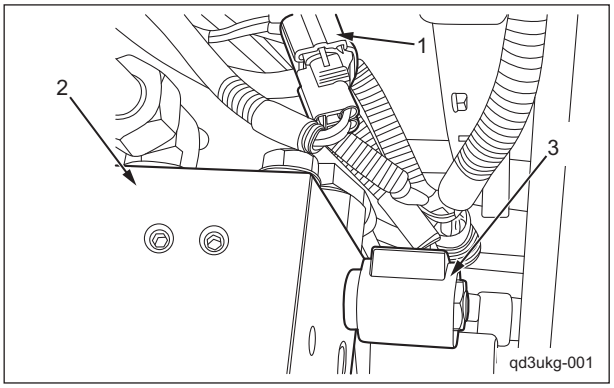

Removal of 2WD/4WD Changeover Valve_002

1	Connector
2	2WD/4WD changeover valve
3	Solenoid

https://truckmanualshub.com/

Hydraulic system

Important

Before removing the hydraulic pipes, check their installation positions.

6. Remove the hydraulic pipes attached to the 2WD/4WD changeover valve.

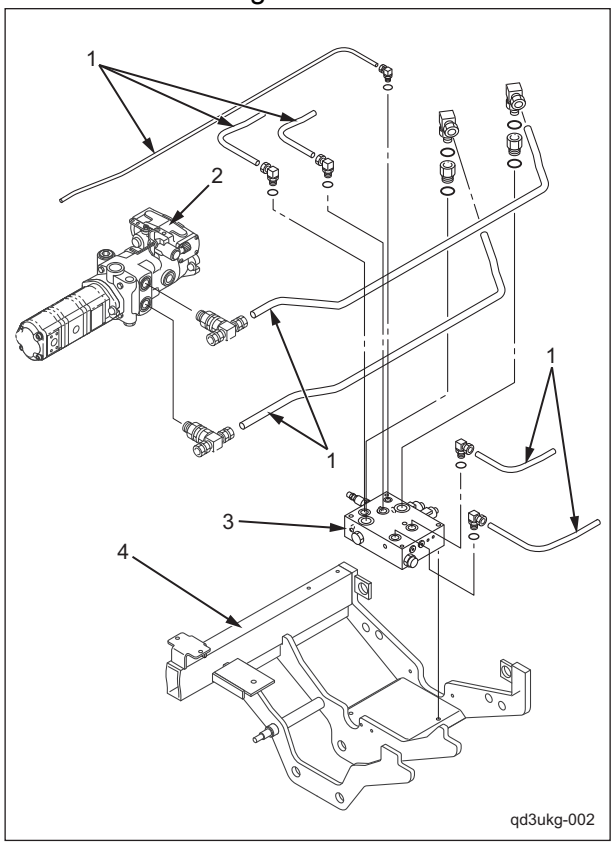

Removal of 2WD/4WD Changeover Valve_003

1	Hydraulic pipes
2	Piston pump
3	2WD/4WD changeover valve
4	Frame

7. Remove elbows A, elbow B, elbow C and the connector.

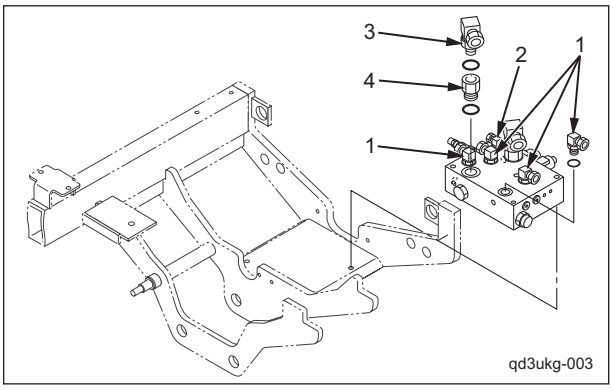

Removal of 2WD/4WD Changeover Valve_004

1	Elbow A
2	Elbow B
3	Elbow C
4	Connector

8. Remove the nut, spring washer, bolt and washer, and then remove the 2WD/4WD changeover valve.

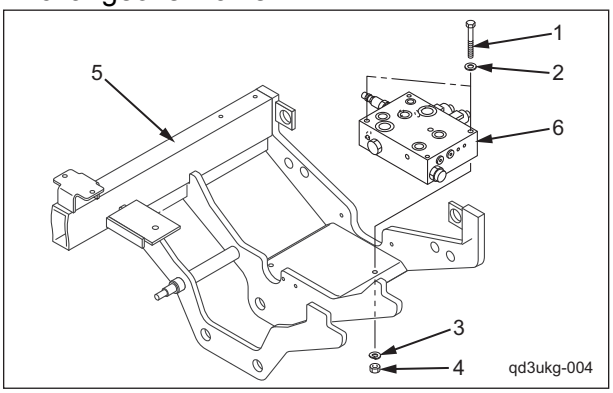

Removal of 2WD/4WD Changeover Valve_005

1	Bolt
2	Washer
3	Spring washer
4	Nut
5	Frame
6	2WD/4WD changeover valve

https://truckmanualshub.com/

Installation of 2WD/4WD Changeover Valve

> **Caution**
>
> After installation, check each part for oil leakage.

> **Caution**
>
> See "Tightening torques" (Page 3-5) .
> Note that the Baroness product warranty may not apply to defects caused by incorrect or overtorque tightening etc.

> **Important**
>
> Make sure of the installing locations of the hydraulic pipes and do not install them at the wrong locations.

For installation, reverse the removing procedure.

Oil cooler

Removal of Oil Cooler

1. Unlock the rubber catch, and then open the radiator cover.

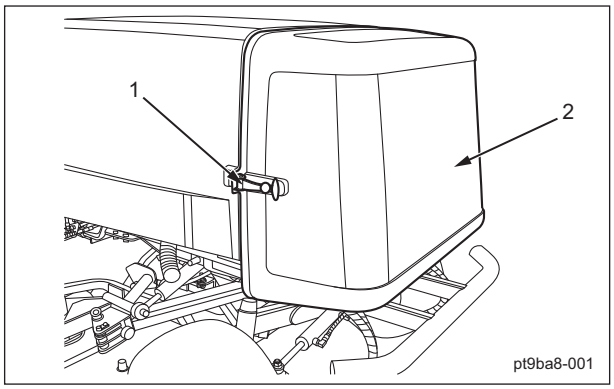

Removal of Oil Cooler_001

1	Rubber catch
2	Radiator cover

> **Important**
>
> Take note of the installation position when removing the hydraulic hose.

2. Follow the steps below to pull out the oil cooler.
   [1] Loosen the hose band and remove the bypass hose.
   [2] Unlock the rubber catches on the left and right of the oil cooler, and then tilt the oil cooler toward the direction of the arrow.

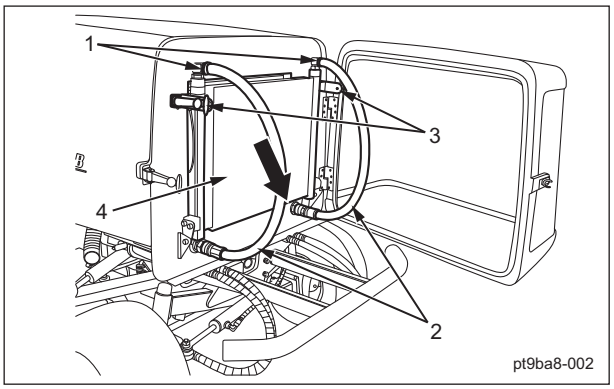

Removal of Oil Cooler_002

1	Hose band
2	Bypass hose
3	Rubber catch
4	Oil cooler

https://truckmanualshub.com/

Caution

Two persons are needed since the oil cooler is heavy.

Important

Exercise care in the handling of oil cooler since its core is easy to be crushed.

3. Loosen the bolts and remove the cable securing the oil cooler in the middle.

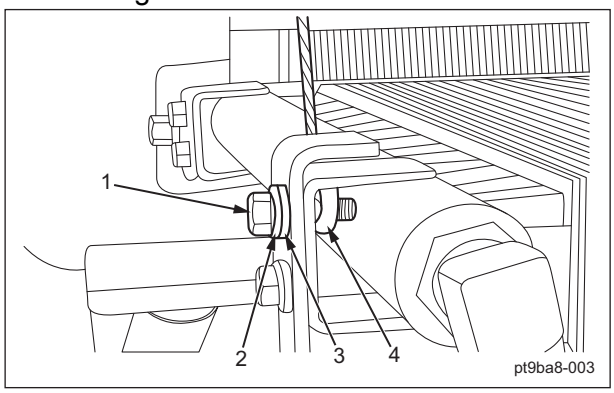

Removal of Oil Cooler_003

1	Bolt
2	Spring washer
3	Washer
4	Cable

4. Remove the nuts, loosen the blots, and then remove the oil cooler from the radiator mounting frame.

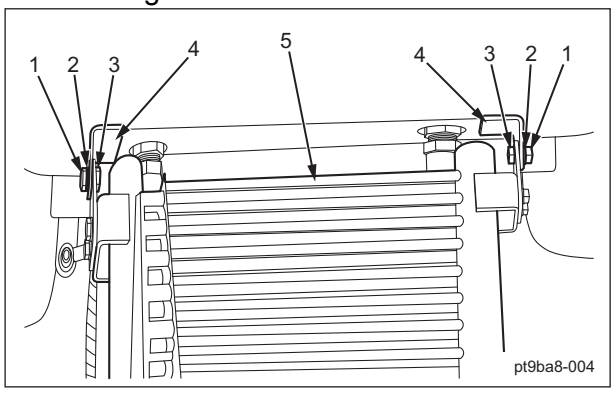

Removal of Oil Cooler_004

1	Nut
2	Spring washer
3	Bolt
4	Radiator mounting frame
5	Oil cooler

5. Follow the steps below to remove the fulcrum plate and the clamp plate.
   [1] Remove the bolt A, spring washer, and then remove the fulcrum plate.
   [2] Remove the bolt A, bolt B, spring washer and washer, and then remove the clamp plate.

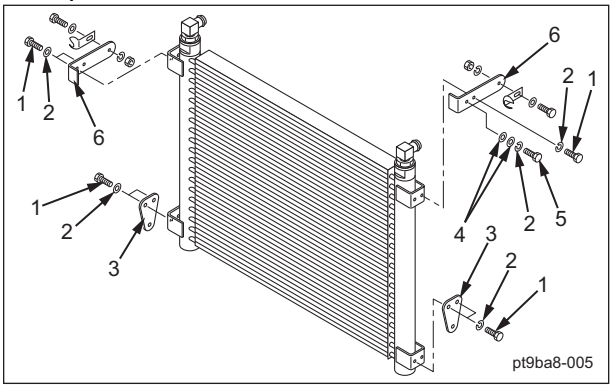

Removal of Oil Cooler_005

1	Bolt A
2	Spring washer
3	Fulcrum plate
4	Washer
5	Bolt B
6	Clamp plate

6. Follow the steps below to remove the rubber catch support and the connector.
   [1] Remove the bolts, nuts, and then remove the rubber catch support.
   [2] Remove the connector.

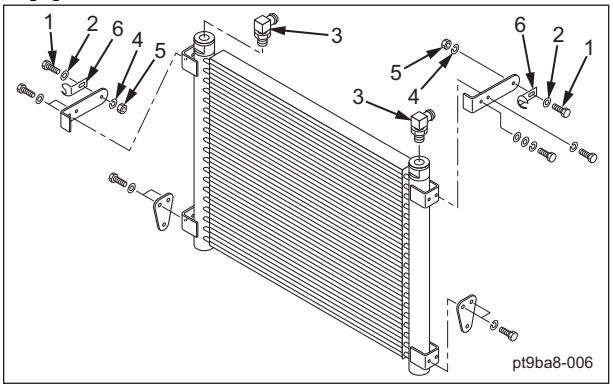

Removal of Oil Cooler_006

1	Bolt
2	Washer
3	Connector
4	Spring washer
5	Nut
6	Rubber catch support

https://truckmanualshub.com/

Installation of Oil Cooler

> **Caution**
>
> After the installation, check if there is no oil leakage in each part.

> **Caution**
>
> See "Tightening torques" (Page 3-5) .
> Note that the Baroness product warranty may not apply to defects caused by incorrect or overtorque tightening etc.

> **Important**
>
> Make sure of the installing locations of the hydraulic hoses and do not install them at the wrong locations.

> **Important**
>
> If you re-use the core of the oil cooler, clean it with compressed air before its use.

For installation, reverse the removing procedure.

Steering Cylinder

Removal of Steering Cylinder

> **Important**
>
> Take note of the installation position when removing the hydraulic hose.

1. Remove 2 hydraulic hoses attached to the steering cylinder.

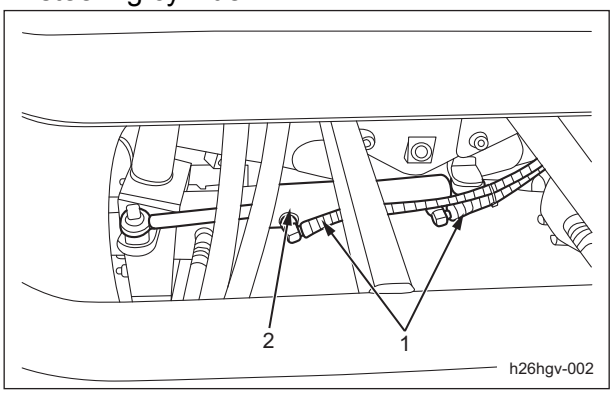

Removal of Steering Cylinder_001

1	Hydraulic hoses
2	Steering cylinder

https://truckmanualshub.com/

2. Follow the steps below to remove the steering cylinder.
   [1] Remove the cotter pin, washer and flat head pin.
   [2] Remove the U nut and spring washer.
   [3] Remove the steering cylinder.

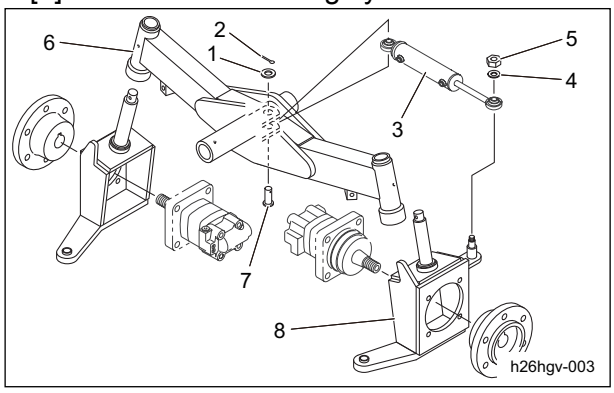

Removal of Steering Cylinder_002

1	Washer
2	Cotter pin
3	Cylinder
4	Spring washer
5	U nut
6	Pivot
7	Flat head pin
8	Kingpin

3. Remove elbow from the steering cylinder.

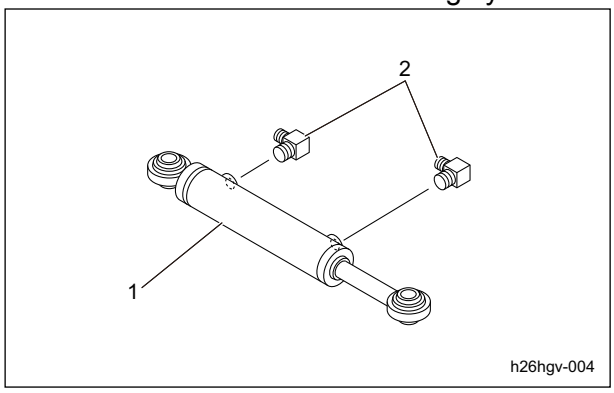

Removal of Steering Cylinder_003

1	Steering cylinder
2	Elbow

Installation of Steering Cylinder

Caution

After the installation, check if there is no oil leakage in each part.

Caution

See "Tightening torques" (Page 3-5) .
Note that the Baroness product warranty may not apply to defects caused by incorrect or overtorque tightening etc.

Important

Make sure of the installing locations of the hydraulic hoses and do not install them at the wrong locations.

For installation, reverse the removing procedure.

https://truckmanualshub.com/

Charge Control Valve

Removal of Charge Control Valve

> **Important**
>
> A charge control valve is located inside mower unit #3.

1. Start the engine, and then lower all mower units completely.
2. Stop the engine, and then remove the key.
3. Remove the clip pin and grip pin installed on mower unit #3, and then pull out the mower unit in the direction of the arrow.

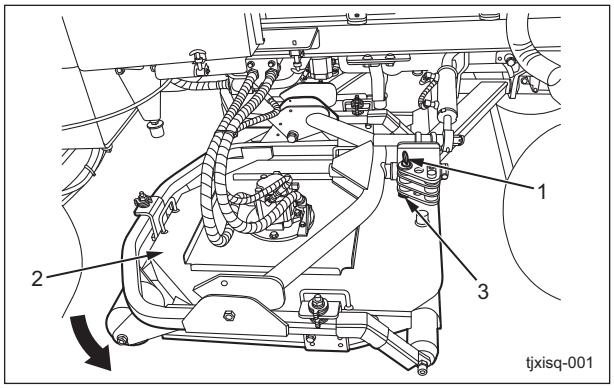

Removal of Charge Control Valve_001

1	Grip pin
2	Mower unit #3
3	Clip pin

> **Important**
>
> Take note of the installation position when removing the hydraulic hose.

4. Completely loosen the nut on the charge control valve side of the elbow to which the hydraulic pipe is attached.

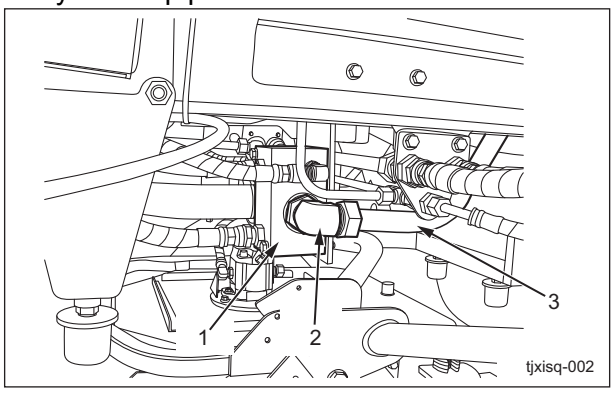

Removal of Charge Control Valve_002

1	Charge control valve
2	Elbow
3	Hydraulic pipe

5. Follow the steps below to remove the hydraulic hoses.
   [1] Remove two hydraulic hoses.
   [2] Loosen the hose band, and then remove the suction hose.

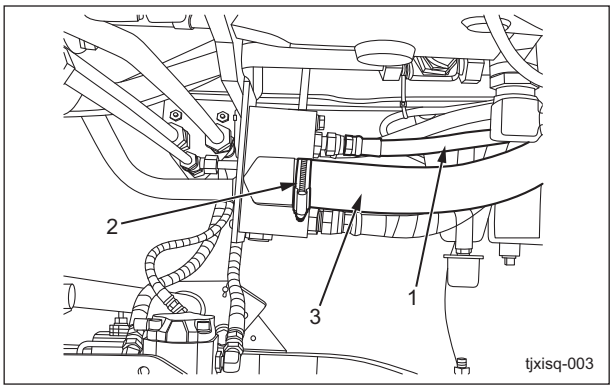

Removal of Charge Control Valve_003

1	Hydraulic hose
2	Hose band
3	Suction hose

6. Remove the bolt, spring washer, and washer, and then remove the charge control valve.

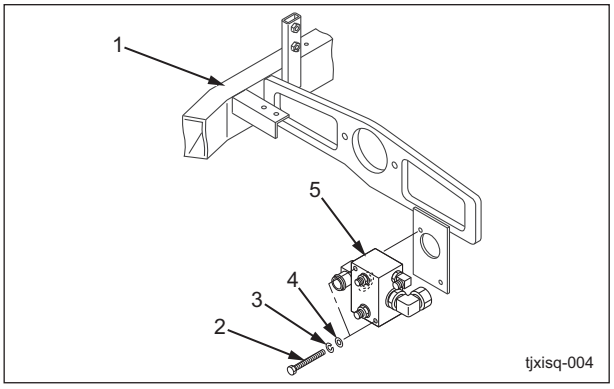

Removal of Charge Control Valve_004

1	Frame
2	Bolt
3	Spring washer
4	Washer
5	Manifold

https://truckmanualshub.com/

7. Remove the elbow, nipple and adapter from the charge control valve.

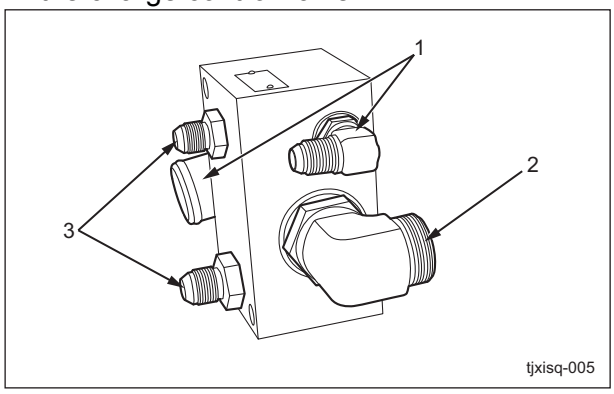

Removal of Charge Control Valve_005

1	Elbow
2	Nipple
3	Adapter

Installation of Charge Control Valve

> **Caution**
>
> After installation, check each part for oil leakage.

> **Caution**
>
> See the list in "Tightening torques" (Page 3-5) .
> Note that the Baroness product warranty may not apply to defects caused by incorrect or overtorque tightening, etc.

> **Important**
>
> Make sure that the hydraulic hose is installed in the correct position.

For installation, reverse the removing procedure.

Fuel Port Breather

Removal of Fuel Port Breather

1. Remove the left tank cover. (See "Removal of Left Tank Cover" (Page 7-36) .)
2. Remove 4-round head screws, and then remove the fuel port breather from the hydraulic tank.

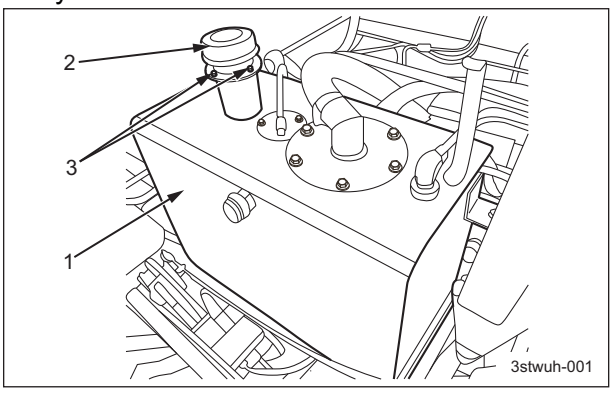

Removal of Fuel Port Breather_001

1	Hydraulic tank
2	Fuel port breather
3	Round head screw

Installation of Filler Neck Breather

> **Caution**
>
> After installation, check each part for oil leakage.

> **Caution**
>
> See the list in "Tightening torques" (Page 3-5) .
> Note that the Baroness product warranty may not apply to defects caused by incorrect or overtorque tightening etc.

For installation, reverse the removing procedure.

https://truckmanualshub.com/

Orbitrol

Removal of Orbitrol

1. Remove the steering column. (See "Removal of Steering Column" (Page 7-30) .)
2. Disconnect the differential lock wire.

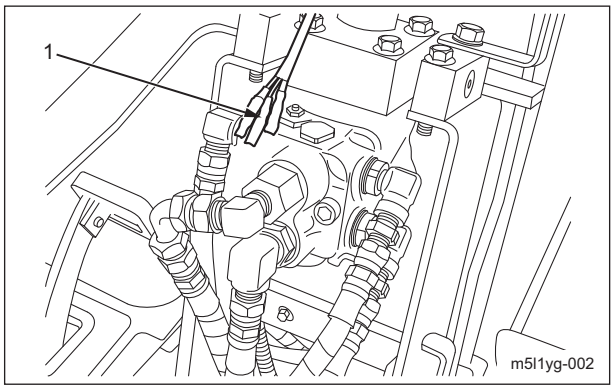

Removal of Orbitrol_001

1	Differential lock wire

> **Important**
>
> Check and mark the installation position when removing the hydraulic hose.

3. Remove five hydraulic hoses, and then remove the pipe adapter.

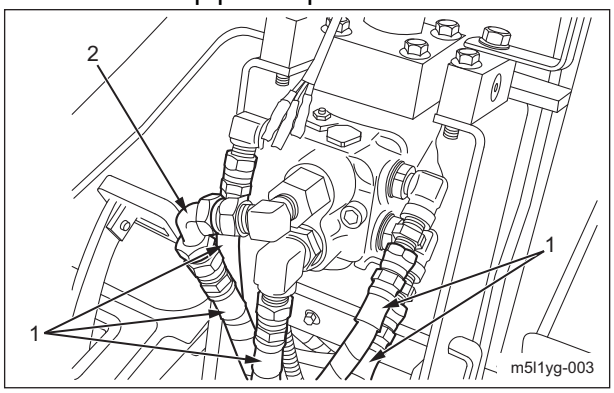

Removal of Orbitrol_002

1	Hydraulic hoses
2	Pipe adapter

4. Remove elbow and bushing from the orbitrol.

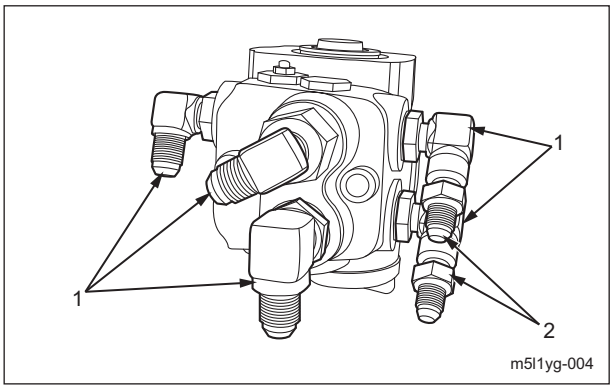

Removal of Orbitrol_003

1	Elbow
2	Bushing

Installation of Orbitrol

> **Caution**
>
> After the installation, check if there is no oil leakage in each part.

> **Caution**
>
> See the list in "Tightening torques" (Page 3-5) .
> Note that the Baroness product warranty may not apply to defects caused by incorrect or overtorque tightening etc.

> **Important**
>
> Make sure of the installing locations of the hydraulic hoses and do not install them at the wrong locations.

For installation, reverse the removing procedure.

https://truckmanualshub.com/

Hydraulic tank

Removal of Hydraulic Tank

1. Remove the left tank cover. (See "Removal of Left Tank Cover" (Page 7-36) .)
2. Drain the hydraulic oil. (See "Hydraulic Oil" (Page 5-51) .)

> **Important**
>
> Before removing the hydraulic hoses and pipes, check their installation positions.

> **Important**
>
> Before removing the wires, check their installation positions.

3. Follow the steps below to remove the hydraulic pipes and hydraulic hoses.
   [1] Remove two hydraulic pipes.
   [2] Loosen the hose band, and then remove the suction hose.
   [3] Remove the wires from the connector.
   [4] Remove the hydraulic hoses.

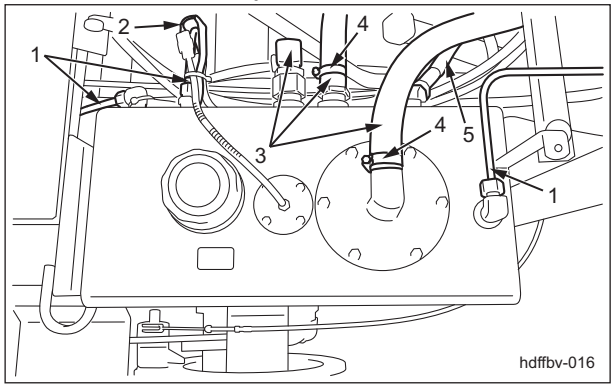

Removal of Hydraulic Tank_001

1	Hydraulic pipe
2	Wire
3	Suction hose
4	Hose band
5	Hydraulic hose

> **Caution**
>
> Be careful when handling the hydraulic tank since it is heavy.

4. Remove the bolts, spring washers and washers, and then remove the hydraulic tank.

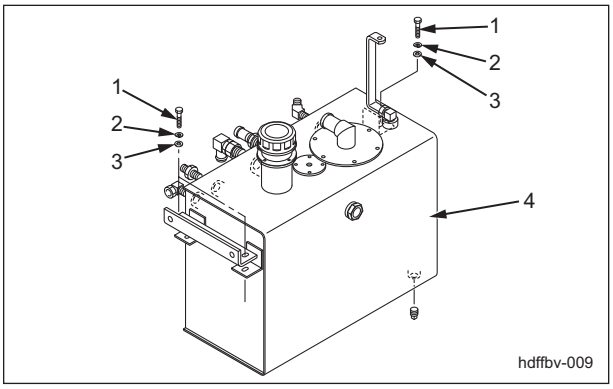

Removal of Hydraulic Tank_002

1	Bolt
2	Spring washer
3	Washer
4	Hydraulic tank

5. Follow the steps below to remove the parts installed on the hydraulic tank.
   [1] Remove the six bolts A, and then remove the joint fitting.
   [2] Remove the four bolts B, and then remove the level switch.
   [3] Remove the elbows, connector, adjustable elbow and adapter.

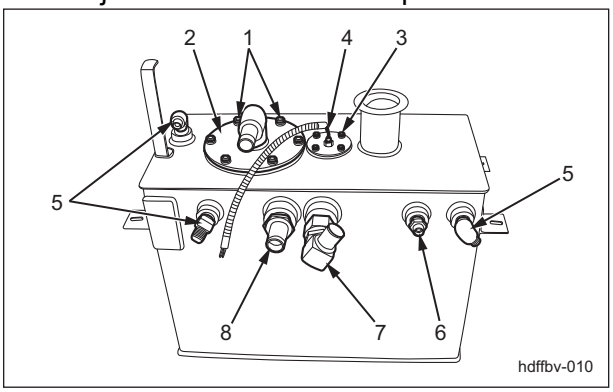

Removal of Hydraulic Tank_003

https://truckmanualshub.com/

1	Bolt A
2	Joint fitting
3	Bolt B
4	Level switch
5	Elbow
6	Connector
7	Adjustable elbow
8	Adapter

Installation of Hydraulic Tank

Caution

After the installation, check if there is no oil leakage in each part.

Caution

See the list in "Tightening torques" (Page 3-5) .
Note that the Baroness product warranty may not apply to defects caused by incorrect or overtorque tightening etc.

Important

Make sure of the installing locations of the hydraulic hoses and pipes and do not install them at the wrong locations.

Important

Make sure of the installing locations of the wires and do not install them at the wrong locations.

For installation, reverse the removing procedure.

https://truckmanualshub.com/

https://truckmanualshub.com/

Maintenance..... Page 6-2

About Maintenance.....Page 6-2

Specifications..... Page 6-2

Adjusted Value..... Page 6-2
Electrical Part Layout.....Page 6-3

Special Tool.....Page 6-6

Special tools list.....Page 6-6

Measurement.....Page 6-6

Battery..... Page 6-6
Interlock system.....Page 6-7

Adjustment..... Page 6-8

Proximity Sensor.....Page 6-8
Parking Brake Switch.....Page 6-9

Electrical components..... Page 6-10

About the Electrical components..... Page 6-10
Seat Switch.....Page 6-12
Parking Brake Switch.....Page 6-12
Rocker Switch.....Page 6-13
Proximity Sensors.....Page 6-13
Terminal Relay.....Page 6-14
Diff-Lock Switch.....Page 6-16
Solenoid Valve.....Page 6-17
Power Relay..... Page 6-19
Work Lamp..... Page 6-20
Key Switch.....Page 6-21
Pilot Lamps.....Page 6-22
Fuel Gauge.....Page 6-23
Water Temperature Gauge.....Page 6-24
Tachometer/Hour Meter.....Page 6-24
Starter Relay.....Page 6-25
Glow Lamp Timer..... Page 6-25
Fusible Link.....Page 6-25
Fuse Box.....Page 6-26
Fuel Pump..... Page 6-26
Fuel Unit..... Page 6-27
Rotation Sensor (Electromagnetic Pickup).....Page 6-27
Buzzers.....Page 6-27
Level Switch.....Page 6-28

General inspection and repair..... Page 6-29

Battery..... Page 6-29

https://truckmanualshub.com/

Electrical system

Maintenance

About Maintenance

This chapter provides descriptions of the main inspection and maintenance operations for the GM2800B electrical system.
For information on daily checks, maintenance and handling of the machine, please refer to the separate GM2800B Owner's Operating Manual and Parts Catalog.
For details on handling the battery, please refer to the separate Battery Instruction Manual.

Specifications

Adjusted Value

Parking brake switch	Slight clearance	Parking brake lever Clearance between the parking brake lever and the switch contact point when the brake lever at 5 notch
Proximity sensor	Outer ends of mower units #4/#5 400 mm (15.75 in) from the ground up to the outer ends of mower units #4/#5	Proximity sensor detection positions : #4/#5 mower arm fulcrum cam portions
	1 - 4 mm (0.04 - 0.16 in)	Distance between the sensors and #4/#5 mower arm fulcrum cam portions

Adjustment of Safety Switch

See ("Adjustment" (Page 6-8)) for method for adjustment.

https://truckmanualshub.com/

Electrical Part Layout

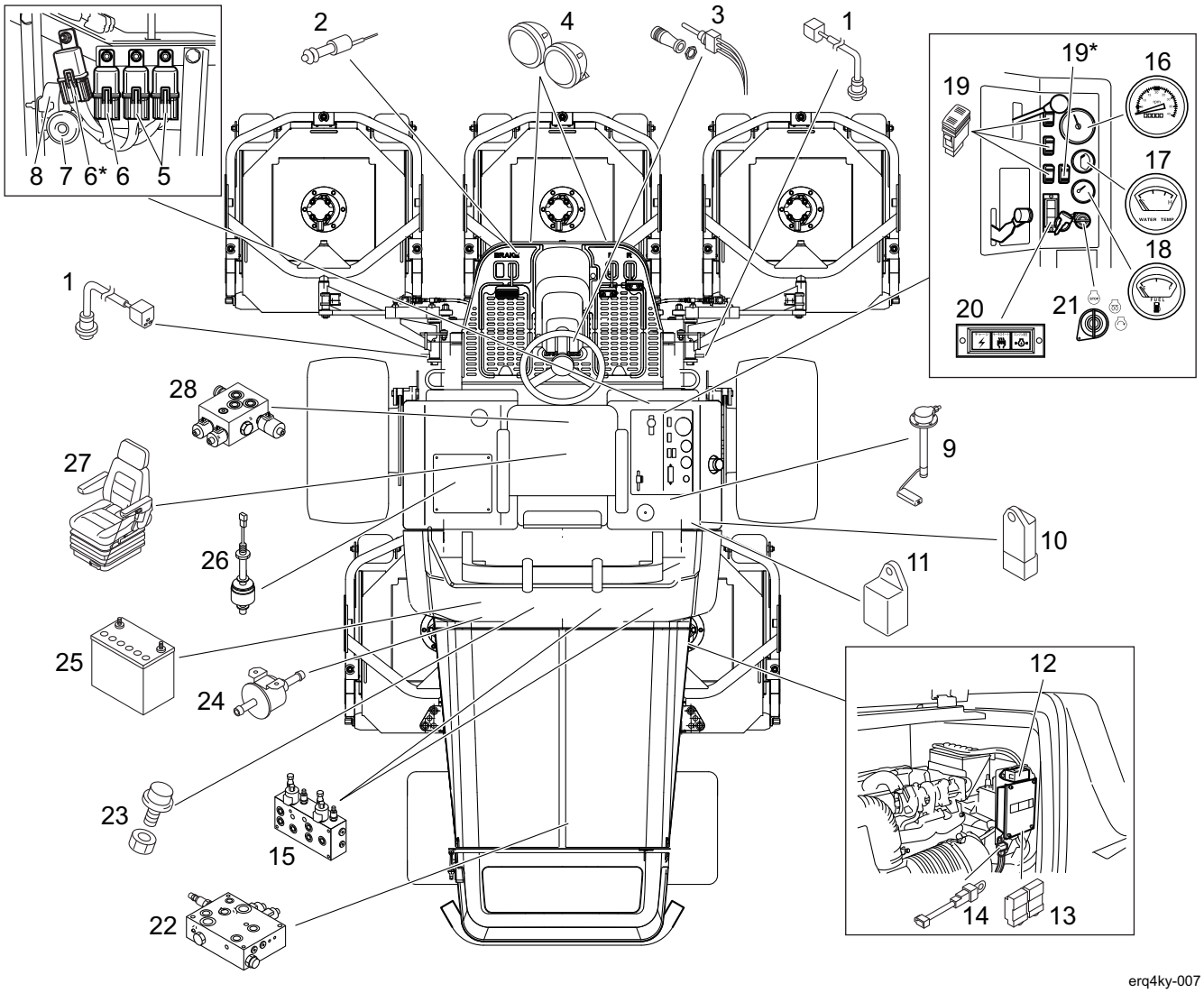

Electrical Part Layout_001

1	Proximity sensor	10	Relay comp. (starter)	19*	Rocker switch (assist switch) #10132- / #11001-
2	Parking brake switch	11	Glow lamp timer	20	Pilot lamp
3	Automatic return switch	12	Mini fuse block	21	Starter switch
4	Work lamp	13	Terminal relay	22	2WD/4WD changeover valve
5	Power relay 411 (seat, brake)	14	Fusible link	23	Electro-magnetic pickup (rotation sensor)
6	Power relay 602 (knife rotation)	15	Rotary knife rotation valve	24	Fuel supply pump
6*	Power relay 602 (knife rotation detection) #10152- / #11001-	16	Hour meter	25	Battery
7	Buzzer (oil level)	17	Water temperature gauge	26	Level switch
8	Buzzer (water temperature)	18	Fuel gauge	27	Seat switch
9	Tank unit	19	Rocker switch	28	Diff-lock valve

https://truckmanualshub.com/

Electrical system

1. Proximity sensor
   The proximity sensors are one of the safety switches that constitute the interlock system. Proximity sensors (position detection switches) are attached to the #4/#5 mower arm fulcrum. They detect the rise of the mower arms and stop the rotary knife rotation.
2. Safety switch [NC type (push to turn off)]
   The parking brake switch is one of the safety switches that constitute the interlock system. It is located on the brake pedal fulcrum.
3. Automatic return switch
   This switch turns the differential lock (V4200 valve) for the left and right front wheels on or off.
   Tilt the switch lever up or down to turn the differential lock on. Release the switch lever to return it to the neutral position to turn the differential lock off.
   It is located to the right of the steering wheel.
4. Work lamps (12V 35 W)
   Use the light switch on the control panel, located to the right of the seat, to turn the work lamps on or off.
   The lamps are located on the front part of the machine.
   These lamps provide auxiliary lighting. Do not travel or operate the machine at night or under poor visibility.
5. Power relay 411 (brown)
   These power relays are located at the front inside of the control panel (which is located to the right of the seat). They are part of the interlock system and linked to the safety switches and seat switch. They control the engine startup and operation.
6. Power relay 602 (gray)
   This power relay is located at the front inside of the control panel (which is located to the right of the seat). It is a part of the interlock system and linked to the rotary knife rotation switch and the proximity sensors for mower units #4 and #5. It controls the rotary knife rotation.
   6*. Power relay 602 (knife rotation detection) #10152- / #11001-
   This power relay is linked to the rotary knife rotation switch and seat switch. It controls the engine operation.
7. Buzzer (oil level)
   This buzzer is linked to the level switch for the hydraulic tank. A continuous buzzer alarm will sound if the oil volume in the hydraulic tank decreases by approximately two (2) liters.
   The buzzer is located at the front inside of the control panel (which is located to the right of the seat).
8. Buzzer (water temperature)
   This buzzer is linked to the thermo switch on the water flange (to which the upper radiator hose is connected). An intermittent buzzer alarm will sound if the coolant temperature reaches 115 °C.
   The buzzer is located at the front inside of the control panel (which is located to the right of the seat).
9. Tank unit
   The tank unit is connected to the fuel gauge. The remaining fuel volume measurement is determined by the position of the float.
   It is located on top of the fuel tank.
10. Relay comp. (starter)
    This is one of the relays that constitute the interlock system. It allows the starter motor to start only when the safety switches and alternator are working properly.
    It is located at the rear inside of the control panel (which is located to the right of the seat).
11. Glow lamp timer
    This timer controls illumination of the thermo-start lamp for the pilot lamp. When the ignition key is held in the "GLOW" position, the thermo-start lamp turns on for 5 seconds.
    It is located at the rear inside of the control panel (which is located to the right of the seat).
12. Mini fuse block
    Each electrical device is connected through the fuse block to the ignition key switch.
    The machine uses a standard mini fuse for automobiles.
    The fuse block is located at the right front under the hood.
13. Terminal relay
    This is located at the right front, under the hood. Each terminal relay has four circuits, and two terminal relays are used on this machine.

https://truckmanualshub.com/

One of the terminal relays controls operation of the differential lock, and the other turns the rotary knives on or off and switches between 2WD and 4WD.
The operating condition can be determined by checking the illumination of the LEDs.

14. Fusible Link
The fusible link functions as the main fuse for the entire electrical circuit, and as the fuse for the charge circuit.
It is located at the right front, under the hood.
It is equipped with a specialized fuse (50A) cartridge.
15. Rotary knife rotation valve (knife rotation solenoid)
These valves are linked to the rotary knife rotation switch and the proximity sensors. They switch the hydraulic path inside the manifold and rotate or stop the rotary knives.
These two valves are located side-by-side under the cover behind the seat.
16. Hour meter
The tachometer indicates the engine rpm while the engine is running.
The hour meter indicates total operation time of the engine. It is located in the control panel (which is located to the right of the seat).
Determine the periodic inspection and maintenance schedule based on the number of hours indicated on the hour meter.
17. Water temperature gauge
This is connected to the water temperature sensor on the engine's cylinder head (front left). It indicates the temperature of the engine coolant.
It is located on the control panel (which is located to the right of the seat).
18. Fuel gauge
This indicates the quantity of fuel inside the fuel tank.
It is located on the control panel (which is located to the right of the seat).
19. Rocker switch
The rocker switches are one of the safety switches that constitute the interlock system. These switches are the rotary knife rotation switch, 2WD/4WD changeover switch and headlight switch. They are located on the control panel (which is located to the right of the seat).

19*. Rocker switch (assist switch) #10132- / #11001-
This switches between turning traction assist on (strong) and off (soft).

20. Pilot lamp
This displays the status of the engine charge, glow lamp and oil pressure with the illumination of the lamps.
It is located on the control panel (which is located to the right of the seat).
21. Starter switch
This is used to start, run or stop the engine.
It is located on the control panel (which is located to the right of the seat).
22. 2WD/4WD changeover valve (2WD/4WD solenoid)
This is linked to the 2WD/4WD changeover switch, rotary knife rotation switch and the proximity sensors. It switches the hydraulic path inside the manifold and switches between 2WD and 4WD.
It is located behind the rear wheel pivot.
23. Electro-magnetic pickup (rotation sensor)
The electromagnetic pickup detects rotation of the engine flywheel gear and converts it to a signal, which is displayed as an rpm value on the tachometer.
The pickup is located near the engine flywheel gear.
24. Fuel supply pump
This sends the fuel that has passed through the fuel filter to the injection pump.
It is located beneath the battery, which is located to the front left of the engine.
25. Battery
The battery supplies power to the starter at the start of the engine, as well as to all electrical parts.
It is located to the front left of the engine.
26. Level Switch
This is linked to the buzzer (oil level). The switch will be engaged and a continuous buzzer alarm will sound if the oil volume in the hydraulic tank decreases (the float descends) by approximately two (2) liters (0.53 U.S. gal.).
27. Seat switch [NO type (push to turn on)]
The seat switch is one of the safety switches that constitute the interlock system. It is located in the seat cushion.

https://truckmanualshub.com/

28. Diff-lock valve (diff-lock solenoid)
    This valve is linked to the auto-return switch. It switches the hydraulic path inside the manifold and turns the diff-lock for the left and right front wheels on or off.
    The diff-lock valve is located in the upper part of the front axle.

Special Tool

Special tools list

No use of special tools is required.

Measurement

Battery

Measurement of Battery Specific Weight

Specific weight of electrolyte tends to reduce in linear proportion with the discharged electrical quantity of the battery and so checking the specific weight of electrolyte with a hydrometer can tell the remaining capacity of the battery.
Temperature compensation is required for the specific weight measured with a hydrometer. The standard temperature for the specific weight of battery electrolyte is 20 ° C, and the specific weight increases or decreases by 0.0007 in accordance with the temperature change of 1 ° C. Thus it can be compensated by the following formula.

$$S20 = St + 0.0007(t - 20)$$

1 — S20
2 — St
3 — t

lyp58z-002

Measurement of Battery Specific Weight_001

1	Specific weight converted for 20 ° C
2	Measured specific weight
3	Fluid temperature at measurement

Specific weight and remaining capacity of battery		
Specific weight (20 ° C)	Discharged electrical quantity (%)	Remaining capacity (%)
1.28	0	100
1.24	25	75
1.20	50	50
1.16	75	25
1.12	100	0

Measurement of specific weight of 12V battery

1. Check all the cells after charge.
2. Replace it when the specific weight is 1.225 or less, or gap of that between each cell is 0.05 or more.

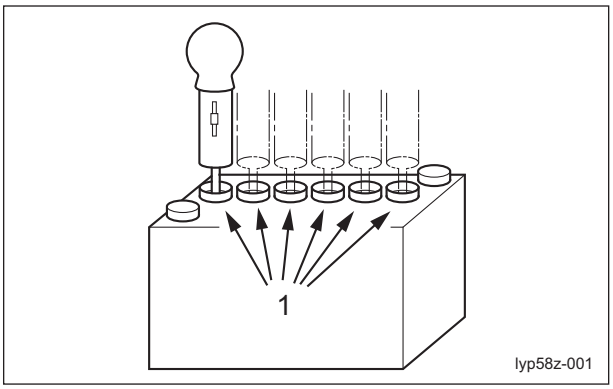

Measurement of Battery Specific Weight_002

1	Cell

https://truckmanualshub.com/

Battery charging

Follow this procedure to fully charge the battery.

Warning

When charging the battery, do not use a current in excess of one tenth of the rated current. With regard to the maximum recommended charging current, follow the battery manufacturer's instructions.

Caution

If the battery gets extremely hot or releases a significant amount of gas during charging, unplug the battery charger at regular intervals.

1. Use a taper battery charger, which automatically reduces the charging rate during charging.
2. After charging is completed, fill the battery cells with distilled water (if the battery is in use).
3. After charging is completed, measure and record the specific gravity of each cell using a battery hydrometer. (See "Measurement of Battery Specific Weight_002" (Page 6-6) "Measurement of Battery Specific Weight" (Page 6-6))
4. If the measured specific gravity is 1.225 or less, or the difference between the cells is equal to or exceeds 0.05, replace the battery with a new one.

Interlock system

The interlock system is a safety system to prevent injury or accident caused by lack of caution of operator using combined control with multiple switches and sensors.
The fuel stop solenoid is activated by relay operation by the seat switch and the parking brake switch. It is related to the rotary knife rotation switch.
Also, the rotary knife rotation stop solenoid is related to relay operation by a proximity switch.

Interlock System Operation Requirements

Operation		Seat	Parking brake	Rotary knife rotation switch
1	Start the engine	Seated	Applied	OFF
2	Stop the engine	Away	Released	—
3	Stop the engine	Away	Applied	ON

1. The engine will not start unless you are seated, the parking brake is applied, and the rotary knife rotation switch is OFF.
2. The engine will stop if you release the parking brake and leave the seat.
   Note:
   If you leave the seat while the engine is running, apply the parking brake.
3. Even if you apply the parking brake before leaving the seat, the engine will stop if the rotary knife rotation switch remains ON.
   Note:
   If you leave the seat while the engine is running, apply the parking brake and turn the rotary knife rotation switch OFF.

Confirming Operation of Interlock System

1. In the status of the engine start, check if the engine will stop when even one of the operation conditions on the seat, the parking brake and the rotary knife rotation switch is not met.
2. With the engine started and the rotary knives rotating, shift the mower unit up/down lever to the "UP" position to raise the mower units, and then check the following.
   [1] When mower unit #4 is raised to 40 cm (15.75 in), check that the rotary knives for mower units #2, #3 and #4 stop rotating.
   [2] When mower unit #5 is raised to 40 cm (15.75 in), check that the rotary knives for mower units #1 and #5 stop rotating.

https://truckmanualshub.com/

Adjustment

Proximity Sensor

1. Start the engine, raise mower units #1, #4, and #5 by 30 cm (11.81 in), and then turn off the engine.

> **Warning**
> Be sure to stop the engine before adjusting the proximity sensor.

> **Warning**
> Do not crawl under the mower units.

2. Turn the key switch ON (the engine remains stopped); turn the rotary knife rotation switch ON; and then lift up mower unit #5 by 40 cm (15.75 in) by hands.

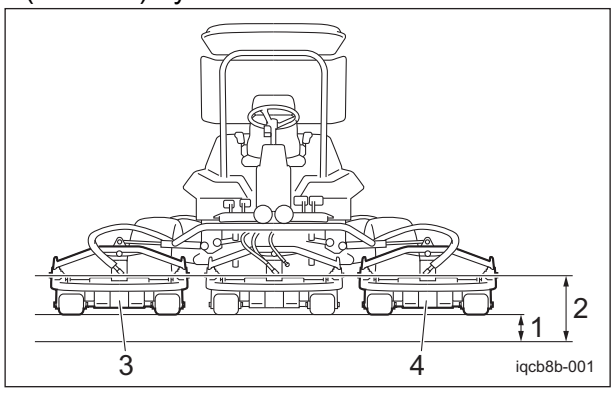

Proximity Sensor_001

1	Setting value 30cm (11.81 in)
2	Setting value 40 cm (15.75 in)
3	Mower unit #4
4	Mower unit #5

> **Caution**
> See the list in "Tightening torques" (Page 3-5) .
> Note that the Baroness product warranty may not apply to defects caused by incorrect or overtorque tightening, etc.

3. Loosen two bolts, slide the switch mounting board slowly until the illuminated proximity sensor on the switch mounting bracket turns off. Then, fasten the board using the two bolts.

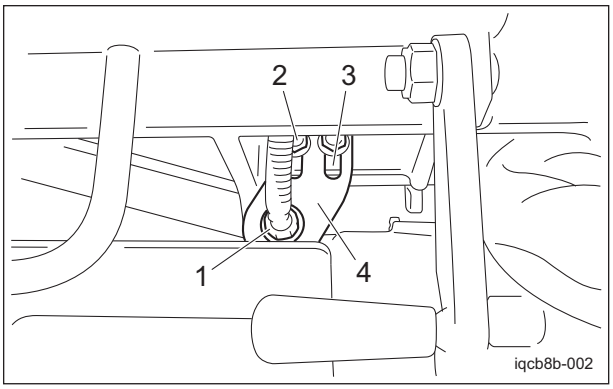

Proximity Sensor_002

1	Proximity sensor
2	Bolt
3	Long hole (for adjusting the proximity sensor)
4	Switch mounting board

4. Adjust the proximity sensor for mower unit #4 by the same procedure.

https://truckmanualshub.com/

Parking Brake Switch

The parking brake is equipped with a parking brake switch, one part of the interlock system. The switch contact point is activated through the operation of the brake pedal, controlling starting and stopping of the engine.

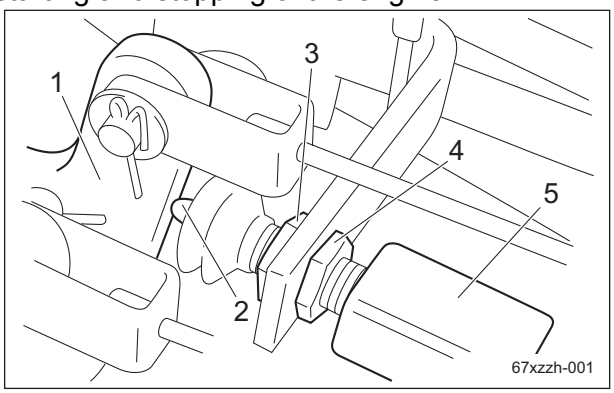

Parking Brake Switch_001

1	Brake pedal
2	Switch contact point
3	Adjusting nut A
4	Adjusting nut B
5	Parking brake switch

1. Link the left and right brake pedals, and then pull up the parking brake lever to apply the parking brake. (See "RT mechanical brake manual" (Page 10-11) .)

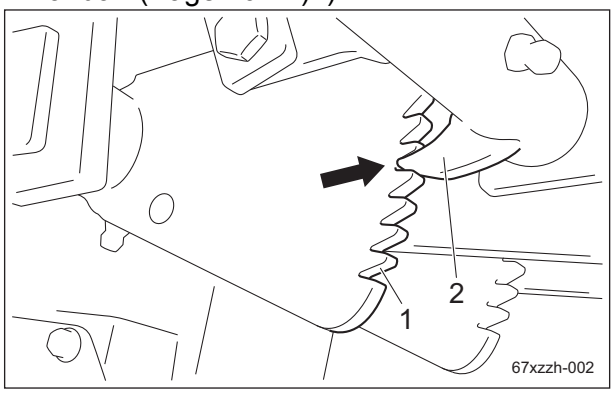

Parking Brake Switch_002

1	Notch
2	Parking brake stopper

> **Important**
>
> After adjusting the foot brake wire, check that the machine is firmly stopped with the parking brake at notch 5 - 6. (See "Adjusted Value of the Foot Brake Wire" (Page 7-3) .)

2. With the parking brake at notch 5, adjust adjusting nut A and adjusting nut B of the parking brake switch to create a slight clearance at the switch contact point.

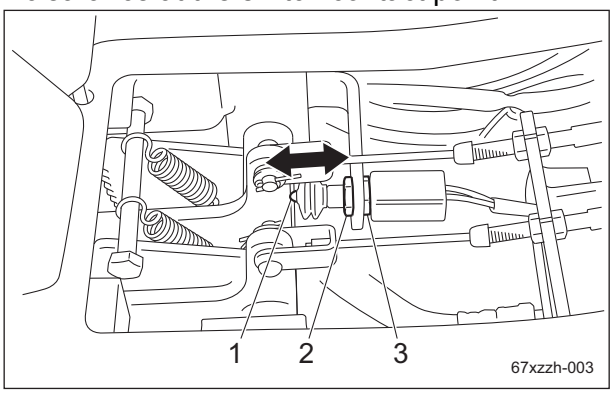

Parking Brake Switch_003

1	Switch contact point
2	Adjusting nut A
3	Adjusting nut B

> **Important**
>
> If the switch contact point is pressed more than a stroke of the switch, the switch may be damaged.

3. Release the parking brake, and then make sure that the switch contact point is pressed.
4. Follow the steps below to check the operation of the parking brake switch.
   [1] While sitting on the seat with the parking brake set to at least notch 5 and the rotary knife switch set to the "OFF" position, check that the engine starts.
   [2] Check that the engine is stopped when you release the parking brake and leave the seat. (See "Interlock system" (Page 6-7) .)

https://truckmanualshub.com/

Electrical components

About the Electrical components

Warning

When servicing electrical components, be sure to disconnect the negative battery cable.

Safety Switches

The following devices are used as safety switches to prevent injuries and accidents due to operator inattentiveness.

1. Related to engine starting and operation (See "Interlock system" (Page 6-7) .)
   - Seat switch
   - Parking brake switch
   - Rotary knife rotation switch
2. Related to rotary knife rotation
   - Proximity sensors

Rotary Knife Rotation Circuit

The rotary knife rotation is controlled by open/close of the rotary knife rotation valve by the operation switch (rocker switch), the rotary knife rotation relay, the proximity sensor, terminal relay and the solenoid valve.
The proximity sensor controls to stop rotation of the rotary knife when the outer edges of the Mower Units #4/#5 are at ground height of 40 cm (15.75 in) or higher.

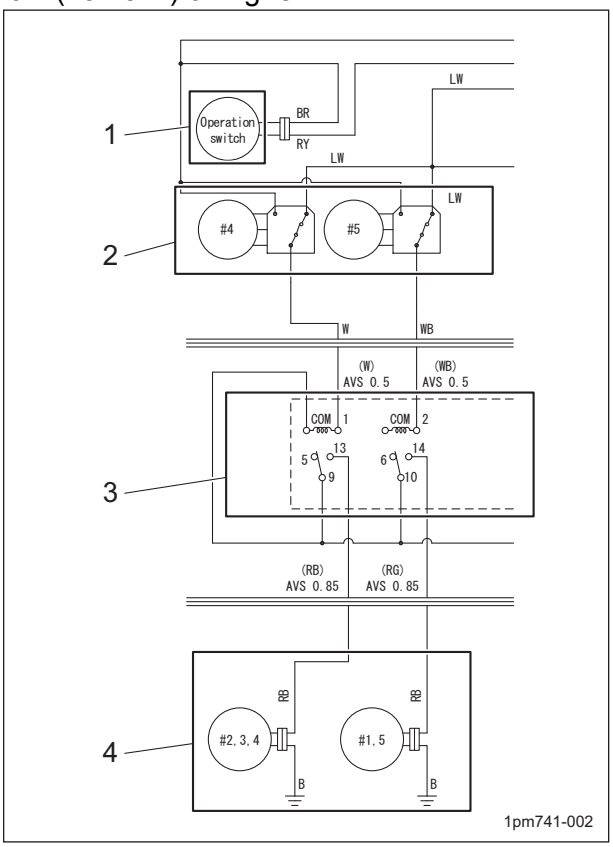

Rotary Knife Rotation Circuit_001

1	Operation switch (rocker switch)
2	Proximity sensor
3	Terminal relay
4	Solenoid valve

https://truckmanualshub.com/

2WD/4WD Changeover Circuit

2WD/4WD changeover is controlled by the opening/closing of the 2WD/4WD changeover valve according to the 4WD switch (rocker switch), terminal relay and solenoid valves.
In addition, when the operation switch is set to the "ON" position, the power relay is activated and the machine will be in four-wheel drive.

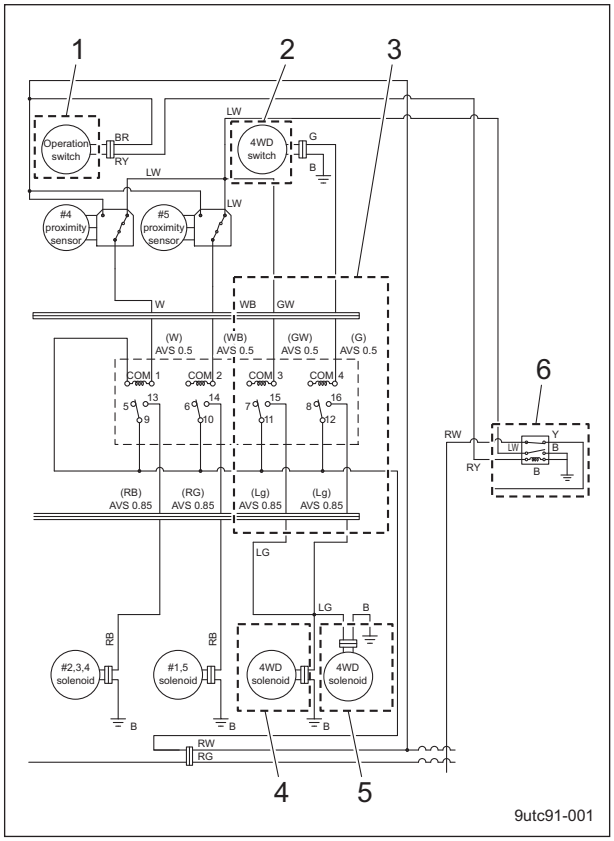

2WD/4WD Changeover Circuit_001

1	Operation switch (rocker switch)
2	2WD/4WD changeover switch (rocker switch)
3	Terminal relay
4	Solenoid #1
5	Solenoid #2
6	Power relay (MR5A602A1K)

Diff-Lock Circuit

Diff-lock operation is controlled by the opening/closing of the diff-lock valve according to the diff-lock switch (auto-return switch), terminal relay and solenoid valves.

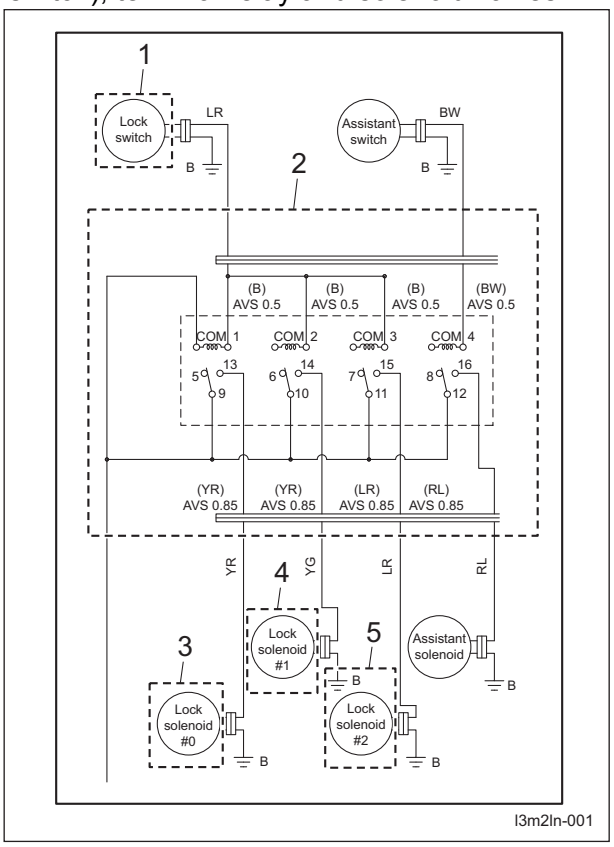

Diff-Lock Circuit_001

1	Diff-lock switch (rocker switch)
2	Terminal relay
3	Solenoid #0
4	Solenoid #1
5	Solenoid #2

https://truckmanualshub.com/

Assist Circuit

The traction assist switching operation is controlled by the assist switch (rocker switch), terminal relay, and the opening and closing of the assist valve that is controlled by the solenoid valve.
The traction assist switching provides two stages of traction assist effects. (#10132- / #11001-)

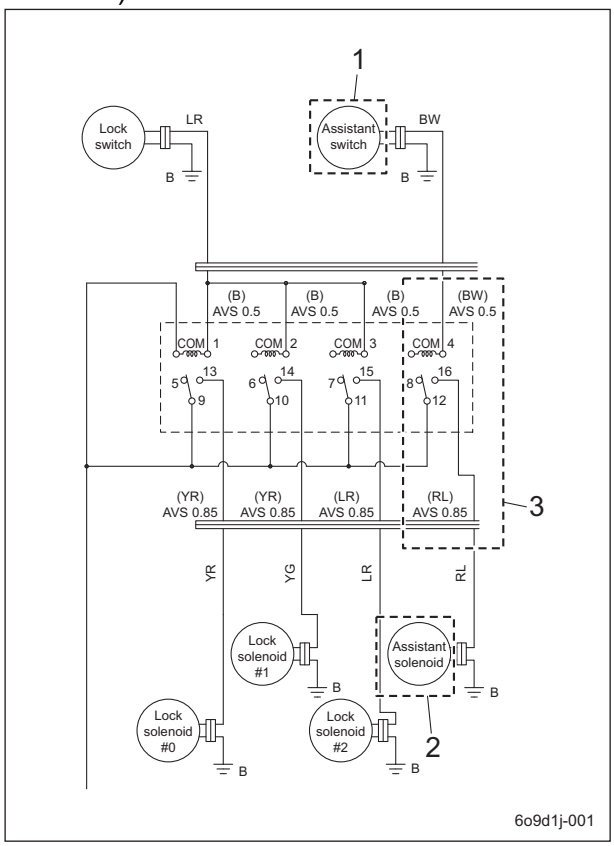

Assist Circuit_001

1	Assist switch (rocker switch)
2	Terminal relay
3	Solenoid

Seat Switch

The seat switch is located right underneath the seat and is not usually conducted.
It is normal if it is conducted when seated (pressed).

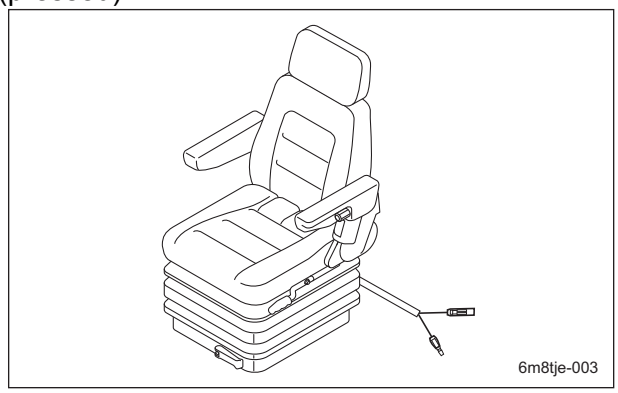

Seat Switch_001

Parking Brake Switch

The parking brake switch is located at the brake pedal fulcrum (under floor).

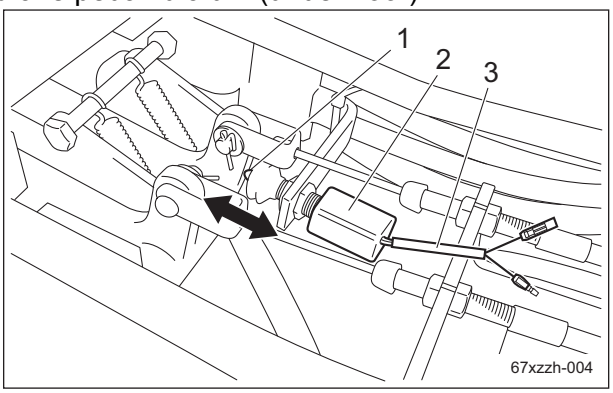

Parking Brake Switch_001

1	Switch operation part
2	Parking brake switch
3	Wiring

1. It is normal if two wires are conducted between them when the brake pedal is depressed.(Condition that switch operation part is completely extended)
2. It is normal if two wires are not conducted between them when the brake pedal is released.(Condition that switch operation part is completely retracted)

https://truckmanualshub.com/

Rocker Switch

Rocker switches are located in the operation panel and are used for the rotary knife rotation switch, 4WD switch, light switch and assist switch (#10132- / #11001-).

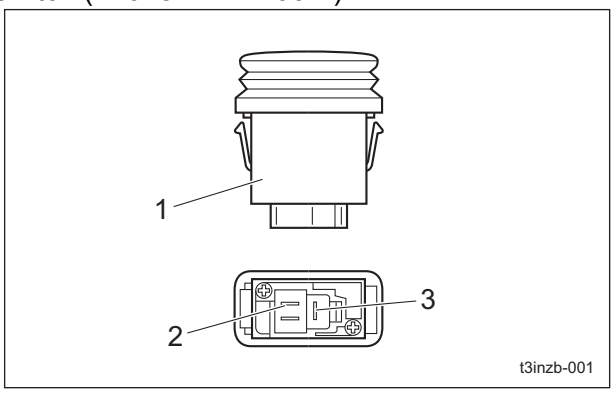

Rocker Switch_001

1	Rocker switch
2	C
3	A

Normal operation is when there is continuity between sockets A and C with the rocker switch in the "ON" position and no continuity between sockets A and C with it in the "OFF" position.

Proximity Sensors

Proximity sensors detect through non-contact methods that objects are nearby.

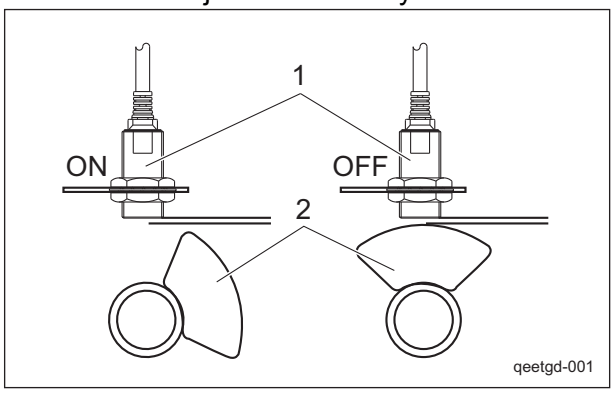

Proximity Sensor_001

1	Proximity sensors
2	Object (metal)

If an object is away from the proximity sensor, the sensor is set to the "ON" position and the operation indicator lights up in red.
If an object is near the proximity sensor, the sensor is set to the "OFF" position and the operation indicator goes off.

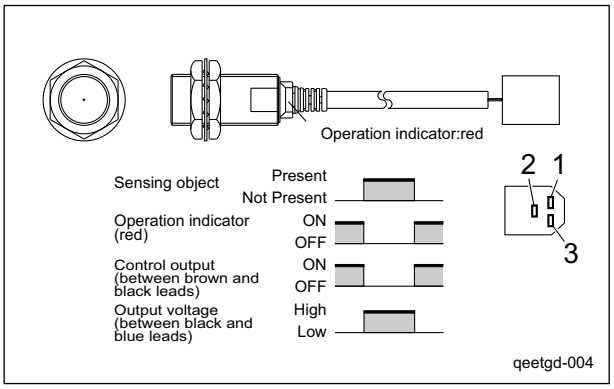

Proximity Sensor_002

1	Connector terminal (brown; +)
2	Connector terminal (black; output)
3	Connector terminal (blue; -)

Inspection of Action Indicator

Caution

Make sure not to short-circuit the battery terminals.

1. Connect the battery (+) to the connecter terminal (brown/+), and the battery (-) to the terminal connector (blue/-).

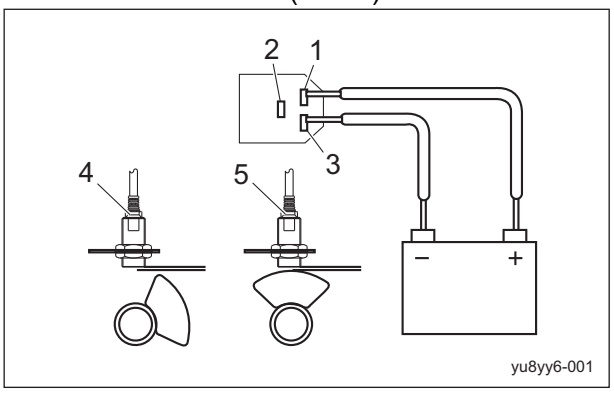

Inspection of Action Indicator_001

1	Connector terminal (brown/+)
2	Connector terminal (black/output)
3	Connector terminal (blue/-)
4	ON (red)
5	OFF

2. It is normal if the action indicator is illuminated red when the object to be detected is away from the proximity sensor, and the action indicator is turned off when the object is close to the proximity sensor.

https://truckmanualshub.com/

Inspection of Control Output

> ⚠ Caution
> Make sure not to short-circuit the battery terminals.

1. Connect the battery (+) to the connecter terminal (brown/+), and the battery (-) to the terminal connector (blue/-).

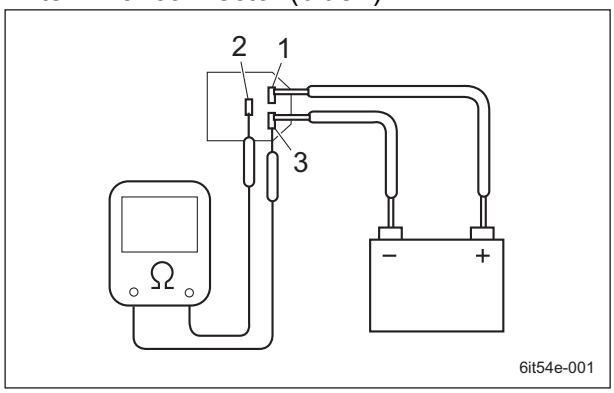

Inspection of Control Output_001

1	Connector terminal (brown/+)
2	Connector terminal (black/output)
3	Connector terminal (blue/-)

2. It is normal if there is conduction between the connector terminal 2 and 3 when the object to be detected is away from the proximity sensor, and there is no conduction between the connector terminal 2 and 3 when the object is close to the proximity sensor.

Inspection of Output Voltage

> ⚠ Caution
> Make sure not to short-circuit the battery terminals.

1. Follow the steps below to connect the battery and voltmeter.
   [1] Connect the battery (+) to the connecter terminal (brown/+), and the battery (-) to the connector terminal (blue/-).
   [2] Connect the voltmeter (+) to the connecter terminal (black/output) and the voltmeter (-) to the connector terminal (blue/-).

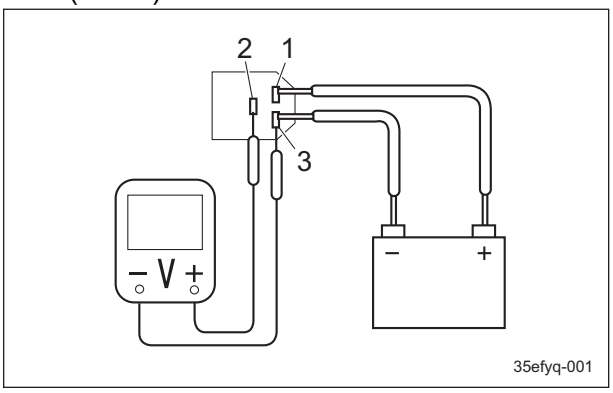

Inspection of Output Voltage_001

1	Connector terminal (brown/+)
2	Connector terminal (black/output)
3	Connector terminal (blue/-)

2. It is normal if the voltage between the connector terminals 2 and 3 is 0 V when the object to be detected is away from the proximity sensor, and the voltage between the connector terminals 2 and 3 is battery voltage (12 V) when the object is close to the proximity sensor.

Terminal Relay

Terminal relays control operation of the diff-lock, rotation of the rotary knives, 2WD/4WD selection and traction assist selection.
The operating condition can be checked by the illumination of the LEDs.
Two terminal relays of four circuits each are used.

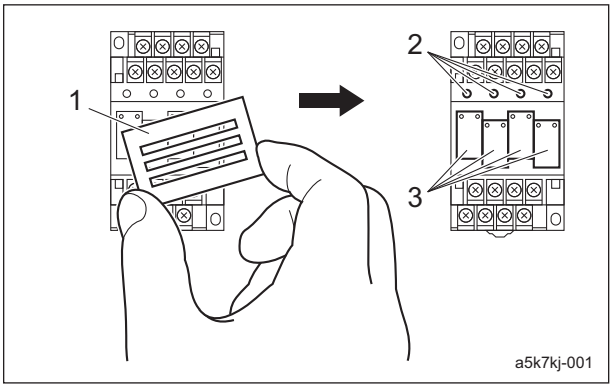

Terminal Relay_001

1	Cover
2	LED
3	Power relay

https://truckmanualshub.com/

Inspection of Terminal Relay

1. Have ready a simple terminal relay.
2. It is normal that there is conduction between terminals 5 and 9 of the terminal relay.

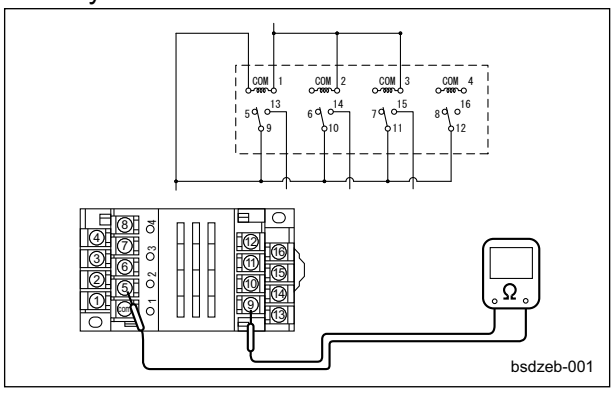

Inspection of Terminal Relay_001

3. Inspect the remaining three circuits in the same way.
   - Between 6 and 10
   - Between 7 and 11
   - Between 8 and 12

> **Caution**
>
> Do not short-circuit the battery terminals.

4. It is normal that there is conduction between 9 and 13 and LED1 lights up with the battery connected between COM and 1.

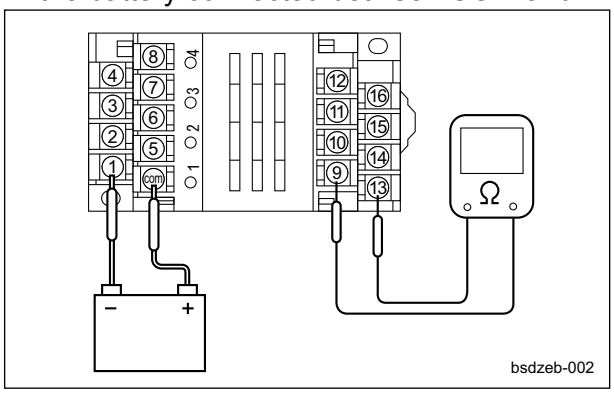

Inspection of Terminal Relay_002

5. Inspect the remaining three circuits in the same way.
   - Between 10 and 14
   - Between 11 and 15
   - Between 12 and 16

BTT (+)	BTT (-)	Tester	LED
COM	1	9 - 13	1
COM	2	10 - 14	2
COM	3	11 - 15	3
COM	4	12 - 16	4

Inspection of Power Relay

Note:
All the power relays have the same internal circuits. Accordingly the inspection method should be the same.

1. Disconnect the power relay from the terminal relay.
2. The normal measured resistance between relay terminals 1 and 8 is about 480 Ω.

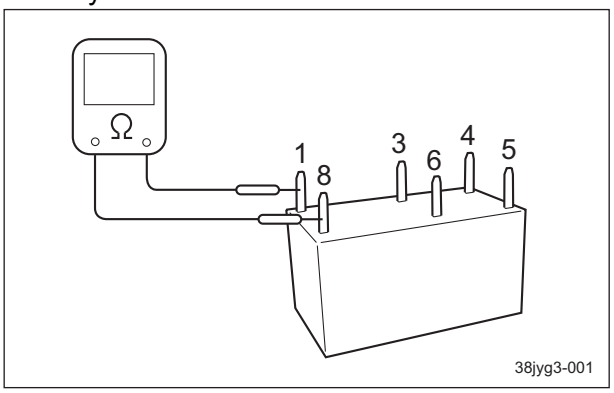

Inspection of Power Relay_001

3. Normal operation is when there is conduction between relay terminals 5 and 6 and no conduction between relay terminals 3 and 4.

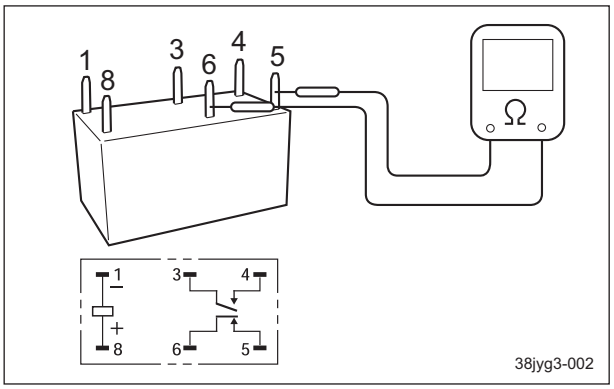

Inspection of Power Relay_002

https://truckmanualshub.com/

> **Caution**
>
> Do not short-circuit the battery terminals.

4. Normal operation is when there is no conduction between 5 and 6 and there is conduction between relay terminals 3 and 4 with the battery connected to relay terminals 1 and 8.

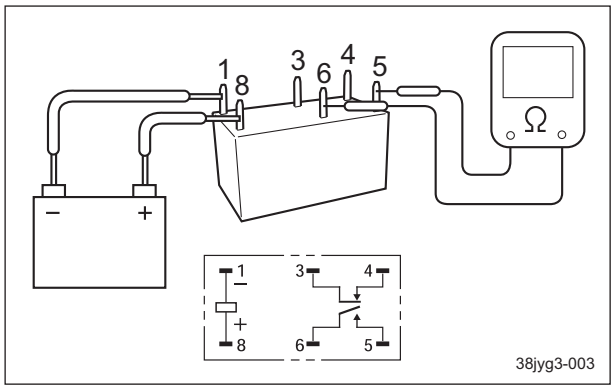

Inspection of Power Relay_003

Diff-Lock Switch

An auto-return switch is used, and it is located below the steering wheel on the right side.
Flip the switch up or down to engage the differential lock for the front wheels.
When the switch is released, it returns it to its neutral position and the differential lock is disengaged.

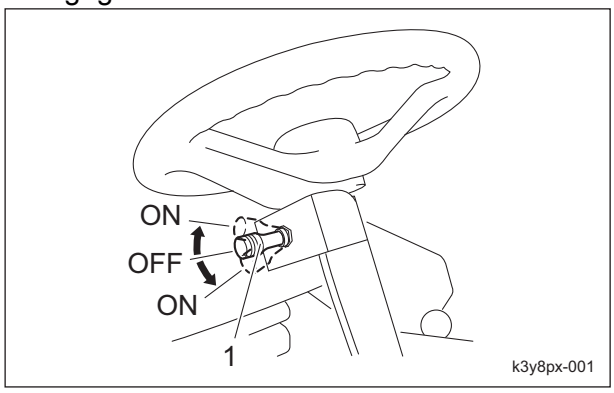

Diff-Lock Switch_001

1	Diff-lock switch

Inspection of Auto Return Switch

1. Prepare a stand alone switch.
2. It is normal if the switch terminal 1 and 2 are conducted between them when the switch lever is pressed towards the terminal 1 side, and if they are not conducted when the lever is in neutral position.
3. It is normal if the switch terminal 2 and 3 are conducted between them when the switch lever is pressed towards the terminal 3 side, and if they are not conducted when the lever is in neutral position.

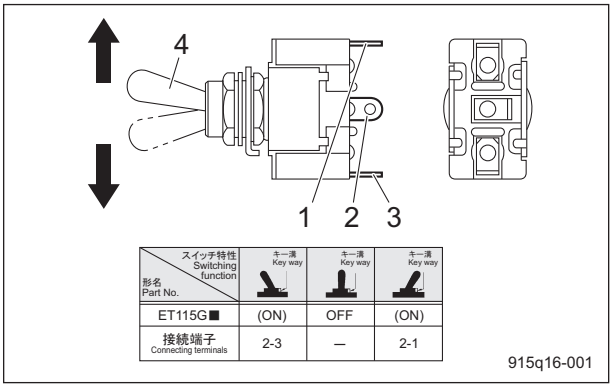

スイッチ特性 Switching function / 形名 Part No.	キー溝 Key way	キー溝 Key way	キー溝 Key way
ET115G■	(ON)	OFF	(ON)
接続端子 Connecting terminals	2-3	—	2-1

Inspection of Auto Return Switch_001

1	Terminal 1
2	Terminal 2
3	Terminal 3
4	Switch lever

https://truckmanualshub.com/

Solenoid Valve

Rotary Knife Rotation Valve

The rotary knife rotation valve is installed behind the seat and to the right.
Depending on the operation of the solenoid valves, the hydraulic path in the rotary knife rotation valve is switched to control the rotation and stopping of the gear motors above the mower units.

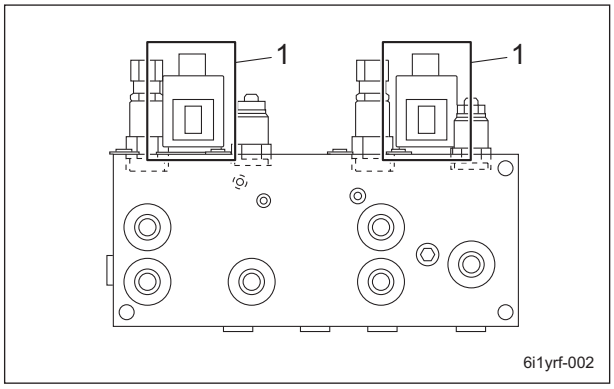

Rotary Knife Rotation Valve_001

1	Solenoid valve

▪Inspection of Solenoid

1. Remove the connector of the solenoid.
2. It is normal if resistance between connectors of the solenoid is about 7.2 Ω.

▪Solenoid Specifications

Voltage	Resistance	Holding Current
DC 12 V	7.2 Ω	1.67 A

Diff-lock Valve

The diff-lock valve is located in the upper part of the front axle.
Operation of the solenoid valves switches the hydraulic path inside the diff-lock valve and turns the diff-lock for the left and right front wheels ON or OFF.

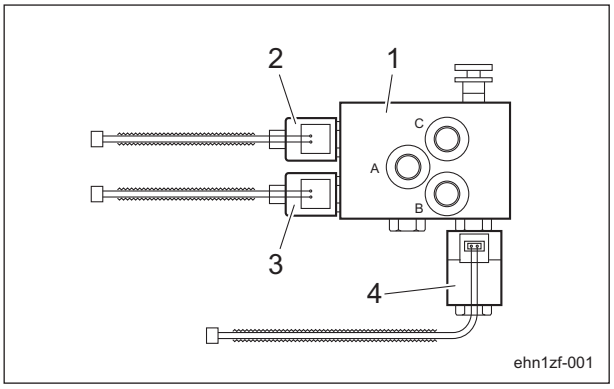

Diff-lock Valve_001

1	Diff-lock valve
2	Solenoid #1
3	Solenoid #2
4	Solenoid #0

▪Inspection of Solenoid

1. Disconnect the solenoid connectors.
2. Measure the resistance between the connector terminals of the solenoid. The normal operation is when the measured values are as in the table.

▪Solenoid Specifications

Solenoid Number	Voltage	Resistance	Holding Current
#0	DC 12 V	4.3 Ω	2.8 A
#1/#2	DC 12 V	7.2 Ω	1.67 A

https://truckmanualshub.com/

2WD/4WD Changeover Valve

The 2WD/4WD changeover valve is located below the radiator, behind the seat.
It controls 2WD/4WD operation. The hydraulic circuit in the 2WD/4WD changeover valve is switched according to the activation of the solenoid valves.

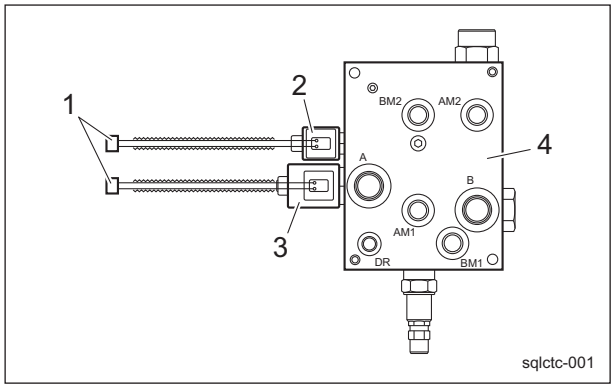

2WD/4WD Changeover Valve_001

1	Housing
2	Solenoid #1
3	Solenoid #2
4	2WD/4WD changeover valve

■Inspection of Solenoid

1. Disconnect the solenoid connectors.
2. Measure the resistance between the connector terminals of the solenoid. Normal operation is when the measured values are as in the table.

■Solenoid Specifications

Solenoid Number	Voltage	Resistance	Holding Current
#1	DC 12 V	10 Ω	1.2 A
#2	DC 12 V	7.2 Ω	1.67 A

Assist Valve

The assist valve is located at right side underneath the seat.（#10132- / #11001-）
Operation of the solenoid valve switches hydraulic path inside of the assist valve to control the traction assist operation.

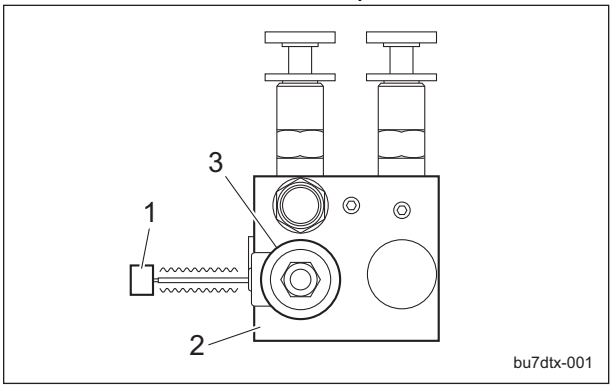

Assist Valve_001

1	Housing
2	Assist valve
3	Solenoid

■Inspection of Solenoid

1. Disconnect the solenoid connectors.
2. The normal resistance between the connector terminals of the solenoid is about 7.2 Ω.

■Solenoid Specifications

Voltage	Resistance	Holding current
DC12 V	7.2 Ω	1.67 A

https://truckmanualshub.com/

Power Relay

Rotary Knife Rotation/Detection Relay

The rotary knife rotation relay controls rotation of the rotary knife with the power relay [MR5A602A1K] (grey) by operation of the rotary knife rotation switch and the proximity sensor of the Mower Units #4/#5.
Also, the *rotary knife rotation detection relay controls operation of the engine with the power relay [MR5A602A1K] (grey) by operation of the rotary knife rotation switch and the seat switch.（#10152- / #11001-）

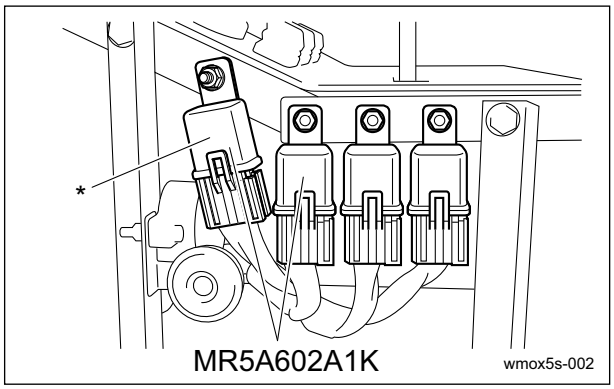

Rotary Knife Rotation/Detection Relay_001

■Inspection of Power Relay

1. Remove the power relay.
2. The normal measured resistance between relay terminals 1 and 2 is about 75 Ω.

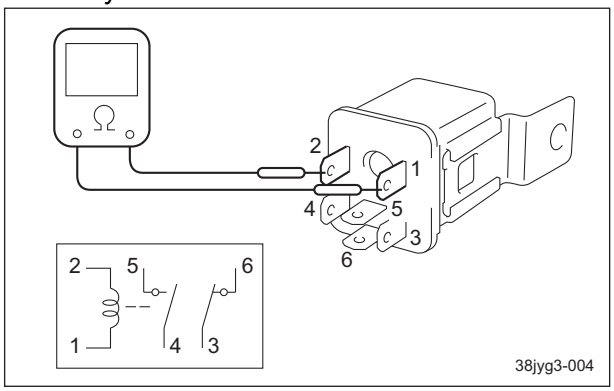

Inspection of Power Relay_001

3. Normal operation is when there is continuity between relay terminals 3 and 6 and no continuity between relay terminals 4 and 5.

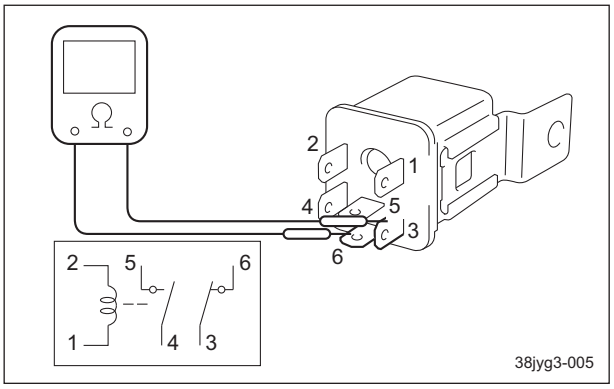

Inspection of Power Relay_002

Caution

Do not short-circuit the battery terminals.

4. Normal operation is when there is no continuity between 3 and 6 and there is continuity between relay terminals 4 and 5 with the battery connected to relay terminals 1 and 2.

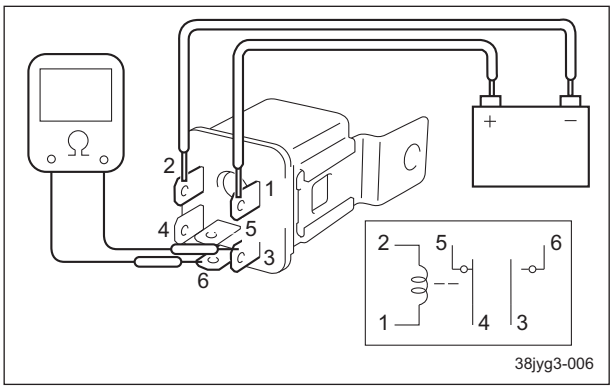

Inspection of Power Relay_003

https://truckmanualshub.com/

Seat/Brake Relay

The seat/brake relay is associated with the seat switch and the brake pedal switch in the interlock system and controls engine starting and operation with power relays (MR5A411A1K; brown).

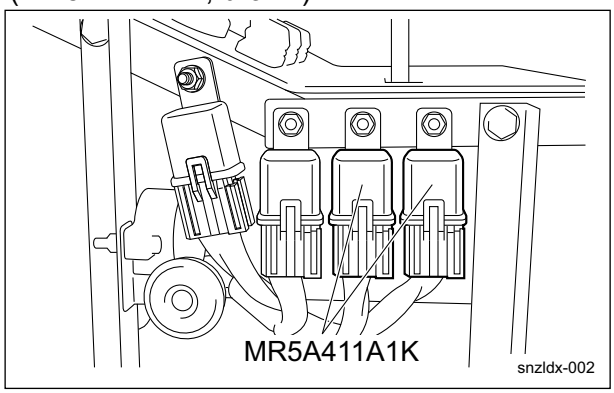

Seat/Brake Relay_001

▪Inspection of Power Relay

1. Remove the power relay.
2. The normal measured resistance between relay terminals 1 and 2 is about 75 Ω.

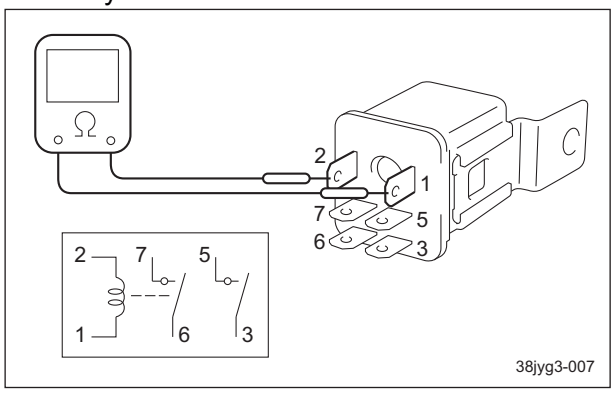

Inspection of Power Relay_001

3. It is normal if there is no conduction between both of relay terminal 3 and 5, 6 and 7.

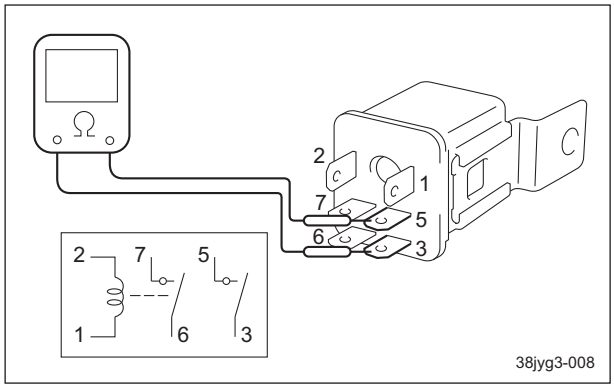

Inspection of Power Relay_002

Caution

Do not short-circuit the battery terminals.

4. It is normal if there is conduction between both of the relay terminal 3 and 5, 6 and 7 when the battery voltage is applied between the relay terminal 1 and 2.

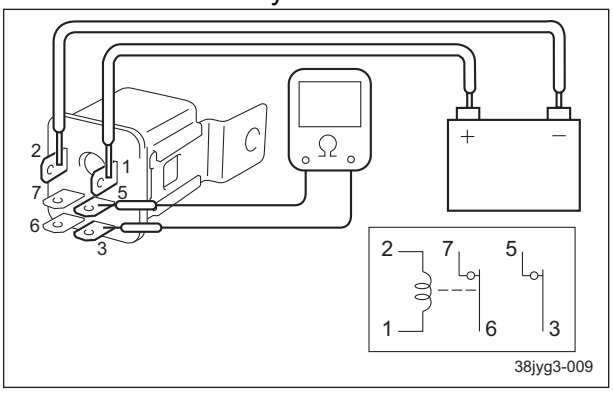

Inspection of Power Relay_003

Work Lamp

The work lamp is located at the front of the main body and it lights up and off by operating the light switch (rocker switch).

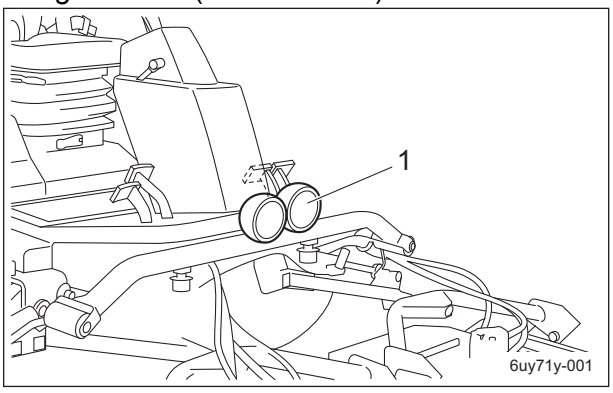

Work Lamp_001

1	Work lamp

https://truckmanualshub.com/

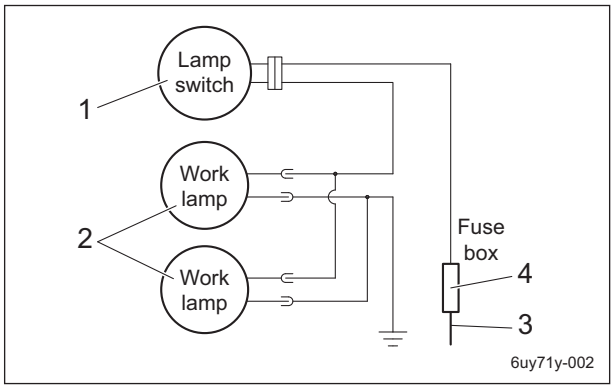

Work Lamp_002

1	Light switch (rocker switch)
2	Work lamp
3	Plus power supply
4	Fuse

Valve Specifications

Type	Rating
H3	12 V 35 W

Key Switch

Use the key switch to start or stop the engine. The conductive status of each key position is described below.

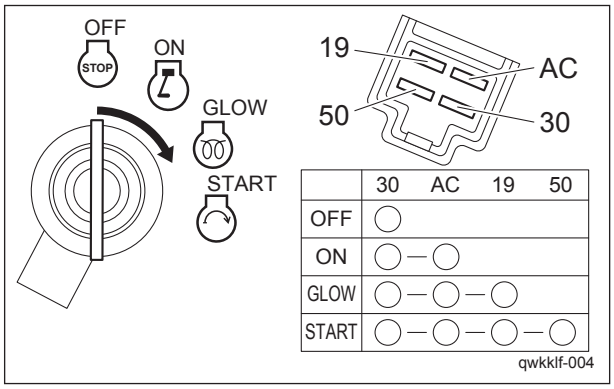

Key Switch_001

Key Position and Device Operation

■ON (Run)

The diesel engine on the machine runs or stops based on the fuel supply.
When the key is set to the "OFF" position, the engine stop solenoid is turned off, and fuel is shut off.
After the engine starts, while the key remains in the "ON" position, the solenoid works and fuel is supplied. (This type of solenoid is always conductive. During operation = conductive.)

Key [OFF]	Plunger [out]
Key [ON]	Plunger [in]

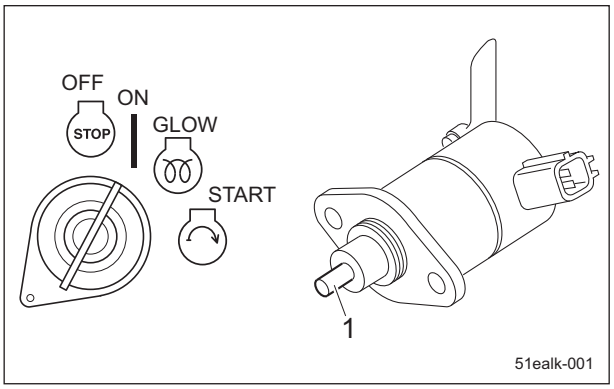

ON (Run)_001

1	Plunger

https://truckmanualshub.com/

■Glow (thermo-start)

When the ignition key is kept in the "GLOW" position, the glow plug is generating heat and the thermo-start lamp is turned on.
The lamp turns off at the specified time. However, the lamp turning off is not related to the glow plug generating heat, and the plug is kept heated as long as the key is in "GLOW" position even after the lamp is turned off.
The glow lamp will stay illuminated for five seconds.
The glow plug is located at engine head of each cylinder and is connected by the plate.
The electrical circuit is grounding of the engine block.

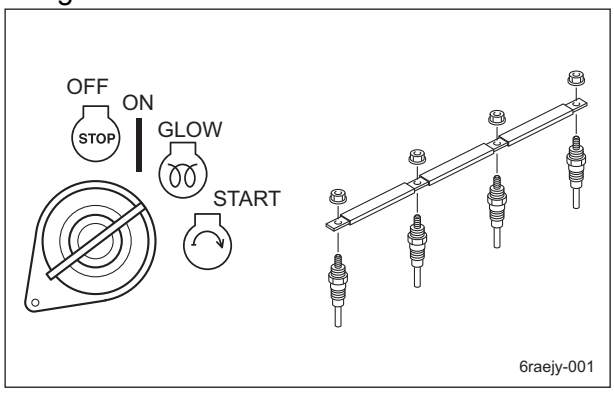

Glow (thermo-start)_001

■START

The engine starts by rotating the starter the magnet switch of which is energized with the key at "START" position.
The starter is connected via three safety switches.
The circuit is designed so as not to rotate the starter without operating the safety switch.

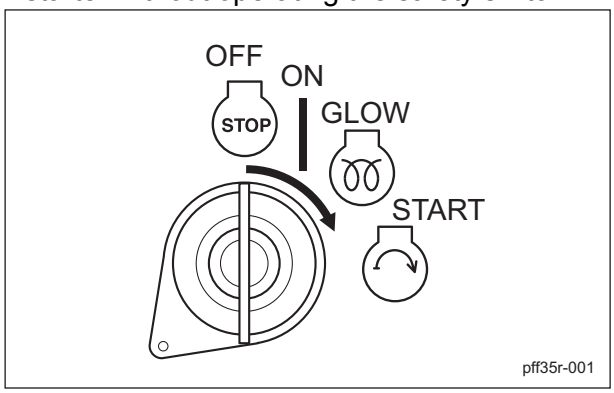

START_001

Pilot Lamps

Status of charge of the engine, glow, and oil pressure is displayed with illumination of the lamps.

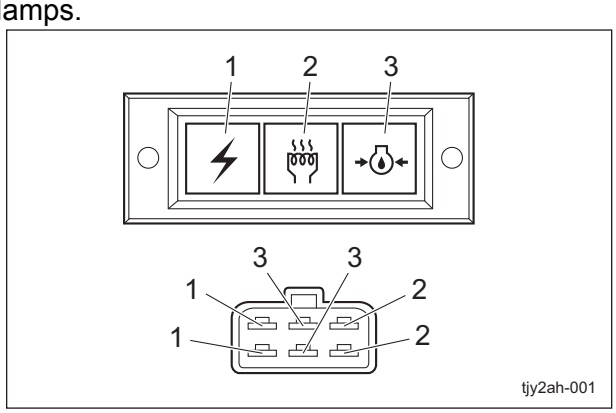

Pilot Lamps_001

1	Charge
2	Thermo-start
3	Engine oil pressure

https://truckmanualshub.com/

Charge

The lamp lights up when the ignition key is set to the "ON" position before the engine starts. It blacks out when the engine starts and the alternator starts operating properly.
When the ignition key is set to the "ON" position before the engine starts, the alternator IG-terminal (yellow) is energized and the L-terminal (brown = charger lamp ground) is grounded through internal circuit of the alternator and the lamp lights up.
After normal operation, the internal circuit ground for L-terminal is disconnected and the lamp blacks out.
Grounding is connected to the engine block.
If the charge lamp lights up during the engine running, a failure in charging may occur due to malfunction of the alternator drive belt or the IC regulator inside of the alternator etc.

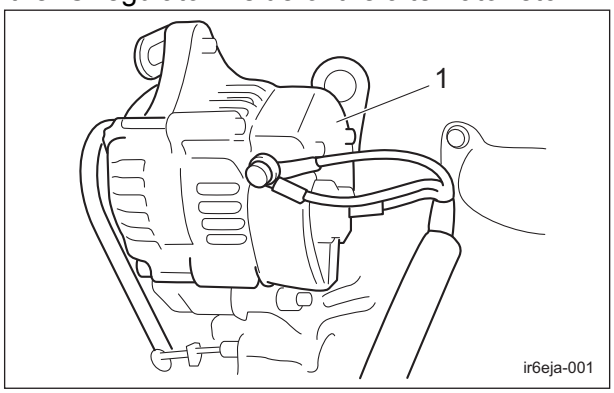

Charge_001

1	Alternator

Thermo-start

When the ignition key is set to the "GLOW" position, it illuminates as the glow plug generates heat.
Illumination time of the thermo-start lamp is controlled by the glow lamp timer, and the lamp is turned off after a specified amount of time passes.
The duration of illumination indicates an approximate period of time required for warm-up, and has been fixed at five seconds.

Engine Oil Pressure

The lamp turns on when the ignition key is set to the "ON" position before the engine starts. It turns off when the engine starts and engine oil pressure is generated properly.
It is connected to an oil pressure switch located in the engine block (beside the oil element) and lights up if the oil pressure drops during operation.

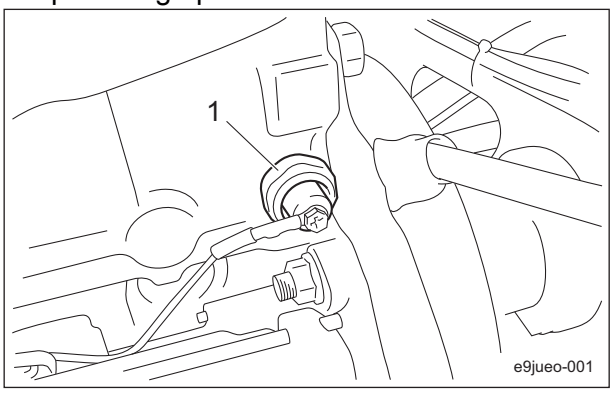

Engine Oil Pressure_001

1	Oil pressure switch

Fuel Gauge

The fuel gauge is located at the upper left of the operation panel and connected to the fuel unit of the fuel tank and it displays the remaining amount of fuel according to the amount of rise and fall of the float installed in the fuel tank.

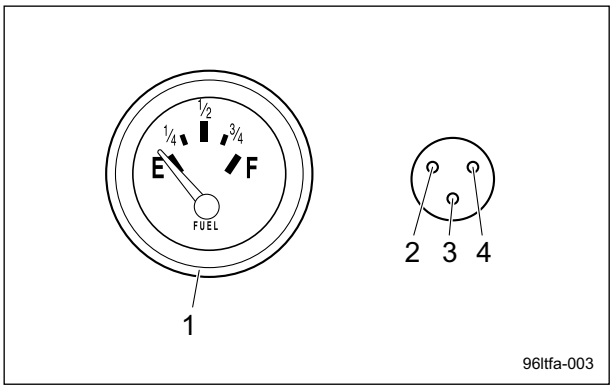

Fuel Gauge_001

1	Fuel gauge
2	Positive (yellow/red)
3	Negative (brown)
4	Signal (yellow)

https://truckmanualshub.com/

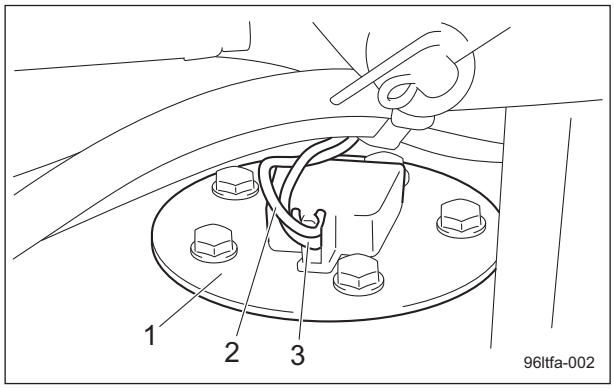

Fuel Gauge_002

1	Fuel unit
2	Ground (black)
3	Signal (yellow)

Water Temperature Gauge

The water temperature gauge is connected to a water temperature sensor located on the engine cylinder head (in the left front of the machine) and displays the water temperature. The resistance value of the water temperature sensor changes according to a temperature and is converted to display the temperature.

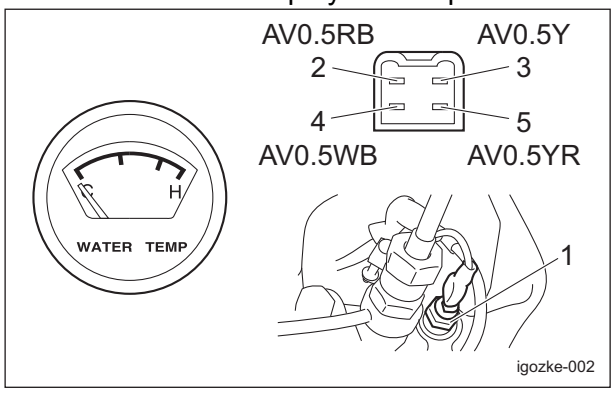

Water Temperature Gauge_001

1	Water temperature sensor
2	Light + (unused)
3	IGN +
4	Ground
5	Water temperature sensor power supply

Tachometer/Hour Meter

The tachometer is located on the operation panel, connected to a rotation sensor in the engine flywheel area and displays the signal output from the rotation sensor as an rpm value.
The hour meter displays the total operation time of the engine. Every six minutes of engine operation will increase the number at the first digit (black number on a white background) by one. Every one hour of engine operation will increase the number at the next digit (white number on a black background) by one.

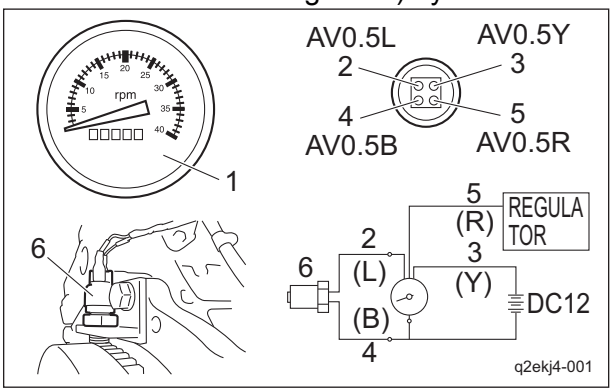

Tachometer/Hour Meter_001

1	Hour meter
2	Tachometer pulse
3	Tachometer wire +
4	Ground
5	Hour meter wire +
6	Rotation sensor

https://truckmanualshub.com/

Starter Relay

Starter relay is located on the operation panel, and it controls starting of the starter by receiving signal from the safety switch.
Wiring from the safety switch is connected to the alternator L-terminal (grounded at starting) via the relay.
The starter can be started only when the safety switch and the alternator are working properly.

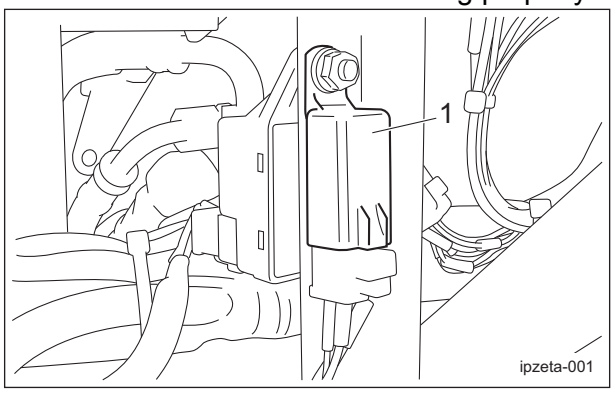

Starter Relay_001

1	Starter relay

Glow Lamp Timer

The glow lamp timer is located on the operation panel and controls illumination of the thermo-start lamp.

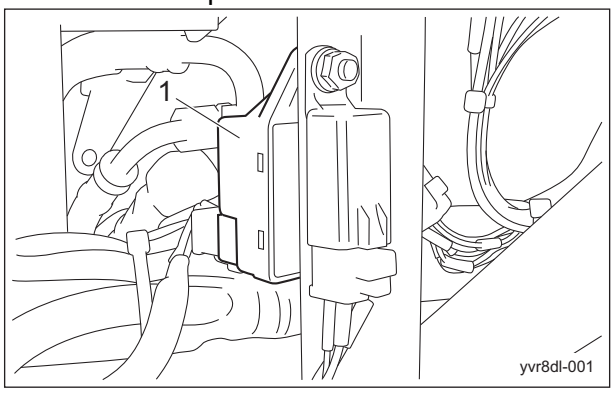

Glow Lamp Timer_001

1	Glow lamp timer

When the ignition key is set and held to the "GLOW" position, the thermo-start lamp turns on for 5 seconds.
The timer unit is activated with the "glow" and "starter start" signals from the ignition key switch.
When the glow signal is inputted, the thermo-start lamp turns on (5 seconds).

When the ignition key is set to the "START" position (starter motor start), even during the period of the thermo-start lamp turning on (before 5 seconds pass), the starter start signal is inputted and the lamp is turned off.
If the timer unit malfunctions, the lamp will not turn on; however, this will not affect engine starting.

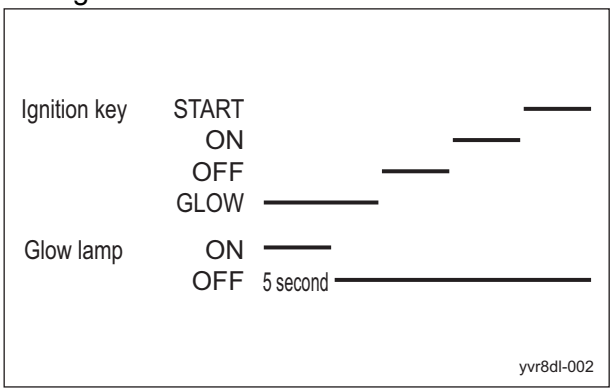

Glow Lamp Timer_002

Fusible Link

The fusible link acts as a main fuse for the entire circuit and a fuse for the charging circuit. Located in the right hood, it is equipped with a specialized fuse (50 A) cartridge.

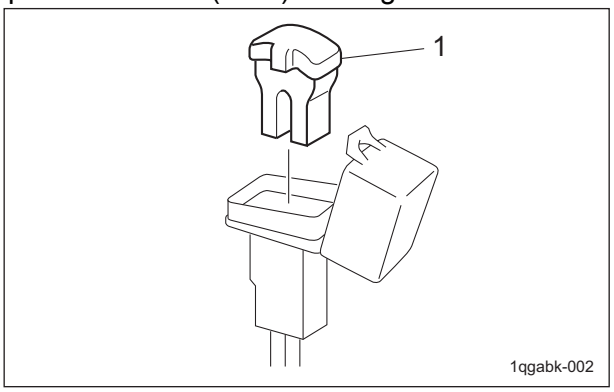

Fusible Link_001

1	Specialized fuse

https://truckmanualshub.com/

Fuse Box

Respective electrical equipments are connected from the key switch through fuses in the fuse box which is located at front right side in the hood.
Fuse standards are "mini fuses for automobiles".

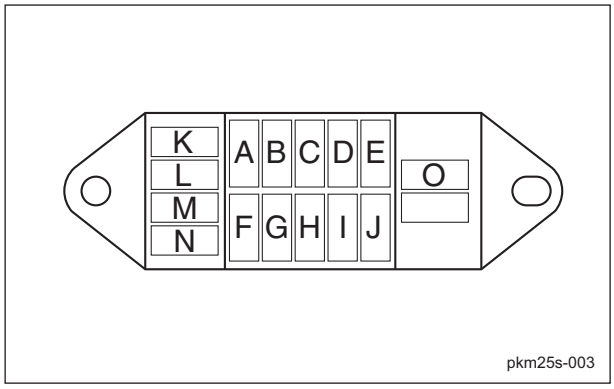

Fuse Box_001

A	5 A	Timer
B	5 A	Thermo-start lamp
C	5 A	Tachometer, fuel gauge, water temperature gauge, charge lamp, oil pressure (engine oil pressure) lamp, water temperature buzzer, hydraulic oil buzzer
D	15 A	Relay box 1, differential lock, (assist switch)
E	15 A	Relay box 2, 2WD/4WD selection, #4/#5 proximity switches
F	-	-
G	5 A	Timer
H	5 A	Alternator
I	5 A	Fuel pump, safety relay, stop solenoid
J	5 A	Relay (starter)
K	5 A	Spare
L	5 A	
M	15 A	
N	15 A	
O	Fuse removal tool	

Replacement of Fuse

Important

To remove the fuse, use the tools in the tool box.

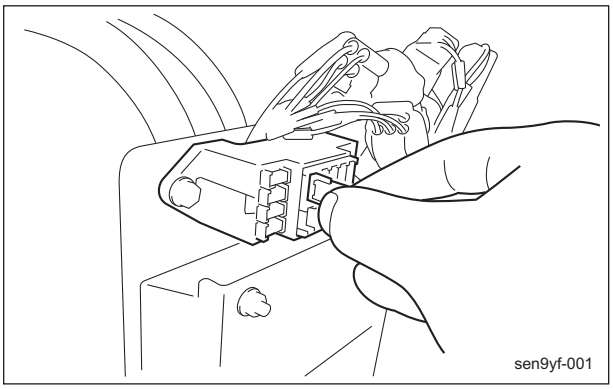

Replacement of Fuse_001

Fuel Pump

The fuel pump is located in the engine and powered by DC12V and its inside is composed of a solenoid, diaphragm, check valve, etc.
When the key switch is set to the "ON" position, the solenoid is energized and the diaphragm operates.
As a result, fuel is repeatedly taken in and discharged to supply a constant amount of fuel to the injection pump, regardless of the engine speed.

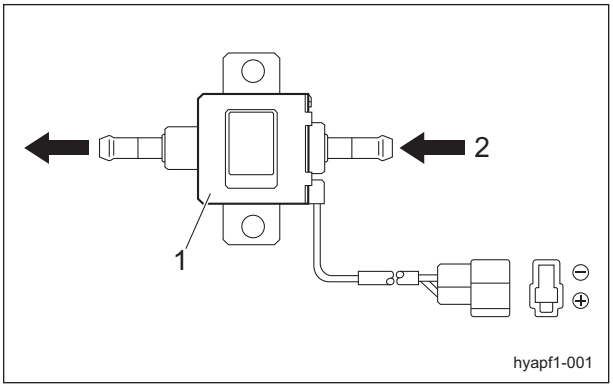

Fuel Pump_001

1	Fuel pump
2	Fuel

https://truckmanualshub.com/

Solenoid Specifications

Rated Voltage	DC 12 V
Rated Current	1.5 A
Discharge Quantity	400 cc/min

Fuel Unit

The fuel unit is located at the top of the fuel tank and connected to the fuel gauge and it converts the amount of rise and fall of the float installed in the fuel tank to a resistance value, which is used to compute the remaining amount of fuel.

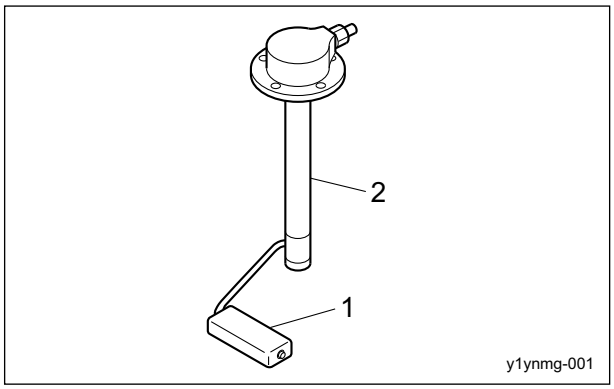

Fuel Unit_001

1	Fuel unit
2	Float

Rotation Sensor (Electromagnetic Pickup)

The rotation sensor (electromagnetic pickup) is located in the engine flywheel area and it detects the rpm by means of the flywheel ring gear and sends the signal to the tachometer which displays the rpm.

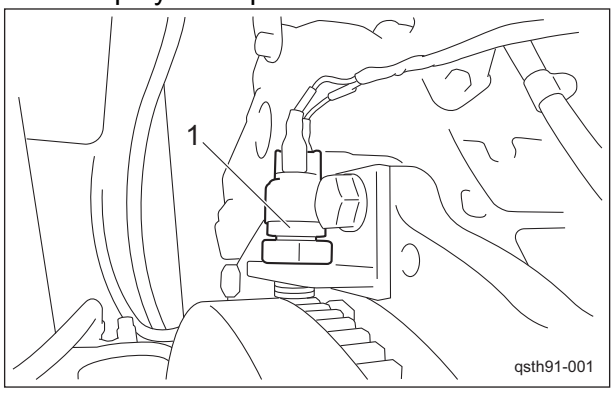

Rotation Sensor (Electromagnetic Pickup)_001

1	Rotation sensor

Buzzers

Water Temperature Buzzer

The water temperature buzzer is a warning buzzer connected to the thermo switch on the engine.
When a specified temperature is reached, there is continuity between the thermo switch and the engine block, causing a buzzer to sound (intermittent tone).
The specified temperature is 105 degrees Celsius.
With the circuit in this machine, the engine will not stop, even if the specified temperature is exceeded.

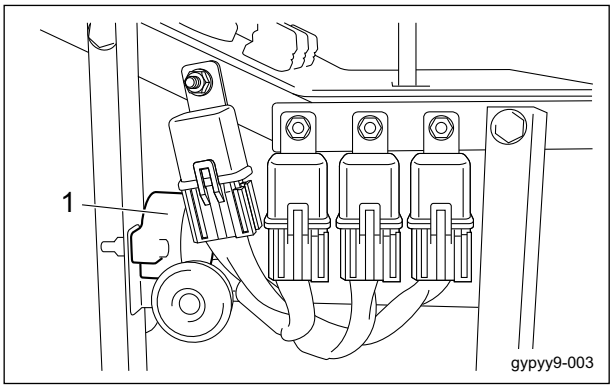

Water Temperature Buzzer_001

1	Water temperature buzzer

The thermo switch is located on the flange of the connector at the top of the radiator hose.

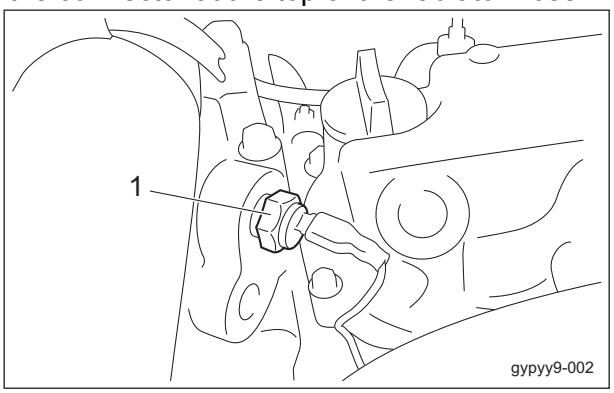

Water Temperature Buzzer_002

1	Thermo switch

https://truckmanualshub.com/

Hydraulic Oil Level Buzzer

The hydraulic oil level buzzer is a buzzer that warns about insufficient oil and is connected to the level switch on the hydraulic tank. When the hydraulic oil is less than the specified quantity, there is continuity in the level switch, causing a buzzer to sound (continuous tone).

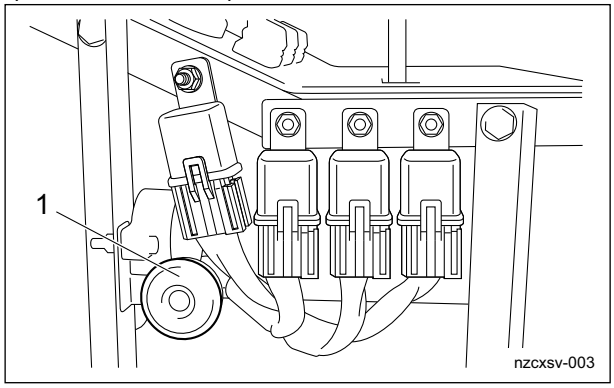

Hydraulic Oil Level Buzzer_001

1	Hydraulic oil level buzzer

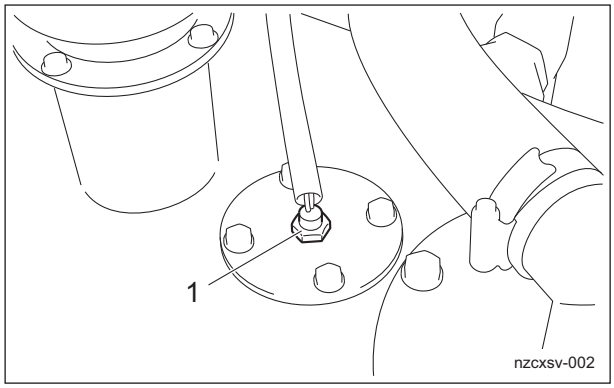

Hydraulic Oil Level Buzzer_002

1	Level switch

Level Switch

The level switch is located at the top of the hydraulic tank and switches "ON" and "OFF" according to the rise and fall of the float. (The arrow indicates the float travel distance.) Normal operation is when there is continuity when the float is down and no continuity when the float is up.

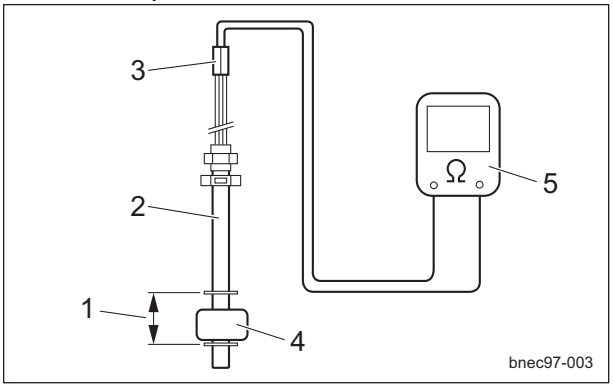

Level Switch_001

1	Float travel distance
2	Coupler
3	Level switch
4	Float
5	Circuit tester

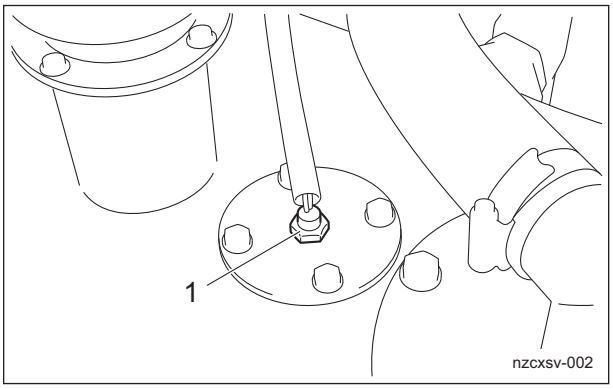

Level Switch_002

1	Level switch

https://truckmanualshub.com/

General inspection and repair

Battery

Handling of the battery

For details on handling the battery, please refer to the separate Battery Instruction Manual.
For safe use of the battery, observe the following precautions:

Danger

Do not use the battery near open flames or in a poorly ventilated area. Keep the battery away from lit cigarettes and other open flames.
Do not short-circuit the battery.
If the positive and negative terminals are connected to each other by a metallic tool, the battery will short-circuit. And a short-circuit will also occur if the positive terminal contacts another metallic part (machine body etc.).

1. Keep the battery away from open flames. Hydrogen gas may be generated from the battery. Improper handling of the battery could cause a fire or explosion.

Danger

Do not throw, drop, tilt or upset the battery, or allow it to undergo physical impact.
Doing so could cause the electrolyte to leak.
If contact of the electrolyte with the eye, skin, or clothing occurs, immediately wash it off with plenty of water.
In particular, if eye contact or ingestion occurs, immediately seek medical treatment.
If the electrolyte spills over the machine etc., wipe away with a wet cloth and flush the affected area with plenty of water.

2. The electrolyte contained in the battery is sulfuric acid.
   Contact of the electrolyte (sulfuric acid) with the skin could cause blindness or burns.
   Contact of the electrolyte with the machine etc. could cause damage to the machine.

Danger

Do not allow anyone to handle the battery who does not fully understand the correct battery handling procedures and relevant dangers.
When handling the battery, wear protective glasses and rubber gloves, etc.
If the battery has an unusual odor, if the electrolyte level goes down unusually fast, or if the electrolyte leaks, do not continue to use the battery.
Failure to observe these precautions could cause a fire, explosion, etc.

Caution

If the electrolyte overflows, neutralize it with bicarbonate etc. until the bubbles disappear, and wash out with plenty of water.
Failure to do so could cause corrosion of the surrounding area or environmental pollution.
If deformation of the exterior of the battery is observed, do not continue to use it.
Doing so could result in damage to the battery or electrolyte leaks.

3. Use extra care when handling the battery, and if any problems are found, replace the battery with a new one.
   Carry or store the battery with care so that it does not fall or become damaged.

https://truckmanualshub.com/

Inspection of the battery

To ensure safe use of the battery, inspect it at least once a month.
Before inspecting the battery, be sure to stop the engine and remove the key.

Danger

Do not allow anyone to handle the battery who does not fully understand the correct battery handling procedures and relevant dangers.
When handling the battery, wear protective glasses and rubber gloves, etc. The electrolyte may cause blindness or burns.
Never use an open flame when inspecting the battery.
Do not connect the positive and negative battery terminals to each other using a metallic tool etc.
Doing so could cause a fire or explosion.
Always keep the electrolyte level above the LOWER (minimum level line) limit.
Failure to do so could cause the battery life to be shortened or cause explosion.
Loose connections between cable and terminal, or corroded terminals could cause a fire or explosion.

Warning

Before handling the battery such as for purposes of inspection etc, touch a metal part of the machine body with your bare hand in order to remove static electricity.
Static electricity could cause a fire.
When cleaning the battery, do not use dry cloth or tissue paper, etc.
Static electricity could cause a fire.
When adding distilled water, keep the electrolyte level below the UPPER (maximum level line) limit.
Failure to do so could cause the electrolyte to leak.

Caution

If the electrolyte overflows from the battery, wipe it with a wet cloth.
Failure to do so could cause damage to the instruments.
When cleaning the battery, do not use organic solvents such as benzene, thinner or gasoline and refrain from using cleaner, or chemical cloth.
Doing so could damage the battery case, resulting in electrolyte leaks.
Do not add anything but distilled water to the battery.
Adding anything other than distilled water could cause the battery to become extremely hot or generate toxic gases due to impurities.
Do not add sulfuric acid to the battery.
Doing so could cause the specific gravity of the electrolyte to exceed the specified value, causing the battery life to be shortened.
After adding distilled water to the battery, firmly tighten the vent plug.

When inspecting the battery, inspect the following items:

1. Visual inspection
   Visually inspect the battery case for cracks, chips and deformation, and check that there are no electrolyte leaks.
   If any of the above are found, investigate what has caused them and replace the battery.
2. Cleaning of the exterior
   When cleaning the battery, use cloth that has been dampened with water.
   Inspect the vent plug or vent hole on the side.
   If the plug or hole is clogged with mud etc., wash it with water.
   A clogged vent hole could cause the internal pressure to increase due to gases generated inside the battery, causing the battery to burst.

https://truckmanualshub.com/

3. Inspection of the mounting bracket
   Ensure that the battery is firmly secured by the mounting bracket.
   If it is not, tighten the nuts securing the battery until it is firmly secured.
   If the battery is not firmly secured by the mounting bracket, the battery could move due to vibration while the machine is moving, resulting in damage to the battery case or electrolyte leaks.
4. Inspection of the cable terminals for looseness
   If a connection between a battery terminal and machine-side cable terminal is loose, tighten the nut securing the cable terminal until it is firmly secured.
   Loose connections could result in an insufficiently charged battery, damaged terminals, or explosion.
   Note:
   If a terminal has corroded, polish it using a wire brush or fine sandpaper, and apply a small amount of anti-rust grease.

Important

When adding distilled water, be careful not to add an excessive amount.

5. Inspection of the electrolyte level and addition of distilled water
   Check the electrolyte level by looking from the side of the battery.
   If the electrolyte level has fallen to less than halfway between the “UPPER” (maximum level line) and “LOWER” (minimum level line) limits, add distilled water to the battery immediately until the “UPPER” limit is reached.
   When adding distilled water, loosen and remove the vent plug and add distilled water up to the “UPPER” (maximum level line) limit.
   After adding distilled water, firmly tighten the vent plug.

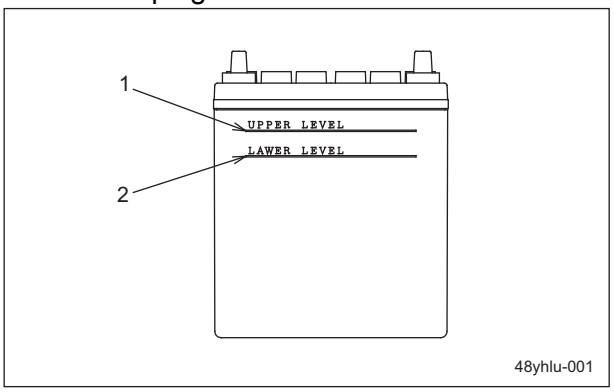

Inspection of the battery_001

1	Upper limit
2	Lower limit

Replacement of Battery

When replacing the battery, note the following precautions and be sure to turn off the power switch etc., stop the engine, and remove the key before replacement.

Danger

Do not replace the battery near open flames or in a poorly ventilated area. Keep the battery away from lit cigarettes and other open flames.
Failure to observe these precautions could cause a fire or explosion.
Do not short-circuit the battery.
If the positive and negative terminals are connected to each other by a metallic tool, the battery will short-circuit. And a short-circuit will also result if the positive terminal contacts another metallic part (machine body etc.).
When connecting a machine-side cable terminal to a battery terminal, ensure that the nut is firmly tightened.
A loose nut could cause a fire or explosion.

https://truckmanualshub.com/

Warning

When connecting the machine-side cable terminals to the battery, ensure that they are correctly connected to the positive and negative terminals.
Secure the battery firmly with the mounting bracket.
Failure to do so could cause damage to the battery, leakage of the electrolyte, fire or explosion.
Do not modify the battery terminals.
Ensure that the vent plug or vent hole on the side of the battery is not covered by the connection cables etc.
Do not connect any electrical devices directly to the battery.

Caution

Select a battery that has the same terminal positions (the positions of the positive and negative terminals) as the old one.
Installing a battery that has different terminal positions could cause damage to the cables.
Do not use organic solvents such as benzene, thinner or gasoline and refrain from using cleaners.
Do not allow the battery to come in contact with vinyl chloride containing plasticizer etc.
When handling the battery, keep it in a horizontal position and install it on the mounting so that it is horizontal.
If the battery has terminal covers or heat shield plates attached, re-install them in their original positions after replacing the battery.
When mounting the battery on the machine, never hold the battery terminals.
Doing so could cause the terminals to deform, resulting in poor connections or electrolyte leaks from around the terminals.
Replace the battery with one that is the same size.

When replacing the battery, follow these steps:

Removing the old battery

Important

Be careful when handling the used battery as it still contains electrical energy.

1. Stop the engine and remove the key.
2. Disconnect the negative cable.
3. Disconnect the positive cable.
4. Loose the mounting bracket and remove the old battery.

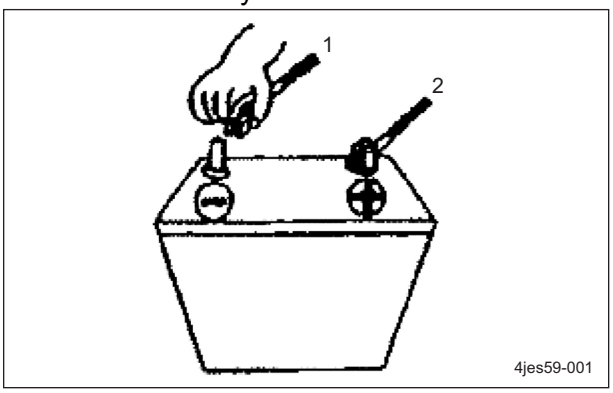

Replacement of Battery_001

1	(-) Cable
2	(+) Cable

Installing a new battery

1. Install the new battery with the correct polarities and firmly secure the battery with the mounting bracket.

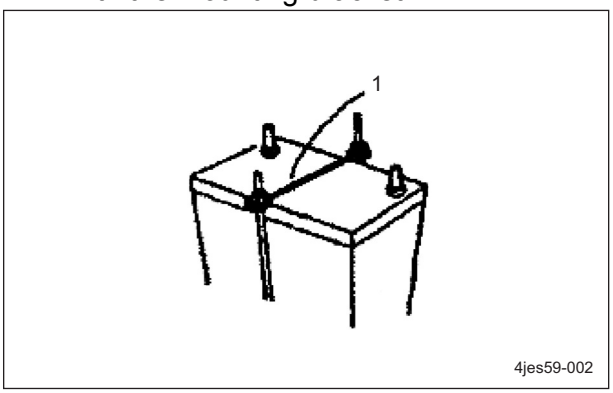

Replacement of Battery_002

1	Mounting bracket

2. Remove the protection cap from the new battery.
3. Firmly secure the positive cable to the positive terminal.

https://truckmanualshub.com/

4. Firmly secure the negative cable to the negative terminal.

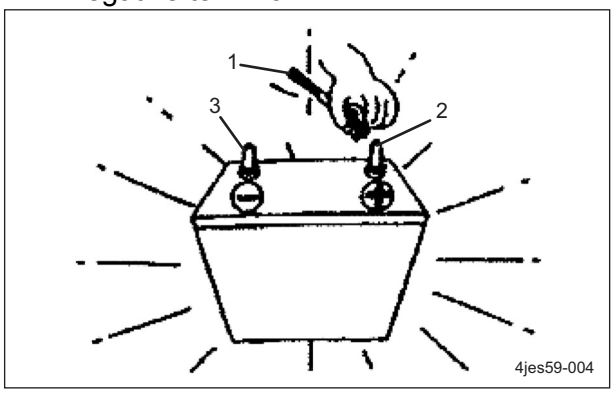

Replacement of Battery_003

1	(+) Cable
2	(+) Terminal
3	(-) Terminal

Battery Charge

When charging the battery with the battery charger, follow the correct steps according to the handling instructions attached to the battery charger.

Danger

Do not charge the battery near open flames or in a poorly ventilated area. Keep the battery away from lit cigarettes and other open flames.
Failure to observe these precautions could cause a fire or explosion.
Do not connect the charge clip to the battery nor remove it while the power of the battery charger is ON.
Failure to observe these precautions could cause a fire or explosion.
If the battery charger has a changeover switch for voltage, set the battery voltage for charge.
If the voltage for charge is wrong, it may cause overheating or ignition of the battery charger or explosion of the battery.

Warning

Charging the battery mounted on the vehicle may cause ignition, explosion, or damage on the vehicle or equipment.
If there is no way other than to charge the battery mounted on the vehicle, remove the minus cable terminal on the vehicle side, which is connected to the battery.
When connecting to the battery charger, firmly connect the plus and minus charge clip to the plus and minus terminals of the battery, respectively.
If they are connected reversely or loosely, it may cause ignition, explosion, failure of the battery charger, or damage on the vehicle or equipment due to the polarity inversion of the battery.
Set the charging current to 1/10 or less than the rating capacity of battery. In the case of fast charging, set it to that rating capacity or less.
If the charging current is too large, it may cause ignition or explosion due to electrolyte leaks or liquid shortage.
Do not mount the battery on the vehicle and wait for 30 minutes after charging.
Failure to observe these precautions could cause a fire or explosion.

Caution

The temperature of the electrolyte must be 45 degrees C or lower. In the case of fast charging, it must be 55 degrees or lower.
If these temperature limits are exeeded, it could result in battery deformation or electrolyte leaks.
When charging the battery, remove the vent plug of the battery, if possible, to expedite the diffusion of the hydrogen gas derived from the battery.
Electrolytic solution adheres to the vent plug, so be careful so that your skin nor clothes do not touch the solution.
If the electrolyte level is lower than halfway between the solution levels, add purified water up to the UPPER LEVEL (maximum line).
If UPPER LEVEL is exceeded, it may cause electrolyte leaks.

https://truckmanualshub.com/

Important

Fast charging is not suitable for charging to recover the battery left for a long time.
A high electrolyte temperature deteriorates parts such as polar plates inside the battery and shorten its lifetime.

https://truckmanualshub.com/

Maintenance..... Page 7-2

About Maintenance.....Page 7-2

Specifications..... Page 7-2

Tire Pneumatic Pressure..... Page 7-2
Adjusted Value..... Page 7-2

Special Tool.....Page 7-5

List of Special Tools.....Page 7-5
Usage..... Page 7-9

Adjustment..... Page 7-11

Brake..... Page 7-11
Traveling rod.....Page 7-13
Throttle wire.....Page 7-16
Toe-in.....Page 7-18

Removal and installation of each section..... Page 7-18

Wheel.....Page 7-18
Brake..... Page 7-20
Axle.....Page 7-21
Steering..... Page 7-30
Seat..... Page 7-31
Cover..... Page 7-33
Lever damper.....Page 7-40
Fuel tank.....Page 7-41

Inspection and repair of each section..... Page 7-44

Tire.....Page 7-44
Brake..... Page 7-44
Brake wire.....Page 7-45
Traveling rod.....Page 7-46
Throttle wire.....Page 7-47
Toe-in.....Page 7-48

https://truckmanualshub.com/

Maintenance

About Maintenance

This chapter provides descriptions of the main inspection and maintenance procedures for the GM2800B.
For information on daily checks, maintenance and handling of the machine, please refer to the separate GM2800B Owner's Operating Manual and Parts Catalog.

Specifications

Tire Pneumatic Pressure

	kPa	kgf-cm^2	psi=lb-in
Front wheel	150	1.5	21.83
Rear wheel	140	1.4	20.37

Adjusted Value

		mm	in
Rod distance (between rod end centers)	Forward rod	1,065	41.93
	Reverse rod	1,065	41.93
	Neutral adjustment rod	221	8.70
Spring compression distance (forward rod part)	Compression spring on pedal side	83	3.27
	Compression spring on pump side	82	3.23
Spring compression distance (neutral adjustment rod part)	Compression spring	55	2.17
Throttle wire part	Engine side clearance	1	0.039
Brake wire part	Pedal side clearance	1	0.039
Toe-in		0 ± 5	0 ± 0.20

https://truckmanualshub.com/

Adjusted Value of the Foot Brake Wire

The clearance adjusted value of brake wire on the pedal side is described below.

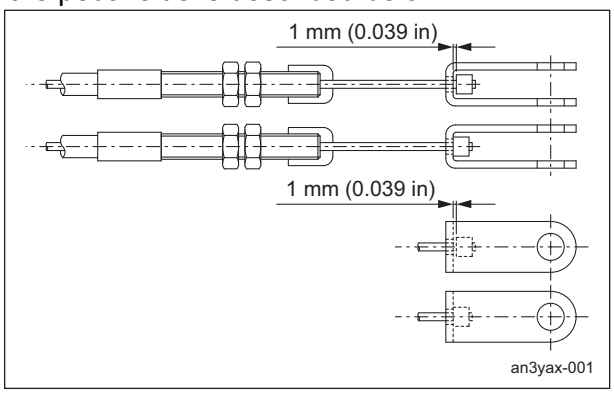

Adjusted Value of the Foot Brake Wire_001

Adjustment of Traveling Pedal Rods

Here are the adjusted values of the traveling rod distance (between the centers of the rod ends).

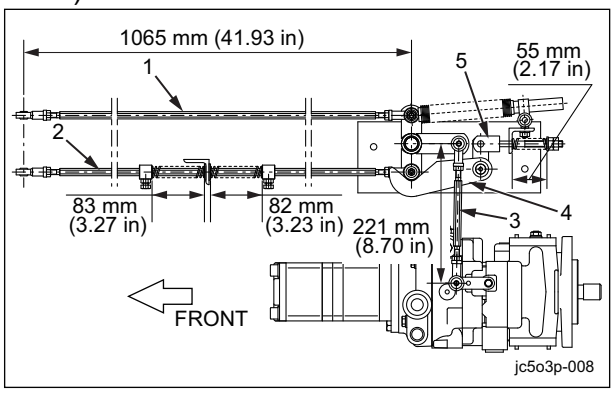

Adjustment of Traveling Pedal Rods_001

1	Reverse rod
2	Forward rod
3	Neutral adjustment rod
4	Pump neutral lever
5	Lever adjustment bracket

1. Forward rod

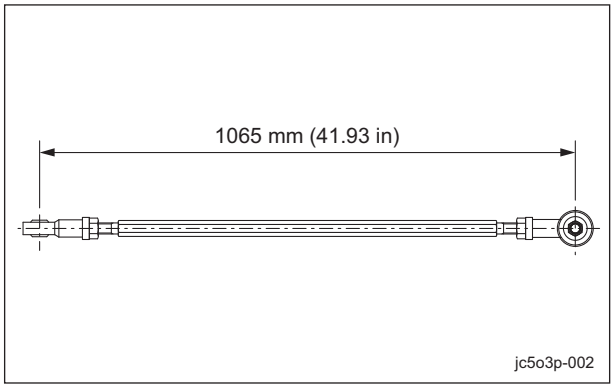

Adjustment of Traveling Pedal Rods_002

2. Reverse rod

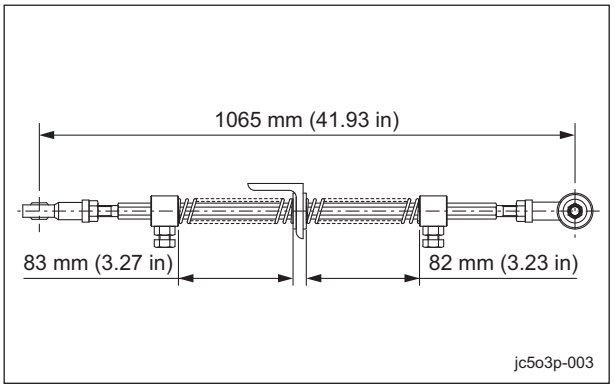

Adjustment of Traveling Pedal Rods_003

3. Neutral adjustment rod

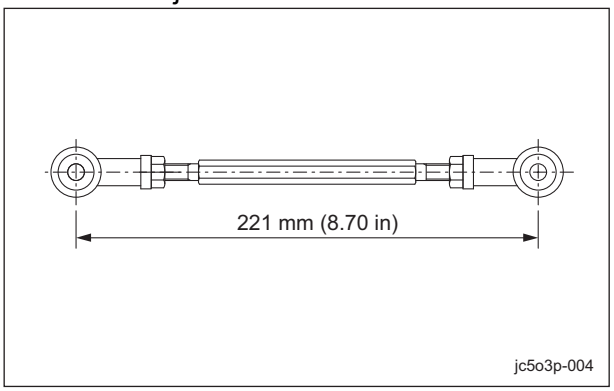

Adjustment of Traveling Pedal Rods_004

Adjusted Value of Throttle Wire

The adjusted value of clearance of engine side throttle wire part is described below.

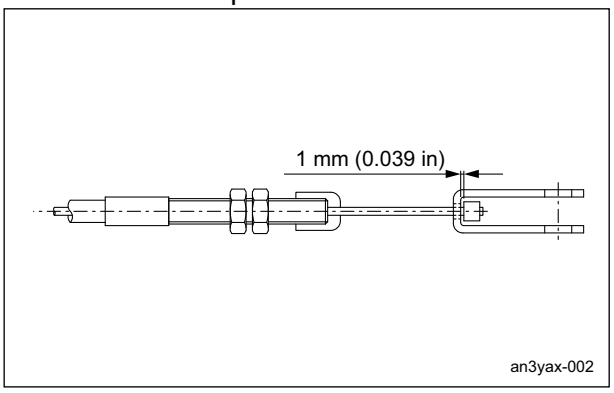

Adjusted Value of Throttle Wire_001

https://truckmanualshub.com/

Adjustment of Toe-In

The toe-in adjustment is 0 ± 5 mm (0 ± 0.20 in). (Toe-in amount = A - B)

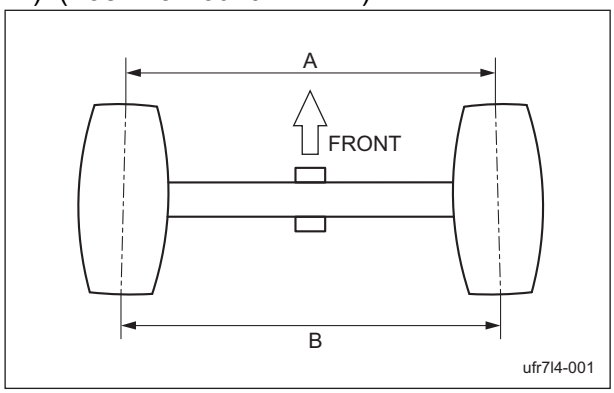

Adjustment of Toe-In_001

https://truckmanualshub.com/

Special Tool

List of Special Tools

6207 Bearing driver 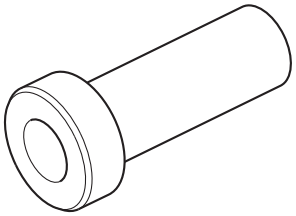 q9c6v6-009	K4802000492	Used to knock-in and install the bearing of outer Φ72 and inner Φ35
6005 Bearing driver 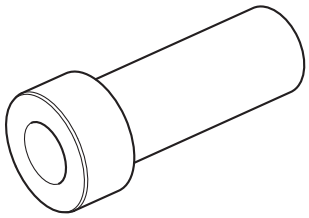 q9c6v6-010	K4802000502	Used to knock-in and install the bearing of outer Φ47 and inner Φ25
34 Oil seal installer 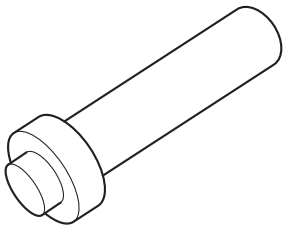 q9c6v6-011	K4802000522	Used to knock-in and install the oil seal of outer diameter Φ34.

https://truckmanualshub.com/

TRB grease filling tool 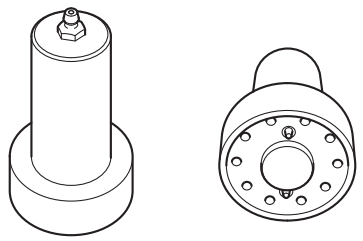 q9c6v6-012	K4802000530	Used to fill grease to Taper roller bearing 30204
Brake disc remover kit 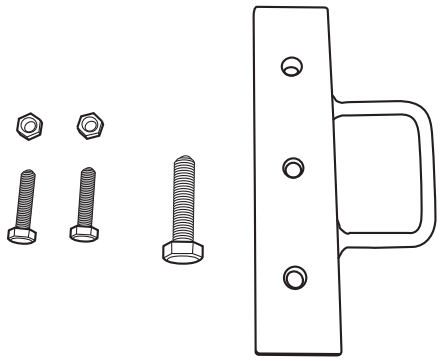 q9c6v6-013	K4802000710	Used to remove the brake disc of the front wheel
Brake disc remover 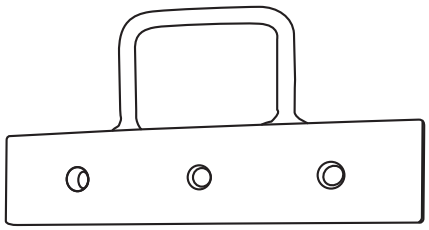 q9c6v6-014	K480200072D	One of the parts that compose the brake disc remover kit and used by being mounted on the brake disc
Bolt, heat-treated M12-50 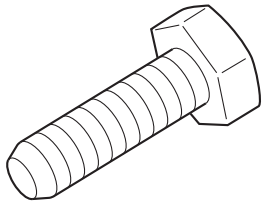 q9c6v6-015	K0010120502	One of the parts that compose the brake disc remover kit and used to remove the brake disc

https://truckmanualshub.com/

Bolt, heat-treated M8-40 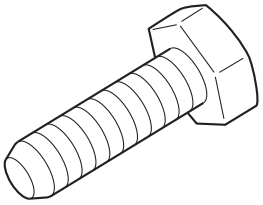 q9c6v6-016	K0010080402	One of the parts that compose the brake disc remover kit and used to fasten the brake disc and the brake disc remover
8 Nut 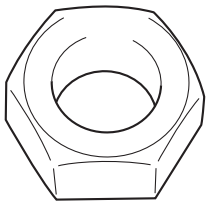 q9c6v6-017	K0100080002	One of the parts that compose the brake disc remover kit and used to attach the 8 heat-treated bolt 40 so as not to lose it.
Wheel mounting base fitting F kit 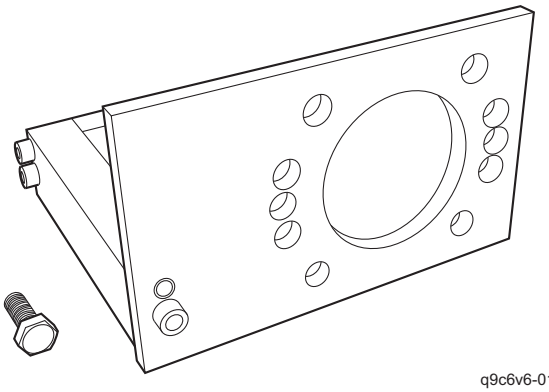 q9c6v6-018	K4802000690	Used to remove and install the wheel mounting base of the front wheel.
Wheel mounting base fitting F 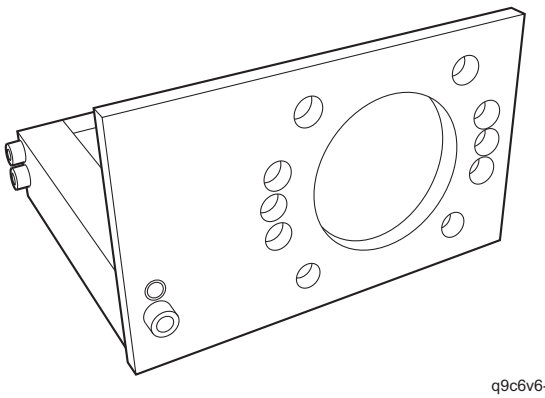 q9c6v6-019	K480200070D	One of the parts that compose the wheel mounting base fitting F kit and used by being mounted on the wheel mounting base of the front wheel.

https://truckmanualshub.com/

Wheel mounting base fitting R kit 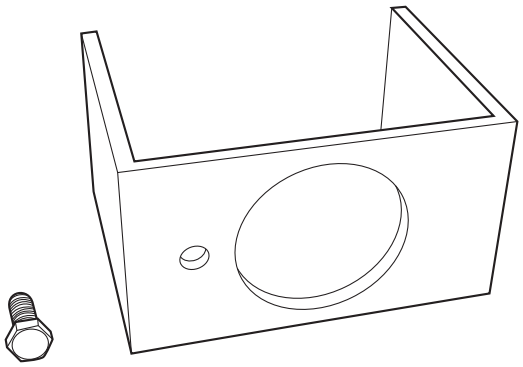 q9c6v6-020	K4802000730	Used to remove and install the wheel mounting base of the rear wheel.
Wheel mounting base fitting R 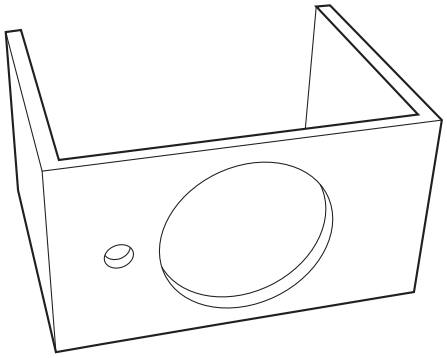 q9c6v6-021	K480200074D	One of the parts that compose the wheel mounting base fitting R kit and used by being mounted on the wheel mounting base of the rear wheel.
Bolt, heat-treated M12-30P1.5 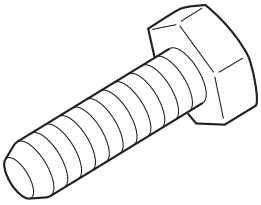 q9c6v6-022	K0011120302	One of the parts that compose the wheel mounting base fitting F kit or R kit and used to remove the wheel mounting base of the front or rear wheel.

https://truckmanualshub.com/

Usage

Bearing Driver

Use bearing drivers to drive in bearings etc. accurately.

> **Caution**
>
> Be careful not to hit your hand with a hammer etc.

1. Place the bearing driver so as to contact it at right angle to the face of bearing.

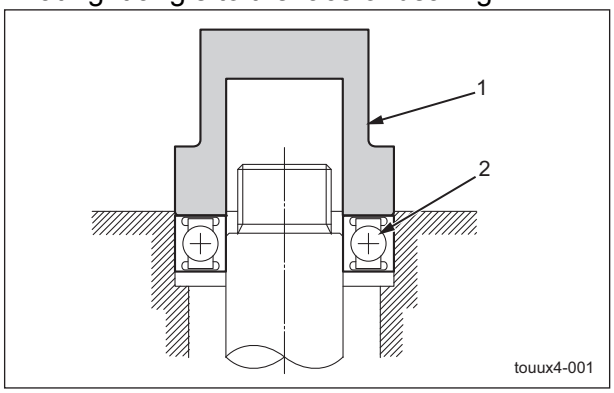

Bearing Driver_001

1	Bearing driver
2	Bearing

2. Hold the bearing driver securely with hand and drive in with a hammer etc.

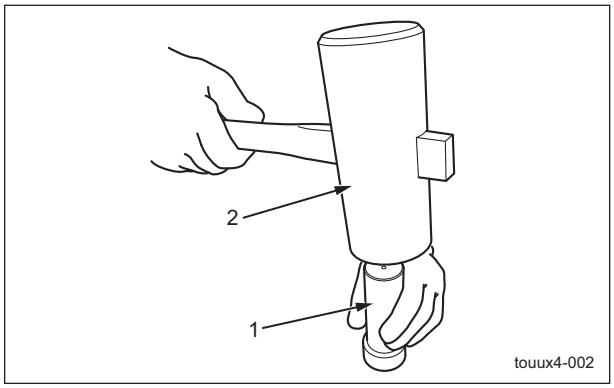

Bearing Driver_002

1	Bearing driver
2	Hammer

Oil Seal Installer

Use an oil seal installer to install the oil seal correctly.

> **Caution**
>
> Be careful not to hit your hand with the hammer.

1. Position the oil seal installer so that it is perpendicular to the surface of the oil seal.

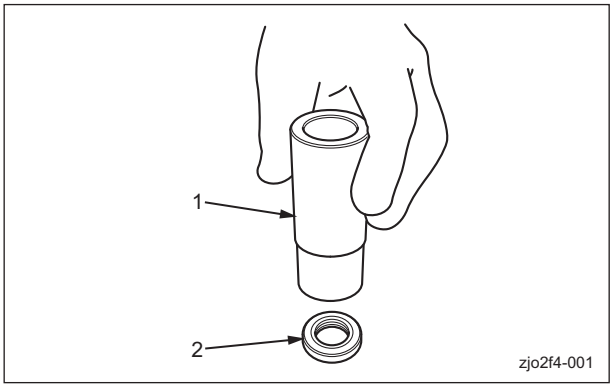

Oil Seal Installer_001

1	Oil seal installer
2	Oil seal

2. Firmly hold the oil seal installer, and then hit it with a hammer.

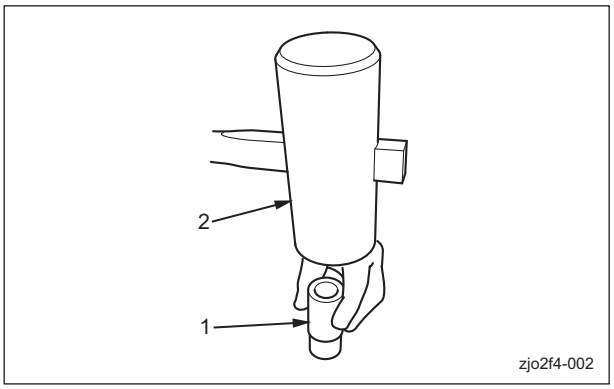

Oil Seal Installer_002

1	Oil seal installer
2	Hammer

https://truckmanualshub.com/

Grease Nozzle

The grease nozzle is used to inject grease into taper roller bearing 30204.

1. Assemble the outer and inner rings of the taper roller bearing, place them on a level surface, and then place the grease nozzle vertically on top of the rings.

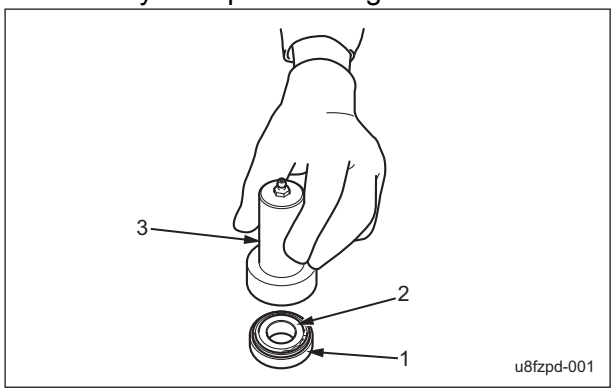

Grease Nozzle_001

1	Outer ring, taper roller bearing
2	Inner ring, taper roller bearing
3	Grease nozzle

2. Attach the grease pump to the grease nozzle fill port, and then pump grease two or three times.

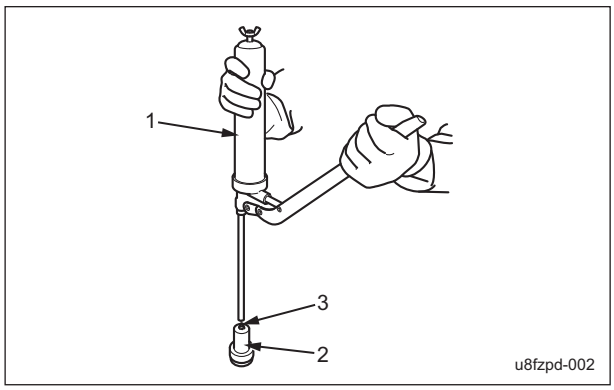

Grease Nozzle_002

1	Grease pump
2	Grease nozzle
3	Grease nozzle fill port

https://truckmanualshub.com/

Adjustment

Brake

Adjustment of Brake

Danger

Make sure that the brake wire is not cracked or damaged.(See "RT mechanical brake manual" (Page 10-11) .)
The wire is used for fine adjustments.

Danger

If the brake is not sufficiently effective, adjust the brake pad clearance.

Important

Adjust the brake with the brake pads.

The brake pad wear limit is 3.0 mm (0.12 in).

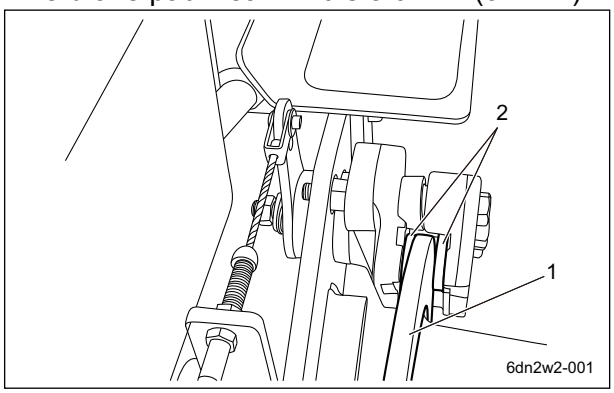

Adjustment of Brake_001

1	Disc
2	Brake pad

Caution

Make sure that the lever is maintained in the open position (neutral).

1. For each wheel, fully tighten the adjustment bolt on the brake disc side.

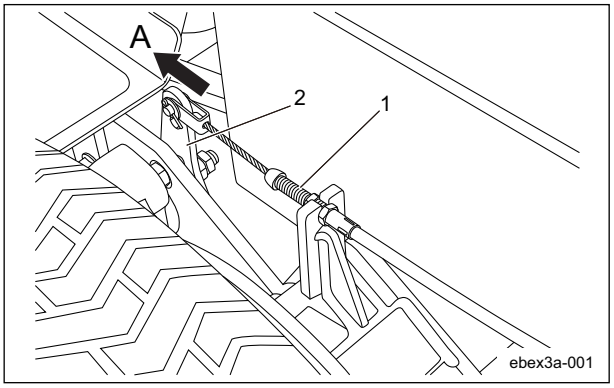

Adjustment of Brake_002

1	Adjustment bolt (on brake disc side)
2	Lever
A	Open (neutral)

2. Reduce the clearance by loosening the lock nut, then tightening the adjustment nut. Tighten the adjustment nut until the friction material contacts the friction surface of the disc.

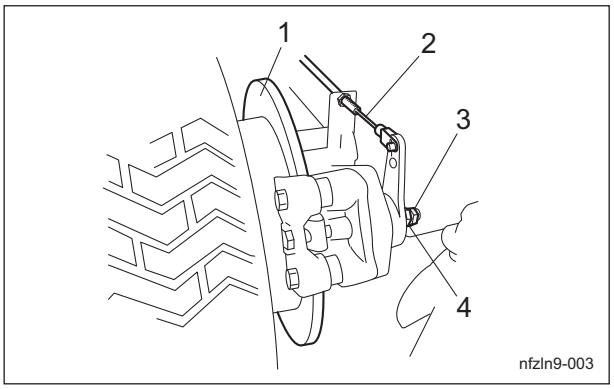

Adjustment of Brake_003

1	Brake disc
2	Wire
3	Lock nut
4	Adjustment nut

https://truckmanualshub.com/

Danger

A clearance that is too small may result in heat generation or fire.

3. Loosen the adjustment nut, adjust the clearance to about 0.2 mm, and then check that the disc rotates freely.
4. Tighten the lock nut, and then fully tighten it while holding the adjustment nut in place.
5. With the brake pedal released, obtain a play of 1.0 mm (0.039 in) at the connection of the pedal and inner wire.

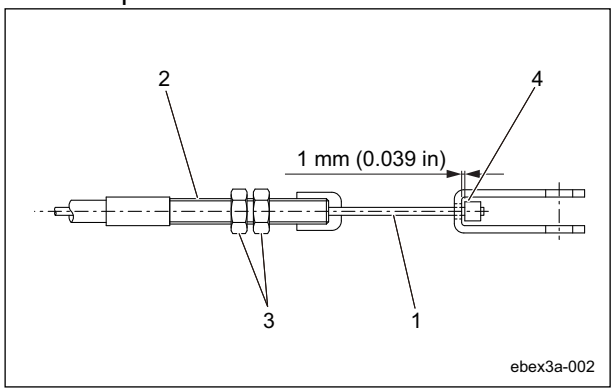

Adjustment of Brake_004

1	Inner wire
2	Adjustment bolt
3	Brake wire (outer)
4	Connection

6. Use a wrench to loosen the adjustment bolt and tighten it after making the adjustment.
7. Link the left and right brake pedals.
8. Start the engine and drive to check the following.
   - Make sure that heat is not generated in the brake area.
   - Make sure that the left and right brakes are equally effective.

Danger

It would be extremely dangerous and may result in an unexpected accident if the left and right brakes are not equally effective.

9. If the left and right brakes are not equally effective, make fine adjustments with the adjustment bolt on the brake wire.

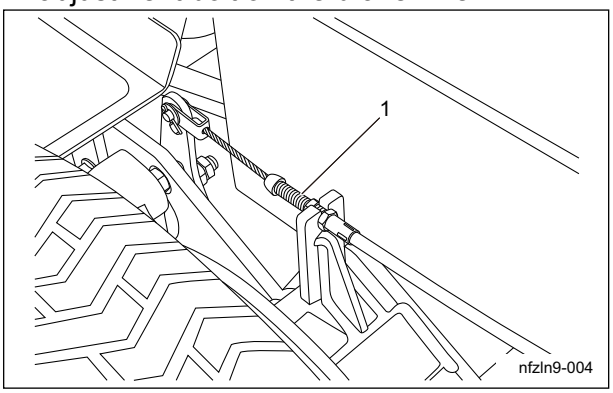

Adjustment of Brake_005

1	Adjustment bolt (on brake disc side)

■Break-in of Brakes

If the brake shoes or brake pads are worn, replace them with new ones.
Immediately after replacement, drive to break in the brakes if the effectiveness of the brakes is low.
While driving, lightly operate the brakes to break in the contact areas.

https://truckmanualshub.com/

Adjustment of Parking Brake

Danger

Make sure that the brake wire is not cracked or damaged.

Danger

Make sure that the brake is effective on slopes and that it is not applied any longer when you release it.
Adjust the parking brake system whenever there is any abnormality.

Important

If the brake becomes less effective due to larger clearance between the brake disc and the pad, adjust the clearance. (See "RT mechanical brake manual" (Page 10-11) .)
The wire is used for fine adjustments.

Adjust the parking brake system by the adjustment bolt.

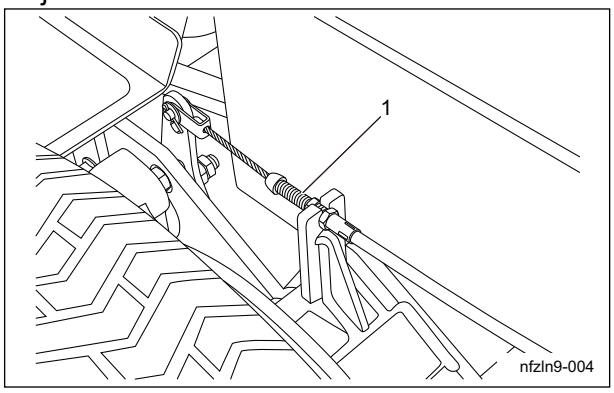

Adjustment of Parking Brake_001

1	Adjustment bolt (on brake disc side)

1. Follow the steps below to adjust the parking brake.
   [1] Check position of the notch of the parking brake.
   [2] Depress the brake pedal firmly, and then pull the parking brake lever to engage the latch on the notch.
   [3] Make adjustment with the adjustment bolt so as to locate position of the arrow at 5 to 6 notches from the bottom.

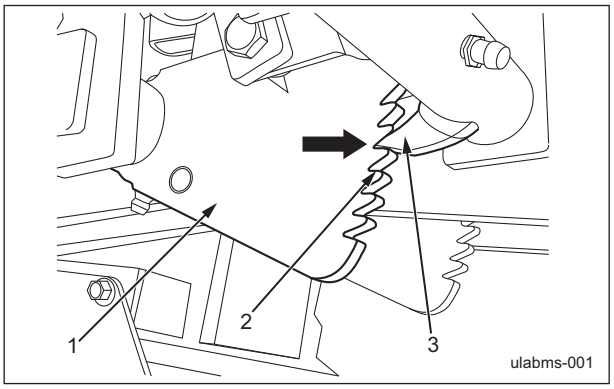

Adjustment of Parking Brake_002

1	Brake pedal
2	Notch
3	Latch

Traveling rod

Adjustment of Traveling Rod

The return of the pedal neutral rod compression spring may become insufficient due to the usage frequency of the traveling pedal.
Inspect it and, if necessary, implement adjustment etc.

1. Remove the right step cover. (See "Removal of Step Cover" (Page 7-39) .)
2. Remove the right tank cover. (See "Removal of Right Tank Cover" (Page 7-36) .)
3. Follow the steps below to adjust the traveling pedal.
   [1] Loosen the nut A at the both ends of the forward screw rod.
   [2] Rotate the forward screw rod to position the screw rod mounting part facing upward (direction of the arrow).
   [3] Tighten nut A at the both ends to secure it.
   [4] Loosen nut B of the stopper adjustment bolt for forward travel to screw in the stopper adjustment bolt for forward travel all the way.
   [5] Depress the forward travel pedal to the bottom. Return the stopper adjustment bolt for forward travel at the position that the pedal stopped (movable limit position of the trunnion of traveling pump), and then make it contact the screw rod mounting part.

https://truckmanualshub.com/

[6] Then turn it an additional one turn, and then return the stopper adjustment bolt for forward travel, then lock it by the nut B.

[7] Follow the same steps to adjust the pedal for reverse travel.
Stopped position of the reverse travel pedal is where the forward travel pedal contacts the floor.

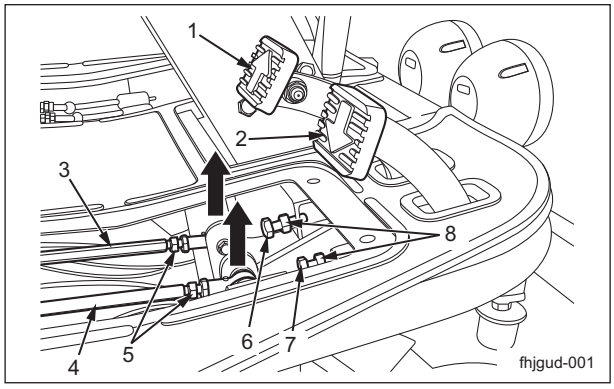

Adjustment of Traveling Rod_001

1	Forward pedal
2	Reverse pedal
3	Forward screw rod
4	Reverse screw rod
5	Nut A
6	Stopper adjustment bolt for forward travel
7	Stopper adjustment bolt for reverse travel
8	Nut B

4. Follow the steps below to adjust the traveling rod.

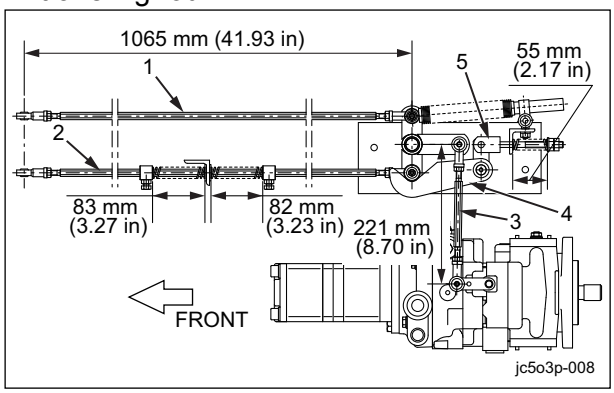

Adjustment of Traveling Rod_002

1	Reverse rod
2	Forward rod
3	Neutral adjustment rod
4	Pump neutral lever
5	Lever adjuster

[1] Make sure that the length of spring A of the forward rod is 83 mm (3.27 in) and that of spring B is 82 mm (3.23 in).
Loosen the lock nut and bolt as necessary, and then move the collar to make adjustment.

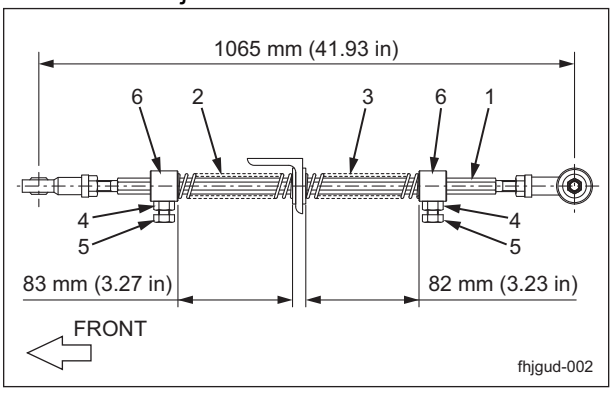

Adjustment of Traveling Rod_003

1	Forward rod
2	Spring A
3	Spring B
4	Lock nut
5	Bolt
6	Collar

[2] Make sure that the length of the spring of the lever adjuster is 55 mm (2.17 in).
Loosen the lock nut as necessary to make adjustment.

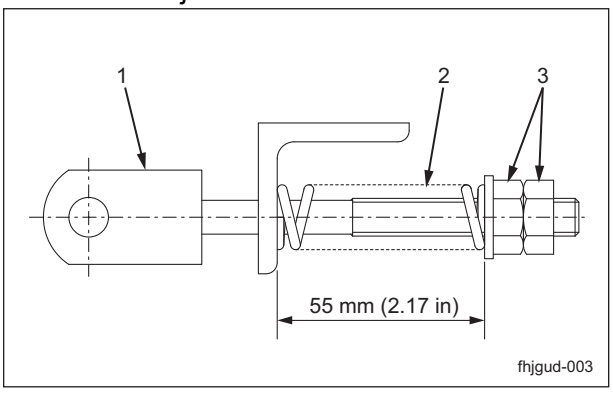

Adjustment of Traveling Rod_004

1	Lever adjuster
2	Spring
3	Lock nut

https://truckmanualshub.com/

[3] Make sure that the length of the neutral adjustment rod is 221 mm (8.70 in). Loosen the lock nut as necessary to make adjustment.

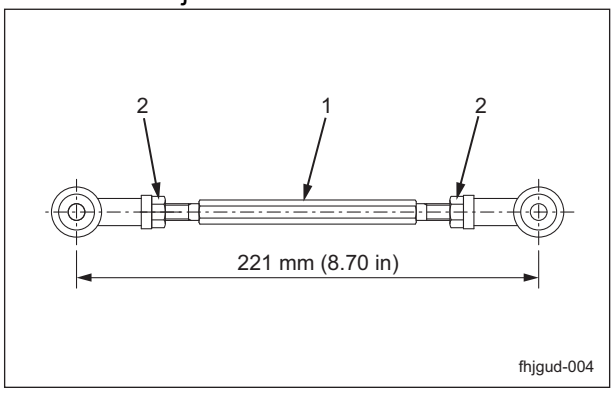

Adjustment of Traveling Rod_005

1	Neutral adjustment rod
2	Lock nut

▪Adjusting the Neutral Position of the Piston Pump

> **Caution**
>
> Make sure not to touch rotating tires.

> **Caution**
>
> When adjusting the neutral position, pay close attention to abrupt start of the machine.
> Place the jacks beneath the jack-up points, and then lift the machine until all the tires get off the ground.

If the machine moves forward or backward while the traveling pedals are released, they are not set to the neutral position.
Follow the steps below to make adjustments.

1. Stop the engine.
2. Place the jacks beneath the jack-up points, and then lift the machine off the ground.
3. Make sure that no tires get contact with the jack stand.
4. Pull up the seat lever, and then slide the seat back completely.

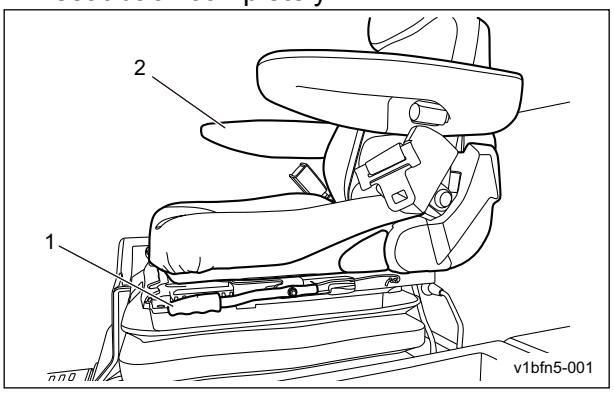

Adjusting the Neutral Position of the Piston Pump_001

1	Seat lever
2	Seat

5. While pulling up the seat lever, tilt the seat forward.

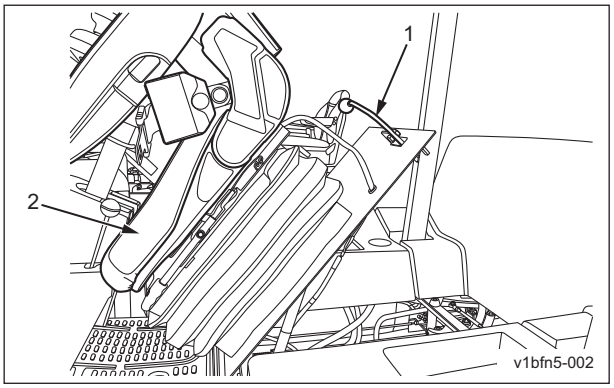

Adjusting the Neutral Position of the Piston Pump_002

1	Seat lever
2	Seat

6. Start the engine, and rev it up to the maximum rpm.
7. Set the 2WD/4WD Selector Switch to the "2WD" position.
8. Adjust the neutral position.

[1] If the front tires rotate forward, loosen the lock nuts, and then turn the neutral adjustment rod to shorten it.

https://truckmanualshub.com/

[2] If the front tires rotate in reverse, loosen the lock nuts, and then turn the neutral adjustment rod to extend it.

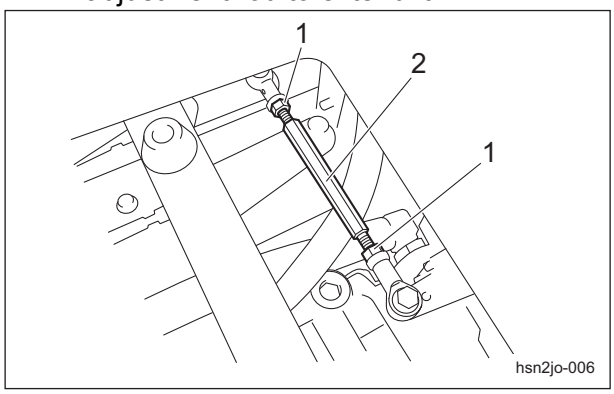

Adjusting the Neutral Position of the Piston Pump_003

1	Lock nut
2	Neutral adjustment rod

9. Find the position where the front wheels stop, and then tighten the lock nuts.

Throttle wire

Adjustment of Throttle Wire

Movement of the lever may become dull, play of the inner wire depending on R angle of the outer wire may change, and the inner wire may be stretched due to frequent usage. Inspect and make adjustment as necessary.

1. Pull up the seat handle, and then slide the seat backward completely.

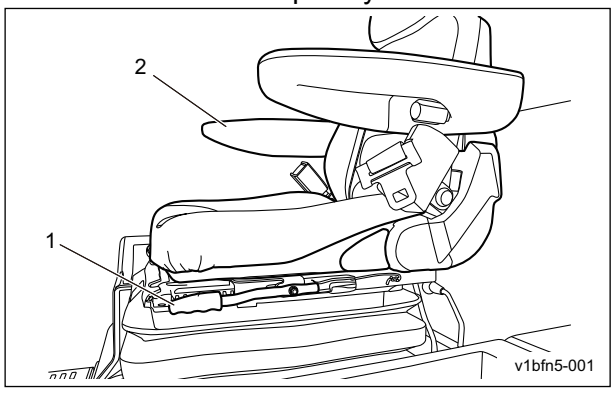

Adjustment of Throttle Wire_001

1	Seat handle
2	Seat

2. While pulling up the seat lever, tilt the seat upward and forward.

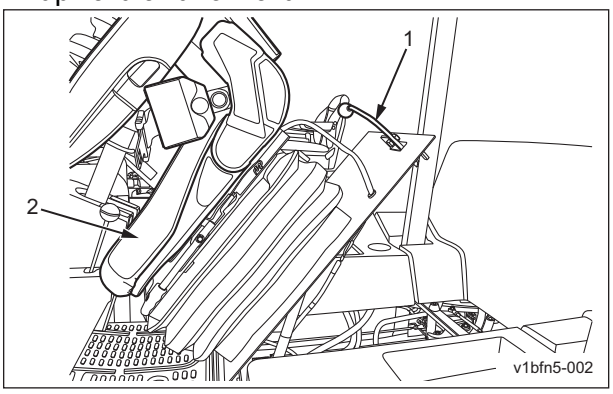

Adjustment of Throttle Wire_002

1	Seat lever
2	Seat

3. Remove the right tank cover. (See "Removal of Right Tank Cover" (Page 7-36) .)
4. Fully tighten the adjustment bolt (throttle lever side) on the throttle wire, and then lock it with the lock nut.

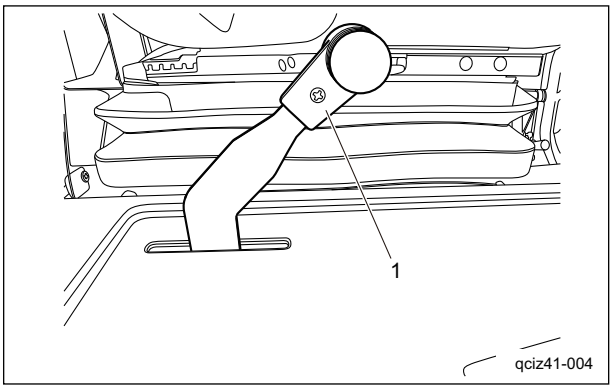

Adjustment of Throttle Wire_003

1	Throttle lever

5. Move the throttle lever to Low side until it contacts the cover.

https://truckmanualshub.com/

6. Loosen the lock nut in the engine side, and then adjust clearance of the joint part to 1mm (0.039 in) with the adjustment bolt.

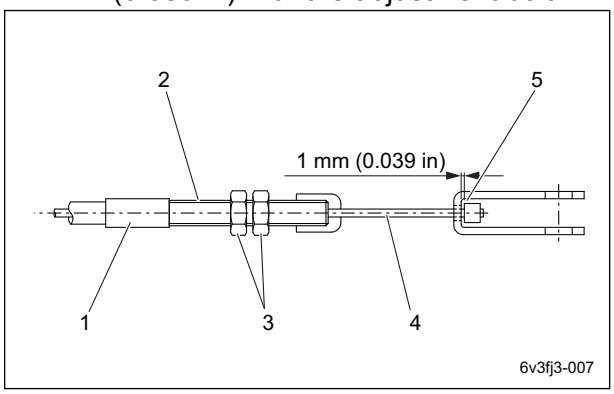

Adjustment of Throttle Wire_004

1	Throttle wire (outer)
2	Adjustment bolt
3	Lock nut
4	Inner wire
5	Joint part

7. Start the engine, and check that the engine rpm is 1,425 rpm.
8. Start the engine, and then fully open the throttle lever.

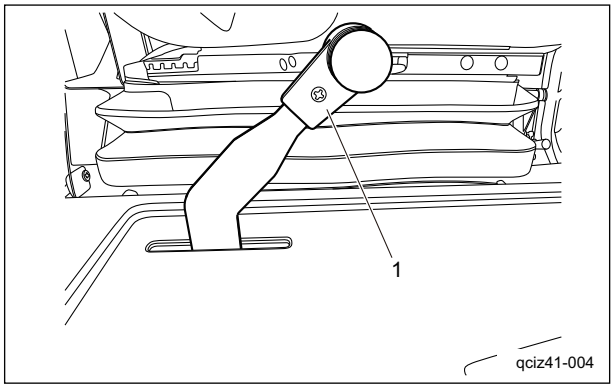

Adjustment of Throttle Wire_005

1	Throttle lever

9. Shift the throttle lever to the maximum rpm, and adjust the engine rpm to 2,400 rpm by the adjustment bolt.
   Note:
   The tachometer can be used to check the engine rpm.

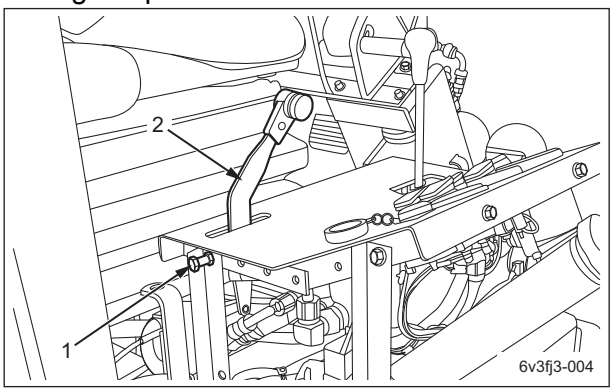

Adjustment of Throttle Wire_006

1	Adjustment bolt
2	Throttle lever

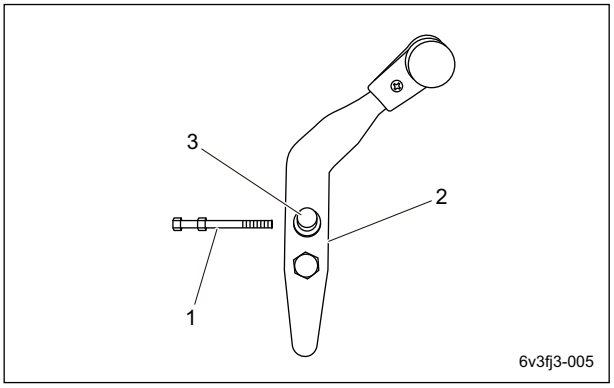

Adjustment of Throttle Wire_007

1	Adjusting bolt
2	Throttle lever
3	Stopper

https://truckmanualshub.com/

10. Make sure that there is clearance at the stopper for maximum rpm of the engine side.

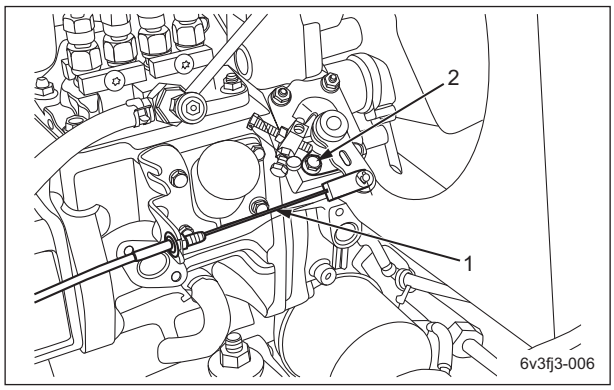

Adjustment of Throttle Wire_008

1	Stopper for maximum rpm
2	Throttle lever

Important

Make sure to make adjustment to have some play in the throttle wire.

Toe-in

Adjustment of Toe-In

Due to damage to the tie rod and rod ends, it may become difficult to properly handle the machine.
Inspect them and, if necessary, implement adjustment etc.

1. Adjust the pneumatic pressure of the tire to specified pressure. (See "Tire Pneumatic Pressure" (Page 7-2) .)

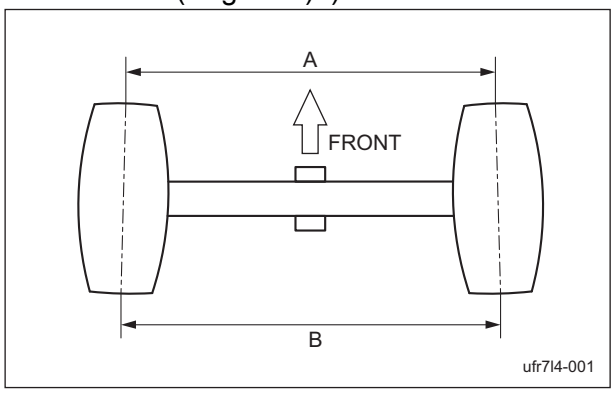

Adjustment of Toe-In_001

2. Straighten the rear wheels and then measure the front width A and the rear width B between the rear wheels.
3. Loosen the left and right lock nuts, and then rotate the tie rod to make adjustment. Target adjustment value of the toe-in is 0±5.0 mm (0±0.20 in). (Toe-in amount = A - B)

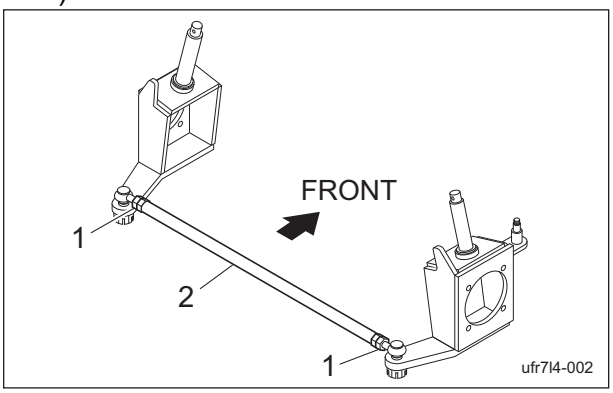

Adjustment of Toe-In_002

1	Lock nut
2	Tie rod

Removal and installation of each section

Wheel

Removal of Front Wheel

1. Securely place the jacks beneath the jack-up points of the front left/right frame area, and then raise it until the tire lifts off the ground. (See "Jack-up Points" (Page 3-10) .)
2. Remove the six heat-treated bolts used to install the front wheel.

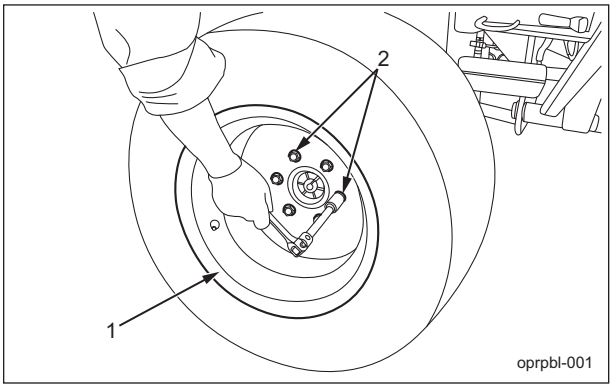

Removal of Front Wheel_001

1	Front wheel
2	Heat-treated bolt

https://truckmanualshub.com/

3. Remove the front wheel from the wheel mounting base.

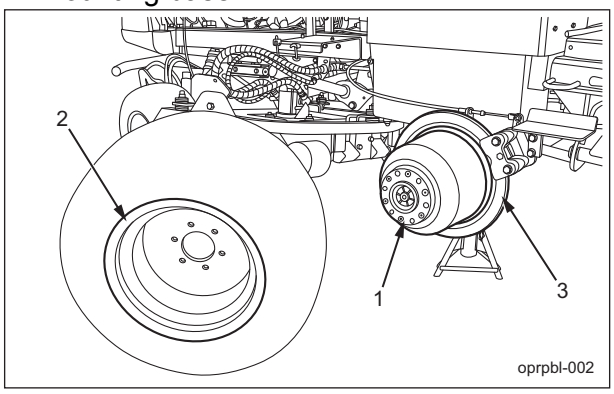

Removal of Front Wheel_002

1	Wheel mounting base
2	Front wheel
3	Disc brake

Installation of Front Wheel

> **Caution**
>
> See the list in "Tightening torques" (Page 3-5) .
> Note that the Baroness product warranty may not apply to defects caused by incorrect or overtorque tightening etc.

For installing it, reverse the removing procedure.

Removal of Rear Wheel

1. Securely place the jacks beneath the jack-up points of the rear left/right frame area, and then raise it until the tire lifts off the ground. (See "Jack-up Points" (Page 3-10) .)
2. Remove the six heat-treated bolts used to install the front wheel.

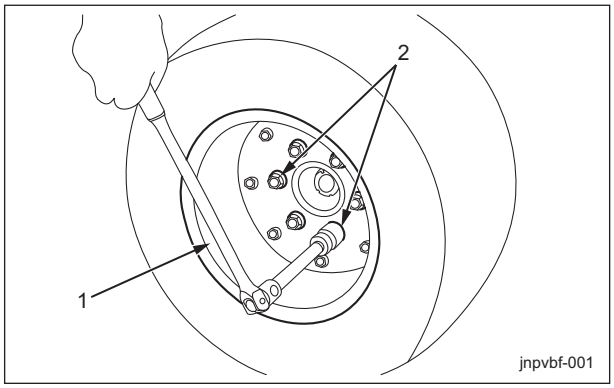

Removal of Rear Wheel_001

1	Rear wheel
2	Heat-treated bolt

3. Remove the rear wheel and rear wheel spacer from the wheel mounting base.

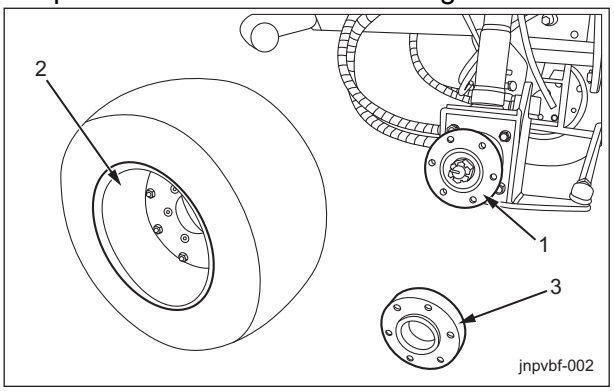

Removal of Rear Wheel_002

1	Wheel mounting base
2	Rear wheel
3	Rear wheel spacer

Installation of Rear Wheel

> **Caution**
>
> See "Tightening torques" (Page 3-5) .
> Note that the Baroness product warranty may not apply to defects caused by incorrect or overtorque tightening etc.

For installation, reverse the removing procedure.

https://truckmanualshub.com/

Brake

Removal of Brake Disc

> ⚠ Caution
>
> Be careful when handling the brake disc since it is heavy.

1. Remove the front wheel. (See "Removal of Front Wheel" (Page 7-18) .)
2. Remove the caliper. (See "Removal of Caliper" (Page 7-21) .)
3. Remove the six bolts w/hexagon hole.

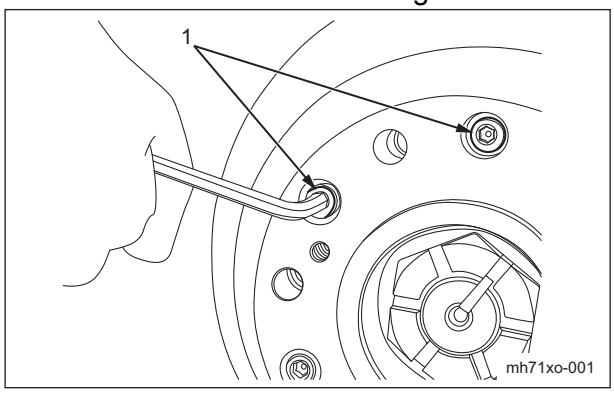

Removal of Brake Disc_001

1	Bolt w/hexagon hole

4. Knock the perimeter of the brake disc with a plastic hammer.

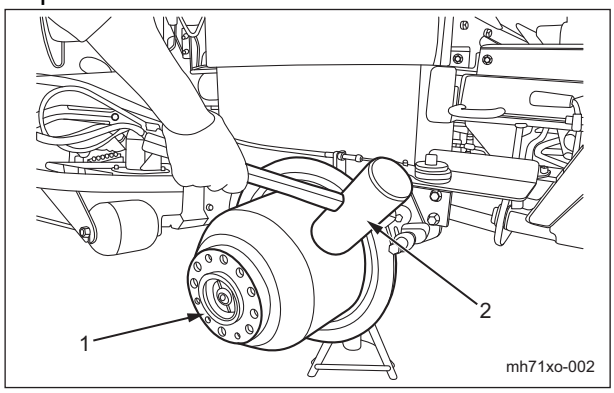

Removal of Brake Disc_002

1	Brake disc
2	Plastic hammer

5. Follow the steps below to install the brake disc remover kit.
   [1] Remove the nut from the brake disc remover kit.
   [2] Use the bolt holes in the brake disc to attach the brake disc remover with the bolts.

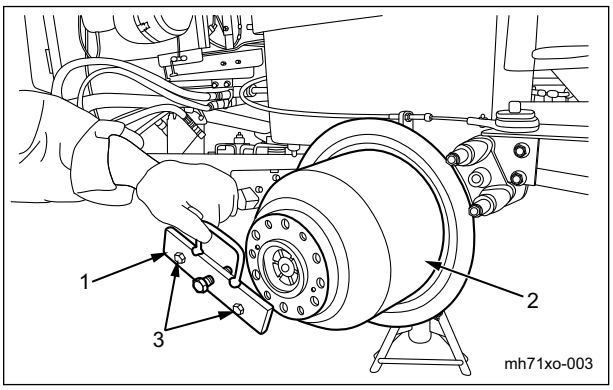

Removal of Brake Disc_003

1	Brake disc remover
2	Brake disc
3	Bolt

6. Tighten the bolt, and then separate the brake disc and wheel mounting base.

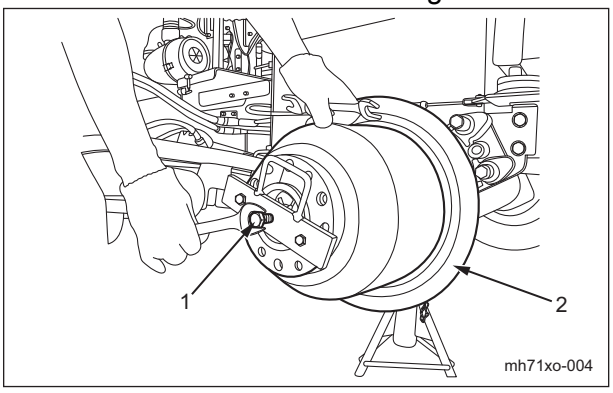

Removal of Brake Disc_004

1	Bolt
2	Brake disc

Installation of Brake Disc

> ⚠ Caution
>
> See "Tightening torques" (Page 3-5) .
> Note that the Baroness product warranty may not apply to defects caused by incorrect or overtorque tightening etc.

For installation, reverse the removing procedure.

https://truckmanualshub.com/

Axle

Removal of Caliper

1. Remove the front wheels. (See "Removal of Front Wheel" (Page 7-18) .)
2. Remove the jam nut, adjustment nut, washer, stainless washer, and thrust bearing.

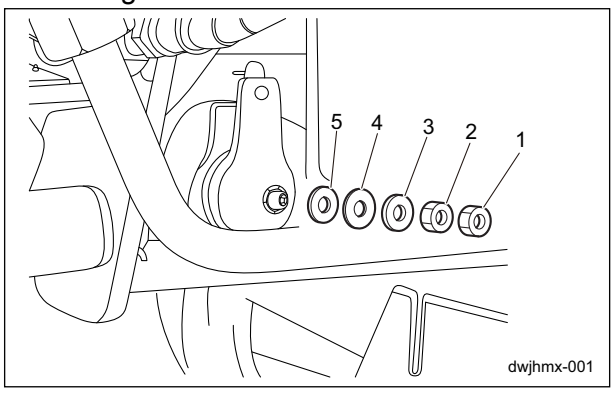

Removal of Caliper_001

1	Jam nut
2	Adjustment nut
3	Washer
4	Stainless washer
5	Thrust bearing

3. Remove the hexagon head bolt, along with the lever, boot, cams, stainless ball, retainer, and ID seal.

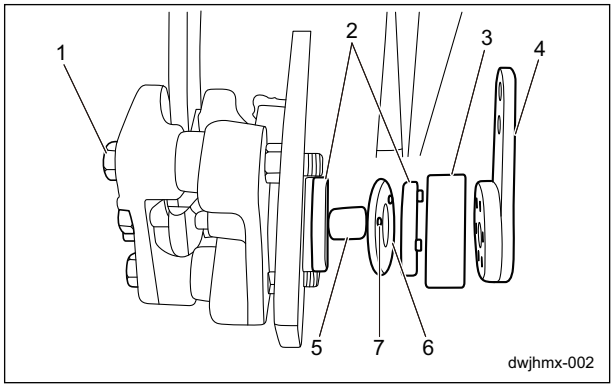

Removal of Caliper_002

1	Hexagon head bolt
2	Cam
3	Boot
4	Lever
5	ID seal
6	Retainer
7	Stainless ball

4. Remove the torque plate assembly A and the flat spring.

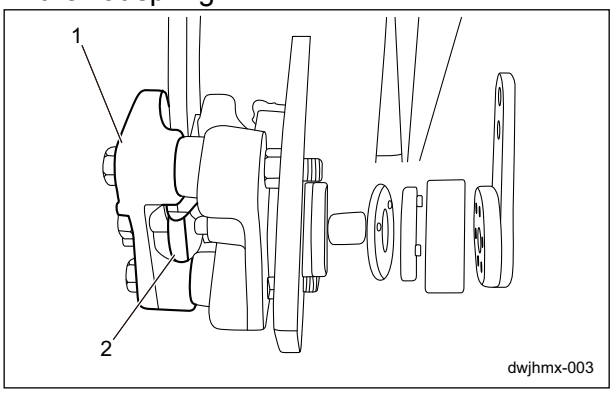

Removal of Caliper_003

1	Torque plate assembly A
2	Flat spring

5. Remove the bolts, and then remove the brake pad assembly and the torque plate assembly B.

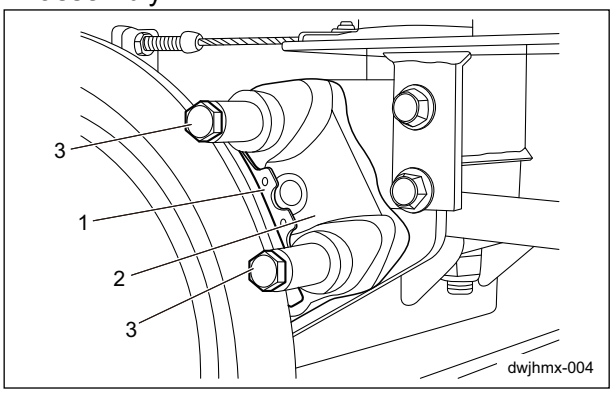

Removal of Caliper_004

1	Brake pad assembly
2	Torque plate assembly B
3	Bolt

https://truckmanualshub.com/

Installation of Caliper

> **Caution**
>
> See "Tightening torques" (Page 3-5) .
> Note that the Baroness product warranty may not apply to defects caused by incorrect or overtorque tightening etc.

> **Important**
>
> Make sure that the stainless ball is located at concave of the inside and outside cams.

> **Important**
>
> The thrust bearing must be installed in predetermined direction.
> Make sure that the side with resin coating is facing the side of the flat washer.

For installing it, reverse the removing procedure.

Removal of Wheel Mounting Base

1. Remove the front wheel. (See "Removal of Front Wheel" (Page 7-18) .)
2. Remove the caliper. (See "Removal of Caliper" (Page 7-21) .)
3. Remove the cotter pin.

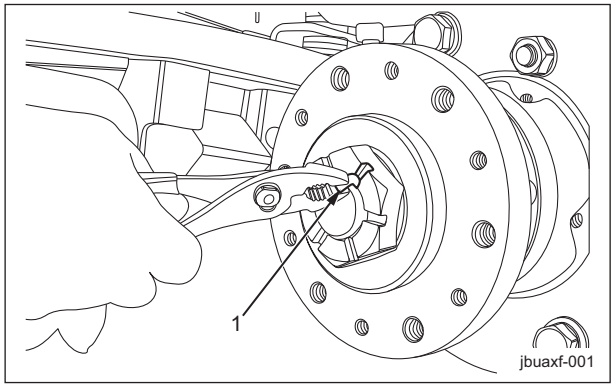

Removal of Wheel Mounting Base_001

1	Cotter pin

4. Follow the steps below to install the wheel mounting base bracket F.
   [1] Hook portion A of the wheel mounting base bracket F to the frame.
   [2] Use the bolt hole of the wheel mounting base to mount it with the bolt.

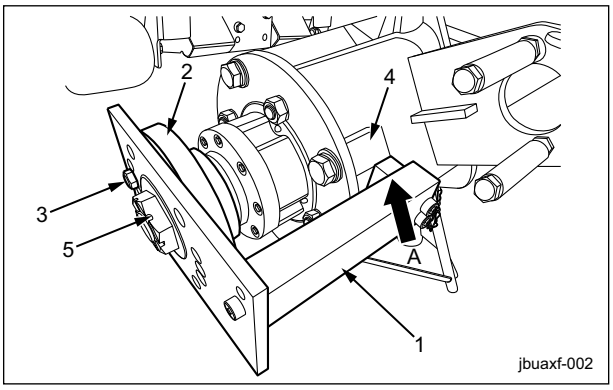

Removal of Wheel Mounting Base_002

1	Wheel mounting base bracket F
2	Wheel mounting base
3	Bolt
4	Frame
5	Special nut

5. Use a socket wrench to loosen the special nut on the shaft of the center shaft until about 2 threads appear between the shaft end and the special nut.
   Note:
   Use a socket of width across flats 2-3/16 inches.

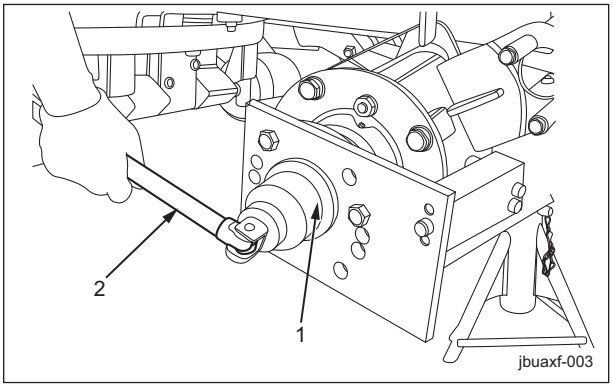

Removal of Wheel Mounting Base_003

1	Special nut
2	Socket wrench

https://truckmanualshub.com/

6. Remove the bolts, and then remove the wheel mounting base bracket F.

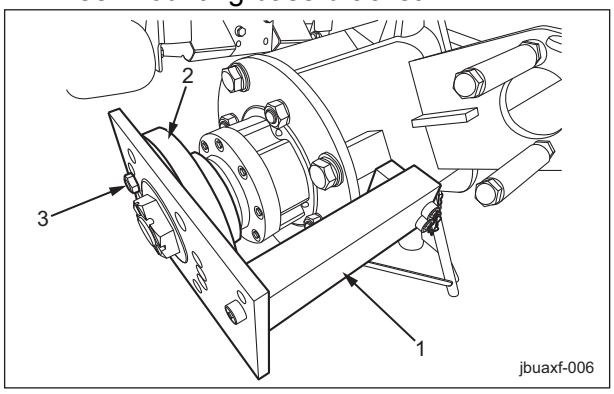

Removal of Wheel Mounting Base_004

1	Wheel mounting base bracket F
2	Wheel mounting base
3	Bolt

7. Hook the gear puller on the wheel mounting base, fix and tighten it, and then separate the motor shaft and the wheel mounting base.

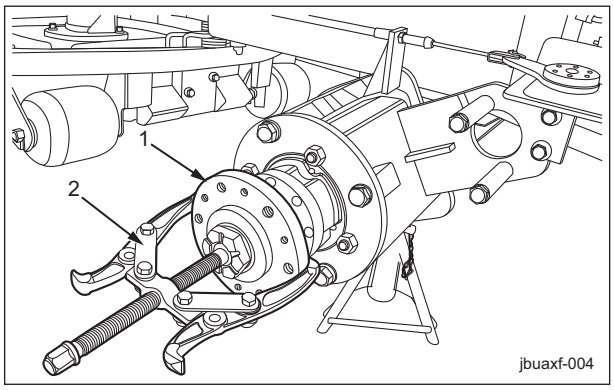

Removal of Wheel Mounting Base_005

1	Wheel mounting base
2	Gear puller

8. Remove the special nut, and then remove the wheel mounting base.

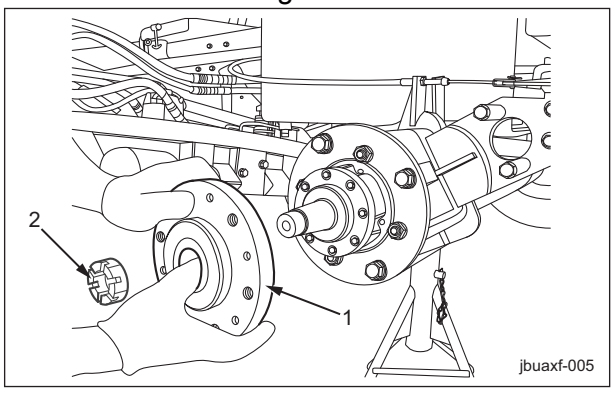

Removal of Wheel Mounting Base_006

1	Wheel mounting base
2	Special nut

Installation of Wheel Mounting Base

> **Caution**
>
> See "Tightening torques" (Page 3-5) .
> Note that the Baroness product warranty may not apply to defects caused by incorrect or overtorque tightening etc.

For installation, reverse the removing procedure.

Removal of Kingpin-Left

> **Caution**
>
> Be careful when handling the kingpin since it is heavy.

1. Remove the rear wheel. (See "Removal of Rear Wheel" (Page 7-19) .)
2. Remove the rear wheel motor. (See "Removal of Rear Wheel Motor" (Page 5-69) .)
3. Remove the steering cylinder. (See "Removal of Steering Cylinder" (Page 5-83) .)
4. Remove the tie rod. (See "Removal of Tie Rod" (Page 7-29) .)

> **Important**
>
> Check and mark position of the slot when removing the spring pin.

5. Use the pin puller to remove the spring pin.

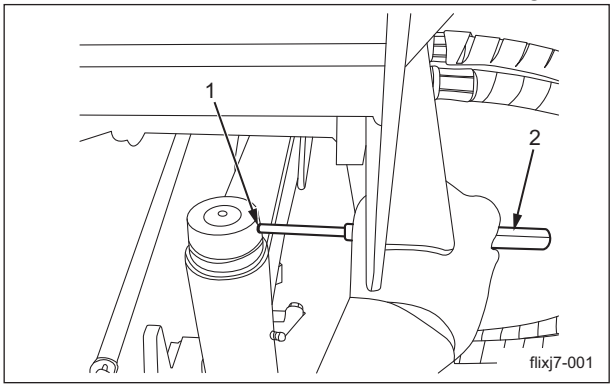

Removal of Kingpin-Left_001

1	Spring pin
2	Pin puller

https://truckmanualshub.com/

6. Follow the steps below to remove the kingpin-left.
   [1] Remove the collar and the cap.
   [2] Remove the kingpin-left from the pivot.
   [3] Remove the thrust bearing and O-ring.

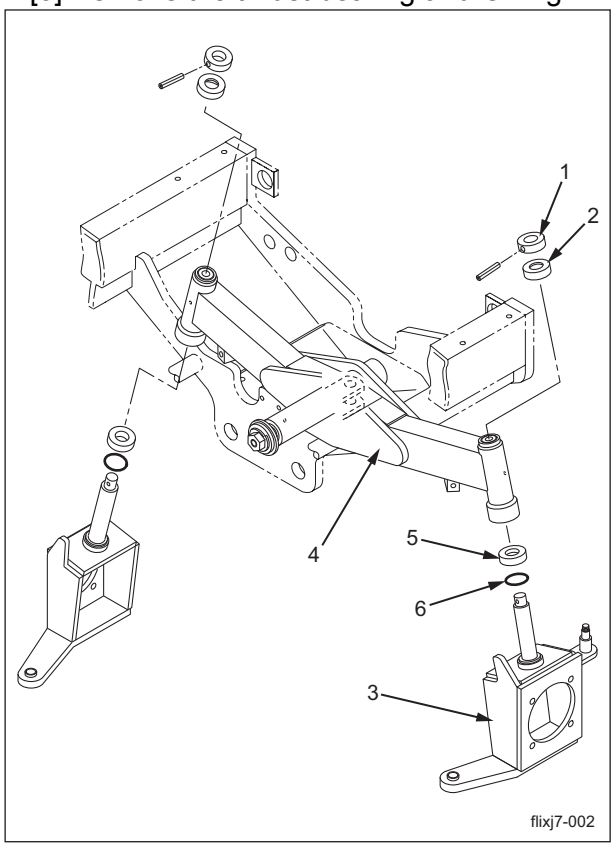

Removal of Kingpin-Left_002

1	Collar
2	Cap
3	Kingpin-left
4	Pivot
5	Thrust bearing
6	O-ring

Removal of Kingpin-Right

> **Caution**
> Be careful since the kingpin is very heavy.

1. Remove the rear wheel. (See "Removal of Rear Wheel" (Page 7-19) .)
2. Remove the rear wheel motor. (See "Removal of Rear Wheel Motor" (Page 5-69) .)
3. Remove the tie rod. (See "Removal of Tie Rod" (Page 7-29) .)

> **Important**
> Check and mark position of the slot when removing the spring pin.

4. Use the pin puller to remove the spring pin.

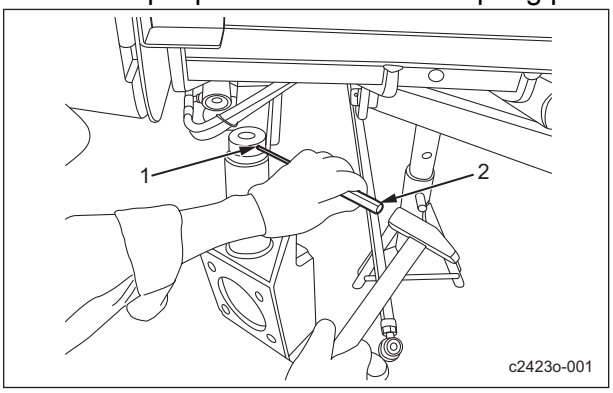

Removal of Kingpin-Right_001

1	Spring pin
2	Pin puller

5. Follow the steps below to remove the kingpin-right.
   [1] Remove the collar and the cap.
   [2] Remove the kingpin-right from the pivot.

https://truckmanualshub.com/

[3] Remove the thrust bearing and O-ring.

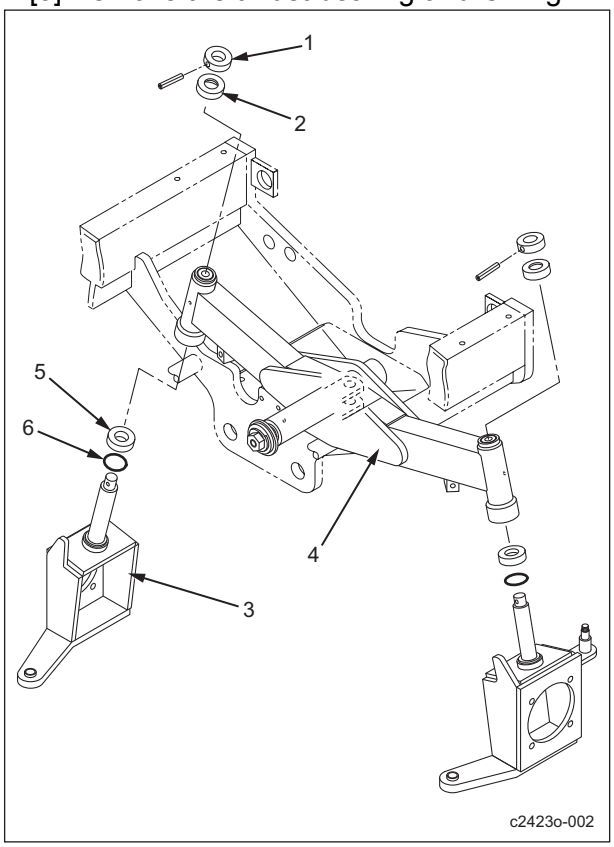

Removal of Kingpin-Right_002

1	Collar
2	Cap
3	Kingpin-right
4	Pivot
5	Thrust bearing
6	O-ring

https://truckmanualshub.com/

Installation of Left Kingpin

> **Caution**
>
> Perform the operation very carefully since the kingpin is heavy.

> **Caution**
>
> See the list in "Tightening torques" (Page 3-5) .
> Note that the Baroness product warranty may not apply to defects caused by incorrect or overtorque tightening, etc.

> **Important**
>
> When installing the spring pin, make sure that the notch on the pin is in the correct position.

1. Follow the steps below to install the left kingpin.
   [1] Apply grease to the stem of the left kingpin.
   [2] Apply grease to the O-ring and thrust bearing, and then install them on the stem of the left kingpin.
   [3] Make sure that the left kingpin is securely inserted in the pivot.
   [4] Attach the cap and collar.
   [5] Align the hole on the collar with the hole on the stem of the left kingpin.
   [6] Tap in the spring pin with a hammer.

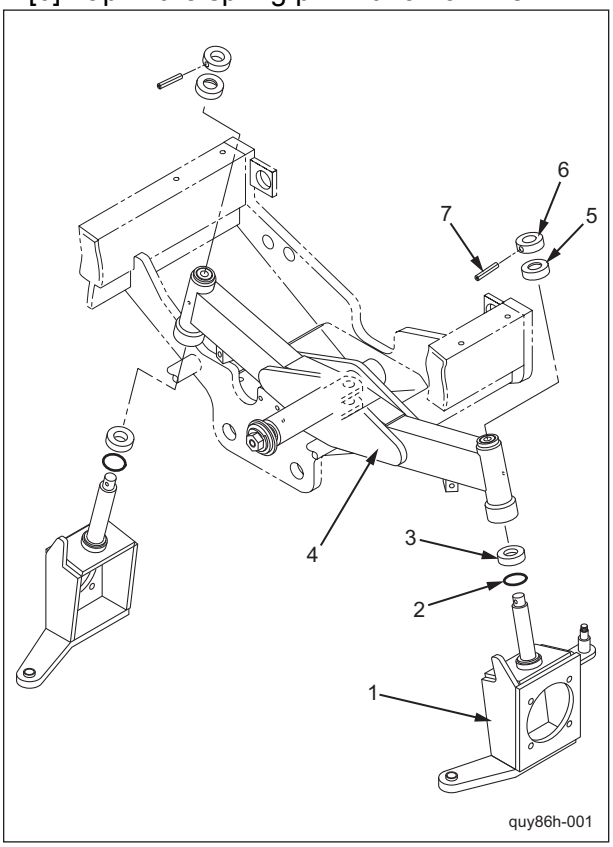

Installation Left Kingpin_001

1	Left kingpin
2	O-ring
3	Thrust bearing
4	Pivot
5	Cap
6	Collar
7	Spring pin

2. Attach the tie rod. (See "Installation of Tie Rod" (Page 7-30) .)
3. Install the steering cylinder. (See "Installation of Steering Cylinder" (Page 5-84) .)
4. Install the rear wheel motor. (See "Installation of Rear Wheel Motor" (Page 5-70) .)
5. Install the rear wheel. (See "Installation of Rear Wheel" (Page 7-19) .)

https://truckmanualshub.com/

Installation of Kingpin-Right

> **Caution**
> Be careful since the kingpin is very heavy.

> **Caution**
> See "Tightening torques" (Page 3-5) .
> Note that the Baroness product warranty may not apply to defects caused by incorrect or overtorque tightening etc.

> **Important**
> Pay attention to the position of slot when installing the spring pin.

1. Follow the steps below to install the kingpin-left.
   [1] Apply grease on the shaft of the kingpin-right.
   [2] Apply grease on the O-ring and the thrust bearing, and then install them on the shaft of the kingpin-right.
   [3] Make sure that the kingpin-right is completely inserted into the pivot.
   [4] Install the cap and collar.
   [5] Align the hole of the collar to the hole of the shaft of the kingpin-right.
   [6] Knock-in the spring pin using a hammer.

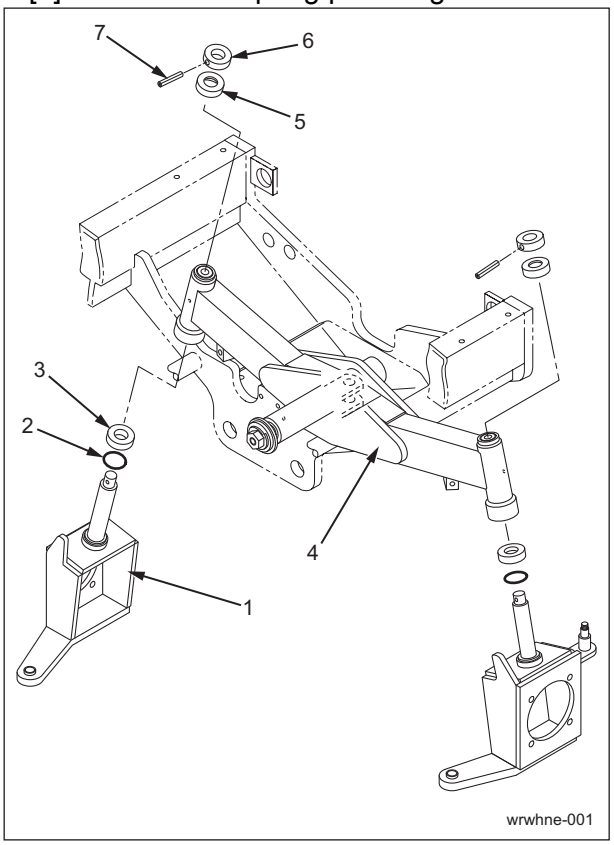

Installation of Kingpin-Right_001

1	Kingpin-right
2	O-ring
3	Thrust bearing
4	Pivot
5	Cap
6	Collar
7	Spring pin

2. Install the tie rod. (See "Installation of Tie Rod" (Page 7-30) .)
3. Install the rear wheel motor. (See "Installation of Rear Wheel Motor" (Page 5-70) .)
4. Install the rear wheel. (See "Installation of Rear Wheel" (Page 7-19) .)

https://truckmanualshub.com/

Removal of Pivot

> **Caution**
>
> Be careful when handling the pivot since it is heavy.

1. Securely place the jack beneath the jack-up point of the rear center frame area, and then raise it until the tires lift off the ground. (See "Jack-up Points" (Page 3-10) .)
2. Use jack stands at the jack-stand points to securely support the machine.

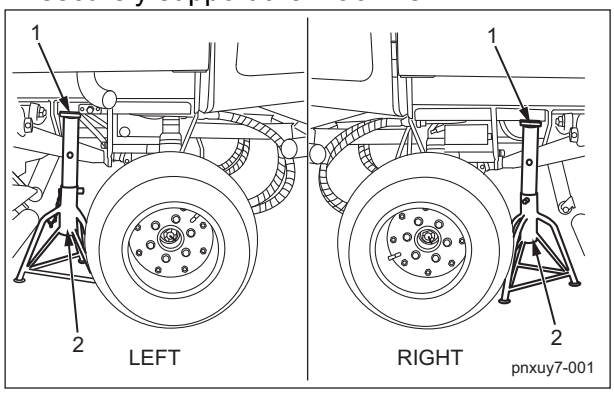

Removal of Pivot_001

1	Jack-stand points
2	Jack stands

3. Remove the rear wheel. (See "Removal of Rear Wheel" (Page 7-19) .)
4. Remove the steering cylinder. (See "Removal of Steering Cylinder" (Page 5-83) .)
5. Remove the tie rod. (See "Removal of Tie Rod" (Page 7-29) .)
6. Remove the left kingpin. (See "Removal of Kingpin-Left" (Page 7-23) .)
7. Remove the right kingpin. (See "Removal of Kingpin-Right" (Page 7-24) .)
8. Support the center of the pivot with a jack, and then loosen the nut.

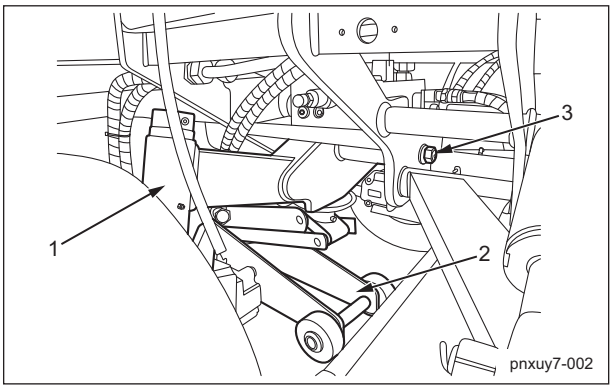

Removal of Pivot_002

1	Pivot
2	Jack
3	Nut

9. Follow the steps below to remove the pivot.
   [1] Remove the spring washer and washers, and then pull out the pivot pin.
   [2] Lower the jack, and then remove the pivot.

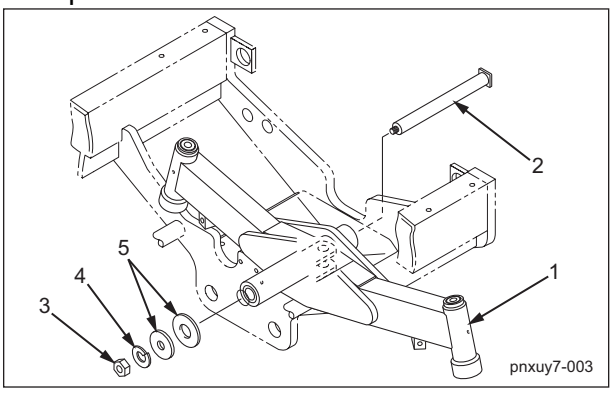

Removal of Pivot_003

1	Pivot
2	Pivot pin
3	Nut
4	Spring washer
5	Washer

https://truckmanualshub.com/

Installation of Pivot

> **Caution**
>
> Be careful when handling the pivot since it is heavy.

> **Caution**
>
> See "Tightening torques" (Page 3-5) .
> Note that the Baroness product warranty may not apply to defects caused by incorrect or overtorque tightening etc.

1. Follow the steps below to install the pivot.
   [1] Apply grease to the pivot pin.
   [2] Apply grease to the pivot pin receptacle on the pivot.
   [3] Place the pivot on a jack, and then raise the jack until it is positioned in the hole of the frame.
   [4] Install the washers, spring washer and nut.

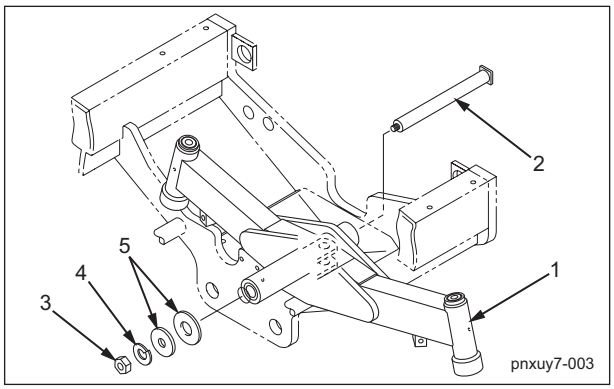

Installation of Pivot_001

1	Pivot
2	Pivot pin
3	Nut
4	Spring washer
5	Washer

2. Install the right kingpin. (See "Installation of Kingpin-Right" (Page 7-27) .)
3. Install the left kingpin. (See "Installation of Left Kingpin" (Page 7-26) .)
4. Install the tie rod. (See "Installation of Tie Rod" (Page 7-30) .)
5. Install the steering cylinder. (See "Installation of Steering Cylinder" (Page 5-84) .)
6. Install the rear wheel. (See "Installation of Rear Wheel" (Page 7-19) .)

Removal of Tie Rod

> **Caution**
>
> Take note of the installed direction when removing the tie rod.

1. Remove the cotter pin, and then remove the slotted nut.

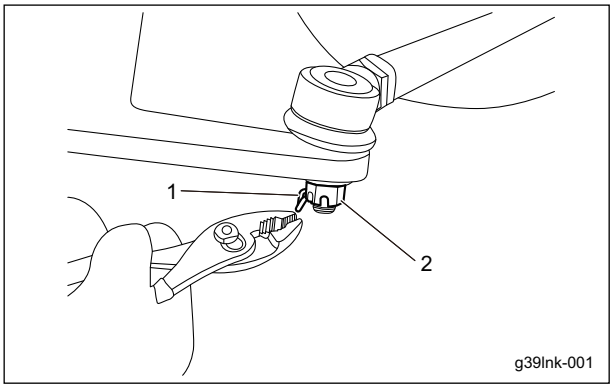

Removal of the Tie Rod_001

1	Cotter pin
2	Slotted nut

2. Tap the joint part of the kingpin tie rod end with a plastic hammer to remove the tie rod.

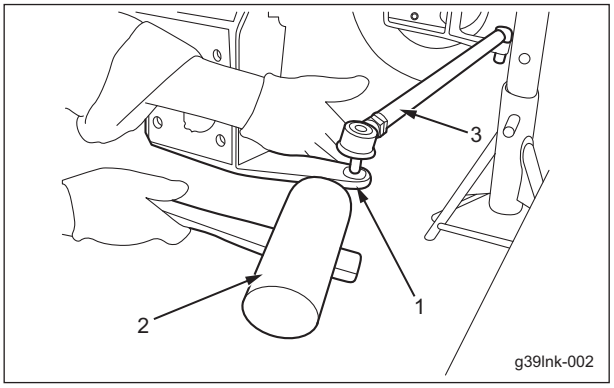

Removal of Tie Rod_002

1	Joint part of the kingpin tie rod end
2	Plastic hammer
3	Tie rod

https://truckmanualshub.com/

Installation of Tie Rod

> **Caution**
>
> See "Tightening torques" (Page 3-5) .
> Note that the Baroness product warranty may not apply to defects caused by incorrect or overtorque tightening etc.

> **Important**
>
> Check the orientation in order to install the tie rod in the correct orientation.

For installation, reverse the removing procedure.

Steering

Removal of Steering

1. Remove the rubber cap, and then remove nut, spring washer.
2. Pull up the steering upwards to remove it.

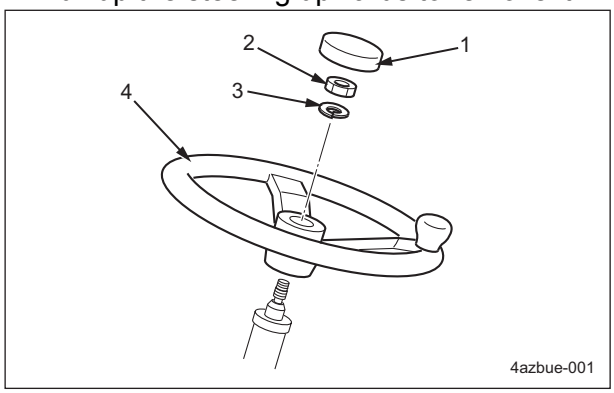

Removal of Steering_001

1	Rubber cap
2	Nut
3	Spring washer
4	Steering wheel

Installation of Steering

> **Caution**
>
> See "Tightening torques" (Page 3-5) .
> Note that the Baroness product warranty may not apply to defects caused by incorrect or overtorque tightening etc.

For installing it, reverse the removing procedure.

Removal of Steering Column

1. Remove the steering wheel. (See "Removal of Steering" (Page 7-30) .)
2. Remove the front cover. (See "Removal of Front Cover" (Page 7-33) .)
3. Detach the diff-lock wires.

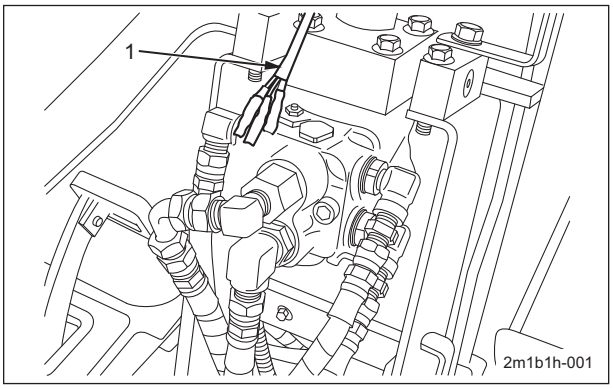

Removal of Steering Column_001

1	Diff-lock wires

4. Remove the eight bolts and spring washers, and then remove the steering column.
   Note:
   The front cover mounting bracket is removed in the same way.

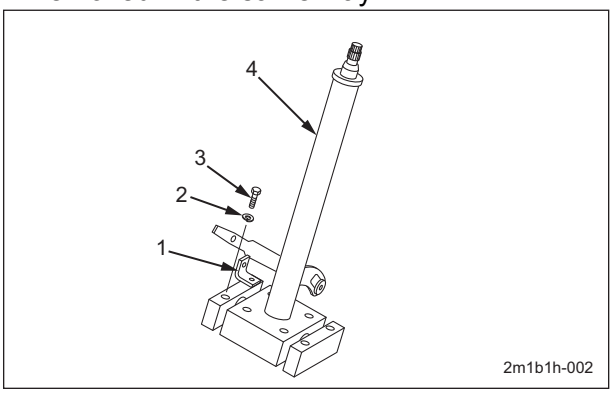

Removal of Steering Column_002

1	Front cover mounting bracket
2	Spring washer
3	Bolt
4	Steering column

https://truckmanualshub.com/

Installation of Steering Column

> **Caution**
>
> See "Tightening torques" (Page 3-5) .
> Note that the Baroness product warranty may not apply to defects caused by incorrect or overtorque tightening etc.

For installation, reverse the removing procedure.

Seat

Removal of Seat

> **Caution**
>
> This operation should be performed by two people since the seat is heavy.
> Also, be careful not to pinch your fingers.

1. Pull up the seat handle, and then slide the seat back completely.

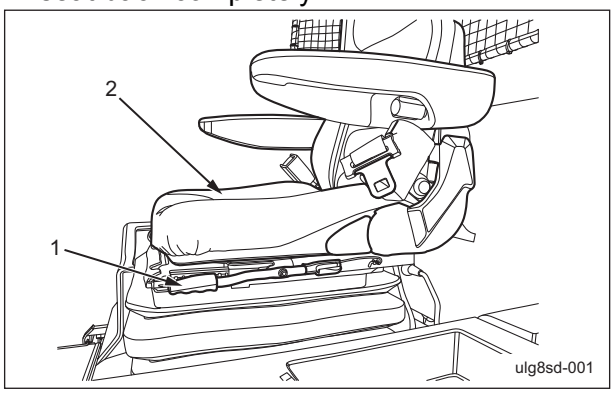

Removal of Seat_001

1	Seat handle
2	Seat

2. While pulling up the seat lever, lift the seat.

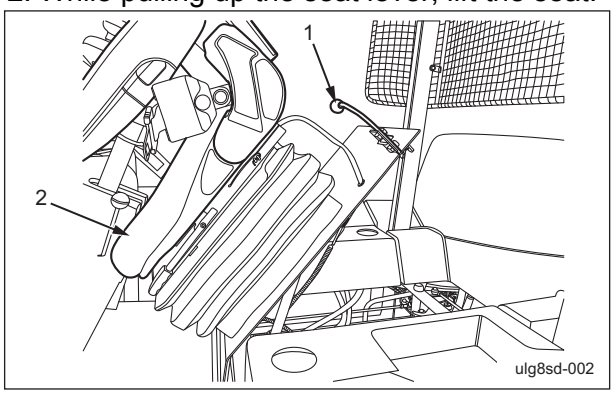

Removal of Seat_002

1	Seat lever
2	Seat

3. Follow the steps below to remove the seat.
   [1] Disconnect the seat switch wire, then remove the wire through the seat mounting bracket toward the seat.
   [2] Remove four bolts, and then remove the seat.

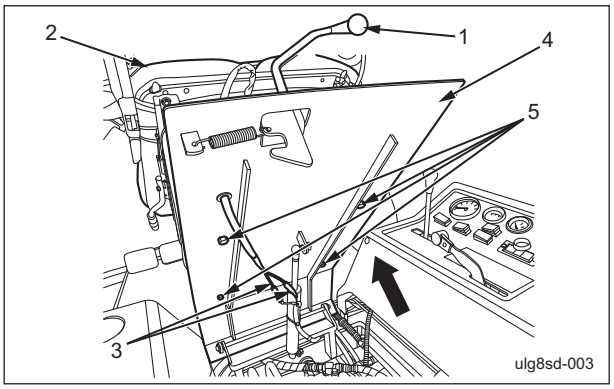

Removal of Seat_003

1	Seat lever
2	Seat
3	Seat switch wire
4	Seat mounting bracket
5	Bolt

Installation of Seat

> **Caution**
>
> This operation should be performed by two people since the seat is heavy.
> In addition, be careful not to pinch your fingers.

> **Caution**
>
> See "Tightening torques" (Page 3-5) .
> Note that the Baroness product warranty may not apply to defects caused by incorrect or overtorque tightening etc.

For installation, reverse the removing procedure.

https://truckmanualshub.com/

Removal of Seat Mounting Bracket

1. Remove the seat. (See "Removal of Seat" (Page 7-31) .)
2. Remove the left tank cover. (See "Removal of Left Tank Cover" (Page 7-36) .)
3. Follow the steps below to remove the seat mounting bracket.
   [1] Remove the cotter pin and washer on the right end of the shaft.
   [2] While supporting the seat mounting bracket with one hand, remove the nut and spring washer that affixes the gas spring.
   [3] Pull out the shaft toward the left, and then remove the seat mounting bracket.

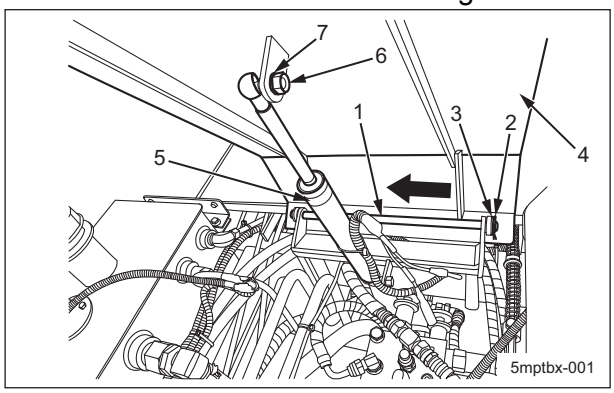

Removal of Seat Mounting Bracket_001

1	Shaft
2	Cotter pin
3	Washer
4	Seat mounting bracket
5	Gas spring
6	Nut
7	Spring washer

4. Remove the U nut, washer, bolt, and spring that affix the lever to the seat mounting bracket.

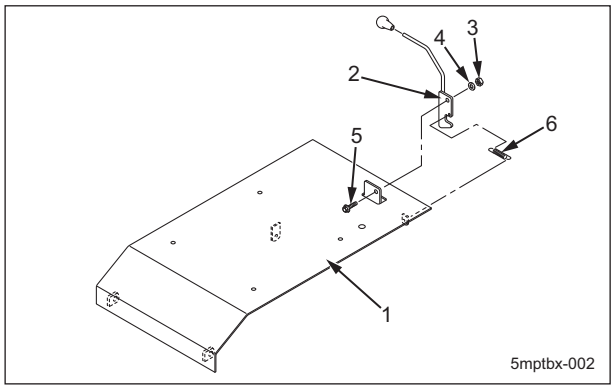

Removal of Seat Mounting Bracket_002

1	Seat mounting bracket
2	Lever
3	U nut
4	Washer
5	Bolt
6	Spring

Installation of Seat Mounting Bracket

Caution

See the list in "Tightening torques" (Page 3-5) .
Note that the Baroness product warranty may not apply to defects caused by incorrect or overtorque tightening, etc.

Important

Replace the removed cotter pin with a new one.

Important

After completely tightening the nut that affixes the lever, loosen the nut by a half rotation and make sure that the lever moves smoothly.

For installation, reverse the removing procedure.

https://truckmanualshub.com/

Cover

Removal of Front Cover

1. Remove the bolt, spring washer and nut installing the grip of tilt lever of the steering, and then remove the grip.

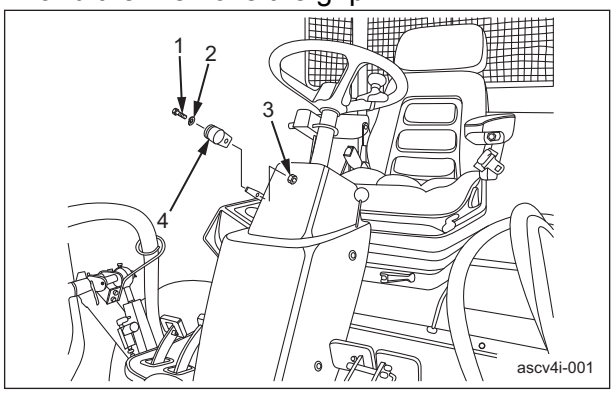

Removal of Front Cover_001

1	Bolt
2	Spring washer
3	Nut
4	Grip

2. Remove the grip from the brake lock shaft.

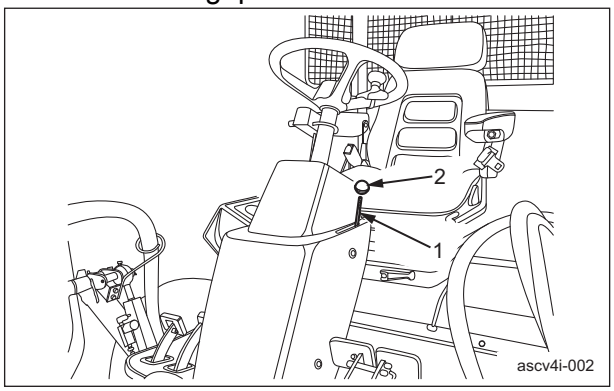

Removal of Front Cover_002

1	Brake lock shaft
2	Grip

3. Remove the bolts, anti-vibration rubber installing the front cover.

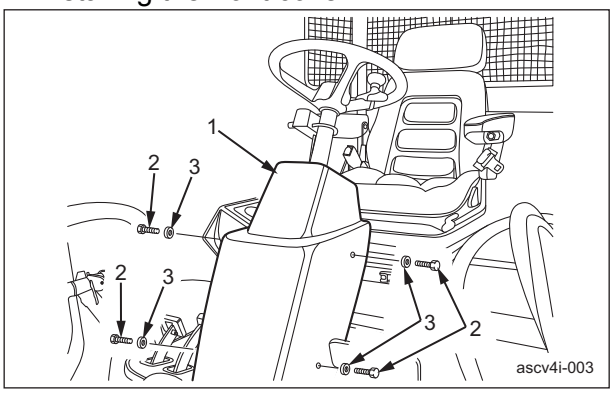

Removal of Front Cover_003

1	Front cover
2	Bolt
3	Anti-vibration rubber

4. Remove the bolt, spring washer, washer to remove the front rear cover, and then remove the front cover.

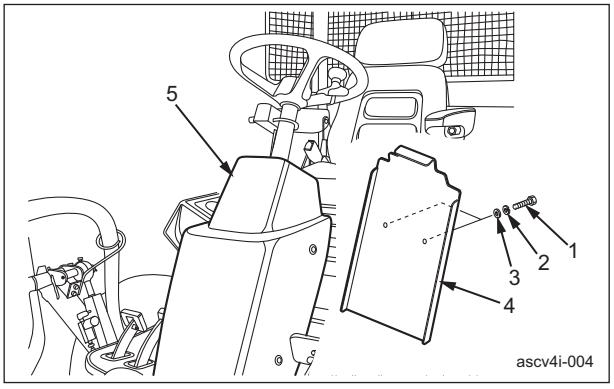

Removal of Front Cover_004

1	Bolt
2	Spring washer
3	Washer
4	Front rear cover
5	Front cover

Installation of Front Cover

Caution

See "Tightening torques" (Page 3-5) .
Note that the Baroness product warranty may not apply to defects caused by incorrect or overtorque tightening etc.

For installation, reverse the removing procedure.

https://truckmanualshub.com/

Removal of Rear Cover

> **Caution**
>
> Be careful when handling the rear cover since it is heavy.

1. Follow the steps below to open the rear cover.
   [1] Unlock the rubber hooks on the left and right sides, and then lift up the left and right rear covers.
   [2] Hook the hood support rods onto the latches inside the left and right rear covers, and then make sure that the rear covers will not close before taking your hand off of them.

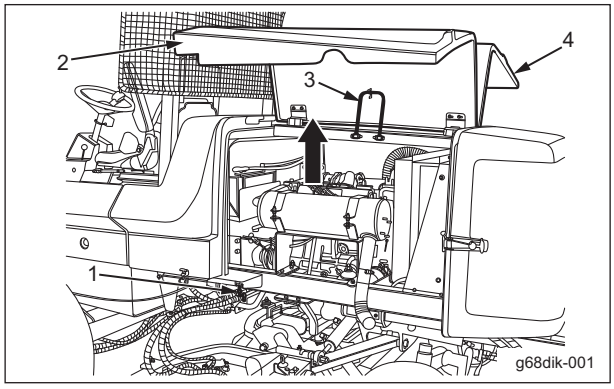

Removal of Rear Cover_001

1	Rubber hook
2	Left rear cover
3	Hood support rod
4	Right rear cover

2. Remove the nut, spring washer and washer, and then remove the rear cover.

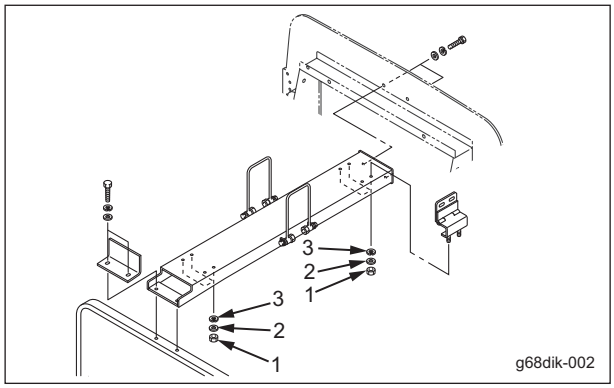

Removal of Rear Cover_002

1	Nut
2	Spring washer
3	Washer

3. The left and right rear covers are secured with hinges.Remove the bolt, washer A, anti-vibration rubber, washer B and U nut, and then remove the hinge.

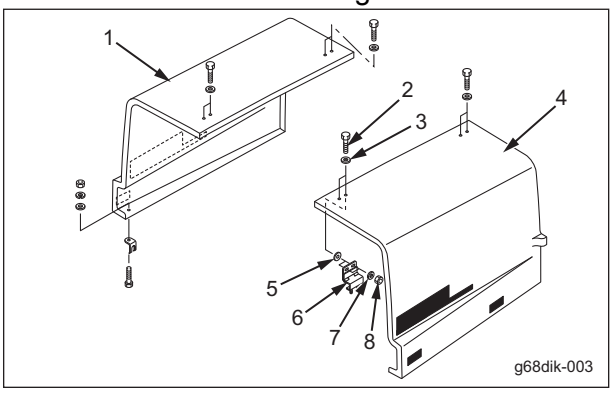

Removal of Rear Cover_003

1	Right rear cover
2	Bolt
3	Washer A
4	Left rear cover
5	Anti-vibration rubber
6	Hinge
7	Washer B
8	U nut

4. Remove the bolt, nut, spring washer and washer, and then remove the rubber hook receiver.

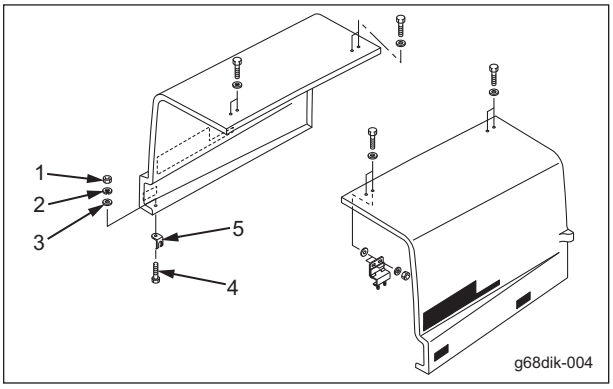

Removal of Rear Cover_004

1	Nut
2	Spring washer
3	Washer
4	Bolt
5	Rubber hook receiver

https://truckmanualshub.com/

Installation of Rear Cover

> **Caution**
>
> See the list in "Tightening torques" (Page 3-5) .
> Note that the Baroness product warranty may not apply to defects caused by incorrect or overtorque tightening etc.

For installation, reverse the removing procedure.

Removal of Cover Mounting Bracket

1. Remove the rear cover. (See "Removal of Rear Cover" (Page 7-34) .)
2. Follow the steps below to remove the cover mounting bracket.
   [1] Remove the bolt, spring washer and washer, and then remove the cover fastener.
   [2] Remove the bolt, spring washer and washer, and then remove the cover mounting bracket.

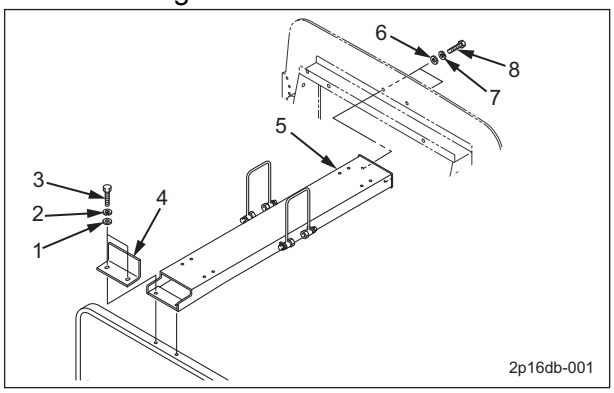

Removal of Cover Mounting Bracket_001

1	Washer
2	Spring washer
3	Bolt
4	Cover fastener
5	Cover mounting bracket
6	Washer
7	Spring washer
8	Bolt

Installation of Cover Mounting Bracket

> **Caution**
>
> See the list in "Tightening torques" (Page 3-5) .
> Note that the Baroness product warranty may not apply to defects caused by incorrect or overtorque tightening, etc.

For installation, reverse the removing procedure.

Removal of Center Cover

> **Caution**
>
> Be careful when handling the center cover since it is heavy.

1. Follow the steps below to remove the center cover.
   [1] Unlock the rubber catch, and then lift up the center cover and remove it.
   [2] Remove the bolt, nut, spring washer and washer, and then remove the rubber catch clasp.

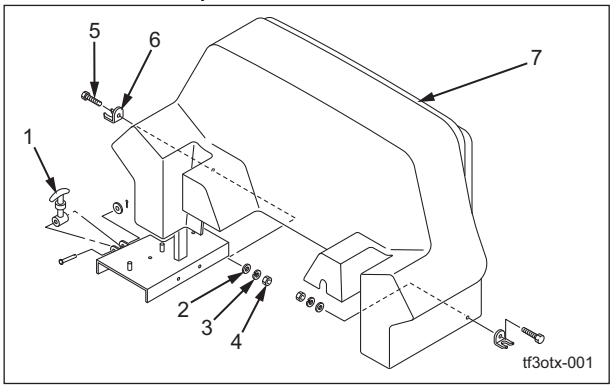

Removal of Center Cover_001

1	Rubber catch
2	Washer
3	Spring washer
4	Nut
5	Bolt
6	Rubber catch clasp
7	Center cover

https://truckmanualshub.com/

Installation of Center Cover

> **Caution**
>
> See "Tightening torques" (Page 3-5) .
> Note that the Baroness product warranty may not apply to defects caused by incorrect or overtorque tightening etc.

For installing it, reverse the removing procedure.

Removal of Left Tank Cover

1. Remove the three bolts, spring washers and washers used to install the left tank cover, and then remove the left tank cover.

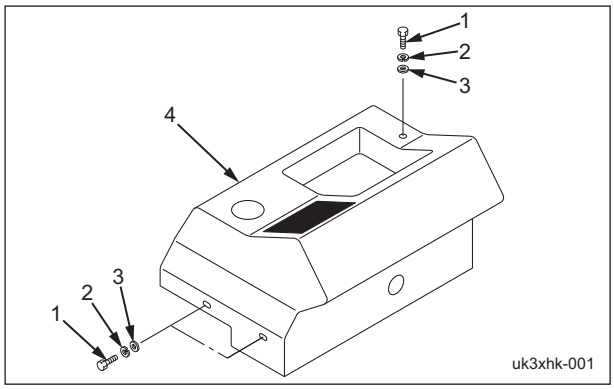

Removal of Left Tank Cover_001

1	Bolt
2	Spring washer
3	Washer
4	Left tank cover

Removal of Right Tank Cover

1. Follow the steps below to remove the right tank cover.
   [1] Remove the fuel tank cap.
   [2] Remove the three bolts used to install the right tank cover, the spring washers and washers, and then remove the right tank cover.

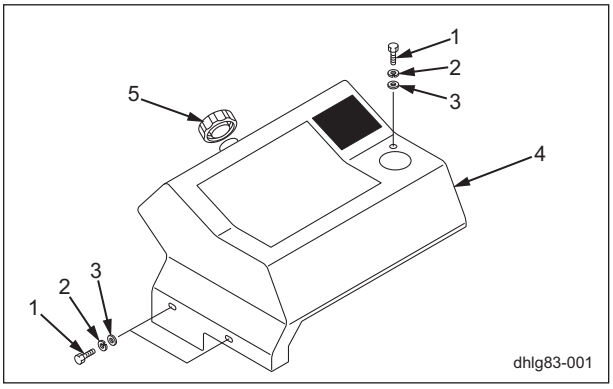

Removal of Right Tank Cover_001

1	Bolt
2	Spring washer
3	Washer
4	Right tank cover
5	Fuel tank cap

Installation of Left Tank Cover

> **Caution**
>
> See "Tightening torques" (Page 3-5) .
> Note that the Baroness product warranty may not apply to defects caused by incorrect or overtorque tightening etc.

For installing it, reverse the removing procedure.

Installation of Right Tank Cover

> **Caution**
>
> See the list in "Tightening torques" (Page 3-5) .
> Note that the Baroness product warranty may not apply to defects caused by incorrect or overtorque tightening, etc.

For installation, reverse the removing procedure.

https://truckmanualshub.com/

Removal of Meter Panel

1. Remove the right tank cover. (See "Removal of Right Tank Cover" (Page 7-36) .)

> **Important**
>
> Before removing the connectors, take note and remember the wire colors and connections.

2. Follow the steps below to remove the connectors and wires.
   [1] Remove eight connectors.
   [2] Remove the spring washer and nut from the fuel gauge, and then remove the wires.

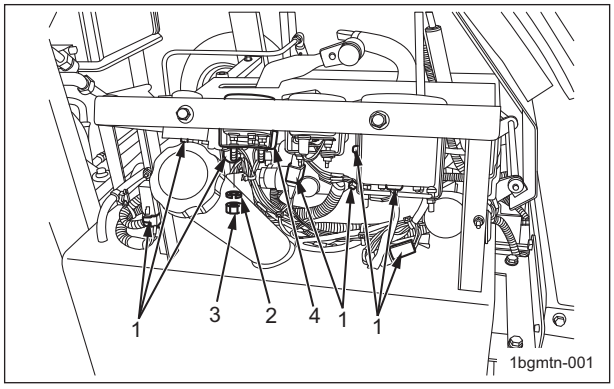

Removal of Meter Panel_001

1	Connector
2	Spring washer
3	Nut
4	Fuel gauge

> **Important**
>
> Before removing the connectors, take note and remember the wire colors and connections.

3. Follow the steps below to remove the lever grips.
   [1] Remove wires for three power relays from the connectors.
   [2] Pull out the grip of the mower unit up/down lever.
   [3] Remove the round head screw, spring washer, and nut, and then remove the throttle lever grip.

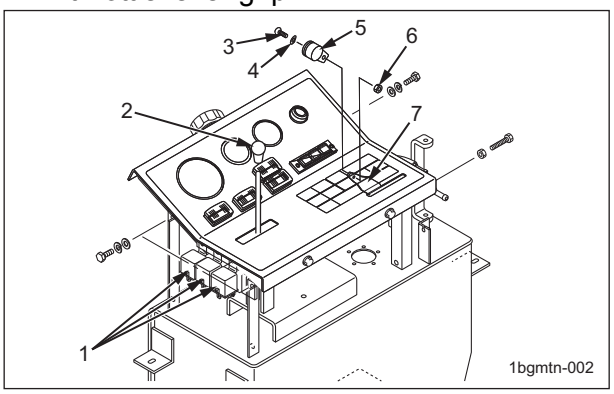

Removal of Meter Panel_002

1	Power relay
2	Up/down lever grip
3	Round head screw
4	Spring washer
5	Grip
6	Nut
7	Throttle lever

4. Follow the steps below to remove the meter panel.
   [1] Remove three bolts, spring washers, and washers.
   [2] Remove one bolt and nut.

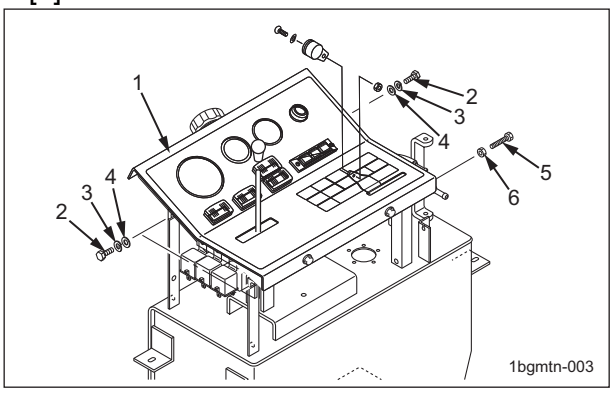

Removal of Meter Panel_003

1	Meter panel
2	Bolt
3	Spring washer
4	Washer
5	Bolt
6	Nut

https://truckmanualshub.com/

Installation of Meter Panel

Caution

See "Tightening torques" (Page 3-5) .
Note that the Baroness product warranty may not apply to defects caused by incorrect or overtorque tightening etc.

Important

Do not install the connector with wrong wire color nor at the wrong location.

Important

Adjust the throttle wire after installation. (See "Adjusted Value of Throttle Wire" (Page 7-3) .)

For installation, reverse the removing procedure.

Removal of Left Step

1. Remove the bolts and spring washers, and then remove the left step.

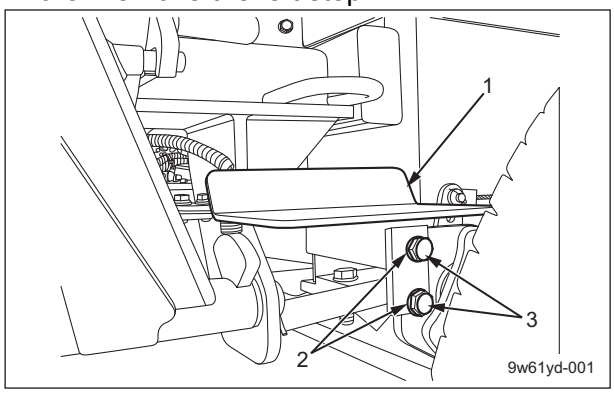

Removal of Left Step_001

1	Left step
2	Spring washer
3	Bolt

2. Peel the pedal sheet from the left step.

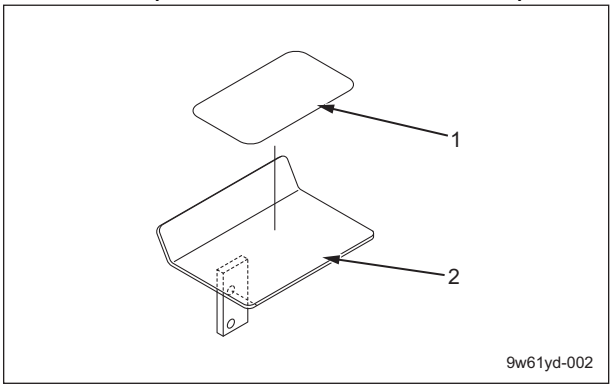

Removal of Left Step_002

1	Pedal sheet
2	Left step

Removal of Step-Right

1. Remove the bolt, spring washer, and then remove the step-right.

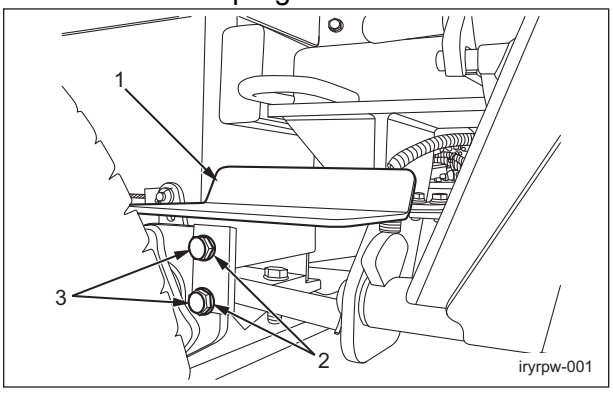

Removal of Step-Right_001

1	Step-right
2	Spring washer
3	Bolt

2. Peel off the pedal sheet from the step-right.

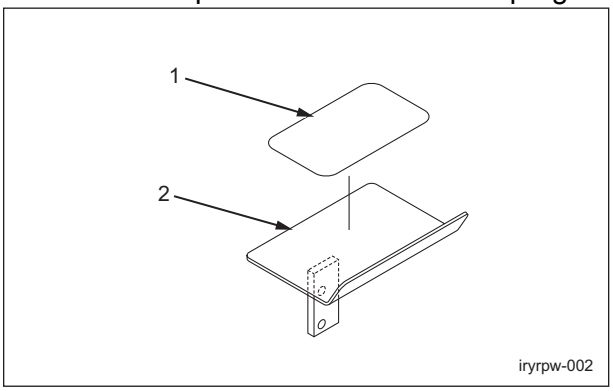

Removal of Step-Right_002

1	Pedal sheet
2	Step

https://truckmanualshub.com/

Installation of Left Step

> **Caution**
>
> See "Tightening torques" (Page 3-5) .
> Note that the Baroness product warranty may not apply to defects caused by incorrect or overtorque tightening etc.

For installation, reverse the removing procedure.

Installation of Right Step

> **Caution**
>
> See the list in "Tightening torques" (Page 3-5) .
> Note that the Baroness product warranty may not apply to defects caused by incorrect or overtorque tightening etc.

For installation, reverse the removing procedure.

Removal of Step Cover

> **Important**
>
> There are four positioning hooks (projections) on the step rubber.
> If dirt is causing it to be fixed in place, clean it before removing it.
> If the step rubber is pulled with excessive force, it may be damaged.

1. Pull the step rubber from the step cover to remove it.

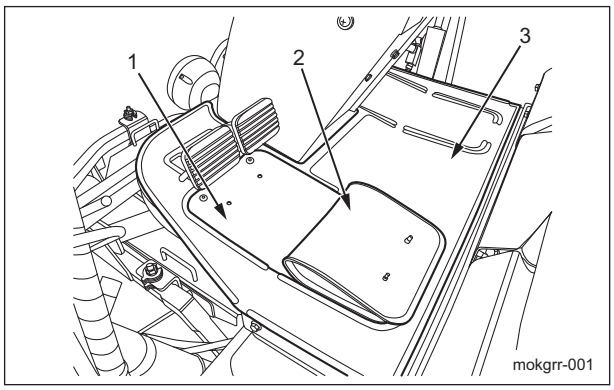

Removal of Step Cover_001

1	Step cover
2	Step rubber
3	Step

2. Remove the three hex socket button head bolts with a hex key, and then remove the step cover.

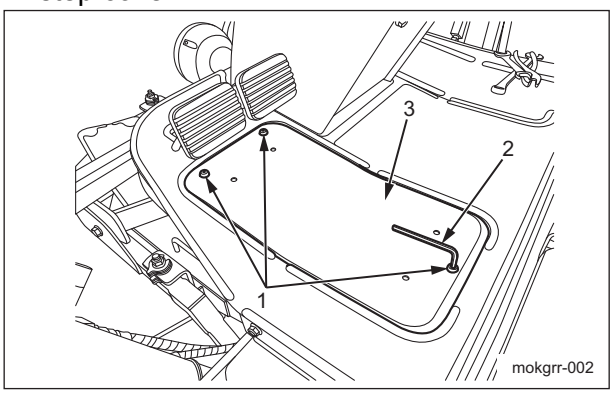

Removal of Step Cover_002

1	Hex socket button head bolts
2	Hex key
3	Step cover

3. Remove the step cover on the right side in the same way.

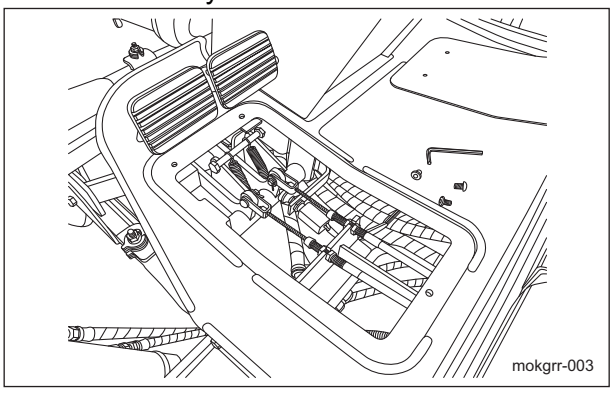

Removal of Step Cover_003

Installation of Step Cover

> **Caution**
>
> See "Tightening torques" (Page 3-5) .
> Note that the Baroness product warranty may not apply to defects caused by incorrect or overtorque tightening etc.

For installation, reverse the removing procedure.

https://truckmanualshub.com/

Lever damper

Removal of Lever Damper

> **Caution**
>
> Two people should work together on the seat since it is heavy.
> In addition, be careful not to pinch your fingers.

1. Pull up the seat lever, and then slide the seat back completely.

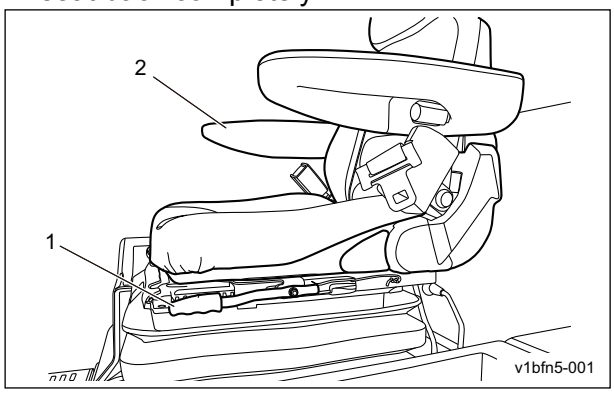

Removal of Lever Damper_001

1	Seat lever
2	Seat

2. While pulling up the seat lever, tilt the seat forward.

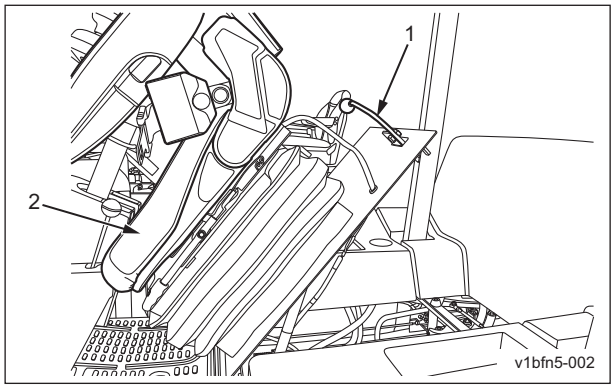

Removal of Lever Damper_002

1	Seat lever
2	Seat

3. Remove the center cover. (See "Removal of Center Cover" (Page 7-35) .)

4. The lever damper is located behind the forward and reverse pedals and in front of the relay box.

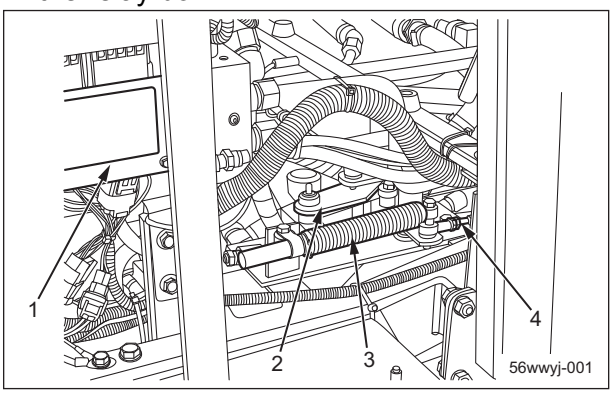

Removal of Lever Damper_003

1	Relay box
2	Pump neutral lever
3	Lever damper
4	Reverse screw rod

5. Follow the steps below to remove the lever damper.
   [1] Remove the lock nut.
   [2] Remove the bolt securing the pump idle lever and lever damper.
   [3] Remove washer A, the lever damper, collar, reverse screw rod and washer B, in order.

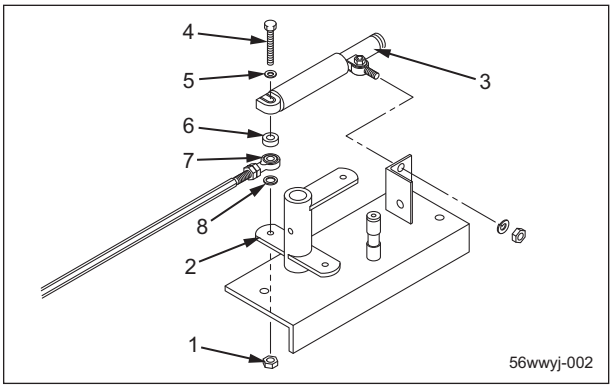

Removal of Lever Damper_004

1	Lock nut
2	Pump idle lever
3	Lever damper
4	Bolt
5	Washer A
6	Collar
7	Reverse screw rod
8	Washer B

https://truckmanualshub.com/

6. Remove the pump neutral fitting, the nut securing the lever damper, and the spring washer.

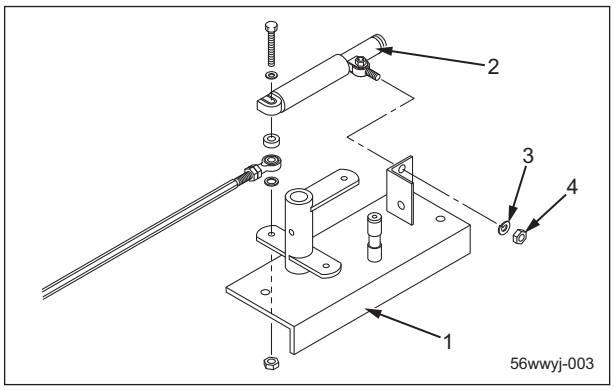

Removal of Lever Damper_005

1	Pump neutral fitting
2	Lever damper
3	Spring washer
4	Nut

Installation of Lever Damper

Caution

See "Tightening torques" (Page 3-5) .
Note that the Baroness product warranty may not apply to defects caused by incorrect or overtorque tightening etc.

Important

After fully tightening the bolt securing the pump idle lever and lever damper, loosen it 1/2 turn, and then secure it with the lock nut.

For installation, reverse the removing procedure.

Fuel tank

Removal of Fuel Tank

Caution

Be careful when handling the fuel tank since it is heavy.

1. Remove the right tank cover. (See "Removal of Right Tank Cover" (Page 7-36) .)
2. Remove the drain plug, and then completely drain the fuel.

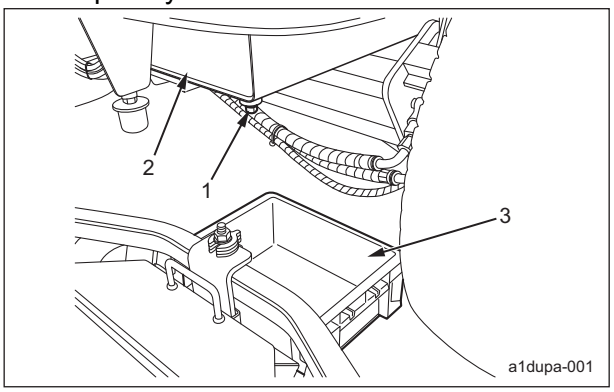

Removal of Fuel Tank_001

1	Drain plug
2	Fuel tank
3	Container

https://truckmanualshub.com/

3. Follow the steps below to remove the fuel hoses.
   [1] With pliers, grab the hose clamp for the fuel hose and move it sideways, and then remove the fuel hose.
   [2] With a Phillips screwdriver, loosen the hose clamp for the return hose, and then remove the return hose.

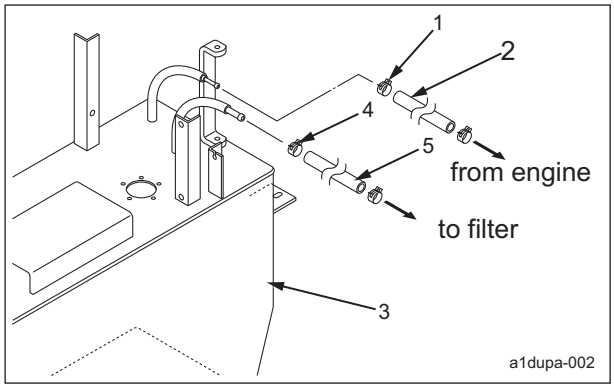

Removal of Fuel Tank_002

1	Hose clamp
2	Fuel hose (engine)
3	Fuel tank
4	Hose clamp
5	Fuel hose (filter)

4. Follow the steps below to remove each device.
   [1] Remove the bolt, nut, spring washer and washer, and then remove the buzzer (metal) and buzzer (plastic).
   [2] Remove the bolt, nut, spring washer and washer, and then remove the relays and glow timer.

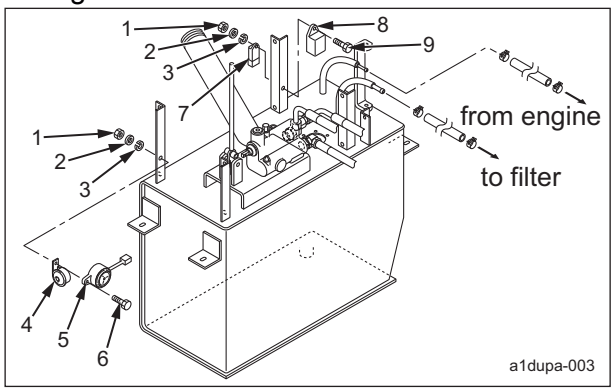

Removal of Fuel Tank_003

1	Nut
2	Spring washer
3	Washer
4	Buzzer (metal)
5	Buzzer (plastic)
6	Bolt
7	Relays
8	Glow timer
9	Bolt

5. Follow the steps below to remove the up/down lever.
   [1] Remove the cotter pin and washer A installed on the rod connecting the control valve and up/down lever.
   [2] Remove the U nut, washer B and bolt used to install the up/down lever, and then remove the up/down lever.

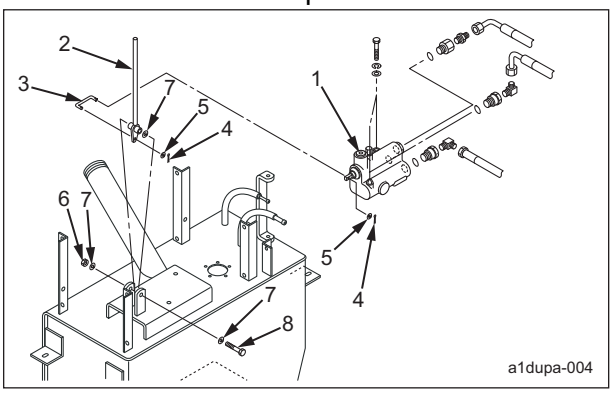

Removal of Fuel Tank_004

1	Control valve
2	Up/down lever
3	Rod
4	Cotter pin
5	Washer A
6	U nut
7	Washer B
8	Bolt

https://truckmanualshub.com/

6. Remove the bolt, spring washer and washer, and then remove the control valve.

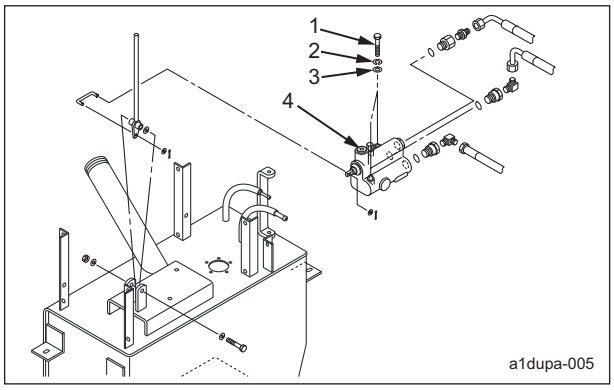

Removal of Fuel Tank_005

1	Bolt
2	Spring washer
3	Washer
4	Control valve

7. Remove the washer, spring washer and bolt, and then remove the cover mounting bracket and fuel tank.

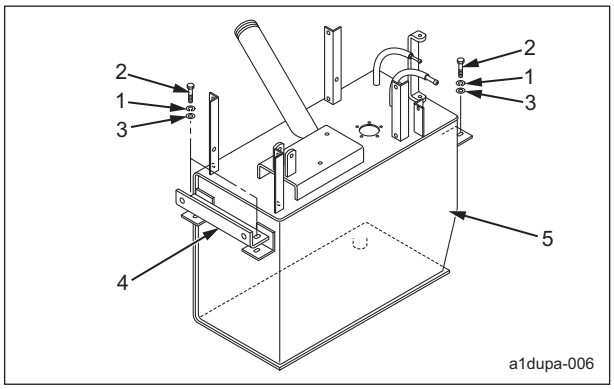

Removal of Fuel Tank_006

1	Spring washer
2	Bolt
3	Washer
4	Cover mounting bracket
5	Fuel tank

Installation of Fuel Tank

Caution

See "Tightening torques" (Page 3-5) .
Note that the Baroness product warranty may not apply to defects caused by incorrect or overtorque tightening etc.

Important

After tightening the bolt securing the up/down lever, loosen it by 1/4 turn, and then make sure that the lever moves smoothly.

Important

Make sure of the installing locations of the hydraulic hoses and pipes and do not install them at the wrong locations.

For installation, reverse the removing procedure.

https://truckmanualshub.com/

Inspection and repair of each section

Tire

Inspection of tire

A worn tire tread may hamper the primary operation of this equipment or result in bursting or slippage of the tire.
Check the tires for any abnormality as described below.

1. Tire pressure
2. Crack, damage
3. Abnormal abrasion

Caution

Check “ "Specifications" (Page 7-2) ” for tire pressure.
Do not pump up a tire more than the specified pressure.

Brake

Inspection of Brake

Danger

Make sure that the brake wire is not cracked or damaged.

Wear of the brake pad may cause increased amount of pedal depression, which results in contact of the pedal with the floor or uneven braking. Inspect the brake.

1. Clearance between disc and pad shall be adjusted as even for the left and right brakes. (See "RT mechanical brake manual" (Page 10-11) .)

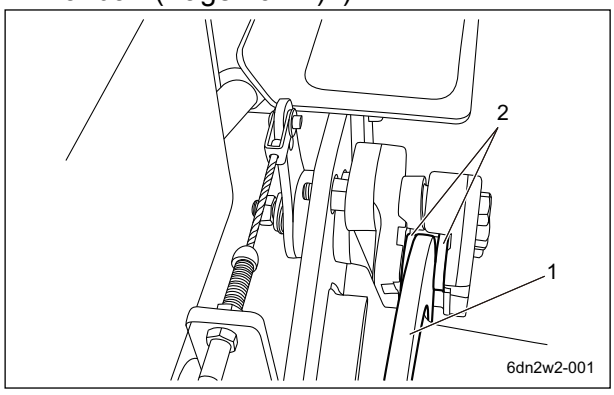

Inspection of Brake_001

1	Disc
2	Brake pad

2. Brake pad wears out gradually as the brake is used just like an eraser.
   Check the remaining amount at the inspection. Replace if it is too small.
   The brake pad wear limit is 3.0 mm (0.12 in). (See "RT mechanical brake manual" (Page 10-11) .)

Disassembling and Assembling the Brake

Caution

Many portions of the brake are exposed outside due to structural reason.
Any oil or grease attached on and around the brake main body may cause negative impact to braking performance, therefore they need to be cleaned using a brush, cloth, etc.

1. Remove the brake pad. (See "RT mechanical brake manual" (Page 10-11) .)
2. Disassemble and assemble the brake. (See "RT mechanical brake manual" (Page 10-11) .)

https://truckmanualshub.com/

Inspection of Parking Brake

Danger

Make sure that the brake wire is not cracked or damaged.

Danger

Make sure that the brake is effective on slopes and that it is not applied any longer when you release it.
Adjust the parking brake system whenever there is any abnormality.

1. Follow the steps below to check that the parking brake is effective.
   [1] Link the left and right brake pedals, then depress both pedals.
   [2] Pull the parking brake lever and apply the parking brake.

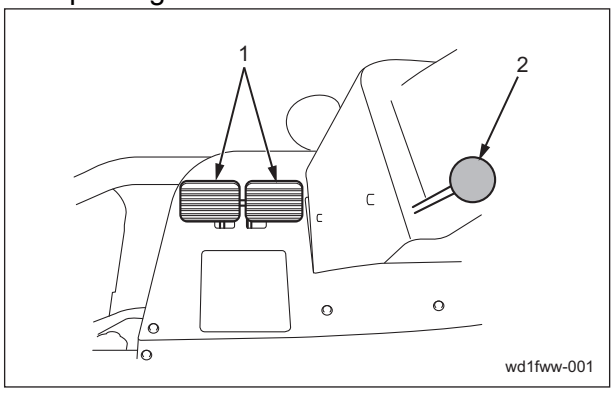

Inspection of Parking Brake 001

1	Brake pedals
2	Parking brake lever

2. Apply the parking brake on a slope with 15-degree gradient and make sure that the machine is completely stopped.
   If it does not stop completely, make necessary adjustment. (See "Adjustment of Brake" (Page 7-11) .)
3. Apply the parking brake, then depress the brake pedal again to check if the parking brake can be released.
   If it can not be released, make necessary adjustment. (See "Adjustment of Brake" (Page 7-11) .)

Brake wire

Inspection of Foot Brake Wire

Danger

Make sure that the brake wire is not cracked or damaged.

Danger

It would be extremely dangerous and may result in an unexpected accident if the left and right brakes are not equally effective.

Danger

If the brake is not sufficiently effective, adjust the brake pad clearance.

If the left and right brakes are not equally effective, make fine adjustments by tightening the adjustment bolt on the brake wire. (See "Adjusted Value of the Foot Brake Wire" (Page 7-3) .)
Use the wire for fine adjustment.

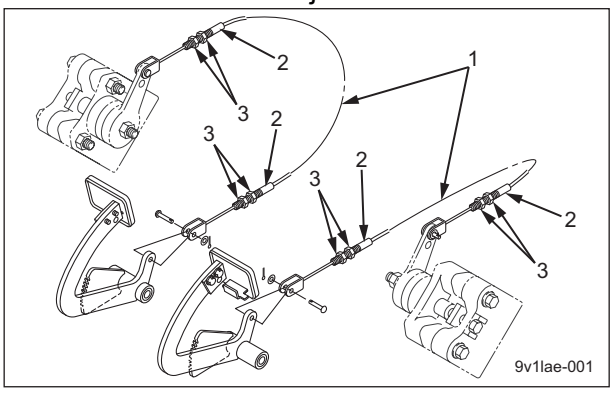

Inspection of Foot Brake Wire_001

1	Brake wire
2	Adjustment bolt
3	Lock nut

https://truckmanualshub.com/

Traveling rod

Inspection of Traveling Rod

The return of the pedal neutral rod compression spring may become insufficient due to the usage frequency for the traveling pedal.
Inspect it and, if necessary, implement adjustment etc.

> **Important**
>
> For details on the adjustment procedure for neutral, refer to the Owner's Operating Manual.

1. Make sure that the compression spring of the pedal rod is not bent nor shortened.
2. Make sure that the adjusted value of the pedal rod and the compression spring is appropriate. (See "Adjusted Value" (Page 7-2) .)
3. Make sure that the pedal bushing is not worn.
4. Make sure that the pedal shaft is not bent nor worn.
5. Make sure that the nuts of the pedal rod, neutral rod and pillow ball are not loose.
6. Make sure that the adjusted value of the neutral rod is appropriate. (See "Adjusted Value" (Page 7-2) .)
7. Make sure that the lever adjustment bracket is not bent nor worn and that the cotter pin is not missing.
8. Make sure that the adjusted value of the neutral lever compression spring is appropriate. (See "Adjusted Value" (Page 7-2) .)

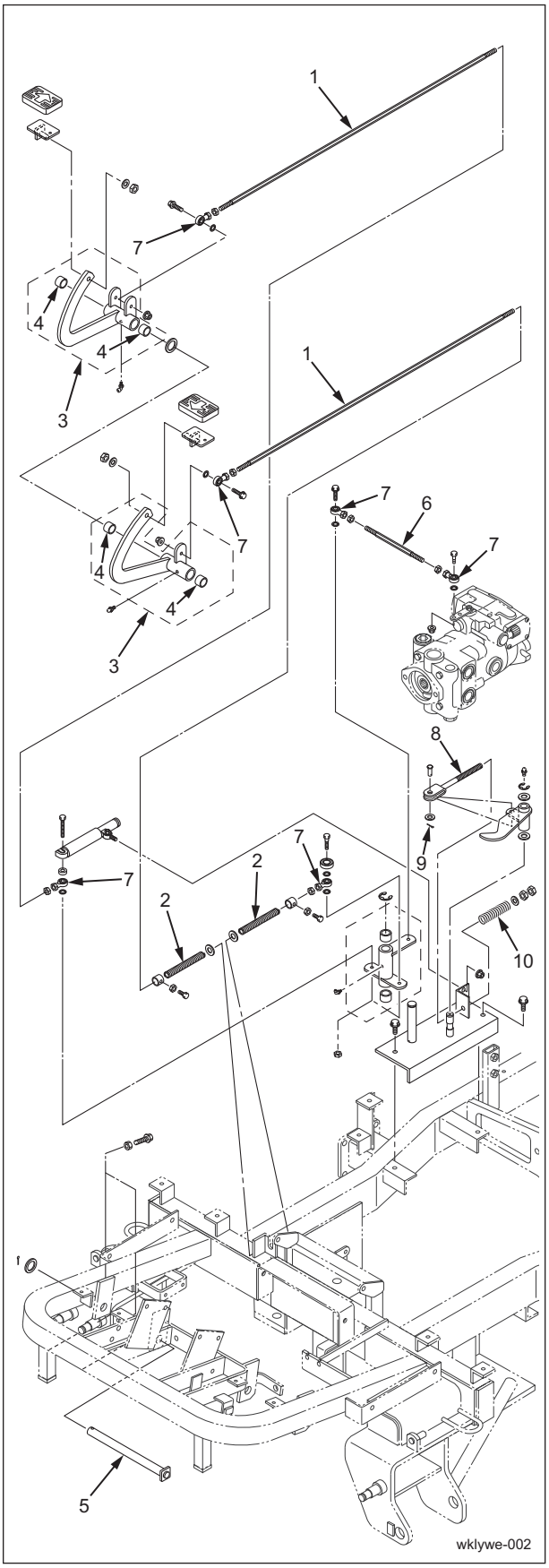

Inspection of Traveling Rod_001

https://truckmanualshub.com/

1	Pedal rod
2	Compression spring
3	Pedal
4	Bushing
5	Pedal shaft
6	Neutral rod
7	Pillow ball
8	Lever adjustment bracket
9	Cotter pin
10	Neutral lever compression spring

Throttle wire

Inspection of Throttle Lever and Wire

With frequent use, the lever movement may not move smoothly, the inner wire play may be affected by the outer wire R angle, and the inner wire may be stretched.
Inspect the lever and wire, and if necessary, implement adjustment etc.

1. Check to ensure that the throttle lever moves smoothly.

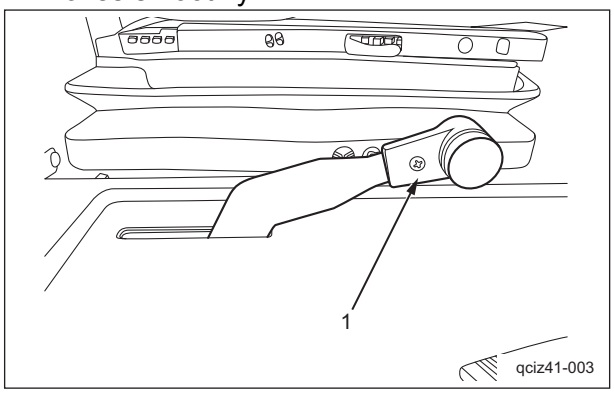

Inspection of Throttle Lever and Wire_001

1	Throttle lever

2. Check to ensure that the throttle lever does not return at the maximum rpm.

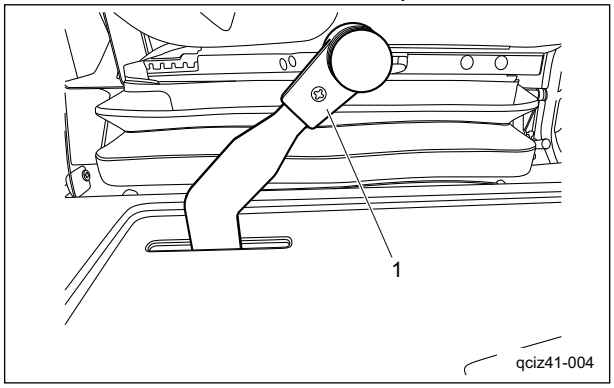

Inspection of Throttle Lever and Wire_002

1	Throttle lever

3. Check to ensure that the throttle wire is not bent or broken.

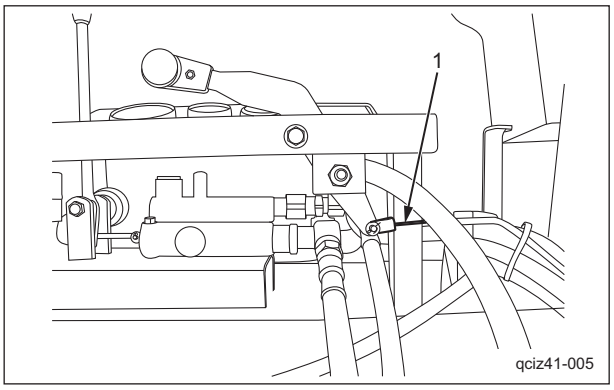

Inspection of Throttle Lever and Wire_003

1	Throttle wire

https://truckmanualshub.com/

Toe-in

Inspection of Tie Rod and Rod Ends

Due to damage to the tie rod and rod ends, it may become difficult to properly handle the machine.
Inspect them and, if necessary, implement adjustment etc.

1. Make sure that the adjusted value of toe-in is appropriate. (See "Adjusted Value" (Page 7-2) .)
2. Make sure that the tie rod is not bent.
3. Make sure that the rod ends are not bent nor worn.
4. Make sure that the cotter pins are not missing from the rod ends.
5. Make sure that the slotted nuts are not loose.
6. Make sure that there is no play between the tie rod socket in the kingpin and the rod end.

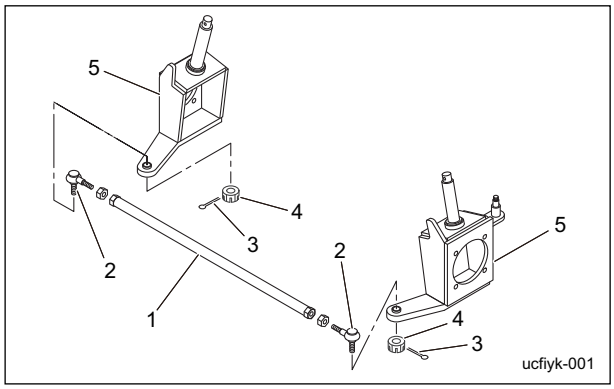

Inspection of Tie Rod and Rod Ends_001

1	Tie rod
2	Rod ends
3	Cotter pin
4	Slotted nut
5	Kingpin

https://truckmanualshub.com/

Operating Machine and Mower Units

Maintenance..... Page 8-2

About Maintenance.....Page 8-2

Specifications..... Page 8-2

Mower Unit Layout.....Page 8-2
Grease.....Page 8-2

Special Tool.....Page 8-3

List of Special Tools.....Page 8-3

Adjustment..... Page 8-5

Cutting Height Adjustment.....Page 8-5

Removal and installation of each section..... Page 8-5

Mower unit..... Page 8-5
Rotary Knife.....Page 8-6
Front Roller Ass'y..... Page 8-9
Rear Roller Ass'y.....Page 8-11
Cutting Height Adjusting Plate.....Page 8-12
Mower Arm..... Page 8-14

Inspection and repair of each section..... Page 8-15

Rotary Knife.....Page 8-15
Housing.....Page 8-22
Roller..... Page 8-26
Mower Arm..... Page 8-30

https://truckmanualshub.com/

Operating Machine and Mower Units

Maintenance

About Maintenance

This chapter provides descriptions of the main inspection and maintenance procedures for the GM2800B mower units.
For information on daily checks, maintenance and handling of the machine, please refer to the separate GM2800B Owner's Operating Manual and Parts Catalog.
For information on attaching and removing optional parts and attachments, refer to the handling instructions for the corresponding attachment.

Specifications

Mower Unit Layout

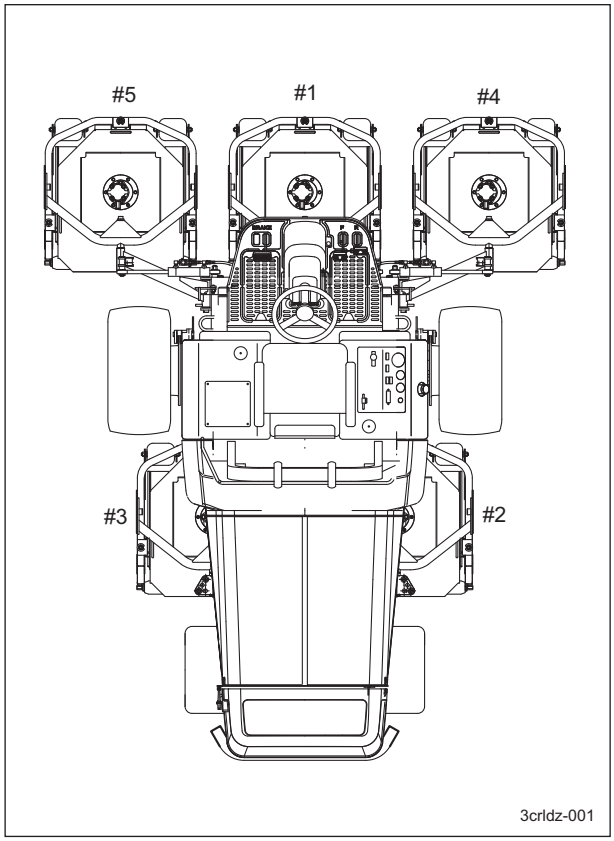

Mower Unit Layout_001

Grease

Use the following type of grease on the operating machine and mower units.

Grease	Excelite EP No. 2 (urea base)

https://truckmanualshub.com/

Special Tool

List of Special Tools

6303 Bearing driver 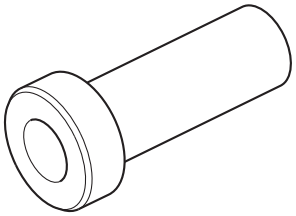 q9c6v6-009	K4802000752	Used when installing bearings with outer Φ47 and inner Φ17
6204 Bearing driver 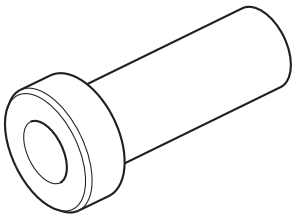 q9c6v6-009	K4802000762	Used when installing bearings with outer Φ47 and inner Φ20
6208 Bearing driver 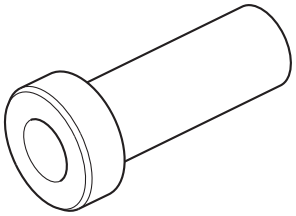 q9c6v6-009	K4802000772	Used when installing bearings with outer Φ80 and inner Φ40

https://truckmanualshub.com/

35 Oil seal installer 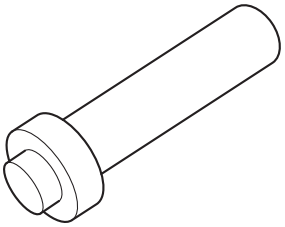 q9c6v6-011	K4802000782	Used when installing Φ35 oil seals
82 Oil seal installer 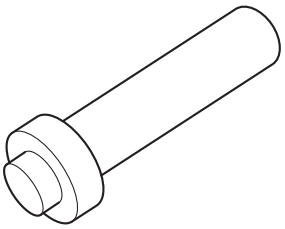 q9c6v6-011	K4802000792	Used when installing Φ82 oil seals

https://truckmanualshub.com/

Adjustment

Cutting Height Adjustment

Make adjustments so as to obtain desired cutting height.
See the handling manual for method for adjustment.

Removal and installation of each section

Mower unit

Removal of Mower Unit

Danger

The rotary knife is an edged tool.
Handle it carefully, since it could cut your hands or legs.

1. Remove the gear motor. (See "Removal of Gear Motor" (Page 5-54) .)
2. Remove the nuts, spring washers, washers, and shoulder bolts that are used to attach the mower unit to the mower arm.

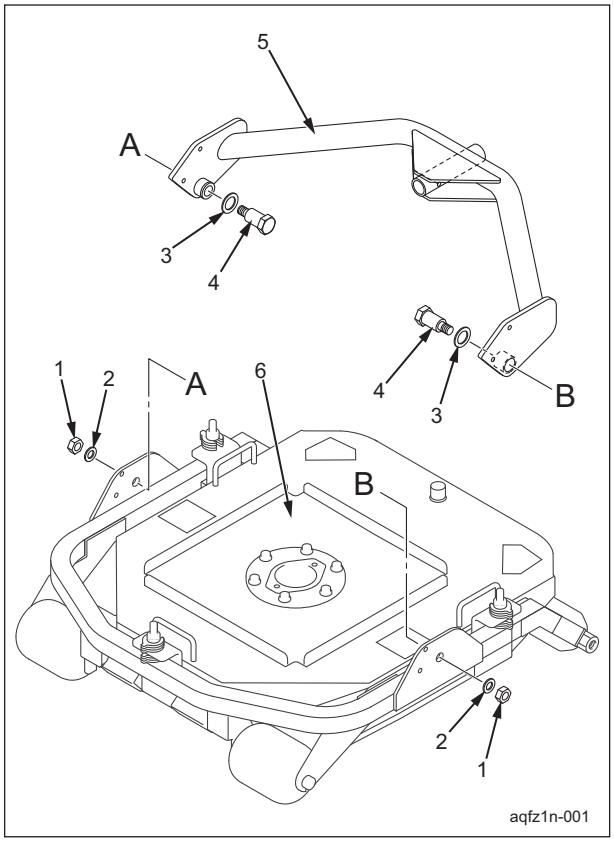

Removal of Mower Unit_001

1	Nut
2	Spring washer
3	Washer
4	Shoulder bolt
5	Mower arm
6	Mower unit

3. Pull out the mower unit to remove it.

Installation of Mower Unit

Danger

The rotary knife is an edged tool.
Handle it carefully, since it could cut your hands or legs.

Caution

See the list in "Tightening torques" (Page 3-5) .
Note that the Baroness product warranty may not apply to defects caused by incorrect or overtorque tightening etc.

For installation, reverse the removing procedure.

https://truckmanualshub.com/

Rotary Knife

Removal of Rotary Knife

▪Mower unit #1

Danger

The rotary knife is an edged tool.
Handle them carefully, since they could cut your hands or legs.

Caution

When touching edged tools, wear gloves, since they could cut your hands.

1. Start the engine, and then raise the mower units.
2. Stop the engine, and then remove the key.
3. Pull up the mower unit.

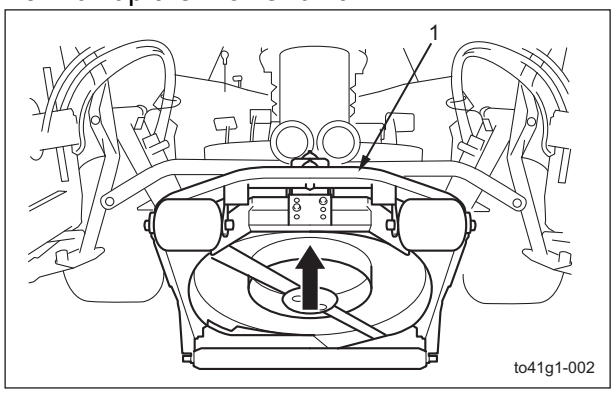

Mower unit #1_001

1	Mower unit

4. Remove the cotter pin and hardened roundhead pin inserted at a, and then insert them at b.

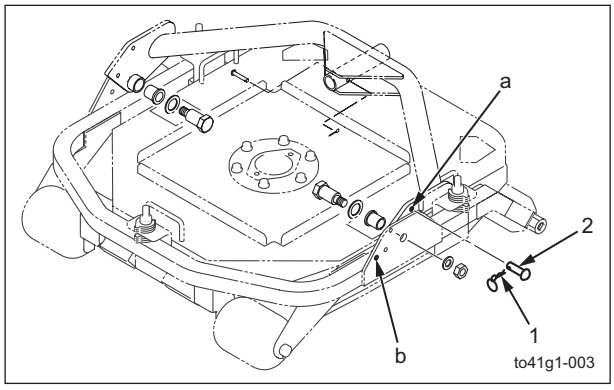

Mower unit #1_002

1	Cotter pin
2	Hardened roundhead pin

5. Follow the steps below to remove the rotary knife.
   [1] Use the square pipe from the included tools to secure the rotary knife so that it does not turn.
   [2] Remove the two bolts, spring washers and washers used to install the rotary knife.
   [3] Remove the knife guide.
   [4] Remove the rotary knife.

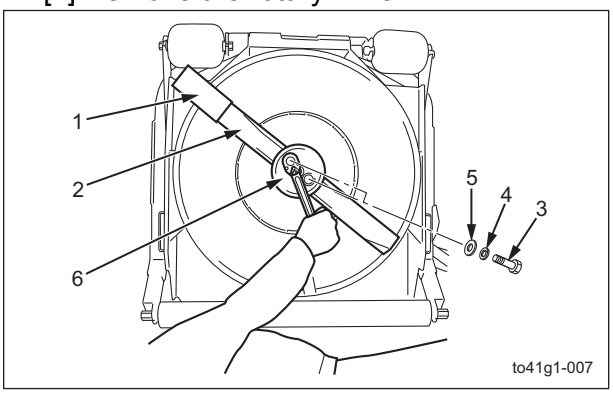

Mower unit #1_003

1	Square pipe
2	Rotary knife
3	Bolt
4	Spring washer
5	Washer
6	Knife guide

https://truckmanualshub.com/

▪Mower Units #2/#3

Danger

The rotary knife is an edged tool.
Handle it carefully, since it could cut your hands or legs.

Caution

When touching edged tools, wear gloves, since they could cut your hands.

1. Remove the clip pin installed on the mower arm, and then pull out the grip pin.

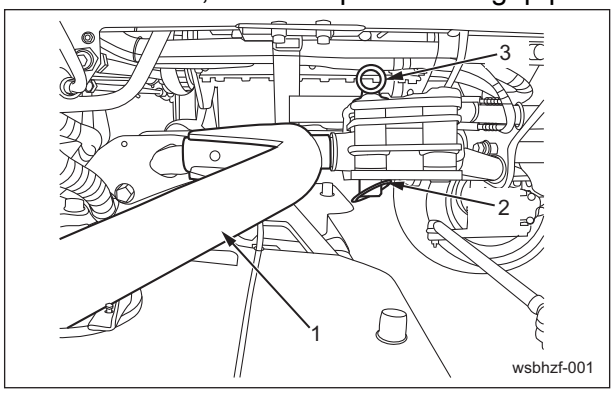

Mower Units #2/#3_001

1	Mower arm
2	Clip pin
3	Grip pin

2. Pull out the mower unit.

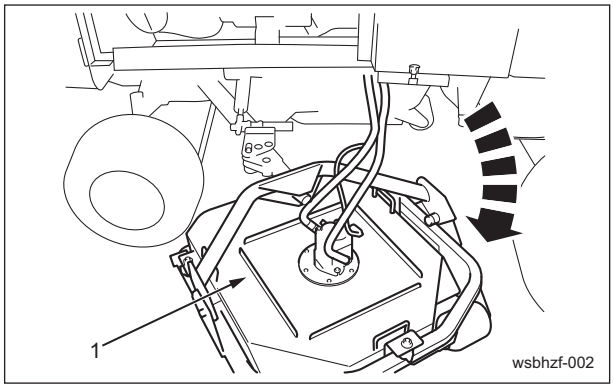

Mower Units #2/#3_002

1	Mower unit

3. Install the grip pin and clip pin in the locking hole for maintenance.

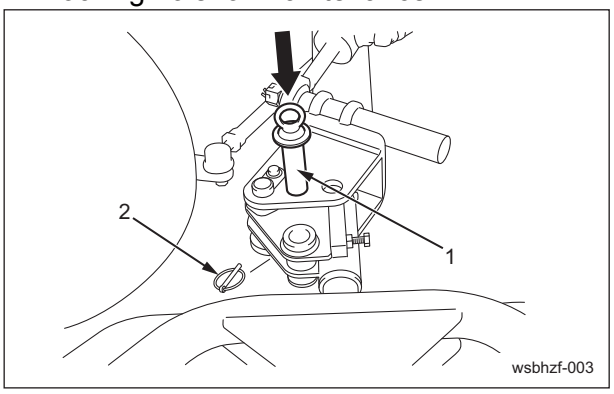

Mower Units #2/#3_003

1	Grip pin
2	Clip pin

4. Start the engine, and then raise the mower units.
5. Stop the engine, and then remove the key.
6. Lift the mower unit at the front.

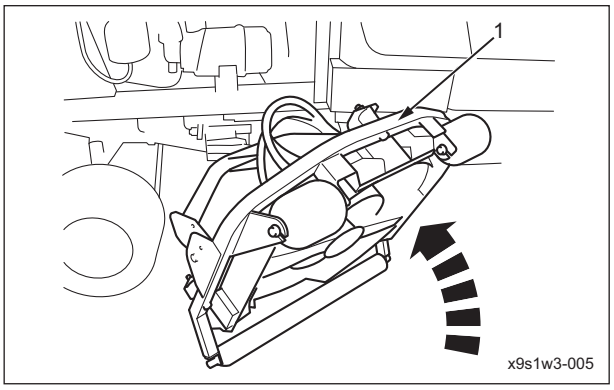

Mower Units #2/#3_004

1	Mower unit

7. Remove the cotter pin and hardened roundhead pin inserted at a, and then insert them at b.

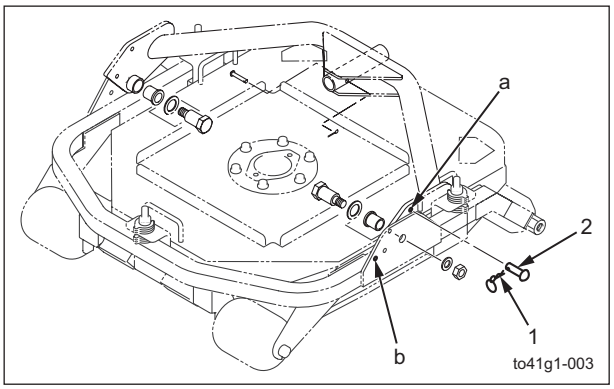

Mower Units #2/#3_005

1	Cotter pin
2	Hardened roundhead pin

https://truckmanualshub.com/

8. Follow the steps below to remove the rotary knife.
   [1] Use the square pipe from the included tools to secure the rotary knife so that it does not turn.
   [2] Remove the two bolts, spring washers and washers used to install the rotary knife.
   [3] Remove the knife guide.
   [4] Remove the rotary knife.

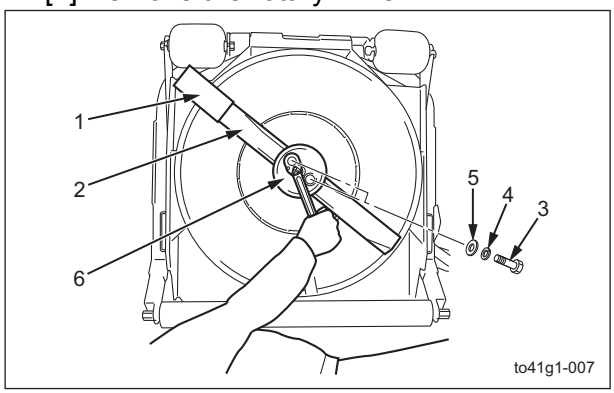

Mower Units #2/#3_006

1	Square pipe
2	Rotary knife
3	Bolt
4	Spring washer
5	Washer
6	Knife guide

▪Mower Units #4/#5

Danger

The rotary knife is an edged tool.
Handle them carefully, since they could cut your hands or legs.

Caution

When touching edged tools, wear gloves, since they could cut your hands.

1. Start the engine, and then raise the mower units.

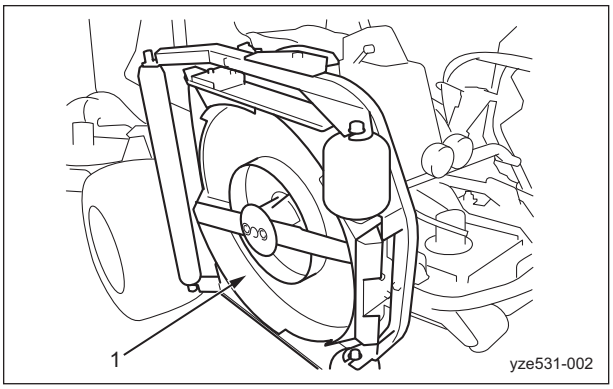

Mower Units #4/#5_001

1	Mower unit

2. Stop the engine, and then remove the key.
3. Remove the cotter pin and hardened roundhead pin inserted at a, and then insert them at b.

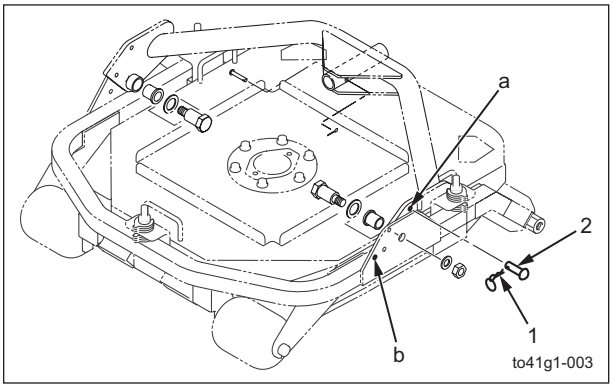

Mower Units #4/#5_002

1	Cotter pin
2	Hardened roundhead pin

4. Follow the steps below to remove the rotary knife.
   [1] Use the square pipe from the included tools to secure the rotary knife so that it does not turn.

https://truckmanualshub.com/

[2] Remove the two bolts, spring washers and washers used to install the rotary knife.
[3] Remove the knife guide.
[4] Remove the rotary knife.

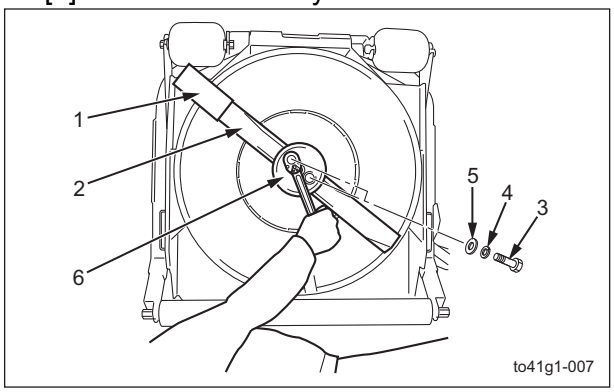

Mower Units #4/#5_003

1	Square pipe
2	Rotary knife
3	Bolt
4	Spring washer
5	Washer
6	Knife guide

Installation of Rotary Knife

Danger

The rotary knife is an edged tool.
Take extra care in handling since they could cut your hands or legs.

Caution

See the list in "Tightening torques" (Page 3-5) .
Note that the Baroness product warranty may not apply to defects caused by incorrect or overtorque tightening etc.

Caution

The rotary knife has a specific installation direction.
Do not install the rotary knife facing the wrong direction.

Important

The tightening torque for the knife mounting bolt is 104 - 134N-m (10.4 - 13.4kgf-cm).

For installing it, reverse the removing procedure.

Front Roller Ass'y

Removal of Front Roller Assembly

Danger

The rotary knife is an edged tool.
Handle it carefully, since it could cut your hands or legs.

Caution

When touching edged tools, wear gloves, since they could cut your hands.

1. Remove the mower units. (See "Removal of Mower Unit" (Page 8-5) .)
2. Reverse the mower units.

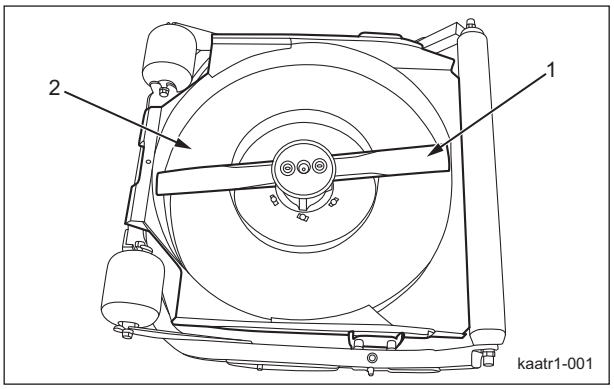

Removal of Front Roller Assembly_001

1	Rotary knife
2	Mower unit

https://truckmanualshub.com/

3. Remove the left and right nuts and washers that are used to attach the front roller assembly to the mower frame.

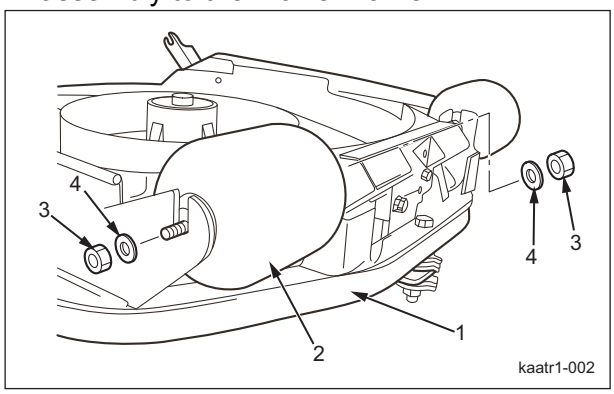

Removal of Front Roller Assembly_002

1	Mower frame
2	Front roller assembly
3	Nut
4	Washer

4. Lift the front roller assembly and remove it from the mower frame.

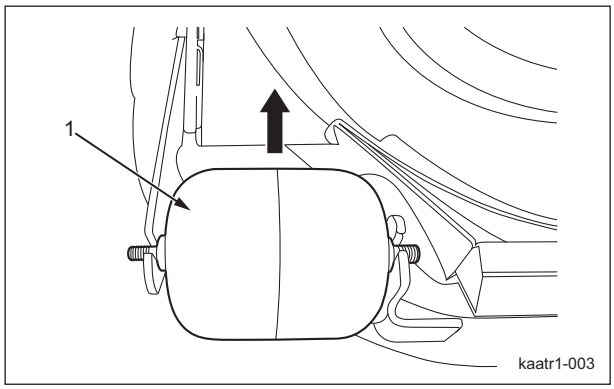

Removal of Front Roller Assembly_003

1	Front roller assembly

5. Follow the same procedure to remove the front roller assembly on the opposite side.

Installation of Front Roller Ass'y

Danger

The rotary knife is an edged tool.
Handle them carefully, since they could cut your hands or legs.

Caution

When touching edged tools, wear gloves, since they could cut your hands.

Caution

See the list in "Tightening torques" (Page 3-5) .
Note that the Baroness product warranty may not apply to defects caused by incorrect or overtorque tightening etc.

1. Insert the front roller ass'y onto the mower frame.

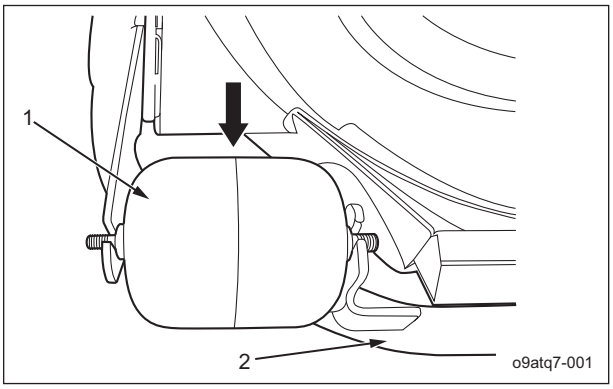

Installation of Front Roller Ass'y_001

1	Front roller ass'y
2	Mower frame

Note:
If the front roller ass'y is not fully inserted, tap it with a plastic hammer until it fits into the correct installation position.

2. Follow the steps below to install the disc springs and nuts on the left and right ends of the shaft.

[1] Temporarily tighten the disc springs and nuts on the left and right ends so the shaft will not move out of place.

https://truckmanualshub.com/

[2] Tighten the disc springs and nuts on the left and right ends.

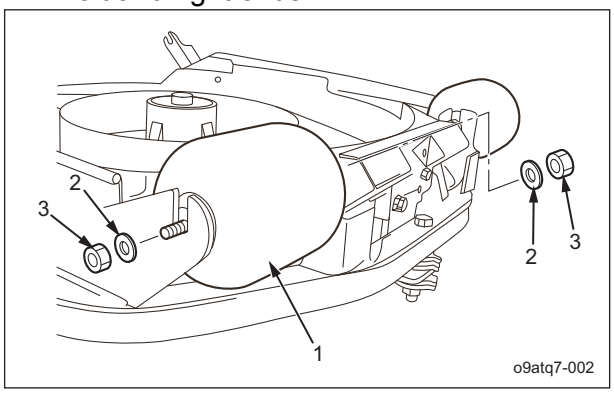

Installation of Front Roller Ass'y_002

1	Front roller ass'y
2	Disc spring
3	Nut

3. Follow the same steps to complete the installation on the opposite side.

Rear Roller Ass'y

Removal of Rear Roller Assembly

Danger

The rotary knife is an edged tool.
Handle it carefully, since it could cut your hands or legs.

Caution

When touching edged tools, wear gloves, since they could cut your hands.

1. Remove the mower units. (See "Removal of Mower Unit" (Page 8-5) .)
2. Reverse the mower units.

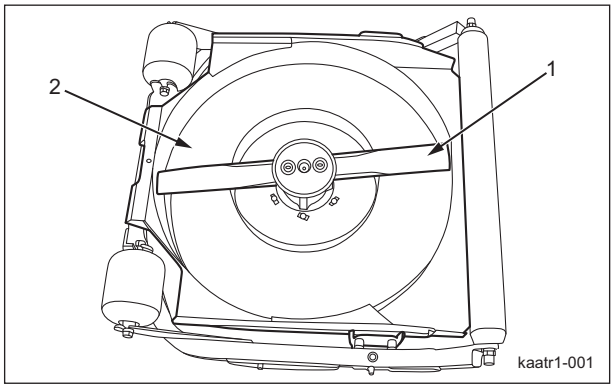

Removal of Rear Roller Assembly_001

1	Rotary knife
2	Mower unit

3. Remove the left and right nuts and washers that are used to attach the rear roller assembly to the mower frame.

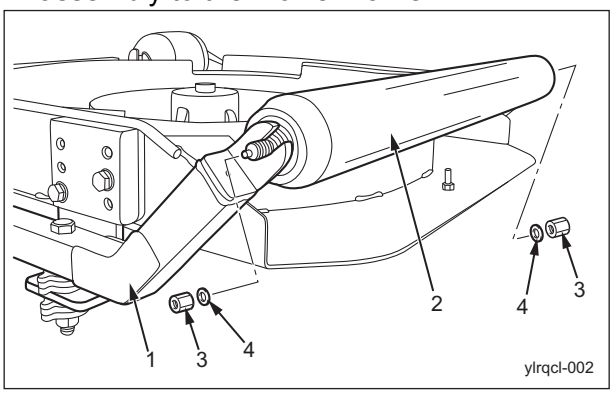

Removal of Rear Roller Assembly_002

1	Mower frame
2	Rear roller assembly
3	Nut
4	Washer

4. Lift the rear roller assembly and remove it from the mower frame.

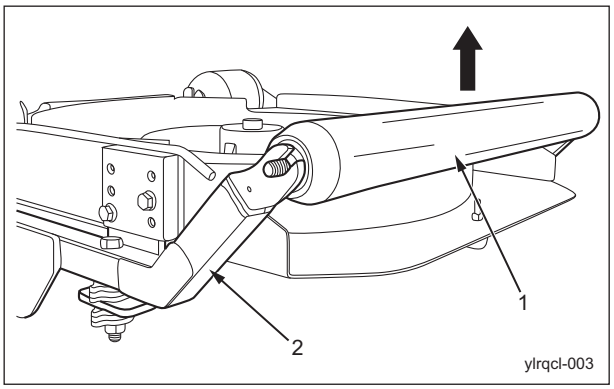

Removal of Rear Roller Assembly_003

1	Rear roller assembly
2	Mower frame

https://truckmanualshub.com/

Installation of Rear Roller Ass'y

Danger

The rotary knife is an edged tool.
Handle them carefully, since they could cut your hands or legs.

Caution

When touching edged tools, wear gloves, since they could cut your hands.

Caution

See the list in "Tightening torques" (Page 3-5) .
Note that the Baroness product warranty may not apply to defects caused by incorrect or overtorque tightening etc.

For installation, reverse the removing procedure.

Cutting Height Adjusting Plate

Removal of Cutting Height Adjustment Plate

Danger

The rotary knife is an edged tool.
Handle it carefully, since it could cut your hands or legs.

Caution

When touching edged tools, wear gloves, since they could cut your hands.

1. Remove the mower frame. (See "Removal of Mower Unit" (Page 8-5) .)
2. Remove nut, washer, and adjustment collar.

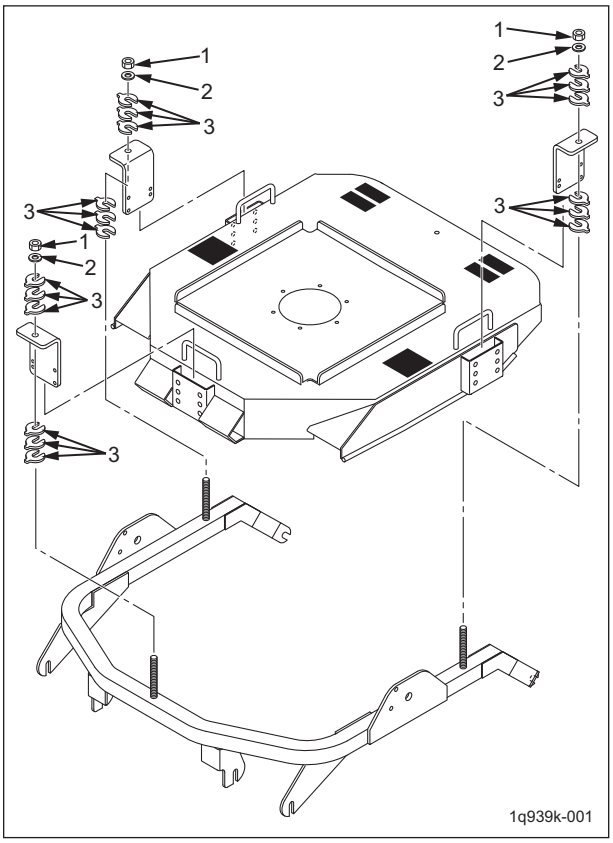

Removal of Cutting Height Adjustment Plate_001

1	Nut
2	Washer
3	Adjusting collar

https://truckmanualshub.com/

Important

The cutting height adjustment plate has six holes.
Check and mark the installation position of the bolts used to install when removing the cutting height adjustment plate.

3. Remove the bolts with the flange used to install the cutting height adjustment plate, and then remove the cutting height adjustment plate.

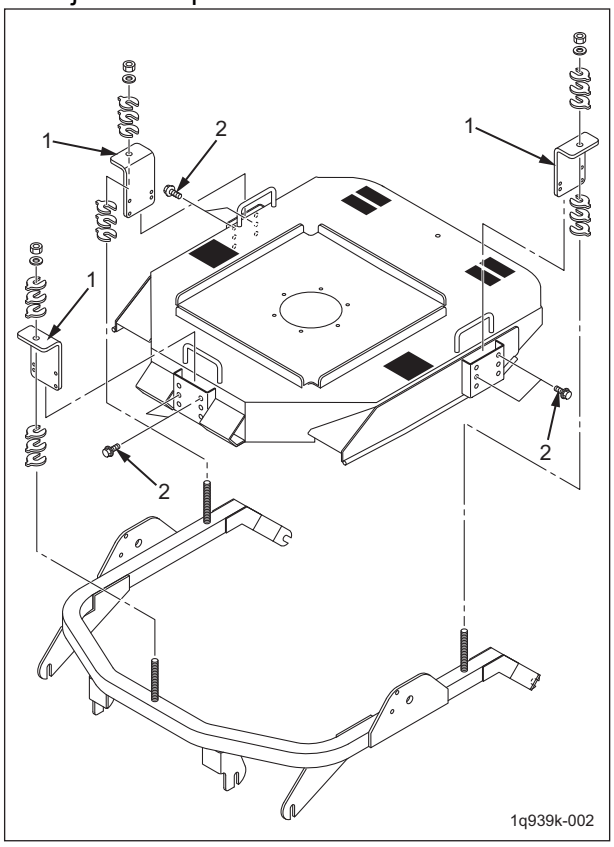

Removal of Cutting Height Adjustment Plate_002

1	Cutting height adjusting plate
2	Bolt with flange

Installation of Cutting Height Adjusting Plates

Danger

The rotary knife is an edged tool.
Handle them carefully, since they could cut your hands or legs.

Caution

When touching edged tools, wear gloves, since they could cut your hands.

Caution

See the list in "Tightening torques" (Page 3-5) .
Note that the Baroness product warranty may not apply to defects caused by incorrect or overtorque tightening etc.

For installation, reverse the removing procedure.

https://truckmanualshub.com/

Operating Machine and Mower Units

Mower Arm

Removal of Mower Arm

Danger

The rotary knife is an edged tool.
Handle them carefully, since they could cut your hands or legs.

Caution

When touching edged tools, wear gloves, since they could cut your hands.

1. Remove the mower units. (See "Removal of Mower Unit" (Page 8-5) .)
2. Follow the steps below to remove the mower arm.
   [1] Remove the nut, spring washer, shoulder bolt then washer in this order.
   [2] Pull up the mower arm upwards to remove it.

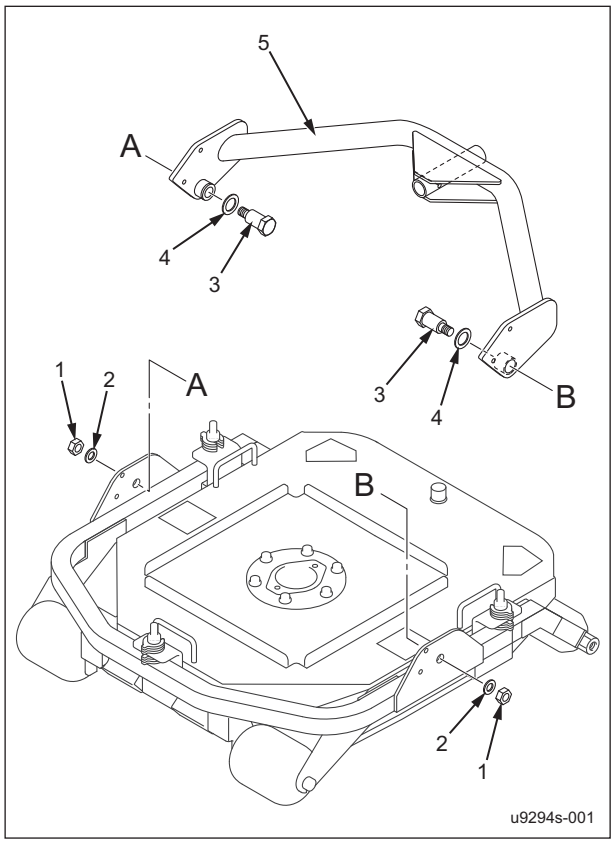

Removal of Mower Arm_001

1	Nut
2	Spring washer
3	Shoulder bolt
4	Washer
5	Mower arm

Installation of Mower Arm

Danger

The rotary knife is an edged tool.
Handle them carefully, since they could cut your hands or legs.

Caution

When touching edged tools, wear gloves, since they could cut your hands.

Caution

See the list in "Tightening torques" (Page 3-5) .
Note that the Baroness product warranty may not apply to defects caused by incorrect or overtorque tightening etc.

For installing it, reverse the removing procedure.
For details on adjustment of mowing height, please refer to the separate Handling Manual.

https://truckmanualshub.com/

Inspection and repair of each section

Rotary Knife

Inspection of Rotary Knife

Danger

The rotary knife is an edged tool.
Handle them carefully, since they could cut your hands or legs.

Caution

When touching edged tools, wear gloves, since they could cut your hands.

Due to frequent use, objects crushed during mowing, or damage during transportation and so forth, the rotary knife may vibrate from imbalance or become dull.
Inspect the rotary knife, and if necessary, resharpen, balance or replace it.

Important

Frequently inspect the rotary knife since it may become dull quickly if the machine is operated in an environment of dry soil or sand.

1. Make sure that the rotary knife is not bent.
2. Make sure that the rotary knife is not chipped.
3. Check to see how much the rotary knife is worn.
4. Make sure that the rotary knife is not worn asymmetrically.
5. Make sure that the mounting bolt for the rotary knife is not loose.
6. Make sure that there are no cracks or tears between the sail and flat part of the rotary knife.

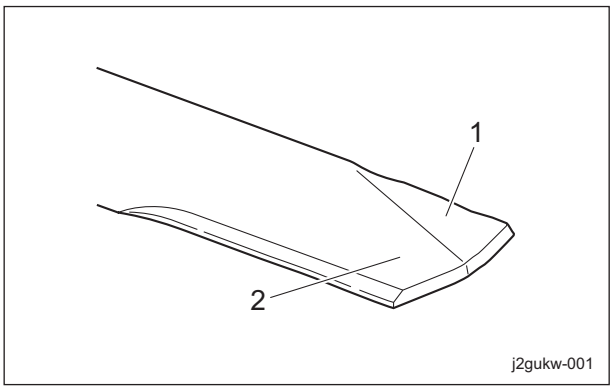

Inspection of Rotary Knife_001

1	Sail
2	Flat part

https://truckmanualshub.com/

Change of Rotary Knife

Danger

The rotary knife is an edged tool.
Take extra care in handling since they could cut your hands or legs.

Danger

If the rotary knife becomes worn or damaged, a crack or tear between the sail and flat part will result.
Take extra care since a broken piece of the rotary knife may fly off while it is rotating.

Caution

When touching edged tools, wear gloves, since they could cut your hands.

Caution

The rotary knife has a specific installation direction.
Do not install it facing the wrong direction.

Important

Before installing the rotary knife, make sure that it is balanced.

If the edge of the rotary knife becomes chipped or thin, replace it with a new one. The criteria for replacing the rotary knife are described below.

1. When the narrowest part of the rotary knife has a width of less than 2/3 of the width of a new knife

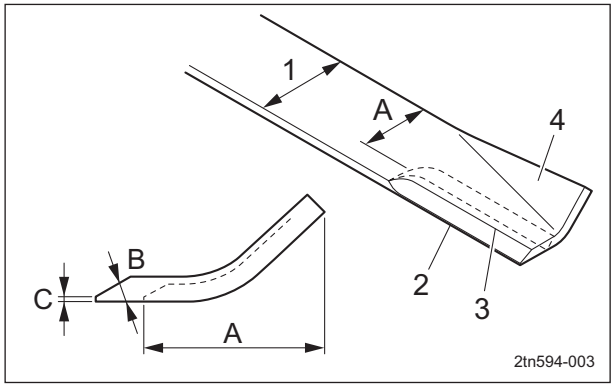

Replacement of Rotary Knife_001

1	Total width
2	Blade edge
3	Blade base
4	Sail
A	less than 2/3
B	30 - 40°
C	0.5 - 1.0 mm

2. When the thinnest part of the rotary knife has a thickness of less than 1/3 of the thickness of a new knife

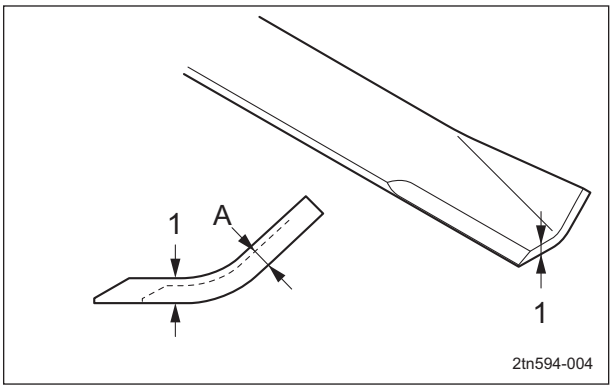

Replacement of Rotary Knife_002

1	Thickness
A	less than 1/3

▪Mower unit #1

1. Start the engine, and then raise the mower units.
2. Stop the engine, and then remove the key.
3. Lift the mower unit at the front.

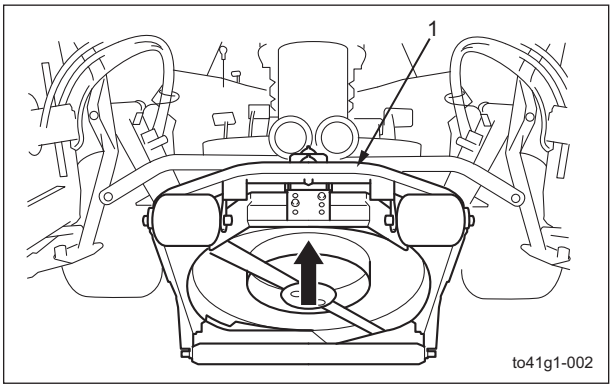

Mower unit #1_001

1	Mower unit

https://truckmanualshub.com/

4. Remove the cotter pin and hardened roundhead pin inserted at a, and then insert them at b.

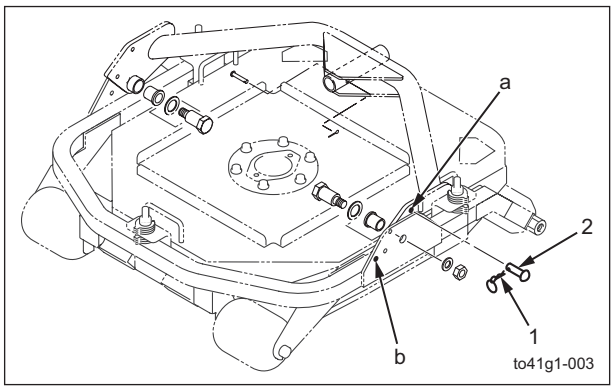

Mower unit #1_002

1	Cotter pin
2	Hardened roundhead pin

5. Follow the steps below to remove the rotary knife.
   [1] Use the square pipe from the included tools to secure the rotary knife so that it does not turn.
   [2] Remove the two bolts, spring washers and washers used to install the rotary knife.
   [3] Remove the knife guide.
   [4] Remove the rotary knife.

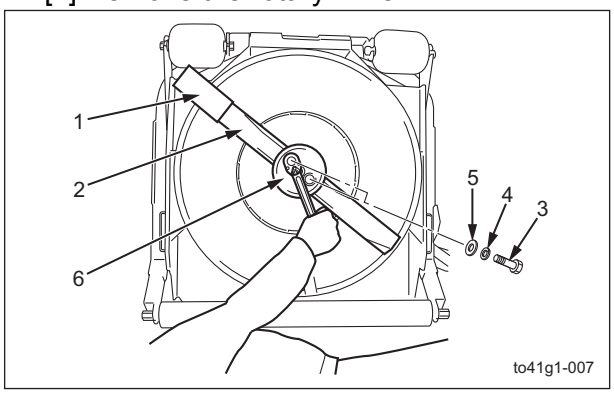

Mower unit #1_003

1	Square pipe
2	Rotary knife
3	Bolt
4	Spring washer
5	Washer
6	Knife guide

Important

The tightening torque for the knife mounting bolt is 67 - 85 N-m (683.20 - 866.75 kgf-cm).

6. Install the rotary knife.
   For installing the rotary knife, reverse the removing procedure.

■Mower Units #2/#3

1. Remove the clip pin installed on the mower arm, and then pull out the grip pin.

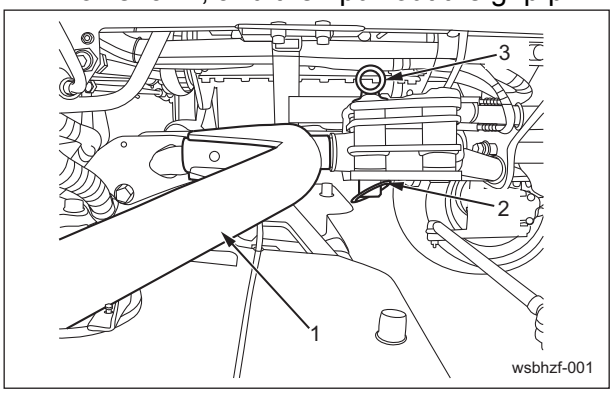

Mower Units #2/#3_001

1	Mower arm
2	Clip pin
3	Grip pin

2. Pull out the mower unit.

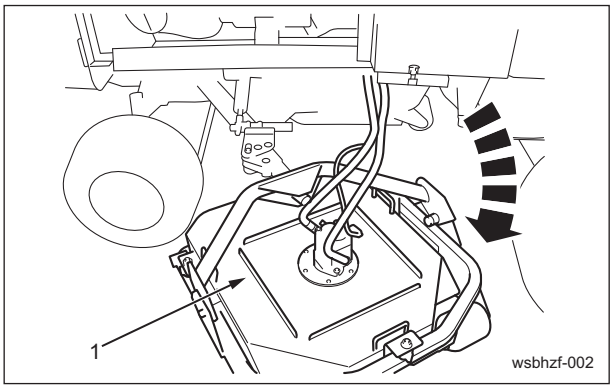

Mower Units #2/#3_002

1	Mower unit

https://truckmanualshub.com/

3. Install the grip pin and clip pin in the mounting hole for maintenance.

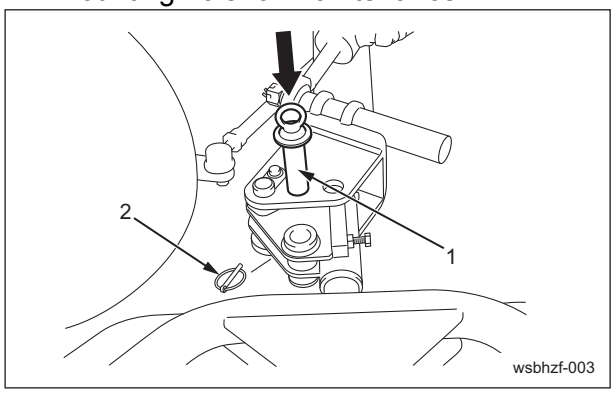

Mower Units #2/#3_003

1	Grip pin
2	Clip pin

4. Start the engine, and then raise the mower units.
5. Stop the engine, and then remove the key.
6. Lift the mower unit at the front.

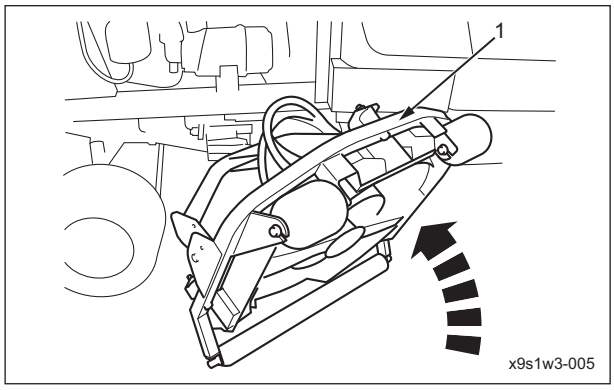

Mower Units #2/#3_004

1	Mower unit

7. Remove the cotter pin and hardened roundhead pin inserted at a, and then insert them at b.

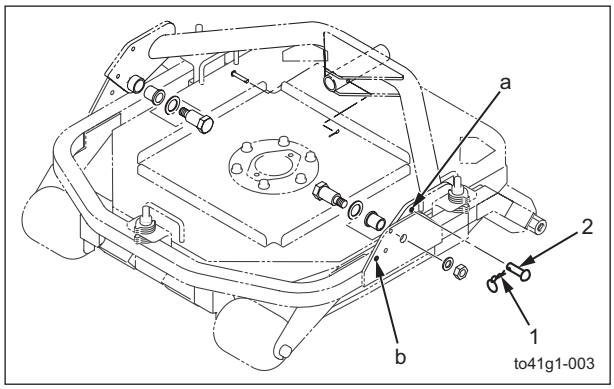

Mower Units #2/#3_005

1	Cotter pin
2	Hardened roundhead pin

8. Follow the steps below to remove the rotary knife.
   [1] Use the square pipe from the included tools to secure the rotary knife so that it does not turn.
   [2] Remove the two bolts, spring washers and washers used to install the rotary knife.
   [3] Remove the knife guide.
   [4] Remove the rotary knife.

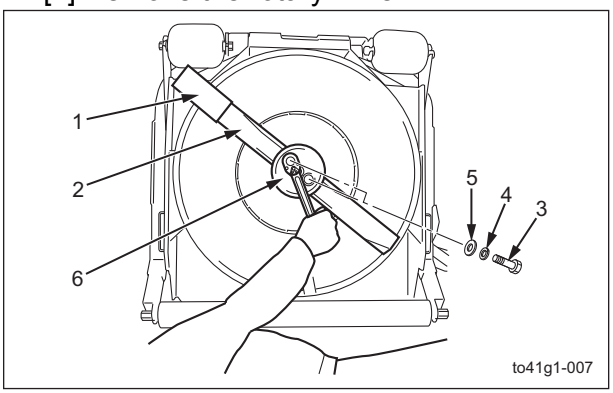

Mower Units #2/#3_006

1	Square pipe
2	Rotary knife
3	Bolt
4	Spring washer
5	Washer
6	Knife guide

Important

The tightening torque for the knife mounting bolt is 67 - 85 N-m (683.20 - 866.75 kgf-cm).

9. Install the rotary knife.
   For installing the rotary knife, reverse the removing procedure.

https://truckmanualshub.com/

■Mower Units #4/#5

1. Start the engine, and then raise the mower units.

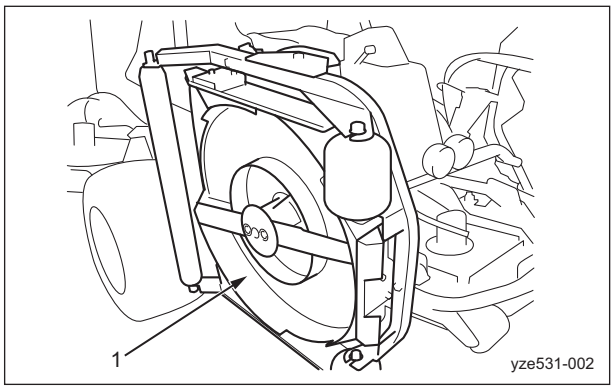

Mower Units #4/#5_001

1	Mower unit

2. Stop the engine, and then remove the key.
3. Remove the cotter pin and hardened roundhead pin inserted at a, and then insert them at b.

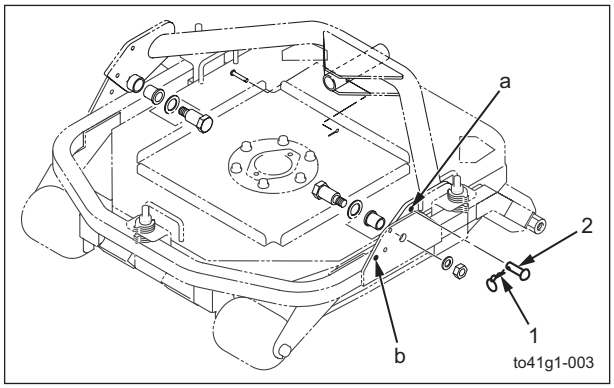

Mower Units #4/#5_002

1	Cotter pin
2	Hardened roundhead pin

4. Follow the steps below to remove the rotary knife.
   [1] Use the square pipe from the included tools to secure the rotary knife so that it does not turn.
   [2] Remove the two bolts, spring washers and washers used to install the rotary knife.
   [3] Remove the knife guide.
   [4] Remove the rotary knife.

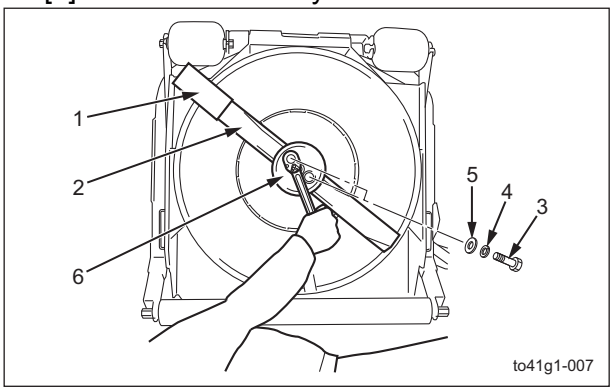

Mower Units #4/#5_003

1	Square pipe
2	Rotary knife
3	Bolt
4	Spring washer
5	Washer
6	Knife guide

Important

The tightening torque for the knife mounting bolt is 67 - 85 N-m (683.20 - 866.75 kgf-cm).

5. Install the rotary knife.
   For installing the rotary knife, reverse the removing procedure.

https://truckmanualshub.com/

Grinding of Rotary Knife

Danger

The rotary knife is an edged tool.
Take extra care in handling since they could cut your hands or legs.

Danger

If the rotary knife becomes worn or damaged, a crack or tear between the sail and flat part will result.
Take extra care since a broken piece of the rotary knife may fly off while it is rotating.

Warning

Using an imbalanced rotary knife may cause vibrations, resulting in damage to the machine.

Caution

When grinding the rotary knife, be sure to wear safety glasses and gloves.

When the edge of the rotary knife becomes rounded and no longer cuts well, sharpen the worn cutting edge with a grinder or sander.
If the edge of the rotary knife becomes chipped or thin, replace it with a new one.
The criteria for grinding the rotary knife is described below.

1. When, after grinding, the width of the rotary knife to the blade edge is 2/3 or more of the total width of a new knife
2. When, after grinding, the blade base of the rotary knife does not reach the sail

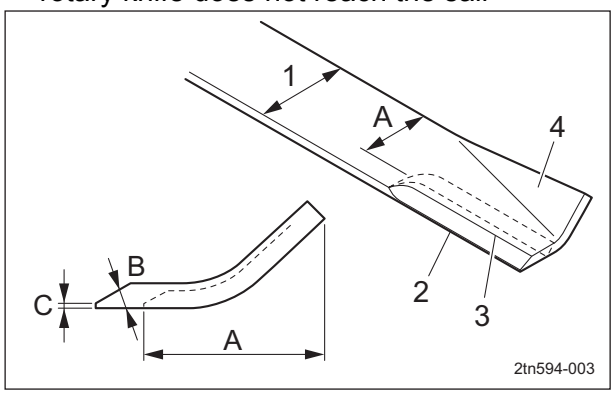

Grinding of Rotary Knife_001

1	Total width
2	Blade edge
3	Blade base
4	Sail
A	2/3 or more
B	30 - 40°
C	0.5 - 1.0 mm

3. When the thinnest part of the rotary knife has a thickness of 1/3 or more of the thickness of a new knife

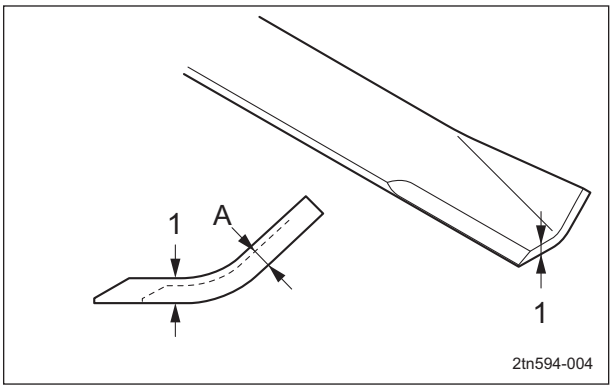

Grinding of Rotary Knife_002

1	Thickness
A	1/3 or more

https://truckmanualshub.com/

Follow the steps below to grind the rotary knife.

1. Remove the rotary knife from the machine. (See "Removal of Rotary Knife" (Page 8-6) .)

Important

Grind only the top surface of the edge, and be sure to maintain the original angle.
By equally grinding the left and right ends of the rotary knife, it can be sharpened without becoming imbalanced.

2. Grind the cutting edge of the rotary knife with a grinder.
   Grind so that the edge angle is 30 - 40 degrees, the point thickness is 0.5 - 1.0 mm, and the blade base does not reach the sail.

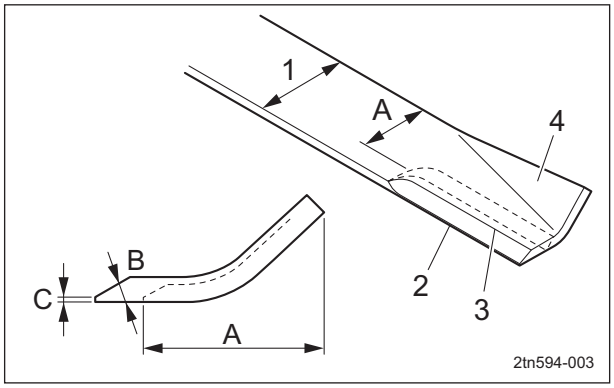

Grinding of Rotary Knife_003

1	Total width
2	Blade edge
3	Blade base
4	Sail
A	2/3 or more
B	30 - 40°
C	0.5 - 1.0 mm

3. Balance the rotary knife. (See "Balancing of Rotary Knife" (Page 8-21) .)
4. If it is not balanced, repeat steps 2. - 3.

Balancing of Rotary Knife

Danger

The rotary knife is an edged tool.
Take extra care in handling since they could cut your hands or legs.

Danger

Using an imbalanced rotary knife may cause vibrations, resulting in damage to the machine.

Caution

When touching edged tools, wear gloves, since they could cut your hands.

When the rotary knife is worn asymmetrically, causing vibrations, or when it becomes dull or worn, remove the rotary knife from the machine and balance it.
Follow the steps below to balance the rotary knife.

1. Remove the rotary knife from the machine. （See "Removal of Rotary Knife" (Page 8-6) .)
2. Install the balancer equipment in an appropriate location.
3. Fit the hole at the center of the rotary knife onto the balancer equipment, and then balance the left and right ends so that the rotary knife is level.

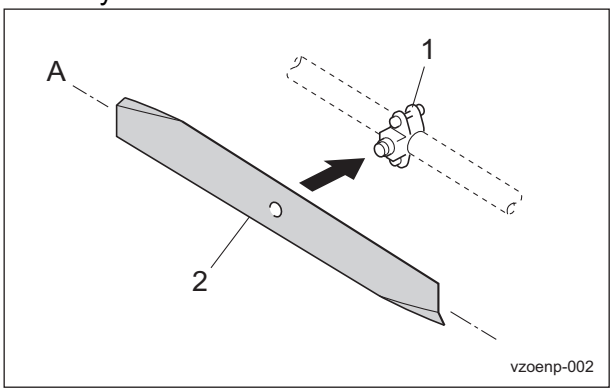

Balancing of Rotary Knife_001

1	Balancer equipment
2	Rotary knife
A	Level

https://truckmanualshub.com/

Housing

Inspection of Housing

Bearing wear due to frequent usage or bearing damage caused by water infiltration may prevent the rotary knife from rotating smoothly. Inspect and replace parts such as oil seals and bearings.

- Make sure that the housing does not have any chips or cracks.
- Make sure that there is no wear or damage of the shaft.
- Make sure that there is no wear or damage of the oil seal.
- Make sure that there is no wear or rusting of the bearing.
- Make sure that there is no play in the fit of the shaft and the bearing.

Danger

The rotary knife is an edged tool.
Handle it carefully, since it could cut your hands or legs.

Caution

Wear gloves when touching edged tools to avoid cutting your hands.

1. Remove the mower unit. (See "Removal of Mower Unit" (Page 8-5) .)
2. Remove the two bolts used to install the stopper, and then remove the stopper.

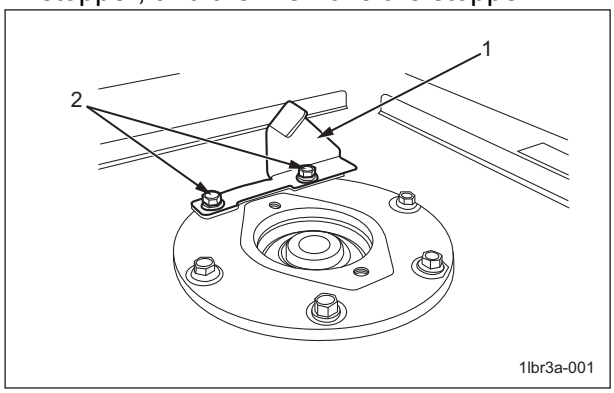

Inspection of Housing_001

1	Stopper
2	Bolt

3. Remove the four bolts used to install the housing.

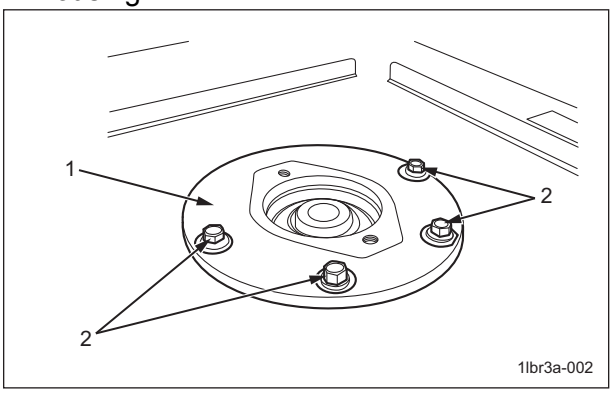

Inspection of Housing_002

1	Housing
2	Bolt

4. Pull up the housing to remove it.

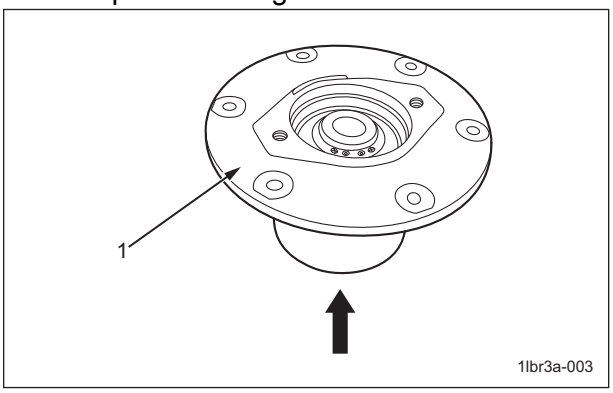

Inspection of Housing_003

1	Housing

5. Remove the roundhead screw and washer used to install the stop ring, and then remove the stop ring.

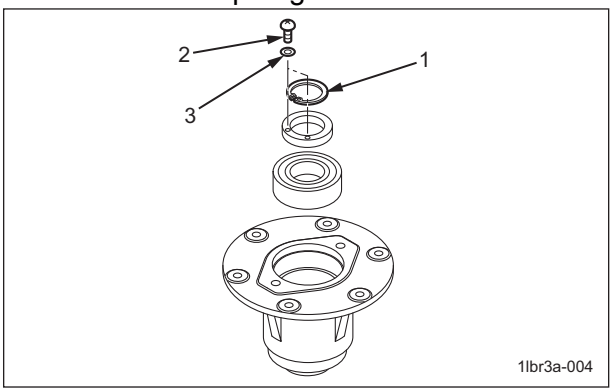

Inspection of Housing_004

1	Stop ring
2	Roundhead screw
3	Washer

https://truckmanualshub.com/

6. In order to avoid damage to the shaft when removing it, use an iron pipe, etc., and tap the pipe with a plastic hammer.

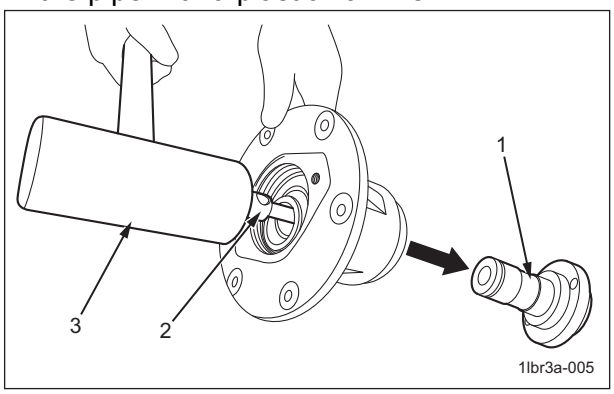

Inspection of Housing_005

1	Shaft
2	Iron pipe
3	Plastic hammer

7. Place the housing upside down and remove the stop ring.

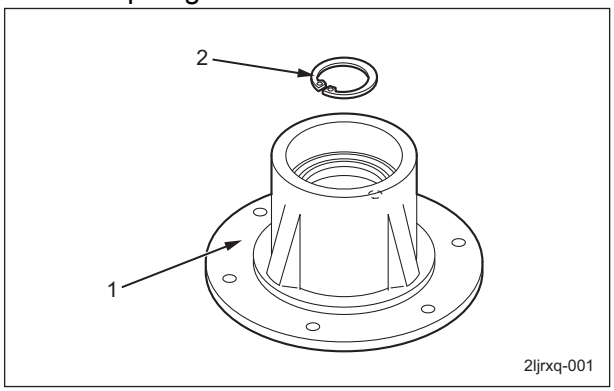

Inspection of Housing_006

1	Housing
2	Stop ring

Important

Be careful not to hit the rubber part since the bearing may be damaged.

8. With the housing turned upside down, follow the steps below to remove the bearing.
   [1] Place blocks of wood, etc., under the housing to create space for the bearing to be pushed out.
   [2] Use an iron pipe and tap it with a plastic hammer to remove the bearing.

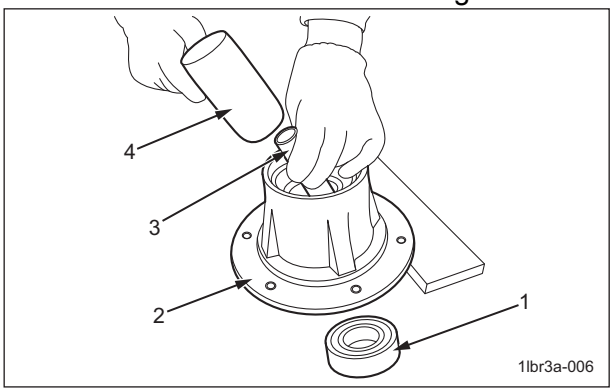

Inspection of Housing_007

1	Bearing
2	Housing
3	Iron pipe
4	Plastic hammer

9. Place the housing right-side up, and then use an iron pipe and tap it with a plastic hammer to remove the bearing and oil seal.

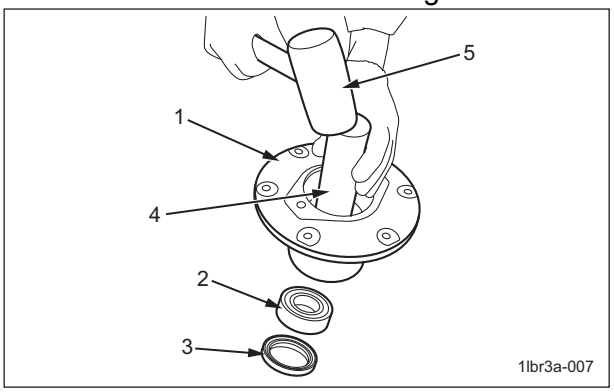

Inspection of Housing_008

1	Housing
2	Bearing
3	Oil seal
4	Iron pipe
5	Plastic hammer

https://truckmanualshub.com/

Important

Be sure to replace the bearings, oil seals and O-rings with new ones.

10. Have new bearings and oil seals ready with a profuse amount of grease applied.
    Apply a profuse amount of grease to the lip of the oil seal.

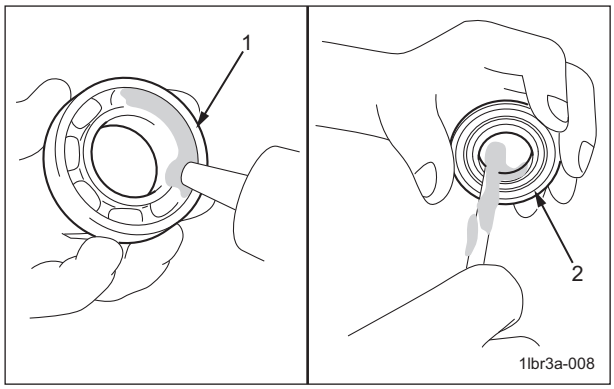

Inspection of Housing_009

1	Bearing
2	Oil seal

Caution

See the list in "Tightening torques" (Page 3-5) .
Note that the Baroness product warranty may not apply to defects caused by incorrect or overtorque tightening etc.

11. Place the housing upside down, and then drive in the bearing and oil seal evenly.
    Note
    Use a bearing driver to drive in the bearings and oil seals.

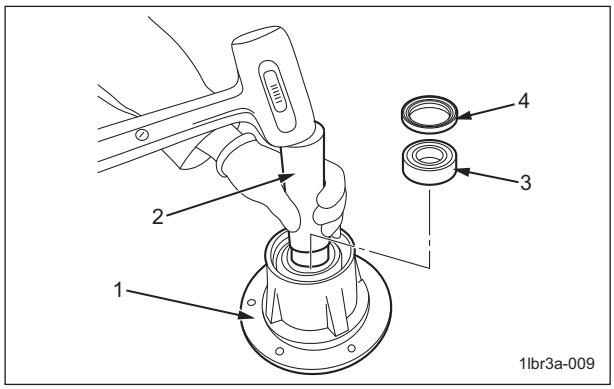

Inspection of Housing_010

1	Housing
2	Bearing driver
3	Bearing
4	Oil seal

12. Attach the stop ring.

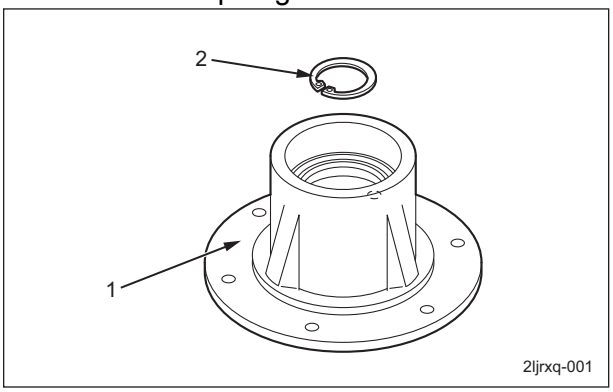

Inspection of Housing_011

1	Housing
2	Stop ring

13. Tap the shaft into the housing evenly.

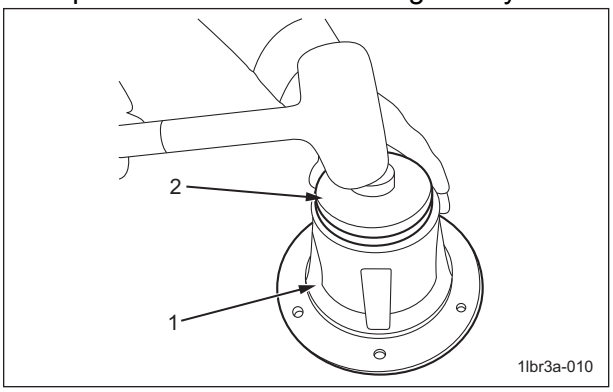

Inspection of Housing_012

1	Housing
2	Shaft

14. Place the housing right-side up, and then inject an appropriate amount of oil around the shaft.

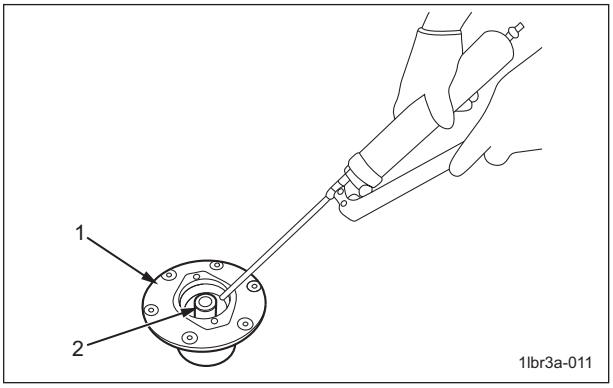

Inspection of Housing_013

https://truckmanualshub.com/

1	Housing
2	Shaft

15. Drive the bearing into the housing evenly.
    Note
    Use a bearing driver to drive in the bearings and oil seals.

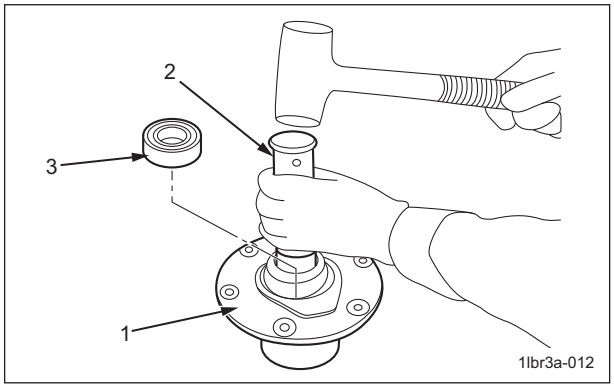

Inspection of Housing_014

1	Housing
2	Bearing driver
3	Bearing

16. Install the stop ring, and then install the washer and roundhead screw.

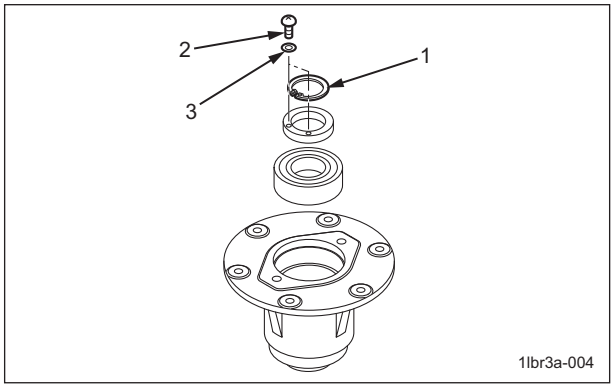

Inspection of Housing_015

1	Stop ring
2	Roundhead screw
3	Washer

17. Insert the housing into the mower unit, and then temporarily install the stopper with the two bolts A.

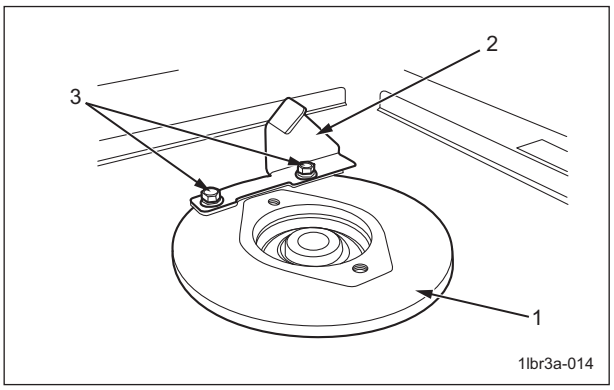

Inspection of Housing_016

1	Housing
2	Stopper
3	Bolt A

18. Temporarily install the housing with the remaining four bolts B.

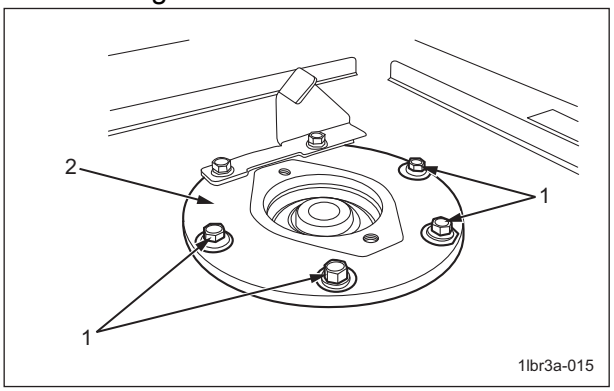

Inspection of Housing_017

1	Bolt B
2	Housing

https://truckmanualshub.com/

19. Evenly tighten bolts A and B, little by little, until the housing is securely installed.

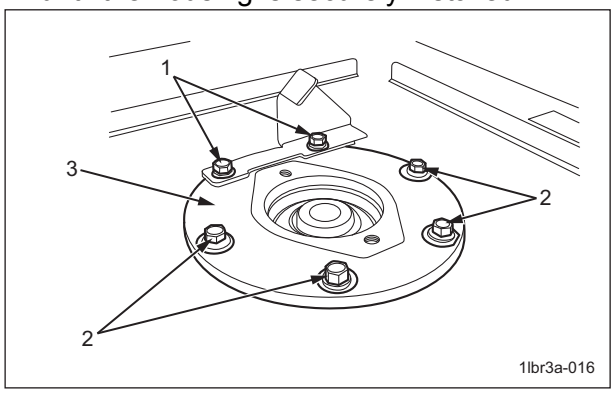

Inspection of Housing_018

1	Bolt A
2	Bolt B
3	Housing

Roller

Inspection of Front Roller

Wear of bearings due to frequent usage and invasion of water may damage bearings etc. and prevent smooth rotation of the roller. Inspect and replace the parts such as the bearings.

- Make sure that there is no abrasion or adhesion of the roller.
- Make sure that there is no wear of the roller shaft.
- Make sure that there is no abrasion or deformation of the collar, or washer etc. on both ends.
- Make sure that there is no wear or rust on the bearing.
- Make sure that there is no play in the fit of the roller and the bearing.

Danger

The rotary knife is an edged tool.
Handle it carefully, since it could cut your hands or legs.

Caution

When touching edged tools, wear gloves, since they could cut your hands.

1. Remove the front roller ass'y. (See "Removal of Front Roller Assembly" (Page 8-9) .)

Caution

Pay attention not to damage the threads when you hit the shaft with a hammer.

2. Knock one end of the wheel shaft with a plastic hammer to push out the shaft.

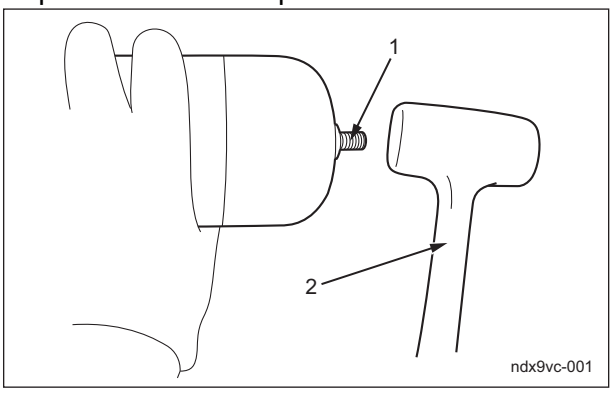

Inspection of Front Roller_001

https://truckmanualshub.com/

1	Wheel shaft
2	Plastic hammer

3. Remove collar, washer, and bearing from one end of the shaft.

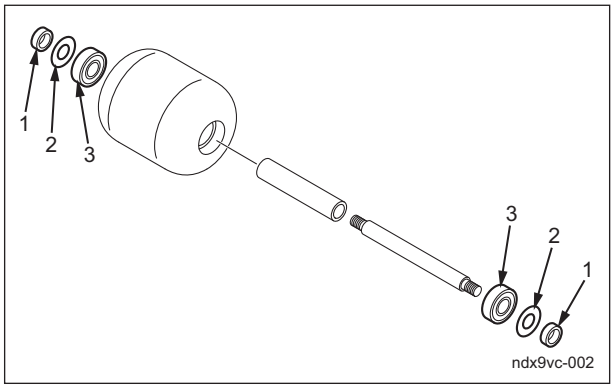

Inspection of Front Roller_002

1	Collar
2	Washer
3	Bearing

4. Follow the same steps to remove them from the other side.
5. Remove collar from the wheel shaft.

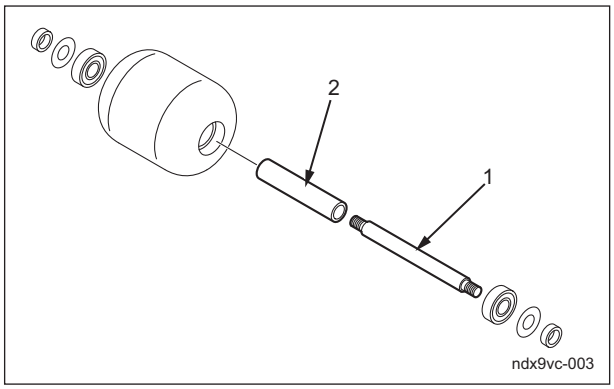

Inspection of Front Roller_003

1	Wheel shaft
2	Collar

Important

Be sure to replace the bearing with new one.

6. Have new bearings, and apply a profuse amount of grease.

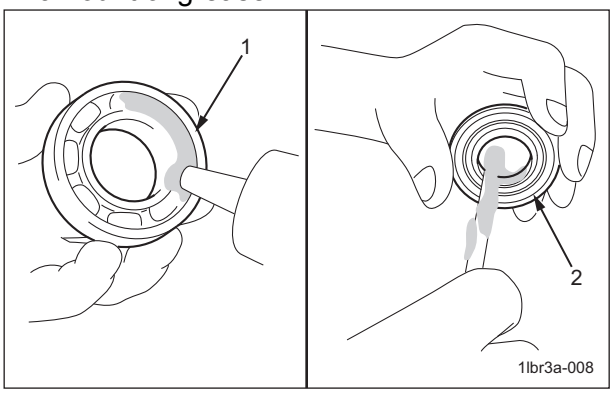

Inspection of Front Roller_004

1	Bearing
2	Oil seal

Caution

See the list in "Tightening torques" (Page 3-5) .
Note that the Baroness product warranty may not apply to defects caused by incorrect or overtorque tightening, etc.

7. Install the front roller ass'y following the reversed procedure of the procedure 2 to 5.
8. Make sure that the roller rotates smoothly with no play when the roller shaft is fixed.
9. Apply grease. (See "Greasing Points" (Page 3-11) .)
10. Install the front roller ass'y. (See "Installation of Front Roller Ass'y" (Page 8-10) .)

https://truckmanualshub.com/

Inspection of Rear Roller

Wear of bearings due to frequent usage and invasion of water may damage bearings to prevent smooth rotation of the roller. Inspect and replace the parts such as the oil seal, bearings.

- Make sure that there is no abrasion or adhesion of the roller.
- Make sure that there is no wear of the roller shaft.
- Make sure that there is no wear or damage of the oil seal.
- Make sure that there is no wear or rust of the bearing.
- Make sure that there is no play in the fit of the roller and the bearing.

Danger

The rotary knife is an edged tool.
Handle it carefully, since it could cut your hands or legs.

Caution

When touching edged tools, wear gloves, since they could cut your hands.

1. Remove the rear roller ass'y. (See "Removal of Rear Roller Assembly" (Page 8-11) .)

Caution

Pay attention not to damage the threads when you hit the shaft with a hammer.

2. Remove the grease nipple and stop ring on the left and right side.

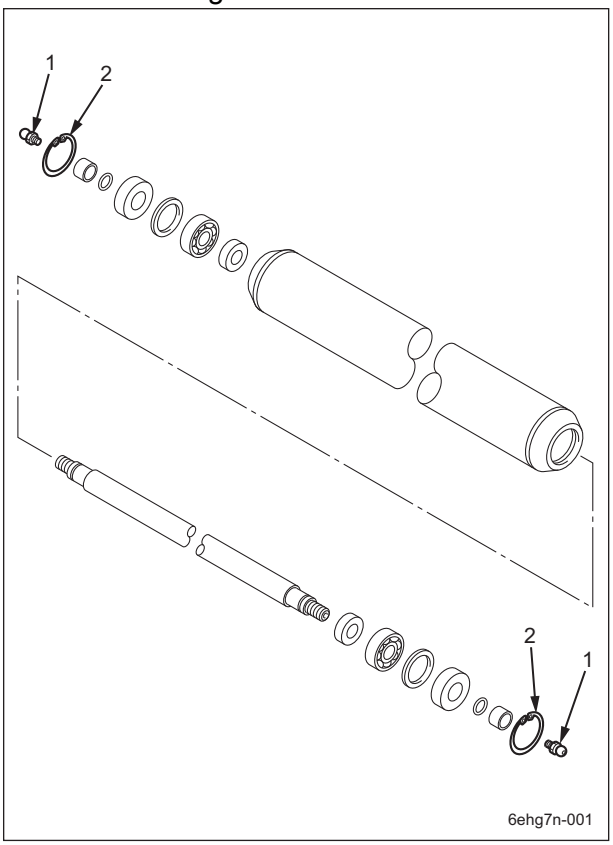

Inspection of Rear Roller_001

1	Grease nipple
2	Stop ring

3. Knock one end of the roller shaft with a plastic hammer to push out the shaft.

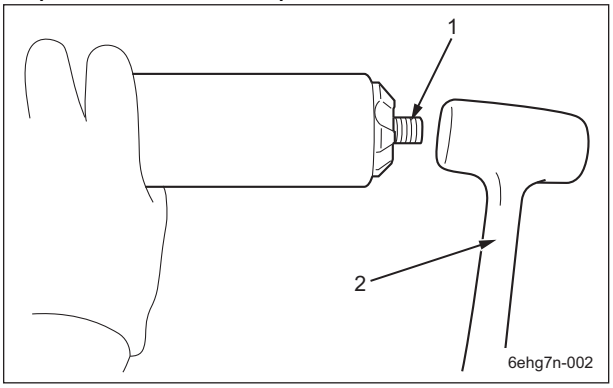

Inspection of Rear Roller_002

1	Roller shaft
2	Plastic hammer

https://truckmanualshub.com/

4. Remove collar, O-ring, oil seal-A, washer, bearing and oil seal-B from one end of the shaft.

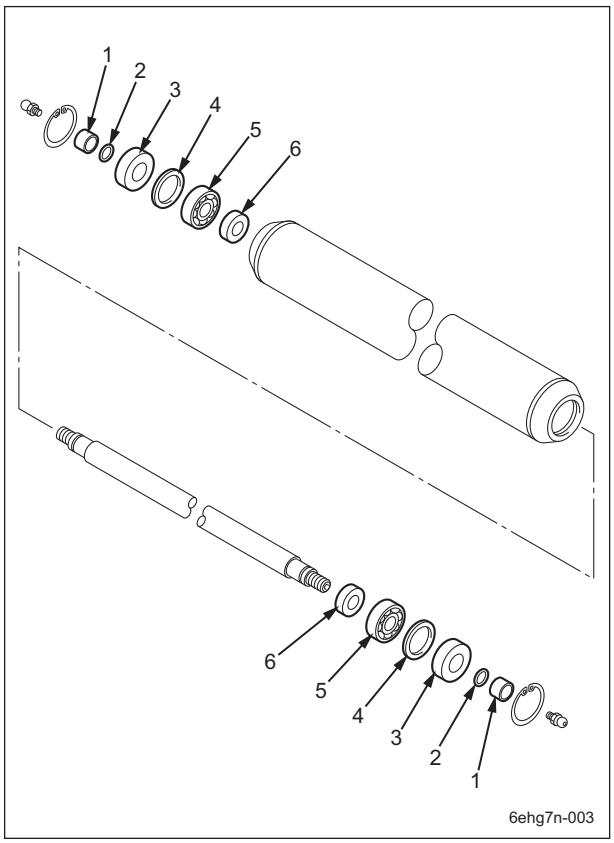

Inspection of Rear Roller_003

1	Collar
2	O-ring
3	Oil seal-A
4	Washer
5	Bearing
6	Oil seal-B

5. Follow the same steps to remove them from the other side.

6. Remove the roller shaft.

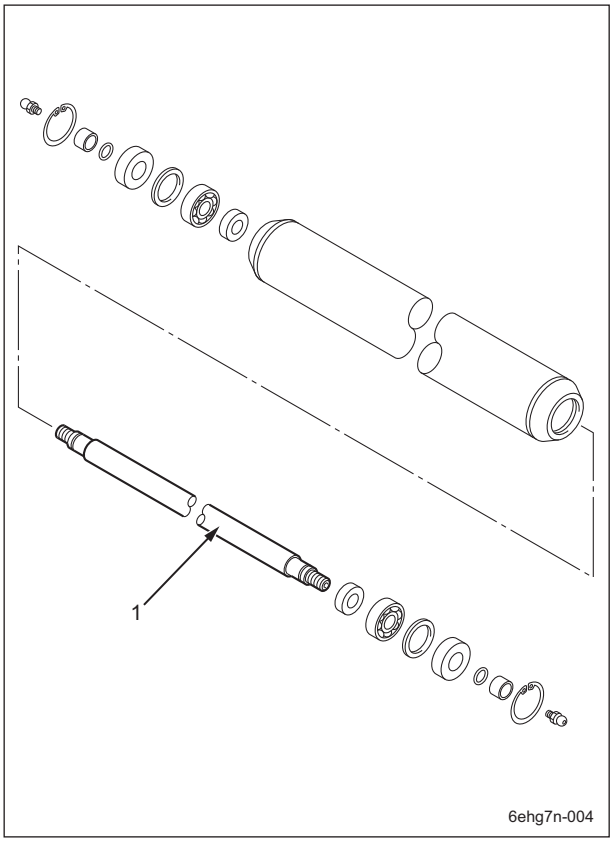

Inspection of Rear Roller_004

1	Roller shaft

Important

Be sure to replace the bearings, oil seals and O-rings with new ones.

7. Have new bearings and oil seals ready, and apply a profuse amount of grease.
   Apply a profuse amount of grease to the lip of the oil seal.

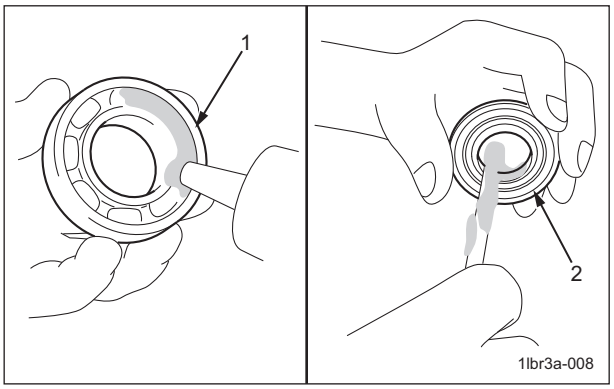

Inspection of Rear Roller_005

1	Bearing
2	Oil seal

https://truckmanualshub.com/

> ⚠ Caution
>
> See the list in "Tightening torques" (Page 3-5) .
> Note that the Baroness product warranty may not apply to defects caused by incorrect or overtorque tightening etc.

8. Install the rear roller ass'y following the reversed procedure of the procedure 2 to 6.
9. Make sure that the roller has no play and rotates smoothly when the roller shaft is fixed and the roller is rotated.
10. Apply grease. (See "Greasing Points" (Page 3-11) .)
11. Install the rear roller ass'y. (See "Installation of Rear Roller Ass'y" (Page 8-12) .)

Mower Arm

Inspection of Mower Arm

Due to frequent use, or bends etc. caused by damage during use or transportation, the finish may not be smooth or the machine may not cut properly. In this case, check the mower arm and replace the parts, if necessary.

- Make sure that the bushing is not loose inside the mower arm.
- Check the tightening state of the attaching portion with the mower frame.
- Check if there is a change in shape etc. on the mower arm.

Refer to ("Removal of Mower Arm" (Page 8-14)) and ("Installation of Mower Arm" (Page 8-14)) for information on attaching and removing the mower arm.

https://truckmanualshub.com/

Troubleshooting

Relating to the Engine.....Page 9-2

Relating to Traveling..... Page 9-5

Relating to Steering.....Page 9-8

Relating to Operating Machine and Mower Unit..... Page 9-9

https://truckmanualshub.com/

Troubleshooting

Relating to the Engine

Problem	Cause	Reference
The engine does not start (the starter motor does not turn).	The interlock system was activated (not sitting on the seat, parking brake not applied and the rotary knife rotation switch not set to the "OFF" position).	Electrical System - Measurements - Interlock System
	Faulty interlock system component (seat switch, parking brake switch, rotary knife rotation switch (rocker switch), rotary knife rotation relay (power relay), seat switch relay (power relay) or brake switch relay (power relay))	Electrical System - Electrical Components Electrical System - Electrical Components - Power Relays
	Faulty 5A/15A fuse	Electrical System - Electrical Components - Fuse Box (E, H or J)
	Faulty fusible link	Electrical System - Electrical Components - Fusible Link
	Insufficient battery capacity or loose terminals	Electrical System - Electrical Components - General Inspections/ Repairs - Battery
	Faulty ignition key switch	Electrical System - Electrical Components - Power Relays - Ignition Key Switch
	Faulty starter relay	Electrical System - Electrical Components - Starter Relay
	Faulty starter motor	Engine Maintenance Manual
	Overheating or damage to a moving part of the engine	Engine Maintenance Manual
	Malfunction related to electrical wire	Inspect and repair or replace the wire-related part.
The engine does not start (the starter motor turns).	No fuel	Engine Handling Manual (Supply fuel and automatically air bleed by setting the ignition key switch to the "ON" position.)
	Fuel pump does not operate.	Electrical System - Electrical Components - Fuel Pump
	Clogged fuel filter	Engine - Inspection/Repair of Each Part - Fuel Filter
	Incorrect fuel	Engine Handling Manual
	Clogged air cleaner element	Engine - Inspection/Repair of Each Part - Air Cleaner

https://truckmanualshub.com/

Problem	Cause	Reference
The engine does not start (the starter motor turns).	Insufficient battery capacity or loose terminals	Electrical System - Electrical Components - General Inspections/ Repairs - Battery
	Faulty ignition key switch	Electrical System - Electrical Components - Power Relays - Ignition Key Switch
	Faulty stop solenoid	Engine Maintenance Manual
	No engine compression	Engine Maintenance Manual
	Faulty 5A fuse	Electrical System - Electrical Components - Fuse Box (I)
	Faulty thrust of the starter motor pinion gear	Engine Maintenance Manual
The engine starts, then immediately stops.	The interlock system was activated (left the seat without applying the parking brake).	Electrical System - Measurements - Interlock System
	Clogged air cleaner element	Engine - Inspection/Repair of Each Part - Air Cleaner
	Little fuel	Engine Handling Manual
	Air in the fuel system	Engine Handling Manual (Supply fuel and automatically air bleed by setting the ignition key switch to the "ON" position.)
	Clogged fuel filter	Engine - Inspection/Repair of Each Part - Fuel Filter
	Fuel pump does not operate.	Electrical System - Electrical Components - Fuel Pump
	Faulty engine stop solenoid	Engine Maintenance Manual
No charge	Loose battery cable	Electrical System - Electrical Components - General Inspections/ Repairs - Battery
	Corroded battery terminal	Electrical System - Electrical Components - General Inspections/ Repairs - Battery
	Insufficient battery electrolyte	Electrical System - Electrical Components - General Inspections/ Repairs - Battery

https://truckmanualshub.com/

Troubleshooting

Problem	Cause	Reference
No charge	Faulty battery	Electrical System - Measurements - Battery Electrical System - Electrical Components - General Inspections/ Repairs - Battery
	Insufficient fan belt tension	Engine - Inspection/Repair of Each Part - Fan/Fan Belt
	Disconnected coupler in charging circuit wire or faulty wire	Inspect and repair the wire.
	Faulty alternator	Engine Maintenance Manual
Buzzer warning about overheating sounds	Rear cover, radiator or oil cooler blocked with dirt	Engine - Inspection/Repair of Each Part - Cooling System
	Insufficient amount of coolant	This machine's Owner's Operating Manual
	Insufficient fan belt tension	Engine - Inspection/Repair of Each Part - Fan/Fan Belt
	Faulty thermostat	Engine Maintenance Manual
	Faulty water temperature switch	Engine Maintenance Manual
Charge lamp does not turn off	Loose or broken fan belt	Engine - Inspection/Repair of Each Part - Fan/Fan Belt
	Faulty alternator wire	Inspect and repair the wire.
	Faulty alternator	Engine Maintenance Manual
Oil pressure lamp does not turn off	Insufficient amount of engine oil	This machine's Owner's Operating Manual
	Faulty engine oil switch	Engine Maintenance Manual
	Faulty engine oil pump	Engine Maintenance Manual
Thermo-start (glow) lamp does not turn on	Faulty lamp bulb	Replace the lamp bulb.
	Faulty 5A fuse	Electrical System - Electrical Components - Fuse Box (B)
	Faulty ignition key switch	Electrical System - Electrical Components - Power Relays - Ignition Key Switch
	Faulty glow lamp timer	Electrical System - Electrical Components - Glow Lamp Timer

https://truckmanualshub.com/

Relating to Traveling

Problem	Cause	Reference
Traveling power is poor.	Engine rpm is slow.	This machine operating manual
	Engine does not run smooth.	Engine maintenance manual
	The parking brake is applied.	This machine operating manual
	The piston pump speed change lever does not shift enough.	Main body - Adjustment - Traveling rod - Adjustment of traveling rod
	The unload valve is not completely closed.	This machine operating manual
	Amount of hydraulic oil is low.	This machine operating manual
	Blockage of hydraulic oil line filter	Hydraulic system - Inspection of each part, repair - Hydraulic oil filter
	Hydraulic oil is too cool.	This machine operating manual
	Dirt in the hydraulic oil (contamination, invasion of water or air)	Hydraulic system - Inspection of each part, repair - Hydraulic oil
	Viscosity of the hydraulic oil is wrong.	Hydraulic system - Specifications Hydraulic system - Inspection of each part, repair - Hydraulic oil
	Insufficient cooling of the hydraulic oil cooler	Engine - Inspection and repair of each part - Cooling system
	Pressure of the piston pump is not high enough.	Hydraulic system - Measurement - Traveling circuit
	Malfunction of the piston pump	Hydraulic system - Removal and installation of each part - Piston pump
	Malfunction of the wheel motor	Hydraulic system - Removal and installation of each part - Wheel motor
It does not travel (in the case without the aforementioned causes).	Malfunction of linkage, etc. from the traveling pedal to the pump	Main body - Adjustment - Traveling rod - Adjustment of traveling rod
	The unload valve is open.	This machine operating manual
	The piston pump speed change lever does not operate.	Main body - Adjustment - Traveling rod - Adjustment of traveling rod

https://truckmanualshub.com/

Troubleshooting

Problem	Cause	Reference
It does not travel (in the case without the aforementioned causes).	There is no charge pressure of the piston pump.	Hydraulic system - Measurement - Charge circuit
	Malfunction of the joint part between the engine and pump	Inspection, repair, or replacement of the joint part
2WD/4WD selection does not work.	Malfunction of the 2WD/4WD changeover switch (rocker switch)	Electrical system - Electrical equipment - Rocker switch
	Malfunction of terminal relay (relay box 2)	Electrical system - Electrical equipment - Terminal relay
	Malfunction of the 2WD/4WD changeover valve	Electrical system - Electrical equipment - Solenoid valve - 2WD/4WD changeover valve
The differential lock does not work.	Malfunction of the differential lock switch (auto return switch)	Electrical system - Electrical equipment - Auto return switch
	Malfunction of the terminal relay	Electrical system - Electrical equipment - Terminal relay
	15A fuse blew	Electrical system - Electrical equipment - Fuse box (D)
	Insufficient adjustment of the differential lock valve	Close the dial of the variable valve of the differential lock valve completely.
	Malfunction of the differential lock valve	Electrical system - Electrical equipment - Solenoid valve - Differential lock valve
It travels forward or backward even when the pedal is released.	Malfunction of neutral of the piston pump	Main body - Adjustment - Traveling rod - Adjustment of traveling rod
	Malfunction of bearing of neutral lever part	Replacement of the bearing
	Adhesion or play of the pedal/rod/lever part	Main body - Inspection of each part, repair - Traveling rod
	Malfunction of neutral of the manual servo	Neutral adjustment, replacement of the manual servo
Brake does not work.	The brake wire is broken (extended) or adhered.	Main body - Inspection of each part, repair - Brake wire

https://truckmanualshub.com/

Problem	Cause	Reference
Brake does not work.	Disk pad is worn out (remaining thickness is 3mm or less).	Main body - Inspection of each part, repair - Brake Reference- "RT mechanical brake manual" (Page 10-11)
	Insufficient adjustment of the brake adjust nut part	Reference- "RT mechanical brake manual" (Page 10-11)
	Disk pad part has water, dust, oil, etc.	Reference- "RT mechanical brake manual" (Page 10-11)
	Adhesion of the torque plate ass'y and the sleeve	Reference- "RT mechanical brake manual" (Page 10-11)

https://truckmanualshub.com/

Relating to Steering

Problem	Cause	Reference
Power steering is not working (steering operation is heavy)	Engine rpm is slow	This machine operating manual
	Tire pressure is low	This machine operating manual
	Lack of grease on the kingpin	Maintenance standards and maintenance - Greasing
	Amount of the hydraulic oil is low.	This machine operating manual
	Block of hydraulic suction filter	Hydraulic system - Inspection of each part, repair - Replacement of the suction filter
	Hydraulic oil is too cool.	Hydraulic system - Inspection of each part, repair - Hydraulic oil
	Dirt in the hydraulic oil (contamination, invasion of water, air)	Hydraulic system - Inspection of each part, repair - Hydraulic oil
	Viscosity of the hydraulic oil is wrong.	Hydraulic system - Specifications Hydraulic system - Inspection of each part, repair - Hydraulic oil
	Insufficient cooling of the hydraulic oil cooler	Engine - Inspection and repair of each part - Cooling system
	Malfunction of the orbitrol	Hydraulic system - Measurement - Steering circuit Hydraulic system - Removal and installation of each part - orbitrol
	Malfunction of steering cylinder	Hydraulic system - Removal and installation of each part - Steering cylinder
	Malfunction of the gear pump	Hydraulic system - Measurement - Steering circuit Hydraulic system - Removal and installation of each part - Gear pump

https://truckmanualshub.com/

Relating to Operating Machine and Mower Unit

Problem	Cause	Reference
Rotary knife does not rotate (all mower units).	The knife rotation switch is not turned ON.	This machine operating manual
	The mower unit is not completely down.	This machine operating manual Electrical system - Electrical equipment - About electrical equipment - Rotary knife rotation circuit
	Malfunction of the knife rotation switch (rocker switch)	Electrical system - Electrical equipment - Rocker switch
	Amount of the hydraulic oil is low.	This machine operating manual
	Block of suction filter	Hydraulic system - Inspection of each part, repair - Hydraulic oil filter
	Malfunction of the gear pump	Hydraulic system - Measurement - Steering circuit Hydraulic system - Removal and installation of each part - Gear pump
Rotary knife does not rotate (mower unit #2/#3/#4 or mower unit #1/#5)	Malfunction of terminal relay (relay box 2)	Electrical system - Electrical equipment - Terminal relay
	Malfunction of proximity sensor	Hydraulic system - Adjustment - Proximity sensors Electrical system - Electrical equipment - Proximity sensors
	Malfunction of rotary knife rotation valve	Electrical system - Electrical equipment - Solenoid valve - Rotary knife rotation valve
	Malfunction of the gear pump	Hydraulic system - Measurement - Steering circuit Hydraulic system - Removal and installation of each part - Gear pump

https://truckmanualshub.com/

Troubleshooting

Problem	Cause	Reference
Rotary knife does not rotate (one mower unit).	Malfunction of the gear motor	Hydraulic system - Measurement - Rotary knife rotation motor circuit Hydraulic system - Removal and installation of each part - Gear motor
	Blockage inside of mower unit	Removal of foreign objects and cleaning inside of mower unit
Rotary knife rotation speed is slow (all mower units).	Engine rpm is slow.	This machine operating manual
	Hydraulic oil temperature is low.	This machine operating manual
	Amount of the hydraulic oil is low.	This machine operating manual
	Block of suction filter	Hydraulic system - Inspection of each part, repair - Hydraulic oil filter
	Malfunction of the gear pump	Hydraulic system - Measurement - Steering circuit Hydraulic system - Removal and installation of each part - Gear pump
Rotary knife rotation speed is slow (mower unit #2/#3/#4 or mower unit #1/#5)	Malfunction of rotary knife rotation valve	Electrical system - Electrical equipment - Solenoid valve - Rotary knife rotation valve
	Malfunction of the gear pump	Hydraulic system - Measurement - Steering circuit Hydraulic system - Removal and installation of each part - Gear pump
Rotary knife rotation speed is slow (one mower unit)	Malfunction of the gear motor	Hydraulic system - Measurement - Steering circuit Hydraulic system - Removal and installation of each part - Gear pump
Rotary knife rotation does not stop (all mower units).	Malfunction of the knife rotation switch (rocker switch)	Electrical system - Electrical equipment - Rocker switch
Rotary knife rotation does not stop (mower unit #2/#3/#4 or mower unit #1/#5).	Malfunction of terminal relay (relay box 2)	Electrical system - Electrical equipment - Terminal relay

https://truckmanualshub.com/

Problem	Cause	Reference
Rotary knife rotation does not stop (mower unit #2/#3/#4 or mower unit #1/#5).	Malfunction of proximity sensor	Hydraulic system - Adjustment - Proximity sensors Electrical system - Electrical equipment - Proximity sensors
	Malfunction of rotary knife rotation valve	Electrical system - Electrical equipment - Solenoid valve - Rotary knife rotation valve
Mower unit is not raised (all mower units).	Engine rpm is slow.	This machine operating manual
	Amount of the hydraulic oil is low.	This machine operating manual
	Block of suction filter	Hydraulic system - Inspection of each part, repair - Hydraulic oil filter
	Malfunction of control valve	Hydraulic system - Removal and installation of each part - Control valve
	Malfunction of the gear pump	Hydraulic system - Measurement - Steering circuit Hydraulic system - Removal and installation of each part - Gear pump
Mower unit is not raised (one mower unit).	Malfunction of up/down cylinder	Hydraulic system - Measurement - Steering circuit Hydraulic system - Removal and installation of each part - Up/down cylinder
	Dropped mounting pin of up/down cylinder	Installation of mounting pin of up/down cylinder
	Lack of grease on the lift arm fulcrum	Maintenance standards and maintenance - Greasing
Mower unit is not lowered (all mower units).	Amount of the hydraulic oil is low.	This machine operating manual
	Block of suction filter	Hydraulic system - Inspection of each part, repair - Hydraulic oil filter
	Malfunction of control valve	Hydraulic system - Removal and installation of each part - Control valve

https://truckmanualshub.com/

Troubleshooting

Problem	Cause	Reference
Mower unit is not lowered (all mower units).	Malfunction of the gear pump	Hydraulic system - Measurement - Steering circuit Hydraulic system - Removal and installation of each part - Gear pump
Mower unit is not lowered (mower unit #4/#5).	Mower lock lever is not released.	This machine operating manual
	Main body is inclined.	Move the main body to level surface.
Mower unit lowering speed is slow (all mower units).	Insufficient adjustment of assist valve	Hydraulic system - Adjustment - Assist valve
	Hydraulic oil temperature is low.	This machine operating manual
Mower unit lowering speed is slow (mower unit #4/#5).	Insufficient adjustment of slow return valve	Loosen the lock nut and loosen the adjustment knob.
Mower unit lowers by itself too quickly.	Malfunction of up/down cylinder	Hydraulic system - Removal and installation of each part - Up/down cylinder
	Malfunction of control valve	Hydraulic system - Removal and installation of each part - Control valve
Mowed face is not flat.	Cutting height adjustments of all the mower units are not even.	This machine operating manual
	Malfunction of bearing of mower unit roller	Operating machine and mower unit - Inspection of each part, repair - Roller
	Malfunction of bearing and shaft of mower unit housing	Operating machine and mower unit - Inspection of each part, repair - Housing
	Deformation of rotary knife	Operating machine and mower unit - Inspection of each part, repair - Rotary knife
	Adhesion, deformation and wear of mower arm	Operating machine and mower unit - Inspection of each part, repair - Mower arm
Mowed face is not clean (in the case without the aforementioned causes).	Engine rpm is slow.	This machine operating manual
	Operation speed is slow.	This machine operating manual
	Volume of mowing is too much.	This machine operating manual
	Wear of rotary knife	Operating machine and mower unit - Inspection of

https://truckmanualshub.com/

Problem	Cause	Reference
Mowed face is not clean (in the case without the aforementioned causes).	Wear of rotary knife	each part, repair - Rotary knife
	Blockage inside of mower unit	Removal of foreign objects and cleaning inside of mower unit
	Grass is wet.	Reduce volume of mowing. Mow when grass is dry.

https://truckmanualshub.com/

https://truckmanualshub.com/

Reference

Specifications..... Page 10-2

Maintenance Schedule..... Page 10-3

Hydraulic circuit diagram.....Page 10-5

Electrical circuit diagram..... Page 10-6

Electric wiring diagram..... Page 10-7

List of Consumables..... Page 10-9

RT mechanical brake manual..... Page 10-11

https://truckmanualshub.com/

Specifications

GM2800B

Main body	Total length	370 cm (145.67 in)
	Total width	During traveling: 230 cm (90.55 in)/during operation: 300 cm (118.11 in)
	Total height	230 cm (90.55 in)
	Wheelbase	172 cm (67.72 in)
	Tread	Front wheel: 190.4 cm (74.96 in)/rear wheel: 110 cm (43.30 in)
	Total weight	During traveling: 2,000 kg (4,409 lb)/during operation: 1,450 kg (3,196 lb)
	Drive	HST4WD (2WD/4WD selectable)
	Traveling speed	Forward: 14.8 km/h (9.2 mph)/reverse: 8.3 km/h (5.2 mph)
	Steering wheel	Power steering (orbitrol + hydraulic cylinder)
	Brake	Front two wheel disk mechanical type
Wheel size: Pneumatic pressure	Front wheel	29 x 14.00 - 15:150 kPa (1.53 kgf/cm^2) (21.83 psi)
	Rear wheel	20 x 12.00 - 10:140 kPa (1.43 kgf/cm^2) (20.37 psi)
Operating machine (Mower unit)	Rotary knife	Width: 69 cm (27 in)
	Cutting height	2.0 - 9.15 cm (0.79 - 3.60 in)
	Cutting width: 5 units	280 cm (110 in)
Engine	Model	Kubota V2003-M-T-B (Diesel Turbo)
	Type	Vertical 4-cylinder water-cooled 4-cycle diesel
	Total stroke volume	1,999 cc (122.12 cu.in.)
	No load rpm	1,425 - 2,800 rpm
	Rated output	41.7 kW/2,600 rpm (56.7 PS/2,600 rpm)
	Fuel consumption	272 g/kW.h (200 g/ps.h)
	Engine oil in use	API Service grade class CF or higher, SAE Viscosity grade 10W-30
	Battery	105D31R
Volume	Quantity of engine oil	9.7 L (2.56 U.S.gals) (including filter)
	Coolant capacity	12 L (3.17 U.S.gals) (including reserve tank)
	Fuel tank capacity	51 L (13.5 U.S.gals) (JIS No.2 diesel fuel)
	Hydraulic tank capacity	44 L (11.6 U.S.gals) (Shell Tellus S2M46 or equivalent: ISO VG46)

https://truckmanualshub.com/

Maintenance Schedule

Follow the maintenance schedule below.
○ · · · Inspect, adjust, supply, clean
● · · · Replace (first time)
△ · · · Replace

	Maintenance item	Before work	After work	Every 8 hrs.	Every 50 hrs.	Every 100 hrs.	Every 200 hrs.	Every 250 hrs.	Every 400 hrs.	Every 500 hrs.	Every 1 year	Every 2 years	Every 4 years	Remarks
Engine	Tightening the parts	○												
	Fuel	○												
	Air cleaner	○					△							
	Engine oil	○		●	△									8 hrs. (first time)
	Engine oil filter	○			●	△								50 hrs. (first time)
	Ignition plug				○	△								
	Radiator	○												
	Oil cooler	○												
	Coolant	○			△									
	Fan belt	○									△			
	Battery	○										△		
	Battery fluid	○												
	Cleaning the exterior	○												
Main body	Tightening the parts	○												
	Interlock system	○												
	Emergency switch	○												
	Electrical wiring										○			
	Knife	○												
	Steering chain	○												
	Cutting (or brush) height	○												
	Greasing, oiling				○									
	Tire	○												
	Rubber crawler	○												
	V-belt	○									△			
	Brake	○												
	Wire	○					△							
	Cover	○												
	Oil leakage	○												
	Hydraulic Oil	○				●				△				100 hrs. (first time)
	Hydraulic oil filter					●				△				100 hrs. (first time)

https://truckmanualshub.com/

Reference

Maintenance item		Before work	After work	Every 8 hrs.	Every 50 hrs.	Every 100 hrs.	Every 200 hrs.	Every 250 hrs.	Every 400 hrs.	Every 500 hrs.	Every 1 year	Every 2 years	Every 4 years	Remarks
Main body	Hydraulic motor oil				●		△							50 hrs. (first time)
	Power unit oil	○				●				△				100 hrs. (first time)
	Transmission oil	○			●						△			50 hrs. (first time)
	Hydraulic hose (moving part)	○										△		
	Hydraulic hose (fixed part)	○											△	
	Air cleaner	○					△							
	Electromagnetic pump filter	○					△							
	Fuel strainer					○					△			
	Fuel hose	○												
	Cleaning the exterior	○												

The values for consumables are not guaranteed.
Replace the steering cylinder hoses every 2 years.

https://truckmanualshub.com/

Hydraulic circuit diagram

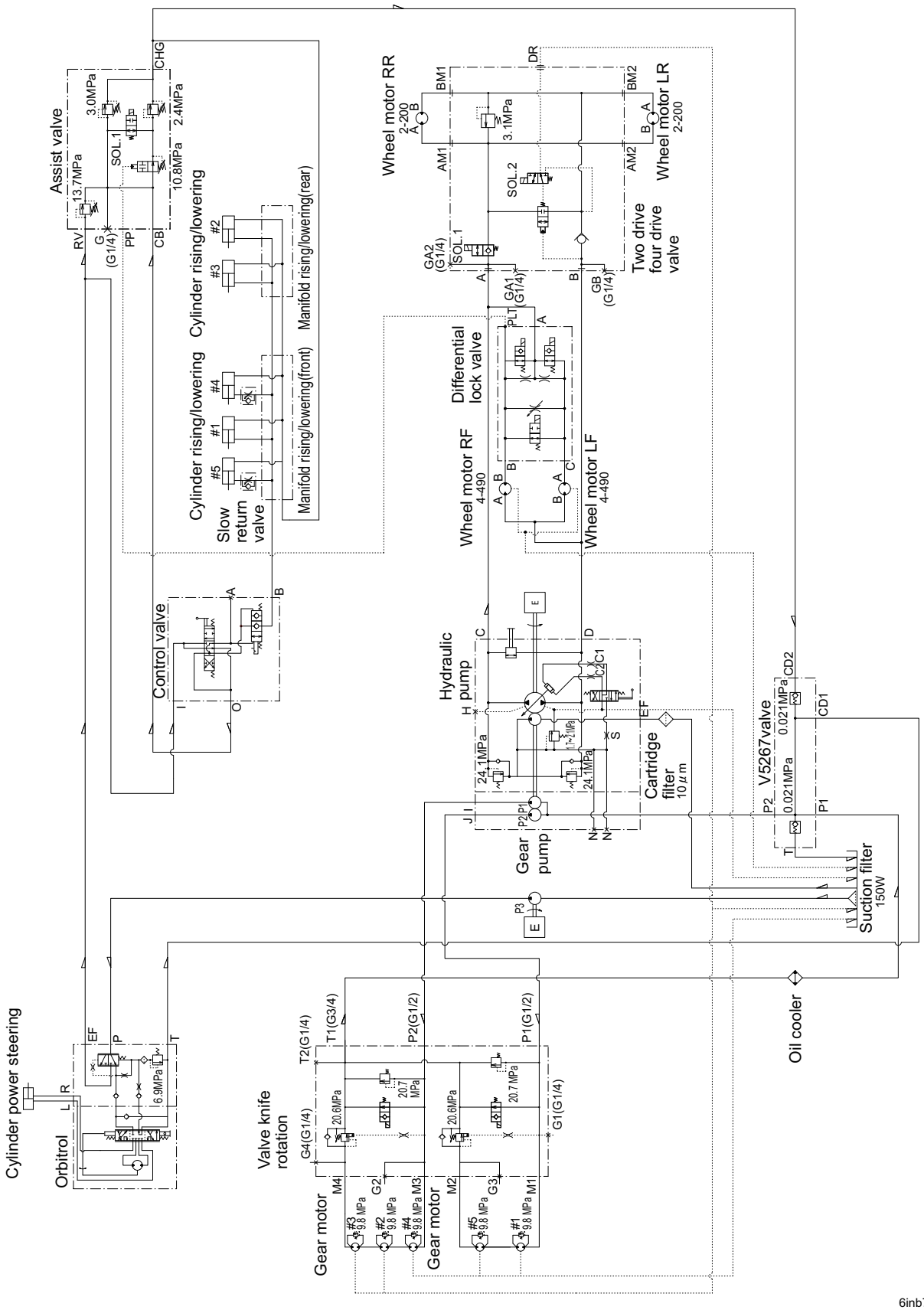

Hydraulic circuit diagram_001

https://truckmanualshub.com/

Electrical circuit diagram

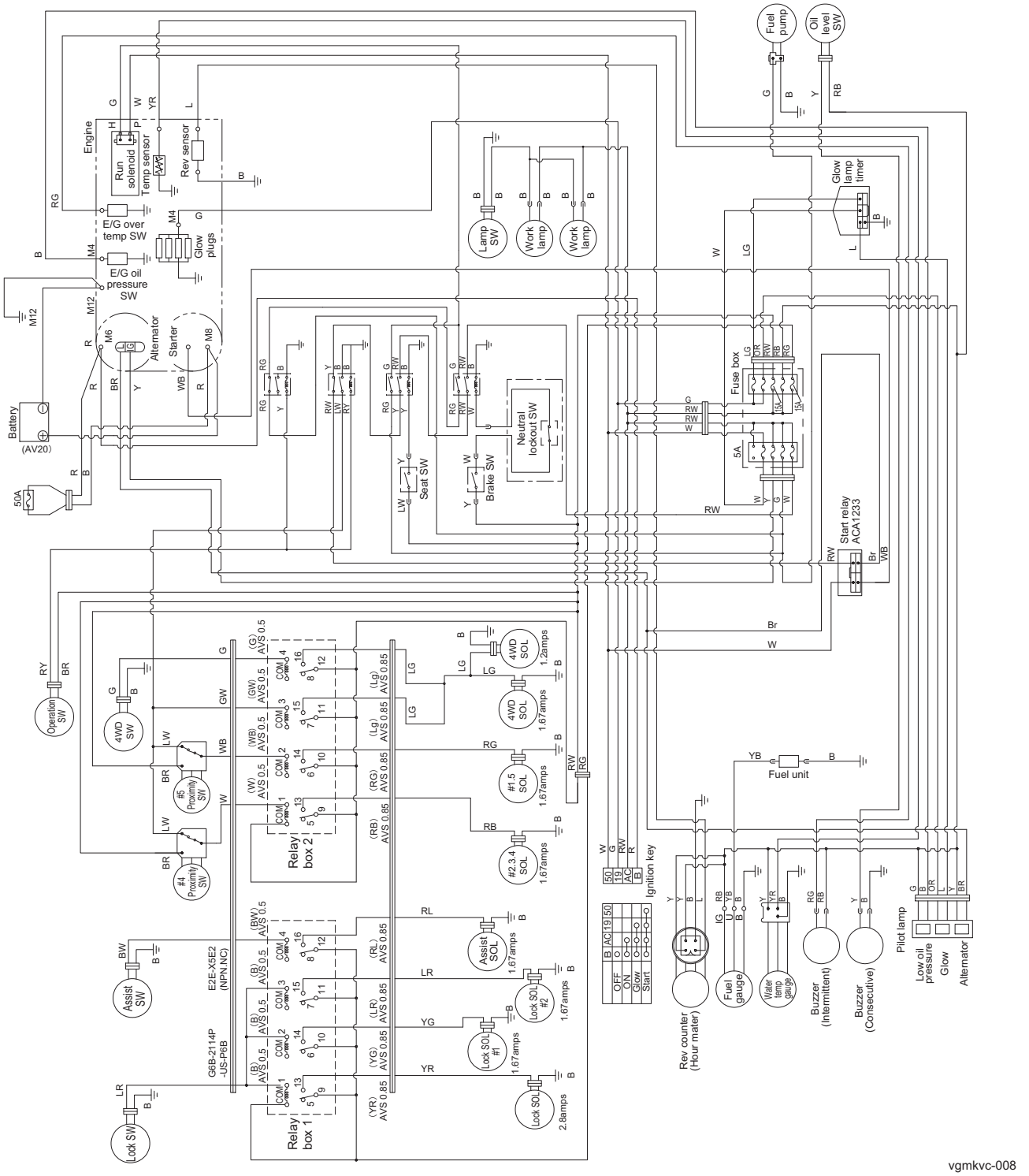

Electrical circuit diagram_001

https://truckmanualshub.com/

Electric wiring diagram

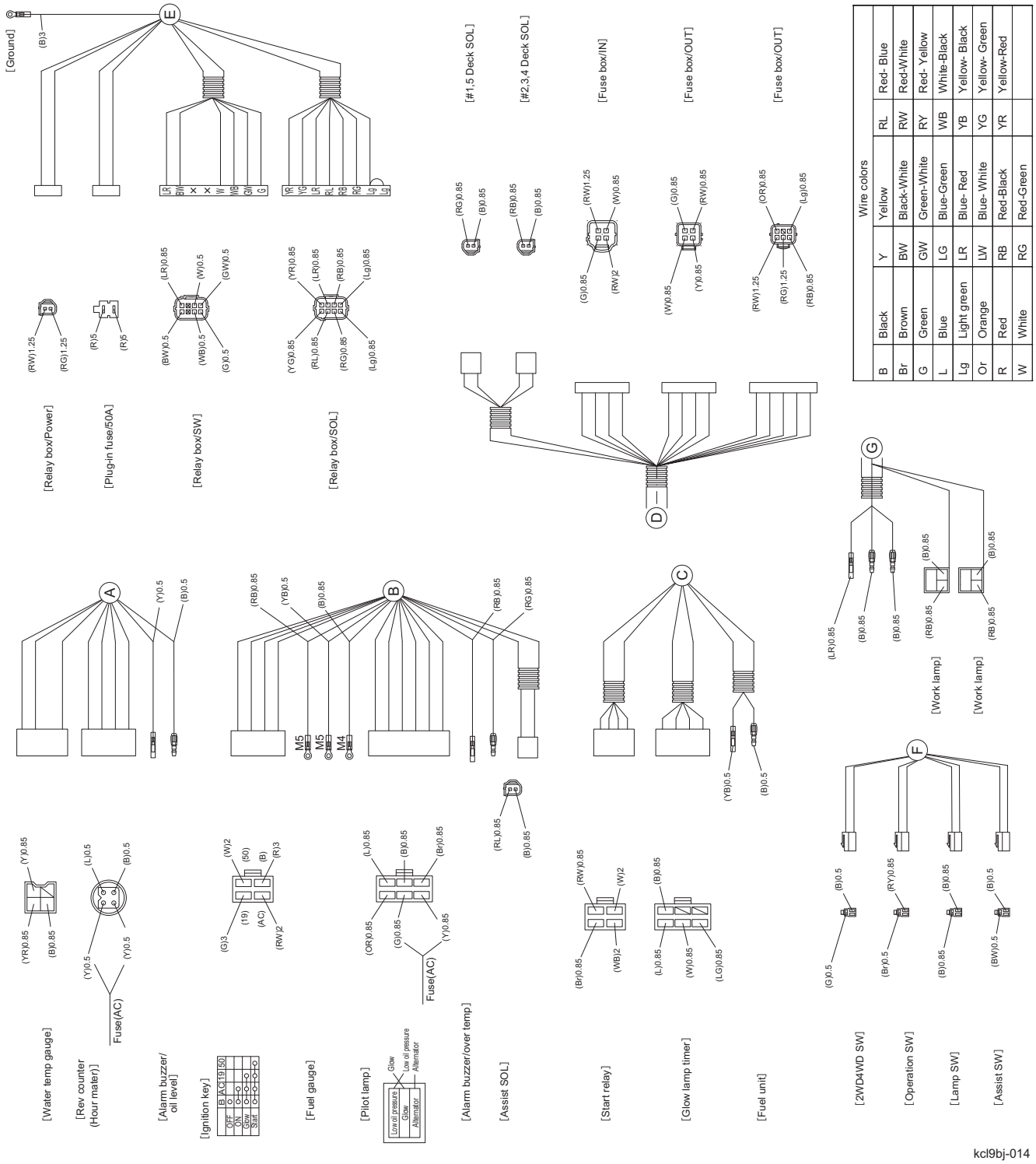

Electric wiring diagram_001

https://truckmanualshub.com/

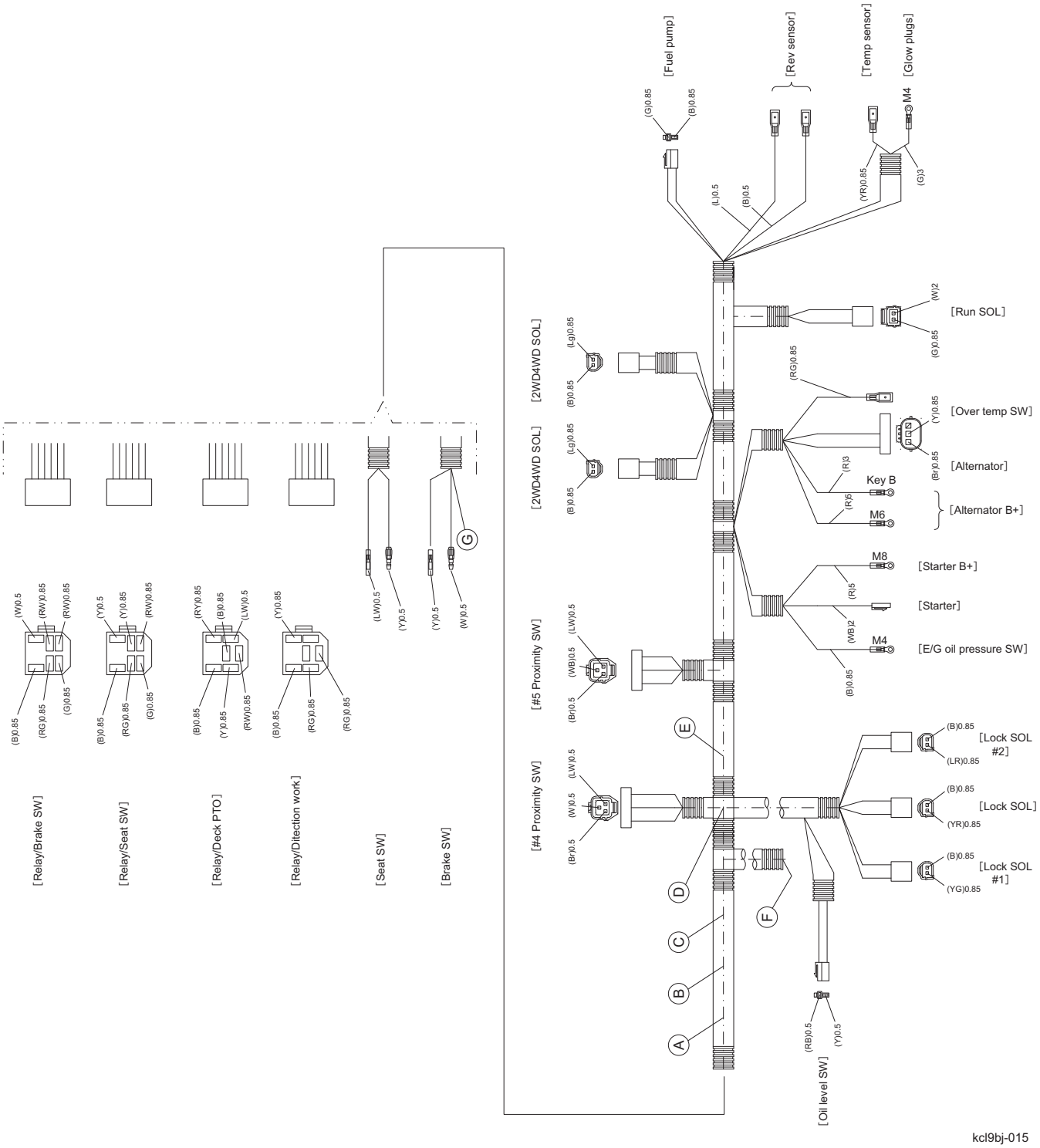

Electric wiring diagram_002

https://truckmanualshub.com/

List of Consumables

The consumables are described below.

Caution

Use tools appropriate for each replacement operation.

		Code	Part name	Qty.	Remarks
Engine	Fan belt	PF17112-9701-0	Fan belt	1	
	Engine oil filter	PF16414-3243-4	Oil element	1	
	Fuel filter	PF15221-4317-0	Fuel filter element	1	
	Air cleaner element	PFR1401-4227-0	Air cleaner element	1	
Main body (including hydraulic and electrical systems)	Suction filter	K3413000040	Suction filter SFT-10-150W	1	
	Hydraulic cartridge filter	K3410000030	Replacement filter F-913-1	1	
	Hydraulic Oil	K2913100200	Shell Tellus 46, 20 L can	-	Hydraulic tank capacity: 44.0 dm^3 (44.0 L) (11.62 U.S. gals)
	Steering cylinder	Y4020K-SK	Cylinder seal kit	1	
	Mower cylinder #1	YIS-40D-SK	Seal kit	1	
	Mower cylinders #2/#3/#4/#5	YIS-45B-SK	Cylinder seal kit	4	
	Knife rotation motor	YCG0047A	Gear motor seal kit	5	
	Piston pump	Y72400-908	Seal kit for piston pump 72400	1	
	Gear pump	Y62-10313	Seal kit for gear pump PBB55RK513	1	
	Orbitrol (PV valve)	YBK0039A	Seal kit for orbitrol PV valve	1	
	Orbitrol UA-B4-D	YBA0271A	Seal kit for orbitrol UA-B4-D	1	
	Front wheel motor	YAE0325A	Seal kit for wheel motor 490BBAS (for shaft)	2	
	Front wheel motor	Y61234S	Seal kit for wheel motor 490BBAS (for rear)	2	
	Rear wheel motor	Y61090S	Seal kit for orbit motor 2000 (for rear)	2	
	Rear wheel motor	Y61091S	Seal kit for orbit motor 2000 (for shaft)	2	
	Terminal relay	G6B2114P-US-P6B	Replacement relay	8	
	Rotary knife rotation power relay	K3681000080	Power relay MR5A602A1K	2	Grey
	Power relay for seat/brake	K3681000070	Power relay MR5A411A1K	2	Brown
	Starter relay	PF1K574-6022-0	Relay comp.	1	
	Glow lamp timer	PF15694-6599-0	Glow lamp timer	1	
	Fusible Link	K3631000100	Plug-in fuse 50 A	1	
	Fuse Box	K3631000070	Mini-blade fuse 5 A	7	
		K3631000110	Mini-blade fuse 15 A	2	
	Parking brake switch	K3671000150	Safety switch V17680A	1	

https://truckmanualshub.com/

		Code	Part name	Qty.	Remarks
Main body (including hydraulic and electrical systems)	Proximity sensor	K3720000120	Proximity sensor E2E-X5E2	2	
	Diff-Lock Switch	K3662000030	Auto-return switch ET115G	1	
	Rocker switch	K3661000050	Rocker switch	4	
	Key switch	PF15248-6359-0	Starter switch ass'y	1	
	RT brake ass'y	Y304-2221	Repair kit for RT brake	2	
	RT brake ass'y	Y328-2845	Pad kit for RT brake	2	
	RT brake ass'y	Y304J7024	Cam kit	2	
	Throttle wire	K1110168010	Throttle wire 1680	1	
	Brake wire, right	K1120238000	Brake wire 2380	1	
	Brake wire, left	K1120205500	Brake wire 2055	1	
Operating machine (mower unit)	Rotary knife	K253000009B	Rotary knife 690	5	

https://truckmanualshub.com/

RT mechanical brake manual

MANUAL E404

R T
MANUAL

This manual is to be used in conjunction with the Illustrated Parts List EP2318.

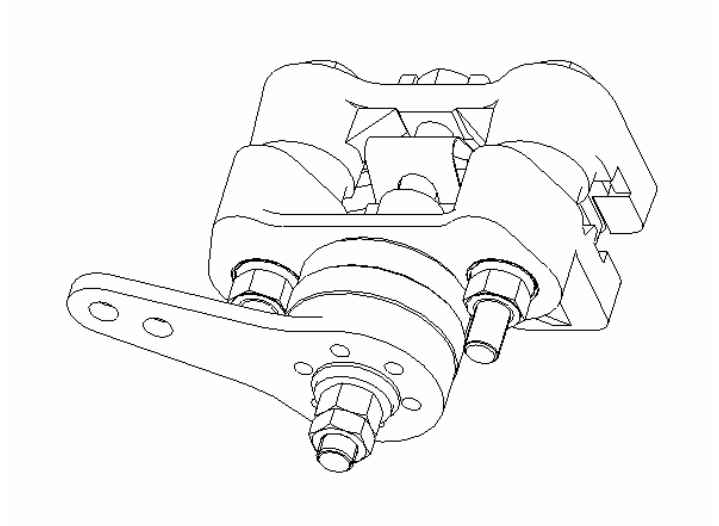

MANUAL: **E404**

JAPAN POWER BRAKE INCORPORATED

1

5dm3ww-008

RT mechanical brake manual_001

https://truckmanualshub.com/

MANUAL E404

TABLE OF CONTENTS

1. DESCRIPTION....3

2. PARTS LIST....3

3. MOUNTING PROCEDURE....4

4. ADJUSTMENT PROCEDURE....4

5. BREAK INSPECTION AND MAINTENANCE....4

6. BALL AND CAM REPLACEMENT....5

7. LINING REPLACEMENT....5

https://truckmanualshub.com/

MANUAL E404

1. DESCRIPTION

The RT parking brake assembly is a ball and ramp, sliding caliper brake designed for use primarily as a parking brake, with some secondary braking capability. The brake has an open caliper design to facilitate changing linings, along with a retraction spring to reduce parasitic drag. It is sealed from the environment to provide a long and trouble free service life.

2. PARTS LIST

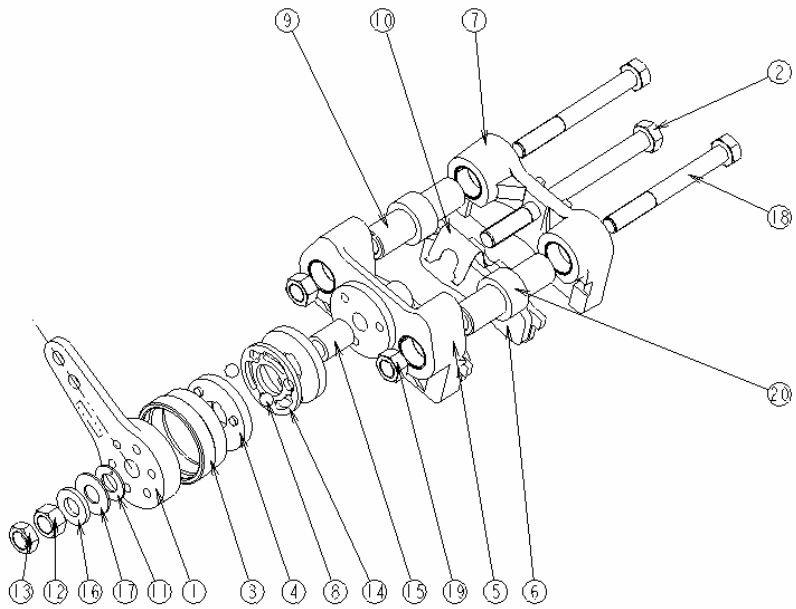

3 5dm3ww-010

RT mechanical brake manual_003

https://truckmanualshub.com/

MANUAL E404

3. MOUNTING PROCEDURE

3.1. Insert Mounting Bolts through Sleeves (9) and thread Brake Mounting Locking Nuts as far as possible on Mounting Bolts. This is not required if brake assembly comes with the sleeve/bolt sub-assy (9). Position the brake over disc and align with mounting holes in mounting bracket.

3.2. Thread mounting bolts into mounting bracket, adjusting bolts until a .020" - .060" gap exists between the Sleeves (9) and the Locking Nuts. Tighten the Locking Nuts to 100 to 120 lb-ft of torque against the bracket.

3.3. Refer to Adjustment Procedure to set clearance of installed brake assembly.

4. ADJUSTMENT PROCEDURE

4.1. Loosen two Adjustment Nuts (12 & 13) (one full nut and one jam nut except when using a 0.50 inch thick disc which requires two jam nuts).

4.2. Tighten inner Nut (12) until firm contact is made with the disc by the linings. Torque to 100 lbs in. Make certain Lever (1) is in proper operating position for application.

4.3. Back off inner Nut (12) 4 to 5 flats and check that disc is free to move.

4.4. Tighten outer Nut (13) against inner Nut (12) to lock Adjustment Bolt (2) in place. Torque to 45 to 55 lb-ft.

5. Break inspection and maintenance

5.1. Inspection of brake and surroundings

Dirt or oil on the brake itself or its surroundings may have an adverse effect on brake performance and should be removed with a brush or a lint-free cloth.

5.2. Appearance inspection of the lining pad assembly (6)

If any cracks or abrasion have occurred in the friction material, replace the lining pad assembly. (See point 7 for the replacement method)

5.3. Thickness inspection of lining pad assembly (6)

The wear limit for the friction material of the lining pad assembly (excluding the carrier) is .12in. If it is less than .12in, replace the lining pad assembly. (See point 7 for the replacement method)

5.4. Greasing of moving parts

<Stainless ball bearing(8), cam(4)>

Grease is sufficiently applied during assembly, but the stainless ball bearing and cam should be disassembled and grease reapplied annually.

If a worn down part is discovered during inspection, replace the stainless ball bearing(8), cam(4), and retainer(14) as a set. (See point 6 for the replacement method)

https://truckmanualshub.com/

MANUAL E404

5.5. Replacement of rubber parts
Replacement of the boot(3), ID seal(15), and OD seal(20) is recommended annually or upon roadworthiness inspection.

6. BALL AND CAM REPLACEMENT

6.1. Remove both Adjustment Nuts (12 & 13), Thrust, Stainless Steel and Hardened Washers (11, 17 & 16), Lever (1), and Boot (3) from Adjustment Bolt (2).

6.2. Remove outer Cam (4) and Ball/Retainer Assembly (8) from Adjustment Bolt (2).

6.3. Use a screwdriver, or similar tool, to gently pry inner Cam (4) protrusions on back of cam, loose from Torque Plate (5), and remove from Adjusting Bolt (2). Remove Seal (15) from Adjusting Bolt (2).

6.4. Install the new Seal (15) on the Adjusting Bolt (2), inserting through inner Cam (4) until Seal (15) bottoms out on Torque plate (5).

NOTE: PRIOR TO THE INSTALLATION OF THE CAMS (4), IT IS RECOMMENDED THAT "ALPHA 2000" GREASE (ANTI-SEIZE & LUBRICATING COMPOUND) MANUFACTURED BY CHEMTOOL, BE APPLIED TO RAMP AREAS OF THE CAMS.

6.5. Install new inner Cam (4) on Adjusting Bolt (2), taking care to orient protrusions into holes in Torque Plate (5).

6.6. Install Ball/Retainer Assembly (8) onto Adjusting Bolt (2), orienting balls into pockets of inner Cam (4). Install outer Cam (4) onto Adjusting Bolt (2), orienting pockets onto Balls of Ball/Retainer Assembly (8). Install Boot (3) over cam assembly.

6.7. Install Lever (1), using protrusions on back of outer Cam (4) and holes in Lever (1) to orient lever to proper operating position.

6.8. Install remaining washers and nuts (11,17,16,12 & 13) and follow adjustment procedure in Section 4.

NOTE: MAKE SURE TO ORIENT COATED FACE OF THRUST WASHER (11) TOWARD STAINLESS STEEL WASHER (17).

7. LINING REPLACEMENT

7.1. Replace both linings when either has worn to .12in. remaining.

7.2. Loosen two Adjustment Nuts (12 & 13) enough to slide each Torque Plate (5 & 7) away from disc far enough to provide clearance to remove old carrier & lining assemblies (6) and install new ones. (It may be necessary to remove one or both Nuts.)

7.3. Collapse Lining Retraction Spring (10) and remove from brake Head Assembly.

https://truckmanualshub.com/

MANUAL E404

7.4. Slide Torque Plates (5 & 7) away from disc, move Carrier & Lining Assemblies (6) out of pockets, and remove from the Brake Head Assembly from the side.

NOTE: PRIOR TO THE INSTALLATION OF THE NEW LININGS, IT IS RECOMMENDED THAT A COATING OF "ALPHA 2000" GREASE (ANTI-SEIZE & LUBRICATING COMPOUND) MANUFACTURED BY CHEMTOOL, BE APPLIED TO THE INTERFACE OF
THE SLEEVE (9) AND THE TORQUE PLATES (5) & (7). AFTER GREASE HAS BEEN APPLIED, SLIDE TORQUE PLATES BACK AND FORTH ON SLEEVE AS FAR AS POSSIBLE TO INSURE THAT THE GREASE HAS BEEN INTRODUCED INTO THE BORES OF THE TORQUE PLATES.

7.5. Install new Carrier & Lining Assemblies (6) in each Torque Plate (5 & 7).

7.6. Install Lining Retention Spring (10) into Brake Head Assembly. Be sure spring's "feet" are positioned properly in holes in both Lining Carrier Assemblies (6).

7.7. Adjust brake per Section 4.

BEVATTNINGSTEKNIK AB
Helsingborgsvägen 578, Varalöv
262 96 ÄNGELHOLM, SWEDEN

Telefon: +46 431 22250
Email : info@bevattningsteknik.se eller philip@bevattningsteknik.se
www.bevattningsteknik.se