https://truckmanualshub.com/

SERVICE MANUAL

360 - 460 - 510 SERIES TRACTORS

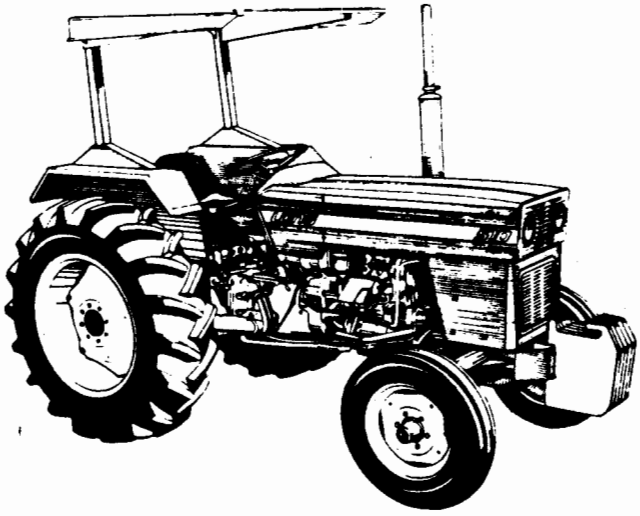

LONG MFG. N.C. INC.

P.O. Box 1139, 111 Fairview St., Tarboro, N.C. 27886
Tel. (919) 823-4151, Telex #510-929-0695

Form 756006 Rev. 6/83

https://truckmanualshub.com/

⚠ SAFETY PRECAUTIONS ⚠

AVOID ACCIDENTS

Most accidents, whether they occur in industry, on the farm, at home or on the highway, are caused by the failure of some individual to follow simple and fundamental safety rules or precautions. For this reason MOST ACCIDENTS CAN BE PREVENTED by recognizing the real cause and doing something about it before the accident occurs.

Regardless of the care used in the design and construction of any type of equipment there are many conditions that cannot be completely safeguarded against without interfering with reasonable accessibility and efficient operation.

A careful operator is the best insurance against an accident. The complete observance of one simple rule would prevent many thousand serious injuries each year. That rule is:

NEVER ATTEMPT TO CLEAN, OIL OR ADJUST A MACHINE WHILE IT IS IN MOTION.

NATIONAL SAFETY COUNCIL

⚠ WARNING ⚠

On machines having hydraulically, mechanically, and/or cable controlled equipment (such as fork lifts, combines, shovels, loaders, dozers, scrapers, etc.) be certain the equipment is lowered to the ground before servicing, adjusting and/or repairing.

If it is necessary to have the hydraulically, mechanically, and/or cable controlled equipment partially or fully raised to gain access to certain items, be sure the equipment is suitably supported by means other than the hydraulic lift cylinders, cable and/or mechanical devices used for controlling the equipment.

⚠ WARNING ⚠

ALWAYS USE proper tools and procedures as recommended in Service and Operator's Manual.

ALWAYS READ all **Caution** and **Note** paragraphs in Service and Operator's Manual before proceeding with service or repair work.

https://truckmanualshub.com/

MASTER INDEX

A. ENGINE

A.O. Specifications · Removal · Installation
A.I. Crankcase · Cylinder Head · Oil Sump
A.II. Valves & Timing Mechanism
A.III. Crank Gear Assembly
A.IV. Fuel System
A.V. Lubrication
A.VI. Cooling
A.VIII. Fits & Tolerances · Torque Specifications

B. POWER TRAIN

B.O. Description
B.I. Clutch
B.II. Transmissions
B.III. Bevel Gear & Differential
B.IV. Brakes
B.V. Independent Hand Brake
B.VI. Final Drive & Rear Wheels
B.VII. Power Take-Off
B.VIII. Front Axle and Steering
B.IX. Front Drive Axle (Side Drive)
B.X. Front Drive Axle (Center Drive)
B.XI. Fits & Tolerances · Torque Specifications

C. HYDRAULICS

C.O. Hydraulic Lift & Linkage
C.I. Power Steering
C.II. Fits & Tolerances · Torque Specifications

D. ELECTRICAL SYSTEM

https://truckmanualshub.com/

A. ENGINE

A.O. Specifications - Removal - Installation
A.I. Crankcase - Cylinder Head - Oil Sump
A.II. Valves & Timing Mechanism
A.III. Crank Gear Assembly
A.IV. Fuel System
A.V. Lubrication
A.VI. Cooling
A.VIII. Fits & Tolerances - Torque Specifications

https://truckmanualshub.com/

A. ENGINE

INDEX

A.O. Specifications · Removal · Installation

Description 3
Specifications 4
Fault-Finding 5
Removing Engine from Tractor 6
Disassembly and Reassembly 8
Installation 8

A.I. Crankcase · Cylinder Head · Oil Sump

Crankcase and Cylinder Liners 11
Checking and Cleaning the Crankcase . . 11
Cylinder Liner Re-boring and Replacement 11
Cylinder Head 12
Oil Sump 14

A.II. Valves and Timing Mechanism

General 15
Timing Data 15
Camshaft 15
Valves, Guides and Springs 17
Valve Gap Adjustment 19
Tappets, Push-Rods and Rocker Arms . . . 19
Timing Gear Assembly 20
Tachourmeter 21

A.III. Crank Gear Assembly

General 22
Crankshaft 22
Crankshaft Bearings 25
Pistons and Rings 25
Connecting Rods 27
Engine Flywheel 28

A.IV. Fuel System

Air Supply 29
Fuel Supply 29
Fuel Tank 30
Fuel Priming Pump 30
Fuel Filters 30
C.A.V. INJECTION PUMP 33
General Description 33
Injection Pump Removal 33
Pump Installation and Timing 35
Injectors 35
Starting Aid 36

A.V. Lubrication

General 38
Oil Pump 39
Oil Filter 39
Low Oil Pressure Warning Light 39
Lube and Capacity Chart 41

A.VI. Cooling

General 42
Water Pump 43
Radiator 44
Thermostat 45
Fan 46
Water Temperature Gauge 46

A.VII. Fits and Tolerances · Torque Specifications

Fits and Tolerances 360/460 47
Fits and Tolerances 510 50
Torque Specifications 53

https://truckmanualshub.com/

A.O. SPECIFICATIONS-REMOVAL-INSTALLATION

DESCRIPTION

The engine installed in the wheel tractor models 360, 460 and 510, is a high speed diesel unit with four strokes and three cylinders-inline. The engine crankcase is a cast iron unibloc with dry type replaceable cylinder liners, and with the housings for the crankshaft main bearings and valve tappets.

Helical-teeth timing gears, camshaft located in the crankcase and overhead valves; intake valves are shielded to increase turbulence of the aspirated air. The power train is driven by the crankshaft which revolves in four thin-shell main bearings and includes: Light alloy pistons with toroidal combustion chamber built in top, three piston rings (two oil scrapers and one compression ring), forged steel connecting rods and liners lubrication and a second one through the small end for piston cooling.

Aspirated air is filtered through an oil bath air cleaner.

Fuel is injected directly into the high turbulence combustion chamber built in piston top.

Double diaphragm fuel lift pump, double filters connected in series and water trap on the first filter.

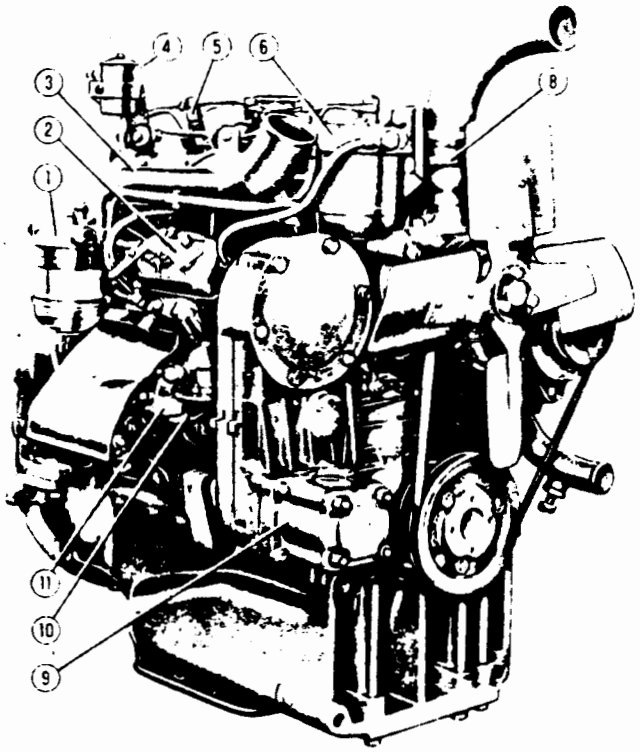

14709

FIG. A.O/1 Three-Quarter Right Front View of Engine

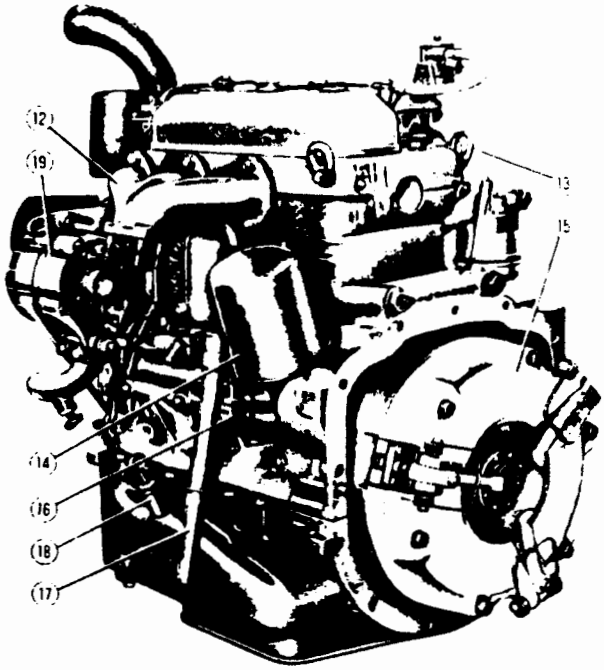

14710

FIG. A.O/2 Three-Quarter Left Rear View of Engine With Clutch

1. First fuel filter; 2. Fuel injection pump; 3. Air intake manifold; 4. Starting aid reservoir; 5. Injector; 6. Second fuel filter; 7. Thermostat location; 9. Hydraulic system oil pump; 10. Fuel lift pump; 11. Electric starting motor

12. Exhaust manifold; 13. Engine lifting eye; 14. Engine oil filter; 15. Engine and P.T.O. clutch unit; 16. Oil pressure sending unit connection; 17. Breather pipe; 18. Oil dipstick; 19. Alternator

https://truckmanualshub.com/

Injection pump of the plunger type with all speed governor and automatic timing device: type Rotary,with fly-weight mechanical governor.

Separate four hole nozzles (360/460) or three hole nozzles (510) clamped to the cylinder head.

Forced feed lubrication from camshaft driven gear-type pump with built in relief valve.

Full flow filter screwed to the crankcase and provided with an internal relief valve which bypasses the oil flow when filter is clogged.

CIRCULATING WATER AND RADIATOR COOLING SYSTEM

A centrifugal pump, belt-driven by the crankshaft-mounted drive pulley, forces the coolant flow which enters the radiator when the temperature reaches up to thermostat setting.

The cold air drawn by the fan which is secured to the water pump hub, cools the coolant inside the radiator.

Direct electric starting with solenoid engagement, 12 volt motor and starting aid for low temperatures.

SPECIFICATIONS — ENGINE

	360	460	510
Type	Diesel	Diesel	Diesel
Strokes	4	4	4
Number of Cylinders	3	3	3
Bore and Stroke	3.74 x 4.33 in. (95 x 110 mm)	3.74 x 4.33 in. (95 x 110 mm)	4.02 x 4.33 in. (102 x 110 mm)
Displacement	143 cu. in. (2340 cu. cm.)	143 cu. in. (2340 cu. cm.)	164.5 cu. in. (2696 cu. cm.)
Static Timing	13°BTDC	13°BTCD	13°BTCD
Number of Main Bearings	4	4	4
Injection Sequence	1-2-3	1-2-3	1-2-3
Compression Ratio	17:1	17:1	17:1
Sense of Rotation (As seated in the driver's seat)	Counterclockwise	Counterclockwise	Counterclockwise
Rated Speed	2255 RPM	2400 RPM	2400 RPM
High Idling	2355 RPM	2550 RPM	2550 RPM
Low Idling	600 RPM	600 RPM	600 RPM

P.T.O. RPM to Engine RPM

164-168	600-650	600-650	675-725
540	1970	1970	2160
600	2189	2189	2400
659	2400	2400	2600

Starter Pinion to Flywheel Crown Gear Ratio	9:110	9:110	9:110
Engine/Alternator Speed Ratio	1:1827	1:1827	1:1827
Lubrication Pressure (Max.)	294-392 kPa (42.7-56.9 PSI)	294-392 kPa (42.7-56.9 PSI)	294-392 kPa (42.7-56.9 PSI)
Minimum Pressure	34.4 kPa (5 PSI)	34.4 kPa (5 PSI)	34.4 kPa (5 PSI)
Engine/Oil Pump Speed Ratio	1:0.500	1:0.500	1:0.500
Engine/Water Pump Speed Ratio	1:1.464	1:1.464	1:1.464
Hourmeter Calibration (1 Hr.)	96,000 Engine Revs.	96,000 Engine Revs	96,000 Engine Revs
Engine Weight (Without Air Cleaner and Lubricating Oil)	660 lbs. (299 kg)	660 lbs. (299 kg)	660 lbs. (299 kg)

HORSEPOWER

Manufacturer's Maximum Observed P.T.O. Horsepower at Rated Engine Speed	35 (26.1 kw)	41.9 (31.3 kw)	48.5 (36.2 kw)

https://truckmanualshub.com/

FINDING THE PROBLEM IN CASE OF POOR ENGINE PERFORMANCE

If test specifications cannot be met:

1. Check, by excluding one cylinder at a time, that the compression pressure drop is constant in order to ascertain the functional efficiency and uniformity of nozzles or try once again using a set of calibrated test nozzles.
2. Look for the causes of poor engine performance. Use a compression tester applying it in succession to each cylinder, to which the present test data and procedure refer. (See chart.)

Test the engine when temperature has reached 158 °F. (70 °C.), corresponding almost to the limit of the white band of the panel-mounted temperature gauge, and stop the engine.

1. Remove the injectors from the cylinders.
2. Install a compression tester in place of the injector corresponding to the cylinder to be tested.
3. Hold the injection pump in "STOP" position and take the readings, turning the engine with the starter motor.

The pressure reading for a normally operating engine, recorded at temperature of about 180 °F (82 °C.) and at sea level (760 mm. of mercury), and for a speed of about 650 RPM is 375-425 PSI (26.4-29.9 k/cm²) with all injectors removed.

The minimum permissible pressure reading for a worn engine is 375 PSI (26.4 k/cm²).

It must be kept in mind that pressure drops of 1% for every 100 m. increments of altitude. (Approximately 320 feet.)

The maximum permissible pressure difference between the various cylinders is 50 PSI (3.5 k/cm²).

Compression faults can be traced to: valves and seats, pistons and their rings, cylinder head gasket.

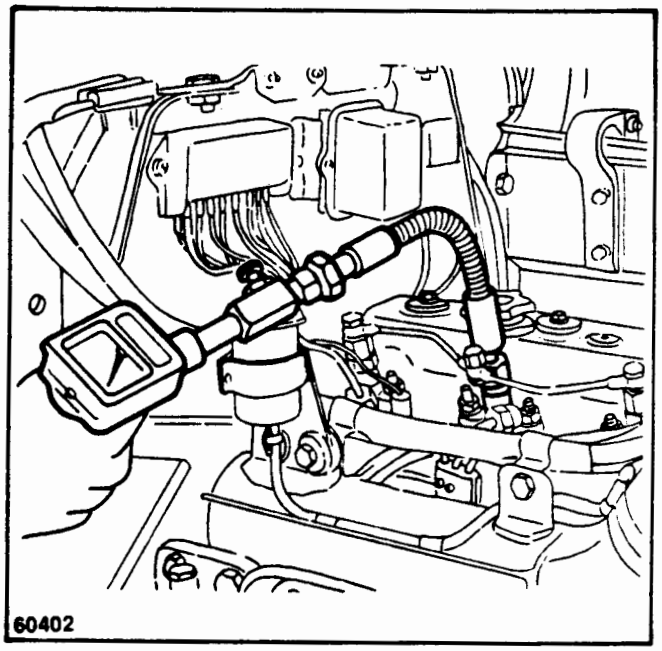

FIG. A.O/3 CHECKING ENGINE COMPRESSOR WITH TESTER

⚠ CAUTION!
Pressure test data are reliable only if the gauge is functionally efficient and correctly installed and if temperature and speed requirements have been met. Do not start overhauling or repairing an engine following a single low compression reading, or if the gauge is not the one indicated or if the test has not been carried on as specified.

https://truckmanualshub.com/

FAULT DIAGNOSIS CHART

SYMPTOM: INCORRECT IDLING AND MAX SPEEDS	SYMPTOM: LOSS OF POWER - POOR CONSUMPTION	SYMPTOM: UNEVEN RUNNING - MISFIRING	SYMPTOM: EXCESSIVE EXHAUST	SYMPTOM: DIFFICULT STARTING	CAUSE	CHECK
				1►	1 No fuel	1 Fuel level
				2►	2 Stop control	2 In run position and linkage free
				3►	3 Starting procedure	3 Is it correct
4►		4►		4►	4 Air in system	4 That system is vented and all joints and unions air tight
5►	5►			5►	5 Fuel restriction	5 Filters and pipes clear
				6►	6 Fuel contamination	6 That fuel is free of water, dirt, ice and wax
				7►	7 Cranking speed	7 Correct Lub, oil, Battery, starter and cable connections
				8►	8 Starting aid	8 Correct functioning, Fuel supply and electrical connections
	9►	9►	9►	9►	9 Injection timing	9 Pump to engine timing
10►	10►			10►	10 Feed pump	10 Pressure
11►	11►			11►	11 Blocked return pipe	11 DPA back leak, return to tank and filter vents are free
12►	12►	12►	12►	12►	12 Poor compression	12 Cyl. comp. Air intake clear. Injector seats. Valve clearances & timing
14►	14►	14►	14►	14►	14 Fuel atomisation	14 Injectors - type, setting, condition, sealing and evenly tightened down
	15►				15 Fuel tank vent	15 Vent unrestricted
	16►	16►		16►	16 Firing order	16 HP pipes fitted in correct order
		17►			17 HP pipe restriction	17 HP pipe bores not kinked or reduced at nipples
18►	18►	18►		18►	18 HP leaks	18 HP pipe joint tightness
	19►				19 LP leaks	19 Fuel pipes for leaks
20►					20 Idling speed incorrect	20 Engine idling speed setting
21►	21►				21 Max. speed incorrect	21 Engine maximum no load setting
22►	22►				22 Accelerator linkage	22 Lever loose on pump, reaches stops. Linkage wear. Pedal stop setting
		23►			23 Engine mounting	23 Mountings are tight
		24►			24 Vibration	24 Vibration not transmitted from elsewhere
	25►				25 Overloading	25 Vehicle payload
	26►				26 Brakes	26 Brakes not binding
		27►			27 F I pump mounting	27 F I pump drive and mounting bolts tight
28►	28►	28►	28►	28►	28 F I pump	28 **If all else fails remove F I pump and send for specialist check**

https://truckmanualshub.com/

REMOVING THE ENGINE FROM TRACTOR

Proceed according to the following sequence:

1. Remove the radiator grill after removing the upper bolts in either direction, then disconnect the battery cables and remove battery. (See Fig. A.O/4.)

2. Drain all fuel and close the fuel valve. Drain the crankcase oil through the bottom plug hole and the crankcase and radiator coolant through the plugs (Items 13 and 14, Fig. A.O/5) located on the left side of the engine.

3 Remove the front axle with radiator, after disconnecting or detaching:

   (a) Transmission oil suction line (Item 21, Fig. A.O/6) to hydraulic pump and delivery line (Item 20) to hydraulic lift; making sure to plug holes to prevent spillage of oil and contamination of lines.

   (b) Band clamp securing air cleaner hose (Item 19) to intake manifold water inlet and outlet hoses from radiator and, finally, the exhaust muffler (Item 11);

   (c) Steering drag link (Item 12) from steering arm (if applicable).

   (d) Remove bolts holding ram anchor to transmission housing.

   Lock the parking brake.

   Insert two wooden wedge blocks on the axle and lift tractor with a hydraulic jack or hoist until free from the engine; place shop stands or wooden blocks under the transmission case, remove the capscrews (Item C_2, Fig. A.O/5) attaching axle to oil sump and, finally, remove the front axle assembly cowling and radiator.

⚠ CAUTION:
When using the axle wedges, be sure they fit and are driven in tight. Also, any blocks or stands used in splitting the tractor should be stable. The brakes should be locked by stepping on the brake pedals and pulling the parking brake back.

Be sure any slings or chains are capable of supporting the portion of the tractor to be hoisted.

4. Remove the rear hood section with instrument and rear panels:

   (a) The starting and lighting switch (Item 26, Fig. A.O/7) and the starting switch (Item 30) and lever.

   (b) Remove the rear hood, instrument panel and rear panel attaching capscrews;

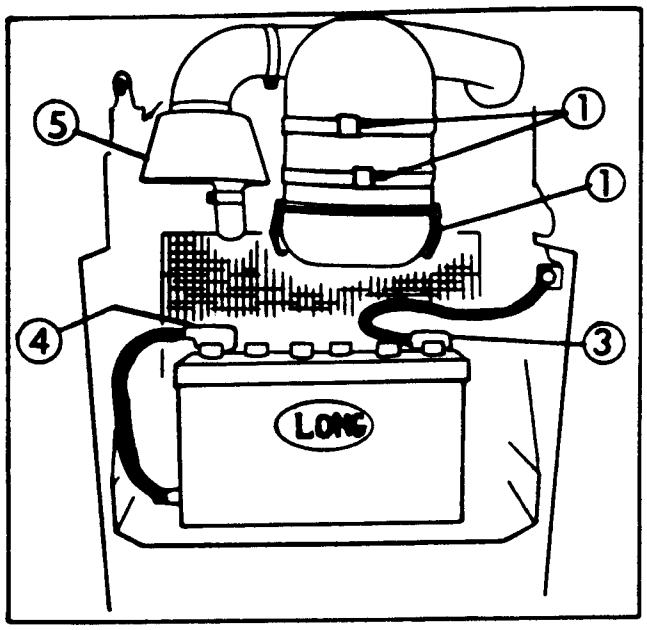

FIG. A.O/4 FRONT VIEW OF TRACTOR WITHOUT BONNET.
1. Air cleaner clamp; 3. Battery ground cable; 4. Plus terminal; 5. Headlight connection cables.

   (c) Disconnect the connections located behind the instrument panel and unscrew the tachometer flexible drive (Item 9, Fig. A.O/5).

5. Remove fuel tank, as follows:

   (a) Disconnect cable (Item 28, Figure A-O/7) from the starting safety switch located on the transmission case cover.

   (b) Slacken the band clamps, then remove suction and return oil lines (Item 9, Fig. A.I/3) from injectors.

   (c) Disconnect the fuel level indicator wire with bayonet-type connection located on the fuel tank.

   (d) Remove the tank strap after loosening and withdrawing the attaching bolt.

6. Remove the fuel tank support and electric control box mounting as an assembly, as follows:

   (a) Disconnect the alternator cable (Item 8, Fig. A.O/5) and the two band clamps (Item 7, Fig. A.I/3) attaching to it the intake manifold.

   (b) Remove the starting motor (Item 23, Fig. A.O/6) cable (Item 22) and the water temperature gauge (Item 18) and low oil

https://truckmanualshub.com/

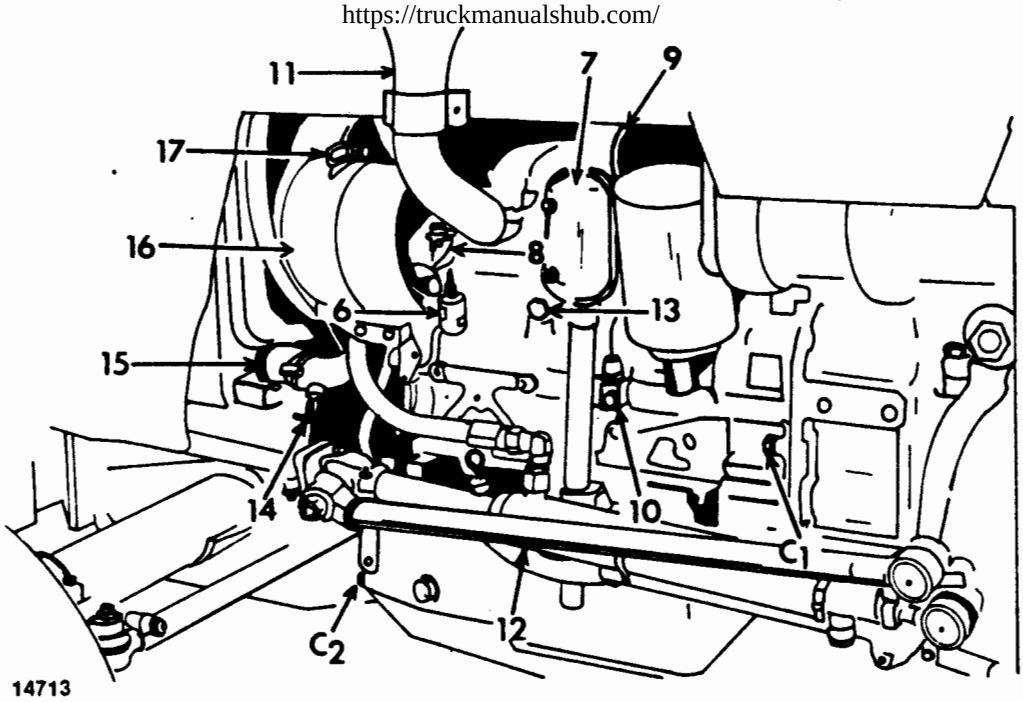

FIG. A.O/5 LEFT SIDE VIEW OF ENGINE INSTALLED

C_1. Capscrews attaching engine to transmission case; C_2. Capscrews attaching front axle to oil sump; 7. Crankcase breather; 8. Alternator cable; 9. Tachourmeter flexible drive; 10. Low oil pressure sending unit; 11. Exhaust muffler; 12. Steering drag link; 13. Crankcase water drain; 14. Radiator water drain cock; 15. Radiator water outlet hose; 16. Alternator; 17. Belt take-up bracket

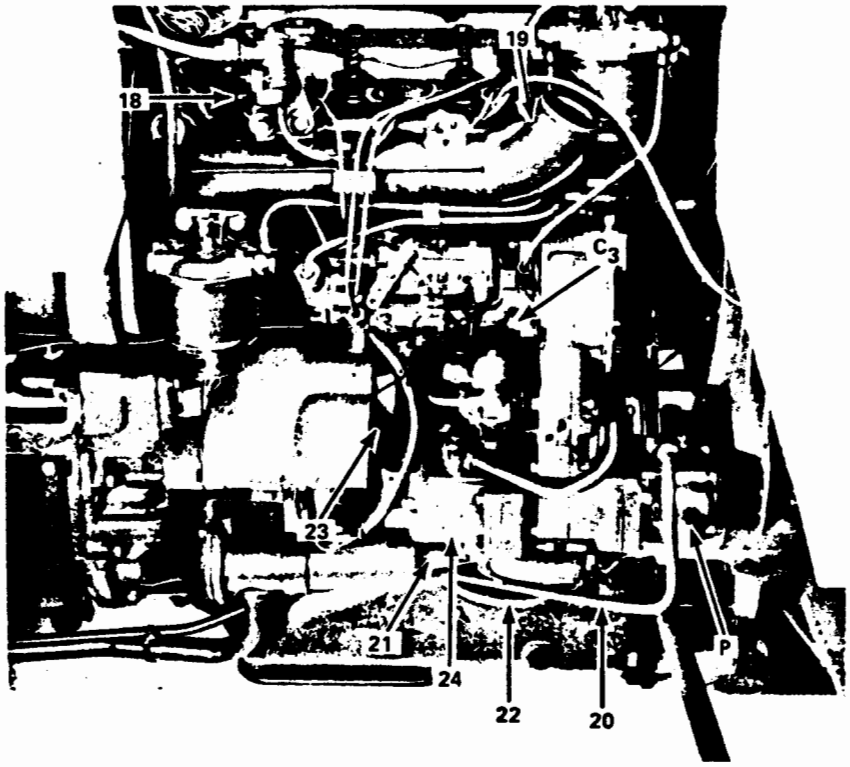

FIG. A.O/6 RIGHT SIDE VIEW OF ENGINE INSTALLED

C_3. Injection pump locating nuts; P. Hydraulic lift oil pump; 18. Water temperature gauge cable; 19. Intake manifold; 20. Delivery line to hydraulic lift; 21. Oil pump suction line; 22. Electric starting motor cable; 23. Electric starting motor; 24. Steering pump

https://truckmanualshub.com/

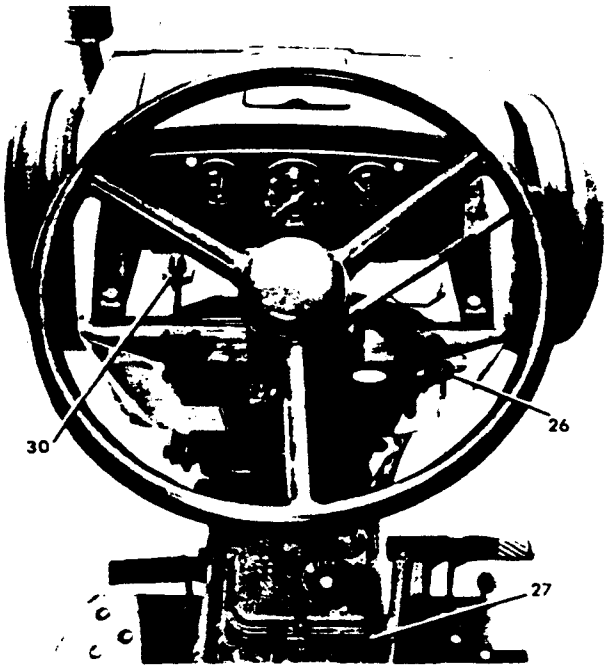

FIG. A.O/7 INSTRUMENT PANEL AND REAR PANEL

26. Key switch; 27. Rear flood light cable; 28. Starting safety switch cable; 30. Starting and thermostart switch

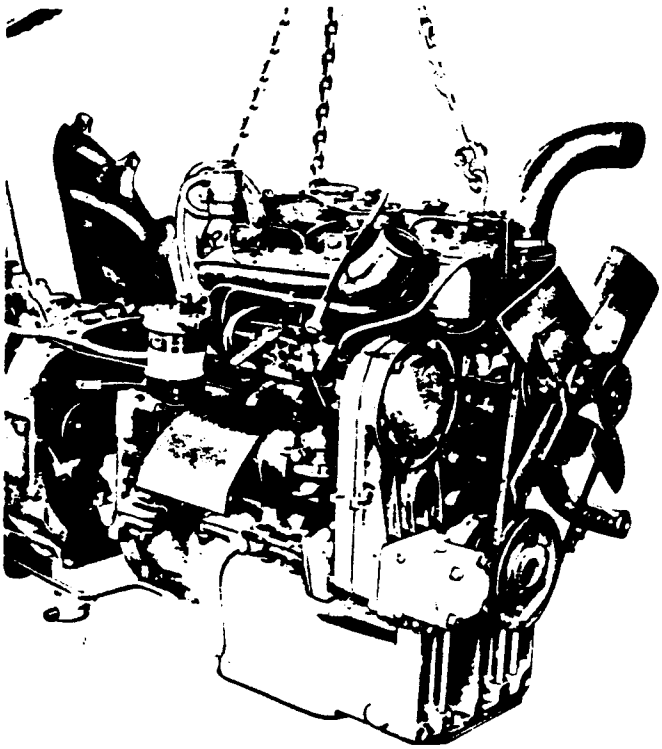

FIG. A.O/8 REMOVING ENGINE FROM TRACTOR WITH LIFTING CHAINS

pressure indicator (Item 10, Fig. A.O/5) cables.

(c) Remove the hand and foot accelerator rods from the linkage.

(d) Remove the attaching capscrews (Item C_1, Fig. A.O/5) to the transmission case.

7. Hook three chains into the three lifting eyes (Fig. A.O/8) on the engine and take the weight off with a hoist.

   Lift the engine and pull it off forward to allow the clutch shafts to clear the clutches.

DISASSEMBLY AND REASSEMBLY

Attach the engine on an engine stand.

INSTALLATION

Reverse the removal sequence and be sure to remember the following:

1. When attaching the engine to the transmission case, be sure to locate the clutch splines on their respective gearbox and P.T.O. shaft section properly so to avoid jamming or spline damage.
2. Tighten to specified torque values.

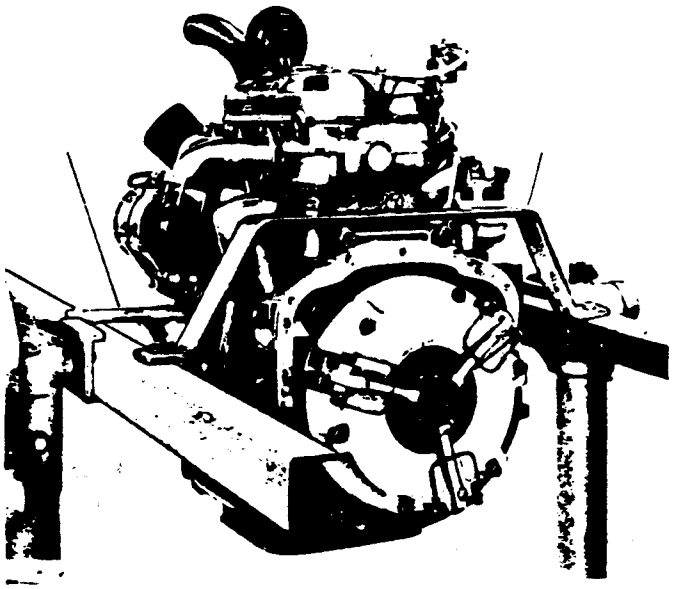

14716

FIG. A.O/9 INSTALLING ENGINE ON TURNOVER STAND

https://truckmanualshub.com/

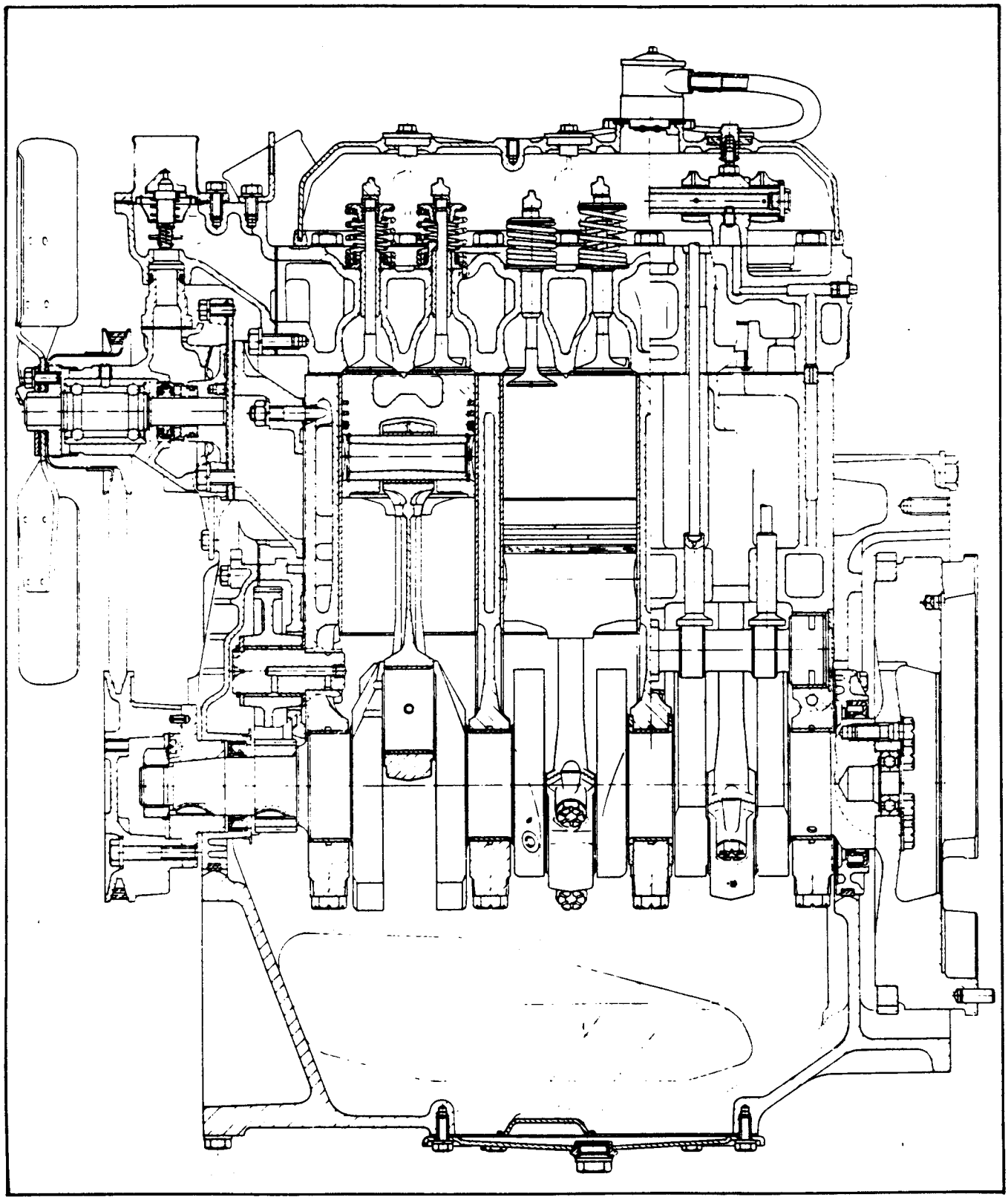

FIG. A.O/9A ENGINE - SECTIONAL VIEW

https://truckmanualshub.com/

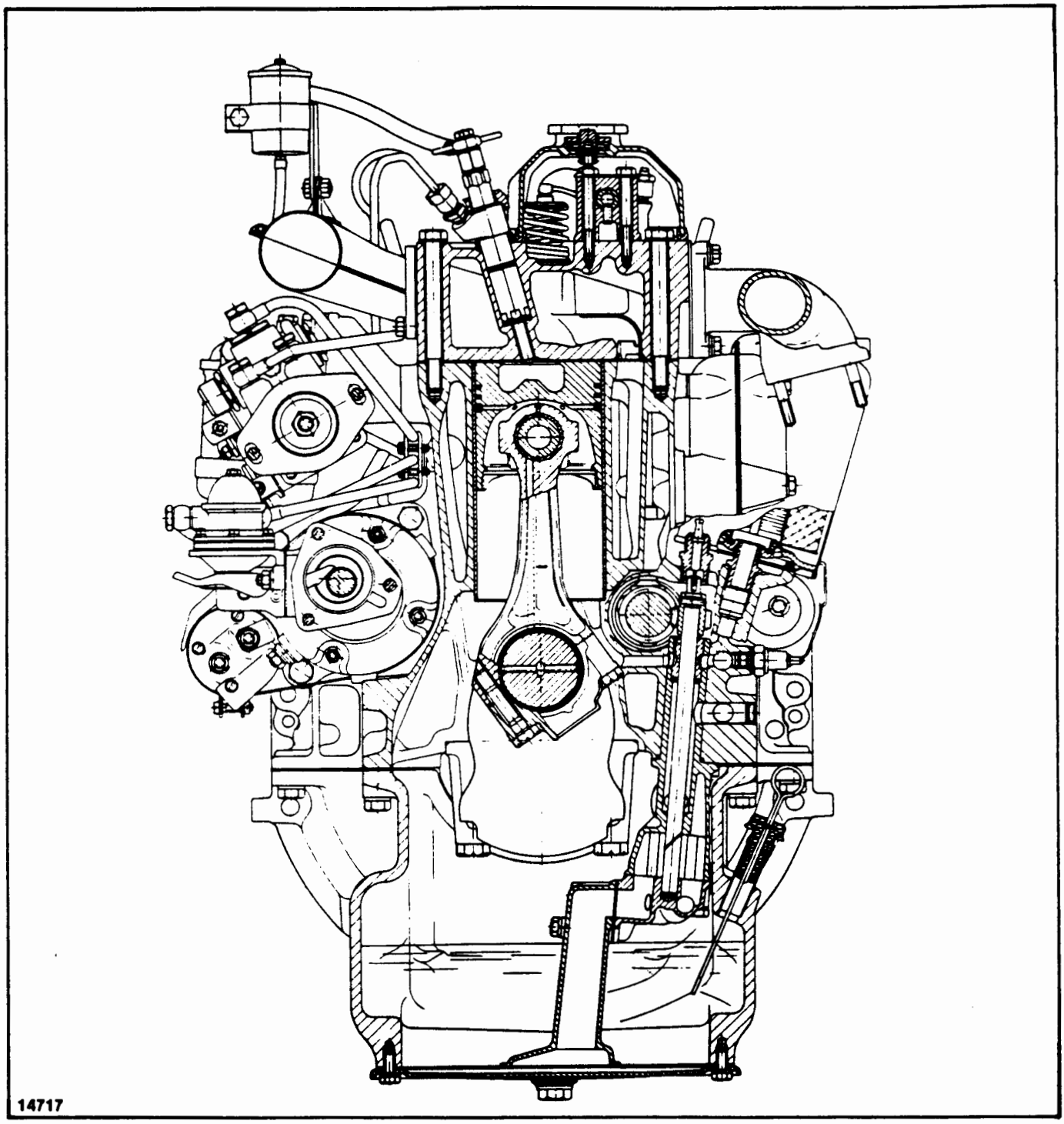

FIG. A.O/9B ENGINE - SECTIONAL VIEW

https://truckmanualshub.com/

A.I CRANKCASE-CYLINDER HEAD-OIL SUMP

For a general overall inspection of the crankcase components, remove engine from tractor as indicated on page 6.

CRANKCASE AND CYLINDER LINERS

The cast iron crankcase and cylinder block unit construction comprises the cylinder liner bores, crankshaft main bearings, camshaft bearing bores, and the valve tappet bores. Cylinder liners, of the dry type, are inserted by cold press fitting. New liners must be bored to proper size after installation in engine bore. (See "Fits and Tolerances-Torque Specifications-section.)

Class identification letters are stamped on the crankcase top surface (Fig. A.I/1), in correspondence of each liner.

CHECKING AND CLEANING THE CRANKCASE

At overhauls check for causes of oil and water leaks and seepage.

Proceed as follows:

1. Wash the crankcase with a hot detergent and water solution, and flush it repeatedly with cold water.
2. Degrease the lubrication passages with a jet of pressurized air and solvent mixture and remove sludge from the inside of passages.
3. Check sealing tightness of threaded and expansion plugs, and replace damaged ones.
4. Check the face parallelism of the cylinder head mating surface using a straight edge and feeler gauge and, if necessary, reface it.
5. To avoid fluid leaks or seepage, make sure both crankcase and cylinder head mating surfaces are clean, before installing the gasket. Do not use any type of gasket sealant.

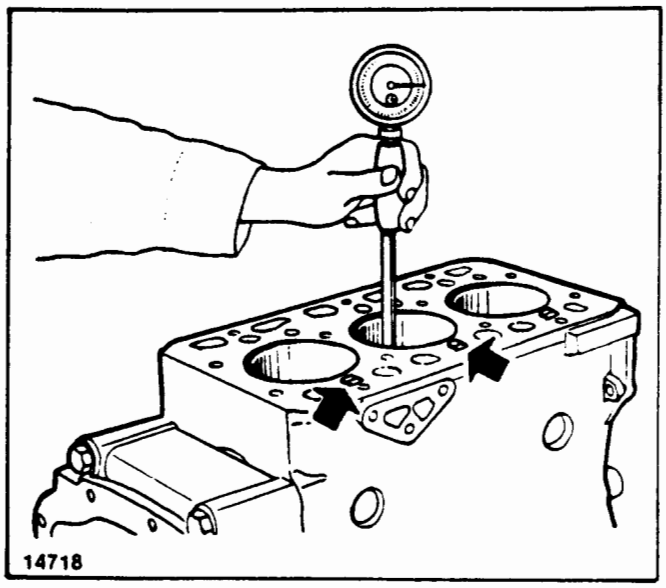

FIG. A.I/1 CHECKING CYLINDER LINER BORE WITH A DIAL INDICATOR GAUGE (ARROWS INDICATE CLASS OF FIT.)

CYLINDER LINER RE-BORING AND REPLACEMENT

Check the liner inside diameter by placing a dial gauge successively on two axes perpendicular to each other (Fig. A.I/1) and take these readings at three different heights (Fig. A.I/2) to locate ovalization or excessive wear.

If necessary, re-bore the liners to the next oversize diameter, the measurements are listed in the "Engine Fits and Tolerances" table. If, on the other hand, the liners which require re-boring are already oversized of 0.0254 mm. (0.001 in.), which is the maximum permissible oversize, replace them, and bore to proper size.

https://truckmanualshub.com/

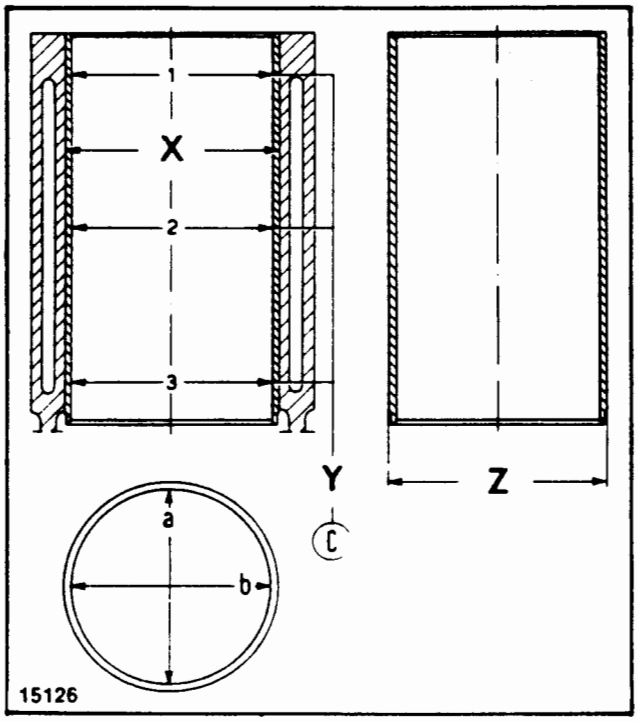

FIG. A.I/2 STANDARD LINER AND CRANKCASE BORE DIMENSIONS
a-b. Liner measure locations; C. Final dimension after press-fitting.
(Liners are classified dimensionally as A or B. See specification chart). - 1, 2 and 3. Bore measuring planes.

	360/460		510	
X	98.890mm 98.940mm	3.893 in. 3.895 in.	105.890mm 105.940mm	4.169 in. 4.171 in.
Y	95.000mm 95.024mm	3.740 in. 3.741 in.	102.000mm 102.024mm	4.015 in. 4.016 in.
Z	99.020mm 99.050mm	3.898 in. 3.899 in.	106.020mm 106.050mm	4.174 in. 4.175 in.

⚠ CAUTION:
If the dowel with lube oil flow restriction is removed also, make sure to install it with the smaller hole toward the cylinder head.

CYLINDER HEAD

Special alloy cast iron cylinder head with hardened valve seats and nozzle mounting holes.

To remove the cylinder head from a tractor installed engine, proceed as follows:

1. Remove hood assembly.
2. Drain crankcase and radiator coolant through the respective cocks located on the engine left side.
3. Loosen the band clamp which secures the cylinder head coolant outlet hose to the radiator.
4. Remove the valve cover (Item 5, Fig. A.I/3) backing out the capscrews (Item C_1).
5. Remove the intake manifold (Item 6) to gain easier access to the lines and tubing indicated below.
6. Disconnect the nozzle pressure and return lines (Items 8 and 9 respectively).
7. Remove rocker arms with shafts and supports, and the push rods.
8. Remove the thermometer bulb.
9. Unscrew the attaching capscrews from the crankcase and split the head away without wedging with tools inserted between mating surfaces to avoid damage.

If the cylinder head is removed with the nozzles installed, care must be taken not to damage the latter which project above the surface, or remove them first as a precautionary measure.

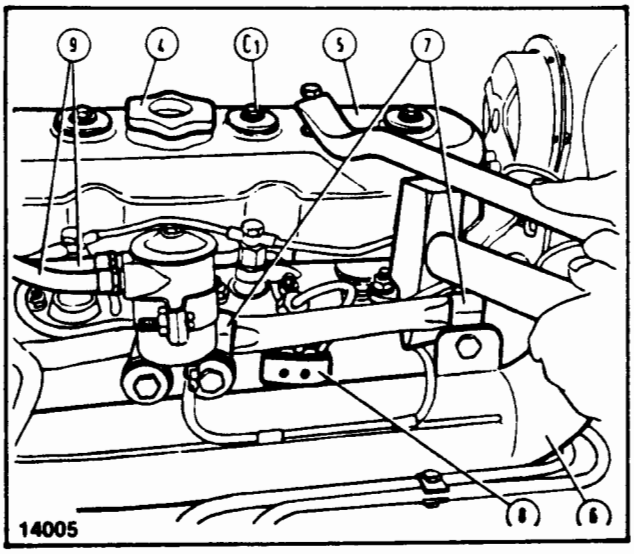

FIG. A.I/3 REMOVING THE TAPPET COVER (5)
C_1. Tappet cover attaching nut; 4. Oil filler plug; 6. Intake manifold; 7. Alternator cable band clamps; 8. Nozzle pressure line retaining bracket; 9. Nozzle return oil lines.

https://truckmanualshub.com/

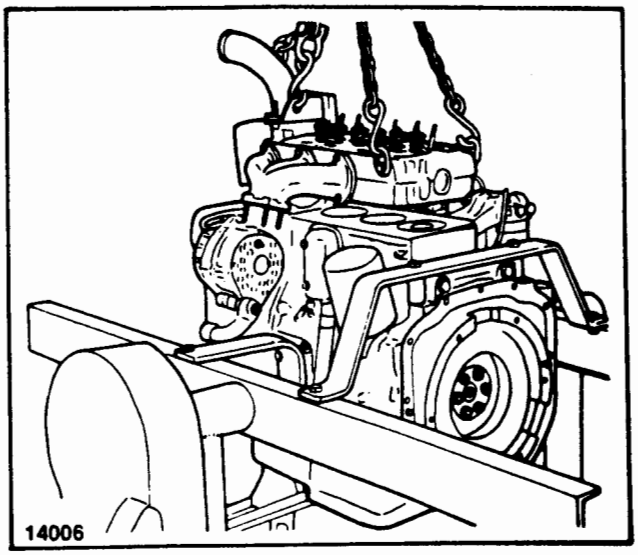

FIG. A.I/4 REMOVING CYLINDER HEAD FROM ENGINE INSTALLED ON ENGINE STAND

The instructions for removing the cylinder head from an engine removed from the tractor are similar to the ones given previously for the tractor installed engine, provided of course that in the former case the engine unit will have to be installed on the shop turnover stand. (See Fig. A.I/4).

CHECKING THE CYLINDER HEAD

For complete inspection and checking of the cylinder head, it is best to remove valves, valve springs and nozzles and to clean the mating surface, valve seat and passages.

Check the cylinder head mating plane by moving it over a surface plate smeared with lampblack or blue. If high spots show up, reface it.

If valve seats are to be re-cut, the cylinder head mating plane can be ground to a depth not exceeding 0.020 in. (0.5 mm.).

In case of grinding, we suggest that a copper washer of suitable thickness be placed inside the nozzle seat so to maintain the nozzle projection above the cylinder head at the same value as before; also, make sure the valve recessing from the cylinder head plane does not exceed 0.03-0.04 in. (0.7 - 1.1 mm.) (Fig. A.I/5). The height of a new cylinder head is 3.662 In. (92 mm.). Check the expansion cups and threaded plug for coolant and oil tightness and replace them if necessary.

Following checks, inspections, grinding, wash cylinder head in solvent to remove even the slightest trace of abrasive matter.

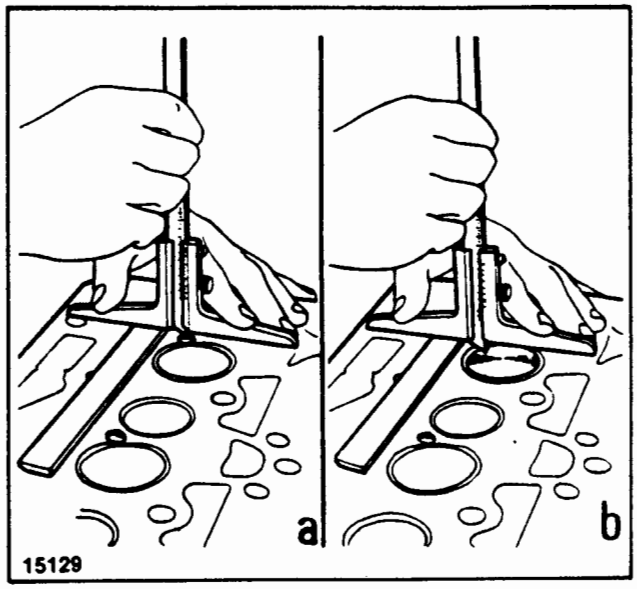

FIG. A.I/5 MEASURING NOZZLE PROJECTION ABOVE CYLINDER HEAD PLANE (a) AND VALVE RECESSING (b)

Nozzle projection: 0.08 - 0.10 in. (2 - 2.5 mm.)
Valve recessing: 0.03 - 0.04 in. (0.7 - 1.1 mm.)

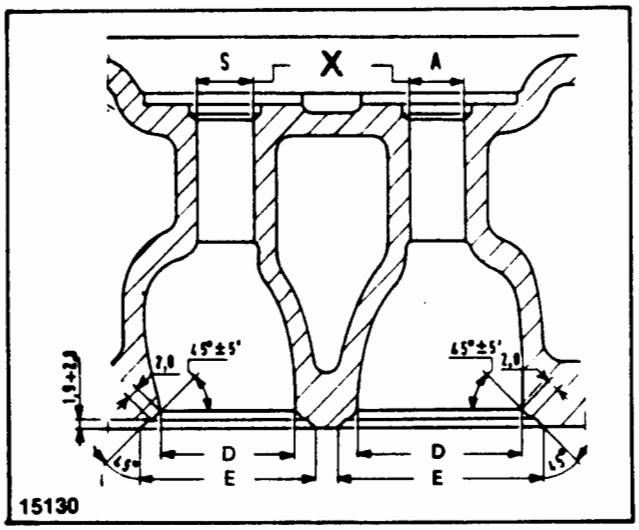

FIG. A.I/6 DIMENSIONS OF INTAKE AND EXHAUST VALVE SEATS AND OF VALVE GUIDES IN CYLINDER HEAD

X = 13.966 mm. - .549 in.
13.983 mm. - .550 in.

Valves	(A) Intake		(s) Exhaust	
	mm.	in.	mm.	in.
Dia. D	40	1.575	33	1.299
Dia. E	48.6	1.913	41.6	1.638

https://truckmanualshub.com/

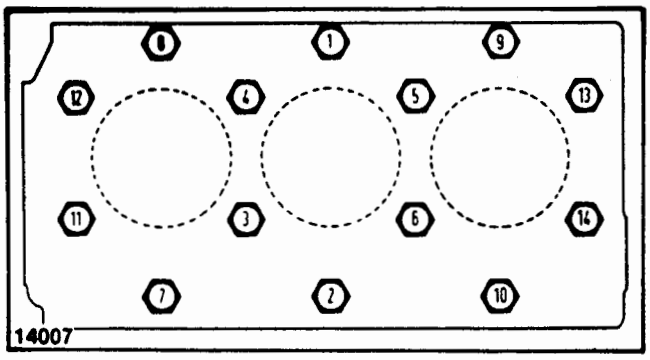

FIG. A.I/7 CYLINDER HEAD TIGHTENING SEQUENCE (See Torque Specification Table.)

CYLINDER HEAD AND GASKET INSTALLATION

Reverse the sequence of removal and take good note of the following:

1. Thoroughly clean both crankcase and cylinder head mating planes to remove gasket particles which have remained stuck to the surfaces at removal.

2. Do not apply any sealing compound to the gasket, as its surfaces have already been treated with a suitable adhesive compound over the areas requiring the greatest sealing performance: this will adhere to the crankcase and cylinder head surfaces under the effect of heat as the engine reaches operating temperature.

3. Place the cylinder head with the crankcase locating dowel fitting in the head hole.

4. Install the capscrews and torque them following the sequence illustrated in Fig. A.I/7 and to the values given in the "Torque Specifications" table.

ENGINE OIL SUMP

To remove the oil sump only from a tractor installed engine, proceed as follows:

1. Drain oil through plug hole at bottom of sump.

2. Disconnect the hydraulic lift delivery and return oil lines.

3. Remove the front axle assembly as outlined on page 108 in Power Train Section.

4. Back out the capscrews attaching the oil sump to the crankcase. Before removing them, place a wooden block under the sump to support it once free.

The operation is easier if the engine is installed on a turnover stand, as it will be sufficient to free the pump to remove the attaching screws to the crankcase.

As to cleaning and checking, see the outline reported in the preceeding topic and referring to the crankcase.

When installing the oil sump, be sure to:

1. Apply a thin coating of non-hardening sealing compound on both surfaces. Install the end seals over the gaskets and make sure the holes are aligned.

2. Place the sump and install all attaching capscrews.

3. Make sure the oil sump and engine bell housing are flush with each other.

4. Cross tighten progressively to the torque values in the "Torque Specifications" table.

https://truckmanualshub.com/

A.II VALVES AND TIMING MECHANISM

GENERAL

Overhead valves are actuated by the camshaft which is driven from the engine through the timing gears. The camshaft motion is transmitted to the valves through tappets, push rods and rocker arms (Fig. A.II/1).

Each valve is fitted with one spring and one guide, the length of the latter inside the cylinder head being limited by a stop ring. The intake valves are shielded to create turbulence and their correct assembly is made fool-proof by allowing only one possible installation position.

TIMING DATA

Valve opening and closing angles, with respect to crankshaft rotation, are as follows:

Intake Valves

Opening Advance . . . . . 3° before T.D.C.
Closing Retard . . . . . 23° after B.D.C.

Exhaust Valves

Opening Advance . . . . . 48° 30' before B.D.C.
Closing Retard . . . . . 6° after T.D.C.

Cold Valve Gap (Intake and Exhaust) for Timing Check . . . . . 0.018 in. (0.45 mm.)
Cold Valve Service Gap (Intake and Exhaust) for Engine . . . . . Intake (0.250 mm) 0.010 in.
Exhaust (0.250 mm) 0.010 in.

Total Valve Down Stroke Inside Cylinders in the Opening Phase . . . Exhaust (10.000 mm.) 0.394 in.
Intake (10.000 mm.) 0.394 in.

CAMSHAFT

Crankcase-mounted camshaft revolving in three bearings with friction metal lining and force-fitted in their respective crankcase housing bores. The shaft (Item a, Fig. A.II/3) is retained at front by means of a stop flange (Item 9) and carries a driving gear (Item 10) press fitted hot and keyed to its front end.

Remove the camshaft and its sleeve bearings as follows:

1. Remove the engine according to the directions outlined on page 6 and install it on an engine stand.
2. Remove the timing gear cover after removing the following:
   (a) Hydraulic pump (Item P, Fig. A.III/1).
   (b) Injection Pump Drive Gear Inspection Cover (Item 7).
   (c) Remove oil pan and oil pump.

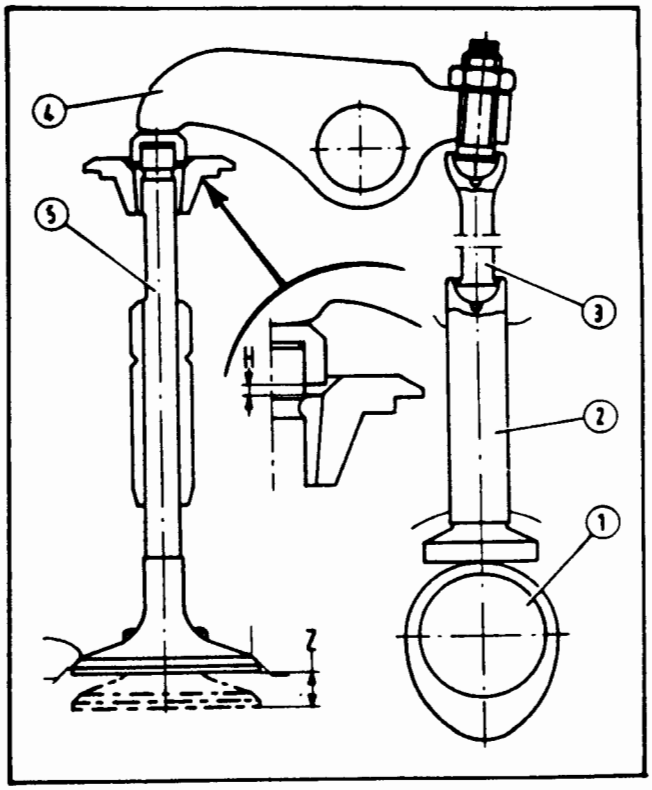

FIG. A.II/1 VALVE DRIVE AND CONTROL MECHANISM

H. Clearance between cup retaining cap and locks; Z. 0.394 in. (10.000 mm.) Maximum valve down stroke exhaust; Z. 0.394 in. (10.000 mm.) intake; 1. Camshaft; 2. Tappet; 3. Push rod; 4. Rocker Arm; 5. Valve

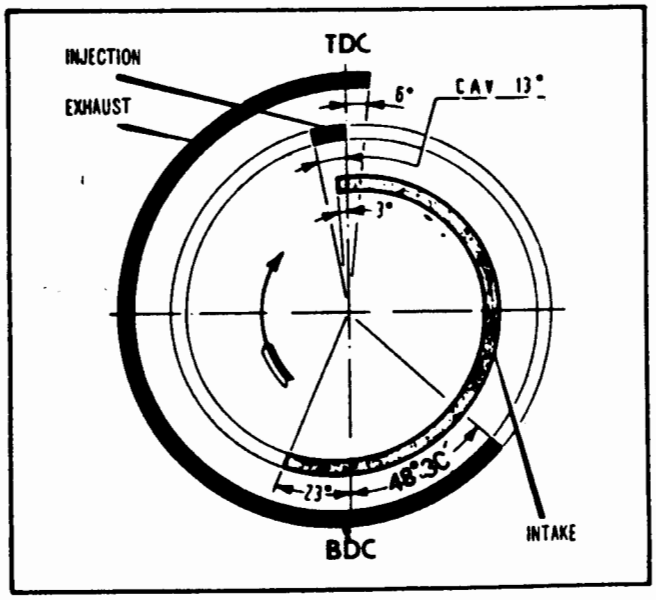

FIG. A.II/2 TIMING DIAGRAM

https://truckmanualshub.com/

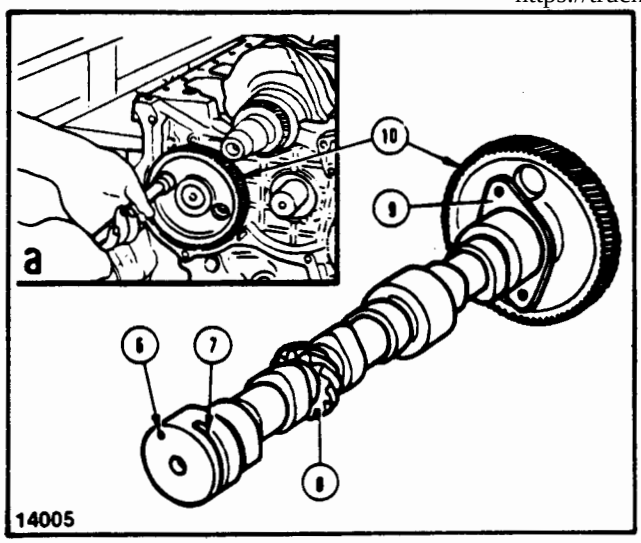

FIG. A.II/3 CAMSHAFT REMOVED
6. Oil pressure reducing hold; 7. Oil circulation groove; 8. Oil pump driving gear; 10. Camshaft driving gear
a) Removing the capscrews securing the camshaft stop flange (Item 9) to the crankcase.

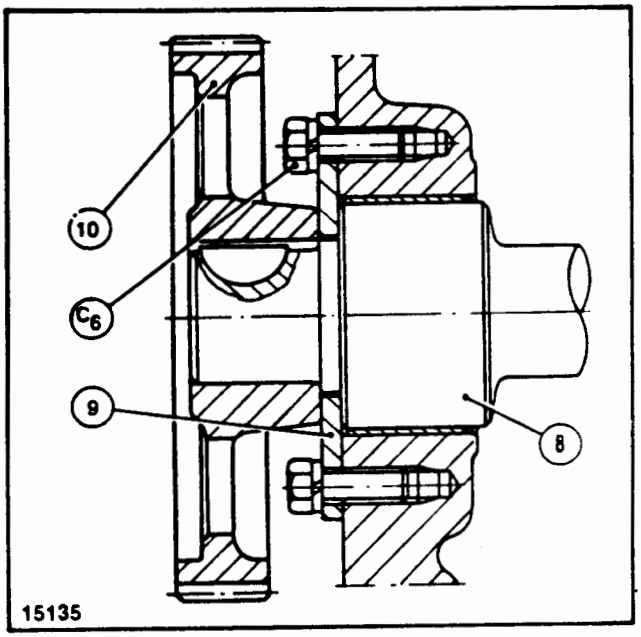

FIG. A.II/4 SECTIONAL VIEW OF THE CAMSHAFT DRIVE
C_6. Capscrews securing the gear (10) and camshaft assembly to the crankcase; 9. Stop flange; 10. Driving gear

(d) V-belt (Item 6), after loosening the front bolt of the alternator.

(e) Drive pulley (Item 5) and its hub with a puller with three slots at 120° each.

(f) Fan and driven pulley.

Remove the end plate attaching capscrews (Item C_6, Fig. A.II/4) by using a suitable wrench through the two holes machined in the gear for this purpose (Fig. A.II/3). Once these operations have been completed, and before withdrawing the camshaft and gear unit, secure lifters in place to prevent the tappets from falling into the oil sump. Remove the gear from shaft end using a press, as the gear is assembled to a shrink fit following immersion in hot oil at 356°F. (180°C.)

REPLACING THE CAMSHAFT BEARINGS

In case of bearing replacement, we recommend the following sequence:

1. Remove the oil sump and timing gear case, if necessary to ease the job.
2. Use a bushing puller on the front bearing (Fig. A.II/6) and the same puller with extension for the intermediate one.
3. Remove the rear crankcase mount.
4. Drive out the expansion plug located at the rear sleeve bearing using a suitable bar through the crankcase.
5. Remove the rear bearing with the same pullers used on front and intermediate ones.

At installation, be sure to:

1. Measure each bushing to be sure they go into the proper bore. (See Fig. A.II/5).
2. Arrange bushings so that lube passages are aligned with the matching passage in the crankcase.
3. Drive in the intermediate bushing with a bushing installation tool.
4. Use a bushing installation tool for the front and rear bushings.
5. Line bore the bushing with a reamer to the diameter specified in Fig. A.II/5.
6. When fitting the camshaft rearmost bearing, be sure to see if this is in the modified version; i.e., with curved uppermost surface so to shield the expansion cup on the crankcase from the outside; if otherwise, fit a rubber plug with replacement inside the cup, to avoid ingress of oil in the clutch compartment.

CAMSHAFT AND BEARING CHECKS

Measure journal and bearing wear and check service clearance (see table of data). Sleeve bearings are not available with undersized bores; if necessary, replace both bearings and camshaft.

Check journal alignment to make sure the camshaft is perfectly straight.

https://truckmanualshub.com/

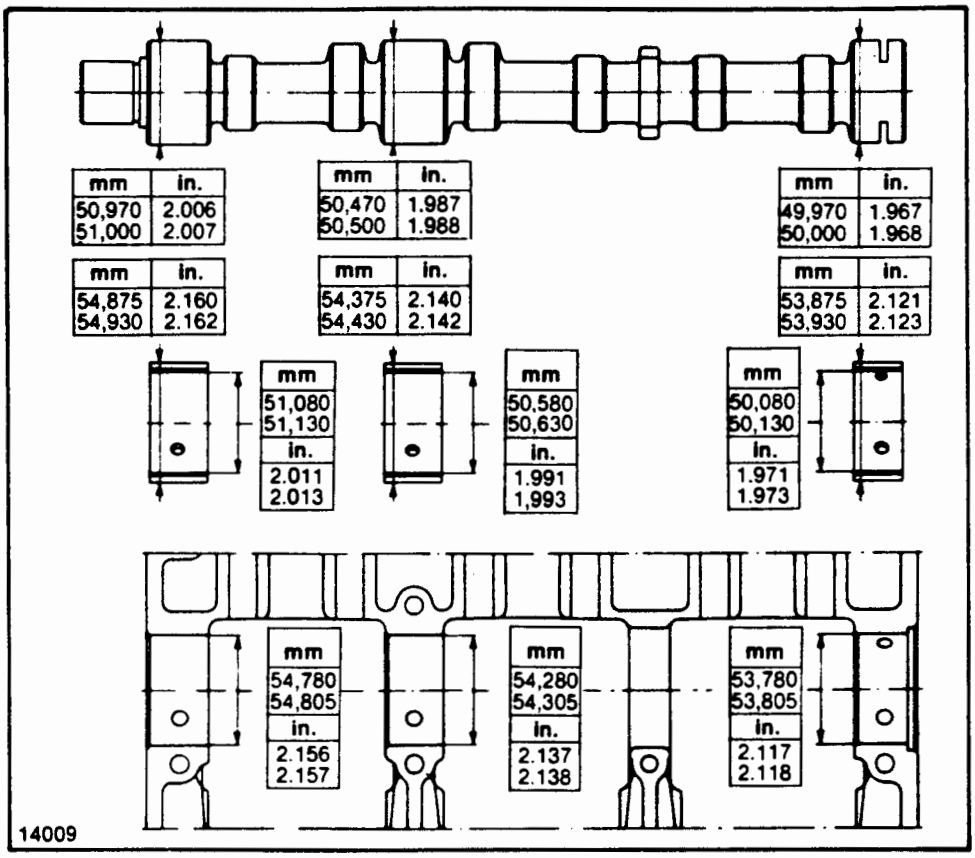

FIG. A.II/5 DIMENSIONS OF CAMSHAFT JOURNALS AND SLEEVE BEARINGS
NOTE: I.D. refers to bearings in their bores.

VALVES AND THEIR GUIDES AND SPRINGS

Many engine problems are due to faulty valve operation.

For satisfactory engine performance, the valves must seat tightly and move freely.

Remove valves as follows:

1. Remove cylinder head from crankcase (see page 12.)
2. Remove cap (Item 19, Fig. A.II/7) from valve rod.
3. Compress springs with a valve spring compressor (Item E, Fig. A.II/7), then remove the upper cup (Item 17) and locks (Item 18).

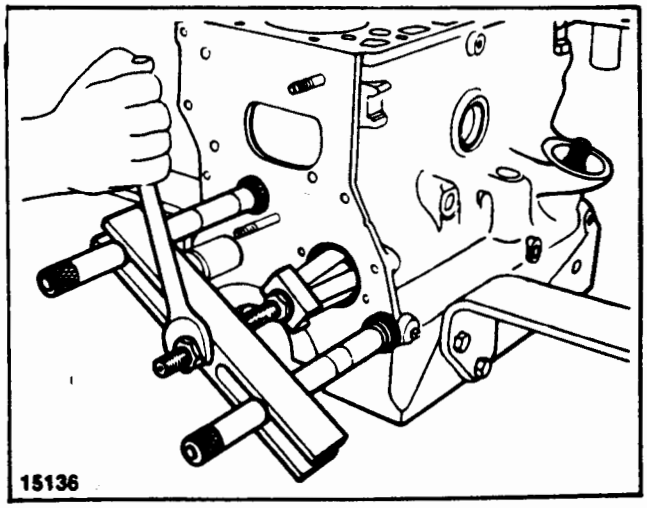

FIG. A.II/6 PULLING THE FRONT BEARING WITH THE UNIVERSAL PULLER AND BUSHING PULLER

https://truckmanualshub.com/

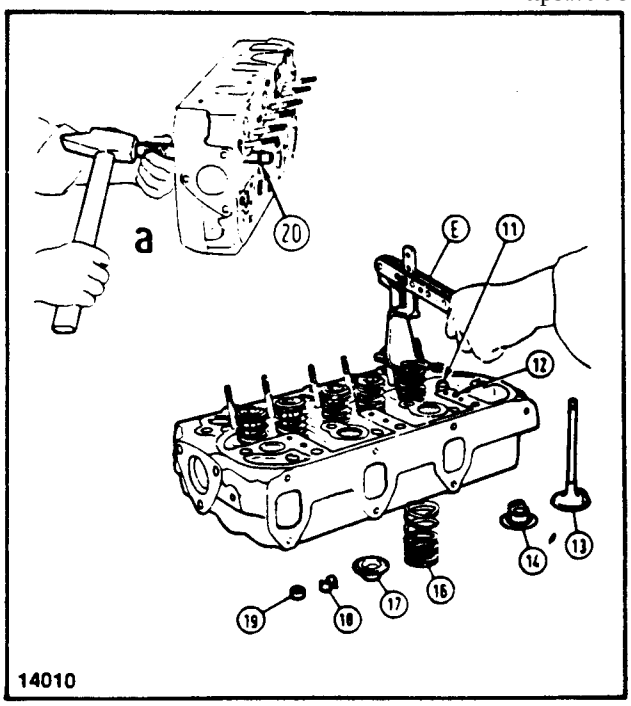

FIG. A.II/7 REMOVING (INSTALLING) VALVES AND SPRINGS

E. Tool; 11. Valve guide; 12. Rocker arm lubrication feed hole; 13. Intake valve; 14. Lower cup for intake valve; 16. Spring; 17. Upper cup; 18. Cup (17) locks; 19. Valve rod cap; a. Removing the valve guide with hammer and drive bar; 20. Stop ring

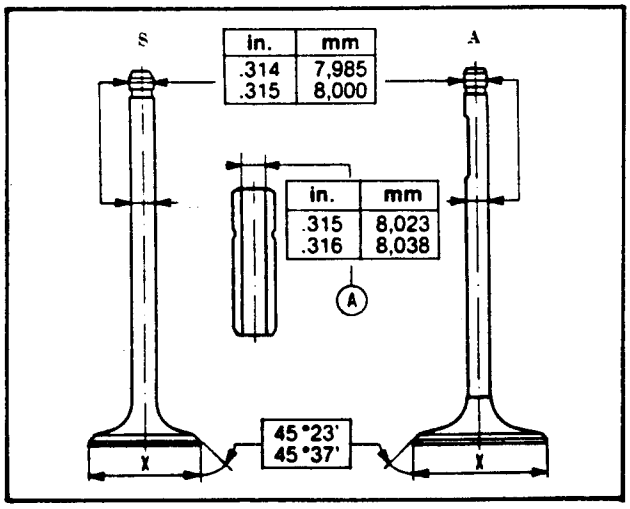

FIG. A.II/8 MAJOR DIMENSIONS OF INTAKE AND EXHAUST VALVES AND THEIR GUIDES

A. Final dimension following boring of valve guide after press-fitting.

Valves	(A) Intake	(S) Exhaust
Dia. X	1.7224-1.7323 in. 43.750-44.000 mm.	1.4469-1.4567 in. 36.750-37.000 mm.

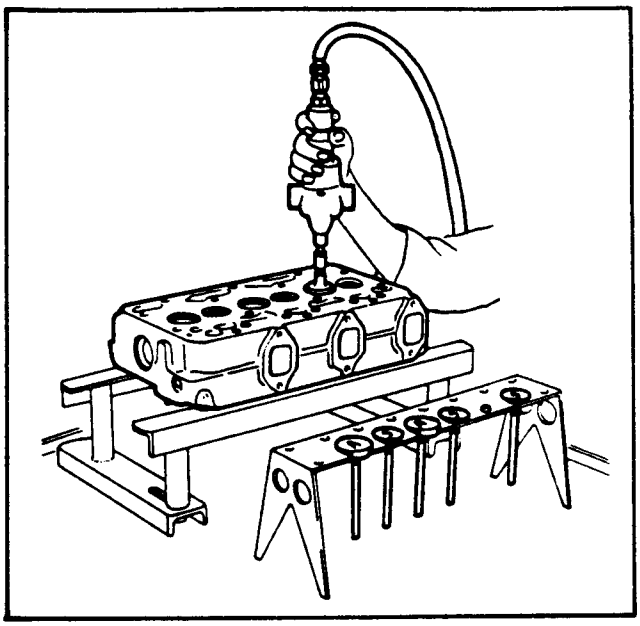

FIG. A.II/9 GRINDING A VALVE WITH PNEUMATIC GRINDER

If valves, following a thorough cleaning, do not ensure perfect tightness on their seats, grind both valves and seats together (Fig. A.I/9), then wash each part thoroughly to remove all traces of abrasive matter.

Extract the valve guides using the removal tool (Item a, Fig. A.II/7) from the underside of the cylinder head and withdrawing them with retaining snap ring (Item 20).

Install them using the same tool but from the top of the cylinder head and stopping when the outer ring prevents further introduction.

Inspect and check valve guides noticing that:

1. The surface of the hole of each guide should be absolutely smooth and free of scoring or seizure marks.
2. The guides must be assembled in their cylinder head locations to a force fit; if not, replace them with oversized ones (see table of data in Fig. A.II/8).
3. Following installation always ream guides.

Springs, the specifications of which are shown in "Engine Fits and Tolerances" table, can be taken down without removing cylinder head from crankcase, in which case, care must be taken not to let the valves fall inside cylinders with lowered pistons.

https://truckmanualshub.com/

After assembly, make sure that:

1. The valves are recessed below the cylinder head lower surface as specified (Fig. A.I/5).
2. The upper spring cup (Item 17, Fig. A.II/7) locks (Item 18) seat perfectly in their seats.
3. Valve rod ends are fitted with caps (Item 19).

⚠ **CAUTION:** The fuel shut-off on this engine is spring loaded in the "FUEL ON" position. When turning the engine by hand, to adjust valves, etc. the fuel stop will have to be held in the "OFF" position which is out because under certain conditions the engine could start.

VALVE GAP ADJUSTMENT

Intake: .010 in. (0.254 mm.)
Exhaust: .010 in. (0.254 mm.)

Adjustment of the gap between valves and rocker arms can be made on engines installed or removed from tractor, as follows:

1. Turn the crankshaft until the first piston is at T.D.C. at beginning of intake stroke and valves are in balanced position. This position of piston 1 is set when the mark "P.M.S. 1" stamped on the flywheel rim is in register with the pointed (Fig. A.II/12).
2. Turn the crankshaft one full revolution, bringing the mark "P.M.S. 1" back to the previous position.
3. Set the intake and exhaust valve gap on cylinder 1 using the special wrench and a feeler gauge (Fig. A.II/10).
4. Repeat for all remaining pairs of valves, holding in mind that the stamped mark "P.M.S. 1" does not apply to pistons 2 and 3. Consequently mark the position corresponding to T.D.C. at intake on the flywheel with chalk.

TAPPETS, PUSH RODS AND ROCKER ARMS

Tappets and push rods are located in the left side or crankcase. Removal of tappets must be preceded by the removal of the camshaft and of the oil sump. Inspections and checks are the following:

1. Inspect finish of surfaces contacting the shaft cams. Smooth out scoring, if any, with a fine grained carborundum stone.

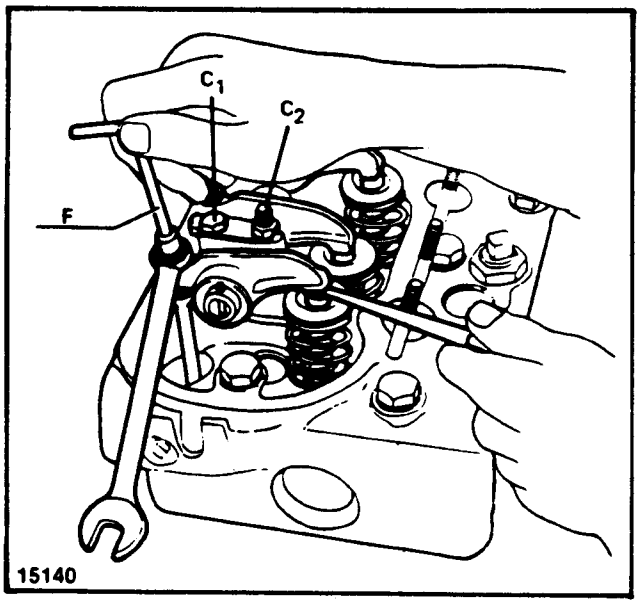

FIG. A.II/10 MEASURING THE VALVE GAP WITH A FEELER GAUGE

C_1. Capscrew securing the rocker; C_1. Capscrew securing the rocker arm support to the cylinder head; F. Wrench; C_2. Attaching stud, rocker arm support to cylinder head, and valve cover

At assembly, always lubricate the surface of tappets. The rocker arms are pivoted on their shafts which are attached to the cylinder head through three supports. The lubrication oil enters the hole drilled through the third support, accumulates inside shaft from which lubricates the bushings, each provided with suitable scrolls through the holes located in each rocker arm (Fig. A.O/9A).

To remove the rocker arms take the tappet cover (Item 5, Fig. A.I/3) off and remove the screws (Item C_1 and C_2, Fig. A.II/10) which secure it to the cylinder head through the three supports. To check rocker arms and shafts accurately, disassembly them as follows:

1. First push on the pair of rocker arms for the valves of the first cylinder, pushing them manually inwards to overcome the spring force.
2. Remove the circlip from the shaft hole and withdraw end up, rocker arm and support.

Before removing the third cylinder rocker arm support be sure to withdraw the screw (Item C_3, Fig. A.II/11) which secures it to the shaft. This screw (Item C_3) is of a particular importance as it prevents the shaft from sliding on a running engine, so to ensure there is no end play. Check clearance and wear of rocker arm shafts in bushings.

https://truckmanualshub.com/

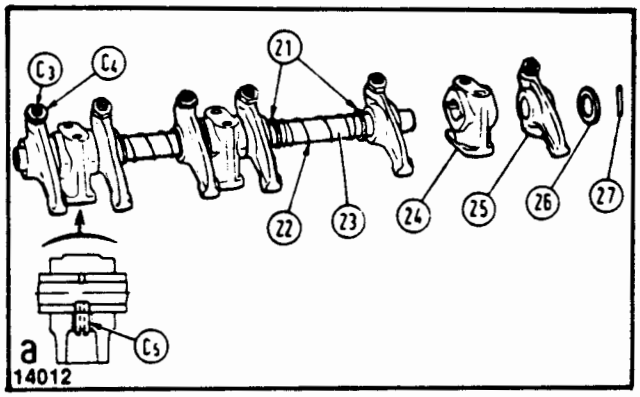

FIG. A.II/11 ROCKER ARMS AND THEIR SUPPORTS, SPRINGS AND SHAFTS

(C_3.) Valve-to-rocker arm gap adjusting screw; (C_4.) Screw; (C_3.) locknut; (C_5.) Screw with lubricating oil hole securing rocker arm supports to shafts; 21. End washer; 22. Spring; 23. Rocker arm shaft; 24. Rocker arm shaft support; 25. Rocker arm; 26. End cup; 27. Split dowel; a. Third cylinder rocker arm support

Inspect contact surfaces of adjusting screws and rods which should be glass-smooth, with no seizure marks. Check the rocker arm spacer springs (Item 22, Fig. A.II/11) and measure their strain values (see "Torque Specifications" table).

Install the rocker arms and make sure that:

1. Lubrication passages are free and unobstructed.
2. End cups are 0.03 - 0.04 in. (0.9 - 1.1 mm.) thick.
3. Spring end spacers are 1 mm. (0.040 in.) thick.

TIMING GEAR ASSEMBLY

To gain access to the timing gears remove the case cover (Fig. A.II/13) as outlined under "Camshaft Removal".

Remove the timing gears from the case as follows:

1. Camshaft driving gear (Item 10): (see instructions under "Camshaft Removal".)
2. Idler gear (Item 29): remove snap ring first, then withdraw it together with the two thrust washers.
3. Fuel supply pump driving gear (Item 31). First remove the pump with its cam drive gear bearing (Item 2, Fig. A.IV/2) then remove the shaft retaining ring and withdraw the shaft with gear (Item 31).

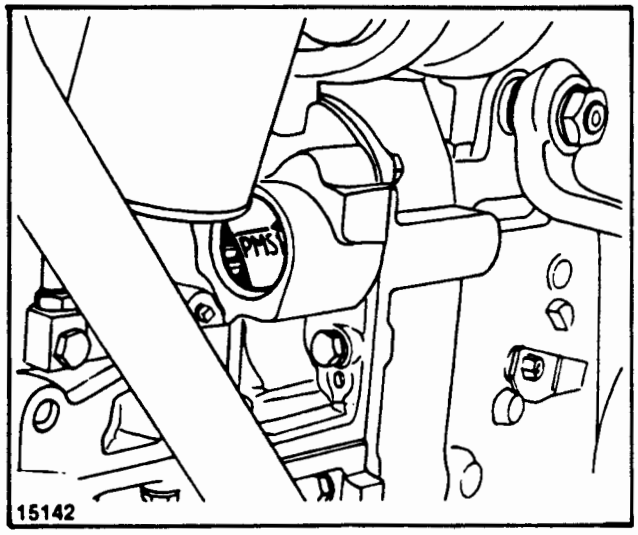

FIG. A.II/12 P.M.S. 1 (T.D.C. OF CYLINDER 1) MARK ON ENGINE FLYWHEEL

4. Injection pump driving gear (Item 32): back out the attaching nut (Item C_{10}) functioning as puller.

Fig. A.II/13 illustrates the correct position of assembly of the camshaft driving gear (Item 28) and of the other fuel injection pump (Item 32) and transfer pump (Item 31) gears. The injection pump gear is marked with the engine model designation and the angular position of the number 4 indicating the mesh with respect to the shaft key:

186° 54' ± 15'

This should be well considered for parts orders. Install the timing gears as follows:

1. Bring piston 1 to T.D.C. and turn the crankshaft clockwise until the pointer is in register with the "P.M.S. 1" mark stamped on the flywheel rim.
2. Install feed and injection pump driving gears on respective shafts and line up the assembly marks 4-4.
3. Install then the idler and timing gears and line up the pairs 1-1, 2-2, 3-3.
4. Tighten the gear capscrews (Items C_6, C_7, C_8) to tabulated torque values in "Torque Specifications" table.

https://truckmanualshub.com/

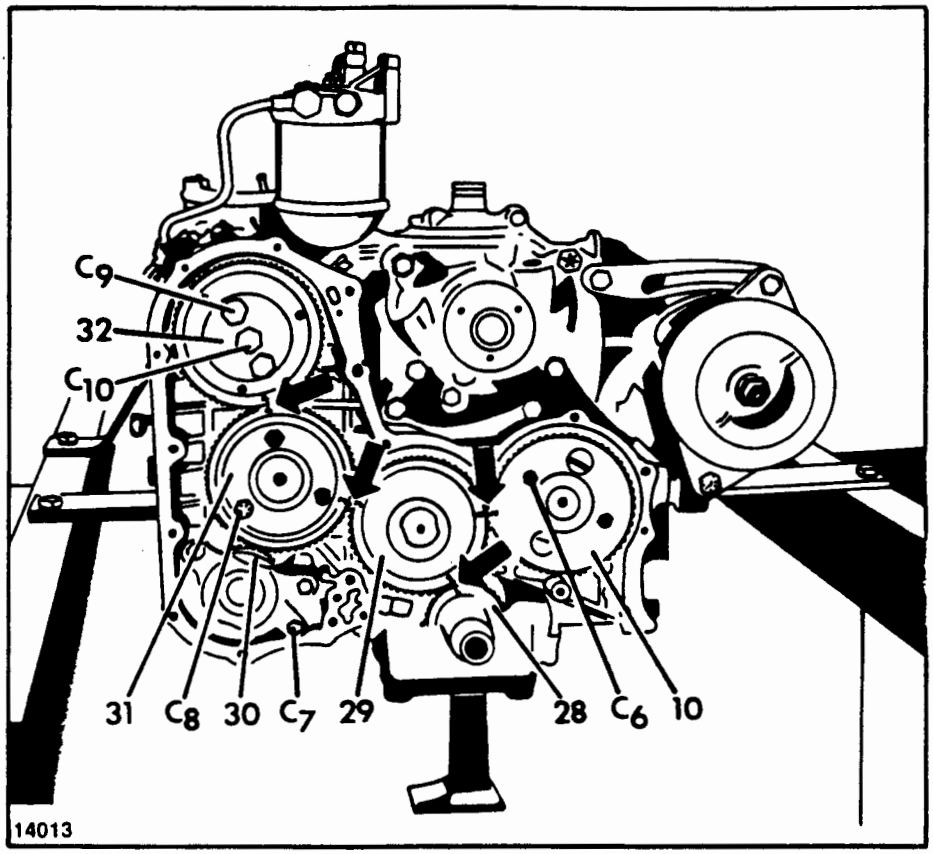

FIG. A.II/13 PHASING THE TIMING GEARS

C_6. Gear and camshaft attaching capscrews; C_7. Capscrews securing the hydraulic pump support; C_8. Fuel transfer pump gear attaching capscrews; C_9. Fuel injection pump gear attaching capscrews; C_{10}. Fuel injection pump attaching nut; 10. Timing drive gear; 28. Timing drive driving gear; 29. Idler gear; 30. Hydraulic lift pump driving gear; 31. Fuel transfer pump driving gear; 32. Fuel injection pump driving gear
(Arrows indicate assembly marks 1-1, 2-2, 3-3, 4-4 which must be made to register for correct phasing of the timing gears.)

The timing gears, installed on their respective shafts, are housed inside the timing gear case and are lubricated through an oil duct in the case. Make sure this duct is free and clean it by inserting a metal wire of suitable diameter (Fig. A.II/14).

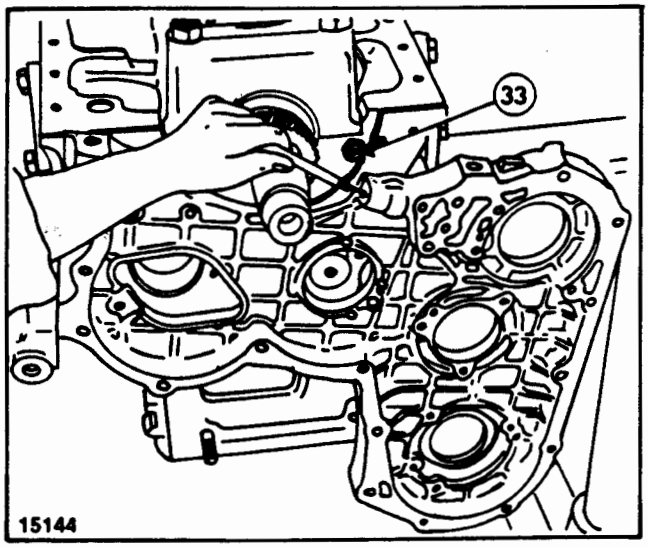

FIG. A.II/14 TIMING GEAR CASE OIL HOLE DUCT
33. O-Ring seal.

TACHOURMETER

The tachourmeter is mounted on the instrument panel and is driven directly from the upper end of the oil pump.

It gives three readings: engine RPM, P.T.O. speed in RPM and work hours.

The hourmeter is set for a constant engine speed of 1600 RPM, and totals 1 hour for every 96,000 revolutions of the pump shaft (1200 RPM).

The transmission ratios are:

1. Drive unit fitted on to the end of lube pump (Fig. A.O/9A) and engine speed 1:2
2. Angular drive unit (between drive flex, cable and instrument) 1:1

https://truckmanualshub.com/

A.III CRANK GEAR ASSEMBLY

GENERAL

The normalized steel crankshaft has its counterweights integral with the crank arms, revolves in thin-shell type bearings with anti-friction metal lining and is supported by 4 main bearings.

Pistons are made of an aluminum alloy possessing high resistance to both mechanical and heat stresses. Its combustion chambers are internal and the truncated cone shaped skirt has an elliptical base with the major diameter at 90° from the pin axis.

Each piston is fitted with three rings arranged, from top down, as follows:

1. First compression ring, with convex, chrome plated outside surface.
2. Second ring, compression ring.
3. Third ring, oil scraper, backbone type, chrome plated and with inside coil spring.

The forged steel channel shaped connecting rods are drilled along the length for cylinder liner lubrication and are provided with thin shell bearings with anti-friction metal lining on big end and sleeve bearings on small end.

CRANKSHAFT

The crankshaft can be removed from the engine only after removing the latter from the tractor. Install the engine on the shop turnover stand, then remove the following parts:

1. Cylinder head (if pistons also are to be removed, see page 25).
2. Oil sump (as outlined on page 14).
3. Oil pump (Item 2, Fig. A.III/1).
4. Hydraulic Circuit Pump (Item P).
5. Injection Pump Gear Compartment Lid (Item 7), located on the timing gear cover.
6. V-belt (Item 6), after slackening the alternator attaching bolt (Item C_2, Fig. A.VI/6).
7. Drive pulley (Item 5) and its hub with a plate puller with slots at 120° (Fig. A.III/2).
8. Fan and Driven Pulley.

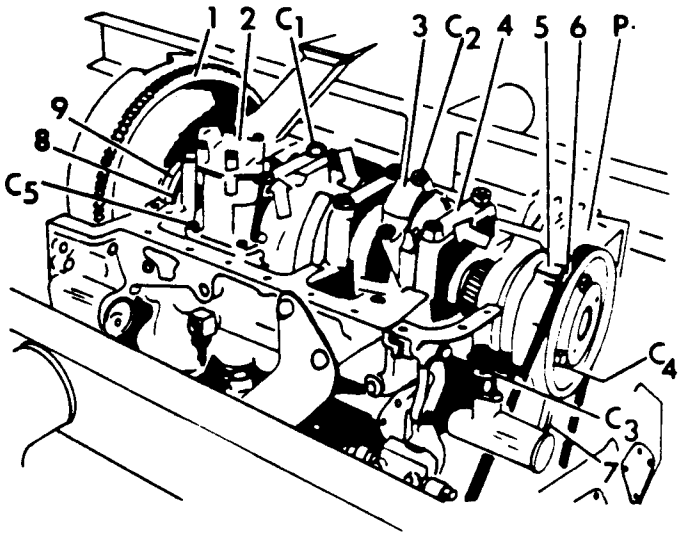

FIG. A.III/1 BOTTOM VIEW OF ENGINE WITHOUT OIL SUMP

C_1. Main bearing caps attaching capscrews; C_2. Connecting-rod bearing caps attaching capscrews; C_3. Timing gear case cover capscrews; C_4. Capscrews securing drive pulley to crankshaft hub; C_5. Oil pump attaching capscrews; P. Hydraulic pump; 1. Flywheel; 2. Oil pump; 3. Connecting rod bearing cap; 4. Main bearing cap; 5. Drive pulley; 6. Belt; 7. Injection pump, drive gear compartment cover; 8. Rear crankshaft gasket; 9. Oil sump outer gasket

https://truckmanualshub.com/

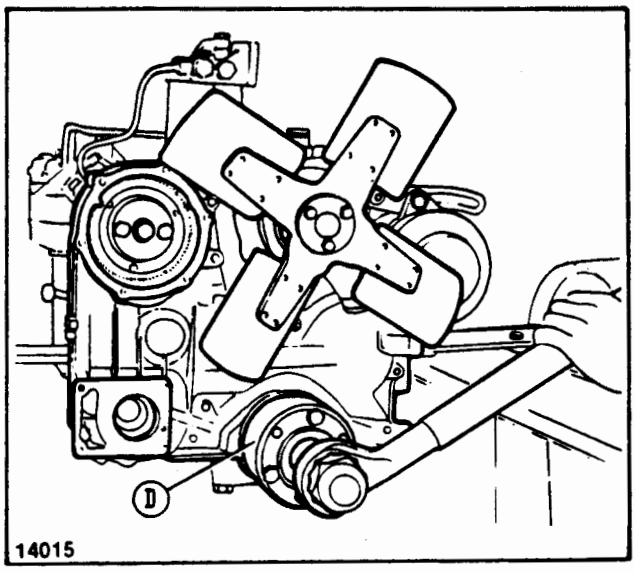

FIG. A.III/2 REMOVING THE PULLEY HUB WITH A PLATE PULLER WITH SLOTS AT 120°(D)

9. Timing Gear Case Cover.
10. Engine Flywheel (Item 1) as indicated on page 28).
11. Crankshaft rear gasket (Item 8).
12. Connecting rod and main bearing caps (Items 4 and 3, respectively).

Wash the crankshaft with solvent and inspect it thoroughly. Damages of any kind, however slight, require that the shaft be replaced or repaired. Examine wear on connecting rod and main bearing journals and make sure that:

1. Journal out-of-round does not exceed 0.0003 in. (0.008 mm.).
2. Journal taper is less than 0.0005 in. (0.012 mm.).
3. With the shaft ends resting on parallel gauge blocks (Fig. A.III/4) journal alignment is wthin tolerance of 0.002 in. (0.05 mm.).
4. Axes of connecting rod and main bearing journals are on the same plane with a maximum permissible difference of 0.010 in. (0.25 mm.) on both directions.

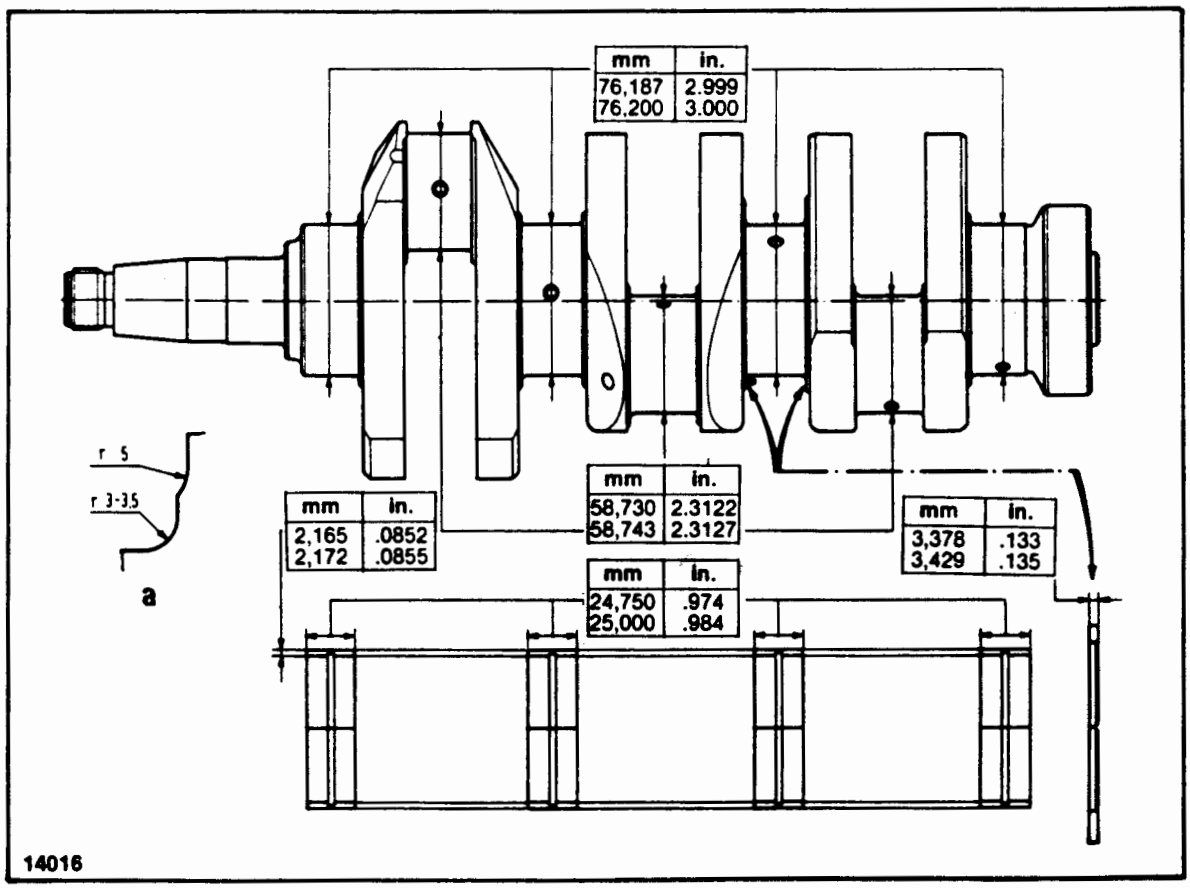

FIG. A.III/3 DIMENSIONS OF CRANKSHAFT JOURNALS AND OF STANDARD THRUST WASHERS

a. Journal radii and fillets

https://truckmanualshub.com/

5. Cup shaped plugs (Item T, Fig. A.III/4) seal properly (test with oil at 213 PSI [15 kg/cm²]). Should the test show defective or unreliable sealing tightness, replace the plugs and repeat the test with new plugs installed. If necessary, grind all crankshaft journals to one of the undersizes specified in "Fits and Tolerances" table. Make sure, after grinding, to machine proper radii and fillets on journals and to chamfer the lubrication holes.

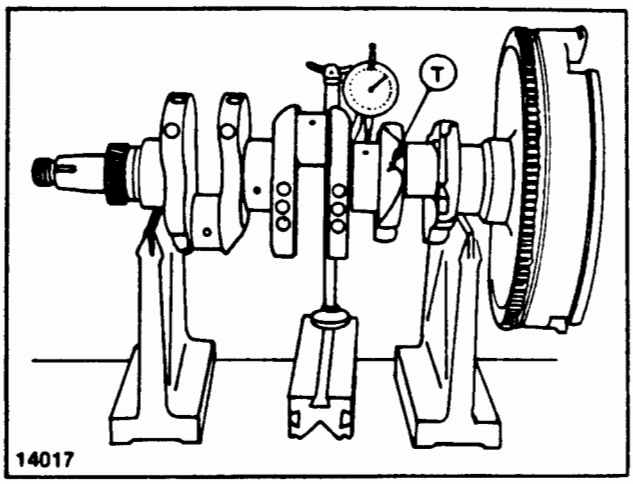

FIG. A.III/4 CHECKING STATIC BALANCE OF CRANKSHAFT AND MAIN BEARING JOURNAL ALIGNMENT WITH DIAL GAUGE ON SURFACE PLATE WITH GAUGE BLOCKS.
T. Plug

FRONT END SEAL INSTALLATION

Fluid tightness at front end of crankshaft is ensured by a rubber seal with coil spring which is force fitted in the timing gear case cover. The fundamental feature of this seal is the spiral rifling of the sealing lip in the direction opposite to that of rotation of the hub. This will throw back inside any amount of fluid which the hub would eventually tend to convey outside.

In case of oil leakage, excluding the running-in period during which parts may require adjustment of their final position of assembly, remove the pulley hub (Fig. A.O/9A) and check:

1. The working surface of the seal for wear, breakage of the rifling coil or of the sealing lip.
2. The sealing surface in contact with the crankshaft for roughness or out-of-round exceeding 0.012 in. (0.3 mm.).

The seal cover must be removed first if the seal is to be replaced. Take good note of the following points to avoid assembly trouble.

1. Wipe off all traces of oil and dry the seal seat in the cover thoroughly.
2. Fit the seal in its seat without using lubricants and apply a uniform pressure over the entire seal ring by means of a seal installer so that the seal will bottom in its seat.
3. Lubricate the seal lip with a film of grease or thick oil to avoid dry contact with the crankshaft surface at the start, then secure the cover and its gasket to the crankcase.

REAR END SEAL INSTALLATION

Fluid tightness at rear end of crankshaft is ensured by a rubber seal with coil spring (see Fig. A.O/9A).

This seal is fitted in a metallic cage which can be removed and installed in the engine crankcase; the lower side of this cage has a semicircular rubber strip gasket (Item 9, Fig. A.III/1) which ensures fluid tightness on the oil sump.

The seal can be considered as reliable up to a crankshaft speed of 3000 ± 10% R.P.M. and up to a service temperature of the oil of 120° ÷ 130°C (248° ÷ 266°F.).

Assemble the rubber-type seal as outlined above, and after assembly fill the space between the two lips with grease.

https://truckmanualshub.com/

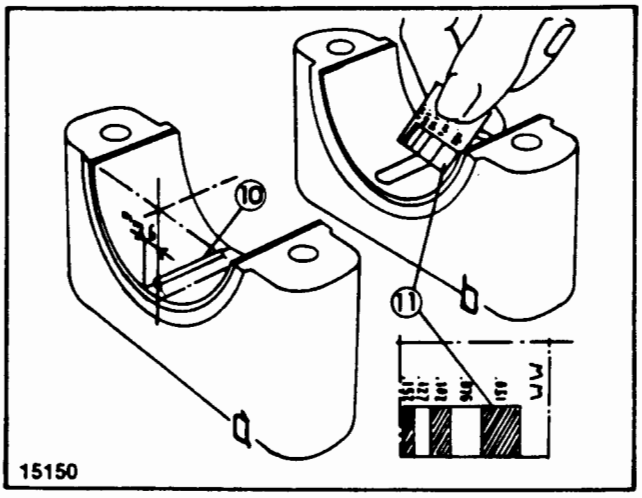

FIG. A.III/5 CHECKING RUNNING CLEARANCE OF CRANKSHAFT JOURNALS IN BEARINGS
a. Arrangement of wire for cap installation;
b. Measure of wire flattening after cap removal;
10. Perfect circle plastigage type PR-1;
11. Graduated scale stamped on the wire envelope

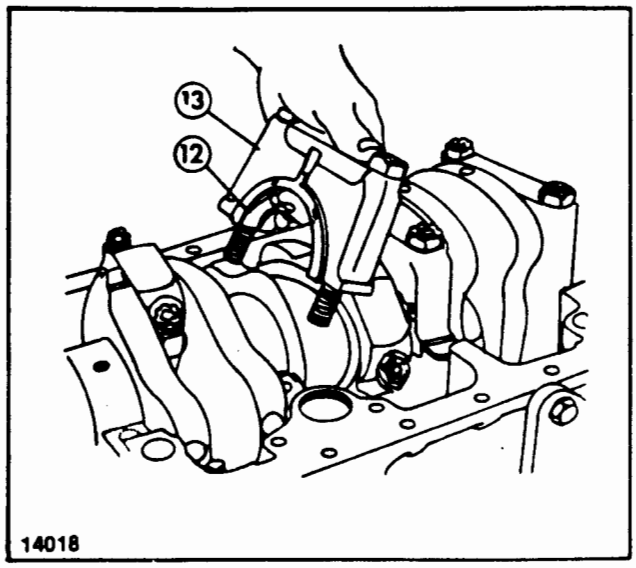

FIG. A.III/6 INSTALLATION (REMOVAL) OF THRUST WASHERS (12) ON THE THIRD MAIN BEARING (13)

CRANKCASE BEARINGS

The thin-shell bearings have an anti-friction metal lining. They require no adjustment but must be replaced when the working surface is worn or scored beyond the permissible limits.

Check the clearance with the crankshaft journals as follows:

Thoroughly clean the journals, bearing shells and bearing bores with solvent. Use a segment of "Perfect Circle Plastigage" type PR-1 of the same length as the bearing cap and place it lengthwise on the bearing shell about 6 mm. (¼ in.) off center (Fig. A.III/5). Install the cap with plasticgage and torque to the value specified in the "Torque Specification" table.

Rock the shaft through a small arc, back and forth. Remove the cap and measure the wire flat with the graduated scale (in mm. or in.) drawn on the envelope containing the wire (Fig. A.III/5).

Remember that:

1. The flattened wire may stick to the shaft.
2. The reading is the clearance.
3. If one end of the wire is more flattened than the other, then taper is present. Measure the two ends, the difference being the approximate amount of taper.

When assembling the main bearings and their caps make sure to:

1. Arrange bearing shells in their original locations as they are not interchangeable, and align lubricating oil grooves.
2. Fit the thrust washers (Item 12, Fig. A.III/6) to the third bearing (Item 13) and cap with the lubricating grooves towards the central shaft journal shoulders.
3. The identification figures stamped on the main bearing caps must be on the crankcase side stamped with their respective bearing identification marks (Fig. A.III/7).
4. Before installing the connecting rod-piston assemblies, check the end float of crankshaft at the third main bearing (Fig. A.III/7).

PISTONS AND RINGS

Standard size and oversized pistons are selected according to the measure (Fig. A.III/8) taken at 50 mm. off the skirt base, from two dimensional classes, "A" and "B", as reported in the "Fits and Tolerances" table.

https://truckmanualshub.com/

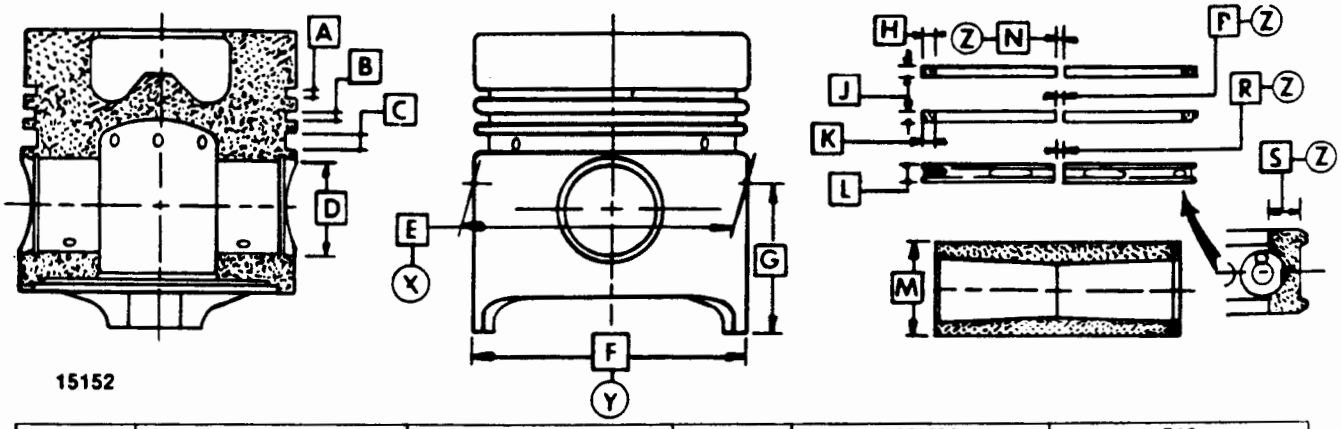

DIM.	360/460 mm	360/460 in	510 mm	510 in	DIM	360/460 mm	360/460 in	510 mm	510 in
A	2,58 2,60	.1015 .1023	2,58 2,60	.1015 .1023	L	5,478 5,490	.2156 .2161	4,943 4,956	.1946 .1951
B	2,54 2,56	.1000 .1008	2,54 2,56	.1000 .1008	M	31,983 31,990	1.2592 1.2594	31,983 31,990	1.2592 1.2594
C	5,53 5,55	.2177 .2185	4,99 5,01	.1964 .1972	N	0,35 0,55	.014 .022	0,35 0,55	.014 .022
D	31,983 31,990	1.2592 1.2594	31,983 31,990	1.2592 1.2594	P	0,30 0,45	.012 .018	0,30 0,45	.012 .018
E	94,842 94,866	3.7339 3.7369	101,772 101,796	4.0068 4.0077	R	0,25 0,40	.010 .016	0,25 0,40	.010 .016
F	94,894 94,918	3.7359 3.7369	101,824 101,848	4.0088 4.0098	S	3,08 3,32	.1212 .1307	3,08 3,32	.1212 .1307
G	50	1.9685	50	1.9685					
H	3,48 3.72	.137 .146	3,48 3,72	.137 .146					
J	2,478 2,490	.0975 .0980	2,478 2,490	.0975 .0980					
K	3,56 3,80	.1402 .1496	3,56 3,80	1.402 1.496					

FIG. A.III/8 DIMENSIONS OF STANDARD SIZE PISTONS AND OF THEIR PINS AND RINGS
X = Major dia. at 50 mm. from skirt; Y = Major dia. at base of skirt; Z = Measurement to be taken with rings installed inside cylinder lines.

NOTE: The tolerance of 0.024 mm. on dia. X is subdivided into two classes A and B each with a tolerance of 0.0012. See the table of "Fits and Tolerances".)

The piston class "A" and weight "B" data are stamped on the piston top surface (Fig. A.III/10). Remove pistons as follows:

1. Remove the front axle and complete as indicated on page 108 in Power Train Section.
2. Remove the cylinder head as indicated on page 12.
3. Remove the oil sump as indicated on page 14.
4. Remove the oil pump.
5. Remove the self-locking screws (Item C_2, Fig. A.III/1), which secure the connecting rod bearing caps after rotating the shaft.
6. Push the piston up in the crankcase paying attention not to score the cylinder liners with the connecting rod end.

Clean the pistons by scraping off all combustion deposits and wash them with solvent.

Calculate piston wear by measuring their diameter at skirt base and at 50 mm. (approximately 2 in.) off (Fig. A.III/9). Find then the difference between the measures taken on cylinder

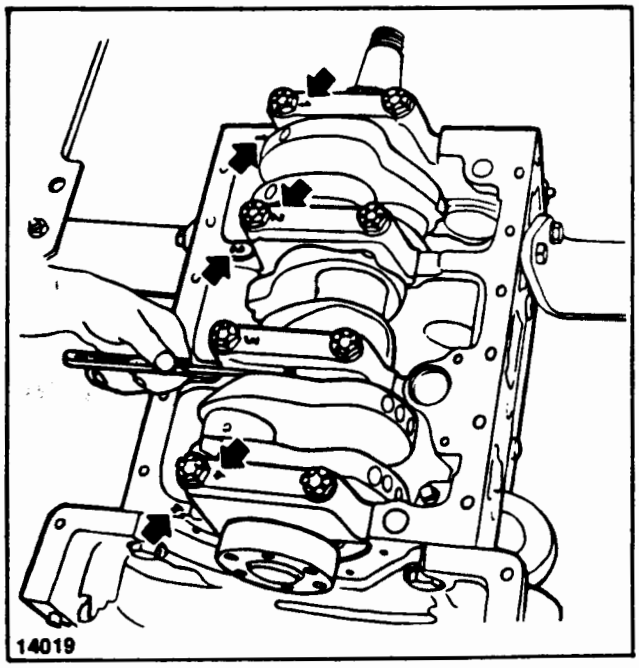

FIG. A.III/7 CHECKING THE CRANKSHAFT END FLOAT
(Arrows indicate assembly marks to be lined up at main bearing cap assembly.)

https://truckmanualshub.com/

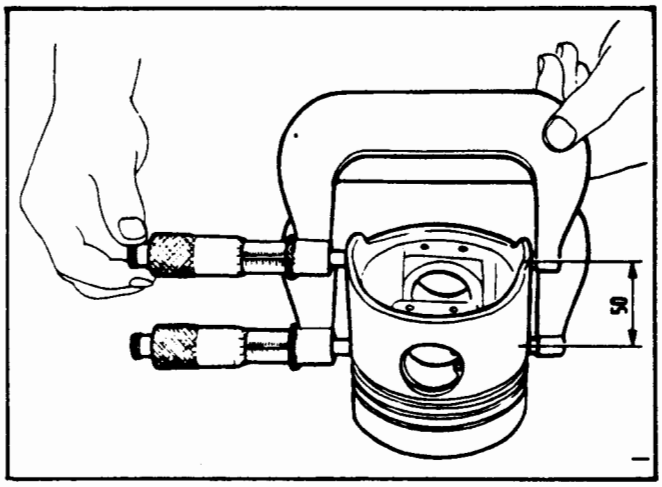

FIG. A.III/9 CHECKING PISTON DIAMETER AT SKIRT BASE AND AT 50 mm. (2 IN. APPROX.) OFF

liners and pistons, the difference being the running clearance.

When the clearance exceeds the permissible service limits (see "Fits and Tolerances" table) the liners must be rebored (not to exceed "B" size) and new oversized pistons and rings installed.

Should it become necessary to replace the pistons, make sure the weight of the new ones is within a tolerance of ± 5 gr, (0.18 oz.).

A normal piston for the Model 360/460 Tractor weights 930 gr. (32.8 oz.). For the 510 Tractor, the weight is 999 gr. (35.2 oz.).

Piston pin bores should not be out of round. If so, replace them.

Install (and remove) piston rings with piston ring pliers (Fig. A.III/10) and arrange them with ends staggered 120° from each other. The second ring (oil scraper) should be placed with the word "top" in the up position.

At assembly, the end gap must meet specification requirements (see table of data; should the gap be less than specified, grind the ends, and if greater, replace the ring and install a new one of the same type.)

Using a feeler gauge, check the ring side clearance in its groove to be sure that it meets specified requirements.

CONNECTING RODS

To remove the connecting rods, proceed as outlined for the pistons, Check connecting rod squareness with a fixture (Item b, Fig. A.III/12).

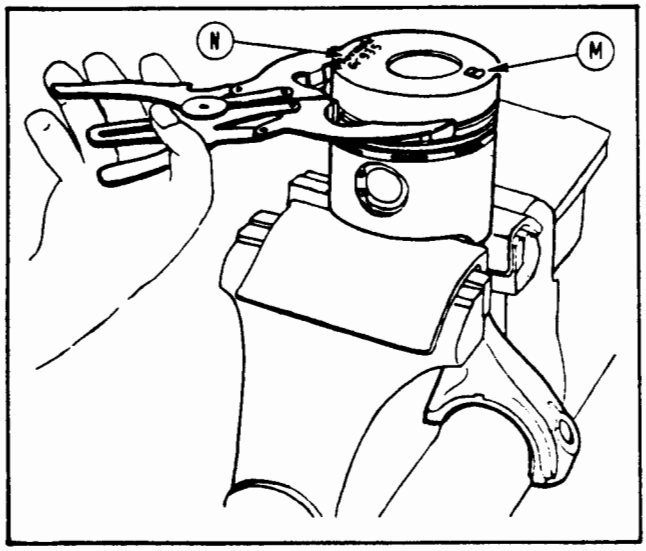

FIG. A.III/10 INSTALLATION (REMOVAL) OF SNAP RINGS WITH PLIERS
M. Skirt class identification; N. Weight of piston in grams

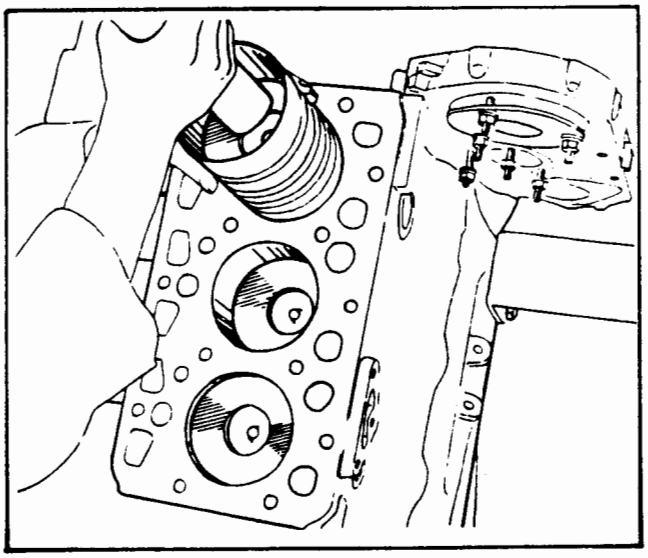

FIG. A.III/11 FITTING A PISTON INSIDE ITS CYLINDER LINER WITH PISTON RING COMPRESSOR

The maximum permissible misalignment between connecting rod big and small end axis, checked at 4.921 in. (125 mm.) away from the rod center line, should not exceed 0.010 in. (0.05 mm.) in either direction.

Besides, the new rods must be stamped with the number of their locating cylinder. The figure is stamped on both the body and bearing cap of the connecting rod (Item G, Fig. A.III/12).

If new bearing bushings are to be fitted into the rod small end, then re-bore it with an expansion blade type reamer to the diameter indicated in the "Fits and Tolerances" table.

https://truckmanualshub.com/

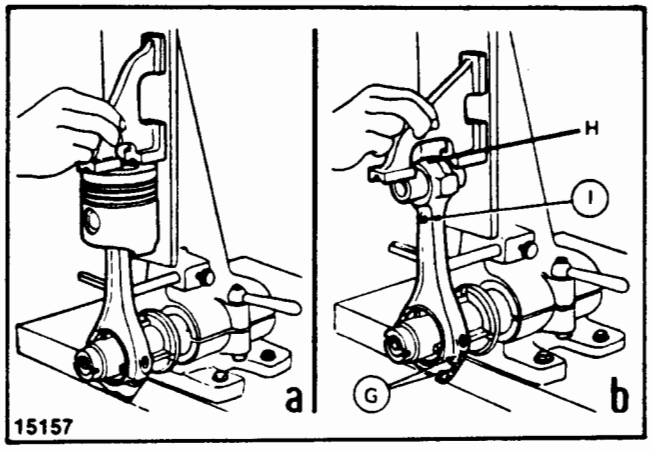

FIG. A.III/12 CHECKING SQUARENESS OF PISTON CONNECTING ROD ASSEMBLY (a) AND PARALLELISM OF A CONNECTING ROD AXIS (b)

G. Number of corresponding cylinder; H. Piston top lubrication hole; I. Liner and piston lubrication hole

Lubricating oil flows inside a lengthwise passage drilled through the rod and connecting the big and small ends.

Two small holes are drilled through the rod perpendicularly to the central passage (Item 1, Fig. A.III/12) for the purpose of improving lubrication between cylinder liners and pistons. Another oil hole (Item H) which is drilled through the top of the small end provides a spray of oil which contributes to piston cooling.

INSTALLING THE CONNECTING ROD-PISTON ASSEMBLIES

Assemble the connecting rod and piston units so that the connecting rod identification number corresponds to the number of the cylinder in which the piston is to be installed and is located on the same side of class mark stamped in the piston (Fig. A.III/13). Check squareness of the assembly with a gauge (Fig. A.III/12).

Make sure that the oil holes drilled through the rod stem are free from debris which would endanger the proper lubrication of the cylinder wall. If so, clean them with a steel wire of suitable diameter and blow with compressed air.

Following all preliminary checks, install the connecting rod-piston unit assemblies into their respective cylinder liners using the piston ring compressor (Fig. A.III/11) to hold the rings tight. Make sure that the connecting rod identification number is on the side opposite to that of the camshaft (Fig. A.III/13). Secure the connecting rod bearing caps by torque tightening to the values given in the "Torque Specification" table.

ENGINE FLYWHEEL

The flywheel and its starting ring gear cannot be removed unless the engine is split from the transmission case. Proceed as follows:

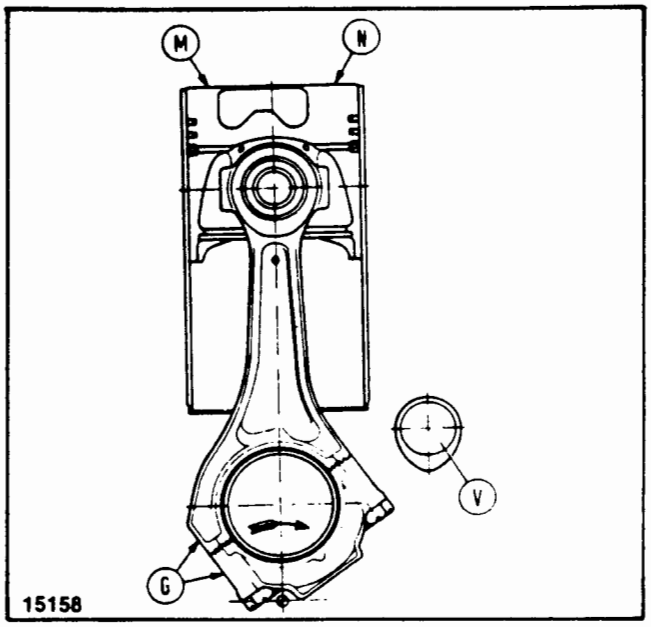

FIG. A.III/13 CROSS-SECTIONAL VIEW OF ONE CONNECTING ROD-PISTON UNIT WITH ASSEMBLY REFERENCE WITH RESPECT TO THE CAMSHAFT (V)

G. Number of corresponding cylinder; M. Identification letter of the piston skirt dimensional class; N. Weight of piston, in grams

1. Remove the front cowling and disconnect the battery ground cable.
2. Remove the steering drag link.
3. Disconnect the oil suction and delivery lines from the hydraulic lift pump. Make sure to plug up open ends with work plugs to prevent oil spillage.
4. Remove the rear hood section and the fuel tank and its support as indicated on page 6.
5. Place a shop stand under the oil sump to prevent the tractor front end from turning over once free.
6. Remove the capscrews which attach the crankcase to the transmission and move either group back or forward so to allow the transmission and P.T.O. shafts to come out of the clutch.
7. Remove the clutch by backing out the capscrews which secure it to the flywheel, then remove the capscrews attaching the flywheel to the crankshaft for checking or replacing the clutch pilot bearing.

When removing the flywheel be careful with the clutch push rod sleeves.

If necessary, replace the flywheel starting ring by preheating the new unit in oil at 176°F. (80°C.) prior to installation and place it with the 60° chamfer on the engine side.

https://truckmanualshub.com/

A.IV. FUEL SYSTEM

AIR SUPPLY

The air aspirated into the cylinders is first filtered through an oil-bath cleaner with a self-cleaning, pre-cleaner (Item 9, Fig. A.IV/1).

AIR CLEANER

A periodic and thorough cleaning of the unit is a must if good performance is to be obtained of the engine.

After every 50 working hours, remove the oil cup (Item 6, Fig. A.IV/1), make sure the oil reaches up to the level indicated in Fig. A.IV/1, and top up if necessary. The oil is changed if dirty or if deposits on the bottom of the cup are 1 cm. (⅜ in.) thick, or over. Following removal of the cup (Item 6), clean the filter central air duct (Item 3).

All these operations are to be done at least 15 minutes after the engine has been stopped.

At every 200 work hours, remove the snap ring (Item 5), then withdraw the filtering element (Item 4) and wash it in solvent; prior to reassembly, moisten the surfaces of the element with oil.

To remove the air cleaner as an assembly, first disconnect hose (Item 19, Fig. A.O/6) from the intake manifold and slacken the band clamp (Item 1, Fig. A.O/4), then dismantle the air cleaner and wash parts in solvent; repeat operation after every 400 hours of work. Before reassembling the cleaner, let it dry and moisten components with oil.

Check tightness of band clamps securing the cleaner to the pre-cleaner and intake manifold to prevent unfiltered air from being drawn into the engine.

FUEL SUPPLY

The fuel supply system which injects fuel directly into the combustion chamber built in piston tops, consists of the following units:

1. Fuel tank, 14.3 gal. (53.0 litres) capacity, located at the back of the engine and provided with a fuel level gauge.
2. Double diaphragm fuel lift pump (Item Pa, Fig. A.IV/6), with hand primer, cam driven from the injection pump drive idling gear.

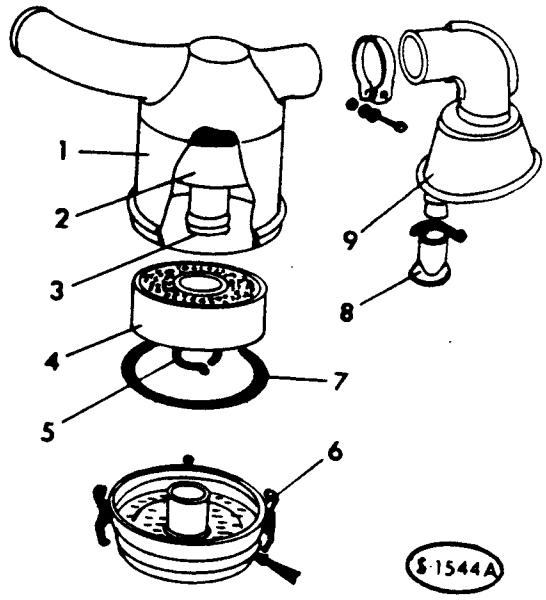

FIG. A.IV/1 AIR CLEANER PARTS
(Arrow indicates position of oil check plate.)
1. Air cleaner body; 2. Fixed filtering element; 3. Air duct; 4. Filtering element; 5. Snap ring retaining filtering element; 6. Oil cup; 7. O-ring; 8. Dust drain; 9. Pre-cleaner

3. Two cartridge type fuel filters, (Items F_1, and F_2, Fig. A.IV/6) arranged in series, the first filter provided with a sediment bowl and drain.
4. Injection pump:
   Model 360: DPA 3233330 - 43/800/6/2350
   Model 460: DPA 3233330 - 49/800/3/2550
   Model 510: DPA 3832 F 040 - 50/800/3/2550

   All of the above are of the single plunger distributor type with built-in all-speed mechanical governor and automatic timing device.
5. 3 injectors with injector holders.
6. Starting aid for cold starts fed by injector spill fuel collected in a reservoir (Item S_1, Fig. A.IV/6).

https://truckmanualshub.com/

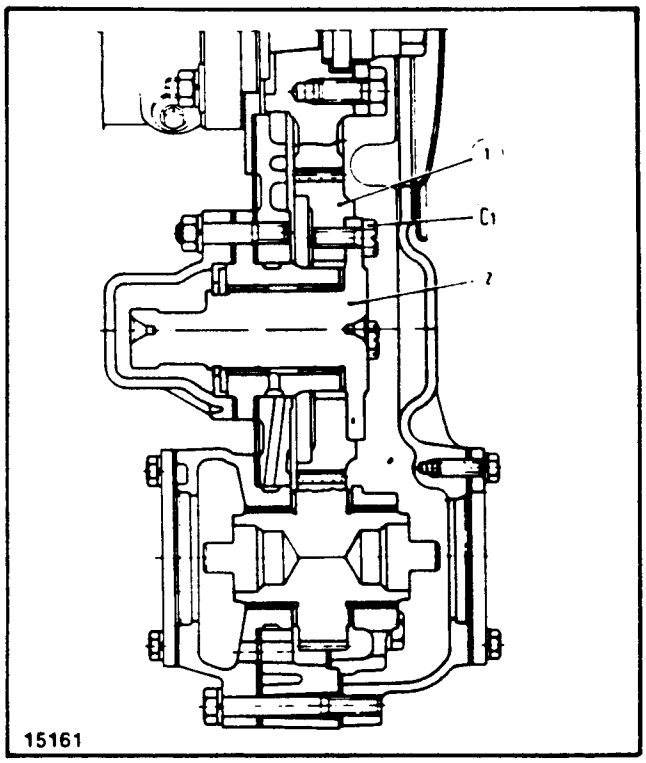

FIG. A.IV/2 CROSS-SECTION OF FUEL TRANSFER PUMP

C_1. Self-locking screws attaching shaft (1) to gear (2); 1. Fuel lift pump drive gear; 2. Eccentric drive shafts

FUEL TANK

Clean the fuel tank thoroughly at engine overhauls. From time to time, drain water condensation and deposits by removing the bottom plug. Be sure the tank is almost empty when draining it, and repeat more often in wet, cold or unstable climates. See that the vent hole on the fuel filler cap is open.

FUEL PRIMING PUMP

The double diaphragm fuel priming pump is actuated by a cam which is driven by the injection pump drive intermediate gear (Fig. A.IV/2) and incorporates one fuel intake and one outlet valve. At pump overhaul see that the two valves and the screen filter (Item 4, Fig. A.IV/3) are clean and the diaphragm (Item 10) unbroken. At pump disassembly make the double diaphragm axle rotate ¼ turn either in a clockwise or counterclockwise direction to disengage the control lever (Item 8).

Fuel priming pump specifications:

Minimum Output . . . . . 31.7 gal/hr. (120 liters/hr.)

Static Delivery Pressure . . . . . 7.115 P.S.I. (49.05 KPa)

Speed of Cylindrical Driving Pin (22 mm. dia. and 3 mm. excentricity) . . . . . 1500 RPM

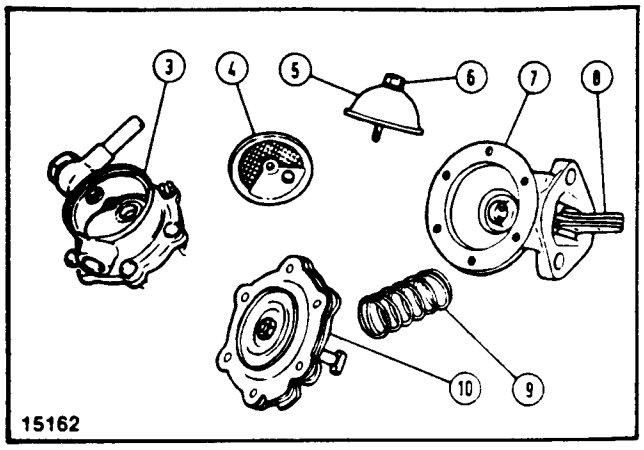

FIG. A.IV/3 FUEL LIFT PUMP PARTS

3. Upper pump body with intake and outlet valves; 4. Screen-and-seal unit; 5. Cover; 6. Cover (5) screw; 7. Lower pump body; 8. Control lever; 9. Diaphragm (10) return spring; 10. Diaphragm with control link

FUEL FILTERS

Major causes of poor engine performance are water and fuel contaminants. A high percentage of damage to the fuel injection system is due to corrosion and excessive wear caused by the presence of water and abrasive matter in the fuel.

The water, in solution or condensed in droplets and the solid contaminants in suspension are eliminated through two filters arranged in series: sediment filter (Item A, Fig. A.IV/4) and agglomerating filter (tem b).

The first filter separates the water and the coarser solid contaminants. The water droplets, passing through the filtering element, are grouped into larger drops and are easily eliminated by sedimentation in the lower part of the filter where they are visible through the transparent wall of the container.

The sediments are periodically removed by backing out the screw (Item 10). The solid particles which pass through the filter are trapped in the same way as in other filters.

The fuel, free from water and solid particles, flows up the element central duct to a point sufficiently far from the bottom and completes its cleaning through the second filter.

To ensure the filters the longest possible service life and the efficient operation of the fuel system the fuel should be previously filtered while filling the tank and, before that, settled out inside the container or barrel.

https://truckmanualshub.com/

After every 250 hours of work, clean the first fuel filter (Item a, Fig. A.IV/4), as follows:

1. Back out the screw (Item 2, Fig. A.IV/4).
2. Replace filtering element (Item 5) and sealing rings (Items 4 and 8).

If, with a new cartridge, a problem persists, replace the element of the second filter also.

Bleed air after each service operation performed on filters to permit starting the engine.

BLEEDING THE FUEL SYSTEM:

Proceed as follows (Fig. A.IV/5).

When air is allowed to enter the fuel system by the fuel tank running dry, the fuel filter is drained or changed, or through a loose fuel line connection, then the fuel system must be "bled."

To "bleed" the fuel system, proceed as follows:

1. Open the fuel shut-off valve at the tank and loosen the air vent plug (Item 11) on the primary fuel filter. Operate the hand lever (Item 16) on the fuel pump, making full strokes, until fuel flows free of air.

   If the cam that operates the fuel pump is on the high spot, the hand lever cannot be operated. To correct this, rotate the crankshaft one-half revolution. Retighten vent plug.

2. Loosen the air vent plug on top of secondary fuel filter (Item 15), pump fuel pump until fuel flows free of air and then tighten vent plug.
3. Loosen the lower vent plug (Item 8) on the injection pump and operate the fuel pump lever until the fuel flows free of air. Tighten the vent plug.

   Loosen the upper vent plug (Item 13) on the injection pump two full turns only.

4. Loosen the injector connections (Item 14) at the injectors. Crank the engine with the starter motor until the fuel is free of air at all connections.

   The fuel shut-off knob must be pushed in for fuel to flow to the injectors.

5. Tighten the injector connectors (Item 14). Let upper vent plug remain open two turns. Crank the engine with the starter motor until it starts. As soon as fuel coming from the upper vent plug is free of air, tighten the plug.

   Avoid overheating the starter motor. Allow it to cool 2 minutes for every 30 seconds it is cranked.

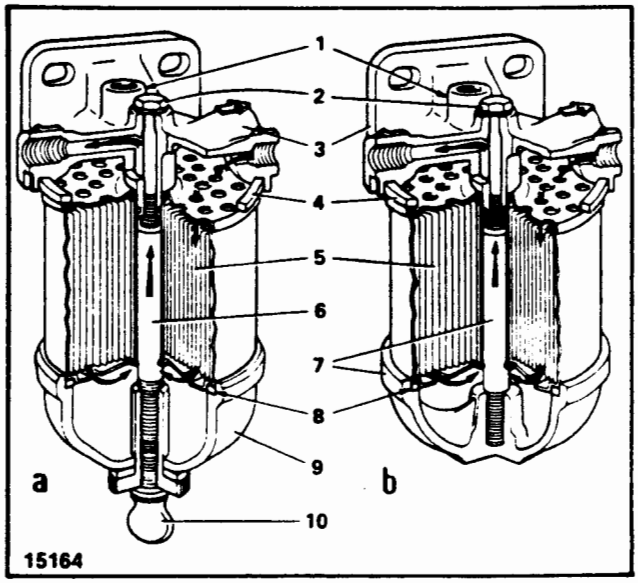

FIG. A.IV/4 FUEL FILTERS
a. First fuel filter; b. Second fuel filter; 1. Vent; 2. Control screw; 3. Cover with fuel inlet and outlet valves; 4. Rubber seal; 5. Filtering element; 6. Rod; 7. Sediment bowl and rod; 8. Seal; 9. Transparent bowl; 10. Bowl (9) attaching screw

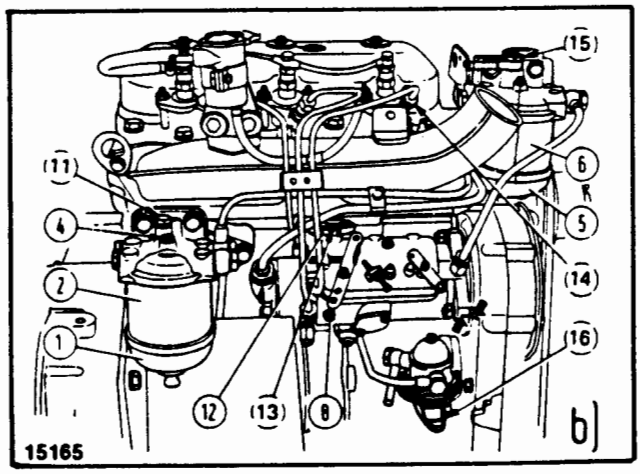

FIG. A.IV/5 BLEEDING THE FUEL SYSTEM
11. Bleed plug on first fuel filter; 12. Injection pump damper; 13. Vent screw for the pump fuel return circuit; 14. Pressure line fittings; 15. Bleed plug on second fuel filter; 16. Fuel pump hand primer

https://truckmanualshub.com/

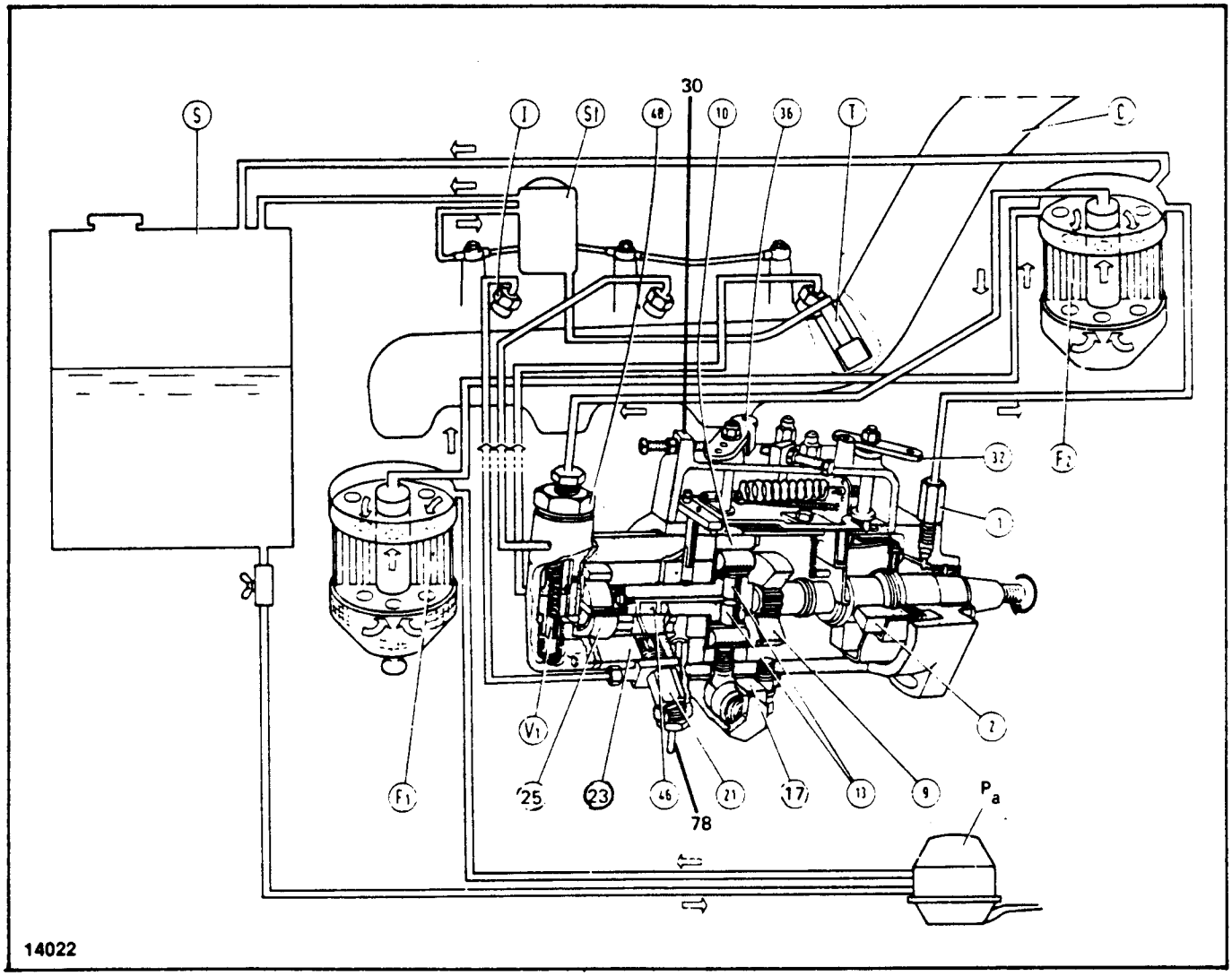

FIG. A.IV/6 — INJECTION PUMP FUEL CIRCUIT

F_1. F_2. Fuel filters; F_3. Air cleaner; Pa. Diaphragm type fuel lift pump; S. Fuel tank; S_1. Starting aid reservoir; T. Starting aid; 1. Outlet connection; 2. Governor weights; 9. Splined drive plate; 17. Advance device body; 21. High pressure connection; 23. Hydraulic head; 25. Transfer pump liner; 30. Governor cover; 32. Shut-off lever; 36. Throttle arm; 48. Fuel inlet connection; 78. Manual retard device pin

https://truckmanualshub.com/

INJECTION PUMP

DESCRIPTION

Injection pump maintains pressure to injectors. To aid dependability, pump has been designed to eliminate failure- and wear-prone parts such as gears and springs. Oiling is unnecessary — pump housing contains fuel oil under pressure to prevent airlocks and keep out dust, water, and particles which would reduce efficiency and shorten service life.

Pump is block-mounted, driven by a tapered shaft secured by a key, and revolves counter-clockwise, as seen from shaft end of pump.

Fuel enters (48, Fig. A.IV/8) injection pump, passes through pressure-regulating valve in end plate (49), through vane-type transfer pump (25, 27, 28), through metering valve (42) controlled by throttle arm (36), and into hollow shaft of rotor (46). Pumping pressure is applied to fuel by cam-operated pistons (13). Fuel then flows to distributor ports (47), through outlet ports (22) to high-pressure connections (21) which feed high-pressure lines to injectors.

Fuel flow is controlled by a mechanical governor, and automatic advance device, and by a hydraulic damper (97, Fig. A.IV/7).

NOTE: Overhauling of injection pump must be done only by authorized service personnel. UNAUTHORIZED BREAKING OF SEALS DURING WARRANTY PERIOD WILL VOID ENGINE AND FUEL INJECTION SYSTEM WARRANTY. Dealer service is limited to replacement of external seals and gaskets and adjustment of idle and high no-load speeds. Contact your LONG service manager for assistance.

REMOVING INJECTION PUMP

1. Remove injection pump drive-gear cover. Disconnect high-pressure lines. Remove fuel lines between injection pump and second fuel filter—cap or plug all openings.
2. Disconnect control links to throttle arm (36, Fig. A.IV/8) and governor shut-off lever (32).
3. Back out center cap screw, which acts as a puller to remove gear.
4. Remove cap screws attaching injection pump to timing-gear case, and remove injection pump.

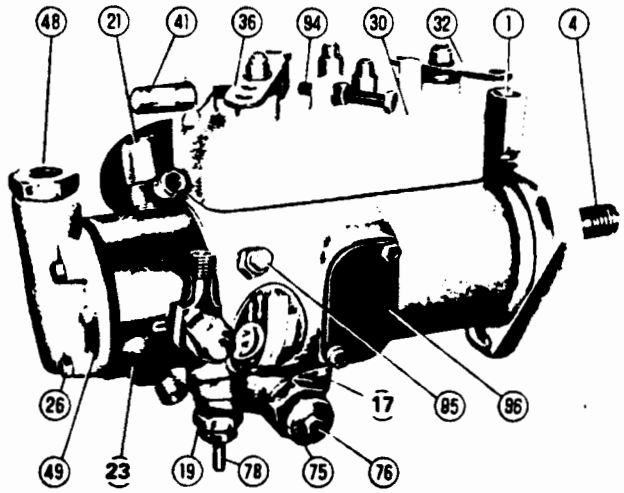

14023

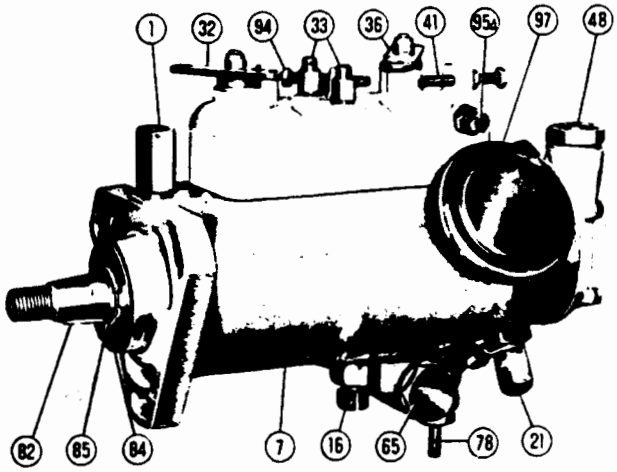

14023

FIG. A.IV/7 — FUEL INJECTION PUMP

1. Leak-off connection; 4. Drive shaft; 7. Pump housing; 16. Auto advance device stud; 17. Advance device housing; 19. Hydraulic head locating fitting; 21. High pressure connection; 23. Hydraulic head; 26. End plate capscrew; 30. Control cover; 32. Shut-off lever; 33. Cover stud nuts; 36. Throttle arm; 41. Maximum speed adjustment screw; 48. Fuel inlet connection; 49. End plate with transfer pressure regulating valve; 65. End plug; 75. Piston cap; 76. Piston capscrew (test machine advance check gauge application); 78. Manual retard device pin; 82. Key; 84. Thrust washer; 85. Circlip; 94. Idling speed adjustment screw; 95a. Hydraulic bleed screw; 95a. Governor bleed screw; 96. Control cover; 97. Pressure equalizer

https://truckmanualshub.com/

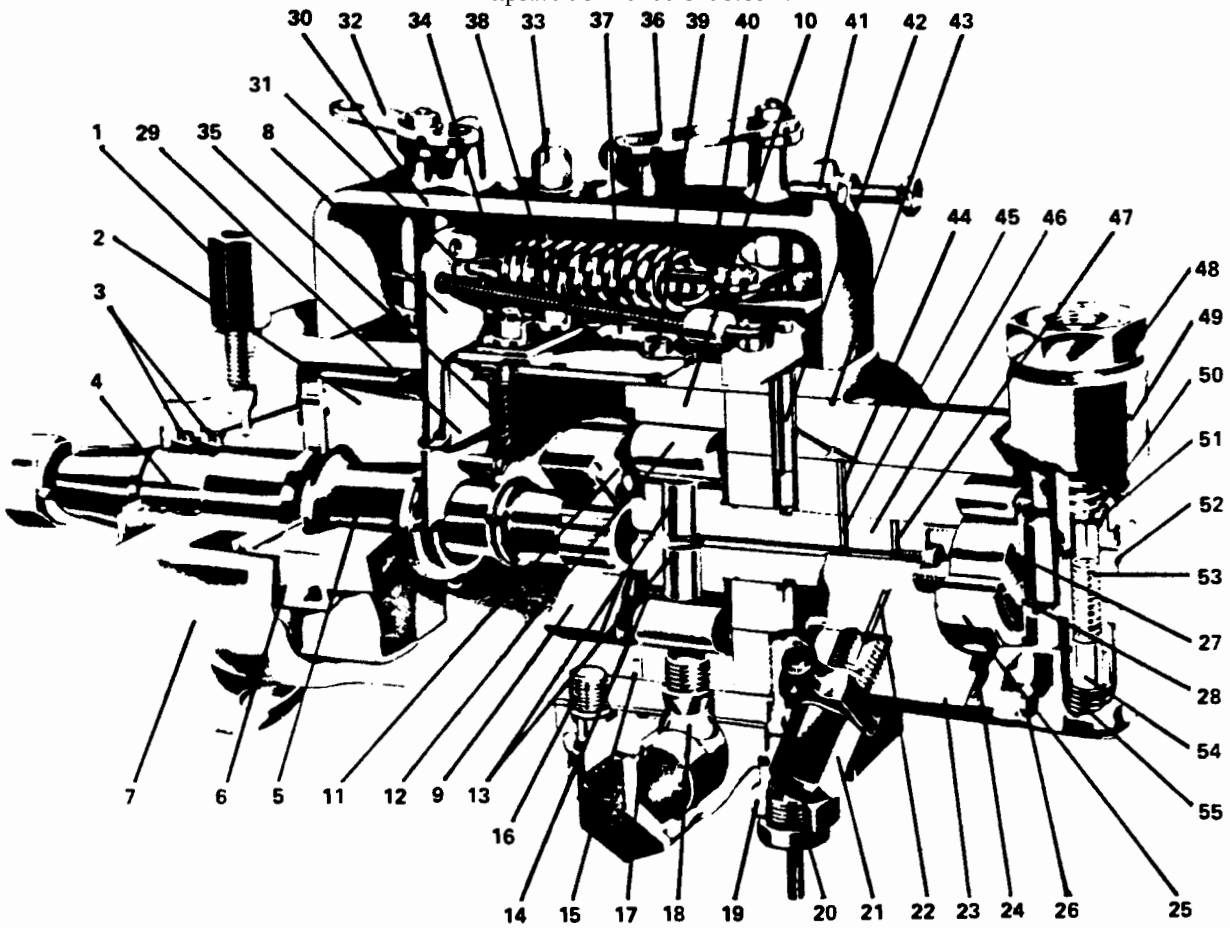

15175

FIG. A.IV/8 — SECTIONAL VIEW OF INJECTION PUMP

1. Leak-off connection; 2. Governor weight; 3. Shaft seals; 4. Drive shaft; 5. Thrust sleeve; 6. Weights retainer; 7. Pump housing; 8. Control arm; 9. Splined drive plate; 10. Cam ring; 11. Maximum fuel setting adjusting plate; 12. Roller; 13. Plungers; 14. Roller shoe; 15. Timing circlip; 16. Auto advance device stud; 17. Advance device housing; 18. Cam advance screw; 19. Hydraulic head locating fitting; 20. Manual retard device; 21. High pressure connection; 22. Outlet port; 23. Hydraulic head; 24. Seal; 25. Transfer pump liner; 26. End plate screw; 27. Transfer pump rotor; 28. Transfer pump blades; 29. Governor control bracket; 30. Control cover; 31. Idling spring guide; 32. Shut-off lever; 33. Cover nut; 34. Governor link; 35. Governor arm spring; 36. Throttle arm; 37. Shut-off bar; 38. Control spring; 39. Governor bracket screw; 40. Throttle arm; 41. Maximum speed adjustment screw; 42. Metering valve; 43. Hydraulic head sealing rubber ring; 44. Metering port; 45. Inlet port; 46. Rotor; 47. Distributor port; 48. Fuel inlet connection; 49. End plate with transfer pressure regulating valve; 50. Retaining spring; 51. Sleeve plug; 52. Valve sleeve; 53. Regulating spring; 54. Piston; 55. Priming spring

https://truckmanualshub.com/

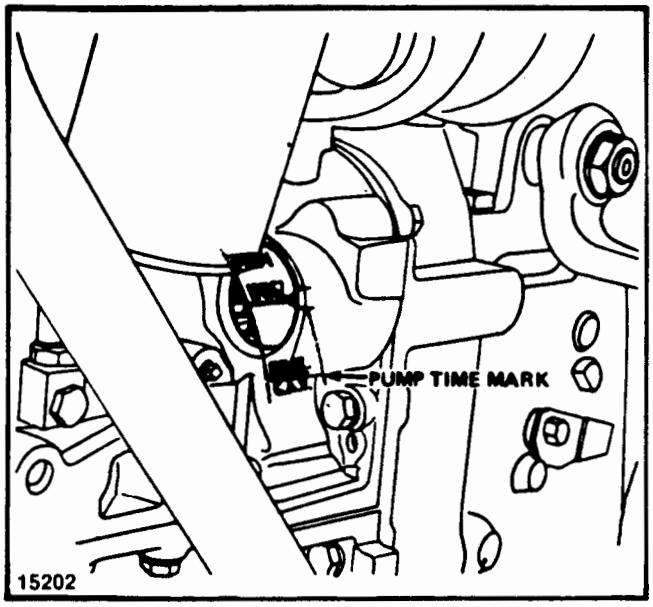

FIG. A.IV/9 TIMING INDEX $\frac{\text{INIEZ}}{\text{C.A.V.}}$ FOR CORRECT PUMP - ENGINE TIMING

INSTALLING INJECTION PUMP

(Read CAUTION and WARNING statements at start of this section.)

1. Align all timing marks (Fig. A.II/13).
2. Boltholes on injection pump mounting are slotted for adjustment purposes. Desired position of injection pump is shown by assembly marks on pump and timing-gear case.
3. Insert injection-pump shaft, with key and lock washer into its location in injection-pump drive gear and thread cap screw in drive gear on injection-pump shaft. Start cap screws through hole in drive plate of injection pump into holes in timing gear.
4. Tighten nut on drive gear to 60 ft.-lbs. Position assembly marks, and tighten drive-plate cap screws to 21 ft.-lbs.
5. Fit injection pump drive-gear cover and gasket to timing-gear cover.
6. Attach fuel lines between injection pump and second filter, tightening to 10 ft.-lbs.
7. Attach control linkage to throttle arm (Item 36, Fig. A.IV/8) and governor shut-off lever (32).

ADJUSTING INJECTION PUMP

1. With engine running at low idle and hand throttle at minimum setting, check reading of tachourmeter on instrument panel. If crankshaft speed varies from 800 R.P.M., adjust low-idle adjustment screw (Item 94, Fig. A.IV/7).
2. With engine running at high idle, and hand throttle set at maximum position, check tachourmeter reading. If crankshaft speed varies from 2350 R.P.M. (360); 2550 R.P.M. (460 & 510), adjust to proper setting.

INJECTORS

Injectors consist of a nozzle with four holes arranged at 90° from each other and with a spray pattern of 145° (Fig. A.IV/10) for 360 and 460, and a nozzle with three holes arranged at 120° from each other and with a spray pattern of 145° (Fig. A.IV/11) for the 510.

Before removing the injectors out of their bores, clean the projecting length and adjacent surfaces on cylinder head thoroughly to avoid entering of dust or dirt into the engine cylinders, then proceed as follows:

1. Unscrew both pressure tube connections.
2. Unscrew the nuts securing the injector bracket to the cylinder head.
3. Pull injectors out of their bores.

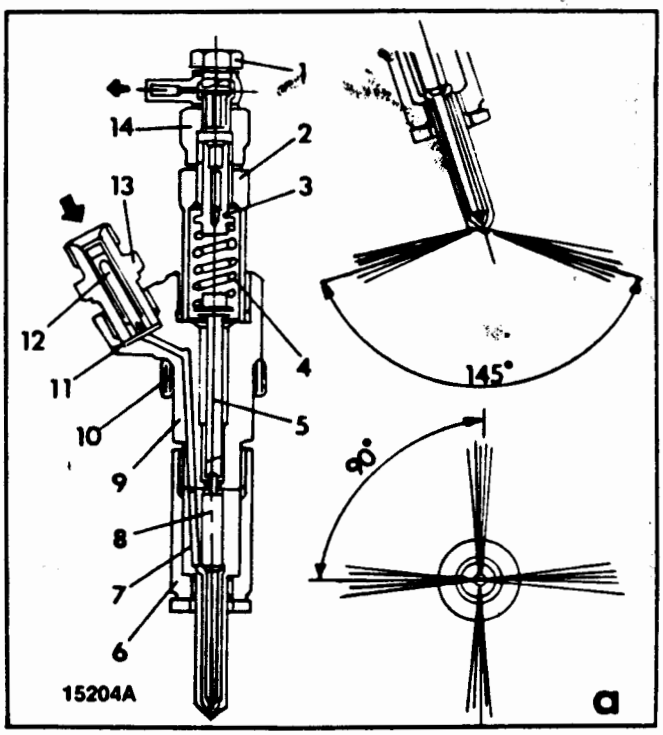

FIG. A.IV/10 INJECTOR CROSS-SECTION AND SPRAY PATTERN, 360 & 460

a. Nozzle spray pattern; 1. Leak-off connection and plug; 2. Fitting; 3. Spring adjusting screw; 4. Spring; 5. Pressure rod; 6. Nozzle nut; 7. Nozzle; 8. Nozzle rod; 9. Nozzle body; 10. Outer sealing ring; 11. Sealing washer; 12. Bar filter; 13. Union; 14. Nut

https://truckmanualshub.com/

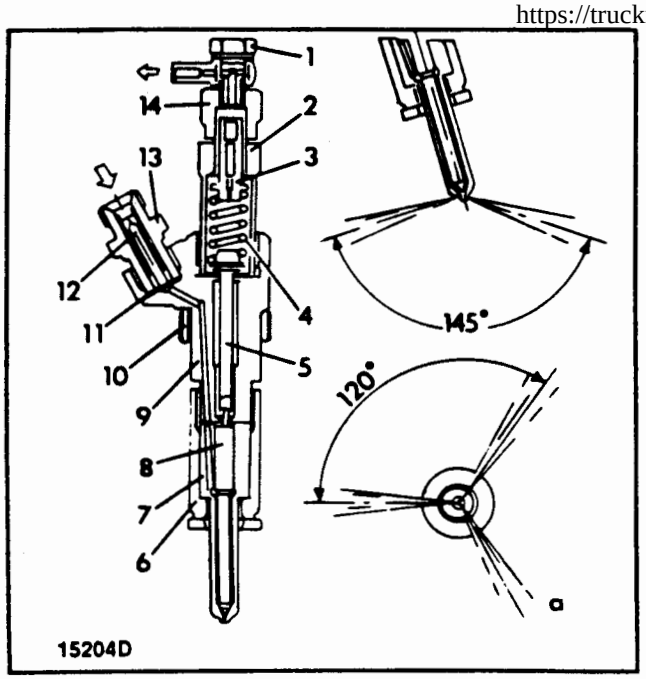

FIG. A.IV/11 INJECTOR CROSS-SECTION AND SPRAY PATTERN, 510

a. Nozzle spray pattern; 1. Leak-off connection and plug; 2. Fitting; 3. Spring adjusting screw; 4. Spring; 5. Pressure rod; 6. Nozzle nut; 7. Nozzle; 8. Nozzle rod; 9. Nozzle body; 10. Outer sealing ring; 11. Sealing washer; 12. Bar filter; 13. Union; 14. Nut

Remove carbon deposits from injector tops with a metal brush.

Disassemble the single injectors as follows:

1. Install the injector on a nozzle fixture clamped in a vise.
2. Unscrew the nut (Item 14) and the plug (Item 2).
3. Withdraw the spring (Item 4) and pin (Item 5).
4. Secure the nozzle holder to a vise, install the nozzle in it, then, using a wrench unscrew the nut (Item 6) to remove the parts.

Pull the rod filter (Item 12, Fig. A.IV/10 and A.IV/11) out of the inlet connection, then wash all the parts of the nozzle in solvent.

CALIBRATION

After cleaning the components, assemble the injectors, then check and calibrate them on nozzle tester. Correct pressure setting is within 3250-3350 P.S.I. (22408-23098 kPa).

WARNING: Keep hands away from nozzle tip when popping a nozzle. The finely atomized fuel is ejected with sufficient force to penetrate the skin and cause blood poisoning.

STARTING AID

The engine is equipped with a thermostart for cold starting contained in a valve holder (Fig. A.IV/12) which is inserted into the initial part of the intake manifold. The plug is fed from a special reservoir (Item S_1, Fig. A.IV/6) which in turn is supplied from the injector leak-off fuel.

The starting aid unit consists of a valve body (Item 8, Fig. A.IV/12) which is surrounded by a heating coil (Item 5) the end of which (Item 6) is designed to allow igniting fuel vapors.

The valve body contains a push rod which holds the ball (Item 3) tight against its seat. This ball prevents the fuel from entering the valve.

When the starting switch is turned clockwise up to the first position it closes the electric circuit.

The current flows to the resistance (Item 5) of the starting aid which is heated and expands towards the inside of the manifold causing the movement of the push rod. Consequently, the ball is released off its seat and the fuel can flow into the valve body where it comes in contact with the hot resistance and vaporizes.

https://truckmanualshub.com/

After 15-20 seconds, the end (Item 6) of the resistance gets incandescent through the passage of current, and the developed heat determines a temperature rise of the air inside the manifold.

As the switch is turned further it closes the contact of the starting motor which starts cranking the engine.

Once starting has taken place, the released switch lever returns automatically to the original position, the electric circuit is interrupted and the air flowing through the manifold cools the valve rapidly. The push rod blocks the ball again on its seat and the fuel is kept out of the starting aid.

When engine is hot, starting aid operation is excluded by turning the switch counterclockwise.

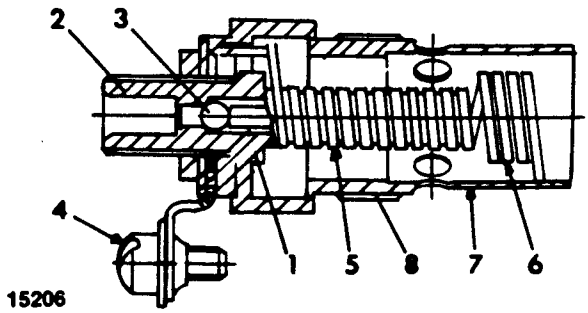

FIG. A.IV/12 STARTING AID CROSS-SECTION
1. Push rod; 2. Valve body; 3. Ball valve; 4. End screw; 5. Heating coil; 6. Ignition coil; 7. Shield; 8. Valve holder

https://truckmanualshub.com/

A.V LUBRICATION

GENERAL

Forced feed engine lubrication by camshaft driven gear-type oil pump.

Pressure regulating valve incorporated in the pump body and set for an opening pressure of a maximum 51 P.S.I. (357 kPa) at engine operating temperature.

The oil is kept clean by:

1. One screen filter attached on the suction pipe inside the oil sump.
2. A full-flow, integral cartridge type oil filter inserted in the pump delivery circuit and provided with a bypass valve operating when filter is clogged.

The system is supplied with CD oil (see Lubrication Chart Data).

The oil filler plug (Item 4, Fig. A.I/4) is installed on the valve cover and the oil level dipstick gauge on the left side of the crankcase sump.

The normal lubrication pressure measured on the crankcase oil gallery plug is:

At Low Idling . . . . . 3 - 5 PSI (34.4 kPa)

At Maximum Speed . . . . . 43-56 PSI (293.5-386.1 kPa)

Low oil pressure is signalled by the panel mounted warning light.

The camshaft/oil pump speed ratio is 1:1.

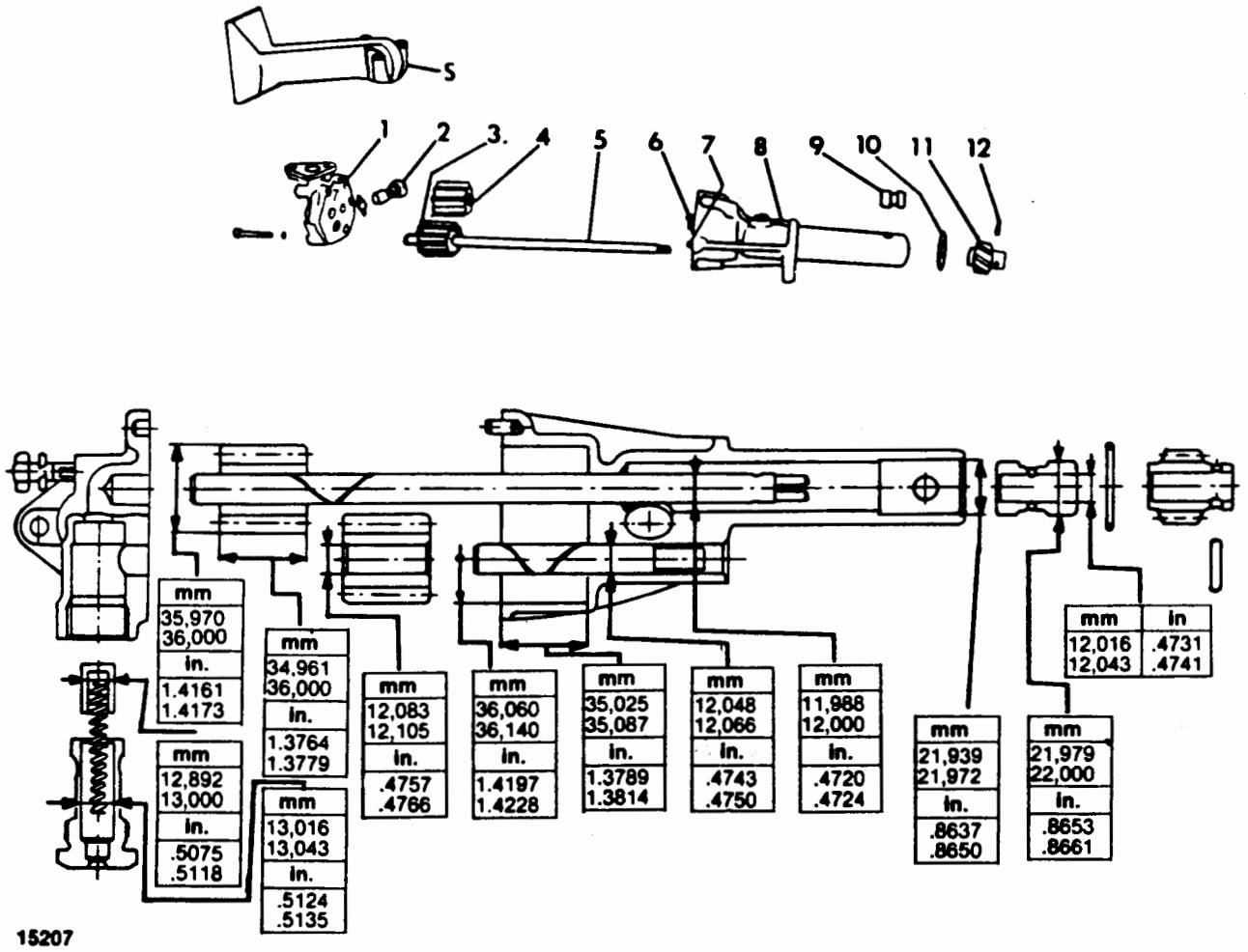

FIG. A.V/1 OIL PUMP PARTS AND ASSEMBLY

S. Oil sump bell; 1. Cover; 2. Valve; 3. Driving gear; 4. Driven gear; 5. Pump drive shaft; 6. Driven gear shaft; 7. Dowel; 8. Pump body; 9. Bushings; 10. Gasket; 11. Driven gear of oil pump drive; 12. Hollow pin

https://truckmanualshub.com/

OIL PUMP

Remove the oil sump (refer to instructions on page 15), the pump mounting capscrews (Item C_5, Fig. A.III/1) and, finally, the oil pump.

After disassembling the pump (Fig. A.V/1) inspect and measure components versus the values reported in the table of data.

At assembly, note of the following points:

1. The pump body comes fitted with the shaft (Item 5) of the driven gear (Item 3), which is a shrink fit on the shaft.
2. Make sure the torque specification is met when tightening the capscrews which secure the pump to the crankcase at rear of this section.

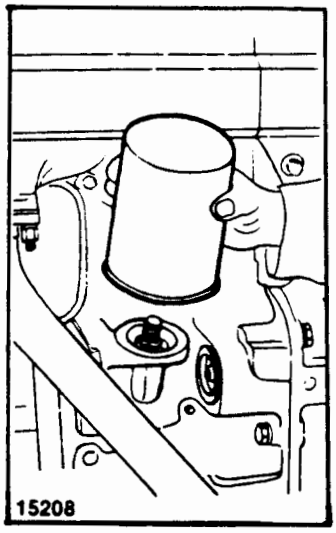

FIG. A.V/2 DISASSEMBLY (REASSEMBLY) OF OIL FILTER

OIL FILTER

The oil filter is furnished complete with the container, which comprises the cartridge and its outer seal and is screwed to the crankcase.

Replace the filter at every oil change, therefore after every 120 working hours, to avoid clogging. If the filter gets clogged, the by-pass valve (set at 12.8-15.6 P.S.I. or 88.3-107.6 kPa) automatically by-passes the filter, thus allowing the lubricating oil to reach the engine anyway but in this case the by-passed oil would be unfiltered.

The filter can be removed by simply unscrewing it by hand from its support (Fig. A.V/2).

The filter is of the full-flow type, consequently efficient performance is a must. It must therefore be regularly replaced at the specified intervals, as the integral body construction offers no possibility of checking or replacing components.

LOW OIL PRESSURE WARNING LIGHT

The warning indicator is a panel-mounted red bulb lamp which goes on in the following cases:

1. Low oil pressure at cold starts or with engine stopped and the key inserted in the switch in a position different from "O".
2. Sending unit (Item 10, Fig. A.O/5) inoperative.
3. Broken ground cable.

If, in case (1) the red lamp does not light up, check the following:

1. Warning light bulb.
2. Fuse
3. Sending Unit.
4. Wires.

Note: Do not use any type of oil filter other than those supplied by your Long Dealer as serious engine damage could occur.

https://truckmanualshub.com/

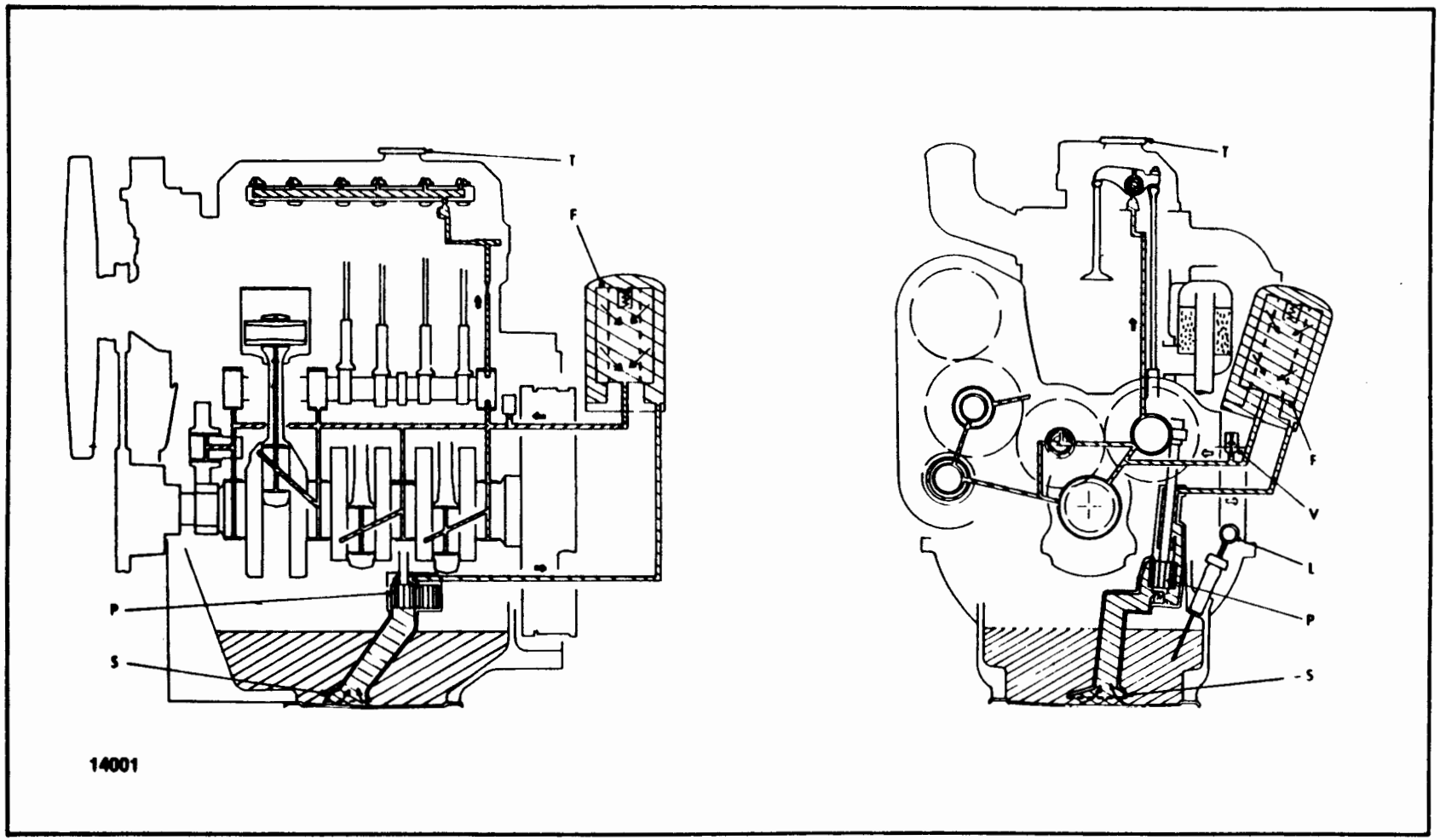

FIG. A.V/3 ENGINE LUBRICATION DIAGRAM
F. Filter; P. Gear-type pump; T. Oil filler plug; L. Dipstick gauge; S. Oil sump bell; V. Oil pressure sending unit

https://truckmanualshub.com/

ENGINE OIL SCHEDULE AND CAPACITIES

Level Check . . . . . 8-10 hrs.
Change Interval . . . . . Filter and Oil First 60 hrs.
Filter and Oil Every 120 hrs.
Type of Oil . . . . . CD, SAE 15 W-40
Quantity:
Without Filter . . . . . 6.4 Qts. (6 litres)
With Filter . . . . . 7.4 Qts. (7 litres)

https://truckmanualshub.com/

A.VI COOLING

GENERAL

Forced feed cooling system with vane-type centrifugal pump and thermostat regulated (Fig. A.VI/1).

The coolant flow is cooled through a verticle tube type radiator core and a fan pulls cooling air through the core.

The cylinder head water pipe houses the fixed-setting thermostat which, when the coolant is cold, blocks the flow of coolant to the radiator until the coolant warms up to correct operating temperature, as follows:

1. With the thermostat closed, the coolant (circulates only between pump and engine (by-pass circuit), excluding the radiator.
2. With the thermostat open, the coolant flows through the radiator also, thus excluding, partially or in full, the by-pass circuit.

The cooling system capacity is 14 Qts. (13.3 litres).

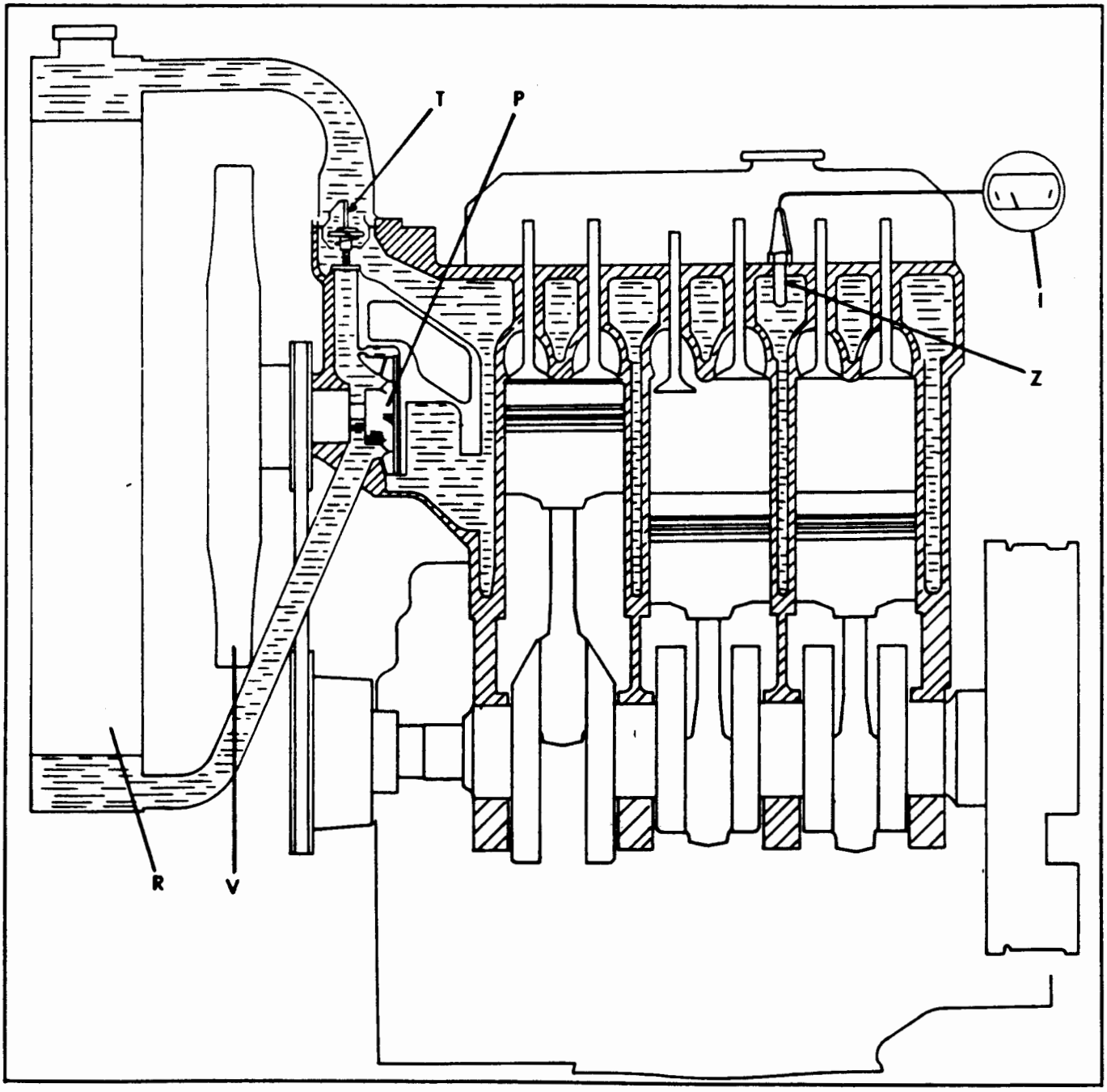

FIG. A.VI/1 ENGINE COOLING DIAGRAM
I. Coolant temperature indicator; R. Vertical tube type radiator; V. Fan; P. Water pump; T. Thermostat; Z. Thermometer gauge bulb

https://truckmanualshub.com/

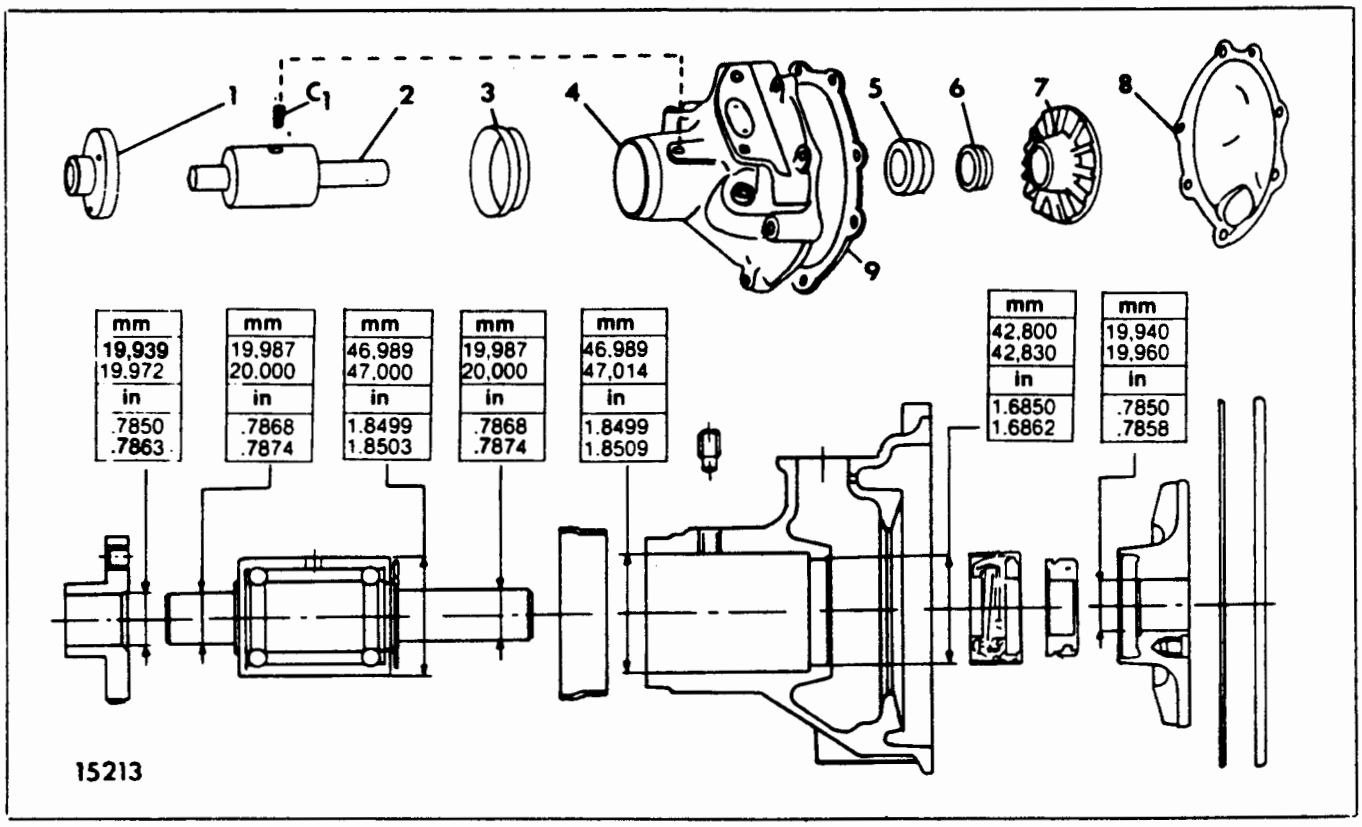

FIG. A.VI/2 WATER PUMP PARTS AND ASSEMBLY DATA

C_1. Pump bearing setscrew; 1. Fan hub; 2. Pump bearing and shaft; 3. Pump bearing shield; 4. Pump body; 5. Shaft seal; 6. Front sealing bushing; 7. Impeller; 8. Pump Cover; 9. Gasket, Pump Cover.

WATER PUMP

The water pump is a cast iron body with a double-row ball bearing and shaft and a protective centrifuge disc (Fig. A.VI/2 and A.O/9A).

When the engine is installed on tractor, remove the pump as follows:

Remove the capscrews securing the pump to its support, then the pump body with fan and pulley. The operation is facilitated by removing the fan first, the the pulley and finally the pump.

Dismantle the pump as follows (Fig. A.VI/2):

1. Remove the cover (Item 8) screws and cover.
2. Remove the impeller (Item 7) by taking advantage of the two threaded holes to fit a puller and two short screws (8 x 1.25 mm.).
3. Remove the setscrew (Item C_1).
4. Drive out the shaft with bearing and fan hub (Item 1) as an assembly from the inside of the pump using a suitable bar.
5. Remove the bearing protective cap (Item 3) and fan hub (Item 1) from the shaft.

Do not remove the shaft seal (Item 5, Fig. A.VI/2) if not for replacement. Replace it when the graphite surface contacting the pump shaft is no longer smooth and endangers front sealing tightness.

Check pump body and cover gaskets (Items 4 and 7) for wear, and fit new ones of the same type, if necesary.

Reassemble the pump by reversing the sequency of disassembly and considering the points outlined below:

1. The bearing (Item 2) is sealed and does not require any lubrication.
2. Impellor (Item 7) must be pressed flush with the end of the shaft. Also, on completion of reassembly check the clearance between impellor and pump body. The correct clearance is 0.04 to 0.05 in. (1 to 1.25 mm.).
3. Torque the mounting screws to the values specified in the table of data.

https://truckmanualshub.com/

RADIATOR

The radiator core has three rows of tubes (four rows on 510) with copper fins.

Two strips of sponge material are glued to the outer side of the radiator (Item 9, Fig. A.VI/3.) their purpose being to block the warm air produced by the cooling of the coolant from flowing back into circulation.

The outflow of coolant vapor which accumulates inside the radiator is provided by a plastic tube (Item 10) connected to a hole which is drilled through the water filler neck.

Two valves are incorporated in the radiator cap: one compression (Item 11) and one vacuum valve (Item 12). The compression valve tends to open when, with tractor in motion, the coolant temperature rise inside the circuit sets up internal pressure exceeding 5 to 7.4 P.S.I. (50,7 kPa); at this point the valve tends to be lifted allowing the excess vapor to flow out along the plastic tube (Item 10).

The vacuum valve starts working by effect of the decreased coolant temperature which results in a pressure drop inside the circuit. The valve lowers and lets air in to re-establish the pressure balance.

First drain the coolant then remove the radiator as follows:

1. Remove the grille.
2. Remove the battery after disconnecting the ground cable.
3. Remove the grille, complete.
4. Remove the frame together with air cleaner after slackening the air suction hose band clamps, and removing the four attaching capscrews to the axle support.

Make sure the radiator functions efficiently by checking for obstructions or clogging inside and outside the radiator core.

The correct flow rate is 28 GPM (105.9 l/min).

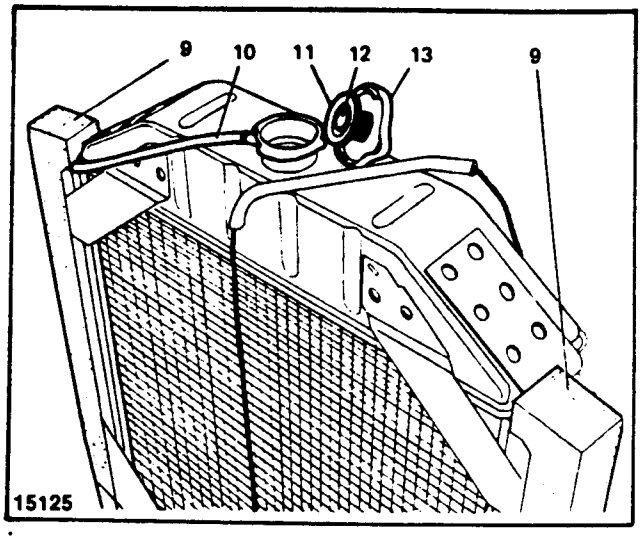

FIG. A.VI/3 RADIATOR
9. Air sealing sponge rubber elements; 10. Water vapor vent tube; 11. Compression valve; 12. Vacuum valve; 13. Plug

Descale the system as follows:

1. Make a solution of 3.64 oz. per gallon of sodium bicarbonate in warm water.
2. Filter it through a cloth.
3. Pour it in the radiator, drain it and flush thoroughly.
4. Check radiator tightness, in case of leakage, by immersion inside a tank filled with water at 68°-104°F. (30° ± 10°C.) and blowing compressed air into it at approximately 14.2 PSI (98 kPa) for about two minutes. Check for air bubbles, and repeat three times.

We do not recommend limiting the washing to the radiator alone as it should always be extended to the entire cooling system supplying the engine with the type of solution and in the manners previously indicated. Work the tractor for about one hour before draining the coolant, with engine stopped.

The circuit should always be flushed and filled with anti-freeze to suit climate need.

Fill the radiator up to about ¾" (2 cm.) below the over-flow exhaust hole (Item 10).

https://truckmanualshub.com/

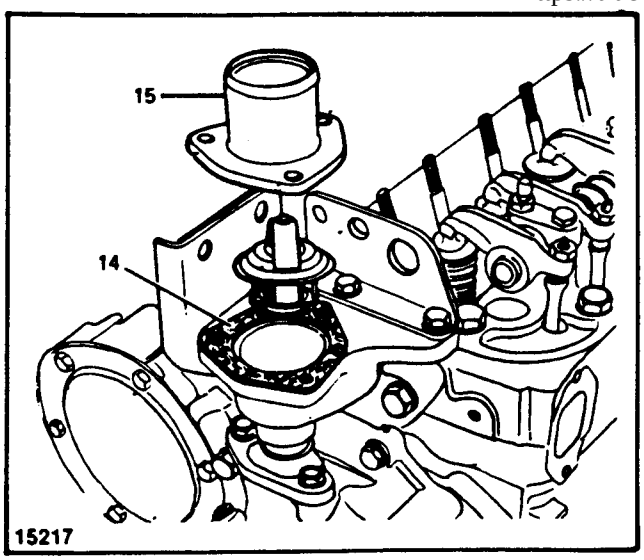

FIG. A.VI/4 THERMOSTAT REMOVAL (INSTALLATION)
14. Gasket; 15. Cover

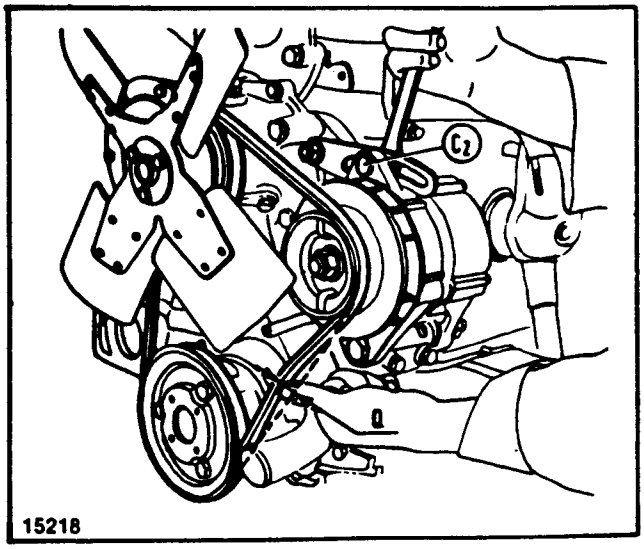

FIG. A.VI/5 CHECKING AND ADJUSTING BELT TENSION
C_2. Alternator mounting bolt on take up bracket; Q. = ⅜"-9/16" (1-1.5 cm.)

THERMOSTAT

The thermostat is located inside the cylinder head water outlet pipe terminal.

To remove it, loosen the band clamps, disconnect the hose and remove the cover (Item 15, Fig. A.VI/4).

Check by immersing it in a container of water along with a temperature gauge. Thermostat begins to open at 181.4° to 203°F. (83° to 95°C.) It is fully open at 203°F. (95°C.).

⚠ WARNING:
DO NOT OPERATE TRACTOR WITHOUT THERMOSTAT. OVERHEATING COULD RESULT AND CAUSE ENGINE DAMAGE.

REPLACING THE FAN AND ALTERNATOR DRIVE BELT

No tractor part needs to be removed first. Proceed as follows:

1. Loosen the take up bracket stop nut (Item C_2 Fig. A.VI/5).
2. Move the alternator away on the bracket so as to loosen the belt tension.
3. Withdraw the belt through the opening in the air shroud.

CHECKING AND SETTING BELT TENSION

Apply a load on the belt between drive pulley and alternator (Fig. A.VI/5).

No adjustment is necessary if the resulting belt slack is within ⅜"-9/16" (1-1.5 cm.) under a load of 11-13 lbs. (5-6 kg.); if not, proceed as follows:

1. Loosen the adjusting bolt (Item C_2).
2. Move the alternator on the take up bracket in either direction so as to take up the excessive belt slack.
3. Tighten the adjusting bolt.

https://truckmanualshub.com/

FAN

The fan, like all other rotating parts, is statically balanced to prevent trouble due to its high speed (45 percent higher than engine speed) which might result in blade failure.

The maximum permissible out-of-balance is 0.555 oz./in. (400 gr./mm.).

Always check blades for bending and for face alignment (Fig. A.VI/6) using a surface gauge.

Some bends can be straightened out with a fork bar, provided that they do not alter the radial shape and do not endanger the strength of the fan.

WATER TEMPERATURE GAUGE

Colored band type gauge, the band being made up of three sectors, as follows:

White Sector	86° - 167°F. (30° - 75°C.)
Central Green	167° - 221°F. (75° - 105°C.)
Red Sector	221° - 239°F. (105° - 115°C.)

The dial is within the green central sector under normal operating conditions.

Test the gauge, should any doubt arise about its reliability, by dipping the bulb in water and then checking the scale graduation versus a test calibrated gauge. Repeat test for greater safety.

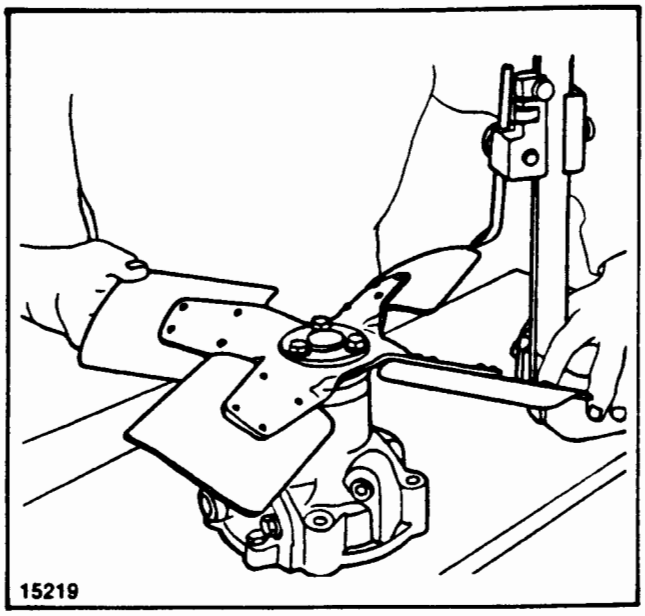

FIG. A.VI/6 CHECK THE FAN BLADE FACE ALIGNMENT WITH A SURFACE GAUGE.

https://truckmanualshub.com/

A.VIII FITS & TOLERANCES — TORQUE SPECIFICATIONS SERVICE TOOLS

ENGINE FITS AND TOLERANCES — 360/460

DESCRIPTION	Size of New Parts and Wear Limits mm	in.
I. Crankcase - Cylinder Head - Oil Sump		
O.D. of cylinder liners:		
—standard	99.020 - 99.050	3.8984 - 3.8996
—0.2 mm. (0.008 in.) oversize	99.220 - 99.250	3.9063 - 3.9075
Diameter of crankcase bores:		
—standard	98.890 - 98.940	3.8933 - 3.8953
—0.2 mm. (0.008 in.) oversize	99.090 - 99.140	3.9012 - 3.9031
Interference fit of cylinder liners in crankcase bores	0.080 - 0.160	0.0031 - 0.0062
I.D. of standard liners (press-fitted):		
—Class A	95.000 - 95.012	3.7402 - 3.7406
—Class B	95.012 - 95.024	3.7406 - 3.7411
Dia. of crankcase bores for valve tappets:	14.000 - 14.018	0.5512 - 0.5519
Dia. of crankcase bores for camshaft bearing bushings:		
—Front	54.780 - 54.805	2.1567 - 2.1577
—Middle	54.280 - 54.305	2.1370 - 2.1380
—Rear	53.780 - 53.805	2.1173 - 2.1183
Dia. of crankcase main bearing locations	80.587 - 80.607	3.1727 - 3.1735
Dia. of cylinder head locating bores for valve guides	13.966 - 13.983	0.5498 - 0.5505
Angle of valve seats in cylinder head	44°55' - 45°5'	—
II. Timing		
I.D. of camshaft bearing bushings (in place):		
—Front	51.080 - 51.130	2.0110 - 2.0130
—Middle	50.580 - 50.630	1.9913 - 1.9933
—Rear	50.080 - 50.130	1.9716 - 1.9736
Assembly clearance between camshaft and bearings:		
—Front	0.080 - 0.160	0.0031 - 0.0063
—Middle	0.080 - 0.160	0.0031 - 0.0063
—Rear	0.080 - 0.160	0.0031 - 0.0063
O.D. of camshaft bearings:		
—Front	54.875 - 54.930	2.1604 - 2.1626
—Middle	54.375 - 54.430	2.1407 - 2.1429
—Rear	53.875 - 53.930	2.1211 - 2.1232
Interference fit of camshaft bearings in crankcase bores:		
—Front	−0.070 - −0.150	−0.0027 - −0.0059
—Middle	−0.070 - −0.150	−0.0027 - −0.0059
—Rear	−0.070 - −0.150	−0.0027 - −0.0059
Dia. of valve stem	7.895 - 8.000	0.3108 - 0.3150
I.D. of valve guides (fitted)	8.023 - 8.038	0.3159 - 0.3165
Assembly clearance between valve stems and guides	0.023 - 0.053	0.0009 - 0.0021
O.D. of valve guides:		
—standard	13.988 - 14.016	0.5507 - 0.5518
—0.20 mm. (0.008 in.) oversize	14.188 - 14.216	0.5586 - 0.5597
Interference fit of valve guides and their seats in the cylinder head	−0.005 - −0.050	−0.0002 - −0.0020
Max. O.D. (intermediate) of valve tappets	13.950 - 13.970	0.5492 - 0.5500
Assembly clearance between tappets and crankcase bores	0.030 - 0.068	0.0012 - 0.0026
O.D. of rocker arm bushings	21.006 - 21.031	0.8279 - 0.8279
Dia. of rocker arm bushing locations	20.939 - 20.972	0.8244 - 0.8257
Interference fit between bushings and rocker arm locating holes	−0.058 - −0.121	−0.0023 - −0.0048
I.D. of rocker arm bushings	18.016 - 18.034	0.7093 - 0.7100

https://truckmanualshub.com/

"ENGINES FITS AND TOLERANCES—360/460" CONT'D.

DESCRIPTION	Size of New Parts and Wear Limits	
	mm	in.
Assembly clearance between rocker arm shaft and bushings (fitted)	0.016 - 0.052	0.0006 - 0.0020
Dia. of timing idler gear axle	31.975 - 32.000	1.2588 - 1.2598
I.D. of timing idler gear bushing	32.050 - 32.075	1.2618 - 1.2628
Assembly clearance between idler gear axle and bushing	0.050 - 0.100	0.0020 - 0.0040
Thickness of idler gear thrust washer	1.450 - 1.500	0.0571 - 0.0591
Valve spring specifications:		
—free length	66.5	2.6181
—closed-valve length (6.55 ÷ 7.55 kg = 14.4 ÷ 16.6 lb loading)	37.5...38.5	1.476...1.516
—open-valve length (15.4 ÷ 16.7 kg = 33.9 ÷ 36.8 lb loading)	26.8...28.8	1.055...1.134
—Test length (32 daN = 71.91 lbs. Test Load)	40.5 - 41.5	1.5944 - 1.6338
—Test length (50.1 daN = 112.58 lbs. Test Load)	30.7 - 30.9	1.2086 - 1.2165
Rocker-arm spacing spring specifications:		
—free length	59.500	2.3425
—test length (4.7 - 5.3 daN = 10.56 - 11.91 lbs. test load)	44.000	1.7322
III. Power Train		
Dia. of standard size pistons, measured at a point 50mm. (1.968 in.) above the base of the skirt (Figure 42):		
—Class A	94.800 - 94.812	3.7323 - 3.7327
—Class B	94.812 - 94.824	3.7327 - 3.7332
Max. dia. of standard size pistons, measured at the base of the skirt	94.894 - 94.918	3.7360 - 3.7369
Running clearance between pistons and cylinder liners belonging to the same class of tolerance	0.188 - 0.212	0.0056 - 0.0066
Dia. of oversize pistons, measured 50 mm. off skirt:		
—0.2 mm. (0.008 in.)	95.000 - 95.012	3.7401 - 3.7406
—0.4 mm. (0.016 in.)	95.200 - 95.212	3.7480 - 3.7485
—0.6 mm. (0.020 in.)	95.400 - 95.412	3.7559 - 3.7563
—0.8 mm. (0.032 in.)	95.600 - 95.612	3.7634 - 3.7642
Dia. of piston pin:		
—standard	31.983 - 31.990	1.2592 - 1.2594
—0.20 mm. (0.008 in.) oversize	32.183 - 32.190	1.2670 - 1.2673
I.D. of connecting rod small end bushings (fitted):		
—standard size	32.005 - 32.012	1.2600 - 1.2603
—0.20 mm. (0.008 in.) oversize	32.205 - 32.212	1.2679 - 1.2682
Assembly clearance between piston pin and small end bushings	0.015 - 0.029	0.0006 - 0.0011
O.D. of connecting rod small end bushings	35.979 - 36.017	1.4165 - 1.4180
Dia. of small end bushing bore locations	35.861 - 35.899	1.4125 - 1.4140
Interference fit between small end bushings and connecting rod bore	−0.063 - −0.140	−0.0025 - −0.0055
I.D. of piston bosses:		
—standard size	31.983 - 31.990	1.2592 - 1.2594
Assembly clearance of piston ring in grooves:		
—1st ring	0.090 - 0.122	0.0035 - 0.0048
—2nd ring	0.050 - 0.082	0.0020 - 0.0032
—3rd ring	0.040 - 0.075	0.0016 - 0.0029

https://truckmanualshub.com/

"ENGINES FITS AND TOLERANCES—360/460" CONT'D.

DESCRIPTION	Size of New Parts and Wear Limits	
	mm	in.
End gap (with piston and rings installed in cylinder liner):		
—1st ring	0.350 - 0.550	0.0138 - 0.0216
—2nd ring	0.300 - 0.450	0.0118 - 0.0177
—3rd ring	0.400 - 0.650	0.0157 - 0.0256
Dia. of crankshaft journals:		
—standard size	76.187 - 76.200	2.9995 - 3.0000
—0.254 mm. (0.010 in.) undersize	75.933 - 75.946	2.9895 - 2.9900
—0.508 mm. (0.020 in.) undersize	75.579 - 75.692	2.9755 - 2.9800
—0.762 mm. (0.030 in.) undersize	75.425 - 75.438	2.9695 - 2.9700
—1.016 mm. (0.040 in.) undersize	75.171 - 75.184	2.9595 - 2.9600
Thickness of main bearings:		
—standard size	2.165 - 2.172	0.0852 - 0.0855
—0.254 mm. (0.010 in.) undersize	2.292 - 2.299	0.0902 - 0.0905
—0.508 mm. (0.020 in.) undersize	2.419 - 2.426	0.0952 - 0.0955
—0.762 mm. (0.030 in.) undersize	2.546 - 2.553	0.1002 - 0.1005
—1.016 mm. (0.040 in.) undersize	2.673 - 2.680	0.1052 - 0.1055
Assembly clearance between main bearings and their journals	0.043 - 0.090	0.0017 - 0.0035
Dia. of crankshaft connecting rod bearing journals:		
—standard size	58.730 - 58.743	2.3122 - 2.3127
—0.254 mm. (0.010 in.) undersize	58.476 - 58.489	2.3022 - 2.3027
—0.508 mm. (0.020 in.) undersize	58.222 - 58.235	2.2922 - 2.2927
—0.762 mm. (0.030 in.) undersize	57.968 - 57.981	2.2822 - 2.2827
—1.016 mm. (0.040 in.) undersize	57.714 - 57.727	2.2722 - 2.2727
Thickness of connecting rod bearings:		
—standard size	1.813 - 1.822	0.0713 - 0.0717
—0.254 mm. (0.010 in.) undersize	1.940 - 1.949	0.0763 - 0.0767
—0.508 mm. (0.020 in.) undersize	2.067 - 2.076	0.0813 - 0.0817
—0.762 mm. (0.030 in.) undersize	2.194 - 2.208	0.0864 - 0.0869
Assembly clearance between connecting rod journals and bearings	0.021 - 0.064	0.0008 - 0.0024
Thickness of crankshaft thrust washers:		
—standard size	3.378 - 3.429	0.1330 - 0.1350
—0.127 mm. (0.005 in.) oversize	3.505 - 3.556	0.1380 - 0.1400
Length of crankshaft central main bearing journal	32.00 - 32.100	1.2598 - 1.2638
End floating of crankshaft	0.082 - 0.334	0.0032 - 0.0131
V. Lubrication System		
Dia. of oil pump drive shaft	11.988 - 12.000	0.4720 - 0.4724
I.D. of pump shaft bushing	12.016 - 12.043	0.4731 - 0.4741
Assembly clearance between oil pump shaft and bushing	0.016 - 0.055	0.0006 - 0.0022
O.D. of pump shaft bushing	21.979 - 22.000	0.8653 - 0.8661
Dia. of bushing locating bore in pump body	21.939 - 21.972	0.8637 - 0.8650
Interference fit of bushing in its pump location	−0.007 - −0.061	−0.0003 - −0.0024
Dia. of driven gear shaft	11.907 - 11.925	0.4687 - 0.4695
Dia. of driven gear hub hole	11.958 - 11.973	0.4707 - 0.4714
Assembly clearance between shaft and gear hub hole	0.033 - 0.066	0.0012 - 0.0025
Tooth backlash, oil pump drive and driven gears	0.100	0.004
Width of drive and driven gears	34.961 - 35.000	1.3764 - 1.3779
Length of bore (gear location) in pump body	35.025 - 35.087	1.3789 - 1.3814
Gear and clearance in pump body	0.025 - 0.126	0.0010 - 0.0050
O.D. of drive and driven gears	35.970 - 36.000	1.4161 - 1.4173
Bore diameter (gear location) in pump body	36.060 - 36.140	1.4197 - 1.4228
Diametral clearance of drive and driven gears in pump body	0.060 - 0.170	0.0024 - 0.0067
Oil pressure valve spring sepcifications:		
—free length	45	1.77
—test length (6.5 - 7 daN = 14.6 - 15.73 lbs. test load)	34.5	1.3582
—test length (9.8 - 10.6 daN = 22.02 - 23.82 lbs. test load)	29	1.417

https://truckmanualshub.com/

FITS & TOLERANCES — TORQUE SPECIFICATIONS

ENGINE FITS AND TOLERANCES — 510

DESCRIPTION	Size of New Parts and Wear Limits	
	mm	in.
I. Crankcase · Cylinder Head · Oil Sump		
O.D. of cylinder liners:		
—standard	106.020 - 106.050	4.1740 - 4.1752
—0.2 mm. (0.008 in.) oversize	106.220 - 106.250	4.1819 - 4.1831
Diameter of crankcase bores:		
—standard	105.890 - 105.940	4.1689 - 4.1709
—0.2 mm. (0.008 in.) oversize	106.090 - 106.140	4.1768 - 4.1787
Interference fit of cylinder liners in crankcase bores	0.080 - 0.160	0.0031 - 0.0062
I.D. of standard liners (press-fitted):		
—Class A	102.000 - 102.012	4.0157 - 4.0162
—Class B	102.012 - 102.024	4.0162 - 4.0167
Dia. of crankcase bores for valve tappets:	14.000 - 14.018	0.5512 - 0.5519
Dia. of crankcase bores for camshaft bearing bushings:		
—Front	54.780 - 54.805	2.1567 - 2.1577
—Middle	54.280 - 54.305	2.1370 - 2.1380
—Rear	53.780 - 53.805	2.1173 - 2.1183
Dia. of crankcase main bearing locations	80.587 - 80.607	3.1727 - 3.1735
Dia. of cylinder head locating bores for valve guides	13.966 - 13.983	0.5498 - 0.5505
Angle of valve seats in cylinder head	44°55' - 45°5'	—
II. Timing		
I.D. of camshaft bearing bushings (in place):		
—Front	51.080 - 51.130	2.0110 - 2.0130
—Middle	50.580 - 50.630	1.9913 - 1.9933
—Rear	50.080 - 50.130	1.9716 - 1.9736
Assembly clearance between camshaft and bearings:		
—Front	0.080 - 0.160	0.0031 - 0.0063
—Middle	0.080 - 0.160	0.0031 - 0.0063
—Rear	0.080 - 0.160	0.0031 - 0.0063
O.D. of camshaft bearings:		
—Front	54.875 - 54.930	2.1604 - 2.1626
—Middle	54.375 - 54.430	2.1407 - 2.1429
—Rear	53.875 - 53.930	2.1211 - 2.1232
Interference fit of camshaft bearings in crankcase bores:		
—Front	−0.070 - −0.150	−0.0027 - −0.0059
—Middle	−0.070 - −0.150	−0.0027 - −0.0059
—Rear	−0.070 - −0.150	−0.0027 - −0.0059
Dia. of valve stem	7.895 - 8.000	0.3108 - 0.3150
I.D. of valve guides (fitted)	8.023 - 8.038	0.3159 - 0.3165
Assembly clearance between valve stems and guides	0.023 - 0.053	0.0009 - 0.0021
O.D. of valve guides:		
—standard	13.988 - 14.016	0.5507 - 0.5518
—0.20 mm. (0.008 in.) oversize	14.188 - 14.216	0.5586 - 0.5597
Interference fit of valve guides and their seats in the cylinder head	−0.005 - −0.050	−0.0002 - −0.0020
Max. O.D. (intermediate) of valve tappets	13.950 - 13.970	0.5492 - 0.5500
Assembly clearance between tappets and crankcase bores	0.030 - 0.068	0.0012 - 0.0026
O.D. of rocker arm bushings	21.006 - 21.030	0.8270 - 9.8279
Dia. of rocker arm bushing locations	20.939 - 20.972	0.8244 - 0.8257
Interference fit between bushings and rocker arm locating holes	−0.058 - −0.121	−0.0023 - −0.0048
I.D. of rocker arm bushings	18.016 - 18.034	0.7093 - 0.7100
Assembly clearance between rocker arm shaft and bushings (fitted)	0.016 - 0.052	0.0006 - 0.0020

https://truckmanualshub.com/

"ENGINES FITS AND TOLERANCES—510" CONT'D.

DESCRIPTION	Size of New Parts and Wear Limits	
	mm	in.
Dia. of timing idler gear axle	31.975 - 32.000	1.2588 - 1.2598
I.D. of timing idler gear bushing	32.050 - 32.075	1.2618 - 1.2628
Assembly clearance between idler gear axle and bushing	0.050 - 0.100	0.0020 - 0.0040
Thickness of idler gear thrust washer	1.450 - 1.500	0.0571 - 0.0591
Valve spring specifications:		
—free length	66.5	2.6181
—closed-valve length (6.55 ÷ 7.55 kg = 14.4 ÷ 16.6 lb loading)	37.5...38.5	1.476...1.516
—open-valve length (15.4 ÷ 16.7 kg = 33.9 ÷ 36.8 lb loading)	26.8...28.8	1.055...1.134
—Test length (32 daN = 71.91 lbs. test load)	40.5 - 41.5	1.5944 - 1.6338
—Test length (50.1 daN = 112.58 lbs. test load)	30.7 - 30.9	1.2086 - 1.2165
Rocker-arm spacing spring specifications:		
—free length	59.500	2.3425
—test length (4.7 - 5.3 daN = 10.56 - 11.91 lb. test load)	44.000	1.7322
III. Power Train		
Dia. of standard size pistons, measured at a point 50mm. (1.968 in.) above the base of the skirt (Figure 42):		
—Class A	101.740 - 101.752	4.0055 - 4.0059
—Class B	101.752 - 101.764	4.0059 - 4.0064
Max. dia. of standard size pistons, measured at the base of the skirt	101.824 - 101.848	4.0088 - 4.0098
Running clearance between pistons and cylinder liners belonging to the same class of tolerance	0.188 - 0.212	0.0074 - 0.0083
Dia. of oversize pistons, measured 50 mm. off skirt:		
—0.2 mm. (0.008 in.)	101.940 - 101.952	4.0133 - 4.0138
—0.4 mm. (0.016 in.)	102.140 - 102.152	4.0212 - 4.0217
—0.6 mm. (0.020 in.)	102.340 - 102.352	4.0291 - 4.0296
—0.8 mm. (0.032 in.)	102.540 - 102.552	4.0370 - 4.0374
Dia. of piston pin:		
—standard	31.983 - 31.990	1.2592 - 1.2594
—0.20 mm. (0.008 in.) oversize	32.183 - 32.190	1.2670 - 1.2673
I.D. of connecting rod small end bushings (fitted):		
—standard size	32.005 - 32.012	1.2600 - 1.2603
—0.20 mm. (0.008 in.) oversize	32.205 - 32.212	1.2679 - 1.2682
Assembly clearance between piston pin and small end bushings	0.015 - 0.029	0.0006 - 0.0011
O.D. of connecting rod small end bushings	35.979 - 36.017	1.4165 - 1.4180
Dia. of small end bushing bore locations	35.861 - 35.899	1.4118 - 1.4133
Interference fit between small end bushings and connecting rod bore	−0.080 - −0.156	−0.0031 - −0.0061
I.D. of piston bosses:		
—standard size	31.983 - 31.990	1.2592 - 1.2594
Assembly clearance of piston ring in grooves:		
—1st ring	0.060 - 0.092	0.0023 - 0.0036
—2nd ring	0.050 - 0.082	0.0020 - 0.0032
—3rd ring	0.050 - 0.082	0.0019 - 0.0032
End gap (with piston and rings installed in cylinder liner):		
—1st ring	0.350 - 0.550	0.0140 - 0.0216
—2nd ring	0.400 - 0.650	0.0157 - 0.0256
—3rd ring	0.300 - 0.450	0.0118 - 0.0177

https://truckmanualshub.com/

"ENGINES FITS AND TOLERANCES—510" CONT'D.

DESCRIPTION	Size of New Parts and Wear Limits	
	mm	in.
Dia. of crankshaft journals:		
—standard size	76.187 - 76.200	2.9995 - 3.0000
—0.254 mm. (0.010 in.) undersize	75.933 - 75.946	2.9895 - 2.9900
—0.508 mm. (0.020 in.) undersize	75.579 - 75.692	2.9755 - 2.9800
—0.762 mm. (0.030 in.) undersize	75.425 - 75.438	2.9695 - 2.9700
—1.016 mm. (0.040 in.) undersize	75.171 - 75.184	2.9595 - 2.9600
Thickness of main bearings:		
—standard size	2.165 - 2.172	0.0852 - 0.0855
—0.254 mm. (0.010 in.) undersize	2.292 - 2.299	0.0902 - 0.0905
—0.508 mm. (0.020 in.) undersize	2.419 - 2.426	0.0952 - 0.0955
—0.762 mm. (0.030 in.) undersize	2.546 - 2.553	0.1002 - 0.1005
—1.016 mm. (0.040 in.) undersize	2.673 - 2.680	0.1052 - 0.1055
Assembly clearance between main bearings and their journals	0.043 - 0.090	0.0017 - 0.0035
Dia. of crankshaft connecting rod bearing journals:		
—standard size	58.730 - 58.743	2.3122 - 2.3127
—0.254 mm. (0.010 in.) undersize	58.476 - 58.489	2.3022 - 2.3027
—0.508 mm. (0.020 in.) undersize	58.222 - 58.235	2.2922 - 2.2927
—0.762 mm. (0.030 in.) undersize	57.968 - 57.981	2.2822 - 2.2827
—1.016 mm. (0.040 in.) undersize	57.714 - 57.727	2.2722 - 2.2727
Thickness of connecting rod bearings:		
—standard size	1.813 - 1.822	0.0713 - 0.0717
—0.254 mm. (0.010 in.) undersize	1.940 - 1.949	0.0763 - 0.0767
—0.508 mm. (0.020 in.) undersize	2.067 - 2.076	0.0813 - 0.0817
—0.762 mm. (0.030 in.) undersize	2.194 - 2.208	0.0864 - 0.0869
Assembly clearance between connecting rod journals and bearings	0.021 - 0.058	0.0008 - 0.0023
Thickness of crankshaft thrust washers:		
—standard size	3.378 - 3.429	0.1330 - 0.1350
—0.127 mm. (0.005 in.) oversize	3.505 - 3.556	0.1380 - 0.1400
Length of crankshaft central main bearing journal	32.00 - 32.100	1.2598 - 1.2638
End floating of crankshaft	0.082 - 0.334	0.0032 - 0.0131
V. Lubrication System		
Dia. of oil pump drive shaft	11.988 - 12.000	0.4720 - 0.4724
I.D. of pump shaft bushing	12.016 - 12.043	0.4731 - 0.4741
Assembly clearance between oil pump shaft and bushing	0.016 - 0.055	0.0006 - 0.0022
O.D. of pump shaft bushing	21.979 - 22.000	0.8653 - 0.8661
Dia. of bushing locating bore in pump body	21.939 - 21.972	0.8637 - 0.8650
Interference fit of bushing in its pump location	−0.007 - −0.061	−0.0003 - −0.0024
Dia. of driven gear shaft	11.907 - 11.925	0.4687 - 0.4695
Dia. of driven gear hub hole	11.958 - 11.973	0.4707 - 0.4714
Assembly clearance between shaft and gear hub hole	0.033 - 0.066	0.0012 - 0.0025
Tooth backlash, oil pump drive and driven gears	0.100	0.004
Width of drive and driven gears	34.961 - 35.000	1.3764 - 1.3779
Length of bore (gear location) in pump body	41.025 - 41.087	1.6151 - 1.6175
Gear and clearance in pump body	0.025 - 0.126	0.0010 - 0.0050
O.D. of drive and driven gears	35.970 - 36.000	1.4161 - 1.4173
Bore diameter (gear location) in pump body	36.060 - 36.140	1.4197 - 1.4228
Diametral clearance of drive and driven gears in pump body	0.060 - 0.170	0.0024 - 0.0067
Oil pressure valve spring sepcifications:		
—free length	45	1.77
—test length (6.5 - 7 daN = 14.6 - 15.73 lbs. test load)	34.5	1.3582
—test length (9.8 - 10.6 daN = 22.02 - 23.82 lbs. test load)	29	1.417

https://truckmanualshub.com/

TORQUE SPECIFICATIONS

Description	Size and thread metric	(N • m)	Ft.-lbs.
I. Data - Removal - Installation			
Capscrews, engine to transmission case (Item C_1, Figure 5)	12 x 1.25	67 - 81	50 - 60
Capscrews, front axle to oil sump (Item C_2, Figure 5)	16 x 1.5	180 - 195	133 - 144
II. Crankcase - Cylinder Head			
Capscrews, cylinder head	12 x 1.25	114 - 126	84 - 93
Capscrews, oil sump	10 x 1.25	57 - 63	42 - 46
III. Timing			
Capscrews, rocker arm support to cylinder head (Items C_1 and C_2, Figure 26)	8 x 1.25	20 - 24	15 - 18
Capscrews, timing gear case	8 x 1.25	20 - 24	15 - 18
IV. Crank Gear			
Capscrews, main bearing caps (Item C_1, Figure 32)	14 x 1.5	142 - 152	105 - 112
Capscrews, connecting rod bearing caps (Item C_2, Figure 32)	12 x 1.25	110 - 120	81 - 88
Capscrews, alternator and fan drive pulley (Item C_4, Figure 32)	10 x 1.25	43 - 52	32 - 38
Capscrews, engine flywheel	12 x 1.25	101 - 115	75 - 85
Crankshaft flange fastening nut	30 x 1.5	260 - 315	192 - 232
NOTE: Metric threads are measured thread to thread. EXAMPLE: Capscrews, engine flywheel, 12 x 1.25 — 12 mm. is the thread diameter — 1.25 mm. is the distance between threads.		(n • m)	In.-lbs.
FUEL INJECTION			
Capscrews securing the end plate containing the relief valve to the hydraulic head	—	5.0 —	44
Fuel inlet connection (Item 48, Figure 50)	—	52 —	60
Fuel inlet connection tube	—	13.5 —	120
Screw (Item 83, Figure 51) on distributing rotor axis	—	3 —	26(1)
Transfer pump rotor (Item 27)	—	7.5 —	66
Screws, hydraulic head (bleed screw included)	—	19.5 —	173
Locating fitting, hydraulic head (Item 19)	—	39.3 —	348
Stud nut, auto advance device (Item 16)	—	15 —	133
Stud (Item 16), auto advance device	—	7 —	62
Cam advance screw (Item 18, Figure 55)	—	52 —	460
Plugs, auto advance device (Items 65 and 75)	—	29 —	257
Screw, piston cap (Item 76)	—	4.5 —	40
Drive plate screws (Item 64, Figure 51)	—	29 —	257(2)
Ditto, with torque wrency (3)	—	2.3 —	20(2)
Studs, governor cover (Figure 82)	—	7 —	62
Stud nuts, governor cover (Item 33, Figure 50)	—	4.5 —	40
Nuts, speed and stop control levers	—	3.5 —	31
Adjusting nut, governor link (Item 34, Figure 58)	—	2.3 —	21
Adjusting screw locknut, wide open throttle (Item 41, Figure 50)	—	2.3 —	21
Leak-off connection (Item 1)	—	20 —	177
Vent screw thread, governor	—	7.4 —	66
Vent screw, governor	—	4.2 —	38
Pressure equalizer	—	39.3 —	348
Nut, pump shaft	—	83 —	735(4)
Pressure outlet connection (w/copper washer)	—	30 —	265

https://truckmanualshub.com/

TORQUE SPECIFICATIONS (CONT'D.)

Description	Size and thread metric	(N • m)	Ft.-lbs.
V. Lubrication System			
Capscrews, oil pump (Item C_5, Figure 32)	8 x 1.25	20 - 24	15 - 18
Valve, pressure regulation (relief)	24 x 1.5	60 - 73	44 - 54
VI. Cooling			
Capscrews, water pump	10 x 1.25	57 - 63	42 - 47
Capscrews, fan	8 x 1.25	25 - 27	18 - 20

(1) Seal with a suitable jointing compound.
(2) After torquing to specified value, turn screws back and retighten them.
(3) Arrange the two screws in line with the hub of the first wrench 127 mm. (5 in.) away from the screw
(4) Tighten first using a plain washer, then remove it and fit a safety washer.

https://truckmanualshub.com/

B. POWER TRAIN

B.O. Description
B.I. Clutch
B.II. Transmissions
B.III. Bevel Gear & Differential
B.IV. Brakes
B.V. Independent Hand Brake
B.VI. Final Drive & Rear Wheels
B.VII. Power Take-Off
B.VIII. Front Axle and Steering
B.IX. Front Drive Axle (Side Drive)
B.X. Front Drive Axle (Center Drive)
B.XI. Fits & Tolerances - Torque Specifications

https://truckmanualshub.com/

B. POWER TRAIN

INDEX

B.O. Foreward - Description 57

Transmission Performance Data 57
Lubricants 59

B.I. Clutch

10" Clutch 60
- Description and Operation 60
- Removal 61
- Disassembly 62
- Inspection 63
- Assembly 63
- Adjustment 64

11" Clutch 66
- Description 66
- Removal 66
- Disassembly 67
- Inspection 68
- Assembly 68
- Adjustment 69

B.II Transmission

6 Speed Transmission 70
- Removal 70
- Disassembly 71
- Inspection 73
- Assembly 74
- Installation 76

8 Speed Transmission 77
- Removal 77
- Disassembly 78
- Inspection 81
- Assembly 83
- Installation 86

B.III Bevel Gear and Differential

Description 87
Removal 87
Disassembly 87
Inspection 88
Assembly 89
Bevel Gear Setting 90

B.IV Brakes

Description 94
Disassembly 94
Inspection 95
Assemble 95
Adjustment 95

B.V Independent Hand Brake

Description 96
Disassembly 96
Assemble 96
Adjustment 98

B.VI Final Drives and Rear Wheels

Description 99
Removal 99
Disassembly 100
Inspection 101
Assembly 102

B.VII Power Take-Off

Overhauling 103

B.VIII Front Axle and Steering

Steering Box 105
- Removal 105
- Disassembly 105
- Inspection 106
- Assembly 106
- Adjustments 107

Front Axle and Steering 108
- Description 108
- Overhaul 108
- Front Axle Checks 111

B.IX Front Drive Axle (Side Drive)

Front Drive Axle 112
- Removal 112
- Disassembly 112
- Inspection 114
- Assembly 116
- Bevel Pinion Setting 118

Reduction Gear 121
- Description 121
- Removal 121
- Disassembly 121
- Inspection 123
- Assembly 123
- Installation 124

B.X Front Drive Axle (Center Drive)

Front Drive Axle 125
- Description 125
- Removal 126

Planetary Drive 126
- Removal 126
- Disassembly 126
- Inspection 128
- Reassembly 128

Axle Shaft 129
- Removal 129
- Disassemble 129
- Inspection 129
- Reassemble 129

Differential 129
- Removal 129
- Disassemble 129
- Inspection 129
- Reassemble 130

Reduction Gear 132
- Removal 132
- Disassemble 132
- Inspection 133
- Reassemble 134
- Installation 134

B.XI Data, Fits, Wear Limits Torque Specifications 135

Fit and Tolerances 135
Torque Specifications 143

https://truckmanualshub.com/

B. POWER TRAIN

B.O. DESCRIPTION - SPECIFICATIONS - LUBRICATION

FOREWORD

This manual is written for the Service Organization to give useful information and essential data regarding the repairs and overhaul of the transmission system and attachments installed on the model 360, 460 and 510 series tractors.

The terms "front", "rear", "right" and "left-hand" are with reference to the normal direction of tractor travel.

GENERAL DESCRIPTION, 360 SERIES TRACTOR

The power train consists of the following major units.

1. A dual-plate dry clutch with a single pedal control on the 360 tractor.
2. Transmission with planetary gear reduction: six forward (four with synchromesh) and two reverse speeds.
3. Main drive bevel gear and two-gear differential with lock and pedal.
4. Dry contracting band service brakes with mechanical control and independent pedals.
5. Single reduction final drives.
6. Telescoping and tubular front axle centrally pivoted.
7. Steering, wheel controlled, of the worm and nut type, Power Assist, or Hydrostatic.

GENERAL DESCRIPTION, 460 AND 510 SERIES TRACTORS

The power train consists of the following major units.

1. 11" LUK type dual-plate dry clutch with separate controls.
2. Transmission with planetary gear reduction; with eight forward (four with synchroesh) and two reverse speeds.
3. Main drive bevel gear and two gears differential with pedal controlled differential lock.
4. Dry contacting band service brakes with mechanical control and independent pedals.
5. Single-reduction final drives.
6. Telescoping and tubular front axle centrally pivoted.
7. Steering, wheel controlled, of the worm and nut type, Power Assist, or Hydrostatic.

The hydraulic lift for all models is of the position and draft control type. The P.T.O. and drive are incorporated in the transmission housing rear cover.

TRANSMISSION RATIOS, PERFORMANCE AND WEIGHT, 360 SERIES

Speed gears	Transmission and epicyclic gear train speed reduction ratios	Overall speed reduction ratios from engine to drive wheels (1 wheel turn per engine revs.)	Maximum speed (with engine running at 2400 r.p.m. and 11.2-28 tires	
	1:	1:	km/h	M.P.H.
1st Low	12.484	275.86	1.88	1.17
2nd Low	6.906	152.47	3.41	2.12
3rd Low	4.387	96.85	5.37	3.34
1st High	2.938	64.860	8.01	4.98
2nd High	1.625	35.873	14.51	9.02
3rd High	1.032	22.788	22.83	14.19
Low Reverse	8.5	187.79	2.77	1.72
High Reverse	2.0	44.1	11.77	7.32

Bevel gear speed reduction ratio 12/47 ..... 1:3.916
Final drive speed reduction ratio 11/62 ..... 1:5.636
Total speed reduction ratio (final drives + bevel gear) 1:22.076
Tractor weight (with standard fitting, oil coolant and fuel, operator excluded) 360C ..... 1633 Kg.
3600 Lb.
360 ..... 1701 Kg.
3750 Lb.

https://truckmanualshub.com/

TRANSMISSION RATIOS, PERFORMANCE AND WEIGHT, 460 AND 510 SERIES

Speed gears	Transmission and epicyclic gear train speed reduction ratios	Overall speed reduction ratios from engine to drive wheels (1 wheel turn per engine revs.)	Maximum speed (with engine running at 2400 r.p.m. and 14.9-28 tires	
	1:	1:	km/h	M.P.H.
1st Low	10.575	233.46	2.44	1.52
2nd Low	7.028	155.24	3.68	2.29
3rd Low	4.800	105.96	5.40	3.36
4th Low	3.716	82.05	6.98	4.34
1st High	2.938	64.84	8.83	5.49
2nd High	1.952	43.10	13.30	8.27
3rd High	1.333	29.43	19.48	12.11
4th High	1.032	22.78	25.16	15.64
Low Reverse	7.360	162.49	3.52	2.19
High Reverse	2.044	45.14	12.69	7.89

Bevel gear speed reduction ratio 12/47 ..... 1:3.916
Final drive speed reduction ratio 11/62 ..... 1:5.636
Total speed reduction ratio (final drives + bevel gear) 1:22.076
Tractor weight (with standard fitting, oil coolant and fuel, operator excluded) 460V ..... 1660 Kg.
3660 Lb.
460/510 ..... 1820 Kg.
4012 Lb.
460/510 DT .... 2070 Kg.
(Side Drive) 4564 Lb.

TRANSMISSION RATIOS, PERFORMANCE AND WEIGHT, 460 AND 510 CENTER DRIVE DT

Speed gears	Transmission and epicyclic gear train speed reduction ratios	Overall speed reduction ratios from engine to drive wheels (1 wheel turn per engine revs.)	Maximum speed (with engine running at 2400 r.p.m. and 14.9-28 tires	
	1:	1:	km/h	M.P.H.
1st Low	10.575	256.4	2.23	1.39
2nd Low	7.029	170.3	3.36	2.09
3rd Low	4.799	116.3	4.92	3.06
4th Low	3.716	89.6	6.38	3.97
1st High	2.938	71.2	8.02	5.00
2nd High	1.952	47.3	12.11	7.53
3rd High	1.333	32.3	17.74	11.03
4th High	1.032	25.0	22.91	14.24
Low Reverse	7.359	1.78.3	3.20	1.99
High Reverse	2.044	49.5	11.57	7.19

Bevel gear speed reduction ratio 10/43 ..... 1:4.3
Final drive speed reduction ratio 11/62 ..... 1:5.636
Total speed reduction ratio (final drives + bevel gear) 1:24.236
Tractor weight (with standard fitting, oil coolant and fuel, operator excluded) ..... 2070 Kg.
4564 Lb.

https://truckmanualshub.com/

POWER TRAIN AND ATTACHMENTS LUBRICATION CHART

ASSEMBLY	CHECK	CHANGE	QUALITY	QUANTITY
Transmission Housing	8-10 hrs.	1000 hrs.	Long Multi-Purpose Tractor Fluid or equivalent	(16 L) 17 Qts.
Final Drive Housing	250 hrs.	1000 hrs.	Long SAE 80-W-90 Gear Oil or equivalent	(2 L) 1.9 Qts.
Steering Box	8-10 hrs.	-	Long Multi-Purpose Tractor Fluid or equivalent	(0.5 L) 0.47 Qts.
Front Drive Differential DT w/Center Drive	120 hrs. 120 hrs.	1000 hrs. 1000 hrs.	Long SAE 80-W-90 Gear Oil or equivalent	(3.2) 3.0 Qts. 2.71 Qts.
Front Drive Planetary System (Center Drive DT)	120 hrs.	1000 hrs.	Long SAE 80-W-90 Gear Oil or equivalent	(1.6 L) 3.4 Pts.
Front Wheel Hubs & Knuckles	250 hrs.	-	Long Multi-Purpose Grease or equivalent	-
Grease Fittings	60 hrs.	-	Long Multi-Purpose Grease NLGI#2 or equivalent	-
Fuel Tank	-	-	Diesel Fuel#2	(53.9 L) 14.25 Gal.
Front Axle Joint (DT)	120 hrs.	-	Long Multi-Purpose Grease or equivalent	-
Front Axle Pivot	250 hrs.	-	Long Multi-Purpose Grease or equivalent	-

https://truckmanualshub.com/

B.I CLUTCH

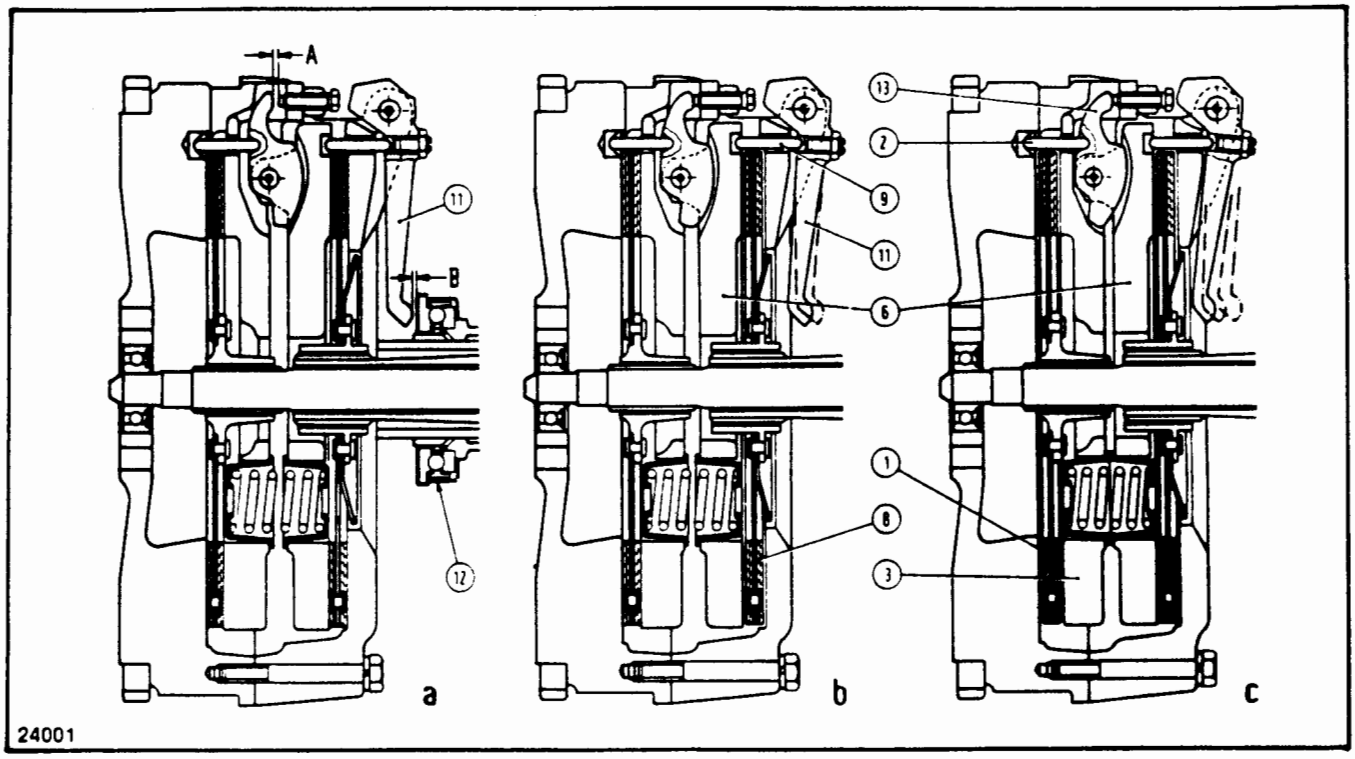

FIG. B.I/1 10" CLUTCH WORKING DRAWINGS (THE NUMBERED PARTS ARE DESCRIBED IN THE TEXT.)
a. Engaged clutch; b. Transmission clutch plate disengaged; c. Completely disengaged clutch

10" (254 mm) CLUTCH

DESCRIPTION

The spring loaded clutch groups into a single unit two 10", dry, single-plate clutches one of which controls the transmission and the other controls the power take-off (Fig. B.I/1).

A single control pedal disengages the two plates in succession during its travel.

OPERATION

The correct free travel of the pedal is 1⅜" (35 mm.). It is necessary to take up the play (Item B, Fig. B.I/1) between the transmission clutch release levers (Item 11) and bearing (Item 12), while the remaining length of travel (up to the stop plate) involves the compression of the levers by the bearing.

The levers (Item 11) act then upon the rods (Item 9) which in turn transmit the load to the pressure plate (Item 6), the separation of which allows the disengagement of the transmission clutch driven plate (Item 8).

Continuing on its travel (beyond the stop plate) the pedal allows the disengagement of the P.T.O. clutch plate: the levers (Item 13), pivoted on pressure plate (Item 6), during the transmission clutch (diagram b) disengagement take up the play (Item A) with the adjusting screws. These levers, with their fulcrum on rods (Item 2), act upon the screws thus moving the pressure plate (Item 3) away causing the disengagement of the P.T.O. clutch plate (Item 1).

https://truckmanualshub.com/

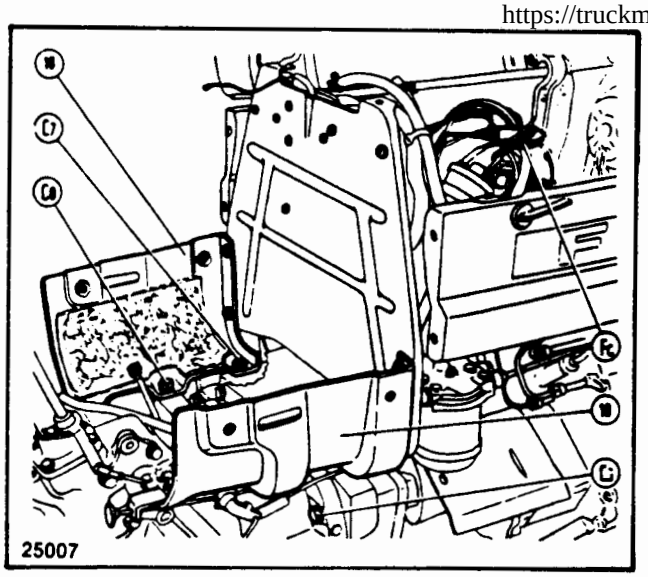

FIG. B.I/2 RIGHT SIDE VIEW OF TRACTOR WITHOUT REAR HOOD AND FUEL TANK
C_3. Upper screws securing the clutch-transmission housing to the engine crankcase; Fc. Electric cable strap; C_7 and C_8. Tank supports front and rear attaching capscrews; 18. Fuel tank supports

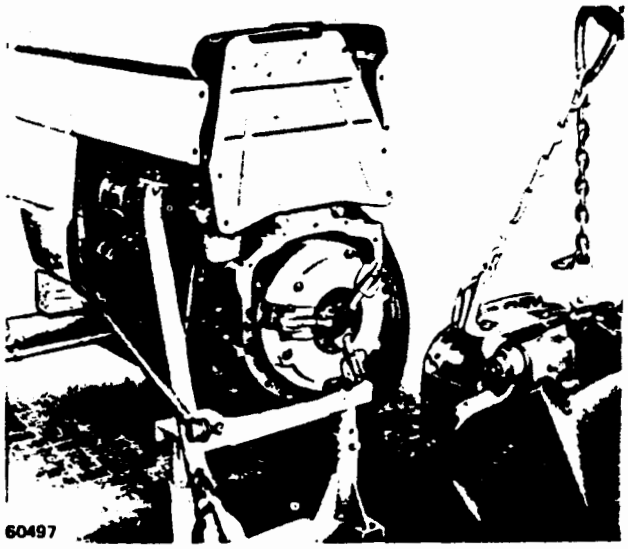

FIG. B.I/3 REMOVING THE FRONT AXLE-ENGINE UNIT WITH CLUTCH FROM THE TRANSMISSION OF THE TRACTOR

10" CLUTCH REMOVAL

Split the engine with front axle as an assembly from the tractor transmission housing (Fig. B.I/3) and then remove the clutch unit from the engine flywheel as follows:

⚠ 1. Disconnect the battery ground cable and protect the terminal.

2. Remove, in the following order:

   The hood back plate, and from this remove the lighting-starting switch.

   The rear hood after separating it from the side panels and dashboard.

   The dashboard, disconnecting the tachourmeter cable, electrical connections and starting switch unit.

   The fuel tank after closing the drain cocks, disconnecting the fuel level indicator wires and fuel lines and removing the mounting brackets.

3. Disconnect the electric cables from the engine starting safety push-button and from the rear lighting connections and place the cable strap assembly on the engine (Item Fc, Fig. B.I/2).

4. Remove the fuel tank supports (Item 18) by separating them from the central panel, disconnecting the throttle controls from the linkage and unscrewing the engine stop control knob.

5. Drain the transmission and rear train housings of lubricating oil and detach.

   Hydraulic lift oil lines from the pump installed on the engine.

   The exhaust muffler from the exhaust manifold (downdraft exhaust only).

   The drag link or mounting bracket from the steering box arm.

6. Put on the hand brake, insert two wooden wedge blocks between the front axle and its support, attach a lifting chain to the transmission housing and to a shop hoist, then take the weight off and place a hydraulic floor jack under the cast iron section of the engine oil sump.

https://truckmanualshub.com/

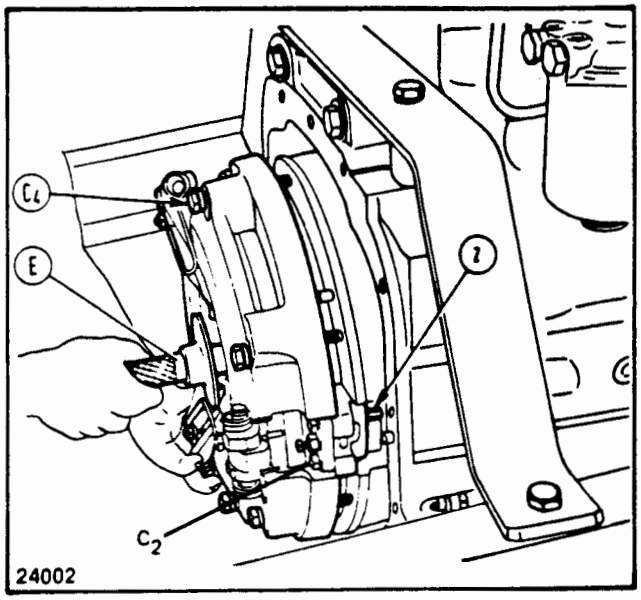

FIG. B.I/4 REMOVING (REPLACING) THE 10" CLUTCH FROM THE ENGINE FLYWHEEL USING THE ALIGNMENT PILOT

C_4. Clutch to flywheel attaching capscrews; 2. P.T.O. clutch release lever rod; C_2. Capscrews; E. Clutch centering shaft

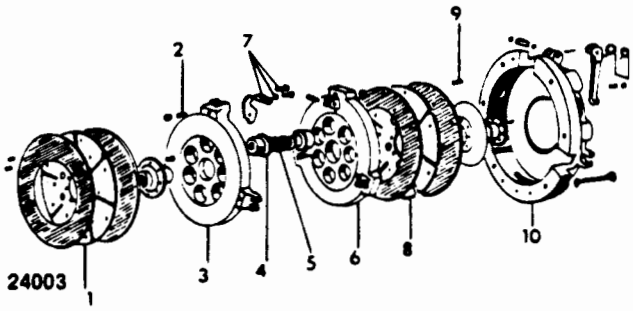

FIG. B.I/5 EXPLODED VIEW OF THE 10" CLUTCH

1. P.T.O. clutch driven plate; 2. P.T.O. clutch release lever rod; 3. P.T.O. clutch pressure plate; 4. Spring (5) cups; 5. Engagement spring; 6. Transmission clutch pressure plate; 7. P.T.O. clutch release lever adjustment screw plate; 8. Transmission clutch driven disc; 9. Transmission clutch release lever push rod; 10. Clutch cover

7. Remove all attaching capscrews (Items C_3 and C_5, Fig. B.I/6) and move the engine front axle unit forward, separating it from the transmission housing and then placing it on a shop stand (Fig. B.I/4) after suitably wedging the front wheels.

8. Remove the clutch unit from the engine flywheel, as follows:

   Remove, in alternate order, four of the six attaching cap screws (Item C_4, Fig. B.I/4) and loosen the remaining two screws.

   Introduce the clutch alignment pilot (Item E, Fig. B.I/4) inside the clutch shaft locations.

   Withdraw the remaining two screws and remove the complete unit and the three rods (Item 2) from their flywheel locations.

10" CLUTCH DISASSEMBLY

Prior to disassembly, mark the following items: pressure plates (Items 3 and 6, Fig. B.I/5), P.T.O. clutch release lever screw plates (Item 7) and clutch cover (Item 10) in order to ensure the correct positioning of the parts in their original locations at reassembly thus maintaining the dynamic balance as set at the factory.

Clutches can be disassembled without using specialized tooling, as follows:

1. Place on a bench the clutch unit without P.T.O. plate (Item 1, Fig. B.I/5) and push rods (Item 2).

2. Gradually and in succession, unscrew the capscrews (Item C_2, Fig. B.I/4) of the pressure plates (Items 3 and 6, Fig. B.I/5) to unload the springs (Item 5) which are compressed between these two plates.

3. Then dismantle the clutch (Fig. B.I/5).

https://truckmanualshub.com/

INSPECTION

Checks required for the 10" clutch are as follows:

1. Functional efficiency of the disc friction linings (Items 1 and 8, Fig. B.I/5) and conditions of mating metallic surfaces. The latter are polished, if necessary. If the discs are impregnated with oil it is best to replace them, as washing in solvent and brushing are not enough.
2. The friction surfaces of the pressure plates should be free from scoring or signs of abnormal wear, and if so it is possible to reface them by turning them down on a lathe (see "Fits and Tolerances" table).
3. The hubs of the driven plates should have no play on the rivets.
4. The side clearance of the disc hub splines with the splined shafts.
5. The condition of the throw-out collar thrust bearing and of the clutch shaft pilot bearing in the flywheel.
6. Loading spring strain values versus specifications in "Fits and Tolerances" table.
7. Sliding surface conditions of throw-out collar and support. If wear is still within limits, the support can be rotated 180°, and if not, replace the parts if excessive play causes grease leakage.

10" CLUTCH ASSEMBLY

Prior to assembly, lubricate the following items with a film of lithium-base grease: transmission clutch release lever pivots, the ball heads of the clutch release rods (mainly to hold them in place at assembly), the outer surfaces of the forks of the pressure plates (Items 3 and 6, Fig. B.I/5) and the inside surface of the fork locations on the clutch cover (Item 10).

Assemble the clutch referring to the following notes:

1. Place the pressure plate (Item 3, Fig. B.I/5), adjusting screw (Item 7) supporting plate, pressure plate (Item 6) and the clutch cover (Item 10) in their original positions arranging them with their assembly marks (scribed at disassembly) in register.
2. Install the transmission clutch disc (Item 8) with the oil slinger away from the flywheel.
3. Tighten the attaching cam screws (Item C_2, Fig. B.I/4) to the torque value specified in the "Torque Specifications" table.

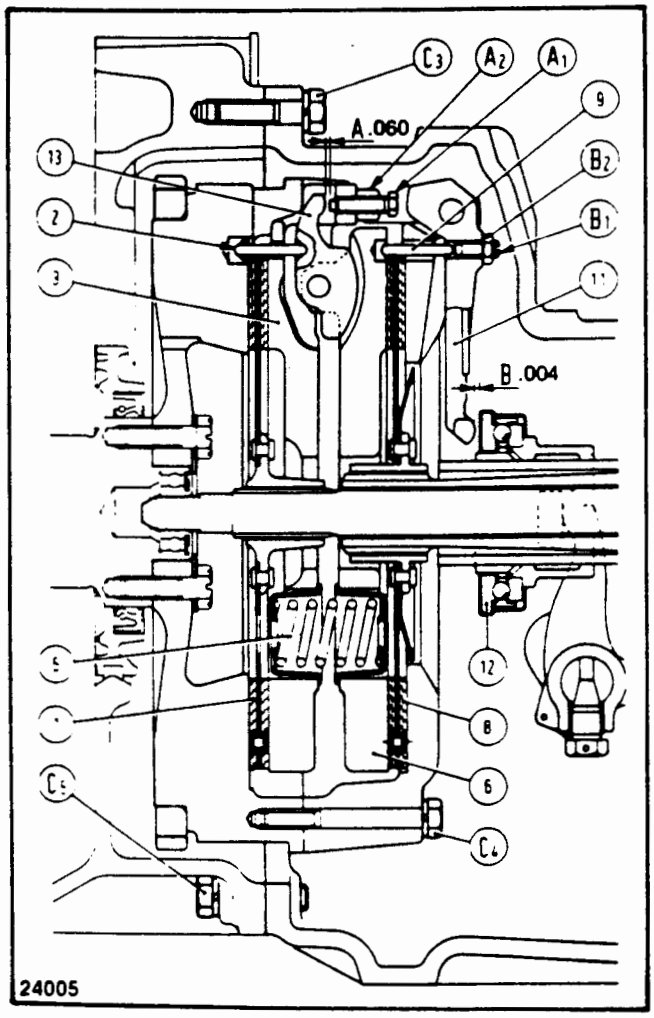

FIG. B.I/6 10" CLUTCH CROSS-SECTION

A. 0.030" (0.75 mm.) P.T.O. clutch release lever adjusted play; A_1. P.T.O. clutch release lever adjusting screw; A_2. Screw (A_1) locknut; B. 0.118" (3 mm.) adjusted clearance between transmission clutch release levers and thrust bearing (12); B_1. Transmission clutch release lever complanarity adjusting screw; B_2. Screw (B_1) locknut; C_4. Capscrews securing the clutch unit to the engine flywheel; C_3 and C_5. Attaching capscrews of the clutch-transmission case to the engine block; 1. P.T.O. clutch disc; 2. Lever (13) rod (short); 3. P.T.O. clutch pressure plate; 5. Engagement spring; 6. Transmission clutch pressure plate; 8. Transmission clutch disc; 9. Lever (11) rod (long); 11. Transmission clutch release lever; 12. Thrust bearing; 13. P.T.O. clutch release lever

https://truckmanualshub.com/

10" CLUTCH ADJUSTMENTS

The data necessary for the correct adjustment of the clutch are noted by the letters "A" and "B" in the legend of Fig. B.I/6.

The play A is set with the clutch installed on the stand, while the play B, between the disengaging sleeve (12) and levers (11), is featured by adjusting the free travel of the control pedal.

The adjustments made with the clutch installed on the stand are, as follows:

1. To adjust the play (Item A, Fig. B.I/6) of the P.T.O. clutch release levers (Item 13), install the clutch without the P.T.O. clutch disc on the universal stand (Item D, Fig. 8), after assembling the spacer bushings (Item H) in their holes.

   Insert the clutch centering shaft (Item F), 6 speed clutch tool, part no. 754246.

   Secure the clutch to the universal stand by using the 3 threaded rods (Item G, Fig. B.I/7) which are tightened up on the same line with the outer spacer bushings.

   Loosen the three nuts (Item A_2, Fig. B.I/6) and screw in the adjusting screws (Item A_1,) until a play of 0.030" (0.75 mm.) is obtained (measured with a feeler gauge), then tighten the locknuts (Item A_2). This adjustment is also carried out or checked on the tractor through the inspection cover window on the right hand side of the transmission housing (Fig. B.I/8). To bring the screws (Item A_1) in line with the window, shift the transmission in neutral and rotate the crankshaft to suit.

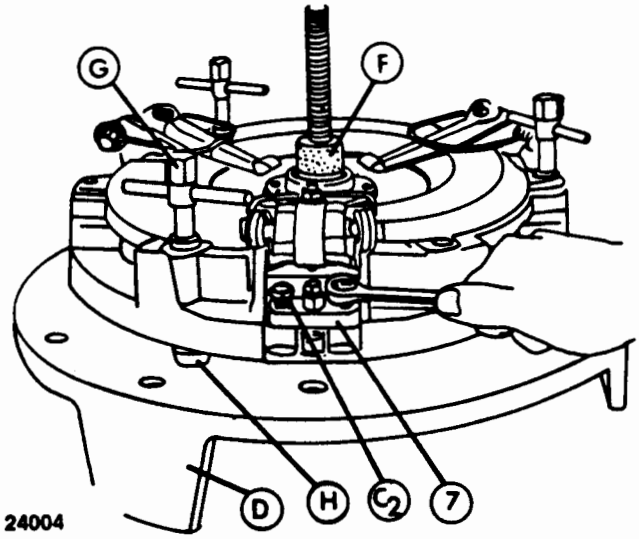

FIG. B.I/7 REMOVAL (ASSEMBLING) OF CLUTCH ON THE UNIVERSAL STAND "D"

C_2. Retaining screws; F. Centering shaft; G. Threaded rods for clutch retaining; H. Space bushing; 7. P.T.O. clutch disengaging lever setscrew.

2. To adjust the P.T.O. clutch release lever planeness (Fig. B.I/9), install the calibration plate (Item L) and locknut (Item 1).

   Check, using a feeler gauge, that a maximum clearance of 0.004" (0.1 mm.) exists between the lever tips and the gauge block, the latter resting on the central spacer (Item F). If otherwise, adjust the levers by slackening the nut (Item B_2) and scerwing up the adjusting screw (Item B_1). Once the specified clearance is achieved, tighten the locknut (Item B_2).

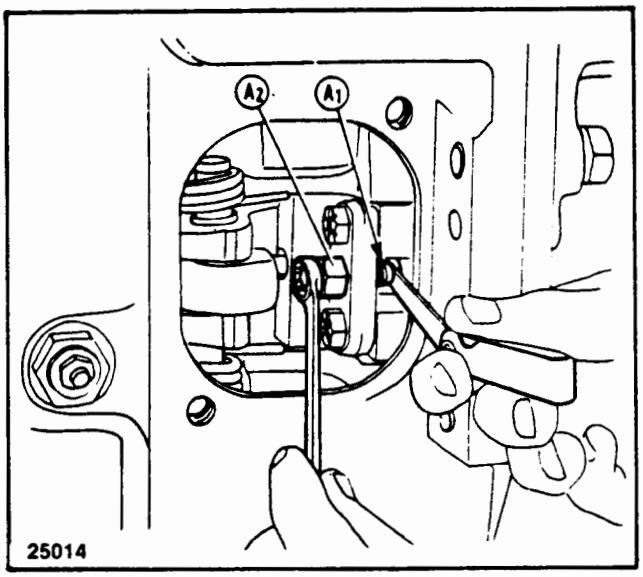

FIG. B.I/8 ADJUSTING THE P.T.O. RELEASE LEVER PLAY THROUGH THE TRANSMISSION CASE RIGHT HAND SIDE WINDOW

A_1. Adjusting screw; A_2. Locknut

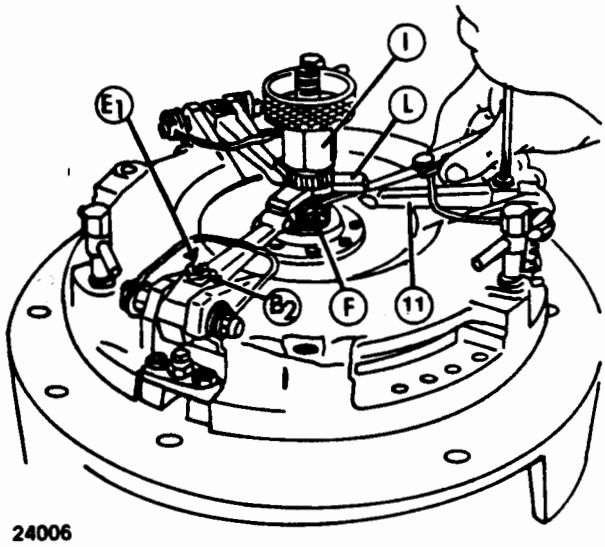

FIG. B.I/9 ADJUSTING THE PLANENESS OF CLUTCH DISENGAGING LEVERS ON UNIVERSAL STAND

B_1. Lever (11) setscrew; B_2. Lock nut; F. Centering shaft; I. Nut; 1. Calibration plate

https://truckmanualshub.com/

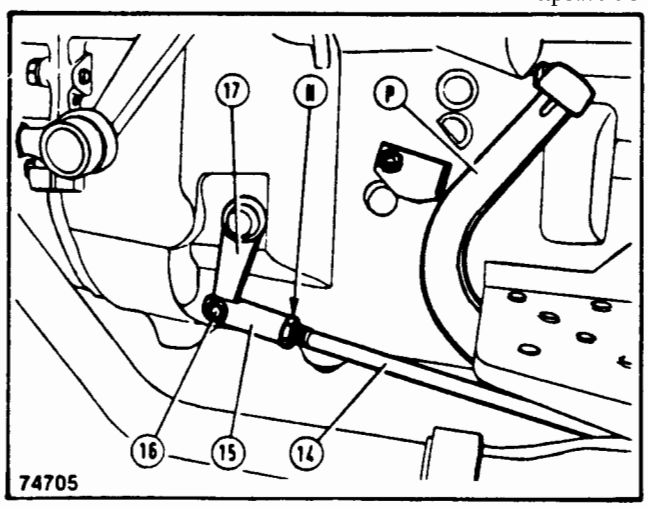

FIG. B.I/10 ADJUSTING THE FREE PEDAL TRAVEL OF THE 10" CLUTCH
N. Locknut; P. Clutch pedal; 14. Adjusting rod; 15. Pedal free travel adjusting clevis; 16. Pivot pin; 17. Release collar arm

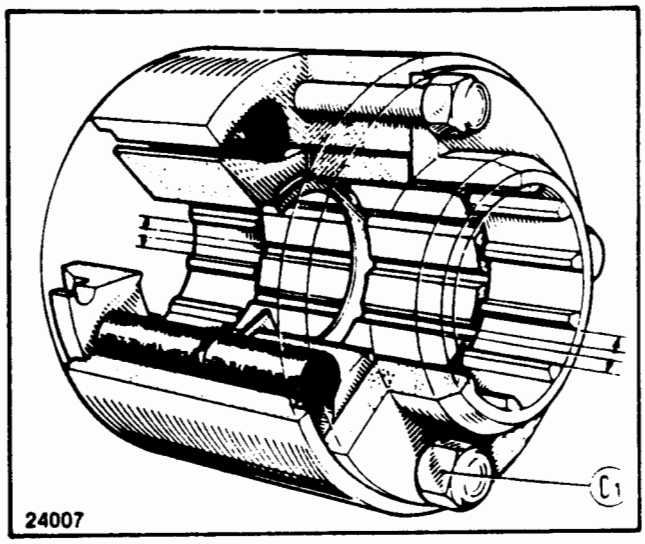

FIG. B.I/11 PHANTOM VIEW OF THE CLUTCH-TRANSMISSION SHAFT COUPLING
C_1. Through-bolt self-locking nuts

NOTE: Arrange the splines so that the grooves of the inner sleeves are symmetrical to the full teeth of the outer flanges.

10" CLUTCH CONTROL LINKAGE ADJUSTMENT

The free, or idle, travel with which the footrest of the pedal makes to start disengaging the engine-transmission clutch, i.e. before the thrust bearing moves the levers (Item 11, Fig. B.I/6) is 1⅜" (35 mm.).

When because of disc lining wearing, the free travel left is down to about 1" (25 mm.), adjust it as follows:

1. Disconnect clevis (Item 15, Fig. B.I/10) from the arm (Item 17) by withdrawing the pivot pin (Item 16).
2. Loosen the clevis nut (Item N) to suit, and increase the length of the rod (Item 14) to suit by screwing back the clevis. The pedal travel varies 25/64" (10 mm.) per each full turn of the clevis.
3. Reconnect the free travel setting clevis to the thrust bearing (Item 12, Fig. B.I/6) arm by fitting the pivot pin and retighten the clevis locknut.
4. Make sure the pedal free travel, measured on the footplate, is 1⅜" (35 mm.), approximately.

When re-attaching the engine front axle unit to the tractor transmission tighten the screws to the torque values specified in the "Torque Specifications" table.

At reassembly, make sure the alignment of the inner and outer sleeve splines is arranged as illustrated in Fig. B.I/11 and tighten the through bolt nuts (Item C_1) to the specified torque value.

CLUTCH-TRANSMISSION SHAFT FLEXIBLE COUPLING

If the transmission is noisy the sleeve coupling could be the problem. Check the condition of the rubber blocks which should be replaced if badly worn.

https://truckmanualshub.com/

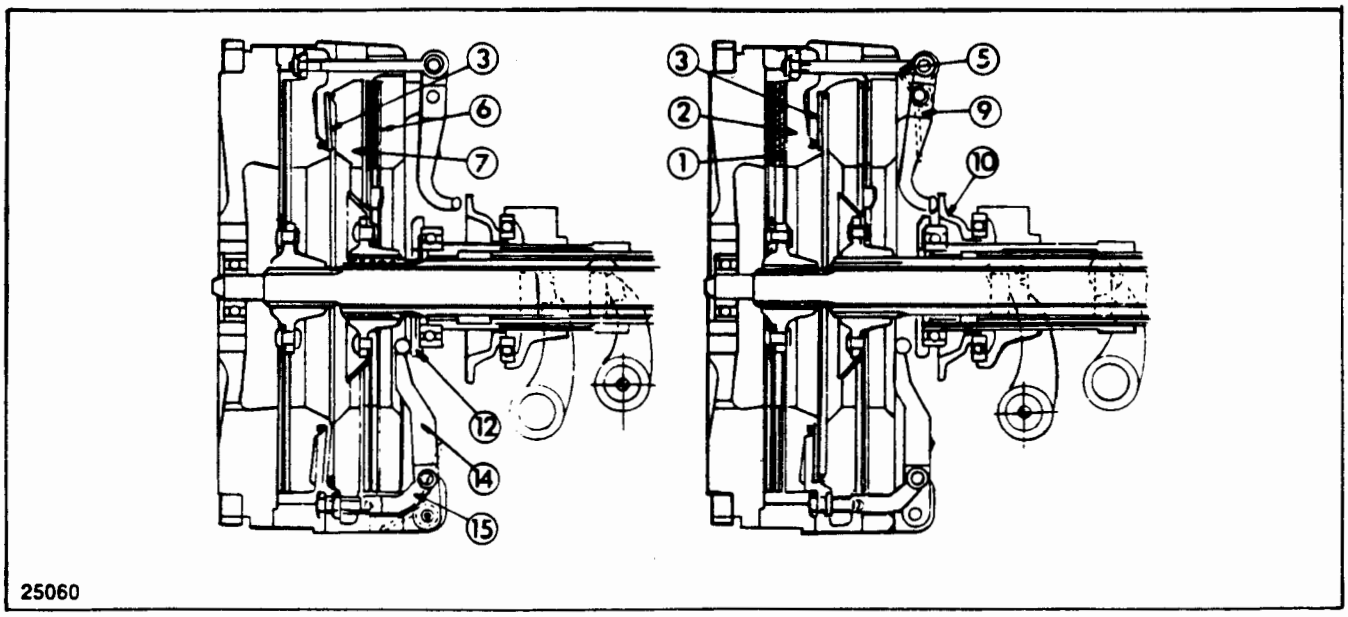

FIG. B.I/12 CLUTCH 11" DIAGRAM

a. Gearbox engaged; b. P.T.O. engaged; 1. P.T.O. clutch disc; 2. P.T.O. thrust plate; 3. Flexible disc; 5. Push rod; 6. Main clutch disc; 7. Main thrust plate; 9. P.T.O. throw out lever; 10. P.T.O. sliding sleeve; 12. Main clutch sliding sleeve; 14. Main clutch throw out lever; 15. Main clutch push rod

11" (279 mm.) CLUTCH

DESCRIPTION

The clutch consists of two 11" dry clutches in a single unit. These clutches are independent of each other and have separate controls. (Fig. B.I/12).

Engine power to the transmission has a pedal control and the PTO clutch is controlled with a lever.

OPERATION

When the pedal (P, Fig. B.I/20) is depressed the transmission clutch release bearing (12 Fig. B.I/12) take up the free play (A Fig. B.I/12) and depresses the release levers (14). These pivot to the outside of the clutch cover and actuate the push rods (15) which moves the pressure plate (7) forward compressing dished spring (3) disengaging the clutch disc (6).

When the hand control is moved upward, the PTO clutch release bearing (10, Fig. B.I/20) takes up the free play (B Fig. B.I/17) and depresses the release levers (9). These pivot to the inside of the cover (4) and are connected externally to the pressure plate (2) through the links (5). The dished spring (3) is compressed releasing the clutch disc (1).

Both clutches are engaged by the extension of the dished spring.

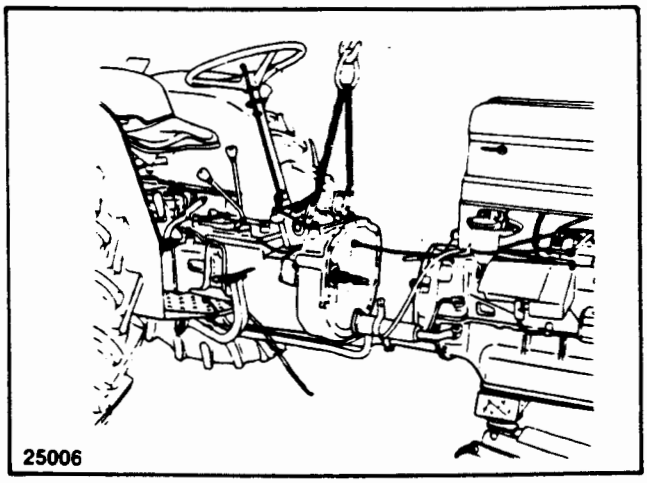

FIG. B.I/13 REMOVING THE ENGINE-AXLE GROUP WITH CLUTCH FROM THE POWER TRAIN

CLUTCH REMOVAL

Split the engine with front axle as an assembly from the tractor transmission housing (Fig. B.I/13) and then remove the clutch unit from the engine flywheel as follows:

1. Disconnect the battery ground cable and protect the terminal.
2. Remove, in this order:

— the hood back plate, and from this remove the lighting-starting switch;

https://truckmanualshub.com/

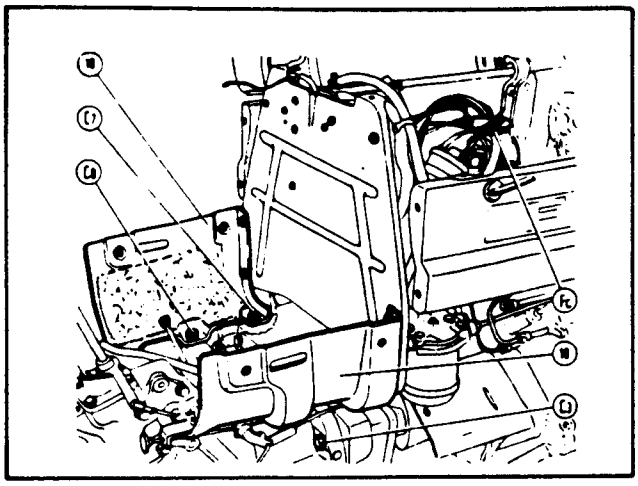

FIG. B.I/14 RIGHT-SIDE VIEW OF TRACTOR WITHOUT REAR HOOD AND FUEL TANK
C_3. Upper screws securing the clutch-transmission housing to the engine crankcase; C_7. and C_8. Tank supports front and rear attaching capscrews; Fc. Electric cable strap; 18. Fuel tank supports

— the dashboard, disconnecting the tractormeter cable, electrical connections and starting switch unit;

— the fuel tank after closing the cocks, disconnecting the fuel level indicator wires and fuel lines and removing the mounting brackets;

3. Disconnect the electric cables from the engine starting safety push-button and from the rear lighting connections and place the cable strap assembly on the engine (Fc, Fig. B.I/14).

4. Remove the fuel tank supports (18) by separating them from the central panel, disconnecting the throttle controls from the linkage and unserving the engine stop control knob.

5. Drain the transmission and rear housings of lubricating oil and detach:

— hydraulic lift oil lines from the pump installed on the engine;

— the drag link from the steering box arm.

6. Put on the hand brake, insert two wooden wedge blocks between the front axle and its support, attach a lifting chain to the transmission housing and to a shop hoist, then take the weight off and place a hydraulic jack under the engine oil sump.

7. Remove all attaching capscrews (C_3 and C_5, Fig. B.I/17) and move the engine-front axle unit forward, separating it from the transmission housing and then placing it on a shop stand (Fig. B.I/13) after suitably wedging the front wheels.

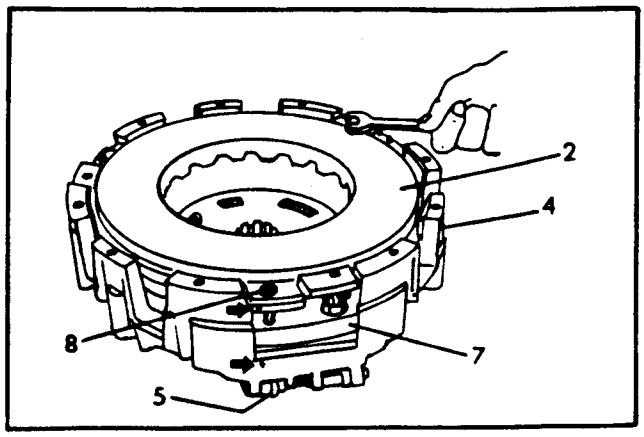

FIG. V.I/15 CLUTCH UNIT REMOVED
2. Thrust plate P.T.O.; 4. Clutch housing; 5. Throw out lever, P.T.O.; 7. Thrust plate, Main Clutch; 8. Push rod and nut (Arrows show location of marks made prior to disassembly).

8. Remove the clutch unit from the engine flywheel, as follows:

— cross-loosen and remove four of the six screws (C_4 Fig. B.I/19) securing the clutch to the flywheel;

— Place the clutch alignment tool, Part No. 772242 in the clutch shaft locations;

— remove the two remaining screws and then the complete clutch unit along with the P.T.O. clutch.

CLUTCH DISASSEMBLY

Prior to disassembly scribe assembly marks on clutch cover (4, Fig. B.I/15) and pressure plates (2

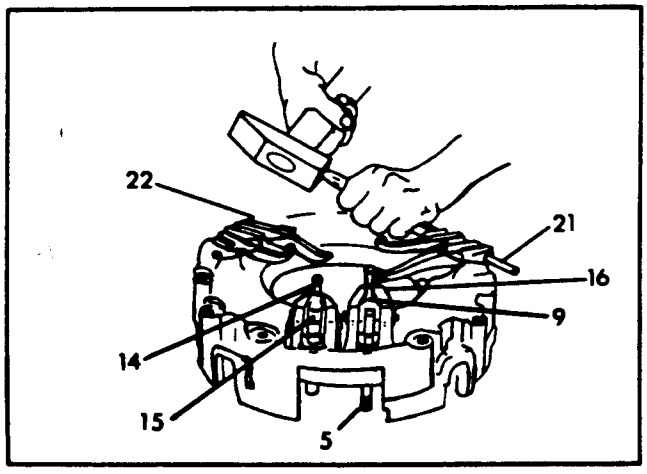

FIG. B.I/16 REMOVING THE RELEASE LEVERS PIVOT PINS (21)
5. Lever (9) links; 9. P.T.O. clutch release levers; 14. Transmission clutch release levers; 15. Lever (14) push rods; 16. Release lever return springs; 22. Pin retaining split pins

https://truckmanualshub.com/

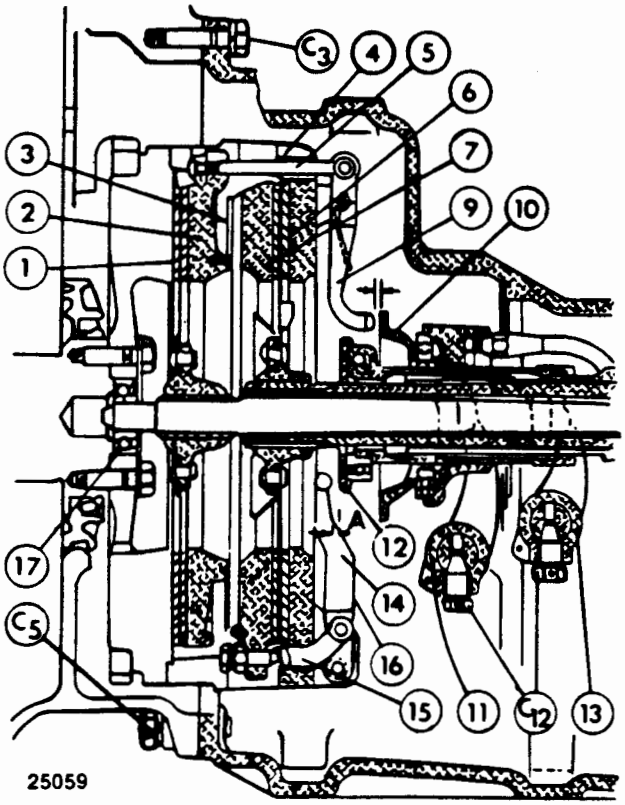

FIG. B.I/17 CROSS SECTION OF THE 11" CLUTCH

A. 0.098 in. (2.5 mm) gap between sliding sleeve (12) and throw out lever (14); B. 0.098 in. (2.5 mm) gap between sleeve (10) and throw out lever (9); C_3 and C_6. cap screws securing clutch housing to engine block; C_{12}. cap screw, clutch fork; 1. P.T.O. clutch disc; 2. P.T.O. clutch thrust plate; 3. Flexible disc; 4. Clutch housing; 5. Push rod; 6. Main clutch disc; 7. Main clutch thrust plate; 9. P.T.O. clutch lever; 10. P.T.O. clutch sliding sleeve; 11. P.T.O. throw out fork; 12. Main clutch sliding sleeve; 13. Main clutch throw out fork; 14. Main clutch lever; 15. Push rod; 16. Return spring; 17. Bearing P.T.O. shaft.

and 7) as illustrated to make sure the parts are reassembled in their respective original positions thus maintaining the dynamic balance of the unit as set at the factory.

Clutches can be disassembled without using any specialized tooling, as follows:

— gradually cross-loosen the nuts (8, Fig. B.I/15) and then remove the P.T.O. clutch pressure plate (2) and the dished spring (3, Fig. B.I/12).

— remove the pressure plate (7) with adjusting screws (19) and transmission disc (6);

— remove the split pins (22, Fig. B.I/16) and remove the pins (21) to remove the transmission clutch release levers (14) with push rods and P.T.O. release levers (9), with rods attached.

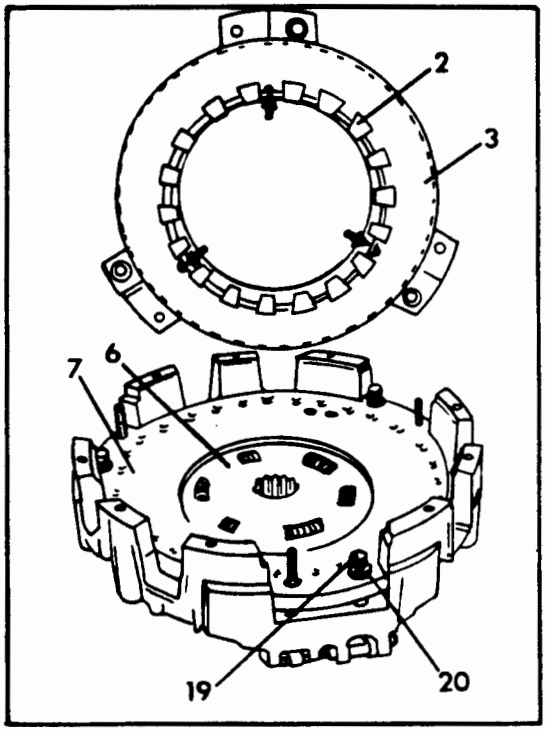

FIG. B.I/18 FITTING (REMOVING) THE P.T.O. CLUTCH ENGAGEMENT DISHED SPRING (3) AND PRESSURE PLATE (2)

(Arrows indicate alignment of dowel pins with respective spring locations).

6 and 7. Transmission clutch disc and pressure plate; 19. Transmission clutch release lever adjusting screws; 20. Screw locknuts (19).

INSPECTION

Check wear of the friction linings of discs (1 and 6, Fig. B.I/17) vs. tabulated limits. If the discs are impregnated with oil we recommend replacing them.

Examine the condition of the friction surfaces on the engine flywheel, pressure plates (2 and 7, Fig. B.I/17) and cover (4). If necessary, these surfaces can be machined to a maximum depth of .008" (0.2 mm). In case the inner side of clutch cover (4) is re-cut, also the mating surface with the flywheel must be refaced in order to restore the dimension mentioned above.

Check the return springs (16, Fig. B.I/16).

Check the flexible disc for flexibility.

CLUTCH ASSEMBLY

Prior to the assembly of the clutch unit we recommend lubricating the release lever pivot pins with a film of Multi-Purpose grease.

Reassemble the clutch on the work bench as follows:

https://truckmanualshub.com/

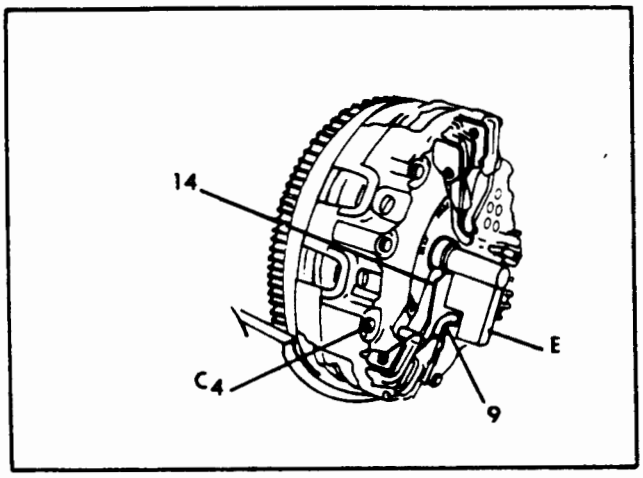

FIG. B.I/19 FITTING CLUTCH TO FLYWHEEL AND ADJUSTING 11" CLUTCH THROW OUT LEVERS

C_4. Cap screws, securing clutch to flywheel; E. Clutch Tool 772242; 9. Throw out lever; 14. Throw out lever, main clutch.

— install the return springs (16, Fig. B.I/16) as shown in the figure, install the release lever pivot pins (22) and secure them with their safety pins (21) making sure the latter project of about 6 - 8 mm (¼" - 5/16");

— turn the cover over, place the disc (6, Fig. B.I/18) as shown in the figure and install the pressure plate (7) with the adjusting screws, line up the assembly marks scribed at disassembly (Fig. B.I/15).

— install the dished spring (3, Fig. B.I/17) as shown in the figure and place it on the pressure plate (2) lining up the dowels with their spring locations as shown by the arrows in Fig. B.I/18.

— hold the parts together and place them as an assembly in the cover in accordance with the assembly marks scribed at disassembly;

— tighten the nuts (8, Fig. B.I/15), without preloading the dished spring, until the transmission clutch disc is locked.

CLUTCH ADJUSTMENTS

In order for the clutch to function properly the following adjustments must be performed.

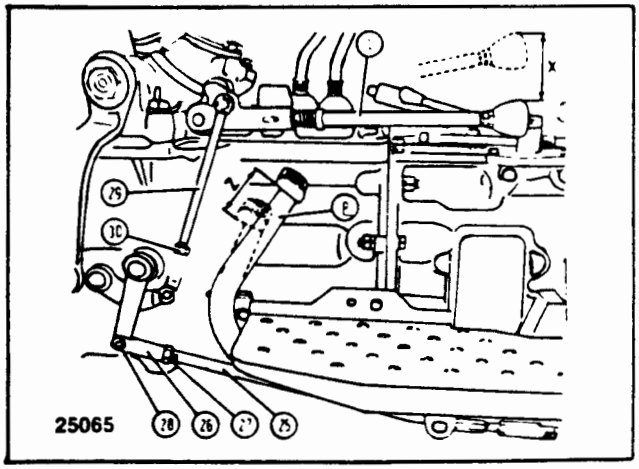

FIG. B.I/20 CLUTCH PEDAL AND CONTROL HAND LEVER FREE TRAVEL ADJUSTMENT AND CHECK

L. P.T.O. clutch control hand lever; P. Main clutch lever Z = 1.376-1.572" (35mm-40mm). pedal free travel; X = 1.572" (40 mm). control hand lever free travel; 25. Adjusting rod; 26. Forkhead, main clutch control; 27. Lock nut, fork head; 28. Bolt, forkhead; 29. Adjusting rod; 30. Lock nut, P.T.O. clutch adjusting rod

In order for the clutch to function properly, the following adjustments must be performed.

1. With the clutch fitted on the flywheel, using the clutch adjusting tool (E, Fig. B.I/19), Long Part No. 772242, adjust both the main clutch and P.T.O. clutch throw-out levers. Correct setting is for throw-out levers end to contact surface of adjusting tool.

   Tighten all set nuts and lock nuts.

2. Clutch pedal (P, Fig. B.I/20) and P.T.O. clutch control hand lever (L) free travel adjustment.

The free travel of the main clutch foot pedal (Z Fig. B.I/20) before it begins to disengage the main clutch should be 1.376"-1.572" (35mm-40mm).

If due to clutch disc lining wear, the free travel is reduced, adjust as follows:

— loosen lock nut (27, Fig. B.I/20), remove bolt (28), to detach forkhead (26), unscrewing, considering the free travel will vary by about .39" (10 mm) for each full turn.

— lock the lock nut, and reattach fork head and recheck free travel.

https://truckmanualshub.com/

B.II TRANSMISSION

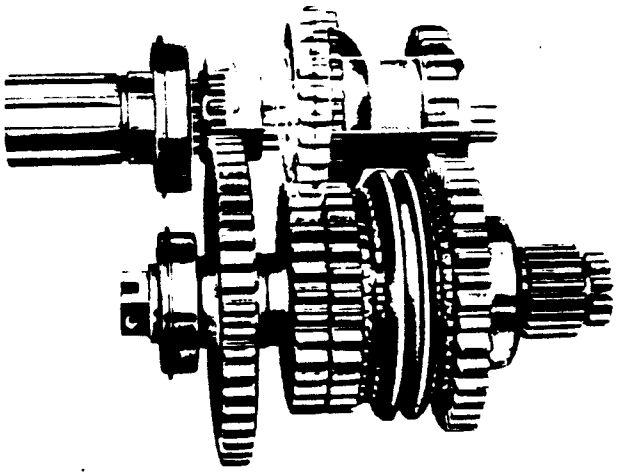

60504

FIG. B.II/1 6-SPEED TRANSMISSION GEARS AND SHAFTS

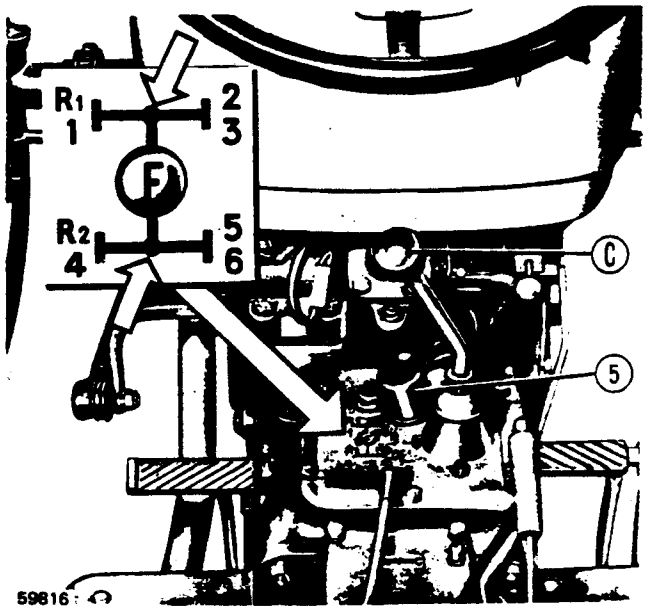

59816

FIG. B.II/2 TOP VIEW AND CONTROLS
C. Gearshift lever; F. Neutral setting of lever (c); 5. Engine starter safety switch
NOTE: Arrows show neutral position for the hi-and-low speed ranges.

6-SPEED TRANSMISSION

The transmission (Fig. B.II/1) offers three forward and one reverse speeds.

The auxiliary planetary gear speed reduction unit, arranged at the rear end of the transmission driven gear shaft, doubles the range of available speeds so that the tractor offers six forward and two reverse speeds.

All transmission and planetary gear unit gears have straight teeth.

The driving gears (Item 31, Fig. B.II/7) and the driven ones (Items 63 and 57, Fig. B.II/8) of the 5th and 6th speeds (2nd and 3rd low) are in constant mesh and speed engagement is aided by a synchromesh device (Item A, Fig. B.II/7).

This device, though being of the conventional free-cone type, has three flat outer springs (Item 60, Fig. B.II/8 and B.II/12) arranged in suitable holders (Item 61) and applying a radial force upon the synchromesh tapered rings (Item 58). Consequently, the axial mating of the cones (Item 58) over their respective tapered surfaces in the driven gears (Items 57 and 63), brakes down the speed of the latter thus synchronizing it with that of the fixed sleeve (Item 59) thus facilitating the quick engagement of the sliding collar (Item 62) with the tractor in motion at different engine speeds.

The engagement of the 4th forward speed and of the 2nd reverse one (1st forward and 1st reverse low speeds) is achieved by shifting the driving gear (Item 30, Fig. B.II/7) sideways.

Both the engagement of the auxiliary unit and the selection of the desired transmission speed are achieved through a single control lever (Item C, Fig. B.II/2) which is equipped with a return spring that automatically brings it back to the neutral settings indicated by the arrows in the figure.

The starter safety switch (Item 5, Fig. B.II/2) allows the engine to be started only when the control lever (Item C) is neutral (Item F).

In fact, if the lever is in neutral for either low or high speed ranges, as shown by the arrows, or if the transmission is shifted in gears, the push rod (Item 6, Fig. B.II/4) does not close the contacts of the switch (Item 5) thus holding the electric starting motor circuit open.

REMOVING THE 6-SPEED TRANSMISSION

Split the engine front axle assembly off the transmission housing by performing the operations for the removal of the 10" clutch, then proceed as follows:

1. Remove the floorplates from the transmission housing.
2. Remove the complete steering box also the P.T.O. shift lever cover to allow removing the upper stud nut.

https://truckmanualshub.com/

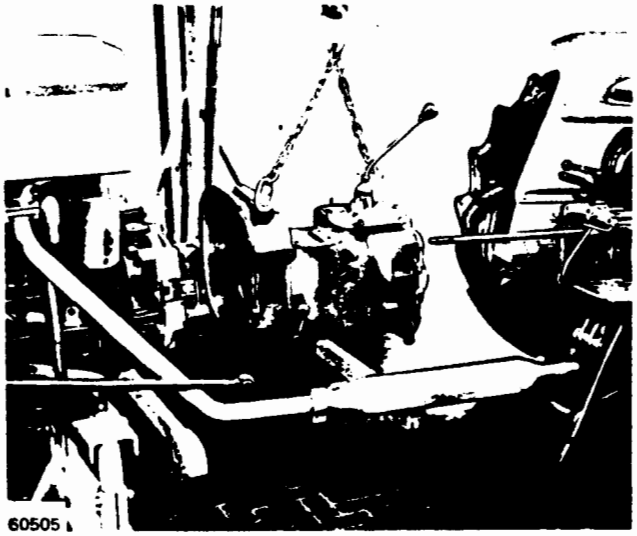

25017

FIG. B.II/3 REMOVING (INSTALLING) THE TRANSMISSION

3. Disconnect the link from the clutch control outside arm.
4. Apply a hoist to the transmission housing and take the weight off.
5. ⚠ Place a hydraulic jack under the transmission housing, remove attaching nuts and bolts and then the transmission unit withdrawing it forward (Fig. B.II/3) and paying attention not to damage the P.T.O. clutch shaft.

DISMANTLING THE 6-SPEED TRANSMISSION

In order to facilitate disassembly we recommend installing the transmission unit on an engine stand.

Proceed then as follows:

1. Remove the transmission top cover (Fig. B.II/4) complete: The clutch release collar (Item 7, Fig. B.II/5) after disconnecting the grease line (Item 18) from the housing. Remove the shifter fork (Item 21) and shaft (Item 36) after removing the capscrew (Item C_{12}).
2. Remove the attaching capscrews (Item C_5, Fig. B.II/5) and withdraw the clutch shaft (Item 24, Fig. B.II/7) and support together with the clutch-transmission shaft joint (Item G).

   NOTE: Due to the fit of the nylon housing (Item 25, Fig. B.II/7) on the rear end of the clutch shaft, the latter may come off together with the shaft.
3. Remove the two front bearing washers for driving and driven shafts using a puller, with care, to withdraw the cover (Item 26, Fig. B.II/7) in order to avoid damaging the oil seal.

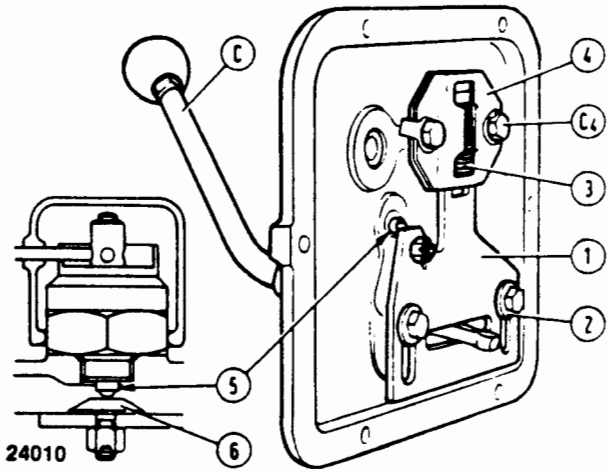

FIG. B.II/4 GEARSHIFT LEVER AND GEAR SELECTOR MECHANISM

C_1. Gearshift lever; C_4. Bracket attaching capscrews; 1. Selector plate; 2. Spacers; 3 and 4. Selector plate automatic return spring and brackets; 5. Engine starting safety button; 6. Button (5) control

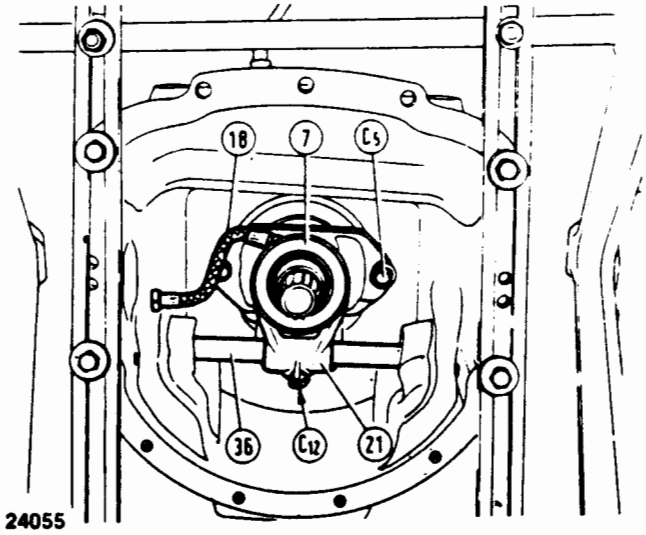

FIG. B.II/5 FRONT VIEW OF TRANSMISSION CASE INSTALLED ON TURNOVER SHOP STAND

C_5. Clutch shaft bracket attaching capscrews; C_{12}. Lever (21) setscrew; 7. Clutch release collar; 18. Clutch release collar (7) bearing grease tube; 21. Fork lever; 36. Lever (21) shaft

4. Through the selectors, shift in two speeds simultaneously, withdraw the cotter pin and unscrew the bearing and drive gears locknut (Item C_{13}, Fig. B.II/10).
5. Remove selectors (Items 9 and 12, Fig. B.II/6) and the shifter fork (Item 14) as follows: withdraw the locating hollow pins shifting the auxiliary speed reduction selector (Item

https://truckmanualshub.com/

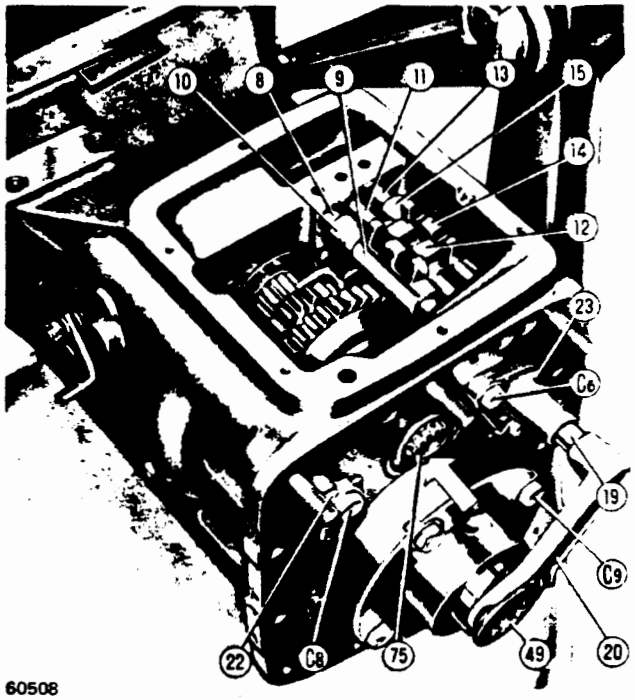

FIG. B.II/6 TRANSMISSION HOUSING INSTALLED ON ENGINE STAND

NOTE: Arrow shows direction for removal of transmission drive shaft.

C_6. Bracket (23) attaching capscrews; C_8. Retaining plate (22) attaching capscrews; C_9. Planetary gear attaching capscrews; 8. Shifter bar for gear selector (9); 9. 2nd-5th and 3rd-6th speed gear selector; 10. Spacer, long, for shifter bar (8); 11. Shifter bar for gear selector (12); 13. Shifter fork (14) bar; 14. Shifter fork for 1st-4th forward and 1st-2nd reverse gears; 15. Spacer, short, for shifter bar (13); 19. Shifter fork (20) bar; 20. Auxiliary speed reduction shifter fork; 22. Reverse shaft retainer; 23. Shifter bar (19) bracket; 49. Reduction unit engagement sleeve; 75. Lip seal

12) into either of the extreme neutral settings to avoid interference of the pin with the shifter fork (Item 14).

Remove the shifter bars starting from the bar (Item 8).

⚠ **CAUTION:** When removing the shifter bars, hold a shop towel over the detent ball holes to prevent the balls from flying out and causing possible injury.

Recover the spacers (Items 10 and 15) from the side bars, the five detent balls (Item 16, Fig. B.II/10) and their three springs (Item 17).

6. Withdraw the shifter bar (Item 19, Fig. B.II/6) with fork (Item 20) and the auxiliary reduction sleeve (Item 49) outwards.

7. Remove the planetary reduction unit after removing the attaching capscrews (Item C_9, Fig. B.II/6).

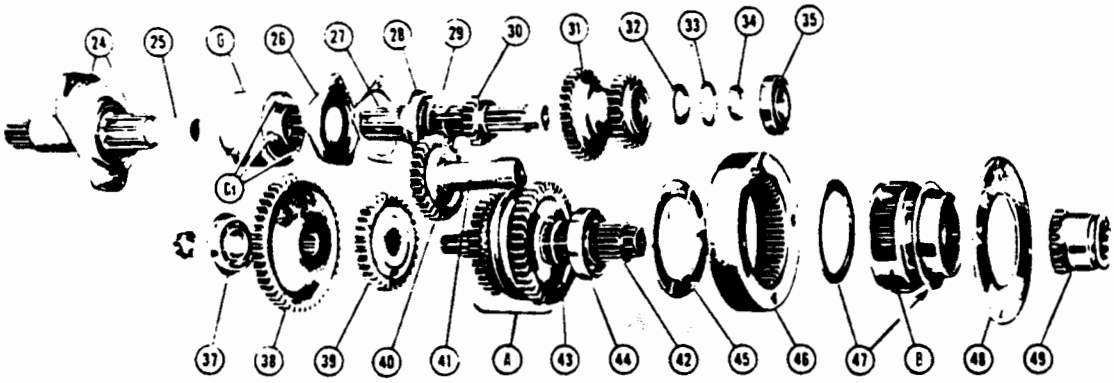

FIG. B.II/7 EXPLODED VIEW OF THE 6-GEAR TRANSMISSION

A. Synchromesh; B. Reduction driven gears support; C_1. Self-locking nuts, for flexible coupling through bolts; G. Clutch-transmission shafts flexible coupling; 24. Clutch shaft, complete; 25. Shaft (24) nylon bushing; 26. Bearing (28) cap with seal; 27. Driving shaft; 28. Front ball bearing; 29. Oil shield; 30. Drive gear, 1st-4th forward and 1st-2nd reverse; 31. Drive gears, 2nd-5th and 3rd-6th speed gears; 32. Gear (31) washer; 33. Retainer ring; 34. Bearing washer; 35. Rear ball bearing; 37. Front ball bearing; 38. 1st-4th forward driven gear; 39. 1st-2nd reverse driven gear; 40. Reverse transfer gear; 41. Reverse gear shaft; 42. Driven shaft; 43. Bearing washer; 44. Rear ball bearing; 45. End ring; 46. Reduction unit ring gear; 47. Thrust rings; 48. Outer disc; 49. Reduction unit engagement shifter sleeve

https://truckmanualshub.com/

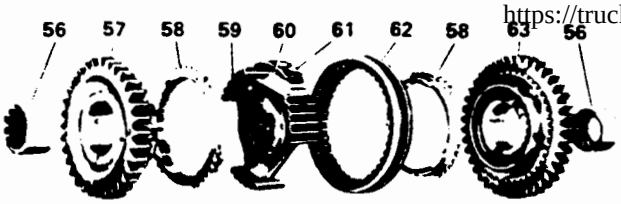

FIG. B.II/8 EXPLODED VIEW OF SYNCHROMESH UNIT

56. Inner sleeves for gears (57 and 63); 57. 3rd and 6th forward driven gear; 58. Synchromesh cones; 59. Fixed collar; 60. Flat spring; 61. Spring (60) holder; 62. Sliding ring; 63. 2nd and 5th forward driven gear

8. Remove and disassemble the driving shaft (Item 27, Fig. B.II/7) as follows:

   Withdraw it frontwards complete with ball bearing (Item 28), its oil shield (Item 29) and driving gear (Item 30), acting with a drive bar in the direction shown by the arrow in Fig. B.II/6 and following the removal of the oil seal (Item 75). Recover the driving gear (Item 31, Fig. B.II/7) and side washer (Item 34).

   If necessary, remove the front ball bearing (Item 28) using a universal puller and the rear one (Item 35) with a drive bar.

9. Remove the retaining plate (Item 22, Fig. B.II/6) use a puller screw M 10 x 1.25 to remove the reverse gear shaft (Item 41, Fig. B.II/10) and then remove the gear (Item 40) from the housing.

10. Remove the support (Item 23, Fig. B.II/6) and withdraw the bar (Item 64, Fig. B.II/10) and the 2nd-5th and 3rd-6th speed gear shifter fork (Item 65).

11. Remove and disassemble the driven shaft (Item 42, Fig. B.II/7), as follows:

    Withdraw it rearwards complete of the ball bearing (Item 44) acting with a drive bar applied to its front end.

    Remove the synchromesh unit (Item A) from the housing.

    If necessary, remove the front ball bearing (Item 37) from the housing with a drive bar and the rear one (Item 44) from the shaft by means of a universal puller.

INSPECTION

Examine the gear hub chamfers (Items 30, 38 and 40, Fig. B.II/7) and those of the synchromesh and planetary gear reduction splines, and eliminate seizure marks or nicks, if any.

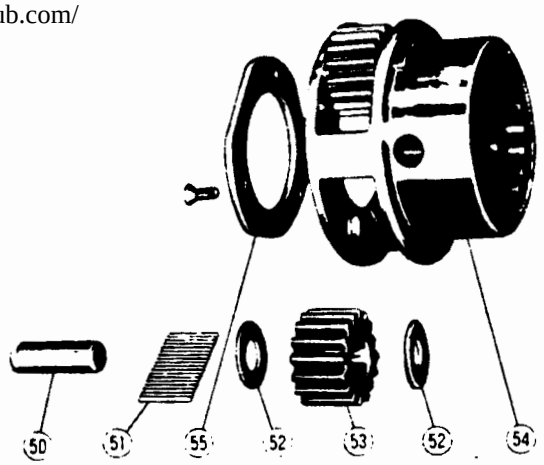

FIG. B.II/9 EXPLODED VIEW OF PLANETARY UNIT DRIVEN GEARS SUPPORT

50. Pinion shaft; 51. Bearing needles; 52. Gear washers; 53. Driven gear; 54. Support; 55. Shaft (50) retainer disc

Make sure that the teeth (Item d, Fig. B.II/12) on the three splined sections of the synchromesh fixed collar have sharp edges. If not, resharpen them with a fine grain carborundum stone. On new parts, these teeth should project 0.008-0.010 in. (0.19-0.26 mm.) and replace the fixed collar only when no appreciable result is obtained. In any case, faulty teeth are normally detected because of the sliding collar tendency to disengage spontaneously.

Thoroughly examine the conditions of the following mating surfaces:

1. Of synchromesh rings (Item 58, Fig. B.II/8) and their mating surface on driven gears of the 2nd-5th and 3rd-6th speeds (Items 63 and 57, respectively).

2. Of inside rings (Item 56) and of their locations on the aforementioned gears.

Check the functional efficiency of the synchromesh flat springs (Item 60, Fig. B.II/12) a force of 3-3.4 lb. (1.40-1.55 kg.) applied at spring center should produce a bend of 0.060 in. (1.5 mm.).

Check the spring holders (Item 61, Fig. B.II/12) for deep scoring or nicks, particularly on the central relief (Item R). Measure the thickness of the auxiliary speed reduction driven gear washers (Item 52, Fig. B.II/9) and of the rings (Item 47, Fig. B.II/7), replacing those below the wear limit, if any.

Check the functional efficiency of the springs (Item 3, Fig. B.II/4) and (Item 17, Fig. B.II/8) of the shifter bar detent balls and selector mechanism and of the gearshift lever retaining spring (Item 69).

https://truckmanualshub.com/

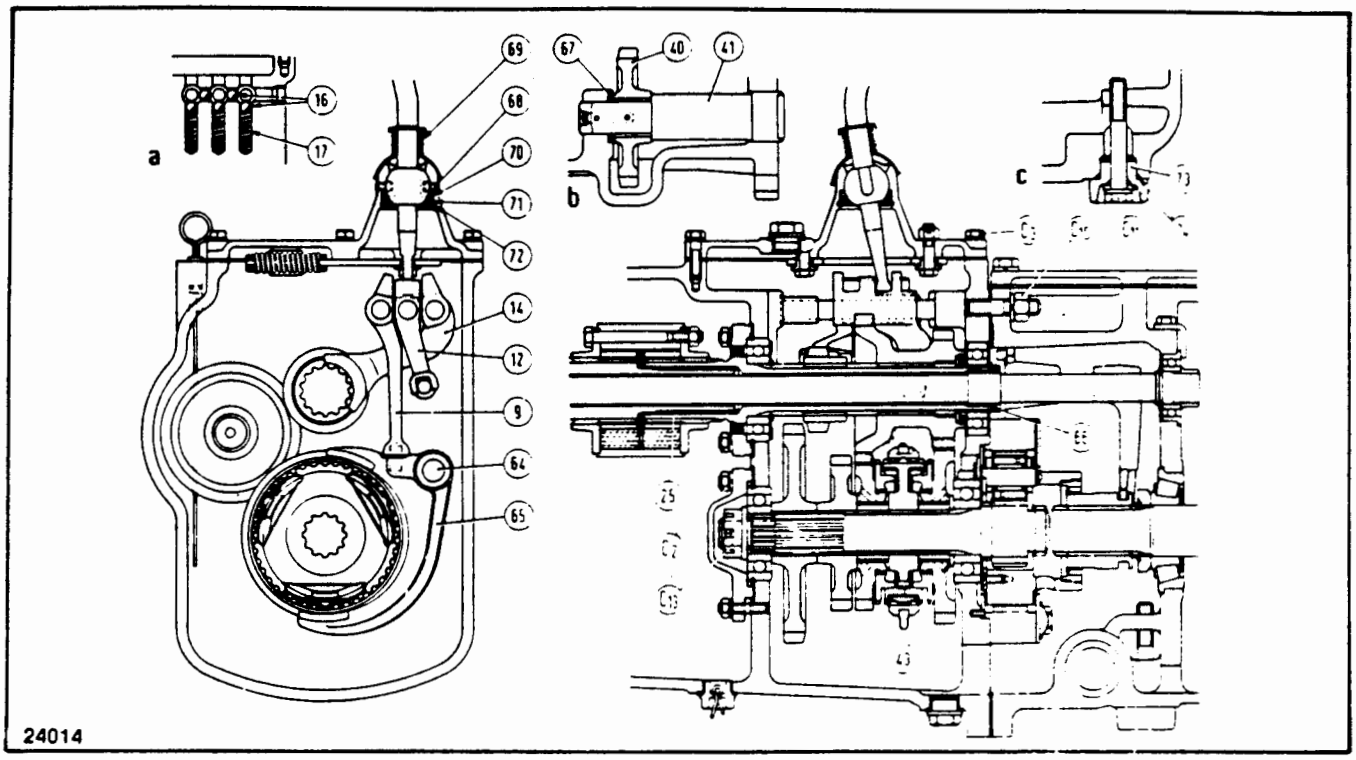

FIG. B.II/10 6-SPEED TRANSMISSION CROSS-SECTION

a. Detail of detent balls and springs; b. Section through reverse gear shaft; c. Detail of the hydraulic lift pump suction pipe connections; C_2. Stud nuts securing the front caps of shafts; C_3. Capscrews securing the top transmission housing cover; C_{10}. Transmission housings bolt and stud nuts; C_{11}. Hydraulic lift pump suction pipe attaching capscrew; C_{13}. Driven gear shaft lock nut; 9. Shifter fork (65) selector; 12. Reduction unit engagement bar selector; 14. Shifter fork for 1st-4th forward and 1st-2nd reverse gears; 16 and 17. Shifter bars balls and springs; 25. Clutch shaft nylon bushing; 40. Reverse transfer gear; 41. Reverse gear axle; 43. Bearing washer; 64. Shifter fork (65) bar; 65. 2nd-5th and 3rd-6th gear shifter fork; 66. P.T.O. shaft bushing; 67. Reverse gear axle bushing; 68. Gearshift lever dowels; 69. Gearshift lever retaining spring; 70, 71 and 72. Gaskets, gearshift ball joint retaining and thrust rings; 73. Hydraulic lift pump suction pipe adaptor; 74. O-Ring

6-SPEED TRANSMISSION ASSEMBLY

In order to facilitate reassembly install the transmission housing on an engine stand then proceed as follows:

1. Assemble the synchromesh unit (Item A, Fig. B.II/7) separately on the work bench, as follows:

   Install on the shaft the 2nd and 5th speed driven gear (Item 63, Fig. B.II/11) with inner ring, one synchromesh ring (Item 58) and the fixed ring (Item 59) with the three toothed sectors fitting the vanes of the previously fitted rings.

   ⚠ **CAUTION:** Arrange the two inner rings (Item 56, Fig. B.II/8) and the fixed ring (Item 59) on the shaft with the spline chamfered ends positioned as illustrated in Fig. B.II/10).

   Install the sliding ring (Item 62, Fig. B.II/11) so that the relieved teeth (Item D) match the splined sectors of the fixed ring (Item 59).

   NOTE: The assembly condition previously indicated is the only which sets the three vanes (Item V) of the sliding ring (Item 62) symmetrically with respect to the toothed sectors of the fixed ring (Item 59), thus allowing the projections (Item R) of the spring holders (Item 61) to fit in their respective locations (Fig. B.II/12).

   Place the flat springs (Item 60) on their holders (Item 61) as shown in Fig. B.II/12 then install them in place. Install the second synchromesh element (Item 58, Fig. B.II/8) with the three front wings aligned with those of the aforementioned ring, and finally install the 3rd-6th driven gear (Item 57) complete with inside ring (Item 56).

   Try to engage the sliding collar by hand in both directions, then withdraw the synchromesh unit from the shaft.

2. Reinstall the driven shaft (Item 42, Fig. B.II/7) as follows:

https://truckmanualshub.com/

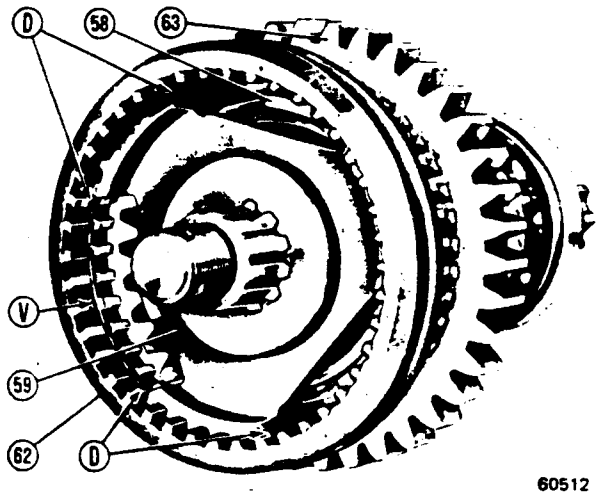

60512

FIG. B.II/11 INSTALLING THE SYNCHROMESH UNIT ENGAGEMENT RING (62)

D. Teeth in relief; V. Flat spring holder seat; 58. Synchromesh cone; 59. Fixed sleeve; 63. 2nd and 5th forward driven gear

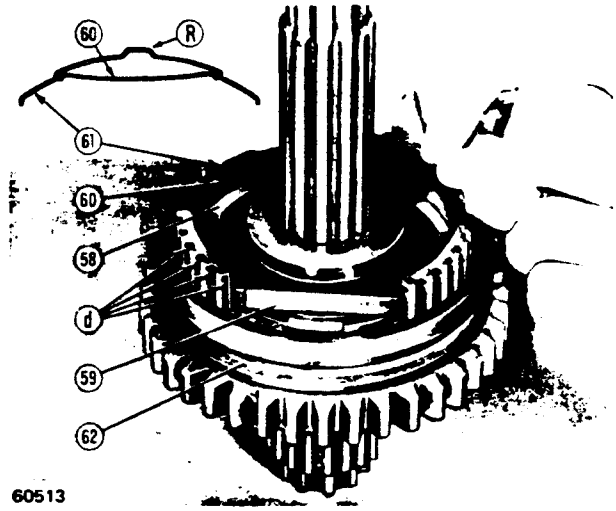

FIG. B.II/12 INSTALLING THE SYNCHROMESH UNIT FLAT SPRINGS (60)

d. Speed gear disengagement safety teeth; R. Central relief on spring holder (61); 58. Synchromesh cone; 59. Fixed collar; 61. Flat spring (60) holder; 62. Sliding ring

Arrange in the housing the front ball bearing (Item 37) with its retaining ring, then fit the end cap securing it with two nuts only.

Set the transmission housing upright with the back end uppermost.

Arrange, inside the housing, the 1st-4th speed driven gears (Item 38, Fig. B.II/7) and 1st-2nd reverse ones (Item 39) as illustrated in Fig. B.II/10, the synchromesh unit (Item A) and the thrust washer (Item 43) with the outer chamfer oriented as shown in Fig. 17.

Install the rear ball bearing (Item 44, Fig. B.II/7) on the shaft, heating it in oil at 176°-194°F. (80°-90°C.). Introduce the driven shaft, complete.

Turn the housing back horizontal, remove the front cap and tighten the nut (Item C_{13}, Fig. B.II/10).

3. Place the transfer gear (Item 40) as shown in the detail (b), then fit the reverse gear shaft (Item 41).

4. Place the 2nd-5th and 3rd-6th speed shifter fork (Item 65) complete with dowel and fit the shifter bar (Item 64) with the end threaded hole facing back (Fig. B.II/13).

5. Install the driving shaft (Item 27, Fig. B.II/7), as follows:

   Install the rear ball bearing (Item 35) in the housing using a driver.

   Install on the shaft the front ball bearing (Item 28) with thrust ring after heating it in oil at 176°-194°F. (80°-90°C) and the oil shield (Item 29) as shown in Fig. B.II/7 and lock them in place with their retaining ring.

   Place the 1st-4th forward and 1st-2nd reverse driving gear (Item 30, Fig. B.II/7) over the shaft. Install the complete shaft from the front end, insert from the inside of the housing the 2nd-5th and 3rd-6th speed driving gear (Item 31) complete with thrust washer (Item 32) and its retaining (Item 33) and, finally, the end ring (Item 34).

   Install the front cap (Item 26) complete with outer and inner seals. Install the rear ball bearing (Item 35) with the aid of a drive bar (Fig. B.II/13) and check the 2nd-5th and 3rd-6th driving gear (Item 31, Fig. B.II/7) for free rotation by hand without end play.

6. Assemble the auxiliary planetary gear reduction unit on the work bench, as follows:

   Place the driven gears (Item 53, Fig. B.II/9) on the carrier (Item 54) lubricating with Multi-Purpose Grease the 18 rolling needles (Item 51) to place them inside the hub of each gear.

   Lock punch the flat-head screws attaching the driven gear shaft retaining disc (Item 55) at two diametrically opposed points along the screw head slot.

7. Install the planetary gear unit after installing the inside thrust washer (Item 45) with the oil

https://truckmanualshub.com/

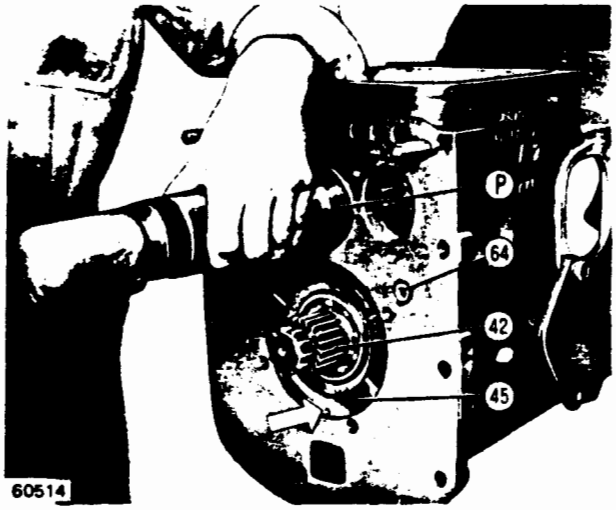

FIG. B.II/13 TAKING UP THE END FLOAT OF 2nd-5th AND 3rd-6th SPEED DRIVE GEAR

NOTE: Arrow shows the retainer dowel of planetary gear reduction end plate.

P. Driver; 42. Driven shaft; 45. Reduction unit thrust ring; 64. 2nd-5th and 3rd-6th speed gear shifter bar

scrolls arranged as shown in Fig. B.II/13 and its retaining pin.

8. Install the support (Item 23, Fig. B.II/6) bar (Item 19) with shifter fork (Item 20) and the speed reduction unit engagement collar (Item 49).

9. Install the transmission speed selectors and shifter bars and forks, as follows:

   First, stake punch at three points the lower part of the holes through selectors and fork to prevent the retaining hollow pins from falling out, then arrange them in succession as shown in the Fig. B.II/6, B.II/10 and B.II/14.

   Install the three springs (Item 17, Fig. B.II/10) in the housing, place the detent balls (Item 16) and make the shifter bars function, starting from either side and using a punch to compress the springs as illustrated in Fig. B.II/15.

   Fix the selectors and shifter fork to their respective bars, by fitting the hollow pins with the split side turned as shown in Fig. B.II/14.

10. Shift into two speed gears simultaneously, tighten the driven shaft lock nut (Item C_{13}, Fig. B.II/10), then install the cover with gasket.

11. Place the gasket on the housing with the aid of grease then install the cover, making sure that the lower end of the gearshift lever (Item C, Fig. B.II/14) fits in the seat on the planetary gear unit central selector (Item 12, Fig. B.II/14).

    In case the speed gear selector mechanism has been disassembled, reassemble it and

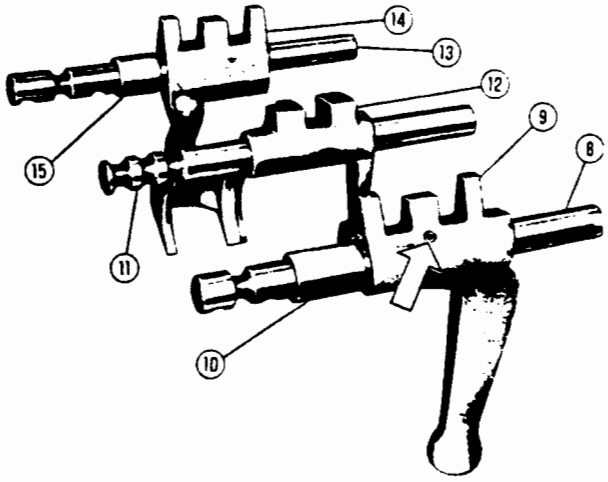

FIG. B.II/14 6-SPEED TRANSMISSION SHIFTER BAR, SELECTORS AND FORK

NOTE: Arrow indicates the correct installation of split dowel pins.

8. Selector (9) bar; 9. 2nd-5th and 3rd-6th speed gear shifter fork selector; 10. Spacer, long, for shifter bar (8); 11. Selector (12) bar; 12. Reduction unit shifter bar selector; 13. Shifter fork bar (14); 14. 1st-4th forward and 1st-2nd reverse gears shifter fork; 15. Spacer, short, for shifter bar (13)

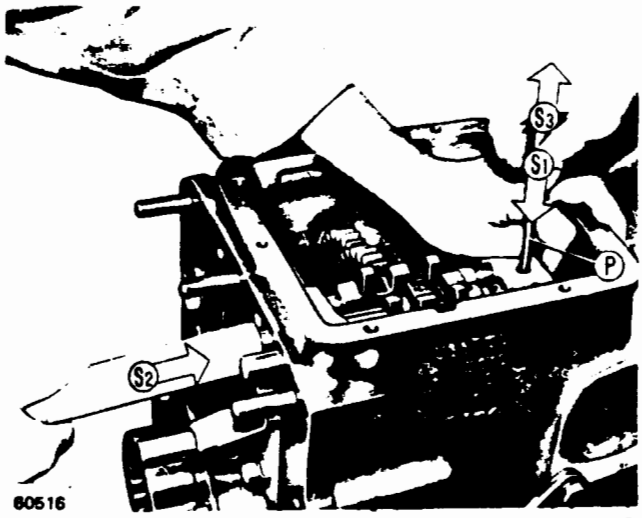

FIG. B.II/15 INSTALLATION OF SHIFTER BARS DETENT BALLS AND SPRINGS

NOTE: Arrows show correct sequence of operations.

P. Punch; S_1, S_2, S_3. Sequence

ensure tightness by applying joining compound to the attaching screws.

6-SPEED TRANSMISSION INSTALLATION

Reverse the removal sequence and:

1. Reattach the transmission housing with a new gasket.

2. Make sure that the O-rings (Item 74, Fig. B.II/10) have been installed before attaching the end (Item 73) of the hydraulic lift pump suction line.

3. Be sure to meet the torque requirements given in the data of the "Torque Specifications" table.

https://truckmanualshub.com/

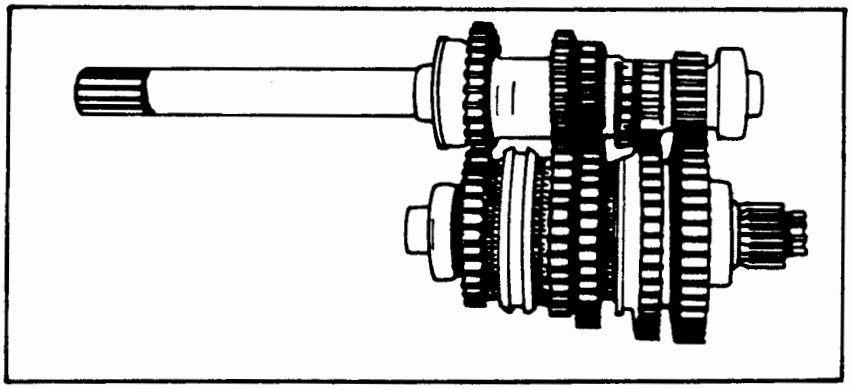

FIG. B.II/16 8-SPEED TRANSMISSION GEARS AND SHAFTS
(The transmission is shown in reverse gear.)

TRANSMISSION

8-SPEED TRANSMISSION

The transmission (Fig. B.II/16) offers four speed reduction ratios in forward and one in reverse. The auxiliary gear speed reduction unit, which is arranged at the back end of the transmission driven shaft, doubles the speed range bringing it up to eight speed ratios in forward and two in reverse.

The gear, all with straight teeth, are constant mesh trains and the 1st and 2nd speeds and the planetary gear reduction are engaged through splined sliding collars, while the 3rd and 4th speeds are engaged with the aid of the synchromesh unit. This device, though being of the conventional free cone type is provided, in addition, with three outer flat springs (60, Fig. B.II/29), arranged in suitable holders (61) and applying a radial force upon the synchromesh tapered rings (58). Consequently, the axial mating of the cones (58) over their respective tapered surfaces of the driven gears (65 and 66) brakes down the speed of the latter thus synchronizing it with that of the fixed collar (59) to facilitate the quick engagement of the sliding collar (62) with the tractor in motion at different engine speeds.

The reverse gears are engaged by shifting the transfer gear (37, Fig. B.II/31) axially. Speeds are subdivided into "high" and "low" speed gears and are controlled by means of two independent levers, one of which (C, Fig. B.II/17) selects the transmission speed gear and the other (R) controls the engagement of the planetary gear reduction unit (Range). The hand lever (c) is provided with a spring which returns it automatically to the central-neutral setting indicated by the arrow in Fig. B.II/17.

The safety start switch (5) allows starting the engine only with the auxiliary reduction (range) unit lever (R) in neutral. In fact if either low high range gears are engaged, the push rod (6, Fig. B.II/22) will not close the contacts of the switch (5), thus preventing operation of the starting motor.

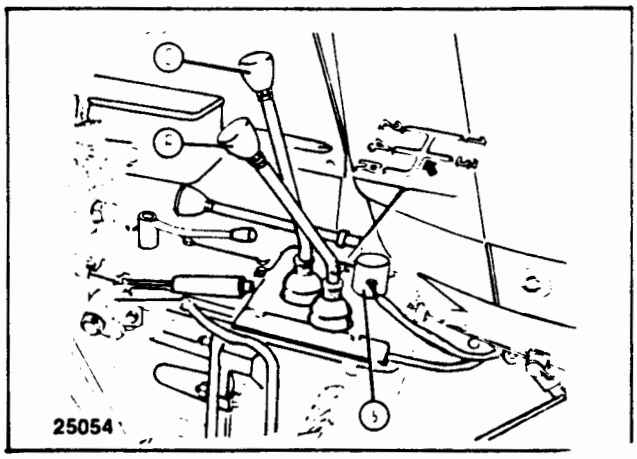

FIG. B.II/17 RIGHT-SIDE VIEW OF THE 8-SPEED TRANSMISSION
(The arrow indicates the neutral setting of gear-shift lever C).
C. Gear shift lever; R. Speed range selector lever;
5. Engine starter safety switch

REMOVING THE 8-SPEED TRANSMISSION

Split the engine-front axle assembly off the transmission housing by performing the operations specified for the removal of the 11" clutch, as follows:

— remove the floor plates after disconnecting the rear lighting cable sheaths and the steering box;

— it is necessary to remove the PTO lever and housing cover and gasket to allow the removal of the upper stud nut;

— in order to remove the transmission detach the line from the transmission clutch control arm;

— apply a hoisting chain to the transmission housing and take the weight off;

https://truckmanualshub.com/

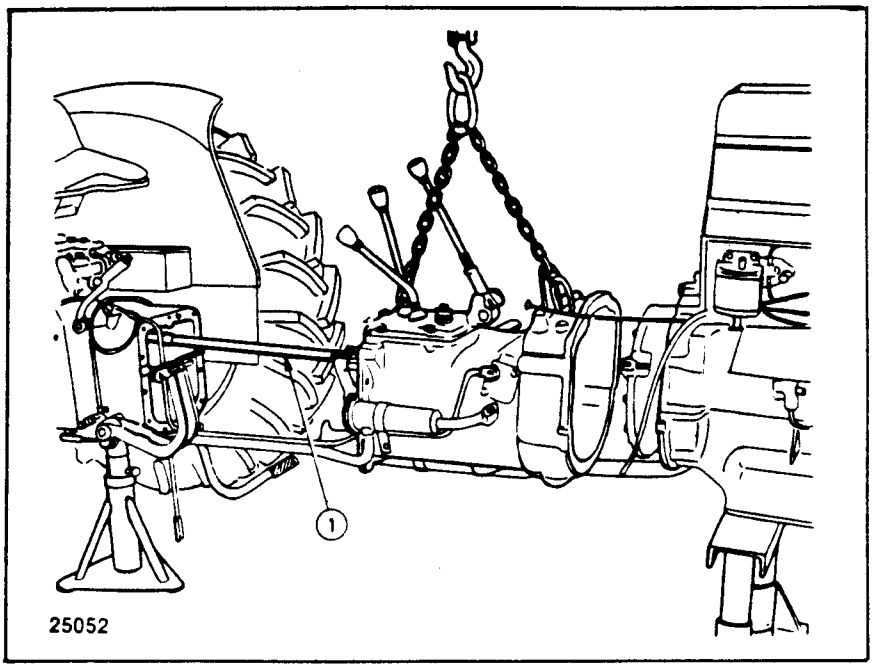

FIG. B.II/18 REMOVING (REPLACING) THE TRANSMISSION UNIT
1. P.T.O. Clutch Shaft

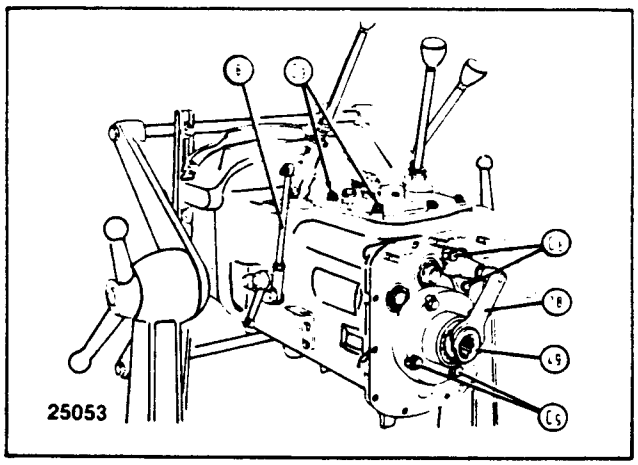

FIG. B.II/19 TRANSMISSION UNIT INSTALLED ON THE SHOP TURNOVER STAND
C_3. Top cover attaching capscrews; C_6. Attaching capscrews, auxiliary speed reduction shifter bar support; C_9. Reduction unit fixed gear capscrews; 8. P.T.O. clutch control adjustable link; 49. Reduction unit engagement sleeve; 78. Reduction unit shifter fork

— remove attaching nuts and bolts then detach the complete unit by moving it slowly forward. (Fig. B.II/18). Caution, do not damage the PTO clutch shaft (1).

DISMANTLING THE 8-SPEED TRANSMISSION

In order to make disassembly easier we recommend installing the transmission unit on an engine stand (Fig. B.II/19 and B.II/20).

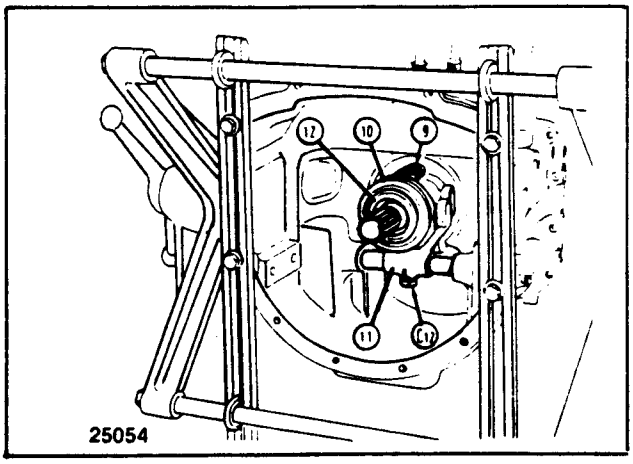

FIG. B.II/20 FRONT VIEW OF TRANSMISSION
C_{12}. Lever (11) setscrew; 9. Release bearing grease lines; 10 and 11. P.T.O. clutch release collar and fork; 12. Transmission clutch release collar

Proceed as follows:

1. Transmission and PTO clutch release collars and fork levers:

— disconnect the link (8, Fig. B.II/19) from the PTO clutch hand control lever;

— remove the setscrews (C_{12}, Fig. B.II/20) and disconnect the grease line (9) from the housing;

— withdraw the outside levers and shafts (14 and 15, Fig. B.II/21) in the order; and withdraw, from the front, the release collars and their fork levers.

https://truckmanualshub.com/

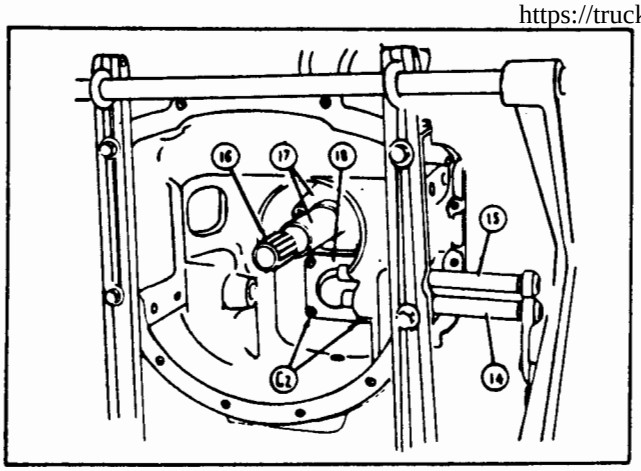

FIG. B.II/21 REMOVING (REFITTING) THE TRANSMISSION SHAFT FRONT BEARING CAPS

C_2. Caps (17 and 18) stud nuts; 14. P.T.O. clutch control lever and shaft; 15. Transmission clutch control lever and shaft; 16. Driving gears shaft; 17. Driving gear shaft bearing cap; 18. Driven gear shaft bearing cap

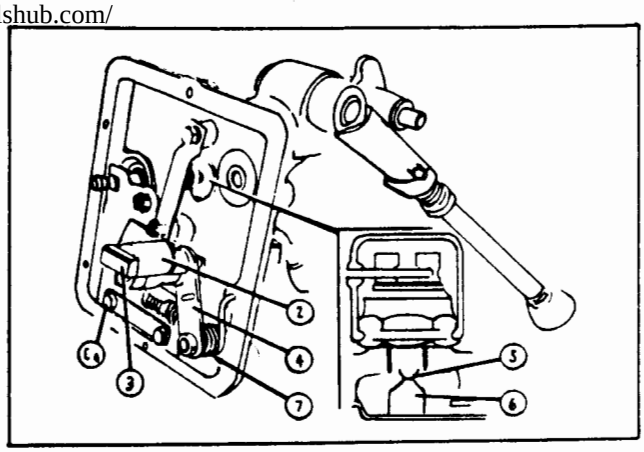

FIG. B.II/22 TRANSMISSION CASE COVER WITH GEAR SELECTOR MECHANISM

C_4. Selector plate automatic return spring bracket screws; 2. Reverse gear control inner lever; 3. Lower (2) pad; 4. Release lever; 5. Engine starting push-button; 6. Button (5) control; 7. Lever (4) return spring

2. The transmission housing cover (Fig. B.II/22) dismantle it on the workbench; we recommend, while withdrawing the inside reverse control lever (2), to retain the release lever (4) with a screwdriver as shown in Fig. B.II/39.

3. Transmission and auxiliary reduction unit shifter bars, selector and inside linkage.

— withdraw the retaining pins towards the inside of the housing;

— withdraw the shifter bars towards the outside starting from the 3rd-4th gear control bar (19, Fig. B.II/23).

4. Auxiliary speed reduction unit carrier, shifter bar, fork and collar:

— remove the attaching capscrews (C_8) and remove them together towards the outside;

— remove the bar and save the detent ball (80, Fig. B.II/37) and spring (81).

5. The planetary gear reduction:

— remove the fixed gear capscrews (C_9, Fig. B.II/23).

— disassemble the driven gear carrier (Fig. B.II/24) by removing the retainer disc (55) flat head screws.

6. Driving shaft and gears:

— remove the shaft front bearing caps (17 and 18, Fig. B.II/21) and the gasket (29 and 30, Fig. B.II/31).

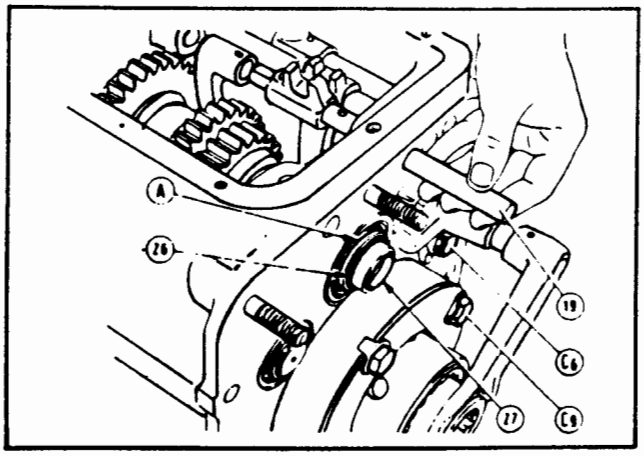

FIG. B.II/23 REMOVING THE TRANSMISSION SHIFTER BARS

A. End float adjustment shim; C_8. Reduction unit shifter bar support screws; C_9. Planetary unit fixed gear screws; 19. 3rd and 4th speed gear shifter bar; 26. Retaining ring; 27. Lip-type seal

https://truckmanualshub.com/

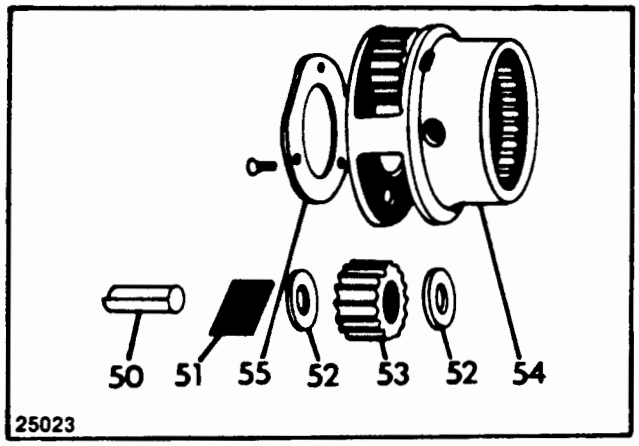

FIG. B.II/24 EXPLODED VIEW OF THE PLANETARY UNIT DRIVEN GEARS SUPPORT
50. Pinion shaft; 51. Bearing needles; 52. Gear washers; 53. Driven gear; 54. Support; 55. Shaft (50) retainer disc

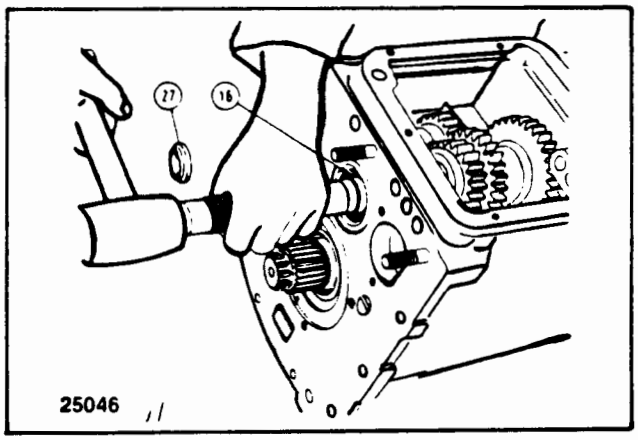

FIG. B.II/25 REMOVING THE DRIVE SHAFT (16) USING A PUNCH
27. Lip-type seal

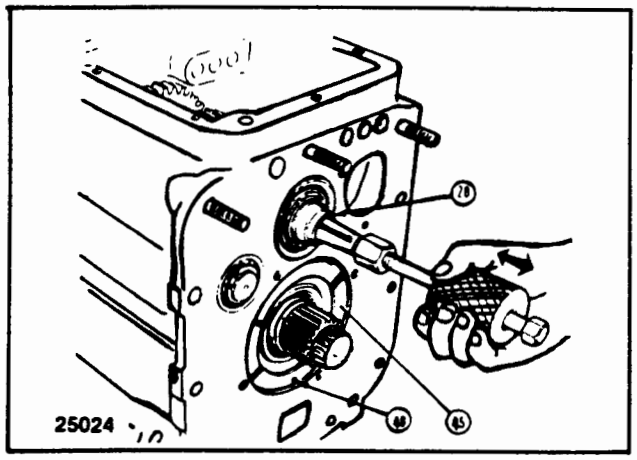

FIG. B.II/26 REMOVING THE BUSHING (28) BY THE SLIDING-WEIGHT PULLER
45. Planetary gear reduction inner thrust ring; 48. Ring locating dowel

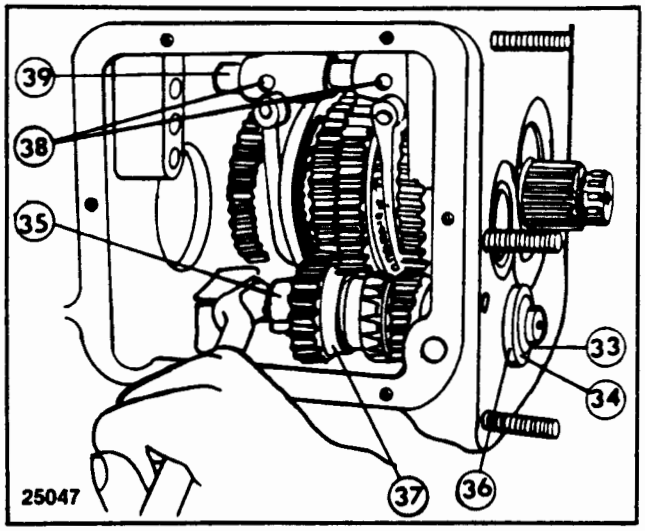

FIG. B.II/27 REMOVING THE REVERSE GEAR SHAFT (35)
33. Retaining ring; 34. Thrust washer; 36. Rear ball bearing; 37. Reverse transfer gear; 38. Shifter fork; 39. Shifter fork (38) bar

— through the sliding collars, engage two speed gears simultaneously, unscrew the driven shaft gear and bearing nut (C_{13}, Fig. B.II/31).

— remove the retaining ring (26, Fig. B.II/23) and the end play (A) adjusting shim, then withdraw the shaft seal (27);

— remove, if necessary, the bushing (28, Fig. B.II/26) using a sliding hammer type puller;

— withdraw the driving shaft (16) with its front ball bearing by means of a drive bar as shown in Fig. B.II/25) then the gears remove from the housing:

— if necessary, press the front ball bearing (31, Fig. B.II/31) off the shaft and remove the outer ring of the rear roller bearing (32) with the aid of a driving bar.

7. Reverse gear shaft and transfer gear:

— remove the retaining ring (33, Fig. B.II/27) and end washer (34) only if the ball bearing is to be removed;

— remove the shaft (35) and rear ball bearings (36) as an assembly, using a crowbar, then remove the gear (37) from the housing;

— remove the needle bearing bushing (42) proceeding as illustrated in Fig. B.II/30.

8. To remove the transmission shifter forks move the bar (39, Fig. B.II/27) outwards, then save the detent balls (70, Fig. B.II/35) and springs (71).

9. Driven shaft and gears and synchromesh unit:

https://truckmanualshub.com/

— withdraw the driven shaft (40, Fig. B.II/28) and ball bearing (41) rearwards as an assembly acting on the front end as illustrated;

— recover the gears and the synchromesh device from the housing;

— remove, at the press if necessary, the rear roller bearing (41) from the shaft and the front ball bearing (43, Fig. B.II/30) from the housing, the latter with the aid of a drive bar.

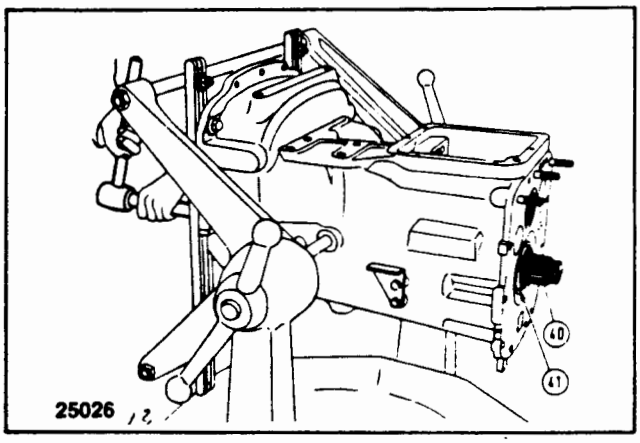

FIG. B.II/28 REMOVING THE DRIVEN SHAFT (40)

41. Rear roller bearing.

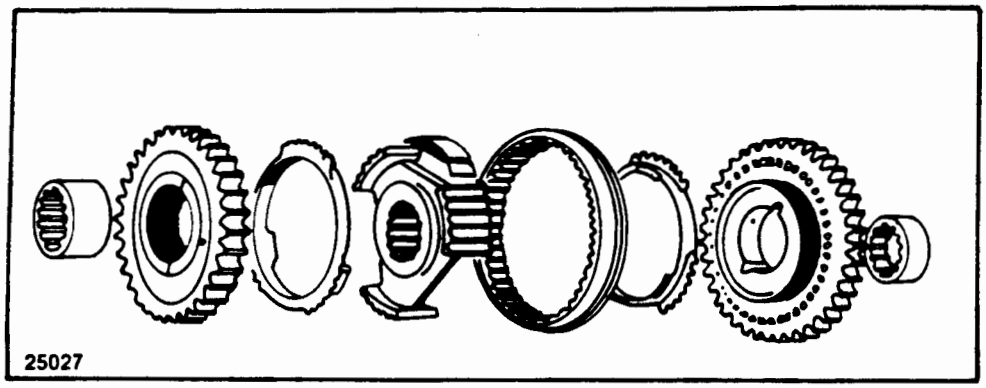

FIG. B.II/29 EXPLODED VIEW OF SYNCHROMESH UNIT

58. Synchromesh tapered rings; 59. Fixed collar; 60. Flat spring; 61. Spring (60) holder; 62. Sliding ring; 64. Driven gear inner rings; 65. 4th speed driven gear; 66. 3rd speed driven gear

INSPECTION

Examine the chamfers on the reverse and 3rd speed driving gear hubs, reverse driven and transfer gear hubs, and on the engagement splines of the 1st-2nd speed gear, synchromesh and planetary gear units; eliminate seizure marks or nicks, if any.

Thoroughly examine the condition of the following mating surfaces:

— of the synchromesh rings (58, Fig. II/29) and their mating surface on driven gears of the 3rd speed (66) and 4th one (65);

— of inside rings (64) and of their locations on the driven gears of all four speeds.

Check the condition of the synchromesh flat springs (60, Fig. II/29): a force of 1.40-1.55 kg (3-3.4 lb.) applied at spring center should produce an arc of 1.5 mm (0.060 in).

Check the spring holders (61, Fig. B.II/32) for deep scoring or nicks, particularly on the central relief (R).

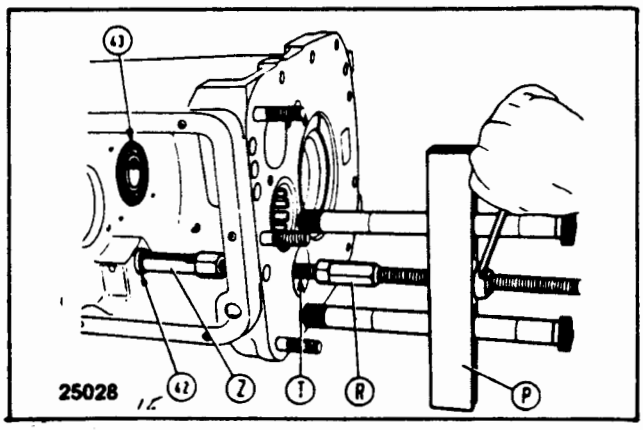

FIG. B.II/30 REMOVING THE REVERSE GEAR AXLE NEEDLE RING (42)

P. Bridge; R. Extension; T. Threaded rod; Z. Collet; 43. Driven gear shaft front ball bearing

Make sure that the teeth (d, Fig. B.II/33) on the three splined sections of the synchomesh fixed collar and on the outside spline of the 1st-2nd speed gear fixed engagement collar (44, Fig. B.II/31) have sharp edges. On new parts, these teeth should project 0.19-0.25 mm (0.08-0.010 in.).

https://truckmanualshub.com/

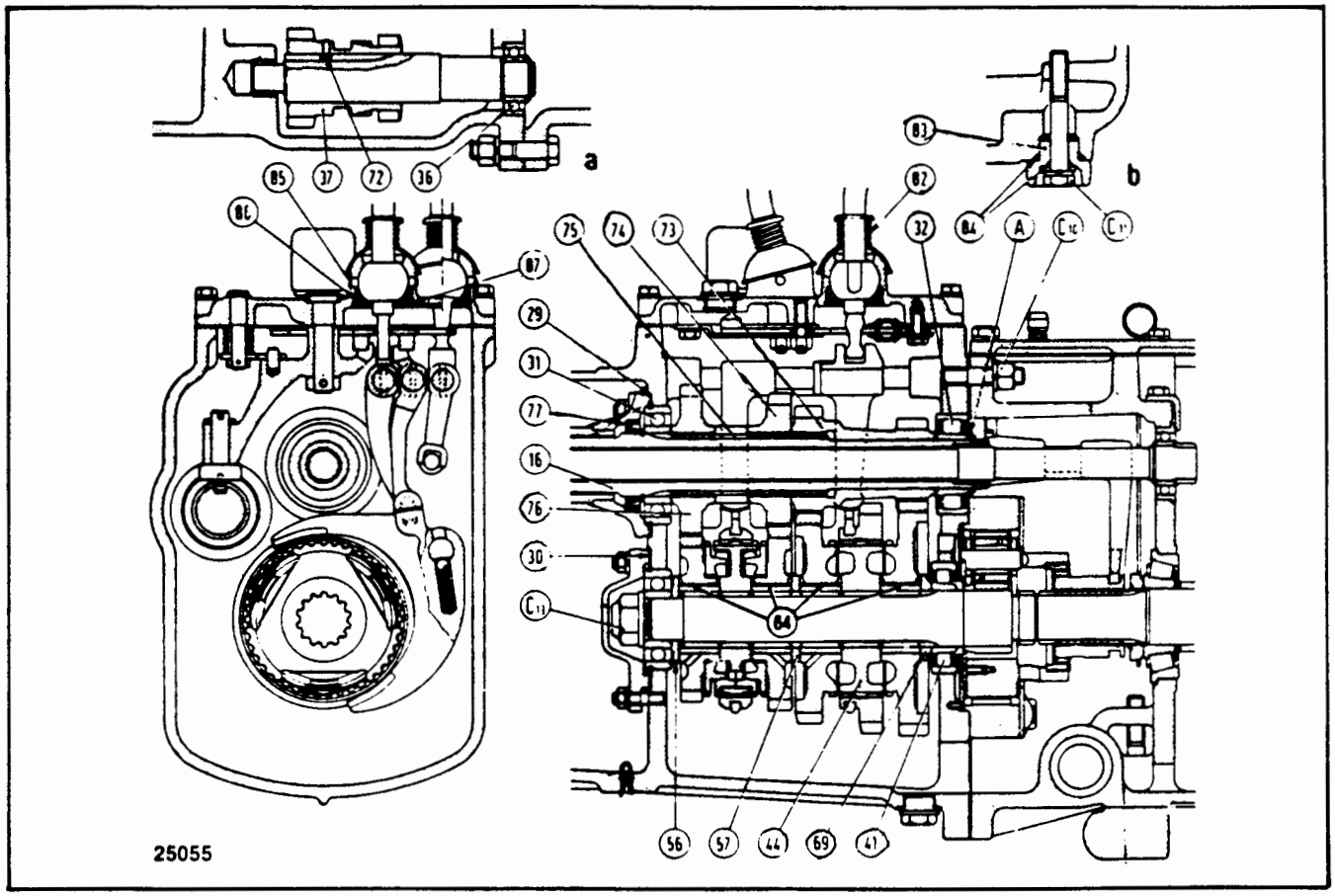

FIG. B.II/31 8-SPEED TRANSMISSION CROSS-SECTIONS

a. Section through reverse gear axle; b. Detail of the hydraulic lift pump suction pipe connection; A. Driving gear float adjusting ring; C_{10}. Transmission housings bolt and steel nuts; C_{11}. Hydraulic lift pump suction pipe attaching capscrew; C_{13}. Drive gear shaft locknut; 16. Driven shaft; 29 and 30. Gaskets; 31. Ball bearing; 32. Roller bearing; 36. Roller bearing; 37. Reverse transfer gear; 41. Roller bearing; 44. 1st and 2nd speed fixed sleeve; 56, 57 and 69. Rear, intermediate and front washers; 72. Gear (37) lock pin; 73. 1st and 2nd speed driving gear; 74. 3rd speed driving gear; 75. Driving gears spacer; 76. 4th speed driving gear; 77. Oil seal; 82. Hand levers retaining spring; 83. Hydraulic lift pump suction pipe adaptor; 84. O-rings; 85, 86 and 87. Lever ball joints gasket, thrust washer and retaining ring; 64. Driven gear inside ring

In any case, faulty teeth are normally detected because of the sliding collar tendency to disengage itself.

Check shims (52, Fig. B.II/24) and thrust rings (47, Fig. B.II/36), and replace those below specification requirements.

Check the functional efficiency of the selector mechanism springs (7 and 13, Fig. B.II/39) of detent ball springs (71, Fig. B.II/35) and (81, Fig. B.II/37) and of hand control lever springs (82, Fig. B.II/31).

https://truckmanualshub.com/

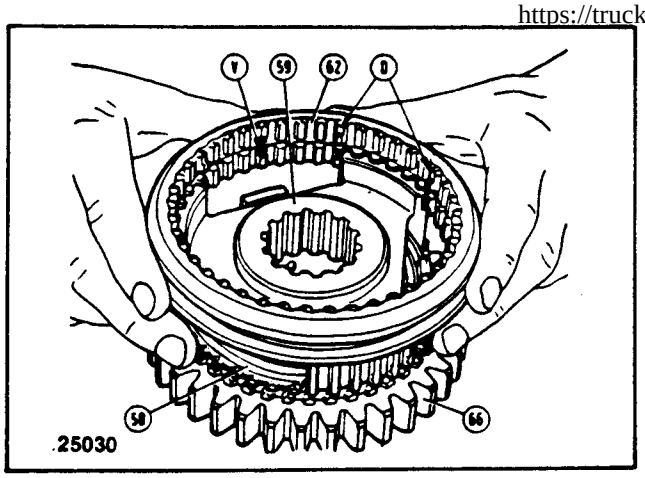

FIG. B.II/32 INSTALLING THE SYNCHROMESH UNIT ENGAGEMENT RING (62)
D. Teeth in relief; V. Flat spring holder seat; 58. Synchromesh cone; 59. Fixed sleeve; 62. Engagement ring; 66. 3rd speed driven gear

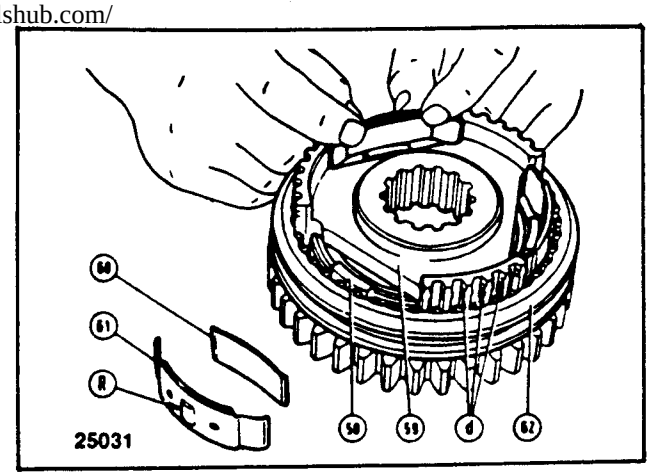

FIG. B.II/33 INSTALLING THE SYNCHROMESH UNIT FLAT SPRINGS (60) AND HOLDERS (61)
d. Safety gear disengagement teeth; R. Holder central projection; 58. Synchromesh cone; 59. Fixed ring; 62. Engagement ring.

8-SPEED TRANSMISSION

In order to facilitate re-assembly, install the transmission housing on an engine stand then proceed as:

1. The synchromesh device:

— place on the 3rd speed driven gear (66, Fig. B.II/32) complete with inner ring, a synchromesh ring (58) and the fixed collar (59) with the three toothed sectors fitting in the ring previously installed and the spline chamfer on the gear side;

— insert the sliding collar (62, Fig. B.II/32) so that the projecting teeth (D) match 17 the three splined sections of the fixed collar (59);

NOTE: The assembly conditions previously indicated is the only one which sets the three vanes (V) of the sliding ring (62) symmetrically with respect to the toothed sectors of the fixed ring (59), thus allowing the projections (R) of the spring holders (61) to fit in their respective locations (Fig. B.II/33).

— place the flat springs (60) on their respective holders (61) as shown in Fig. B.II/32 then push them in place;

— install the second synchromesh unit (58, Fig. B.II/29) with the three front wings aligned with those of the aforementioned ring and finally install the 4th speed driven gear (65) and inside ring (64) as an assembly;

— try to engage the sliding collar by hand and in both directions.

2. Driven shaft, gears and synchromesh unit:

— place the front ball bearing (43, Fig. B.II/30) and retaining ring on the housing and attach the end cap with only two nuts;

— set the transmission housing upright with its back and;

— install in the housing the front end washer (56, Fig. B.II/31) the synchromesh unit (B, Fig. B.II/34), the central thrust washer (57, Fig. B.II/31), the 2nd speed gear (63, Fig. B.II/19) with inside ring, the fixed collar (44), the reverse driven gear (67), the 1st speed driven gear (68) with inside ring and the rear end washer (69) set as shown in Fig. B.II/31;

— install the rear roller bearing (41) on the shaft, arranging it as shown in Fig. B.II/31;

— install the driven shaft (40, Fig. B.II/34) as an assembly;

— turn the housing back horizontal, remove the front end cap and tighten the nut (C_{13}, Fig. B.II/31). [Ref. Long Tool No. 779846]

3. Shifter bar and forks:

https://truckmanualshub.com/

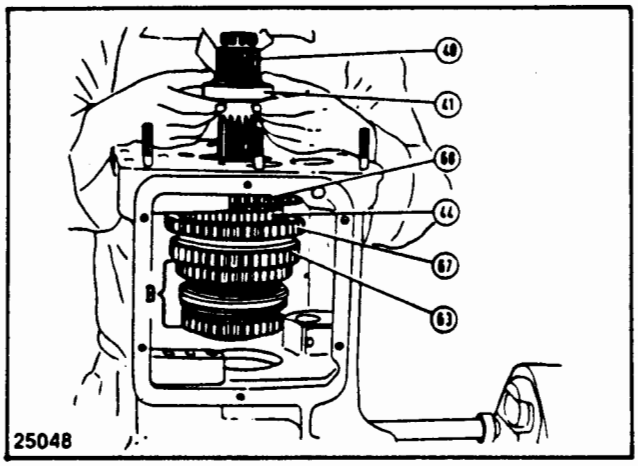

FIG. B.II/34 INSTALLING THE 8-SPEED TRANSMISSION DRIVEN GEARS SHAFT (40)
B. Synchromesh unit with 3rd and 4th speed engagement; 41. Rear roller bearing; 44. 1st and 2nd speed fixed engagement ring; 63. 2nd speed driven gear; 67. Reverse driven gear; 68. 1st speed driven gear

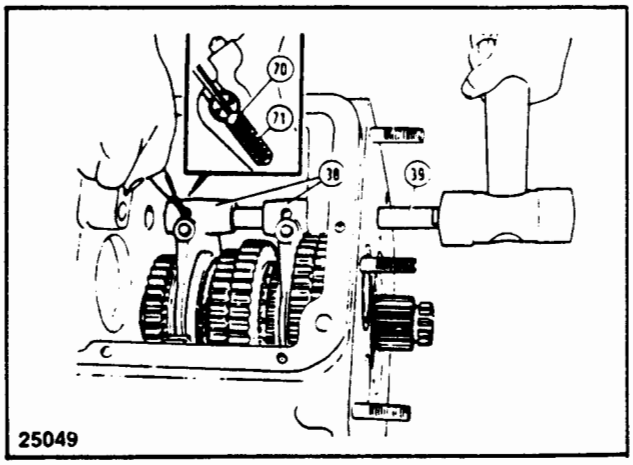

FIG. B.II/35 FITTING THE SHIFTER FORK (38) BAR (39)
70 and 71. Detent ball and spring

— install the forks (38, Fig. B.II/35). These forks are interchangeable;

— install the spring (71) in place; place the detent balls (71) suitably smeared with Multi-Purpose grease and then insert the bar (39) with the stop flat up;

— set the bar by holding down the ball springs as shown in Fig. B.II/35.

4. Reverse shaft and transfer gear:

— install the needle bearing bushing (42, Fig. B.II/30) in the housing using a punch;

— install on the shaft ball bearing (36, Fig. B.II/27) and secure it in place with end washers (34) and retaining ring (33);

— support the gear (37, Fig. B.II/31) from the inside of the housing and install the shaft as an assembly from the outside making sure that the pin (72) fits in the groove;

— make sure, using a drive bar, that the ball bearing (36) is properly seated.

5. Driving, shaft and gears.

— Install the front end ball bearing (31, Fig. B.II/30) on the shaft complete with bushing (28, Fig. B.II/26), seal (27, Fig. B.II/23) and the retaining ring;

— install the outer ring of the rear end roller bearing (32. Fig. B.II/31) in the housing using the drive bar;

— install from the front driving shaft assembly (16, Fig. B.II/31) and, from the inside, install on this shaft the 4th speed drive gear (76), the spacer (75) the 3rd speed drive gears (74) and the 1st-2nd speed ones (73), and finally the inner ring of the rear roller bearing (32) set as shown in the figure;

— install the front cover (17, Fig. B.II/21) complete with inside seal (77, Fig. B.II/31) and outer sealing ring (29);

— make sure, using a drive bar, that the inner ring of the rear roller bearing (32, Fig. B.II/31) is well bottomed in place, install the adjusting shim (A), selecting the thickness which will reduce to the least permissible value the end play of gears and bearings, and finally install the retaining ring;

— through the sliding collars shift into two gears simultaneously, tighten the nut (C_{13}, Fig. B.II/31) to the specified torque value and lock it by punching;

— install the end cap (18, Fig. B.II/21) and gasket (30, Fig. B.II/31);

6. Auxiliary planetary gear speed reduction unit:

— pre-assemble on the work bench the driven gears (53, Fig. B.II/24) on their carrier (54), lubricating with multi-purpose, grease the 18 rolling needles (51) to place them inside the hub of each gear;

— lock punch the flat-head screws attaching the driven gear shaft retaining disc (55) at two

https://truckmanualshub.com/

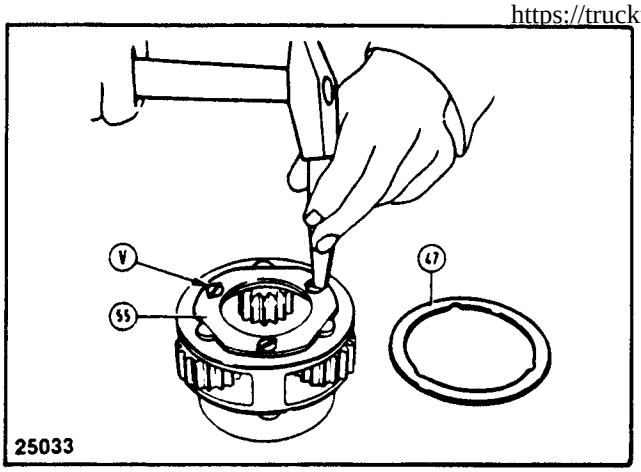

FIG. B.II/36 PUNCH LOCKING THE FLAT HEAD SCREWS (V) SECURING THE PLANETARY UNIT DRIVE GEARS SHAFT RETAINER DISC (55) 47. Thrust ring

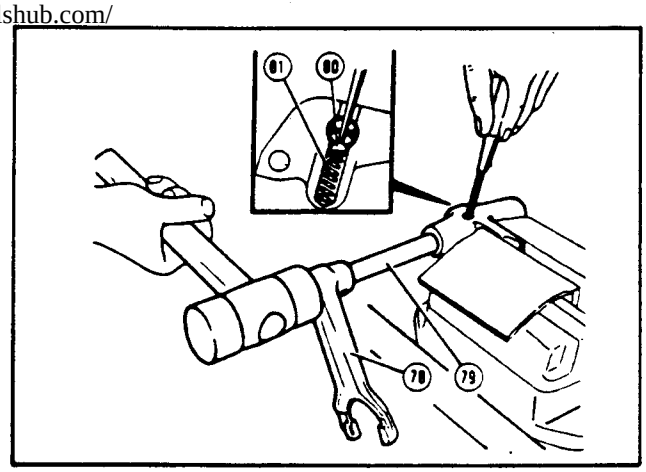

FIG. B.II/37 FITTING THE PLANETARY UNIT SHIFTER FORK (78) AND BAR (79) 80 and 81. Detent ball and spring

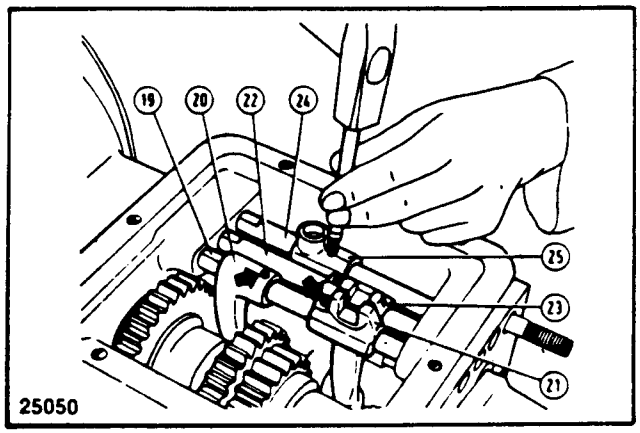

FIG. B.II/38 FITTING THE TRANSMISSION SPEED SELECTOR AND SHIFTER FORKS SPLIT DOWEL PINS
(Arrows indicate the correct pin slot assembly position.) 19, 20 and 21. 3rd and 4th speed shifter bar, fork and selector; 22 and 23. 1st and 2nd speed shifter bar and fork; 24 and 25. Planetary unit shifter bar and fork

diametrically opposed points along the screw head slot (see Fig. B.II/36);

— if previously disassembled, re-install the inside thrust washer (45) with the oil scrolls arranged as shown in Fig. B.II/26 and install the retaining hollow pin (48);

— insert thrust rings (47, Fig. B.II/36) with the milled grooves of the outside thrust washer facing the end cap, then tighten the fixed gear attaching capscrews (C_9, Fig. B.II/19).

7. The auxiliary speed reduction unit support and shifter bar, fork and collar:

— install the spring (81, Fig. B.II/37) in the support and place the detent ball (80), with the aid of multi-purpose grease, then install the shifter bar and fork as an assembly;

— make the shifter bar (79) function using a punch to compress the spring as illustrated in Fig. B.II/37;

— install the supporting unit mating the sliding collar (49, Fig. B.II/9) to the shifter fork (78), then tighten the attaching cap screws (C_6).

8. Shifter bars, selector and the transmission auxiliary speed reduction internal control linkage:

— first lock punch at three points the bottom end of the selector and lever holes to prevent the retaining pins from falling out;

— see Fig. B.II/38 for the correct installation of shifter bars, selector and internal levers and secure them by installing the locating hollow pins with the side cut arranged as shown in the figure.

9. Transmission housing cover (Fig. B.II/22).

— in case of previous removal, make sure of a good seal by applying a suitable jointing compound on the stud and on the gearshift lever attaching capscrews.;

— pre-assemble it on the workbench and in order to install the reverse inside control lever (2), the release lever (4) return spring (7) must be compressed using a screwdriver, as shown in Fig. B.II/39);

https://truckmanualshub.com/

— install, with the aid of grease, the gasket on the housing, then install the cover assembly, making sure that the ends of the hand control levers and the pad (3, Fig. B.II/22) of the inside reverse control lever fit the selectors (23 and 25, Fig. B.II/38) and the transfer gear (37, Fig. B.II/27) respectively.

10. Transmission and P.T.O. clutch release collars and shifter, forks:

— re-connect the grease line (9, Fig. B.II/20) to the housing;

— tighten the cap screws (C_{12}) to the specified torque value and wire lock them;

— re-connect the link (8, Fig. B.II/19) to the P.T.O. clutch hand control lever.

TRANSMISSION INSTALLATION

Reserve the removal sequence and;

— re-attach the transmission housing installing the gasket;

— make sure the O-rings (84, Fig. B.II/31) have been installed before attaching the end (83) of the hydraulic lift pump suction line;

— be sure to meet torque requirements given in the data table.

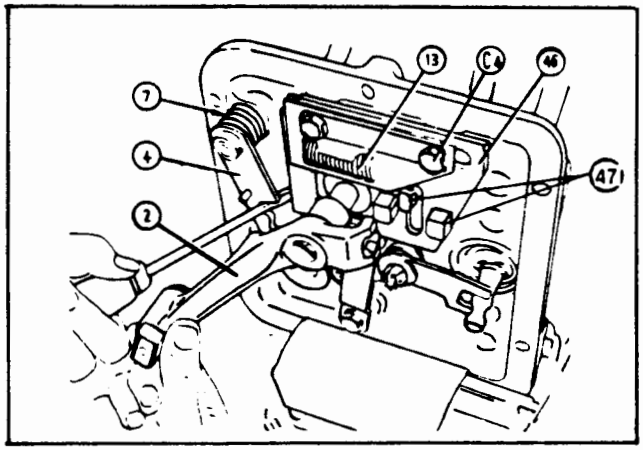

FIG. B.II/39 (REPLACING) - (REMOVING) THE REVERSE GEAR SHIFTER FORK (2)

C_4. Spring (13) bracket capscrews; 4. Detent lever; 7. Lever (4) return spring; 13. Selector plate automatic return spring; 46. Speed selector plate.

NOTE: The interlock (47) lugs are located on the speed selector plate. (46)

https://truckmanualshub.com/

B.III BEVEL GEAR AND DIFFERENTIAL

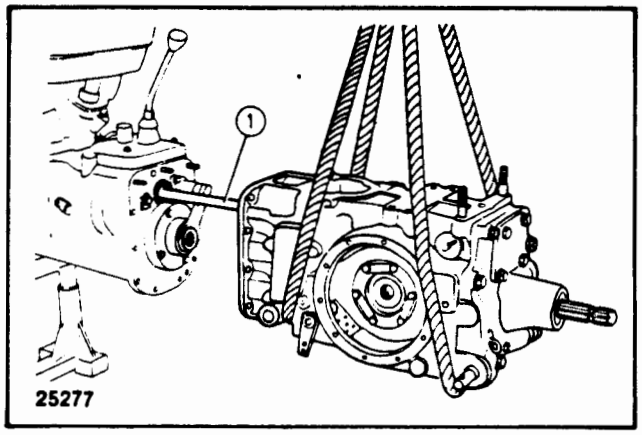

FIG. B.III/1 HOISTING OFF THE REAR BEVEL GEAR UNIT
1. P.T.O. clutch shaft

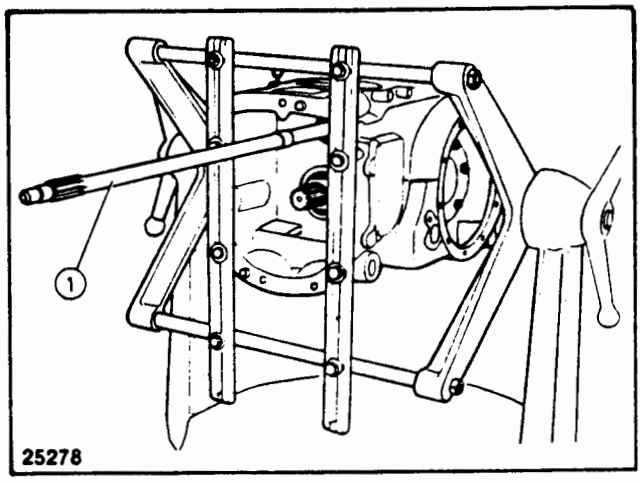

FIG. B.III/2 REAR BEVEL GEAR HOUSING INSTALLED ON TURNOVER STAND
1. P.T.O. clutch shaft

DESCRIPTION

The speed reduction unit housed inside the bevel gear housing consists of a helical-tooth bevel gear and pinion with a speed reduction ratio of 1:3.916 (12/47).

Both the bevel gear, which is attached to the differential case, and the pinion revolve inside tapered roller bearings.

The differential, with two gears and two pinions, is equipped with a pedal controlled differential lock.

REMOVING THE REAR BEVEL GEAR HOUSING

Remove the rear bevel gear housing as follows:

1. Drain the oil from both transmission and bevel gear housings.
2. Remove the final drives according to the instructions of the "Final Drives and Rear Wheels" Section and place a block under the gearbox case.
3. Remove the operator's seat, hydraulic lift and its oil tubing.
4. Set the P.T.O. clutch control lever in "Neutral" then remove the cover with lever.
5. Apply a sling to the rear bevel gear housing and take the weight off with a hoist.
6. Remove the attaching bolts and nuts.
7. ⚠ Carefully separate the rear bevel gear and transmission housings paying attention not to bend or buckle the P.T.O. clutch shaft (Item 1, Fig. B.III/1).

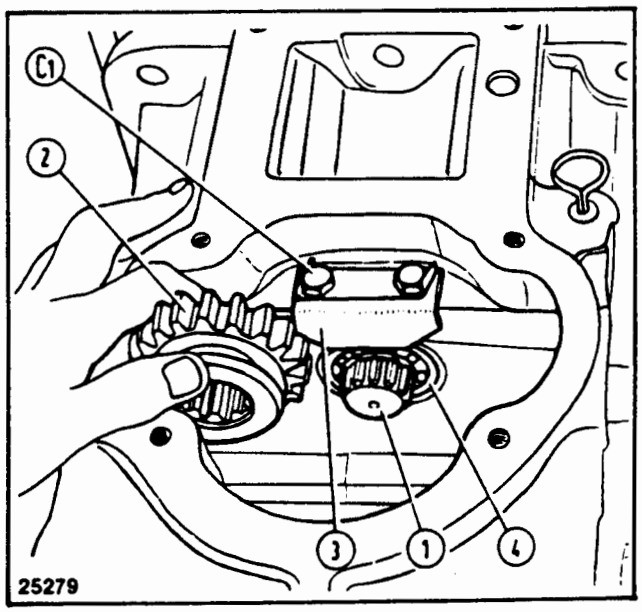

FIG. B.III/3 REMOVING (INSTALLING) THE P.T.O. SLIDING COLLAR (2)
C_1. Bracket (3) attaching capscrews; 1. P.T.O. clutch shaft; 3. Bearing (4) retainer; 4. Ball bearing

DISMANTLING THE BEVEL GEAR AND DIFFERENTIAL

Disassemble the rear bevel gear housing installed on an engine stand (Fig. B.III/2) as follows:

1. Remove the back cover complete with shafts and P.T.O. driving and driven gear train.
2. Withdraw the sliding collar (Item 2, Fig. B.III/3) of the P.T.O. clutch shaft (Item 1) from above.
3. Remove the P.T.O. shaft bearing (Item 4) holder (Item 3).

https://truckmanualshub.com/

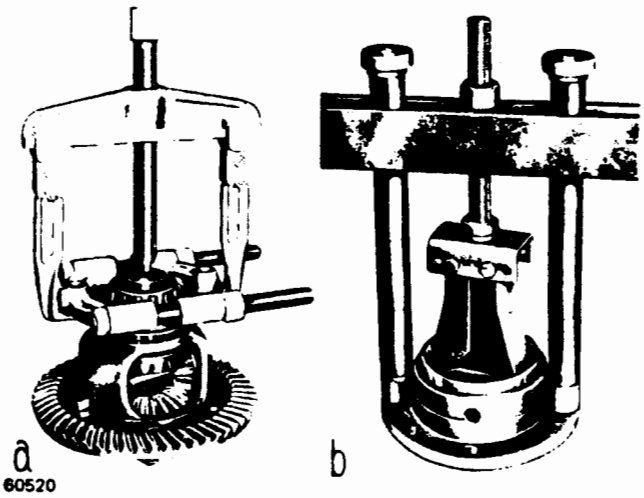

25280

FIG. B.III/4 PULLING THE DIFFERENTIAL TAPERED ROLLER BEARINGS

a. Pulling the cone off of the differential housing with the split type bearing puller attachment and universal type puller; b. Pulling the cup from the bearing housing with a universal puller

4. Tap the front end of the P.T.O. clutch shaft (Item 1, Fig. B.III/3) with a lead hammer and withdraw it with the bearing (Item 4) installed, from the back of the housing.
5. Remove attaching nuts, sheet metal oil shields (Item 5 and 14, Fig. B.III/5), then depress the differential lock pedal and remove the cone bearing housing brackets (Items 6 and 13) and their adjusting shim stacks (Items Sd and Ss).
6. Remove the bevel gear and differential units.
7. Remove the differential lock pedal and supporting unit as an assembly.
8. Withdraw the spring rod (Item 27, Fig. B.III/8) by removing the plug (Item T, Fig. B.III/6) first and then tapping its left hand side with bar and hammer only if necessary. Recover then the spring (Item 25, Fig. B.III/8) and the lock fork from the housing.
9. Unscrew the pinion shaft nut (Item C_3, Fig. B.III/6) [Ref. Long Tool No. 779846] and then withdraw the tapered roller bearing cone (Item 24, Fig. B.III/5).
10. Remove the bevel pinion complete (Item 20) from the back of the housing and the P.T.O. driving gear (Item 22) and its spacer (Item 23) from the top; if so equipped.
11. Extract from the housing the front (Item 24) and rear (Item 21) end bearing cups with a puller.

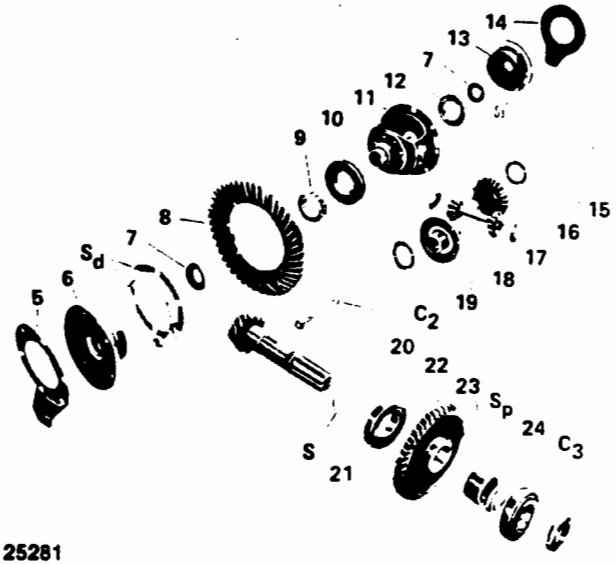

25281

FIG. B.III/5 EXPLODED VIEW OF THE DIFFERENTIAL AND BEVEL GEAR

C_2. Bevel gear bolt nut; C_3. Bevel pinion shaft nut; S. Pinion setting adjustment shim; Sd and Ss. Bevel gear bearing and tooth backlash adjustment shims; Sp. Bevel pinion bearing adjustment shims; 5. Right side oil shield; 6. Right bearing housing bracket; 7. Oil seal; 8. Bevel gear; 9. Right hand side cone; 10. Differential lock collar; 11. Differential case; 12. Left hand side bearing cone; 13. Left side bearing housing bracket; 14. Left oil shield; 15. Differential gear thrust washer; 16. Differential gear; 17. Differential pinion thrust washer; 18. Differential pinion; 19. Differential pinion axle; 20. Bevel gear pinion shaft; 21. Rear tapered roller bearing; 22. P.T.O. driving gear; 23. Spacers; 24. Front tapered roller bearing

Dismantle the bevel gear and differential as follows:

1. Split the bevel gear from the differential by removing the attaching bolts (Item C_2, Fig. B.III/5).
2. Remove the bearing cones (Items 9 and 12) using a split-type bearing puller attachment and a universal puller, (Item a, Fig. B.III/4) and the cups from the housings with a universal puller (Item b).
3. Withdraw the differential lock collar (Item 10, Fig. B.III/5).
4. Remove from the carrier (Item 11) the differential pinions (Item 18) and gears (Item 16).

INSPECTION

Always compare the measured values versus the tabulated data, and proceed as follows:

https://truckmanualshub.com/

1. Check the bevel gear and pinion and differential gears and pinions for excessive tooth wear.
2. Measure the thickness of the thrust washers (Items 15 and 17, Fig. B.III/5) for differential gears and pinions and the service wear of the pinion bushes. Notice that if the bushings are renewed they require reaming after fitting to ensure the correct assembly clearance.
3. Check the functional efficiency of the tapered roller bearings and of the oil seals (Item 7) of differential axle shafts.
4. Check the running surface of the differential lock collar and the functional efficiency of the locating hollow pins.
5. Check the differential lock return spring characteristics versus the specifications given on the table of data.

BEVEL GEAR AND DIFFERENTIAL ASSEMBLY

Reverse the sequence of disassembly, see the Fig. B.III/5 and B.III/6 and take good note of the following points:

1. Smear grease over the differential pinion washers (Item 17, Fig. B.III/5).
2. Install the two special head bolts (Item C_2) securing the bevel gear to the differential carrier in the holes at both ends of the differential pinion shaft (Item 19).
3. Fit the differential lock return spring.
4. Install the differential bearing housing brackets (Items 6 and 13, Fig. B.III/5) arranging them with the oil drain holes facing downwards as shown in Fig. B.III/7.
5. Set the bevel gear and pinion (see following topic).
6. Install the oil shield discs (Items 5 and 14, Fig. B.III/5) with their ears facing down and to the inside.

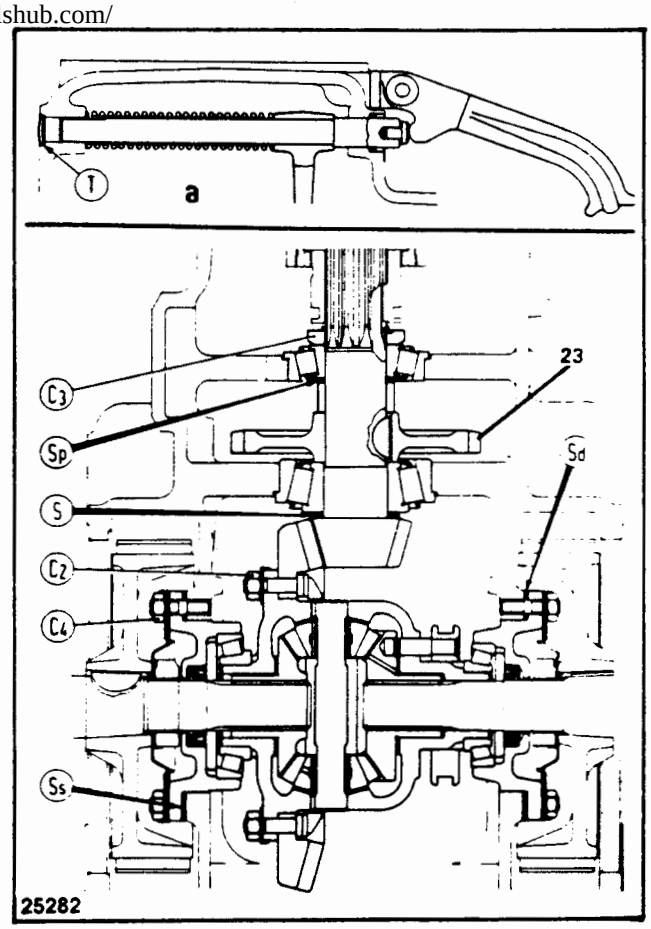

FIG. B.III/6 BEVEL GEAR AND DIFFERENTIAL CROSS-SECTIONAL VIEW

a. Differential lock cross-section; C_2. Bevel gear bolt nut; C_3. Bevel gear pinion shaft nut; C_4. Differential bearing housing stud nuts; S. Pinion setting adjustment shim; Sd and Ss. Bevel gear and tooth backlash adjustment shims; Sp. Bevel gear pinion bearing adjustment shims; T. Plug

https://truckmanualshub.com/

BEVEL GEAR SETTING

Adjustment operations are grouped under the following subtitles:

1. Adjusting the bevel gear pinion shaft tapered roller bearings and finding shim thickness (Item Sp, Fig. B.III/6).

   Install the pinion shaft with a stack of shims (Item S_1, Fig. B.III/8) of any thickness, the tapered roller bearings (Items 21 and 24) previously lubricated, the P.T.O. driving gear (Item 22) and its spacer (Item 23), then make sure that the gear, the rear bearing cone, the shim and the pinion back end are all in contact with each other.

   Lubricate the locknut (Item C_3) thread with crankcase oil and gradually tighten it with the torque wrench F (Fig. B.III/9) with torque increments of 1.5 ft.-lbs. (2 N•m) up to the value of 7.2 ft.-lbs. (10 N•m). Simultaneously, turn the shaft a few turns after each torquing step to make sure the tapered rollers are properly seated.

   NOTE: After turning the shaft following the final torquing step, re-check the torque and reset it if necessary.

   Measure the clearance (Item L_1, Fig. B.III/8) with a feel gauge between P.T.O. driving gear and spacer and select two adjustment shims (Item Sp, Fig. B.III/6) the sum of which is equal to the value of the clearance previously measured plus 0.002" (0.05 mm.).

   NOTE: When selecting the shims (Item Sp), measure each shim with a micrometer then add the readings. Do not rely on a single measurement of the stack or on the nominal thickness given for the individual shims.

2. Checking the pinion cone center distance and finding the correct thickness of the shim pack (Item S, Fig. B.III/6).

   Remove the bevel gear pinion shaft previously installed, install the reference shaft (Item E, Fig. B.III/10), insert the adjustments shims (Item Sp) found in paragraph 1 and then block the stack by means of the knurled knob.

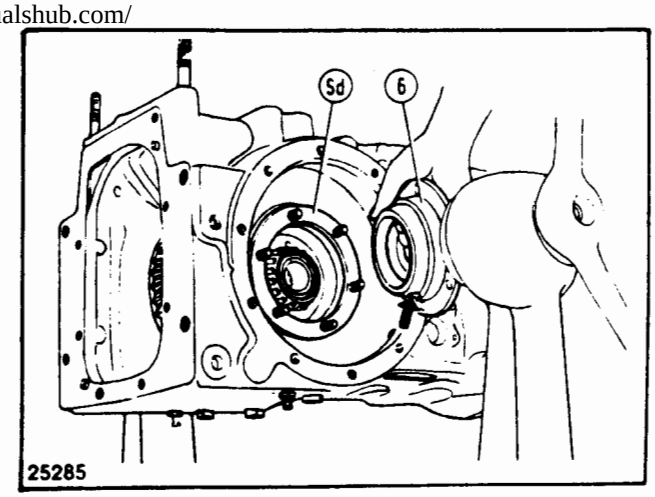

FIG. B.III/7 FITTING (REMOVING) THE DIFFERENTIAL BEARING HOUSINGS

NOTE: Arrow indicates correct assembly position of the oil drain hole.

Sd. Right hand side bearing shims; 6. Right bearing housing bracket

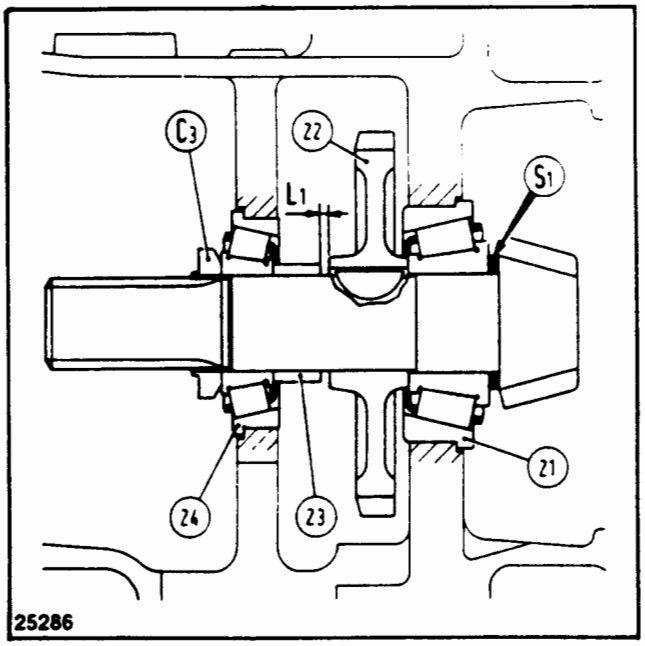

FIG. B.III/8 ADJUSTING THE BEVEL GEAR PINION SHAFT TAPERED ROLLER BEARINGS

C_3. Bevel gear pinion shaft nut; L_1. Clearance between gear (22) and spacer (23); S_1. Pinion setting adjustment shim; 21. Rear bearing; 22. P.T.O. driving gear; 23. Spacer; 24. Front end bearing

https://truckmanualshub.com/

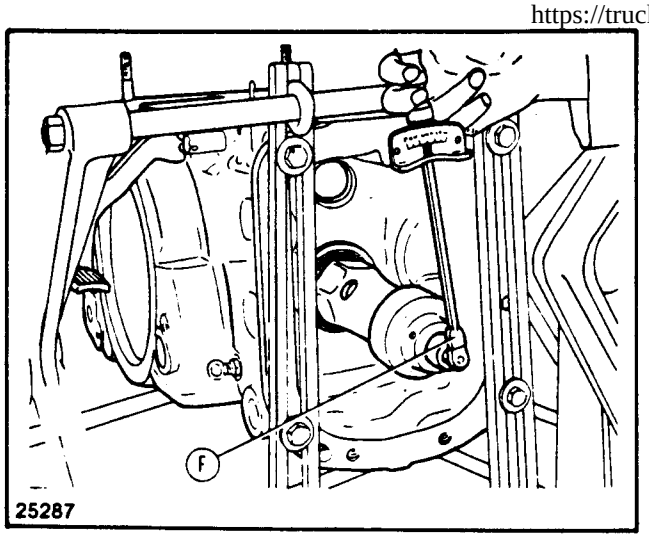

FIG. B.III/9 TIGHTENING THE NUT (ITEM C_3, FIGURE 36) WITH THE TORQUE WRENCH (F, LONG TOOL NO. 779846) TO CHECK THE BEVEL PINION BEARING SETTING

Install in the housing the caliper (Item F, Fig. B.III/11), block the right side bearing housing complete with about 0.040" (1 mm) of adjustment shims (Item Sa) with only three nuts (Item C_4) tightened to the torque of 41.2-45.5 ft.-lbs. (56-62 N•m) and then arrange the left side bearing housing without adjustment shims still with only three nuts (Item D), previously lubricated and arranged at 120° from each other. Cross-tighten the nuts (Item D) with torque increments of 0.7 ft.-lbs. (.9 N•m) up to 4.3 ft.-lbs. (6 N•m) per nut and, at the same time, turn the caliper by hand to seat in the tapered roller bearings.

Arrange the caliper horizontally, turn the knurled knob bringing the end of the pin in abutment with the surface (Item E) of the shaft and take the reading of the dimension (Qr) and its sign given by the pointer as the knob stops turning.

Write down the correction factor (Item Qc, Fig. B.III/6) etched on the pinion face, expressed in mm. and preceded by the sign (+) or (−), if different from zero.

NOTE: It is important to remember that 0.1 mm. equals 0.004 in.

Find the algebraic difference between the measured distance (Item Qr) and the correction factor (Item Qc): the result will be the quantity of increment of reduction of the thickness and the adjustment shim stack (Item S_1) to obtain the final shim thickness (Item S, Fig. B.III/6).

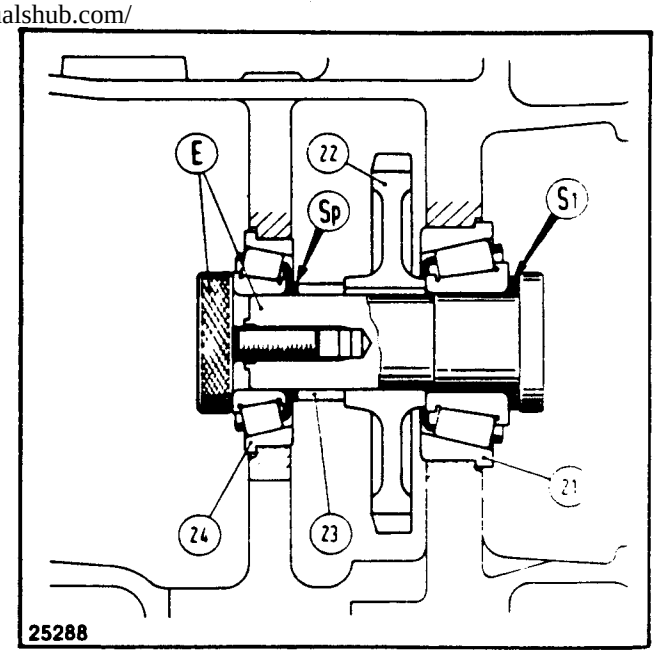

FIG. B.III/10 ARRANGEMENT OF CONE CENTER DISTANCE CALIPER SHAFT (E)

S_1. Pinion cone center check shim; Sp. Pinion bearing shims; 21. Rear bearing; 22. P.T.O. driving gear; 23. Spacer; 24. Front bearing

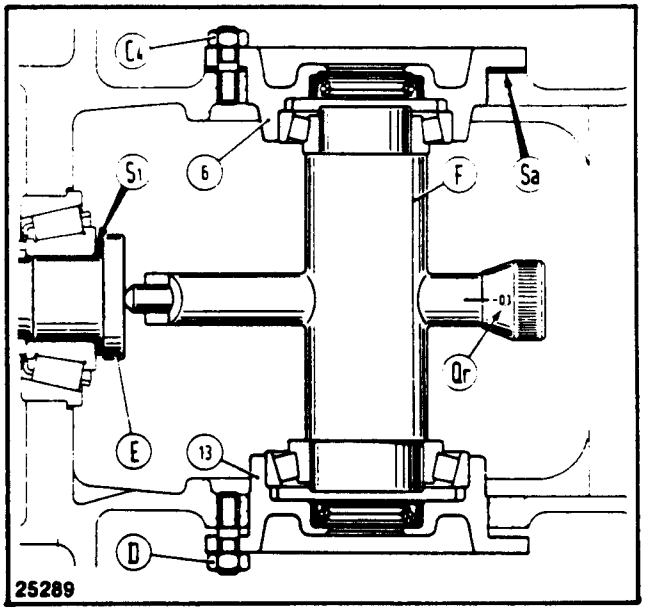

FIG. B.III/11 ARRANGEMENT OF CONE CENTER DISTANCE CALIPER (F)

C_4. Bearing housing (6) stud nuts; D. Bearing housing (13) nuts; E. Caliper shaft; Qr. Caliper reading; Sa. 0.040" (1 mm.). Shim stock for bearing housing (6); S_1. Cone center distance check shims; 6. Right bearing housing; 13. Left bearing housing

https://truckmanualshub.com/

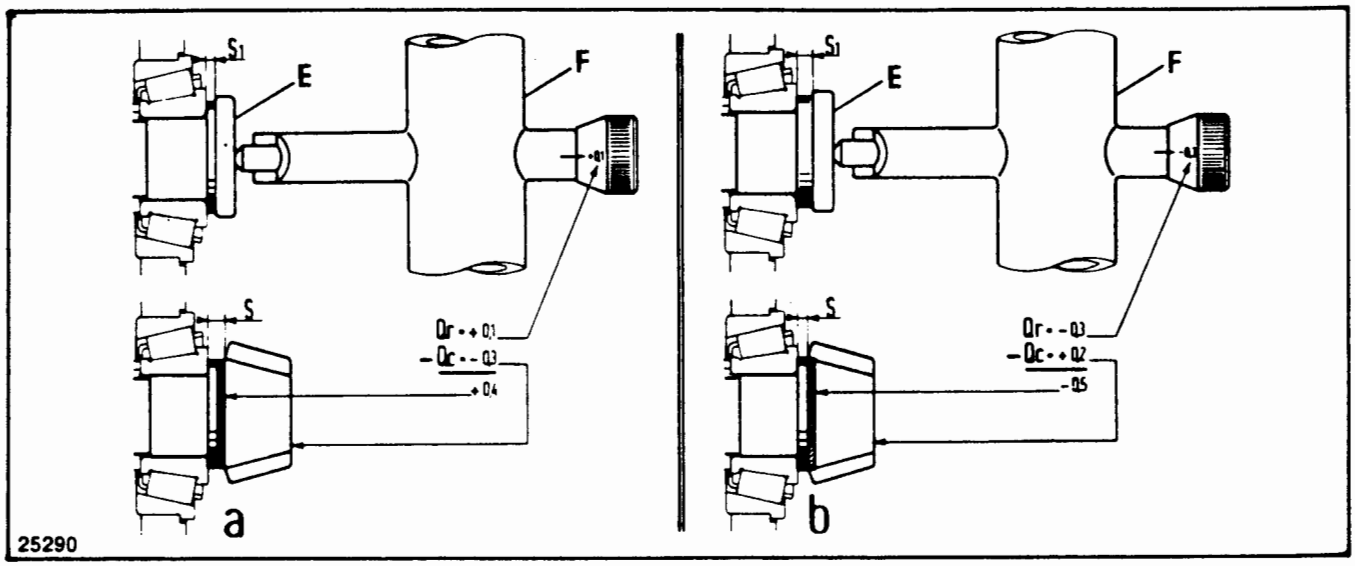

FIG. B.III/12 SAMPLE LAYOUTS OF TWO PINION CONE CENTER DISTANCE SETTINGS
Qc. Correction dimension etched on the pinion face; S_1. Shim inserted to check the pinion cone center distance; Qr. Caliper reading; S. Correct pinion cone center distance setting shim

EXAMPLE 1 (DIAGRAM A, FIG. B.III/12):

Caliper reading (Item Qr) . . . . . + 0.1 mm
Correction factor (Qc) read
on the pinion . . . . . − 0.3 mm.
Shim correction . . . . . = Qr − Qc = + 0.1 − (− 0.3)
= + 0.1 + 0.3 = + 0.4 mm. (+ .016")

To position the pinion correctly, install a shim (Item S) 0.016" (0.4 mm.) thicker than the caliper shim (Item S_1).

EXAMPLE 2 (DIAGRAM B, FIG. B.III/12):

Caliper reading (Item Qr) . . . . . − 0.3 mm.
Correction factor (Qc) read
on the pinion . . . . . + 0.2 mm.
Shim correction . . . . . = Qr − Qc = − 0.3 − (+ 0.2)
= − 0.3 − 0.2 = − 0.5 mm. (− .020")

To position the pinion correctly, install an adjustment shim (Item S) 0.020 in. (0.5 mm.) thinner than the shim (Item S_1) arranged on the caliper.

Install the bevel pinion and the adjustment shim just found (Item S, Fig. B.III/6) then torque tighten the nut (Item C_3) to the specified value.

3. Setting the bevel gear tapered roller bearings and finding the total shim stack (Item Sc) thickness.

   Install the differential and bevel gear as an assembly with the bearings properly lubricated, install a stack of shims (Item Sa, Fig. B.III/13) about 1 mm, thick and the bearing housing bracket securing the latter with only three nuts (Item C_4) tightened to a torque value of 41.5-45.5 ft.-lbs. (56-62 N•m) and, finally, install the left side bearing housing bracket with no shims and also with three nuts (Item D), well lubricated with thin crankcase oil and arranged at 120° from each other (Fig. B.III/14).

   Gradually cross-tighten the three nuts (Item D) with a torque wrench and with torque increments of 0.7 ft.-lbs. (.9 N•m) up to the final value of 4.3 ft.-lbs. (6N•m) per nut, simultaneously, turn the bevel gear a few turns by hand to ensure correct roller seating.

   Measure the clearance (Item L, Fig. B.III/13) between transmission housing side and left side bearing housing bracket with a feel gauge at three points 120° from each other and symmetrical with respect to the adjusting nuts (Item D, Fig. B.III/15).

   Find the average of the readings then add 0.002 in. (0.05 mm.).

   Therefore, the total thickness (Item Sc) of shims to be installed is:

   $$Sc = Sa + L + 0.05 \text{ mm. } (.002")$$

   where:

   Sa = shim thickness inserted at the right bearing housing bracket.

   L = Clearance measure previously.

   0.05 mm. (.002") = play required to take up the end float caused by tightening the nuts (Item D).

https://truckmanualshub.com/

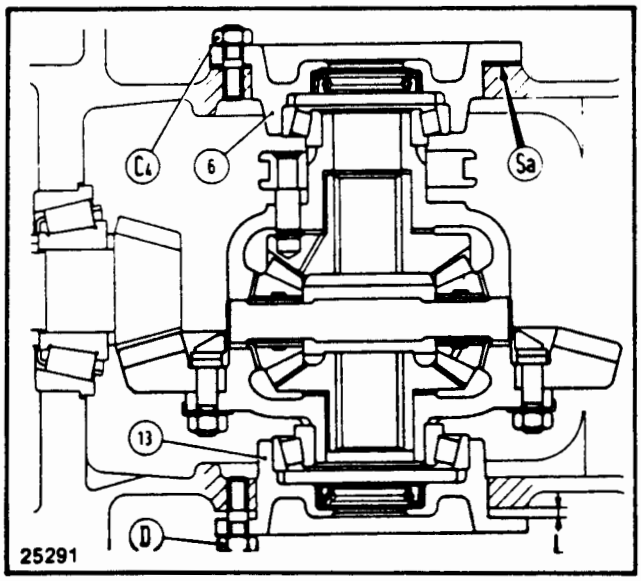

FIG. B.III/13 ADJUSTING THE DIFFERENTIAL-BEVEL GEAR TAPERED ROLLER BEARING
C_4. Bearing housing bracket (6) stud nuts; D. Setting check nuts; L. Assembly clearance between transmission housing and left hand bearing housing (13); Sa. 0.040" (1 mm.). Shim stack thickness to be inserted on the right bearing housing; 6. Right side bearing housing bracket; 13. Left side bearing housing bracket

EXAMPLE

Thickness of shim stack inserted at the right side housing bracket . . . . . .0.0374 in. (0.95 mm.)

Clearance (L) measures 0.1062 – .1062 – .1043 in. (2.70 – 2.70 – 2.65 mm.)

L = average clearance

$$= \frac{0.1062 + 0.1062 + 0.1043}{3} = 0.1055 \text{ in.}$$

$$= \frac{2.70 + 2.70 + 2.65}{3} = 2.683 \text{ mm.}$$

Sc = Sa + 0.05 = 0.0374 + 0.1055 + 0.0019
= 0.1448, rounded in excess of 0.145 in.

Sc = Sa + L + 0.05 = 0.95 + 2.683 + 0.05
= 3.683, rounded in excess to 3.70 mm.

NOTE: Always round the result in excess to the second decimal figure, with 0.002" (0.05 mm.) intervals.

4. Checking the bevel gear and pinion tooth backlash and subdividing the total shim thickness (Item Sc), found in paragraph 3, into the shim stacks (Items Sd and Ss, Fig. B.III/6).

   Find the tooth clearance with the aid of a dial gauge placed perpendicularly to a tooth face.

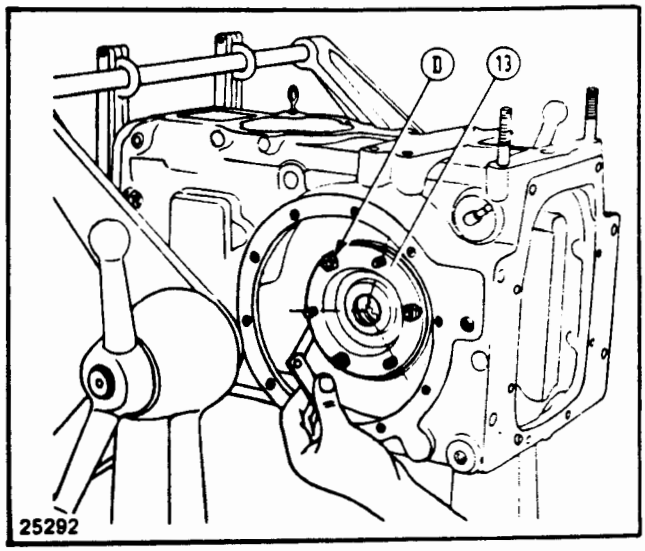

FIG. B.III/14 TIGHTENING THE NUTS (D) WITH A TORQUE WRENCH TO CHECK THE BEARING SETTING
13. Left bearing bracket

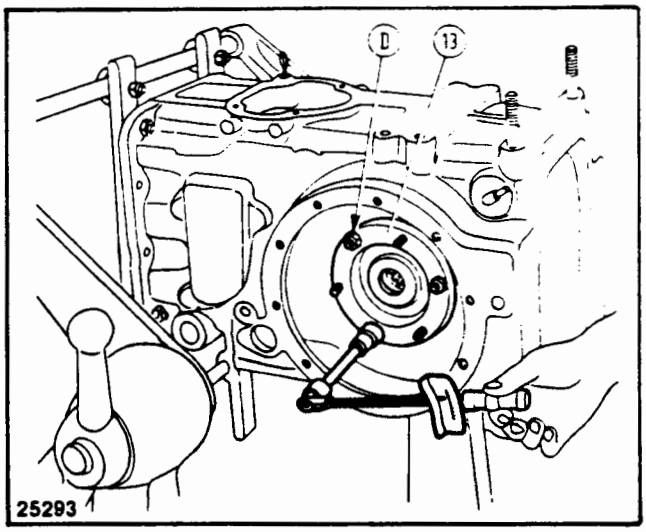

FIG. B.III/15 MEASURING THE CLEARANCE (ITEM L, FIGURE 41) WITH A FEELER GAUGE
13. Left side bearing housing bracket; D. Adjustment check nuts

NOTE: We recommend taking two more readings at two different points to make sure the bevel gear is not warped.

The correct backlash is 0.007"-0.009" with all nuts torqued to 30-35 ft.-lbs. If the backlash is less than 0.007" it will be necessary to move shims from the right side to the left. If the backlash is over 0.009" it will be necessary to move shims from the left side to the right. Shims are available in thicknesses of 0.006", 0.008" and 0.020". It may be necessary to trade shims to arrive at the correct backlash. Keep in mind that when you add shims to move the ring gear it will change the dial indicator reading 1½ times the amount of shims installed. EXAMPLE: 0.008" of shims will change the backlash 0.012".

https://truckmanualshub.com/

B.IV BRAKES

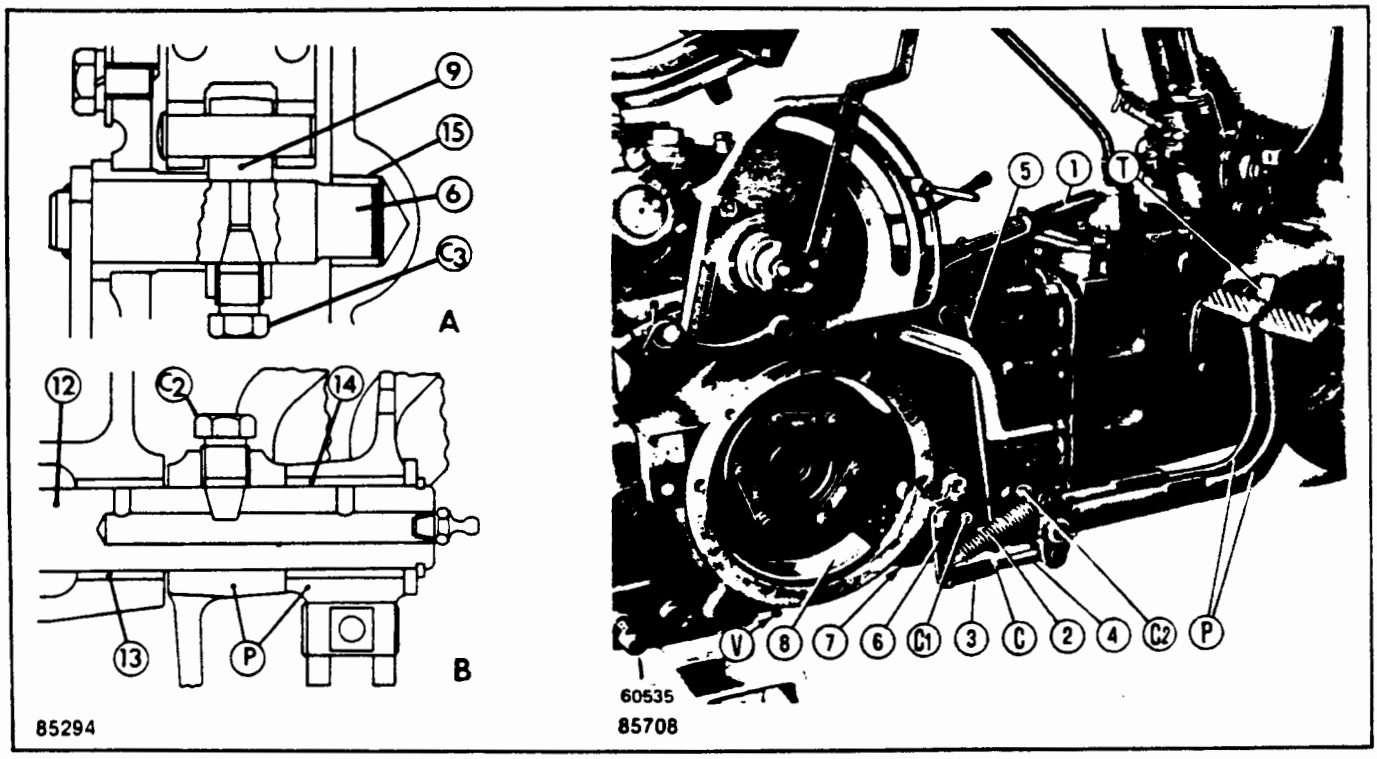

FIG. B.IV/1 SERVICE AND PARKING BRAKES AND THEIR CONTROLS

a. Inside lever (9) pivoting arrangement; b. Pivoting arrangement of pedal (P) shaft (12); C. Clevis (3) jam nut; C_1. Outside lever bracket screw; C_2. Left service brake pedal setscrew; C_3. Inside lever (9) setscrew; P. Service brake pedals; T. Lockplate; V. Brake band centering screw; 1. Parking brake lever; 2. Return spring; 3 and 4. Brake pedal free run adjusting clevis and link; 6. Outside brake control lever; 7. Cover; 8. Band brake; 9. Inside band control lever; 12. Left side service brake shaft; 13, 14 and 15. Bushings.

DESCRIPTION

The dry, contracting band brakes operate on two drums which are keyed to the differential axle shafts and are mechanically controlled by two independent service pedals (Item P, Fig. B.IV/1) placed at the tractor right hand side.

The lock plate (Item T) blocks the pedal together for simultaneous highway control.

The brakes are housed in the compartment between differential and each final drive (Fig. B.IV/1). The band (Item 8) of each brake is lined with three asbestos base friction elements for a total winding angle around the drum of 274°.

DISASSEMBLY

To dismantle each brake, first remove the final drive following the instructions given in the related chapter, then proceed as follows:

1. Remove the brake pedal return springs (Item 2, Fig. B.IV/1) and free the outside lever (Item 6) from the clevis (Item 3), after removing the connecting pin and cotter pin.
2. Remove the bottom service and inspection cover (Item 7) then, through the transmission housing compartment, remove the outside control lever (Item 6) setscrew (Item C_3, Fig. B.IV/2).
3. Withdraw the pivot pins (Item 10) and remove the complete brake band (Item 8) and the inside lever (Item 9).

https://truckmanualshub.com/

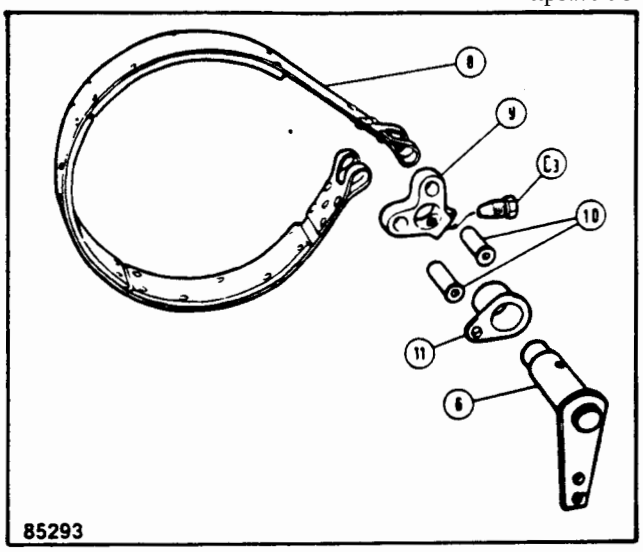

FIG. B.IV/2 EXPLODED VIEW OF A SERVICE BRAKE

C_3. Lever (9) setscrew; 6. Outside brake control lever; 8. Brake band; 9. Inside lever; 10. Brake band hinge pins; 11. Lever (6) bracket

INSPECTION

Check the brake band lining wear versus service limits, and make sure that rivet heads do not protrude from the friction lining surface.

Replace the brake band (Item 8, Fig. B.IV/2).

If the liners are to be removed because of contamination by seeping transmission oil check the functional efficiency of the seals on the differential axle shafts.

Inspect the brake drum surfaces. If necessary, reface the drum diameter, which can be cut down to 8.819 in. (224 mm.), and replace brake linings.

Check the bushings (Items 13, 14 and 15, Fig. B.IV/1) for wear considering the permissible limits of the table of data.

ASSEMBLY

Make sure of the following:

1. The setscrews (Item C_3, Fig. B.IV/2) are installed with their heads towards the rear of the tractor. A different installation means that the levers (Item 6) are installed the wrong way.
2. Wire lock the screws on the levers (Item 9).

ADJUSTMENT

As the brake linings wear out, the free travel of the pedals increases.

This free travel should not exceed 2.36-2.76 (60-70 mm.) and is equal for both pedals so to achieve simultaneous and equal braking force action when they are interlocked by the plate (Item T, Fig. B.IV/1).

Adjust, if necessary, as follows:

1. Make sure the parking brake lever (Item 1, Fig. B.IV/1) is disengaged.
2. Tighten the brake band centering screws (Item V), screw them back of one and a half turn then lock them by tightening the jam nuts.
3. Slacken the jam nuts (Item C) and unscrew the push rod (Item 4) until the free travel of the pedals is eliminated.
4. Then, tighten the rods (Item 4) two turns so to obtain a free travel of 1.97 in. (50 mm.) for both pedals.
5. Tighten the jam nuts (Item C).

https://truckmanualshub.com/

B.V INDEPENDENT HAND BRAKE

DESCRIPTION

The independent hand brake is fitted to the differential drive pinion shaft in the compartment between the two tapered roller bearings.

It consists of the following main parts:

gear Z = 34, Z = 18 teeth (Item 22) assembled to the brake disc (Fig. B.V/1);
brake rod (Item 24)
adjusting screw (Item 28)
brake shoe lever (Item 34)
brake shoe (Item 35)

At brake application, the shoe, made of friction material, which is resistant to oil, penetrates into the channel build up by the brake disc and the gear side, braking in this way.

DISASSEMBLY

The independent hand brake and the intermediate double gear may be removed as an assembly only after removal of the final drive housings, according to the instructions given in the respective chapter and then proceed as follows:

1. remove the circlip for shaft from lever head, then the differential lock control pedal bracket and the fixing screws and detach the differential lock control pedal bracket together with the pedal;
2. remove the hand brake lever lock quadrant (Item 70, Fig. B.V/1);
3. loosen lock nut (Item 29) and then remove the hand brake lever shaft by easy hammering, to inside, recovering the "O"-ring;
4. unlock the safety plate from the screw head (Item 98), unscrew and remove the safety plate from the shoe (Item 30) lever shaft bushing and then remove it, setting free the shoe lever;
5. remove the shoe lever of the rear axle housing.

REMOVAL OF DOUBLE INTERMEDIATE GEAR

1. unlock the lock washer of the fixing screw head on the lock plate and remove the intermediate shaft using a maneouvre shaft with smaller dia., so that at the complete removal of the intermedial shaft all parts, which were fitted on it, should remain on the maneouvre shaft;
2. pulling back the maneouvre shaft, remove in sequence all parts, which were fitted on the intermediate shaft as:
3. spacing bushing (Item 80)
4. washer (Item 83)
5. double intermediate gear (Item 79)

   washer (Item 91)

Then remove the needle bearings from double intermediate gear inside, removing the lock rings of the bearings and pushing out the two needle bearings together with the spacing ring (Item 96).

ASSEMBLING THE DOUBLE INTERMEDIATE GEAR

Insert in one of the holes of the gear the lock washer (Item 91), then insert onto the gear in the following sequence:

the first needle bearing (Item 95)
spacing ring (Item 96)
the second needle bearing
the bearing lock ring inserted into the channel from the other gear end.

Prior fitting, lubricate the needle bearings with vaseline or lithium base.

Insert gradually on the rear part of the axle housing a maneouvre shaft into the left-hand side bore for the intermediate shaft. During this operation insert on the shaft the following:

1. spacing bushing (Item 80) which should be placed with cutting near the toothing Z = 45;
2. washer (Item 83)
3. double intermediate gear, prepared in the previous operation;
4. washer (Item 91).

After this, take the intermediate shaft, lubricate it with oil and insert it through the front housing bore, passing all parts, which are fitted on the maneouvre shaft. Insert the shaft until the thicker part reaches to the bore and is in the same plane with the housing wall. Then fasten it by the lock plate, which should be fitted to the housing by means of a screw provided with washer and bend it over the screw and the lock plate.

1. Check for slight revolution by hand and without binding.

ASSEMBLING THE INDEPENDENT HAND BRAKE

Install the tapered roller bearings (Items 81 and 82), the assembled gear (22) and spacer into the housing and adjust bearings and determine adjusting washers thickness:

https://truckmanualshub.com/

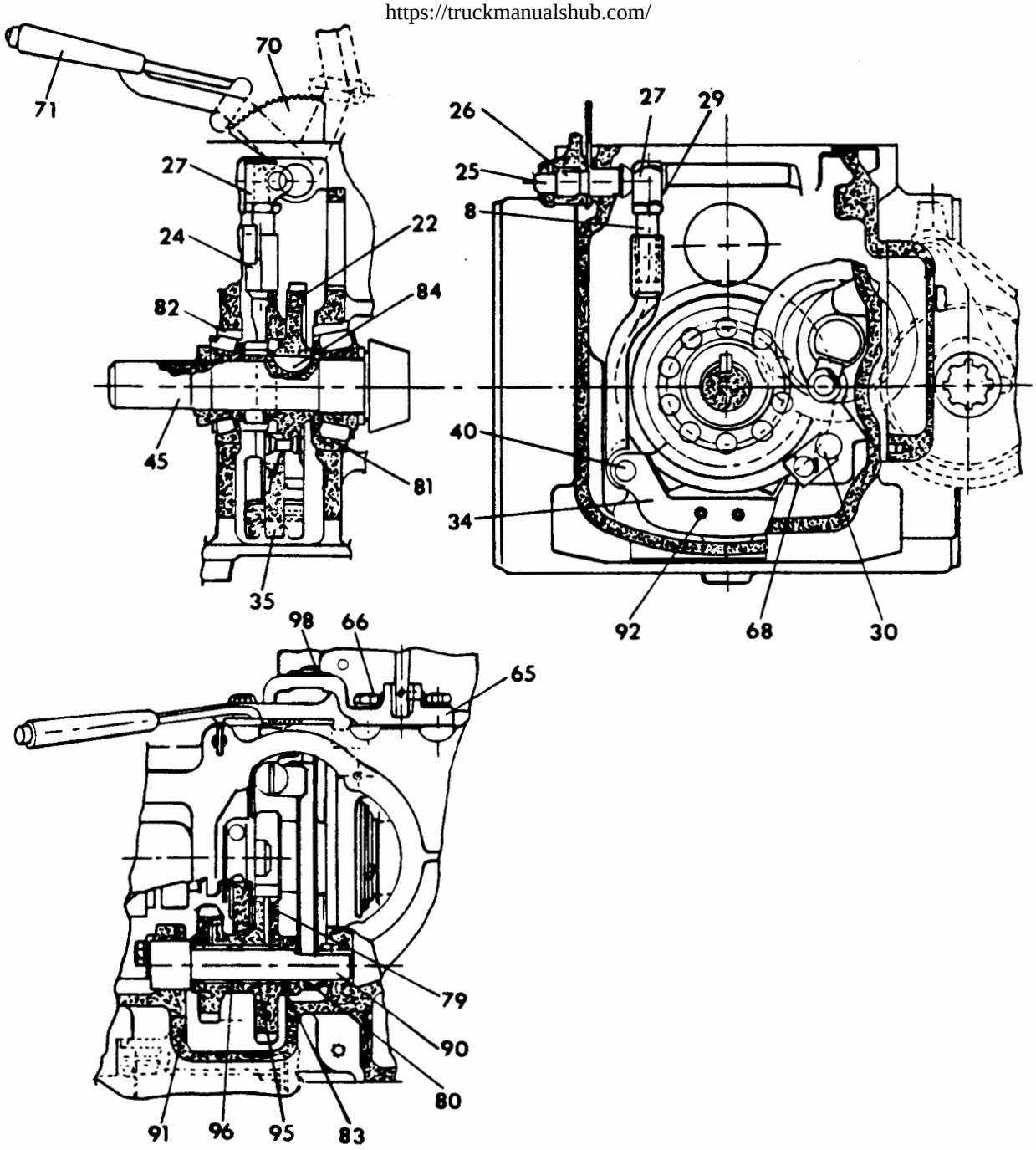

FIG. B.V/1 CROSS-SECTION OF THE REAR AXLE WITH SIDE P.T.O. AND INDEPENDENT HAND BRAKE

22. Gear assembled with brake disc; 24. Brake rod; 25. O-ring; 26. Handbrake lever axle; 27. Support; 28. Brake setscrew; 29. Lock nut; 30. Shoe lever shaft; 34. Brake shoe lever; 35. Brake shoe; 40. Pin; 45. Pinion shaft; 65. Differential lock pedal bracket; 66. Pedal bracket fixing screws; 68. Safety plate; 70. Lock quadrant; 71. Hand brake lever; 79. Double intermediate gear; 80. Spacing bushing; 81. and 82. Tapered roller bearing; 83. and 91. Washer; 84. Disc key; 90. Double intermediate pinion shaft; 92. Elastic pin; 95. Needle bearing; 96. Spacing bushing; 98. Lock ring for shaft

https://truckmanualshub.com/

If the brake shoe exceeds the admissible wear limit, replace it with a new shoe. Assembling of the new shoe should be accomplished by inserting the shoe on the lever and then bore it in two places through the two existing bores in the lever. Then fit it to the shoe lever by means of pin (Item 40), which should be secured by cotter pin.

Hand brake lever assembling with adjusting screw (Item 27) bracket should be effectuated by inserting of the smaller end into the adjusting screw (Item 28) bore, after its lubricating with oil, and screw the nut (Item 29) on the screw rod until it stops on the screw bracket.

The subassembly obtained in the previous operation should be inserted into the compartment of the rear axle housing. Insert from the front side of the rear axle housing through the holes in the housing wall and the shoe bracket hole, the shoe lever shaft (Item 30) until it reaches the front wall of the housing. Introduce the safety plate (68) with the shaft end bushing and fasten it to the housing by means of screw provided with a safety plate, which should be bent over the screw end.

Install the hand brake shaft (Item 26). Insert it from inside to outside through the side right hand hole of the housing, screw the adjusting screw (Item 28) onto the assembled rod (Item 24) on a distance of 0.315 - 0.394 in. (8-10 mm) without locking the nut (Item 29).

Introduce on the outer blading of the housing the hand brake lever (Item 26) the "O"-ring (Item 25).

Insert the lock quadrant (Item 10) on the shaft and fasten it.

Insert the differential lock control pedal bracket (Item 65) on the hand brake lever shaft and fasten it to the housing by means of the hex screws provided with lock washers.

Secure the hand brake lever shaft by inserting onto the end channel of the lock ring (Item 98) for shaft.

After inserting on the brake lever shaft (Item 26) of the lock quadrant and of lever, check the correct position on the hand brake lever shaft (Item 26). With the complete forward pushed lever, dimension between lever end and gearbox upper surface must be of 26...29mm. (1.02 - 1.14 in.).

INDEPENDENT HAND BRAKE ADJUSTMENT

Place the hand brake lever into complete braked position and then screw the adjusting screw (Item 28) in and secure it by tightening of nut (Item 29).

The hand brake should be released and check if the differential drive pinion shaft rotates slightly. It is not permitted for the shoe to contact the gear (Item 22) in this position.

NOTE: For instructions on independent hand brake use on center driven D.T. model, see Section B.X.

https://truckmanualshub.com/

B.VI FINAL DRIVES AND REAR WHEELS

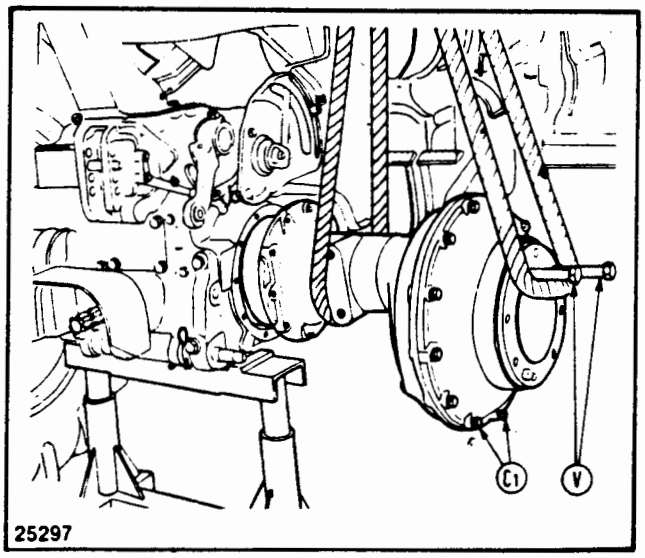

FIG. B.VI/1 REMOVING (REPLACING) THE RIGHT HAND SIDE FINAL DRIVE
C_1. Cover capscrews; V. M16x1.5 bolts for hoisting rope application

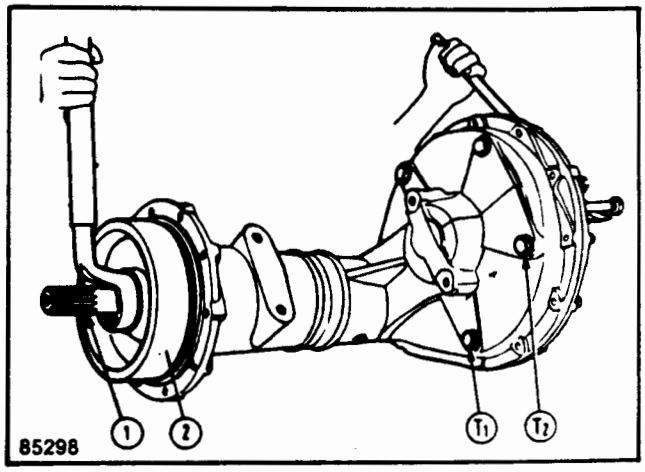

FIG. B.VI/2 REMOVING THE BRAKE DRUM LOCKNUT
T_1. Oil drain plug; T_2. Oil filler plug; 1. Final drive pinion shaft; 2. Brake drum

DESCRIPTION

The final drives are attached to the sides of the rear transmission and contain a single reduction spur gear train offering a final speed reduction ratio of 1:5.636.

The driving pinions are machined directly from the pinion shaft ends, and the driven bull gears are splined onto the axle shafts.

Track adjustment is obtained by suitable arrangement of the wheel rims and disc:

360C-4 positions, 40.0 in.-52.0 in. (1016-1321 mm)

360/460/510-8 positions, 47.4 in.-74.9 in. (1203-1903 mm)

460V-4 positions, 33.4 in.-45.4 in. (8484-1153.2 mm).

REMOVAL

Remove each final drive unit as follows:

1. Drain approximately two gallons of oil from the transmission.
2. Drain the final drive lubrication oil through the plug hole (Item T_1, Fig. B.VI/2).
3. Remove screws and fenders from the brackets. Disconnect the rear lighting cables before removing the left hand side fender.
4. Attach a sling to the final drive so that it can't rotate.
5. Raise the unit until the weight is taken off the drive wheel.
6. Remove the wheel and tire unit and place a shop stand under the transmission housing. ing.
7. Fit two M16x1.5 (Item V, Fig. B.VI/1) bolts to the drive wheel shaft flange, arrange a hoisting rope around the housing and take the weight off.
8. Remove the final drive housing attaching capscrews and then the unit itself from the tractor (Fig. B.VI/1).

https://truckmanualshub.com/

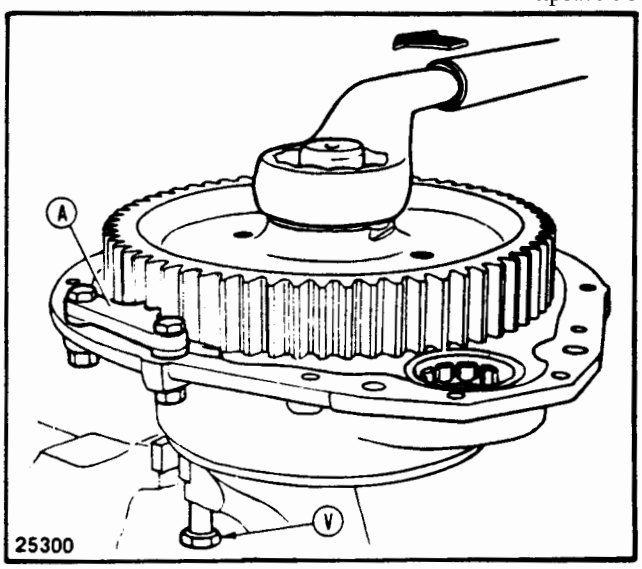

FIG. B.VI/3 REMOVING THE BULL GEAR LOCKNUT

V. M16 x 1.5 bolt for cover attachment to the bench vise.

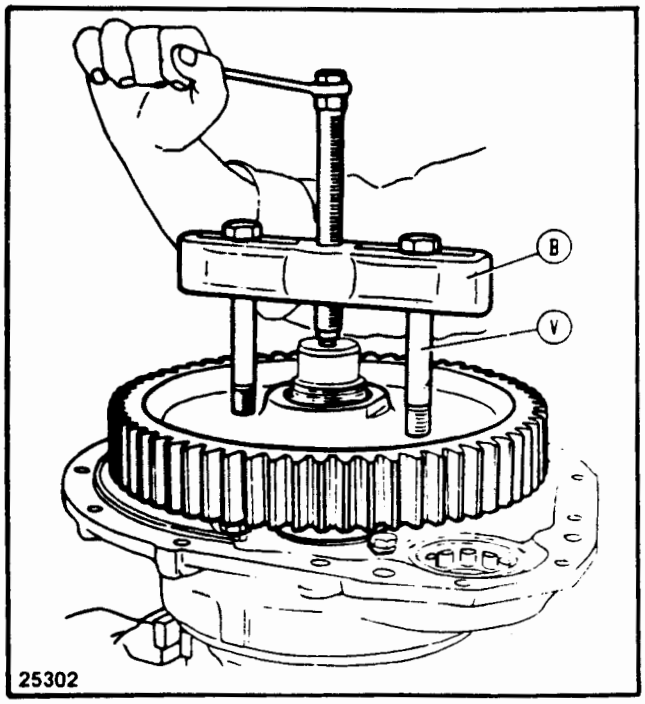

FIG. B.VI/4 REMOVING THE BULL GEAR BY MEANS OF A PULLER

DISASSEMBLY

Dismantle each final drive unit as follows:

1. Unscrew the brake drum nut stopping the rotation of the axle shaft by means of a crowbar as shown in Fig. B.VI/2).
2. Remove the brake drum (Item 2) with a puller.
3. Remove the final drive cover and bull gear as an assembly, after unscrewing the attaching capscrew (Item C_1, Fig. B.VI/1), then clamp the assembly in a bench vice suitably arranging the M16x1.5 bolts (Item V, Fig. B.VI/3) already used for removal.
4. Install on the cover the gear stop then unscrew the bull gear nut (Fig. B.VI/3).
5. Remove the bull gear from its shaft using a puller ("B" Fig. B.VI/4) and withdraw the spacer (Item 4, Fig. B.VI/8).
6. Tap with a lead hammer in the direction shown by the arrow in Fig. B.IV/8 to expel the shaft (Item 3).
7. Straighten the lock plates then unscrew the attaching capscrews (Item C_2) to remove the bearing washer (Item 5).
8. Withdraw the retaining pin (Item 11, Fig. B.VI/5) then remove the pinion shaft (Item 1) and bearing (Item 9) in the direction shown by the arrow in Fig. B.VI/5 by striking the opposite end with a lead hammer.

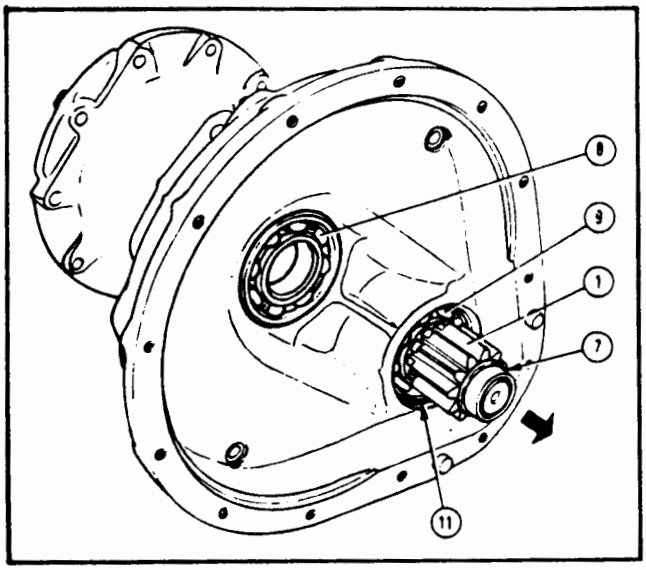

FIG. B.VI/5 FINAL DRIVE HOUSING

NOTE: The arrow indicates the direction of withdrawal of pinion shaft

1. Final drive pinion shaft; 7. Roller bearing inner ring; 8 and 9. Ball bearings; 11. Bearing (9) retaining ring

https://truckmanualshub.com/

9. Remove the retaining ring and press the ball bearing (Item 9) off the shaft, then remove the roller bearing inner ring (Item 7, Fig. B.VI/6) using a split-type bearing puller.
10. Remove the ball bearing (Item 6, Fig. B.VI/8), the roller bearing outer ring (Item 7) and the ball bearing (Item 8, Fig. B.VI/5) using a universal puller.

INSPECTION

After thorough washing of the disassembled parts, proceed as follows:

1. Make sure that the seals (Items 12 and 13, Fig. B.VI/7) are not damaged.
2. Examine the gear working surfaces and check the tooth backlash.
3. Check the mating splines of bull gear and shaft.
4. Examine the bearings very carefully.

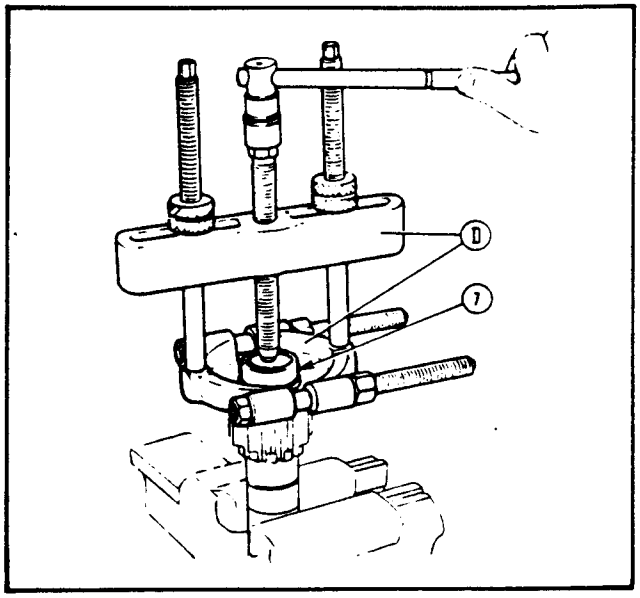

FIG. B.VI/6 PULLING OUT THE PINION SHAFT OUTER ROLLER BEARING INNER RACE (7)
D. Split-type bearing puller

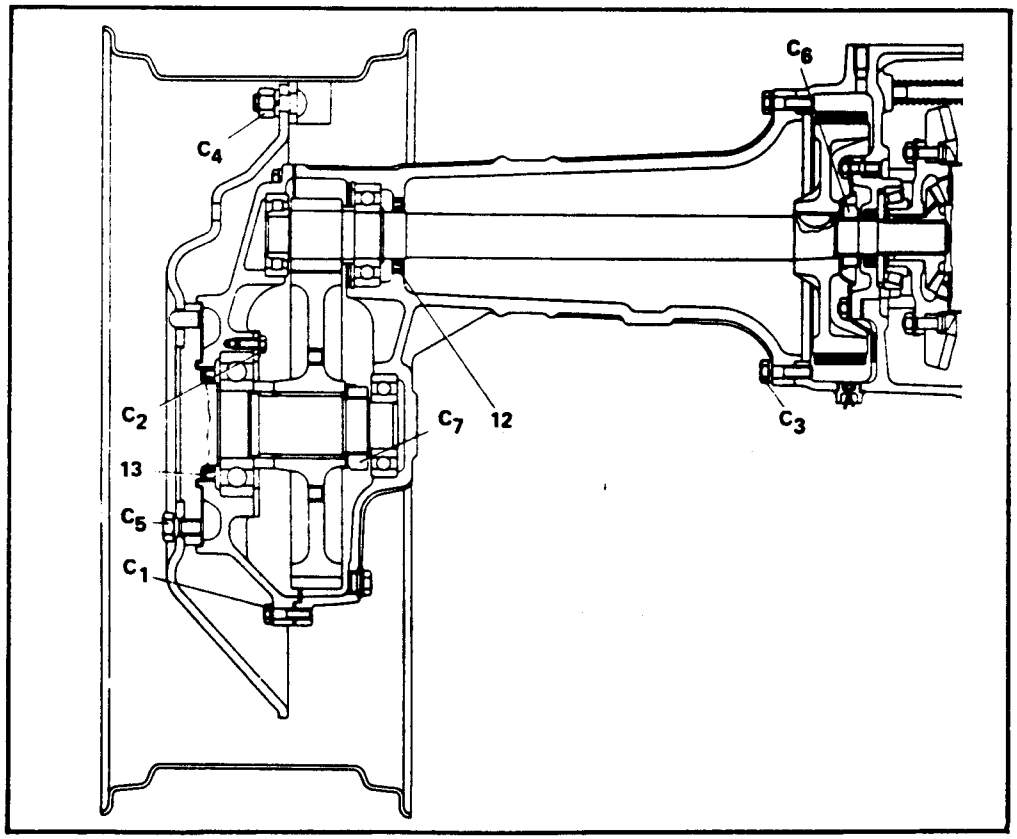

FIG. B.VI/7 CROSS-SECTIONAL VIEW OF ONE FINAL DRIVE
C_1. Final drive case cover capscrews; C_2. Bull gear outer bearing should ring capscrews; C_3. Capscrews securing final drive to transmission; C_4. Wheel rim bolts; C_5. Wheel disc screws; C_6. Brake drum nut; C_7. Bull gear nut; 12 and 13. Oil seals

https://truckmanualshub.com/

ASSEMBLY

At assembly, take notice of the following items:

1. When installing the pinion shaft and the axle shaft be careful not to damage the seal (Items 12 and 13, Fig. B.VI/7).
2. Fit the outer roller bearing inner ring (Item 7, Fig. B.VI/5) to the pinion shaft.
3. Install the outer ring of the roller bearing (Item 7, Fig. B.VI/8) into the final drive cover housing with the factory mark facing outside.
4. Install the retaining bearings using drive bars of appropriate dimensions.
5. In case of replacement, arrange the seals (Items 12 and 13) as shown in Fig. B.VI/7.
6. Tighten the bull gear nut (Item C_7, Fig. B.VI/7) after applying the gear stop (Item A, Fig. B.VI/3) previously used as disassembly.
7. Be sure to meet the torque requirements specified in the "Torque Specifications" table.

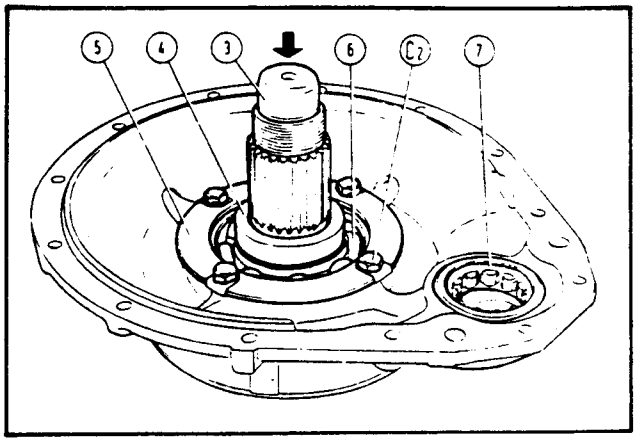

FIG. B.VI/8 REMOVING (REPLACING) THE BULL GEAR SHAFT (3)

NOTE: Arrow indicates the direction of shaft removal.

C_2. Washer (5) capscrews; 4. Spacer; 5. Bearing (6) washer; 6. Ball bearing; 7. Roller bearing outer ring

https://manualshub.com/

B.VII POWER TAKE-OFF

A. POWER TAKE-OFF

The power take-off (a, Fig. B.VII/1) is placed internally in the rear cover of the rear axle housing and can be operated in two ways: one directly from the engine crankshaft through the clutch and therefore independent from the tractor motion, and the other synchronized to the gearbox.

The lever (L, Fig. B.VII/1) selects the type of operation. If the lever acts on the sliding gear (1, Fig. B.VII/2) this connects the drive shaft (2) directly to the engine P.T.O. operating is independent, or, by shifting the gear (1) into engagement with gear (3), which is assembled with the bevel pinion shaft, synchronizes the P.T.O. operating with the tractor travel speeds.

To shift the lever (L, Fig. B.VII/1) of the independent P.T.O. from the neutral "N" setting to the setting "I", just disengage the P.T.O. clutch. To shift the lever to the setting "S" the engine must be stopped.

The P.T.O. has the following characteristics:

— P.T.O. r.p.m. for 1 covered meter, in case of synchronized transmission to the travel speed: 2.26 turns for P.T.O. 540 r.p.m.

— independent P.T.O. running at rated engine r.p.m. (2400 r.p.m.) 658 r.p.m. for the 540 r.p.m. P.T.O.

— side face of the n = 540 r.p.m. shaft: 6 splines - 35 x 28.5 x 8.75

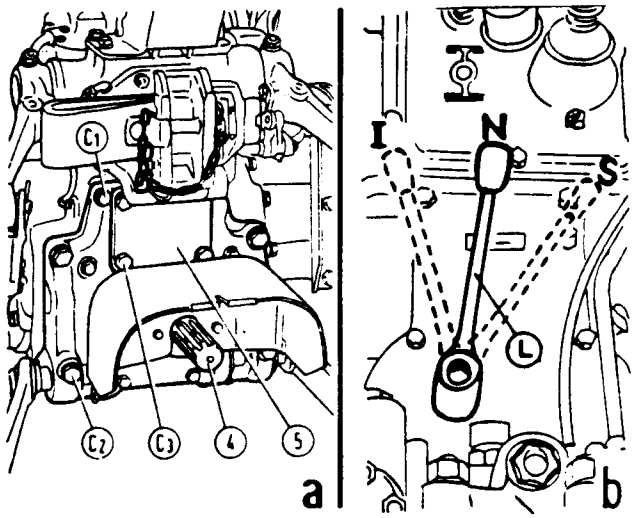

FIG. B.VII/1 P.T.O. AND P.T.O. CONTROL INSTALLATION

a. P.T.O. mounting; b. P.T.O. control; C_1, C_2. Transmission rear cover fixing screws; C_3. Cover (5) fixing screws; N. Neutral position corresponding with the P.T.O. disengaged; L. Coupling lever; I. Independent P.T.O. position; S. Synchronous P.T.O. position; 4. P.T.O. shaft; 5. Drive shaft cover

OVERHAULING

For P.T.O. removal proceed as follows:

— drain the gearbox housing and rear axle housing lubricating oil;

— set the lever (L, Fig. B.VII/1) into "I" position;

— remove the fixing screws and then remove the P.T.O. from the rear axle, together with the rear axle housing cover.

For disassembly, we recommend installing of the assembly on the turnover stand. Remove the rear cover of the rear axle housing to gain access to the sliding gear (1, Fig. B.VII/2) and the P.T.O. engagement unit for removal.

Check the seal ring (6) carefully and replace if damaged.

Reassemble the unit according to Fig. B.VII/2. When installing the unit, rotate the P.T.O. shaft to facilitate meshing of the drive shaft (2, Fig. B.VII/2) with the sliding gear splines (1).

https://truckmanualshub.com/

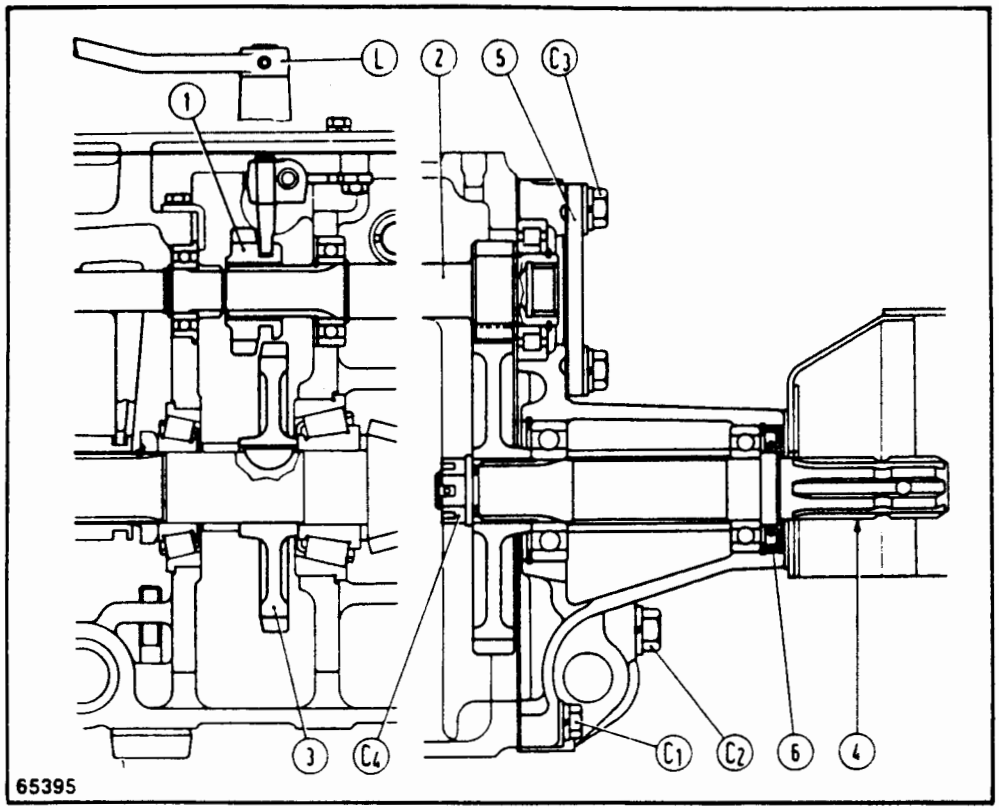

FIG. B.VII/2 P.T.O. CROSS-SECTION

C_1 and C_2. Rear transmission cover fixing screws; C_3. Cover (5) fixing screws; C_4. Driven gear shaft locknut; L. Engaging handle; 1. Sliding gear; 2. Driving shaft; 3. Driven gear; 4. Driven P.T.O. shaft; 5. Driving shaft cover; 6. Seal ring

https://truckmanualshub.com/

B.VIII FRONT AXLE AND STEERING

DESCRIPTION

The front axle and steering controls for the compact, standard and vineyard tractors are of the same basic design and is covered in this section of the manual.

The front wheel drive version is covered in a different section as the repair operation differ.

The steering controls for the above mentioned tractors consist of the following:

— Steering wheel;
— Steering column;
— Steering box and nut shaft with steering arm;
— Front axle assembly with tie rod and linkages.

STEERING BOX

Worm-and-nut steering box with 1:22.4 ratio.

REMOVAL

Remove the steering box as follows:

1. Remove the cowling separating it from the instrument panel and disconnecting from the latter the lighting-starting switch.

2. Disconnect the throttle links from its leverage.

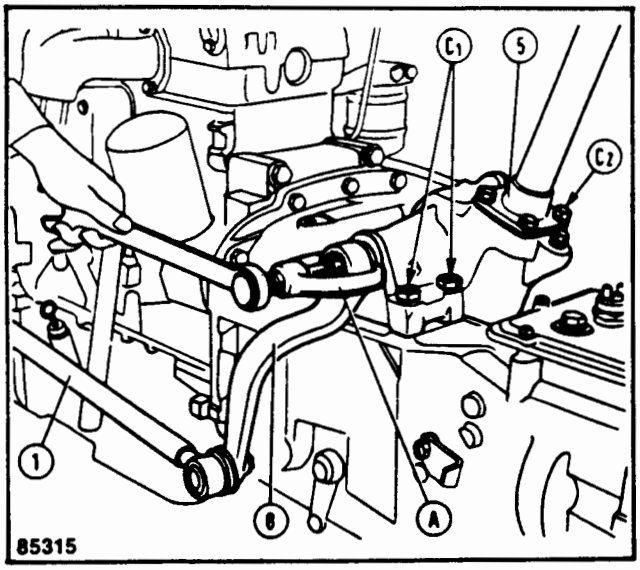

FIG. B.VIII/1 REMOVING THE STEERING ARM (8) FROM THE STEERING BOX NUT SHAFT BY A PULLER

C_1. Steering box self-locking screws; C_2. Cover (5) screws; 1. Drag link; 5. Top cover with steering column

3. Detach the drag link (Item 1, Fig. B.VIII/1) or remove the steering arm (Item 8) by means of the puller, after unscrewing the nut.

4. Remove the steering box assembly complete with steering wheel after unscrewing the attaching capscrews.

DISASSEMBLY

Before starting to disassemble, drain the oil by removing one of the side cover lower screws and the threaded plug, then proceed as follows:

1. Remove the steering wheel after unscrewing the nut which secures it onto the steering shaft.

2. Remove the steering shaft key, remove the screws (Item C_2, Fig. B.VIII/1) and then withdraw the cover (Item 5) with steering column and hand throttle.

3. Remove the capscrews (Item C_3, Fig. B.VIII/4), then withdraw the steering box nut shaft (Item 2) and adjuster (Item V), nut (Item V_1) and side cover (Item 9) as an assembly, using a lead hammer.

4. Withdraw the steering shaft upwards with worm (Item 4) and upper taper roller bearing (Item 6).

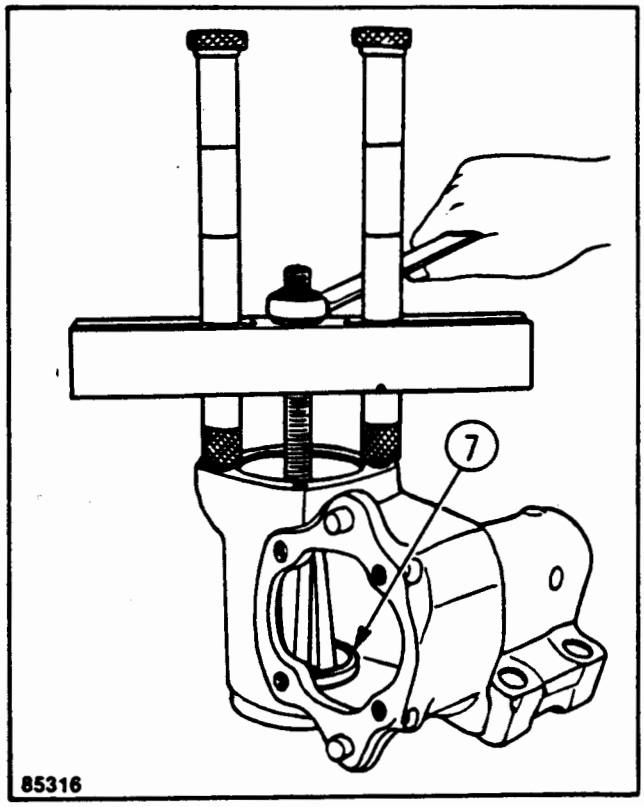

FIG. B.VIII/2 REMOVING THE CUP OF THE LOWER TAPERED ROLLER BEARING (7) WITH A UNIVERSAL PULLER

https://truckmanualshub.com/

5. Withdraw the lower taper roller bearing (Item 7) by hand.
6. Remove the cup of the lower bearing (Item 7) using a universal puller (Fig. B.VIII/2) and recover the shims.

   NOTE: The inner races of both upper and lower taper roller bearings are machined directly on the body of the worm screw which, for service, is furnished together with the steering shaft, as an assembly.

In case of replacement, remove the bushings (Items 10 and 11, Fig. B.VIII/3) from the steering box and from the side cover by means of a puller (Item D, Fig. B.VIII/3). Notice that the bushing (Item 11) is to be removed after the oil seal (Item 12).

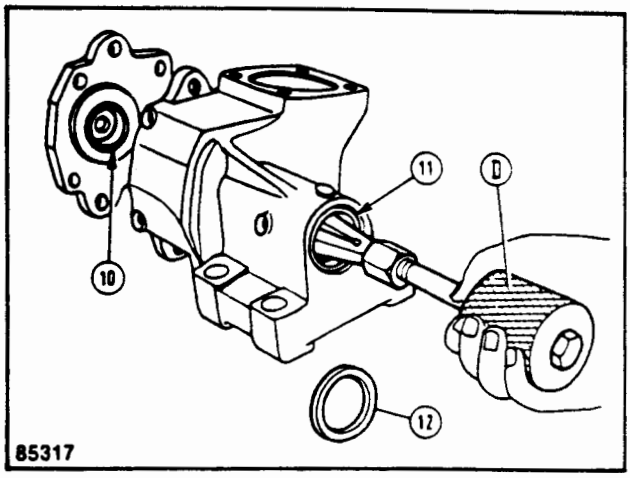

FIG. B.VIII/3 REMOVING THE STEERING BOX NUT SHAFT BUSHING (11) BY MEANS OF A PULLER
10. Cover bushing; 12. Oil seal

INSPECTION

Check the worm and nut surfaces for nicks or seizure marks.

Make sure that the clearance between bushings and nut shaft is within the permissible limits. (See "Fits and Tolerances" table.)

Also make sure that the nut has no end play because of worm nut thrust washers (Item R, Fig. B.VIII/4). If so, replace the whole nut shaft as an assembly.

Try the worm screw roller bearings for free running and check the oil seal (Item 12, Fig. B.VIII/3) for efficiency and reliability.

Check the steering levers and tie-rods for bends of bucklings, and replace them if necessary.

ASSEMBLY

Assemble the steering box as follows:

1. Insert the shim stack (Item S_1, Fig. B.VIII/4) and install the cup of the lower taper roller bearing (Item 7) using a suitable driver.
2. Install the bushings to the steering box and to the side cover using the drive bar, then ream them to bring the diameter to the specification listed in the "Fits and Tolerances" table.
3. Install the oil seal (Item 12, Fig. B.VIII/3) using a suitable driver.
4. Adjust the steering shaft taper roller bearings as indicated in the paragraph 1 of the following chapter.
5. Set the worm-and-nut as indicated in the paragraph 2.
6. Be sure to meet the tightening torque requirements specified in the "Torque Specifications" table.

   Prior to assembly, the side cover screws (Item C_3, Fig. B.VIII/5) and the adjusting lever (Item V) are smeared with a thin film of jointing compound.

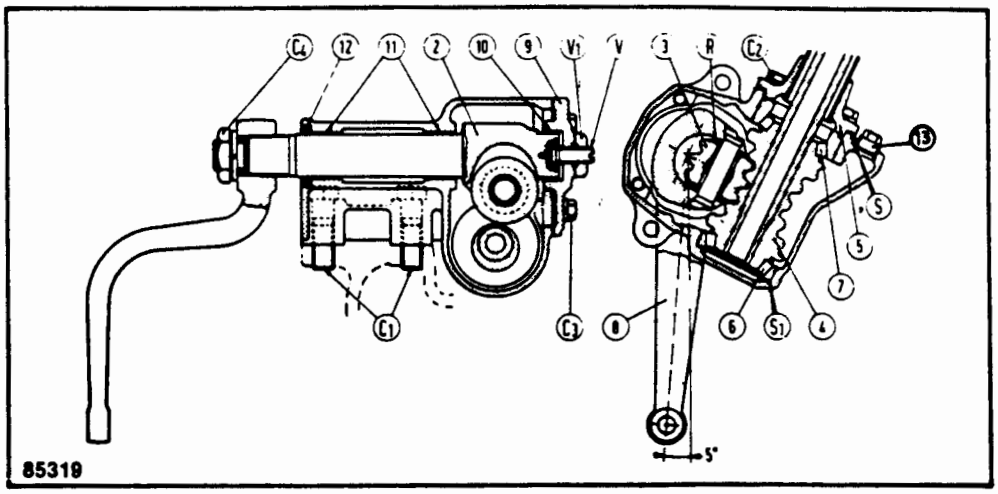

FIG. B.VIII/4 STEERING BOX CROSS-SECTION

C_1. Steering box self-locking screws; C_2. Upper cover capscrews; C_3. Side cover capscrews; C_4. Steering arm (8) nut; R. Nut thrust washers; S. Worm bearings shims; S_1. Worm-and-nut setting shims; V. Nut adjusting screw; V_1. Nut screw (V) locknut; 2. Nut shaft; 3. Nut; 4. Worm; 5. Upper cover; 6 and 7. Tapered roller bearings; 8. Steering arm; 9. Side cover; 10 and 11. Bushings; 12. Oil seals

https://truckmanualshub.com/

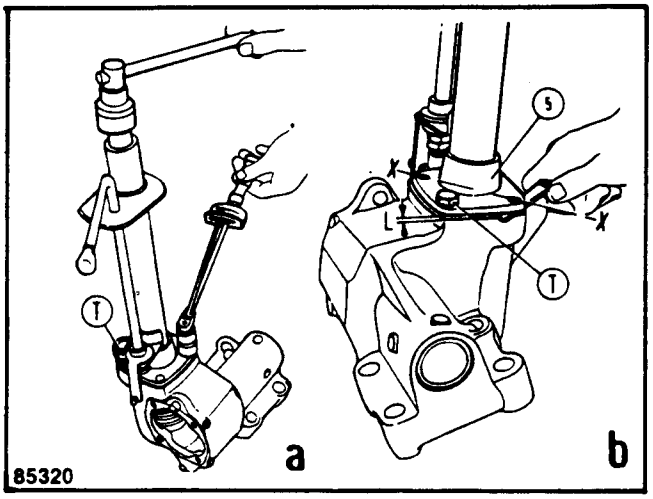

FIG. B.VIII/5 ADJUSTING THE STEERING SHAFT TAPERED ROLLER BEARINGS
a. Tightening the screws (T) with a torque wrench; b. Measuring the clearance (L) between cover (5) and steering box with feeler gauge; X-X. Clearance measuring axis; 5. Top cover with steering column

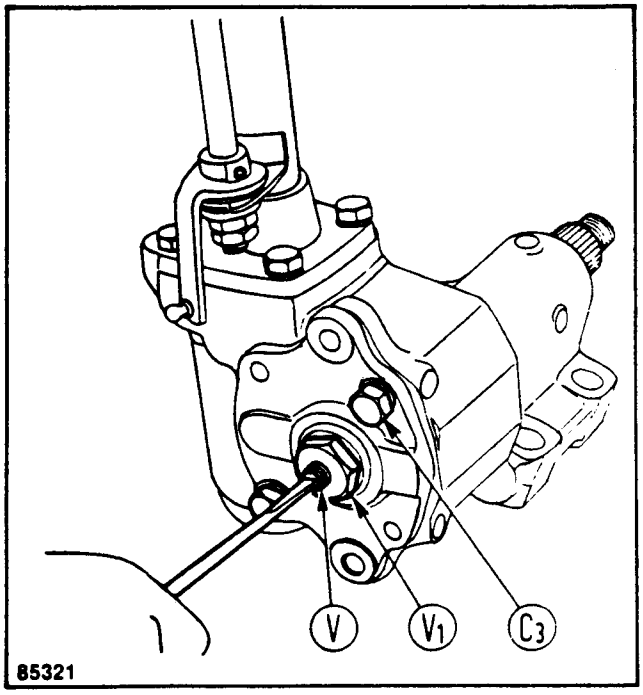

FIG. B.VIII/6 ADJUSTING THE WORM-AND-NUT SETTING
C_3. Side cover capscrews; V. Adjusting screw; V_1. Adjusting screw (V) nut

STEERING BOX ADJUSTMENTS

The adjustment operations can be subdivided into two distinct phases and are grouped under the two following subtitles.

1. **Adjusting the worm screw taper roller bearings.**

   Install the steering shaft in the steering box and lubricate the taper roller bearings to suit.

   Fit the top cover and steering column to the steering box using only two of the four screws, properly lubricated with oil and with no lock washer.

   Gradually cross-tighten the screws (Item T, Fig. B.VIII/5) by applying a torque of 2.2 ft.-lbs. (3 N • m) by means of a torque wrench, and simultaneously turn the steering shaft (Diagram a) by hand in order to insure the proper seating of the rollers on their bearing races.

   Measure the clearance between top cover and steering box by taking two readings with a feeler gauge at diametrically opposed points on the axis X-X (Diagram b, Fig. B.VIII/5) and then finding the average of the readings.

   Remove the cover (Item 5), insert a shim stack (Item S, Fig. B.VIII/4), adding 0.004" (0.10 mm.) to the value found previously, then refit the cover and torque tighten the screws to (41.5-45.5 ft.-lbs [56.2-76.2 N-m]).

   Measure the torque which is required to turn the steering shaft and if it is different from 0.4-0.7 ft.-lb. (.54-.94 N • m), repeat the adjustment.

2. **Adjusting the worm-and-nut setting.**

   Smear a thin film of lead oxide on the nut working surface.

   Install in the steering box the steering shaft nut with side cover and with the adjusting screw (Item V, Figure B.VIII/6) completely backed out, so that the nut is at the end of its run towards the side cover.

   Secure the side cover with two screws (Item C_3).

   Check the number of turns that the steering wheel makes between stops.

   Find the mid-position of the steering wheel between stops, corresponding to the position of the steering arm (Item 8) for straightforward motion, as shown in Fig. B.VIII/4.

   Turn the adjusting screw (Item V, Fig. B.VIII/6) in so as to take up the play between worm and nut, then block it with the jam nut (Item V_1).

   Check the torque which is required to turn the steering shaft. It should be 1-1.9 ft.-lb. (1.3-2.5 N • m) through the initial 30° in both directions, and 0.43-0.87 ft.-lbs. (.58 - 1.2 N • m) in proximity of the stop.

https://truckmanualshub.com/

Remove the nut shaft complete and inspect the nut examining the uniformity of the contact areas on the working surfaces.

To correct, if necessary, suitably vary the shim stack (Item S_1, Fig. B.VIII/4) considering that if the stack is increased then the shims (Item S), found in paragraph 1 should be correspondingly increased and vice-versa.

NOTE: The aforementioned adjustment may be used at steering box overhauls as a further check of the worm-and-nut setting, if the parts are reusable. In this case we suggest maintaining the original factory shim stack (Item S_1, Fig. B.VIII/4). Alter the shim stack only when one or more parts are replaced.

FRONT AXLE AND STEERING

DESCRIPTION

The front axle is tubular and centrally pivoted and has telescopic beam extensions which allow a range of tread width adjustments.

By moving the front axle beam extensions it is possible to obtain the following different tread width adjustments:

360C—40-52 in. (1016-1321 mm) 4 positions
360—50.77.5 in. (1280-1975 mm) 8 positions
460V—32.2-41.2 in. (843.3-1153.2 mm) 4 positions
460—50.3-77.5 in. (1280-1975 mm) 8 positions
510—50.3-77.5 in. (1280-1975 mm) 8 positions

OVERHAUL

If the front axle trunnion assembly requires servicing, proceed as follows:

1. Apply the hand brake and insert wooden wedges to block the drive wheels.
2. At one axle end, remove the bolt (Item C_9, Fig. B.VIII/7), the steering lever (Item 17) from the wheel spindle, withdraw the pin (Item 18) and loosen the screws (Item C_8).
3. Place a hydraulic jack under the crankcase oil sump and raise the front end of the tractor to take the weight off the axle.
4. Remove the front wheel, spindle-beam extension assembly (Item 19, Fig. B.VIII/7).
5. Remove the setscrew (Item C_7, Fig. B.VIII/8) and then the trunnion pin (Item 20) using a sliding weight type puller and adaptor.
6. Remove the front axle and remaining wheel as an assembly and recover the end thrust washers (Item 25, Fig. B.VIII/9).

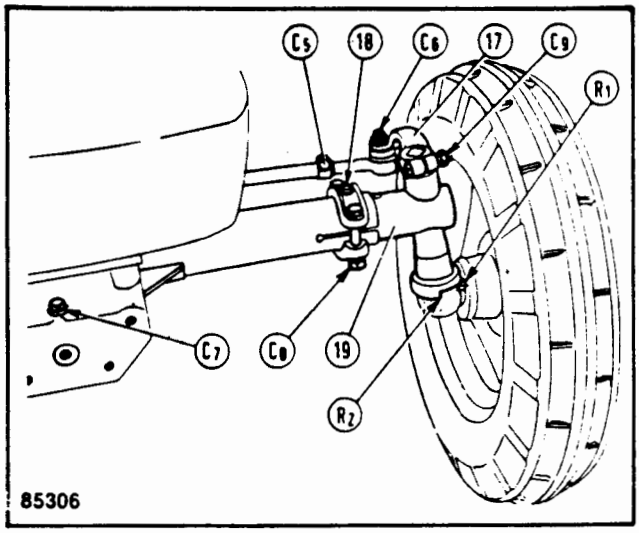

FIG. B.VIII/7 FRONT AXLE LEFT END

C_5. Tie rod setscrew nut; C_6. Steering lever (17) ball socket blocking nut; C_7. Trunnion pin setscrew; C_8. Beam extension (19) setscrew nut; C_9. Steering lever (17) bolt nut; R_1, and R_2. Steering angle adjustable and fixed stops; 17. Steering lever; 18. Beam extension set pin; 19. Beam extension

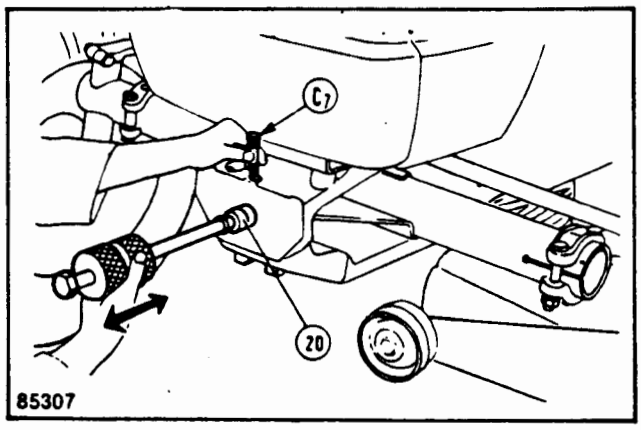

FIG. B.VIII/8 REMOVING THE TRUNNION PIN (20) BY MEANS OF A SLIDE PULLER AND ADAPTOR

C_7. Trunnion pin setscrew

7. Remove the bushings (Item 33) using a bushing puller, a rod and the bridge.

Disassemble the steering lever pivot assembly as follows:

1. Remove the cowling and the storage battery.
2. Disconnect the cables.
3. Remove the grille and the battery tray with air cleaner.
4. Disconnect the steering lever (Item 27, Fig. B.VIII/10) from the drag link (Item 1) and from the tie-rods (Item 40) using a puller.

https://truckmanualshub.com/

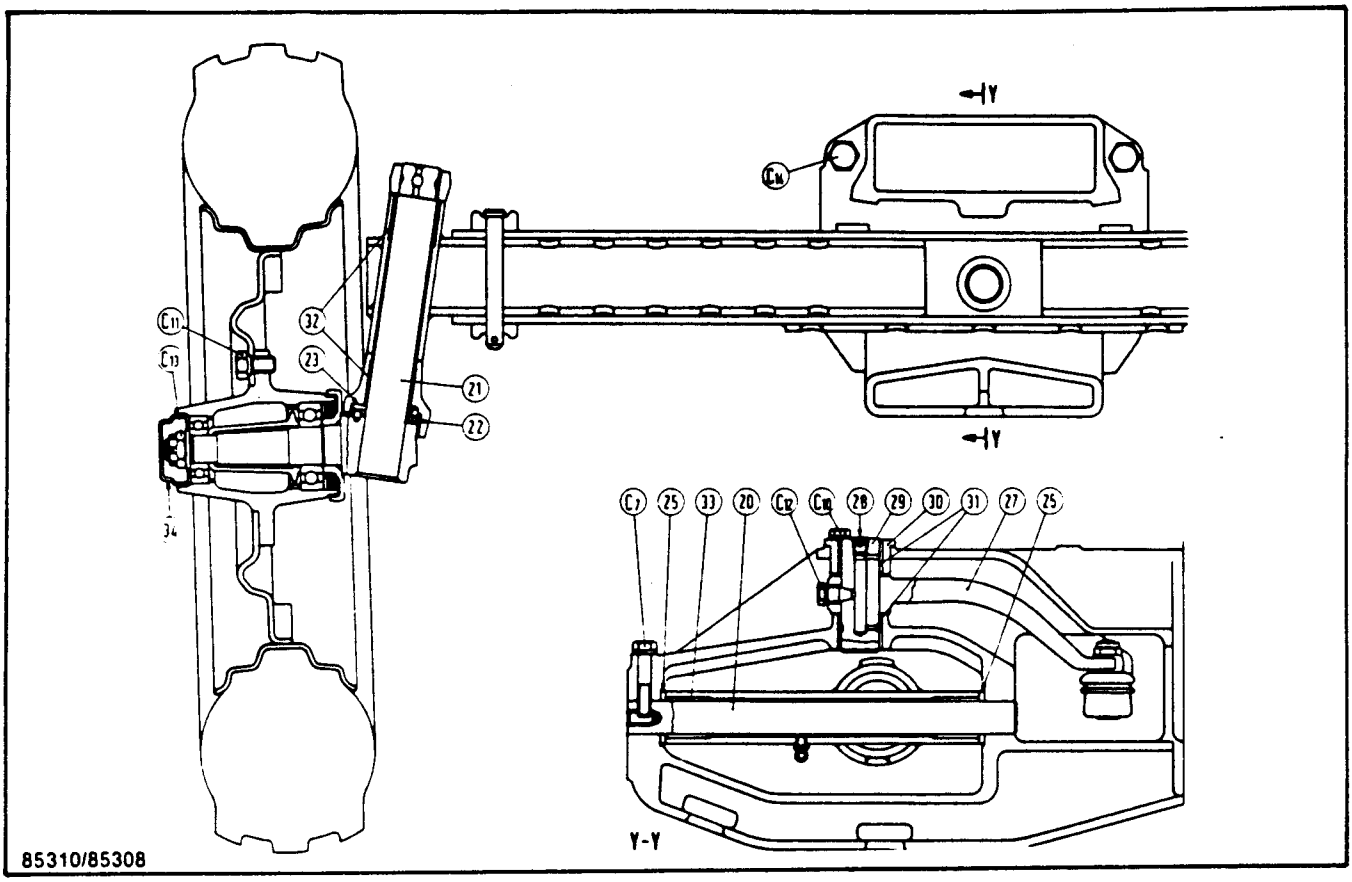

FIG. B.VIII/9 FRONT AXLE CROSS-SECTION

C_7. Trunnion pin (20) setscrew; C_{10}. Flange (30) capscrews; C_{11}. Front wheel disc screws; C_{12}. Steering lever setscrew; C_{13}. Front wheel hub nut; C_{14}. Bracket capscrews; 20. Trunnion pin; 21. Spindle; 22. Bronze thrust washer; 23. Steel thrust washer; 25. Trunnion pin end washers; 27. Steering lever; 28. Recessed head screw; 29. Steering lever (27) pivot; 30. Upper bushing flange; 31, 32 and 33. Bushings; 34. Wheel hub cap

5. Remove the setscrew (Item C_{12}, Fig. B.VIII/9) and the recessed head screw (Item 28).
6. Withdraw the pivot (Item 29) using a M 12x1.5 puller screw and a sliding weight puller as shown in Fig. B.VIII/10.
7. Remove the flange (Item 30) with bushing and, finally, the lever (Item 27).
8. Remove the bushings (Item 31, Fig. B.VIII/9) respectively from the flange (Item 30) using a suitable drive bar and from the axle bracket using a bushing puller, a bridge and a universal puller. (Fig. B.VIII/11).

The removal of the front wheel spindles and hubs can be done for each wheel without removing the front axle, as follows:

1. Remove the hub cap (Item 34. Fig. B.VIII/10) and loosen the nut (Item C_{13}) following the removal of its cotter pin.

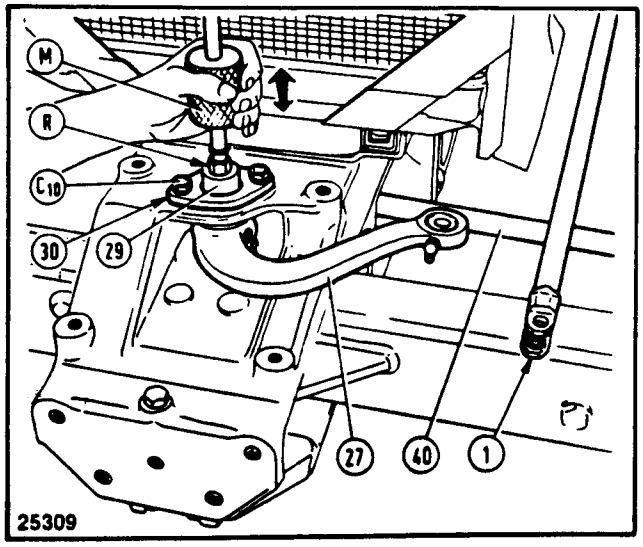

FIG. B.VIII/10 REMOVING THE STEERING LEVER (27) PIVOT (29)

C_{10}. Flange (30) capscrews; M. Sliding-weight type puller; R. Reduction; 1. Drag link; 30. Upper bushing flange; 40. Tie rod

https://truckmanualshub.com/

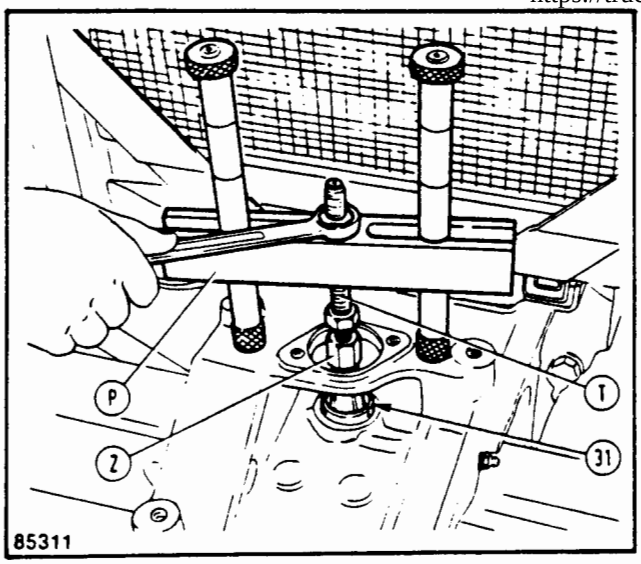

FIG. B.VIII/11 REMOVING THE BUSHING (31) FROM THE FRONT AXLE BRACKET
P. Bridge; T. Puller rod; Z. Bushing puller

2. Loosen the front wheel capscrews (Item C_{11}).
3. Apply the hand brake, and block the drive wheels, raise the tractor front end and set the axle down on two shop stands, as shown in Fig. B.VIII/12.
4. Remove the front wheel.
5. Remove the retaining bolt and nut (Item C_9, Fig. B.VIII/12) and remove the wheel spindle (Item 21) and hub together, to be disassembled later on the workbench.
6. Remove the bushings (Item 32, Fig. B.VIII/9) from the beam extension using the universal pullers already quoted.

See "Fits and Tolerances" table for all mating parts previously considered.

At assembly, take good notice of the following cautions:

1. The washers (Item 22, Fig. B.VIII/9) (Item 23) shall be installed with the oil scrolls facing the washers (Item 23).
2. Be sure to meet the tabulated torque requirements.
3. Wire lock the screw (Item C_{12}, Fig. B.VIII/9).
4. Complete the assembly by lubricating the axle trunnion, steering lever, wheel spindles and by filling the wheel hubs with wheel bearing grease.

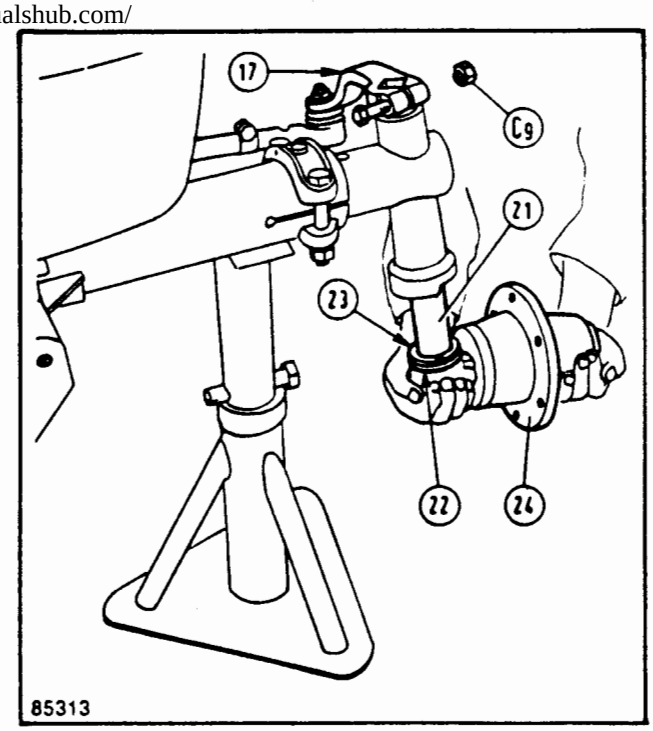

FIG. B.VIII/12 REPLACING (REMOVING) THE STEERING SPINDLE (21) COMPLETE WITH WHEEL HUB (24)
C_9. Steering lever (17) setscrew; 17. Steering lever; 22. Bronze thrust washer; 23. Steel thrust washer

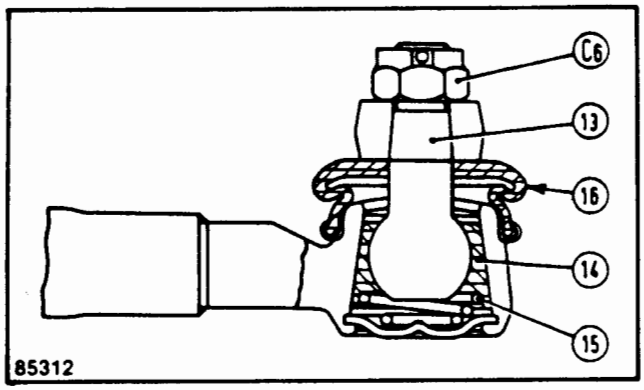

FIG. B.VIII/13 SELF-LUBRICATING BALL JOINT
C_6. Nut securing steering lever to ball pivot; 13. Ball pivot; 14. Tapered nylon bushing; 15. Seat (14) retaining spring; 16. Dust cap

https://truckmanualshub.com/

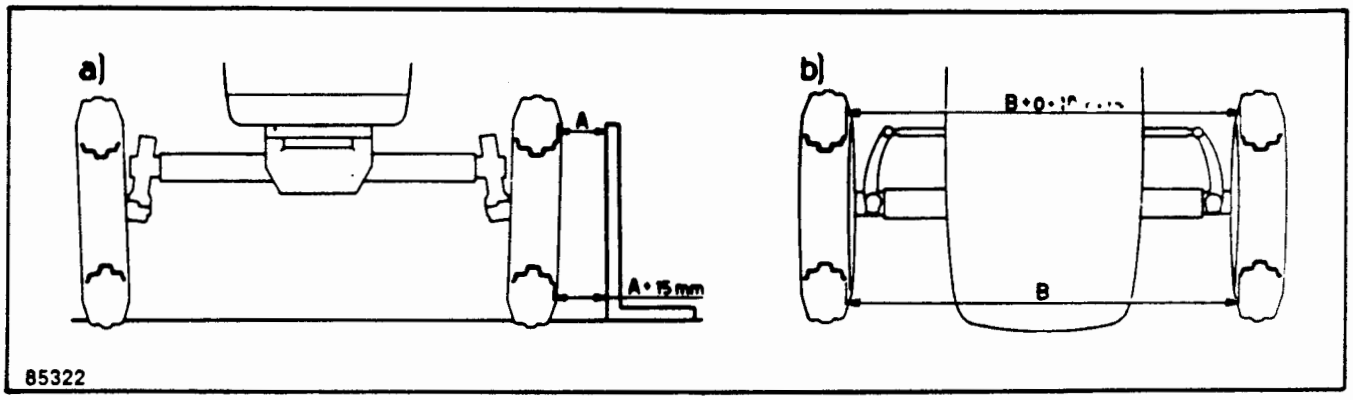

FIG. B.VIII/14 CHECKING FRONT WHEEL ALIGNMENT
(10 mm. = 3/8"; 15 mm. = 19/32")
a. Caster check; b. Toe-in check

FRONT AXLE CHECKS

Check the front wheel setting and steering as follows:

CHECKING THE FRONT WHEEL ALIGNMENT

We recommend this check following every alteration of the tread adjustment or if front tires show abnormal wear.

The front wheels, set for straight-forward motion should be inclined 2° with respect to the ground, corresponding to a difference of about 19/32" (15 mm.) between the wheel disc rim (Diagram a. Fig. B.VIII/14) and parallel to the tractor longitudinal axis. However, a maximum toe-in of 3/8" (10 mm.), measured between the rims of the discs is permissible (Diagram b). To correct, adjust the end of right side tie-rod.

https://truckmanualshub.com/

B.IX FRONT DRIVE AXLE (SIDE DRIVEN)

DESCRIPTION

The four wheel drive (DT) version of the tractor is obtained by replacing the front axle of the tractor with a housing that has a centrally pivoted differential. Through the use of a reduction gearbox (Fig. B.IX/17), located on the side of the gearbox, power is transferred from the gearbox to the reduction gear to the front differential via the cardanic shaft.

The planetary axis of the differential transmit the motion to the front wheels by two homokinetic joints.

The front transmission is engaged by shifting upward the control lever (M, Fig. B.IX/18).

FRONT DRIVE AXLE REMOVAL

1. Apply the hand brake and insert wood wedges to block the drive wheels.
2. Remove the transversal and the longitudinal drag links.
3. Place a hydraulic jack under the front axle, remove the swinging axle retaining screw (Item S13, B.IX/11) and finally the swinging axle by means of puller A (Fig. B, B.IX/1).
4. Raise the tractor, remove the drive shaft retaining threaded ring, remove the front drive wheels (Fig. B.IX/2) together with the U-joint cross and the fork, completely assembled and recover the two thrust washers.

NOTE: Prior to removing the casing under the tractor it is advisable to loosen the front wheel retaining screws in order to make easy the further operations.

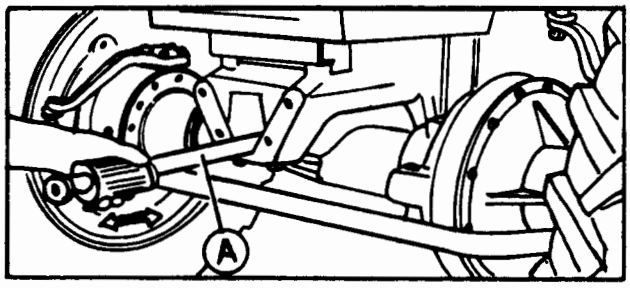

FIG. B.IX/1 REMOVING THE FRONT DRIVE AXLE SWINGING AXLE

A. Puller

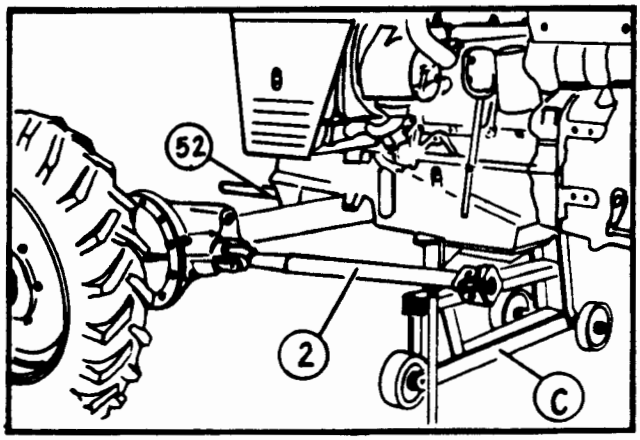

FIG. B.IX/2 REMOVING THE FRONT DRIVE AXLE

C. Rolling ficture; 2. Drive shaft; 52. Swing Shaft

DISASSEMBLY

The following operations and figures are referring only to the differential, steering knuckle and left wheel hub assembly; for the right wheel the procedure is similar.

In order to facilitate the removal fix the front axle on a support. Dismantle the front drive axle as follows:

1. remove the front wheels, complete;
2. remove assembly of U-joint cross, flange and fork after screwing back the nut which protects the grooves against dirt;
3. remove the steering levers, right and left (Items 3 and 4, Fig. B.IX/3) together with transversal drag link (5) as an assembly;

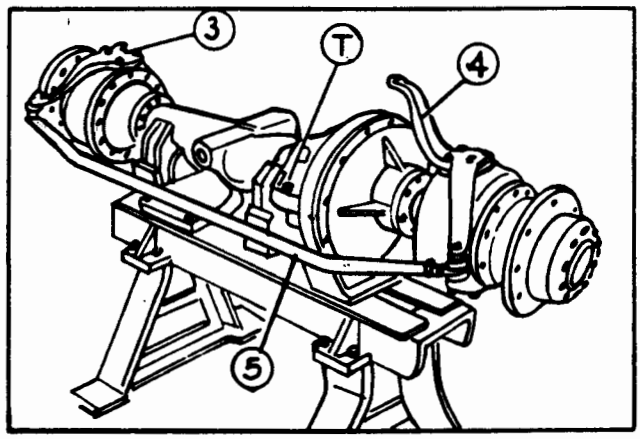

FIG. B.IX/3 FRONT DRIVE AXLE, COMPLETELY ASSEMBLED, FITTED ON ITS SUPPORT

T. Oil plug; 5. Transversal drag link; 3. Steering lever, R.H.; 4. Steering lever, L.H.

https://truckmanualshub.com/

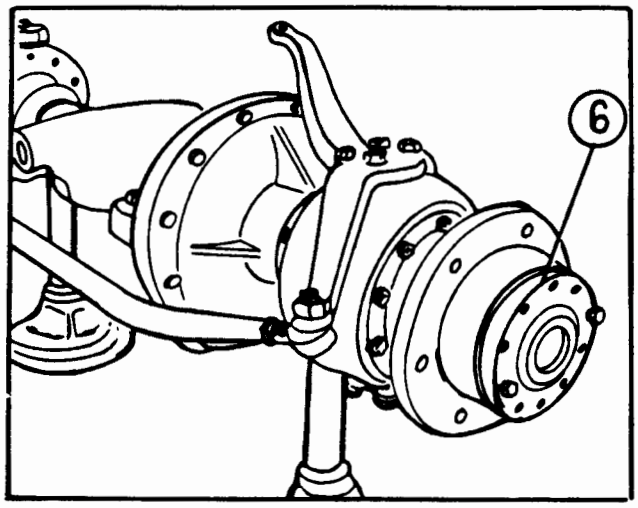

FIG. B.IX/4 REMOVAL OF SPLINED HUB
6. Hub cover

4. screw back the screws and take the splined hub out (Fig. B.IX/4), screwing the two screws up into the cover threaded holes;
5. remove the bends of the washer (Item 7, Fig. B.IX/10) and screw back the splined nut (Iem S11, Fig. B.IX/11) and then by means of a puller, if necessary, remove the front wheel hub (10) and the outer bearing.

The outer races of the two tapered roller bearings can be removed by means of the puller.

6. Remove the screws (Item S10, Fig. B.IX/11) the flange (Item 13, Fig. B.IX/10) with the inner race of the inner roller bearings (11) the oil ring (12) and the bushing (18).
7. Withdraw the joint outer axis (20) and the ball joint (21).

The inner race of the inner tapered roller bearing and, if need, the outer axis bushing must be removed from the flange by means of the universal puller (Fig. B.IX/5).

8. Take the joint body (Item 22, Fig. B.IX/10) out and then withdraw the joint axis (23) by the universal puller (Fig. B.IX/6). At the same time, remove the thrust ring (Item 19, Fig. B.IX/10).
9. Remove the screws and the retaining ring.
10. Remove the outer sealing ring of the joint casing and recovering the plate in order to limit the steering.
11. Withdraw the steering lever shaft by the puller (E, Fig. B.IX/7) recovering the shims (Item 1, Fig. B.IX/11) and take the joint casing out by downward inclining. Refit, only temporary, the steering lever shaft only by the two screws and withdraw the lower cover of the joint by the puller.

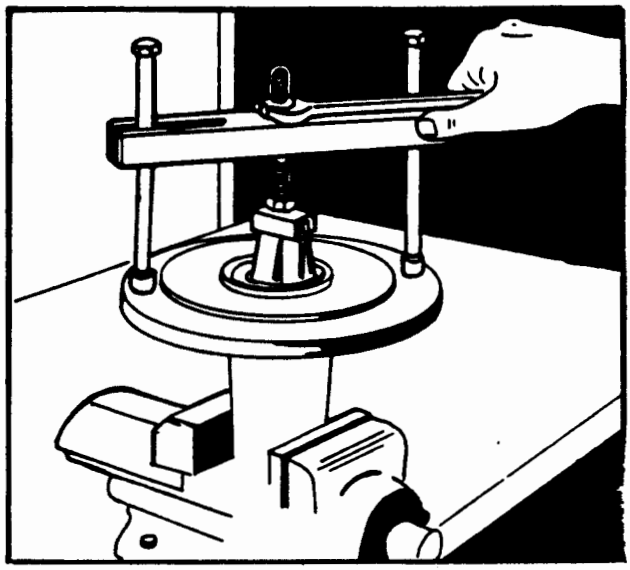

FIG. B.IX/5 WITHDRAWING THE OUTER AXIS BUSHING OF THE FLANGE BY MEANS OF THE UNIVERSAL PULLER

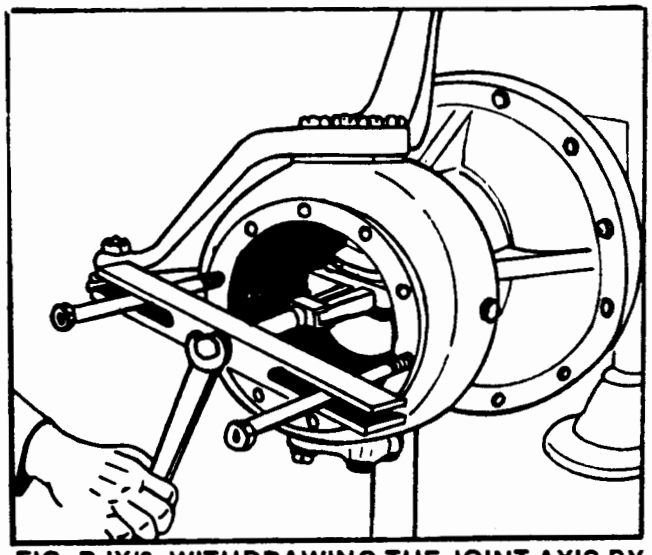

FIG. B.IX/6 WITHDRAWING THE JOINT AXIS BY MEANS OF THE UNIVERSAL PULLER

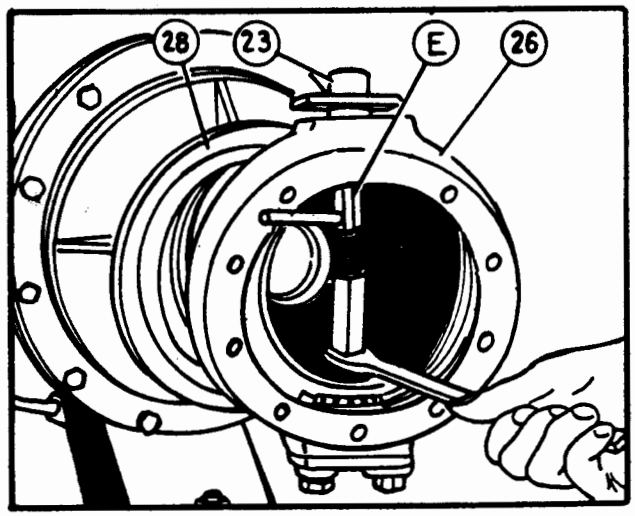

FIG. B.IX/7 WITHDRAWING THE STEERING LEVER AXLE (23)
E. Puller; 23. Steering lever shaft; 26. Joint casing; 28. Sealing ring

https://truckmanualshub.com/

12. Drain the lubricating oil from the differential casing.

13. Screw back the self-locking screws (57) and remove the spherical bracket flange from the differential casing, recovering the steering clamp (Item 58, Fig. B.IX/16) and O-ring between the two flanges by dismantling the spherical bracket (Item 26, B.IX/10) together with the bushing (25), the oil ring (24) and the bearing outer races (27).

The tapered roller bearing outer races of the joint casing should be removed by the puller. When necessary to replace the bushing (25) and the oil ring (24) use special tools.

14. complete removal of the differential drive pinion (Item P, Fig. B.IX/12) from the differential casing is carried out by screwing back the self-locking screws (Item S5, Fig. B.IX/11) and dismantling its components after taking out the screws.

Be careful when withdrawing the oil ring (48) the screwdiver to be supported on the outer race, so as not to damage the sealing inner surface.

15. the two outer races of the tapered roller bearing (49 and 51) and the inner race can be removed from the support (43) and from the differential drive shaft (45) using the universal puller.

16. by withdrawing the right joint axis (Item 55, Fig. B.IX/11) and left joint axis (17), by screwing back the self-locking screws (S_3), the differential casing should be complete separate from the front drive axle assembly. Recover O-rings (29 and 42).

17. remove the differential casing by screwing back the screws (54).

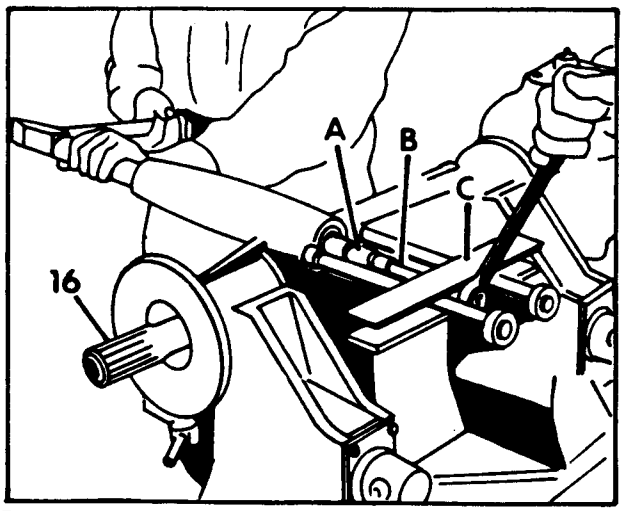

FIG. B.IX/8 WITHDRAWING THE BUSHINGS OF THE FRONT DRIVE AXLE SWINGING SHAFT
A. Elastic bushing; B. Tensioner; C. Bride; 55. Joint axis, R.H.

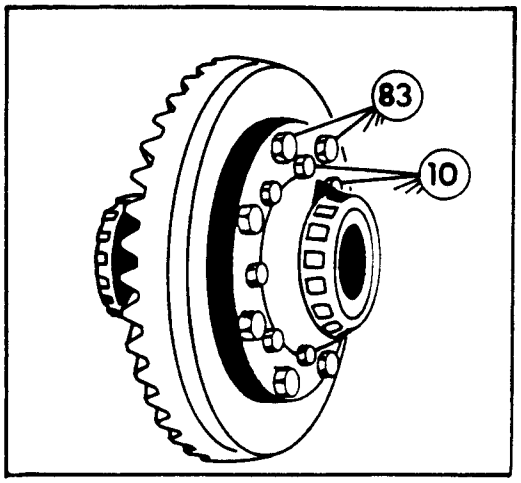

FIG. B.IX/9 DIFFERENTIAL AND BEVEL GEARING
83. Bevel gearing self-locking screw; 10. Differential casings retaining self-locking screws

18. the outer and the inner races of the two tapered roller bearings (Item 32, Fig. B.IX/12) can be removed from the differential casing by the universal puller. The adjusting nuts (I_4) should be screwed back only after taking the retaining pins out.

The spider pinion casing (Fig. B.IX/9) should be dismantled by screwing back the self-locking screws (83), bevel gearing (11) and self-locking screws (10) which retain the two differential half-casings.

When detaching the planetary pinions (Item 36, Fig. B.IX/12) and the spider pinions (37) recover the thrust rings (39) and the differential drive pinion adjusting screws (35).

When withdrawing the bushings (Item 53, Fig. B.IX/11) of front drive axle pivoting shaft use the universal puller to which an elastic bushing (Fig. B.IX/8) must be adopted. Tension the puller and by means of a pipe apply from the other end of the puller light hammering until complete removal of the bushings.

INSPECTION

The measurements and checks indicated refer to data in the table on page 140.

The strict compliance with the mentioned data indicate if the part can be used or must be replaced.

1. Check for the wear of the spider pinion teeth, of the planetary pinions and of the bevel gearing.

2. Check the clearance between the joint grooves (Item 23, Fig. B.IX/10) and those of the spider pinions (Item 36, Fig. B.IX/12).

https://truckmanualshub.com/

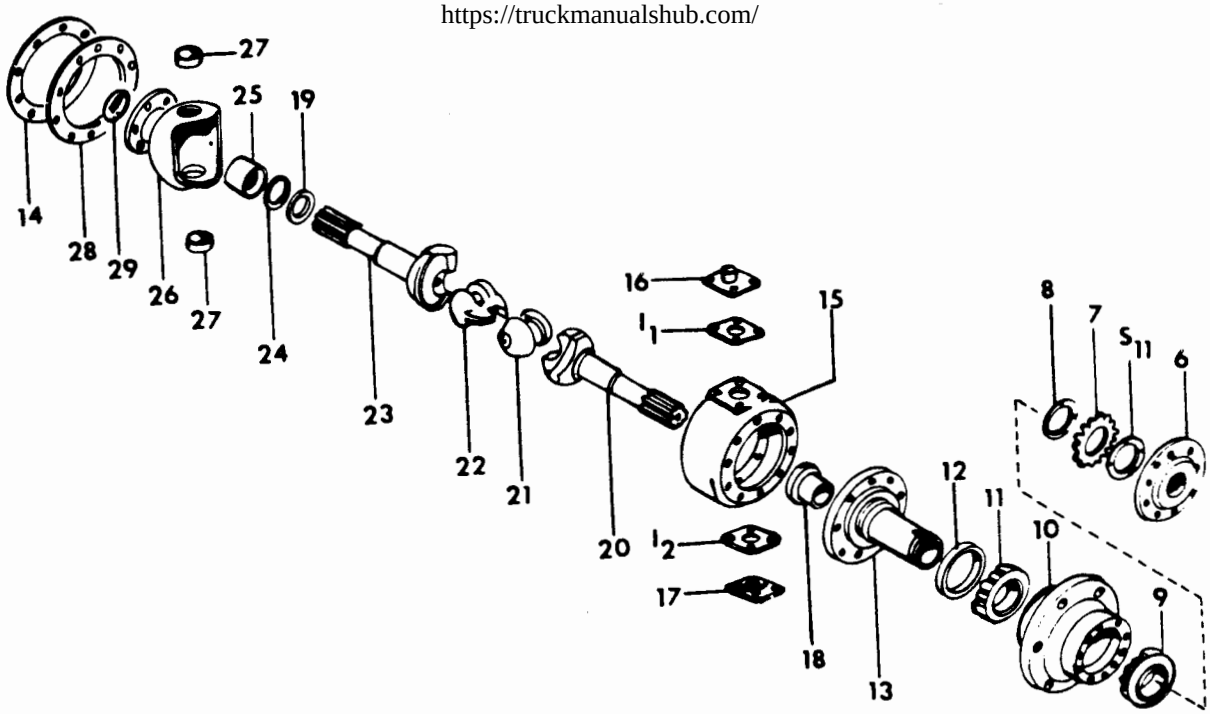

FIG. B.IX/10 HUB AND LEFT JOINT COMPONENTS

Sn. Splined nut; I_1-I_2. Adjusting plates; 6. Outer cover; 7. Washer; 8. Adjusting splined nut; 9. Tapered roller bearing; 10. Hub; 11. Tapered roller bearing; 12. Oil Ring; 13. Flange; 14. Retaining screw; 15. Joint casing; 16. Steering lever axle; 17. Joint lower cover; 18. Bushing; 19. Thrust ring; 20. Joint outer axis; 21. Universal joint; 22. Joint body; 23. Joint inner axis; 24. Oil ring; 25. Bushing; 26. Spherical support; 27. Tapered roller bearing; 28. Sealing ring; 29. O-ring

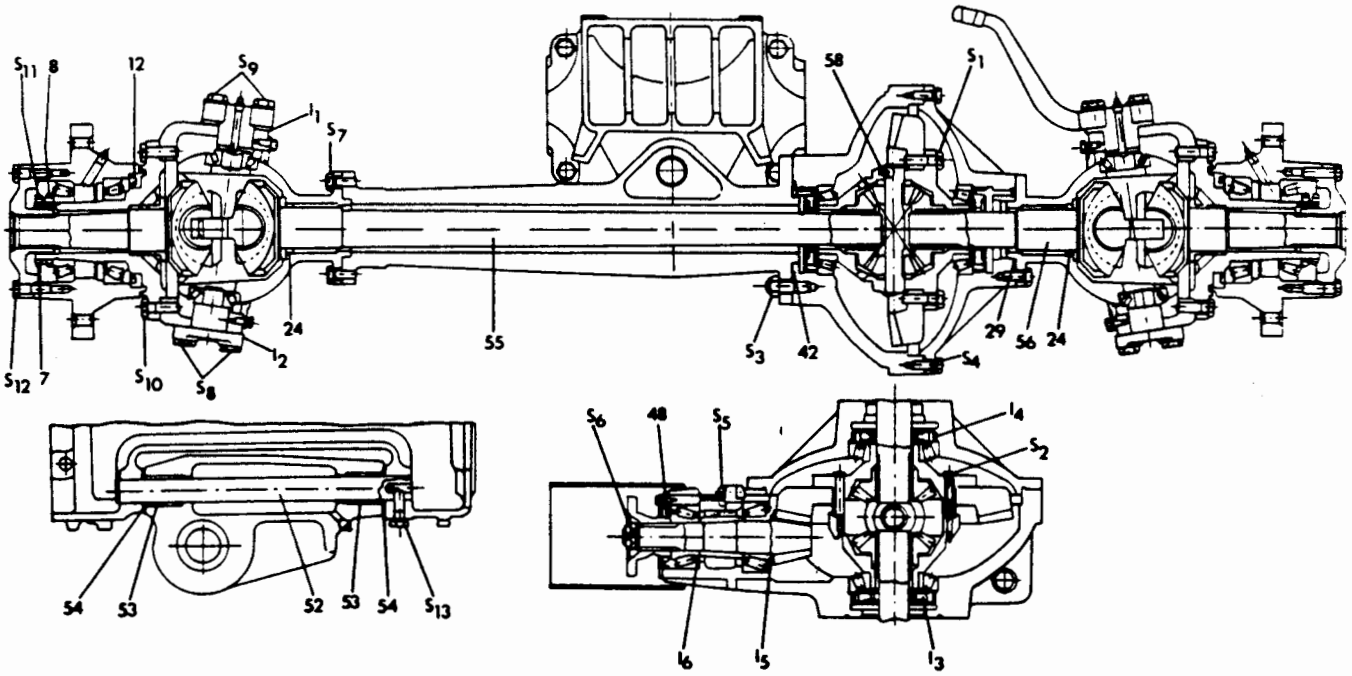

FIG. B.IX/11 FRONT DRIVE AXLE CROSS-SECTION

S1. Bevel gearing retaining screw; S2. Differential casing retaining screw; S3. Screw retaining the front axle on differential casing; S4. Differential cover retaining screw; S5. Differential drive pinion support retaining screw; S6. Differential drive pinion shaft nut; S7. Screw retaining the spherical support on differential; S8. Joint lower cover retaining screw; S9. Steering lever axle retaining screws; S10. Screw retaining the flange on the joint casing; S11. Retaining nut; S12. Hub cover retaining screw; S13. Retaining screw; 1_1-1_2. Shims for bearings; 1_3-1_4. Shim; 1_5-1_6. Adjusting screw; 7. Washer; 8. Nut; 12, 24. Oil rings; 29, 42. O-Ring; 48. Oil ring; 52. Swinging axle; 53. Bushing; 54. Thrust rings; 58. Pin; 55. Joint axle R.H.; 56. Axle; 58. Pin

https://truckmanualshub.com/

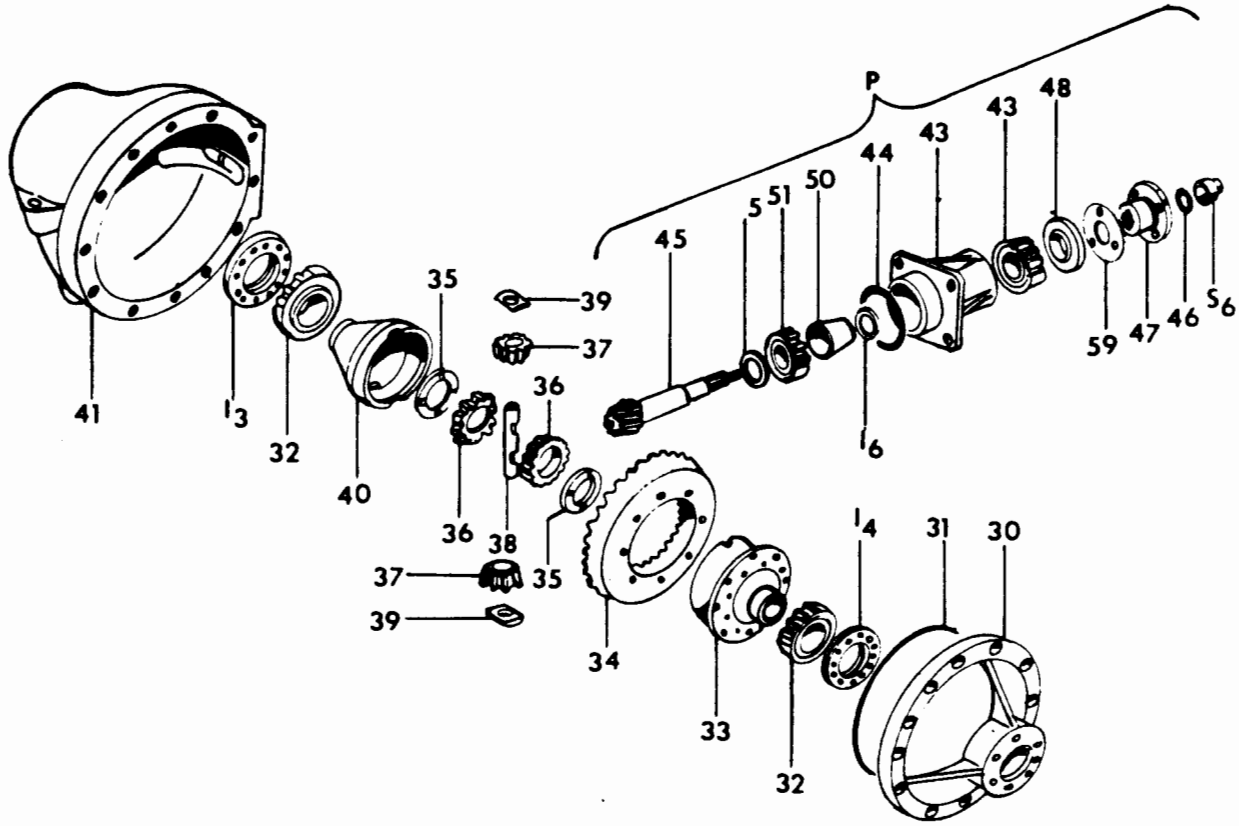

FIG. B.IX/12 DIFFERENTIAL AND BEVEL GEARING COMPONENTS

P. Bevel pinion support, complete; 1_3-1_4. Adjusting nut; 1_5-1_6. Bevel pinion bearing adjusting rings; 30. Differential casing cover; 31. O-ring; 32. Tapered roller bearing; 33. Casing, L.H.; 34. Bevel gearing; 35. Planetary pinion adjusting ring; 36. Planetary gear; 37. Spider pinion; 38. Spider pinion shaft; 39. Thrust ring; 40. Casing, R.H.; 41. Differential casing; 43. Bevel pinion support; 44. Sealing; 45. Pinion shaft; 46. Washer; 47. Flange; 48. Oil ring; 49. Tapered roller bearing; 50. Bushing; 51. Tapered roller bearing; 59. Bevel pinion support cover

3. Check the pressure for the planetary pinion adjusting rings (35, Fig. B.IX/12), the spider pinion thrust rings (39), the axis thrust rings (19, Fig. B.IX/10), as well as the thickness of the ring (54, Fig. B.IX/11) for the front drive axle swinging axis; at the same time, make sure the contact surfaces to be in good state.
4. Inspect the tapered roller bearings: they must freely rotate, without jammings and excessive wear.
5. Check the clearance of the homokinetic joint, being careful to insure that the joint body (22, Fig. B.IX/10) is not damaged and the surfaces in motion are without scratches and of a correct hardness.
6. Check for the hub threaded holes (10) retaining the splined flange (13) on the differential left casing; their thread must be in good condition.
7. Check the condition of the seals and replace the damaged ones.

REASSEMBLY

In the following pages it was considered that the front drive axle was completely dismantled; that means the assembling operations are referring to all parts either new or already used found in good condition by inspection.

The operations following to the assembling phase should be the same, the clearances and the permissible limits of wear being in accordance with the specifications.

The bevel gearing and the differential drive pinions can be changed only together. They are delivered as spare parts only in pairs.

The bearing mounting and dismantling operations should be carried out with special tools and fixtures for each bearing, having in view that the pressing force can not be transmitted by rolling elements.

All the components, planetary pinions, spider pinions, bevel gearing, bevel pinion must be cleaned without hammerings and visible defects.

ASSEMBLING THE SPIDER PINIONS INTO THE CASING AND BEVEL GEARING (FIG. B.IX/12)

1. Insert in order on the spider pinion shaft the thrust ring (39), two spider pinions (37) having the bevel side inward and again a thrust ring.

https://truckmanualshub.com/

2. Introduce into the right casing a planetary pinion (36) only after fitting an adjusting screw (35) on its cylindrical side.
3. Fit on the planetary pinion the shaft, already prepared, fixing the pin of the shaft in the right casing hole.
4. Over the spider pinions put the second planetary pinion provided with adjusting screw.
5. Over them apply the left casing and tighten the self-locking screws (Item S_4, Fig. B.IX/11) at a torque value of 18-25 ft. lbs. (24-34 N-M).
6. Check, rotating by hand the clearance between planetary pinions and spider pinions flanks which must be within .006-.008 in. (0.15-0.20 mm.) and can be set by means of the adjusting rings.

They must rotate freely.

After performing this operation, remove the left casing so that the planetary pinion and the thrust ring to remain in the right casing assembly.

7. Press on the bevel gearing the left casing and tighten the self-locking screws at a torque of 51-56 lbs. (69-76 N-m).
8. Insert from the inside the two buttons M12 and fully tighten them with the respective nuts and secure by bending circlips.
9. Assemble the two casings and tighten the 8 screws previously removed, at a torque of 18-25 ft. lbs. (24-34 N-m).
10. Simultaneously press the inner races of the tapered roller bearings (Item 32, Fig. B.IX/12) on the two casings.

The establishment for the shims for the bevel pinion is made by means of a device as indicated on Fig. B.IX/13.

1. Press inside the differential drive pinion support the tapered roller bearings inner races (49 and 51).
2. Insert in the adjusting device the inner races of the tapered roller bearings (49 and 51) and the drive pinion support (43); finally tighten the device nut. Then rotate the drive pinion support about 10 turns in order to seat the rollers on the races; measure dimension L_1 (Fig. B.IX/13).

Remove the parts from the device, withdraw the drive pinion support and fit in place the bearing inner races and the bushing. Measure dimension L_2.

The shims thickness must be as follows: $S_1 = (L_1 - L_2) + .002$ in. (0.05 mm.).

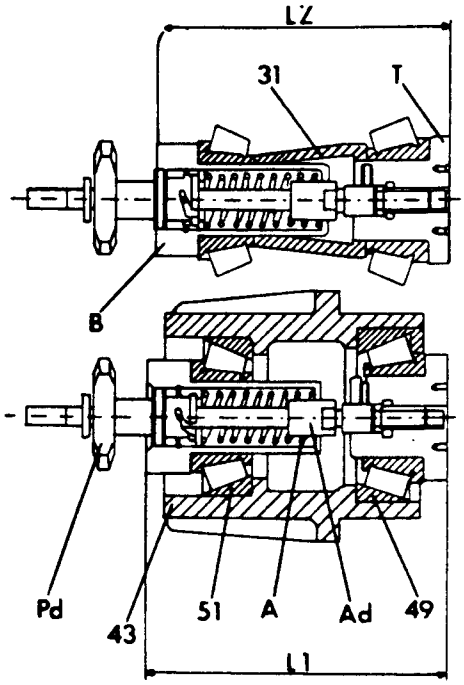

FIG. B.IX/13 ESTABLISHING THE THICKNESS OF SHIMS FOR THE DIFFERENTIAL DRIVE PINION BEARINGS

Pd. Spring tapped; B. Outer bearing guide; T. Inner bearing support; A. Compressed spring; Ad. Shaft; 31. Bushing; 43. Differential drive pinion; 49. Outer bearing; 51. Inner bearing

Insert again on the device the bearing inner races (49 and 51) and the drive pinion support, tighten the device nut and fit the device inside the differential casing (Fig. B.IX/14).

Fit the four screws and rotate the device about 10 turns in both directions for a proper fitting of the bearing rollers. Then insert in the differential casing the device plate and fix it by 4 screws. Tighten the threaded shaft of the device until it

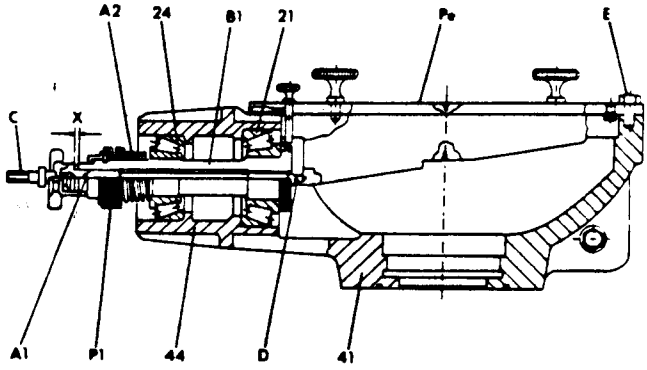

FIG. B.IX/14 ESTABLISHING THE SHIMS THICKNESS FOR THE BEVEL PINION

A_1. Rod; P_1. Adjusting nut; A_2. Compression spring; C. Wrench pin; B_1. Bearing axle; D. Stop; Pe. Main plate; E. Screws retaining the device on the housing cover; 61. Casing cover; 64. Bevel pinion support; 74. Outer bearing; 75. Inner bearing

https://truckmanualshub.com/

is locked by the stop (D, Fig. B.IX/14). Measure dimension X and check on the drive pinion the permissible error A.

CAUTION: Measure dimension X only after adjusting the spring A_2, so that the bearings support rotation is made using a torque indicator handle wrench.

The shim thickness for the drive pinion should be: S_2 = (X - A) in. (mm.).

Remove the plate and the drive pinion support from the device, the inner races of the bevel supports and the drive pinion support.

To reassembly the bevel pinion support with the bevel pinion, insert on the bevel pinion a shim and then press on the bevel pinion shaft the inner race of the roller bearing (Item 51, Fig. B.IX/12).

1. Introduce the bushings (50) the shims (I_6) for the drive pinion bearings and finally the bevel pinion support (43).
2. Press the bearing inner race (51) on the bevel pinion.
3. Fit on the support the oil ring (48) after inserting the spring. Prior to pressing the sealing will be coated with lithium base lubricant grease in the spring location and on the sealing lug.
4. Fit the bevel pinion support cover (59) on the pinions support by fully tightening the 3 screws and securing by circlips.
5. Insert the splined flange (47) on the shaft, then the washer (46) and tighten the splined nut (S_6) at a torque value of 217-246 ft. lbs. (294-391 N-m), finally secure it by a cotter pin.

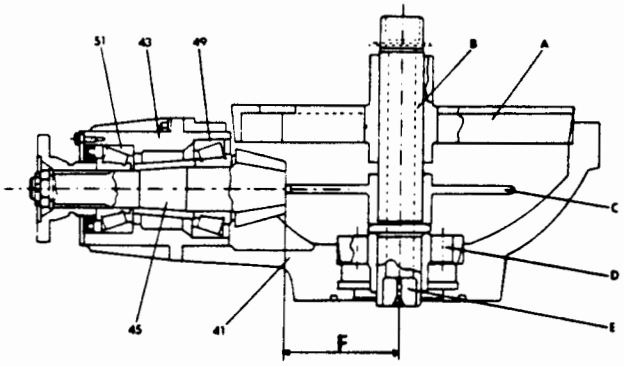

FIG. B.IX/15 CHECKING THE DIFFERENTIAL DRIVE PINION ADJUSTMENT BY MEANS OF INSPECTION MANDREL

A. Guiding mandrel in the casing cover boring; B. Mandrel; C. Checking quadrant with limiting rods of intervals of .004 in. (0.1 mm.); D. Guiding mandrel for the boring of casing cover bearing; E. Plug; 12. Bevel pinion axle; 41. Differential casing; 43. Bevel pinion support; 45. Bevel pinion axle; 49. Inner bearing; 51. Outer bearing.

BEVEL PINION SETTING

To check the adjustment of the bevel pinion:

1. Fit on the differential casing the bevel pinion support, already assembled from the previous procedure, and provided with O-ring (44); then fix it by self-locking screws by tightening them at a torque of 51-56 ft. lbs. (69-76 N-m). Rotate the device about 10 revolutions in both directions for a suitable fitting of the bearing rollers.
2. Fix in the differential casing the adjusting device and check for dimension F (Fig. B.IX/15).

After withdrawing the adjusting device from the casing, screw up the adjusting nut in the casing and press the outer race of the bearing (49).

Make the same procedure for the casing cover.

3. Fit the O-ring on the casing cover, apply the cover on the casing by the screws provided with snap rings tightening them at a torque value of 33-36 ft. lbs. (45-49 N-m).
4. Screw up or back the shims (I_3 and I_4, B.IX/12) until the load torque necessary to rotate the differential by means of the splined flange should reach a value of 362-506 ft. lbs. (491-686 N-m); at the same time, the clearance between the flanks of bevel gearing must be within .006-.008 in. (0.15-0.20 mm.). After finishing the adjustment, lock the cover nut by the retaining pin (39) and finally apply a rubber O-ring.
5. Screw back two of the screws retaining the pinion support on the casing and use them to

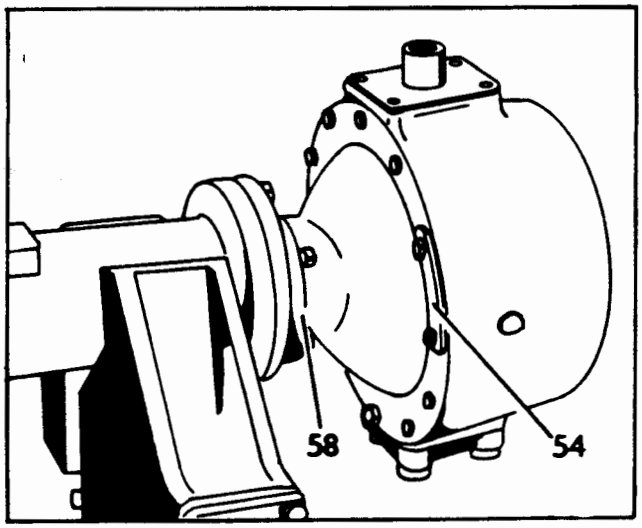

FIG. B.IX/16 THE ASSEMBLING POSITIONS OF THE STOP (56) AND OF THE STEERING STOP PLATE (57)

https://truckmanualshub.com/

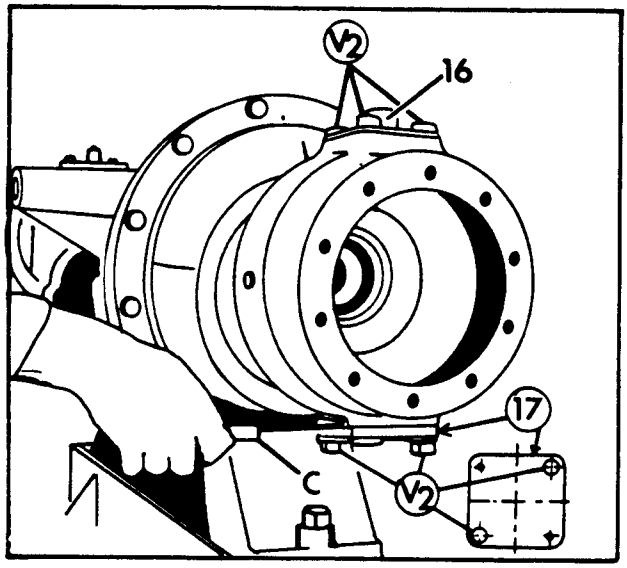

FIG. B.IX/17 ADJUSTMENT OF THE STEERING AXIS BEARING CLEARANCE
C. Shim set; V_2. Screw for adjustment check; 16. Steering lever axis; 17. Lower cover

fix the protection at a torque value of 51-56 ft. lbs. (69-76 N-m).

TO ASSEMBLE THE JOINT CASING WITH THE SPHERICAL SUPPORT:

1. Press on the spherical supports the bearing outer races (Item 27, Fig. B.IX/10), the bushing (25) then fit on the support the outer sealing ring (28) which is retained by screws on the ring (14).
2. After inserting the O-ring (29) tighten the screws at a torque of 65-72 ft. lbs. (88-97 N-m) and fix the steering stop plate (58) as shown on Fig. B.VIII/16.

The adjustment of the clearance of the tapered roller bearing of the steering axis is carried out, as follows:

1. Fit the steering lever axis by four screws without shims and insert on the axle the tapered roller bearing inner race (Item 27, Fig. B.IX/10.)

   20-30 minutes.
2. Fit the joint casing (Item 15, Fig. B.IX/10) on the spherical support as indicated on Fig. B.IX/11.
3. Place the tapered roller bearing inner race (27) on the joint lower cover axle (17) by means of screws without shims.
4. Let the two races get cold, then tighten the lower cover by two screws protected by a thin layer of oil. Tighten alternatively the two screws by the torque wrench at a torque value of 3-4 ft. lbs. (4-6 N-m) by continual rotation in both directions of the joint casing for a proper fitting of the bearings.
5. Check the play between the joint location and the steering axis by using the shims, the measurements being always carried out in two opposite points and establishing the arithmetical mean of the two values.
6. Add .004 in. (0.1 mm.) to the obtained value of the play and divide into two equal quantities using the shims (I_1 and I_2).
7. Fit the shims, replace the screws used for establishing the shim thickness by the screws (V21, Fig. B.IX/17) and tighten at a torque of 87-94 ft. lbs. (118-127 N-m).

⚠ **CAUTION:** If the value of the shim set is not possible to be divided into two equal quantities it is permitted to use different values having in view not to change the total one.

For example:
The values of the measured plays: .012 + .008 in. (0.3 + 0.2 mm.)
The arithmetical mean: $\frac{.012 + .008}{2} = \frac{.010}{2}$ $(0.3 + 0.2$ = 0.25 mm.)

Total value of shim set: .010 + .004 = .014 in. (0.25 + 0.1 = 0.35 mm.)

The shim values may be: .008 and .006 in. (0.2 and 0.15 mm.) indifferently if are upper or lower side fitted.

Fit the oil ring (Item 12, Fig. B.IX/10) after having coated it with lithium base lubricant grease, the thrust ring (19) and the joint axis (20 respectively 23) together with the joint body (22). Apply the sealing ring (28) then the ring (14) and fit in its place the clamp which limits the steering as shown on Fig. B.IX/16.

Fill the joint location with lithium base lubricant grease.

Fit the right steering lever by the self-locking screws at a torque of 87-94 ft. lbs.

Assemble the outer axle and the flange to the joint (15, Fig. B.IX/19).

Fit on the flange the oil ring (Item 12, Fig. B.IX/10), insert the tapered roller bearing inner race (11) after having heated it on the oil bath at 176-194 °F. (80-90 °C.), for about 20-30 minutes.

Introduce in the flange the outer axis of the joint (20) and together with the joint ball (21) fit the joint body (21). Apply a sealing and tighten the screws retaining the flange on the joint body at a torque of 51-56 ft. lbs. (69-76 N-m).

https://truckmanualshub.com/

ASSEMBLING THE WHEEL HUB

Press into the wheel hub (10) the tapered roller bearing outer races (9 and 11). Fill with lithium base lubricant grease the hub inside between the two bearings prior to mounting on the flange the outer tapered roller bearing inner race.

ADJUSTMENT OF WHEEL HUB BEARINGS

Tighten the first splined nut (Item S11, Fig. B.IX/10) by continuous rotation of the hub in both directions until feeling a slight braking; then screw back the splined nut in order to permit a free rotation of the hub without any play. Bend a washer edge (7) into one groove of the nut and tighten the second splined nut at a torque of 362-434 ft. lbs. (491-588 N-m).

Introduce inside lithium base lubricant grease.

REMARKS: The two splined nuts must be fitted having the outer chamfering towards the bearings, as indicated on Fig. B.IX/11.

Fit the splined hub (6) by tightening the screws with self-locking at a torque of 65-72 ft. lbs. (88-98 N-m).

Repeat the procedure for the left side.

SETTING THE FRONT DRIVE AXLE

Fit the driving wheels, completely assembled with transversal drag link.

Tighten the self-locking nuts and the universal shaft coupling flange retaining screws at a torque value of 36-40 ft. lbs. (49-54 N-m).

Fill the casing with oil by the plug (T, Fig. B.IX/3).

When carrying out the assembling operations, repeat the reverse procedure as indicated for removal.

After finishing the reassembling, grease the splined joint and the universal joint until the grease leaks out by the universal joint central trap. To carry out this operation use a grease gun.

RUNNING-IN OF THE FRONT DRIVE AXLE

Grease with lubricant grease the joint locations through the threaded plug holes provided with sealing rings.

Tighten the greasers into the wheel hubs and steering levers.

Fill the differential casing with the recommended oil up to the level of the plug.

Fit on the running-in bench the front driver axle and let it operate for 5 minutes at a speed of 1800 rpm.

At the same time, check for:

- abnormal noise exceeding the medium level.
- oil leakages at joints and sealings.
- abnormal heating of the moving parts.
- if the hub presents a slight vibration within the permitted angle by the stop plates.

INSPECTION

Make sure that the nuts and the screws from the above-mentioned table are tightened to the torque specification and that they are secured.

Make sure the running-in period of 5 minutes is carried out; during the running-in the front drive axle must strictly comply with as follows:

- front drive axle must not get hot;
- front drive axle must not present abnormal noise;
- no leakages are permitted;
- the steering levers must easily rotate:

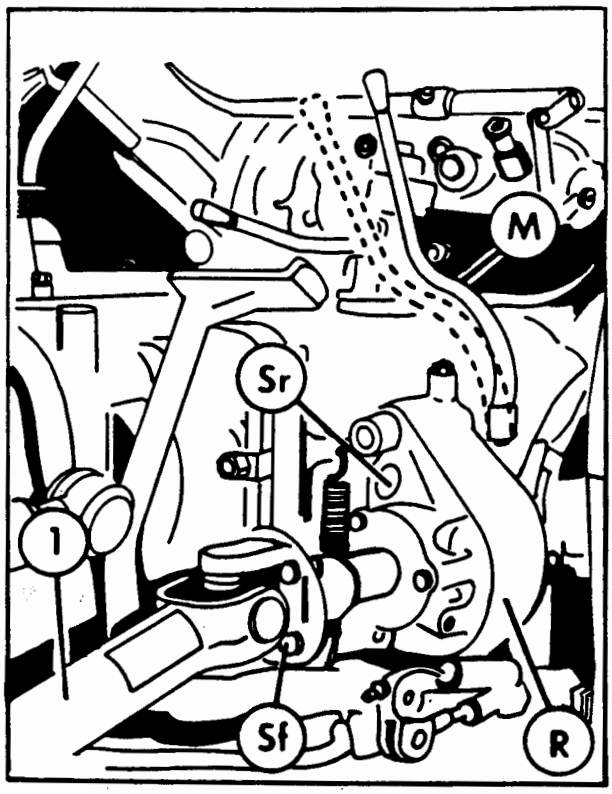

FIG. B.IX/18 REDUCTION GEAR OF FRONT DRIVE AXLE FITTED ON THE TRACTOR. ("ON" POSITION OF CONTROL LEVER IS INDICATED BY DOTTED LINE.)

Sf. Screws fixing the splined flange with u-joint; Sr. Screws retaining the casing on the differential casing; M. Reduction gear control lever; R. Reduction gear; 1. Shaft

https://truckmanualshub.com/

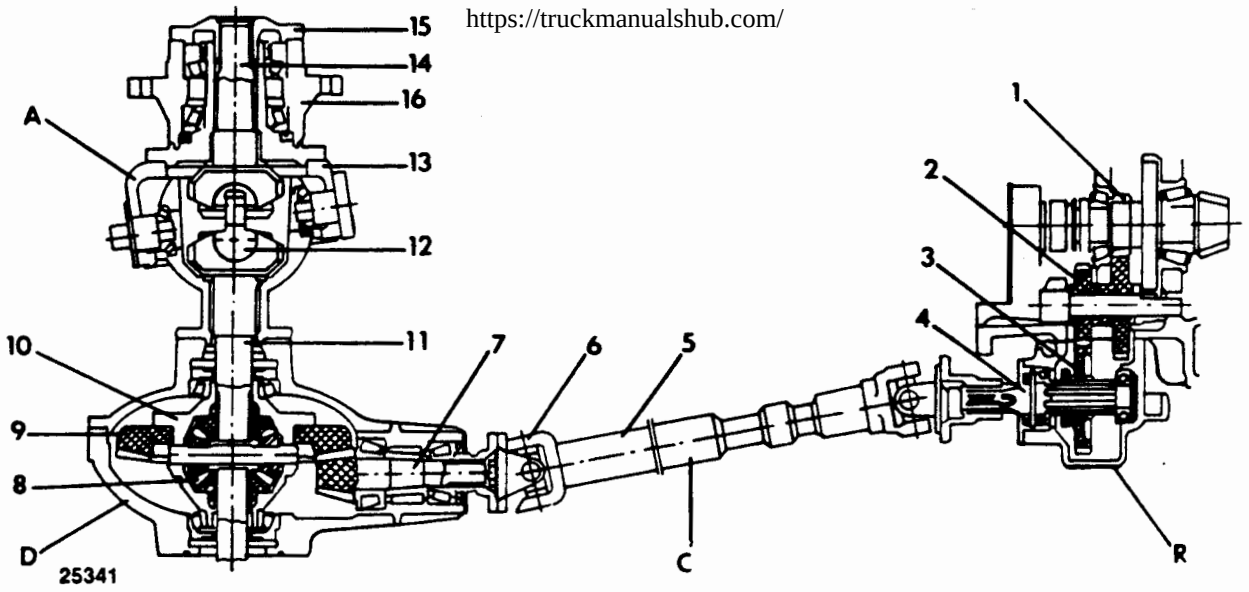

FIG. B.IX/19 KINEMATIC DIAGRAM OF FRONT DRIVE AXLE

R. Reduction gear; D. Differential; A. Joint; 1. Driving gear; 2. Double-gear, intermediate; 3. Gear; 4. Splined shaft; 5. Cardanic shaft; 6. Universal joint; 7. Drive pinion shaft; 8. Planetary gear; 9. Bevel gear ring; 10. Casing, L.H.; 11. Inner axle of joint; 12. Joint body; 13. Joint casing; 14. Flange; 15. Outer cover; 16. Casing

FRONT DRIVE AXLE REDUCTION GEAR

REDUCTION GEAR DESCRIPTION AND OPERATION

The reduction gear of the front drive axle is located on the front left side of the differential casing of the front drive axle. It consists of a gear sliding on a splined shaft.

Due to the reduction gear M control and engaging fork, the gear (Item 4, Fig. B.IX/21) of the reduction gear can be in mesh with the intermediate gear which receives the motion from the drive pinion shaft gear.

Reduction gear transmission ratio: 2.108.

REMOVING THE FRONT DRIVE AXLE REDUCTION GEAR FROM THE TRACTOR

Remove the silencer (if it is of a type towards ground) and the left platform.

Screw back the screws (Sf, Fig. B.IX/17) retaining the top U-joint cross and the screws (Sr) retaining the reduction gear on the differential casing; finally take out the complete reduction gear.

DISMANTLING THE FRONT DRIVE AXLE REDUCTION GEAR

Proceed as follows:

1. remove the reduction gear control lever (Item M, Fig. B.IX/20) and the two circlips for shaft (21), screw back the adjusting screw (24), recovering the ball (22) and the spring (23), the control shaft (16) and the coupling fork (7).
2. remove the cover retaining screw (Sc) and then the splined flange (6) by means of the universal puller, as shown on Fig. B.IX/19, withdraw the rear bearing (14) from its location of the casing, the lock ring for shaft (15) and finally the complete splined shaft (5).

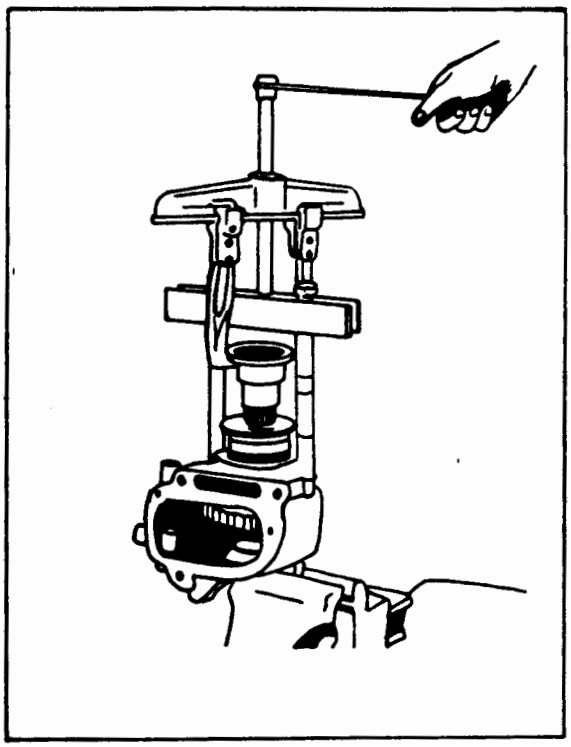

FIG. B.IX/20 DISMANTLING THE COUPLING FLANGE BY THE UNIVERSAL PULLER

https://truckmanualshub.com/

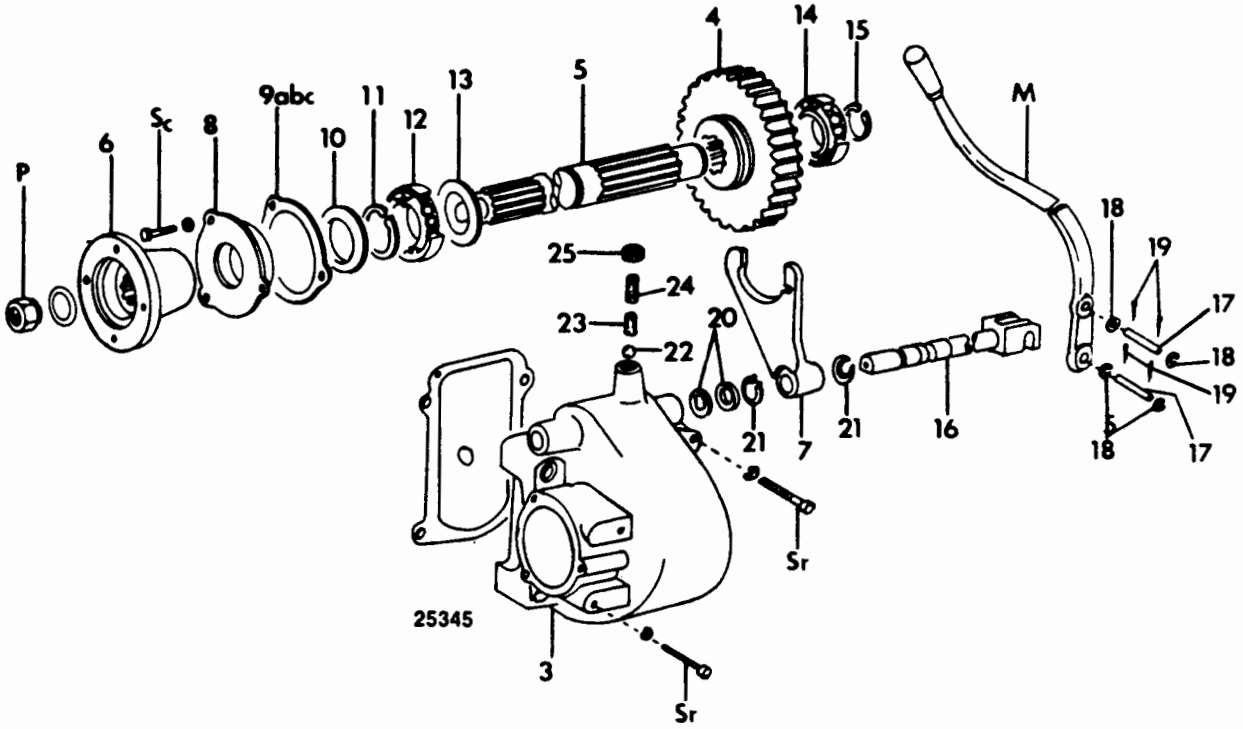

FIG. B.IX/21 FRONT DRIVE AXLE REDUCTION GEAR, DISMANTLED IN ITS COMPONENTS

M. Reduction gear lever; P. Nut; Sc. Cover retaining screw; 3. Reduction gear casing; 4. Gear; 5. Splined shaft; 6. Splined shaft; 7. Coupling fork; 8. Cover; 9a, 9b, 9c. Shims; 10. Oil ring; 11. Circlip; 12. Bearing; 13. Oil deflecting disc; 14. Bearing; 15. Circlip; 16. Control shaft; 17. Bolt; 18. Washer; 19. Cotter pin; 20. Oil ring; 21. Circlip; 22. Ball; 23. Spring; 24. Adjusting screw; 25. Nut; Sr. Screw retaining the reduction gear on rear axle housing

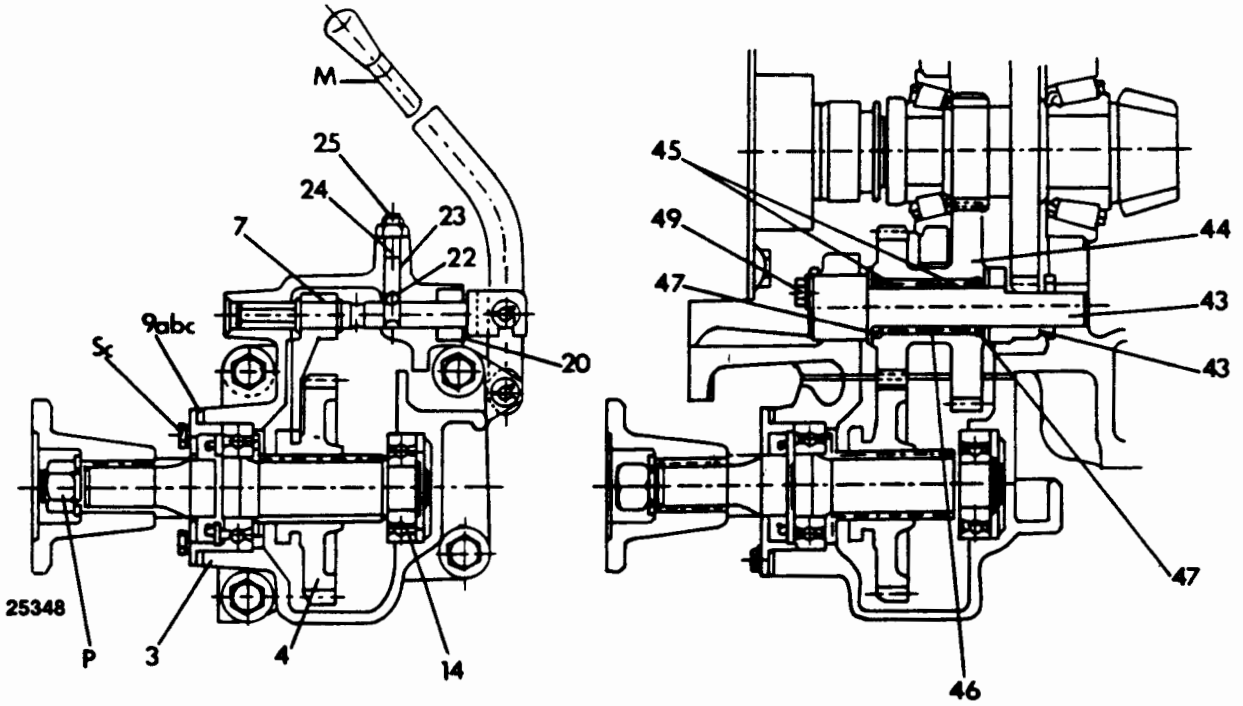

FIG. B.IX/22 FRONT DRIVE AXLE REDUCTION GEAR CROSS-SECTION

Sc. Cover retaining screw; M. Reduction gear control handlever; P. Nut; 3. Reduction gear casing; 4. Gear; 7. Engaging fork; 9, a, b, c. Shims; 14. Bearing; 20. Oil ring; 22. Ball; 23. Spring; 24. Adjusting screw; 25. Lock nut; 43. Intermediate shaft; 44. Gear, double-type; 45. Needle bearing; 46. Spacer; 47. Circlip; 48. Spacer; 49. Screw

https://truckmanualshub.com/

In order to remove the double-type gear (Item 44, Fig. B.IX/21) it is absolutely necessary to separate the gearbox-clutch casing from the rear axle housing. After this you must screw back the screw (49), the plate and the intermediate shaft (43) recovering the bushing (48) the washers (29) and the complete gear.

3. Then remove the bearing needles (46), the bushing (26), after withdrawing the circlips.

INSPECTION

Check the dismantled parts according to the remarks and technical data comprised in this chapter.

Check if the teeth are not worn off having in view in special the teeth chamfering of the control pinion.

Check the clearance between the driven gear grooves (4) and those of the splined shaft (Item 5, B.IX/20).

Check the ball bearings (12 and 14) and the needle bearing (Item 45, Fig. B.IX/21) are freely rotate without jamming; make sure they are not excessively worn off.

Make sure the coupling fork (7) is not damaged and worn off. No scratches are permitted.

Replace the oil ring (10 and 20) if it is damaged.

Check for the elasticity of the coil spring (23).

ASSEMBLING THE FRONT DRIVE AXLE SIDE REDUCTION GEAR

When re-assembling the driving gear (Item 44, Fig. B.IX/21) use the reverse procedure as for removal having in view the following:

1. the bushing (48) and the shaft groove (43) must be fitted so that to permit the P.T.O. gear rotation, as indicated on Fig. B.IX/21.

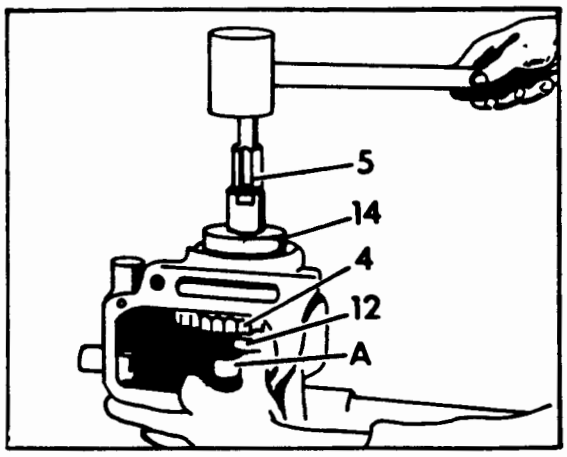

FIG. B.IX/23 ASSEMBLING THE SECONDARY SHAFT (5) IN THE REAR BEARING (14)
A. Fixture for the bearing; 4. Gear; 5. Secondary shaft; 12. Front bearing; 14. Secondary bearing

For assembling the reduction gear casing, proceed as follows:

2. press the oil ring (Item 20, Fig. B.IX/20) in cover (8) after dipping in oil and greasing with lubricant grease;
3. apply the oil deflecting disc (13) on the splined shaft (5), then press over it the bearing (12) and secure by a lockring for shaft (11);

NOTE: The bearing (12) is possible to be inserted on the shaft by means of a press.

4. insert the two oil rings (20) in the reduction gear casing after dipping into oil and greasing with lubricant grease;
5. insert the control shaft (16) through the casing and the coupling fork (7), apply two lockrings for shaft (21) to each end of the shaft, on one side and on the other side of the fork, finally press a spherical cover;
6. fit the ball (22), then apply on it the coil spring (23), screw up the threaded pin with adjusting cap (24) and fit on it the lock nut (25) without completely locking;
7. insert in the casing the gear (4) arranging the coupling fork in its band, then through it the splined shaft, already assembled from the previous operation, with the ball bearing and the circlip;
8. press on the shaft the bearing (14), secured by a lockring for shaft (15), then press finally the splined shaft completely assembled with the bearings in the reduction gear casing;
9. fit on the splined shaft the cover (8) after having been assembled with the oil ring and temporarily apply it on the casing by 3 screws provided with snap rings. Check the space remaining between the cover and the casing, take the cover out, insert the shims (9a, 9b, 9c) having a total thickness more than .04 in. (1 mm.) with respect to the initially measured distance, finally screw up the three screws retaining the casing cover;
10. insert on the shaft the splined flange (6) by the self-locking nut (p) provided with a washer applying a torque of 174-192 ft. lbs. (236-260 N-m).
11. insert in the central hole of the control lever (M) the bolt (17) with two washers, secure by two cotter pins, then insert a control lever having the bolt fitted in the control shaft milling and fix on the casing lugs by means of a bolt (17), two washers (18) and two cotter pins (19).

https://tractormanualshub.com/

THE ADJUSTMENT OF THE FRONT DRIVE AXLE SIDE REDUCTION GEAR

Make sure the engaging and disengaging torque is of 108 ± 14 ft. lbs. (146 ± 19 N-m) for the control lever (M). If not so, make the adjustment by means of the threaded pin with cap (24), then lock by tightening the nut (25).

ASSEMBLING THE REDUCTION GEAR ON THE TRACTOR

Fit on the reduction gear casing in the contact area, the gasket (27) coated with sealing compound, then fix the reduction gear on the rear axle housing by 3 screws M 12 x 1.5 x 50, by one screw M 12 x 1.5 x 60 provided with snap rings. Torque value: 51-56 ft. lbs. (69-76 N-m).

REDUCTION GEAR RUNNING-IN

Reduction gear running-in period should be carried out with the rear axle housing completely assembled.

During the running-in check the following:

— abnormal noise.

— the engaging and disengaging must be smoothly without jamming.

— the gasket sealing, no leakages.

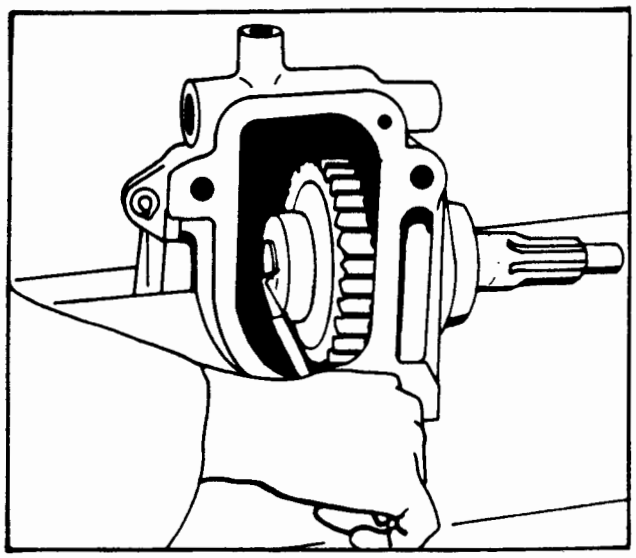

FIG. B.IX/24 ASSEMBLING THE CIRCLIP OF REAR BALL BEARING

FRONT WHEEL TOE-OUT

The proper toe-out for the DT tractor is 3/8 in. (10 mm) closer together at the rear of the rims than at the front.

B.X FRONT DRIVE AXLE (CENTER DRIVEN)

http://tractormanualsclub.com/

DESCRIPTION

The four wheel drive (DTC) version of the tractor is obtained by replacing the front axle of the tractor with a housing that has a centrally pivoted differential. Through the use of a reduction gearbox (Fig. B.X/1), located on the bottom of the gearbox, power is transferred from the gearbox, to the reduction gear, to the front differential, via the cardan shaft.

The motion is transmitted to the front wheels from the differential via two planetary drive shafts, two universal joints and two planetary systems.

To engage the four wheel drive, push forward on the manual control lever near the left fender. (Item 1, Fig. B.X/20).

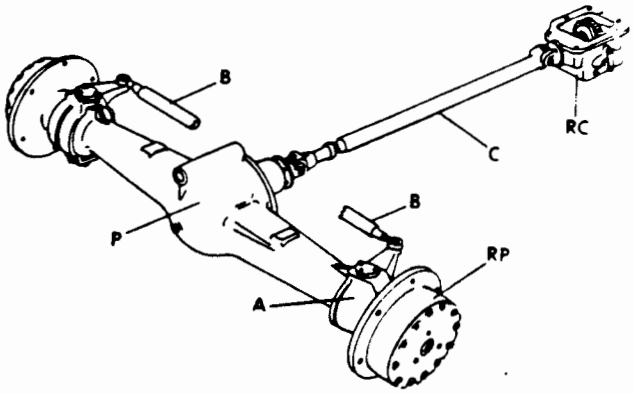

FIG. B.X/1 FRONT DRIVE SYSTEM
A. Trunnion knuckle; B. Steering linkage; C. Cardan shaft; P. Front drive axle; RC Reduction gearbox; RP Planetary drive system

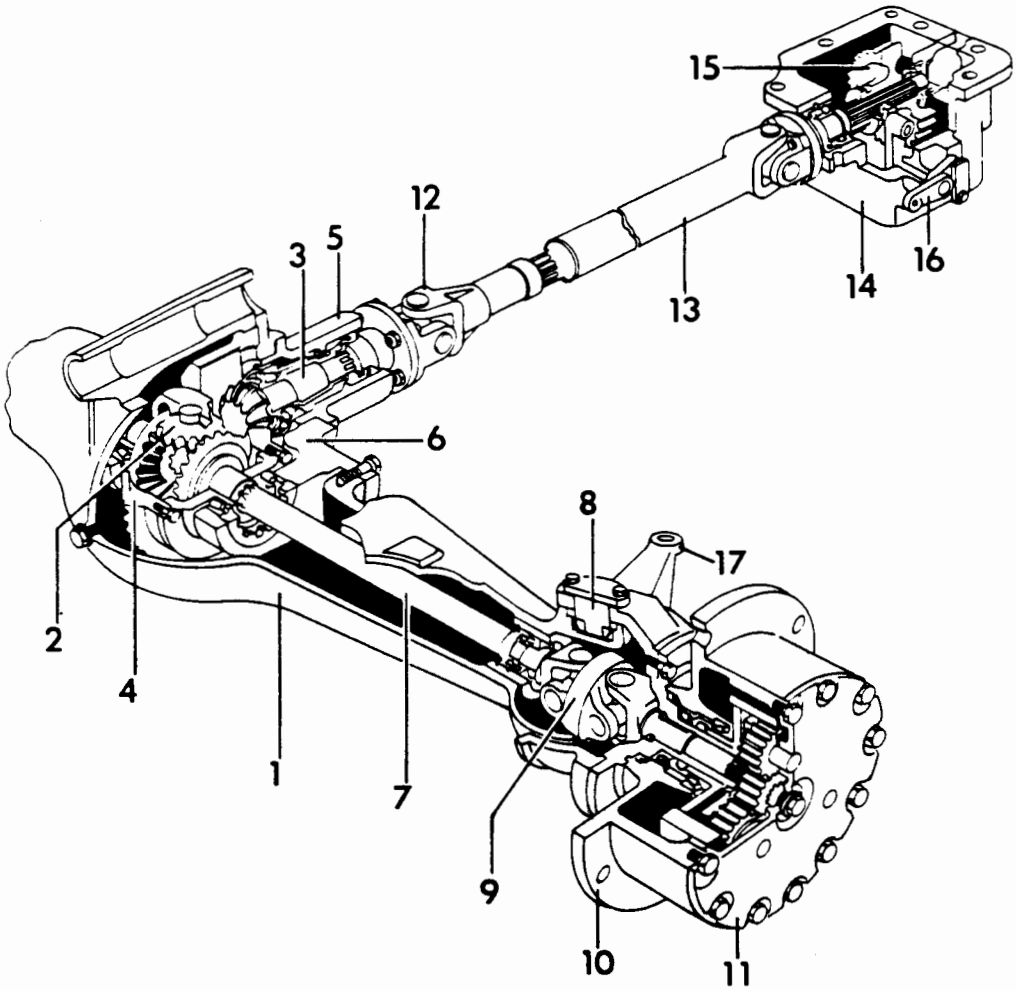

FIG. B.X/2 FRONT DRIVE AXLE
1. Front axle casing; 2. Differential spider pinion; 3. Differential bevel pinion; 4. Differential bevel gear; 5. Bevel pinion holder; 6. Differential holder; 7. Planetary drive shaft; 8. Ball bearing axle; 9. Universal joint; 10. Wheel hub; 11. Spider pinion holder; 12. Universal joint; 13. Cardan shaft; 14. Reduction gear box casing; 15. Reduction gear; 16. Reduction gear control lever; 17. Steering lever

https://truckmanualshub.com/

FRONT DRIVE AXLE REMOVAL

Before removing the front drive axle, put on the hand brake or block the rear wheels of the tractor, and proceed as follows:

1. Disconnect the steering tie rods (Item B, Fig. B.X/1) at the front axle steering arm and remove the cardan shaft.
2. Support the front of the tractor, and unscrew the axle pivot pin lock screw. Drive out the front axle pin by means of a slicing hammer type puller. (Fig. B.X/3).
3. Remove the front drive axle and recover from the inside of the axle support, 2 pivot pin end washers.

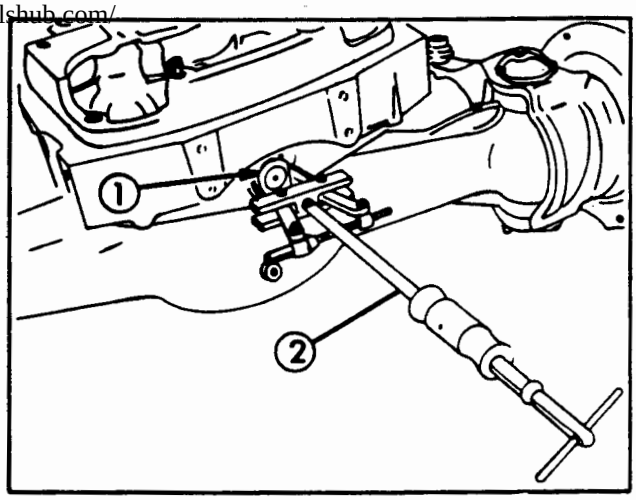

FIG. B.X/3 REMOVING FRONT DRIVE AXLE
1. Axle pivot pin; 2. Sliding hammer

PLANETARY DRIVE REMOVAL AND DISASSEMBLY

The planetary drive can be overhauled on the tractor. In this case, put on the hand brake and insert wedges under the front wheels and proceed to step 2 below.

If the front drive axle has been removed from the tractor, place it on a stand for support while overhauling it, and proceed as follows:

1. Remove tire and rim assemblies.
2. Drain the planetary gear housing of lubricant.
3. Remove the spider pinion holder cap screws and remove from locating dowels (Fig. B.X/4).

   The sun gear fits loosely on the axle shaft, pull the spider pinion holder from the housing, being careful the sun gear does not fall.
4. If necessary, remove the spider pinion gears from the holder by driving each pinion shaft outward and removing thrust plates and pinion from the holder.

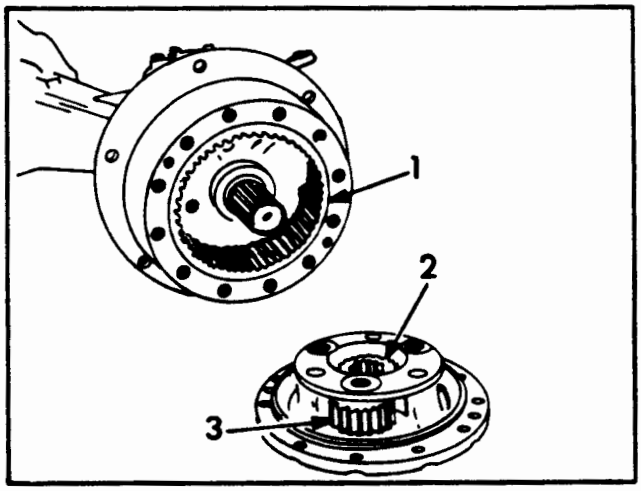

FIG. B.X/4 PLANETARY DRIVE REMOVAL
1. Ring gear; 2. Sun gear; 3. Spider pinion

If further disassembly is required, the front must be removed (Fig. B.X/5).

5. Using a barrel spanner, unscrew the spindle nut and remove it and the washer. Work the ring gear and ring gear support outward as an assembly.

   Remove the wheel hub, shims and spacer from the spindle. Remove both inner and outer bearing cups from wheel hub. Remove oil seal.
6. Unscrew retaining cap screws and slide spindle with seal, bushing and cone outward over the axle shaft end. Use a bearing splitter or universal puller to remove inner bearing cone from the spindle (Fig. B.X/7). Remove seal and bushing.

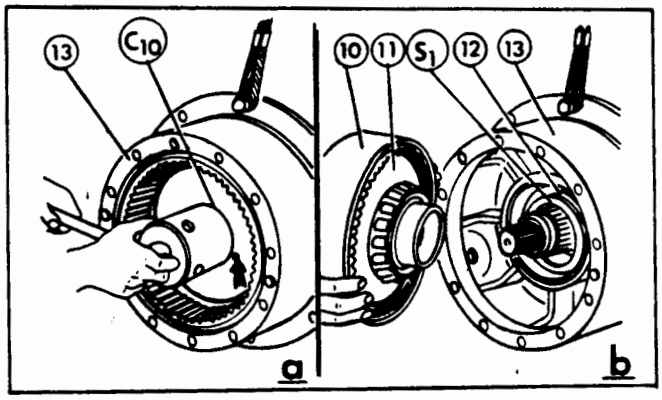

FIG. B.X/5 REMOVING (INSTALLING) THE SPINDLE NUT
C_{10}. Spindle nut; S_1. Bearing shim; 10. Ring gear; 11. Ring gear support; 12. Bearing spacer; 13. Hub

If required, the spindle carrier support may be removed at this time. To remove:

https://truckmanualshub.com/

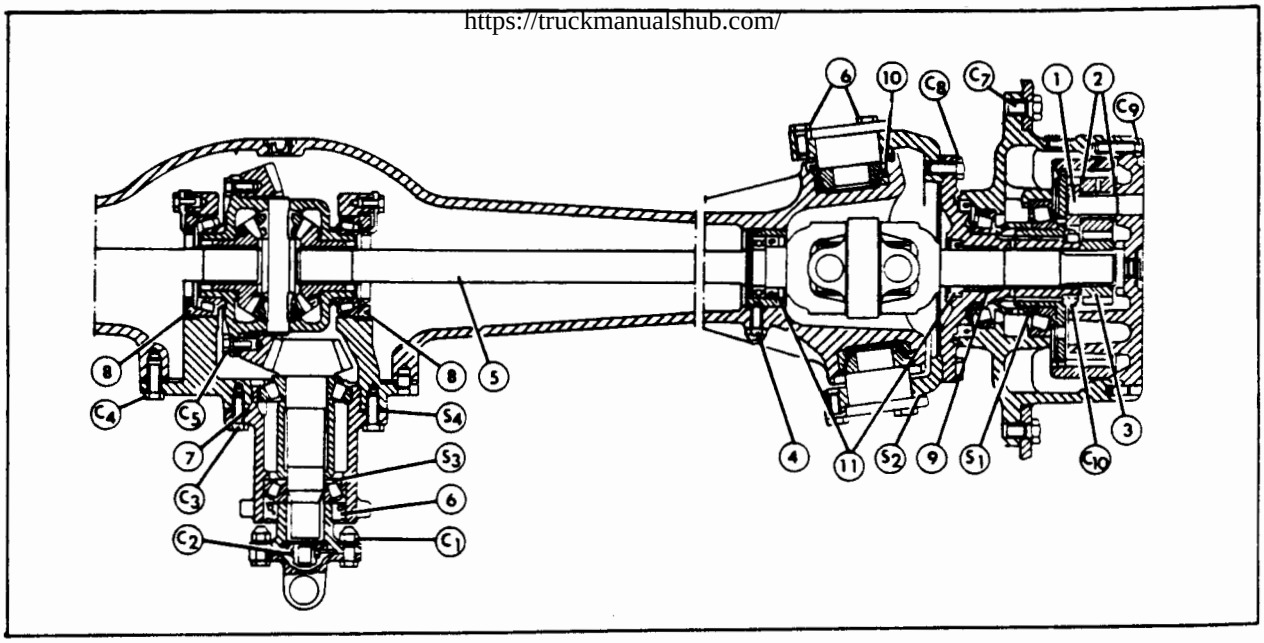

FIG. B.X/6 FRONT DRIVE AXLE CROSS-SECTION

C_1. Nut, cardan shaft; C_2. Nut, bevel pinion shaft; C_3. Screw, pinion support; C_4. Screw, differential support; C_5. Screw, ring gear; C_6. Screw, trunnion bearing housing; C_7. Lug bolt; C_8. Screw, spindle shaft; C_9. Screw, spider pinion holder; C_{10}. Spindle nut; S_1. Wheel hub bearing adjustment shim; S_2. Trunnion shim; S_3. Bevel pinion bearing adjustment shim; S_4. Bevel pinion cone center distance and adjustment shim pack; 1. Spider pinion shaft; 2. Pinion thrust plate; 3. Sun gear; 4. Axle setscrew; 5. Axle shaft; 6. Pinion support seal; 7. O-ring; 8. Ring nut for bevel gear bearing adjustment; 9. Bushing; 10. Trunnion bearing; 11. Oil seal, axle shaft

1. Unscrew trunnion pin retaining screws and remove trunnion pins. Fasten shims to each trunnion pin and mark location.
2. Position pry beneath steel casing of each dirt seal and apply leverage to remove.
3. Use puller to remove trunnion knuckle from the axle carrier end.

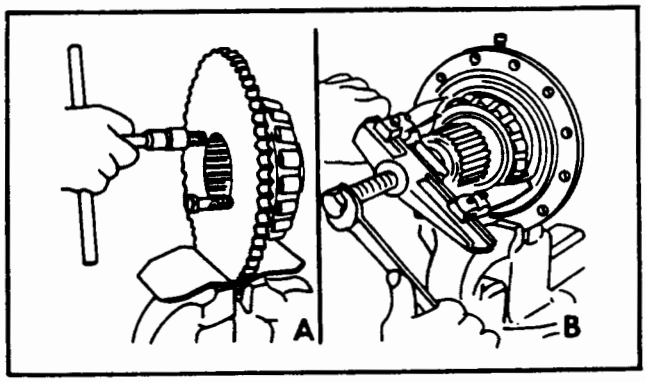

FIG. B.X/7 REMOVING BEARING FROM (A) RING GEAR SUPPORT, (B) SPINDLE

https://truckmanualshub.com/

INSPECTION

Clean all parts. Inspect for signs of wear or damage. Replace as required.

PLANETARY DRIVE REASSEMBLY

1. If removed, lubricate each trunnion knuckle with a light coat of grease. Install each trunnion knuckle and dirt seal in axle carrier end.
2. Position the spindle support over the axle housing outer end, and install the trunnion pin and shims as marked during disassembly. Fit the trunnion and shims so that 5 to 6 lbs. (22.2 to 26.7 N) pull is required at the tie rod hole to rotate the spindle support. Distribute shims evenly on upper and lower trunnions and tighten trunnion cap screws to specifications (Fig. B.X/8).
3. Press inner bearing cone onto spindle. Replace seal and bushing if required, and slide spindle onto axle shaft. Tighten retaining cap screws to specifications.
4. Assemble outer bearing cup (bevel facing outward) and inner bearing cup (bevel facing inward) in wheel hub. Install hub oil seal, lip toward inner bearing.
5. Press outer bearing cone onto ring gear support. Install ring gear support with bearing cone away from splines and secure with lock ring.
6. Fit hub onto steering spindle, be careful to prevent the spindle from damaging the hub oil seal. Slide the spacer over the spindle end and locate against the inner bearing. Position shim around the outer bearing race and install the inner ring assembly.
7. Install thrust washer and nut. Tighten spindle nut until there is no end play in the hub bearings, but the hub rotates freely, when turned by hand. Measure torque required to rotate the hub. If resistance is not within 2-3 lbs. (8.9 to 13.3 N) pull, add or remove shims to obtain the desired bearing preload (Fig. B.X/9).

Reassembly the planet spider pinion assembly in the following order:

1. Press the needle bearings flush with the outer pinion gear surface.

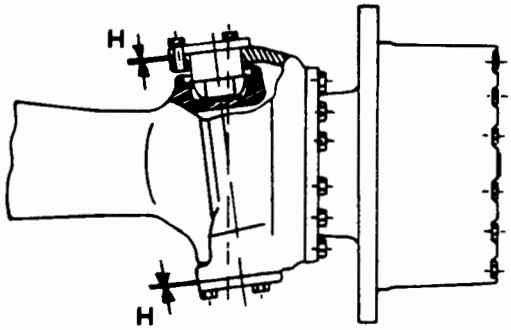

FIG. B.X/8 SHIMING TRUNNION
H. Clearance between spindle support case and cover

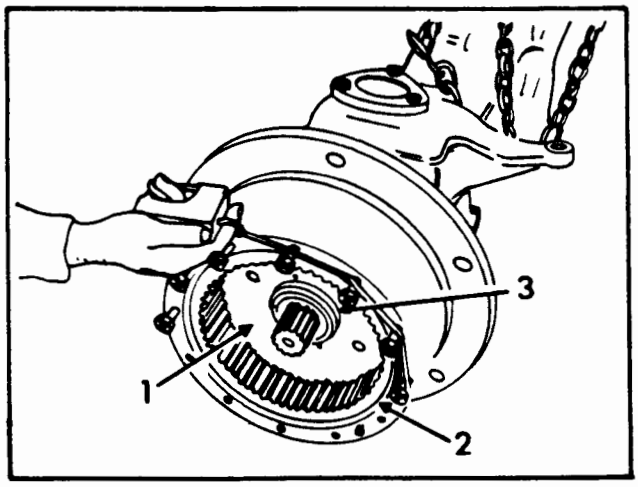

FIG. B.X/9 CHECKING HUB BEARING PRELOAD
1. Ring gear support; 2. Ring gear; 3. Spindle nut

2. Position thrust washer and pinion in planet spider support.
3. Install remaining thrust washer between pinion gear and planet support.
4. Align mark on pinion head with those on support and press in place.
5. Check O-ring and install new one if required. Place planet spider against wheel hub and tighten attaching cap screws to specifications.

Bolt tire and rim on wheel hub and remove axle supports. Fill wheel hubs to proper level with recommended lubricant.

https://truckmanualshub.com/

AXLE REMOVAL

If the following procedures have not been performed, they must be done before the axle can be removed.

1. Drain lubricant from planetary drives and differential. Position stand on either side of the differential to relieve axle weight and prevent axle from oscillating. Remove tire and rim assemblies.
2. Pull tie rod end at spindle support. Remove spindle retaining cap screws at the spindle support, and pull planetary assembly complete.

To remove the axle, loosen lock nut and remove axle set screw located on the rear of the axle housing.

Place a block beneath inner yoke of the universal joint, and pry the axle outward until the O-ring seal is free of the housing. Remove the axle shaft.

AXLE DISASSEMBLY

To disassemble the axle, remove the O-ring seal, external snap ring and internal bearing retaining snap ring. Pull roller bearing from bearing retainer and remove inner retaining snap ring. Press seal from housing (Fig. B.X/10).

AXLE INSPECTION

Clean all parts and check for defects. Check the axle universal for worn or damaged parts and replace as required.

AXLE REASSEMBLE

Place the inner bearing retaining snap ring in the retainer and insert ball bearing. Locate the ball bearing against inner retaining snap ring. Install the outer retaining snap ring. Invert bearing retainer and insert seal. Locate the seal against inner bearing retaining snap ring.

Slide the O-ring over the seal end of the bearing retainer. Run the bearing retainer and bearing assembly over the length of the shaft, and locate against the shoulder on the axle. Install internal snap ring against the bearing race.

DIFFERENTIAL REMOVAL

Before the differential can be removed for inspection or overhaul, the front drive axle must be removed from the tractor, and both of the planetary drives and drive axle shafts must be removed.

Remove differential support retaining screws (Item C_3, Fig. B.X/6) and lift differential support from axle housing.

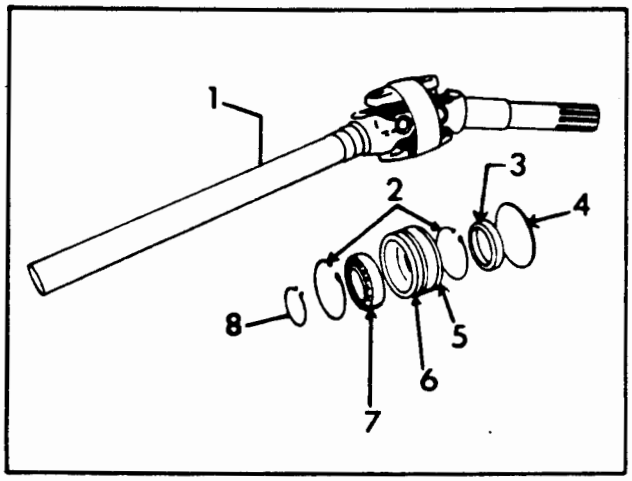

FIG. B.X/10 AXLE SHAFT DISASSEMBLE (ASSEMBLY)

1. Axle shaft; 2. Internal snap ring; 3. Seal; 4. O-ring seal; 5. Bearing housing; 6. Setscrew groove; 7. Bearing; 8. External snap ring.

DIFFERENTIAL DISASSEMBLY

1. Remove pinion support cap screws (Item C_3, Fig. B.X/6) and remove bevel pinion support from differential support. Recover the O-ring (Item 7), and the shim (Item 4).
2. Remove the nut (Item 8, Fig. B.X/12) being careful not to damage the oil seal (Item 11).
3. Remove the bevel pinion, spacer and shim from the pinion support by tapping carefully on the threaded end of the bevel pinion.
4. Using a bearing puller, remove bearing cone (Item 5) pinion. Remove dust cover (Item 10) from the pinion support and press seal out with outer bearing cup (Item 4). Invert pinion support and press inner bearing cup from support.
5. To disassemble the differential support unit, remove the adjusting ring nut (Item 8, Fig. B.X/11), bearing caps (Item 18) and lift the differential ring gear and case assemble from the differential support.
6. Pull bearing cones from the differential case. Unscrew the retaining screws and remove the ring gear from the case. Slide pin from case and remove thrust plates, pinions, side gears and thrust washers.

INSPECTION

Clean all parts and check for damaged components. Replace as necessary. Measure wear on component parts and check against specification table.

https://truckmanualshub.com/

DIFFERENTIAL REASSEMBLY

PINION SUPPORT

1. Press bearing cone (Item 15, Fig. B.X/12) on to pinion shaft (Item 14), tapered side out, and seat tightly against pinion shoulder.
2. Place spacer (Item 3) and shim (Item 12) onto pinion shaft next to bearing inner race. The spacer and shim control bearing adjustment.
3. Press inner bearing cup into pinion support (Item 13), taper outward. Invert support and locate outer bearing cup (taper outward) against inner shoulder. Install outer bearing cone (Item 5), new lip seal, lip in, (Item 11) and dust cover (Item 10).
4. Insert bevel pinion shaft into pinion support. Install flange (Item 7), washer (Item 9) and nut (Item 8). Tighten the nut to 181 ft.-lbs. (245.4 N-m) torque. Wind a cord (5-6 turns) around the drive sleeve and using a pull scale on the cord, check the rolling torque of the pinion shaft. This torque must be 4.2 to 8.4 in.-lbs. (0.47-0.95 N-m). The scale reading should be 3.96 to 7.93 lbs. (17.6-35.3 N). Do not read the starting torque. If the scale reading is less than the above figure, reduce the shim stack. If higher, add shims.

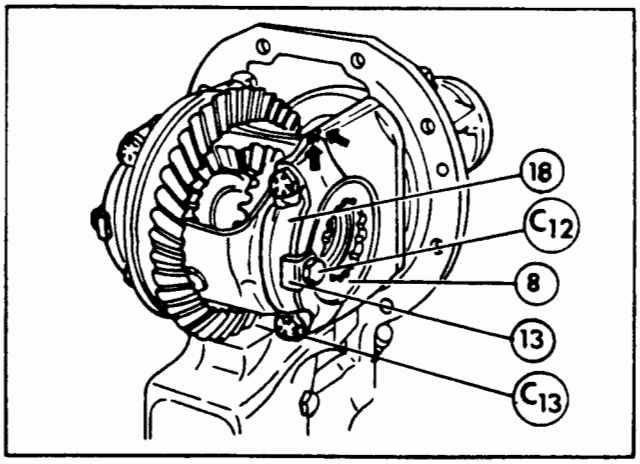

FIG. B.X/11 DIFFERENTIAL SUPPORT REMOVED FROM AXLE HOUSING
C_{12}. Ring nut safety tab screw; C_{13}. Cup holding screw; 8. Adjustment ring nut; 17. Ringnut safety tab; 18. Bearing cup. (Arrows indicate assemble marks)

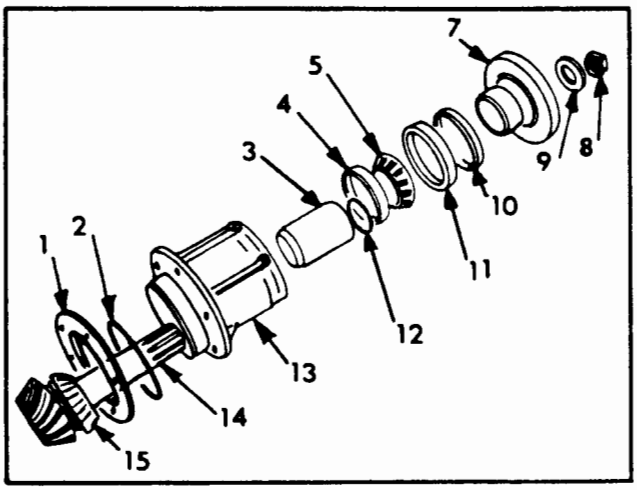

FIG. B.X/12 PINION SUPPORT DISASSEMBLED
1. Shim; 2. O-ring; 3. Spacer; 4. Bearing cup; 5. Bearing; 7. Flange; 8. Nut; 9. Washer; 10. Dust cover; 11. Seal; 12. Shim, adj.; 13. Support, pinion; 15. Bevel pinion

When correct adjustment is obtained, stake nut at key slot on pinion shaft. Slide O-ring over pinion support end and secure support to differential support. Tighten to required specification.

DIFFERENTIAL SUPPORT

1. Install thrust washers, bevel side gears and idler pinion gears in the differential support case. Place pinion shaft through pinion gears. Slide the ring gear over the differential case, locking pinion shaft in place. Install retaining screws and tighten to specification.
2. Install differential bearing cones with taper of each cone outward. Place differential bearing caps over cones and insert ring gear and case assembly into differential support.
3. Install differential bearing adjusting nuts and bearing caps. Bearing caps are marked to corresponding marks on differential support. Tighten bearing cap capscrews until firm contact is made.
4. Tighten bearing adjusting nuts to seat and take up all slack in differential bearing. Be sure ring gear is not "loading on pinion shaft." Always turn nuts so that locks can be inserted. DO NOT FORCE TIGHTEN BEARING ADJUSTING NUTS, as this will preload bearings excessively. Check the twisting torque necessary to the bearing turn. This should be 1.08 to 2.02 ft.-lbs. (1.46 to 2.74 N-m), disregarding the torque necessary to overcome the inertia at the start, correspon-

https://truckmanualshub.com/

ding to a pull scale reading of 4.4 to 6.6 lbs. (19.5 to 29.4 N). This rolling torque can be checked by wounding a cord around the differential housing and connecting it to a pull scale.

5. Check the backlash between ring gear and pinion with a dial indicator (Fig. B.X/15). If backlash is not within limits (.0059 to .0078 in.) (.15 to .20 mm), adjust as follows:

   (1) BE SURE BEARINGS CUPS ARE PROPERLY SEATED against adjusting nuts and nuts are just tight enough to eliminate all bearing end play.

   (2) To decrease backlash, loosen adjusting nut on pinion side of differential one notch and tighten other nut one notch. Check backlash and repeat if necessary.

   (3) To increase backlash, loosen adjusting nut on ring gear side of differential one notch. Check backlash and repeat as necessary.

   (4) Tighten differential bearing cap screws to specification. Recheck backlash.

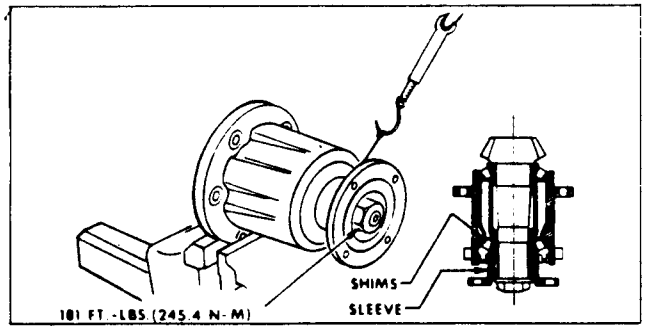

FIG. B.X/13 CHECKING ROLLING TORQUE OF PINION SHAFT

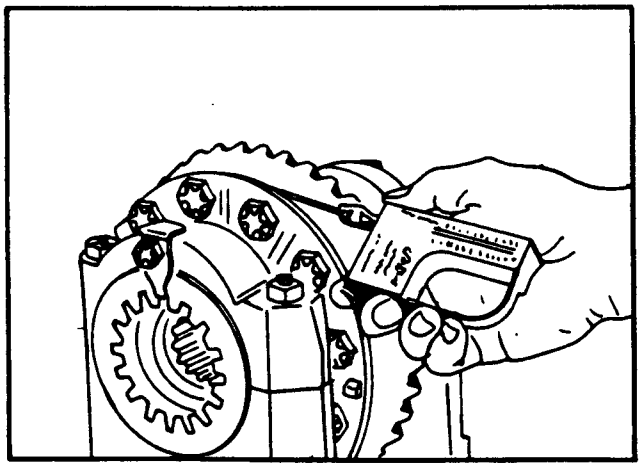

FIG. B.X/14 CHECKING ROLLING TORQUE OF DIFFERENTIAL

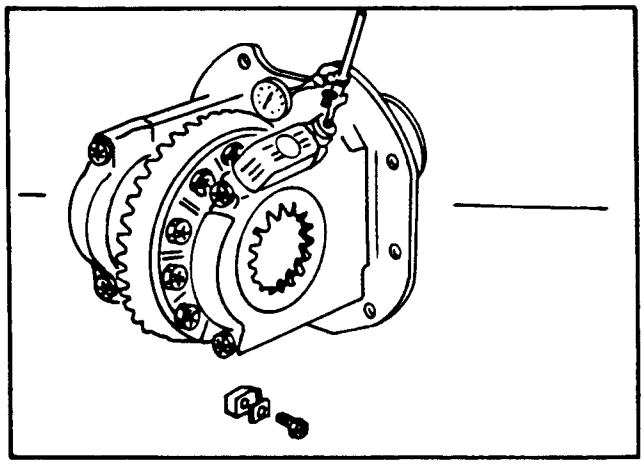

FIG. B.X/15 CHECKING BACKLASH OF PINION AND RING GEAR

CHECKING AND ADJUSTING THE PINION SHAFT AND RING GEAR TOOTH CONTACT (FIG. B.X/16)

This check is to be made after the pinion and ring gear bearings have been adjusted to the proper rolling torque.

   (1) Clean the teeth on the pinion and ring gear.

   (2) Coat a few teeth with a light film of lead oxide.

   (3) Rotate the pinion gear while holding back on the ring gear. If contact is not correct, adjust the pinion using the shim stack.

6. Install bearing adjusting nut locks so end extends into nut.

   Slide lock plate over cap screw and install. Tighten cap screw and bend one corner of lock against cap screw head.

INSTALLATION

Coat mating surfaces of differential support and axle housing with sealing compound. Position differential in axle housing with ring gear to the right and secure support to axle housing. Tighten cap screws to specification.

Lift axle housing, reinstall pivot pin and secure with cap screw. Install blocks between pivot support and axle housing to prevent axle from oscillating. Insert tie rod ends into spindle support and torque retaining nut to specification.

Install axle shaft assemblies. Be careful not to change O-ring seal.

Remove planet spider and sun gear from wheel hub. Slide wheel hub over axle end and tighten retaining cap screws to specifications. Reinstall sun gear and planet spider back onto wheel hub.

https://truckmanualshub.com/

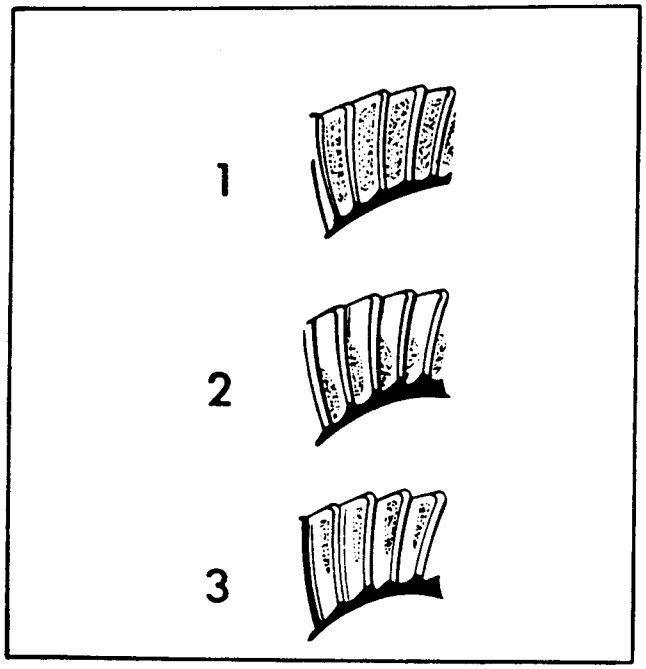

FIG. B.X/16 CHECKING AND ADJUSTING PINION AND RING GEAR TOOTH CONTACT

1. Correct Contact. The contact must be even on the teeth; 2. Incorrect Contact. Contact at the toe of the teeth. Move the pinion away from the ring gear and readjust the backlash to .0059 to .0078 in. (15 to 20 mm); 3. Incorrect Contact. Contact at the heel of the teeth. Move the pinion toward the ring gear and readjust the backlash.

Install front tire rim assemblies. Remove axle blocking and front frame support. Fill differential and planetary assemblies with recommended lubricant.

REDUCTION GEARBOX

DESCRIPTION

The reduction gearbox unit transmits the engine torque to the front drive axle. It is attached below the rear transmission housing and consist of a spur gear train and the independent handbrake. The front drive axle is engaged by means of a lever (Item 1, Fig. B.X/20).

REMOVAL

To remove the reduction gearbox, drain the oil from the transmission case and disconnect the cardan shaft, the shifting linkage and the independent handbrake linkage.

DISASSEMBLY

Remove the brake mechanism cover. Remove screw and remove lever from shaft. Remove shaft from case.

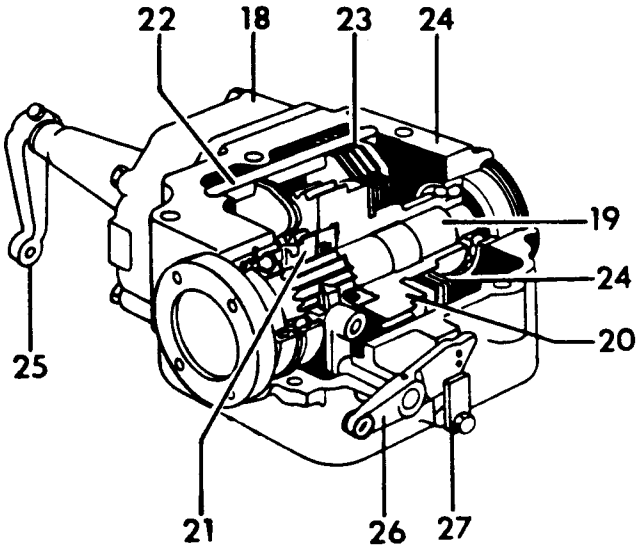

FIG. B.X/17 REDUCTION GEARBOX

19. Reduction gear, splined shaft; 20. Gear; 21. Sliding sleeve; 22. Brake sector; 23. Guide; 24. Friction disc; 25. Brake lever; 26. Reduction gear control lever; 27. Plate; 28. Independent handbrake reduction gear case.

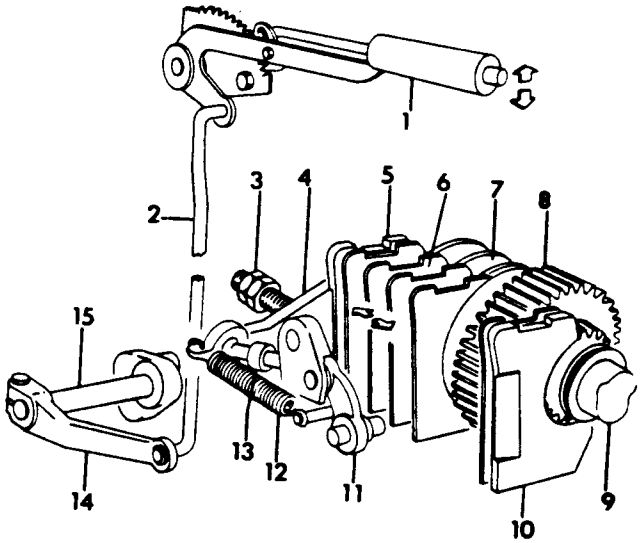

FIG. B.X/18 INDEPENDENT HANDBRAKE CONTROLS

1. Handlever; 2. Linkage rod; 3. Brake adjustment screw; 4. Brake fork; 5. Rear plate; 6. Brake sectors; 7. Friction disc; 8. Gear; 9. Shaft; 10. Front plate; 11. Brake cam assy.; 12. Spring; 13. Push rod; 14. Lever; 15. Shaft

Remove internal snap ring from rear of reduction gearbox case. Install appropriate size capscrew in cover and remove (Fig. B.X/19).

https://truckmanualshub.com/

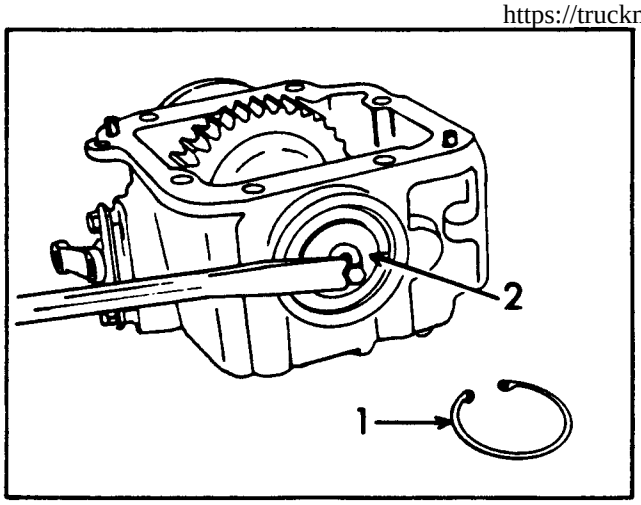

FIG. B.X/19 REMOVE SHAFT
1. Snap ring; 2. Cover

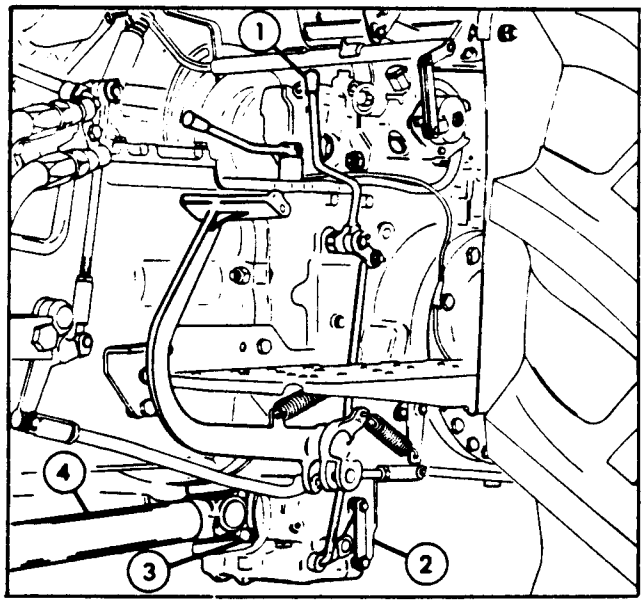

FIG. B.X/20 REDUCTION GEARBOX INSTALLED
1. Control lever, shift forward to engage, rearward, disengage; 2. Reduction gearbox; 3. Cardan shaft screws; 4. Cardan shaft

Expand external snap ring and slide along shaft toward the rear of case. Make certain snap ring is out of groove and up on spline. Slide deflector up on shaft toward rear of case (Fig. B.X/22).

Using a drift, drive the drive shaft out of the casing. Remove the gear with brake disc, deflector, snap ring, brake disc and front brake plate.

Disconnect spring and remove brake fork, and cam assembly. Remove shifting arm retainer, detent ball and spring. Drive roll pin from detent shift arm and remove shaft (Fig. B.X/21).

If necessary, remove front bearing by pressing toward the rear of the case. Remove the snap ring and press the seal out of the front of the case. Press the rear bearing into the case to remove.

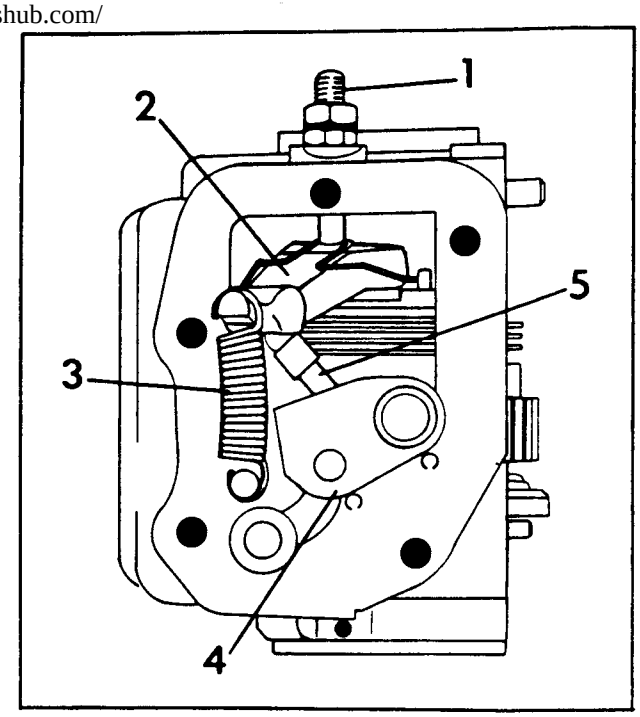

FIG. B.X/21 L.H. REDUCTION GEARBOX
1. Brake adjustment screw; 2. Brake fork; 3. Spring; 4. Brake cam; 5. Push rod

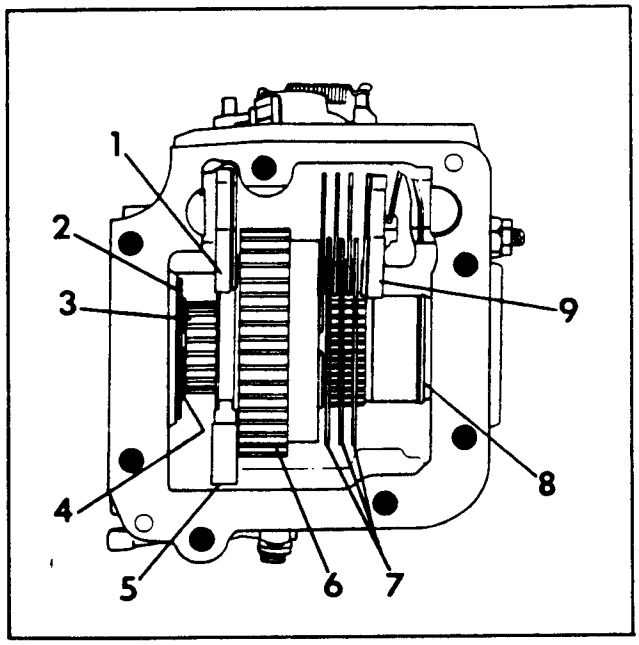

FIG. B.X/22 TOP VIEW, REDUCTION GEARBOX
1. Front plate; 2. Deflector; 3. Sliding sleeve; 4. Snap ring; 5. Shifting pad; 6. Gear; 7. Friction disc; 8. Bevel ring

INSPECTION

Inspect front and rear bearings. Check front seal, cover O-ring, and replace if necessary. Check thickness of brake liner and brake disc. Brake liner should be 0.155 in. to 0.160 in. (3.930 to 4.070 mm) thick. Brake disc should be 0.98 in to 0.104 in. (2.485 to 2.650 mm) thick. Replace if necessary. Check drive shaft, drive gear and engaging sleeve for wear.

https://truckmanualshub.com/

REASSEMBLE

Install bearing, snap ring and seal in front of case. The seal must be installed with the lip facing inward. Install rear bearing into case.

Install O-ring, seal washer and shift arm into case. Install front and rear brake plate, friction disc, brake cam, spring, push rod and brake fork.

Install shaft into case. Place deflector and O-ring onto shaft. Place sleeve onto shaft, making sure that shifting pad is located in groove. Place friction disc in proper location between brake disc and slide onto shaft. Install bevel ring, with bevel side away from bearing, onto shaft and push shaft thru. Slide snap ring and deflector into place and make sure snap ring is in groove.

Install cover with O-ring and snap ring.

Reinstall unit on tractor. Refill transmission case with proper lubricant and check for leaks.

Handbrake adjustments are made by turning the adjustment screw (Item 1, Fig. B.X/21) in to tighten, and out to loosen.

FRONT WHEEL TOE-OUT

The proper toe-out for the DT tractor is 3/8 in. (10 mm) closer together at the rear of the rims than at the front.

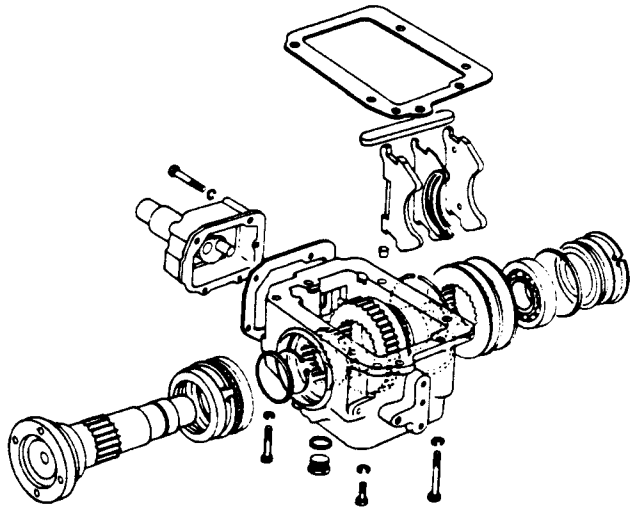

FIG. B.X/23 STACKING OF PARTS, REDUCTION GEARBOX

https://truckmanualshub.com/

B.XI DATA, FITS, WEAR LIMITS, TORQUE SPECIFICATIONS

DESCRIPTION	FITS AND TOLERANCES In.	(mm.)
I. Clutch - 10"		
Backlash, clutch shaft splines and clutch disc hub	0.0040-.0042	0.100-0.106
Thickness of P.T.O. and gearbox clutch friction discs	0.3661-0.3819	9.300-9.700
Wear limit	0.275	7
Thickness of P.T.O. clutch pressure disc	.976-.980	24.800-24.900
Wear limit	.965	24.5
Thickness of gearbox clutch pressure disc	.906-.909	23.00-23.100
Wear limit	.894	22.7
Outer diameter of clutch release sleeve bracket	2.0454-2.0472	51.954-52.000
Inner diameter of clutch release sleeve bracket	2.0484-2.0513	52.030-52.104
Assembly clearance between release sleeve and bracket	0.0012-0.0059	0.030-0.150
Diameter of clutch control pedal shaft	1.1006-1.1024	27.955-28.000
Inner diameter of clutch control pedal shaft bushing after fitting	1.1031-1.1052	28.00-28
Assembly clearance of shaft in bushing	0.0008-0.0049	0.020-0.124
Diameter of pedal shaft bushing seat	1.2982-1.2984	32.974-32.980
Outer diameter of pedal shaft bushing	1.3004-1.3019	33.030-33.069
Interference fit of pedal shaft bushing	0.0020-0.0037	0.050-0.095
Specifications of clutch springs:		
—free length	2.678	68
—engagement length under a load of 191-216 lbs. (87-98 Kg.)	2.035	51.7
—disengaged length under a load of 267-301 lbs. (121.3-136.7 Kg)	1.780	45.2
Specifications of P.T.O. lever spring:		
—free length	1.339	34
—length under a load of 25.7 ± 3.3 lbs. (11.7 ± 1.5 kp)	1.220	31
—length under a load of 68.6 ± 6.6 lbs. (31.1 ± 3 kp)	1.024	26
Specifications of clutch lever spring:		
—Under a load of 4.77 ± .47 ft. lbs. (660 ± 65 kp. mm.) on the longer end, it will rotate	27°	
II. Clutch - 11"		
Backlash, clutch spline shaft and clutch disc hub	0.0004-0.0042	0.010-0.106
Thickness, P.T.O. Clutch disc	0.326-0.350	8.300-8.900
Thickness, main clutch disc	0.331-0.354	8.400-9.000
Wear limit, disc	0.256	6.5
Inner diameter, sliding sleeve, main clutch	1.931-1.934	49.050-49.112
Assembly clearance, between sliding sleeve and carrier	0.0020-0.0059	0.050-0.151
Outer diameter, sliding sleeve	2.282-2.283	57.954-58.000
Inner diameter, sliding sleeve, P.T.O. clutch	2.286-2.288	58.060-58.134
Assembly clearance, between P.T.O. clutch and main, clutch sliding sleeve	0.0024-0.0071	0.060-0.180
Diameter, main clutch shaft	1.100-1.102	27.955-28.000
Inside diameter, main clutch bushing	1.103-1.105	28.020-28.072
Assembly clearance, clutch pedal and bushing	0.0008-0.0046	0.020-0.117
Interference fit, pedal shaft bushing	0.0017-0.0041	0.043-0.103

https://truckmanualshub.com/

DESCRIPTION	FITS AND TOLERANCES In.	(mm.)
Specifications of transmission clutch pressure plate return springs		
—free nominal length	25.2	0.99
—compressed length under a load of 11 - 12 kg (24.5 - 26 lb.)	11.2	0.44
Specifications of modified P.T.O. clutch release lever return springs		
—free nominal length	48.8	1.61
—length under a load of 25 - 27 kg (55 - 59.5 lb.)	29.85	1.17
III. Gearbox - 6/2		
Splines backlash:		
—driven gears	0.0039-0.0042	0.010-0.106
—driving gears	0.0006-0.0037	0.015-0.093
—synchromesh engagement sleeve	0.0039	0.100
—planetary reduction gear sliding sleeve (inside spline)	0.0027-0.0067	0.070-0.170
—planetary reduction gear sliding sleeve (outside spline)	0.0134-0.0173	0.340-0.440
Tooth backlash:		
—gearbox gears	0.0039-0.0079	0.100-0.200
—gears of the planetary reduction gear	0.0028-0.0051	0.070-0.130
Outside diameter of splined bushings and of 1st and 2nd speed driven gear bushings	1.7699-1.7705	44.959-44.971
Diameter of the 1st, 2nd, 3rd, and 4th speed driven gear bores	1.7736-1.7746	45.050-45.075
Assembly clearance between 1st and 2nd speed driven gear bushings and splined bushings and driven gear	0.0031-0.0045	0.080-0.116
Max. permissible clearance	0.012	0.30
Diameter of 1st and 2nd speed driven gear bushing bores	1.3569-1.3581	34.466-34.495
Diameter of the countershaft	1.3571-1.3583	34.470-34.500
Assembly clearance between bushings and the countershaft	0.0010-0.013	0.025-0.034
Thickness of the countershaft thrust ring	0.2224-0.2244	5.65-5.70
Permissible wear thickness	0.197	5.00
Diameter of the reverse gear axle	0.9834-0.9842	24.979-25.000
Inside diameter of bushing	0.9868-0.9880	25.065-25.095
Running clearance of reverse gear axle and bushing	0.0014-0.0047	0.035-0.119
Wear limit	0.012	0.30
Outside diameter of reverse gear bushing	1.1420-1.1470	29.000-29.130
Bore of the reverse speed gears	1.1378-1.1397	28.900-28.950
Interference fit of the bushing and the reverse speed gears bore	0.0020-0.0091	0.050-0.230
Diameter of reduction gear pinion shafts (50, Fig. B.II/9)	0.5665-0.5669	14.389-14.400
Diameter of bearing needles (51)	0.1177-0.1181	2.990-3.000
Diameter of bearing needle location on driven gears (53)	0.8035-0.8043	20.410-20.430
Assembly clearance of bearing needles and their location on driven gears	0.0004-0.0024	0.008-0.062
Wear limit	0.0060	(0.15)
Thickness of planetary reduction gear pinions friction discs and of the toothed rim	0.0567-0.0614	(1.440-1.560)
Wear limit	0.0512	(1.30)
Specifications of the speed selector plate return spring:		
—free length	1.339	(34)
—length under a load of 8.6-9.5 lbs. (3.9 - 4.3 kg)	0.787	(20)

https://truckmanualshub.com/

DESCRIPTION	FITS AND TOLERANCES In.	(mm.)
Specifications of the engaging fork shafts lock ball springs:		
—free length	1.40-1.44	35.5-36.5
—length under a load of 18.0-22.0 lbs. (8.2-10 kp)	1.122	28.5
IV. Transmission - 8/2		
Spline Backlash:		
Transmission driven gears	0.0040-0.0041	0.010-0.106
Transmission drive gears	0.0006-0.0037	0.015-0.093
Synchromesh engagement collar	0.0039	0.100
Planetary gear train staight drive engagement	0.0027-0.0067	0.070-0.170
Planetary gear train engagement	0.0134-0.017	0.340-0.440
Tooth backlash:		
Transmission gears	0.0039-0.0079	0.100-0.200
Planetary gear train	0.0027-0.0051	0.070-0.130
Outside diameter of gear hub sleeves (64, Fig. B.II/29)	1.9655-1.9665	49.925-49.950
Diameter of gear housing bores, Transmission Driven gears	1.9700-1.9720	50.050-50.089
Assembly clearance of sleeves in driven gear hubs	0.0031-0.0047	0.080-0.120
Wear limit	0.012	0.30
Assembly clearance of driven shaft in gear hub sleeves	0.000-0.0020	0.000-0.0050
Diameter of P.T.O. clutch shaft	0.9828-0.9836	24.964-24.985
Inside diameter of bushing	0.9858-0.9879	25.040-25.092
Running clearance of P.T.O. clutch shaft in bushing	0.0021-0.0050	0.055-0.128
Wear limit	0.012	0.30
Interference fit of bushings on drive shaft	-0.0014/-0.0036	-0.037/-0.091
Diameter of clutch shaft	1.2251-1.2563	31.880-31.910
Diameter of drive shaft bushing bore	1.4185-1.4205	36.030-36.080
Dimensions of clutch shaft bushing		
Outside diameter	1.4212-1.4291	36.100-36.300
Thickness	0.077-0.079	1.960-2.000
Diameter of transmission reverse gear axle	0.9834-0.9842	24.979-25.000
Inside fitted diameter of bushing	0.9868-0.9881	25.065-25.098
Running clearance of reverse gear axle and bushing	0.0026-0.0047	0.065-0.119
Wear limit	0.012	0.30
Interference fit of reverse gear bushing	-0.0020/-0.0090	-0.050/-0.230
Diameter of planetary gear train driven pinion shafts	0.5507-0.5512	13.988-14.000
Diameter of needle bearings	0.1178-0.1181	2.990-3.000
Inside diameter of driven gears	0.8035-0.8043	20.410-20.430
Assembly clearance of shafts, needle bearings and driven gears	0.0004-0.0024	0.010-0.061
Wear limit	0.006	0.15
Thickness of thrust washers and rings for speed reduction unit	0.0579-0.0602	1.440-1.560
Wear limit	0.051	1.30
Gearshift return spring:		
Unstressed length	2.42	61.5
Length under load of 11.5-12.5 pounds (5.1-5.7 kg)	1.89	48
Gearshift lever spring		
Unstressed length	1.3976	35.5
Length under load of 27 pounds (12.3 kg)	1.2401	31.5
Poppet ball springs		
Unstressed length	1.40	35.5
Length under load of 18-22 pounds (8.2-kg)	1.12	28.5
Synchromesh flat springs		
Arc under load of 3-3.4 pounds (1.40-1.55 kg)	0.060	1.5
V. Bevel Gear and Differential		
Normal bevel gear and pinion tooth backlash	0.0059-0.0079	0.15-0.20
Backlash of planetary gear tooth and spider pinion tooth	0.0059-0.0079	0.15-0.20
Backlash of bevel gear tooth and differential shaft splines	0.0039-0.0042	0.100-0.106
Diameter of spider pinion shaft (19, Fig. B.III/5)	0.8653-0.8661	23.939-23.960
Spider pinion bore	0.9464-0.9472	24.040-24.060

https://truckmanualshub.com/

DESCRIPTION	FITS AND TOLERANCES In.	(mm.)
Bevel Gear and Differential Continued		
Inside diameter spider pinion (18) bushings, reamed after press-fitting	0.8669-0.8690	22.020-22.072
Assembly clearance between shaft and bushing	0.0008-0.0037	0.020-0.093
Wear limit	0.0098	0.25
Outside diameter of bushing	0.9842-0.9902	25.000-25.150
Interference fit of bushings (18) and spider pinion	-0.0020/-0.0098	0.050-0.250
Diameter of spider gear hub (16, Fig. B.III/5)	1.7307-1.7322	43.961-44.000
Diameter of gear hub locations in differential housing	1.7354-1.7370	44.080-44.119
Assembly clearance between planetary gear hubs and differential case location	0.0041-0.0076	0.105-0.194
Wear limit	0.014	0.35
Diameter of differential case hub (11)	2.3598-2.3622	59.940-60.000
Diameter of differential lock sleeve bore	2.3659-2.3699	60.095-60.195
Assembling clearance between differential lock sleeve and housing hub	0.0037-0.0096	0.095-0.245
Thickness of differential side gear thrust rings	0.059-0.063	1.5-1.6
(15, Fig. B.III/5)	.002 tolerance	0.06 tolerance
Wear limit	0.039	1
Thickness of differential spider pinion thrust washer (17, Fig. B.III/5)	0.0567-0.0614	1.440-1.560
Wear limit	0.039	1
Thickness of differential drive gear bearing adjusting washers	0.012-0.020-0.031	0.3-0.5-0.8
(Sd and SS, Fig. B.III/5 and B.III/6)	± .001 tolerance	± 0.02 tolerance
Thickness of differential spider pinion adjusting washers (S)	.138-.142-.150	3.5-3.6-3.8-3.9-4.0
	.154-.157-.161	4.1-4.2-4.3-4.4-4.5
	.165-.169-.173	4.6-4.7-4.8-5.0
	.177-.181-.185	± .001 tolerance
	.187-.197	
	± 0.02 tolerance	
Thickness of differential spider pinion bearing adjusting washer (Sp)	.067-.069-.071	1.7-1.75-1.8-1.9
	.075-.079-.083	2-2.1-2.2-2.25-2.3
	.087-.089-.091	± 0.01 tolerance
	± .0004 tolerance	
Specifications of differential lock return spring (25, Fig. B.III/7):		
—free length	7.402 ± .126	188 ± 3.2
—length under a load of 200-234 ft. lb. (27.6-32.4 kpm)	.480	126.5
VI. Brakes		
Thickness of brake band linings	0.236	6
Wear limit	0.138	3.5
Width of brake band linings	1.968	50
Outside diameter of brake drums	8.858	225
Diameter of control lever shaft of brake drum (6, Fig. B.IV/1)	0.9428-0.9449	23.948-24.000
	1.0574-1.0630	28.860-27.000
Inside diameter of control lever bushing	0.9459-0.9482	24.025-24.085
	1.0638-1.0658	27.020-27.072
Assembly clearance between pedal shafts and bushings	0.0020-0.0054	0.052-0.137
	0.0008-0.0083	0.020-0.212
Assembly clearance between lever shafts and end bushings (15)	.001-.005	0.025-0.137
Interference fit of bushings (15) and transmission housing locations	.001-.004	0.038-0.091
Diameter of brake pedal shaft (12, Fig. B.IV/1)	1.101-1.102	27.955-28.000
Inside diameter of bushings (13 and 14)	1.1031-1.1052	28.020-28.072
Assembly clearance between pedal shafts and bushings (13 and 14)	0.0008-0.0046	0.020-0.117

https://truckmanualshub.com/

DESCRIPTION	FITS AND TOLERANCES In.	(mm.)
VI. Brakes (Cont'd.)		
Interference fit between bushings (13 and 14) in transmission housing	0.002-0.004	0.049-0.111
Specifications of pedals spring:		
—free length	4.126	104.8
—length under a load of 56-65 lbs. (25.6-29.6 kp)	5.393	137
VII. Final Drives		
Final drive gear tooth backlash	0.0060-0.0078	0.150-0.200
Differential gear and axle shaft splines backlash	0.0004-0.0042	0.0100-0.1060
Final drive bull gear and drive axle shaft splines backlash	-0.0020/-0.0019	-0.050/-0.048
VIII. Steering and Front Wheels		
Diameter of steering case nut shaft (Item 2, Fig. B.VIII/4)	1.3730-1.3740	34.875-34.900
Inside diameter of bushing (Item 10) fitted	1.3745-1.3755	34.912-34.937
Inside diameter of bushings (Item 11) fitted	1.3750-1.3760	34.925-34.950
Assembly clearance between nut shaft and bushings:		
—steering box cover bushing	0.0005-0.0024	0.012-0.062
—steering box bushings	0.0010-0.0068	0.025-0.175
Interference fit of bushings:		
—steering box cover bushing (Item 10)	0.0008-0.0039	0.021-0.099
—steering box bushings (Item 11)	0.0005-0.0034	0.0-0.0
Thickness of worm and nut setting adjustment shims (Item S_1, Fig. B.VIII/4)	0.0039	0.10
Thickness of worm gear taper roller bearing shims (Item S_1)	0.003-0.005-0.011 0.019	0.10-0.15-0.30 0.50
Diameter of spindles (Item 21, Fig. B.VIII/9)	1.495-1.496	37.975-38.000
Inside diameter of bushings (Item 32) (1)	1.496-1.500	38.000-38.100
Assembly clearance of spindles in bushings	0.0007-0.0049	0.020-0.125
Interference fit of bushings (Item 32)	0.0019-0.0118	0.050-0.300
Diameter of front axle trunnion pin (Item 20, Fig. B.VIII/9)	1.2470-1.2480	31.975-32.000
Inside diameter of bushings (Item 33) (fitted) (1)	1.2487-1.2519	32.020-32.100
Assembly clearance between trunnion pin and bushings	0.0007-0.0048	00.020-0.125
Wear limit	0.0136	0.35
Interference fit of bushings (Item 33) in the front axle bracket	0.0019-0.0046	0.050-0.120
Diameter of the steering lever pivot (Item 29, Fig. B.VIII/9)	1.364-1.365	34.975-35.000
Inside diameter of bushings (Item 31) (fitted) (1)	1.3669-1.3693	35.050-35.112
Assembly clearance between steering lever pivot and bushings	0.0019-0.0053	0.050-0.137
Wear limit	0.0136	0.35
Interference fit of bushings (Item 31) in the front axle bracket	0.0019-0.0046	0.050-0.120
Thickness of the spindle bronze thrust washers (Item 22, Fig. B.VIII/9) and (Fig. B.VIII/12) and the steel ones (Item 23) 1	0.1530-0.1560	3.925-4.000
Wear limit of thrust washer (Item 22)	0.117	3
Thickness of trunnion pin washers (Item 25, Fig. B.VIII/9)	0.2223-0.2047	5.100-5.650
Wear limit	0.156	4

https://truckmanualshub.com/

DESCRIPTION	FITS AND TOLERANCES In.	(mm.)
IX. Power Take-Off		
Gear tooth backlash:		
—P.T.O. driving and driven gears	0.0019-0.0059	0.050-0.150
Splines backlash:		
—P.T.O. engagement sliding gear	0.0004-0.0041	0.010-0.105
—P.T.O. driven gear	-0.0009/-0.0028	-0.024/-0.072
X. Front Drive Axle (Side Driven)		
Backlash between bevel gearing flanks and differential	0.08	0.20
Pinion tooth flanks splines and joint axles backlash	0.0011-0.0041	0.028-0.106
Maximum wear limit	0.012	0.30
Dia. of joint body location (22, Fig. B.IX/10) and universal joint (21)	1.9281-1.9291	48.975-49.000
Bore of inner location coupling the axles of the inner and outer joints (20 and 23)	1.9301-1.9315	49.025-49.060
Backlash between locations coupling the joint body and location outer joint axle	0.0000-0.0030	0.000-0.075
Maximum wear limit	0.0079	0.20
Gradient thickness of joint body (22)	0.9331-0.9409	23.7-23.9
Width of universal joint location (21)	0.9449-0.9508	24.000-24.150
Backlash between joint body edge and its location from universal joint	0.0079-0.0177	0.200-0.450
Max. permissible backlash	0.3937	1.000
Dia. of spider pinion shaft (38, Fig. B.IX/12)	0.9255-0.9263	23.508-23.529
Boring for spider pinion shaft (37)	0.9271-0.9287	23.549-23.590
Backlash between axle and spider pinions boring	0.0011-0.0032	0.028-0.082
Max. permissible backlash	0.0098	0.25
Dia. of cylindrical side of the planetary pinion (36)	2.2817-2.2835	57.954-53.000
Boring of the spider pinion cylindrical side location from casings (33 and 34)	2.2860-2.2880	58.065-58.115
Backlash between the spider pinion cylinderical side and their locations from casings	0.0012-0.0059	0.030-0.150
Max. permissible backlash	0.0157	0.40
Dia. of joint outer axles and joint axles (23, 55 and 20, Fig. B.IX/10)	2.0461-2.0472	51.970-52.000
Boring of ball joint bushings	2.0488-2.0520	52.040-52.120
Backlash between axles and bushings	0.0016-0.0059	0.040-0.150
Max. permissible backlash	0.0138	0.35
Dia. of swinging axle (52, Fig. B.IX/11) of front drive axle	1.2589-1.2598	31.975-32.000
Bushing (53) bore of front drive axle support	1.2608-1.2633	32.025-32.087
Backlash between swinging axle and bushings of front drive axle support	0.0098-0.0044	0.025-0.112
Max. permissible backlash	0.01378	0.35
Thrust ring thickness (19, Fig. B.IX/10) of axle	0.2559	6.50
Wear limit	0.2441	6.20
Thrust rings thickness (39, Fig. B.IX/12) for spider pinions	0.2333-0.2362	5.925-6.000
Wear limit	0.2244	5.700
Thickness of planetary pinion adjusting rings (35)	0.0567-0.0614	1.44-1.56
Wear limit	0.0492	1.25

https://truckmanualshub.com/

DESCRIPTION	FITS AND TOLERANCES In.	(mm.)
X. Front Drive Axle (Side Drum) (Cont'd.)		
Thickness of rings (54, Fig. B.IX/11) of front drive axle swinging axle	0.1146-0.1217	2.91-3.09
Wear limit	0.1043	2.65
Thickness of shims I_1, I_2, Fig. B.IX/11 of tapered roller bearing for steering axle	0.004-0.006-0.031	0.1-0.15-0.80
Thickness of shims (I_3 and I_6) of the drive pinion	0.106-0.108-0.110 0.112-0.114-0.116 0.118-0.120-0.122 0.124-0.126-0.128 0.130	2.7-2.75-2.80 2.85-2.90-2.95 3.00-3.05-3.10 3.15-3.20-3.25 ·3.30
Thickness of shims (I_5) for the bevel pinion bearings	0.004-0.005-0.006	0.100-0.125-0.150
Front Drive Axle Side Reduction Gear		
Backlash between tooth flanks of the driving and driven gears	0.004-0.008	0.100-0.200
Backlash between driven gear grooves and splined shaft	0.0006-0.0054	0.14-0.137
Max. permissible backlash	0.014	0.35
Shaft (43, Fig. B.IX/22) dia. for driving gear	0.9837-0.9843	24.987-25.000
Dia. of bearing needles for the double-type driving gear	0.1177-0.1181	2.990-3.000
Bore of bearing needle location	1.2217-1.2225	31.030-31.050
Backlash between shaft, bearing needles and location of driving gear	0.0012-0.0033	0.030-0.083
Max. permissible backlash	0.008	0.20
Dia. of control shaft (16) for engaging fork (Fig. B.IX/21)	0.6292-06297	15.982-15.994
Location boring of control shaft from the reduction gear casing	0.6306-0.6315	16.016-16.040
Backlash between control shaft and its location	0.0009-0.0023	0.022-0.058
Max. permissible backlash	0.060	0.15
Shims for cover (9a, 9b, 9c)	0.004-0.008-0.012	0.1-0.2-0.3
Shim thickness (29) for the driving gear	0.0578-0.0603	1.470-1.530
Specification of spring (23) for the lock ball (22) of control shaft:		
—free length	0.9449	24
—length under load	0.5512	14
—check load	26.5 lbs.	12 kg.
XI. Front Drive Axle (Center Driven)		
Pinion bearing adjustment shims (S_3, Fig. B.X/6)	0.049-0.051-0.055 0.059-0.063-0.065 0.067-0.071	1.25-1.3-1.4-1.5 1.6-1.65-1.7-1.8
Pinion cone center distance adjustment shims (S_4, Fig. B.X/6)	0.004-0.008-0.019	0.1-0.2-0.5
Rolling torque corresponding to assembly preload of bearings	1.08-2.02 ft. lbs.	1.46-2.74 N·m
Differential		
Thickness of differential gear thrust washers	0.0567 to 0.0614	1.47 to 1.53
Diameter of pinion axles	0.9432 to 0.9440	23.959 to 23.980
Bore of differential pinion (fitted and reamed)	0.9527 to 0.9477	24.020 to 24.072
Assembly clearance between differential pinion bushings and axles	0.0016 to 0.0044	0.040 to 0.113
Interference fit of bushing on differential pinions	0.0020 to 0.0098	0.050 to 0.250
Backlash between differential gear and pinion teeth	0.0059 to 0.0078	0.15 to 0.20
Final Drive		
Thickness of driven gear end washers (3, Fig. B.X/6)	0.0578 to 0.0602	1.47 to 1.53
Backlash of sun gear, planet gear and internal gear teeth	0.004 to 0.008	0.10 to 0.20

https://truckmanualshub.com/

DESCRIPTION	FITS AND TOLERANCES In.	(mm.)
Axle Shafts		
Backlash between differential pinion, planet gear and axle shaft splines	0.004 to 0.0042	0.010-0.106
Outside diameter of wheel shaft bushings (9, Fig. B.X/6)	1.8504 to 1.8512	47.000 to 47.020
Bore of seat for bushings in wheel hub	1.8464 to 1.8485	46.900 to 46.950
Interference fit of bushings in their seats	0.0019 to 0.0047	0.050 to 0.120
Bore of wheel shaft bushings (after fitting without reaming)	1.5759 to 1.5775	40.030 to 40.070
Diameter of axle shafts in correspondence of bushings	1.5737 to 1.5748	39.975 to 40.000
Assembly clearance of axle shaft in its bushing	0.0012 to 0.0037	0.030 to 0.095
Steering Joint		
Thickness of adjustment shims (S_2, Fig. B.X/6)	0.004-0.006-0.008 0.010-0.012	0.10-0.15-0.20 0.25-0.30
Thickness of wheel hub bearings adjustment shims (S_1, Fig. B.X/6)	0.086-0.090-0.094 0.098-0.102-0.106 0.110-0.114-0.118 0.122-0.126	2.2-2.3-2.4-2.5 2.6-2.7-2.8-2.9 3-3.1-3.2
Front Wheel Drive Pivot		
Diameter of trunnion pin	1.4951 to 1.4961	37.9756 to 38.000
Bore of trunnion bushings	1.4969 to 1.5000	38.020 to 38.100
Assembly clearance between trunnion pin and bushings	0.0008 to 0.0049	0.020 to 0.125
Interference fit of bushing	0.0025 to 0.0047	0.050 to 0.120
Thickness of trunnion thrust washer	0.2008 to 0.2067	5.100 to 5.250
Max. osciliation of axle in both directions	11°	
Reduction Gearbox		
Thickness of brake liner	0.1547 to 0.1602	3.930 to 4.070
Thickness of brake disc	0.0978 to 0.1043	2.485 to 2.650
Backlash of brake liner on shaft	0.0028 to 0.0063	0.070 to 0.160
Backlash of sliding sleeve and gear	0.0028 to 0.0065	0.070 to 0.166
Backlash of sliding sleeve and shaft	0.0004 to 0.0042	0.010 to 0.106

https://truckmanualshub.com/

TORQUE SPECIFICATIONS

Description	Size and thread (metric)	N • m	Ft.-lbs.
NOTE: Metric threads are measured thread to thread. EXAMPLE: Capscrew floorplate front 10 x 1.25 10 mm. is the diameter of the thread. 1.25 mm. is the distance between threads.			
I. Frame, Mudguards, Floorplates and Drawbar			
Capscrew, battery holder	10 x 1.25	55.9 - 61.8	41 - 46
Capscrew, floorplate front	10 x 1.25	40.6 - 47.4	30 - 35
Capscrews, radiator support bracket	12 x 1.25	67.7 - 81.3	50 - 60
Capscrews, mudguards to supporting brackets	12 x 1.25	67.7 - 81.3	50 - 60
Capscrews, floorplate rear	12 x 1.5	67.7 - 81.3	50 - 60
Bolt nuts, drawbar	18 x 1.5	325 - 366	240 - 270
Bolt nuts, drawbar plate lower attachment	20 x 1.5	291 - 232	215 - 245
Bolt nuts, drawbar plate upper attachment	20 x 1.5	291 - 232	215 - 245
II. Clutch, 10"			
Self-locking nuts, clutch-transmission shafts coupling bolts, (Item C_1, Fig. B.I/11 and B.II/7)	8 x 1.25	20 - 27	15 - 20
Self-locking screws, 10" P.T.O. clutch release lever adjustment support	8 x 1.25	23 - 27	17 - 20
Capscrews securing clutch to engine flywheel (Item C_4, Fig. B.I/4 and B.I/6)	12 x 1.25	67.7 - 81.3	50 - 60
Capscrews, clutch transmission housing to engine crankcase:			
—Housing to crankcase upper capscrews (Item C_3, Fig. B.I/2 and B.I/6)	12 x 1.25	67.7 - 81.3	50 - 60
—Crankcase to housing side and lower capscrews (Item C_5, Fig. B.I/6)	12 x 1.25	67.7 - 81.3	50 - 60
Capscrews, fuel tank support:			
—Capscrews, front, support to crankcase (Item C_7, Fig. B.I/2)	12 x 1.25	67.7 - 81.3	50 - 60
—Capscrews, rear, support to clutch-transmission housing (Item C_8, Fig. B.I/2)	12 x 1.25	67.7 - 81.3	50 - 60
Setscrews, clutch release forks (Item C_{12}, Fig. B.II/5)	16 x 1.5	176 - 203	130 - 150
III. Clutch, 11"			
Capscrews securing 11" LUK clutch to engine flywheel (C_4, Fig. B.I/19)	8 x 1.25	22.4 - 24.4	16.5 - 18
Capscrews clutch transmissions housing to engine crankcase:			
—Housing to crankcase upper capscrews (C_3, Fig. B.I/17)	12 x 1.25	97.6 - 107.8	72 - 79.5
—Crankcase to housing side and lower capscrews (C_5. Fig. B.I/17)	12 x 1.25	97.6 - 107.8	72 - 79.5
Capscrews fuel tank support:			
—Capscrews, front support to crankcase	12 x 1.25	97.6 - 107.8	72 - 79.5
—Capscrews, rear, support to clutch-transmission housing (C_8, Fig. B.I/14)	12 x 1.25	97.6 - 107.8	72 - 79.5
Setscrews, clutch release forks (C_{12}, Fig. B.I/16 and C_{12}, B.I/17)	16 x 1.5	180 - 195	133 - 144
IV. Transmission - 6/2			
Capscrews, transmission housing cover	8 x 1.25	13 - 15	10 - 11
Stud nuts, shafts front bearing caps (Item C_2, Fig. B.II/31)	8 x 1.25	13.5 - 17.6	10 - 13

https://truckmanualshub.com/

TORQUE SPECIFICATIONS (Continued)

Description	Size and thread (metric)	N • m	Ft.-lbs.
IV. Transmission - 6/2 (Cont'd.)			
Capscrews, gearbox cover (Item C_3, Fig. B.II/31)	8 x 1.25	25 - 27	18 - 20
Capscrews, selector plate return spring bracket (Item C_4, Fig. B.II/4)	8 x 1.25	25 - 27	18 - 20
Capscrews, 10" clutch shaft bracket (Item C_5, Fig. B.II/5)	10 x 1.25	57 - 63	42 - 46
Capscrews, auxiliary speed reduction unit shifter fork bar support (Item C_6, Fig. B.II/6)	10 x 1.25	57 - 63	42 - 46
Capscrews, 6-speed transmission reverse gear axle retaining plate (Item C_8, Fig. B.II/6)	12 x 1.25	67.7 - 81.3	50 - 60
Capscrews, planetary unit fixed gear (Item C_9, Fig. B.II/6)	12 x 1.5	90 - 100	66 - 74
Bolt and stud nuts, differential and transmission housing (Item C_{10}, Fig. B.II/10)	12 x 1.5	95 - 105	70 - 77
Capscrew, oil pump suction pipe (Item C_{11}, Fig. B.II/6)	12 x 1.5	90 - 100	66 - 74
Locknut, driven gears shaft (Item C_{13}, B.II/6)	22 x 1.5	350 - 400	258 - 295
V. Transmission - 8/2			
Capscrews transmission housing cover	8 x 1.25	13 - 15	10 - 11
Stud nuts, shafts front bearing caps (C_2, Fig. B.II/24)	8 x 1.25	16.5 - 17.6	12.2 - 13
Capscrews, gearbox cover (C_3, Fig. B.II/19)	8 x 1.25	24 - 27	18 - 20
Capscrews, selector plate return spring bracket (C_4, Fig. B.II/22)	8 x 1.25	25 - 27	18 - 20
Capscrews, creeper speed reduction unit shift fork bar support (C_6, Fig. B.II/19 and B.II/23)	10 x 1.25	57 - 63	42 - 46
Capscrews, planetary unit fixed gear (C_9, Fig. B.II/19 and B.II/23)	12 x 1.5	90 - 100	66 - 74
Bolt and stud nuts, gearbox and transmission housing (C_{10}, Fig. B.II/23)	12 x 1.5	95 - 105	70 - 77
Capscrew, oil pump suction pipe (C_{11}, Fig. B.II/31)	12 x 1.5	90 - 100	66 - 74
Locknut, driven gears shaft (C_{13}, Fig. B.II/31)	22 x 1.5	350 - 400	258 - 295
VI. Bevel Gear and Differential			
Capscrews, P.T.O. shaft bearing retaining plate (Item C_1, Fig. B.III/3)	8 x 1.25	25 - 27	18 - 20
Bolt nuts, bevel gear to differential (Item C_2, Fig. B.III/5 and B.III/6)	12 x 1.25	94.9 - 108	70 - 80
Stud nuts, differential bearing housings (Item C_4, Fig. B.III/6)	10 x 1.25	57 - 68	42 - 46
Capscrews, differential lock pedal bracket	10 x 1.25	57 - 63	42 - 46
Locknut, bevel gear pinion shaft (Item C_3, Fig. B.III/5 B.III/6 and B.III/10)	40 x 1	345 - 380	255 - 280
VII. Brakes			
Screw, outside lever bracket (Item C_1, Fig. B.IV/1)	8 x 1.25	25 - 27	18 - 20
Setscrew, left brake pedal (Item C_2)	16 x 1.5	200 - 220	148 - 162
Setscrew, inside levers (Item C_3, Fig. B.IV/1 and B.IV/2)	16 x 1.5	200 - 220	148 - 162

https://truckmanualshub.com/

TORQUE SPECIFICATIONS (Continued)

Description	Size and thread (metric)	N • m	Ft.-lbs.
VIII. Final Drives and Sprocket Wheel			
Capscrews, final drive housing covers (Item C_1, Fig. B.VI/1 and B.VI/7)	10 x 1.25	40.6 - 47.4	30 - 35
Capscrews, driven gear outer bearing washers (Item C_2, Fig. B.VI/7 and B.VI/8)	10 x 1.25	40.6 - 47.4	30 - 35
Capscrews, final drives to differential housing (Item C_3, Fig. B.VI/7)	12 x 1.5	67.7 - 81.3	50 - 60
Bolt nuts, wheel rims (Item C_4, Fig. B.VI/7)	16 x 1.5	162.6 - 189.8	120 - 140
Capscrews, drive wheel discs (Item C_5)	16 x 1.5	244 - 271	180 - 200
Nut, brake drums (Item C_6)	38 x 1.5	149 - 176	110 - 130
Nut, final drive bull gear (Item C_7)	55 x 1.5	840 - 922	620 - 680
IX. Steering and Front Wheels			
Capscrews, steering box cover (Item C_2, Fig. B.III/1)	10 x 1.25	40.6 - 47.4	30 - 35
Capscrews, steering box side cover (Item C_3, Fig. B.VIII/4 and B.VIII/6)	10 x 1.25	40.6 - 47.4	30 - 35
Bolt nut, steering tie rods (Item C_5, Fig. B.VIII/7)	10 x 1.25	23 - 27	17 - 20
Setscrews, steering lever pivot flange (Item C_{10}, Fig. B.VIII/9 and B.VIII/10)	10 x 1.25	40.6 - 47.4	30 - 35
Setscrew, front axle trunnion pin (Item C_7, Fig. B.VIII/7 and B.VIII/9)	12 x 1.25	67.7 - 81.3	50 - 60
Bolt nut, steering levers (Item C_9, Fig. B.VIII/7)	12 x 1.25	67.7 - 81.3	50 - 60
Blocking screw nut, steering lever to socket ball (Item C_6)	14 x 1.5	40.6 - 54	30 - 40
Setscrews nuts, beam extension (Item C_8)	14 x 1.5	108.4 - 128.8	80 - 95
Capscrews, front wheel discs (Item C_{11}, Fig. B.VIII/9)	14 x 1.5	108.4 - 128.8	80 - 95
Self-locking screws, steering box to gearbox (Item C_1, Fig. B.VIII/1 and B.VIII/4)	16 x 1.5	176 - 203	130 - 150
Setscrew, steering lever (Item C_{12}, Fig. B.VIII/9)	16 x 1.5	176 - 203	130 - 150
Capscrews, front axle bracket (Item C_{14})	16 x 1.5	176 - 203	130 - 150
Nut, steering wheel	20 x 1.5		55 - 65
Nut, front wheel hubs (Item C_{13}, Fig. B.VIII/9)	20 x 1.5	230.4 - 257.6	170 - 190
Nut, steering arm (Item C_4, Fig. B.VIII/4)	22 x 1.5	176.5 - 196.2	130.2 - 144.7
X. Front Drive Axle - (Side Drive)			
Bevel gearing retaining screws provided with self-locking (S_1, Fig. B.IX/9)	12 x 1.25	97.6 - 108.4	72 - 80
Spider pinion casing retaining screws (S_2) provided with self-locking (Fig. B.IX/11)	10 x 1.25	25.8 - 28.5	19 - 21
Self-locking nuts (S_3) of the stud bolds retaining the differential casing on the front drive axle body	14 x 1.5	161.3 - 176.2	119 - 130
Screw (S_4) retaining the differential cover on the right half-casing	14 x 1.5	39.3 - 44.7	29 - 33
Screw (S_5) retaining the bevel pinion support (43) on the differential casing (Fig. B.IX/12)	14 x 1.5	69.1 - 75.9	51 - 56
Nut (S_6) retaining the bevel pinion shaft	20 x 1.5	20.3 - 25.8	108 - 137
Screws (S_7) retaining the spherical support on the front drive axle (Fig. B.IX/11)	14 x 1.5	88.1 - 97.6	67 - 72
Screws (S_8) retaining the lower cover of the joint on the joint location	14 x 1.5	117.9 - 127.4	87 - 94

https://truckmanualshub.com/

TORQUE SPECIFICATIONS (Continued)

Description	Size and thread (metric)	N • m	Ft.-lbs.
X. Front Drive Axle (Side Drive) (Cont'd.)			
Screws (S_9) retaining the steering lever on the joint location (26)	14 x 1.5	117.9 - 127.4	87 - 94
Screws (S_{10}) retaining the flange on the joint location	12 x 1.25	69.1 - 75.9	51 - 56
Outer splined nut (S_{11}) retaining the bevel roller bearing of the wheel hub	70 x 2	490.7 - 588.4	362 - 434
Screws retaining the splined hub (S_{12}) on the wheel hub	12 x 1.25	88.1 - 97.6	65 - 72
Self-locking nuts (S_{13}) for cardan joint flange retaining screws	12 x 1.5	48.8 - 54.2	36 - 40
XI. Reduction Gearbox (Side Drive)			
Screw retaining the rear engaging flange to the U-joint (Sc)	10 x 1	39.3 - 44.7	29 - 33
Screw retaining the reduction gear casing to the transmission housing	12 x 1.5	69.1 - 75.9	51 - 56
Self-lock nut retaining the shaft nut (P)	45 x 1.5	235.9 - 260.3	174 - 192
XII. Front Drive Axle (Center Drive)			
Fixing screws, drive pinion carrier onto differential holder	12 x 1.25	70 - 80	52 - 59
Fixing nut, drive pinion shaft	18 x 1.5	150 - 190	111 x 140
Fixing screws, reduction gear casing onto transmission housing	12 x 1.25	90 - 100	66 - 74
Fixing screws, differential holder onto front axle	12 x 1.25	90 - 199	66 - 74
Fixing screws, ball cup axle onto ball socket	10 x 1.25.	57 - 63	42 - 46
Fixing screws, wheel shaft onto ball socket	12 x 1.25	90 - 100	66 - 74
Fixing screws, differential pinion carrier onto wheel hub	10 x 1.25	57 - 63	42 - 46
Fixing screws, axle	16 x 1.5	220 - 240	162 - 177
Fixing nut, wheel shaft	KM11	500 - 550	369 - 406
XIII. Power Take-Off			
Capscrews, differential housing rear cover (Item C_1, Fig. B.VII/1 and B.VII/2)	12 x 1.5	68 - 81	50 - 60
Capscrews, differential housing rear cover (Item C_2, Fig. B.VII/1 and B.VII/2)	16 x 1.5	176 - 203	130 - 150
Nut, P.T.O. driven shaft gear (Item C_4, Fig. B.VII/2)	22 x 1.5	203 - 250.8	150 - 185

All torque values are calculated for threads lubricated with motor oil.

https://truckmanualshub.com/

C. HYDRAULICS

C.O. Hydraulic Lift & Linkage
C.I. Power Steering
C.II. Fits & Tolerances - Torque Specifications

https://truckmanualshub.com/

HYDRAULIC LIFT AND POWER STEERING

INDEX

GENERAL 149
SPECIFICATIONS 150
HYDRAULIC LIFT 150
Mechanics of Position Control Operation 153
Mechanics of Draft Control Operation 153
Removal - Disassembly 156
Inspection 158
Assembly and Installation 159
Oil Filter 159
3-Point Linkage 160
Adjustment 164
Checking Pressure Relief, Safety and Drain Valves 165
REMOTE HYDRAULIC SYSTEM 166
HYDRAULIC PUMP 168
Overhauling 168
Trouble-Shooting Chart 171
POWER STEERING 172
HYDROSTATIC STEERING 179
FITS AND TOLERANCES, TORQUE SPECIFICATIONS 183

https://truckmanualshub.com/

C.O HYDRAULIC LIFT AND POWER STEERING

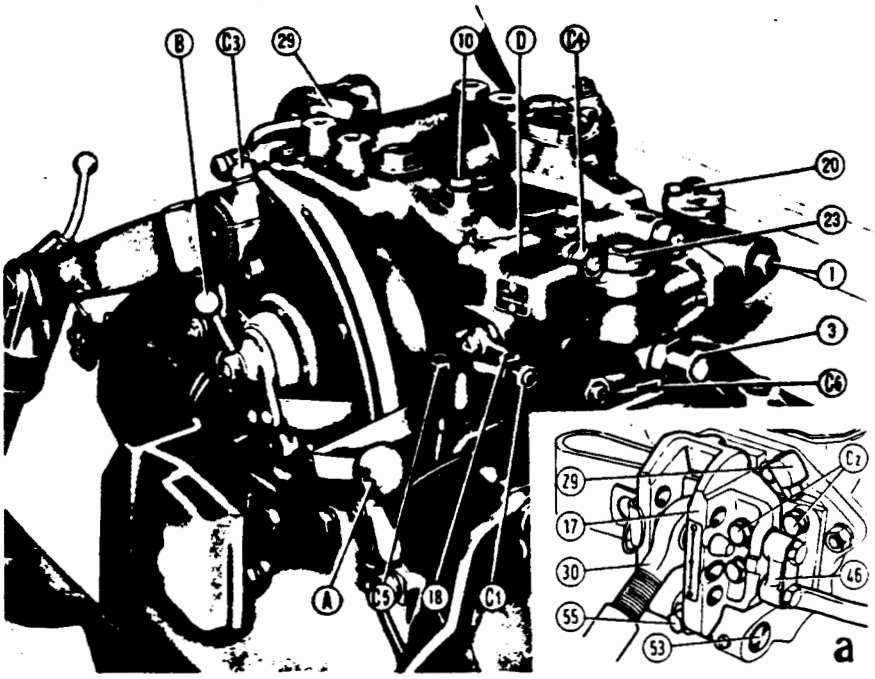

54001

FIG. C.O/1 HYDRAULIC LIFT INSTALLED ON TRACTOR
a. Rear view of top link bracket and its four mounting holes.

A. Lift control lever; B. Operation selector lever; C_1 and C_4. Stud nuts securing hydraulic control valve to lift carcase; C_2. Capscrews securing control spring to top link bracket and to rear cover; C_3. Bolt nuts securing lift arms to rocker shaft; C_5. Capscrews securing hydraulic lift to transmission housing; C_6. Dump valve plug; D. Hydraulic control valve; 1. Pressure relief valve; 3. Cylinder safety valve; 10. Arms maximum lift adjusting screw; 17.Top link bracket; 18. Sensitivity regulation lever (turn it towards " + " to increase sensitivity or " – " to reduce it); 20. Oil line from pump; 23. Pilot valve retaining plug; 29. Top link bracket blocking wedge; 30. Top link; 46. Draft control lever; 53. Top link bracket trunnion; 55. Trunnion setscrew

GENERAL

The hydraulic lift unit installed on the tractor consists of the following major units:

1. An oil pump (Item P, Fig. C.O/30) incorporated the pressure loaded principle by which service wear between gear and faces is taken up automatically. This pump is driven by the engine timing gears.
2. A hydraulic lift unit (Fig. C.O/1) using transmission oil, with position and draft control operations, consisting of a cast iron block containing the power piston (single-acting). This piston acts through a ball-head push rod upon a lever keyed to the rockshaft. The hydraulic control valve and control levers are attached to the same body.
3. A standard remote ram valve.
4. A three-point linkage (Fig. C.O/17) with lift rods, top link and adjustable sway chains.

https://truckmanualshub.com/

Specifications:

Fluid type ..... Exxon Torque Fluid 56 or Equivalent

Fluid capacity of transmission case with level reaching the upper dipstick mark ..... 17 Qts. (16 litres)

Available fluid for remote ram control ..... 10.6 Qts. (10 litres)

Plessey gear type hydraulic pump ..... Model PD 10

Borg Warner gear type hydraulic pump ..... Optional

Engine/pump speed ratio 1:0.91

Pump speed (with engine running at 2400 RPM) ..... 2180 RPM

Corresponding output with an oil temperature of 122° - 140°F. (50°-60°C.) and 2133 PSI (14707 kPa) pressure at 2400 engine RPM ..... 5.75 GPM (21.8 litres/min.)
(Optional) 10 GPM (37.8 litres/min.)

Pressure relief valve setting ..... 2062-2204 PSI (14217-15203 kPa)

Single-acting ram:

Bore and stroke ..... 3.54 x 3.54 in. (90 x 90 mm)

Capacity ..... 34.8 cu. in. (570 cc)

Cylinder Safety valve pressure setting ..... 2845-2987 PSI (19616-20595 kPa)

Nominal lifting capacity ..... 6075 ft.-lb. (8236 N • m)

Three-point linkage:
Maximum liftable weight at implement mounting points with lift rods connected to lower links as follows:

(Figure 17) in holes (a) ..... 2645 lb. (1200 kg)
(Figure 17) in holes (b) ..... 2205 lb. (1000 kg)

Lift arms range with lift rods connected to lower links as follows:

(Figure 17) in holes (a) ..... 21.6 in. (550 mm)
(Figure 17) in holes (b) ..... 27.2 in. (690 mm)

Lifting time with engine running at 2550 RPM ..... 1.5 sec.

Total weight of the hydraulic lift and linkage ..... 229 lb. (104 kg)

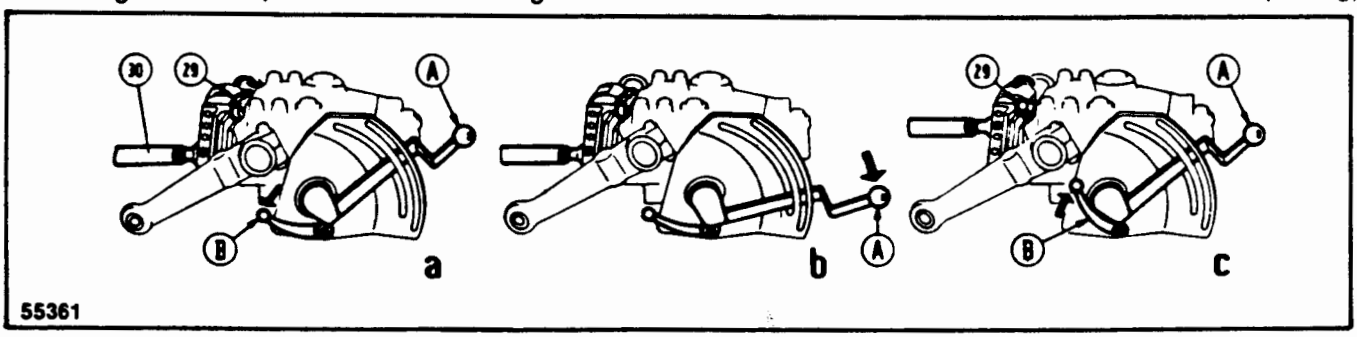

FIG. C.O/2 HYDRAULIC LIFT SETTING FOR POSITION CONTROL OPERATION (a), IN FLOATING (b) AND IN DRAFT CONTROL OPERATION (c)
A. Lift control lever; B. Operation selector lever; 29. Top link blocking wedge; 30. Top link

HYDRAULIC LIFT

The hydraulic lift installed on tractor offers three types of operation: position control, floating and draft control. Each operation is selected to suit the job application, the type of implement and the physical characteristics of the soil.

POSITION CONTROL

Position Control permits the operator to use the implement at any position which he selects either in or out of the ground, according to the position on the quadrant at which he places the lift control lever (Item A, Fig. C.O/1). The movement of the implement is proportional to the movement of the lever.

https://truckmanualshub.com/

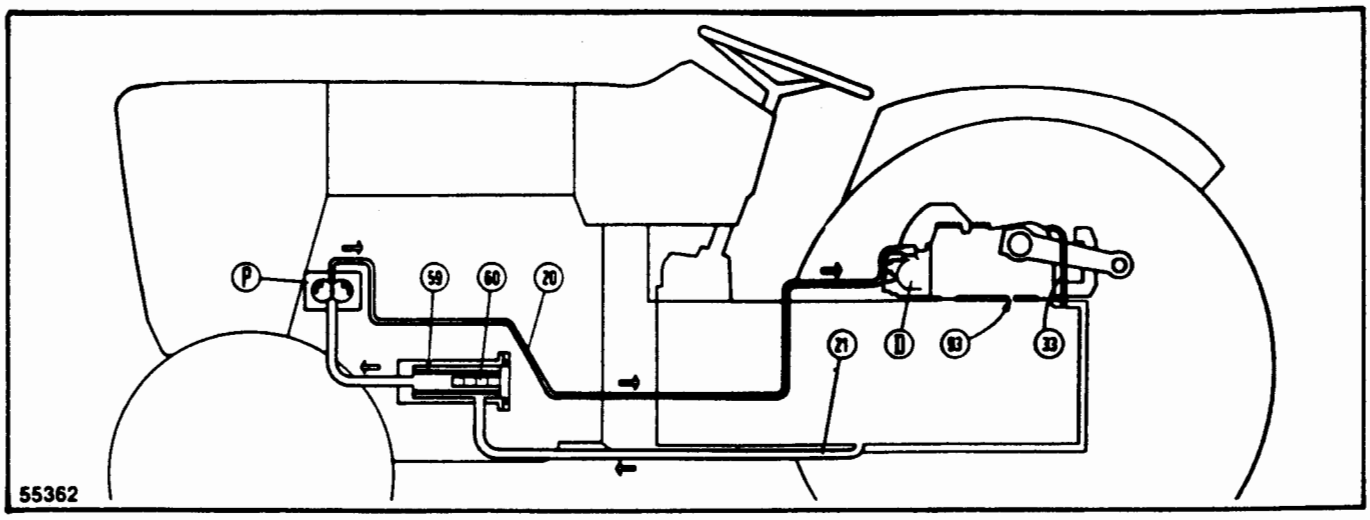

FIG. C.O/3 HYDRAULIC WORKING DIAGRAM OF LIFT UNIT USING TRANSMISSION OIL
D. Hydraulic control valve; P. Pump; 20. Delivery line to control valve; 21. Feeding line from transmission; 33. Pressure equalizing line; 59. Full flow screen filter on pump suction end; 60. Internal magnetic plug; 93. Oil drain line from hydraulic lift to transmission

Position control is used for grader blades, scrapers, drills, and carried implements, that is any implement without gauge wheels or other means of resting on the ground.

To place the controls in position control, do the following:

(1) Raise the implement to full height by raising the hydraulic system control lever.

(2) Push the selector lever downward. (Item 13, Fig. C.O/2)

(3) Rotate the upper link anchor support wedge to the left and insert it between the upper link anchor and the tractor frame (Item 29, Fig. C.O/2).

(4) When the desired working height is obtained by adjustment of the lift-control lever, the control lever stop can be set on the quadrant at that point to permit return to the same working height after the implement has been raised for turns and transport. The top link (Item 30) must be fitted in the lowest hole of the bracket.

FLOATING POSITION

When the hydraulic lift works in floating position the lift arms are free so that the mounted implement can follow the ground profile by its own weight. This position is used for implements that rest on the ground either on gauge wheel, skids or other means when operating.

To use the full float position:

(1) Set the hydraulic lift controls for position control.

(2) Move the control lever to its low-position. (Item A, Fig. C.O/2)

The implement will now follow the contour of the ground.

DRAFT CONTROL

The draft control operation allows the tractor to maintain pulling effort by automatically varying, within very close limits, the working depth of the implement in the presence of more or less compact soil and when the ground surface is irregular (bumps, ditches, etc.) so that the implement would tend to dig in more or to lift off the ground.

When the soil or ground are of the same consistency and level the vertical motion of the implement is controlled by moving the quadrant lever up or down (within the range "U" of the sector, Fig. C.O/23).

When the lever is set at the lowest position within the sector (U) of the quadrant, the implement does not reach a sufficient depth, then the top link must be fitted to a hole lower in the bracket (Diagram a, Fig. C.O/1). To lift the implement all the way up, move the lever up to the upper stop (range V of the quadrant, Fig. C.O/23).

The draft control is particularly suitable for job applications requiring sustained pulling, such as plowing, harrowing, etc., carried on by means of mounted implements, as it transfers the vertical components of the loads on to the rear wheels of the tractor, thus improving traction. To set the hydraulic lift for draft control just move the selection lever (Item B, Fig. C.O/2) up and remove the wedge (Item 29) blocking the top link bracket.

At work, regulate the "sensitivity" of the hydraulic lift considering that it should be the highest possible without subjecting to repeated and harmful jolting. To increase sensing turn the lever (Item 18, Fig. C.O/1) clockwise; to reduce it, turn the lever counterclockwise.

⚠ **CAUTION:** To move the selection lever (Item B, Fig. C.O/1) to shift from one type of operation to another, first move the lift arms up to avoid putting the control levers and linkage under strain.

https://truckmanualshub.com/

Pressure oil
Suction or drain oil
Static oil

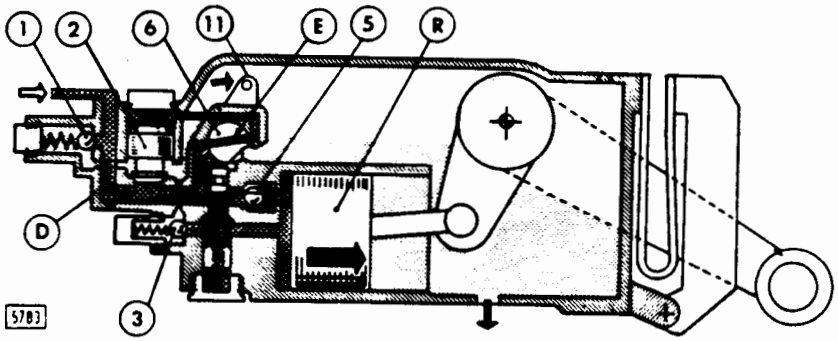

S. Arms lifting.
The rotation of the spool (6) allows the oil flowing in from the pump to reach, through the cross port (E), the upper end of the pilot valve (2); as the cross-sectional area of the upper end of this valve is larger than the lower one, the pressure applied at the top prevails and the valve is held closed, the pressure oil can thus flow into the cylinder through the valve (5) and actuates the lift arms control piston.

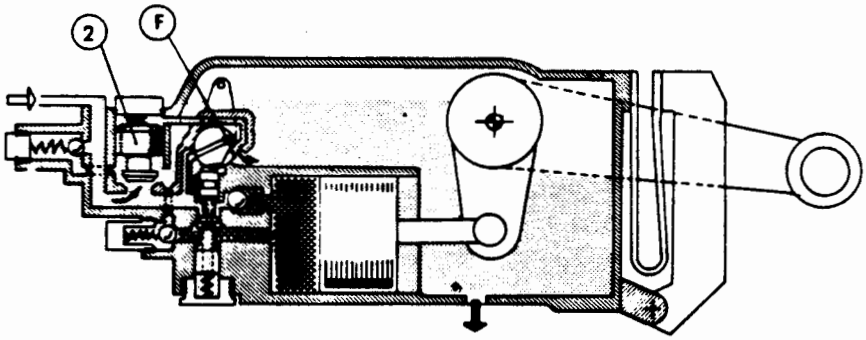

N. Neutral (lift arms stopped)
The spool uncovers the spill groove (F) thus draining the pressure oil which holds the pilot valve (2) closed. The pressure by the oil coming from the pump prevails at the bottom of the pilot valve, consequently this valve opens and the oil is conveyed back to the reservoir rather than to the power cylinder.

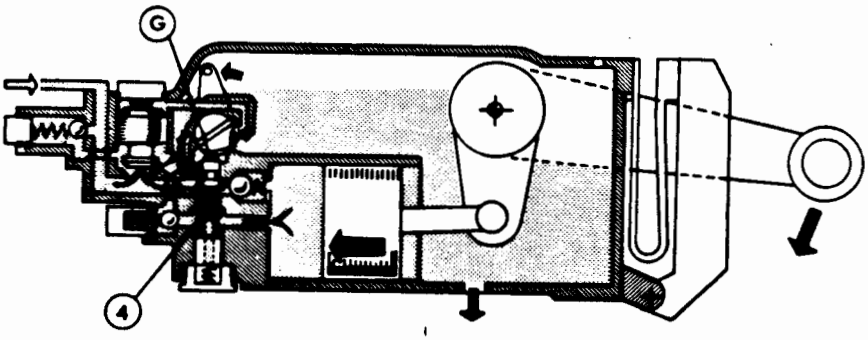

A. Arms Lowering.
The spool, through its cam (G), opens the valve (4) so that the oil, pushed by the piston, drains out to discharge.

55363

FIG. C.0/4 OIL FLOW PATTERN INSIDE THE HYDRAULIC CONTROL VALVE AND POWER CYLINDER DURING THE THREE OPERATING PHASES

D. Hydraulic control valve; E. Spool cross hole; F. Spool groove; G. Spoon cam; R. Arms lifting power cylinder; 1. Pressure relief valve; 2. Pilot valve; 3. Cylinder safety valve; 4. Drain valve; 5. Cylinder inlet valve; 6. Control valve spool; 11. Spool control lever

https://truckmanualshub.com/

LIFT HYDRAULICS

Fig. C.O/3 illustrates the hydraulic working diagram of the lift unit.

The oil pump (Item P) feeds directly on transmission oil through a screen type filter (Item 59), internally provided with a magnetic element which catches and retains circulating metallic particles (if any) and delivers it to the hydraulic lift control valve (Item D). The oil quantity which is not utilized by the lift cylinder drains into the hydraulic lift body from which it flows back into the transmission housing through a suitable duct (Item 93).

A plastic tube (Item 33) connects the upper compartment of the transmission housing with the hydraulic lift and serves to equalize the pressure. The transmission housing, which also serves as reservoir for the hydraulic lift, contains 17 quarts (16 litres) of oil, 10.6 quarts (10 litres) of which can be utilized, with tractor standing on level ground, for hydraulic lift operation and for that of auxiliary external ram applications, if any (see page 152) (Fig. C.O/4), illustrates the three working phases of the hydraulic lift and the operation is described in the legend. The valves contained in the hydraulic lift block and their major features are as follows:

1. The double section pilot valve (Item 2) functions as a hydraulic cock. If bottomed on its seat it prevents the oil from draining out (lifting phase), and if lifted off allows oil draining (neutral and lowering phases).
2. The one-way cylinder inlet valve (Item 5). During the lifting phase the valve opens to let the delivery oil out. In the other phases the valve is held closed by the pressure of the oil trapped inside the cylinder.
3. The drain valve (Item 4) which, when bottomed on its seat, keeps the oil inside the cylinder (neutral or lifting phase) and dumps it when lifted off its seat (lowering phase).
4. The pressure relief valve (Item 1), set at 2062-2204 PSI (14217-15203 kPa), protects the hydraulic pump and oil lines.
5. The cylinder safety valve (Item 3), set at 2845-2987 PSI (19616-20595 kPa) limits the dynamic stresses acting upon the mechanical components (stresses which may occur when hauling implements on bumpy roads or ground.)

The most important function of the hydraulic circuit is, however, that performed by the directional control valve spool (Item 6) or rotating valve, which indirectly controls the closing of the pilot valve (Schematic S) and, directly, the opening of the drain valve (Schematic A). The distribution of the oil to the cylinder is the same for both position and draft control operations. That which changes is the leverage quantity controlling the valve spool rotation, the operation of which is illustrated in Fig. C.O/5 and described in the two following paragraphs.

MECHANICS OF THE HYDRAULIC LIFT POSITION CONTROL OPERATION

The diagram (X) of Fig. C.O/5 illustrates the internal and external leverage subassemblies which is involved in position control operation.

The downward shifting of the selection lever (Item B)) for position control operation determines the release of roller (Item 64) from the external levers (Items 62 and 63) and the upward rotation of the cam (Item 65) which comes in contact with the lever (Item 63). The external levers, active in draft control (see diagram Y) are therefore excluded.

When the lever (Item A) is moved up in the control sector, the movements of the leverage are those indicated by the black arrows in scheme X and make the spool (Item 6) turn to the position of delivery. As soon as the piston moves, the lever (Item 39), connected to the inside arm, acts upon the rocker arm (Item 66) in the direction indicated by the arrows drawn in light lines and tends to bring the spool back to neutral.

This condition, however, occurs only when the lift arms reach the position set by the lever (Item A) within the sector range.

During the lowering phase the leverage moves in the opposite direction. In floating, the spool is permanently kept in spill position and the travel of the lever (Item 39), in this case, is not sufficient to bring it back to neutral.

MECHANICS OF THE DRAFT CONTROL OPERATION

In draft control, the forces applied to the implement and transmitted through the top link (Item 30, Fig. C.O/5, Diagram Y) deform the control spring (Item 94).

As these deformations are strictly dependent upon the position of the lever (Item A) in the control sector, the control valve will go neutral (thus preventing downward motions of the implement) only when, for a given lever setting, the force (Item F) transmitted from the top link to the spring is such to impart to the latter a corresponding deformation.

Any further spring deformation caused by load variation transmitted through the top link, moves the valve spool off neutral. The valve is thus automatically controlled by the load imparted by the implement to the spring through the top link so that:

https://truckmanualshub.com/

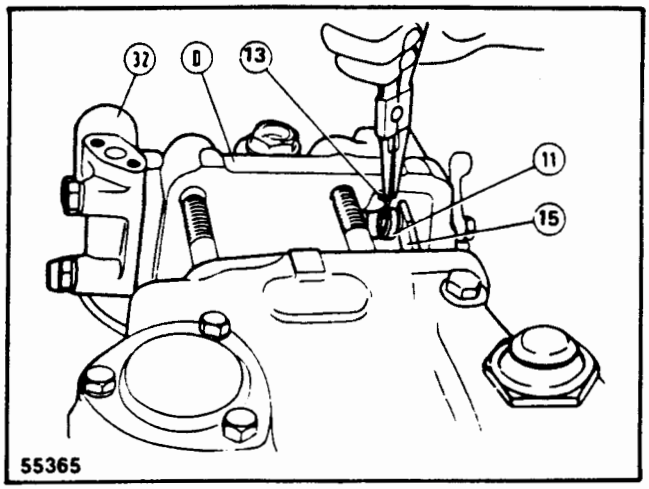

FIG. C.O/6 CONTROL VALVE REMOVAL

D. Control valve; 11. Internal spool control lever; 13. Cotter pin securing link (15) to spool control lever (11); 15. Link; 32. Pressure relief valve holder

1. If spring compression increases, then the valve spool will turn towards delivery (implement lifting).
2. If spring compression is reduced, then the valve spool will turn towards dumping (implement lowering).

The diagram (Item Y) illustrates the internal and external linkage which are involved in draft control. When the selection lever (Item G) is turned upwards, the external draft control leverage is inserted in the valve spool linkage. In fact, the cam (Item 65) integral with the selection lever (Item B) loses the contact with the lever (Item 63) (see diagram X) so that the follower (Item 64) is inserted between the levers (Items 62 and 63), interlocking them, while the roller (Item 19) contacts the cam (Item 34).

The valve spool (Item 6) is thus controlled by both the hand control lever (Item A) and control spring (Item 94), the latter subject to the load variations transmitted through the top link (Item 30).

In particular, the layout (Item Y) illustrates, by means of the heavy black arrows, the leverage motions occurring when for a given setting of the control lever (Item A) in the quadrant, the top link (Item 30) thrust increase determines the rotation of the valve spool (Item 6) towards the outlet side.

If, on the other hand, the top link thrust is reduced instead of increasing, the leverage motion takes place in the opposite direction and the valve spool turns towards the drain side.

During work, the lifting or lowering phase continues until the load upon the top link is back to its original value and the valve spool is in neutral.

As in draft control operation the valve spool is subject to the straining of the control spring (Item 94) only, the motion (indicated by the lighter arrows) transmitted on to the rocker arm (Item 66) by the lever (Item 39), which is connected to the inside arm, is annulled by the motion in the opposite direction (indicated by the light cross-hatching arrows) which is transmitted to the rocker arm through the levers and links (Items 62, 63, 92, 69 and 80) because of the motion of the follower roller (Item 19) over the cam (Item 34), the latter integral with the right hand side lift arm.

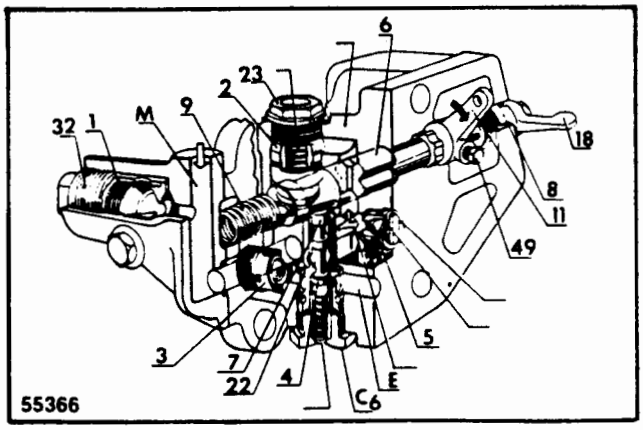

FIG. C.O/7 HYDRAULIC CONTROL VALVE CUTOUT

NOTE: The black arrow indicates the torsional action by the spring 9 upon the spool control lever 11. The oil flow is referred to the arms lifting phase as shown in Fig. C.O/4.

C_6. Drain valve plug; M. Pressure oil inlet: 1. Pressure relief valve assembly; 2. Pilot valve; 3. Cylinder safety valve assembly; 4. Drain valve; 5. Cylinder oil inlet valve (use Tool No. 781993 to remove and install); 6. Control valve spool; 7. Drain valve actuating pin in contact with the spool cam; 8. Sensing adjustment plug; 9. Valve spool return spring; 11. Spool control lever; 18. Sensing adjusting lever; 22. Drain valve holder; 23. Pilot valve plug; 32. Valve holder; 49. Setscrew securing lever (11) to spool.

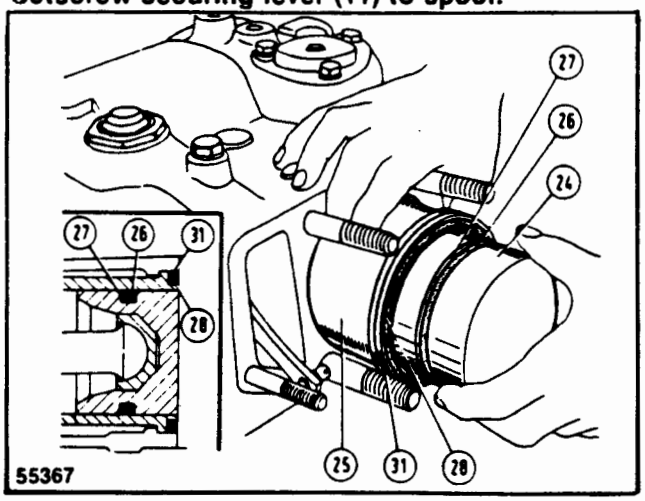

FIG. C.O/8 REMOVING THE HYDRAULIC LIFT PISTON AND CYLINDER BARREL

24. Piston; 25. Cylinder barrel; 26. Piston ring; 27. Piston seal rest (plastic material); 28. Barrel sealing ring; 31. Outer ring for barrel seal (brass)

https://truckmanualshub.com/

X. Position control operation.
(The selector lever B is shifted downwards. The leverage drawn in light lines do not take part in this operation and concern the draft control operation only.)

Y. Draft control operation.
(The selector lever B is shifted upwards.)

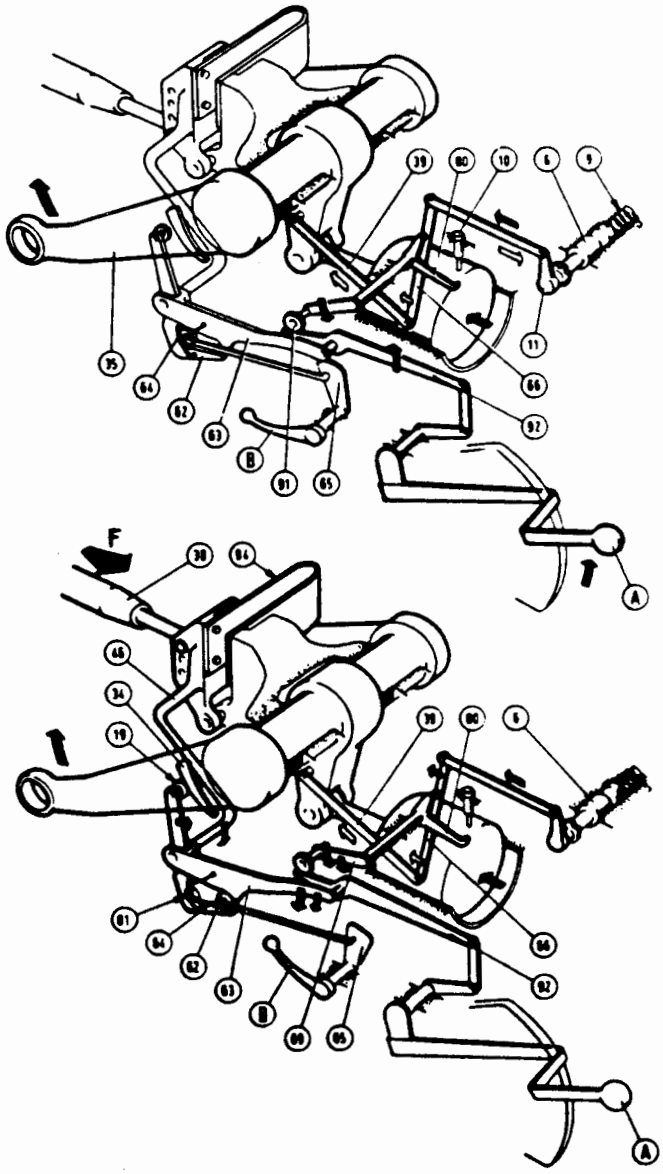

55364

FIG. C.O/5 SCHEMATIC DIAGRAM SHOWING THE OPERATION OF THE VALVE SPOOL CONTROL LEVERAGE FOR POSITION AND DRAFT CONTROL RESPECTIVELY

NOTE: Black, light arrows and those with light cross-hatching refer to the motions which the leverage components make in the arms lifting phase. The arrows with heavy cross-hatching show the motion of the piston and arms lifting. The direction is opposite for arms lowering.

A. Lift control lever; B. Operation selector lever; F. Top link loading by the forces to which the implement is subjected when the tractor is moving forward; 6. Control valve spool; 9. Spool return spring; 10. Arms maximum lift adjusting screw; 11. Spool control lever; 19. Reaction roller; 30. Top link; 34. Cam integral with right side lift arm; 35. Lift arms; 39. Inside arm link; 46. Top link lever; 62. Reaction roller arm; 63. Outer link arm; 64. Selection roller; 65. Cam, integral with the selection roller; 66. Rocker arm; 69. Rocker arm lever (integral with the lever 80); 80. Rocker arm lever (stops the arms lift when it reaches the screw 10); 81. Levers (62 and 63) connecting spring; 91. Rocker arm control roller (kept constantly in contact with the lever 92 by the torsional force of the spool return lever 9); 92. Roller supporting lever; 94. Control spring

https://truckmanualshub.com/

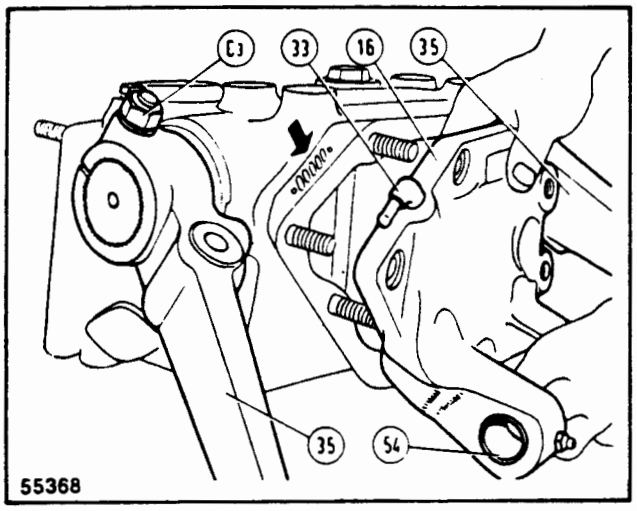

FIG. C.O/9 REMOVING THE REAR COVER
NOTE: The arrow shows the position of the hydraulic lift unit factory serial number.
C_3. Lift arms clamping bolt nuts; 16. Rear cover; 33. Connection for hydraulic lift-transmission housing line; 35. Lift arms; 54. Top link bracket solid bushings

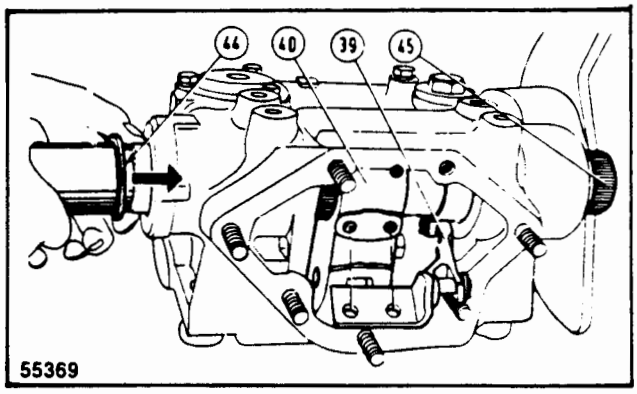

FIG. C.O/10 REMOVING THE ROCKER SHAFT FROM THE HYDRAULIC LIFT UNIT
NOTE: The arrow shows the direction of shaft removal.
A. Sealing ring protection; 39. Lever connected to the inside arm; 40. Inside arm; 44. Shaft sealing ring; 45. Rockshaft

HYDRAULIC LIFT REMOVAL

The hydraulic lift can be fully overhauled only if removed from the tractor. Should overhauling be required for the control valve only, or should the unit require replacement of piston or cylinder seals, or leverage checking, then these subassemblies can be easily removed from the lift without removing the whole unit from the tractor.

These components are removed as indicated in the following topics.

Remove the hydraulic lift from the tractor as follows:

1. Remove operator's seat with its support.
2. Disconnect the lift arms from three point linkage, the oil delivery line and the lift transmission connecting line from the hydraulic lift unit.
3. Remove the stud nuts and the capscrews which secure the hydraulic lift to the transmission case, then remove the former using a hoist.

DISASSEMBLY

Disassemble the hydraulic lift as follows:

1. Remove the control valve unit (Item D, Fig. C.O/6) by unscrewing all attaching nuts and, prior to withdrawing it from the studs, be sure to remove the cotter pin (Item 13) securing the link (Item 15) to the spool control lever (Item 11).

https://truckmanualshub.com/

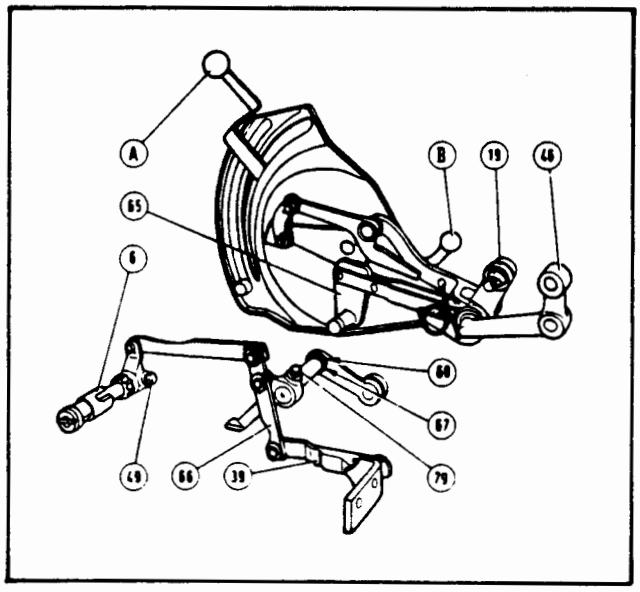

FIG. C.O/11 EXTERNAL AND INTERNAL SPOOL CONTROL LEVERAGE AND LINKAGE OF THE HYDRAULIC LIFT UNIT

NOTE: The figure shows: top drawing, the external leverage assembly as removed from the hydraulic lift, bottom drawing, the internal leverages as they are in operation.

A. Hydraulic lift control lever; B. Operation selector lever; 6. Control valve spool; 19. Reaction roller; 39. Inside arm link; 46. Top link lever; 49. Setscrew securing control lever to valve spool; 65. Cam integral with the selector lever; 66. Rocker arm; 67. Sealing ring; 68. Spacer; 79. Screw securing the arms maximum lift stop lever to the rock-rocker arm control roller arm

Unscrew the pressure relief valve (Item 1, Fig. C.O/7) and the cylinder safety valve (Item 3), remove the drain and pilot valve plugs (Items C_6 and 23), then withdraw these valves and their springs from the control valve lock. If necessary, remove the cylinder inlet valve (Item 5) by unscrewing the retaining plug with the aid of the special wrench.

To remove the control valve spool (Item 6) it is necessary to remove the lever (Item 18) with the sensing adjustment plug (Item 8), the valve holder (Item 32) or the auxiliary external ram top (Item P, Fig. C.O/27) and the lever (Item 11, Fig. C.O/7) after unscrewing the setscrew.

Following the removal of the control valve, it is possible to withdraw the piston (Item 24, Fig. C.O/8) and cylinder barrel (Item 25) and their sealing rings.

2. Detach the draft control operation outside lever (Item 46, Fig. C.O/1) from the top link bracket, then remove the latter and the control spring as an assembly.

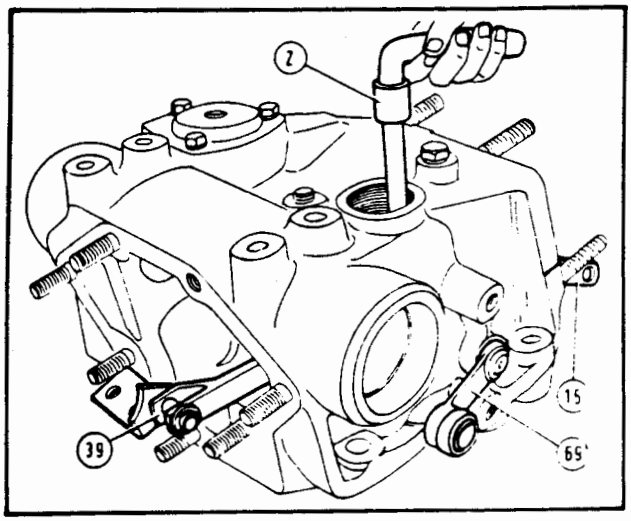

FIG. C.O/12 REMOVING THE INTERNAL CONTROL LEVERAGE

Z. Box wrench for removing the screw (Item 79, Fig. C.O/11; 15. Valve spool control link; 39. Lever connected to the internal arm; 69. Rocker arm drive roller supporting lever

This must be preceded by the removal of the screw (Item 55) to withdraw the pivot pin, and of the screws (Item C_2) to detach the spring from the hydraulic lift rear cover. Remove the stud nuts (Item 16) and then the rear cover, as shown in Fig. C.O/1.

3. Remove the lift arms (Item 35, Fig. C.O/9), the screws securing the lever (Item 39, Fig. C.O/10) to the inside arm (Item 40) and remove the rockshaft (Item 45) in the direction shown by the arrow (Fig. C.O/10).

   To avoid damaging the sealing ring (Item 44) located on the left hand side of the rockshaft, first turn the latter in the sense opposite to that of withdrawal until the sealing ring comes off its seat, then withdraw it using the protector. Inside the hydraulic lift, the arm (Item 40) and piston push rod will remain free.

4. Remove the outside linkage assembly (Fig. C.O/11) and control lever as an assembly, after removing the capscrews which secure it to the hydraulic lift.

   Remove then the inside levers by unscrewing first the screw (Item 79) using a socket wrench (Item Z, Fig. C.O/12) through the hydraulic lift top opening. Then, withdraw towards the outside the roller support lever (Item 69) with sealing ring (Item 67, Fig. C.O/11), and spacer (Item 68). As for removal (installation) of the single levers see Fig. C.O/11 and C.O/12, Diagram C).

https://truckmanualshub.com/

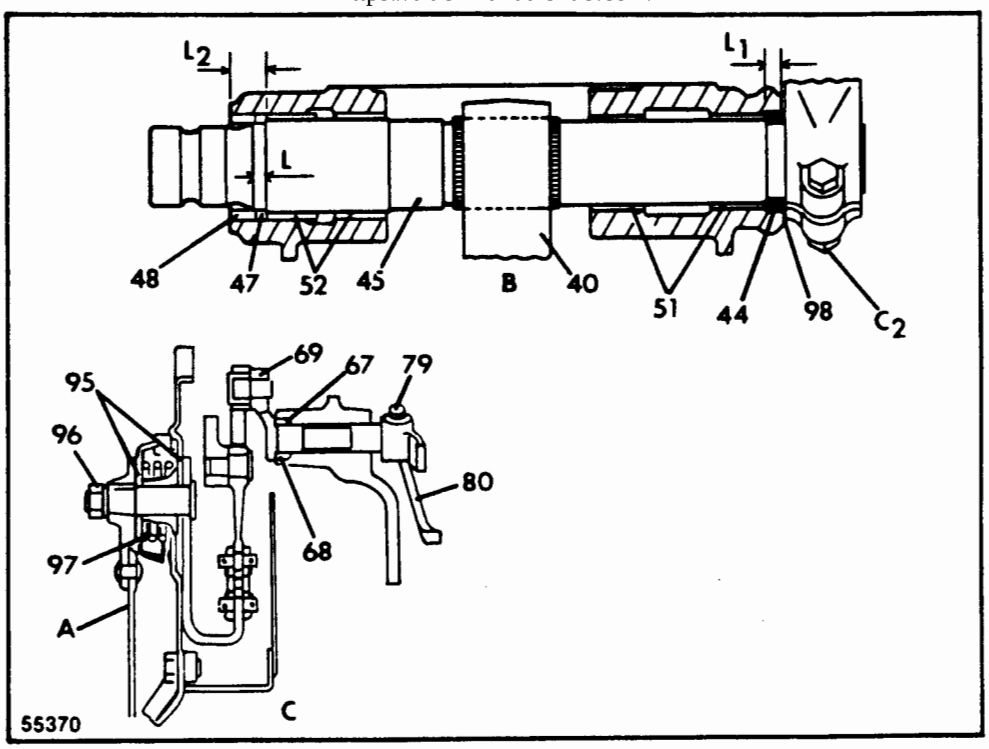

FIG. C.O/13 ROCKER SHAFT CROSS-SECTIONAL VIEW

b. Rockshaft sections; c. External control leverage section; A. Lift control lever; L_1. 0.315"-0.327" (8-8.3 mm.) Recessing of the left side outer bushing; L_2. 0.807"-0.815" (20.5-20.7 mm.) Correct recessing of the right side bushing; L_4. 0.394"-0.402" (10-10.2 mm.) Correct width of the shaft seal; 40. Inside arm; 44. Left hand side seal; 45. Rockshaft; 47. Right hand side seal; 48. Spacer, 0.532-0.543" (13.5-13.8 mm.) long; 51. Left side bushings; 52. Right side bushings; 67. Oil seal; 68. Spacer; 69. Rocker arm roller supporting arm; 79. Screw securing lever (80) to roller supporting arm (69); 80. Arms maximum lift stop lever; 95. Friction discs; 96. Control lever nut; 97. Spring; 98. Left side spacing ring (to be added to those units which are found without one at disassembly

INSPECTION

Wash components in solvent then proceed to inspect and check them referring to the data reported on the table in rear of this section.

1. Check the functional efficiency of the sealing rings (Fig. C.O/8) installed between cylinder barrel and control valve and between cylinder liner and piston.

   Check the plastic seal back-up for wear and conditions of the soldered joint on the barrel seal brass ring.

   If necessary, replace.

   Replace, if functionally poor, the sealing rings installed on the control valve block valves and rockshaft, the sealing ring (Item 67, Fig. C.O/1) on the roller lever and that between hydraulic lift and transmission case, at the outlet duct (Item 93, Fig. C.O/3).

2. Check the clearance between rockshaft and bushings and between top link hinge pin and bushings.

   If the bushings (Items 51 and 52, Fig. C.O/13) and (Item 54, Fig. C.O/9) are to be replaced, then remove them using a bushing puller.

   When installing the new bushings be sure to meet the specification requirements reported on the Fig. C.O/13 and ream the inside diameters, if necessary, to specifications.

3. Check the control valve spool for wear, the correct spool and bore clearance being 0.001-0.0014 in. (0.025-0.035 mm.). If a new spool is to be installed consider that it is not available alone as spares as they are fitted to their respective bores at the factory.

4. Check sealing tightness of the drain valve as indicated in the topic on checking the pressure relief and safety valves. Make sure that the sealing surfaces of the pilot valve are free from scoring or faults and grind, if necessary, the cast iron walls of the bore on the hydraulic lift body.

   Verify flexibility of the valve springs versus the data reported in the table in rear of this section.

5. Check the pressure setting of the relief valve and of the cylinder safety valve according to the instructions given on checking the pressure relief and safety valves.

https://truckmanualshub.com/

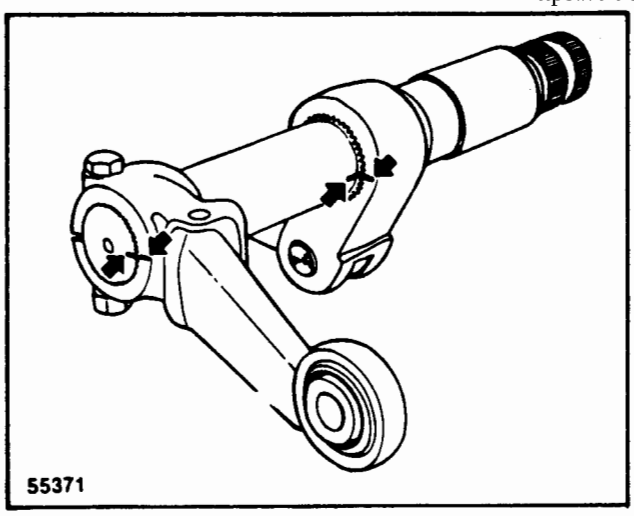

FIG. C.O/14 ASSEMBLY MARKS FOR CORRECT INSTALLATION OF INTERNAL ARM AND LIFT ARMS ON THE ROCKSHAFT

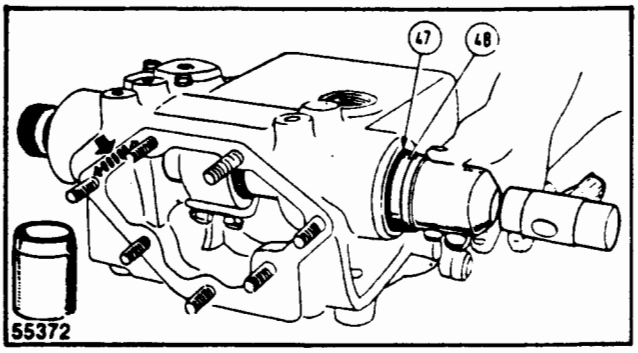

FIG. C.O/15 FITTING THE SEALING RINGS TO THE ROCKSHAFT WITH THE AID OF THE PROTECTION A AND INSTALLATION TOOL B
47. Sealing ring; 48. Spacer

ASSEMBLY

The hydraulic lift is reassembled and refitted to the tractor by reversing the sequence of operations described in the preceding chapters, then tighten the screws and nuts to torque specifications. Also, consider the following indications:

1. Arrange the inside arm and lift arms on the rockshaft with the assembly marks aligned (Fig. C.O/14).

   A few tractors have experienced trouble in getting a mounted plow in the ground. When this happens, the flat load measuring spring at the rear of the lift housing compresses completely against the lift housing. The traction booster cannot work.

   Fig. C.O/1 shows one mark on the rockshaft and one mark on the internal arm, however, the Tractor has two numbers on the rockshaft, a two (2) and a four (4). Some tractors have the mark on the internal arm lined up with the four (4) which causes the tractor booster problem. This can be seen by removing the spring and rear cover from the lift arm housing.

   This can also be corrected by changing the position of the lift arms on their splines. The stop screw on the full raise of the linkage will have to be readjusted.

2. Install the seals on the rockshaft using the protection to avoid damages when going over the splined ends, then fit them definitely in their respective seats using an installer (Fig. C.O/15).

3. The spool control lever (Item 11, Fig. C.O/11) is arranged, after press-fitting, with the setscrew (Item 49) on the piston side.

4. The spool return spring (Item 9) is installed so that it tends to rotate the spool towards lifting position, that is, so that the lever is pushed towards the piston.

After assembly, make sure the rockshaft end play is 0.004-0.012 in (0.1-0.3 mm.). If it does, reduce it by adding a spacer of suitable thickness between lift arm and hydraulic lift body.

When refitting the hydraulic lift to the tractor make sure the oil drain duct (Item 93, Fig. C.O/3) from hydraulic lift to transmission is provided with its sealing ring.

OIL FILTER

The filter for the hydraulic lift fluid is installed on the pump suction line (Fig. C.O/3). It consists of a metallic mesh cartridge containing a magnetic element which traps the metallic particles, if any, circulated by the oil.

After every 200 hours of operation, remove the filter and clean it.

Remove the cover screws then withdraw the magnetic plug (Item 60, Fig. C.O/16) integral with the cover and then the cartridge (Item 59). At the same time, recover the oil flowing out of the upper suction line. Wash the components in solvent and clean the inside of the container.

Check the functional efficiency of the sealing ring (Item 61) on the cover and then reinstall the parts after drying them.

https://truckmanualshub.com/

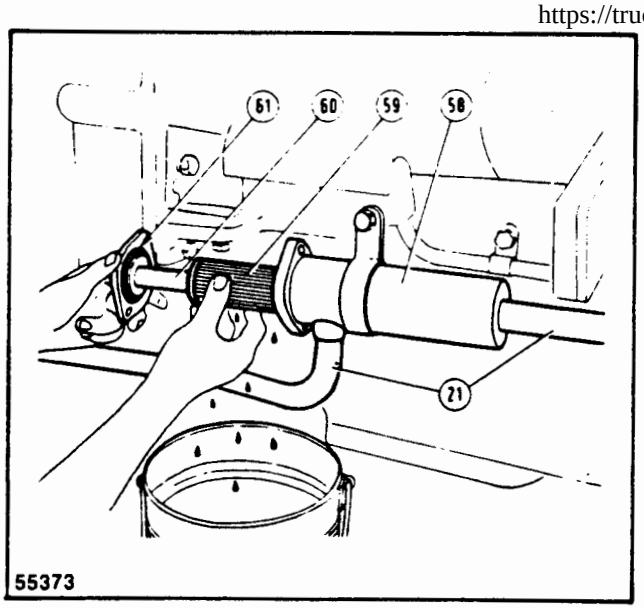

FIG. C.O/16 CHECKING AND SERVICING THE HYDRAULIC LIFT OIL FILTER
21. Pump suction line; 58. Filter container; 59. Filtering cartridge; 60. Magnetic plug; 61. Filter cover sealing ring

THREE-POINT LINKAGE

The three point linkage (Categories 1 and 2) consists of (Fig. C.O/16):

1. Two lower links (Item 74) hinged on the tractor body.
2. Two adjustable lift rods (Items 72 and 76) connecting the lower links to the hydraulic lift.

   The left side rod is adjustable for two lengths (short or long) which are obtained by fitting the pin (Item 71) below or above the fixed pin (Item 70), respectively.

   The length of the right side rod is adjusted by turning the crank (Item 77).

   This latter adjustment can be made during work also to adjust the tilt angle of the implement.
3. An adjustable top link (Item 30) which allows mounting the implement at center (third point). By retracting or extending the top link, the implement pitch angle is increased or reduced so to allow the best setting for the job conditions at hand.
4. Two adjustable sway chains (Item 73) limiting or preventing implement side sway.

When both lift rods are extended or retracted of the same amount, the maximum travel of the implement off the ground is increased or reduced, and, conversely, the available working depth is reduced or increased. When making this adjustment, make sure that the implement is not lifted more than necessary with the lift arms all the way up (travel position) and that, at work, the implement can make a supplement of downward travel, that is, it will not be prevented from doing so by the hydraulic ram travel stop.

RIGHT SIDE LIFT ROD

A cross section of the right lift rod is shown in Fig. C.O/18. To remove this rod, if necessary, just straighten the safety washer (Item 88), unscrew the sleeve (Item 89) to withdraw the driven gear and then the screw (Item 83) to withdraw the driving gear. These parts are then freed easily by removing the wire lock, removing the hollow pin (Item 82) and then by unscrewing completely the lower rod (Item 90) from the driven gear stem.

Prior to reassembly, lubricate all lift rod components with multi-purpose grease and insert a shim stack (Item S) between rod and driven gear so to obtain an end play of 0.004-0.012 in. (0.1-0.3 mm.).

Periodically, apply this same type of grease to the two pressure fittings (Item 84) to lubricate the gears, bearing and the lower rod inside thread.

ADJUSTMENTS

Once the hydraulic lift is correctly installed on the tractor make the four adjustments which follow. Bear in mind that correct adjustment is a must for proper lift performance.

https://truckmanualshub.com/

55374

FIG. C.O/17 REAR VIEW OF THE HYDRAULIC LIFT AND THREE-POINT LINKAGE

NOTE: The arrows locate the grease nipples.

a. and b. Lift rod mounting holes; 30. Top link, with length adjusting turnbuckle sleeve; 70. Fixed pin; 71. Movable pin; 72. Left side lift rod in short setting (to extend the rod fit the pin 71 above the fixed pin 70); 73. Side check chains, with adjusting sleeve; 74. Lower links; 75. Stop pins with snap locks for implement linkage; 76. Right side lift rod; 77. Right side lift rod adjustment crank, with spring lock; 78. Top link linch pin (four mounting positions, see Fig. C.O/1)

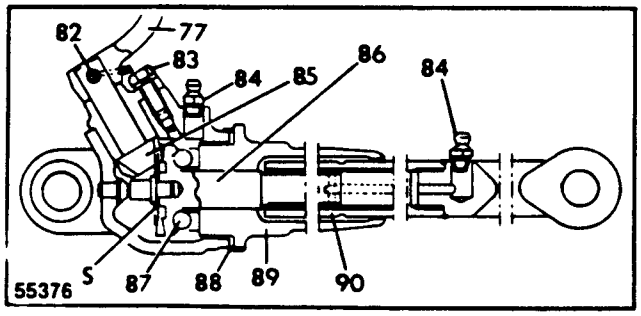

FIG. C.O/18 RIGHT SIDE LIFT ROD SECTION

s. End play adjusting shims; 77. Adjustment crank; 82. Spring pin with safety wire lock; 83. Driving gear holder capscrew; 84. Grease nipples; 85. Driving gear; 86. Driven gear; 87. Bearing balls (no. 12); 88. Safety washer; 89. Sleeve; 90. Lower rod

https://truckmanualshub.com/

1. SETTING THE CONTROL SPRING MOVEMENT

The correct setting of the double acting control spring (Item 94, Fig. C.O/19) ensures that the valve spool will not exceed the present limits and that the complete displacement, subdivided into compression and tension, is the desired one. All this is necessary to avoid mechanical troubles such as spring permanent yields or rupture or leverage straining, etc.

Adjust the hydraulic lift installed on the tractor as follows:

1. Remove the wedge (Item 29, Fig. C.O/19) inserted between top link bracket and hydraulic lift rear cover.
2. Check (with control lever free) that the distance (Item L_1) between top link upper stop and the rear cover of the hydraulic lift is 0.583-0.594 in. (14.8-15.1 mm.). If the distance is less, add shims (Item H) between control spring (Item 94) and top link bracket (Item 17); reduce them if more.
3. Connect a lever to the top link bracket holes and push downwards until the spring has effected its full tension stroke. Make sure that the distance (Item L_2) between the upper top link bracket stop and rear cover of the hydraulic lift is comprised between 0.748-0.787 in. (19-20 mm.). If it is more, correct it by building up the lower stop surface through electric welding.

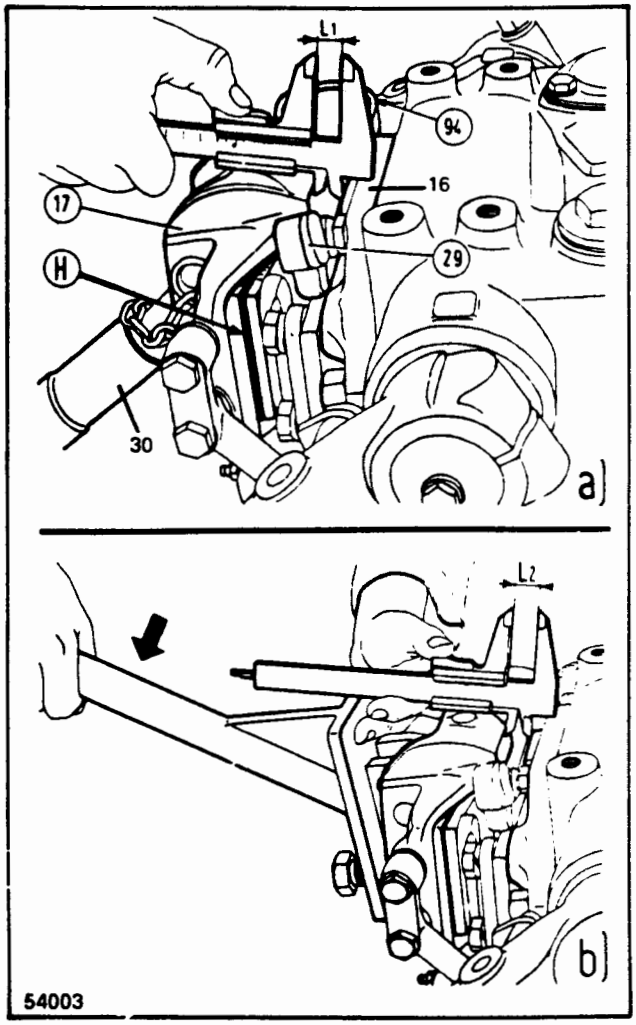

FIG. C.O/19 ADJUSTING THE CONTROL SPRING SETTING

a. Position of top link bracket with spring free; b. Position of top link bracket with spring held under full tension by means of the lever. Lever connected to the top link bracket holes to stretch the control spring (push the lever downwards.); H. (L_1) adjusting shims; L_1. 0.583-0.595" (14.8-15.1 mm.) Nominal gap between bracket and lift cover with spring fully stretched; L_2. 0.748-0.787" (19-20 mm). Nominal gap between bracket and lift cover with spring fully stretched; 16. Lift rear cover; 17. Top link bracket; 29. Top link bracket wedge stop; 30. Top link; 94. Control spring

https://truckmanualshub.com/

2. SETTING THE MAXIMUM LIFT ARMS TRAVEL

The condition of upper lift arms stopping at maximum height should occur automatically following the rotation of the spool to neutral setting, which allows the inlet oil to drain out freely.

If not, the piston would end its stroke when the inside rockshaft control lever is stopped by the hydraulic lift body and, under these conditions, the oil under pressure delivered by the pump would drain out through the pressure relief valve.

Adjust as follows:

1. Apply a load of at least 110 lb. (50 kg.) to the three-point lower links.
2. Start the engine and run it up to medium speed.
3. Raise the arms and set the hydraulic lift control lever (Item A, Fig. C.O/20) at the highest point in the control quadrant.
4. In this position, scribe two assembly marks (Items S_1 and S_2, Diagram C), in register, on the hydraulic lift body and on the cam integral with the right side arm.
5. Slowly unscrew a few turns the arms maximum lift stop screw (Item 10) until the pressure relief valve (Item 1, Fig. C.O/1) opens.
6. Make sure that the residual upward travel by the lift arms following the opening of the pressure relief valve is comprised between 0.158-0.197 in. (4-5 mm.) in (Item d_4, Fig. C.O/20) as measured at the quoted assembly marks. If the residual travel is less, then reduce the shims (Item N) under the head of the screw (Item 10), and if more, then add shims.

   In the course of adjustment, hold the hydraulic lift control lever at the lower stop.

CAUTION: No variation of the lift arms travel length following a reduction or an increase of the number of shims inserted under the head of the screw is probably caused by wrong assemblage or inside leverage deformation: in this case inspect and check the hydraulic lift inside components.

3. SENSITIVITY ADJUSTMENT

To be functionally efficient, the pulling action requires the maximum sensitivity of the reaction by the control valve spool (Item 6, Fig. C.O/21).

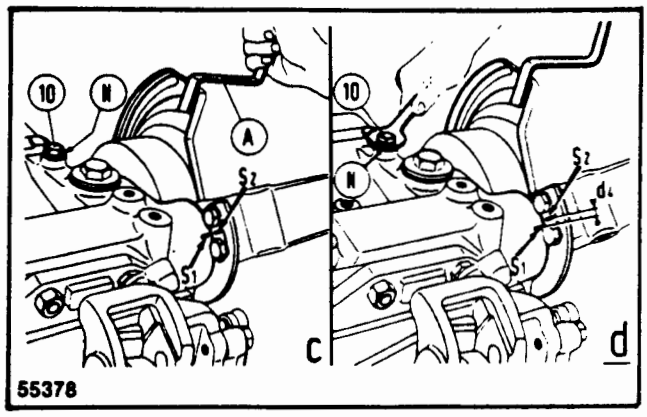

FIG. C.O/20 ADJUSTING THE MAXIMUM LIFT ARM TRAVEL

c. Maximum lift; d. Lift arms following pressure relief valve blow-out (residual travel); A. Lift control lever at upper stop inside the quadrant; d_4. 0.156-0.197" (4-5 mm.) Distance between marks (S_1 and S_2) following the blow-out of the pressure relief valve; N. Screw (10) adjustment shims; S_1. Setting mark on hydraulic lift body; S_2. Setting mark on the cam integral with the right side arm; 10. Arms maximum lift adjusting screw

This sensitivity depends upon the position taken, in neutral setting, by the spool cam (Item G) with respect to the drain valve push rod (Item 7). The position of the spool cam is adjusted, if necessary, through the plug (Item 8) and the outside lever (Item 18, Fig. C.O/22).

Adjust as follows:

1. Apply a load of at least 110 lb. (50 kg.) to the three-point linkage lower links.
2. Remove the lever (Item 18, Fig. C.O/22) by removing the attaching screw.
3. Start the engine and run it up to medium speed.
4. Set the hydraulic lift control screw at the upper stop and then shift the selection control lever (Item B) down in "position control".
5. Starting from the upper end, shift the hydraulic lift control lever down to about the center of the sector, then scribe on the periphery of it the mark indicating the position (Item A_1) of the lever. Wait then until the lift arms stop.
6. Gradually, move the lever up until the arms start raising. Mark on the sector new position (Item A_2) of the lever.

https://truckmanualshub.com/

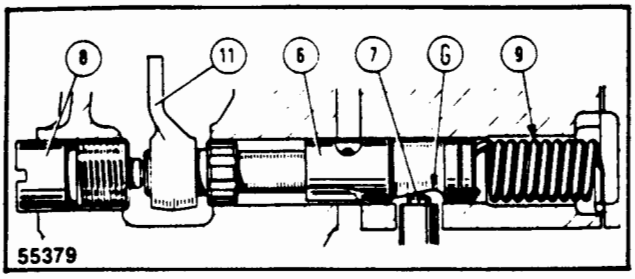

FIG. C.O./21 CONTROL VALVE SPOOL SECTION

G. Spool cam; 6. Control valve spool; 7. Drain valve actuating pin; 8. Sensitivity adjustment plug (without outside lever); 9. Spool return spring (works in both compresssion and torsion); 11. Inside spool control lever

7. Check that the distance (Items A_1 and A_2) measured on the periphery of the sector is within 0.275-0.394 in. (7-10 mm.) (Item d_1).

   If the distance is greater, tighten the spool adjustment plug (Item 8), and if smaller, then unscrew the plug to suit.

Following adjustment, refit the lever (Item 18) to the adjustment plug (Item 8), arranging it as horizontally as possible as illustrated in the Fig. C.O/1.

⚠ **CAUTION:** Before making each new check, be sure to operate the lift a few times, thus allowing the valve spool (Item 6, Fig. C.O/21) and its spring (Item 9) to return to their normal operating conditions.

4. ADJUSTING THE DRAFT CONTROL OPERATING RANGE

The gap between reaction roller (Item 19, Fig. C.O/25) and cam (Item 34), the latter integral with the right side arm, locates the "draft control" zone (Item U, Fig. C.O/23) on the control lever sector.

If the quoted zone is not properly arranged, the following troubles may occur:

1. Too high: at the lower end of the sector there is a too ample neutral zone which will make it impossible to react to the forces set up on the top link bracket (third point).

2. Too low: it will be impossible to control the highest loads (as the entire control spring compression stroke cannot be taken advantage of) and, consequently, to work with certain implements under given job conditions.

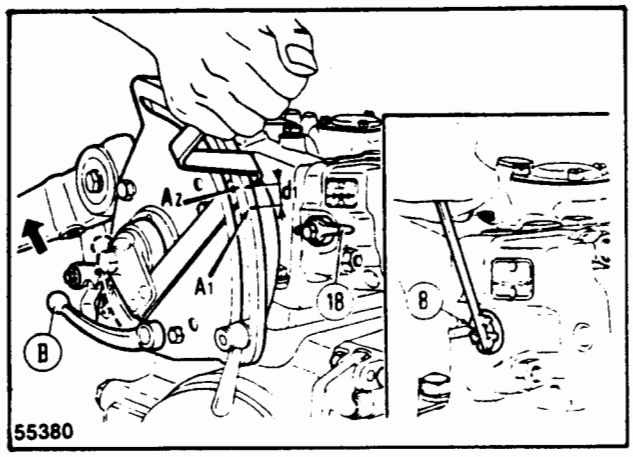

FIG. C.O/22 CHECKING CONTROL VALVE SPOOL SENSITIVITY

e. Detail of sensitivity adjustment; A_1. Control lever starting position mark; A_2. Mark corresponding to the commencement of arms lift; B. Selector lever in "draft control" (down); d_1. 0.275-0.394" (7-10 mm.) Spread between marks measured on the top of the quadrant; 18. Lever on the sensing adjustment plug; 8. Lift sensing adjustment plug

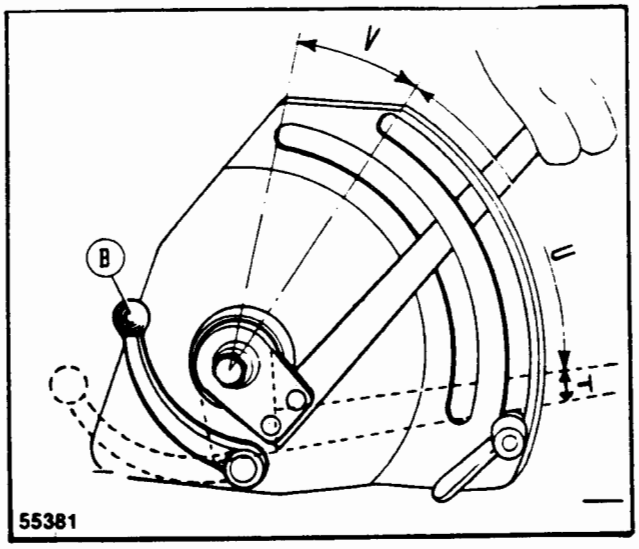

FIG. C.O/23 CONTROL LEVER QUADRANT DRAFT CONTROL RANGE

B. Selection lever in "draft control" (up); T. Neutral range, the corresponding arc measured on the sector circumference must not exceed 0.197" (5 mm.); U. Draft control operation range; V. Lifting range

https://truckmanualshub.com/

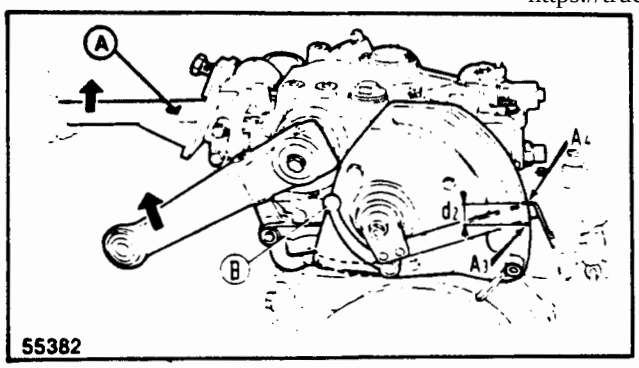

FIG. C.O/24 CHECKING THE DRAFT CONTROL OPERATING RANGE

A_3. Check mark indicating the hydraulic lift control lever at the end of travel (down); A_4. Check mark indicating the position of the lever for commencement of lift arms raising; B. Selection lever in "draft control" (shifted up); A. Tool bar connected to the top link bracket mounting hole for control spring compression (shift the lever up); d_2. 0.197" (5 mm.) or less. Distance between check marks A_3 and A_4 measured on the quadrant outer rim

Adjust as follows:

1. Apply a load of at least 110 lb. (50 kg.) to the three-point linkage lower links, making sure that the entire lowering stroke can be effected before the load will touch the ground.

   If necessary, raise the back of the tractor or arrange the loads over a depression of the ground.

2. Start the engine and run it up to medium speed.

3. Move the hydraulic lift control lever to the highest point in the quadrant and then set the selection lever (Item B, Fig. C.O/24) up in "draft control".

4. Move the control lever down to lowest position in the quadrant and scribe a mark on the periphery of the sector and corresponding to the position (Item A_3) of the lever.

5. Apply a bar to the top link bracket holes and push upwards so to compress the control spring completely.

   Under these conditions the lower links of the three-point hitch must not raise.

   If, on the contrary, the lower links with their load move up, then the gap (Item d_3, Fig. C.O/25) between the reaction roller (Item 19) and cam (Item 34) should be reduced. This is done by raising the lift arms until the cam lifts off the roller and then act upon the roller cam so that the arms remain unaffected when the aforementioned operation is repeated.

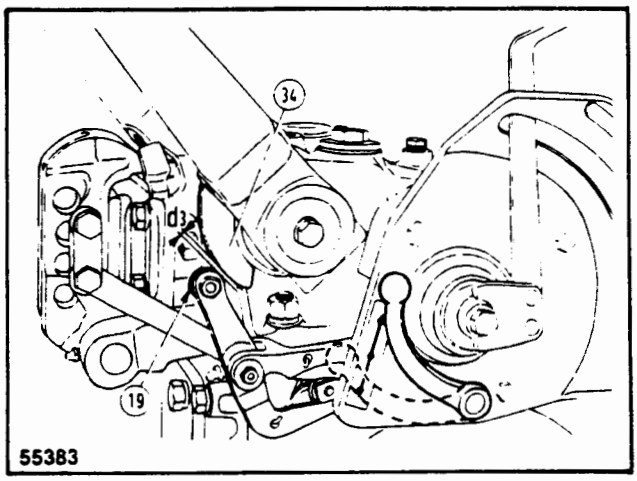

FIG. C.O/25 ADJUSTING THE DRAFT CONTROL RANGE

d_3. Cam-to-follower gap with arms lifted; 19. Cam roller with eccentric pin for adjusting the distance between the roller itself (34) and the cam; 34. Cam integral to the right side lift arm

6. Gradually tap the control lever upwards, keeping the spring fully compressed, and stop as soon as the arms start moving up. Scribe on the sector a mark corresponding to the new position (Item A_4, Fig. C.O/24) of the lever.

7. Make sure that the distance between the marks A_3 and A_4 (Item d_2) is less than 0.197 in. (5 mm.). If not, increase the gap (Item d_3, Fig. C.O/25) between the roller (Item 19) and cam (Item 34) through the excentric pin on the roller.

8. Put the spring under full tension by pushing downwards on the bar connected to the top link bracket holes and then make sure that, under this condition, the lift arms are raised all the way up when the control lever is shifted to its highest position in the quadrant (Zone V, Fig. C.O/23). If not, reduce the distance A_3-A_4 (Item d_2, Fig. C.O/24) further, according to the same procedure indicated above.

Following adjustments, lock the reaction roller excentric pin by tightening its nut to torque specifications.

CHECKING THE PRESSURE RELIEF AND SAFETY VALVES CALIBRATION AND THE DRAIN VALVE TIGHTNESS

The pressure relief valve (Item 1, Fig. C.O/1) and cylinder safety valve (Item 3) are tested by means of a nozzle tester (Fig. C.O/20) and valve holders.

The relief valve is open at a pressure of 2062-2204 PSI (14217-15203 kPa) and the safety valve at 2845-2987 PSI (19616-20595 kPa).

https://truckmanualshub.com/

If these specification requirements of the cylinder safety valve cannot be met, then replace it as separate components are not available as spares.

The pressure relief valve can also be tested with the hydraulic lift installed on the tractor, as follows:

1. Run the engine to warm the hydraulic fluid up to a temperature of 122°-140°F. (50°-60°C).
2. Install a 5000 PSI (34475 kPa) gauge in a remote outlet and operate the remote lever (Item C, Fig. C.O/27).
3. With the engine running at 2400 RPM the pressure gauge reading should read between 2133-2489 PSI (14707-17161 kPa). If not, adjust with shims as required.

Check drain valve tightness as follows:

1. Place the valve and sealing rings, seat and spring inside the adaptor "D" and then connect the latter to a nozzle tester (Fig. C.O/26).
2. Actuate the pump until the pressure gauge has a reading of 3556-4267 PSI (24518-29420 kPa).
3. Next, using a watch, find the time the pressure takes to drop from 2845-1422 PSI (19616 down to 9804 kPa).

   This time should not be less than six seconds. If less, first replace the sealing rings (Item 57), then recheck the valve tightness.

   If the trouble persists, replace the complete valve as an assembly.

REMOTE HYDRAULIC SYSTEM

The remote hydraulic system (Item P, Fig. C.O/27) is used for the remote control of auxiliary attachments actuated by single and double acting hydraulic cylinders.

If the device is used to actuate single acting cylinders, connect a line (Item 37) to the lower hole. If it is used to actuate double acting cylinders, connect two oil lines (Item 38) to the existing holes, being sure to apply the adaptor (Item 41) in place of the plug (Item 36). The holes are tapped for a M 16 x 1.5 thread.

The remote hydraulic system feeds on hydraulic lift oil, though separately controlled through the hand lever (Item C, Fig. C.O/27).

However, the simultaneous operation of hydraulic lift and remote ram is not possible.

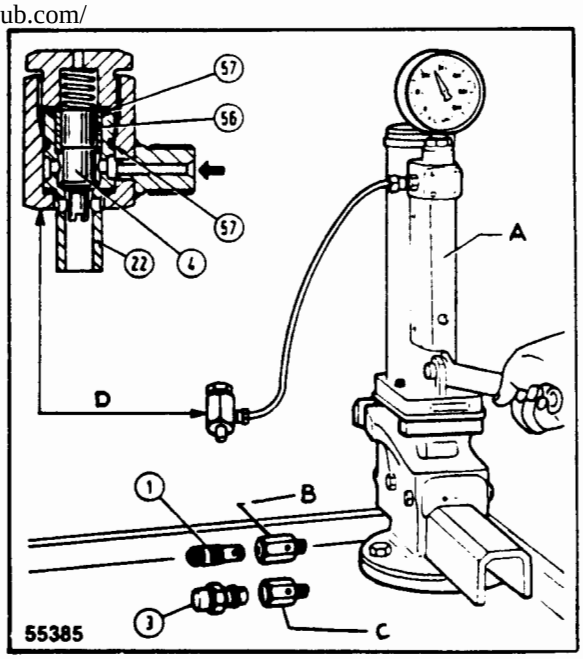

FIG. C.O/26 TEST SET-UP FOR CHECKING THE CALIBRATION OF THE PRESSURE RELIEF VALVE (1), SAFETY CYLINDER VALVE (3) AND DRAIN VALVE (4) SEALING EFFICIENCY

A. Nozzle tester; B. Adaptor, pressure relief valve; C. Adaptor, safety valve adaptor; D. Drain valve adaptor; 22. Drain valve location; 56. Valve liner; 57. Sealing rings

With the tractor stationary on level ground, the maximum fluid quantity for filling the hydraulic cylinders and their lines is 12 quarts (11 liters), approximately. Fig. C.O/28 illustrates the hydraulic working diagram for a single and double acting cylinder, respectively.

To disassemble the remote valve, first remove the control lever locknut and then remove the components. Then, check tightness of the sealing ring on the valve spool and check the sliding clearance of the spool which should be within the limits of 0.0006-0.0008 in. (0.015-0.020 mm.).

LEAK DOWN REMOTE RAM

This is generally caused by a poor fit between the remote valve spool and body.

In some cases it has been found that the gasket at the bottom of the two way operation connection was not sealing and allowed the oil to return to sump.

Before replacing the remote spool and body, it would be a good idea to replace the gasket and inspect the end of the connection for nicks and scratches that could cause a poor seal.

https://truckmanualshub.com/

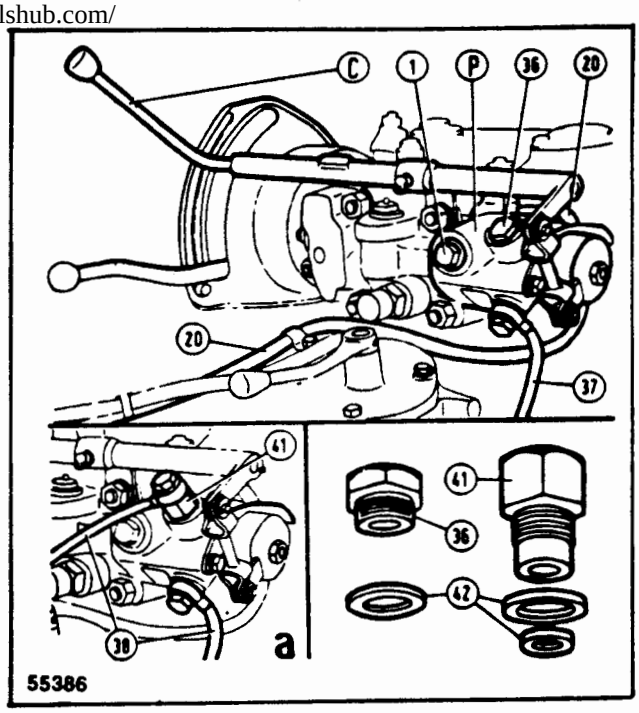

FIG. C.O/27 OPTIONAL PRESSURE CONNECTION FITTED TO THE CONTROL VALVE OF THE HYDRAULIC LIFT VERSION ACTUATING BOTH SINGLE AND DOUBLE-ACTING RAMS

C. Spool control valve (at the right hand side of the operator); P. External ram feed connection; 1. Pressure relief valve; 20. Oil line from pump; 36. Double acting rams feeding port plug; 37. Single acting rams power oil line; 38. Double acting rams power oil lines; 41. Double acting rams power oil adaptor; 42. Adaptor sealing rings

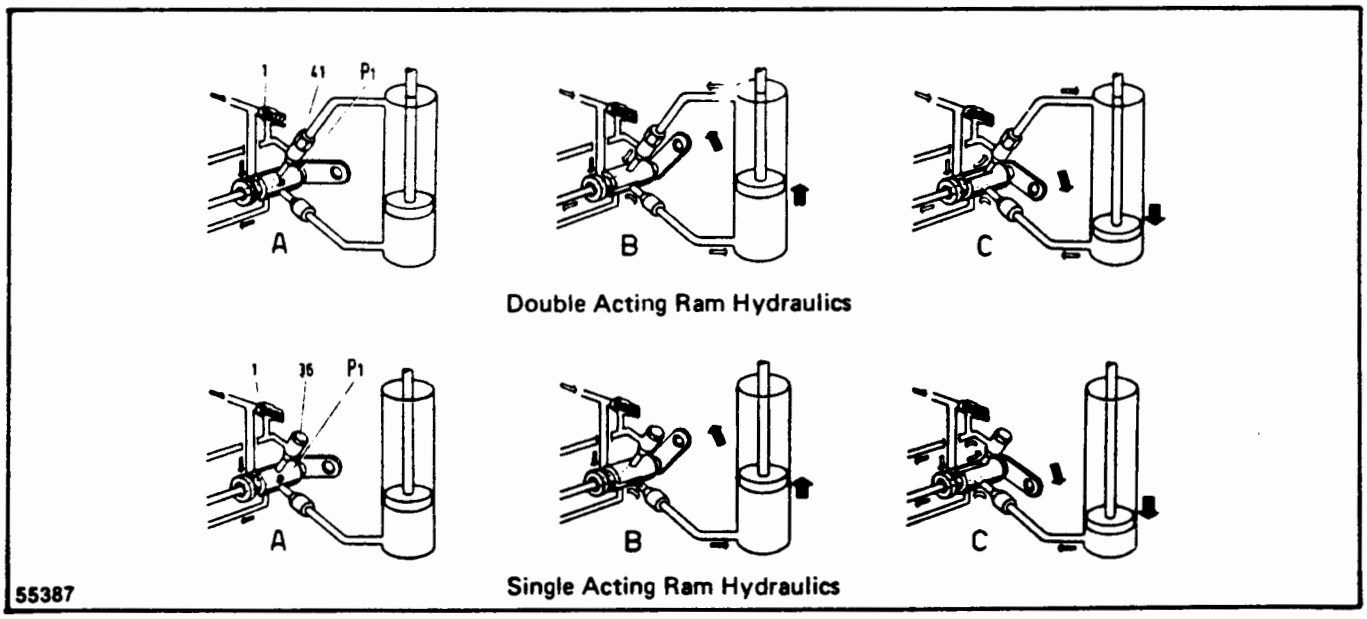

FIG. C.O/28 HYDRAULICS WORKING DIAGRAM IN REMOTE SINGLE AND DOUBLE ACTING RAMS FEEDING PHASE

A. Stop; B. Lift; C. Lowering; P_1. Remote rams feeding valve spool; 1. Pressure relief valve; 36. Double acting rams feeding port plug; 41. Double acting rams adaptor

https://truckmanualshub.com/

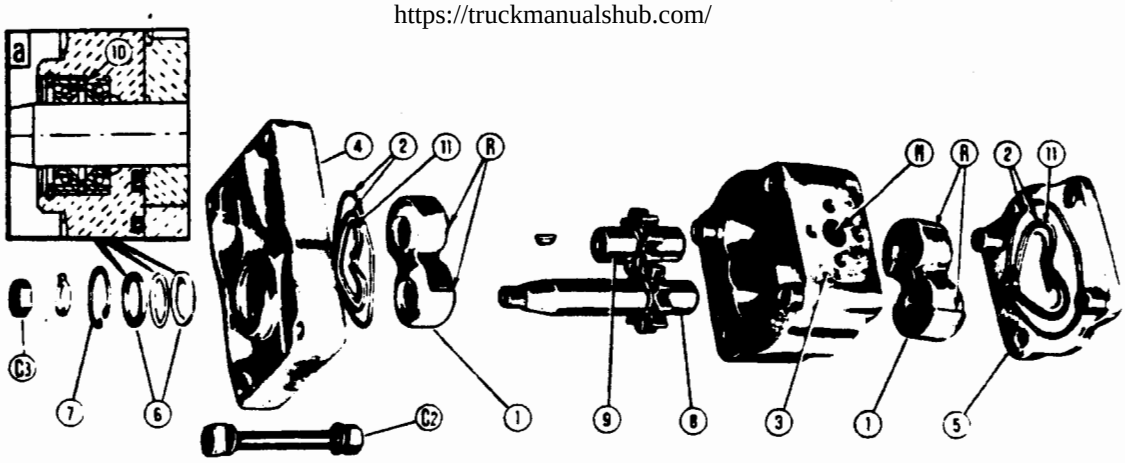

55388

FIG. C.O/29 EXPLODED VIEW OF HYDRAULIC PUMP

a. Detail of shaft oil assembly; C_2. Cover and flange bolt nuts; C_3. Pump driving shaft coupling nut; M. Pump delivery port (of smaller diameter than the inlet port); R. Bearing fillets, delivery end; 1. Bearings; 2. Cover and flange sealing rings; 3. Body; 4. Flange; 5. Cover; 6. Shaft oil seal; 7. Circlip; 8. Drive gear shaft; 9. Driven gear shaft; 10. Spacer; 11. Seal back-up ring (to be installed also on pumps found without one)

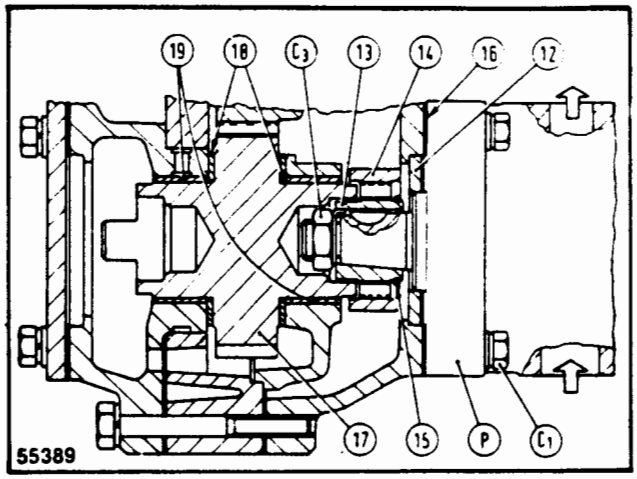

FIG. C.O/30 PUMP DRIVING UNIT

C_1. Capscrews securing pump to engine timing gearcase cover; C_3. Coupling nut; P. Oil pump; 12. Pump alignment ring; 13. Pump drive coupling; 14. Coupling driving ring; 15. Driving ring (14) circlip; 16. Gasket; 17. Pump driving gear; 18. Thrust washers; 19. Bearing bushes

HYDRAULIC PUMP

The pump (Item P, Fig. C.O/3) which feeds the hydraulic lift circuit is a gear type "sandwich construction" unit that does not require any maintenance, checking or periodical adjustments because both gear shaft lubrication and the taking-up of service wear between gears and bearings is done automatically by the pressure of the oil circulating through the pump (pressure-loaded bearing principle).

Bearing bores housing the shafts are lubricated by the same oil circulated by the pump through the recesses on inlet side of bearings. Service wear is taken up by the pressure of the oil acting upon the plane face of the bearings adjacent to the flange and cover within the area delimited by the two sealing rings.

The pump is driven from the engine timing gear (Item 17, Fig. C.O/30) through an oldham coupling. To reach the driving gear, bushings and bearings, remove the timing gear case cover.

The related data are tabulated in the "Fits and Tolerances" section table.

The pump is quickly damaged when running dry, therefore, never run the engine when the transmission housing is dry.

OVERHAULING

Overhaul the pump when output drops off about 25% with respect to that given in the specifications on page 150.

https://truckmanualshub.com/

REMOVAL

Remove the pump from the tractor by removing the capscrews which secure it to the engine timing gear case cover and the capscrews securing the suction and delivery oil lines (Items 21 and 20, Fig. C.O/3).

Withdraw it then at front and recover the alignment ring (Item 12, Fig. C.O/30), the driving ring (Item 14) and the gasket inserted between pump and timing gear case cover.

DISASSEMBLY

Clamp the pump in a bench vise provided with soft lead jaws, then disassemble it as follows:

1. Unscrew the nut (Item C_3, Fig. C.O/29) from the drive shaft, then withdraw the drive sleeve and retaining ring.
2. Remove flange and cover and their sealing rings after removing the attaching bolts.
3. Remove gears and bearings, tapping the shaft ends with a plastic mallet. We recommend scribing assembly of the parts, if still usable.
4. Remove from the cover the drive shaft seals and the spacer, after removing the retaining ring.
5. Remove the inner and outer seals from flange and cover, the latter provided with a plastic back-up ring.

INSPECTION

Following a thorough cleaning of the parts, but avoiding solvents which may damage the oil seals. proceed as follows:

1. Check flange and cover seals and the two drive shaft seals for scored working surfaces or permanent damage, and refit them if found functionally efficient. However, it is best to replace all of them at overhauls.
2. Check that mating gear and bearing faces with lampblack. These surfaces must be perfectly smooth and normal to their axes. If wear is very small these faces are polished as shown in Fig. C.O/31, by inserting a sheet of emery paper lubricated with paraffin and turning the shaft and gear slowly.
3. Check on a surface gauge the flats on the bearing mating faces, and if wear is still small, polish them by passing them over a sheet of emery paper lubricated with paraffin and laid on a flat surface.

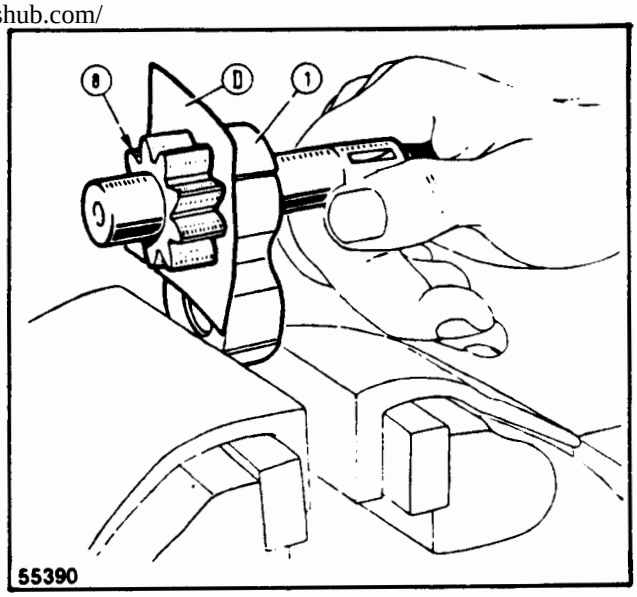

FIG. C.O/31 POLISHING DRIVE GEAR FACES
D. Emery paper; 8. Gear; 1. Bearing

Then, remove burrs and polish the side surfaces so that bearings slide in under slight hand pressure.

4. Measure shaft and bore wear versus data tabulated at the rear of this section.
5. Measure the bearing clearance which should be comprised within the limits of 0.004-0.008 in. (0.1-0.2 mm.) (Fig. C.O/32).

ASSEMBLY

Prior to assembly, lubricate all pump components using the hydraulic fluid, to avoid seizure or binding during the initial period of service. Assemble the pump referring to Fig. C.O/29 and taking notice of the scribed assembly marks and of the following points:

1. After installing the sealing rings insert on the inside of the ring anti-extrusion plastic ring (Fig. C.O/33), also on those pumps which were not provided with it.
2. Arrange the gear bearings inside the pump body with the relieved radii (Item R, Fig. C.O/29), on the outer circumference facing the delivery end port (Item M) and with the front faces with the lubrication scrolls adjacent to the gears.
3. Thoroughly dry the shaft seal lands in the cover, then introduce them complete with spacer arranged as shown in detail (a) of Fig. C.O/29 and finally, fill the cavity between the seal lips with multi-purpose grease (wheel bearing grease).

https://truckmanualshub.com/

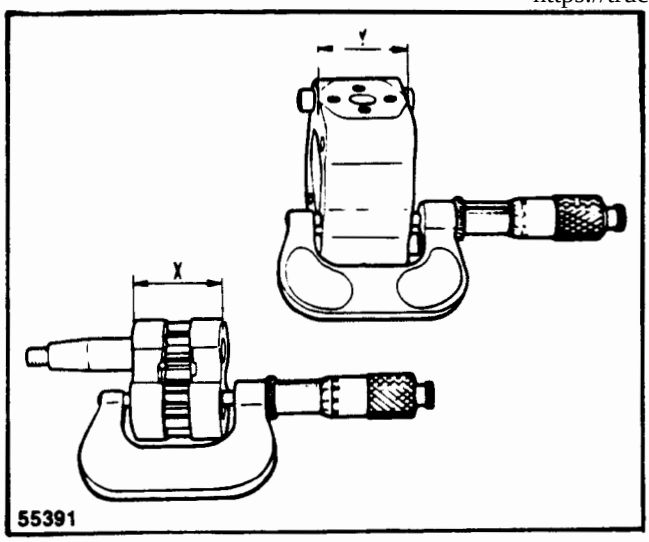

FIG. C.O/32 BEARING AND GEAR END CLEARANCE MEASUREMENT
Length X less than Y by 0.004"-0.008" (0.1-0.2 mm.)

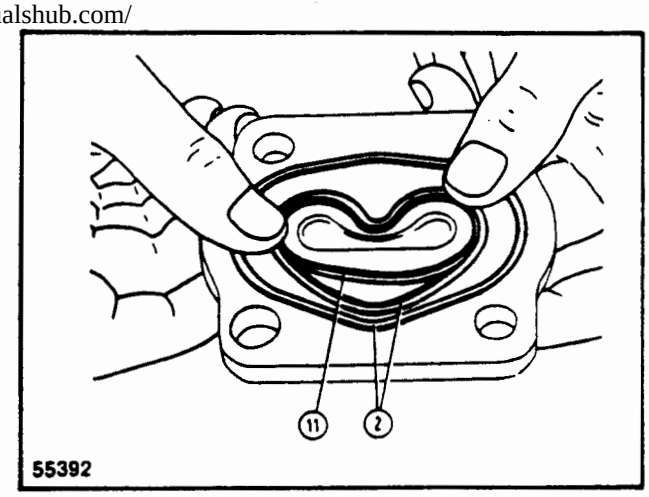

FIG. C.O/33 INSTALLING THE SEAL BACK UP RING (11) TO THE PUMP COVER ON THE INSIDE OF THE INNER O-RING
2. Sealing rings

When installing the complete cover be sure to cover with a suitable sheet band the end thread and the key seat of the drive shaft to avoid damaging the rubber rings against sharp corners.

4. Tighten the pump cover bolt nuts gradually and to the specified torque value.

If following overhauling, the pump performance is poor, entrust it to a specialized shop properly equipped for bench testing.

INSTALLATION

Assemble the drive coupling and refit the pump to the tractor inserting the alignment ring (Item 12, Fig. C.O/30) and gasket (Item 16) between the timing gear case cover and the pump.

Fix the suction line flange (Item 21, Fig. C.O/3) and, before securing the delivery pipe (Item 20), pour in some oil through the upper duct, in order to favor the priming of the pump avoiding the risk of seizure during the initial service period.

https://truckmanualshub.com/

TROUBLESHOOTING CHART

TROUBLE	PROBABLE CAUSE	REMEDY
A. Hydraulic lift inoperative.	1. Lack of oil.	1. Fill up to level.
	2. Control valve stuck.	2. Remove and clean it.
	3. Pump inoperative.	3. Disassemble and inspect it.
	4. Stuck drain valve.	4. Disassemble and inspect it.
	5. Dirty pilot valve seat.	5. Disassemble and inspect it.
	6. Safety valve or dis. valve plug too tight.	6. Disassemble and inspect it.
B. Hydraulic lift jerky.	1. Low oil.	1. Fill up to level.
	2. Oil strainer clogged.	2. Clean it.
	3. Air entering the suction line.	3. Check connections and seals.
C. Hydraulic lift does not hold the load up (with engine running the load keeps oscillating up and down; with engine stopped, the load drops).	1. Faulty adjustment of the control valve spool.	1. Readjust the valve spool.
	2. Drain valve leaking or stuck. Defective oil seals.	2. Disassemble, check tightness and replace defective parts.
	3. Poor sealing of the oil cylinder inlet valve.	3. Remove, check and clean the components.
	4. Oil leaks by the piston seal or the cylinder seal.	4. Replace the seals.
	5. Poor sealing or low calibration of the cylinder safety valve.	5. Replace it.
D. Pressure relief valve cuts in when lift arms are at maximum height.	1. Wrong adjustment of lift arms travel.	1. Reduce to suit the number of shims inserted under the head of the travel adjustment screw.
E. Poor lifting capacity, less than estimated.	1. Wrong pressure relief valve setting.	1. Replace it.
	2. Low pump efficiency (normally accompanied by a considerable increase of the lifting time).	2. Test pump performance and overhaul it, if necessary.
F. Presence of engine sump oil in the hydraulic lift fluid.	1. Poor performance of hydraulic pump shaft seals.	1. Check the parts and replace defective ones.
	2. Plugged hydraulic filter.	
G. Cycling	1. Too much sensitivity.	1. Back off lever and adjust.
	2. One-way valve spring broken or poor seat or leakage.	2. Disassemble and check.
	3. Leaky safety valve.	3. Disassemble and check.

https://truckmanualshub.com/

C.I POWER STEERING (POWER ASSISTED)

INTRODUCTION

The power steering system comprises the following main parts: (Fig. C.I/1)

1. The oil reservoir (Item 16) containing the filter with replaceable element.
2. The hydraulic pump (Item 8) driven by the engine timing gear.
3. The pressure valve, incorporated in the hydraulic pump, allows the steering of the tractor when the pump is inoperative or the engine has stopped, and regulates the pressure.
4. The operating cylinder with double-acting ram (Item 7) and built-in control valve, installed in parallel with drag link.
5. Oil pipes and hoses connecting the pump to the cylinder circuit.

There are two different versions of the power steering cylinder. Cylinder assemblies are interchangeable, but components are not.

OPERATION (UTB)

Oil drawn from independent reservoir, positioned above engine, is transferred under pressure to cylinder inlet port. Force inacted upon steering wheel during turn is directed to control valve spool. Spool movement allows pressure upon cylinder piston aiding direction of turn.

1. NEUTRAL POSITION (A, FIG. C.I/2)

When ball stud is subjected to side pressure lower than preload of reaction spring, control valve remains on a floating balanced position between shoulders of valve spool (41) because of force exercised by springs (30) and (36). In this condition, ports (I) and (L) are open allowing free flow of fluid. Oil delivered by pump will flow back into oil reservoir through cylinder chambers (E) and (F) and line (40).

2. RETRACTED POSITION—LEFT TURN (B, FIG. C.I/2)

If front ball stud (17) is subjected to a force acting on piston (43) and exceeding preloading of reaction spring (30), control valve spool moves in same direction with respect to cylinder rod (9); this will restrict and, if load is at maximum intensity, it will shut off oil flow through port (I); consequently, pressure exercised by oil in minor chamber (E) increases and forces piston (43) to retract cylinder rod (9). Oil contained in opposite chamber (H) flows freely into reservoir through slots in piston (43), ports in valve body (41), chamber (f) and tube (40). Movement of piston (43) and cylinder rod stops as soon as lessening of load on front ball stud (17) allows reaction spring (30) to bring valve back to neutral.

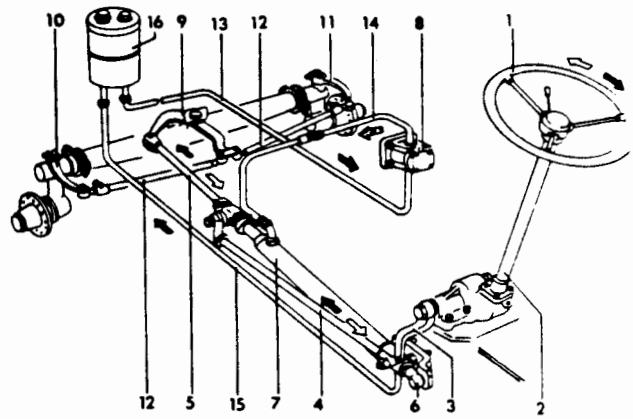

STEERING SYSTEM, TWO WHEEL DRIVE

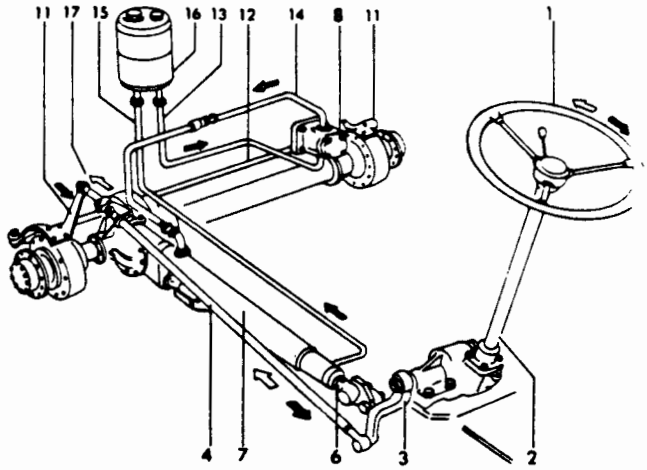

STEERING SYSTEM, FOUR WHEEL DRIVE

FIG. C.I/1 STEERING SYSTEM

1. Steering wheel; 2. Steering column; 3. Steering lever; 4. Drag link, rear; 5. Drag link, front; 6. Fixed joint; 7. Servo-cylinder; 8. Hydraulic pump; 9. Central lever; 10, 11. Steering levers; 12. Tie-rod; 13. Pipe, tank-pump; 14. Pipe, pump-cylinder; 15. Pipe, servo-cylinder tank; 16. Oil tank; 17. Joint, steering lever

3. EXTENDED POSITION—RIGHT TURN (C, FIG. C.I/2)

Conversely, if force acting on front ball stud (17) occurs in direction opposite to previous one, and its intensity is such as to overcome preload of reaction spring (36), control valve rod (37) will move with respect to cylinder rod (9) in same

https://truckmanualshub.com/

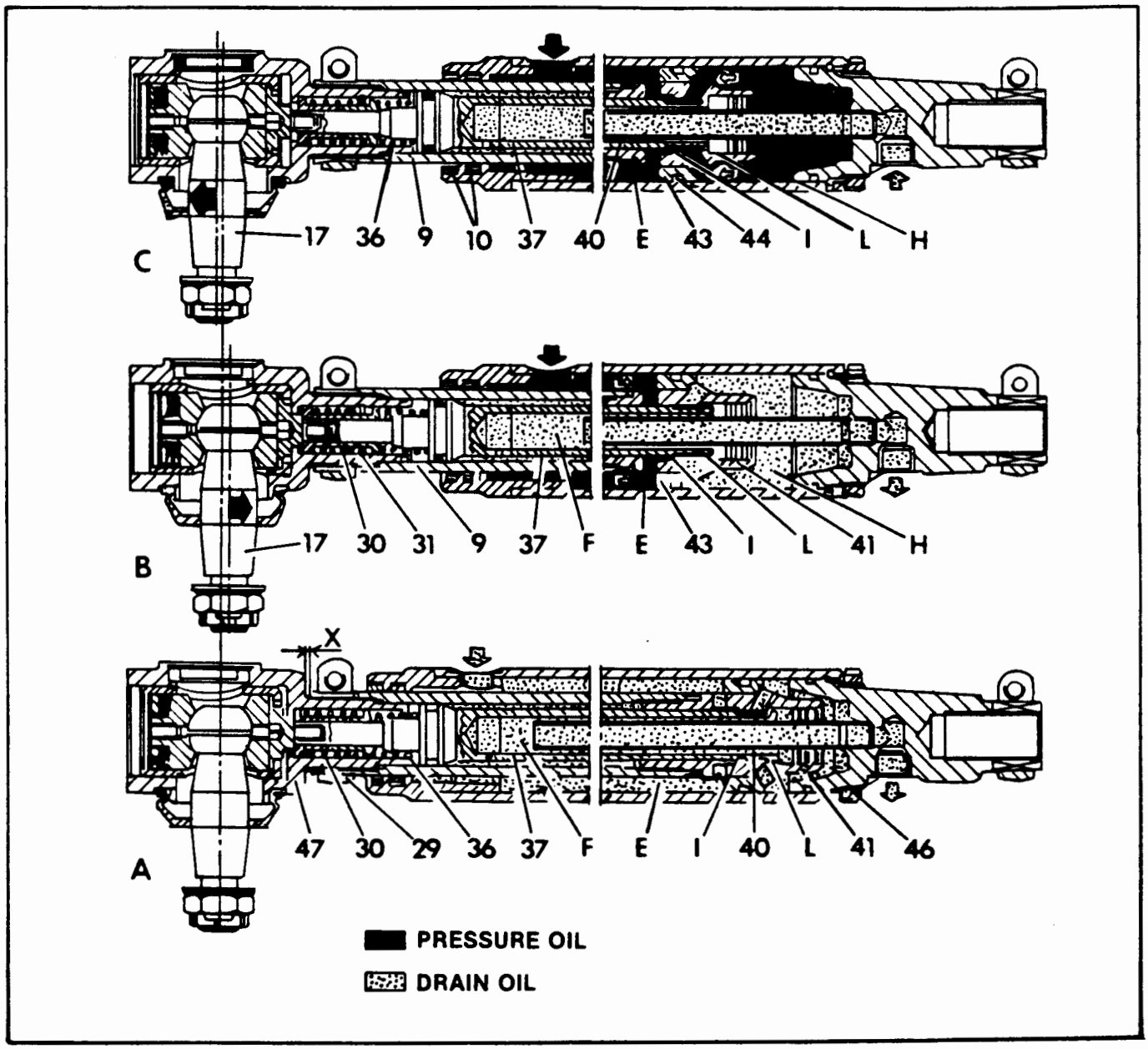

FIG. C.I/2 WORKING DIAGRAMS OF POWER STEERING CYLINDER

a. Neutral position; b. Retracted position (turning to the left); c. Extended position (turning to the right); E. Chamber with minor pressure area; F. Oil discharge chamber; H. Chamber with major pressure area; I and L. Oil ports; X. 0 - 0.1575" = 0 - 4 mm. Adjustment gap for the correct positioning of valve body (41) with respect to control valve rod (37); 9. Cylinder rod; 10. Oil seals; 17. Cylinder control ball stud; 29. Control head clamp; 30 and 36. Reaction springs; 31. Retaining ring; 37. Control valve rod; 40. Discharge line; 41. Valve body; 43. Piston; 44. Seal ring; 46. Cylinder head locknut; 47. Control head body

https://truckmanualshub.com/

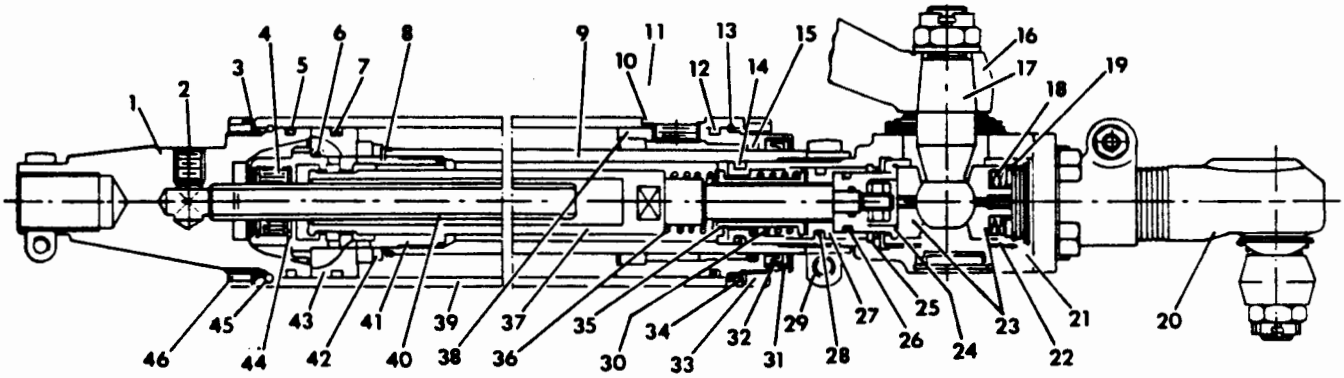

FIG. C.I/3 POWER STEERING CYLINDER (UTB)

1. Rear anchoring head; 2. Discharge tube connection; 3. Safety plate; 4. Oil-seal; 5. O-ring; 6. Dowel; 7. Bronze seal ring; 8. Safety plate; 9. Cylinder rod; 10. Oil-seal; 11. Delivery tube connection; 12. O-ring; 13. Retaining ring; 14 and 15. Oil-rings; 16. Draglink; 17. Cylinder control ball stud; 18. Disc spring (Belleville); 19. Retaining ring; 20. Cylinder head; 21. Control head body; 22. Ball stud seat; 23. Ball stud caps; 24. Reaction piston abutment; 25. Retainer ring; 26. O-ring; 27. Reaction piston; 28. O-ring; 29. Control head clamp; 30. Reaction spring; 31. Retaining ring; 32. Piston rod mud scraper; 33. Cylinder front end locknut; 34. Safety plate; 35. Spring seat; 36. Reaction spring; 37. Control valve rod; 38. Cylinder front end; 39. Cylinder barrel; 40. Discharge tube; 41. Valve body; 42. Washer; 43. Piston; 44 and 45. Retaining rings; 46. Cylinder head locknut; E. Chamber with minor pressure area; F. Oil discharge chamber; H. Chamber with major pressure Area I and L. Oil inlet ports, a) Neutral - b) Retracted - c) Extended

https://truckmanualshub.com/

direction as steering to be actuated. This will restrict or completely shut off oil flow through port (L), and pressure will rise both in major and minor chambers (E and H). Pressure will prevail in major chamber where piston head is larger in diameter, forcing piston to extend cylinder rod (9). Forward motion of piston (43) and cylinder rod (9) will stop as soon as lessening of load exercised on front ball-head pin (17), allows reaction spring (36) to bring valve back to neutral.

CYLINDER DISASSEMBLY (UTB)

FRONT END OF CYLINDER (MAJOR DISASSEMBLY(FIG. C.I/3)

1. Remove attaching brackets, tubing and connections. Drain residual oil by tilting. Straighten tabs, take out bolts. Remove cylinder head (20) and retaining ring (19). CAUTION—Spring tension is released when retaining ring is removed. Be cautious of spring loaded parts.
2. Remove front ball stud cap (23) and take out Belleville spring discs (18). Take retainer, cap and "O" ring from round hole and lift out cylinder control ball stud (17). Release control head clamp (29) and screw out control valve assembly.

Make sure oil inlet connection is completely removed from side of cylinder. Straighten tab of safety plate (34) and screw off cylinder front end lock nut (33). Tap cylinder front end (38) inward for clearance, and with small punch through 1/8 inch hole found on rim of cylinder, remove retaining ring (13). Grasp cylinder rod and twist, pulling outward to remove it and cylinder front end (38). Should extra resistance be encountered when piston (43) butts against inside of cylinder front end (38), bolt up in clamp (29) and tap gently against it with soft metal hammer while twisting and drawing on piston rod. Entire piston and rod assembly will slide out front of cylinder. Loosen and remove clamp (29, Fig. C.I/3). Slide cylinder front end (38) off rod (9).

NOTE: Cylinder sleeve and minor pressure end assembly remain intact, and seldom need further disassembly. Clean interior with solvent and inspect for loose discharge tube (40), for damage or scoring. Should seal (5) be deteriorated, and oil seeps from area of lock nut (46), replace seal as outlined under Disassembly and Assembly of Minor-Pressure End of Cylinder.

DISASSEMBLY AND ASSEMBLY OF MINOR—PRESSURE END OF CYLINDER

Straighten tab of safety plate (3, Fig. C.I/3) and back off cylinder head lock nut. Push minor pressure chamber (1) inward to clear, and with small punch through 1/8-inch hole found on rim of cylinder, remove retaining ring (45). Pull chamber (1) from cylinder. Tap gently with soft-metal hammer if necessary.

Clean interior surfaces in solvent, examine for any irregularity in cylinder or return tube (40). Replace or repair any damaged part. "O" ring (5) is only seal involved. Upon its replacement, this end of cylinder may be reassembled by reversing steps in previous paragraph, but leave nut (46) finger-tight for installation alignment.

DISASSEMBLY AND ASSEMBLY OF CONTROL VALVE GROUP

Take out inside ball stud cap (23, Fig. C.I/3) to allow access to retaining nut holding reaction piston abutment (24). Grip control valve rod in vise and with appropriate tool, or carefully with small snub-nosed punch, remove retaining nut.

Withdraw through ball stud end:

—washer;
—ball stud seat (22);
—reaction piston abutment (24).

Withdraw control valve rod (37) with reaction spring (36) and spring seat (35) from other end of control head body (21). Seat (35) and spring (36) are loose on rod (37) and may lodge in body (21), but are easily removed.

NOTE: Due to vast number of small parts in total steering cylinder, repair and immediate reassembly of head body is recommended before repairing other sub-assemblies.

Remove retainer ring (25) from I.D. of body (21). Pull out reaction piston (27) and shake out spring (30). Take out all "O" ring seals, wash parts in solvent. Inspect all working surfaces for damage or excessive wear. Examine spring for fatigue. Repair, polish or replace as necessary.

Install all new seal replacements before reassembly.

Insert reaction spring (30) and piston (27). Clamp against spring tension and reinstall retainer (25).

⚠ **CAUTION**—During reassembly take special care not to damage "O" rings.

Inspect spring for fatigue. Examine threads on rod (37) and retaining nut. Nut must screw on rod freely. Slip spring (36) and seat (35) (flange against spring) onto rod (37). Insert into head body (21). Slide in seat (22) and piston abutment. Push and hold body (21) against springs on rod (37). Install washer and retaining nut. Tighten securely.

https://truckmanualshub.com/

DISASSEMBLY AND ASSEMBLY OF CYLINDER ROD

Major disassembly of piston from rod is not necessary except when piston, valve body, and/or cylinder rod must be serviced or replaced. Inspect wearing surfaces. If satisfactory, omit further instructions to and including next CAUTION note.

To disassemble, remove bronze seal ring with ring tool. Take care not to damage edges if reusable.

Straighten tab of safety plate (8, Fig. C.I/3). Clamp cylinder rod (9) in well-padded vise, or better, enlist aid of assistant to hold rod on a smooth, clean wood surface. Use a punch against spanner notch - strike sharply to loosen. Unscrew valve body (41) with piston (43) from rod (9). Slide off safety plate (8) and washer (42).

Use arbor press to remove piston (43) from valve body (41).

To reassemble piston, valve body and rod, reverse disassembly procedure.

⚠ **CAUTION**—Take care not to lose piston alignment-pin lodged in valve body.

Remove snap ring inside valve body. Take out seal retainer, seal (4) and washer. Inner snap-ring may stay. Clean in solvent, inspect, replace with new seal (4) and reassemble by reversing disassembly procedure.

SERVICE OF FRONT END BODY (38)

Through small hole in rim of body, release retainer (31, Fig. C.I/3), take out mud-scraper (32) and "O" ring (15). Remove "O" ring (12). Discard all old rubber parts. Wash body (38) in solvent.

Inspect bronze bushing for scoring or excessive wear and replace if necessary.

To reassemble, replace "O" rings and mud-scraper with new, and reverse disassembly procedure.

INSTALLING CYLINDER ROD AND PISTON ASSEMBLY

NOTE: Following instructions deal with assembly into front of cylinder only, since rear, low-pressure end assembly is covered under Disassembly and Assembly of Minor-Pressure End of Cylinder.

With clamp (29, Fig. C.I/3) removed, slide front end body (38) onto cylinder rod assembly with threaded end away from piston. Install piston ring (7).

Lubricate discharge tube (40) inside cylinders and seal (4) liberally. Insert cylinder rod and front end body (piston-end first) into cylinder opening. Compress ring for entry. Carefully maintain lateral alignment by sliding front end body against piston and into cylinder immediately following it. Twist cylinder rod assembly as it is gently eased inward.

⚠ **CAUTION**—Do not force. If resistance is encountered, oil seal (4) may be catching on discharge tube (40) and damage result. Retract rod a little and try again. When rod is 5 or 6-inches into cylinder, oil seal (4) is past danger point and should slide in easily.

Tap cylinder front end (38) below edge of cylinder and reinstall retaining ring (13). Make sure ring is seated and withdraw cylinder rod to limit. This forces front end (38) against retainer (13).

Carefully use spanner in safety plate key-way of cylinder end (38) so threads will not be damaged, and turn until threaded hole for delivery tube connection aligns with hole in rim of cylinder. Lightly screw in connector to maintain alignment. Install safety plate (34) and lock nut (33); draw up tightly and set tab of plate (34).

INSTALLING CONTROL VALVE ROD AND HEAD BODY ASSEMBLY

Install inner ball stud cap (23, Fig. C.I/3). Turn ball stud seat so round holes align, slotted holes align, and insert ball stud (17), thread-end first, through round hole. Push in outer ball stud cap (23) and Belleville discs (18) (maintaining alternate cover-concave order) and washer.

NOTE: Installing retaining ring (19) against tension of Belleville discs (18) is facilitated by making a simple tool of 1-inch x ¼-inch flat steel about 3½-inch long with two 7/16-inch holes 2¼-inch apart. Attach it diagonally across head body with two mounting screws, a pipe-union or small wrench-socket against washer. Tighten screws to compress Belleville discs (18) and allow access to groove for snap ring (19).

Put snap ring (19) in groove. Remove "tool", if used.

Install in order: "O" ring, plug and snap ring in round hole.

INSTALLING VALVE ROD AND HEAD BODY ASSEMBLY

Extend cylinder rod (9, Fig. C.I/3) to limit. Loosen clamp (29). Insert valve rod and screw head body

https://truckmanualshub.com/

into threaded bore of cylinder rod (9) snug tight and set clamp (29).

Bolt on cylinder head (20), and attach miscellaneous brackets and tubing connections.

⚠ **CAUTION**—Lock nut (46) is still loose. After nut is installed on tractor and alignment assured for free rocking movement of ball joints, do not forget to tighten lock nut (46) and set tab of safety plate.

Inspect all exterior tubing connections and fastenings: lock tabs and cotter pins.

Start tractor engine and allow cylinder to fill with oil. Rock steering wheel several times. Cylinder nearly always purges itself of air, but in event spongy operation indicates airlock, bleed with intake line disconnected; work steering cylinder against limits several times. Turn wheel until cylinder is fully extended, reconnect inlet hose finger-tight. Start engine and allow oil and air to trickle out around connector for 2-3 minutes. Tighten connector with pressure still present in lines.

OPERATION (MICO)

The operation of the MICO power steering cylinder is similar to the UTB cylinder.

CYLINDER DISASSEMBLY

The MICO power steering cylinder can be disassembled only into two groups, the cylinder and the valve.

Disconnect hoses from the cylinder. Remove the cylinder from the tractor. Recover grommet and washer from shaft end of cylinder. Remove bolts from control valve end. Separate cylinder from control valve.

To replace wiper ring, remove snap ring from groove inside cylinder barrel. Replace wiper ring.

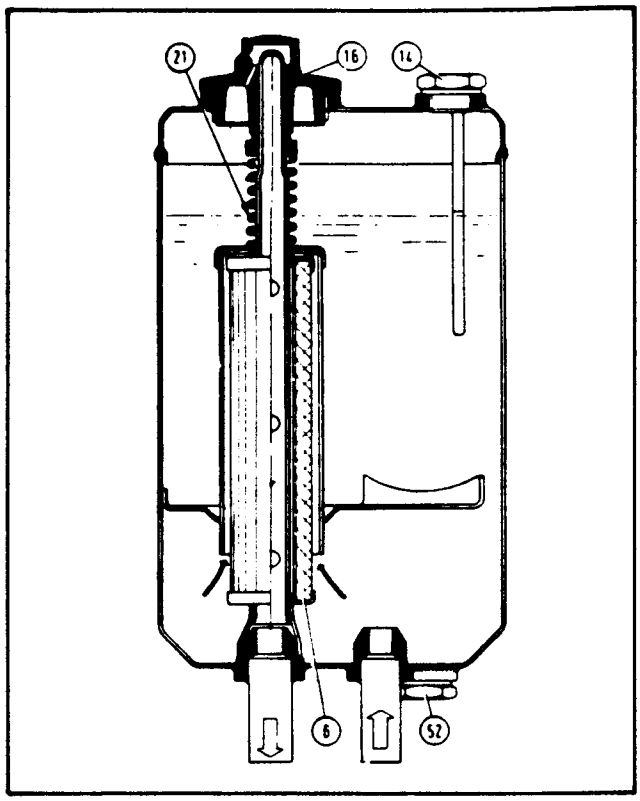

FIG. C.I/4 SEPARATE HYDRAULIC OIL RESERVOIR

NOTE: Arrows indicate the oil flow pattern.

6. Metal filter cartridge; 14. Oil filler plug with dipstick; 16. Breather and access plug to oil filter; 21. Cartridge retaining spring; 52. Oil drain plug

This is the extent of disassembly of the cylinder barrell. If any other damage is indicated, the cylinder assembly must be replaced.

Service on the control valve is limited to replacing the rubber boot.

https://truckmanualshub.com/

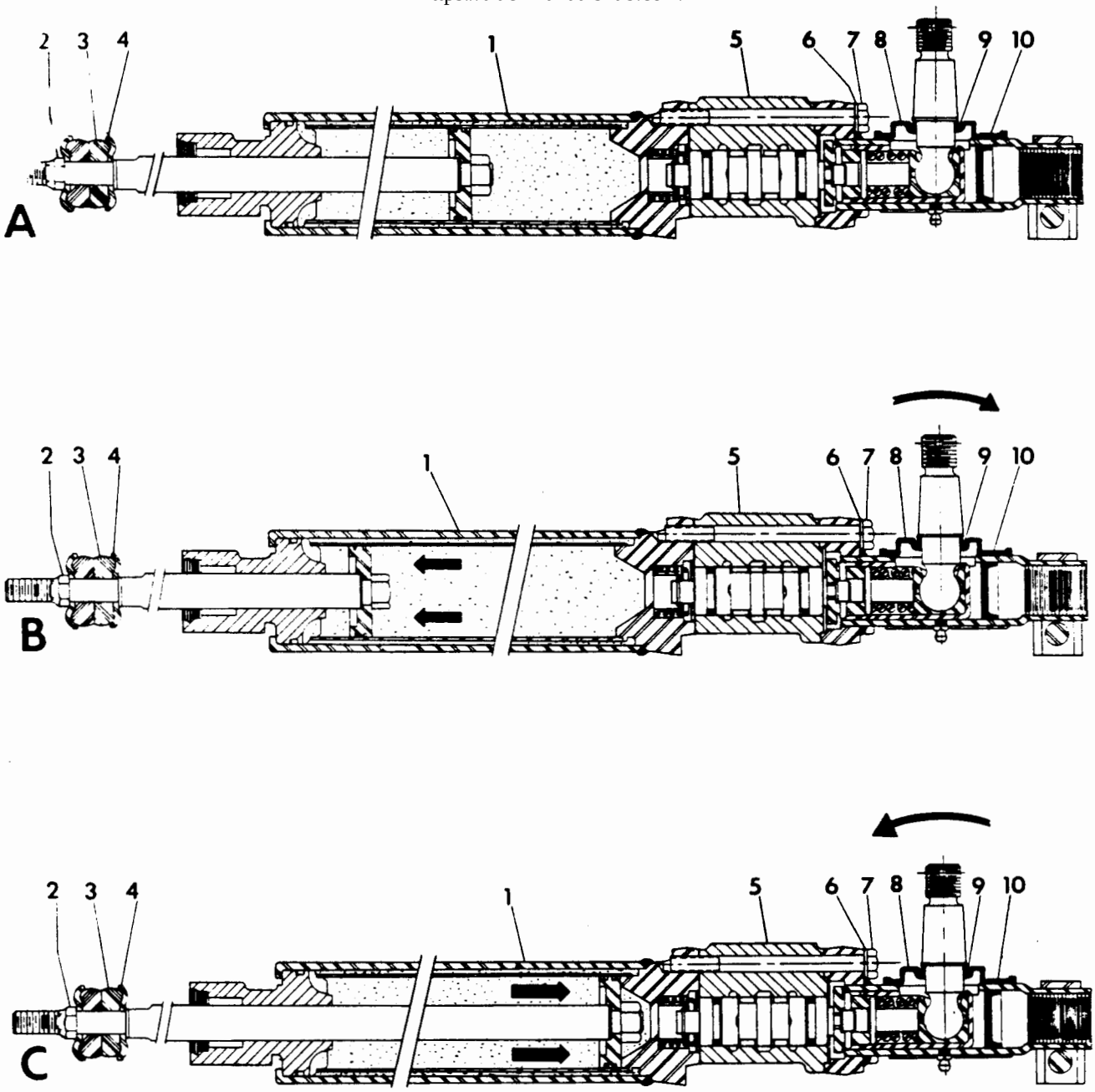

C.I/5 POWER STEERING CYLINDER (MICO)

A. Neutral; B. Extended position (right turn); C. Retracted position (left turn); 1. Cylinder assy.; 2. Nut; 3. Grommets; 4. Washer; 5. Control valve assembly; 6. Washer; 7. Bolt; 8. Boot; 9. Retaining ring; 10. Clamp

Overhauling the Oil Pump and Reservoir

See operations indicated on page 174.

https://truckmanualshub.com/

C.II HYDROSTATIC STEERING

INTRODUCTION

The hydrostatic steering system consist of an oil reservoir (Item 14, Fig. C.II/1), with built-in filter, a hydraulic pump, with built-in pressure relief valve (6), hydraulic cylinder (5) and steering unit (11). Oil pipes and hoses connect the steering and pump to the cylinder.

SPECIFICATIONS

Oil Reservoir—Serves the hydraulic system of hydrostatic steering only. It is located under the hood of the tractor. It has a filler plug with a dipstick and a drain plug at the bottom, as well as a filter.

Hydraulic Pump—PD-10-OS geared type, dependent to engine speed, in permanent mesh.

—Maximum Pressure . . . . 2537.5 psi (17,000 kPa)
—Working Pressure . . . . . 2175 psi (15,000 kPa)
—Capacity @ 1000 rpm . . . . . 2.64 gpm (10 1/min.)
—Max. Operating Temp. . . . . 176 °F (80 °C)
—Relief Valve Setting . . . . . 1450 psi (10,000 kPa)

Hydraulic Cylinder—Double-acting type, located on the left side of tractor.

Steering Unit—DANFOSS OSPB 80.0N 150-0040 type. Connected directly to the steering wheel shaft.

—Output @ one full turn . . . . . 4.88 cu.in. (80 cc)
—Rated Pressure . . . . . 1450 psi (10,000 kPa)
—Opening pressure of reverse shock valve . . . . . 2320 psi (16,000 kPa)

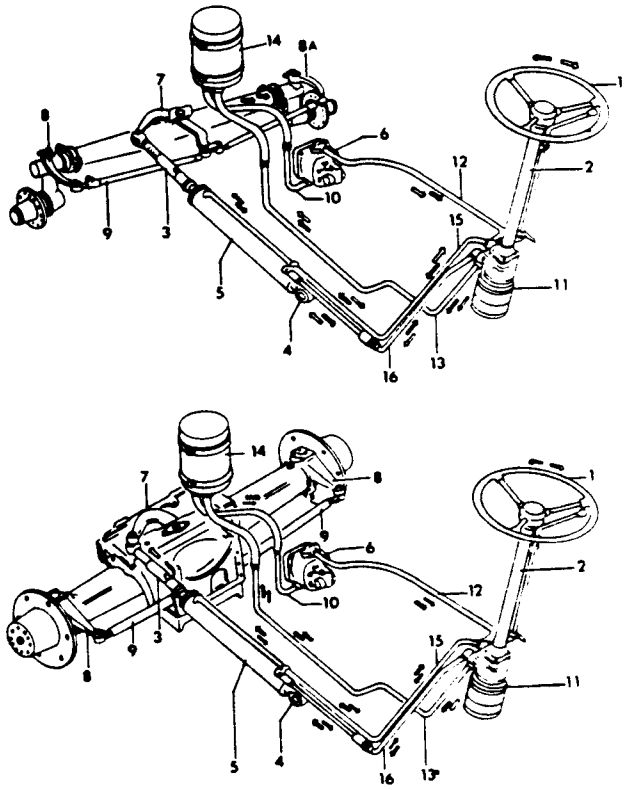

FIG. C.II/1 HYDROSTATIC STEERING SYSTEM
1. Steering wheel; 2. Steering column; 3. Drag link; 4. Joint, fixed; 5. Hydraulic cylinder; 6. Hydraulic pump; 7. Lever; 8. Track arm; 9. Track rod; 10. Suction pipe; 11. Steering unit; 12. Delivery pipe; 13. Return path; 14. Oil reservoir; 15. Line, steering unit; 16. Line, cylinder-steering unit; A. Steering system, standard tractor; B. Steering system, DTC Tractor

OPERATION

The steering unit consists of the rotary-type distributor (Item 13, Fig. C.II/2) and the metering gear set (14), fitted on the same shaft and steering wheel-controlled. The control from the steering wheel is transmitted to the rotary distributor spool and metering gear set.

The hydraulic pump (4) supplies the steering unit with oil under pressure, through the union "P". The metering gear set (14) regulates the quantity of oil supplied by the rotary distributor to the hydraulic ram and insures a turn proportional to the steering wheel rotating angle. If the oil pump is inoperative (defective engine or pump), the metering gear set insures the operation of the steering system, working as a vane-type hydraulic pump at a speed equal to the number of turns of the steering wheel.

The safety valves for reverse shocks (18), one for each branch of the system, is set at 2320 psi (16,000 kPa) to protect the system against the shocks to which the tractor wheels are exposed.

https://truckmanualshub.com/

1. Steering wheel; 2. Steering wheel column; 3. Steering unit; 4. Hydraulic pump; 5. Pressure valve; 6. Hydraulic ram; 7. Strainer pipe; 8. Delivery pipe; 9. Pipe, valve steering unit; 10. Return line; 11. Pipes, Steer Unit, ram; 12. Oil tank; 13. Rotary-type distributor; 14. Metering gear set; 15 and 16. Non-return valves; 17. Fastening springs; 18. Safety valve for reverse shock; P. Union from pump; R. Union, return line

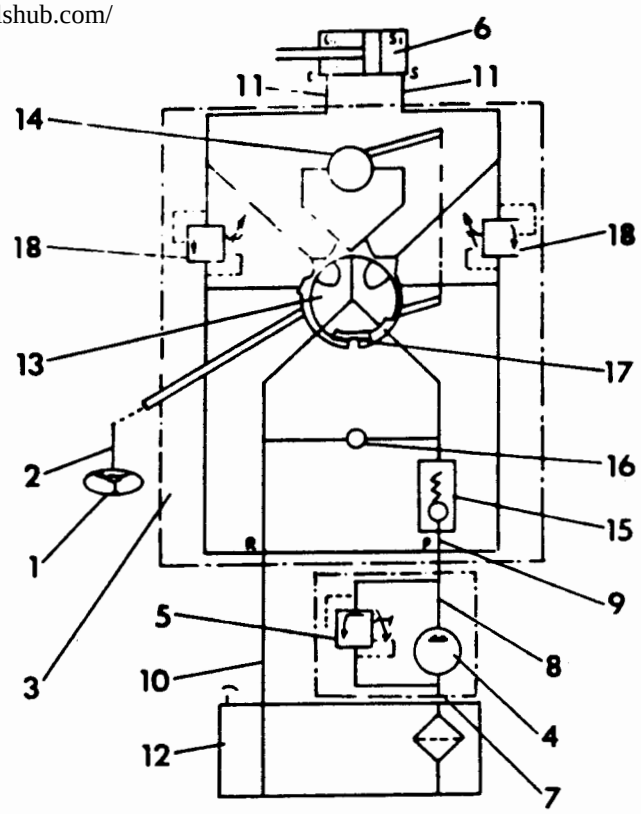

FIG. C.II/2 HYDRAULIC DIAGRAM OF HYDROSTATIC SYSTEM

The non-return valve (16), provided with ball and spring, in place within the pressure oil circulation.

The non-return valve (15), provided with a ball, is fitted between the pressure line and the return line with the outlet towards the pressure line.

NEUTRAL POSITION

The oil supplied by the pump, enters the system through the union "P" and reaches the tank, through the union "R".

In this case, the rotary distributor spool is fastened by the two springs (17) and shuts oil inlet and outlet in hydraulic ram; the direction is kept in a straight line.

LEFT TURN

Turning the steering wheel to the left, the rotary distributor spool which closes the pressure oil circulation return to the tank leaves the neutral position and opens the pressure oil circulation through the metering gear set (14) to the union "D".

https://truckmanualshub.com/

The union "S" features the connection with the return line. The quantity of the pressure oil which circulates through the metering gear set is proportional to the number of turns of the steering wheel. The piston is pushed proportional to the quantity of oil which enters the hydraulic ram, in the space "S_1", then the oil from the space "D_1" passes to the tank.

When steering wheel turning stops, the rotary-distributor spool and the steering control are brought back in neutral position.

RIGHT TURN

The steering wheel is turned to the right; the metering gear set opens the pressure oil circulation to the steering ram (6), through the union "D". The union "S" features the oil return.

TURNING WHEN THE OIL PUMP IS INOPERATIVE

In this case, steering wheel turning requires a higher effort. To turn the steering wheel, the distributor spool must leave the neutral position and the same pressure circulations like when the pump is operative, are established.

The union from the pump "P" is pressureless, the non-return valve (15) is closed and the metering gear set is revolving due to the effort on the steering wheel.

The metering gear set operates like a pump which sucks the oil from the return line, through the non-return valve (16) and directs it to the union "D". The effort on the steering wheel is highly increased due to the resistance felt when turning the tractor.

SERVICING THE HYDROSTATIC STEERING SYSTEM

RESERVOIR (TANK)

When filling the reservoir with oil, the following procedure should be used;

1. Raise the front wheels off of the ground.
2. Fill the reservoir to maximum level, and replace filler plug.
3. Turn the engine for a maximum of 10 seconds, using the starter, but do not start the tractor.
4. Re-fill the reservoir, and replace filler plug.
5. Start the engine and run it at an idle; turn the steering wheel one full turn to the left, and then one full turn to the right, avoiding the extreme position in either position.
6. Repeat operations "2" and turn the steering wheel several times in both directions, keeping it in its extreme position for only a few seconds.
7. Top the reservoir and lower the tractor. Turn the steering wheel several times in both directions, observing the operation of the steering system.

STEERING UNIT

The steering unit can be serviced only by the factory, therefore, it must be replaced as a unit when damage or malfunction is observed.

To replace the steering unit, remove the instrument panel and disconnect the steering column from the steering unit. Disconnect pipes to the unit, and remove unit from support bracket.

Install new unit, and replace pipes in proper location. Replace steering column and instrument panel.

Refill reservoir as outlined above.

https://truckmanualshub.com/

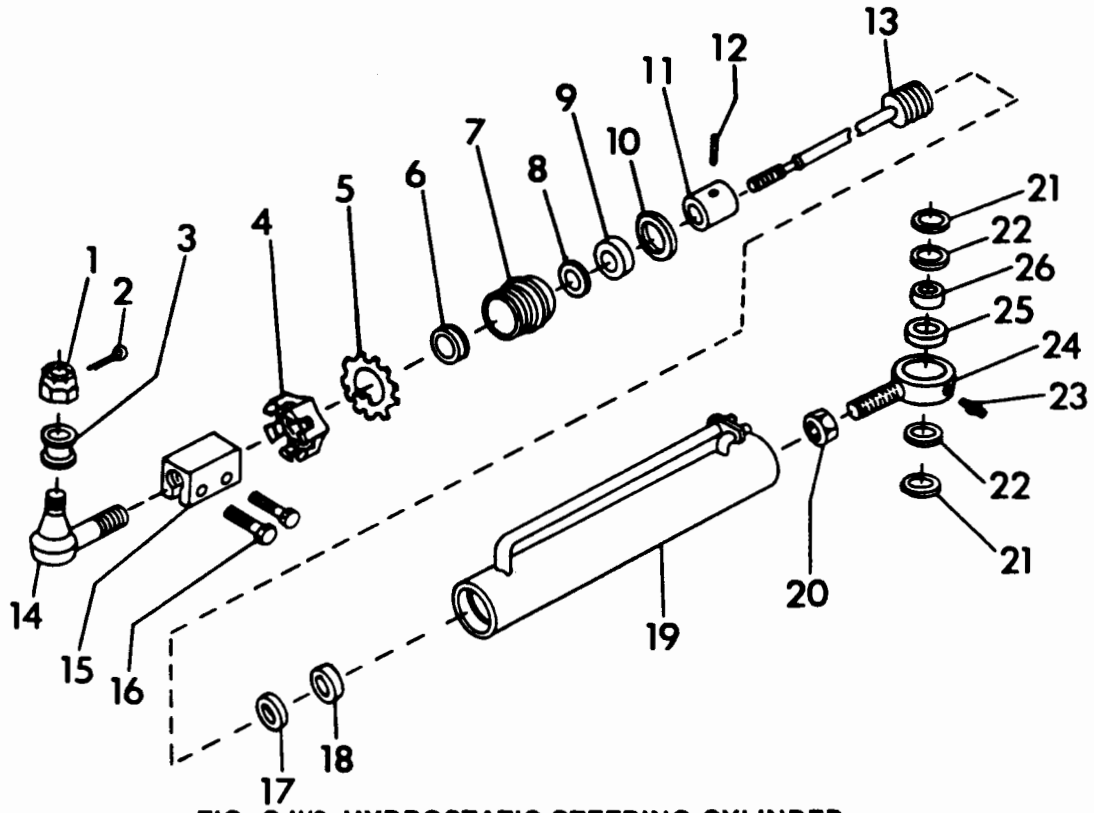

FIG. C.II/3 HYDROSTATIC STEERING CYLINDER

1. Castellated Nut; 2. Cotter pin; 3. Bushing; 4. Lock nut; 5. Lock washer; 6. Seal; 7. Back-up washer; 8. O-Ring; 9. Guide Ring; 10. Cap; 11. Back-up Ring; 12. O-Ring; 13. Head; 14. Adjusting sleeve; 15. Screw; 16. Rod w/Piston; 17. O-Ring; 18. Sliding Ring; 19. Guide Ring; 20. Retaining ring; 21. Cylinder tube.

CYLINDER ASSEMBLY

To remove and disassemble the hydraulic cylinder assembly, disconnect hose from the cylinder. Remove cylinder from tractor and clean.

Unscrew locking screws in clamping sleeve and unscrew sleeve (Item 14, Fig. C.II/3) from cylinder rod.

Using a spanner wrench, unscrew the locknut (4), depress the cap (10) and remove the retaining ring (20). Pull piston rod out to remove cap. Remove cap from rod.

Remove O-ring, back-up ring, guide ring and seal from cap. Remove sliding ring, O-ring and guide ring from piston rod.

Clean and inspect cap, cylinder tube and piston rod assembly for excessive wear or scoring. Check rod for nicks, scratches and scoring.

After all parts have been cleaned, dried and inspected, place a light coat of oil on all metal parts. Install new seal (6), back-up ring (7), O-ring (8) and guide ring inside cap. Install new back-up ring (11) and O-ring (12) in groove on OD of cap (10).

Install O-ring (17) on piston. Install sliding ring in same groove over O-ring. Install guide ring on piston.

Oil piston liberally and insert into cylinder tube. Slide cap over rod, being careful not to damage O-ring, back-up washer and seal, and into tube.

Insert retaining ring into slot on side of cylinder tube. Install lock washer and nut on cap and tighten. Lock tab on lock washer on nut.

Reinstall adjusting sleeve and head on piston rod. Install on tractor. Check for leak.

https://truckmanualshub.com/

C.II FITS & TOLERANCES — TORQUE SPECIFICATIONS SERVICE TOOLS

FITS AND TOLERANCES

DESCRIPTION	Size of New Parts and Wear Limits mm	in.
Hydraulic lift unit.		
Hydraulic lift.		
Diameter of piston (Item 24, Fig. C.O/8)	89.980-90.000	3.5425-3.5433
Inside diameter of cylinder barrel (Item 25)	90.036-90.071	3.5447-3.5461
Running clearance of piston	0.036-0.093	0.0014-0.0036
Diameter of rockshaft (Item 45, Fig. C.O/13) bushing locations:		
—right hand side	59.398-59.434	2.3385-2.3399
—left hand side	51.398-51.434	2.0235-2.0249
Inside diameter of the assembled rockshaft bushings:		
—right hand side (Item 52) (1)	55.100-55.170	2.1693-2.1720
—left hand side (Item 51) (1)	47.100-47.170	1.8543-1.8571
Assembly clearance of rockshaft in bushings	0.100-0.195	0.0040-0.0079
Interference fit of bushings (Items 51 and 52) in hydraulic lift body locations	0.046-0.102	0.0018-0.0040
Diameter of top link bracket trunnion (Item 53, Fig. C.O/1)	24.948-25.000	0.9822-0.9842
Inside diameter of bushings (Item 54, Fig. C.O/9) fitted (1)	25.020-25.072	0.9850-0.9871
Assembly clearance between top link bracket trunnion and bushings	0.020-0.124	0.0008-0.0049
Interference fit of bushings (Item 54) in top link bracket	– 0.050- – 0.230	– 0.0020- – 0.0090
Thickness of washers (Item N. Fig. C.O/20) for the lift arms stop adjustment screw	0.460-0.550	0.0180-0.0217
Thickness of adjustment shims (Item H, Fig. C.O/19) for top link bracket control spring	0.250-0.350	0.0098-0.0140
Assembly clearance between valve spool (Item 6, Fig. C.O/7) and its location (4)	0.025-0.035	0.0010-0.0140
Assembly clearance between external ram spool (Item P_1, Fig. C.O/28) and valve bore (4)	0.015-0.020	0.0006-0.0008
Specifications of drain valve spring:		
—free nominal length	22	0.87
—length under load (2.3-2.6 kg = 5-5.7 lb.)	10	0.39
Specifications of pilot valve spring:		
—free nominal length	46	1.81
—length under load (1.8-2.2 kg. = 4-4.8 lb.)	20	0.79
Hydraulic Pump		
Diameter of driving and driven shafts	17.400-17.424	0.6850-0.6859
Diameter of bearing bores	17.450-17.470	0.6870-0.6878
Running clearance of shafts in bearing bores	0.026-0.070	0.0010-0.0027
Wear limit	0.220	0.009
Diameter of bearing locations in pump body	37.270-37.294	1.4673-1.4683
Permissible wear	0.100	0.0039
Drive and driven gear widths	16.323-16.348	0.6423-0.6436
Wear limit	16.069	0.6323
End clearance of gears and bearings in pump body	0.100-0.200	0.0040-0.0080
Thickness of pump driving gear thrust washers (Item 18, Fig. C.O/30)	1.450-1.5001	0.0570-0.0590
Diameter of drive gear shaft (Item 17) bushing locations	36.975-37.000	1.4557-1.4567
Inside diameter of assembled bushings (Item 19) (1)	37.050-37.075	1.4587-1.4596
Assembly clearance of gear shafts and bushings	0.050-0.100	0.0020-0.0039
Interference fit of gear bearing bushings (Item 19)	– 0.060/- – 0.097	– 0.0023/- – 0.0038

(1) Ream after fitting.
(2) At assembly, control valve spools are suitably selected and fitted by grinding and polishing to the correct clearance.

https://truckmanualshub.com/

TORQUE SPECIFICATIONS

Description	Size and thread metric	(N • m)	Ft.-lbs.
NOTE: Metric threads are measured thread to thread. **EXAMPLE: Nut, cam roller excentric pin.** **8 x 1.25** **8 mm is the thread diameter** **1.25 is the distance between threads**			
Hydraulic lift and linkage.			
Hydraulic lift.			
Nut, cam roller excentric pin (Item 19, Fig. C.O/25)	8 x 1.25	29-32	21-24
Stud nut, control valve to lift body (Item C_1, Fig. C.O/9)	10 x 1.25	57-63	42-47
Stud nuts, hydraulic lift rear cover (Item 16, Fig. C.O/9)	12 x 1.5	130-145	96-107
Capscrews, control spring to top link bracket and rear cover (Item C_2, Fig. C.O/1)	14 x 1.5	170-185	125-136
Bolt nuts, lift arms to rocker shaft (Item C_3)	12 x 1.5	120-130	88-96
Stud nuts, control valve to hydraulic lift (Item C_4)	14 x 1.5	150-165	111-122
Stud nuts, hydraulic lift to tractor (Item C_5)	14 x 1.5	120-130	88-96
Capscrews, hydraulic lift to tractor	14 x 1.5	120-130	88-96
Cylinder pressure safety valve (Item 3)	24 x 1.5	30-40	22-29
Plug, Pump valve (Item C_6)	24 x 1.5	60-70	44-52
Hydraulic Pump.			
Capscrews, pump to timing gear case cover (Item C_1, Fig. 30)	16 x 1	8	6
Bolt nuts, pump covers (Item C_2, Fig. C.O/29)	10 x 1	40-44	29-32
Nut, drive coupling to shaft (Item C_3)	12 x 1.25	27-39	20-29

https://truckmanualshub.com/

D. ELECTRICAL SYSTEM

https://truckmanualshub.com/

ELECTRICAL SYSTEM

INDEX

GENERAL

BATTERY CHARGING PLANT

Wiring Diagram 187
General 188
Alternator 188
Alternator Specifications 191
Alternator Operation 191
Rectifying Diodes 192
Diode Specifications 192
Checking Diodes 192
Service Instructions 193
Rectifier Diode Replacement 193
Alternator Disassembly 193
Alternator Assembly 194
Replacing the Brushes 194
Installation on the Tractor 195
Operation Instructions 195
Maintenance Instructions 195

VOLTAGE REGULATOR 196

BATTERY CHARGE WARNING LIGHT RELAY 196

Trouble Shooting the Battery Charging System . 196
Trouble Shooting Guide in Case of Irregular Warning Light Operation 197

STARTER

Starter Characteristics 199
Test Instructions for Starter Check 199
Trouble Shooting Instructions 200
Service Instructions 200
Starter Dismantling 200
Reassembly 201
Inspection and Permissible Repairs 201
Troubles, Causes and Remedies 204
Specifications, Starter 205

https://truckmanualshub.com/

1. Thermostarter
2. Headlights
3. Battery—12 Volts
4. Temperature Probe
5. Starter
6. Voltage Regulator
7. Fuse Panel
8. Relay — Charge Light
9. Alternator
10. Fuse Holder
11. Oil Pressure Switch
12. Fuel Level Probe
13. Acces. Power Outlet
14. Master Switch (Keyed)
15. Rear Work Light
16. Terminal Block — 4 Plugs
17. Terminal Block — 6 Plugs
18. Starter Switch
19. Safety Start Switch

INSTRUMENT PANEL

A. Oil Pressure Light
B. Fuel Gauge
C. Tachometer Light
D. High Beam Indicator
E. Charge Light
F. Temperature Gauge

FUSE PANEL

1	Controls	— 18 , B
2	"	— 8 , 18
3	"	— 14 , 15, 17, 2
4	"	— 14 , 15, 17, 2
5	"	—
6	"	—

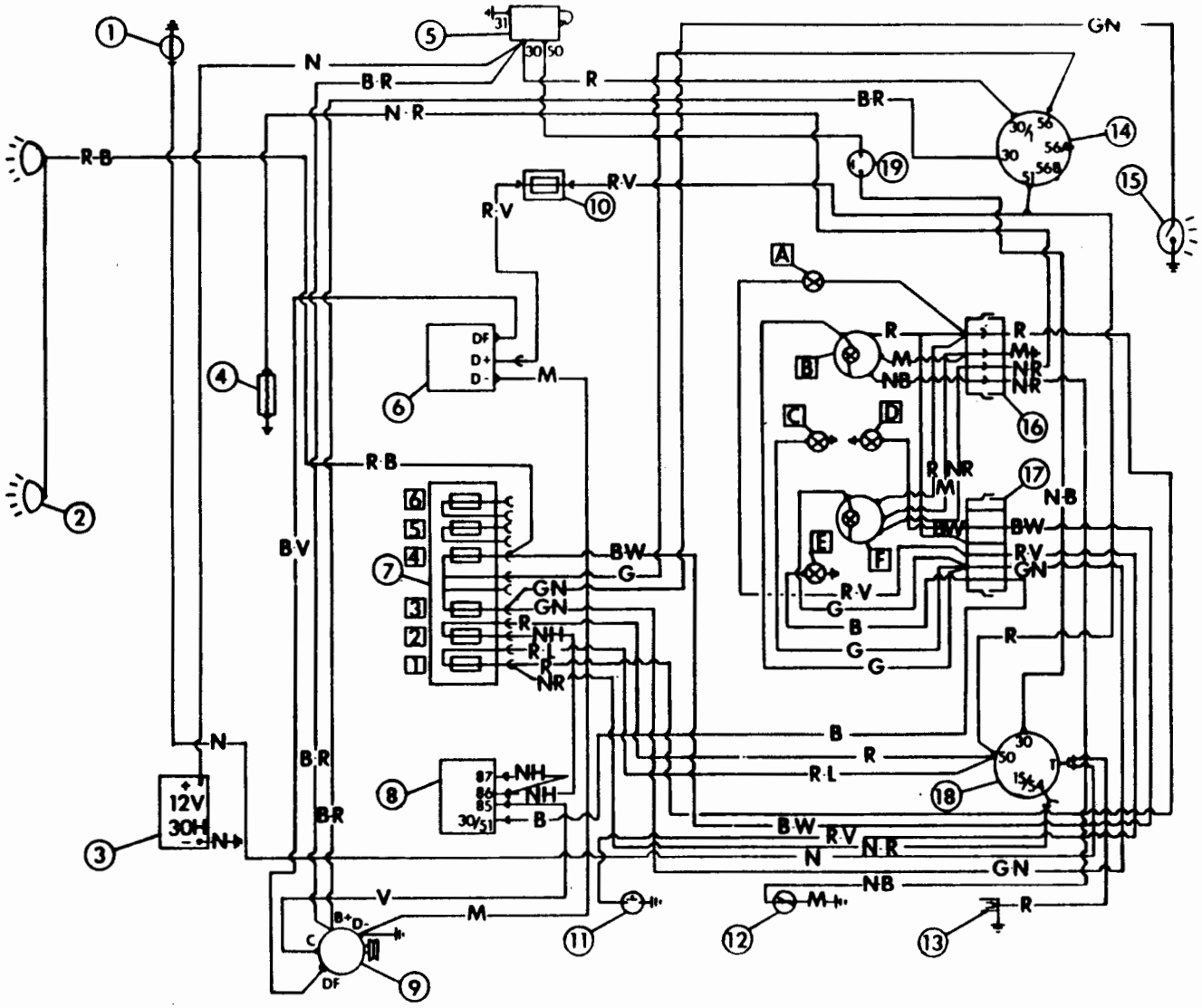

V—Green W—White B—Blue G—Grey H—Yellow M—Brown N—Black R—Red L—Violet

FIG. D.I/1 WIRING DIAGRAM - 360, 460-510 SERIES

https://truckmanualshub.com/

D.I BATTERY CHARGING EQUIPMENT

GENERAL

The battery charging equipment (Fig. D.I/1) includes the following units: alternator, voltage regulator and battery charge warning light relay.

A red warning light, which is installed on the instrument panel, signals trouble in the system. For each unit, the present chapter will give the necessary constructional and functional features, instructions for check-up and overhauls as well as trouble-shooting information for the charging equipment.

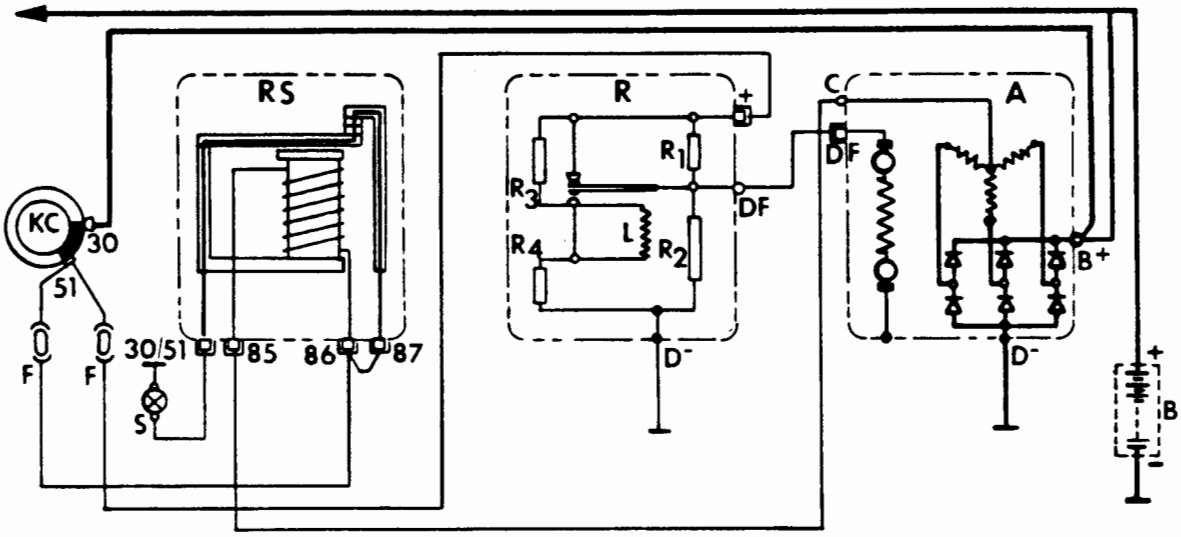

FIG. D.I/2 BATTERY CHARGING EQUIPMENT WIRING DIAGRAM WITH FUNDAMENTAL CIRCUIT OF ALTERNATOR, VOLTAGE REGULATOR AND BATTERY WARNING LIGHT RELAY

B. Battery; KC. Lighting and starting switch in travel position; F. Fuses; A. Alternator; S. Battery charge warning light; R. Voltage regulator; R.S. Battery charge warning light relay; B (+) Terminal of battery charging circuit; D. (−) Terminal of tractor grounding; C. Terminal of battery charge warning light relay; DF. Terminal of excitation winding; R1, R2, R3, R4. Adjusting resistances of alternator excitation voltage; + Supply terminal; L. Induction coil for voltage setting; 30 and 51. Switch terminal; 85, 86, 87. Battery charge warning light relay terminals

ALTERNATOR

The 1130 type alternator (Fig. D.I/2) is a 3-phase, self-rectifying generator, consisting of the following main units: stator (Fig. D.I/3) or stationary inductor, the rotor (Fig. D.I/4) or armature, provided with two slip rings.

It is situated on the engine left side, being driven from V-belt on fan pulley. The belt tension must be checked from time to time and adjusted, if required, after every 200 hours' operation.

STATOR:

The stator (Fig. D.I/3) consists of a structure of made up annular laminations and provided with 36 slots. These accommodate a star connected 3-phase winding made of electric wire insulated by a double layer of enamelled polyvinyl. A cable is connected to the "C" terminal in the star center, to which is connected the battery warning light relay.

https://truckmanualshub.com/

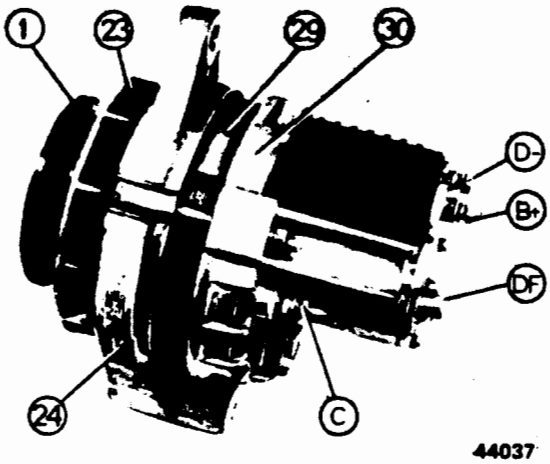

FIG. D.I/3 ALTERNATOR

29. Stator; 24. End shield; 1. Pulley; 23. Fan; 30. Shield, rings; B. (+) Terminal of battery charge circuit; C. Terminal; D. (−) Grounding terminal; DF. Terminal of excitation winding

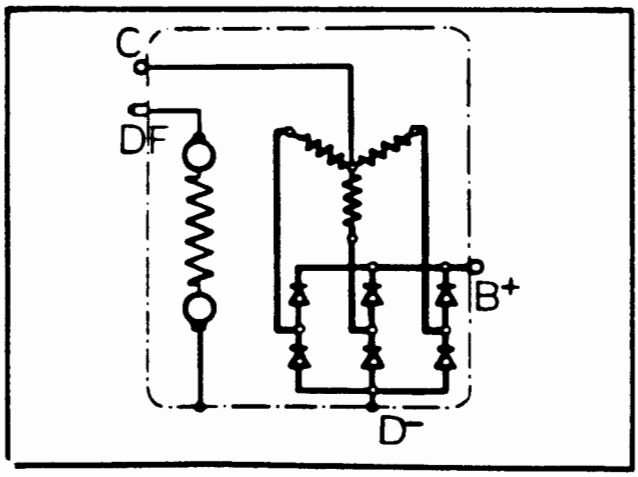

FIG. D.I/3a. FUNDAMENTAL CIRCUIT OF ALTERNATOR

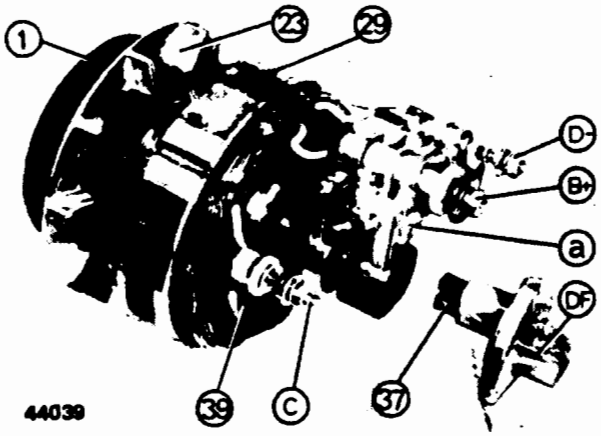

FIG. D.I/3b ALTERNATOR WITHOUT END SHIELDS

a. Rectifier diodes; 37. Collecting brush

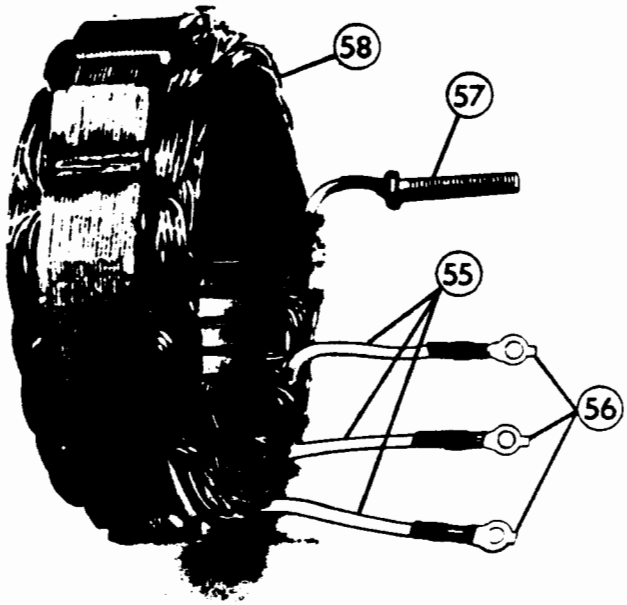

FIG. D.I/4 THE STATOR

55. Insulating tube; 56. Wire terminals; 57. Hex screw; 58. Conducting wire

ROTOR:

The rotor (Fig. D.I/5) consists of two polar discs 59 (each provided with 6 poles), clawshaped, which, when interlocked, hold an excitation winding (60), which is coaxial to the shaft. The winding is made of copper wire insulated with enamelled polyvinyl. The ends of the excitor winding are connected to the two slip rings (61). The collector, front type, is fitted to the rotor shaft (62) on the end opposite to the thread.

The brushes, positive (37a, Fig. D.I/16) and negative (37b) which contact both slip rings, are accommodated in the brush holder. The brush-holder (32) is made of plastic compound and is attached to the collecting shield (30, Fig. D.I/15). The brush-holder is provided with the "DF" terminal which connects the positive brush; the negative brush is grounded by means of a screw that retains the brush holder to the collector shield (Fig. D.I/16).

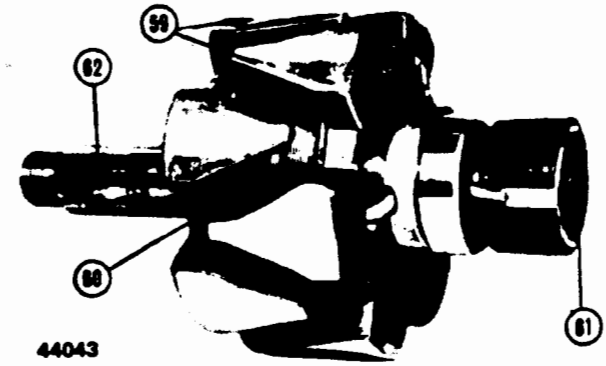

FIG. D.I/5 THE ROTOR

59. Polar disc; 60. Excitor winding; 61. Slip rings; 62. Rotor shaft

https://truckmanualshub.com/

The end shield (Fig. D.I/6) is a light alloy diecasting. This shield accommodates a double ball bearing, sealed inside and secured by a plate (25) which is retained by three screws (16). The projection on the shield is provided with a hole; which houses a steel bushing that the mounting bolt goes through. The bushing is aimed to take up any play that exists between alternator projection and bracket when installing the alternator on the engine.

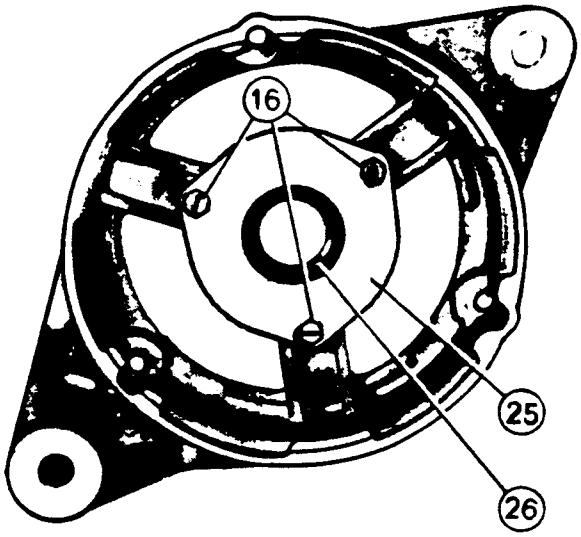

44044

FIG. D.I/6 END SHIELD
16. Attaching screws; 25. Securing plate; 26. Bearing

The bracket shield (Fig. D.I/7a) is made up of a light alloy casting. On this shield are mounted the rectifying unit and the brush holder assembly.

The rectifying unit consists of six silicon rectifying diodes; three positive diodes (13, Fig. D.I/13) and three negative diodes (11) disposed in such a way to make a 3-phase rectifier bridge. The positive diodes are pressed into a holder (12) insulated against the ground and connected to B plus terminal (18).

The negative diodes are also pressed into an aluminum alloy holder (10) which is connected to the minus-terminal (D, Fig. D.I/3). The D-Terminal is grounded.

The positive diodes are marked in red, the negative diodes are marked in black letters.

The diode holders, besides serving as support or housing, also serve as a cooler to disperse the heat produced during operation.

The diode and phase terminals are interconnected through three screws (16) on a bracket made of plastic material (7, Fig. D.I/14).

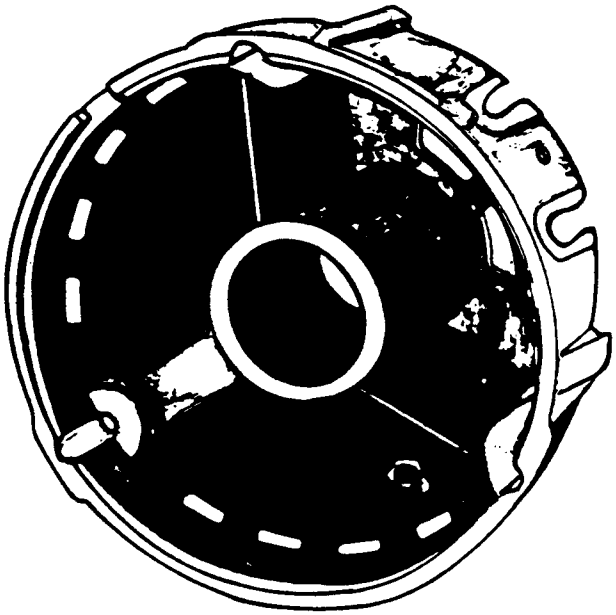

FIG. D.I/7 BRACKET SHIELD

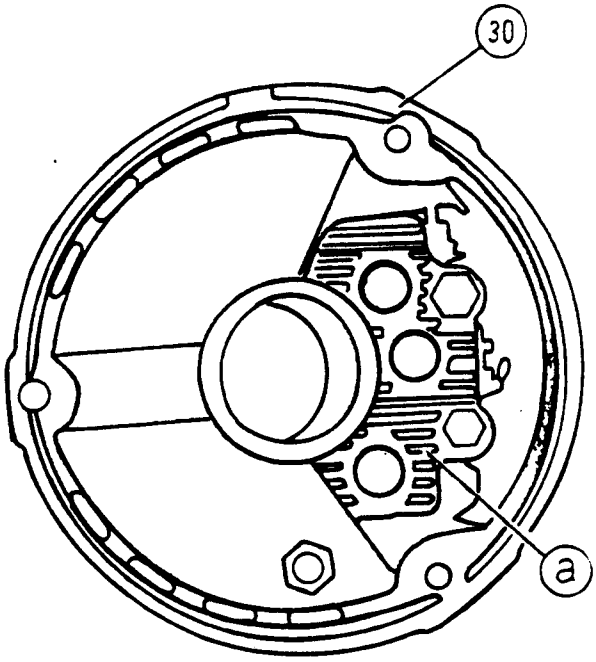

FIG. D.I/7a BRACKET SHIELD AND DIODE HOLDER UNIT
a. Diode holder unit; 30. Bracket shield

A centrifugal fan (23) installed on the shaft between pulley (1) and end shield (24) assures the internal cooling of the alternator. The cooling air is drawn in through the holes of the diode holder shield, diode holders and rotor (Fig. D.I/14) and the radiant surfaces for heat dissipation.

https://truckmanualshub.com/

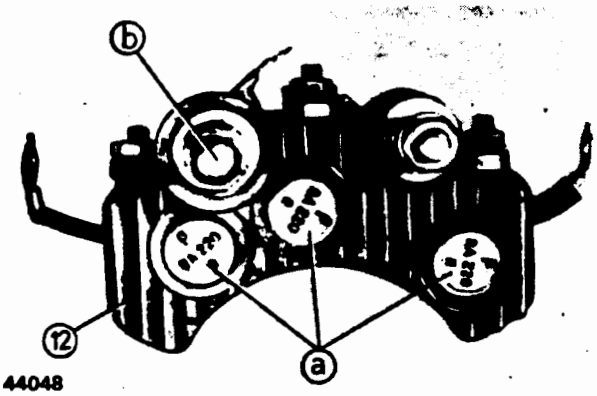

FIG. D.I/8 DIODE HOLDER UNIT
a. Diodes; b. B + terminal; 12. Diode holder

ALTERNATOR SPECIFICATIONS

—Rated voltage 12V
—Cut-in speed at 14V . . . . . 950 r.p.m.
—Current output delivered to battery at 14V, 3000 r.p.m. and stabilized conditions 30A
—Max. current* 36A
—Max. continuous speed . . . . . 8500 r.p.m.
—Overspeed . . . . . 10000 r.p.m.
—Induction coil resistance at 20°C. between both slip rings . . . . . 4.7 ohm
—Rotation . . . . . Counterclockwise
—Engine/alternator speed ratio 1:1.82

*This data applies for alternators with properly contacting brushes.

ALTERNATOR OPERATION

When the coil of the rotor is energized a magnetic field is created by rotation; it passes across the stator winding and thus generates a 3-phase alternating current in the field windings. This current is rectified through the bridge rectifiers. The rectified current reaches the alternator B positive terminal.

The exciting coil is supplied from the battery by means of the voltage regulator and a switch which is included in the lighting and starting switch (see, Fig. D.I/1).

As for the generator, the voltage of the current which is generated by the alternator, is regulated by varying the current in the excitor field of the rotor winding. This is done through the dual stage type voltage regulator, being provided with two pairs of contacts, which vibrate.

There is an indicator light in the instrument panel to signal failure of the alternator. This light is energized through the warning light relay.

https://truckmanualshub.com/

RECTIFYING DIODES

The diodes are used to rectify the alternator output into direct current to charge the battery.

The diode rectifiers for the 1100 series alternators are silicon units.

The covering of the diode is one of the two electrical terminals. The other terminal consists of a flexible conductor, the end of which has a cable shoe. The diode is positive when the flexible conductor is of positive polarity and the case of negative polarity. The negative diodes allow the current to pass only in reverse direction (from case to flexible conductor).

When this test is to be carried out, insert a bulb between the source of voltage and the diode. This bulb is necessary to limit the current to a rated value of less than 25A, because short-circuit currents might destroy the diode.

The diode rectifier unit is connected according to the wiring diagram of Fig. D.I/9—known as a 3-phase bridge—and consists of three positive diodes and three negative diodes.

DIODE SPECIFICATIONS:

—Max. direct current . . . . . 25 A
—Continuous max. reverse voltage . . . . . 75 V
—Max. peak reverse voltage . . . . . 200 V
—Max. operating temperature . . + 300 °F.(+ 150 °C)

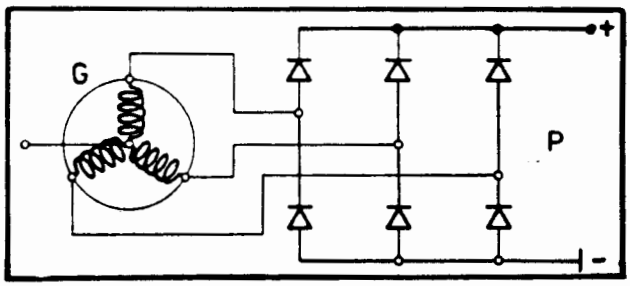

FIG. D.I/9 WIRING DIAGRAM OF THE 3-PHASE BRIDGE-CONNECTED RECTIFIER
G. Alternator; P. 3-phase rectifier bridge.

INSTRUCTIONS FOR CHECKING DIODES

To check the efficiency of the rectifier unit, be sure that the single diodes do not have the following failures:

—open—in this case, they will not allow the flow of current to pass in either direction.
—short-circuited—in this case, the diode allows the current to flow in both directions.

The rectifier diodes can be checked without removing them from the Alternator. Just disconnect the flexible conductor terminals from the screws that attach them to the phase terminals, to the diode-holder bracket plate as shown in Fig. D.I/10.

The flexible conductor of each diode should be connected to one battery pole. Insert between the other battery pole and diode a control light in series.

First connect battery plus-terminal (through the bulb) to the case and the minus-terminal to the flexible conductor; then reverse, connecting the minus-terminal to the case and the plus-terminal (through the bulb) to the flexible conductor (according to Fig. D.I/10).

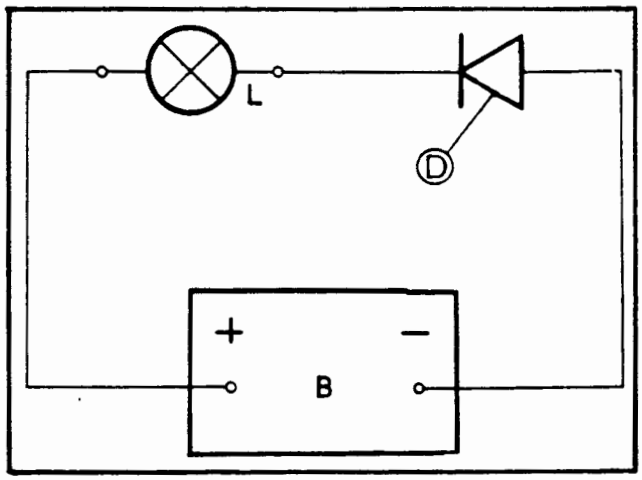

FIG. D.I/10 WIRING DIAGRAM FOR RECTIFIER DIODES FUNCTIONAL EFFICIENCY CHECK BY MEANS OF CONTROL LIGHT CONNECTED INTO THE CIRCUIT.
B. Battery; L. Warning light; + and – Battery terminals; D. Rectifier diode to be checked

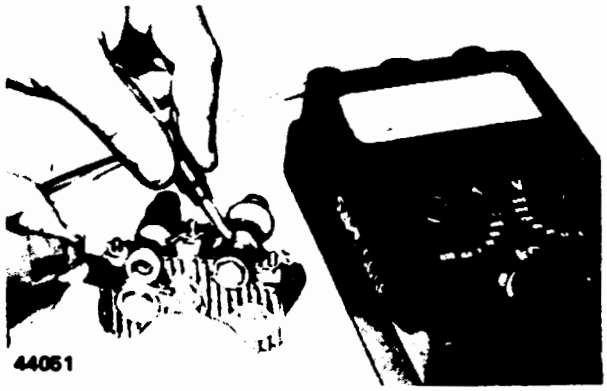

FIG. D.I/11 DIODE CHECK BY MEANS OF AN OHMETER

The rectifier diode is good if the light goes on when the tester is connected one way and goes out when the tester connection is reversed.

https://truckmanualshub.com/

⚠ CAUTION!
The diode rectifiers should never be checked by a voltage higher than 75 V because in this case the diodes will be damaged.

SERVICE INSTRUCTIONS

Do not attempt to repair the components of the alternator. Replace them. The replacement of many components can be done without dismantling the alternator completely. The following instructions cover disassembly and assembly of the alternator.

RECTIFIER DIODE REPLACEMENT

Damaged diodes (open or short-circuited) cannot be replaced in aluminum holders.

When one or a few diodes are damaged, replace the respective diode-holder unit (positive or negative) complete.

ALTERNATOR DISASSEMBLY

Dismantle the alternator as follows:

—loosen nut (54, Fig. D.I/12 and D.I/13) remove pulley (1) and fan (23) and the key (47)
—remove the sub-assembly brush-holder (32) slackening the diode end plate retaining screws (45).
—unscrew the three through-bolts (4) connecting the two end plates. (Fig. D.I/13).

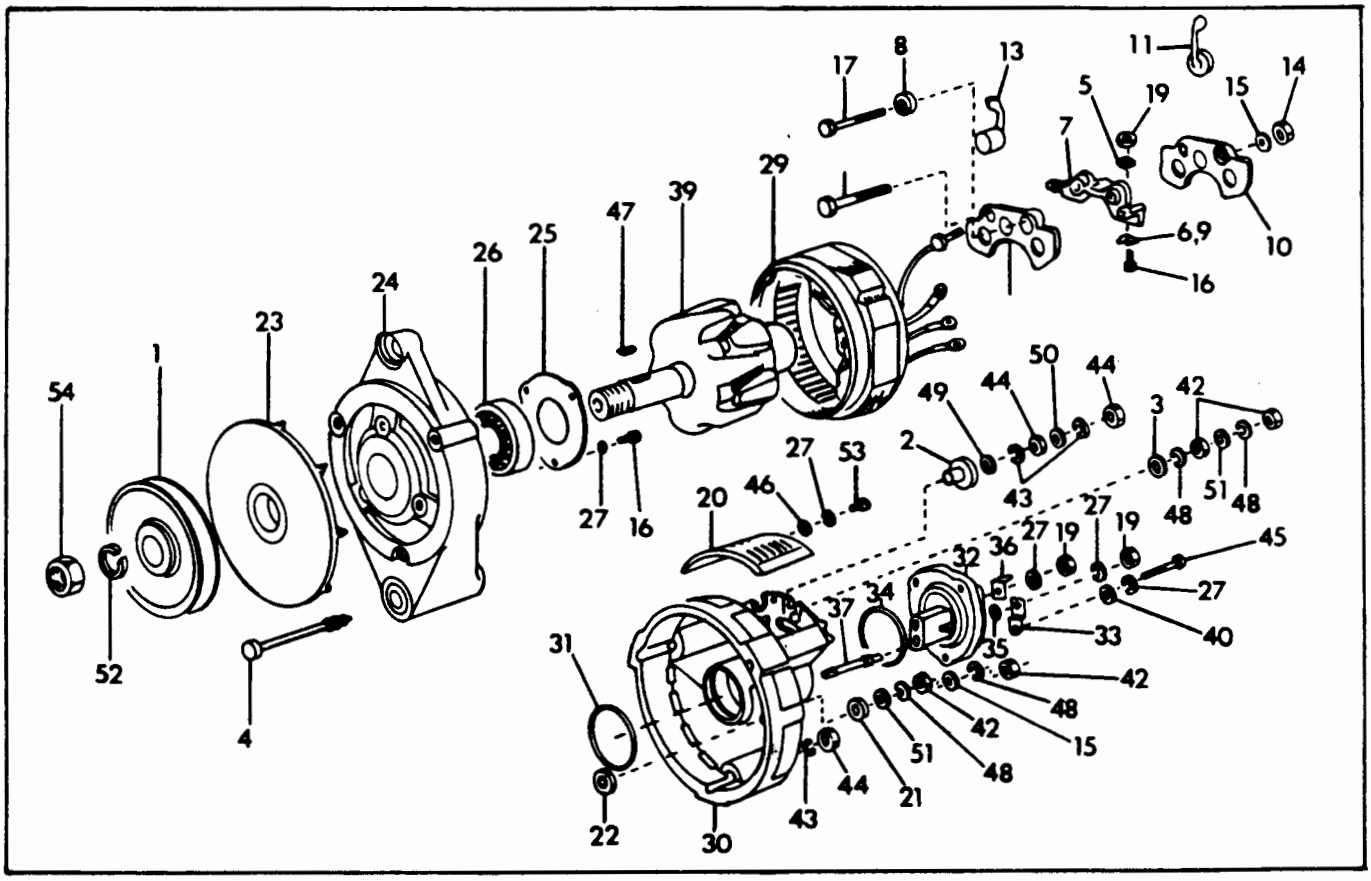

FIG. D.I/12 ALTERNATOR

1. Pulley; 2. Insulating bushing; 3. Band bushings; 4. Mounting bolt; 5. Sq. nut; 6. Lock plate; 7. Supporting plate; 8. Insulating bushing; 9. Lock plate; 10. Diode-holder (−); 11. Negative diode; 12. Diode-holder (+); 13. Positive diode; 14. Nut; 15. Washer; 15, 17. and 18. Screw; 19. Nut; 20. Hood; 21. Terminal insulation; 22. Screw insulation; 23. Fan; 24. End shield; 25. Securing plate; 26. Bearing; 27. Lockwasher; 29. Stator winding; 30. Shield with ring; 31. Seal; 32. Brush-holder; 33. Plate; 34, 35. Seal; 36. Flat plug; 37. Brush; 39. Rotor winding; 40. Washer; 42. Nut; 43. Lockwasher; 44. Nut; 45. Screw; 46. Washer; 47. Key; 48. Lockwasher; 49, 50, 51. Washer; 52. Lockwasher; 53. Screw; 54. Nut

https://truckmanualshub.com/

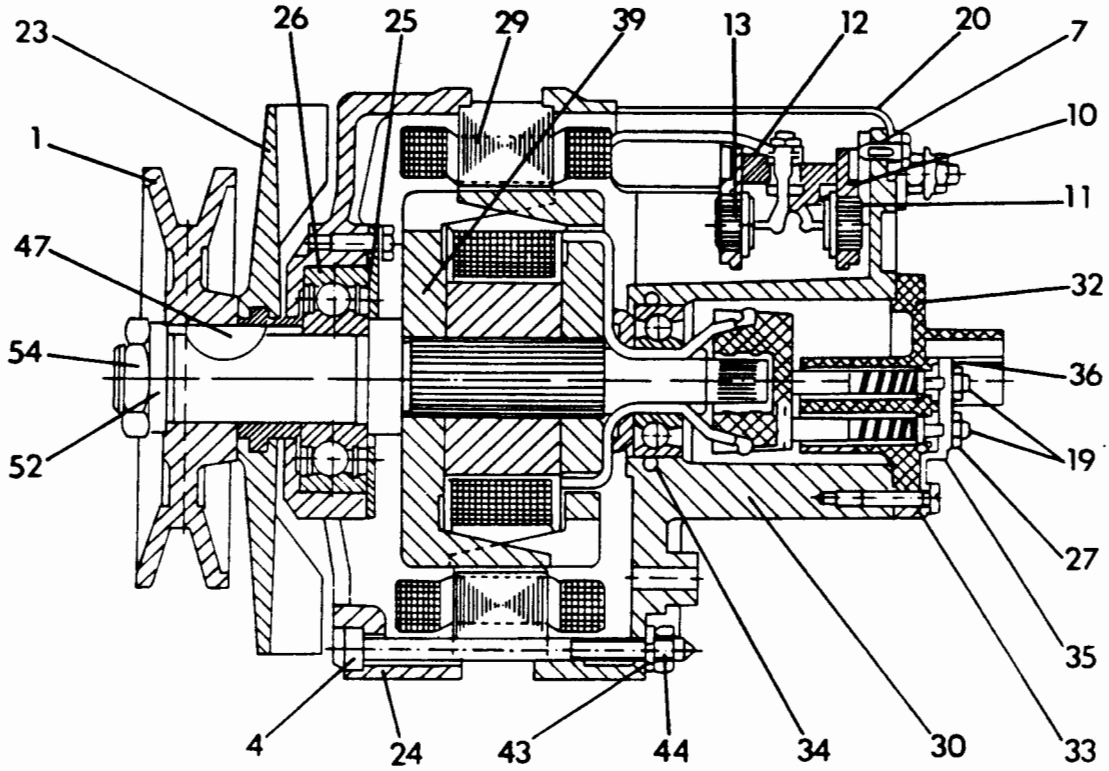

FIG. D.I/13 CROSS-SECTIONAL VIEW OF ALTERNATOR

Before removing the stator, unscrew from the inside the three phase terminals, loosening the three nuts on the end plate, which are part of the assembly diode-holder. Loosen the nut (42), which retains the C-terminal to the diode end plate, thus setting this terminal free. After these operations, the stator (29) can be removed from the diode end plate (30).

ALTERNATOR ASSEMBLY

Re-assemble the alternator by referring to the Fig. D.I/12 and D.I/13 and proceed by reversing the sequence of operations specified for disassembly.

NOTE:

—be sure of correct contact of brushes with the slip rings.

—tighten nuts (44, Fig. D.I/12) that secure the alternator end plates (4) retaining screws to .5 ft.-lbs. (0.7 N • m) and tighten the pulley (54) attaching nut to a torque of 32 ft.-lbs. (43.4 N • m)

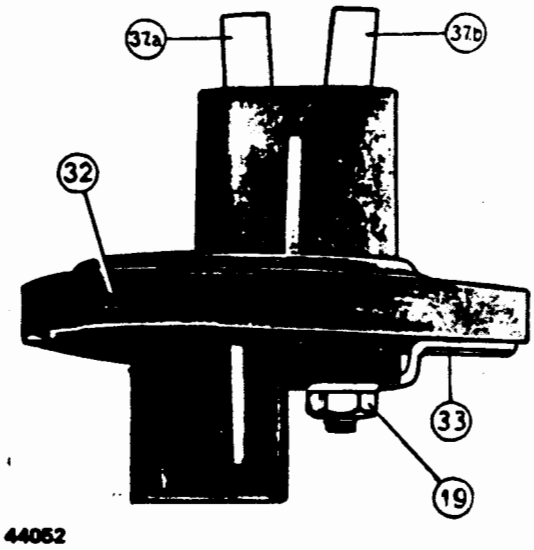

FIG. D.I/14 BRUSH-HOLDER ASSEMBLY
19. Nut; 37a. Positive brush; 37b. Negative brush; 32. Brush-holder; 33. Blade for grounding.

REPLACING THE BRUSHES

Before installing the new brushes, clean all parts thoroughly with compressed air, and wash the brush-holder in solvent and with dry cloth, wipe the collector and the end plate, where the brush-holder is to be installed, clear of carbon dust deposits. Tighten the brush retaining nuts (19, Fig. D.I/14) with a torque of 1.8 ft.-lbs. (2.4 N• m) minimum.

We recommend replacing the brushes and the brush-holder (Fig. D.I/14) for best performance.

https://truckmanualshub.com/

INSTALLATION ON THE TRACTOR

Install the alternator on a rigid bracket on the tractor and attach the big projection of the end shield to this bracket. The small projection should be attached to a flange that is used for belt adjusting.

CHECK AT ASSEMBLY:

1. Belt pulley drive surface for dents and cracks. Such damaged surfaces may lead to premature wear of the belts.
2. The crankshaft belt pulley, water pump belt pulley and alternator belt pulley must be in line.
3. The three aforementioned belt pulleys must not have radial or axial out-of-true runs.
4. The electric connections must be tight in order to protect the electric circuit from high resistance.

— When replacing conductors of the feeding circuit, make sure that the new conductors are of the same gauge and length as the former ones.

— When adding new electrical loads, never connect them to the circuit between alternator and voltage regulator; otherwise the alternator voltage will increase and put the service life of current electrical loads and the battery in danger.

— The contact between battery minus-terminal and ground must be clean and tight.

— The ground connection between engine and chassis must be good. It may be tested by means of voltmeter for continuous current.

Not complying with recommendations set out in topic 1 and 3, you will cause overloading of the alternator bearings, causing premature bearing failure.

OPERATION INSTRUCTIONS

Problems in the system can be caused by:

1. Letting the alternator operate without connecting the battery to the alternator plus-terminal "B". The diode rectifiers may be destroyed.
2. The alternator and voltage regulator excitation terminal as well as connecting cables must not be grounded.
3. Do not reverse or ground the voltage regulator "DF" and plus-terminals. Do not check alternator operation by letting the plus-terminal touch a ground.
4. Do not put alternator excitation terminal in direct connection with the plus-terminal (voltage adjustment is cancelled by directly feeding the alternator field winding).
5. During alternator operation (while engine is running) never disconnect alternator, voltage regulator or battery, or change connections. Stop the engine and then disconnect the battery but prior to putting it into operation, check for proper connections. Then start the engine.

If this instruction is not complied with and the battery is still connected when working on the electrical system, you risk damaging the diodes or any other components of the electrical system if the cables happen to touch (only for a fraction of a second) other terminals or the ground.

6. Never let the voltage regulator operate without being grounded to the alternator.
7. Never charge the battery by means of an outside source (rectifier, etc.) without first disconnecting the plus-and minus-cables which connect the battery terminals to the rest of the system.
8. Avoid arc-welding directly onto the electric equipment without disconnecting the alternator, from the electric equipment installed on the tractor.
9. Do not connect the condensers to the alternator or voltage regulator field winding terminal.
10. Do not try to feed the alternator by directly feeding the field winding from the plus-terminal.
11. Do not reverse the battery terminals (this would damage the diodes).

When checking stator insulation efficiency with voltage that is higher than 75 V, it is absolutely necessary to disconnect the diode rectifiers, otherwise you may destroy them.

Do not reverse the cable of the DF-terminal with that of the C-terminal, as the voltage regulator safety fuse would be opened and the contacts damaged. In this case the voltage regulator must be replaced.

MAINTENANCE INSTRUCTIONS

1. Periodically check for good contacts.
2. Periodically check (after about every 200 hours operation) belt tension with a pull of 11-15 lbs. (49 N - 67 N) on the belt section between alternator and crankshaft pulley, deflection must be .04-.06 inches (10-15mm).

https://truckmanualshub.com/

3. After 1600 hours operation check the condition of the brushes. Min. brush height: .240 inches (6 mm).

VOLTAGE REGULATOR

If the voltage regulator is faulty replace it with a new one.

BATTERY CHARGE WARNING LIGHT RELAY

The alternator warning relay (Fig. D.I/15) is used to energize the alternator warning light should the battery charging system fail.

Fig. D.I/1 illustrates the associated wiring diagram.

For warning relay data see under Specification. If on inspection the relay is found not to be operating satisfactorily, it should be replaced as a unit.

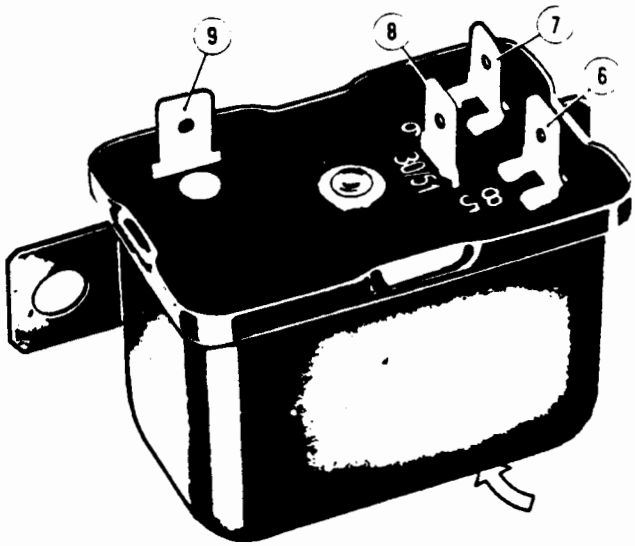

FIG. D.I/15 BOTTOM VIEW OF ALTERNATOR WARNING RELAY
(Relay identification markings arrowed)
6. Terminal 85; 7. Terminal 86; 8. Terminal 30/51; 9. Terminal 87

Battery charge warning light relay specifications

Description	Data
Excitor winding resistance	27 – 31 Ohm
Contact opening voltage	4.0 – 5.7 V

TROUBLE SHOOTING THE BATTERY CHARGING SYSTEM ON THE TRACTOR

Charging system problems are pointed out through the panel-mounted warning light. When the alternator is working properly the warning light will act as follows:

—with the starting and lighting switch in position I, the warning lights on.

—when the engine is started, the warning light goes out and will not go on if the engine is accelerated.

If a problem exists, then it will show up as quoted in the trouble-shooting guide below:

Trouble	Possible cause	Location and remedies
A. With the lighting and starting switch in position 1 (travel position) the warning light goes on. As the engine is started, the warning lamp stays lighted even if the engine is accelerated, or goes out and in again at certain alternator speeds and at certain current absorbtion levels by the tractor equipment.	1. Voltage regular fuse (8 A) broken off. 2. Broken off circuit between voltage regulator plus-terminal and starting switch or broken off connections between the DF-terminals of the alternator and the voltage regulator. 3. Voltage regulator does not work. First stage contacts oxidized or dirty. Stuck contacts of the second stage. 4. Defective battery charge warning light relay.	1. Locate and eliminate the short circuit which has burnt the fuse and check the instruments and components of the charging system protected by this fuse, that are: voltage regulator, alternator exciting coil and the corresponding connections. Then, replace the burnt fuse. 2. Check continuity of circuits, replace any broken-off cables and correct junction defects if any. If trouble persists, it is possible to locate it by checking as specified to the bottom of this table. 3. Change the voltage regulator and eliminate the troubles.

https://truckmanualshub.com/

Trouble	Possible Cause	Location and remedies
	5. Break-off or short-circuit of the alternator rotor induction winding or of slip ring connections. One or more positive diodes are short-circuited. One or both brushes worn-out or locked.	4. Check the relay.
		5. Check the alternator. Replace the positive diode-holder subassembly. Check the brushes and if necessary, replace them.
	6. Broken-off connection between alternator star center and C terminal or between C terminal and the terminal 85 of the battery charge warning light relay.	6. Check the continuity of the circuits eliminating eventual troubles at the insulation and replace, if necessary the damaged cables.
B. When the lighting and starting switch is set on travel position the warning light does not go on. The warning light stays off even when the engine is started.	1. Broken-off filament of warning light bulb.	1. Replace the bulb.
	2. Broken-off connection between battery and alternator plus-terminal B. Broken-off connection between alternator plus-terminal B and starting and lighting switch terminal 30/1. Broken-off warning light connections.	2. Check continuity of all circuits, replace broken-off cables and re-establish correct junctions.
	3. Worn or oxidation of switch	3. Check the starting and lighting switch contacts leading to the terminals 30/1 and 51. If contacts are worn, replace the switch. If oxidized just remove oxidation.
	3. Worn or oxidation of switch contacts of terminals.	
	4. Defective battery charge warning light relay.	4. Check the battery charge warning light relay and if defective replace it.
	5. One or more short-circuited alternator negative diode rectifiers. Grounded stator winding phase. Cable insulation between alternator center and C-terminal damaged and short-circuited to ground or same condition on cable which connects C-terminal and terminal 85 of the battery charge warning light relay.	5. Check the alternator, if necessary, replace the short-circuited negative diodes. Check the cable between the alternator star center and C-terminal and the cable between C-terminal and terminal 85 of the battery charge warning light relay. Eliminate insulation defects or replace the cable.
C. When the lighting and starting switch is set in 1 (travel position) the warning light does not go on. When engine is started, the warning lamp gives off a weak light, which remains so even if the engine is accelerated.	1. Broken-off cable between switch junction 51 and terminal 86 of battery charge warning light.	1. Check the continuity of the cable, eliminating eventual insulation defects or replace the cable.
	2. Burned 8 A fuse which protects the battery charge warning light relay.	2. Locate and eliminate the circuit which has caused the fuse trouble by checking oil instruments and connections protected by the same fuse. Then replace the burnt fuse.

TROUBLE-SHOOTING GUIDE IN CASE OF IRREGULAR WARNING LIGHT OPERATION

If the trouble covered by the point A in the table persists even after all checks and repairs at points A1 and A2 have been carried out, it is possible to locate the trouble proceeding as follows:

Check the battery for efficiency and charging and the belt tension, which must correspond to the indicated values.

Let the alternator run for a few minutes, measure the voltage at the battery terminals with the engine running at medium speed.

https://truckmanualshub.com/

This voltage should give one of the following readings:

a) greater than 15 V (high reading). The trouble is to be found in the voltage regulator.

b) within 13.5-15 V (normal reading). In this case, voltage readings are necessary to locate the trouble.

— measure the voltage between terminal 85, Fig. D.I/22a, of the battery charge warning light relay and ground.

— measure the voltage between the terminal 85 of the battery charge warning light relay and the positive terminal of the B-terminal of the alternator.

The voltage readings may give three results:

— if the two readings give about the same value (half the voltage reading at the battery terminals), the trouble is caused by the battery charge warning light relay.

— if the two readings differ by 1 V or more, the the trouble is due to the alternator.

— if the two readings are null, the trouble is one specified at point A5 of the trouble-shooting chart.

c) Less than 13.5 V (low reading). In this case also, the two voltage readings may give three results:

— if the two readings are about the same, the trouble is to be found in the voltage regulator.

— if the two readings differ by 1 V or more, the trouble is due to the alternator.

— if the two readings give no results, the trouble is that specified at point A6 of the trouble-shooting chart.

Summary of the effects on charging system operation by diode rectifier problems and of the behavior of the battery charge warning light relay in presence of said problems.

This summary deals with problems that may occur at the diode rectifiers as well as with the behavior of the battery charge warning light relay in presence of such problems.

Trouble and warning light behavior	Effects upon the charging system
A. One or more negative diodes are short-circuited. The warning lamp signals the problem in conditions (b) by giving no light.	a) With engine stopped and main switch in O setting (all off). No battery discharge signalling.
	b) With engine stopped and main switch in 1 setting (travel position). The battery discharges a current which is due to the battery charge warning light relay excitation winding summed to that absorbed by the alternator excitation windings.
	c) With engine running. — Both current output and regulated voltage tend to drop. The voltage across star center and alternator positive terminal tends to rise up to values approaching 9V. There is little evidence of these troubles when only one diode is short-circuited.
B. One or more positive diodes are short-circuited.	a) With engine stopped and main switch in O setting (all off). Slight battery discharge across the short-circuited diode or diodes, alternator stator winding, battery charge warning light relay excitation wiring and warning light.
The warning lamp signals the problem under the conditions c) by remaining lighted or by light up again.	b) With engine stopped and main switch in 1 setting (travel position). No further current is discharged from the battery besides that (normal under these conditions) due to the absorption by the alternator excitation winding and warning light.
	c) With engine running. — The voltage across the alternator star center and the alternator B-terminal tends to drop to values lower than 4 V.
C. Short circuit across one positive and one negative diodoes not belonging to the same phase.	a) With engine stopped, also with main switch in O setting (all off). An reverse current of about 40 A is produced. This current causes a quick discharge of the battery.
The warning light does not signal the trouble.	b) With engine running. — A reverse current is produced of lower magnitude than that occurring at a) but sufficient to cause a quick discharge of the battery.
D. Short-circuit across a pair of diodes belonging to the same phase.	The effect is equivalent to that caused by a short circuit across the battery positive and negative terminals.

https://truckmanualshub.com/

D.II STARTER

STARTER CHARACTERISTICS

The starter consists of the following main parts:

— a solenoid, with a core which, because of the action of the magnetic field, induced by the solenoid coil, moves axially to carry on the following; exerting pressure on the return spring, positive engagement of the pinion with the flywheel gear ring through a special lever, connection in circuit of the field winding fixed contacts, hence allowing the passage of the energising current necessary to operate the starter.

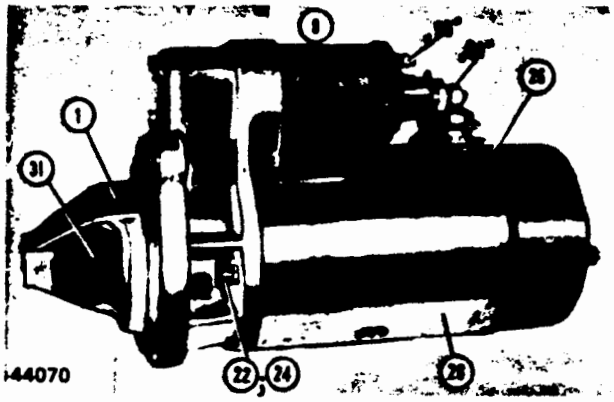

FIG. D.II/1 STARTER

1. Bearing assembly; 8. Solenoid; 22. Nut; 24. Rod; 26. Cover; 28. Stator assembly; 31. Engaging unit assembly; 30. and 50. Terminals

— four winding coils, two of them have series and by-pass winding and the other two only series winding.

— a rotor on bushings that are self-lubricated.

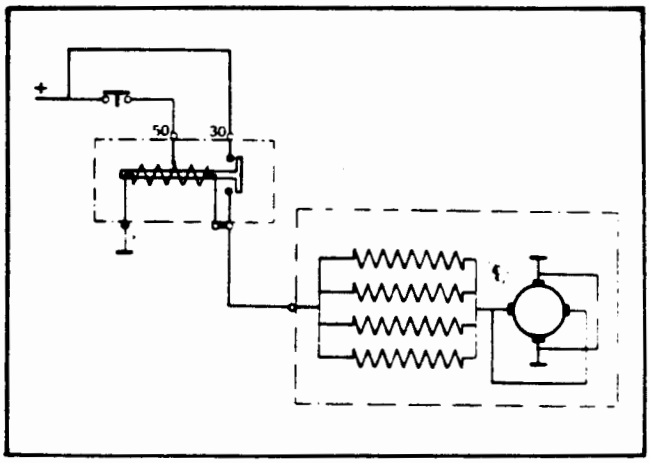

FIG. D.II/1a WIRING DIAGRAM OF STARTER

TEST INSTRUCTIONS FOR STARTER CHECK

The performance of the aforementioned starter is checked by carrying on the functional, electrical and mechanical tests indicated further on:

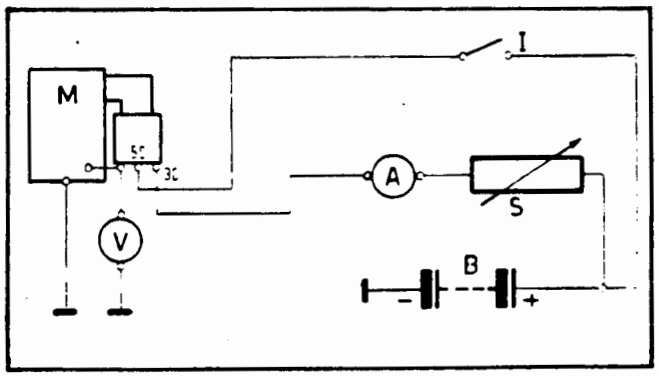

FIG. D.II/2 TEST WIRING DIAGRAM FOR STARTER.

A. Ammeter (1500 amp. scale); B. Battery (12 V, 110 Ah, full charge); M. Starter under test; 1. Starter push-button; S. Rheostat (1500 amp.); V. Voltmeter (20 V. scale); 30. and 50. Terminals

https://truckmanualshub.com/

TROUBLE-SHOOTING INSTRUCTIONS

The troubles which may be brought out during the tests are the following:

1. Low idling speed, high current input with low torque output.

This trouble may be due to shorted or grounded armature coils or to defective mechanical components (worn-out bearing bushings, bent armature shaft, loose pole shoe screws). The armature check is instantaneous, as in these cases there is a defective commutation bar corresponding to the shorted or grounded coils, so that the commutator sinks in correspondence of the aforementioned bars and brush wear is accentuated.

If the trouble is found in the armature winding, replace the complete armature.

In the case of mechanical troubles, which are also revealed by characteristic noises, replace the worn-out bushings, or the bent armature shaft, and re-tighten the pole shoes.

2. The starter is inoperative and has a high current input.

The trouble is due to a grounded armature or field winding.

3. Starter inoperative, no current input.

The trouble may be due to a broken-off solenoid coil, oxidized or worn out contacts because of interposed dirt particles, lack of contact between brushes and commutator because of brush wear or breakage of the springs, and to broken-off field winding.

4. Low idle speed, low current input with low torque.

The trouble may be due to excessive internal resistance in the starter, due to defective connection or to a dirty or thrown commutator.

5. High idling speed, high current input with low torque.

The trouble may be due to a short across the series field winding or to shunted field winding interruption.

The former trouble is not easily detected by taking a resistance reading, due to the low value of the resistance. Consequently, it is best to replace it and to check functional conditions with a new field winding.

SERVICE INSTRUCTIONS

Parts replacement does not always require that the starter be dismantled completely. The right sequence of disassembly, up to the final stripping and reassembly operations, are given as a practical service guide.

STARTER DISMANTLING

Strip the starter according to the indicated sequence.

The figures illustrating the top refer to the starter type 2130.

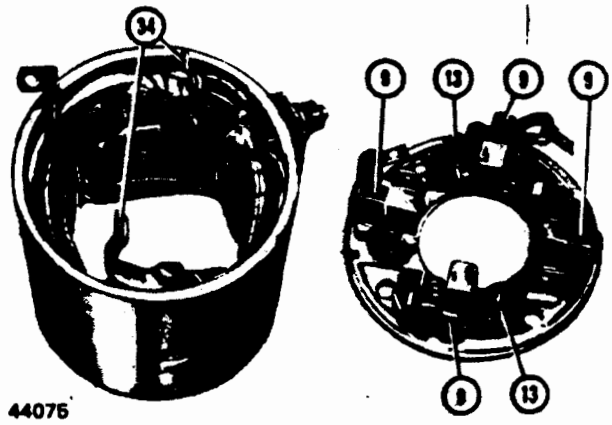

FIG. D.II/3 STATOR ASSEMBLY
9. Brush sub-asy.; 13. Spring; 34. Brush connections sub-asy.

1. Remove nuts (22, Fig. D.II/5), assembling rods (24) of the bearings, remove the cover (26), screw (19) and bearing assembly from collector side (27) provided with bushing, spring (13), seat (12) and insulating washer (11) for armature thrust.
2. Lift brushes slightly and place the spring ends against the side face of each brush to avoid damage, then disconnect the starter winding lead from terminal (30, Fig. D.II/1) and withdraw from the armature the complete housing with brush holder bearing.
3. Disconnect from the positive brush holders the terminals of the induction coil winding. Separate then the complete brush holder bearing (9, Fig. D.II/5) from the starter housing.

https://truckmanualshub.com/

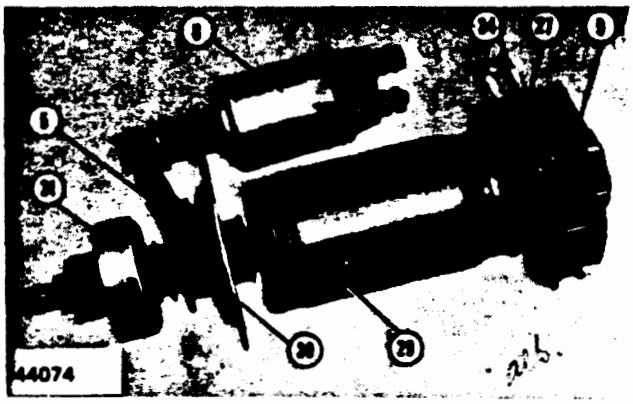

FIG. D.II/4 ARMATURE
29. Assembly with intermediate shield; 30. Engagement unit; 31. Fork; 5. Sub-assembly and solenoid; 8. Assembly; 9. Brush sub-assembly; 27. Bearing to collector assembly; 34. Connection-brush sub-assembly

4. Remove the solenoid assembly (8, Fig. D.II/5) by removing the attaching capscrew (4).
5. Remove the shifter fork pivot (17), shaft snap ring (16) and withdraw the pivot pin. Withdraw then the armature (29, Fig. D.II/5) from the sub-assembly bearing bracket (1, Fig. D.II/5), together with the intermediate shield (30), engagement unit (31) and shifter fork (5).
6. Remove the snap ring (33, Fig. D.II/5) with pinion stop ring (32) and withdraw from the armature the complete engagement unit the intermediate shield (3), armature return spring and spring seat.

REASSEMBLING

Dowels are used to locate housing and bearing assembly. Also refer to Fig. D.II/5.

Prior to re-assembly, clean the armature and the bearings with compressed air and the collector with a clean, lint-free cloth.

Lubricate the channels of the engagement unit with multi-purpose grease.

INSPECTION AND PERMISSIBLE REPAIRS

This chapter covers the checks, and repairs if any, to be carried out, at overhauling time, on dismantled starter components.

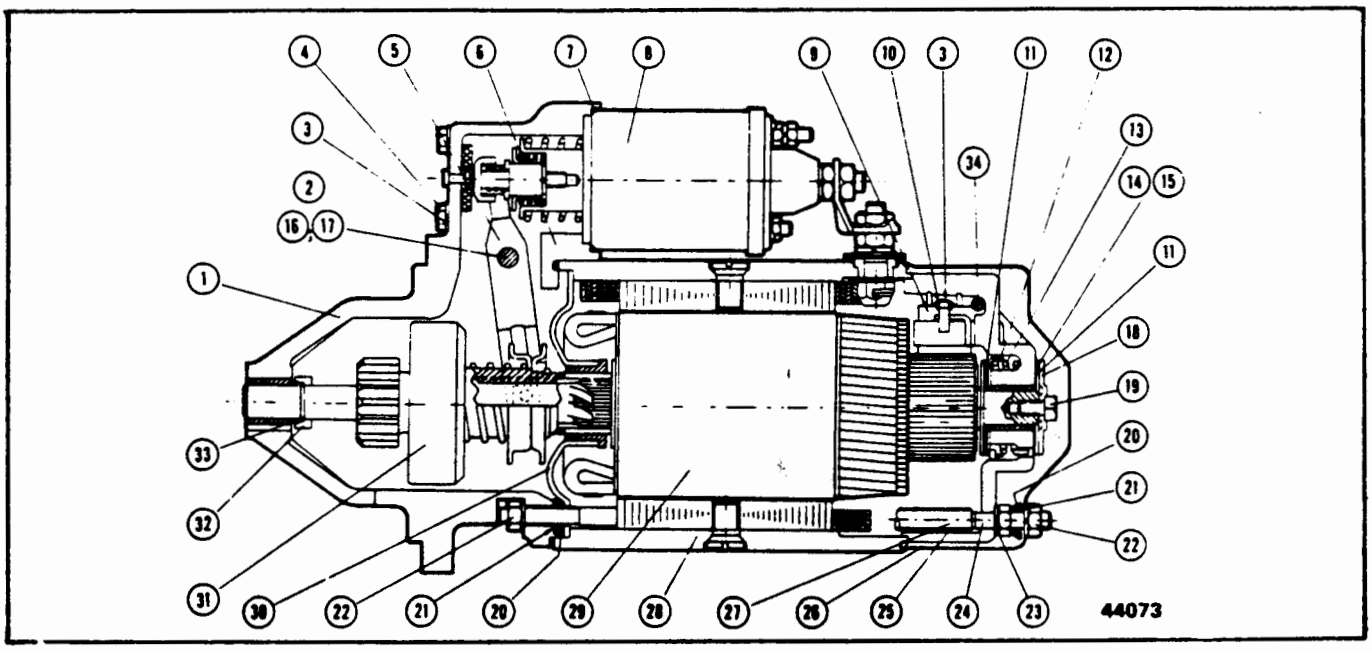

FIG. D.II/5 SECTIONAL VIEW OF THE STARTER, 2130 TYPE
1. Sub-assembly, bearing bracket; 2. Cover gasket; 3. Snap ring; 4. Hex headed screw; 5. Sub-assembly, fork; 6. Sealing; 7. Sealing ring; 8. Solenoid assembly; 9. Brush sub-assembly; 10. Cylindrical headed screw; 11. Insulating washer; 12. Spring seat; 13. Spring; 14. Metallic washer; 15. Metallic washer; 16. Snap ring; 17. Fork shaft; 18. Stop plate; 19. Hex headed screw; 20. Sealing cover; 21. Rubber gasket; 22. Nut M 7; 23. Lock ring; 24. Assembly rod; 25. Insulating tube; 26. Cover; 27. Bearing assembly; collector side; 28. Stator assembly; 29. Rotor; 30. Intermediate plate sub-assembly; 31. Engagement unit assembly; 32. Thrust ring; 33. Snap ring; 34. Brush connections sub-assembly

https://truckmanualshub.com/

BEARINGS

Clean off any trace of impurities, such as grease, carbon dust, oil, etc. Check bushing wear and replace them if necessary, considering that an excessive radial play is extremely dangerous as it might cause armature friction against the pole shoes.

If necessary, replace brushes using new parts all brushes must be replaced, even if only one among them is worn or defective. The replacement however, is preceded by a brush holder check, regarding both mechanical features (out of shape) and the insulation, or lack of insulation. Check the brush springs vs. the tabulated data. Replace, if functionally defective, any of the seals.

ARMATURE

Armature must undergo both mechanical checks and electrical testing. The major mechanical check concerns the armature out-of-round, using a dial indicator gauge. If the eccentric of .0008"-.0012" (0.02-0.03 mm) is exceeded, (Fig. C.III/8). turn the collector down on the lathe, being careful to remove as little copper as possible to eliminate the trouble. If the bars are loose the complete armature must be replaced.

The max. permissible depth of cut is given in the table of data. Once the collector is turned down, undercut the mica with a tool (Fig. D.II/7) on a depth of .020" to .040" (0.5-1 mm) depending on collector size. After undercutting the mica, polish the collector surface with O grade sand paper and then blow all residues off with compressed air.

The armature is electrically tested to make sure that the armature winding and the collector are insulated from the armature housing (counter-ground test); no winding, conductor or collector bar is shorted (short test); there is no electrical discontinuity throughout the system. In case of any insulating defects, shorts or interruptions, the armature must be replaced.

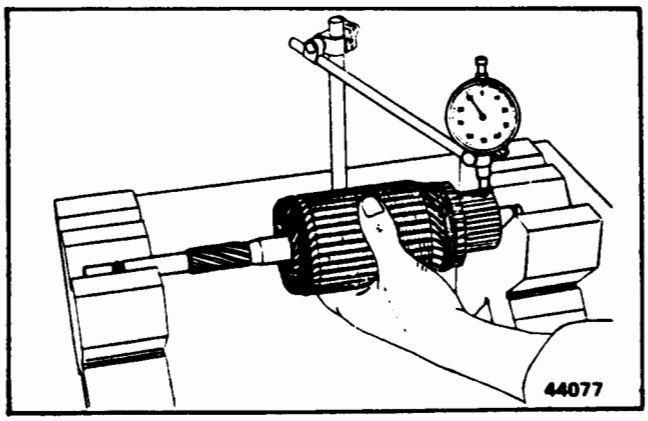

FIG. D.II/6 CHECKING COLLECTOR EXCENTRICITY USING A DIAL INDICATOR GAUGE
(Out-of-round not to exceed .0008"-.0012" (0.02-0.03 mm)

Insulation is checked by inserting the armature in an a.c. circuit, and a lamp connected in series. Any ground (which closes the circuit) is shown by the test lamp (L, Fig. D.II/8).

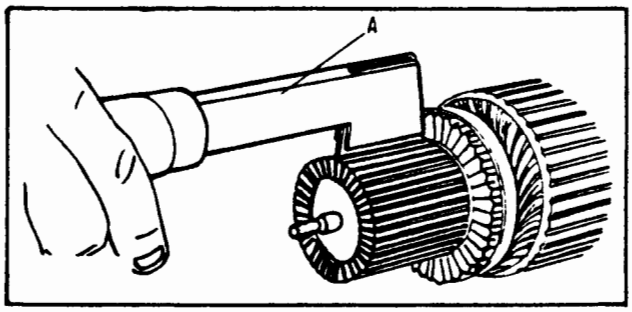

FIG. D.II/7 CHECKING THE MICA OF THE COLLECTOR
A. Grooving tool.

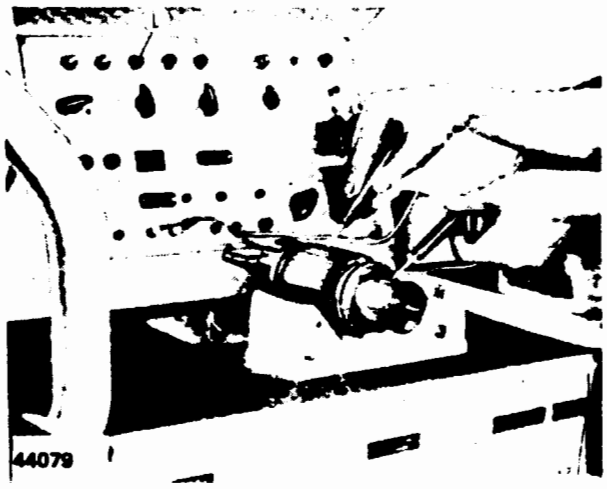

FIG. D.II/8 CHECKING THE INSULATION TO GROUND OF THE ARMATURE WINDING WITH A TEST LAMP
(If any grounding occurs the test lamp L lights)

Shorts are found by means of the armature tester (Fig. D.II/9).

The armature is placed on the tester inserted in the a.c. circuit, then it is slowly rotated around its axis while a steel blade is kept in contact over the armature housing. If there is a short, the blade vibrates as it gets over the recess housing of the shorted coil.

The same armature testing equipment (Fig. D.II/11) is employed to check the windings for broken-off conductors, using the double-contact tester.

This test is done by touching two consecutive collector bars with the two contacts of the tester (which are connected to an ammeter) and

https://truckmanualshub.com/

rotating the armature slowly. The ammeter will indicate the flow of a current, which will attain a given magnitude at a certain distance of the blade coupler with respect to the starting position. By repeating this operation for each successive pair of bars, the ammeter reading, always in the chosen position, shall always be the same. No flow of current will be shown by the ammeter if the circuit is interrupted. Should the ammeter readings differ, the cause may be shorts in the winding zones; in this case repeat at the shorting test the operations indicated in the preceding paragraph.

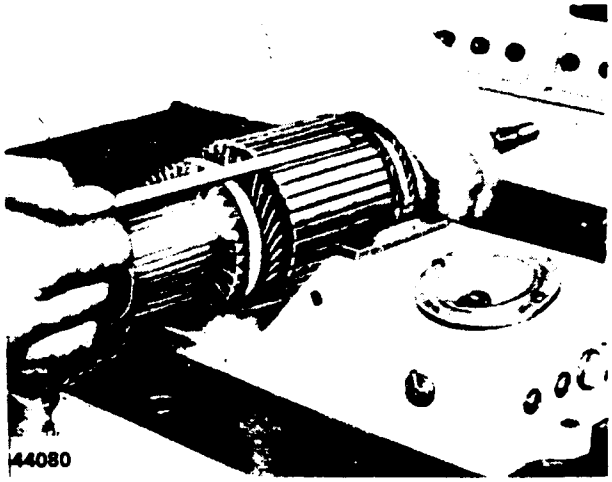

FIG. D.II/9 CHECKING FOR SHORT CIRCUITS ACROSS THE ARMATURE WINDING CONDUCTORS
(Any short is indicated by vibration of steel blade placed on the armature as shown in the figure.)

INDUCTION FIELDS

Testing of induction fields is necessary to check the insulation to ground (with respect to the housing and pole shoes on which they are arranged) and the absence of broken-off coils (continuity test).

Check by inserting the field windings on an a.c. current, at rated voltage and with a test lamp connected in series.

To check insulation to ground, put a tester in contact with the housing and the other with the lead of the winding undergoing testing.

The presence of ground is shown by the test lamp which lights up (C, Fig. D.II/11).

Notice that in many cases, the insulation defects across the ground, are due to the presence of carbon or copper dust originated by brush and collector wear and which can be easily removed by compressed air.

To check winding continuity, put the testers in contact with the leads of the winding undergoing test. The test lamp will remain off, if the winding is open because of broken or dis-soldered connections.

Install insulation and weld the connections, if possible, but do not attempt repair the broken-off winding as the results would be both uneconomical and unreliable. In this case, replace the defective winding with a new and original one. For this, remove the pole shoes by removal of the screws.

Clean the housing by washing it in solvent and dry it with compressed air so to remove all impurities; the pole shoes shall undergo the same procedure.

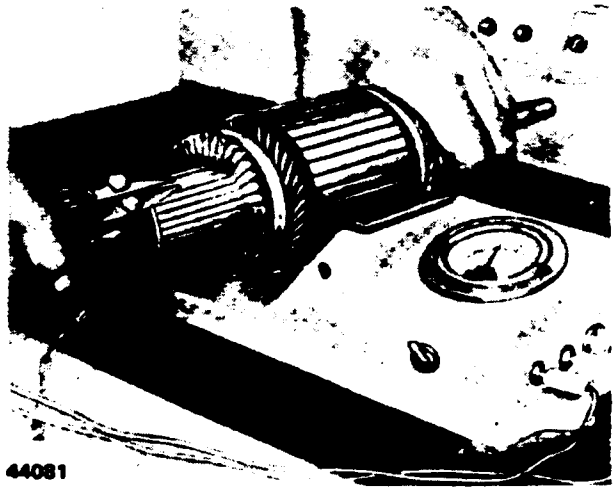

FIG. D.II/10 CHECKING CONTINUITY OF AN ARMATURE WINDING THROUGH A DOUBLE-CONTACT TESTER
(The armature testing instrument will give no amp. reading in the case of broken-off coils.)

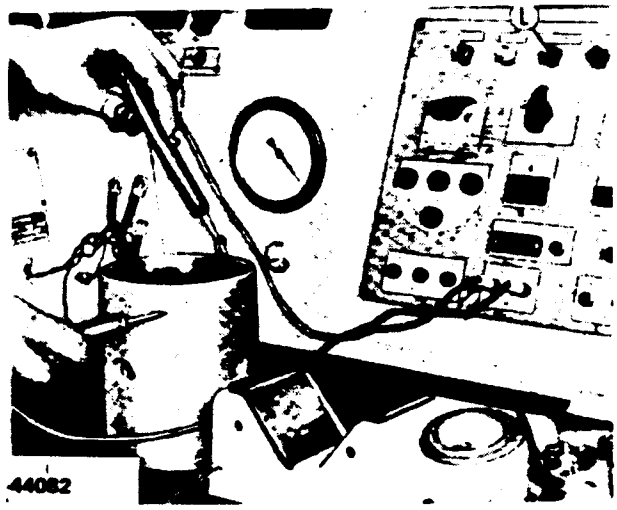

FIG. D.II/11 CHECKING THE INSULATION TO GROUND OF a. FIELD WINDING WITH TEST EQUIPMENT
(If grounded, the test lamp L lights up)

Then, before installing the new winding, warm it up to about (50 °C.) 120 °F. by feeding a 12 V current for about one minute in order to make it more flexible and hence facilitate installation under the pole shoes. Fit the poles by tightening their screws and using, simultaneously, a pole shoe stretch. The latter, by expanding the pole shoes from the inside, improves their fitting arrangement and facilitate the full tightening of the screws so that the original air gap may be re-established.

https://truckmanualshub.com/

ENGAGEMENT UNIT

Check pinion tooth wear, and the condition of the mechanical components and of the freewheel. Be sure to clean it thoroughly and, if necessary, replace it.

STARTER CONTACTS AND SOLENOID SWITCHES

Check for wear and surface condition of the contacts, and reface them if necessary with emery paper.

Test the solenoid coils for opens and grounds.

Always replace the complete units, as components are not individually available in parts.

TROUBLES IN STARTER OPERATION CAUSES AND THEIR REMEDIES

Trouble	Possible causes	Remedy
Starter inoperative or turning too slow.	1. Battery connections and terminals loose or oxidized.	Remove terminals, clean connections and terminals thoroughly, refit them and tighten the screws and then apply a thin layer of pure petroleum jelly to preserve them from corrosion.
	2. State of charge of battery zero or very low.	Check battery charge state, or, if necessary replace it.
	3. No contact of brushes with collect or due to brushes sticking into brush-holders, excessive wear, broken or out of shape springs, insertion of dirt.	Locate the point of current losses (battery, cables, equipment). Check brushes, and clean brush-holder guides and collector. If necessary, replace brushes and springs with genuine ones.
	4. Starting switch contacts oxidized, worn or insulated by insertion of dirt.	Check and clean the contacts. The oxidation may be due to shorted coils because of excessive current absorption.
	5. Armature or field windings partially shorted or grounded.	Replace defective components.
	Blacking of insulators, damaged collector bars.	Replace the armature assembly.
	6. Thrown commutator bars.	Check cables and connections.
	7. Excessive voltage drop throughout cables, damaged cables, loose cable connections.	Replace bushings.
Starter makes too much noise while rotating.	1. Excessive wear of armature shaft self-lubricating bearings.	Defective engagement controls due to friction or knocks of the shifter fork, strained return spring, friction of driving bushing on the shaft or solenoid armature in its seat.
	2. Pinion disengage from flywheel rim is delayed.	Remove and replace the necessary components.
Starter turns but fails to start the engine.	1. Worn out pinion or flywheel rim teeth.	Replace pinion or flywheel gear ring or both.
	2. Pinion meshes with ring gear but fails to transmit torque.	Overhaul it and lubricate components.
	Starter drive failure.	Replace the complete unit.
Starter output falls short of full power rating.	1. Low battery charge.	Charge the battery.
	2. Brushes sticky in holder.	Clean brush-holders.
	3. Idling drive control or clutch coupling slip.	Repair or replace the units.
	4. Brushes were not seated.	Set the brushes properly by running the starter idle a while, at 30-40 seconds intervals.
Quick wearing of brushes.	1. High commutator bar.	Turn it down.
	2. Mica above copper blades.	Undercut the collector.
	3. Loose brush-holder screws.	Tighten the screws.
	4. Wrong type of brushes.	Replace them and make sure that new ones correspond to the tractor Parts Book.

https://truckmanualshub.com/

STARTER SPECIFICATIONS

Description	Data
Starter type	2130
Voltage	12 V
Rotation looking from the pinion side	Clockwise
Pinion and rim teeth ratio	9/110
Poles number	4
Excitation (windings)	in series
Engagement	by engagement unit move
Control	electromagnetic

Mechanical Specification Checks	
Spring pressure on brushes (not worn)	5.9 Lb. + .6 lb. (26.5 N ± 2.9 N)
Spring pressure on brushes (worn)	3.7 lb. (16.7 N)
End float of armature shaft	.024" - .071" (0.6 - 1.8 mm)
Mica undercutting	0.32" (0.8 mm)
Collector dia.	1.653 (42 mm)
Max. out-of-true	.002 (0.05 mm)
Lubrication	
Helical channels of the shaft-engagement unit drive	10 W Engine Oil, (during Assembly)
Solenoid	
Coil resistance at 70°F. (21°C)	0.235 ± 10% ohms
Starting coil resistance 70°F. (21°C)	0.775 ± 10% ohms
Switch-on voltage (min.)	8 V
Contact stroke	.140" (3.5 mm)
Core stroke	.400" (3.5 mm)

https://truckmanualshub.com/

1. Thermostarter
2. Headlights
3. Battery—12 Volts
4. Temperature Probe
5. Starter
6. Voltage Regulator
7. Fuse Panel
8. Relay — Charge Light
9. Alternator
10. Fuse Holder
11. Oil Pressure Switch
12. Fuel Level Probe
13. Acces. Power Outlet
14. Master Switch (Keyed)
15. Rear Work Light
16. Terminal Block — 4 Plugs
17. Terminal Block — 6 Plugs
18. Starter Switch
19. Safety Start Switch

INSTRUMENT PANEL

A. Oil Pressure Light
B. Fuel Gauge
C. Tachometer Light
D. High Beam Indicator
E. Charge Light
F. Temperature Gauge

FUSE PANEL

1	Controls	— 18 , B
2	"	— 8 , 18
3	"	— 14 , 15, 17, 2
4	"	— 14 , 15, 17, 2
5	"	—
6	"	—

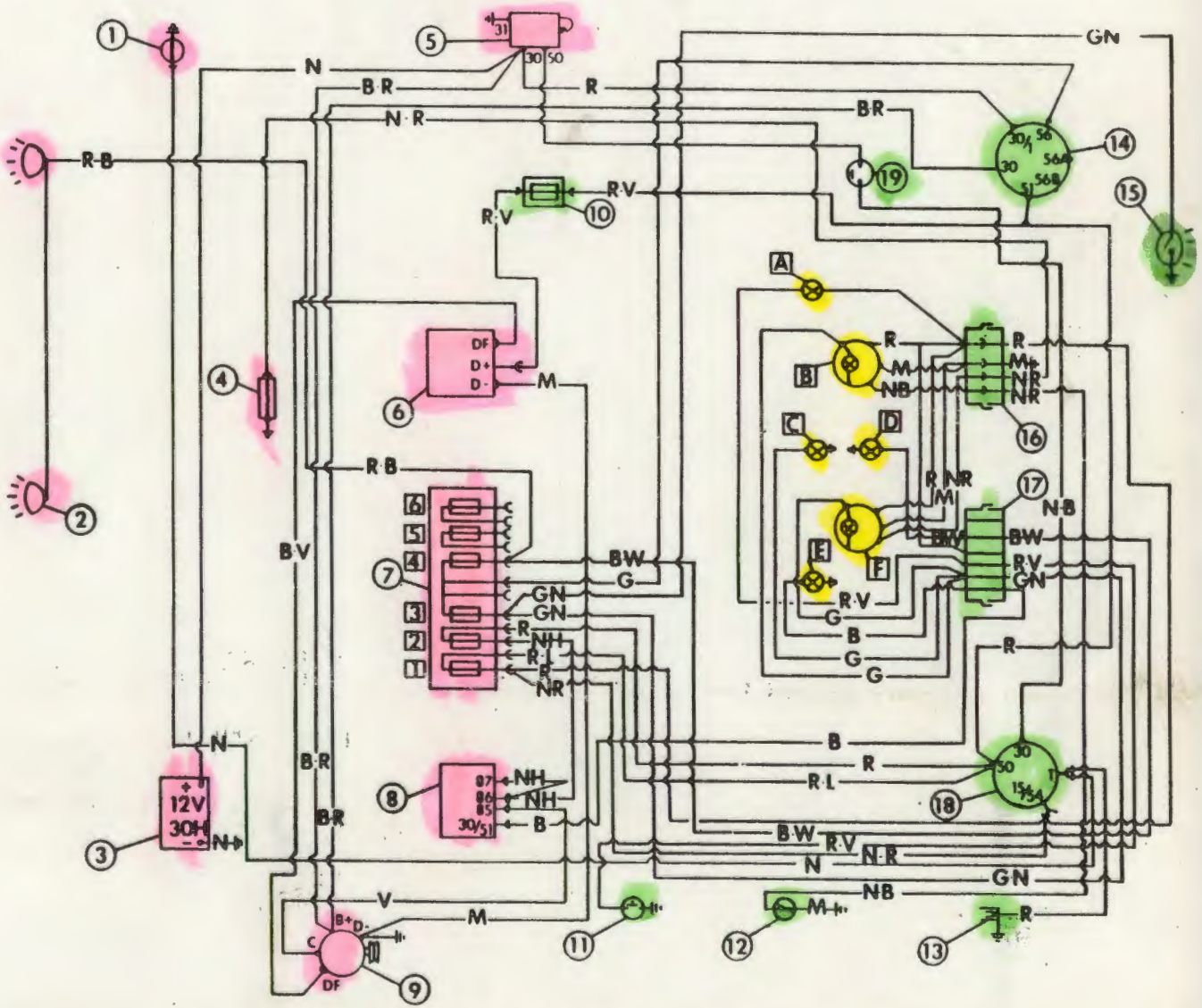

V—Green W—White B—Blue G—Grey H—Yellow M—Brown N—Black R—Red L—Violet

FIG. D.I/1 WIRING DIAGRAM - 360, 460-510 SERIES