https://truckmanualshub.com/

SCANIA

00:45-51

Issue 3 **en-GB**

Dismantling information
Scania Touring
Scania - Higer A80, A30

Work description

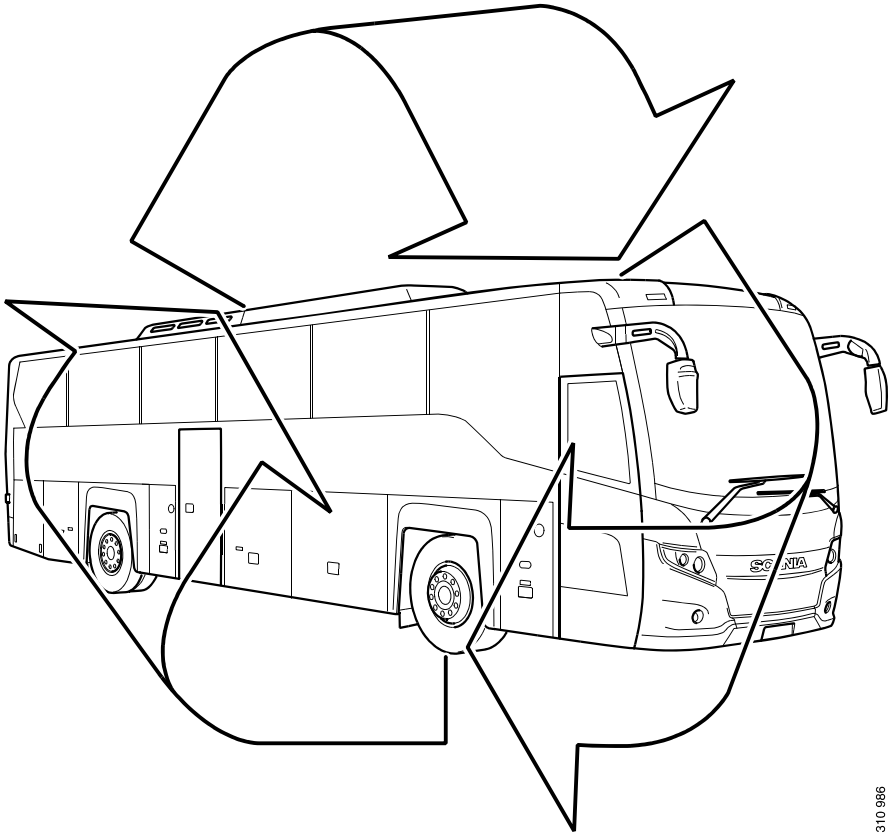

© Scania CV AB 2013, Sweden

https://truckmanualshub.com/

General 3
Draining and removing 4
Climate system 4
Identification of materials for recycling 7
General 7
Polymeric materials 8
Glass fibre and glass 11
Aluminium 12
Steel and copper 13
Colour codes 15

© Scania CV AB 2013

https://truckmanualshub.com/

General

This information is aimed at everyone dealing with reconditioning and scrapping of Scania vehicles. The information applies to workshops as well as companies specialising in dismantling and recycling.

The information is applicable to Scania Touring bus bodywork. However, not all parts are covered in this information booklet. The information is by no means complete.

The first section describes how hazardous waste is to be separated from the vehicle (environmental disposal).

The purpose of the second section is to facilitate identification and sorting of material for recycling.

© Scania CV AB 2013

https://truckmanualshub.com/

Draining and removing

Climate system

Tool

Number	Designation	Illustration	Tool board
587 627	Recycling station	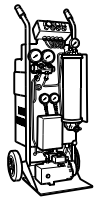 306 928	-

Refrigerant R134a

WARNING!

Wear protective gloves and goggles.

WARNING!

Welding, smoking or heating are not allowed if there is refrigerant in the air. Refrigerant generates a very toxic gas when heated.

© Scania CV AB 2013

https://truckmanualshub.com/

1. Connect the recycling station hoses to the low-pressure and high-pressure service valves.
2. Drain the refrigerant slowly.

IMPORTANT!

The refrigerant must not be released into the atmosphere and must be recycled according to local regulations.

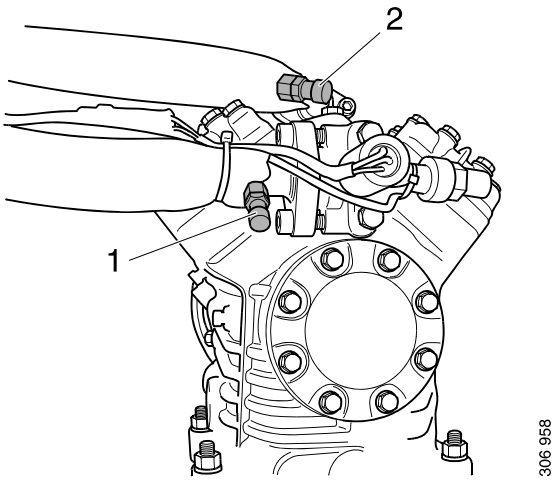

1. *Service valve, low-pressure*
2. *Service valve, high-pressure*

© Scania CV AB 2013

https://truckmanualshub.com/

Coolant

Note:

There might be some coolant left in the system after the coolant has been drained from the system.

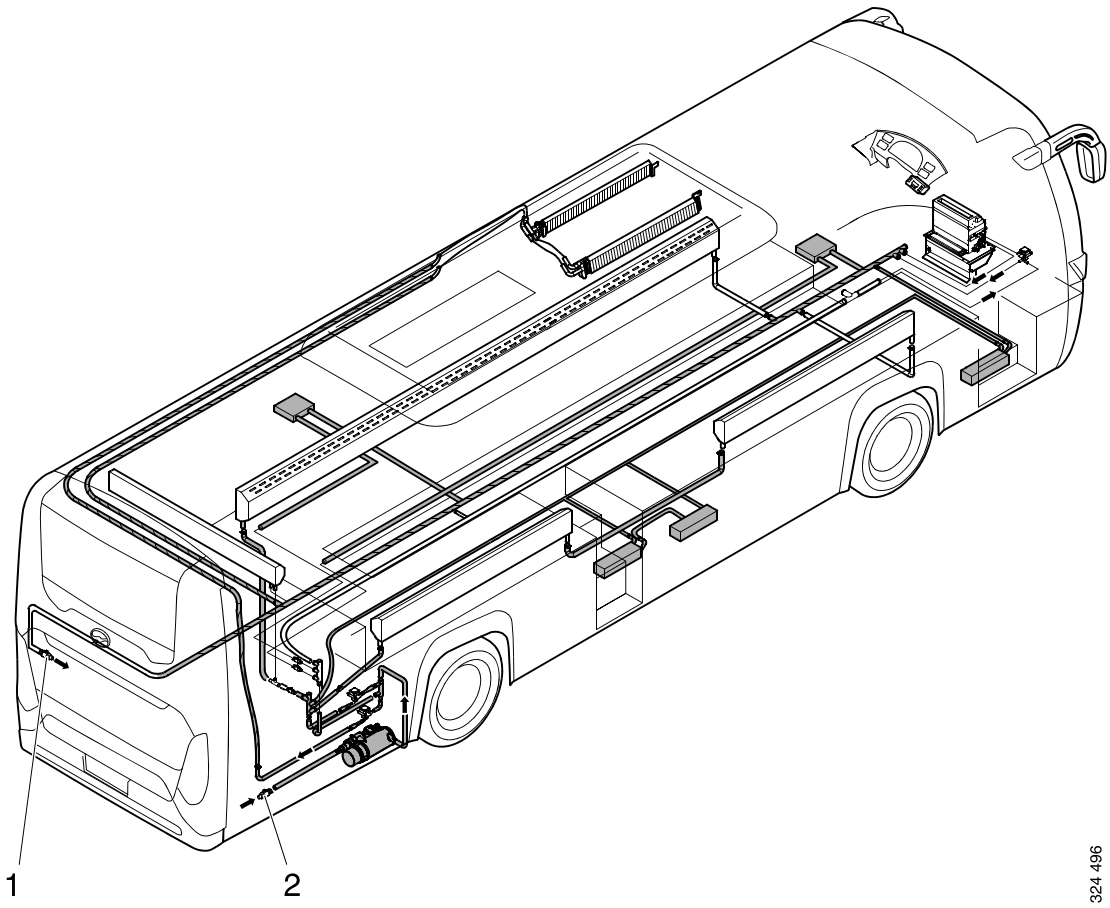

Pipes and components where some coolant potentially remains

1. *Return to the engine*
2. *From the engine*

© Scania CV AB 2013

https://truckmanualshub.com/

Identification of materials for recycling

General

The following pages illustrate parts of the vehicle that consist of polymeric materials (primarily plastics), glass fibre, glass, aluminium and steel. The illustrations enable the identification and sorting of these materials for recycling.

© Scania CV AB 2013

https://truckmanualshub.com/

Polymeric materials

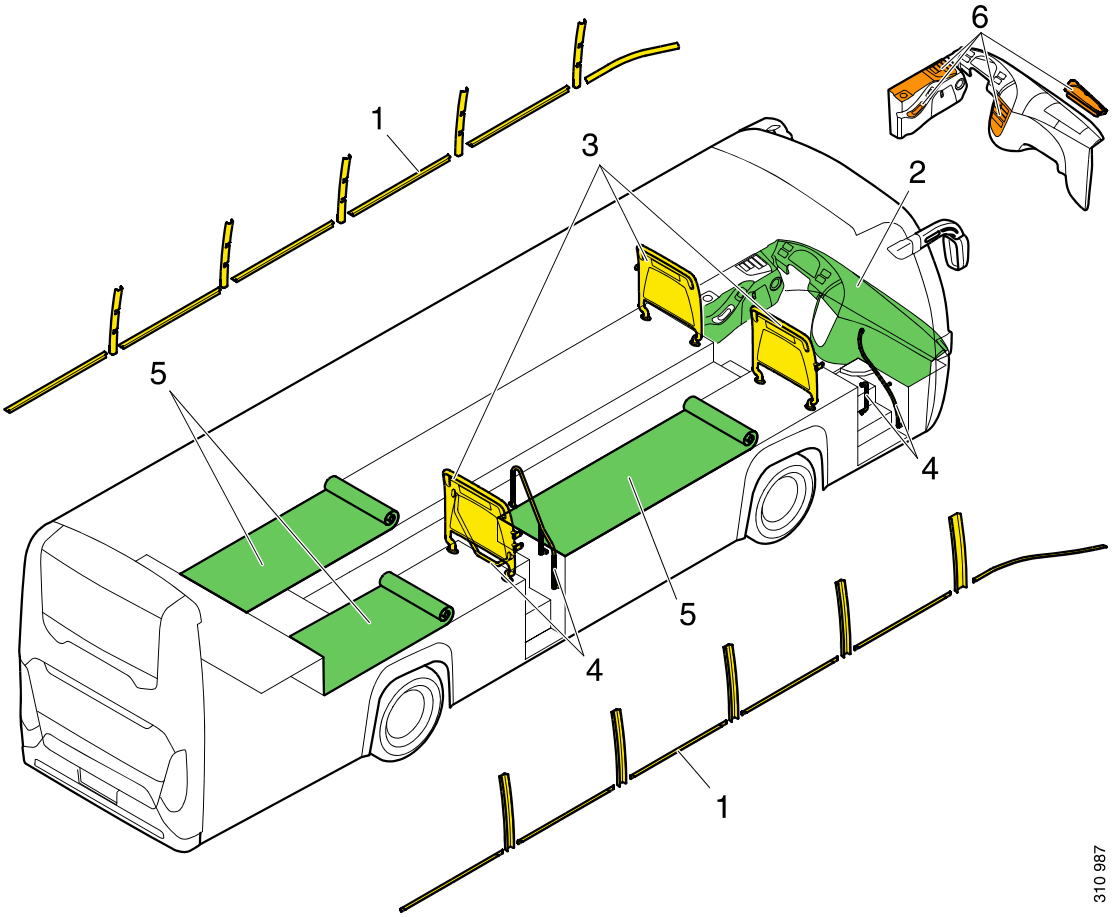

1. *PU (Q345A inside)*
2. *PVC (Glass fibre inside)*
3. *PU (wooden board and Q235 inside)*
4. *PU (HRB400 inside)*
5. *PVC together with non-woven fabric*
6. *ABS, frames and panels in the instrument panel*

© Scania CV AB 2013

https://truckmanualshub.com/

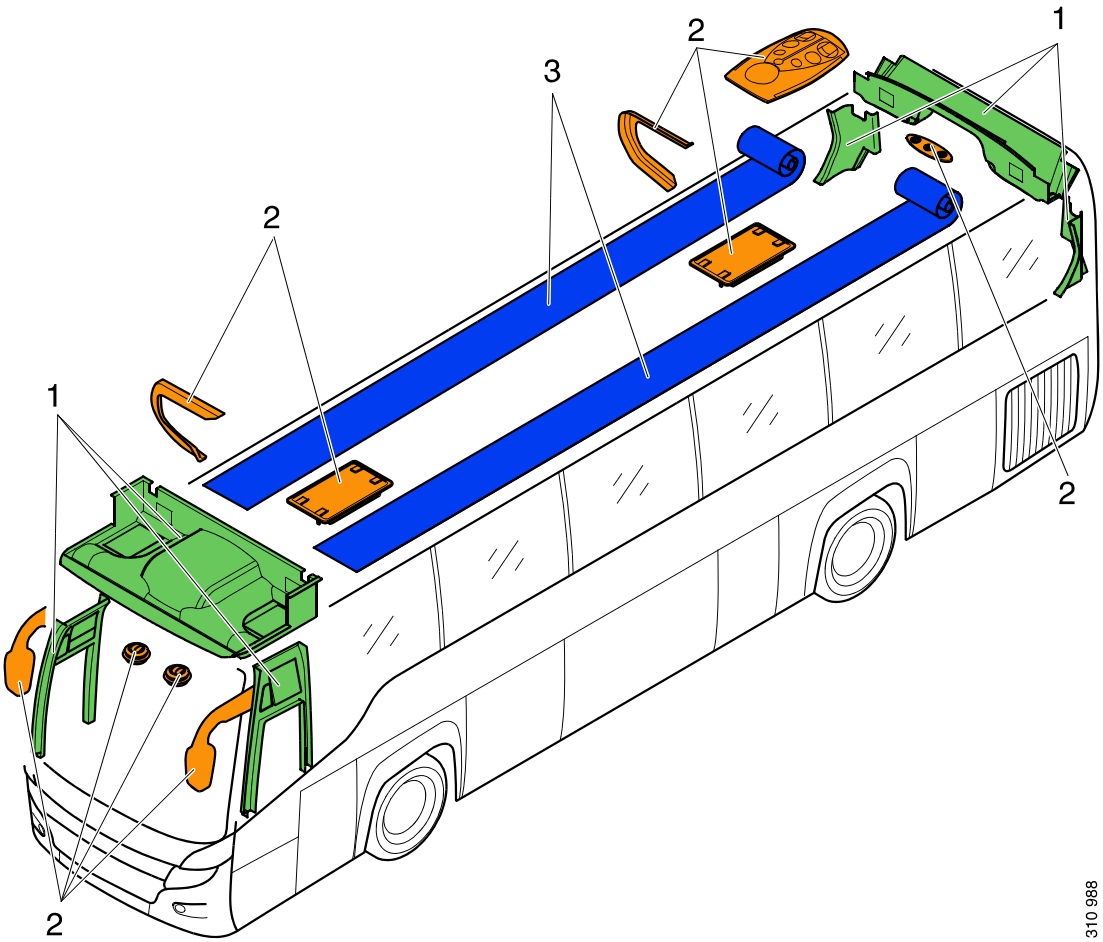

1. *PVC*
2. *ABS*
3. *Felt together with PP*

© Scania CV AB 2013

https://truckmanualshub.com/

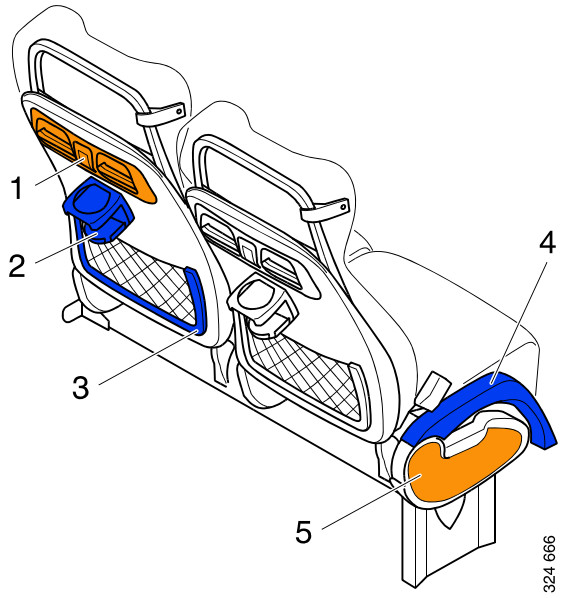

1. *ABS*
2. *Others*
3. *Others*
4. *Others*
5. *ABS*

© Scania CV AB 2013

https://truckmanualshub.com/

Glass fibre and glass

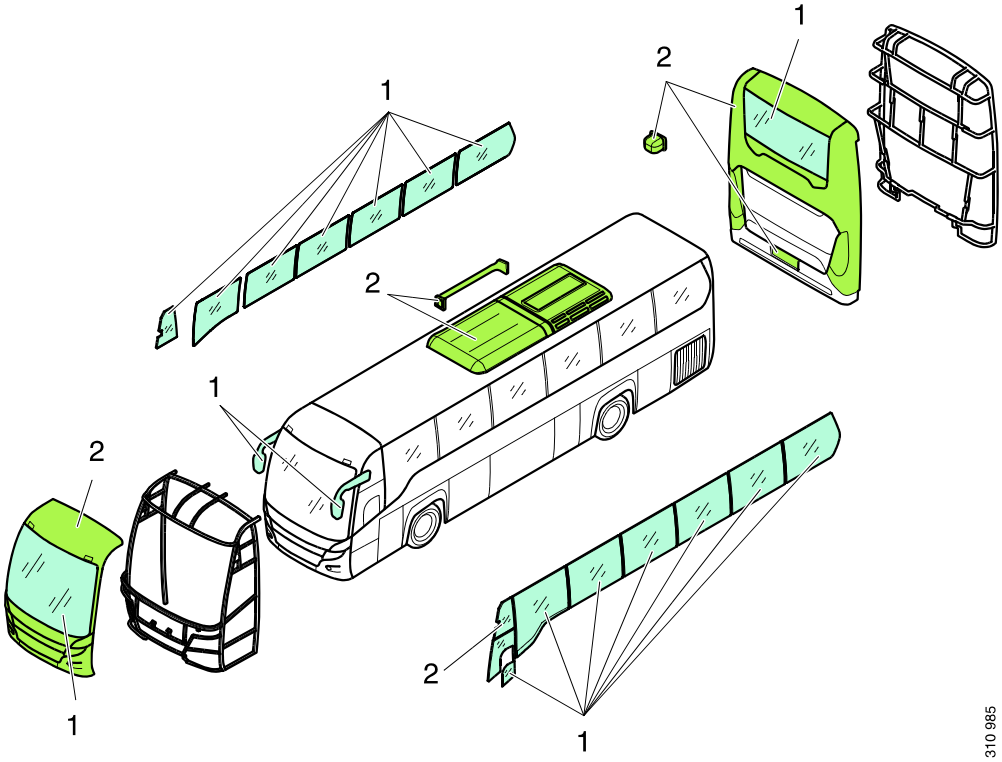

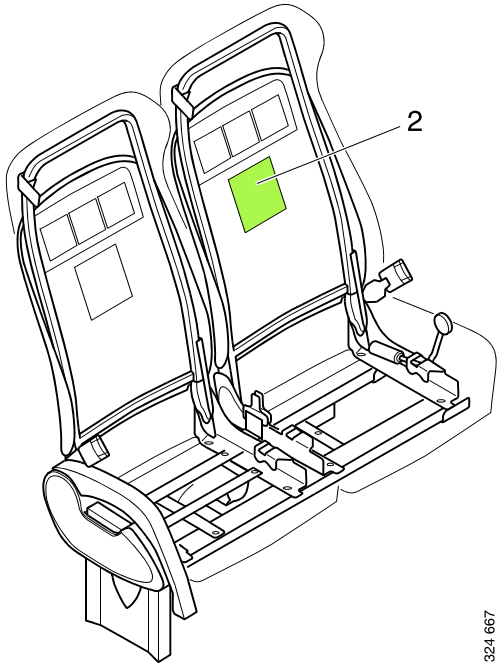

1. *Glass*
2. *Glass fibre*

© Scania CV AB 2013

https://truckmanualshub.com/

Aluminium

Production of raw aluminium consumes a lot of energy. Recycling aluminium consumes relatively little energy. From a life cycle perspective as much of the aluminium as possible should be recycled. Therefore, Scania wants to ensure that most of the aluminium used can be recycled.

The illustration on this page shows the main use of aluminium in the bus. Parts made of aluminium are marked in grey.

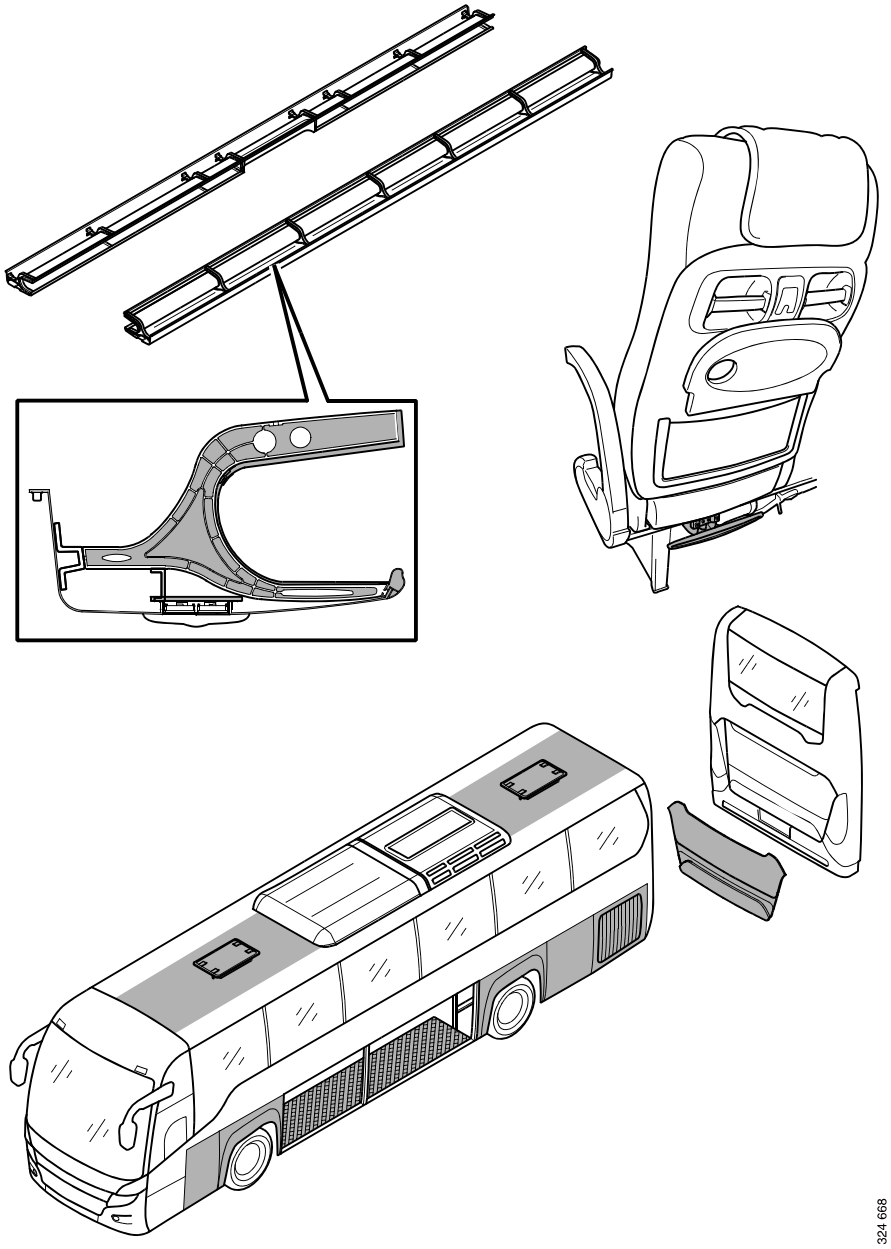

© Scania CV AB 2013

https://truckmanualshub.com/

Steel and copper

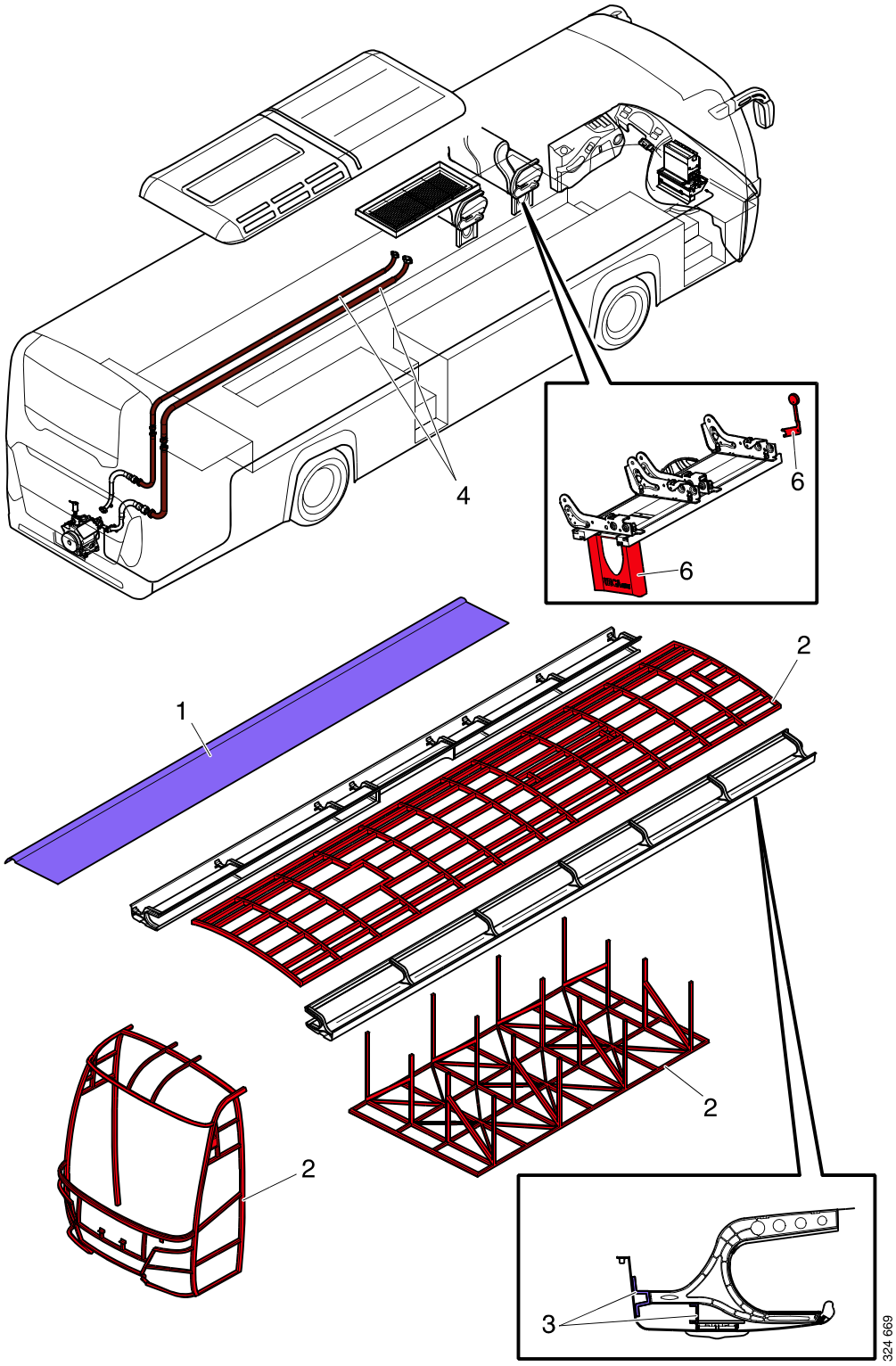

© Scania CV AB 2013

https://truckmanualshub.com/

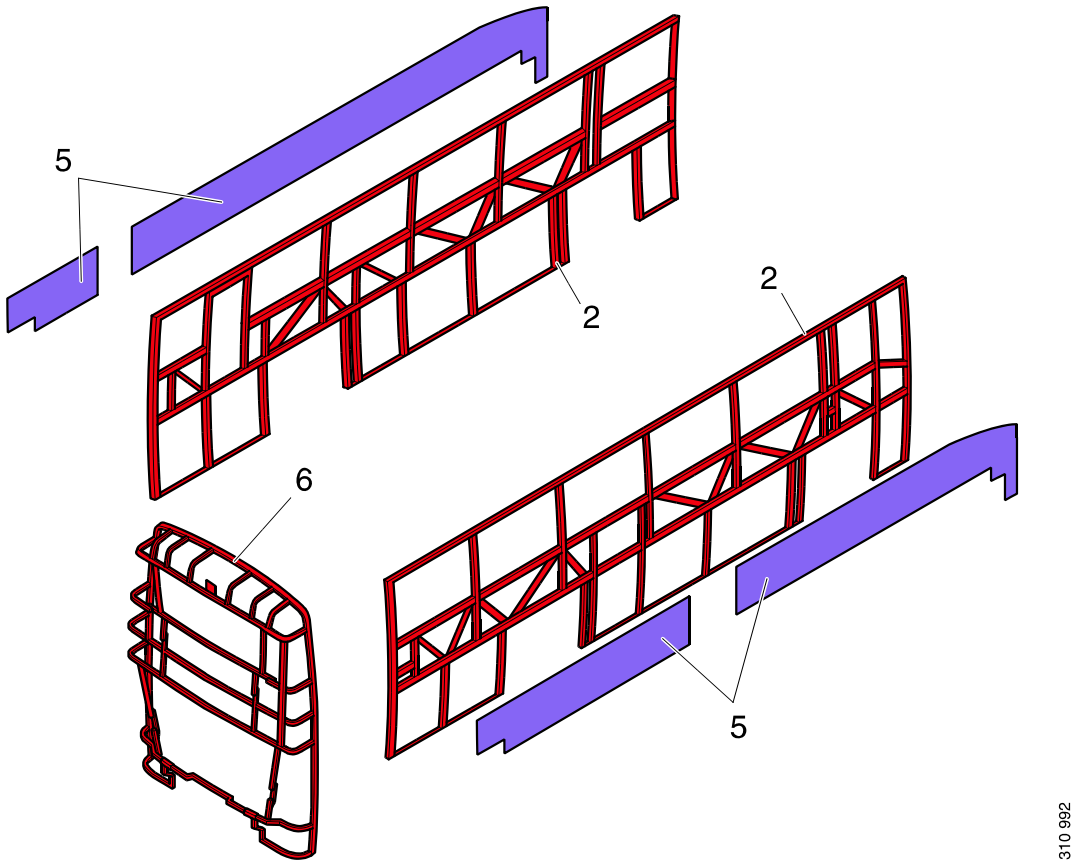

1. *Zinc-coated panel DC51D+Z, 1.2 mm*
2. *Q345*
3. *Zinc-coated panel DC51D+Z, 1.5 mm*
4. *Copper, some parts in the AC assembly*
5. *Zinc-coated panel DC51D+Z, 1.0 mm*
6. *Q235 or Q345*

© Scania CV AB 2013

https://truckmanualshub.com/

Colour codes

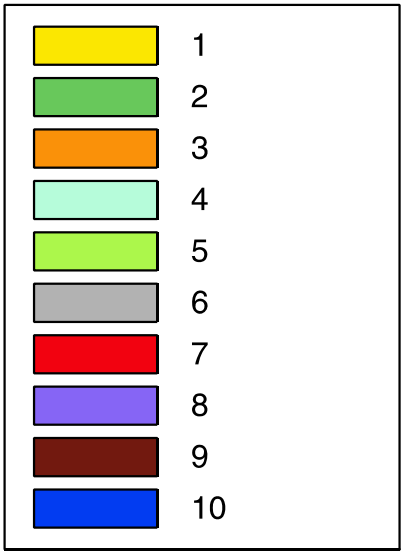

324 499

1. *PU*
2. *PVC*
3. *ABS*
4. *Glass*
5. *Glass fibre*
6. *Aluminium*
7. *Steel*
8. *Zinc-coating*
9. *Copper*
10. *Others*

© Scania CV AB 2013