https://truckmanualshub.com/ 1

912D
912DS

HYDREMA

https://truckmanualshub.com/ 2

912D
912DS

The Hydrema 912D series has a host of features designed to improve operator safety and output. The proven articulated chassis is designed to keep the nett weight low and give excellent cross country performance while still carrying a high payload. The new cab offers the operator the highest levels of comfort and the new tier 3a engine will keep the 912D ahead of the field. Featuring Hydrema's advanced suspension system, the brand new 912DS model sets new standards of comfort for this class of machine. The 912 is well-known for its sure-footed handling characteristics and great robustness, and is particularly suitable for plant hire.

Centre pivot and roadholding qualities

The key to the performance of the 912D lies in the articulated pivot steer chassis. The centre pivot and hydraulic stabilisers keep the machine stable and safe by automatically transferring the weight where it is needed. The chassis ensures that all wheels constantly track to reduce ground contact and the standard twin tyres offer outstanding traction with minimum ground damage. The pivot which is centrally placed increases manoeuverability with a low turning radius and better positioning characteristics. The addition of cruise control makes for more comfortable road useage.

Suspension on front axle with electronic level control

The Hydrema 912DS model is equipped with a newly developed suspension system for the front axle. The system is an electro-hydraulic spring system featuring independent suspension cylinders and level control of the two front wheels. With its rapid regulation and long spring travel, the system provides a hitherto unseen level of comfort for this type of machine. The driver will be less affected by vibration during a long working day and experience considerably greater efficiency, in particular on long transport stages. The 912DS model is developed for the most professional and demanding of users.

Engine

The 912D comes equipped with a Perkins tier 3a common rail engine. This new engine offers an increase in torque of almost 20% giving it just about the best power to weight ration on the market. Wether the machine is working on steep gradients or poor ground conditions the 912D has the power to cope. The high torque offers more power at lower revs which improves fuel economy and noise levels which are both important for environmental and financial reasons.

Transmission

The 912D is fitted with a well proven 6 speed ZF Soft-Shift transmission. Offering full auto or manual shift this intelligent transmission will automatically shift 2 gears in the right conditions to smoothly increase acceleration regardless of the payload.

Optimum operator comfort

After studying the working situation and posture of the operator we have produced our most modern cab to date. The D series cab is more spacious cab with improved visibility and a soft touch interior. All the instrumentation is ergonomically placed and the seat and arm rests are fully adjustable to suit the individual. Visibility has been improved by increasing the glazed area in the cab and a new a/c system is incorporated as standard with 8 air nozzles placed throughout the cab. Overall vibration has been reduced by mounting liquid filled engine suspension points and utilising the cab suspension arrangement from the proven 912C models. The cab is also fitted with automatic entry/exit lighting for safer night time operation.

User friendly computer

The Hydrema 912D has been installed with a Windows based instrument display which provides the operator with information via a 6.4'' flat-screen PC monitor. The display works as a rear view camera when the machine is put into reverse gear and the computer is installed with various service and rental menus along with data collection and diagnostic tools. The computer is very user friendly even for inexperienced operators and It is possible to update software and download data from the machine via a USB socket.

Dynamic design

A lot of time and effort has gone into the design of the 912D to keep it ahead of the market in terms of quality and function. Industrial designers have been employed to attend to every detail from the eight working lights to the built in tool boxes and soft touch interior. The operator has a superb working environment with easy to understand controls, heated seating, electrical adjustable side mirrors and the best off road on road performance available on the market!

Body

The body is designed to ensure easy and fast emptying. By chosing the MultiTip function the dumper can turn the body 180° degrees and deliver the payload anywhere in the area. Features like tipping break and auto throttle control speeds up the whole process. By chosing MultiTip the Auto Body Return feature also puts the body back to the neutral postion automatically. The body is tipped via two double acting cylinders and the swivel op tion is sup ported by a robust turn ing ring mounted on the chassis.

https://truckmanualshub.com/ 4

DIMENSIONER:

		912D Std. Tip:	912DS Std. Tip:	912D MultiTip:	912DS MultiTip:
Total weight	*kg*	*17,060*	*17,330*	*17,520*	*17,790*
Unladen weight	*kg*	*7,060*	*7,330*	*7,520*	*7,790*
Load capacity	*kg*	*10,000*	*10,000*	*10,000*	*10,000*
Axle load, front (unladen)	kg	4,300	4,460	4,380	4,540
Axle load, rear (unladen)	kg	2,760	2,870	3,140	3,250
Axle load, front (laden)	kg	6,480	6,640	6,840	7,000
Axle load, rear (laden)	kg	10,580	10,690	10,680	10,790
A Track	mm	1,860	1,860	1,860	1,860
B Total width: *Std. tyres*	mm	2,470	2,470	2,470	2,470
Opt. tyres	mm	2,200	2,200	2,200	2,200
C Ground clearance	mm	400	400	400	400
D Width, dump body	mm	2,210	2,210	2,210	2,210
E Max. height	mm	2,750	2,790	2,750	2,790
F Loading height	mm	2,170	2,210	2,320	2,360
G Max. height for tipping	mm	4,215	4,255	4,450	4,490
H Tipping clearance	mm	1,050	1,090	1,200	1,240
I Overhang, rear	mm	1,000	1,000	920	920
J Wheelbase	mm	3,080	3,080	3,080	3,080
K Overall length	mm	5,820	5,820	5,900	5,900
L Approach angle, front	°	27	28	27	28
M Departure angle, rear	°	73	73	79	79
N Tipping angle	°	75	75	67	67
R Overhang, front	mm	1,820	1,820	1,820	1,820
V Overhang when tipping	mm			500	500
Capacity	*m³*	*5.6*	*5.6*	*5.6*	*5.6*
Turning radius	*m*	*6.1*	*6.1*	*6.1*	*6.1*
Tipping time	*sek.*	*6*	*6*	*8*	*8*

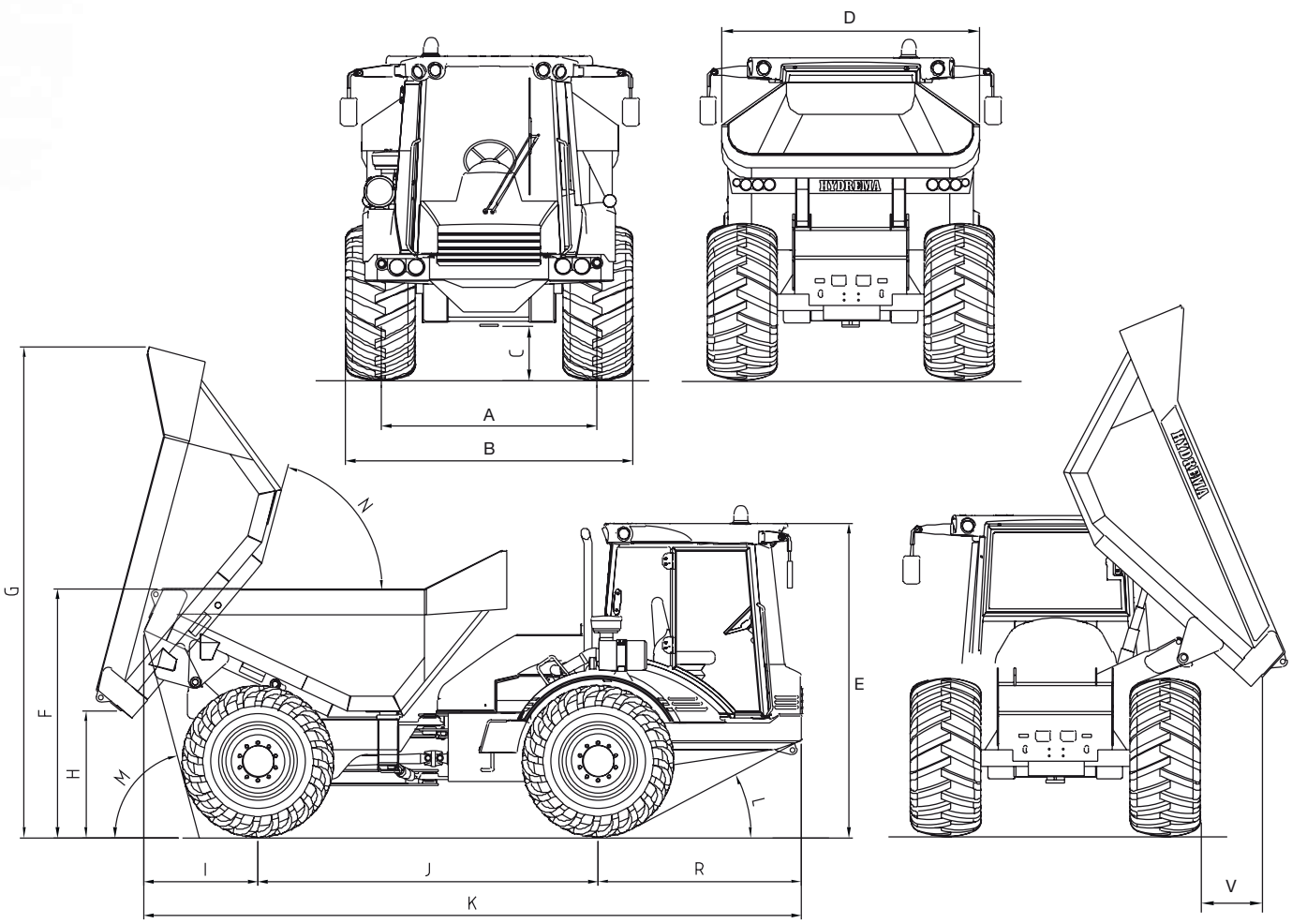

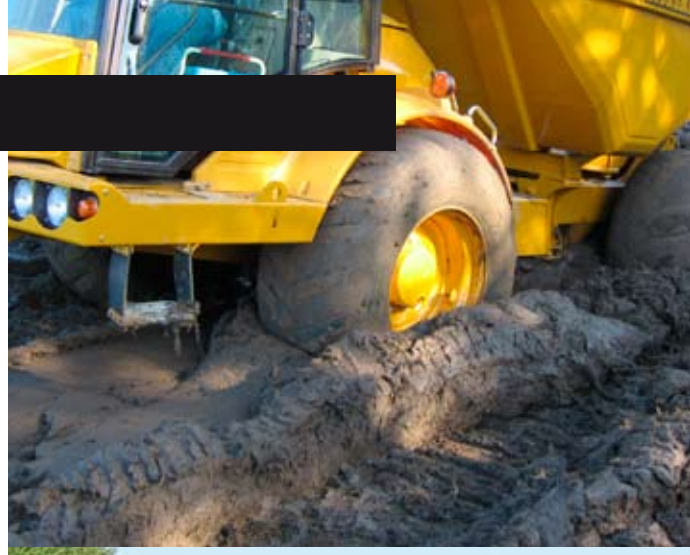

TECHNICAL DATA:

Chassis:
Articulated chassis in a heavy-duty robot-welded construction. 912D has rigid integral axles, whilst 912DS has a sprung front axle suspended in heavy-duty pivot bearings and two spring cylinders. Pivot with pendulum bar and double hydraulic stabiliser with the option of locking the oscillation movement. The pivot is fitted with large spherical pivot bearings. The fuel tank and hydraulic tank are integrated into the front chassis.
Oscillation.....24°

Steering:
Hydrostatic Load Sensing pivot steering with 2 double-acting cylinders. Priority valve and integrated emergency steering. Control cylinders with damping.
Max. steering angle ..... ± 35°

Axles:
Rigid axles are fixed on 912D, whilst the front axle is sprung on 912DS. The axles have planetary reduction in the wheel hubs and separate oil chambers for the hubs. The front axle has automatic limited-slip differential lock and the rear axle has electro-hydraulically activated 100% differential lock.

Brakes:
Dual-circuit hydraulic servo system with immersed brake discs on each wheel. Self-adjusting and maintenance-free. Handbrake: Maintenance-free, »fail-safe« parking brake with electro-hydraulic activation of the wet disc brakes on the front axle.

Tyres:
Twin tyres: 600/55-26.5.

Engine:
Perkins E1104D-44TA stage 3a engine. 4.4 l turbo diesel engine with air/air intercooler, 16 valves and common rail injection. 96 kW/131 hp at 2200 rpm. Max. torque 516 Nm at 1400 rpm. Latest engine technology which meets EEC stage 3a requirements for exhaust emissions. 140 l fuel tank integrated into front chassis.

Transmission:
ZF WG115 6-speed fully automatic »ERGOPOWER« with full electronic control. Electronically-controlled pressure on each clutch ensures completely smooth gear shifts without any loss of tractive effort. (6 forward/3 reverse). Constant 4WD.

Hydraulic system:
Hydraulic pump 84 l/min. with priority for steering. Separate pump for brakes and stabilisers.

Dumper body:
Fabricated in robotically welded high tensile steel.

MultiTip (optional):
Compact slewing system with rapid dumping at the rear and to both sides. The slewing system is supported in a robust ball-bearing slewing ring. Pivotal movement takes place by means of 2 doubleacting cylinders. Tipping function by means of 2 singleacting telescopic cylinders.

Noise levels:
LwA: (outside) 104 db(A) 2000/14/EC
LpA: (inside) 73 db(A) ISO 6396

https://truckmanualshub.com/ 6

912D
912DS

STANDARD EQUIPMENT:

- 600/55-26,5 TWIN tyres
- Waterproof sockets
- Friction differential in front
- 100% differential lock at the rear
- Cab with suspension
- Suspension on front axle with electronic level control
- Automatic air-conditioning
- Headrest
- Rotating beacon light
- Radio with CD/MP3
- Heated wing mirrows
- Seat heating
- Steering wheel knop
- Automatic driving lights
- 8 Mega Beam working lights
- 12V/24V plug in the cab
- Interval wiper front
- Sun blinds in front
- Portable lamp
- Red cabin light at night
- Automatic tipping speed adjustment
- Automatic tipping brake

OPTIONAL EQUIPMENT:

- Extra rotating beacon light
- Towing hook – fork type
- Tyres 17,5 x 25 EM
- Bio-oil
- 180° MultiTip
- Automatic body return
- Pendulum lock
- Warning triangle
- Engine preheater
- Reinforced body
- Rear light protection
- Extended upper edge on body
- Air-suspended seat
- 3-point hitch
- Reverse camera
- Centralized lubrication system
- Radio remote control
- Electrically adjustable wing mirrows
- Xenon working lights

HYDREMA (UK) Ltd.
Barugh Way, Melmerby Green Road
Barker Business Park, Melmerby
Ripon HG4 5NB
Phone +44 01765 641940
Fax +44 01765 641942
e-mail: hydrema@hydrema.com

www.hydrema.com

Photos may show optional equipment - Subject to alterations - 0855334 - 03 / 2009