https://truckmanualshub.com/

SP05A

Bunker Rake

Owner's Operating Manual

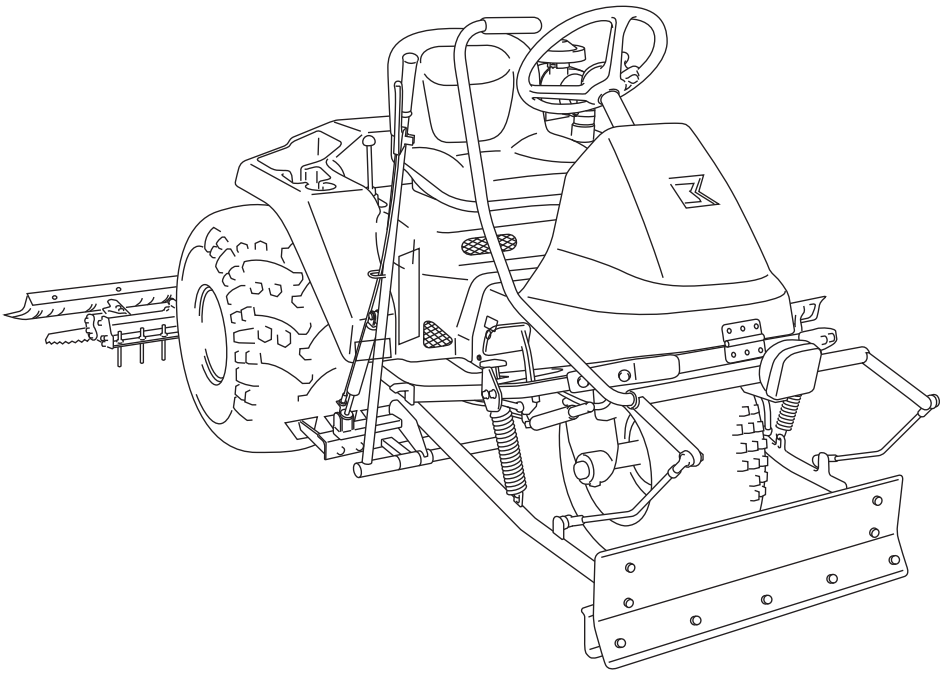

"Required reading" Read this manual and the Owner's Manual for the engine before using the machine.

BARONESS®

Quality on Demand

Serial No. 11001-

Original Instructions Ver.1.1

https://truckmanualshub.com/

Greeting

Thank you for purchasing the Baroness machine. This manual explains proper handling, adjustment, and inspection of your machine. Prior to use, carefully read this manual to thoroughly understand the contents for safe and correct operation.
We hope you will use the machine safely, and take advantage of its best performance.

Keeping the Owner's Operating Manual

Keep this Owner's Operating Manual in the box on the right side of the seat.

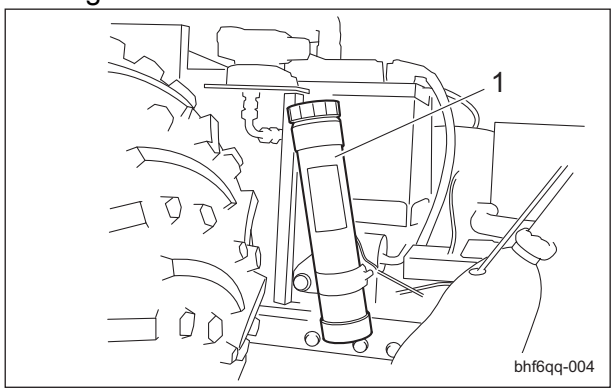

Keeping the Owner's Operating Manual_001

1	Box

https://truckmanualshub.com/

Introduction

Read this manual carefully to ensure that you thoroughly understand how to properly operate and maintain this machine, and to avoid causing injury to yourself or others.

The operator is responsible for operating the machine properly and safely.

Do not perform maintenance on the machine other than that described in this manual.

Be sure to also read the operating manuals for the engine, battery, etc.

Maintenance should only be performed by a certified specialist.

If you have any questions concerning maintenance or genuine parts, please contact Kyoeisha or your local Baroness dealer.

When making inquiries about this machine, please specify the machine's model designation and serial number.

When loaning or transferring this machine, please also provide the Owner's Operating Manual together with the machine.

Kyoeisha Co., Ltd.

Caution

The information described in this manual is subject to change for improvement without prior notice.
When replacing parts, be sure to use genuine Baroness parts or parts designated by Kyoeisha.
Note that the Baroness product warranty may not apply to defects caused by the use of parts from other companies.

Warning Symbols

This manual uses the following warning symbols for handling precautions that are important for your safety.

696cq5-001	Warning symbol

This symbol indicates the articles regarding "Danger," "Warning," or "Caution."

Those articles describe important safety precautions and so read them carefully to understand completely before operating the machine.

Failure to adequately follow these safety precautions may cause an accident.

Danger

This symbol indicates that serious injury or death will occur if the warning is ignored.

Warning

This symbol indicates that serious injury or death may occur if the warning is ignored.

Caution

This symbol indicates that injury or damage to property may occur if the warning is ignored.

Important

This symbol indicates precautions on the mechanism of the machine.

https://truckmanualshub.com/

Introduction

Purpose

This machine is intended for leveling bunkers at golf courses.
Do not use this machine in any other way than its intended purpose, and do not modify the machine.
Operating this machine for other purposes and modifying it may be very dangerous and may cause damage to the machine.
In addition, this machine is not authorized for operation as a special motor vehicle. Do not operate it on public roads.

https://truckmanualshub.com/

Contents

Safety ..... Page 1-1

Safe Operating Practices .....Page 1-2

Disposal ..... Page 2-1

Waste Disposal .....Page 2-2

Product Overview ..... Page 3-1

Specifications .....Page 3-2
Names of Each Section ..... Page 3-3
Safety Signs and Instruction Signs ..... Page 3-4

Handling Instructions ..... Page 4-1

Inspection Before Use ..... Page 4-2
Tightening torques .....Page 4-13
Adjustment Before Operating ..... Page 4-16
Procedure to Start / Stop Engine .....Page 4-21
Operation of Each Section .....Page 4-22
Instruments .....Page 4-26
Travel of Machine ..... Page 4-27
Operations ..... Page 4-28
Transporting .....Page 4-34

Maintenance ..... Page 5-1

Maintenance Precautions ..... Page 5-2
Maintenance Schedule ..... Page 5-3
Jacking up the machine .....Page 5-6
Greasing ..... Page 5-8
Maintenance (Attachments) .....Page 5-10
Maintenance (Main Body) .....Page 5-12
Long-Term Storage .....Page 5-17

https://truckmanualshub.com/

Contents

https://truckmanualshub.com/

Safe Operating Practices ..... Page 1-2

Training .....Page 1-2
Preparation .....Page 1-2
Operation .....Page 1-3
Maintenance and storage .....Page 1-4

https://truckmanualshub.com/

Safety

Failure to adequately follow these safety precautions may cause an accident resulting in injury or death.

Danger

This machine is designed to ensure safe operation and has been tested and inspected thoroughly before shipment from the factory.
The machine is equipped with safety devices to prevent accidents.
However, whether the machine demonstrates its original performance level depends on the manner in which it is operated and handled, as well as the manner in which it is managed on a daily basis.
Inappropriate use or management of the machine may result in injury or death.
Observe the following safety instructions to ensure safe operation.

Safe Operating Practices

The following instructions include the ones from CEN standard EN 836: 1997, ISO standard 5395: 1990, and ANSI B71.4-2004.

Training

1. Read the Owner's operating Manual and other training material carefully. Be familiar with the controls, safety signs, and the proper use of the equipment.
2. If the operator or mechanic can not read English it is the owner's responsibility to explain this material to them.
3. All operators and mechanics should seek and obtain professional and practical instruction.
   The owner is responsible for training the users.
   Such instruction should emphasize.
   [1] The need for care and concentration when working with ride-on machines.
   [2] Control of a ride-on machine sliding on a slope will not be regained by the application of the brake.
   The main reasons for loss of control are
   - Insufficient wheel grip
   - Being driven too fast
   - Inadequate braking
   - The type of machine is unsuitable for its task
   - Lack of awareness of the effect of ground conditions, especially slopes
   - Incorrect hitching and load distribution
4. Never allow children or people unfamiliar with these instructions to use or service the machine.
   Local regulations may restrict the age of the operator.
5. The owner/use can prevent and is responsible for accidents or injuries occurring to themselves, other people, or property.
6. Keep in mind that the owner, operator, and mechanic are responsible for accidents or hazards occurring to other people or their property.

Preparation

1. Evaluate the terrain to determine what accessories and attachments are needed to properly and safety perform the job.
   Only use accessories and attachments approved by the manufacturer.
2. While operating, always wear substantial footwear, long trousers, hard hat, safety glasses, and ear protection.
   Long hair, loose clothing, or jewelry may get tangled in moving parts.
   Do not operate the equipment when barefoot or wearing open sandals.
3. Inspect the area where the equipment is to be used and remove all objects such as rocks, toys and wire which can be thrown by the machine.
4. Exercise care in the handling of fuel.

Warning

Warning-Fuel is highly flammable.
Take the following precautions.

[1] Store fuel in containers specifically designed for this purpose.
[2] Add fuel before starting the engine.
Never remove the cap of the fuel tank or add fuel while the engine is running or when the engine is hot.
[3] Refuel outdoors only and do not smoke while refueling.

https://truckmanualshub.com/

[4] If fuel is spilled, do not attempt to start the engine but move the machine away from the area of spillage and avoid creating any source of ignition until petrol vapours have dissipated.

[5] Replace all fuel tanks and container caps securely.

5. Check that operator's presence controls, safety switches and shields are attached and functioning properly.
   Do not operate unless they are functioning properly.
6. If the brake operation is faulty or the parking brake lever has noticeable play, be sure to adjust or repair them before operating the machine.
7. Replace faulty mufflers.

Operation

1. Do not operate the engine in a confined space where dangerous carbon monoxide fumes can collect.
2. Only operate in good light, keeping away from holes and hidden hazards.
3. Before attempting to start the engine, disengage all attachments, shift into neutral, and engage the parking brake.
   Only start engine from the operator's position.
   Use seat belts if provided.
4. Remember there is no such thing as a safe slope.
   Travel on grass slopes requires particular care.
   To guard against overturning:

   [1] Do not stop or start suddenly when going up or downhill.

   [2] Engage clutch slowly, always keep machine in gear, especially when traveling downhill.

   [3] Machine speeds should be kept low on slopes and during tight turns.

   [4] Stay alert for humps and hollows and other hidden hazards.

   [5] Never operate across the face of the slope, unless the machine is designed for this purpose.

   [6] Never drive the machine on a slope with an angle of gradient that is greater than that specified or in a place where there is a danger of the machine slipping.
5. Never operate the machine with damaged guards, shields, or without safety protective devices in place.
   Be sure all interlocks are attached, adjusted and functioning properly.
6. Do not change the engine governor settings or overspeed the engine.
   Operating the engine at excessive speed may increase the hazard of personal injury.
7. Do the following before leaving the operator’s position.

   [1] Stop on level ground.

   [2] Lower the attachments.

   [3] Change into neutral and set the parking brake.

   [4] Stop the engine and remove the key.
8. Disengage the drive to attachments, stop the engine, and remove the ignition key in the following conditions.

   [1] Before refueling.

   [2] Before cleaning blockages.

   [3] Before checking, cleaning or working the machine.

   [4] After striking a foreign object or if an abnormal vibration occurs.
   Inspect the machine for damage and make repairs before restarting and operating the equipment.
9. Keep hands and feet away from the rotating parts.
10. Look behind and down before backing up to be sure of a clear path.
11. Do not carry passengers.
12. Never operate while people, especially children, or pets are nearby.
13. Slow down and use caution when making turns and crossing roads and sidewalks.
14. Do not operate the machine under the influence of alcohol or drugs.
15. Take care when loading or unloading the machine into a trailer or a truck.
    Load or unload the machine in a flat and safe place.
    Before loading or unloading, set the parking brake on the truck or trailer, stop the engine, and chock the wheels.

https://truckmanualshub.com/

When transporting the machine on a truck or a trailer, set the parking brake, stop the engine, and fasten the machine to the truck with a rope or other suitable restraining device that has sufficient strength.
When using a running board, select one with sufficient strength, length, and width and that will not cause the machine to slip.

16. Close the fuel valve before transporting the machine.
17. Use care when approaching blind corners, shrubs, trees, or other objects that may obscure vision.
18. Do not take your eyes off the road ahead. Do not operate the machine with no hands.
19. Reduce the throttle setting during engine run-out and, if the engine is provided with a shut-off valve, turn the fuel off at the conclusion of operation.

Maintenance and storage

1. Disengage drives on level ground, lower the atattachments, set parking brake, stop engine and remove key from ignition.
   Wait for all movement to stop before adjusting, cleaning or repairing.
2. To reduce the fire hazard, keep the engine, silencer/muffler, battery compartment fuel storage area, attachments and drives free of grass, leaves, or excessive grease.
   Clean up oil or fuel spillage.
3. Allow the engine to cool before storing in any enclosure.
4. Only cover the machine with a sheet after hot parts have sufficiently cooled down.
5. Never store the equipment with fuel in the tank inside a building where fumes may reach an open flame or spark.
6. If the engine is provided with a shut-off valve, shut off valve while storing or transporting.
7. Do not store fuel near flames.
8. Never allow untrained personnel to service machine.
9. Allow the engine/muffler to cool before checking/maintenance.
10. Appropriately manage and correctly use the tools necessary for servicing or adjusting the machine.
11. Use jack stands to support components when required.
12. Carefully release pressure from components with stored energy.
13. Be sure to depressurize the hydraulic system before performing maintenance operations on it such as removing hydraulic equipment.
14. Check whether line connectors in the hydraulic system are properly tightened.
    Before applying hydraulic pressure, check the connections of the hydraulic pressure lines and the condition of the hoses.
15. When checking the hydraulic circuit for pinhole leaks or oil leakage from nozzles, do not use your hands.
    Use items such as paper or corrugated cardboard to find leakage points.
    Be extremely careful with high-pressure oil as it may pierce your skin, result.
    If fluid is injected into the skin it must be surgically removed within a few hours by a doctor familiar with this form of injury or gangrene may result.
16. Disconnect battery before making any repairs.
    Disconnect the negative terminal first and the positive last.
    Reconnect positive first and negative last.
17. Make sure that parts such as wires are not touching each other and that their covers have not come off.
18. Keep hands and feet away from moving parts.
    If possible, do not make adjustments with the engine running.
19. Charge batteries in an open well ventilated area, away from spark and flames.
    Unplug charger before connecting or disconnecting from battery.
    Wear protective clothing and use insulated tools.
20. Keep all parts in good working condition and all hardware tightened.
    Replace all worn or damaged decals.
21. Keep all nuts, bolts and screws tight to be sure the equipment is in safe working condition.
22. If the fuel tank has to be drained, do this outdoors.

https://truckmanualshub.com/

Disposal

Waste Disposal ..... Page 2-2

About the Waste disposal .....Page 2-2

https://truckmanualshub.com/

Disposal

Waste Disposal

About the Waste disposal

Make sure that waste generated when servicing or repairing the machine is disposed of in accordance with local regulations.
(e.g. waste oil, antifreeze batteries, rubber products, and wires etc.)

https://truckmanualshub.com/

Product Overview

Specifications ..... Page 3-2

Specifications .....Page 3-2
Sound pressure level .....Page 3-2
Sound power level ..... Page 3-2
Vibration level ..... Page 3-3

Names of Each Section ..... Page 3-3

Serial Number Plate .....Page 3-3
Specification Decal ..... Page 3-4
Noise Emission Decal .....Page 3-4
Year of Manufacture Decal .....Page 3-4

Safety Signs and Instruction Signs ..... Page 3-4

About Safety Signs and Instruction Signs .....Page 3-4
Positions of Safety Decals and Instruction Decals ..... Page 3-4
Explanation about Safety Decals and Instruction Decals ..... Page 3-5

https://truckmanualshub.com/

Product Overview

Specifications

Specifications

Model		SP05A (2WD)	SP05A (3WD)
Dimensions	Total length	215 cm (with blade 230 cm)	
	Total width	190 cm	
	Total height	120 cm	
Weight (with rake)		430 kg	457 kg
Minimum turning radius		339 cm	
Engine	Model	Vanguard 356447	
	Type	Air-cooled 4-cycle gasoline engine	
	Total displacement	570 cm^3 (0.57 L)	
	Maximum output	13.2 kW (18.0PS)/3,600 rpm	
Fuel tank capacity		Gasoline 15.0 dm^3 (15.0 L)	
Fuel consumption		310 g/kW.h (rated output)	
Quantity of engine oil		1.6 dm^3 (1.6 L)	
Operating width (Mowing width)	Rake	190 cm	
	Blade (option)	80 cm (Weight: 25 kg)	
	Cultivator (option)	116 cm (Weight: 19 kg)	
	Finishing brush (option)	195 cm (Weight: 10.6 kg)	
Drive		HST, 2WD/3WD selectable	
Speed (HST)	Forward	0 - 16.0 km/h	0 - 12.8 km/h
	Reverse	0 - 6.0 km/h	0 - 6.0 km/h
Speed (Mechanical)		-	
Efficiency		-	
Maximum inclination for operation		15 degrees	
Tire size	Front wheel	PD21 x 11.00 - 10	
	Rear wheel	25 x 13.00 - 9	
Tire pneumatic pressure	Front wheel	70 kPa (0.7 kgf/cm^2)	
	Rear wheel	40 kPa (0.4 kgf/cm^2)	
Battery		46B19R	

* The factory default maximum engine rpm is 3,000 rpm.

Sound pressure level

Sound pressure level

This machine was confirmed to have a continuous A-weighted sound pressure level of 84 dB by measuring identical machines in accordance with the procedure specified in directive EN ISO5395-1:2013.

Sound power level

Sound power level

This machine was confirmed to have a sound power level of 98 dB by measuring identical machines in accordance with the procedure specified in directive 2000/14/EC.

https://truckmanualshub.com/

Vibration level

Hand-arm vibration

This machine was confirmed to transmit a maximum vibration level of less than 2.5 m/s^2 to hands and arms by measuring identical machines in accordance with the procedure specified in ISO5349-1:2001,ISO5349-2:2001.

Whole body vibration

This machine was confirmed to transmit a maximum vibration level of less than 0.5 m/s^2 to the whole body by measuring identical machines in accordance with the procedure specified in ISO2631-1:1997,ISO2631-2:2003.

Names of Each Section

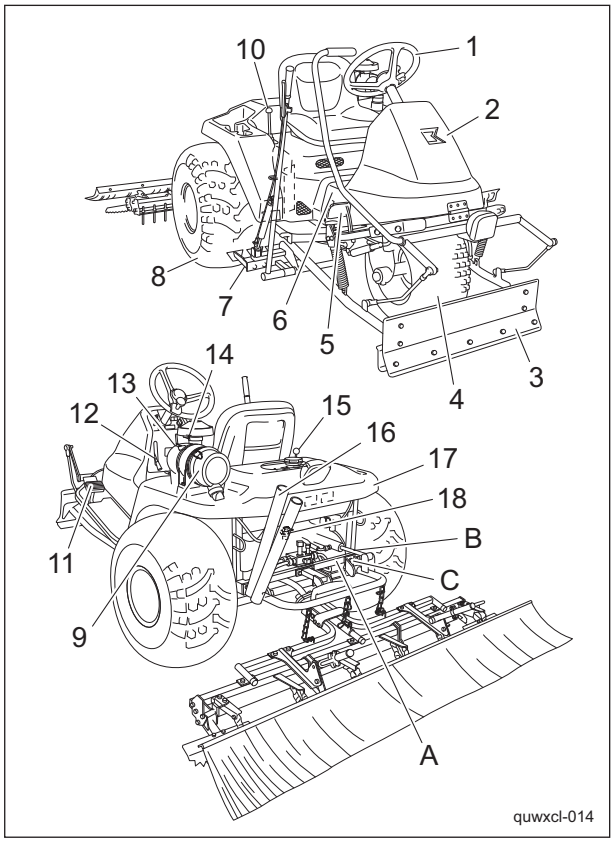

Names of Each Section_001

1	Steering wheel
2	Front cover
3	Blade (option)
4	Front tire
5	Traveling pedal
6	Oil gauge
7	Cultivator (option)
8	Rear tire
9	Air cleaner
10	2WD/3WD selector lever (3WD specifications)
11	Brake pedal
12	Tilt lever
13	Throttle lever
14	Up/down lever
15	Fuel filler
16	Broom holder
17	Rear cover
18	Fuel cock
A	Serial number plate
B	Year of manufacture plate
C	Decal, specifications

Serial Number Plate

The serial number plate indicates the name and serial number of the machine.

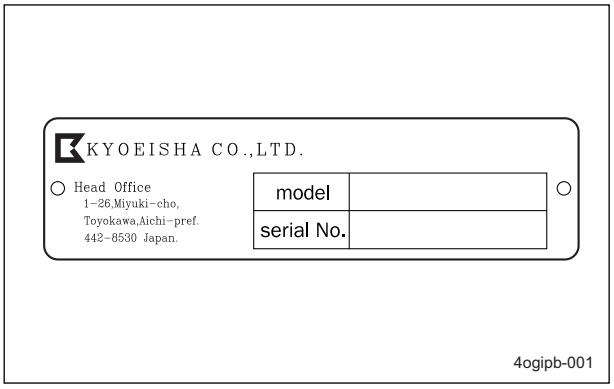

Serial Number Plate_001

https://truckmanualshub.com/

Specification Decal

The Specification decal indicates the CE mark, model name, and weight, etc.

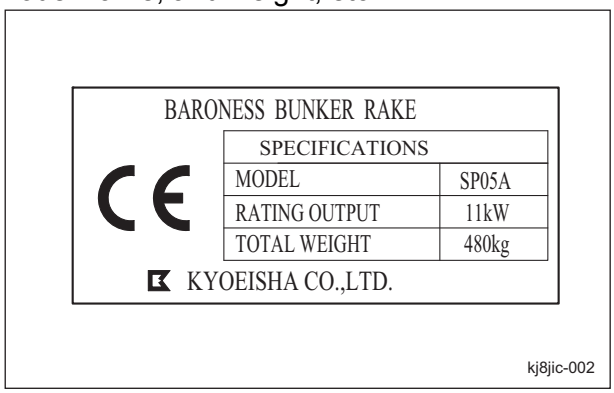

Decal, Specifications_001

Noise Emission Decal

The noise emission decal indicates the sound power level determined by measuring identical machines in accordance with the procedure specified in the EC directives.

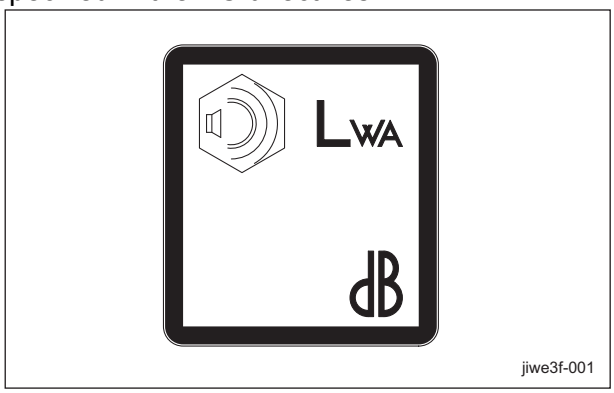

Noise Emission Decal_001

Year of Manufacture Decal

The year of manufacture decal indicates the year when this machine was manufactured.

Year of Manufacture Decal_001

Safety Signs and Instruction Signs

About Safety Signs and Instruction Signs

Warning

Safety decals and instruction decals are attached to this machine.
Make sure that they are preserved in their entirety. If they are damaged, become dirty, or peel off, replace them with new ones.

Part numbers for decals that need to be replaced are listed in the parts catalog. Order them from a Baroness dealer or Kyoeisha.

Positions of Safety Decals and Instruction Decals

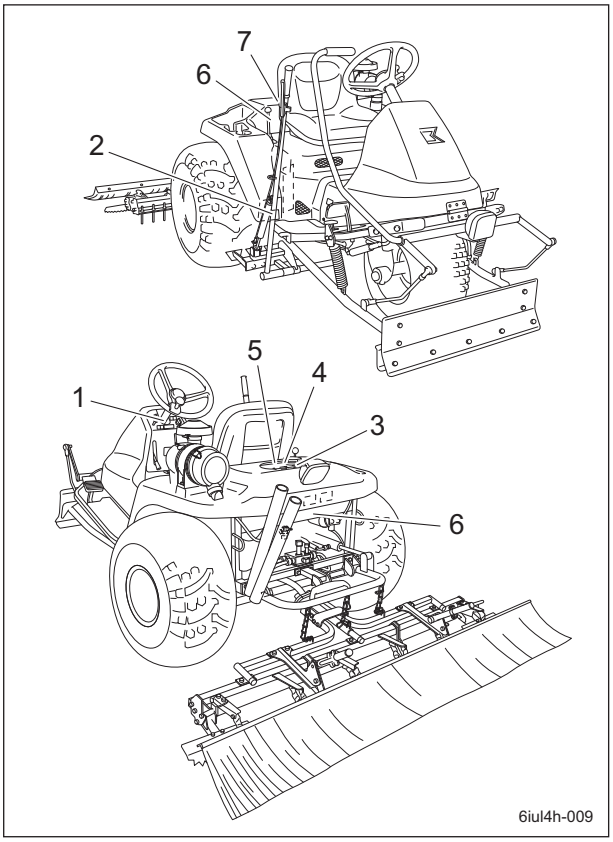

Positions of Safety Decals and Instruction Decals_001

https://truckmanualshub.com/

Explanation about Safety Decals and Instruction Decals

1	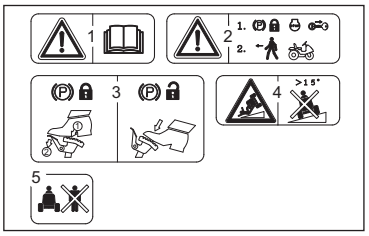 qigqnx-037	SP05---0560C0 Decal, operation 1. Warning Read the manual. 2. Warning Apply the parking brake, stop the engine, remove the ignition key, and then leave the machine. 3. Applying the parking brake - While depressing the parking brake pedal, depress the lock pedal. Releasing the parking brake - Depress the parking brake pedal. 4. Danger Rollover - Do not work on slopes of 15 degrees or more. 5. Danger Flying objects - All persons other than the operator must keep a safe distance from the machine.
2	 qigqnx-038	K4205001930 Decal, caution to getting pinched Caution May pinch - There is a risk of being pinched.
3	 qigqnx-039	K4205001950 Decal, caution to exhaust gas Warning Be careful of exhaust emissions.
4	 qigqnx-040	K4209001310 Decal, lead-free gasoline Use lead-free gasoline.
5	 qigqnx-041	K4205001940 Decal, fire prohibited Danger Keep away from fire.

https://truckmanualshub.com/

6	qigqnx-028	K4205001910 Decal, caution to getting entangled **Danger** Watch for rotating parts - Keep your hands away from the belts while the engine is running.
7	qigqnx-042	K4205001920 Decal, caution to hot parts Caution High temperature of muffler - Do not touch. Otherwise, you will get burned.

https://truckmanualshub.com/

Handling Instructions

Inspection Before Use ..... Page 4-2

Rake ..... Page 4-2
Blade ..... Page 4-2
Cultivator ..... Page 4-3
Finishing Brush ..... Page 4-3
Oil cooler ..... Page 4-3
Hydraulic Oil ..... Page 4-3
Hydraulic Hoses ..... Page 4-5
Air Cleaner ..... Page 4-6
Battery ..... Page 4-7
Tire ..... Page 4-8
Brake ..... Page 4-8
Belt ..... Page 4-8
Steering wheel ..... Page 4-8
Around the Engine ..... Page 4-9
Engine Oil ..... Page 4-9
Fuel filter ..... Page 4-11
Fuel ..... Page 4-12
Oil Leakage ..... Page 4-12

Tightening torques ..... Page 4-13

Standard tightening torques ..... Page 4-13
Principal tightening torques ..... Page 4-15

Adjustment Before Operating ..... Page 4-16

Adjustment of Steering Wheel ..... Page 4-16
Adjustment of Seat ..... Page 4-16
Adjustment of Speed Adjustment Plate ..... Page 4-17
Adjustment of Rake ..... Page 4-17
Adjustment of Blade ..... Page 4-18
Adjustment of Finishing Brush ..... Page 4-18

Procedure to Start / Stop Engine ..... Page 4-21

Start / Stop of Engine ..... Page 4-21
Safety Mechanisms ..... Page 4-21
Warning Mechanisms ..... Page 4-21

Operation of Each Section ..... Page 4-22

Precautions for Operating the Machine ..... Page 4-22
Cautions for when You Leave the Machine ..... Page 4-22
Operation Decals ..... Page 4-22
Throttle Lever ..... Page 4-22
Choke Lever ..... Page 4-22
Up/Down Lever ..... Page 4-23
2WD/3WD Selector Lever ..... Page 4-23
Traveling Pedal ..... Page 4-24
Brake Pedal ..... Page 4-24
Front Cover ..... Page 4-25
Rear Cover ..... Page 4-25

Instruments ..... Page 4-26

Instruments on the Operation Panel ..... Page 4-26
Hour meter ..... Page 4-26

Travel of Machine ..... Page 4-27

Operating Procedure ..... Page 4-27
Towing the Machine ..... Page 4-27

Operations ..... Page 4-28

Rake ..... Page 4-28
Blade ..... Page 4-29
Cultivator ..... Page 4-31
Finishing Brush ..... Page 4-33

Transporting ..... Page 4-34

Transporting Procedure ..... Page 4-34

https://truckmanualshub.com/

Inspection Before Use

Be sure to perform an inspection before you start using the machine so that you will be able to take advantage of its optimum performance for a long period of time.

Rake

Inspection of Rake

Due to frequent use or damage caused during use or transportation, tracks, such as from tires, may remain after use.
Inspect, and if necessary, repair or replace.

1. Make sure that the rake pipe is not bent.
2. Make sure that the cross-link chain is not twisted or worn.
3. Make sure that the rake shaft is not worn.
4. Make sure that the center shaft of the fulcrum swing fitting is not worn.
5. Make sure that a spring pin is not missing from the rake shaft.
6. Make sure that a hardened flat-head pin on the rake hanging arm is not worn.
7. Make sure that the plate springs are not cracked or bent.
8. Make sure that a spring pin is not missing from the rake fulcrum fitting.
9. Make sure that the rake mounting bracket is not bent.
10. Make sure that the smoother plate is not bent, cracked or unevenly worn.
11. Make sure that the warp board is not bent, cracked or worn.
12. Make sure that the fork prong bar is not bent or worn.

Blade

Inspection of Blade

Due to frequent use or damage caused during use or transportation, it may become difficult to move sand around.
Inspect, and if necessary, repair or replace.

1. Make sure that the spring pin is not missing from the lever arm.

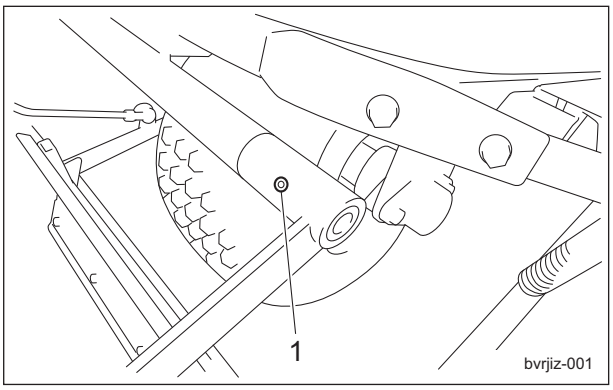

Inspection of Blade_001

1	Spring pin

2. Make sure that the connecting shaft is not bent.
3. Make sure that the hook spring is not bent or stretched.
4. Make sure that a delta pin is not missing.
5. Make sure that the small blade is not bent, cracked or worn.

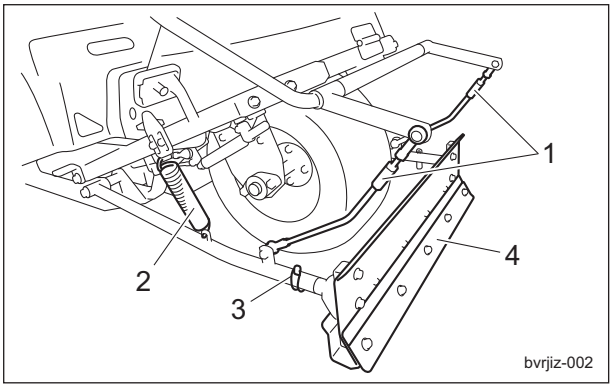

Inspection of Blade_002

1	Connecting shaft
2	Hook spring
3	Delta pin
4	Small blade

https://truckmanualshub.com/

Cultivator

Inspection of Cultivator

Due to frequent use or damage caused during use or transportation, it may become difficult to adjust the sand depth.
Inspect, and if necessary, repair or replace.

1. Make sure that the cultivator wire is not broken.
2. Make sure that the free lock pin is not missing.
3. Make sure that the parker clamp is not loose.
4. Make sure that the trapezoidal cultivator fitting is not worn.

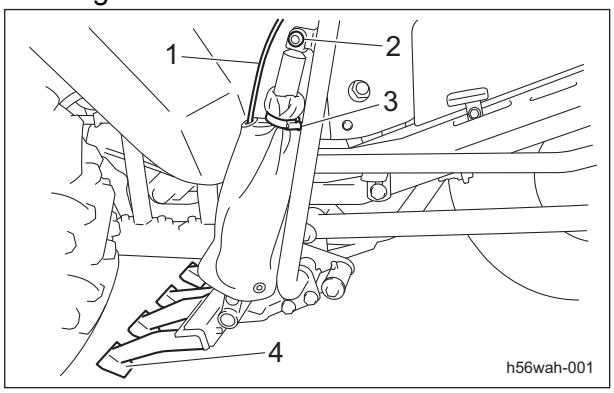

Inspection of Cultivator_001

1	Cultivator wire
2	Free lock pin
3	Parker clamp
4	Trapezoidal cultivator fitting

Finishing Brush

Inspection of Finishing Brush

Due to frequent use or damage caused during use or transportation, the rake may leave tracks.
Inspect, and if necessary, repair or replace.

1. Make sure that the brush mounting frame is not bent.
2. Make sure that the brush is not bent or excessively worn.

Oil cooler

Inspection of Oil Cooler

1. Make sure that there is no damage to the oil cooler.
2. Make sure that the oil cooler is not contaminated.

Cleaning of Oil Cooler

Caution

An unclean oil cooler may cause malfunction of the hydraulic system.

Important

Do not use solid objects, such as a spatula or screwdriver, or high-pressure water to clean the radiator or oil cooler.
Otherwise, special fins or tubes may be damaged, possibly resulting in reduced cooling performance or coolant leakage.

If the oil cooler has been contaminated with dust, be sure to clean it.
After operating the machine in a dusty environment, it is important to remove dust as soon as possible.

1. Open the rear cover.
2. Carefully clean the front and back of the oil cooler with water or compressed air.

Hydraulic Oil

Inspection of Hydraulic Oil

1. Raise the rake and maintain that position on a level surface.
2. Make sure that the oil level is at the middle of the oil gauge.

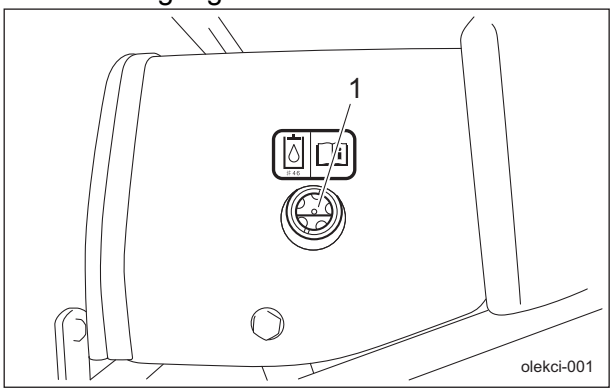

Inspection of Hydraulic Oil_001

1	Oil gauge

3. Check underneath the machine for oil leakage.

https://truckmanualshub.com/

Hydraulic Oil Supply

> **Important**
>
> Do not mix different types of oil.

> **Important**
>
> Use Shell Tellus S2V32 (or equivalent) as hydraulic oil.

1. Remove the dimple knobs, and then open the front cover.

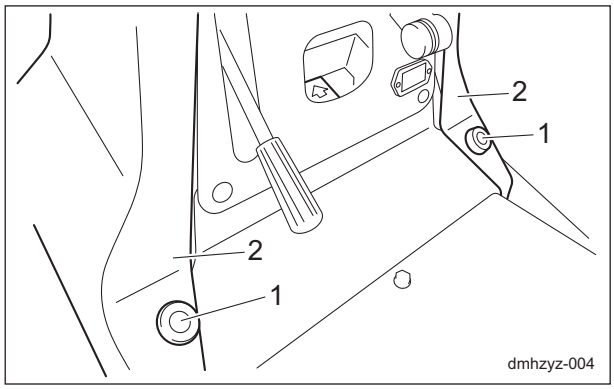

Hydraulic Oil Supply_001

1	Dimple knobs
2	Front cover

2. Remove the bolts, and then remove the cover.

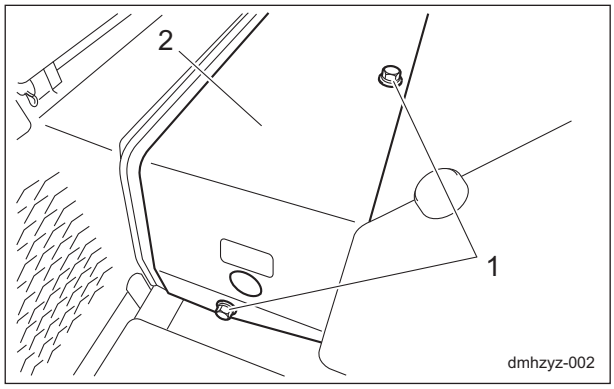

Hydraulic Oil Supply_002

1	Bolt
2	Cover

3. If the oil level is low, open the tank cap and supply oil.

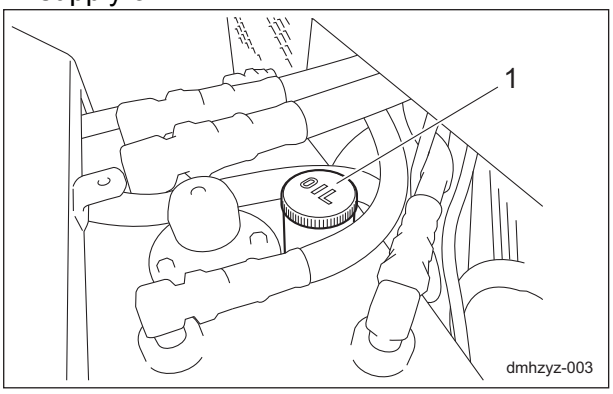

Hydraulic Oil Supply_003

1	Tank cap

4. Start the engine, raise and lower the rake, and repeatedly move forward and backward several times with the rake raised.
5. Raise the rake and maintain that position on a level surface, and then check to see if the oil level is at the middle of the oil gauge. If necessary, supply oil.
6. Check underneath the machine for oil leakage.

https://truckmanualshub.com/

Change of Hydraulic Oil

Warning

When you change the hydraulic oil, be sure to drain it into a bowl and discard it in accordance with local laws and regulations.

Important

If the oil emulsifies or if it becomes even slightly less transparent, change the oil immediately.

Important

Use Shell Tellus S2V32 (or equivalent) as hydraulic oil.

1. Follow the steps below to remove the old oil.
   [1] Start and run the engine to warm up the oil. On a level surface, lower the rake, stop the engine, remove the drain plug on the hydraulic tank, and then drain the old oil into a container.
   [2] Wind new sealing tape on the drain plug, and then attach it to the hydraulic tank.

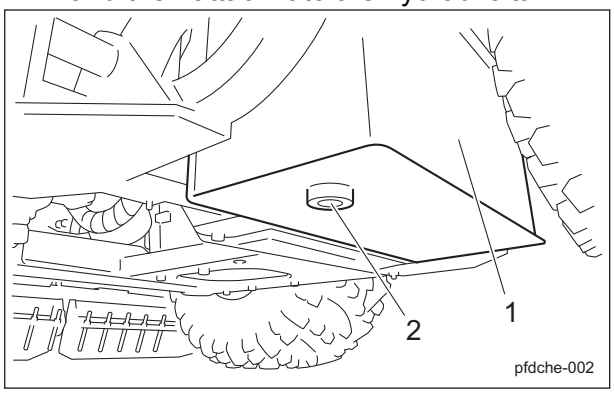

Change of Hydraulic Oil_001

1	Hydraulic tank
2	Drain plug

2. Remove the tank cap, pour new oil from the fill port until the oil level reaches the middle of the oil gauge on the hydraulic tank, then replace the tank cap.
   The hydraulic tank capacity is approximately 15.0 dm^3 (15.0 L).
3. Start the engine, raise and lower the rake, and repeatedly move forward and backward several times with the rake raised.
4. Raise the rake and maintain that position on a level surface, and then check to see if the oil level is at the middle of the oil gauge. If necessary, supply oil.
5. Check underneath the machine for oil leakage.

Hydraulic Hoses

Inspection of Hydraulic Hoses

Warning

When checking the hydraulic circuit for pinhole leaks or oil leakage from nozzles, do not use your hands. Use items such as paper or corrugated cardboard to find leakage points.
Be extremely careful with high-pressure oil as it may pierce your skin, resulting in personal accidents.

1. Every day, check the pipes and hoses to make sure that there is no oil leakage, circuit damage, looseness, wear, connector looseness or weather or chemical deterioration.
   Make any necessary repairs before operating the machine.

https://truckmanualshub.com/

Air Cleaner

Inspection of Air Cleaner

For details on handling the engine, please refer to the separate Engine Handling Manual.
The air cleaner is a component that removes dirt from the intake air to prevent wear of the cylinder liners and piston rings so that the engine will always operate smoothly.
A contaminated air cleaner element may cause malfunction of the engine.

1. Make sure that the outer element is neither damaged nor dirty.
2. Make sure that the inner element is neither damaged nor dirty.

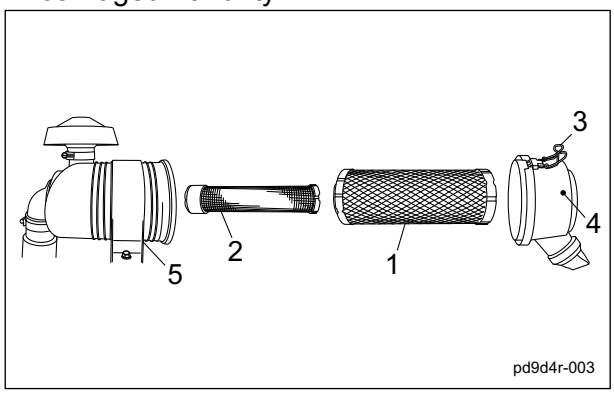

Inspection of Air Cleaner_001

1	Outer element
2	Inner element
3	Clip
4	Cover
5	Air cleaner body

Cleaning of Air Cleaner

For details on handling the engine, please refer to the separate Engine Handling Manual.
A contaminated air cleaner may cause malfunction of the engine.
To maximize the life of the engine, clean the air cleaner properly.

Caution

When cleaning the air cleaner element, do not use a petroleum solvent.
When cleaning and drying the air cleaner element, do not use compressed air.

1. Follow the steps below to clean the outer element.
   [1] Remove the clip, remove the cover, and then remove the element.
   [2] While paying close attention not to damage the element, tap a solid portion of the element to remove dust and dirt.
   If the element is extremely contaminated, replace it with a new one.
   [3] Attach the air cleaner element to the air cleaner body.
   [4] Install the cover, and then affix it securely using the clip.

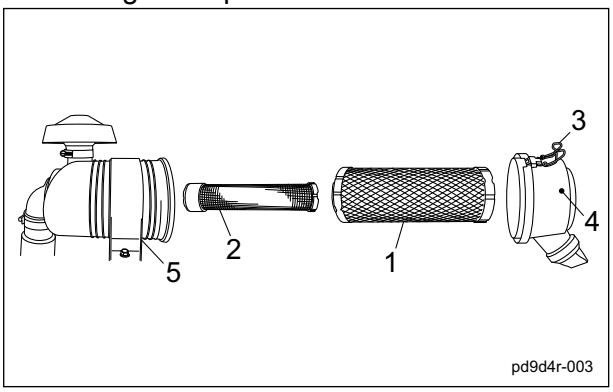

Cleaning of Air Cleaner_001

1	Outer element
2	Inner element
3	Clip
4	Cover
5	Air cleaner body

https://truckmanualshub.com/

Important

The inner element cannot be cleaned.

2. Replace the inner element every third replacement of the outer element or when it is damaged or dirty.

Change of Air Cleaner

For details on handling the engine, please refer to the separate Engine Operating Manual.
A contaminated air cleaner element may cause malfunction of the engine.
To maximize the life of the engine, replace the air cleaner element at the appropriate times.

1. The timing for replacing the air cleaner element is described below.
   [1] Replace the air cleaner element in accordance with the Maintenance Schedule.
   [2] If it is significantly contaminated, replace it, even if the hours of operation do not exceed the specified time.
   [3] Even if the hours of operation do not exceed the specified time, change it at least once per year.
2. Replace the air cleaner element in the same manner as cleaning the air cleaner. (See "Cleaning of Air Cleaner" (Page 4-6) .)

Battery

Inspection of Battery

For details on handling the battery, please refer to the separate Battery Instruction Manual.

Danger

Keep fire away while inspecting or charging the battery.
The battery may explode.

Warning

Do not allow the battery fluid level to become lower than the LOWER LEVEL (minimum fluid level line).
The battery may explode if it is used or charged while the battery fluid level is at the LOWER LEVEL (minimum fluid level line).

1. Clean the areas around the battery fluid level lines using a cloth dampened with water.
2. Make sure that the battery fluid level is between the UPPER LEVEL (maximum fluid level line) and the LOWER LEVEL (minimum fluid level line).

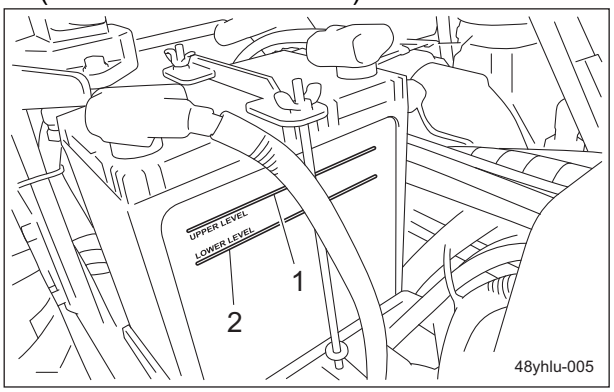

Inspection of Battery_001

1	UPPER LEVEL
2	LOWER LEVEL

https://truckmanualshub.com/

Supply of Battery Fluid

For details on handling the battery, please refer to the separate Battery Instruction Manual.

Danger

Be careful not to let your skin, eyes or clothes, etc., come into contact with battery fluid (electrolyte) or accidentally swallow the fluid. Should your skin or clothes come into contact with electrolyte, immediately wash them away with water.

Warning

When you supply battery fluid, wear protective garments and safety glasses, etc.

1. If the battery fluid level is lower than halfway between the UPPER LEVEL (maximum line) and LOWER LEVEL (minimum line), add purified water up to the UPPER LEVEL (maximum line).

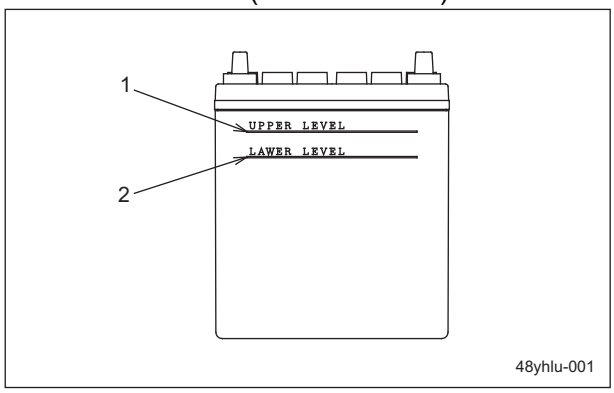

Supply of Battery Fluid_001

1	UPPER LEVEL
2	LOWER LEVEL

Tire

Inspection of Tires

1. Check the pneumatic pressure of the tires.
2. Make sure that there are no cracks, damage or abnormal wear.

Tire size	Pneumatic pressure
Front wheel (PD21 x 11.00 - 10)	70 kPa (0.7 kgf/cm^2)
Rear wheel (25 x 13.00 - 9)	40 kPa (0.4 kgf/cm^2)

Brake

Inspection of Brake

While traveling, depress the brake pedal firmly to make sure that the brake is applied effectively.

Inspection of Parking Brake

1. With the brake pedal firmly depressed and locked with the lock fitting, check that the brake is applied effectively.
2. Firmly depress the brake pedal and release the lock fitting to release the brake pedal, and then check that the brake is not applied.

Belt

Inspection of Belt

Caution

The engine must be stopped when the belt is inspected.
Be careful since the belt may rotate and something may get caught in it, even if the engine is stopped.

Caution

The engine muffler is near the belt.
Inspect the belt after the muffler has sufficiently cooled.

1. Press the middle of the belt with your finger to check the belt tension.
2. Make sure that there are no cracks, damage or abnormal wear.

Steering wheel

Inspection of Steering Chain

Excessive play with a loose steering chain may stretch the chain further while you may feel a heavy steering wheel with an excessively tight chain and the chain and wheel may wear prematurely.

1. Make sure that the steering chain is not overtightened and is not loose.
2. Make sure that there are no cracks, damage or abnormal wear.

https://truckmanualshub.com/

Around the Engine

Inspection of Engine-Associated Parts

For details on handling the engine, please refer to the separate Engine Operating Manual.

1. Check the fuel system parts for loosened or cracked joints and leakage. Replace the parts if necessary.
2. Blow compressed air to clean any grass or flammable materials that may be attached inside or around the muffler.

Engine Oil

Inspection of Engine Oil

For details on handling the engine, please refer to the separate Engine Handling Manual.

Important

Securely tighten the oil level gauge and oil filler cap.
If they are insufficiently tightened or there is an insufficient seal, negative pressure inside the crankcase cannot be maintained, causing the oil to rise, possibly resulting in the production of white smoke and damage to the engine.

1. Stop the engine, wait for 10 to 20 minutes for the engine to cool down, and then check the engine oil.
2. Position the machine so that the engine will be level, then insert the oil level gauge all the way to check the oil level.

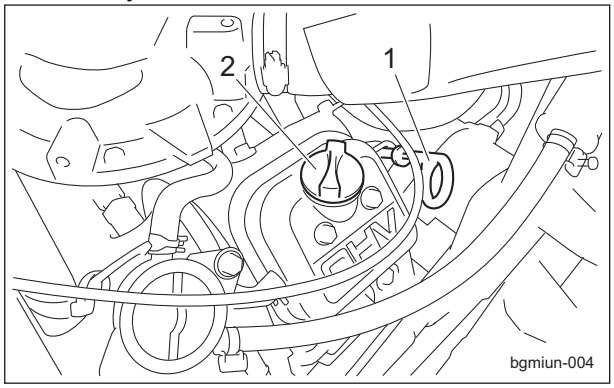

Inspection of Engine Oil_001

1	Oil level gauge
2	Oil filler cap

3. The appropriate oil level should be between the upper and lower limit lines on the gauge.

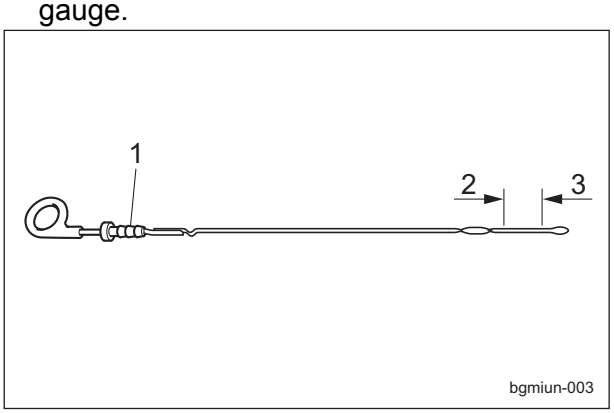

Inspection of Engine Oil_002

1	Oil level gauge
2	Upper limit
3	Lower limit

https://truckmanualshub.com/

Supply of Engine Oil

For details on handling the engine, please refer to the separate Engine Handling Manual.

Important

Do not fill too much engine oil. Otherwise, the engine may be damaged.

Important

Do not mix different types of engine oil.

Important

Be sure to use engine oil that is classified as API Service Grade CF or higher, with an SAE Viscosity that is appropriate for the operating environment (ambient temperature).

Important

Securely tighten the oil level gauge and oil filler cap.
If they are insufficiently tightened or there is an insufficient seal, negative pressure inside the crankcase cannot be maintained, causing the oil to rise, possibly resulting in the production of white smoke and damage to the engine.

1. If the engine oil level is lower than the lower limit line on the oil level gauge, supply engine oil through the oil filling port. Remove the oil filler cap, and then supply new engine oil until the oil reaches a level in between the upper and lower limit lines on the oil level gauge.
2. Re-place the oil filler cap.

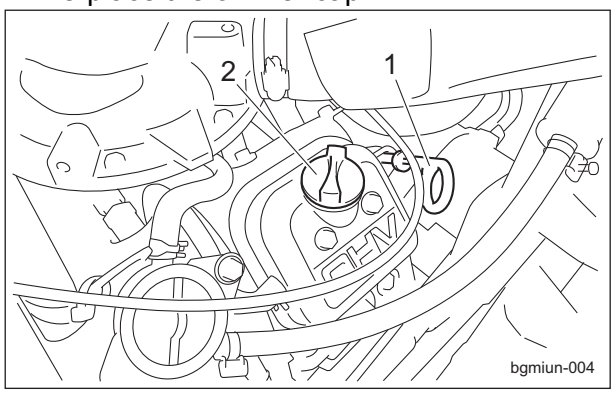

Supply of Engine Oil_001

1	Oil level gauge
2	Oil filler cap

3. It will take a while for the supplied engine oil to descend into the oil pan.
   Check the oil level again 10 to 20 minutes after supplying the oil.

Change of Engine Oil

For details on handling the engine, please refer to the separate Engine Handling Manual.

Warning

When you change the engine oil, be sure to drain it into a bowl and discard it in accordance with local laws and regulations.

Caution

Be careful with hot oil, which could cause burns if it contacts your skin.

Important

Be sure to use engine oil that is classified as API Service Grade CF or higher, with an SAE Viscosity that is appropriate for the operating environment (ambient temperature).

Important

Securely tighten the oil level gauge and oil filler cap.
If they are insufficiently tightened or there is an insufficient seal, negative pressure inside the crankcase cannot be maintained, causing the oil to rise, possibly resulting in the production of white smoke and damage to the engine.

Change the engine oil more frequently if the engine oil is contaminated and, especially, if you use the machine in dusty areas or operate the engine at high loads or in high temperatures.

1. Move the machine onto a level surface, stop the engine, remove the drain plug while the engine oil is warm, and then drain the oil into a bowl.

https://truckmanualshub.com/

2. Wind new sealing tape around the drain plug, and then replace it in the engine.

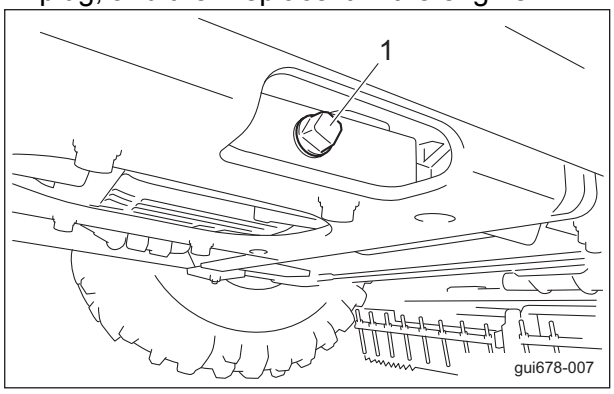

Change of Engine Oil_001

1	Drain plug

3. Engine oil is supplied through the oil filling port.
   Remove the oil filler cap, and then supply new engine oil until the oil reaches a level in between the upper and lower limit lines on the oil level gauge.
4. Supply 1.0 dm^3 (1.0 L) of engine oil, remove the oil level gauge, and then insert it all the way to check the oil level.
5. After checking the oil level with the oil level gauge, add more engine oil if it is insufficient.
   The engine oil quantity (including the oil filter) is approximately 1.6 dm^3 (1.6 L).
6. Replace the oil filler cap.

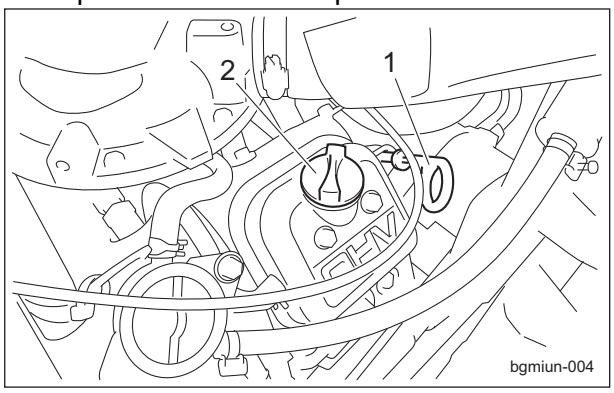

Change of Engine Oil_002

1	Oil level gauge
2	Oil filler cap

7. It will take a while for the supplied engine oil to descend into the oil pan.
   Check the oil level again 10 to 20 minutes after supplying the oil.

Fuel filter

Inspection of Fuel Filter

The fuel filter is positioned between the fuel strainer and the engine, and cleans the fuel flowing into the carburetor.
When the fuel flow becomes insufficient, replace the fuel filter if necessary.

1. Make sure that there is no fuel leakage.
2. Make sure that the fuel filter is not damaged or dirty.

Change of Fuel Filter

Caution

The fuel filter cannot be disassembled or cleaned.

If dust or dirt accumulates in the fuel filter, the fuel flow will become insufficient.
Replace the fuel filter at the appropriate times.

1. The timing for replacing the fuel filter is described below.
   [1] Replace the fuel filter in accordance with the Maintenance Schedule.
   [2] If it is significantly contaminated, replace it, even if the hours of operation do not exceed the recommended number of hours.
   [3] Even if the hours of operation do not exceed the recommended number of hours, replace it once per year.

https://truckmanualshub.com/

2. Follow the steps below to replace the fuel filter.
   [1] Open the rear cover, and then remove the fuel filter.
   [2] Install a new fuel filter with the arrow marked on it pointing toward the engine.

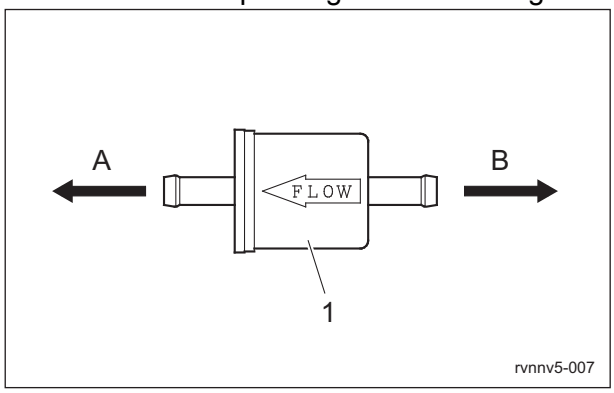

Change of Fuel Filter_001

1	Fuel filter
A	Engine
B	Fuel cock

Fuel

Inspection of Fuel Quantity

Observe the fuel gauge located on the fuel tank to check the fuel level.

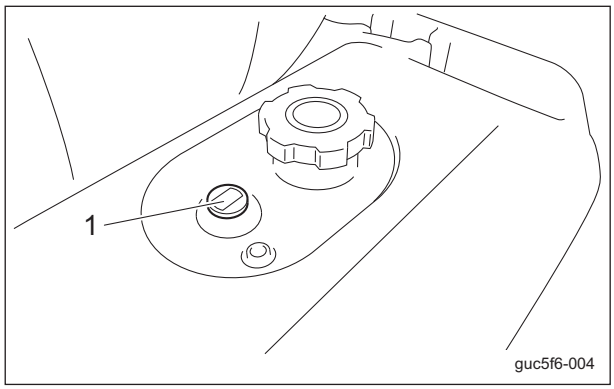

Inspection of Fuel Quantity_001

1	Fuel gauge

Fuel Supply

Danger

Do not supply fuel above F (FULL) level of the fuel gauge.

If the fuel gauge located on the fuel tank indicates a level close to E (EMPTY), supply lead-free gasoline for automobiles at your earliest convenience.
The fuel tank capacity is approximately 15.0 dm^3 (15.0 L).

Oil Leakage

Inspection of Oil Leakage

Caution

When performing maintenance on the hydraulic system, lower the rake.

After approximately 50 hours of operation, some tightened portions may be loosened and oil may leak.
Check the bottom of the machine for oil leakage.

https://truckmanualshub.com/

Tightening torques

Standard tightening torques

Bolts and Nuts

Important

A number of bolts are used in each part of this machine.
Be sure to re-tighten the bolts and nuts, because they may be loosened at the earlier stage of the use.

As to the bolts and nuts without any special instruction, tighten them in appropriate tightening torque with proper tool.
Too much tightening may cause the looseness or damage of the screw.
The strength of tightening is determined by types of screws, strength, the friction of thread face or base face and others.
The table below is for the galvanized or parkerized bolts.
In case that the strength of internal thread is weak, it is not applied.
Do not use rusty or sand attached "screw."
Otherwise, it may cause insufficient tightening even if you apply the specified tightening torque.
The friction of the screw face becomes higher and the tightening torque is canceled out by the friction, therefore sufficient tightening cannot be applied.
If "screw" is wet by water or oil, do not tighten it with normal tightening torque.
If the screw is wet, the torque coefficient will get smaller and it may result in too much tightening.
Too much tightening may cause looseness by the screw stretched or result in damage.
Do not use a bolt experienced too much burden.
Using the impact wrench requires the skill.
Do exercise as much as possible for steady tightening.

Nominal diameter	General bolt		
	Strength classification 4.8		
	tib3yb-001		
	N-m	kgf-cm	lb-in
M5	3 - 5	30.59 - 50.99	26.55 - 44.26
M6	7 - 9	71.38 - 91.77	61.96 - 79.66
M8	14 - 19	142.76 - 193.74	123.91 - 168.17
M10	29 - 38	295.71 - 387.49	256.68 - 336.34
M12	52 - 67	530.24 - 683.20	460.25 - 593.02
M14	70 - 94	713.79 - 958.52	619.57 - 831.99
M16	88 - 112	897.34 - 1142.06	778.89 - 991.31
M18	116 - 144	1,182.85 - 1,468.37	1,026.72 - 1,274.54
M20	147 - 183	1,498.96 - 1,866.05	1,301.10 - 1,619.73
M22	295	3,008.12	2,611.05
M24	370	3,772.89	3,274.87
M27	550	5,608.35	4,868.05
M30	740	7,545.78	6,549.74

https://truckmanualshub.com/

Nominal diameter	Heat-treated bolt					
	Strength classification 8.8			Strength classification 10.9		
	tib3yb-002			tib3yb-003		
	N-m	kgf-cm	lb-in	N-m	kgf-cm	lb-in
M5	5 - 7	50.99 - 71.38	44.26 - 61.96	7 - 10	71.38 - 101.97	61.96 - 88.51
M6	8 - 11	81.58 - 112.17	70.81 - 97.36	14 - 18	142.76 - 183.55	123.91 - 159.32
M8	23 - 29	234.53 - 295.71	203.57 - 256.68	28 - 38	285.52 - 387.49	247.83 - 336.34
M10	45 - 57	458.87 - 581.23	398.30 - 504.51	58 - 76	591.43 - 774.97	513.36 - 672.68
M12	67 - 85	683.20 - 866.75	593.02 - 752.34	104 - 134	1,060.49 - 1,366.40	920.50 - 1186.03
M14	106 - 134	1,080.88 - 1,366.40	938.21 - 1,186.03	140 - 188	1,427.58 - 1,917.04	1,239.14 - 1,663.99
M16	152 - 188	1,549.94 - 1,917.04	1,345.35 - 1,663.99	210 - 260	2,141.37 - 2,651.22	1,858.71 - 2,301.26
M18	200 - 240	2,039.40 - 2,447.28	1,770.20 - 2,124.24	280 - 340	2,855.16 - 3,466.98	2,478.28 - 3,009.34
M20	245 - 295	2,498.27 - 3,008.12	2,168.50 - 2,611.05	370 - 450	3,772.89 - 4,588.65	3,274.87 - 3,982.95
M22	-	-	-	530	5,404.41	4,691.03
M24	-	-	-	670	6,831.99	5,930.17
M27	-	-	-	1,000	10,197.00	8,851.00
M30	-	-	-	1,340	14,628.78	11,860.34

Note:
The same values are applied to "fine screw thread."

https://truckmanualshub.com/

Principal tightening torques

Tightening Torque by Model

SP05A
Tighten the following bolts and nuts at the torque specified in the table.
For thread locking adhesive, apply a middle strength thread locker (ThreeBond 1322 anaerobic adhesives).

Location		Code	Part name	Tightening torque			Thread locking adhesive
				N-m	kgf-cm	lb-in	
2WD front wheel	Front wheel bracket	K0000100202	Bolt, M10-20	29 - 38	295.71 - 387.49	256.68 - 336.34	—
	Wheel	K0034120302	Bolt, heat-treated M12-30P1.5	67 - 85	683.20 - 866.75	593.02 - 752.34	—
	Rhombic flange unit	K0661205000	Rhombic flange unit UCFL205	—	—	—	M6 set screw
3WD front wheel	Front wheel bracket	K0000100202	Bolt, M10-20	29 - 38	295.71 - 387.49	256.68 - 336.34	—
	Motor mounting base	K0160000492	24 special nut P1.5	180 - 200	1835.46 - 2039.40	1593.18 - 1770.20	—
	Wheel	K0014120602	Bolt, heat-treated M12-60P1.5	67 - 85	683.20 - 866.75	593.02 - 752.34	—
	Spacer	K0014120502	Bolt, heat-treated M12-50P1.5	67 - 85	683.20 - 866.75	593.02 - 752.34	—
	Rhombic flange unit	K0661205000	Rhombic flange unit UCFL205	—	—	—	M6 set screw
Front wheel arm		K0013000502	Bolt, heat-treated M10-50	29 - 38	295.71 - 387.49	256.68 - 336.34	—
Rear wheel	Wheel	K0034120302	Bolt, heat-treated M12-30P1.5	67 - 85	683.20 - 866.75	593.02 - 752.34	—
	Wheel mounting base	K0160000492	24 special nut P1.5	180 - 200	1,835.46 - 2,039.40	1,593.18 - 1,770.20	M24 screw

https://truckmanualshub.com/

Adjustment Before Operating

Adjustment of Steering Wheel

Warning

Since it is dangerous, do not adjust the steering wheel while traveling.

The steering wheel can be adjusted up or down with the tilt lever.
Adjust the position according to the operator's body size.
Shift the tilt lever to the "FREE" position, move the steering wheel to the position that suits your work requirements, and then shift the tilt lever to the "LOCK" position to secure the steering wheel in place.
The tilt lever is located at the center of the driver's seat.

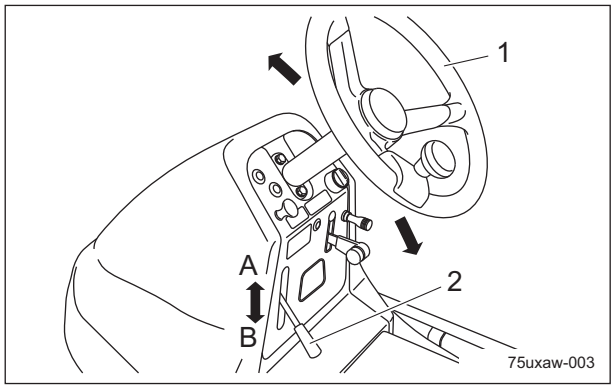

Adjustment of Steering Wheel_001

1	Steering wheel
2	Tilt lever
A	FREE
B	LOCK

Adjustment of Seat

Use the seat adjustment lever to adjust the seat.
Adjust the position according to the operator's body size.

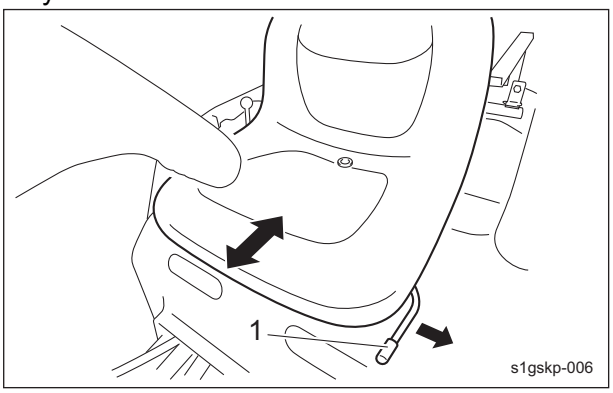

Adjustment of Seat_001

1	Adjustment lever

https://truckmanualshub.com/

Adjustment of Speed Adjustment Plate

Warning

Since it is dangerous, do not adjust the speed adjustment plate while traveling.

The height of the speed adjustment plate can be adjusted with the bolts.
Use the speed adjustment plate to operate the machine at a constant speed.

1. Loosen the bolts.
2. Determine the operating speed, adjust the height of the speed adjustment plate, and then tighten the bolts.

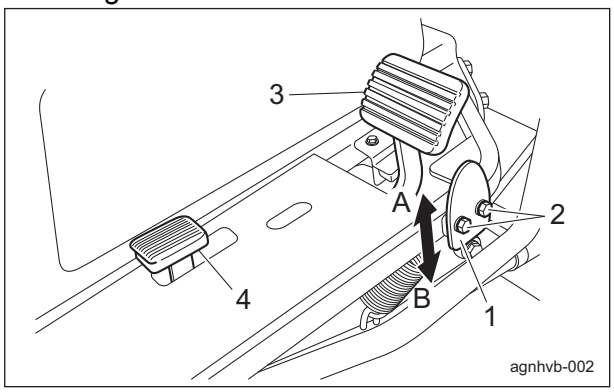

Adjustment of Speed Adjustment Plate_01

1	Speed adjustment plate
2	Bolt
3	Forward pedal
4	Reverse pedal
A	Slow
B	Fast

Adjustment of Rake

1. The rake can be adjusted with the nut.
   [1] On a level surface, lower the rake, and then drive the machine forward about approximately 200 mm (7.87 in).
   [2] Place a wooden board with a thickness of about 15 mm (0.59 in) under the warp board.
   [3] Adjust the fork prong bar to a position where the rake load is applied to the wooden board and the tip of the fork prong bar lightly touches the ground, and then lock it in place with the nut.

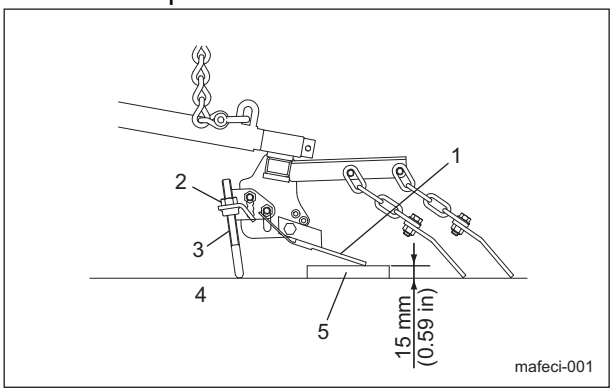

Adjustment of Rake_001

1	Warp board
2	Nut
3	Fork prong bar
4	Flat concrete surface
5	Wooden board, etc.

https://truckmanualshub.com/

2. When adjusting the links of the cross-link chains, adjust the rake stopper.
   As a standard, 7 links of the chain are used.
   [1] Loosen the nut.
   [2] Raise the rake.
   [3] Adjust the rake stopper so that it lightly touches the rake, and then tighten the nut.
   [4] Raise and lower the rake to check that it lightly touches the rake stopper.

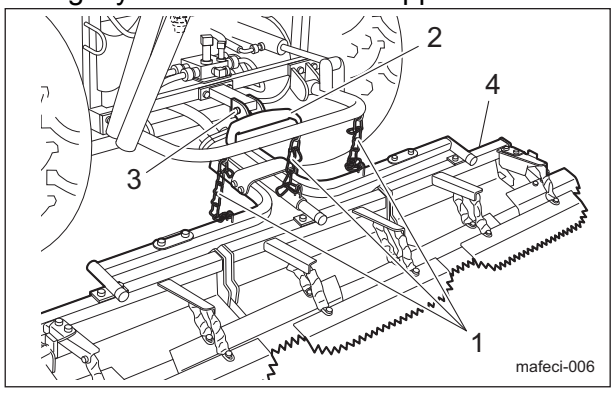

Adjustment of Rake_002

1	Cross-link chains
2	Rake stopper
3	Nut
4	Rake

Adjustment of Blade

The blade can be adjusted with the bolt.

1. Loosen the bolt, and then move the small blade to the desired position.
   [1] Toward A to take a thin layer from the surface of the sand
   [2] Toward B to take a thick layer from the surface of the sand
2. Tighten the bolt.

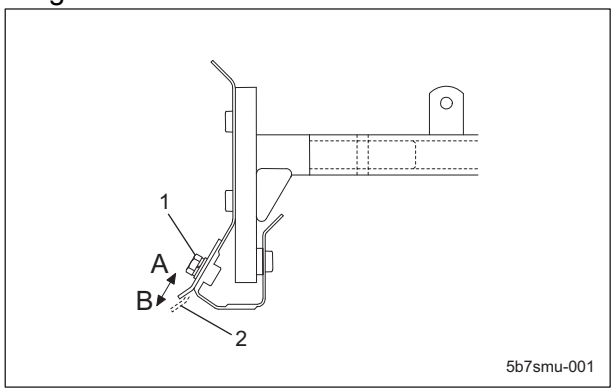

Adjustment of Blade_001

1	Bolt
2	Small blade

Adjustment of Finishing Brush

The height of the finishing brush can be adjusted with the clutch lever.
Adjust the height of the brush from the ground according to the bunker conditions.
The mounting height can be adjusted to one of four levels.

1. When traveling, adjust to the lowest position.

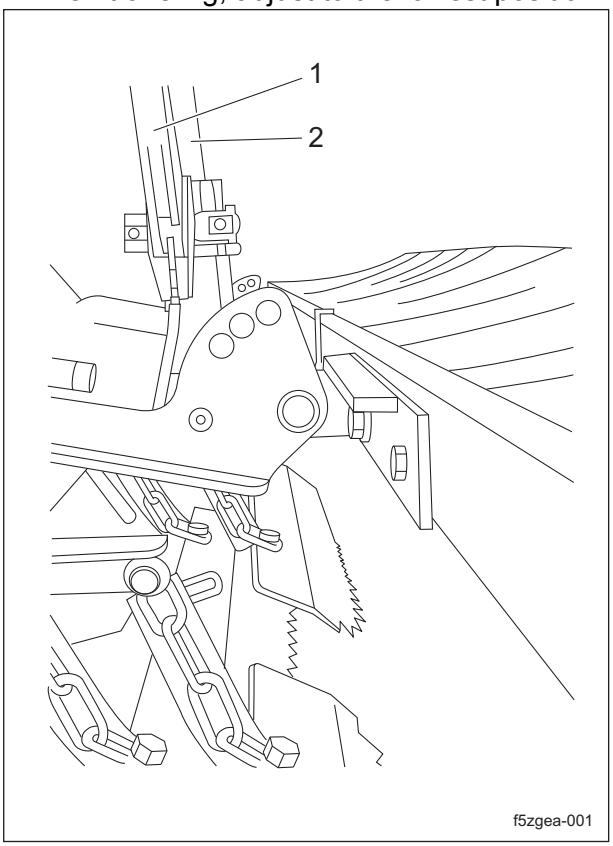

Adjustment of Finishing Brush_001

https://truckmanualshub.com/

2. When used for light finishing, adjust to the position second from the bottom.

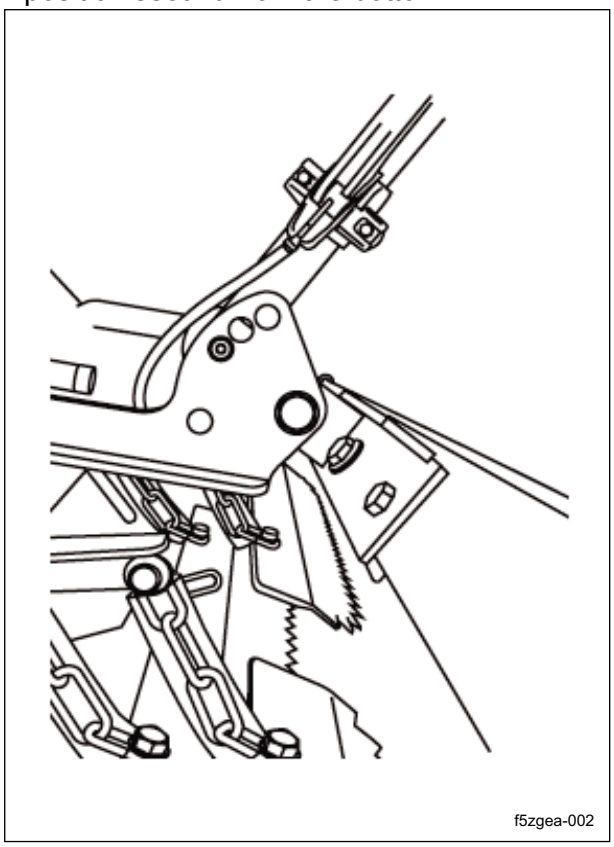

Adjustment of Finishing Brush_002

3. When used for normal finishing, adjust to the position third from the bottom.

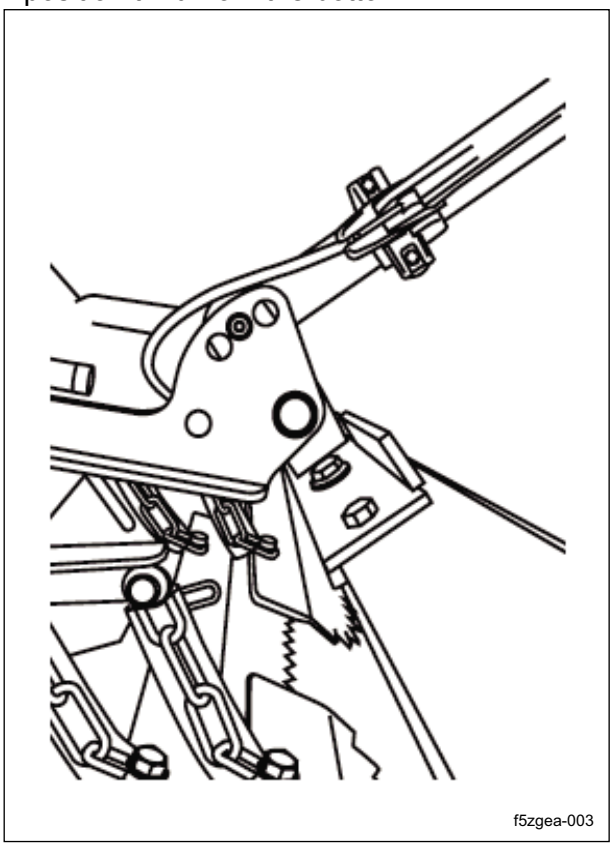

Adjustment of Finishing Brush_003

https://truckmanualshub.com/

4. When used for heavy finishing, adjust to the highest position.

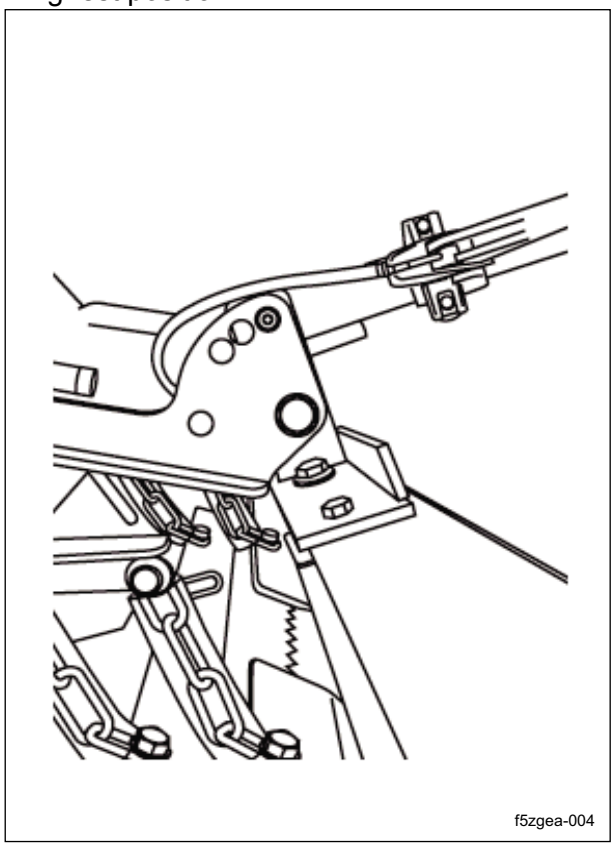

Adjustment of Finishing Brush_004

https://truckmanualshub.com/

Procedure to Start / Stop Engine

Start / Stop of Engine

Procedure to Start Engine

Warning

Before starting the engine, make sure that there are no other people or obstacles around the machine.

Caution

Do not start the engine in a building with insufficient ventilation.

Caution

Make sure that the covers are correctly in place and are not damaged.

Important

Starter operation must take 15 seconds or less. If the engine does not start, stop using the battery for 30 to 60 seconds to avoid exhausting the battery.

1. Open the fuel cock.
   This is near the fuel tank.
2. Sit on the seat.
3. Make sure that the parking brake is applied.
4. Make sure that the traveling pedal is in neutral position.
5. Move the throttle lever to the middle position between "High" and "Low".
6. Pull the choke knob.
   Pull the choke knob half way for restarting, as necessary.
7. Switch the ignition key to the "START" position.
8. Check that the engine has started, and then return the choke knob to its original position.
9. Shift the throttle lever to "Low", and then warm up the engine for 1-2 minutes.
10. Gradually move the throttle lever to "High".

Procedure to Stop Engine

1. Set the traveling pedal in neutral position.
2. Apply the parking brake.
3. Move the throttle lever to "Low", and continue idling for 1-2 minutes.
4. Switch the ignition key to the "OFF" position.
5. Make sure that the engine has stopped.
6. Remove the ignition key.
7. Leave the driver's seat.
8. Close the fuel cock.
   The fuel cock is located near the fuel tank.

Safety Mechanisms

This machine features a safety device for starting/stopping the engine.

1. As for starting the engine, the safety device prevents the engine from starting unless it meets each of the following three conditions.
   - An operator is sitting on the seat.
   - The parking brake is applied.
   - The traveling pedal is set to the neutral position.
2. In the event the operator leaves the seat with the engine running, the safety device will be activated and will stop the engine under any of the following conditions:
   - The operator leaves the seat without applying the parking brake.
   - The traveling pedal is operated after the parking brake is applied and the operator leaves the seat.

Warning Mechanisms

This machine features a warning mechanism to prevent operation while the parking brake is applied.

1. If the traveling pedal is depressed while the parking brake is applied, a buzzer will sound. (intermittent tone)

https://truckmanualshub.com/

Operation of Each Section

Precautions for Operating the Machine

Caution

Under any circumstances drive the machine at such a speed that you can stop it immediately for emergencies.

Cautions for when You Leave the Machine

Caution

If the brakes are not sufficiently effective, use the wheel stoppers to secure the machine.

Operation Decals

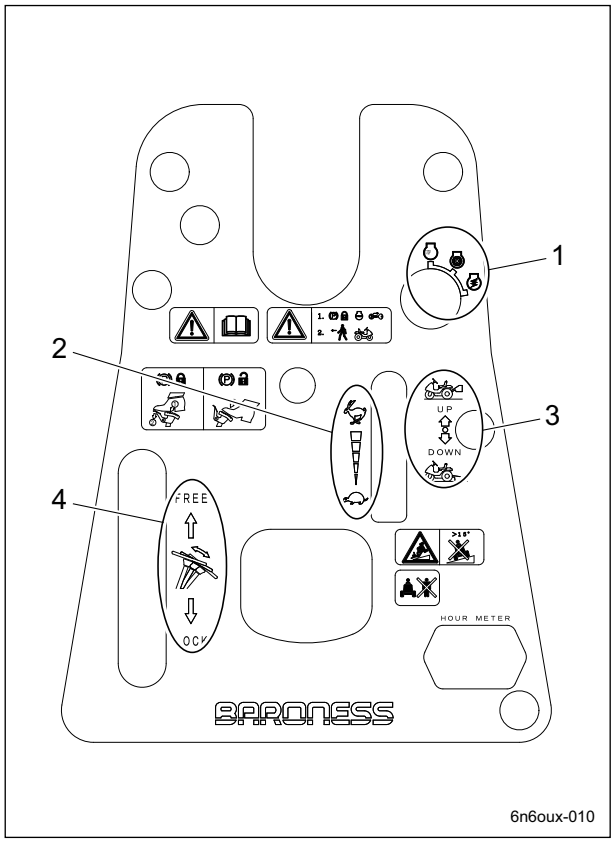

Operation Decals_001

1	Ignition key
2	Throttle lever
3	Up/down lever
4	Tilt lever

Throttle Lever

The throttle lever is located on the right side below the steering wheel and enables you to adjust the engine rpm.
Move the throttle lever toward "High" to increase the engine rpm, and toward "Low" to reduce the rpm.
Note:
The factory default engine rpm (maximum) is set to 3,000 rpm.

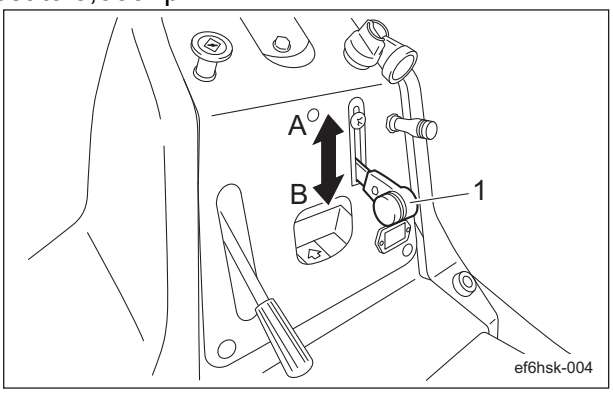

Throttle Lever_001

1	Throttle lever
A	High
B	Low

Choke Lever

The choke lever is located on the left side below the steering wheel and its knob is to be pulled when starting the engine.
Pull the knob half way for restarting, as necessary.

https://truckmanualshub.com/

Up/Down Lever

Important

If the engine rpm is low, the rake will not be raised and lowered due to insufficient hydraulic oil.
Move the throttle lever above the middle position toward "High".

The up/down lever is on the right side below the steering wheel and is used to operate the rake.

- Shift the up/down lever to the "UP" position to raise the rake.
  When the lever is released, it returns to the neutral position and stops there.
- Shift the up/down lever to the "DOWN" position to lower the rake.
  When the lever is released, it returns to the neutral position and stops there.

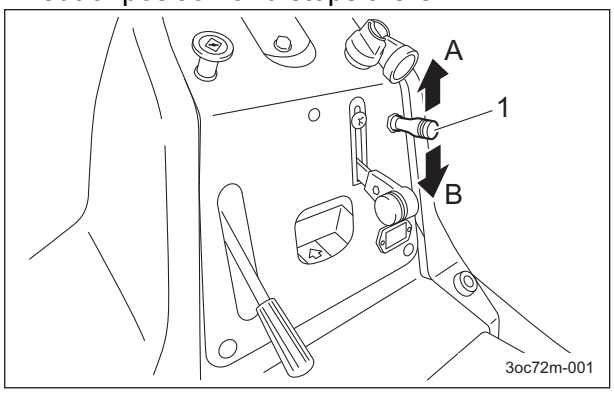

Up/Down Lever_001

1	Up/down lever
A	UP
B	DOWN

2WD/3WD Selector Lever

Warning

When switching between 2WD and 3WD operation, make sure to stop the machine completely.

The 2WD/3WD selector lever is on the right side of the driver's seat and is used to switch the traveling and operation mode.

- Shift the 2WD/3WD selector lever to the "2WD" position to operate in rear-wheel 2WD.
- Shift the 2WD/3WD selector lever to the "3WD" position to operate in all-wheel 3WD.

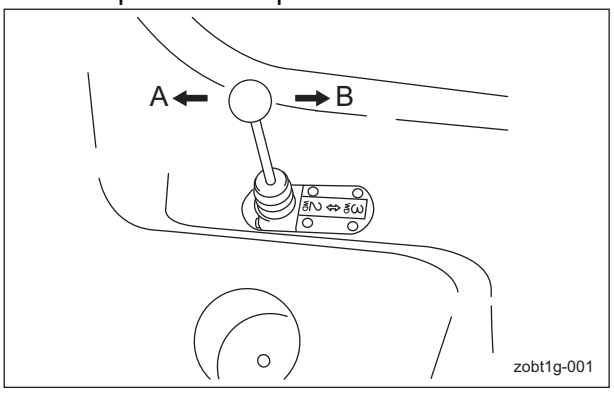

2WD/3WD Selector Lever_001

A	2WD
B	3WD

* Use of 2WD or 3WD

- Use 2WD when working with the blade and high-speed traveling (maximum 16 km/h) is possible.
- Use 3WD when working on steeply sloped or soft bunkers or bunkers with a small diameter.

https://truckmanualshub.com/

Traveling Pedal

The traveling pedal is located in the right foot area.
When depressed forward, the machine travels forward. When depressed backward, the machine travels in reverse.
If the pedal is secured with the speed adjustment plate during operation, the machine can be operated at a constant speed.

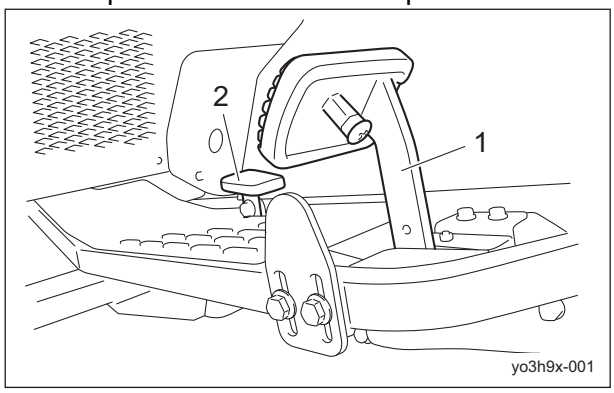

Traveling Pedal_001

1	Forward
2	Backward

Brake Pedal

Caution

When leaving the driver's seat, park the machine on a stable, flat surface and be sure to apply the parking brake.

Caution

Do not park on a slope.

The brake pedal is located in the left foot area.
To stop the machine, depress the brake pedal all the way firmly.
When parking, firmly depress the brake pedal and lock it with the lock fitting.
To release it, firmly depress the brake pedal and release the lock fitting.

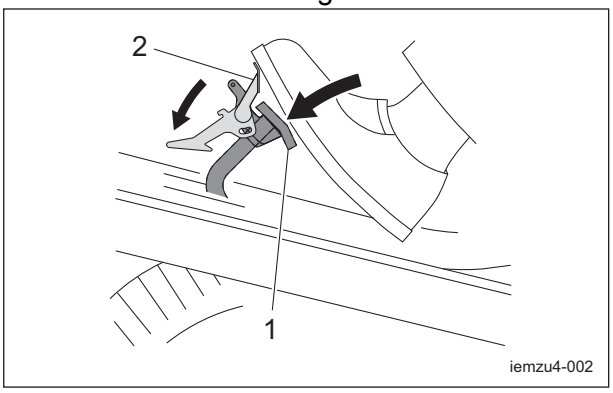

Brake Pedal_001

1	Brake pedal
2	Lock fitting

https://truckmanualshub.com/

Front Cover

Caution

Do not open the cover in strong winds.

Caution

When closing the cover, be careful not to pinch your hands.

Caution

Stop the engine when performing recommended maintenance operations that do not require the engine to be running when the hood is opened.
When performing maintenance with the engine running, stay away from moving parts.

The front cover is in front of the steering wheel and is opened in order to perform maintenance.

1. Remove the dimple knobs.

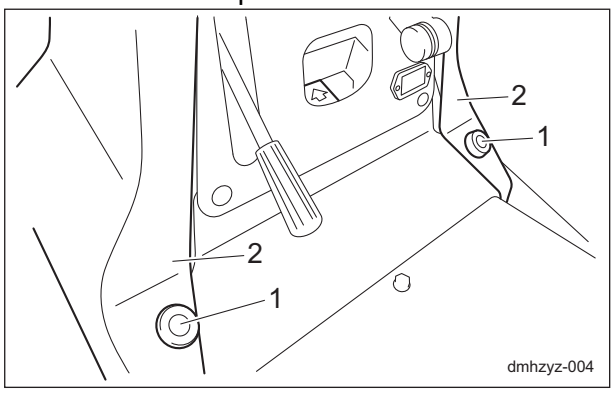

Front Cover_001

1	Dimple knobs
2	Front cover

2. Open the front cover, and then tilt it forward until the wire is fully extended.

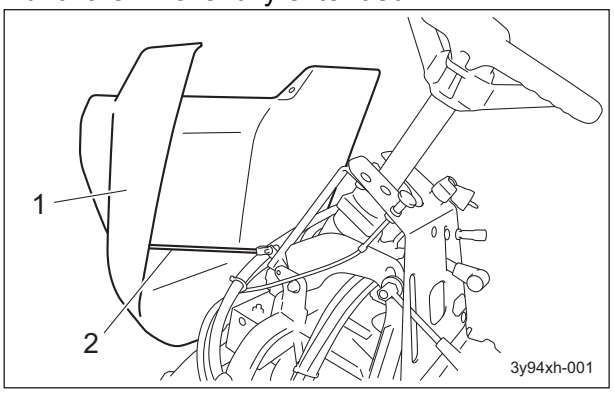

Front Cover_002

1	Front cover
2	Wire

Rear Cover

Caution

Do not open the cover in strong winds.

Caution

When closing the cover, be careful not to pinch your hands.

The rear cover is under the seat and is opened in order to perform maintenance.

1. Release the cover fastener.

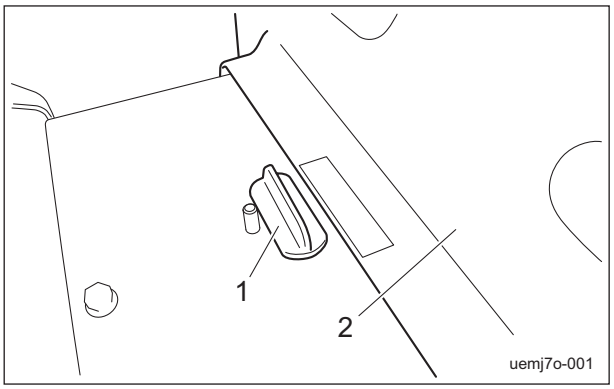

Rear Cover_001

1	Cover fastener (released)
2	Rear cover

https://truckmanualshub.com/

2. Open the rear cover, and then lift it until the gas spring is fully extended.

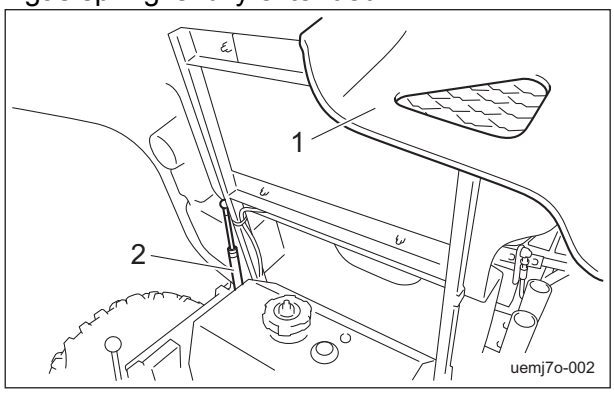

Rear Cover_002

1	Rear cover
2	Gas spring

3. When closing the rear cover, slowly lower it while firmly supporting it, and then engage the cover fastener.

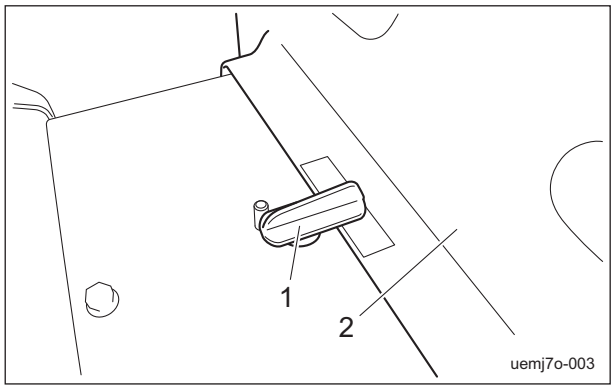

Rear Cover_003

1	Cover fastener (engaged)
2	Rear cover

Instruments

Instruments on the Operation Panel

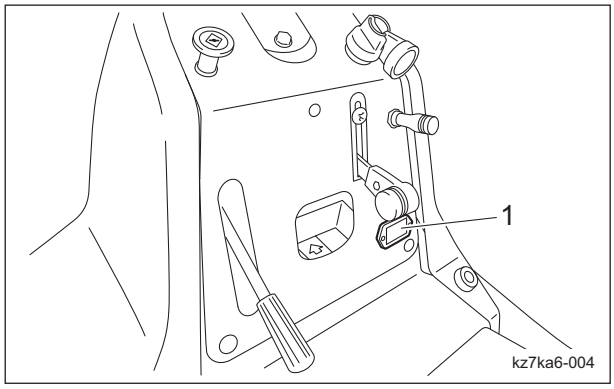

Instruments on the Operation Panel_001

1	Hour meter

Hour meter

The hour meter is located in the operation panel, and indicates the accumulated operation time of the engine.
The number in black figures on a white background is incremented every six minutes.
The number in white figures on a black background is incremented every hour.
1/10 wheel ··· black figures on a white background
Hour wheel ··· white figures on a black background

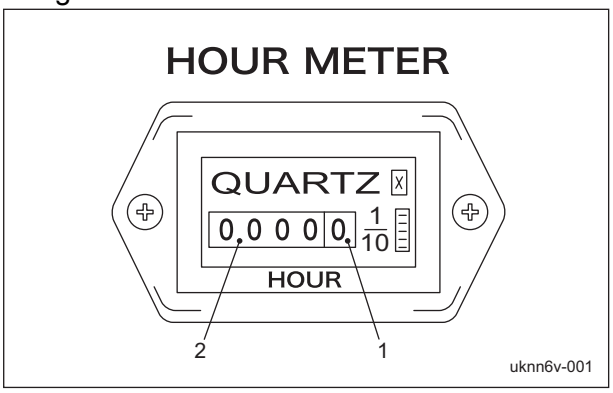

Hour meter_001

1	1/10 wheel
2	Hour wheel

https://truckmanualshub.com/

Travel of Machine

Operating Procedure

1. Start the engine.（(See "Procedure to Start Engine" (Page 4-21) .)
2. Raise the rake.
3. Firmly depress the brake pedal and release the lock fitting to release the brake pedal.
4. Slowly depress the traveling pedal.
5. The machine can start traveling.

Towing the Machine

If the machine does not travel due to engine trouble, etc., you can move it by towing it.

Caution

Tow the machine at a low speed while paying close attention.

Caution

Do not touch the unload valve except when towing the machine.

Caution

Before restarting the engine, be sure to close the unload valve.

1. Stop the engine.（(See "Procedure to Stop Engine" (Page 4-21) .)
2. Apply the parking brake and chock the wheels.
3. Release the cover fastener.
4. Open the rear cover, and then lift it until the gas spring is fully extended.
5. Loosen the lock nuts.

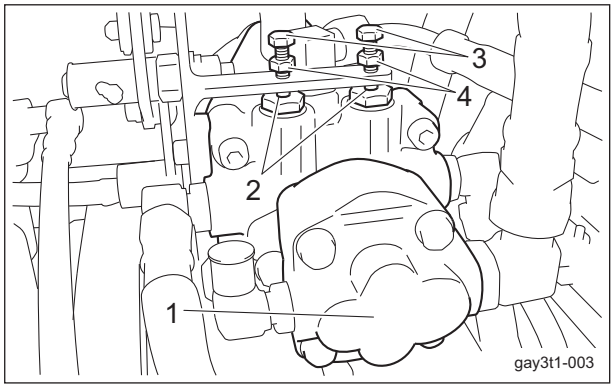

Towing the Machine_001

1	Piston pump
2	Unload valve operating pins
3	Bolt
4	Lock nut

Caution

When pushing in the unload valve operating pins, be careful about overtightening the bolts. The unload valve operating pins may be damaged.

6. Tighten the bolts, and then push in the unload valve operating pins to open the unload valve.

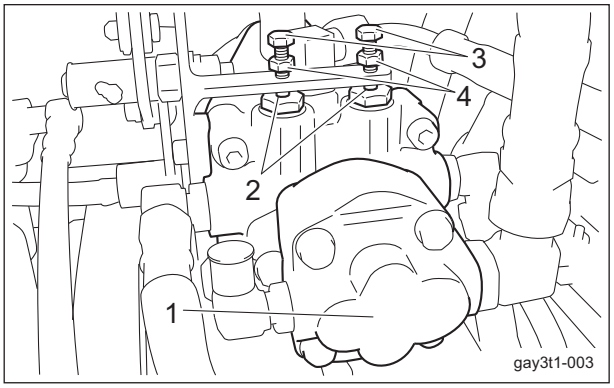

Towing the Machine_002

1	Piston pump
2	Unload valve operating pins
3	Bolt
4	Lock nut

Important

Before towing, be sure to open the unload valves in two locations.

7. Remove the wheel stoppers, and then firmly depress the brake pedal and release the lock fitting.
8. Tow the machine slowly.

https://truckmanualshub.com/

Operations

Rake

Warning

Do NOT start to move or stop the machine abruptly.
To do so is very dangerous. In addition, it may damage the hydraulic system or result in oil leakage.

Caution

Perform operations at an appropriate speed for the site and location.

Caution

Before starting operations, check that the area where the operations are to be performed is safe.

1. Start the engine.（(See "Procedure to Start Engine" (Page 4-21) .)

Important

If the engine rpm is low, the rake will not be raised and lowered due to insufficient hydraulic oil.
Move the throttle lever above the middle position toward "High".

2. Shift the up/down lever to the "UP" position to raise the rake.

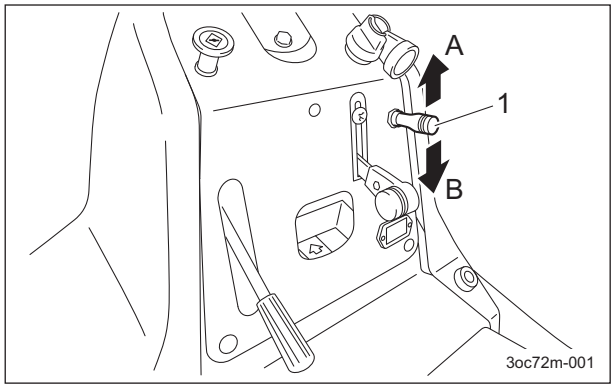

Rake_001

1	Up/down lever
A	UP
B	DOWN

3. Firmly depress the brake pedal and release the lock fitting.
   The parking brake is released at the same time.

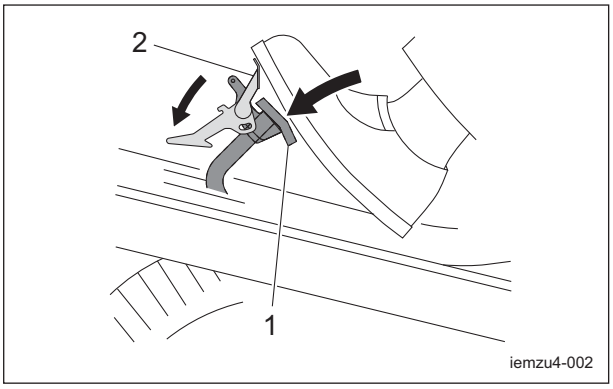

Rake_002

1	Brake pedal
2	Lock pedal

4. Gradually move the throttle lever to "High", and rev up the engine to MAX (3,000 rpm).

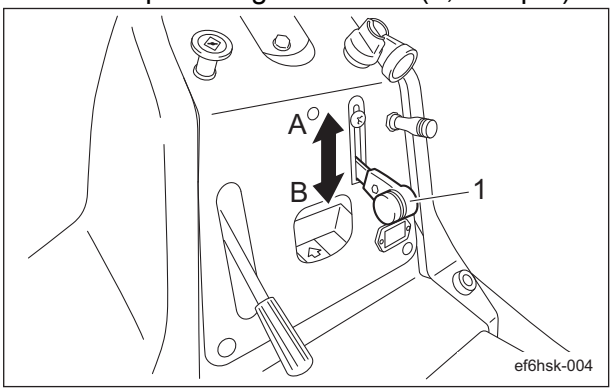

Rake_003

1	Throttle lever
A	High
B	Low

Warning

When switching between 2WD and 3WD operation, make sure to stop the machine completely.

Caution

Do not enter or leave a bunker via a steep slope or extremely uneven ground.

5. Enter the bunker.

https://truckmanualshub.com/

Caution

Do not back up (drive in reverse) with the rake, cultivator or finishing brush lowered.

6. Depress the traveling pedal to travel.
7. At the bunker area where the operation is to be started, shift the up/down lever to the "DOWN" position to lower the rake.

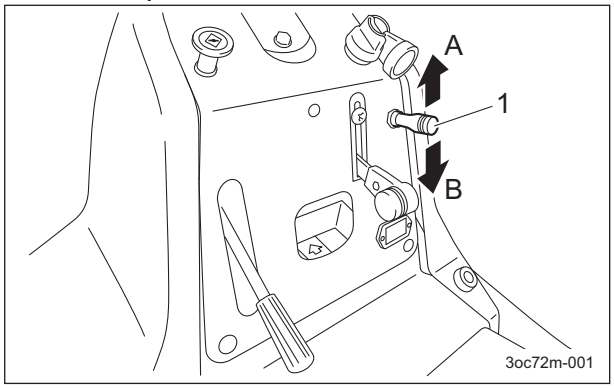

Rake_004

1	Up/down lever
A	UP
B	DOWN

8. At the bunker area where the operation is to be stopped, shift the up/down lever to the "UP" position to raise the rake.
9. Leave the bunker.
10. If tire tracks remain, use the broom to remove them.

Blade

Warning

Do NOT start to move or stop the machine abruptly.
To do so is very dangerous. In addition, it may damage the hydraulic system or result in oil leakage.

Caution

Perform operations at an appropriate speed for the site and location.

Caution

Before starting operations, check that the area where the operations are to be performed is safe.

Caution

If the blade is raised, do not touch the lifting lever.

Caution

When getting on and off the machine, watch out the blade lever lest you should get your foot caught on it and fall.

1. Start the engine.（(See "Procedure to Start Engine" (Page 4-21) .)

https://truckmanualshub.com/

Important

If the engine rpm is low, the rake will not be raised and lowered due to insufficient hydraulic oil.
Move the throttle lever above the middle position toward "High".

2. Shift the up/down lever to the "UP" position to raise the rake.

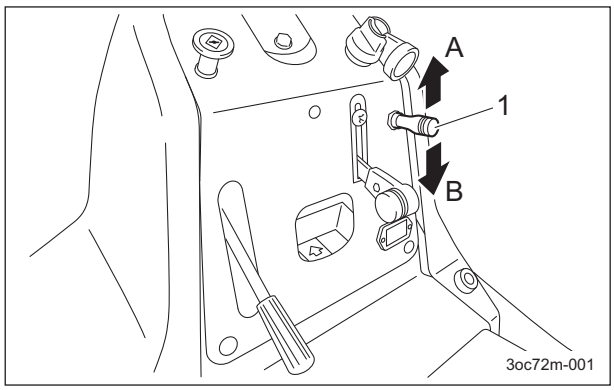

Blade_001

1	Up/down lever
A	UP
B	DOWN

3. Firmly depress the brake pedal and release the lock fitting.
The parking brake is released at the same time.

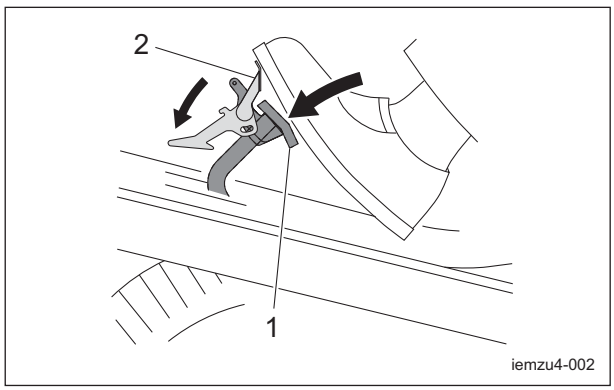

Blade_002

1	Brake pedal
2	Lock pedal

4. Gradually move the throttle lever to "High", and rev up the engine to MAX (3,000 rpm).

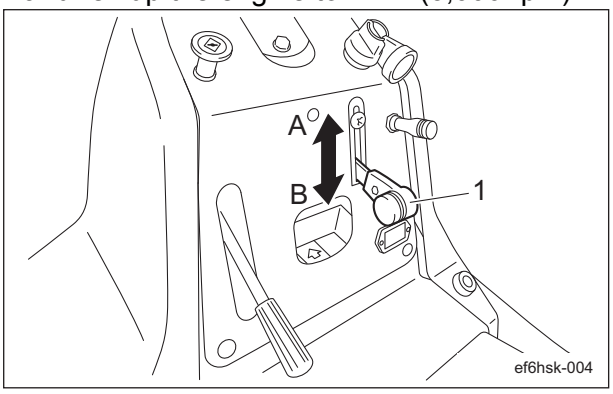

Blade_003

1	Throttle lever
A	High
B	Low

Warning

When switching between 2WD and 3WD operation, make sure to stop the machine completely.

Caution

Do not enter or leave a bunker via a steep slope or extremely uneven ground.

5. Enter the bunker.

Important

Perform blade operations in 2WD.

6. Shift the 2WD/3WD selector lever to the "2WD" position to operate in rear-wheel 2WD.

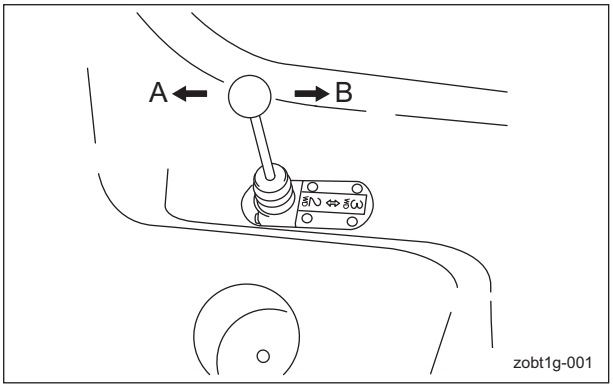

Blade_004

A	2WD
B	3WD

https://truckmanualshub.com/

Caution

Do not back up (drive in reverse) with the rake, cultivator or finishing brush lowered.

7. Depress the traveling pedal to travel.
8. At the bunker area where the operation is to be started, repeatedly perform the following operations.
   - Move the blade lever forward to lower the blade, and then keep pushing the blade lever forward to lift the sand while driving forward.
   - Pull the blade lever toward you to raise the blade.

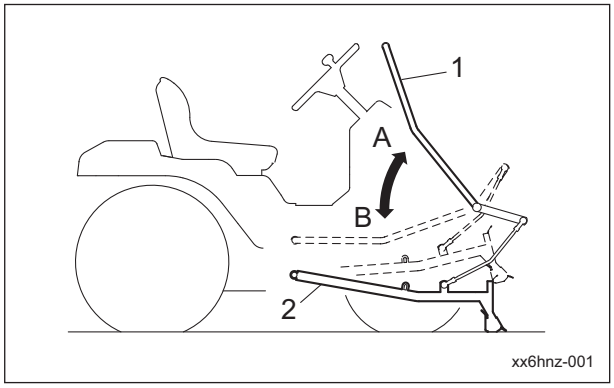

Blade_005

1	Blade lever
2	Blade
A	Tilted up (blade lowered)
B	Pulled down (blade raised)

Cultivator

Warning

Do NOT start to move or stop the machine abruptly.
To do so is very dangerous. In addition, it may damage the hydraulic system or result in oil leakage.

Caution

Perform operations at an appropriate speed for the site and location.

Caution

Before starting operations, check that the area where the operations are to be performed is safe.

1. Start the engine.（(See "Procedure to Start Engine" (Page 4-21) .)

Important

If the engine rpm is low, the rake will not be raised and lowered due to insufficient hydraulic oil.
Move the throttle lever above the middle position toward "High".

2. Shift the up/down lever to the "UP" position to raise the rake.

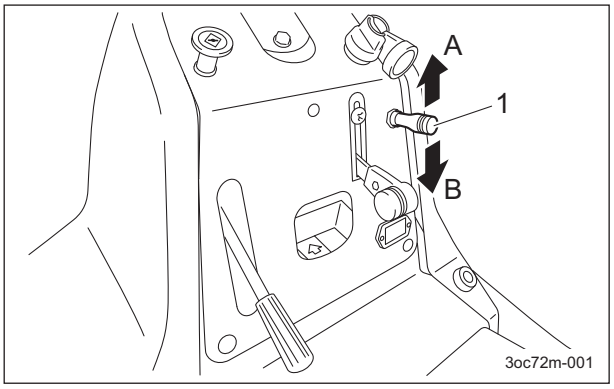

Cultivator_001

1	Up/down lever
A	UP
B	DOWN

https://truckmanualshub.com/

3. Firmly depress the brake pedal and release the lock fitting.
   The parking brake is released at the same time.

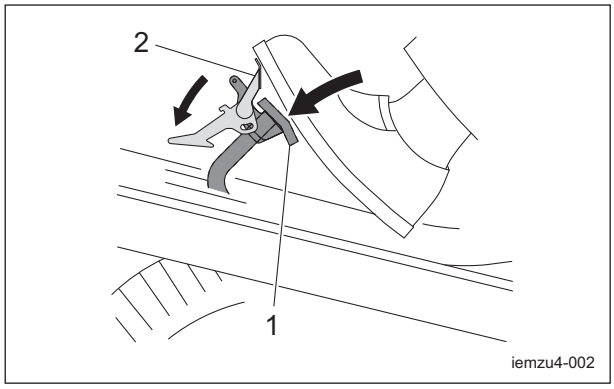

Cultivator_002

1	Brake pedal
2	Lock pedal

4. Gradually move the throttle lever to "High", and rev up the engine to MAX (3,000 rpm).

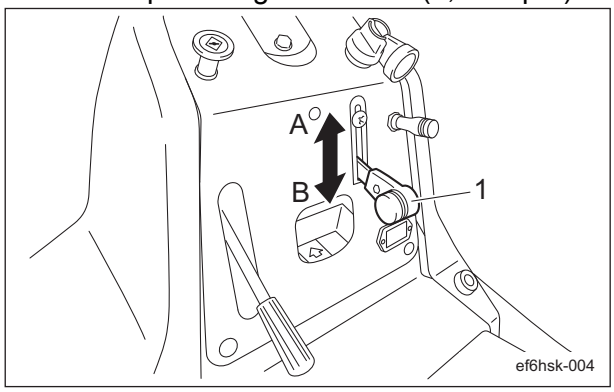

Cultivator_003

1	Throttle lever
A	High
B	Low

Warning

When switching between 2WD and 3WD operation, make sure to stop the machine completely.

Caution

Do not enter or leave a bunker via a steep slope or extremely uneven ground.

5. Enter the bunker.

Caution

Do not back up (drive in reverse) with the rake, cultivator or finishing brush lowered.

6. Depress the traveling pedal to travel.
7. At the bunker area where the operation is to be started, squeeze the clutch lever and pull the cultivator lever toward you.

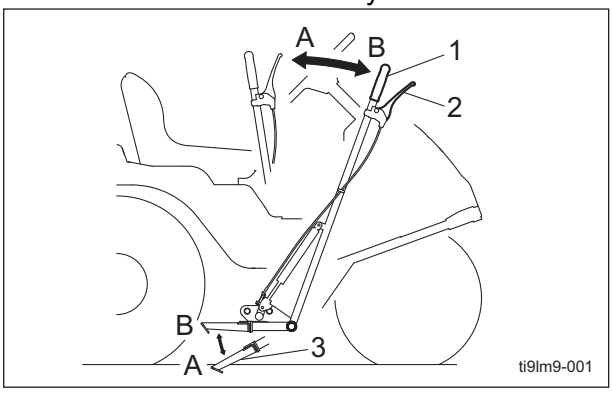

Cultivator_004

1	Cultivator lever
2	Clutch lever
3	Cultivator board
A	Pull (lowered)
B	Push (raised)

8. Lower the cultivator board to the desired depth, and then release the clutch lever.

https://truckmanualshub.com/

9. At the bunker area where the operation is to be stopped, squeeze the clutch lever and push the cultivator lever to raise the cultivator board.

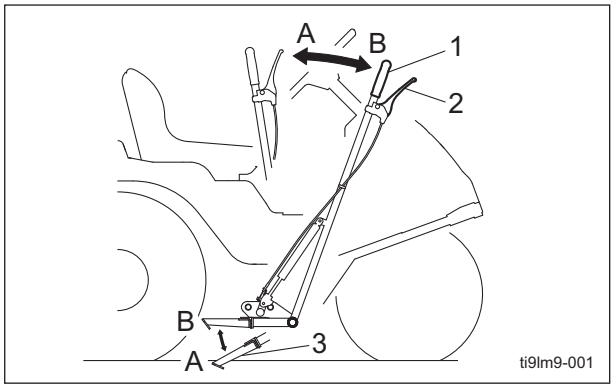

Cultivator_005

1	Cultivator lever
2	Clutch lever
3	Cultivator board
A	Pull (lowered)
B	Push (raised)

10. At the bunker area where the operation is to be started, shift the up/down lever to the "DOWN" position to lower the rake.

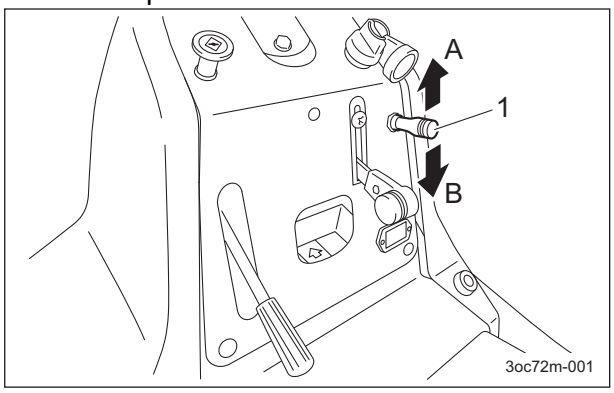

Cultivator_006

1	Up/down lever
A	UP
B	DOWN

11. At the bunker area where the operation is to be stopped, shift the up/down lever to the "UP" position to raise the rake.
12. Leave the bunker.
13. If tire tracks remain, use the broom to remove them.

Finishing Brush

Warning

Do NOT start to move or stop the machine abruptly.
To do so is very dangerous. In addition, it may damage the hydraulic system or result in oil leakage.

Caution

Perform operations at an appropriate speed for the site and location.

Caution

Before starting operations, check that the area where the operations are to be performed is safe.

1. Start the engine.（(See "Procedure to Start Engine" (Page 4-21) .)

Important

If the engine rpm is low, the rake will not be raised and lowered due to insufficient hydraulic oil.
Move the throttle lever above the middle position toward "High".

2. Shift the up/down lever to the "UP" position to raise the rake.

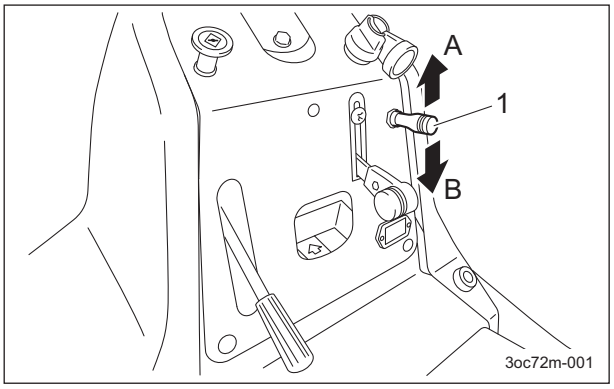

Finishing Brush_001

1	Up/down lever
A	UP
B	DOWN

https://truckmanualshub.com/

3. Firmly depress the brake pedal and release the lock fitting.
   The parking brake is released at the same time.

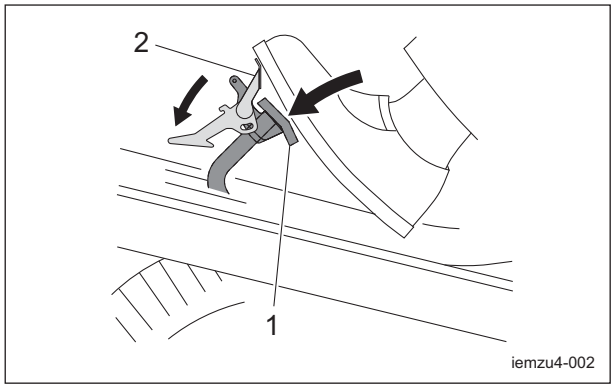

Finishing Brush_002

1	Brake pedal
2	Lock pedal

4. Gradually move the throttle lever to "High", and rev up the engine to MAX (3,000 rpm).

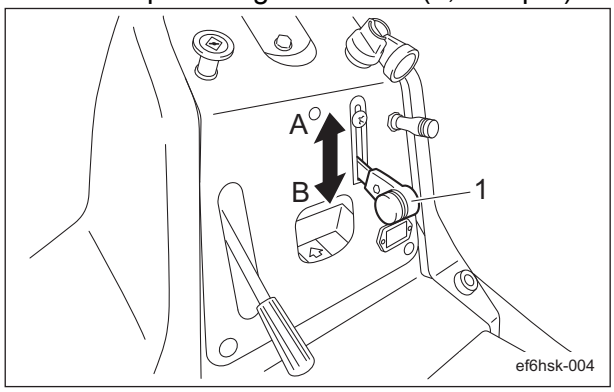

Finishing Brush_003

1	Throttle lever
A	High
B	Low

Warning

When switching between 2WD and 3WD operation, make sure to stop the machine completely.

5. Adjust the height of the brush from the ground according to the bunker conditions.

Caution

Do not enter or leave a bunker via a steep slope or extremely uneven ground.

6. Enter the bunker.

Caution

Do not back up (drive in reverse) with the rake, cultivator or finishing brush lowered.

7. Depress the traveling pedal to travel.
8. At the bunker area where the operation is to be started, shift the up/down lever to the "DOWN" position to lower the rake.
   The finishing brush is lowered at the same time.

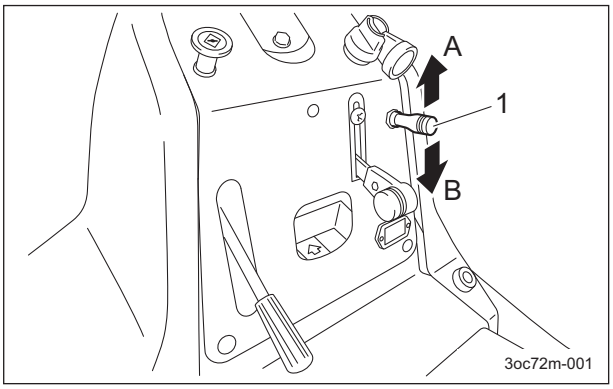

Finishing Brush_004

1	Up/down lever
A	UP
B	DOWN

9. At the bunker area where the operation is to be stopped, shift the up/down lever to the "UP" position to raise the rake.
   The finishing brush is raised at the same time.
10. Leave the bunker.
11. If tire tracks remain, use the broom to remove them.

Transporting

Transporting Procedure

When loading the machine into a trailer or a truck to transport it, drive the machine in reverse. When unloading, drive the machine forward.

https://truckmanualshub.com/

Maintenance Precautions ..... Page 5-2

Maintenance Schedule ..... Page 5-3

Specified Values ..... Page 5-4
Main Consumable Parts ..... Page 5-5

Jacking up the machine ..... Page 5-6

About the Jacking up the machine ..... Page 5-6
Jack-up Points ..... Page 5-6

Greasing ..... Page 5-8

About Greasing ..... Page 5-8
Greasing Points ..... Page 5-8

Maintenance (Attachments) ..... Page 5-10

Change of Fork Prong Bar ..... Page 5-10
Change of Small Blade ..... Page 5-11
Change of the Cultivator Fitting ..... Page 5-11
Change of Finishing Brush ..... Page 5-12

Maintenance (Main Body) ..... Page 5-12

Removing/Installing Tires ..... Page 5-12
Adjustment of Belt Tension ..... Page 5-14
Adjustment of Steering Chain ..... Page 5-15
Adjustment of Brake ..... Page 5-15
Adjusting the Neutral Position of the Piston Pump ..... Page 5-16
Change of Fuse ..... Page 5-17

Long-Term Storage ..... Page 5-17

Before Long-Term Storage ..... Page 5-17

https://truckmanualshub.com/

Maintenance

Maintenance Precautions

Caution

First, learn well the maintenance operations you plan to perform.

Caution

Use tools appropriate for each maintenance operation.

Caution

For the safe and best performance of your machine, use Baroness genuine parts for replacement and accessories.
Please note that our product warranty may be void if you use non-genuine parts for replacement or accessories.

https://truckmanualshub.com/

Maintenance Schedule

Follow the maintenance schedule below.
○・・・Inspect, adjust, supply, clean
●・・・Replace (first time)
△・・・Replace

	Maintenance item	Before work	After work	Every 8 hrs.	Every 50 hrs.	Every 100 hrs.	Every 200 hrs.	Every 250 hrs.	Every 400 hrs.	Every 500 hrs.	Every 1 year	Every 2 years	Every 4 years	Remarks
Engine	Tightening the parts	○												
	Fuel	○												
	Air cleaner	○					△							
	Engine oil	○		●	△									8 hrs. (first time)
	Engine oil filter	○			●	△								50 hrs. (first time)
	Ignition plug				○	△								
	Radiator	○												
	Oil cooler	○												
	Coolant	○			△									
	Fan belt	○									△			
	Battery	○										△		
	Battery fluid	○												
	Cleaning the exterior	○												
Main body	Tightening the parts	○												
	Interlock system	○												
	Emergency switch	○												
	Electrical wiring										○			
	Knife	○												
	Steering chain	○												
	Cutting (or brush) height	○												
	Greasing, oiling				○									
	Tire	○												
	Rubber crawler	○												
	V-belt	○									△			
	Brake	○												
	Wire	○					△							
	Cover	○												
	Oil leakage	○												
	Hydraulic Oil	○				●				△				100 hrs. (first time)
	Hydraulic oil filter					●				△				100 hrs. (first time)

https://truckmanualshub.com/

Maintenance

Maintenance item		Before work	After work	Every 8 hrs.	Every 50 hrs.	Every 100 hrs.	Every 200 hrs.	Every 250 hrs.	Every 400 hrs.	Every 500 hrs.	Every 1 year	Every 2 years	Every 4 years	Remarks
Main body	Hydraulic motor oil				●		△							50 hrs. (first time)
	Power unit oil	○				●				△				100 hrs. (first time)
	Transmission oil	○			●						△			50 hrs. (first time)
	Hydraulic hose (moving part)	○										△		
	Hydraulic hose (fixed part)	○											△	
	Air cleaner	○					△							
	Electromagnetic pump filter	○					△							
	Fuel strainer					○					△			
	Fuel hose	○												
	Cleaning the exterior	○												

The values for consumables are not guaranteed.
Replace the steering cylinder hoses every 2 years.

Specified Values

Fuel tank capacity		15.0 dm^3 (15.0 L)	
Hydraulic tank capacity		15.0 dm^3 (15.0 L)	Shell Tellus S2V32 (or equivalent)
Engine oil capacity (including oil filter)		1.6 dm^3 (1.6 L)	Summer: SAE30, Winter: SAE20
Front tire		70 kPa (0.7 kgf/cm^2)	PD21 x 11.00 - 10
Rear tire		40 kPa (0.4 kgf/cm^2)	25 x 13.00 - 9
Belt		Approximately 10mm/98N (10kgf)	Belt slack
Steering chain		Approximately 5 mm (0.20 in)	Steering chain slack
Rake	Fork depth (standard)	15 mm (0.59 in)	
Blade	Arm stopper	23 mm (0.91 in)	
	Raised height	200 mm (7.87 in)	
	Exposed length of screw shaft from spherical joint	65 mm (2.56 in)	
	Exposed length of threaded end of connecting shaft	20 mm (0.79 in)	
	Installation depth of spherical joint	15 mm (0.59 in)	

https://truckmanualshub.com/

Main Consumable Parts

Part Name	Code
Engine oil filter	PL492932S
Fuel filter	PL691035
Spark plug	PL491055S
Fuse	K3631000040
Air cleaner, outer	PL841497
Air cleaner, inner	PL821136
Hydraulic cartridge filter	K3412000050
Hydraulic oil (20 L can)	K2913500200
Brake shoe, upper right	P741-8007-00
Brake shoe, lower right	P741-8005-00
Brake shoe, upper left	P741-8008-00
Brake shoe, lower left	P741-8006-00
Brake wire, right	K1120145200
Brake wire, left	K1120086210
V-belt	K2374200430
Push-pull cable	K1160075500
Throttle wire	K1110143000
Choke wire	K1100178500
Steering chain	K2210000440
Plate spring	K1090000110
Fork prong bar	K6175000218
Finishing brush	SP05---1002Z0
Finishing brush adjusting wire	K1160089000
Trapezoidal cultivator fitting	SP05---0909ZD
Cultivator wire	K1160082000
Smoother plate	SP05---0722ZD

https://truckmanualshub.com/

Jacking up the machine

About the Jacking up the machine

Warning

When replacing a tire or beginning any other maintenance or repairs, be sure to chock the wheels to prevent the machine from moving.
Before jacking up the machine, park it on a hard, flat surface such as a concrete floor and remove any obstacles that could prevent you from performing the work safely.
When necessary, use an appropriate chain block, hoist, or jack.
Support the machine securely with jack stands or appropriate blocks.
Failure to do so may cause the machine to move or fall, resulting in injury or death.

Use the jack-up points identified in this manual when jacking up the machine.
Only place a jack under the jack-up points specified.
Placing a jack at any other point could result in damage to the frame or other parts.

Jack-up Points

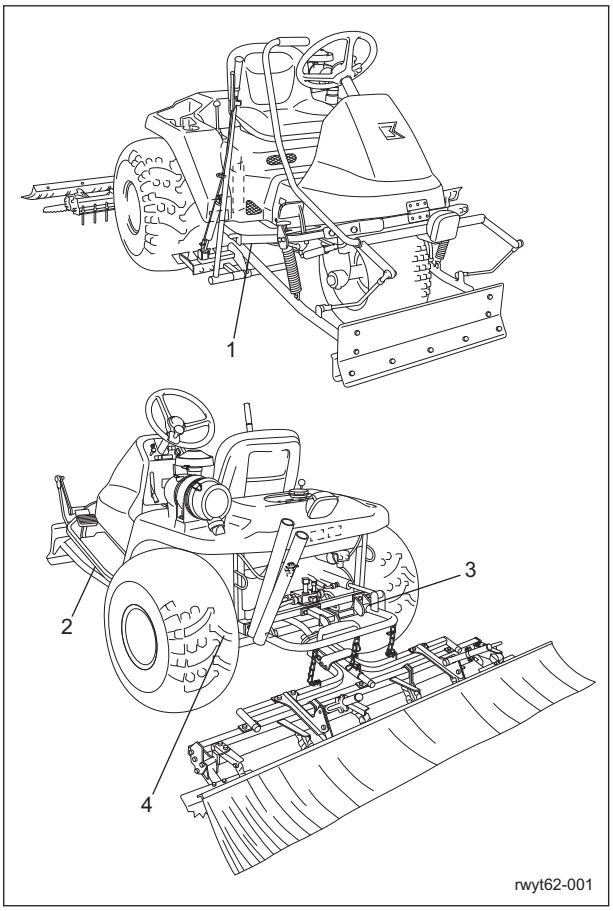

Jack-up Points_001

	Jack-up Points
1	Front right frame
2	Front left frame
3	Rear right frame
4	Rear left frame

1. Front right frame

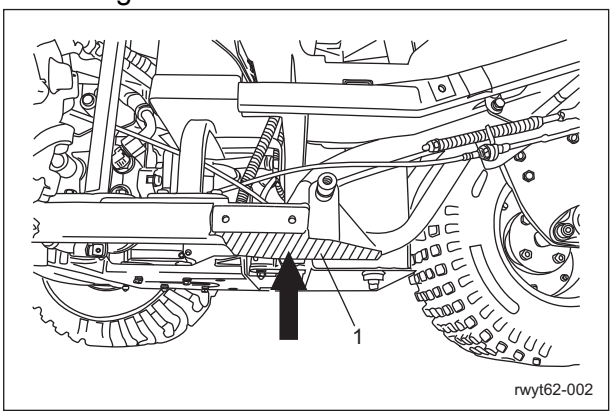

Jack-up Points_002

1	Reinforcing plate

https://truckmanualshub.com/

2. Front left frame

Important

One nut is used to install the reinforcing plate.
Be careful that the jack does not hit the nut.

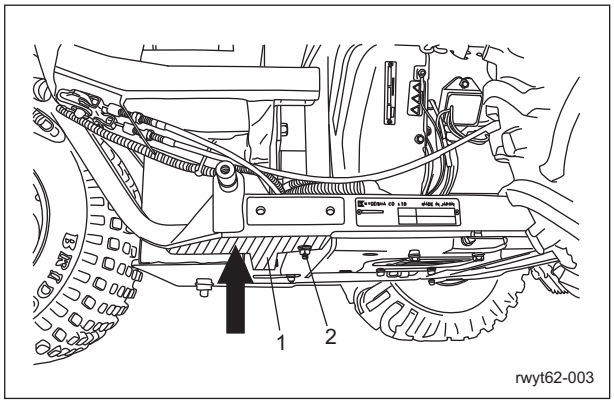

Jack-up Points_003

1	Reinforcing plate
2	Nut

3. Rear right frame

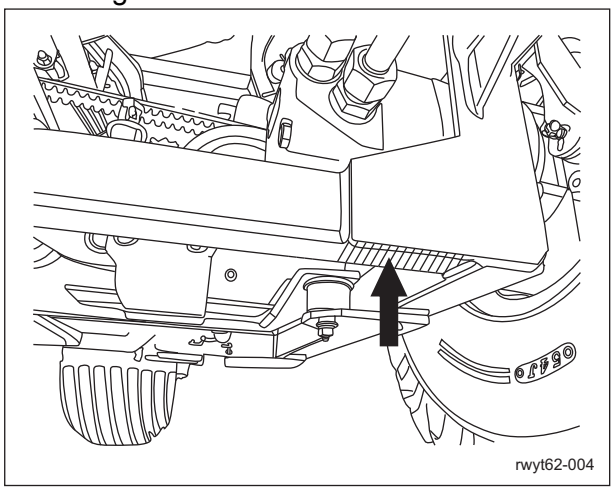

Jack-up Points_004

4. Rear left frame

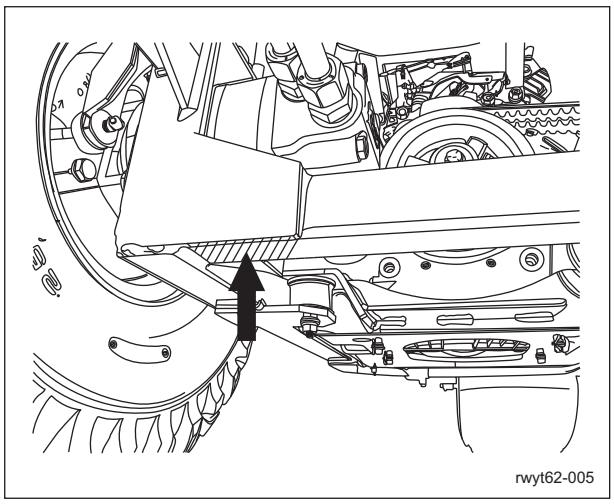

Jack-up Points_005

https://truckmanualshub.com/

Greasing

About Greasing

Since there may be adhesion or damage due to lack of grease on moving parts, they must be greased.
Add urea-based No. 2 grease in accordance with the Maintenance Schedule.
Other locations where the specified grease or lubricant is used are indicated in "Greasing Points".
Add grease using the specified grease or lubricant.

Greasing Points

Grease nipples are installed in the following locations. Add grease every 50 hours of operation.

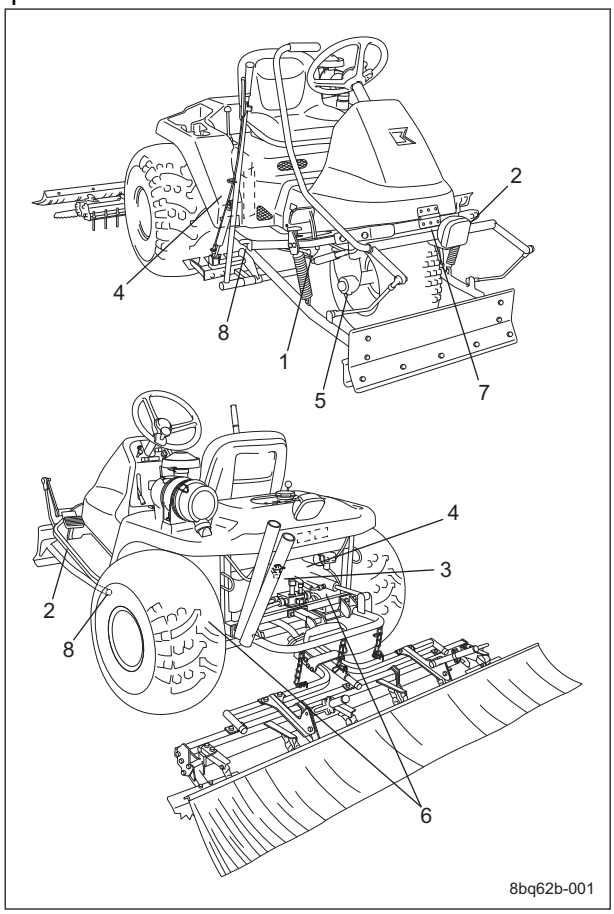

Greasing Points_001

	Location	No. of Greasing Points	
		2WD	3WD
1	Traveling pedal fulcrum	1	1
2	Brake pedal fulcrum	1	1
3	Belt tension lever	1	1
4	Pump neutral lever fulcrum	1	1
5	Front wheel shaft rhombic flange unit	2	1
6	Rear wheel brake lever fulcrum	2	2
7	Blade lever fulcrum	1	1
8	Blade arm fulcrum	2	2

https://truckmanualshub.com/

1. Traveling pedal fulcrum

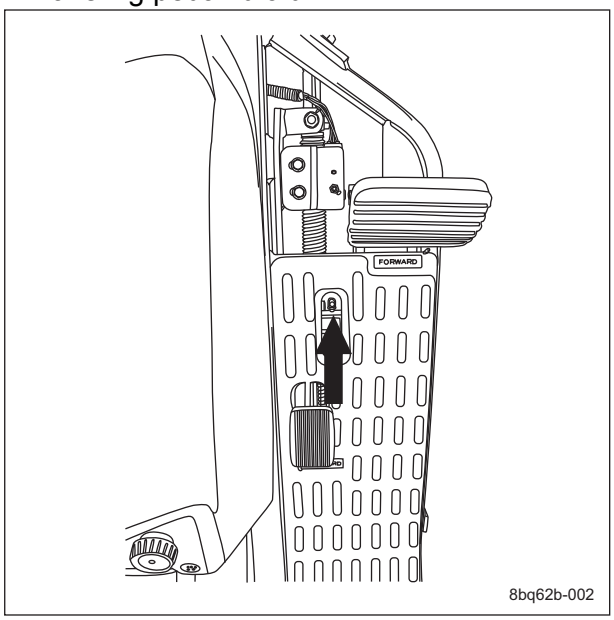

Greasing Points_002

2. Brake pedal fulcrum

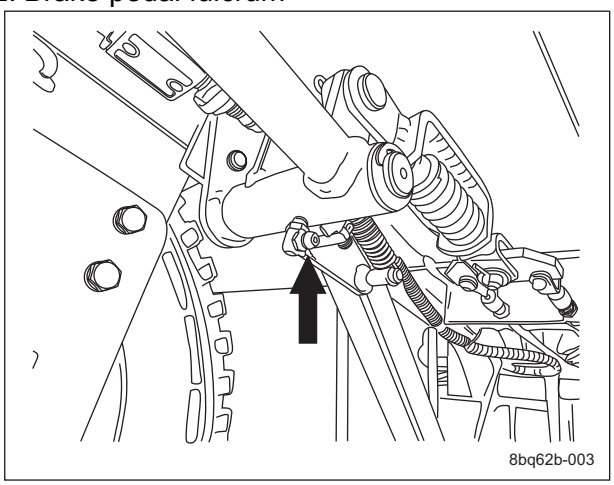

Greasing Points_003

3. Belt tension lever (below pump pulley)

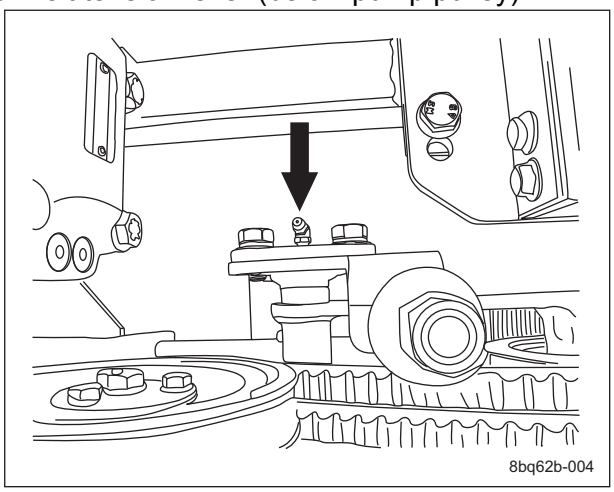

Greasing Points_004

4. Pump neutral lever fulcrum (above piston pump)

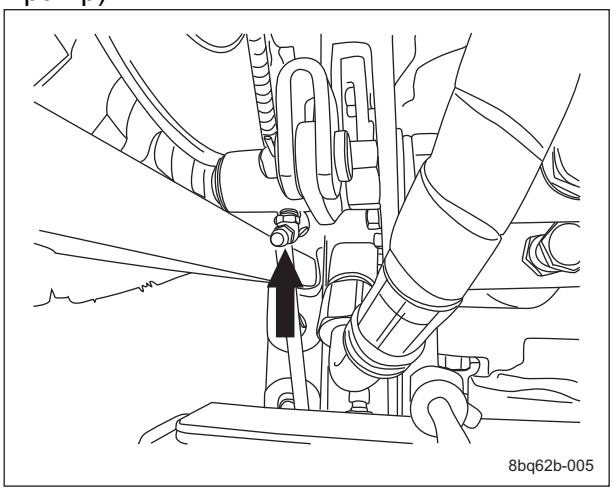

Greasing Points_005

5. Front wheel shaft rhombic flange unit

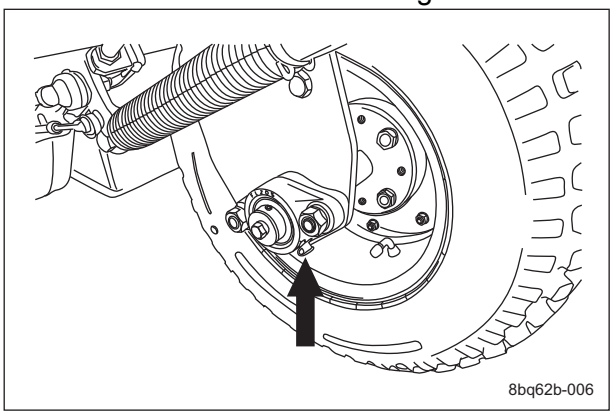

Greasing Points_006

6. Rear wheel brake lever fulcrum

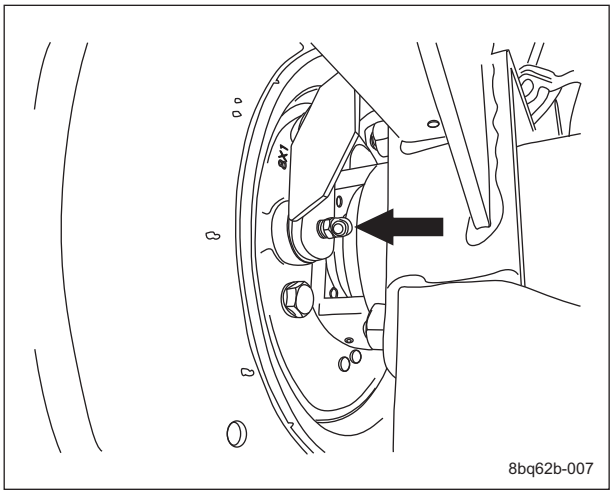

Greasing Points_007

https://truckmanualshub.com/

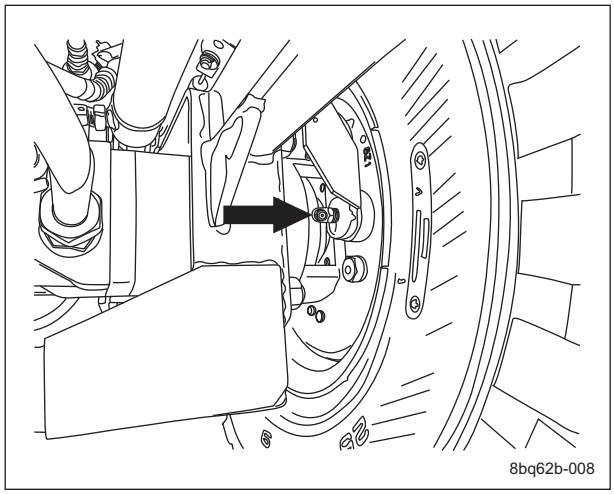

Greasing Points_008

7. Blade lever fulcrum

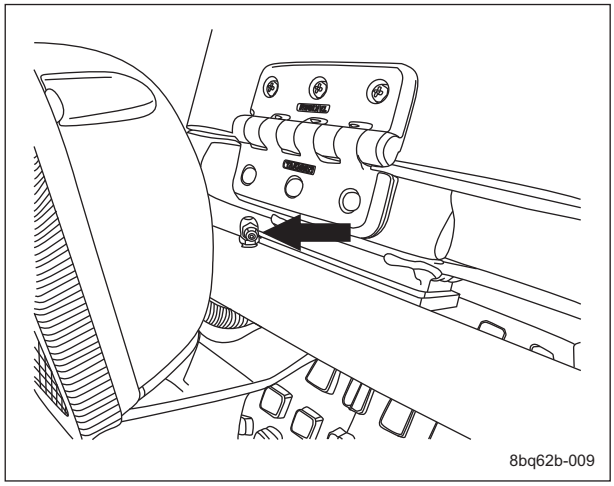

Greasing Points_009

8. Blade arm fulcrum

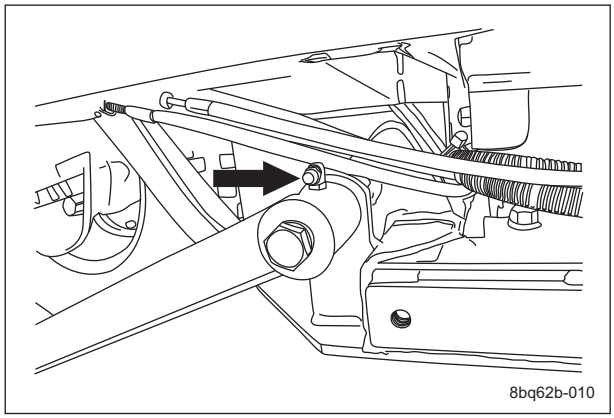

Greasing Points_010

Maintenance (Attachments)

Change of Fork Prong Bar

Caution

When handling a sharp fork prong bar, be sure to wear gloves.

When wear of the fork prong bar results in no margin for tightening the nut on the fork prong bar, replace the fork prong bar.

1. Loosen the nut, and then replace the fork prong bar.

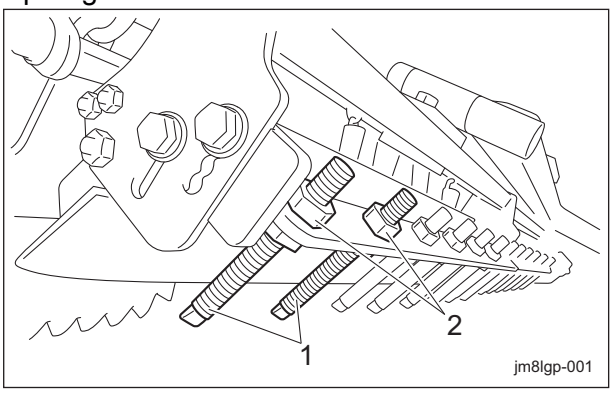

Change of Fork Prong Bar_001

1	Fork prong bar
2	Nut

2. Adjust the fork prong bar. (See "Adjustment of Rake" (Page 4-17) .)
3. Tighten the nut.

https://truckmanualshub.com/

Change of Small Blade

When wear of the small blade causes a reduction in the amount of sand that is lifted up, replace the small blade.

1. Loosen the bolts installing the small blade, and then replace the small blade.

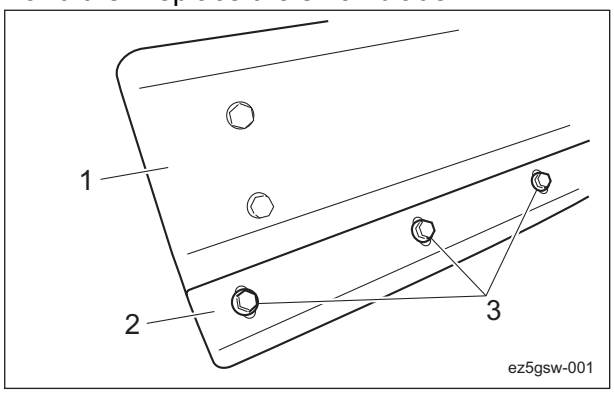

Change of Small Blade_001

1	Blade
2	Small blade
3	Bolt

2. Adjust the small blade. (See "Adjustment of Blade" (Page 4-18) .)
3. Tighten the bolts.

Change of the Cultivator Fitting

Caution

When removing the cultivator, be careful not to pinch your hands.

When wear of the trapezoidal cultivator fitting disables unhardening the sand, replace the trapezoidal cultivator fitting.

1. Remove the bolts at the bottom of the machine on the right side.

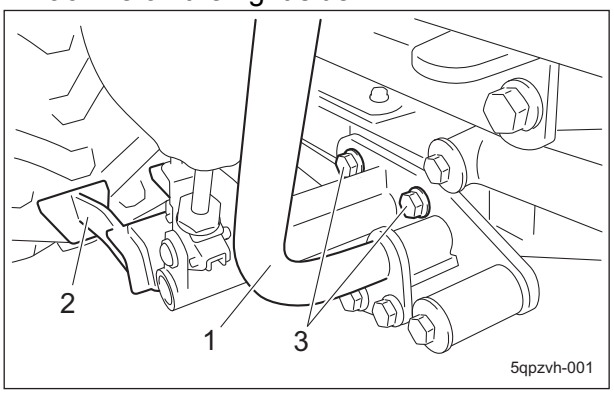

Change of the Cultivator Fitting_001

1	Lever pipe
2	Trapezoidal cultivator fitting
3	Bolt

2. Remove the bolts at the bottom of the machine on the left side, and then remove the cultivator arm from the bottom of the machine.

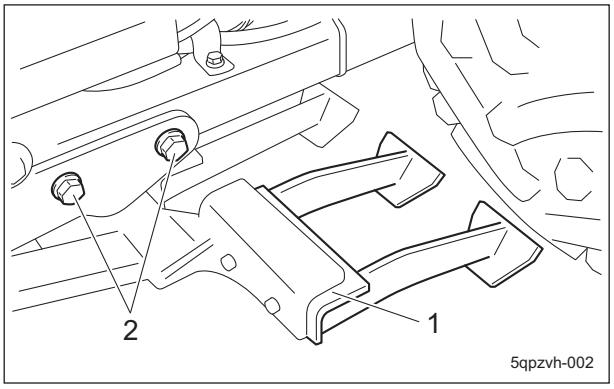

Change of the Cultivator Fitting_002

1	Cultivator arm
2	Bolt

https://truckmanualshub.com/

3. Remove the bolts, and then replace the trapezoidal cultivator fittings.

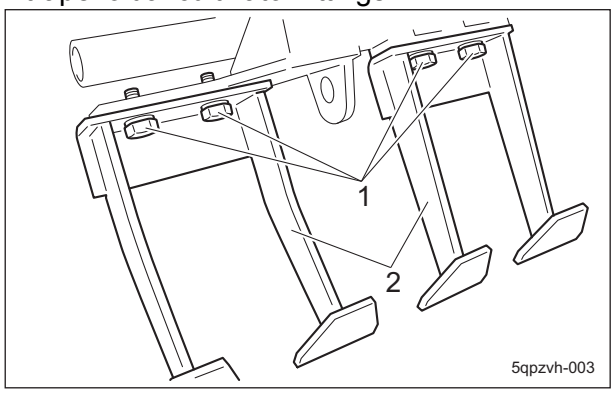

Change of the Cultivator Fitting_003

1	Bolt
2	Trapezoidal cultivator fitting

4. Tighten the bolts for the trapezoidal cultivator fitting.
5. Tighten the bolts for the cultivator arm.

Change of Finishing Brush

Caution

Be careful since the finishing brush is heavy.

When wear of the finishing brush results in rake tracks remaining, replace the finishing brush.

1. Remove the bolts from the rake, and then remove the finishing brush.

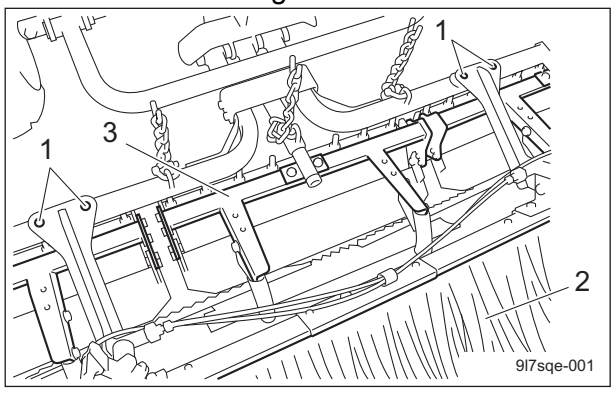

Change of Finishing Brush_001

1	Bolt
2	Finishing brush
3	Rake

Caution

Place the finishing brush on level surface.

2. Remove the bolts, and then replace the finishing brush.

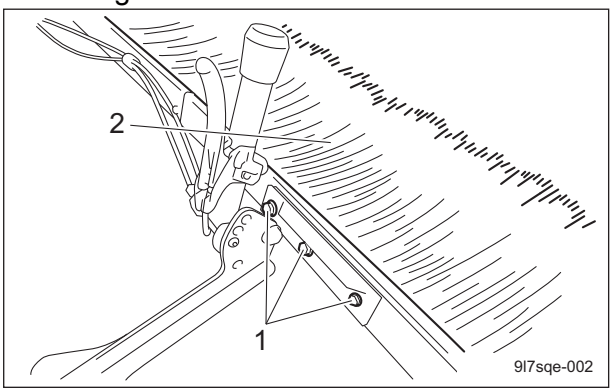

Change of Finishing Brush_002

1	Bolt
2	Finishing brush

3. Tighten the bolts.

Maintenance (Main Body)

Removing/Installing Tires

Front Tire

Follow the steps below to remove the front tire:

1. Securely place the jack beneath the jack-up points of the front left/right frame area, and then raise it until the tire lifts off the ground. (See "Tightening torques" (Page 4-13) .)

Important

The installed parts differ according to 2WD and 3WD specifications.

2. Follow the steps below to remove the tire.
   [1] Loosen the lock bolts (2 locations) for the right rhombic flange unit, and then remove bolt A.
   [2] Remove bolt B and nut B of the right rhombic flange unit, and then remove the right rhombic flange unit.
   [3] Remove bolt C, attaching the left and right front wheel bracket to the front wheel arm, and then lower the front wheel to the floor.

https://truckmanualshub.com/

[4] Remove the wheel mounting bolt, and then remove the tire.

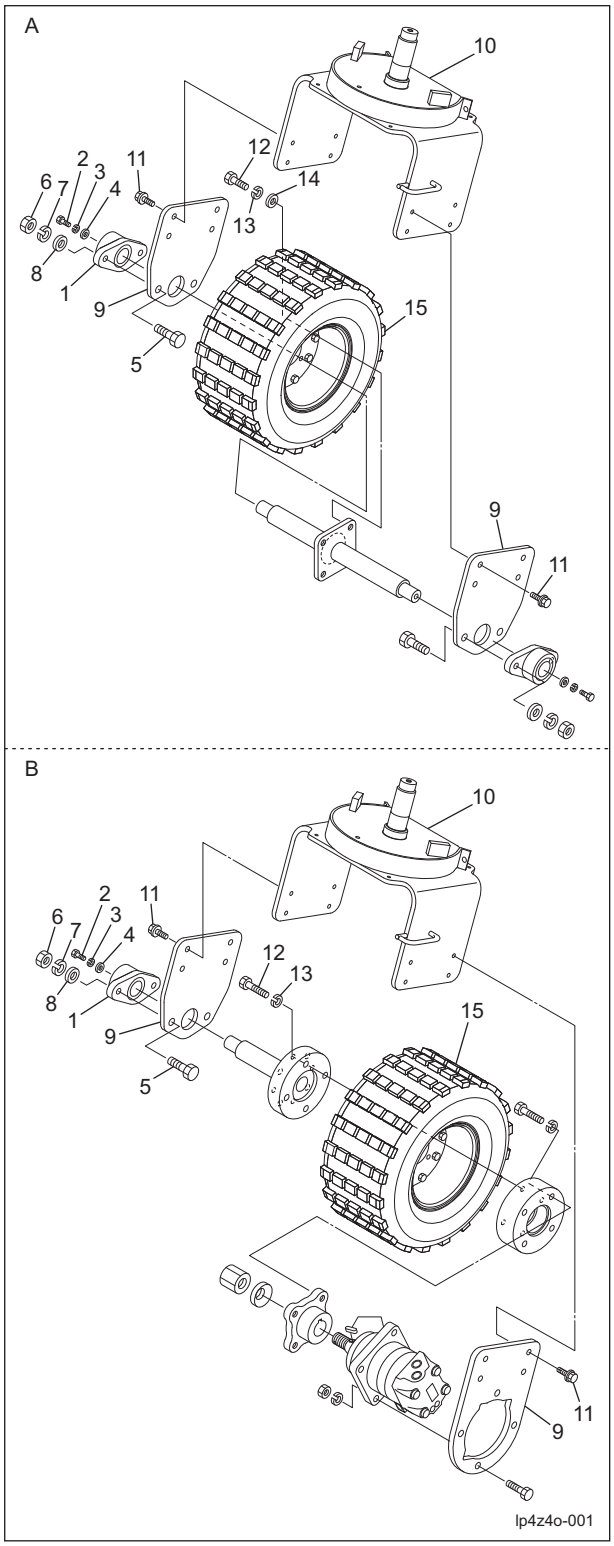

Front Tires_001

A	2WD specifications
B	3WD specifications
1	Rhombic flange unit
2	Bolt A
3	Spring washer A
4	Washer A
5	Bolt B
6	Nut B
7	Spring washer B
8	Washer B
9	Front wheel bracket
10	Front wheel arm
11	Bolt C
12	Wheel mounting bolt
13	Spring washer C
14	Washer C
15	Front wheel

Caution

Refer to the Tightening Torque table.
Note that the Baroness product warranty may not apply to defects caused by incorrect or overtorque tightening etc.

Important

Tighten the bolts in the tightening order (crosswise).

For installing the front tires, reverse the removing procedure.

https://truckmanualshub.com/

Rear Tires

Follow the steps below to remove the rear tires:

1. Loosen the bolts.

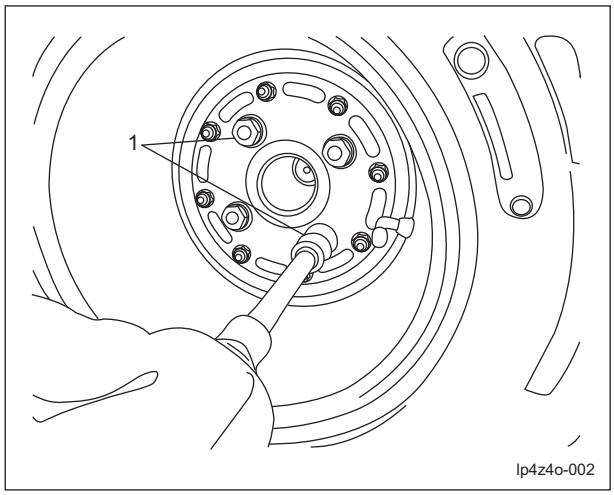

Rear Tires_001

1	Bolt

2. Securely place the jack beneath the jack-up point of the rear left/right frame area, and then raise it until the tire lifts off the ground. (See "Jack-up Points" (Page 5-6) .)
3. Remove the bolts.
4. Remove the tire from the wheel mounting seat.

Caution

See "Tightening torques" (Page 4-13) .
Note that the Baroness product warranty may not apply to defects caused by incorrect or overtorque tightening etc.

Important

Tighten the bolts in the tightening order (crosswise).

For installing the rear tires, reverse the removing procedure.

Adjustment of Belt Tension

Caution

Be sure to stop the engine before adjusting the belts.

Important

Make sure that the belt has the specified amount of tension.

If the belt becomes slack due to frequent use, it may jump or slip.
In addition, if it is overtightened, it may wear prematurely.
If necessary, adjust it, and always check the belt for appropriate tension.

Adjustment of Pump Drive Belt

1. Press the middle of the belt with your finger to check the belt tension.
2. Tighten the high nut until there is no clearance between the spring cover and the tension fulcrum fitting, and then lock it in place with the nut.

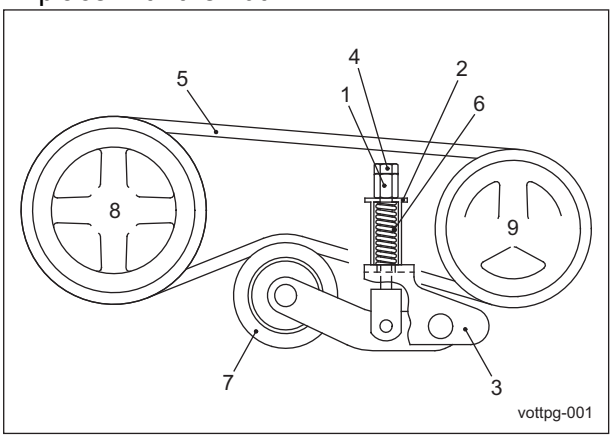

Adjustment of Pump Drive Belt_001

1	High nut
2	Spring cover
3	Tension fulcrum fitting
4	Nut
5	Belt
6	Spring
7	Tension pulley
8	Engine pulley
9	Pump pulley

https://truckmanualshub.com/

Adjustment of Steering Chain

Excessive play with a loose steering chain may stretch the chain further while you may feel a heavy steering wheel with an excessively tight chain and the chain and wheel may wear prematurely.

Important

Make sure that the steering chain has the specified amount of slack.

1. Open the front cover.
2. With the nut on each end of the steering chain, adjust it so that there is almost no slack, without stretching the chain too much.

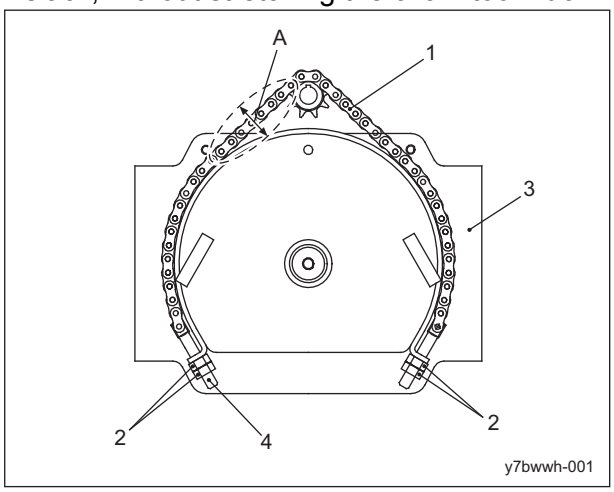

Adjustment of Steering Chain_001

1	Steering chain
2	Nut
3	Front wheel arm
4	Adjustment screw

3. After making adjustments, firmly secure the nuts.

Adjustment of Brake

Warning

Make sure that the brake wire is not cracked or damaged.

Warning

If the brake is not sufficiently effective, adjust the brake wire.

Caution

Perform the adjustment with the engine stopped.

Adjust the brake by tightening the brake wire adjustment bolt and the spring rod.

Adjustment of Adjustment Bolt

When the brake wire is stretched, the play of the brake pedal may become large, the braking effectiveness may become worse and the brake pedal may lock.

Important

Adjust the play of the brake lever so that it is as small as possible and the brakes do not drag when the lever is released.

Adjust the brake wire adjustment bolts to adjust the pull length for the brake lever.

- If the brake lever play is too large, the braking power will be decreased and the brake pedal will be soft.
- If the brake lever play is too small, the braking power will be increased and the brake pedal will be hard.

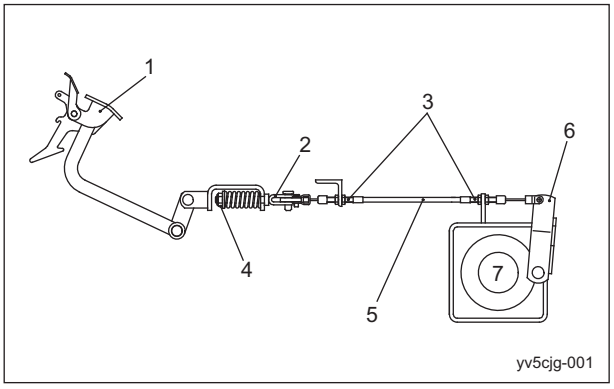

Adjustment of Adjustment Bolt_001

1	Brake pedal
2	Spring rod
3	Adjustment bolt
4	Nut
5	Brake wire
6	Brake lever
7	Rear wheel

https://truckmanualshub.com/

Adjustment of Spring Rod

If the spring becomes shorter from depressing the brake pedal, the brakes may become insufficiently effective.
Adjust the spring rod nut to adjust the braking power and operating force of the brake pedal.

- If the brake lever play is too large, the braking power will be weak and the brake pedal will be soft.
- If the brake lever play is too small, the braking power will be excessive and the brake pedal will be hard.

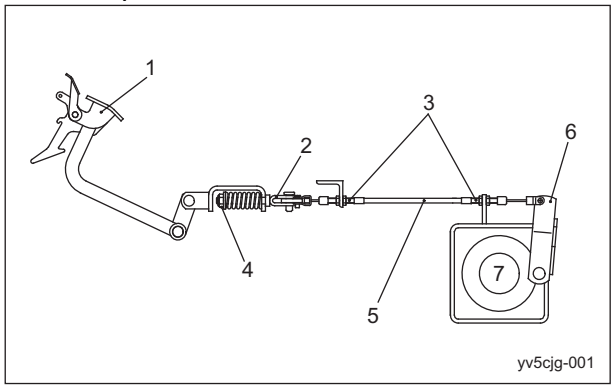

Adjustment of Spring Rod_001

1	Brake pedal
2	Spring rod
3	Adjustment bolt
4	Nut
5	Brake wire
6	Brake lever
7	Rear wheel

Break-in of Brakes

If the brake shoes or brake pads are worn, replace them with new ones.
Immediately after replacement, drive to break in the brakes if the effectiveness of the brakes is low.
While driving, lightly operate the brakes to break in the contact areas.

Adjusting the Neutral Position of the Piston Pump

If the machine moves forward or backward while the traveling pedals are released, they are not set to the neutral position.
Follow the steps below to make adjustments.

1. Stop the engine.
2. Remove the cotter pin and washer at the pedal end, and then remove the end of the push-pull cable.

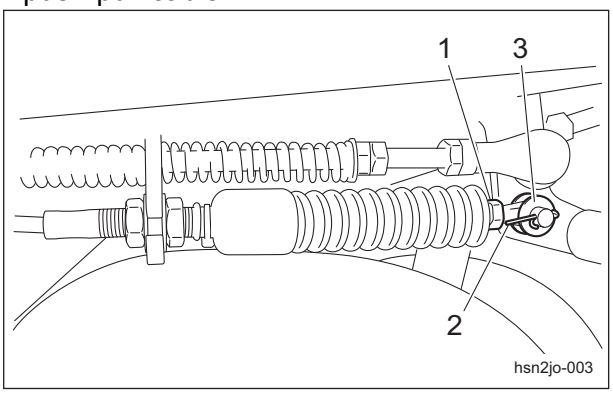

Adjusting the Neutral Position of the Piston Pump_001

1	Push-pull cable
2	Cotter pin
3	Washer

3. Place the jacks securely beneath the jack-up points, and then lift the machine off the ground.
   Use stable jack stands, and raise the machine until the tires lift off the ground.
   (See "Jack-up Points" (Page 5-6) .)
4. Start the engine, and rev it up to the maximum rpm.
5. Set the 2WD/3WD selector lever to the "2WD" position.
6. Slowly turn the camshaft until the rear wheel stops, and then use the nut to lock the camshaft at the stopped position.

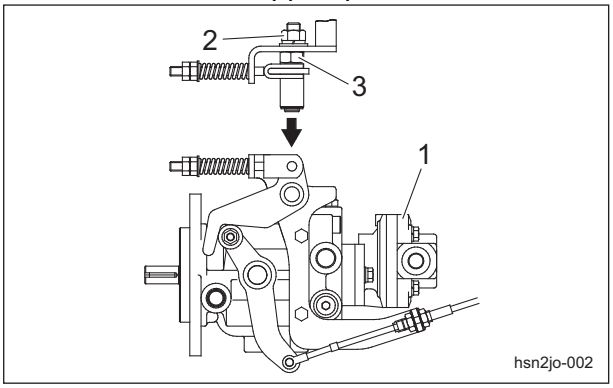

Adjusting the Neutral Position of the Piston Pump_002

1	Piston pump
2	Nut
3	Camshaft

https://truckmanualshub.com/

7. Loosen the adjustment nuts.

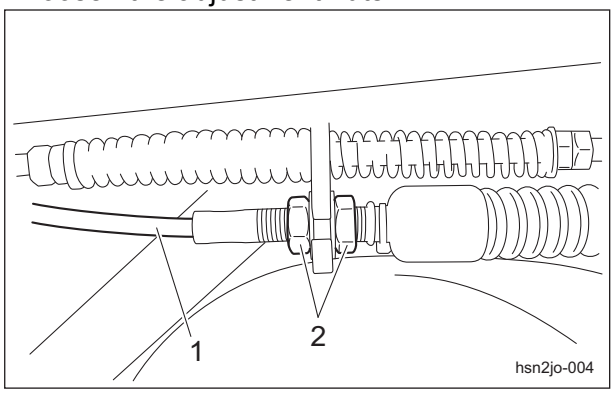

Adjusting the Neutral Position of the Piston Pump_003

1	Push-pull cable
2	Adjustment nuts

8. Adjust the end of the push-pull cable at the pedal end so that it attaches to the connection point on the pedal, and then tighten the adjustment nuts.

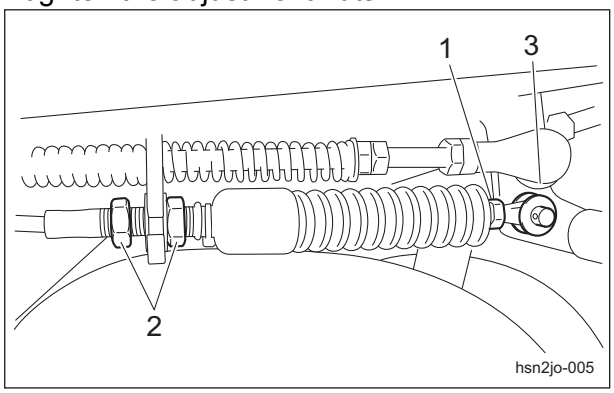

Adjusting the Neutral Position of the Piston Pump_004

1	Push-pull cable
2	Adjustment nuts
3	Connection point on pedal

9. Insert the push-pull cable, and then install the washer and cotter pin.

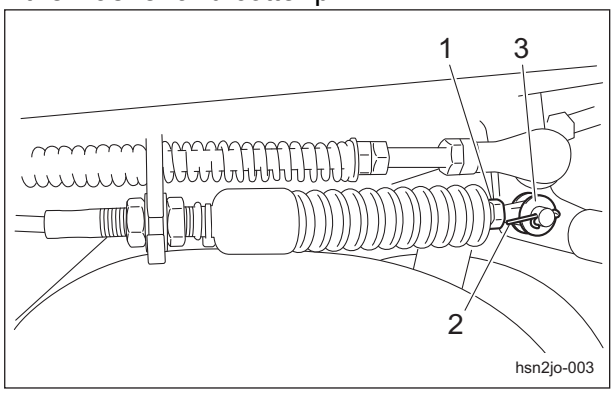

Adjusting the Neutral Position of the Piston Pump_005

1	Push-pull cable
2	Cotter pin
3	Washer

Change of Fuse

Fuses

Warning

When performing maintenance on the electrical system, be sure to remove the negative battery wire.

Caution

If a fuse blows, a short may have occurred within the electrical circuit.
Check for the cause, such as faulty terminal connections, damaged wiring or terminals, or incorrect wiring.

The fuses are located at the lower right inside the front cover and consist of the light harness fuse and the main harness fuse for the entire circuit.
Both are glass fuses 20 A (φ6.4 x 30 mm).

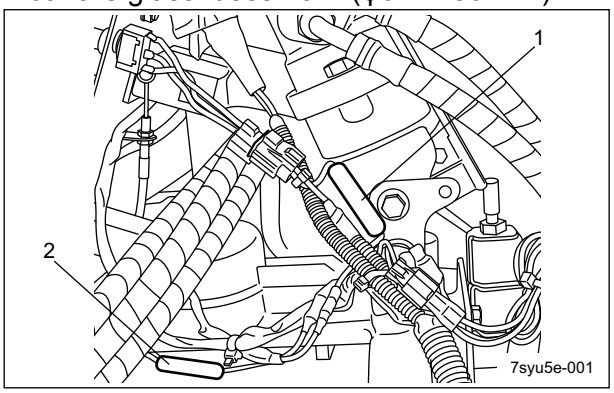

Fuses_001

1	Main harness fuse
2	Light harness fuse

Long-Term Storage

Before Long-Term Storage

- Remove dirt, grass clippings, debris, oil stains etc. completely.
- Supply oil and apply grease to appropriate parts.
- Remove the battery.

https://truckmanualshub.com/

https://truckmanualshub.com/

BARONESS
Quality on Demand

EU Declaration of Conformity

Product Identification

Product :		Bunker rake		
Make :		BARONESS		
Type :		SP05A		
Version(s) :		Not Applicable		
Starting Serial No. :		**20207**		
Measured Sound Power Level :		LWA	95.00	dB
Guaranteed Sound Power Level :		LWA	98	dB
Manufacturer	Name :	Kyoeisha Co., Ltd.		
	Address :	1-26 Miyuki-cho, Toyokawa, Aichi-pref.,Japan		

Conforms to the following Directives

2006/42/EC	Machinery (MD)
2004/108/EC	Electromagnetic compatability (EMC)
2000/14/EC	Noise emissions from outdoor equipment

We has been designed and manufactured using the following specifications

ISO 12100 : 2010 (2006/42/EC)
ISO 5395-1 : 2013 (2006/42/EC)
ISO 5395-3 : 2013 (2006/42/EC)
ISO 14982:1998 (2004/108/EC)

Technical Documentation

Keeper's Name :	Kyoeisha Co., Ltd.
Keeper's Address :	1-26 Miyuki-cho, Toyokawa, Aichi-pref.,Japan

Compiler of the technical file (2006/42/EC)

Name:	Kyoeisha U.K.Ltd.
Address:	Unit 5 Hatch Industrial Park Grewell Road,Basingstke Hampshire RG24 7NG, the United Kingdom

Conformity assessment procedures

Internal production control : Module A (2006/42/EC)
EC-type examination : Module B (2004/108/EC)
Internal control of production with assessment of technical documentation and periodical checking (2000/14/EC)

Place : Japan
Date : 2 September 2015 (02 / 09 / 2015)

Signature : Kimiya Kaneko
Name : Kimiya Kaneko
Position : Quality Dept. Manager

Déclaration de conformité UE

Identification du produit

Produit :		Râteau pour fosses		
Fabriquant :		BARONESS		
Type :		SP05A		
Version(s) :		Non applicable		
Numéro de série de début :		**20207**		
Niveau de puissance acoustique mesuré :		LwA	95.00	dB
Niveau de puissance acoustique garanti :		LwA	98	dB
Fabricant	Nom :	Kyoeisha Co., Ltd.		
	Adresse :	1-26, Miyuki-cho, Toyokawa, préfecture d'Aichi, Japon		

Conforme aux directives suivantes :

2006/42/CE	Machine (MD)
2004/108/CE	Compatibilité électromagnétique (CEM)
2000/14/CE	Émissions sonores de l'équipement de plein air

Conception et fabrication en respect des spécifications suivantes :

ISO 12100 : 2010 (2006/42/CE)
ISO 5395-1 : 2013 (2006/42/CE)
ISO 5395-3 : 2013 (2006/42/CE)
ISO 14982:1998 (2004/108/CE)

Fiche technique

Marque :	Kyoeisha Co., Ltd.
Adresse de la marque :	1-26, Miyuki-cho, Toyokawa, préfecture d'Aichi, Japon

Compilateur de la fiche technique (2006/42/CE)

Nom :	Kyoeisha U.K. Ltd.
Adresse :	Unit 5 Hatch Industrial Park Greywell Road, Basingstoke Hampshire RG24 7NG, Royaume-Uni

Procédures d'évaluation de la conformité

Contrôle de production interne : module A (2006/42/CE)
Examen de type CE : module B (2004/108/CE)
Contrôle interne de la production avec évaluation de la fiche technique et vérification périodique (2000/14/CE)

https://truckmanualshub.com/

Declaración de conformidad de la UE

Identificación del producto

Producto:		Rastrillo para búnker
Marca:		BARONESS
Tipo:		SP05A
Versión:		No aplicable
N.º de serie inicial:		**20207**
Nivel de potencia sonora medido:		LWA 95.00 dB
Nivel de potencia sonora garantizado:		LWA 98 dB
Fabricante	Nombre:	Kyoeisha Co., Ltd.
	Dirección:	1-26 Miyuki-cho, Toyokawa, Aichi-pref., Japón

Cumple las siguientes Directivas

2006/42/CE	Maquinaria (MD)
2004/108/CE	Compatibilidad electromagnética (EMC)
2000/14/CE	Emisiones sonoras de máquinas de uso al aire libre

Se ha diseñado y fabricado utilizando las siguientes especificaciones

ISO 12100 : 2010 (2006/42/CE)
ISO 5395-1 : 2013 (2006/42/CE)
ISO 5395-3 : 2013 (2006/42/CE)
ISO 14982:1998 (2004/108/CE)

Documentación técnica

Nombre del responsable:	Kyoeisha Co., Ltd.
Dirección del responsable:	1-26 Miyuki-cho, Toyokawa, Aichi-pref., Japón

Compilador del archivo técnico (2006/42/CE)

Nombre:	Kyoeisha U.K. Ltd.
Dirección:	Unit 5 Hatch Industrial Park Greywell Road, Basingstoke Hampshire RG24 7NG, Reino Unido

Procedimientos de evaluación de conformidad

Control de fabricación interno: Módulo A (2006/42/CE)
Examen de tipo CE: Módulo B (2004/108/CE)
Control interno de fabricación con evaluación de documentación técnica y comprobaciones periódicas (2000/14/CE)

EU-Konformitätserklärung

Produktbeschreibung

Produkt:		Bunkerharke
Marke:		BARONESS
Modell:		SP05A
Version(en):		Nicht zutreffend
Startseriennummer:		**20207**
Gemessener Schallleistungspegel:		LWA 95.00 dB
Garantierter Schallleistungspegel:		LWA 98 dB
Hersteller	Name:	Kyoeisha Co., Ltd.
	Adresse:	1-26 Miyuki-cho, Toyokawa, Aichi-pref.,Japan

Entspricht den folgenden Richtlinien

2006/42/EG	Maschinenrichtlinie
2004/108/EG	Elektromagnetische Verträglichkeit (EMV)
2000/14/EG	Geräuschemission von im Freien betriebenen Geräten

Unter Anwendung der folgenden Bestimmungen entwickelt und hergestellt

ISO 12100 : 2010 (2006/42/EG)
ISO 5395-1 : 2013 (2006/42/EG)
ISO 5395-3 : 2013 (2006/42/EG)
ISO 14982:1998 (2004/108/EG)

Technische Dokumentation

Name des Halters	Kyoeisha Co., Ltd.
Adresse des Halters	1-26 Miyuki-cho, Toyokawa, Aichi-pref.,Japan

Technische Unterlagen erstellt von (2006/42/EG)

Name:	Kyoeisha U.K.Ltd.
Adresse:	Unit 5 Hatch Industrial Park Grewell Road,Basingstoke Hampshire RG24 7NG, Großbritannien

Konformitätsbewertungsverfahren

Interne Produktionskontrolle : Modul A (2006/42/EG)
EG-Baumusterprüfung : Modul B (2004/108/EG)
Interne Produktionskontrolle mit Bewertung der technischen Unterlagen und regelmäßiger Überprüfung (2000/14/EG)

https://truckmanualshub.com/

BARONESS®

Quality on Demand

KYOEISHA CO.,LTD.

Head Office 1-26, Miyuki-cho, Toyokawa, Aichi-Pref. 442-8530 Japan. Tel :(0533) 84-1390 Fax:(0533) 89-3623

SP05A---UM--GBZ/15J-00-S.K