INTERNATIONAL®
Engines

SERVICE MANUAL

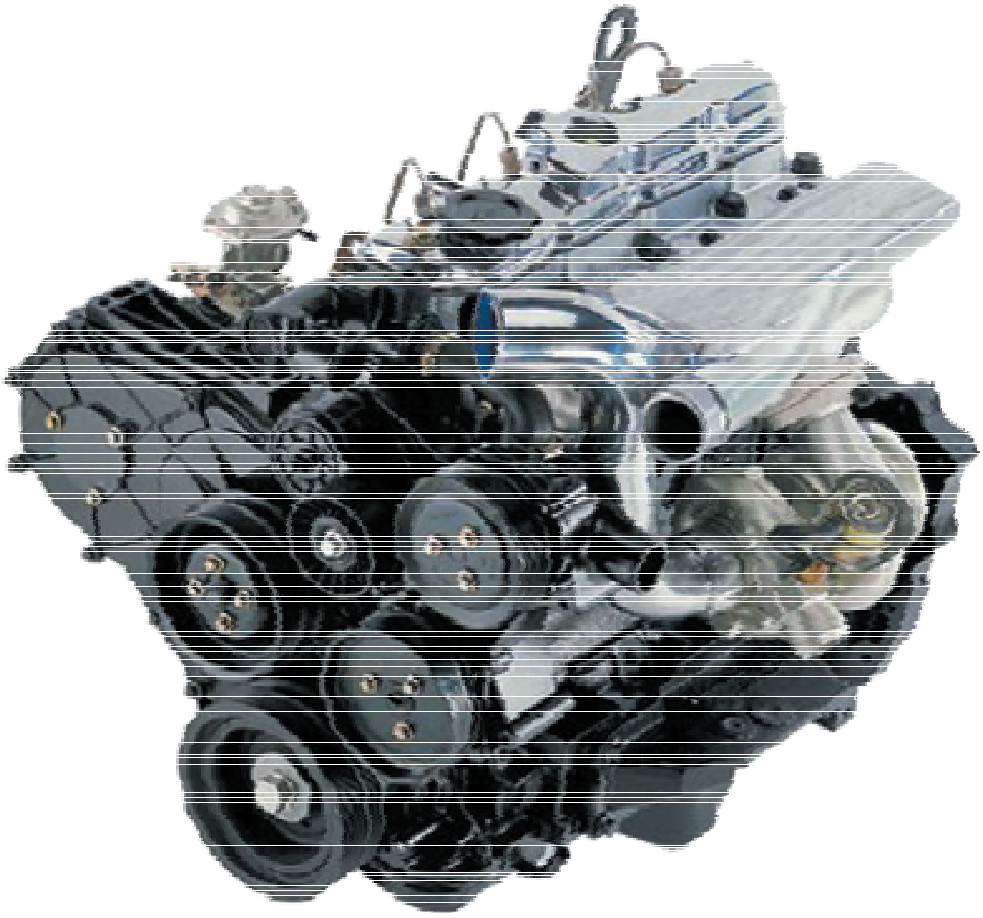

International HS 2.8L

Downloaded from www.Manualslib.com manuals search engine

➤ *PRESENTATION*

This Service Manual has technical specifications necessary to a correct maintenance and repairing of the International HS 2.8L engines.

As a strictly technical literature, it has been avoided the inclusion of theory concepts and basic definitions, due to this publication purpose.

It is important to learn how to correctly operate, to maintain and to repair these engines, as well to know the issues that may cancel warranty due to a bad operation, unauthorized adaptations, unoriginal parts use or any other procedures that affect it way any.

Following the instructions and specifications of this manual, the maintenance and repairing will be made in the most correct and safety way possible.

INTERNATIONAL ENGINES SOUTH AMERICA LTDA reserves the right of changing the content of this publication without warning, whenever innovations are necessary to be introduced in its products.

INTERNATIONAL ENGINES SOUTH AMERICA LTDA
Strategic Planning and Control Management
After Sales Department
Estrada dos Casa, 3155
S.B. do Campo - SP - Brazil
ZIP 09840-000 - Post Office Box 951
Phone: 55 (11) 4358-8522 - Fax (11) 4358-5710
site: www.nav-international.com.br
Publication Nr. 8120081 - 05/02.

Downloaded from www.Manualslib.com manuals search engine

INDEX

Safety Precautions 3
Environment 5
Technical Features 8
Operation and Maintenance Recommendations 11
Cooling System 20
Fuel System 27
Lubrication System 41
Cylinder Head 47
Engine Block 63
Pistons and Connecting Rods 68
Crankshaft 76
Crankshaft Pulley 83
Engine Timing 89
Flywheel 97
Accessories 101
Technical Specifications 106
Tightening Specifications 113
Additional Instructions 119
Special Tools 125

Downloaded from www.Manualslib.com manuals search engine

SAFETY PRECAUTIONS

Downloaded from www.Manualslib.com manuals search engine

➤ *SAFETY PRECAUTIONS*

Warning: The texts emphasized with the symbol means direct or indirect personal injuries risk.

Read carefully this manual and keep it always on hand to clarify any doubts.
Do not try to operate the equipment without knowing all controls and understanding the operation of the main systems.

Take all precautions of safety indicated next, because they are your protection during the work.

- Do not change the original features of the engine.
- Do not smoke while filling fuel tank.
- Clean immediately all and any spilled fluid. Put the material used on cleaning in a safe position and discard according the Local Legislation.
- Do not fill, while engine is running, unless it is absolutely necessary.
- Never clean, lubricate or adjust an engine in operation.
- Do not adjust anything, if you do not know how to do it correctly.
- Do not operate the engine in closed rooms, because the exhaust gases are extremely “prejudicial” to the health.
- Do not allow people or animals to stay close to the engine, vehicle or equipment while in operation.
- Do not allow people with loose clothes or long and loose hair to stay close to the mobile parts.
- Stay away from the rotary parts. Remember that helices, for example, cannot be well seen while the engine is running.
- Do not remove radiator cap if the engine is still hot, because cooling water, under pressure, is extremely dangerous, and may spill and cause serious injuries.
- Do not use salty water or any other substance that can cause corrosion in the cooling system.
- Avoid sparks or fire near batteries, especially while they are charging, because they can cause explosions. The solution of the batteries could boil and its contact with the skin and eyes is dangerous.
- Disconnect battery terminals before doing any repair in the electric system.
- Seek medical assistance if diesel fuel, under high pressure, penetrates the skin.

Downloaded from www.Manualslib.com manuals search engine

ENVIRONMENT

Downloaded from www.Manualslib.com manuals search engine

➤ *ENVIRONMENT*

ENVIRONMENTAL POLICY

INTERNATIONAL ENGINES SOUTH AMERICA LTDA is committed with the continuous search of the environment preservation in Diesel engines production for the worldwide market, through an efficient administration of its resources, processes and products.

GUIDELINES:

To attend the legislation, applicable environmental rules and other requirements that the Company has joined.

To develop products and procedures to reduce environmental impacts and to avoid pollution.

To apply an efficient administration system that promotes the continuous improvement to reach environmental objectives and targets.

To promote, in the Company, the sense of individual responsibility in relation with the environment.

To involve its suppliers and service suppliers in the development of habits which cooperate in the preservation of the environment.

ENVIRONMENT

The environment preservation is a basic point in the managerial philosophy of **INTERNATIONAL ENGINES SOUTH AMERICA LTDA.**

It has been approved a program of actuation that includes activities as natural resources conservation, elimination and residues recycling, water protection, noise reduction and acoustic isolation, air purity conservation and contaminants residues elimination.

All these subjects constitute the mark of a wide environment protection program, which is considered since the beginning of a new product project.

The International HS 2.8L engine was released in the market and accomplishes without problems all these requirements.

The systematical accomplishment of this philosophy can be appreciated especially in the main aspects, like disassembly easiness, less number of materials, usage of plastics of easy recycling.

It means, equally, that materials harmful to the environment are not used, like amianthus, cadmium and hydro-carbide fluor-chlorined.

In the same field, gases and acoustics emissions reduction are considered, as well as the improvement of the active and passive safety.

This environment protection program is not limited only to the production process, because it is extended to the complete cycle of useful life of the engine, considering also its wear after a long operation period.

We have assumed a commitment with the planet we live in. A commitment that we take very seriously.

Downloaded from www.Manualslib.com manuals search engine

ENVIRONMENTAL POLLUTION CONTROL

INTERNATIONAL ENGINES SOUTH AMERICA LTDA, through its Environmental Administration System, has improved more and more its engines contributing to pollution reduction (Program of Air Pollution Control for Auto-Motorized Vehicles - PROCONVE) and attending, in this way, to the resolutions of CONAMA (National Council of the Environment).

Warning: The engine adjustment values specified in this manual, must be strictly observed, because, besides to offer a better performance to the vehicle, also reduce noises and harmful gases emissions to the atmosphere.

Warning: Any change in the fuel injection or air intake system, or even the exhaust system, may affect directly the homologated values.

DESTINATION OF THE USED COMPONENTS OF THE ENGINE

INTERNATIONAL ENGINES SOUTH AMERICA LTDA is applying in its engines, more and more, materials of easy recycling, making easy this way, in the end of the component life, its sale or re-fusion.

Plastic and Metallic Components / Packing

This type of component must be sent to a Scrap Trade where the parts will be sold and re-melted.

Lubricant Oil

This fluid has a high polluting potential and it cannot be discarded, never, in the sewer. Send it to companies that make the re-process (re-refine).

Downloaded from www.Manualslib.com manuals search engine

TECHNICAL FEATURES

Downloaded from www.Manualslib.com manuals search engine

➤ *TECHNICAL FEATURES*

ENGINE TYPE	INTERNATIONAL HS 2.8L	
PL number	8B60	8B61
Turbocharger	Variable Nozzle (VNT)	With Wastegate
Number and Cylinder Arrangement	4 in line	
Cylinder Nominal Bore	93.0 mm	
Stroke	102.50 mm	
Cycle	Diesel, 4 stroke	
Compression Relation	19.5 : 1	
Total Displacement	2,8 Liters	
Combustion System	Direct Injection	
Rotation Sense (front view)	Clockwise	
Firing Order	1 - 3 - 4 - 2	
Opening Beginning	86 - 90 ºC	
Operation Temperature	86 -102 ºC	
Lubricant oil Pressure (at Maximum Specified Speed With the Engine at Normal Operation Temperature)	3.5 bar	
Maximum Speed Unload	4640 rpm	
Idle Speed	800 rpm ± 20	
Static Injection Beginning at TDC	0º	
Engine Cooling	Liquid	
Power (NBR5454)	135 hp (99 kW) at 3800 rpm	133 hp (97 kW) at 3800 rpm
Torque (NBR5454)	38.2 kgfm (375 Nm) at 1400 rpm	36.2 kgfm (355 Nm) at 1600 rpm
Weight (basic unit)	208 kg	205 kg

Downloaded from www.Manualslib.com manuals search engine

LOCATION AND IDENTIFICATION OF THE ENGINE NUMBER

Location

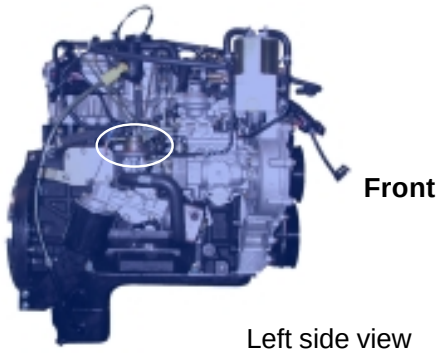

Identification

B61 (WG)
B60 (VNT) **536265**

SERIAL NUMBER

PARTS LIST NUMBER

- For engines manufactured in Brazil - nr 000001 to 499999.
- For engines manufactured in Argentina - nr from 500000 on.

PS: (WG) - Wastegate Version
(VNT) - Variable Nozzle Turbocharger Version

Downloaded from www.Manualslib.com manuals search engine

OPERATION AND MAINTENANCE RECOMMENDATIONS

Downloaded from www.Manualslib.com manuals search engine

➤ *OPERATION AND MAINTENANCE RECOMMENDATIONS*

START AND STOP

Before starting the engine

1. Check “Daily Maintenance” items, see PERIODIC MAINTENANCE.
2. Turn start key to contact position and check if battery charge and engine oil pressure indicator lamps are switched on.

If the engine has been stayed inactive for a long period, bleed the fuel system.

Key Positions

1. Off
2. Contact
3. Start

Start

Warning: POSITION TRANSMISSION LEVER TO NEUTRAL.

1. Position key in start position for seven seconds, at the maximum.

If engine doesn’t work, repeat operation after 30 (thirty) seconds.

Note: Do not keep the key turned too much long, because it will damage the starter.

In turbocharged engines, after to start, do not accelerate over than 1000 rpm, during the firsts 30 (thirty) seconds. This allows turbocharger lubrication line pressure equalization avoiding damages to this equipment.

Downloaded from www.Manualslib.com manuals search engine

2. Check the panel instruments, engine noise and exhaust gases.

   In case of any irregularity, stop the engine and immediately look for our Distributors Network and / or Authorized Services.

Note: Do not extremely load the engine, while it is not at the normal operation temperature.

Stop

Warning: Let the engine in idle speed and transmission lever in neutral.

In turbocharged engines, in order to do not damage the turbocharger shaft, the engine must run during 30 (thirty) seconds under 1000 rpm before stopped.

- Do not accelerate the engine.
- Turn key to “off” position.

RUNNING-IN

The technology that INTERNATIONAL ENGINES SOUTH AMERICA LTDA uses on its engines production, as well as on tests in dynamometer, eliminate the necessity of large run-in periods. Generally, it is considered the firsts 2500 km (1550 mi) of work as the necessary period for the run-in, which can vary according to each application that each product is used.

Downloaded from www.Manualslib.com manuals search engine

During running-in follow these recommendations:

- DO NOT OPERATE THE ENGINE AT OVER THAN 85% OF THE MAXIMUM SPECIFIED SPEED (3800 rpm), see TECHNICAL SPECIFICATIONS.
- WHEN IN A TRIP, VARY THE ROTATION TO AVOID CONSTANT SPEEDS DURING LONG PERIODS. DO NOT BRUSQUELY ACCELERATE THE ENGINE.

During useful life of the engine:

- Before starting, check lubricant oil, cooling system water and fuel levels.
- Do not warm the engine up in idle speed but varying its speed.
- To reach the normal operation temperature, move the vehicle without extremely loading and without exceeding 3800 rpm.
- Do not let the engine running in idle speed without need.
- Keep the engine operation temperature between 86 and 102 °C (187 and 216 °F) engine.

Note: It is operator responsibility the correct use of the product during the running-in. The not execution of the recommendations above mentioned will provoke the decrease of the product useful life, with consequent increase of the lubricant oil consumption to higher levels than the ones defined by the project.

REVISION PROGRAMS

The engine warranty is conditioned to the accomplishment of the delivery revisions, and more the revisions mentioned in the Warranty Certificate.

Our Distributors and / or Authorized Services Net must make all obligatory and periodic revisions operations according to the instructions of this Manual.

Optional equipment installation, not originals from factory, will cancel warranty and may cause serious damages to the engine, with consequent decrease of its useful life.

For a better engine performance, always use genuine parts.

Downloaded from www.Manualslib.com manuals search engine

INSTALLATION REVISION

ITEM	CHECK
Alternator belt	Tension
Water and lubricant oil	Level (complete if necessary)
General performance	Operation temperature and speed at maximum load
Intake system	Intake air temperature and restriction
Fuel system circuit	If the piping is unobstructed and free of vibrations, extreme heat areas and leakages occurrences
Exhaust system	If there isn't restriction to the exhaust gases
Command system	Accelerator course
Engine fixation	Alignment among engine and transmition
Instrument panel	Indicators, warning lamps and sensors functioning
Cooling system	Radiator, hoses, piping and clamp conditions

Downloaded from www.Manualslib.com manuals search engine

PERIODIC MAINTENANCE

PERIODS								CHECK
15,000 km (9,300 mi)	30,000 km (18,600 mi)	45,000 km (27,900 mi)	60,000 km (37,300 mi)	75,000 km (46,600 mi)	90,000 km (55,900 mi)	105,000 km (65,200 mi)	120,000 km (74,600 mi)	
Daily								Check engine oil level (complete if necessary).
Daily								Check water “reservoir” level (complete if necessary).
Daily								Drain impurities from the fuel filter and sedimentation filter.
Daily								Check air filter hoses and connections conditions.
●	●	●	●	●	●	●	●	Check the terminals and battery level.
●	●	●	●	●	●	●	●	Retighten engine rubber pads.
●	●	●	●	●	●	●	●	Replace lubricant oil and filter.
●	●	●	●	●	●	●	●	Replace fuel filter element.
●	●	●	●	●	●	●	●	Adjust valves clearance.
●	●	●	●	●	●	●	●	Check idle speed*.
●	●	●	●	●	●	●	●	Check teeth belt conditions, through the inspection lateral plug.
●	●	●	●	●	●	●	●	Check external belts conditions.
●	●	●	●	●	●	●	●	Cooling system: check anti-freezing (replace at each 2 years).
●	●	●	●	●	●	●	●	Check oil - fuel - cooling piping conditions.
							●	Replace external belts.
							●	Replace toothed belt.
			●				●	Evaluate starter, alternator and turbocharger**.

After the first change at 15.000 km (9,300 mi) lubricant oil and oil filter must be obligatory changed at each 15.000 km (9,300 mi) or 6 months maximum (which one first occurs). Fuel filter must be replaced and fuel tank clean (maximum) at each 6 months, even without reached the limit of 15.000 km (9,300 mi) (recommended for the fuel filter change).

* Services that have to be made by Distributors / Authorized Services Net.

** Services that have to be made by part manufacturer.

Remark: For vehicles that work predominantly in regions where sulfur index in fuel is over than 1%, lubricant oil change intervals must be at each 7.500 km.

Downloaded from www.Manualslib.com manuals search engine

TURBOCHARGER

The turbocharger is compound of a rotary turbine and a air compressor, located in opposite sides of a same shaft. The compressor and turbine rotors are covered by housing denominated compressor and turbine, which function is to direct the gases flow through the rotors shovels.

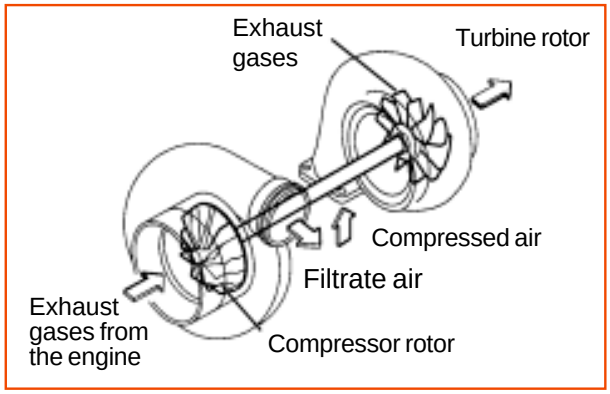

These gases having energy in pressure, temperature and speed form, cause the rotation of the turbine rotor and consequently of the compressor rotor.

With the rotation, the atmospheric air (that must be properly filtrate) is aspired, and later on, compressed to the compressor rotor from where goes to turbocharging (in turbocharged International HS 2.8L engines) and later on to the engine cylinders. Having a higher pressure in the intake, the work done by the cylinders is positive, in other words, the cylinders spent a smaller amount of energy in the intake.

In turbocharged International HS 2.8L engine, the turbocharger is also composed by a Wastegate valve or VNT, which controls the maximum pressure to be provided by the compressor, to avoid damages in the engine.

Other advantage:

Existing a larger mass of air, we can fire a larger amount of fuel, besides we get a better combustion of the mixture.

The operation of an engine equipped with turbocharger does not require any special procedure.

Anyway, to assure the maximum durability of the turbocharger, take care of these items:

To accelerate the engine immediately after starting damages the turbocharger, because it gets a high speed without the oil flow need on its shaft.

To accelerate the engine before stop it, also damages the turbocharger, because it stops the lubrication but, on the other hand, the turbo shaft still has a high speed.

Downloaded from www.Manualslib.com manuals search engine

The intake of strange objects, even smalls, will damage the rotor of the compressor, damaging the operation of the turbocharger, this way, between the recommended periods check the air filtering system.

By working at high speeds and temperatures, the turbo requires a lubricant oil that accomplish to these requirements, and never should be used a lubricant oil that does not attend to API / ACEA specification (5th class - multi-viscous).

ACCESSORIES BELTS

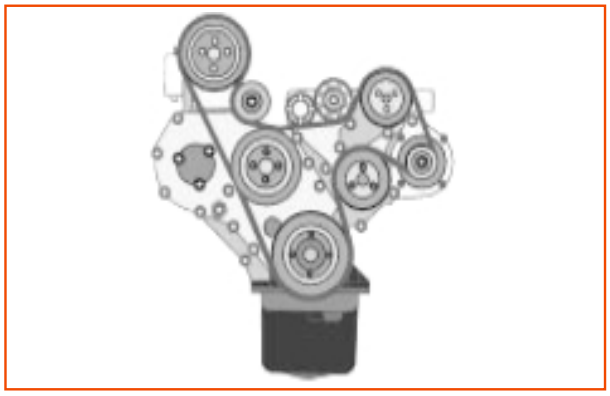

If the panel of the equipment accuses high temperature and / or battery low charge, check if the belt is loose or ruptured.

Two belts equip the turbocharged International HS 2.8L engine. It is very important that the belts be installed exactly as shown in the illustration.

Two tensors adjust automatically the belts tension, eliminating this way the necessity of individual adjustment.

The belts must be checked at each service and replaced when necessary.

Off-road use

Belts regular checks are essential if the vehicle is used off-road. When executing service in the vehicle, the owner must be contacted to identify the way in that the vehicle's mileage has been get.

After each off-road use, the owner must check the belts for cuts and damages caused by stones. If one of the belts gets loose, it must be repositioned correctly, replacing in the next service or before, depending on the damage level.

Belts conditions check

Check belts conditions, replacing them if they present waste, cracks or contamination with oil.

Downloaded from www.Manualslib.com manuals search engine

CAMSHAFT BELT

The engine timing pulleys are moved by a flexible rubber belt, which must be replaced in predetermined intervals depending on the use conditions severity.

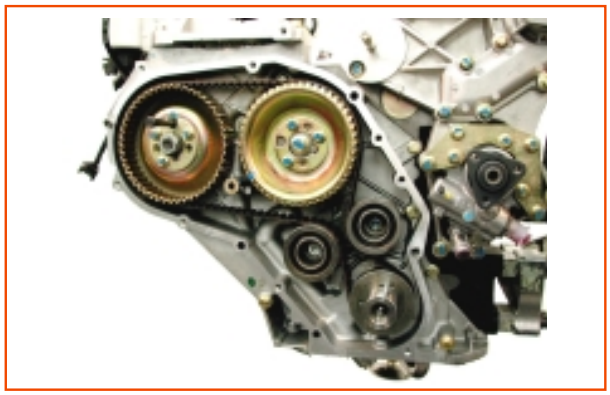

Note: If the belt is not replaced within the correct intervals, it may present failures, causing serious damages to the engine.

Follow strictly the specifications of belt tensor tightening, guaranteeing its useful life, according the recommendation.

Downloaded from www.Manualslib.com manuals search engine

COOLING SYSTEM

Downloaded from www.Manualslib.com manuals search engine

COOLING SYSTEM

Circuit drainage

If it is necessary to totally drain the coolant water, follow the instructions below:

Warning: Do not drain cooling water while the engine is still hot and the system pressurized.

1. Remove lower and upper radiator hoses.
2. Remove engine block drainage plug M14 (right side of the engine, front view). Make sure that the drainage hole is not obstructed.
3. Remove radiator hoses from the engine, and fan.
4. Drain all the coolant water from the block.
5. Check hoses condition and replace them if they are damaged or deformed.

System filling

1. Install plug in the block and tighten it within 13 to 17 Nm.
2. Install all cooling system hoses in the inverse order of the removal, according to the vehicle Owner's Manual.
3. Check in the Owner's Manual, the level (capacity) of the cooling system (engine + radiator + expansion reservoir - if existent).

Warning: Never check the water level immediately after the engine stop. This may cause burnings.

Downloaded from www.Manualslib.com manuals search engine

4. Remove cooling system expansion reservoir cover (tank).
5. Remove disaeration plug, located in the upper part of the thermostat housing.
6. With the engine stopped, fill the system through expansion reservoir, until liquid leaks through the disaeration plug (see illustration).

   Always using additives diluted in clean water, keeping the mix proportion (1/3 of addictive, 2/3 of water).

   In regions of more intense cold, use 1/2 of addictive and 1/2 of clean water, free of residues.
7. Press radiator upper hose to help the air elimination and fill the system until only coolant water leaks free from bubbles through the thermostat-housing hole.

Recommended additives:

Radiex Química Ltda - Fluid for radiator Radiex.

Mobil Oil do Brasil Ind. e Com. Ltda. - Mobil Permazone.

Promax Products Máximos S.A. - Bardhal Rad Cool.

Shell Brasil S.A. - Fluid for radiators

Warning: Carefully read the instructions on the product packing before using it.

Do not add soluble oil to the cooling circuit water, because it attacks and damages the rubber hoses.

The above mentioned additives usage is very important to guarantee the cooling system efficiency, being the engine operating at low or high temperatures.

Downloaded from www.Manualslib.com manuals search engine

8. Manually reinstall thermostat housing disaeration plug, just to seal the liquid outlet hole.

A. Fill system until reaching the maximum level of the tank.

B. Tighten expansion reservoir cover and check for leakages.

C. Run engine at idle speed for 10 seconds and let the liquid spill through the disaeration plug, eliminating all air bubbles from the system.

D. Stop engine and tighten the disaeration plug within 13 to 17 Nm.

E. Run engine at 2000 rpm, approximately medium acceleration, for five minutes.

F. Increase speed up to 3500 rpm, approximately 3/4 of the maximum acceleration, for four minutes more.

G. Slow down engine speed again to 2000 rpm, for three minutes more.

H. Check coolant water level in the expansion reservoir, if necessary complete to the maximum level.

FAN

Removal

1. Remove radiator shield.
2. Using tool nr. 8130632 to lock flywheel, use tool nr. 8130643 to viscous clutch.

Warning: To remove the viscous clutch and fan is necessary to rotate the fixation nut clockwise.

Reinstallation

1. Reinstall in inverse order of removal.
2. Using tool nr. 8130632 to lock flywheel, fix viscous clutch and fan with the tool nr. 8130643, counter clockwise; tighten nut.

Downloaded from www.Manualslib.com manuals search engine

FAN PULLEY

Removal

1. Remove fan, see FAN - Removal.
2. Loosen pulley fixation bolts.
3. Remove accessories belt, see ACCESSORIES BELTS.
4. Remove pulley.

Reinstallation

1. Reinstall in the inverse order, tightening bolts within 22 to 28 Nm.

WATER PUMP

Removal

1. Drain cooling system.
2. Remove radiator upper hose from the thermostat.
3. Loosen fixation bolts of the power steering pump pulley.
4. Loosen fixation bolts of the water pump pulley.
5. Remove belt tensor.
6. Remove accessories belt, see ACCESSORIES BELTS - Removal.
7. Remove water pump pulley.
8. Remove power steering pump pulley.
9. Remove the 8 fixation bolts of the water pump, marking the position of the 3 passing bolts in the engine block.
10. Remove pump and gasket and clean the contact surfaces.

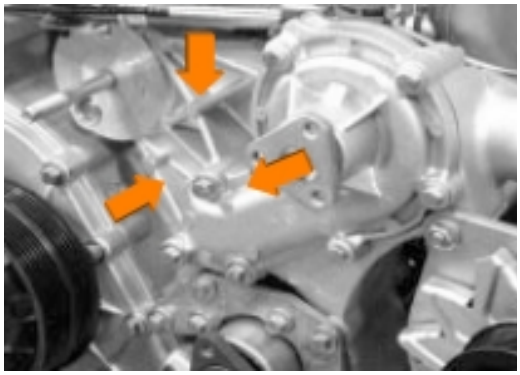

Downloaded from www.Manualslib.com manuals search engine

Reinstallation

1. Reinstall water pump in the inverse order of the removal, using a new gasket.
2. Use two prisoners as guide to position the new gasket, reinstall the assembly support in the inverse order.
3. Apply Loctite 242 and tighten the bolts with the specified torque (See TIGHTENING SPECIFICATIONS).

THERMOSTAT

Removal

1. Partially drain cooling system, until the level of the coolant water is below the thermostat housing.
2. Disconnect hose from thermostat housing.
3. Disconnect electric connections of the water temperature switch.
4. Remove outlet elbow.
5. Remove thermostat.
6. Pay attention that the initial scale for the thermostat operation evaluation test is 88 °C (190 °F). Install the thermostat in a recipient with water. Heat the water up and check the temperature in which the thermostat begins to open. The thermostat will be satisfactory if it opens between 86 and 90 °C (187 and 194 °F).

Reinstallation

1. Put the thermostat with the breathe guide / hole pin totally upwards (12 o-clock position).
2. Install the outlet elbow and a new sealing washer. Tighten bolts within 22 to 28 Nm.
3. Invert the removal operations.
4. Tighten bolts within 22 to 28 Nm.
5. Check for coolant water leakages around all the connections and gaskets.

Downloaded from www.Manualslib.com manuals search engine

Note: The preliminary specified test in this manual for the thermostat evaluation helps the diagnosis of a possible failure in the engine. Therefore, it is recommended to send the thermostat to laboratorial analysis after the tests (if positive).

Downloaded from www.Manualslib.com manuals search engine

FUEL SYSTEM

Downloaded from www.Manualslib.com manuals search engine

FUEL SYSTEM

PREVENTIVE MAINTENANCE

Fuel is an important factor to ensure the good operation of the engine for a long time and without failures.

The fuel must be clean, free of water and impurities.

If the fuel used in the engine has to be stored, see FUEL STORAGE.

During the engine operation, be aware to the fuel indicator.

Fill the tank before the volume reaches the minimum, because sedimented impurities in the bottom of the tank can be suctioned, damaging the filter.

Filling

1. Clean filling inlet duct cover whenever necessary.
2. Every end of working day, fill the tank in order to avoid the condensation of the air humidity.

Warning: After tank filling, keep it very well closed. Never improvise. If the cap presents any problem, replace it to a genuine spare part.

Warning: Bleed the system every time the engine stops due of a fuel lack.

Warning: Do not smoke or get close any type of exposed blame or sparks while filling the tank, because diesel fuel is very inflammable.

Downloaded from www.Manualslib.com manuals search engine

3. In periods of intense cold (under 0 ºC) (32 °F), 20% of aviation kerosene can be added to the diesel fuel. This procedure will avoid that the existence of paraffin in the diesel fuel obstruct the fuel piping. In the filling, first put the kerosene and then the fuel.

Note: Only use aviation kerosene in situations when the ambient temperature is under zero. (0 °C) (32 °F).

Fuel Filter

The filter has the function to retain the impurities to make that the system receives a clean fuel, avoiding this way damages in the engine fuel injection pump and the nozzles.

Note: Use only genuine filter element.

Filter drainage

Daily, in order to avoid the premature obstruction of the filter and to guarantee the fuel injection pump and nozzles durability, it is necessary drain it before the initial start, according to the Periodic Maintenance table.

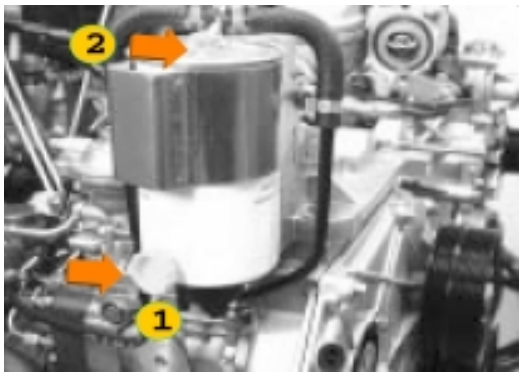

1. Open filter drainage lateral plug.
2. Open filter upper plug.
3. As soon as the fuel flows clean, through the side plug, close the drain plug.
4. Close upper plug.
5. Check for leakages.

Downloaded from www.Manualslib.com manuals search engine

FUEL FILTER ELEMENT

Removal

1. Loosen filter fuel inlet (1) and outlet (2) pipes (position pipes to avoid leakages).
2. Loose fuel filter fixation clamp.
3. Raise fuel filter and loosen electric connection of the water-in-fuel sensor.
4. Remove filter.
5. Disconnect water-in-fuel sensor.
6. Discard filter.

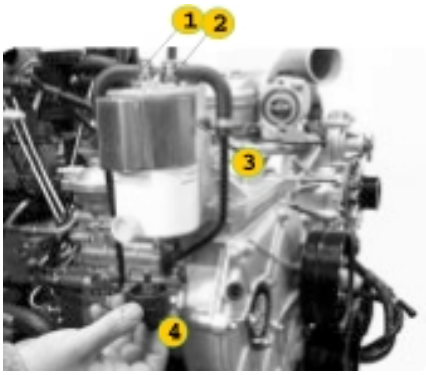

Installation

1. Manually assembly water-in-fuel sensor, until rubber ring touches the new filter.
2. Turn sensor 1/3 turn clockwise.
3. Position filter in the clamp and install water-in-fuel sensor electric connection 1 and 4.
4. Support filter in the support and if necessary, adjust filter to allow better a position of the pipes.
5. Install fuel inlet and outlet pipes.
6. Tighten clamp nut until the clamp touches the support (to avoid strangle).

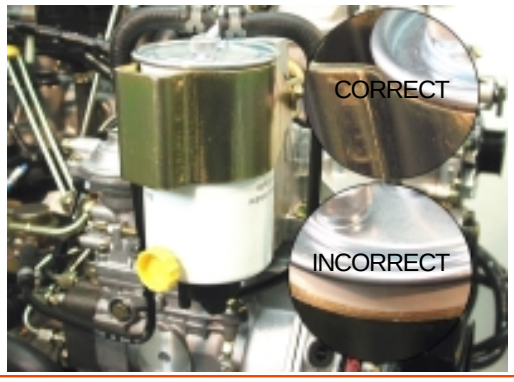

Note: The upper edge of the filter must be pushed against the aluminum support in order to provide negative, according detail below. In case of non-existence of contact between the edge of the filter and the support, the sensor will loose action and will not indicate the water presence in the vehicle panel.

7. Start engine, wait to speed stabilization (in idle speed), for 10 seconds.
8. Check for leakages.

Note: Manual bleed is unnecessary.

Downloaded from www.Manualslib.com manuals search engine

LACK OF FUEL

1. Fill fuel tank with 3 liters minimum.
2. Open fuel filter upper plug and loosen the 4 nozzle nuts.
3. Crank engine until that fuel drips through the filter upper plug and through the nozzle nuts (approximately 10 seconds).
4. Close plug and tighten the high-pressure pipe nuts.
5. Start and wait for 10 seconds to engine stabilization.
6. If the engine doesn't start, repeat the procedure starting from the item 2.
   - It is recommended to change the fuel filter.
   - Avoid the lack of fuel because it causes serious damages to the fuel injection system.

LIFT PUMP

Fuel lift pump has the function of transferring fuel from fuel tank to fuel injection pump, passing through the fuel filter.

Removal

1. Disconnect fuel lift pump inlet and outlet pipes.

Note: Close pipes ends and connections to avoid dust penetration.

2. Loosen fixation bolts and remove pump and gasket.

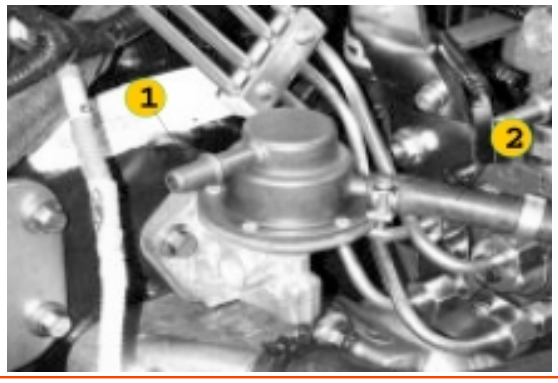

Downloaded from www.Manualslib.com manuals search engine

Reinstallation

1. Clean pump and block contact surfaces.
2. Install pump in cylinder block with a new gasket, ensuring of the correct location of the lever with the camshaft.
3. Fix with bolts tightening according to specification.
4. Connect fuel lift pump inlet and outlet pipes.

BLEEDING

Note: Position contact key in start.

After each one of the operations described next, crank the engine until the fuel to leave without air bubbles. Next, close the bleeding point indicated.

1. Open fuel filter upper plug 1 and loosen the 4 nozzle nuts.
2. Crank engine until fuel drain through the filter upper plug and nozzles nut (approximately 10 seconds).
3. Close plug and tighten high-pressure pipe nuts.
4. Start and wait for 10 seconds to engine stabilization.

FUEL INJECTION PUMP

Removal

1. Remove fuel injection pump inlet and outlet pipes.
2. Remove boost control pipe.
3. Remove high-pressure pipes set from the fuel injection pump to the nozzle-holders set.
4. Remove valves cover.
5. Turn crankshaft clockwise until that the valves of the cylinder nr. 4 swings (cylinder nr. 1 piston at TDC in compression stroke).

Downloaded from www.Manualslib.com manuals search engine

6. Reinstall valves cover to avoid particulates penetration.
7. Remove flywheel-housing plug.
8. Install tool nr. 8130632 in the flywheel housing, without inserting center pin.
9. Continue turning crankshaft clockwise until that center pin fits in the flywheel timing hole.
10. Remove fuel injection pump inspection cover from timing housing cover, complete with the gasket.
11. Install the pin of the tool nr. 8130633 in the fuel injection pump pulley.

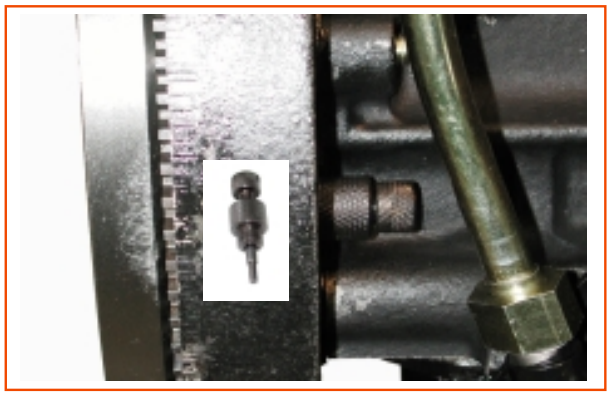

12. Remove limiter bolt tightening it to lock the pump.
13. Remove from the motor pulley the fixation bolts of pump hub and plate.
14. Remove pump pulley pin.

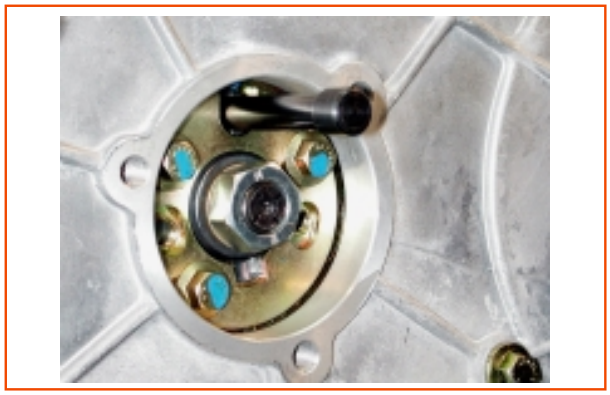

15. Install tool nr. 8130633 with an 8 mm washer and 1,5 to 2 mm thickness, under each bolt head, beyond existent washer.

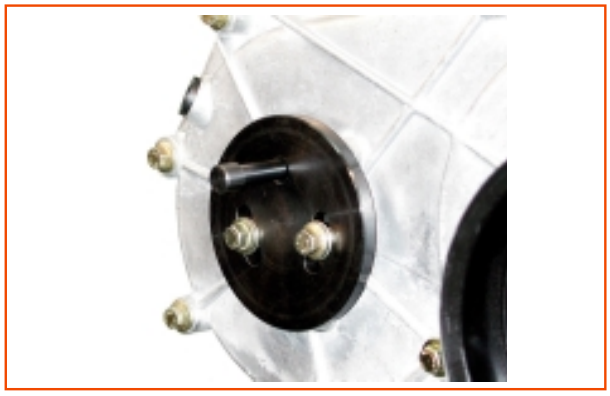

Downloaded from www.Manualslib.com manuals search engine

16. Remove accelerator cable at the fuel injection pump.
17. Disconnect connector from electric stop control solenoid.
18. Remove banjo bolts from fuel return pipes and “boost control”, reinstalling them after the pipes disconnection.

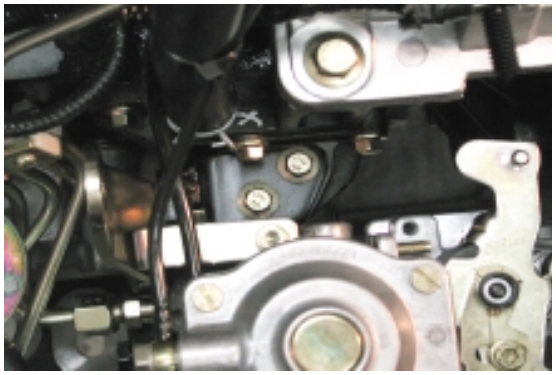

19. Remove the two bolts from the pump assembly support (*).
20. Loosen the pump support bolts in the block 1, enough to move the support.
21. Loosen pump fixation nuts in the flange and remove pump and gasket.
22. Install plugs in pipes connections.
23. Reinstall limiter, if a new pump is being installed.

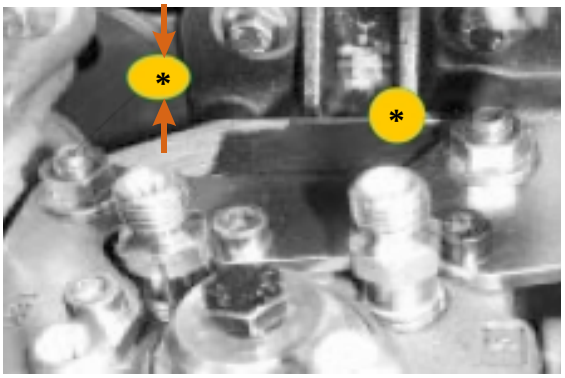

Reinstallation

1. Remove pump plugs.
2. (Only for a new pump). Install the tool pin nr. 8130633 in the fuel injection pump, turning the pump the necessary to introduce the pin. Remove the limiter and tighten the bolt to lock the pump.

Downloaded from www.Manualslib.com manuals search engine

3. Remove special tool pin from the pump.
4. Clean pump and timing housing contact surfaces.
5. Install pump in timing housing with a new gasket and fix it with nuts tightening according to specification.
6. Fix pump to timing housing with nuts, tightening within 22 to 28 Nm, clockwise, and finishing the tightening in the lower nut.
7. Tighten the support fixation bolts to the block and pump bolts to the support, and tighten within 22 to 28 Nm.
8. Connect return and fuel pipes with new washers and fix them with banjo bolts tightening according to specification.
9. Connect “boost control” pipe and fix it with banjo bolt tightening it according to specification.
10. Connect stop control solenoid wiring.
11. Connect accelerator cable.
12. Remove tool nr. 8130633.
13. Install gear lock plate.
14. Install the tool pin nr. 8130633.
15. Fix pulley with bolts.
16. Install retention plate in fuel injection pump.
17. Remove the pins of the special tools nr. 8130632 and 8130633.
18. Turn crankshaft two complete turns, check if the pin of the tool nr. 8130633 can be totally and easily introduced in the pump. Check at the same time that the tool pin nr. 8130632 also can to be introduced in the hole of the flywheel.
19. If, with the timing pin nr. 8130632 introduced on the flywheel, the timing pin of the tool nr. 8130633 is not able to be easily introduced in the fuel injection pump, make the timing procedures, see TIMING.

Downloaded from www.Manualslib.com manuals search engine

20. Using adequate anti-adherent compound, install the flywheel housing plug and tighten it according to specification.
21. Install inspection cover with a new gasket on timing housing cover and tighten bolts according to specification.
22. Reinstall nozzle-holders pipes.
23. Assembly accelerator cables at fuel injection pump.

Note: Remove special tool.

24. Bleed fuel system, see FUEL SYSTEM - Bleeding.
25. Start engine and check system for leakages.

IDLE SPEED ADJUSTMENT

1. Check and adjust accelerator cable.
2. Start engine and let it work until reach normal operation temperature always varying its speed.
3. Using an appropriate tachometer, check idle speed value.
4. Loosen counter-nut in fuel injection pump, if adjustment is necessary.
5. Turn adjustment screw clockwise to increase engine speed, or counter clockwise to decrease it. Operate engine at a higher speed during a few seconds and check idle speed again.
6. Once correct speed is get, tighten screw and counter-nut.

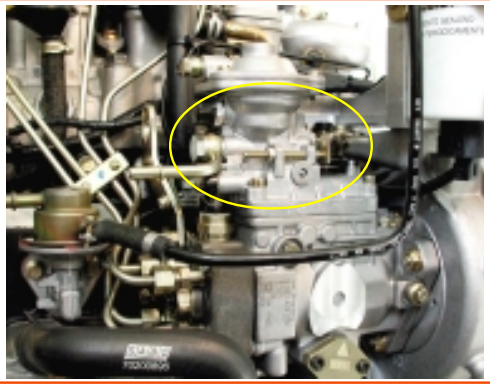

Note: The idle speed is the only adjustment allowed in service. Any other additional adjustment must be made by a Bosch authorized representative.

Downloaded from www.Manualslib.com manuals search engine

FUEL NOZZLE-HOLDERS SET

Removal

1. Remove high-pressure pipes set from nozzle-holders and from fuel injection pump.
2. Remove return pipe from nozzle-holders.
3. Close nozzle-holders pipes and connections to prevent against dust and strange materials penetration.
4. Remove fixation plate nuts from nozzle-holders in cylinder head.
5. Remove nozzle-holders and discard copper washers.
6. Protect fuel passages and nozzle pulverization holes.

Reinstallation

1. Check nozzles. In case it is noticed any irregularity, seek a Distributor or an Authorized Service of the injection system manufacturer, to the nozzle-holder set replacement.
2. Internally clean all fuel piping with compressed air. Externally check pipes conditions and structure, replacing them if necessary.
3. Make sure that the nozzle-holder set and its seat in the cylinder head are clean.
4. Grease slightly a new copper washer and position it in the nozzle-holder set.

Downloaded from www.Manualslib.com manuals search engine

5. Install nozzle-holder set with the return outlet turned outside.
6. Fix it with the plate and nut, tightening according to specification.

Note: The fixation plates are slightly curved and must be installed with the convex side upwards.

7. Install return pipe with only one copper washer under the head of the banjo bolt and two copper washers between the nozzle-holder set and the banjo. Tighten the banjo bolt according to specification.
8. Install high-pressure pipe, tightening the union nuts according to specification.

TIMING

1. Externally clean the engine. Remove valves cover, its gasket and breather pipe.
2. Remove high-pressure pipes set from nozzle-holders to fuel injection pump.
3. Remove fuel injection pump inspection cover from timing housing cover, complete with gasket.
4. Install tool nr. 8130632 in flywheel housing.

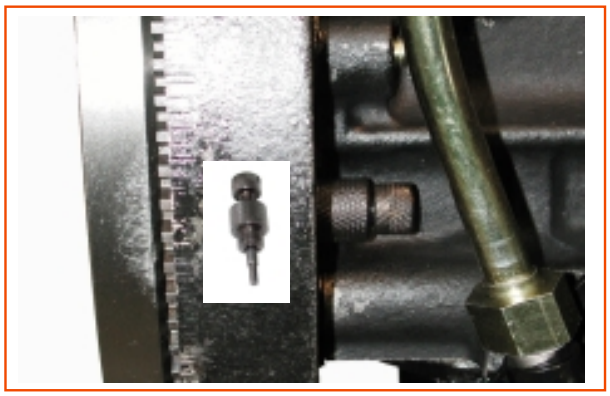

Downloaded from www.Manualslib.com manuals search engine

5. Turn crankshaft to the valves of the cylinder nr. 4 to be swinging (1st cylinder piston at TDC in compression stroke).
6. Continue turning crankshaft clockwise until fit the center pin.
7. Install the tool pin nr. 8130633 in the fuel injection pump pulley.
8. If, with the pin of timing nr. 8130632 introduced in the flywheel, the timing tool pin nr. 8130633 can not be easily introduced in the fuel injection pump, proceed as following:
   a. Make sure that the timing pin of the flywheel are not introduced in the hole.
   b. Turn slightly crankshaft, enough to allow the timing pin fitting in the pump.
   c. Remove retention plate and lock pump.
   d. Loosen the three fixation bolts of the pump gear.
   e. Turn crankshaft to TDC until cylinder nr. 1 in compression.
   f. Check if the timing pin can be easily introduced in the pump and in the flywheel.
   g. Tighten fixation bolts of pump gear according to specification.
   h. Unlock pump, install retention plate and tighten screw.
   i. Remove pump and flywheel timing pins.
9. Using an adequate anti-adherent compound, install the flywheel housing plug and tighten it according to specification.
10. Install inspection cover with gasket in the timing housing cover and tighten bolts according to specification.
11. Reinstall nozzle-holders pipes.

Downloaded from www.Manualslib.com manuals search engine

12. Assembly accelerator cable at fuel injection pump.
13. Bleed fuel system. See FUEL SYSTEM - Bleeding.
14. Install plug in housing, tightening within of 22 to 28 Nm.

Note: Remove special tools 8130632 and 8130633.

15. Start engine and check system for leakages.

Downloaded from www.Manualslib.com manuals search engine

LUBRICATION SYSTEM

Downloaded from www.Manualslib.com manuals search engine

LUBRICATION SYSTEM

PREVENTIVE MAINTENANCE

The lubrication system is responsible for the durability and internal cleaning of the engine. Beyond of lubricating, the oil has the function of absorbing the heat generated by the friction of the mobile parts.

Level

Check oil level with the engine on a flat ground and stopped.

1. Wait from 10 to 15 minutes to allow the oil return from the upper part of the engine.
2. Remove oil dipstick and clean it with a clean cloth, introduce it until the edge, remove it again and check level, twice, to make sure of the check.

Complete the oil level only if the oil mark is below the dipstick lower mark, the difference between the volume of the maximum mark and the minimum mark is 1 liter. Always use oil of the same specification.

Warning: If oil level is frequently low, seek a distributor and / or authorized service.

Lubricant oil and filter replacement

If the engine operates in regions with high dust concentration, or other harmful conditions to the good operation, it will be necessary to reduce the replacement periods, filter and lubricant oil.

Note: After the first oil and filter change at 15,000 km (9,300 mi) or 6 months, prevailing which one occurs first, lubricant oil must be replaced together with filter.

Warning: During drainage, lubricant oil is hot and may cause burnings.

Downloaded from www.Manualslib.com manuals search engine

1. Run the engine until reach the ideal operation temperature.
2. Stop the engine, clean the filling inlet cover and oil pan plug. Remove and let oil drain freely.
3. Check if the breather pipe is obstructed. If necessary, remove and clean it.
4. Remove lubricant oil filter, see OIL FILTER - Removal.
5. Assembly a new filter, see OIL FILTER - Assembly.
6. Assembly oil pan plug with a new washer.
7. Refill and assembly the filling inlet cover.

Note: Only use recommended lubricant oils Multi-viscous SAE 15W/40: CCMC D-5 / ACEA AND 3 / API CG-4

OIL PAN CAPACITY:

Minimum: 6 liters (without filter)

Maximum: 6.5 liters (with filter)

8. Start the engine.
9. Stop the engine, check level and eventual leakages existence.

OIL FILTER

Removal

1. Position a recipient under the filter.
2. Loosen filter counter clockwise, using a belt or a universal ribbon.

Downloaded from www.Manualslib.com manuals search engine

Assembly

1. Lubricate new filter seal with clean engine oil.
2. Screw manually the filter until the sealing ring touches the surface, manually tighten ½ turn more, without tightening excessively.

OIL COOLER

Removal

1. Drain cooling system.
2. Remove water inlet and outlet hoses from the cooler.
4. Disconnect pressure switch.
5. Loosen fixation bolts and remove lubricant oil filter head complete with the gasket.

Installation

1. Clean contact surfaces.
2. Reinstall it with a new gasket.
3. Fix with bolts, tightening them according to specification.
4. Reinstall pipes and reconnect pressure switch.

LUBRICANT OIL PAN

Removal

1. Drain engine oil.
2. Loosen oil pan fixation bolts and use a sharp knife, break the adhesive around oil pan flange.
3. Remove bolts in the inverse of the tightening sequence and remove oil pan.

Downloaded from www.Manualslib.com manuals search engine

Installation

1. Clean oil pan contact surfaces, timing housing and engine block.
2. Install new liquid gasket (LOCTITE 5900).
3. Fix oil pan to the block with bolts according to the illustrated tightening sequence, tightening them according to specification.

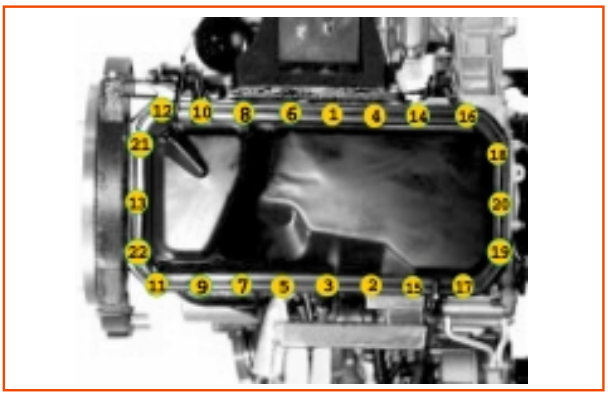

OIL SUCTION PIPE

Removal

1. Remove oil pan, see OIL PAN - Removal.
2. Remove pipe support fixation bolts.
3. Remove pipe flange bolt and oil pump connection.
4. Remove oil suction pipe.
5. Close oil inlet duct in the timing housing, avoiding dirt penetration.

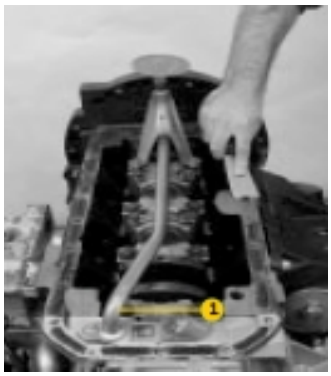

Reinstallation

1. Reinstall oil suction pipe, installing a new sealing “o” ring in pump connection.
2. Apply Loctite 242 in the two bearing cap bolts. Tighten them according to specification.
3. Install bolts in pipe flanges and tighten them according to specification.
4. Reinstall oil pan, see OIL PAN - Installation.

Downloaded from www.Manualslib.com manuals search engine

LUBRICANT OIL PUMP

Removal

The lubricant oil pump of the Turbocharged International HS 2.8L Engines is attached to the timing housing.

1. Remove timing housing, see TIMING HOUSING - Removal.
2. If it is necessary to replace oil pump, it is recommended to replace the whole timing housing, see TIMING HOUSING.

Recommended Lubricant Oils:

Note: Multi-viscous SAE 15W/40: CCMC D-5 / ACEA AND 3 / API CG4.

Note: Multi-viscous oil: Keep its features even with high temperatures variations. Use obligatory in International HS 2.8L Engines.

Downloaded from www.Manualslib.com manuals search engine

CYLINDER HEAD

Downloaded from www.Manualslib.com manuals search engine

CYLINDER HEAD

Removal

Warning: Loosen radiator lower and upper hoses. Remove reservoir cover and loosen water outlet hose from thermostat housing. Drain Cooiant water.

Warning: Loosen exhaust duct from the manifold.

1. Remove outlet elbow and thermostat.
2. Loosen intake duct from manifold.
3. Loosen nozzle-holder return pipe from fuel injection pump.
4. Remove all fuel system pipes.
5. Remove nozzle-holders and washers.
6. Remove air filter and / or intake manifold hose.
7. Remove turbocharger hoses.
8. Remove intake and exhaust manifolds.
9. Remove valves cover breather lateral hose.
10. Loosen the breather valve fixation bolt, remove valve together with valve pipe from intake manifold, remove and discard o'ring.

11. Remove valves cover and gasket.

Downloaded from www.Manualslib.com manuals search engine

12. Disconnect heating pipe from hoses and remove it.
13. Remove wiring support fixation bolt in the cylinder head.
14. Loosen nuts and bolts and remove rocker arms shaft, see ROCKER ARMS - Removal.
15. Remove camshaft tappet push rods, identifying them to reinstall in the same position later.
16. Remove rear lift handle.
17. Uniformly loosen cylinder head fixation bolts from engine block following the inverse of the tightening sequence, removing them next.
18. Raise cylinder head and remove gasket.

Cylinder Head Cleaning, Inspection and Resurfacing

1. After the complete disassembly, flush cylinder head with chemical biodegradable greasing remover and water at 80 °C (176 °F) under pressure, eliminating all presence of carbon.

   Remove existent incrustations in the water galleries. Dry with air.
2. Check for cracks or damages in the cylinder head.
3. Check cylinder head height.
4. Check cylinder head distortion with a sheet and a ruler of steel.

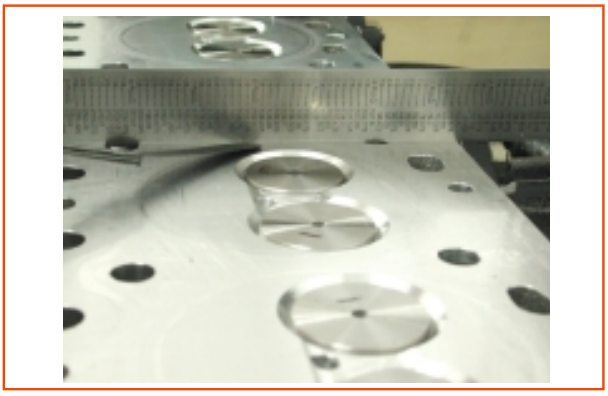

Downloaded from www.Manualslib.com manuals search engine

Note: The maximum allowed distortion is 0.05 mm; over this value, cylinder head must be replaced.

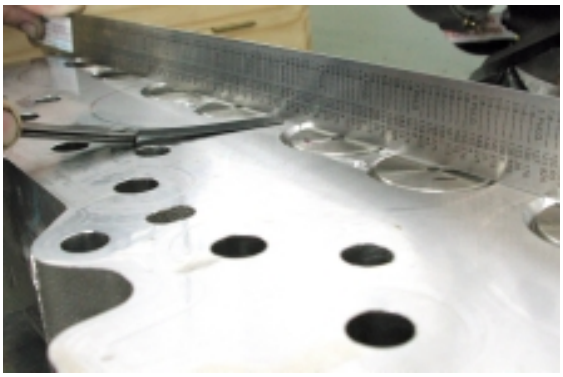

5. Check nozzle maximum projection:

6. Resurfacing can be made only if the maximum nozzle projection to the cylinder head does not surpass the specified dimension (1.82 - 2.10 mm).

Note: Assembly of sealing washers cannot compensate nozzle projection.

7. Check valve guides, see VALVES.
8. Check seats, see SEATS AND HOUSING.

Downloaded from www.Manualslib.com manuals search engine

Reinstallation

1. Make sure that the engine block surface is perfectly clean.
2. Using a dial indicator gauge with a magnetic base, check pistons height, to specify the cylinder head gasket.

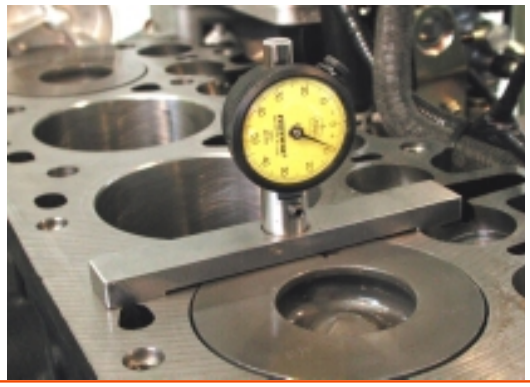

3. There are available 3 (three) types of gaskets for the cylinder head assembly, identified by holes in the left side, from front viewing.

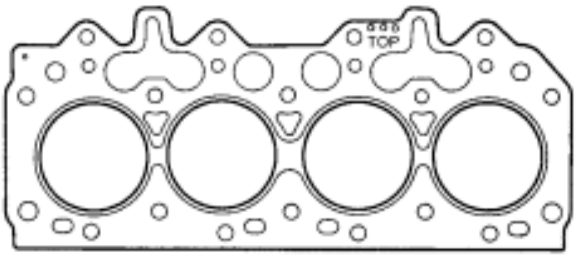

4. Select a new gasket with the correct thickness.

Holes reference	Gasket thickness	Piston Height (mm)
0	1.37 mm	from 0.50 to 0.60
00	1.48 mm	from 0.61 to 0.70
000	1.59 mm	from 0.71 to 0.80

Note: Cylinder head gasket corresponds to piston height, in relation with cylinder head surface.

Downloaded from www.Manualslib.com manuals search engine

5. Install gasket with the identification holes turned back and with “TOP” mark upwards.
6. Clean engine block contact surface.
7. Lower cylinder head on the engine block, making sure of the correct guide-pins position.

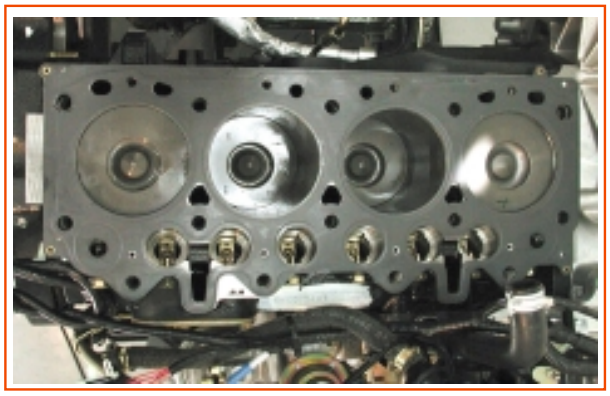

8. Check bolts deformation with a flat ruler, checking their lengthening 1, diameter reduction 2 and whether there is visible waste in the threads 3. If one of the last 3 parameters is out of their project features, they must be replaced.

9. Apply some lubricant oil on bolts threads and install them in the indicated position:
10. Tighten bolts until their heads touches the cylinder head.
11. Follow the instructions, according the table below, to the correct application of tightening:

Positions	Dimensions	Torque (Nm)
1, 2, 7, 8, 9, 10, 15, 16, 17 and 18	M12 x 140 mm	60 Nm + 150°
3, 5, 12 and 13	M8 x 117 mm	20 Nm + 140°
4, 6, 11 and 14	M12 x 100 mm	60 Nm + 120°

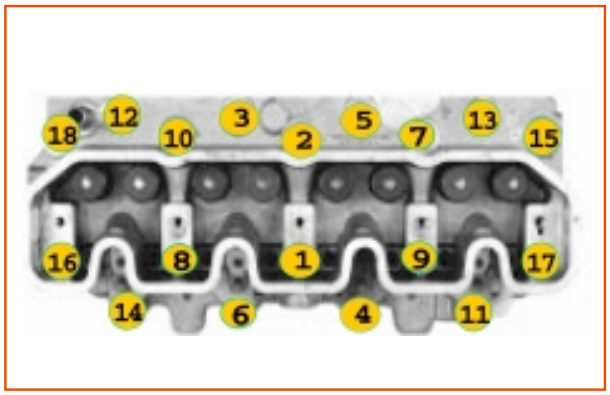

Downloaded from www.Manualslib.com manuals search engine

Note: Use special tool nr. 8130625 (Goniometry).

12. Install valve caps rods.
13. Install camshaft rods on their original positions.
14. Install rocker arm shaft, see ROCKER ARM SHAFT - Installation.
15. Adjust valves clearance, see VALVES CLEARANCE ADJUSTMENT.
16. Install valves cover, making sure that the gasket is good for the continuous use.

Note: Valves cover gasket can be reused twice, at maximum.

17. Fix valves cover with special sealing washers and nuts tightened according to specification.
18. Lubricate “o” ring with engine oil and install it in the breather valve. Install valve and fix it with the bolt, tightening according to specification.
19. Reinstall the remaining items inverting the operations, tightening bolts according to specification, whenever applicable.

Inspection after assembly

1. Start the engine. Check the correct lubricant oil pressure and all engine parts for leakages.
2. Warm the engine up to normal operation temperature see TECHNICAL SPECIFICATIONS, varying its speed.
3. Stop the engine.
4. If necessary adjust valves clearance again, see VALVES CLEARANCE ADJUSTMENT.

Note: It is not necessary to retighten cylinder head during the revisions.

Downloaded from www.Manualslib.com manuals search engine

TURBOCHARGER

Removal

1. Loosen clamp and disconnect turbocharger inlet pipe from intake manifold.
2. Loosen clamp and disconnect breather hose from turbocharger inlet elbow.
3. Loosen clamp and disconnect air filter hose.
4. Remove inlet elbow, loosening support bolts.
5. Loosen lower exhaust pipe in the silencer flange nuts, making sure if the pipe turns freely.
6. Remove turbocharger outlet elbow from exhaust pipe.
7. Position an appropriate recipient under the engine and remove banjo bolt from turbocharger lubrication pipe and disconnect turbocharger oil return pipe from cylinder block.
8. Loosen turbocharger fixation prisoners nuts from exhaust manifold, removing it carefully.

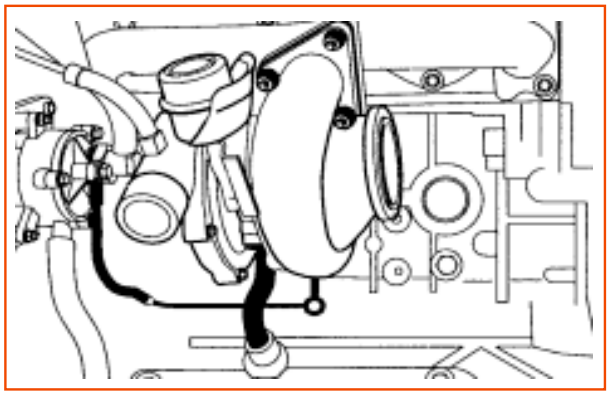

Reinstallation

1. Reinstall in inverse order of removal.

INTAKE MANIFOLD

Removal

1. Loosen clamp and disconnect turbocharger inlet pipe from intake manifold.
2. Remove valve fixation bolts and vacuum derivation and remove the set.
3. Remove bolt that fix intake manifold to intake elbow from turbocharger.
4. Remove boost pipe control banjo bolt.

Downloaded from www.Manualslib.com manuals search engine

5. Loosen intake manifold lower fixation nuts, positioned under the exhaust manifold.
6. Remove intake manifold upper fixation bolts.
7. Raise intake manifold only, covering the openings in the cylinder head with a clean cloth to prevent the fall of any component in the engine.

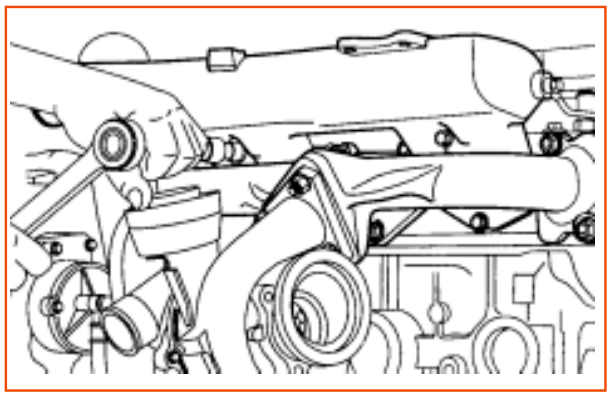

Reinstallation

1. Clean intake manifold contact surface and reinstall it with a new gasket, in the inverse order of the removal, tightening bolt within 22 to 28 Nm.

EXHAUST MANIFOLD

Removal

1. Remove turbocharger, see TURBOCHARGER - Removal.
2. Remove exhaust manifold fixation nuts, removing first lower central nut.
3. Remove gasket.
4. Clean contact surfaces.

Downloaded from www.Manualslib.com manuals search engine

Reinstallation

1. Install new gasket on manifold prisoners.
2. Install exhaust manifold and fix it with the two upper and the three lower central nuts.
3. Tighten exhaust manifold fixation nuts according to specification.

ROCKER ARM

Removal

1. Loosen rocker arm shaft set fixation nuts from the edges to the center in 3 steps.
2. Remove the set.

3. Remove camshaft push rods marking them to reinstall in the same position later.

Downloaded from www.Manualslib.com manuals search engine

Disassembly

1. Remove rocker arms, springs, brackets and spacers.

Cleaning and inspection

1. To clean shaft, remove the plugs of the edges. Check lubricant, rocker arms and shaft passage holes, unblocking them if necessary.
2. Check rocker arms bushing. If its clearance with the upper shaft is over than specified, bushing must be replaced, see clearance in TECHNICAL SPECIFICATIONS.
3. Check waste in the ends and warping of the push rods.

Assembly

1. Assembly a new plug in the ends of the removed shaft. Assembly bushing in rocker arm, making sure that the lubrication holes are aligned.
2. Machine the inner diameter of the bushing.
3. Assembly the connection in rocker arms shaft.
4. Assembly springs, brackets and rocker arms.

Installation

1. Lubricate the lower edge of the push rods, making sure that there is a correct fitting in the tappets.
2. If the rocker arms support shaft fixation “prisoners” in the cylinder head have been removed, assembly and tighten them according to specification.
3. Assembly rocker arms shaft set using new sealing rings. Tighten fixation nuts in three steps from the center to the ends according to specification.

Downloaded from www.Manualslib.com manuals search engine

VALVES

Disassembly

1. Remove cylinder head, see CYLINDER HEAD - Removal.
2. With tool nr. 8130001, compress springs and remove valves locks.
3. Remove springs seats, springs, springs washers, seals and valves.
4. While removing or replacing valves, mark with electric pencil the corresponding number of each cylinder.

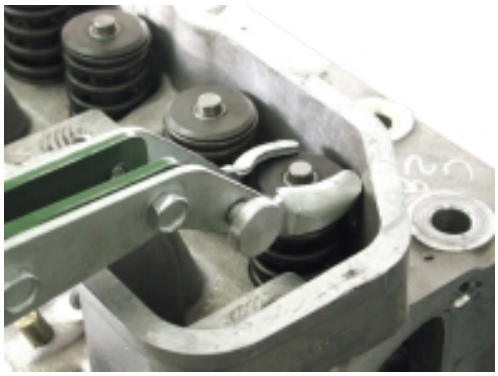

Cleaning and inspection

1. Remove carbon from combustion chamber, valve guides and valves. Wash all parts with solvent.
2. Check valve rod diameters with micrometer in three positions.
3. If the clearance between the rod valve outer diameter and guide inner diameter is over than specified replace guide by another, see VALVE GUIDES.
4. Check springs.

Assembly

1. In the assembly, seals must be replaced and assembled very carefully. Use a compound of Bisulphet of Molybdenum mixed with engine oil. Apply a little coat in valve rod.
2. Install valve in its corresponding guide.
3. Assembly new seal, spring washers, springs and spring seats. Lubricate parts in the assembly sequence.
4. Compress springs and assembly locks.
5. Assembly valves covers.

Downloaded from www.Manualslib.com manuals search engine

Seals and springs replacement with cylinder head installed

1. Set the piston of the replacement corresponding cylinder at TDC.
2. Loosen valve rocker arm adjustment bolt. Displace rocker arm, allowing the access of the tool nr. 8130 002 and compress springs.
3. Remove locks, spring seats, springs, spring washers and seal. Do not turn the crankshaft before the end of to replacement operation, for that the valve does not fall inside of cylinder.
4. Install a new seal on the valve rod, fitting it in its housing. Assembly spring washers, springs and seat.
5. Compress valve springs and install locks.
6. Assembly valves cover.
7. Correctly position rocker arm and adjust the adjustment screw to get the correct clearance, see VALVES CLEARANCE ADJUSTMENT.

VALVE GUIDES

Inspection

1. Remove valves, see VALVES -Disassembly.
2. Remove carbons from combustion chambers and valve guides wash them with solvent.
3. Check guide-hole diameter with an inner diameters measurer in three positions.

Downloaded from www.Manualslib.com manuals search engine

Guide replacement

1. Use tool nr. 8130631 and a press to quit guide.

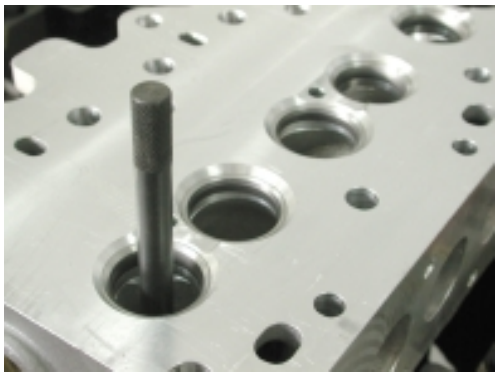

2. Press the guide with the tool nr. 8130634 and the spacer nr. 8130644.
3. Check clearance specification between valve and guide, see TECHNICAL SPECIFICATIONS.

SEAT AND HOUSING

Seat disassembly and machining

1. Seats replacement operations can be made only after valve guides replacement, see VALVE GUIDES.
2. Machine seat, removing it.
3. In housing machining operation, cylinder head surface must be flat and perpendicular to the valve guides, see cylinder head Cleaning, Inspection and Resurfacing.
4. Machine seat housing, using valve guide reference. Proceed according the specifications. See TECHNICAL SPECIFICATIONS - table VALVE SEATS. Try to work the closest possible of the minimum value for later adjustment.

Downloaded from www.Manualslib.com manuals search engine

Assembly

1. In the pressing, the seat can be cooled in liquid nitrogen. Use a press, with 2 to 3 ton capacity. Do not use hammer or similar to press.
2. Position seat with its base turned to the housing.
3. Press intake and exhaust valve seats. Use valve guides for assembly reference.

Inspection

1. Check valve seat on its seat. The seat must not present an eccentricity over than 0.08 mm in relation to valve guide.
2. Check valves depth from cylinder head surface. Use a micro dial indicator gauge together with the tool nr. 8130004. See TECHNICAL SPECIFICATIONS.

VALVES CLEARANCE ADJUSTMENT

1. Remove breather valve and hose.
2. Remove valves cover.
3. Loosen lock nut and adjust clearance turning adjustment screw.

Downloaded from www.Manualslib.com manuals search engine

Clearances

Adjustment conditions	Intake valve	Exhaust valve
COLD ENGINE	0.20 mm	0.20 mm

Procedure

Balance valves of cylinder nr.	Adjust valve of cylinder nr.
4	1
2	3
1	4
3	2

Note: Swinging is the moment when exhaust valve is closing and intake valve is opening. At this situation, the piston of the respective cylinder will be at TDC. The piston nr. 1 is the closest to the timing housing.

3. Assembly valves cover, correctly positioning its sealing gasket with cylinder head. Tighten fixation nuts within 8 to 11 Nm.

Downloaded from www.Manualslib.com manuals search engine

ENGINE BLOCK

Downloaded from www.Manualslib.com manuals search engine

➤ *ENGINE BLOCK*

Removal

Warning: Drain lubricant oil.

Warning: Remove tank cap and loosen water hoses from radiator.

Warning: Remove drain plug and drain cooling system.

1. Loosen electric cables from starter motor, lubricant oil pressure and engine temperature gauges.

Disassembly

1. Disconnect inlet pipes and fuel return.
2. Remove engine from equipment.
3. Install support on the engine and install it in the engine stand.
4. Remove fan.
5. Remove crankshaft pulley.
6. Remove water pump.
7. Remove accessories.
8. Remove cylinder head.
9. Remove fuel lift pump.
10. Remove lubricant oil filter and cooler.
11. Remove distribution cover, pulleys and housing.
12. Remove fuel injection pump.
13. Remove camshaft.
14. Remove flywheel and flywheel housing.
15. Remove oil pan.
16. Remove timing housing.
17. Remove alternator with vacuum pump and power steering pump.

Downloaded from www.Manualslib.com manuals search engine

18. Remove accessories support.
19. Remove rear seal and crankshaft.
20. Remove pistons and connecting rods.

Cleaning and inspection

1. Remove oil gallery rear plug.
2. Remove all water gallery plugs and lubricant oil filter support.
3. Flush block with water at 80°C (176 °F) under pressure and a chemical grease remover. Keep block in an immersion bathing with a solution of the same type for 12 hours and dry with compressed air.
4. Clean block galleries, flush again with hot water under pressure and dry with compressed air. Make sure that the passages of water and lubricant oil are unobstructed.
5. Check for cracks or other damages in the block. Measure cylinders bore, see CYLINDER.
6. Assembly water gallery plugs applying Loctite 601. Fix aluminum washer and oil lubricating rear plug applying Loctite 271.

CAMSHAFT BUSHING AND BEARING

Removal

1. Quit camshaft bearings bushing using tool nr. 8130635 and tool nr. 8130636.

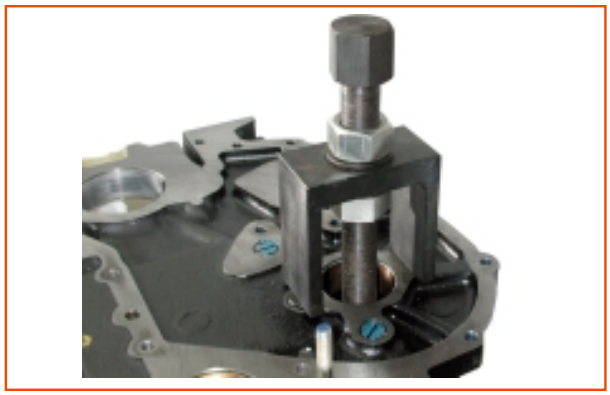

Downloaded from www.Manualslib.com manuals search engine

2. Remove camshaft rear seal.

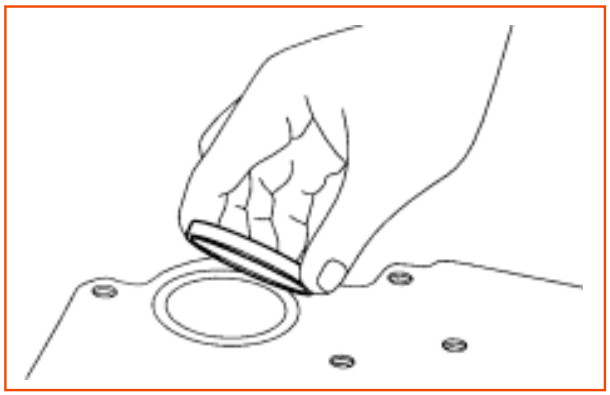

Cleaning, inspection and assembly

1. Check camshaft bushing housing bores.

2. Position bushing in engine block.
3. Assembly bushing, making sure that lubrication hole is aligned with the hole in the block.
4. Assembly camshaft rear seal, applying Loctite 601.

CYLINDER

Verification

1. Check cylinder inner diameter and out-of-roundness. If dimensions found are higher than specified, replace the engine block. Maximum bore allowed for service.

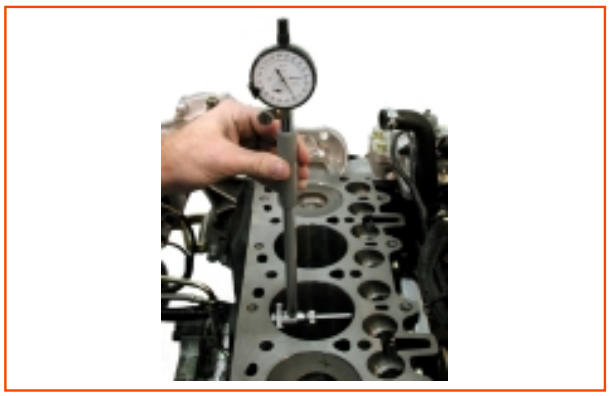

Downloaded from www.Manualslib.com manuals search engine

CYLINDER FINISHING

Mandrill and burnishing

1. Adjust the machine to operate at 293 rpm and advance of 0.15 to 0.30 mm / turn. The final bore must be gotten in only one pass of the broach.
2. First step must be made with burnishing batons of granulation 80 to 100 mash. In finishing for final bore, it has to be used batons of granulation 320 mash. In the two steps, the grain quality of all the batons must be CG (carbide of green silicon, hardness N).
3. During burnishing, use oil Honilo 407 (Castrol).
4. Finishing must be uniform on all cylinder extension. All mandrill marks must be removed. The cylinder surface must not be polished. The rugosity must be within the specified values.

Cleaning and inspection

1. Remove incrustated particulate in the inner surface of cylinder after the burnishing.
2. Check cylinder bore and out-of-roundness.

Downloaded from www.Manualslib.com manuals search engine

PISTONS AND CONNECTING RODS

Downloaded from www.Manualslib.com manuals search engine

PISTONS AND CONNECTING RODS

Removal

1. Remove cylinder head.
2. Remove oil pan, suction and lubricant oil flux pipes.
3. Position the block in the horizontal position.
4. Before removing piston, remove carbon deposits accumulated on liner top. Horizontally position cylinders and cylinder piston to be cleaned at BDC. Fill with a cloth the space above of the top of the piston. Remove carbon with a brush or sandpaper and clean the area with a cloth.
4. Remove pistons.

Disassembly

1. Remove the piston rings.

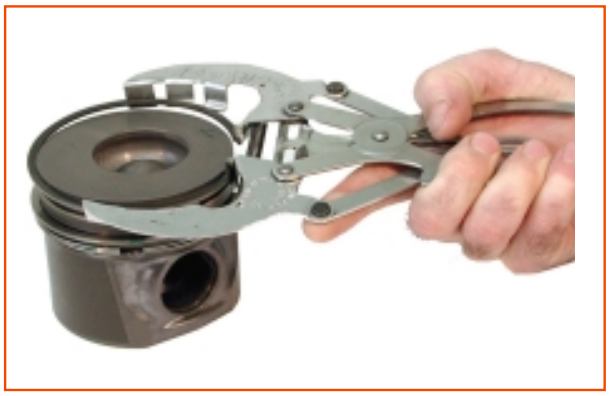

2. Remove snap rings and manually remove piston pin. If it is difficult to remove pin, heat the piston in water or oil up to 80 °C (176 °F).
3. Remove connecting rod bushing.

Downloaded from www.Manualslib.com manuals search engine

Cleaning and inspection

1. Check if the pistons have risks or damages in lateral and upper faces. Carefully remove carbon residues from the grooves.
2. Assembly a new ring and check its clearance in the groove. If it is over than indicated next, piston must be replaced.

Lateral clearance	Millimeters	
Ring of the 1st groove, compression	0.050	0.090
Ring of the 2nd groove, compression	0.050	0.090
Ring of the 3rd groove, compression	0.030	0.065

3. Measure piston pin outer diameter with micrometer.
4. Measure piston pin housing with bore gauge. The measurements must be taken in the horizontal, vertical and diagonal direction in relation to the hole that houses the pin.

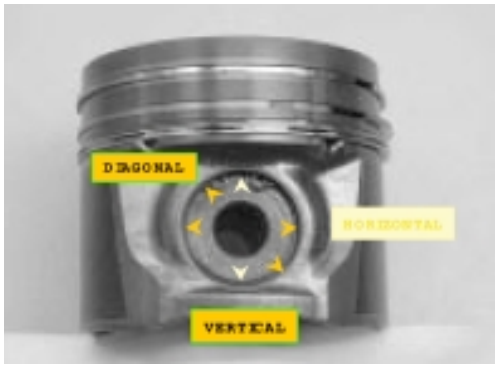

5. Check connecting rod warping and alignment.

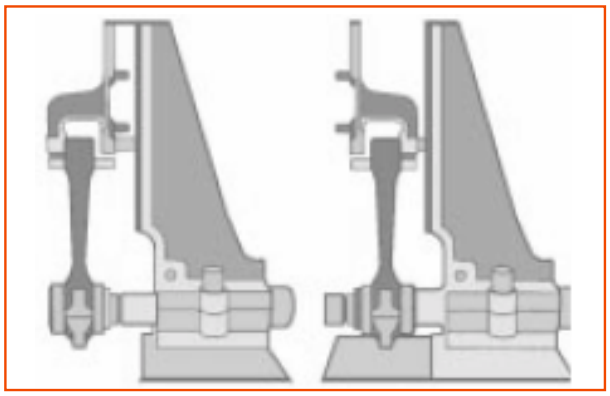

Downloaded from www.Manualslib.com manuals search engine

6. In case of any irregularity, replace the part and make a new position number demarcation of the connecting rod in the engine block. Example of connecting rod that will work in the first cylinder, marked with electric pencil.

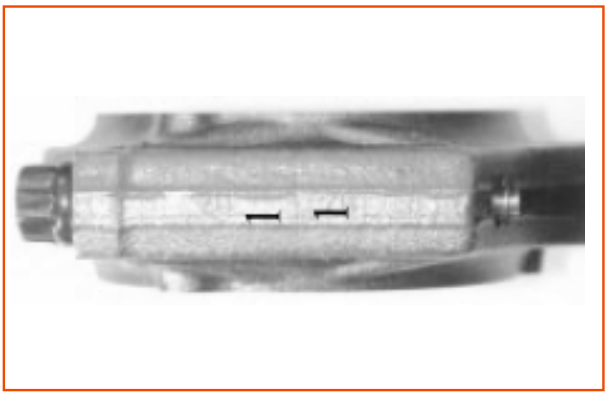

7. Connecting rod and cap have serial number on one of its side. When assembling cap, check if its serial number corresponds to the connecting rod number.

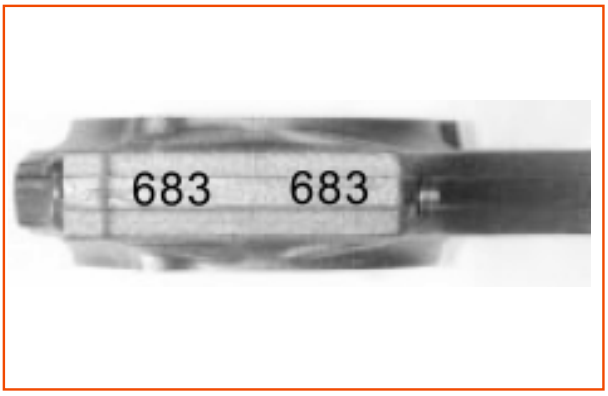

8. On one of the sides, connecting rod has the code of weight, that goes from, approximately, 1259 to 1322 grams and it is identified only by the two last weight digits, by an ink mark on the body of the connecting rod.

Note: In the four kits assembly (piston, connecting rod and rings), the variation of the set can be of, at maximum, 5.5 g.

9. Measure bushing and shell housings in the horizontal, vertical and diagonal positions. When measuring shells housing, correctly position connecting rod cap, tightening according specification.

Downloaded from www.Manualslib.com manuals search engine

10. Check clearance between piston rings ends in cylinder. Clearance must be checked separately. Use piston to introduce the ring between 40 and 50 mm below block surface. Cylinder bore must be within specified measures. See the correct clearance between ends below.

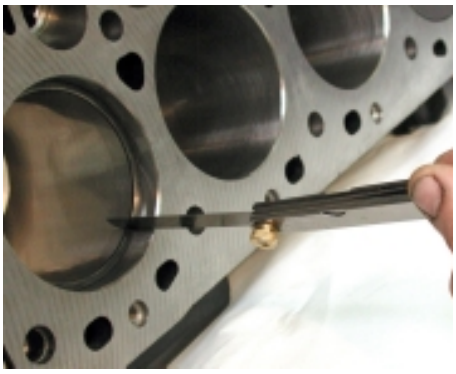

Clearance between ends	Millimeters	
1st groove, compression ring	0.400	0.600
2nd groove, compression ring	0.300	0.550
3rd groove, oil ring	0.300	0.550

Assembly:

1. To assembly, all parts must be cleaned. Assembly bushing in connecting rod, making sure that lubrication holes are aligned. Machine bushing inner diameter.

2. Assembly piston in connecting rod, with combustion chamber turned to the same side of the shell lock. Manually install pin and snap rings. If it is difficult to assembly the pin, heat the piston in water or oil at 80 °C (176 °F). The piston must be carefully handled, because any damage on its surfaces may cause bad engine operation. Assembly connecting rod and piston in the same cylinder whether they have not been replaced.

Downloaded from www.Manualslib.com manuals search engine

3. Assembly ring spring in piston 3rd groove and next ring, with ends in opposite position from spring ends. Install 2nd and 1st rings with TOP mark or inner chamfer upwards. Note that 2nd and 1st grooves rings have different thickness.
4. Clearances between rings ends must not be aligned in the same direction of piston pin or skirt. Position rings according the illustration.

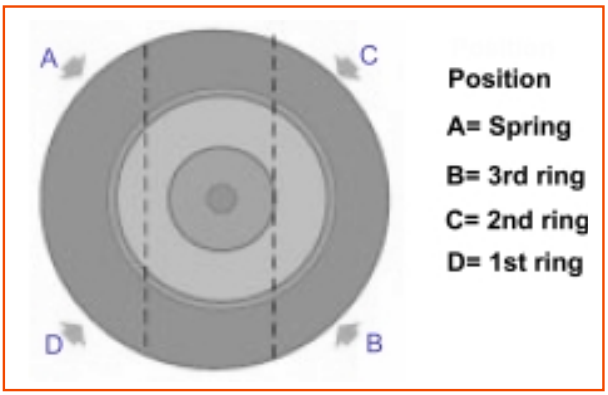

5. Assembly new shells on connecting rod body, correctly positioning locks.

Installation

1. Set engine block in horizontal position. Lubricate grooves, inside liners, connecting rod shells and crankshaft crankpin.
2. When assembling piston, make sure that the arrow is aiming the engine front side. Install connecting rod with the tool nr. 8130646, avoiding scratching the liner.
3. Assembly piston in cylinder, using tool nr. 8130647 and a rod of wood to push the piston.
4. In turbocharged engines, there is one injector of lubricant oil for each engine cylinder. During piston assembly in the cylinder, check the position of the connecting rod in relation to the injector, avoiding breaking its injection pipe.
5. The positioning of the oil injector inside the engine block is checked with the engine viewed from the top, without cylinder head.

Downloaded from www.Manualslib.com manuals search engine

6. Complete lubricant oil injector for cylinder inside and piston pin lubrication is shown below.

7. Assembly new shell in connecting rod cap, correctly positioning locks. Lubricate shell and crankshaft crankpin.

8. Assembly cap on connecting rod corresponding to the cylinder, watching blue mark on cap, bolt and connecting rod, and tighten according specified. Manually turn crankshaft when assembling each connecting rod. If it is difficult to turn, check all tightening applied in connecting rods fixation.

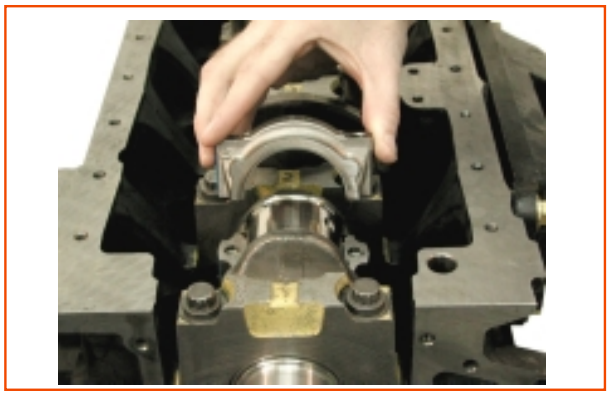

9. Check axial clearance (0.15 to 0.35 mm) between assembled connecting rod and crankpin with dial indicator gauge.

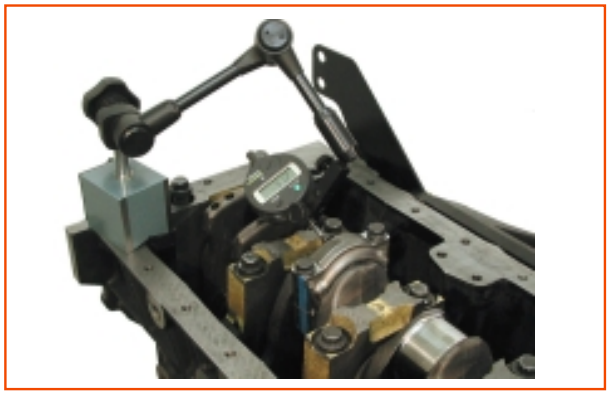

Downloaded from www.Manualslib.com manuals search engine

10. Position piston at TDC. Check piston height in relation to engine block surface with dial indicator gauge and tool nr. 8130004, see CYLINDER HEAD SPECIFICATIONS.
11. Assembly suction, flux pipes and lubricant oil pan.

Downloaded from www.Manualslib.com manuals search engine

CRANKSHAFT

Downloaded from www.Manualslib.com manuals search engine

CRANKSHAFT

Removal

1. Remove engine.
2. Remove cylinder head and push rods.
3. Remove accessories support.
4. Remove oil pan.
5. Remove timing housing and camshaft.
6. Remove flywheel housing and flywheel.
7. Remove pistons and connecting rods.

Disassembly

1. To disassembly, position engine topside down. Remove rear oil seal housing and gasket.
2. Remove connecting rod caps and shells.

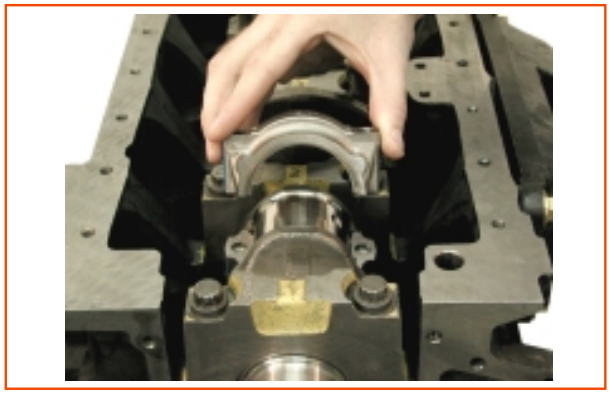

3. Remove main bearing caps and shells.

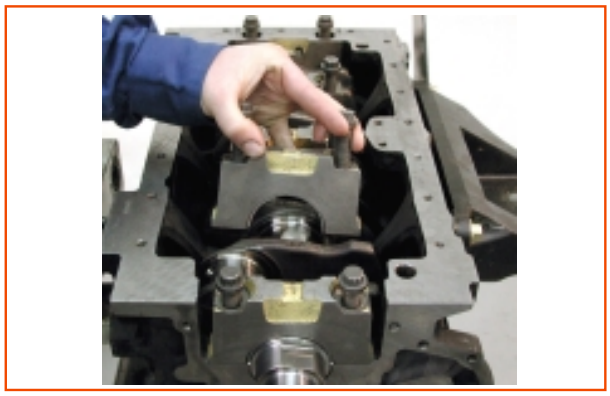

Downloaded from www.Manualslib.com manuals search engine

4. Remove crankshaft and shells.
5. Position crankshaft in vertical fitted in the flywheel in order to avoid warping.

Cleaning and inspection

1. Remove remains of gasket from rear seal housing and from engine block.
2. Clean main journals and crankpins, checking for risks and damages.
3. With micrometer, measure main journals and crankpins diameter and out of roundness in 4 places.
4. Check crankshaft main journals maximum eccentricity with dial indicator gauge. Main journals nr. 1 and 5: Supported.
5. Check for cracks with Magnaflux. Demagnetize crankshaft in case of cracks, the part must be replaced..

Machining and inspection

1. Machine main journals and crankpins to the immediately lower undersize than the obtained measure. Check main journals rugosity and fillets. Main journals/crankpins rugosity, see TECHNICAL SPECIFICATIONS.
2. Remove sharp chamfers from lubrication holes.
3. After the machining, wash crankshaft with chemical solvent in immersion bathing. Dry with compressed air.

Downloaded from www.Manualslib.com manuals search engine

4. Check for cracks and remove crankshaft magnetization.
5. Clean the lubrication holes.
6. Check with micrometer main journals and crankpins length, see TECHNICAL SPECIFICATIONS - Crankshaft.

7. Check again crankshaft main journals eccentricity.
8. Check main journals and crankpins fillets with caliper.
9. To balance, remove material from crankshaft arm sides. In case of part stock, apply antioxidant oil immersion.
10. Before assembly, wash crankshaft with water at 80 °C (176 °F) in agitation immersion bathing and dry with air.

Assembly

1. Clean shells housing on the block and bearings caps. Check if engine block lubrication galleries are not obstructed.

2. Assembly upper and lower shells on engine block and bearing caps, correctly positioning locks.

Downloaded from www.Manualslib.com manuals search engine

3. Lubricate upper shells and crankshaft main journals and crankpins,
4. Lubricate the two upper thrust washers, positioning lubrication channels to crankshaft and slip them in their block housing.
5. Assembly crankshaft. Do not turn crankshaft before bearing caps fixation.
6. Lubricate lower shells.

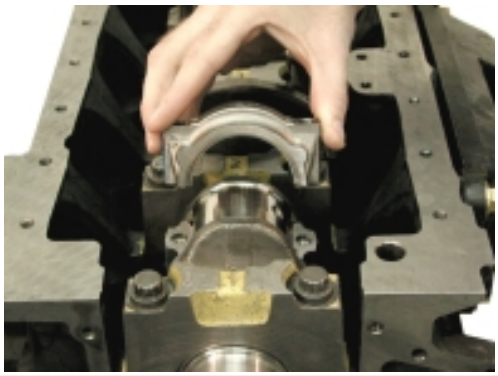

7. Assembly bearing caps correctly positioning them.
8. After 5th cap assembly, apply Loctite 5900 on bearing side grooves.

9. Fix bearings from the ends to the center and tighten bolts according to specification. Manually turn crankshaft after final tightening of each bearing cap, see TIGHTENING SPECIFICATIONS.
10. Check crankshaft axial clearance using a dial indicator gauge. If clearance checked is over than specified, replace thrust washers.

Rear seal

Assembly

1. Carefully clean engine block surface and crankshaft flange and remove all existent residues.
2. Apply a fillet of Loctite 5900 in all rear seal housing edge.

Downloaded from www.Manualslib.com manuals search engine

3. Install a new housing with seal rear in crankshaft flange and free seal lip protection (plastic - disposable).

Note: Check seal lip positioning uniformity in crankshaft flange, avoiding edges bit.

4. Point housing fixation bolts in the block.

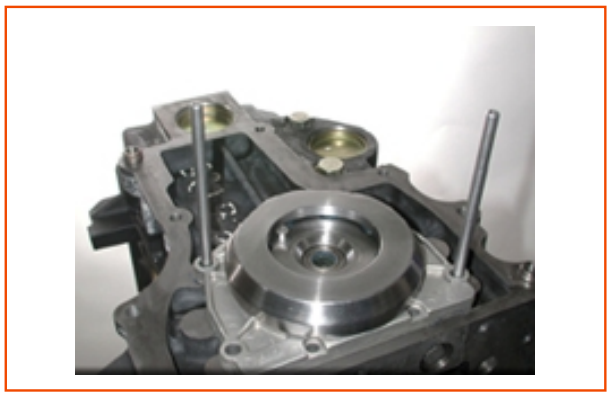

5. Install tool nr. 8130648 and turn the two rods, clockwise, fix in holes located in crankshaft flange.

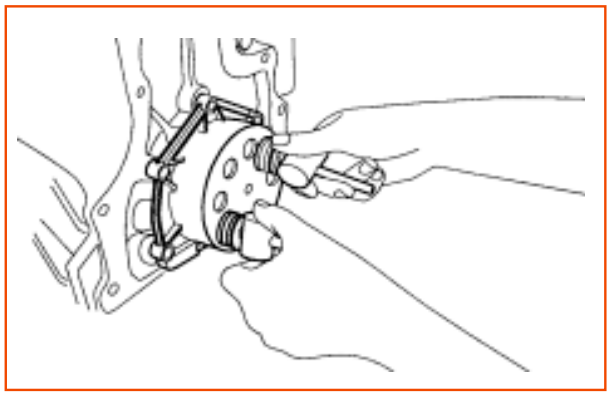

Downloaded from www.Manualslib.com manuals search engine

6. Flex side rods of tool nr. 8130648, pressing against crankshaft flange.

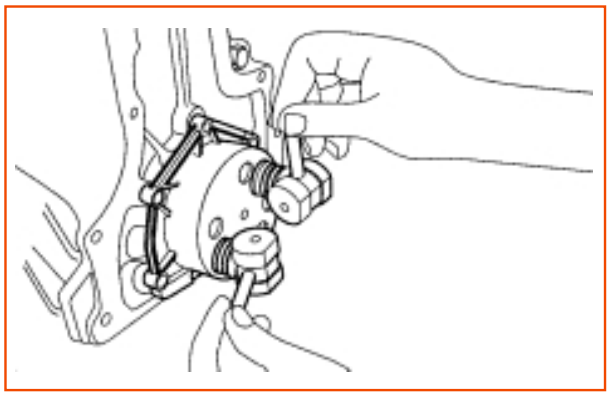

Note: This procedure will guarantee perfect seal housing concentricity in relation to crankshaft flange.

7. Fix bolts, following tightening - torque sequence, see TIGHTENING SPECIFICATIONS.

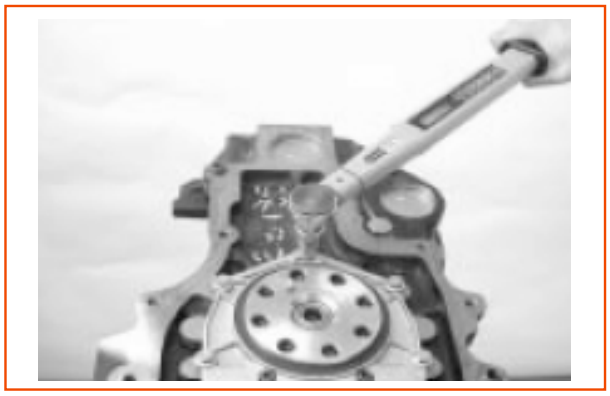

8. Carefully remove tool nr. 8130648 and check the perfect accommodation of the seal lip.

Note: In case of seal lip bite, install a new seal, repeating previous procedures.

Downloaded from www.Manualslib.com manuals search engine

CRANKSHAFT PULLEY

Downloaded from www.Manualslib.com manuals search engine

CRANKSHAFT PULLEY

Removal

1. Drain coolant water.
2. Remove radiator upper hose.
3. Remove fan, see FAN -Removal
4. Remove moving belt, see ACCESSORIES MOVING BELT - Removal.
5. Install tool nr. 8130638 in crankshaft pulley and fix it with 4 bolts.
6. Remove crankshaft pulley fixation bolt, using a lever of an appropriate length.
7. Remove pulley. If necessary, use extractor nr. 8130628.

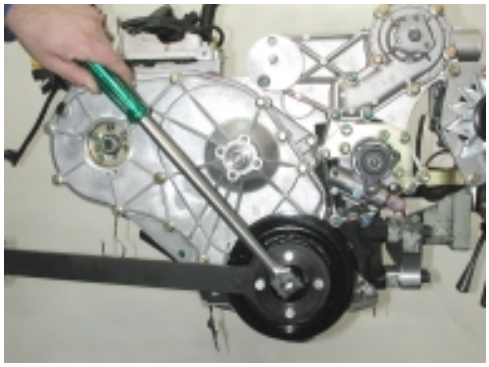

Reinstallation

1. Reinstall in inverse order, tightening fixation bolt with 80 Nm + 125º.

TIMING HOUSING COVER

Removal

1. Remove crankshaft pulley, see CRANKSHAFT PULLEY - REMOVAL
2. Remove 14 fixation bolts from timing housing cover.
3. Remove cover with gasket.

Seal replacement

1. Remove used cover seal and clean housing
2. Support cover and install a new seal, open side turned to the housing, using tool nr. 8130637.

Downloaded from www.Manualslib.com manuals search engine

Reinstallation

1. Reinstall in inverse order of removal, using new gaskets, installing fixation bolts as shown in the illustration and tighten according to specification.

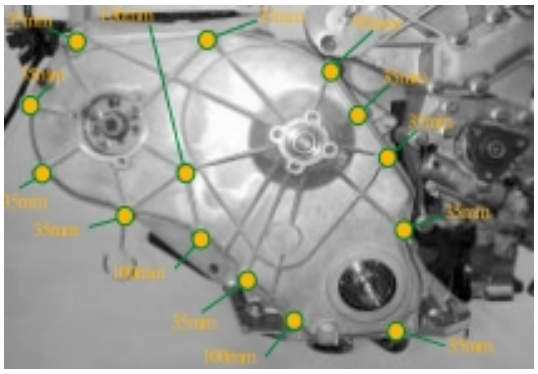

DISTRIBUTION BELT

Removal

1. Remove timing housing cover. See TIMING HOUSING COVER - Removal.
2. Turn engine until cylinder nr. 1 to be at TDC (4th cylinder swinging).
3. Remove flywheel housing plug and install timing tool nr. 8130632.

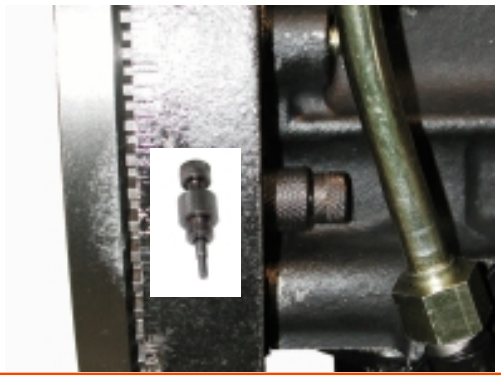

4. Fit the timing tool nr. 8130632 pin in the hole of the flywheel.
5. Check the correct alignment of the timing mark on the camshaft toothed pulley and if crankshaft gib is aligned with the arrow engraved in the housing.

Downloaded from www.Manualslib.com manuals search engine

6. Install tool nr. 8130633 pin in the fuel injection pump pulley and fit it in pump flange.

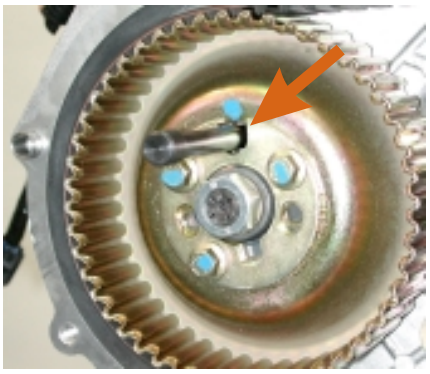

Note: If camshaft teeth pulley has to be removed during these operations, its fixation bolts must be loosen before the distribution belt removal.

7. Loosen belt tensor bolt.

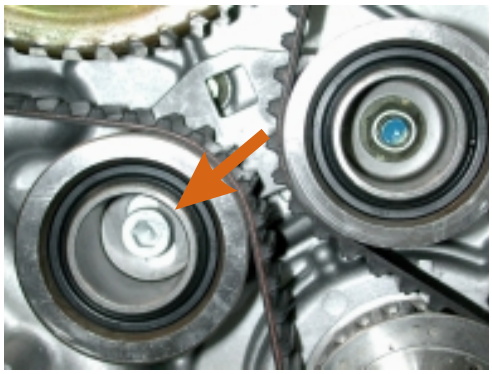

8. Remove distribution belt. With the use, the belt wears in the rotation sense.

Note: If the original belt will be reused, it must be assembled keeping the original rotation sense.

9. Mark belt rotation sense, to reinstall in the same sense later.

Downloaded from www.Manualslib.com manuals search engine

Note: The belts must be stocked with the edges in a clean surface and in such way that the folds do not have a radius lower than 50 mm. Do not fold belts in an acute angle or with ray lower than 50mm, otherwise it may occur premature failures.

Belt tensor

Note: The belt tensor only needs to be removed if it is being replaced or to have access to remove the timing housing.

1. Remove fixation bolt, idling pulley and inner tensor.

Distribution belt installation and tensioning

Note: It is important that belt tensioning is carefully and safely made. The following procedure evolves the belt tensioning to assure that it keeps tensioned between each pulley.

1. Lock engine, at TDC, positioning the pin of the timing tool nr. 8130632 in the flywheel-housing hole with the pin fitted in the flywheel hole.

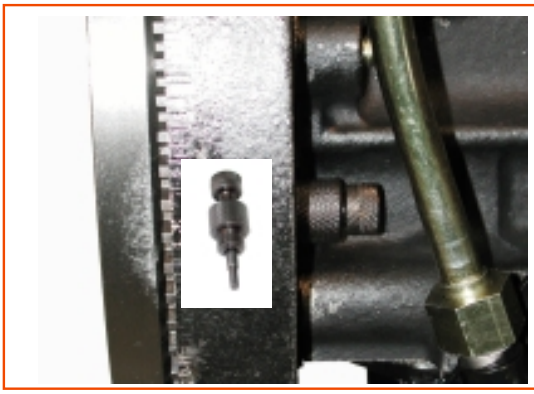

2. Make sure that marks are aligned (Ref. A and B) and that injection timing tool pin nr. 8130633 is correctly introduced in injection pump pulley (Ref. C).

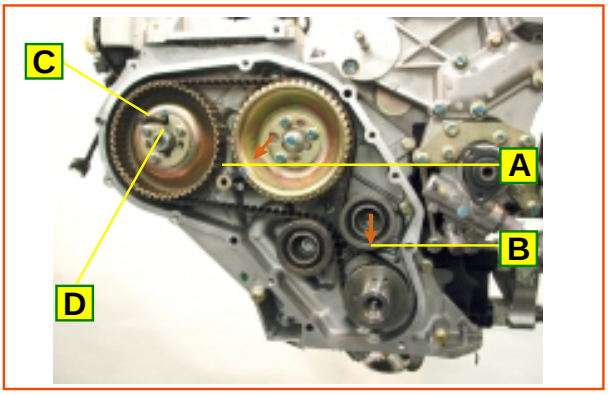

Downloaded from www.Manualslib.com manuals search engine

3. Loosen the 3 (three) fuel injection pump pulley fixation bolts (Ref. D), letting pulley slightly loose to allow belt accommodation.
4. Install distribution belt on the pulleys.
5. Slightly press belt tensor, screwing tensor bolt. Make sure if tensor movement is free, that is to say, bolt slightly loosen, allowing free movement, but, without side clearance.
6. Install in the square among idle and tensor pulleys, special tool nr. 8130649, which is adjusted to attend a torque equivalent from 9 to 10 Nm.
7. Tighten tensor bolt within 40 to 50 Nm.

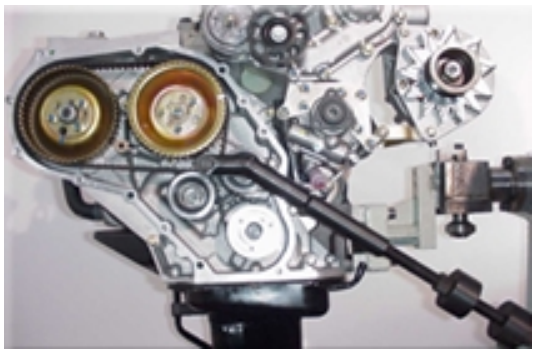

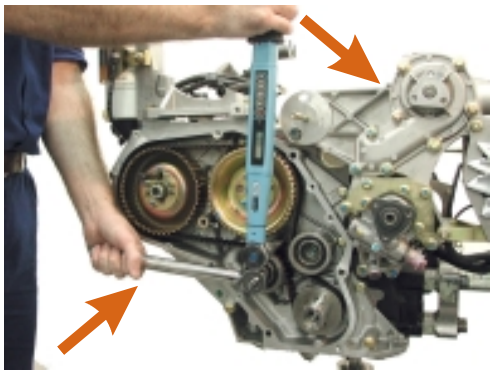

8. Tighten the 3 (three) fixation bolts of fuel injection pump pulley, within 22 to 28 Nm.
9. Remove special tool, fuel injection pump and flywheel locking device.
10. Manually turn engine (2 turns) to distribute belt tension.
11. Check engine timing.

Note: After the torque application, it is recommended to check belt tension by the device pitch within 130 to 160 Hz.

Downloaded from www.Manualslib.com manuals search engine

ENGINE TIMING

Downloaded from www.Manualslib.com manuals search engine

➤ *ENGINE TIMING*

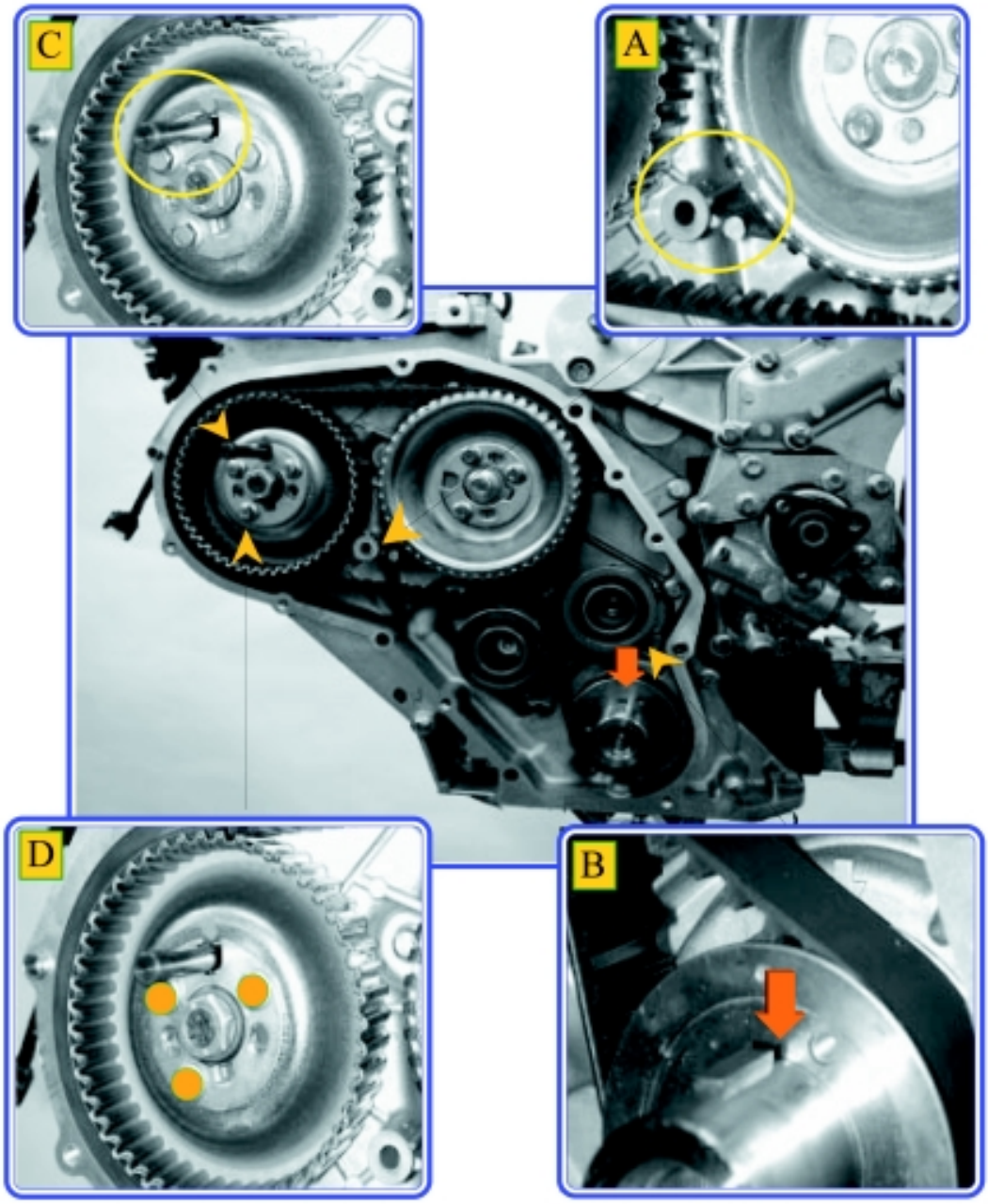

A Camshaft pulley and timing housing

B Crankshaft pulley and timing housing (gib upwards)

C Fuel injection pump pulley and synchronizer pin

D Loosen pulley bolts, to accommodate belt

Downloaded from www.Manualslib.com manuals search engine

CRANKSHAFT GEAR

Removal

1. Remove distribution belt, see DISTRIBUTION BELT - Removal.
2. Use tool nr. 8130628 if the crankshaft gear cannot be manually removed.
3. Remove “o” ring.

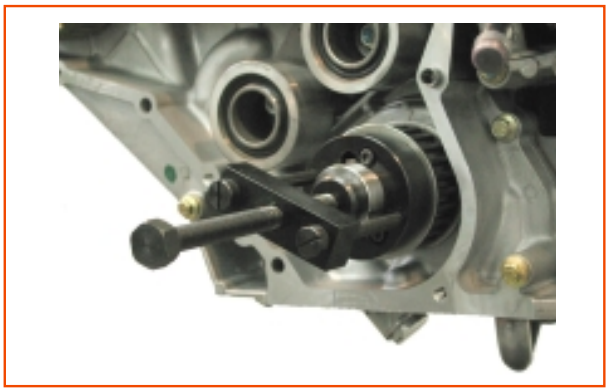

4. If necessary remove oil seal from timing housing.

Installation

1. Lubricate the new crankshaft oil seal with clean engine oil.
2. With lip side forward, parallel install oil seal, using tool nr. 8130637.
3. Lubricate a new sealing ”o” ring with Vaseline and position it on shaft, taking care to do not damage it with the gibs.
4. Install crankshaft gear, until the total touch, making sure “o” ring stay correctly seated. Use tool nr. 8130637.

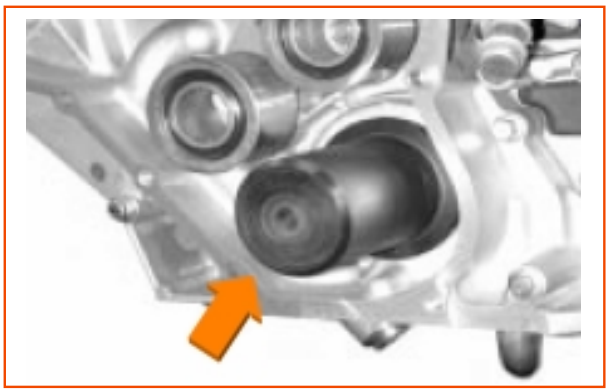

Downloaded from www.Manualslib.com manuals search engine

CAMSHAFT PULLEY AND OIL SEAL COVER

Removal

1. Remove camshaft pulley central bolt.
2. Remove camshaft pulley.
3. Remove oil seal from timing housing, using tool nr. 8130640.

Installation

1. Lubricate the new camshaft seal with clean engine oil.
2. With the lip side forward, parallel install oil seal, using special tool nr. 8130639.

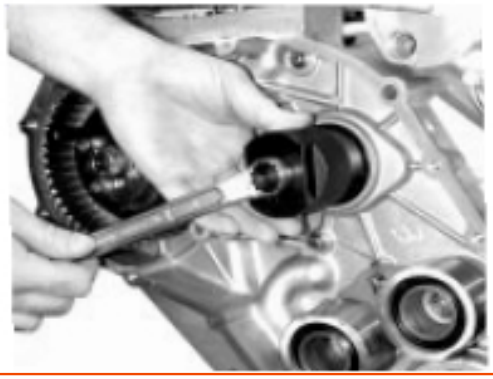

Note: Camshaft and injetion pump pulleys are the same, but they are assembled in inverse way.

3. Reinstall pulley, positioning it so that the timing mark stay turned forward, tighten bolt according to specification.

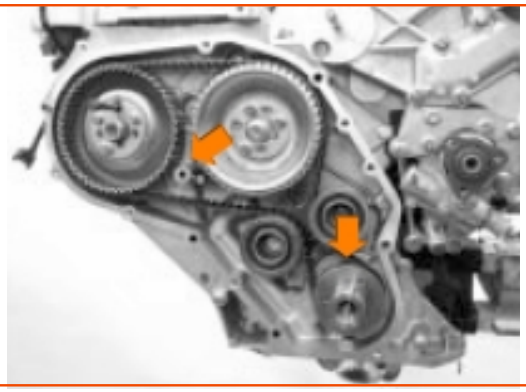

Downloaded from www.Manualslib.com manuals search engine

FUEL INJECTION PUMP PULLEY

Removal

1. Follow distribution belt removal procedure, see DISTRIBUTION BELT - Removal, but only loosen tensor bolt and remove belt after the following steps.
2. Loosen the three pulley central bolts.
3. Remove pump limiter and retighten bolt to lock the pump.

4. Remove tool nr. 8130633 pin from pulley.
5. Remove the three bolts and then remove plate and pulley.

Note: It is important to assure that, once locked fuel injection pump, any attempt to turn pump cannot be made. Take care to do not allow crankshaft to be turned.

Reinstallation

Note: Camshaft and injetion pump pulleys are the same, even so they are assembled in inverse way.

1. Install pulley, positioning it in way that timing mark keep turned backwards.
2. Install plate and fix it with three bolts.
3. Install tool nr. 8130633 pin in fuel injection pump pulley and fit it in the pump flange.
4. Reinstall limiter to unlock pump.
5. Install distribution belt, see DISTRIBUTION BELT - INSTALLATION

Downloaded from www.Manualslib.com manuals search engine

TIMING HOUSING

Removal

1. Remove distribution belt and toothed pulleys, see DISTRIBUTION BELT - Removal.
2. Remove fuel injection pump, see FUEL INJECTION PUMP Removal.
3. Remove crankshaft gear, see CRANKSHAFT GEAR- Removal.
4. Remove oil pan, see ENGINE OIL PAN Removal.
5. Remove oil suction pipe.
6. Remove timing housing fixation bolts.
7. Remove timing housing with gasket.
8. Remove all gasket material from contact surfaces.

Reinstallation

1. Install guide prisoners to position gasket.
2. Install a new gasket, on guide prisoners in engine block.
3. Align oil pump grooves with crankshaft grooves.
4. Install timing housing on the block, taking care to do not damage oil seal.
5. Fix bolts with correct length in the positions where guide prisoners were not installed.
6. Remove guide prisoners, installing on its places bolts with correct size.
7. Tighten all bolts according to specification.
8. Install oil suction pipe.
9. Install oil pan, see ENGINE OIL PAN Installation.
10. Reinstall fuel injection pump, see FUEL INJECTION PUMP Reinstallation.
11. Reinstall teeth pulleys, crankshaft gear and belt.

Downloaded from www.Manualslib.com manuals search engine

Accessories moving belts

Note: A new belt must be installed if tensor lever marks and housing spring are aligned.

Removal

1. Position a tool on the fixation bolt of the pump and alternator moving belt tensor.

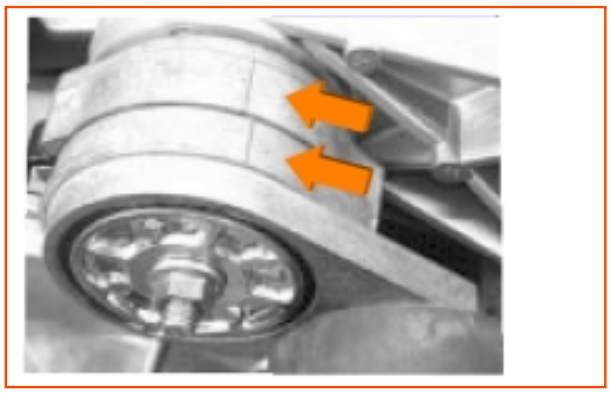

2. Slowly release pulley tension on belt (counter clockwise).

3. Remove belt from pulley.
4. Free tensor.
5. Finish belt removal,
6. Loosen fixation bolt of air conditioning compressor moving belt tensor.

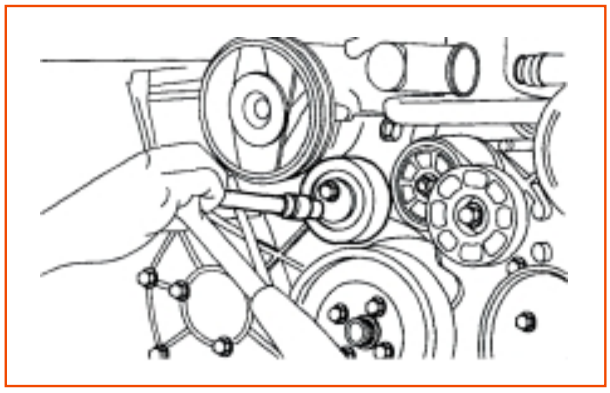

7. Remove belt from pulley handling it over the fan.

Downloaded from www.Manualslib.com manuals search engine

Reinstallation

1. Reinstall moving belts in the inverse order of removal.
2. Fix tensor bolt according to specification.

Camshaft

Removal

1. Remove timing housing, see TIMING HOUSING Removal.
2. Remove cylinder head.
3. Remove tappets and tappets rolls.
4. Loosen bolts and remove camshaft fixation plate.
5. Remove camshaft.

Installation

1. Reinstall in inverse order of removal tightening bolts according to specification.

Downloaded from www.Manualslib.com manuals search engine

FLYWHEEL

Downloaded from www.Manualslib.com manuals search engine

➤ *FLYWHEEL*

1. Remove gearbox.
2. Remove starter motor.
3. Remove clutch.
4. Install two long bolts of 8 mm in clutch bolt holes diametrically opposites, to use as handles when removing flywheel from crankshaft.
5. Install tool nr. 8130638 in crankshaft pulley and fix it with four bolts, to immobilize crankshaft during flywheel fixation bolts removal.
6. Loosen flywheel fixation bolts and remove it.

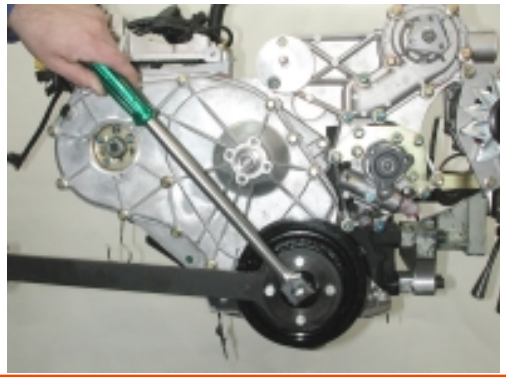

Cleaning and inspection

1. Wash all parts with biodegradable chemical detergent.
2. Check if gear ring teeth are worn. To replace, see GEAR RING REPLACEMENT.
3. Use a male M14 in crankshaft bolts holes, to remove the residues of Loctite.

Reinstallation

Note: To avoid flywheel excessive eccentricity, make sure if flywheel and crankshaft contact surfaces are perfectly clean.

1. Install flywheel on crankshaft and fix it with thrust plate and new bolts, tightening according to specification.
2. Check flywheel eccentricity, assembling a dial indicator gauge so that its point touches at 114 mm from the center of the flywheel.

Downloaded from www.Manualslib.com manuals search engine

3. Check eccentricity to do not exceed from 0,05 mm to 0,07 mm. If eccentricity is excessive, remove flywheel and check again for irregularities on flywheel, crankshaft and guide thrust surfaces.
4. Check with dial indicator gauge, concentricity between flywheel diameter and crankshaft.
5. Reinstall in the inverse order of the removal, install the fixation bolts, using Scotch Grip and tighten with 60 Nm + 30°.

Flywheel housing

Removal

1. Remove flywheel, see FLYWHEEL Removal.
2. Remove the flywheel housing support four bolts.
3. Loosen the six central bolts and remove flywheel housing.

Reinstallation

1. Clean engine block and remove the excess of liquid gasket (Loctite 5900) from the block.
2. Apply a 4 mm fillet of Loctite 5900 on flywheel housing.

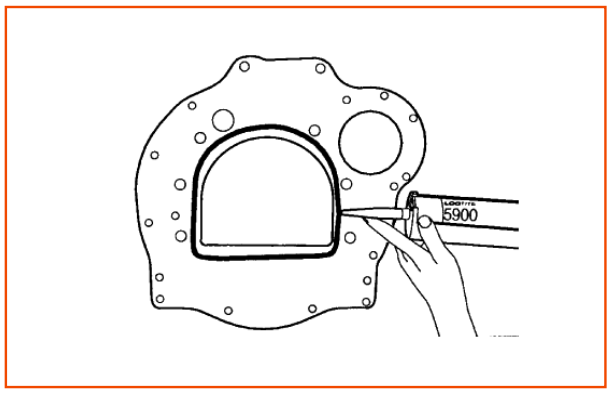

3. Install housing on engine block and fix it with bolts according removed and tighten according to specification, see TECHNICAL SPECIFICATIONS.

Downloaded from www.Manualslib.com manuals search engine

RING GEAR REPLACEMENT

Warning: Following operations evolve heat, and may cause burinings.

Disassembly

1. Put flywheel in a recipient, with clean water and support ring gear on four metal blocks, so ring gear stays approximately 6,5 mm (1/4") above the level of water.
2. Heat ring gear on all its extension so that flywheel loosen.

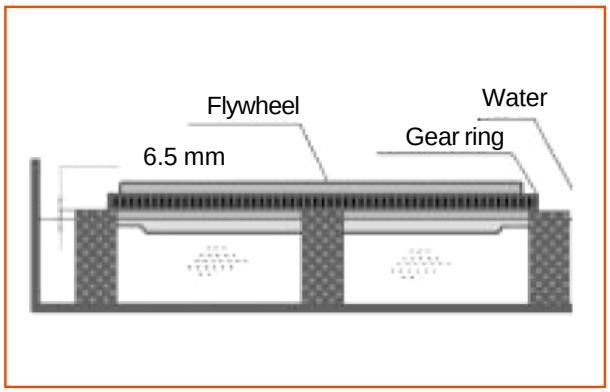

Assembly

1. To assembly ring gear on flywheel, heat it up to approximately 246 °C (475 °F) in a stove.

Downloaded from www.Manualslib.com manuals search engine

ACCESSORIES

Downloaded from www.Manualslib.com manuals search engine

➤ *ACCESSORIES*

POWER STEERING PUMP

Removal

1. Remove radiator upper hose from thermostat.
2. Remove fan, see FAN Removal.
3. Loosen power steering pump pulley bolts.
4. Remove moving belt, see ACCESSORIES MOVING BELTS Removal.
5. Remove power steering pump pulley.
6. Disconnect hydraulic oil inlet pipe (low pressure lower pipe) and drain fluid in an appropriate recipient.
7. Disconnect outlet pipe (pipe with union) and drain fluid.
8. Cover the pump and hoses extremity.
9. Loosen pump assembly support fixation bolts and remove the complete pump with assembly support.
10. In case of a new pump assembly, remove assembly support and pump hoses connectors and install them on the new pump.

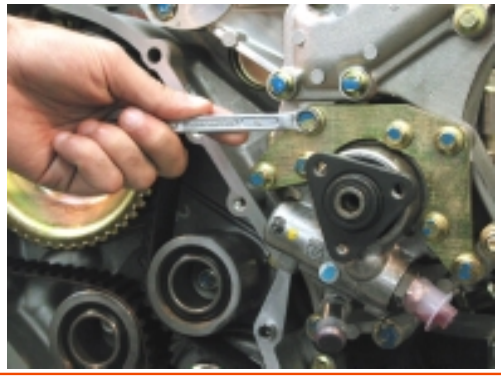

Downloaded from www.Manualslib.com manuals search engine

Reinstallation

1. Reinstall in the inverse order of the removal, applying Loctite 271 and tighten bolts within 26 to 34 Nm.
2. Complete reservoir with recommended fluid.
3. Start the engine and complete turn steering wheel from one side to the other.
4. Check again fluid level, complete if necessary and check for leakages.

Warning: Bleeding, according to the manual of the vehicle.

ALTERNATOR WITH VACUUM PUMP

Removal

1. Remove moving belt.
2. Disconnect cables from the rear part of the alternator.
3. Remove vacuum pump piping.
4. Remove alternator base fixation bolt.
5. Loosen long passing-by upper fixation bolt and remove alternator.

Reinstallation

1. Reinstall alternator in the inverse order of the removal, tighten bolts according to specification.

ALTERNATOR

Removal

1. Remove moving belt.
2. Disconnect cables from the rear part of the alternator.
3. Remove alternator base fixation bolt.
4. Loosen long passing-by upper fixation bolt and remove alternator.

Reinstallation

1. Reinstall alternator in the inverse order of the removal, tighten bolts according to specification.

Downloaded from www.Manualslib.com manuals search engine

VACUUM PUMP

Removal

Vacuum pump of turbocharged International HS 2.8L Engines is attached to the alternator.

1. Remove alternator, see ALTERNATOR, Removal.
2. If it is necessary to repair vacuum pump, it is recommended to send the complete set (alternator and vacuum pump) to Bosch Network.

Warning: By not execution this procedure, the warranty will be canceled.

Installation

1. Install in the inverse order of the removal, tighten bolts according to specification.

Air conditioning compressor

Removal

1. Remove compressor pulley belt tensor, see ACCESSORIES MOVING BELTS - Removal
2. Disconnect cables from the rear part of the compressor.
3. Remove piping from the rear part of the compressor.
4. Remove upper support bolts.
5. Remove compressor fixation bolts to housing support.

Reinstallation

1. Reinstall in the inverse order of the removal, tighten bolts according to specification.

Downloaded from www.Manualslib.com manuals search engine

Accessories support

Removal

1. Remove water pump and power steering pump pulleys bolts.
2. Remove accessories moving belt tensor, see ACCESSORIES MOVING BELT Removal.
3. Remove water pump hoses.
4. Remove power steering pump, see POWER STEERING PUMP Removal.
5. Remove alternator and vacuum pump, see ALTERNATOR Removal.

Reinstallation

1. Reinstall in the inverse order of the removal tightening bolts according to specification.

Downloaded from www.Manualslib.com manuals search engine

TECHNICAL SPECIFICATIONS

Downloaded from www.Manualslib.com manuals search engine

➤ *TECHNICAL SPECIFICATIONS*

COMPONENTS: MEASURES, ADJUSTS AND TOLERANCES

ENGINE BLOCK	MILIMETERS
Total height, between finished surfaces	348.28 - 348.46
Cylinder bore, after burnished	93.000 - 93.013
Rugosity, after burnished (CLA)	0.45 µm - 0.70 µm
Burnishing angle	38 - 42°
Shell housing diameter	67.704 - 67.721
Camshaft bushing housing diameter	49.99 - 50.01
Tappet housing diameter	34.925 - 34.950

MAIN BEARING SHELLS	MILIMETERS
Outer diameter	67.704 - 67.721
Inner diameter, after assembly	63.535 - 63.536
Oversize (0.25 µm)	63.281 - 63.282
Main bearings shells width nr. 1, 2, 3 and 4	24.25 - 24.50
Main bearing shell width nr. 5 (rear)	34.81 - 35.06
Thickness	2.083 - 2.093
Clearance between shell and main journal (diametrical)	0.030 - 0.080

CAMSHAFT GEAR	MILIMETERS
Number of teeth	24
Gear housing diameter	38.030 - 38.075

CAMSHAFT PULLEY	MILIMETERS
Seal ring diameter	56.975 - 57.025

Downloaded from www.Manualslib.com manuals search engine

CRANCKSHAFT	MILIMETERS
Main journals diameter, standard	63.471 - 63.491
Undersize (0.25 mm)	63.217 - 63.237
Main journal length nr. 1 - standard	31.090 - 31.850
Main journal length nr. 2 - standard	34.393 - 34.645
Main journal length nr. 3 - standard	33.275 - 33.325
Main journal length nr. 4 - standard	34.393 - 34.645
Main journal length nr. 5 - standard	44.704 - 44.958
Crankpin diameter - standard	58.725 - 58.745
Undersize (0.25 mm)	58.471 - 58.491
Crankpins length - standard	33.249 - 33.401
Main journals fillets / roller crankpins	3.3 - 3.7
Main journals / crankpins maximum out-of-roundness	0.007
Main journals / crankpins rugosity (CLA)	0.25 µm
Fillets rugosity (CLA)	0.8 µm (*)
Rear flange diameter	99.495 - 99.517
Rear flange width	21.122 - 22.176
Maximum eccentricity - Main journals nr. 1 and 5	supported
Maximum eccentricity - Main journal nr. 3	0.025
Axial clearance	0.05 - 0.15

(*) = up to 45”; in the remaining direction of the ray, in direction to the mirror, rugosity must be 1.6 mm.

CONNECTING ROD	MILIMETERS
Shell housing diameter	62.433 - 62.446
Bushing housing diameter	36.650 - 36.675
Distance between centers (shell housing / connecting rod bushing housing)	175.388 - 175.438
Maximum radial clearance	0.029
Crankshaft axial clearance	0.15 - 0.35

Downloaded from www.Manualslib.com manuals search engine

CONNECTING ROD SHELLS	MILIMETERS
Outer diameter (assembled)	62.433 - 62.446
Inner diameter, after assembly	58.779 - 58.780
Thickness	1.827 - 1.833
Oversize (0.25 mm)	1.952 - 1.958
Shells width	24.750 - 25.000
Clearance between shell and main journal (diametrical)	0.025 - 0.076

CONNECTING ROD BUSHING	MILIMETERS
Outer diameter	36.650 - 36.675
Inner diameter after finish	32.020 - 32.035
Clearance between pin and bushing	0.020 - 0.041

PISTON	MILIMETERS
Type: Aluminum alloy with combustion camera in the convex head. Side covering with graphite Height, in relation to engine block surface	0.500 - 0.800

PISTON PIN	MILIMETERS
Diameter	31.994 - 32.000

PISTON RING	MILIMETERS
Side clearance in the 1st and 2nd grooves, compression	0.050 - 0.090
Side clearance in the 3rd groove, oil ring	0.030 - 0.065
Clearance between ends of the 1st ring, compression	0.400 - 0.600
Clearance between ends of the 2nd ring, compression	0.300 - 0.550
Clearance between ends of the 3rd ring, oil ring	0.300 - 0.550

CAMSHAFT PULLEY	MILIMETERS
Number of teeth	48
Pulley hole bore	30.000 - 30.035

CAMSHAFT	MILIMETERS
Axial clearance	0.100 - 0.200
Bushing diameter	46.812 - 46.825
Camshaft bearing diameter	46.760 - 46.780

Downloaded from www.Manualslib.com manuals search engine

CYLINDER HEAD	MILIMETERS
Height	127.87 - 128.13
Valve guides hole diameter: Standard	14.000 - 14.018
Intake valve seat housing diameter: Standard	40.400 - 40.416
Intake valve seat housing depth	11.000 - 11.100
Exhaust valve seat housing diameter: Standard	38.000 - 38.016
Exhaust valve seat housing depth	11.000 - 11.100

INTAKE VALVE SEAT	MILIMETERS
Outer diameter	40.490 - 40.505

EXHAUST VALVE SEAT	MILIMETERS
Outer diameter	38.080 - 38.100

INTAKE VALVE GUIDE	MILIMETERS
Inner diameter after assembly	8.000 - 8.015
Outer diameter	14.050 - 14.060

EXHAUST VALVE GUIDE	MILIMETERS
Inner diameter after assembly	8.000 - 8.015
Outer diameter	14.050 - 14.060

INTAKE VALVE	MILIMETERS
Valve rod diameter	7.957 - 7.977
Clearance of valve in guide	0.023 - 0.058
Head diameter	38.750 - 39.050
Seat surface angle	60° to 60° 30’
Valve depth, under cylinder head surface: Standard	0.810 - 1.090
Total length	116.14 - 116.62

EXHAUST VALVE	MILIMETERS
Valve rod diameter	7.940 - 7.960
Clearance of valve in guide	0.040 - 0.075
Head diameter	36.35 - 36.65
Seat surface angle	44° 30’ to 45°
Valve depth, under cylinder head surface: Standard	0.860 - 1.140
Total length	116.29 - 116.77

Downloaded from www.Manualslib.com manuals search engine

VALVE SPRING		MILIMETERS
Spring inner diameter		23.7
Free length		47.1
Minimum length, under load of	304 to 336 N	39.8
	652.5 to 707.5 N	32.0

ROCKER ARM	MILIMETERS
Bushing housing diameter	20.310 - 20.340
Bushing outer diameter	20.354 - 20.380
Bushing assembly interference	0.014 - 0.070
Bushing inner diameter	18.034 - 18.049
Clearance of the shaft in the bushing	0.050 - 0.076

ROCKER ARM SHAFT	MILIMETERS
Diameter	17.973 - 17.984
Total length	469.850 - 470.150

TIMING HOUSING COVER	MILIMETERS
Seal housing diameter	74.000 - 74.046
Seal housing width	10.7

LUBRICANT OIL FILTER	
Valve opening pressure	117.21 kN/m^2 ± 20.7 kN/m^2

THERMOSTAT	
Type	Wax capsule
Opening temperature	86° to 90 °C (187 to 194 °F)
Valve minimum course at maximum opening temperature	9 mm
Maximum opening temperature	102 °C (216 °F)

FUEL INJECTION PUMP	
Mark	Bosch
Type	VE Rotary
Rotation sense	Clockwise
Pump service code (Bosch)	VE4/12F1900R905-1 (WG)
Pump service code (Bosch)	VE4/12F1900R905-1 (VNT)
Pump piston displacement	1.44 mm
Fuel injection pump International Nr.	77529 N° Bosh: 0460424237 (WG)
Fuel injection pump International Nr.	77528 N° Bosh: 0460424234 (VNT)

Downloaded from www.Manualslib.com manuals search engine

NOZZLE HOLDER	
Mark	Bosch
Type	DSLA 140P112
Set number	Nº International: 77530 Nº Bosh:
1st stage opening pressure	200 bar
2nd stage opening pressure	330 bar
Nozzle height (in relation to cylinder head)	1.82 mm - 2.10 mm

FUEL LIFT PUMP	
Type	Mechanic, of diaphragm
Flux pressure, static	42 to 55 kN/m^2
Gasket thickness to engine block	0.4 mm - 0.6 mm

FUEL INJECTION PUMP PULLEY	
Number of teeth	48

STARTER	
Mark	Prestolite Indiel
Tension	12 v
Power	2.8 cv
No. of gear teeth	z=9

TURBOCHARGER	
Mark	GARRETT
Type	GT 20 (52S) WG GT 22 (56V) VNT
Operation pressure	1.2 Bar
Wastegate type (WG)	Diaphragm
Actuator valve type (VNT)	Diaphragm

Downloaded from www.Manualslib.com manuals search engine

TIGHTENING SPECIFICATIONS

Downloaded from www.Manualslib.com manuals search engine

➤ *TIGHTENING SPECIFICATIONS*

GROUP	ILLUSTRATION
Engine Block	1
Timing Housing	2
Rocker Arm Shaft / Camshaft	3
Rear Seal	4
Fan and Camshaft Pulley	5
Oil Cooler / Filter	6
Piston and Connecting Rods	7
Cylinder Head	8
Belt and Tensor	9
Oil Pan	10
Cylinder Head Cover / Engine Breather	11
Thermostat and Housing	12
Intake / Exhaust Manifold	13
Fuel Injection Pump	14
Gear Box Adaptor Plate	15
Starter / Alternator	16
Water Pump	17
Turbo Installation	18
Fuel Lift Pump / Fuel Filter	19
Power Steering Pump / Belt Tensor	20
Injection Piping and Nozzles	21
Flywheel and Gear Ring	22
Brake System	23
Engine Brackets	24

Downloaded from www.Manualslib.com manuals search engine

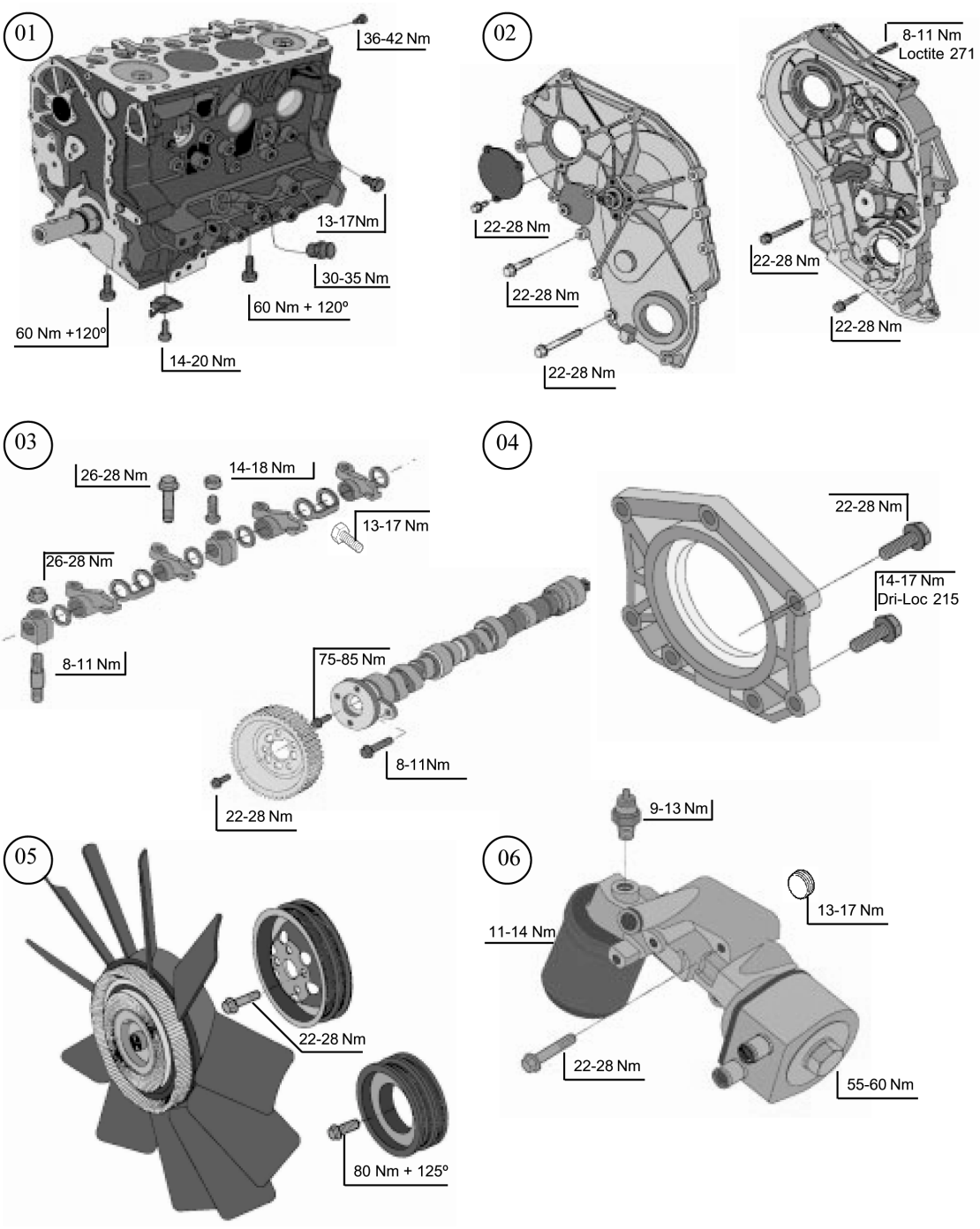

Downloaded from www.Manualslib.com manuals search engine

07

08

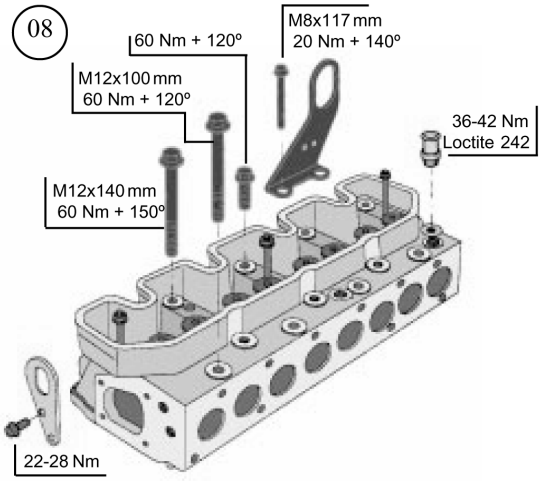

09

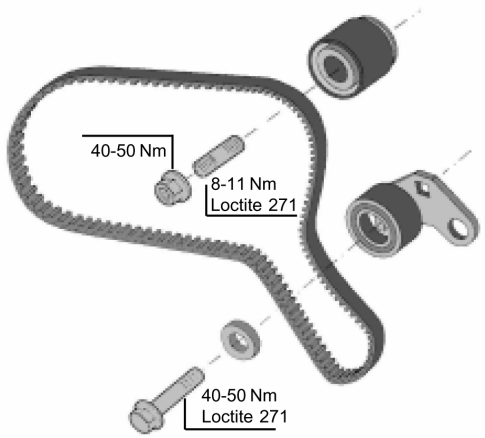

10

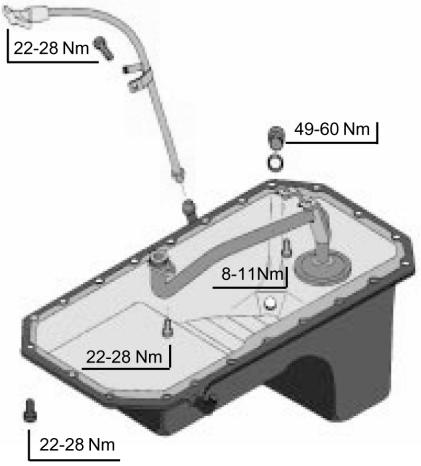

11

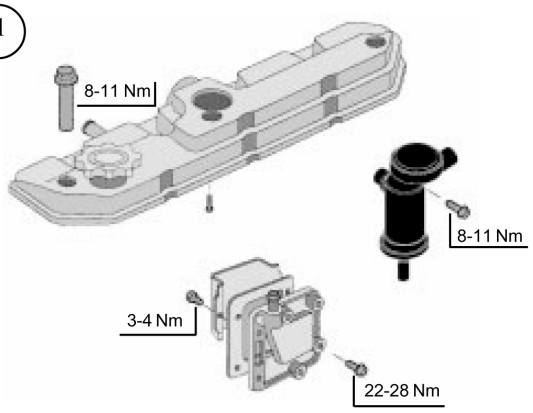

12

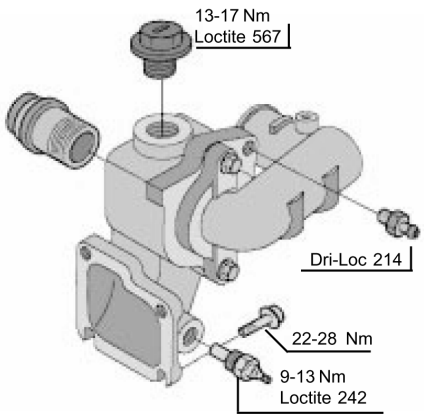

Downloaded from www.Manualslib.com manuals search engine

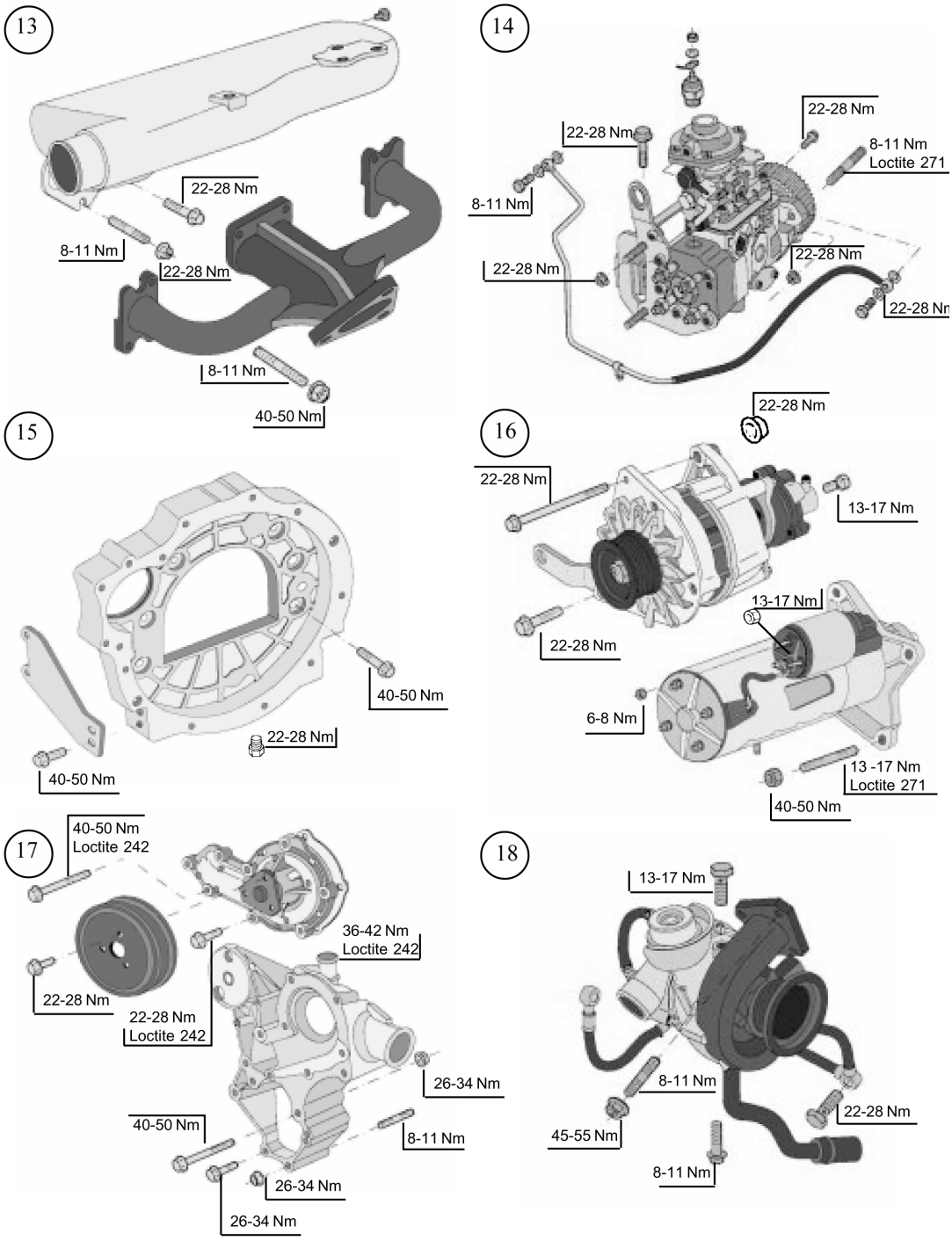

Downloaded from www.Manualslib.com manuals search engine

19

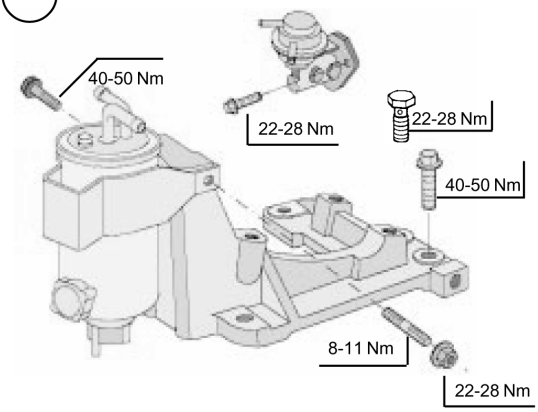

20

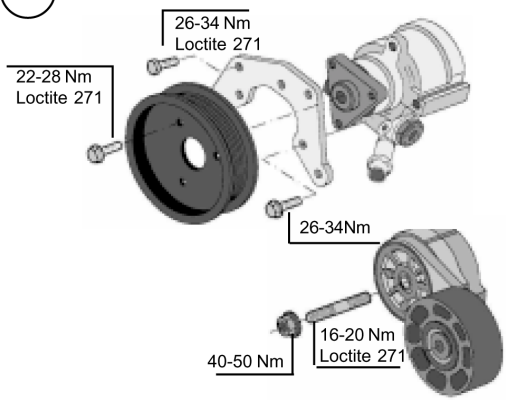

21

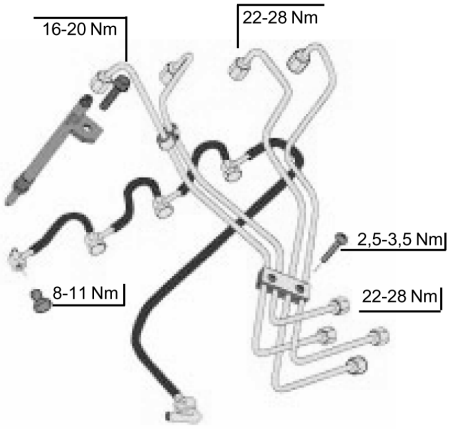

22

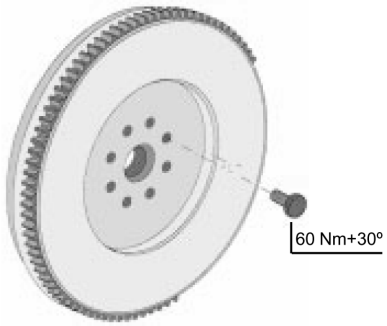

23

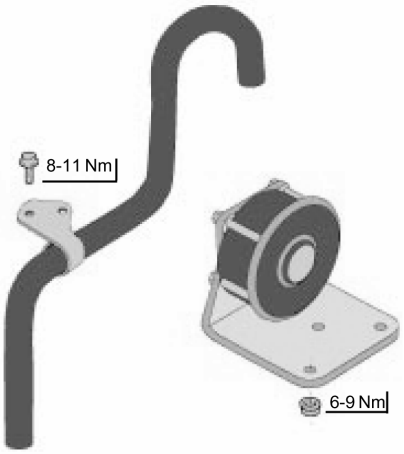

24

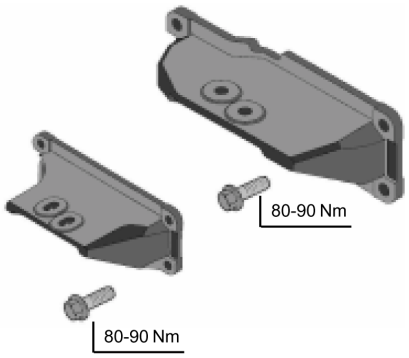

Downloaded from www.Manualslib.com manuals search engine

ADDITIONAL INSTRUCTIONS

Downloaded from www.Manualslib.com manuals search engine

➤ *ADDITIONAL INSTRUCTIONS*

INACTIVE ENGINES CONSERVATION

In order to avoid engine corrosion if it stays inactive during long period, it is necessary to take the following providences:

1. Clean correctly the outer parts of the engine.
2. Run engine up to the normal operation temperature. Next, stop and drain oil from oil pan.
3. Remove oil pan, clean oil suction pipe and replace lubricant oil filter cartridge.
4. Clean breather pipe.
5. After to reinstall filter, fill oil pan up to the maximum level, marked on lubricant oil dipstick with SHELL ENSIS ENGINE MOTOR oil.
6. Drain fuel tank and fill it with SHELL CALIBRATION FLUID B oil.
7. Run engine until that it reaches normal operation temperature.
8. Drain cooling water from engine and radiator.
9. Remove air filter or any extension of the intake piping and seal air intake with adhesive tape.
10. Remove exhaust pipe and seal exhaust manifold, as well as intake manifold.
11. Disconnect battery and remove it for storage.

Warning: It contains acid, protect eyes and hands.

12. Remove fan belt.

13 Complete battery level with distillated water. Clean terminals, lubricate with grease and complete charge. Do not use quick charge. Stock in a fresh, dry and free of dust place. Complete charge once a month.

Downloaded from www.Manualslib.com manuals search engine

14. Clean starter motor and alternator terminals and apply a light layer of grease. If the vehicle is exposed to the weather, alternator, starter motor, and instruments panel must be protected.

Engine preparation to return to operation

Before starting an engine, which was being inactive for a long time, back to operation, take the following cares:

1. Clean perfectly all the outer parts.
2. Close all block and radiator drain plugs and fill cooling system with clean water. Check for leakages.
3. Turn water pump pulley with the hand to assure if the water pump seals are free.
4. Install fan belt and adjust its tension.
5. Remove valves cover, lubricate rocker arms with engine oil and assembly it again.
6. Clean and assembly air filter and filling inlet, remove the sealing adhesive tape from intake and exhaust manifolds.
7. Assembly exhaust pipe.
8. Pressurize with new engine oil engine galleries (50/60 lbf/pol^2) and turn crankshaft with the hands, so it displaces the shells. Depressurize system and remove pressurization tank.
9. Connect battery(ies):

Warning: In terminals fixation, do not invert cables position in relation to battery contacts. First connect positive terminal.

10. Remove the excess of grease from alternator and starter motor terminals. Check if all the connections are ok.
11. Drain oil from oil pan and fill it up to correct level.
12. Remove adhesive tape from tank or from filling pipe breather.

Downloaded from www.Manualslib.com manuals search engine

13. Drain fuel from tank and fill it with new oil.
14. Replace fuel filter cartridge.
15. Bleed fuel system.

Notes: If these instructions are followed the return to work will not damage the engine. ***INTERNATIONAL ENGINES SOUTH AMERICA LTDA*** is not responsible for damages in the engine, caused by the incorrectly made procedures.

FUEL STORAGE

Clean fuel, free of water, impurities and strange materials are important factors to assure the good engine operation, for a long time and without failures.

Water, dirt and sulfur contained in fuel are responsible for dregs formation in oil pan, deposit in compression rings housing, cylinders walls, nozzles and exhaust valves, besides interfacing in the good operation of the fuel injection pump.

The use of recommended lubricants contributes efficiently to neutralize, to avoid or to reduce the harmful effects of these products during engine operation.

The function of the engine fuel filtering system is to avoid dirt and impurities existents in fuel, damage fuel injection system high precision parts.

Lack of care during filling overcharges engine fuel filtering system, damaging its purpose.

These problems are easily eliminated taking the following cares:

1. After storage tank filling, it is necessary to let fuel resting during 24 h, so that there will be water and impurities sedimentation.
2. Before transferring fuel from storage tank to any other tank, it is necessary to drain accumulated water and sediments.
3. Bottles, funnels, etc. used to transfer fuel from a tank to another must be clean. Tow or clothes that loose threads cannot be used to clean these utensils.
4. Funnel used for fuel transfer must have a metallic fabric of mesh 80 (thread of 0.10 mm and mesh opening of 0.25 mm).

Downloaded from www.Manualslib.com manuals search engine

Warning: To install fuel storage tanks the following checks must be followed:

1. Location, dimension and safety of the area where it is installed.
2. The local must be flat, preferently far from houses, animal shelters, electric installations, places where there are welding equipments, boilers, or others that may generate sparks, blames or excessive heat.
3. Tank must be cylindrical, made of steel plates electrically welded. Internally, the surface of the tank and all fuel piping must be clean and free of any impurities which can contaminate fuel, it cannot be zinced, because fuel chemically reacts with zinc, producing a viscous substance that obstruct filters and damage fuel injection system functioning.
4. Externally, fuel tank and all components of its piping must be painted with anti-corrosive paint.
5. Tank must have a ventilation system with inlet protected with metallic mesh. It is also possible to install an air filter.
6. Outlet fuel piping must have, after register, filtering and sedimentation system.
7. If it is necessary to install an electric net to power pump, that equipment must be special, armored type.
8. If it is necessary to install a hydraulic pump for fuel manipulation, this must be protected, when not in use, from direct contact with fuel, by a retention valve and register.
9. Hydraulic pump and control panels must be assembled on bases of concrete.
10. Tank must have a storage register of sedimented water and impurities.
11. Tank must be installed on appropriated supports, so that its frontal part, where it is fuel outlet, stays higher than rear where it is located drainage register.

Downloaded from www.Manualslib.com manuals search engine

12. Inclination in relation to ground level must be from 20 to 50 mm to each meter of length.
13. If gallons are used, these must not be internally galvanized.

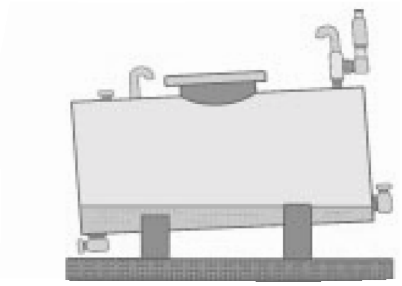

14. Gallons must be protected from sun, rain and dust, and must be lay down on supports that keep faucets approximately 75 mm higher than the bottom. This will make easier water and impurities sedimentation.
15. Place where fuel tank is installed must be kept clean. Floor under tank, even at 1 meter of distance, must be covered with thick gravel.

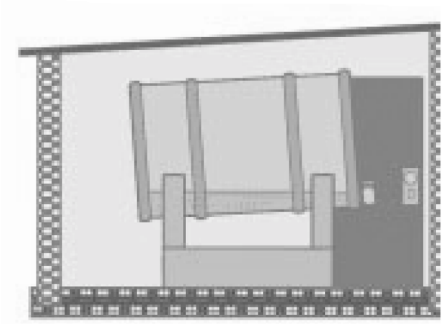

16. Children must keep out of playing near fuel tank facilities.
17. In strategic points, around tank, must be fixed warning plates like this:

Warning: Do not smoke in this local on near watch out inflammable! Keep out

18. The area must be protected with fire extinguishers properly signalized.

Downloaded from www.Manualslib.com manuals search engine

SPECIAL TOOLS

Downloaded from www.Manualslib.com manuals search engine

TOOLS	NUMBER	APLICATION
	8130001	Valves assembly / disassembly device with disassembled cylinder head.
	8130002	Valves assembler / extractor with assembled cylinder head (Standard)
	8130004	Base for height and depth check with dial indicator gauge. (Standard)
	8130005	Expander pliers for piston rings (Standard)
	8130625	Torque/angle device (Standard)
	8130628	Extractor for crankshaft gear removal

Downloaded from www.Manualslib.com manuals search engine

TOOLS	NUMBER	APLICATION
	8130631	Valve guides extractor pin
	8130632	Flywheel timing adjustment tool
	8130633	Fuel injection pump gear fixation device
	8130634	Valve guides assembler pin
	8130635	Camshaft bushing extractor
	8130636	Flange for camshaft bushing extraction (use with 8130635)

Downloaded from www.Manualslib.com manuals search engine

TOOLS	NUMBER	APLICATION
	8130637	Crankshaft front seal assembler / oil seal fixation part assembler
	8130638	Crankshaft pulley fixation tool
	8130639	Camshaft oil seal fixation tool
	8130640	Camshaft oil seal extractor
	8130641	Compression tester adapter
	8130643	Fixation device for viscous clutch

Downloaded from www.Manualslib.com manuals search engine

TOOLS	NUMBER	APLICATION
	8130644	Guide for connecting rods assembly
	8130646	Spacer for valves guide
	8130647	Ribbon for pistons assembly in cylinders (Standard)
	8130648	Rear crankshaft seal assembly device
	8130649	Engine belt tensioning device

Downloaded from www.Manualslib.com manuals search engine