https://truckmanualshub.com/

OWNERS/OPERATORS MANUAL
Model 944E-42
(S/N 0160003882 thru 0160037751)

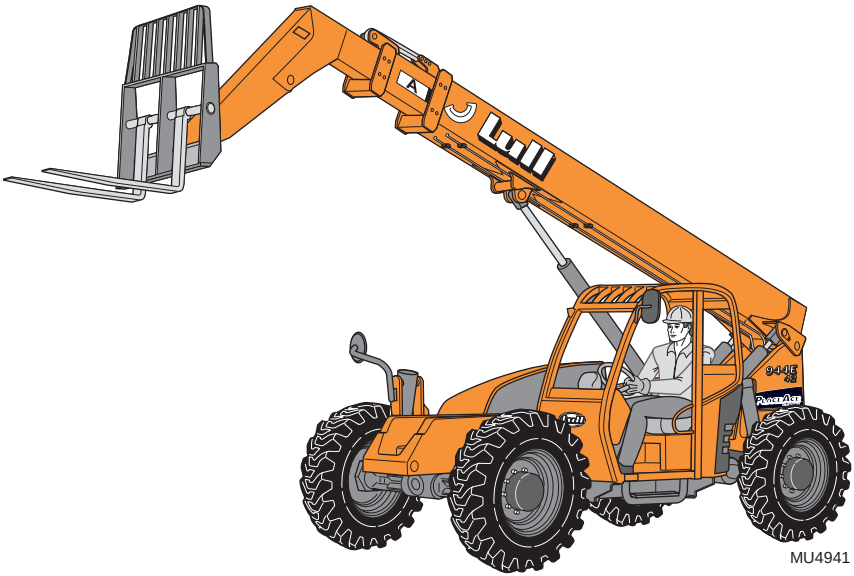

MU4941

Keep this manual with the vehicle at all times.

3120039 B
Printed in U.S.A. 3/09

Courtesy of Crane.Market

https://truckmanualshub.com/

WARNING: **Improper operation of this vehicle can cause injury or death. Only trained and authorized operators should operate this vehicle.**

Before starting the engine, do the following:

1. **Read this owner/operators manual.**
2. **Read all the safety decals on the vehicle.**
3. **Clear the area of other persons.**

Learn and practice safe use of vehicle controls in a safe, clear area before you operate this vehicle on a worksite.

It is your responsibility to observe applicable laws and regulations and to follow manufacturer's instructions on vehicle operation and maintenance.

CALIFORNIA

Proposition 65 Warning

Diesel Engine exhaust and some of its constituents are known to the State of California to cause cancer, birth defects and other reproductive harm.

CALIFORNIA

Proposition 65 Warning

Battery posts, terminals and related accessories contain lead and lead compounds, chemicals known to the State of California to cause cancer and birth defects or other reproductive harm. Wash hands after handling.

Courtesy of Crane.Market

https://truckmanualshub.com/

Table of Contents

Introduction
The Manual.....2
Replacement Parts.....2
Reports.....2
Disclaimer.....3

Safety Practices
Hazard Classification System.....3
Accident Prevention Tags.....5
New or Additional Operators 5
Instructional Symbols 6
Instructional Symbols (cont'd) 7
Hazard Symbols 8
Avoidance Symbols.....9
Avoidance Symbols (cont'd).....10
Avoidance Symbols (cont'd).....11
Personal Considerations 12
Operational Considerations.....15
Equipment Considerations 20

Operation
Pre-Operation Inspection.....23
Operator Controls.....26
Front Dash Panel.....48
Optional Features.....55
Carriages.....66
Indicators.....68
Fork Rating.....70
Using the Capacity Chart.....71
Stabil-TRAK System.....74
Stabil-TRAK™ System Test 77
Refueling 83
Normal Starting.....85
Cold Starting.....86
Jump Starting 87
How To Pick, Carry & Place A Load.....88
Elevating Personnel.....89
Using Other Attachments 93
Shut-Off 95

Emergency Operations
Towing a Disabled Vehicle 96
Emergency Boom Lowering 98

General Maintenance
Introduction.....104
Maintenance Schedule and Checklist 105
1. Lubrication Points.....106
2. Air Cleaner 107
3. Optional Closed Cab Air Filters 109
4. Engine Cooling System.....110
5. Engine Oil and Filter.....114
6. Engine Fuel System 118
7. Engine Fan Belt.....123
8. Air Conditioner Compressor Belt (Optional) 124
9. Hydraulic Oil and Filter.....125
10. Transmission Oil and Filter 128
11. Transfer Case Oil 131
12. Axle Oil.....133
13. Brake Disc Inspection 135
14. Wheel End Oil 138
15. Wheels and Tires 140
16. Battery.....142
17. Fuse & Relay Replacement.....143
18. Boom Chains and Wear Pads.....150
19. Transfer Carriage Rollers and Wear Pads 163
Storage and Transport 170
Storage.....170
Transport.....171

Test Procedures
Parking Brake/Transmission De-Clutch Test Procedures 172

Specifications
Fluid & Lubrication Capacities...174
Tires 175
Weights 175
Vehicle Dimensions.....176
Electrical System.....177
Engine 177

Index.....179
Load Charts
Accident Prevention Tags

© 2004 JLG Industries, Inc.

Courtesy of Crane.Market

https://truckmanualshub.com/

The Manual

This Owners/Operators Manual provides the information you need to operate and maintain this vehicle.

IMPORTANT! *Before you operate this vehicle, read this manual completely and carefully so you will understand the instructions and the operation of the controls and equipment. You must comply with all* ***Danger****,* ***Warning****, and* ***Caution*** *notices; they are for your benefit.*

All references to the right side, left side, front, or rear are given from the operator's seat looking forward.

JLG Industries, Inc. is hereinafter referred to as **JLG**.

Replacement Parts

For easy reference when ordering replacement parts or making service inquiries on this vehicle, record its model and serial number on the back cover of this manual. The serial number is stamped into the serial number plate (1) which is located on the vehicleís frame.

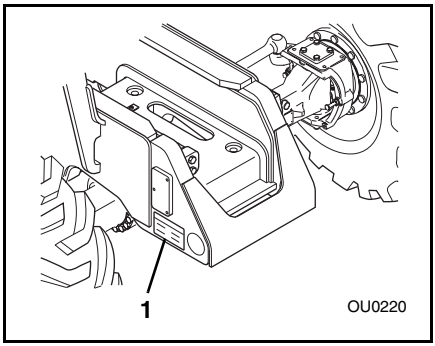

IMPORTANT! *The replacement of any part on this vehicle by anything other than a* ***JLG*** *authorized replacement part may adversely affect the performance, durability or safety of this vehicle and may void the warranty.* ***JLG*** *assumes no liability for unauthorized replacement parts which adversely affect the performance, durability or safety of this vehicle.*

Reports

IMPORTANT! *A Warranty Registration form must be filled out by the Lull Distributor, signed by the purchaser, and returned to* ***JLG*** *once the product is sold and/or put into service. This report activates the warranty period, assuring that your claims during the warranty period will be processed promptly. To guarantee full warranty service, make sure your Lull Distributor has returned the business reply card of this form to* ***JLG****.*

Courtesy of Crane.Market

https://truckmanualshub.com/

Disclaimer

JLG reserves the right to make changes on and to add improvements upon its products at any time without public notice or obligation. **JLG** also reserves the right to discontinue manufacturing any product at its discretion at any time.

NOTICE: Under OSHA rules, it is the responsibility of the employer to provide operator training. Successful completion and certification of Safety Training for Rough Terrain Forklifts is required. Operator Training Kits are available by calling Ken Cook Company at (414) 466-6060. An order form for these kits is available through our website, http://www.jlg.com.

The information in this manual does not replace any safety rules and laws used in your area. Before operating this vehicle, learn the rules and laws for your area. Make sure the vehicle has the correct equipment according to these rules and laws.

Your safety and the safety of others in the worksite depend significantly upon your knowlege and understanding of all correct operating practices and procedures for this vehicle.

WARNING: **DO NOT** modify or alter (weld, drill, etc.) any part of this vehicle without consulting **JLG**. Modifications can weaken the structure creating a hazard that can cause death or serious personal injury.

Hazard Classification System

OP0330

This safety alert symbol is used with the following signal words to attract your attention to messages found within the manual and on hazard decals located on the vehicle. They are reproduced herein and pertain to proper operation and procedure messages contained throughout the manual. The message that follows the symbol contains important information about Safety. To avoid possible death or serious personal injury, carefully read and follow the messages! Be sure to fully understand the potential causes of death or injury.

Courtesy of Crane.Market

https://truckmanualshub.com/

Signal Word

A signal word is a distinctive word located on hazard decals and used throughout this manual that alerts the viewer to the existence of and relative degree of the hazard.

DANGER:

The signal word ì**DANGER**î indicates an imminently hazardous situation which, if not avoided, will result in death or serious personal injury.

WARNING:

The signal word ì**WARNING**î indicates a potentially hazardous situation which, if not avoided, could result in death or serious personal injury.

CAUTION:

The signal word ì**CAUTION**î indicates a potentially hazardous situation which, if not avoided, may result in minor or moderate injury.

CAUTION:

The signal word ì**CAUTION**î, used without the safety alert symbol, indicates a potentially hazardous situation which, if not avoided, may result in property damage.

For safe maintenance of the vehicle, read, understand and follow all DANGER, WARNING and CAUTION information.

Courtesy of Crane.Market

https://truckmanualshub.com/

Accident Prevention Tags

Before beginning any maintenance or service, place an Accident Prevention Tag (1) on both the starter key switch (2) and the steering wheel (3), stating that the vehicle should not be operated. Actual Accident Prevention Tags, which can be punched out and used, are included as the last page of this manual. Retain these Accident Prevention Tags for reuse at a later date.

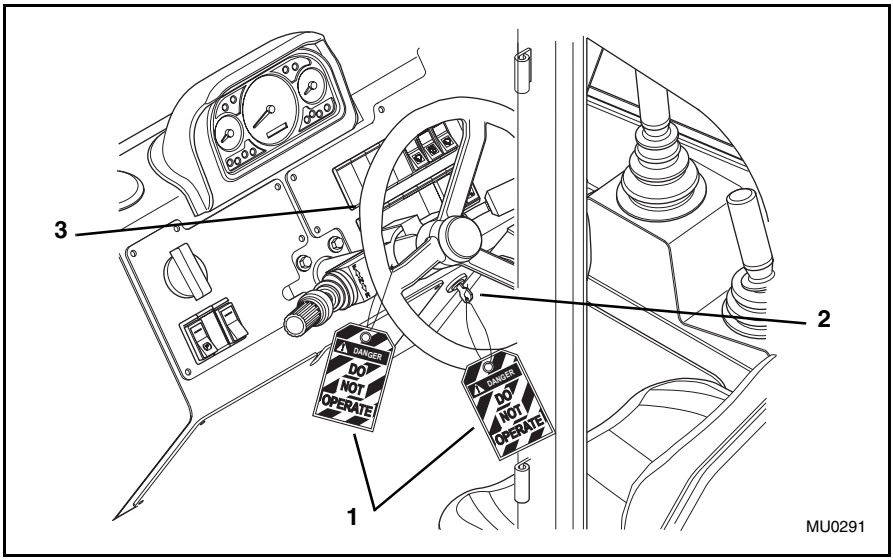

New or Additional Operators

At the time of original purchase, the purchaser of this vehicle was instructed by the seller on its proper use. If this vehicle is to be used by an employee or is loaned or rented to someone other than the purchaser, make certain that the new operator is trained and authorized, in accordance with the OSHA regulations referenced on page 3, and reads and understands this Operators Manual before operating the vehicle.

In addition, make sure that the new operator has completed a walk-around inspection of the vehicle, is familiar with all decals on the vehicle, and has demonstrated the correct use of all controls.

Courtesy of Crane.Market

https://truckmanualshub.com/

Instructional Symbols

The following symbol definitions will help you understand all hazard related decals and load charts used on this vehicle.

OP0330

Safety Alert Symbol

OH2100

Read Operatorís Manual

OH2090

Fasten Seat Belt

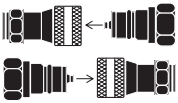

OH3100

Always Connect Couplers On Hydraulically Powered Attachments

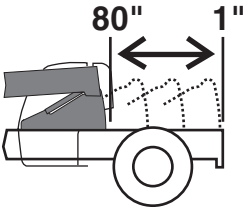

OU1570

Transfer Carriage Forward Movement

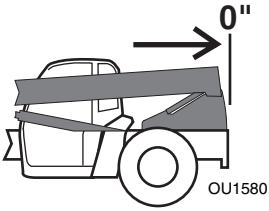

OU1580

Transfer Carriage Fully Retracted

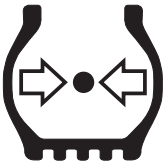

OS0900

Always Maintain Proper Tire Pressure

Courtesy of Crane.Market

https://truckmanualshub.com/

Instructional Symbols (contíd)

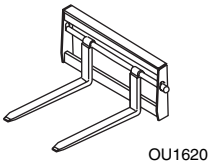

Standard Carriages

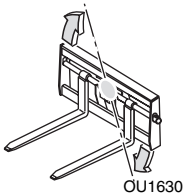

Side Tilt Carriages

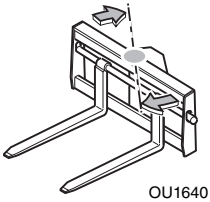

Swing Carriages

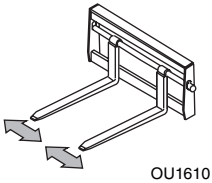

Single or Dual Fork Positioning Carriages

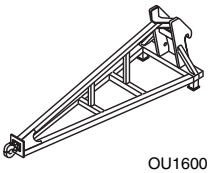

10 Ft. Truss Boom

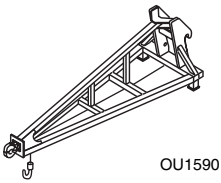

10 Ft. Truss Boom w/Winch

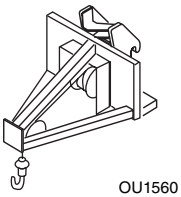

3 Ft. Truss Boom w/Winch

Courtesy of Crane.Market

https://truckmanualshub.com/

Hazard Symbols

Lead Acid Batteries Generate Explosive Gases

Rotating Fan Blades Can Cut

Vehicle Tipover Can Crush

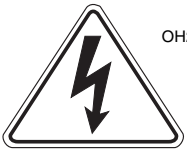

Electrocution Can Cause Death Or Serious Injury

Vehicle Roll Away Can Cause Death Or Serious Injury

Rotating Belts Can Cut Or Entangle

FALLING OFF ATTACHMENT Can Result In Death Or Serious Injury

AVOID CRUSHING, Falling Off Vehicle Can Cause Death Or Serious Injury

Swinging Loads Can Cause Vehicle Tipover Which Can Result In Death Or Serious Injury

ENGINE EXPLOSION Can Result In Death Or Serious Injury

Courtesy of Crane.Market

https://truckmanualshub.com/

Avoidance Symbols

Keep Lit Cigarettes Away

Keep Flames and Ignition Sources Away

Do Not Raise Boom While On A Slope

Do Not Travel With Boom Raised

Do Not Travel With Personnel In Work Platform

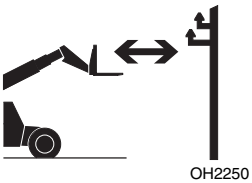

Keep Clear Of Power Lines

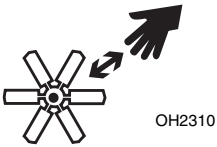

Keep Away From Rotating Fan Blades

Courtesy of Crane.Market

https://truckmanualshub.com/

Avoidance Symbols (contíd)

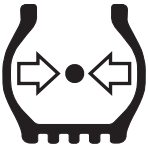

OH2290

Maintain Proper Air Pressure In Tire

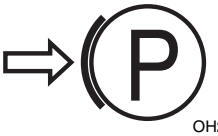

OH2260

Engage Parking Brake

OH2230

Carry No Riders

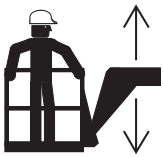

OH2170

Use Only Compliant Work Platforms To Raise Or Lower Personnel

OH2220

DO NOT JUMP

- **Brace Yourself and Stay With Vehicle**
- **Keep Seat Belt Fastened**
- **Hold On Firmly**
- **Lean Away From The Point Of Impact**

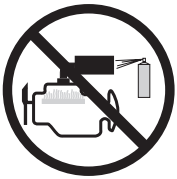

OU1460

DO NOT Use Ether Or Other High Energy Starting Aids. Engine Equipped With Grid Heating System.

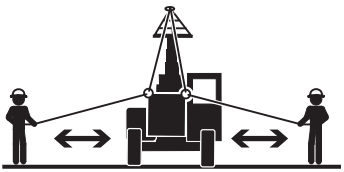

OH3120

To Avoid Vehicle Tipover

ALWAYS:

- **Travel Slowly**
- **Rig Properly**
- **Use Two Tethers**

Courtesy of Crane.Market

https://truckmanualshub.com/

Avoidance Symbols (contíd)

OU1530

Keep Truss Boom Horizontal When Using Winch

OU1540

Avoid Rope Damage. DO NOT Tilt Truss Boom DOWN When Using Winch

OU1550

Avoid Rope Damage. DO NOT Tilt Truss Boom UP When Using Winch

OU1520

Stop Operation At This Point

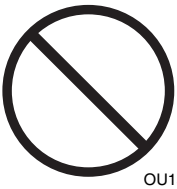

OU1510

Prohibition Symbol. DO NOT Operate

Courtesy of Crane.Market

https://truckmanualshub.com/

Personal Considerations

1. Seat Belt

Always fasten the seat belt before starting the engine.

2. Clothing and Safety Gear

DO NOT wear loose clothing or jewelry that can get caught on controls or moving parts. Wear protective clothing and personal safety gear issued or called for by job conditions.

3. Dismounting

DO NOT get off the vehicle until you:

- level the vehicle,
- ground the carriage,
- place the travel select lever in the (N) NEUTRAL DETENT position,
- engage the parking brake switch,
- turn the engine off, if appropriate,
- unbuckle the seat belt,
- exit the vehicle using the hand holds.

OU0340

4. Chemical Hazards

A. Exhaust Fumes

Fumes from the engine exhaust can cause death or serious personal injury. **DO NOT** operate vehicle in an enclosed area without a ventilation system capable of routing the hazardous fumes outdoors.

B. Explosive Fuel

Engine fuel is ***flammable*** and can cause a fire and/or an explosion. Avoid danger by keeping sparks, open flames and smoking materials away from the vehicle and from fuel during refueling or when servicing the fuel system. Know where fire extinguishers are kept on the worksite and how to use them.

C. Ether or High Energy Starting Aids

The engine utilizes a grid heating system inside the induction manifold for cold starting conditions.

WARNING: This diesel engine uses a grid heating system inside the induction manifold. **DO NOT** use ether or any high energy fuels to assist starting. An explosion may cause death or serious personal injury or engine damage.

Courtesy of Crane.Market

https://truckmanualshub.com/

DO NOT use ether or any other high energy starting aids during cold starting. An engine explosion can result in death or serious personal injury.

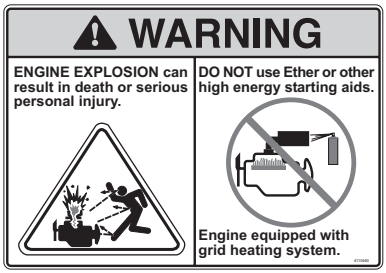

OU1470

D. Hydraulic Fluid

DO NOT attempt to repair or tighten any hydraulic hoses or fittings while the engine is running or when the hydraulic system is under pressure. Fluid in the hydraulic system is under enough pressure that it can penetrate the skin causing death or serious personal injuries.

HOT HYDRAULIC FLUID WILL CAUSE SEVERE BURNS. Wait for fluid to cool down before disconnecting lines.

DO NOT use your hand to check for leaks. Use a piece of cardboard or paper to search for leaks. Wear gloves to protect hands from spraying fluid.

Hydraulic fluid can cause permanent eye injury. Wear appropriate eye protection and stop engine. Relieve pressure before disconnecting lines. Pressure can typically be relieved by slowly and cautiously loosening one end of a hose at the swivel connection.

If anyone is injured by or if any hydraulic fluid is injected into the skin, obtain medical attention immediately or gangrene may result.

E. Batteries

The following WARNING is intended to supplement and does not replace the warnings and information provided on the battery by the battery manufacturer.

When jump starting the vehicle, carefully follow instructions found under ìJump Startingî on page 87.

Keep sparks, flames and lit smoking materials away from the battery at all times. Lead acid batteries generate ***explosive*** gases. Severe chemical burns can result from improper handling of battery electrolyte. Wear safety glasses and proper protective gear when handling batteries to prevent electrolyte from coming in contact with eyes, skin or clothing.

OU0350

Courtesy of Crane.Market

https://truckmanualshub.com/

Battery Charging

WARNING: **DO NOT** charge a frozen battery, it may explode and cause serious injury. Let the battery thaw out before putting on a battery charger.

Under normal conditions, the engine alternator will have no problem keeping the batteries charged. The only condition in which the battery may cause a problem is when the batteries have been completely discharged for an extended period of time. Under this condition, the alternator may not be able to recharge the batteries. A battery charger will be required for recharging.

Before using a battery charger, an attempt can be made to recharge the batteries using the engine alternator by first starting the vehicle and letting the engine run. See ìJump Startingî on page 87.

WARNING: Fluid in electric storage batteries contains sulfuric acid which is **POISON** and can cause **SEVERE CHEMICAL BURNS**. Avoid all contact of fluid with eyes, skin or clothing. Use protective gear when handling batteries. **DO NOT** tip a battery beyond a 45 angle in any direction. If contact does occur, follow the First Aid suggestions that follows.

Battery Electrolyte First Aid:

- **External Contact ó** Flush with water.
- **Eyes ó** Flush with water for at least 15 minutes and get medical attention immediately.
- **Internal Contact ó** Drink large quantities of water. Follow with Milk of Magnesia, beaten egg or vegetable oil. Get medical attention immediately.

IMPORTANT! *In case of internal contact,* ***DO NOT*** *give fluids that would induce vomiting!*

Courtesy of Crane.Market

https://truckmanualshub.com/

5. Moving Parts Hazard

DO NOT place limbs near moving parts. Severing of any body part can result.

Turn off engine and wait until fan and belts stop moving before servicing.

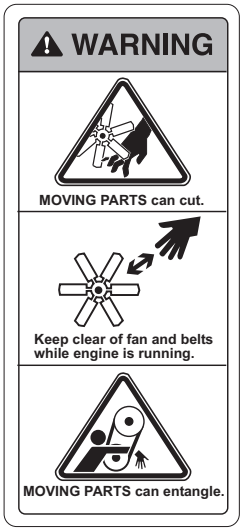

OT0810

6. Lowering Boom or Falling Load Hazard

DO NOT get under a raised boom unless it is blocked up safely. Always empty the attachment of any load and block the boom up before doing any servicing that would require the boom to be raised.

NEVER allow anyone to walk or stand under the boom. A lowering boom or falling load can result in death or serious personal injury.

Operational Considerations

1. Preparation and Prevention

Know the location and function of all vehicle controls.

Make sure all persons are away from the vehicle and that the travel select lever is in the (N) NEUTRAL DETENT position and the parking brake switch engaged before starting the engine.

Holes, obstructions, debris and other worksite hazards can cause death or serious personal injury. Always walk around and look for these and other hazards before operating the vehicle in a new worksite.

Prevent accidents when you move the vehicle around the worksite. Know the rules for movement of people and vehicles on the worksite. Have a person act as a lookout for you. Follow the instructions of signals and signs.

DO NOT operate the vehicle unless all hazard and instructional decals are in place and readable. (Replace all missing, illegible, or damaged decals.)

Courtesy of Crane.Market

https://truckmanualshub.com/

2. Clearances

Look out for and avoid other personnel, machinery and vehicles in the area. Use a spotter if you do not have a clear view of conditions that affect clearances. Travel with the boom fully retracted and lowered as far as possible while still maintaining enough ground clearance for conditions.

Always check boom clearances carefully before driving underneath door openings, bridges, etc.

Always check for power lines when raising the boom. Beware of overhead wires. Contact with electrical power lines can result in electrocution. See Electrocution Hazards.

3. Visual Obstruction

Dust, smoke, fog, etc. can decrease vision and cause an accident. Always stop or slow the vehicle until the obstruction clears and the worksite is visible again. Have a lookout person assist you.

Where the load will obstruct the operatorís vision, it is recommended that the vehicle be operated in REVERSE, looking backwards in the direction of travel. Travel at a slower speed and get someone to direct you.

4. Underground Hazards

Know the location of all underground hazards before operating this vehicle in a new area or worksite. Electrical cables, gas and water pipes, sewer, or other underground objects can cause death or serious personal injury. Contact your local underground utility service or diggers hotline to mark all underground hazards.

5. Electrocution Hazards

NEVER operate this vehicle in an area where overhead power lines, overhead or underground cables, or other power sources may exist without first requesting that the appropriate power or utility company de-energize the lines, or take other suitable precautions.

OS0063

Courtesy of Crane.Market

https://truckmanualshub.com/

6. Elevating Personnel

Use only a compliant work platform meeting the ASME B56.6 standards for lifting and lowering personnel. **NEVER** transport personnel in a work platform for even the shortest distance.

Death or serious personal injury can occur if these rules are not obeyed. Riders can fall and be crushed or run over. Avoid accidents.

For other specific precautions, See ìElevating Personnelî on page 89.

OH3180

OU0620

7. Transfer Carriage Operation

Before any operation of the PlaceAceô transfer carriage is started, be sure to clear the path of travel in front of the boom and the transfer carriage of any personnel or objects.

Be sure there is enough room in front of the boom for complete transfer carriage movement.

IMPORTANT! *When transfer carriage movement is started in the forward direction, the lifting capacity of the vehicle will be reduced. Refer to ìUsing the Capacity Chartî on page 71 and the ìLoad Chartî section at the end of this manual for vehicle capacities during transfer carriage operation.*

If load cannot be safely transfered forward, position the vehicle closer to the landing point of the load.

Courtesy of Crane.Market

https://truckmanualshub.com/

8. Tip Over Hazard

OS0086

Traveling with the boom raised is dangerous and can cause tipover. Keep the boom as low as possible. Travel with extreme caution and at the slowest possible speed.

Keep the vehicle under control at all times. When negotiating turns, slow down and turn the steering wheel in a smooth sweeping motion. Avoid jerky turns, starts or stops. Reduce vehicle speed on rough ground and slopes.

DO NOT exceed the rated lift capacity of the vehicle as structural damage and unstable conditions will result.

To ensure that the vehicle is positioned in the most stable condition before operating an attachment, use the frame sway control (frame tilt) to level the vehicle. The vehicle is level when the frame level indicator gauge reaches (0) zero degrees.

If the vehicle cannot be leveled using the frame sway control, reposition the vehicle.

Frame swaying left or right with the boom raised above horizontal is dangerous. Always use the frame sway control to level the vehicle before raising the boom above horizontal, with or without a load. If the vehicle cannot be leveled using the frame sway control, reposition the vehicle.

9. Emergency Exit Rear Window

The rear window (1) in the optional enclosed cab can be used as an emergency exit by removing the latch pin (2) located on the window latch (3). The window is then free to swing open.

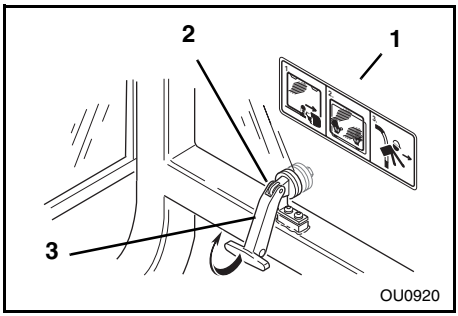

OU0920

Courtesy of Crane.Market

https://truckmanualshub.com/

10. Tire Pressure

OS0085

MAINTAIN proper tire pressures at all times. An underpressurized tire(s) adversely affects vehicle stability. If proper tire pressures are not maintained, this vehicle can tip over.

To ensure proper vehicle stability, check all four tire pressures before operating the vehicle.

11. Do Not Jump

If a vehicle ever becomes unstable and starts to tip over:

- BRACE YOURSELF and STAY WITH THE VEHICLE,
- KEEP YOUR SEAT BELT FASTENED,
- HOLD ON FIRMLY and
- LEAN AWAY FROM THE POINT OF IMPACT.

Indecision and trying to escape from a tipping vehicle can result in death or serious personal injury.

OH3190

12. Slopes

DO NOT park the vehicle on an incline and leave it unattended.

- Driving across a slope is dangerous, as unexpected changes in the slope can cause tipover. Ascend or descend slopes slowly and with caution.
- Ascend or descend slopes with the heavy end of the vehicle pointing up the slope.

NOTE: *The rear of the vehicle is normally considered the heavy end unless the carriage is fully loaded. In this case the front of the vehicle is now the heavy end.*

- Unloaded vehicles should be operated on all slopes with the carriage pointing down the slope.
- On all slopes, the load must be tilted back and raised only as far as necessary to clear the ground.
- When operating on a downhill slope, reduce travel speed and downshift to a low gear to permit compression braking by the engine and aid the application of the service brakes.

Courtesy of Crane.Market

https://truckmanualshub.com/

13. Falling Load Hazard

DO NOT exceed the total rated load capacity of the specific type fork being used. Each fork is stamped with a maximum load capacity. If the capacity is exceeded, forks may break. See ìFork Ratingî on page 70.

DO NOT downshift at a high ground speed. Sudden slowing can cause the load to drop off the forks.

14. Ventilation

Sparks from the electrical system and the engine exhaust can cause an explosion. **DO NOT** operate this vehicle in an area with flammable dust or vapors unless good ventilation has removed the hazard.

Carbon monoxide fumes from the engine exhaust can cause suffocation in an enclosed area. Good ventilation is very important when operating this vehicle.

Equipment Considerations

WARNING: **DO NOT** modify or alter (weld, drill, etc.) any part of this vehicle without first consulting **JLG**. Modifications can weaken the structure creating a hazard that can cause death or serious personal injury.

DO NOT by-pass or disconnect any electrical or hydraulic circuits. Consult the **JLG** Service Department or your local **Lull** Distributor if any circuit is malfunctioning.

DO check for frayed or cut seat belt webbing, damaged buckles or loose mounting brackets. Replace immediately if required.

ALWAYS wear a seat belt when operating the vehicle.

DO check tire pressure on all four tires. Add air if required.

DO check the condition of all four rims. Check for bent flanges and/or bead mounting areas.

DO check the parking brake/transmission de-clutch operation. Refer to the test procedures on page 172. Repair immediately if required.

DO keep all non-skid surfaces clean and free of debris. Replace if worn, damaged or missing.

DO check the condition of decals. Replace decals if missing, damaged or illegible. The following pages show the proper location of the decals.

Courtesy of Crane.Market

https://truckmanualshub.com/

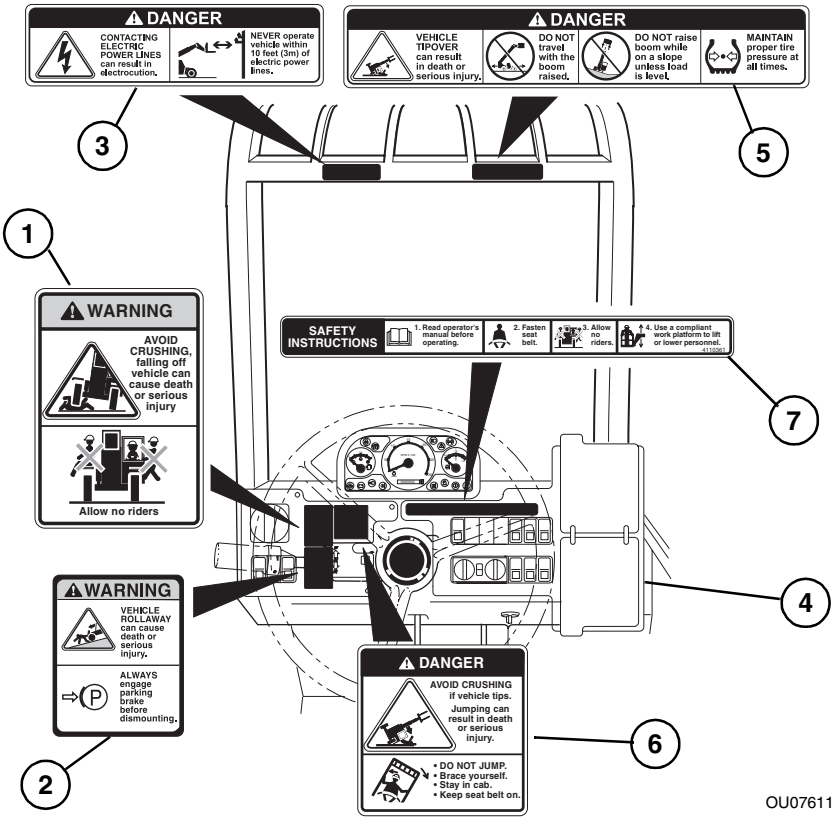

Item	Part Number	Quantity	Decal Description
1	4110358	1	No Riders Warning
2	4110358	1	Vehicle Rollaway Warning
3	4108991	1	Electrocution Danger
4	7301586	1	Load Chart Booklet
5	4110137	1	Tipover Danger
6	4110358	1	Do Not Jump Danger
7	4110361	1	Safety Instructions

Courtesy of Crane.Market

https://truckmanualshub.com/

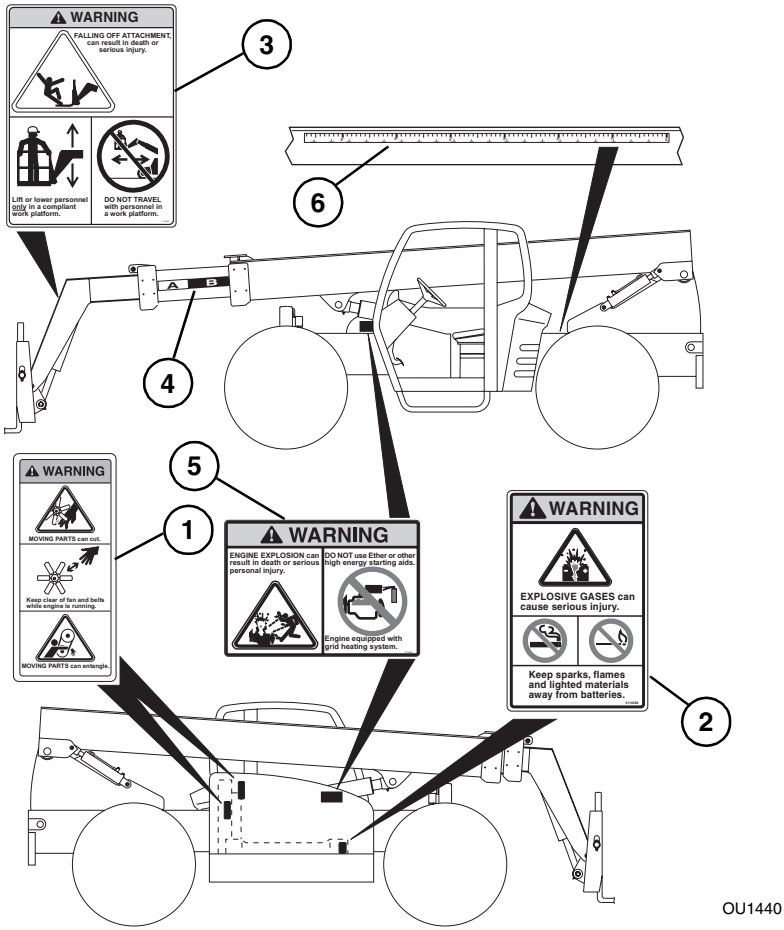

Item	Part Number	Quantity	Decal Description
1	4110184	2	Moving Parts Warning
2	4110368	1	Explosive Gases Warning
3	4110389	1	Carrying Personnel Warning
4	4110130	1	Boom Extend Stripes
5	4110460	2	Ether Starting Warning
6	4110356	1	Transfer Carriage Extension

Courtesy of Crane.Market

https://truckmanualshub.com/

Pre-Operation Inspection

1. Check seat belt for damage. Check for frayed or cut seat belt webbing, damaged buckles or loose mounting brackets. Make any necessary repairs before operating the vehicle.
2. Check all four tires and rims for damage. Check for proper tire pressure, add air if required. Observe the condition of each tire looking specifically for punctures, cracks, cuts, gouges, bulges or any other damage. Check the condition of each rim for bent flanges or any other damage. Make any necessary repairs before operating the vehicle.
3. Check and add engine oil if required. This procedure is explained in greater detail on page 114.
4. Check and add transmission oil if required. This procedure is explained in greater detail on page 128.
5. Check the cooling system overflow bottle for coolant. Add coolant if required. This procedure is explained in greater detail on page 110. Remove any debris blocking the radiator cooling fins.
6. Check the hydraulic oil level sight glass and add hydraulic oil if required. This procedure is explained in greater detail on page 125.
7. Visually inspect the batteries for cleanliness. Check terminals for corrosion. Check the cable connections to ensure proper tightness.
8. Walk around the vehicle and check for oil leakage as well as damaged or missing parts. Make any necessary repairs before operating the vehicle.
9. Check ALL lighting systems (if so equipped) for proper operation.
10. Adjust rear view mirrors as required to obtain proper field of vision to the rear.
11. Test the back-up alarm and horn for proper operation.
12. Check condition of cab glass (if so equipped), looking for cracks or other damage.
13. Visually check the condition of the air conditioner condenser (if so equipped). Remove any debris from the cooling fins of the air conditioner condenser located at the top rear of the cab. Clean the fins as needed.

Courtesy of Crane.Market

https://truckmanualshub.com/

Operators Seat Adjustments

Enter the cab using the hand holds.

The operatorís seat can be adjusted as follows:

Fore and Aft Adjustment (all styles of seat)

Pull the handle (1) under the front of the seat (2) to the left and move the seat forward and backward. Release the handle to lock the seat in the desired position. Depending on the style of seat, this handle may be on the right side or the left side of the seat.

Suspension Adjustment (for seats equipped with adjustable suspensions only)

Turn the knob (3) on the front of the seat to adjust the suspension to correspond with the operatorís weight. Turn the knob clockwise to increase stiffness. Turn the knob counterclockwise to reduce stiffness.

Backrest Angle Adustment (for seats equipped with adjustable backrests only)

The angle of the seat backrest can be adjusted to suit the operator. Move the lever (4) located on the left side of the seat backrest to adjust the angle.

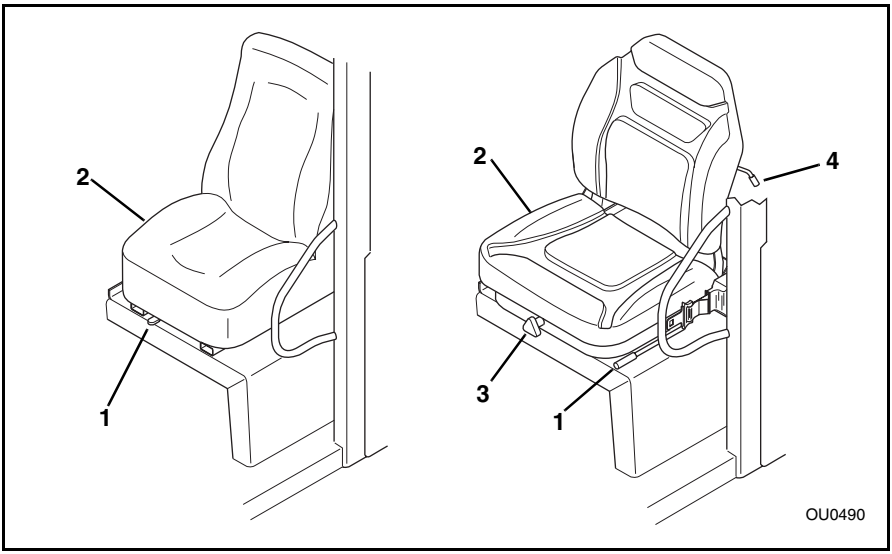

Courtesy of Crane.Market

https://truckmanualshub.com/

Seat Belt

WARNING: Serious bodily injury or death may result from failure to wear the seat belt installed on this vehicle. The seat belt is a critical component of the Operatorís Protective Structure, and is provided for the operators protection in case of vehicle upset. The seat belt MUST be worn whenever this vehicle is operated.

IMPORTANT! *Inspect the seat belt every time it is used, looking for cut or worn webbing, or any defect in the latch assembly. If any wear or damage is noted,* ***DO NOT*** *operate the vehicle until the seat belt is replaced.*

Before the engine is started, adjust the seat as required for position and comfort. Then adjust the seat belt as follows:

1. Grasp the retractable end of the belt or the male end of the seat belt and make certain that the belt webbing is not twisted or entangled in any portion of the seat assembly.
2. With your back straight in the seat, couple the retractable end or the male end of the belt into the receptacle (buckle) end of the belt.
3. With the belt as low on your body as possible, pull the retractable end of the belt or the free end of the belt away from the buckle until it is tight across the lap.

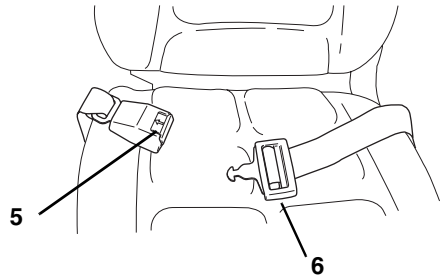

OM0720

4. To release the belt latch, depress the red button (5) and pull the free end (6) from the buckle.

An optional 3 inch wide seat belt is available for those locations that require a 3 inch seat belt.

Courtesy of Crane.Market

https://truckmanualshub.com/

Operator Controls

Accelerator Pedal

Pressing down the accelerator pedal (1) increases engine speed and the speed of the hydraulic system. The pedal is spring-loaded to return to idle speed.

NOTE: *The accelerator pedal is also used to activate the Cummins ECM diagnostic system. With the ignition switch in the RUN position, depress and release the pedal 3 times to activate the system.*

Service Brake Pedal

Pressing down the brake pedal (2) decreases the speed of the vehicle by applying the service brakes located in the axles. In the event of engine power loss, the service brake pedal can also be used for braking. It also activates and locks the rear axle to frame lock system when the boom angles are greater than 40 , as long as the pedal is depressed.

Steering Wheel

Turning the steering wheel (3) to the left or right steers the vehicle in the corresponding direction. Any one of the steering modes are selectable. Refer to ìSteering Mode Selectorî on page 27.

Horn Button

Pressing the horn button (4) located in the center of the steering wheel sounds the horn.

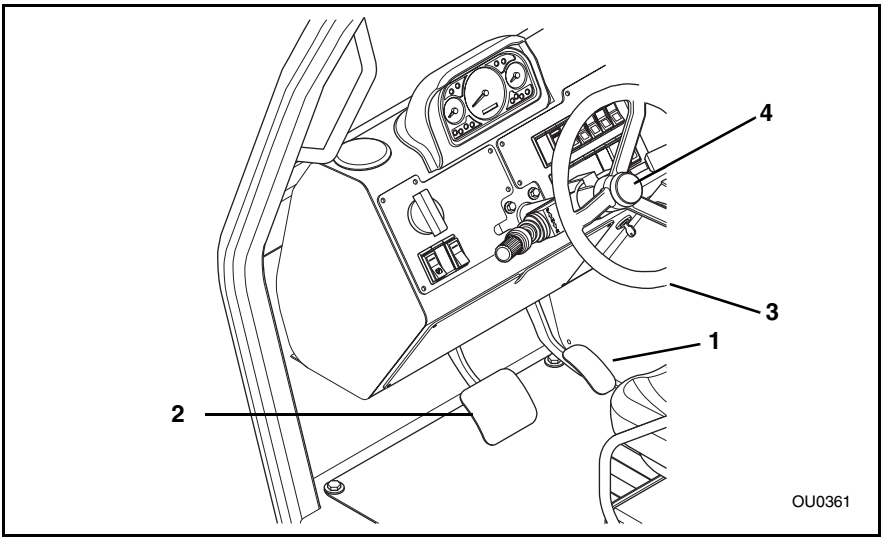

Courtesy of Crane.Market

https://truckmanualshub.com/

Ignition Switch

The ignition switch is located on the lower right side of the front dash. Using the ignition switch key (5), the key may be turned clockwise from the OFF (6) position to the RUN (7) and START (8) positions. The START position is spring-loaded to return to the RUN position and must be manually held in place for starting.

OFF position (6) ó The entire electrical system is shut down.

RUN position (7) ó All controls and indicators are operable.

START position (8) ó Engages starter motor to crank the engine when the parking brake switch is engaged and the transmission is in NEUTRAL.

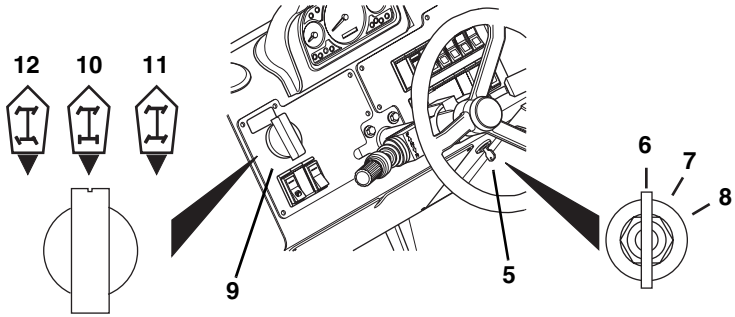

Steering Mode Selector

Three Mode Steer Select

The steering mode selector (9) is located on the left side of the front dash. The selector has three positions.

- Front Wheel Steer (10).
- Crab Steer (11).
- Four Wheel Steer (12).

Turn the steer mode selector until the notch on the top of the knob points to the desired steering mode selection. You will feel the knob of the selector slip into a detent position for each mode. Refer to the individual steering modes starting on page 28 for a detailed explanation.

Courtesy of Crane.Market

https://truckmanualshub.com/

1. Four Wheel Steering Mode

WARNING: **NEVER** use the Four Wheel Steering Mode when traveling at high speed. Rapid turning in this mode can cause tipover. Use only the Front Wheel Steering Mode at higher speeds and slow the vehicle when turning.

The front wheels will steer in the direction that the steering wheel is turned; the rear wheels will steer in the opposite direction. This steering mode allows an extremely short turning radius and enables the rear wheels to follow the tracking of the front wheels which can be an advantage in mud and sand conditions.

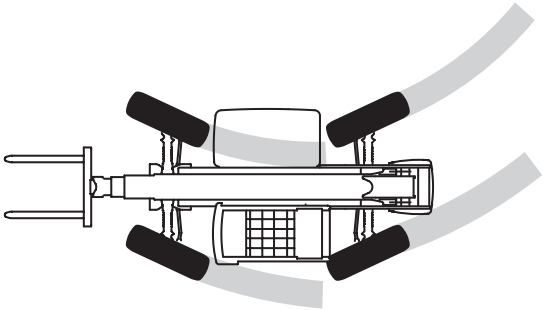

OS0280

2. Front Wheel Steering Mode

The front wheels will steer in the direction that the steering wheel is turned. The rear wheels will remain in a fixed forward position. This steering mode should be used when loading or unloading the vehicle from a trailer and for on-highway travel at higher speeds.

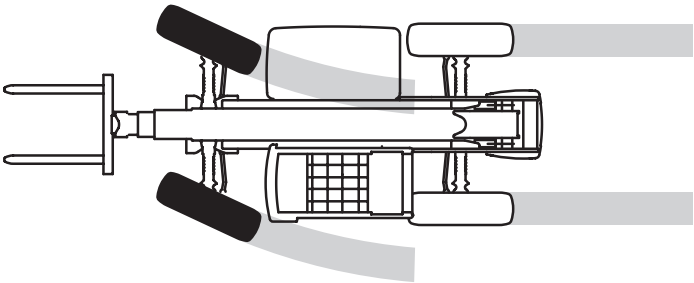

OS0290

Courtesy of Crane.Market

https://truckmanualshub.com/

3. Crab Steering Mode

WARNING: **NEVER** use the Crab Steering Mode when travelling at high speed. Rapid turning in this mode can cause tipover. Use only the Front Wheel Steering Mode at higher speeds and slow the vehicle when turning.

All wheels will steer in the same direction that the steering wheel is turned. This steering mode allows the operator to move the vehicle ìsidewaysî toward the landing point of a load. This is especially useful on a congested worksite in order to line up at the exact spot in front of the loading location.

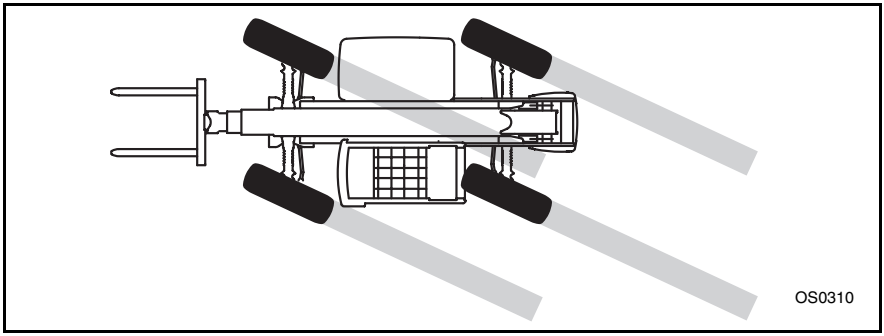

Four Wheel Steer Indexing

If the vehicle does not drive ìstraight,î the steering could be ìout of phase.î Perform the following procedure to synchronize the front and rear steering.

1. Select the four wheel steer mode with the steer mode selector.
2. Turn the steering wheel all the way to the right until it reaches the stop.
3. Select the front wheel steer mode with the steer mode selector.
4. Turn the steering wheel to the left, about one complete revolution.
5. Select the four wheel steer mode with the steer mode selector.
6. Turn the steering wheel all the way to the right until it reaches the stop. This will ensure the rear wheels are fully against the right stop.
7. Select the front wheel steer mode with the steer mode selector.
8. Turn the steering wheel all the way to the right until it reaches the stop.
9. Select the four wheel steer mode with the steer mode selector.
10. Turn the steering wheel to the left, until the wheels are pointing straight ahead.
11. Drive the vehicle forward a short distance to check the wheel tracking.
12. The vehicle should now be properly indexed in Four Wheel Steering. If the wheels are still out-of-phase, repeat the above procedure.

Courtesy of Crane.Market

https://truckmanualshub.com/

Parking Brake Switch

The Parking Brake Switch (1) is located on the left side of the front dash and has two positions:

ENGAGED ..... toggle switch downward

DISENGAGED ..... toggle switch upward

The Parking Brake Switch must be ENGAGED to permit engine starting. A red LED, on the parking brake switch, will indicate the brake is ENGAGED. The parking brake engaged light (2) will illuminate on the front dash panel any time the parking brake is engaged.

The parking brake may be used to stop in an EMERGENCY situation. However, use caution because the stop will be abrupt and the operator and the load may be jolted forward unexpectedly.

With boom angles greater than 40 , this switch activates the locked mode of the Stabil-TRAK system.

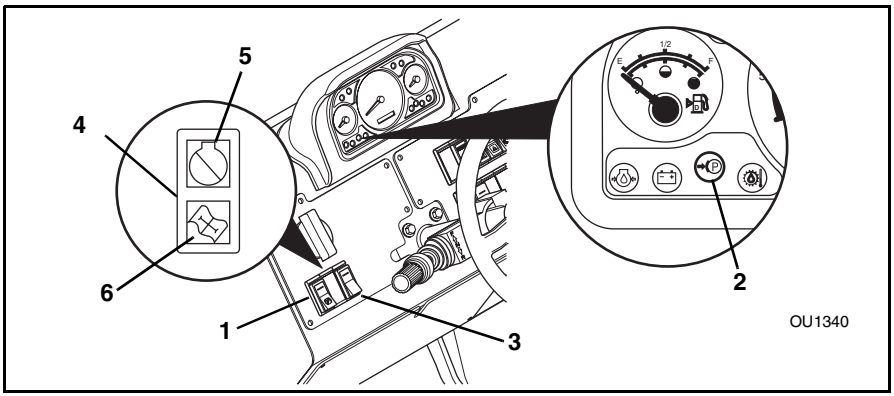

Transmission Disconnect Switch

The Transmission Disconnect Switch (3) is located on the left side of the front dash and has two positions:

- Push the TOP of the rocker switch in to DEACTIVATE the transmission disconnect function.

- Push the BOTTOM of the rocker switch in to ACTIVATE the transmission disconnect function.

Courtesy of Crane.Market

https://truckmanualshub.com/

With the transmission disconnect activated, when the service brake pedal is applied, the transmission will be disconnected allowing the engine speed to be increased without the need to place the transmission shifter in the (N) NEUTRAL DETENT.

This feature eliminates the need to shift the transmission to the (N) NEUTRAL DETENT before operating the hydraulic system at high engine speed. When the transmission disconnect is active, the drivetrain is disconnected and the hydraulic system has full engine power.

IMPORTANT! *With the disconnect feature active and the service brake pedal being released, the transmission will be reconnected in the same gear and direction of travel as when it was originally disconnected. The service brakes must remain fully applied for this feature to be functional.*

Engine Function Indicator Lights

The engine function indicator lights (4) are located on the left side of the front dash between the Park Brake switch and the Transmission Disconnect switch. The light indicates any faults that arise in the engine during operation. The light contains a RED light (5) and a AMBER light (6).

If the RED light (5) comes ON during operation, STOP the engine IMMEDIATELY and diagnose the fault by activating the ECM diagnostic system. Activate the system with the accelerator pedal.

Activate the system and read the code as indicated by the light. Contact your local Cummins dealer for an explanation of these codes or refer to the Cummins Engine Owners Manual or call the Cummins Customer Assistance Center at 1-800-343-7357.

If the AMBER light (6) comes ON during operation, the engine diagnostic system has detected a fault within the engine. Stop the engine and diagnose the fault by activating the ECM diagnostic system.

Activate the system and read the code as indicated by the light. Contact your local Cummins dealer for an explanation of these codes or refer to the Cummins Engine Owners Manual or call the Cummins Customer Assistance Center at 1-800-343-7357.

Cummins ECM Diagnostic System Activation

With the engine OFF, turn the ignition switch to the RUN position. DO NOT start the engine.

Completely depress and release the accelerator pedal 3 times. This will activate the system, both the AMBER light (6) and RED light (5) will come ON momentarily and then will begin to flash the code. If the system has been activated with the accelerator pedal and no faults are present, both the AMBER light and the RED light will come ON and stay ON.

ECM Light Code Identification

The AMBER light (6) will flash one time to identify the start of the code followed by a one or two second pause. Then the RED light (5) will flash the code sequence, pausing for one or two seconds between numbers. The AMBER light will flash once after the RED light has flashed the code to signify the end of that fault code.

Courtesy of Crane.Market

https://truckmanualshub.com/

Travel Select Lever

The Travel Select Lever (1) has three positions to select direction of travel:

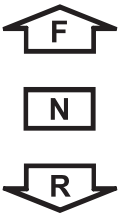

OS0340

F = FORWARD (2) ..... all the way UP

N = NEUTRAL DETENT (3) ..... CENTER position

R = REVERSE (4) ..... all the way DOWN

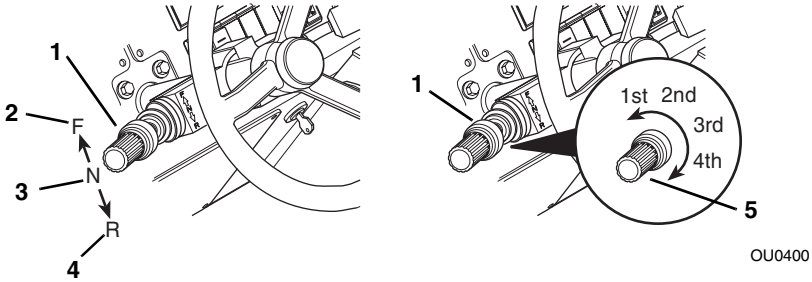

OU0400

Starting Travel

1. Enter the operator cab, fasten the seat belt, start the engine, apply the service brake pedal and disengage the parking brake switch.
2. Rotate the twist grip (5) of the range select lever to 1st gear.
3. Pull the travel select lever (1) toward the steering wheel and move the travel select lever (1) to (F) FORWARD (2) to travel in a forward direction or to (R) REVERSE (4) to travel backward.
4. Slowly remove your foot from the service brake pedal and press the accelerator pedal to start travel.

IMPORTANT! *Check for warning lights and the gauges frequently during operation. Any abnormal indication should be corrected as soon as practical.*

Courtesy of Crane.Market

https://truckmanualshub.com/

Changing Travel Direction

1. Stop the vehicle by applying the service brakes.
2. Grasp the travel select lever (1), pull it toward the steering wheel, then move the lever up or down in the opposite direction;
   (R) REVERSE (4) or (F) FORWARD (2).

When the Travel Select Lever is shifted to REVERSE, the back-up alarm will automatically sound.

NOTE: *The Travel Select Lever must be in the (N) NEUTRAL DETENT (3) position to permit engine starting.*

Gear Select Twist Grip

The Gear Select Twist Grip (5) is at the end of the travel select lever (1). The twist grip handle has four positions 1st gear thru 4th gear.

Shifting Gears

1. Rotate the twist grip of the gear select lever to the next desired gear. The transmission has four forward gears and three reverse gears.
2. Use first gear for highest torque and pulling power. Use higher gears for higher ground speed. The recommendations listed in the table that follows is a guideline only. Always use good judgement when traveling with a load.

Recommended Gear/Speed for Various Load/Travel Conditions (Forward Direction Only)

Load Size	Surface	Gear	Speed
No Load	Smooth	4th*	0 to 20 mph (0 to 32 km/h)
	Improved	3rd	0 to 14 mph (0 to 23 km/h)
	Rough	2nd	0 to 6 mph (0 to 9.7 km/h)
Load up to 4,500 lbs (up to 2.041 kg)	Smooth	3rd	0 to 14 mph (0 to 23 km/h)
	Improved	2nd	0 to 6 mph (0 to 9.7 km/h)
	Rough	2nd	0 to 6 mph (0 to 9.7 km/h)
Load 4,500 to 9,000 lbs (2.041 to 4.082 kg)	Smooth	2nd	0 to 6 mph (0 to 9.7 km/h)
	Improved	1st	0 to 3.5 mph (0 to 5.6 km/h)
	Rough	1st	0 to 3.5 mph (0 to 5.6 km/h)

*__NEVER__ travel in 4th gear when carrying a load.

NOTE: *Shifting to the next higher gear may be done while the vehicle is in motion.*

IMPORTANT! *When downshifting, allow the engine speed to slow down before shifting to the next lower gear.*

Courtesy of Crane.Market

https://truckmanualshub.com/

Stopping Travel

1. Apply the service brake pedal and downshift the vehicle to a lower gear if necessary to slow the vehicle until it comes to a complete stop.
2. Move the travel select lever (1) to the (N) NEUTRAL DETENT position and engage the parking brake switch.

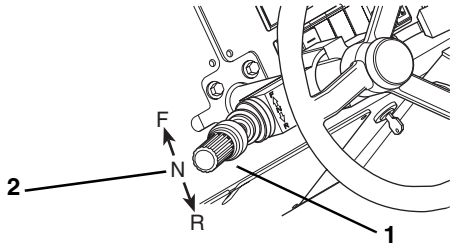

OU0390

Maximum Fork Sweep (During Travel)

CAUTION: Allow for adequate clearance between the attachment and rear counterweight and other objects when turning.
The attachment and the rear counterweight extends beyond the end of the vehicle. The operator must be aware of the maximum sweep of the attachment (3) and the rear counterweight (4) when turning in order to avoid hitting personnel and other objects in the area.

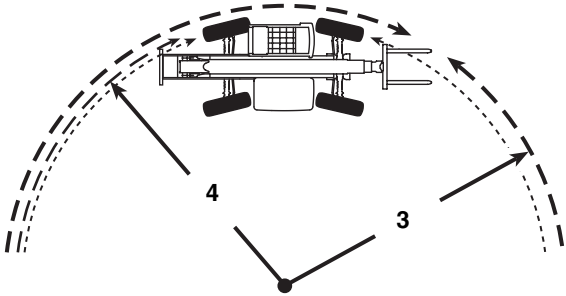

ou0730

Courtesy of Crane.Market

https://truckmanualshub.com/

Joystick Operation (Standard)

The standard vehicle is equipped with three separate joysticks.

- The front joystick (5) controls attachment tilt and PlaceAceô transfer carriage operation. The button (6) on the front joystick controls the auxiliary hydraulic function.
- The middle joystick (7) controls boom lift/lower and extend/retract functions.
- The rear joystick (8) is a single axis joystick with a lift to shift lock ring detent and controls the frame sway to the left and right.

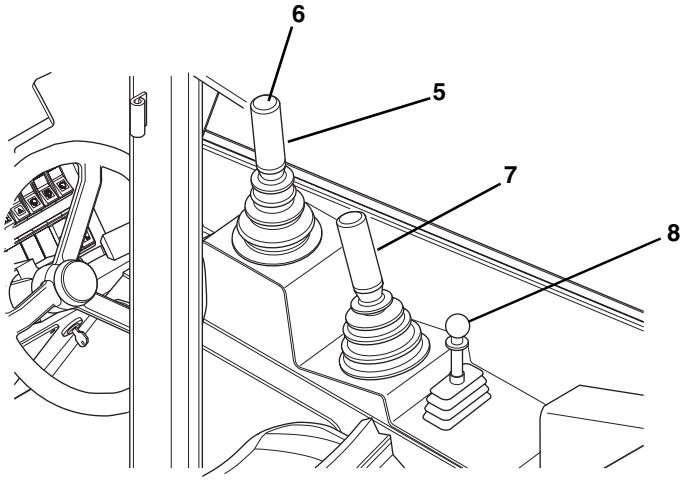

Two functions can be accomplished at the same time by moving the front or middle joysticks in between quadrants. For example; moving the middle joystick forward and to the left will lower and retract the boom simultaneously.

The speed of the function depends directly upon the amount of joystick travel in the corresponding direction. Increasing the engine speed will also increase the function speed.

Courtesy of Crane.Market

https://truckmanualshub.com/

Front Joystick (Attachment Tilt & Transfer Carriage)

The front joystick (1) controls the attachment tilt and the PlaceAceô transfer carriage operation. The joystick can be moved from the center position into any of these quadrants. The joystick will return to the center position when released. The button on the top of the joystick controls the auxiliary hydraulics function. Refer to ìAuxiliary Hydraulic Controlî on page 40 for a detailed explanation.

Attachment Tilt Up (2) ..... move handle backward

Attachment Tilt Down (3) ..... move handle forward

Transfer Carriage Extend (4)..... move handle to the right

OU0080

Transfer Carriage Retract (5) ..... move handle to the left

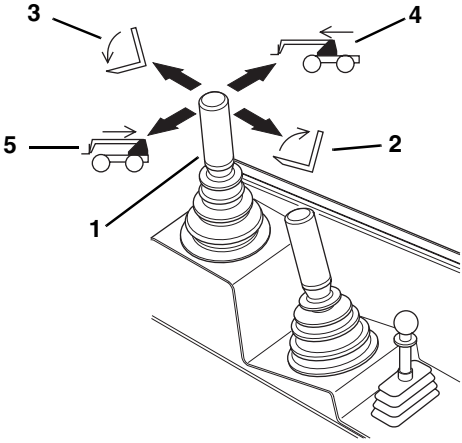

OU0420

Courtesy of Crane.Market

https://truckmanualshub.com/

Middle Joystick (Boom Lift/Lower & Boom Extend/Retract)

The middle joystick (6) controls the boom lift/lower and boom extend/retract functions. The joystick can be moved from the center position into any of these quadrants. The joystick will return to the center position when released.

Boom Lift (7) ..... move handle backward

Boom Lower (8) ..... move handle forward

Boom Extend (9) ..... move handle to the right

Boom Retract (10) ..... move handle to the left

OU0060

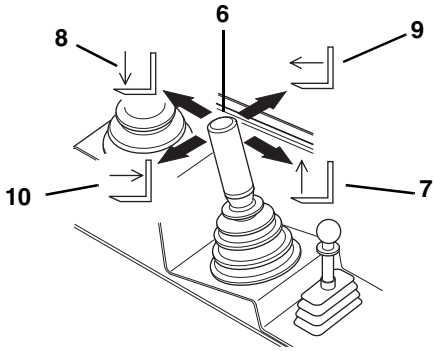

OU0430

Courtesy of Crane.Market

https://truckmanualshub.com/

Frame Sway Joystick

The frame sway joystick (1) is equipped with a lock ring (2) to prevent unintentional operation of the frame sway control.

Lift up and hold the lock ring while moving the handle to the left or right. When frame sway is complete, center the handle and lower the lock ring to lock the handle in the center position.

Frame Sway Right (3)..... LIFT lock ring and move handle to the RIGHT

Frame Sway Left (4) ..... LIFT lock ring and move handle to the LEFT

OU0070

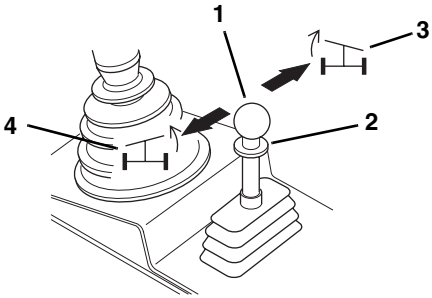

OU0440

Courtesy of Crane.Market

https://truckmanualshub.com/

Leveling The Vehicle

When placing a load while on a slope, use the frame sway control. Keep the vehicle level. The operator should observe the frame level indicator (5) to assure that the vehicle is level at all times. The frame sway is capable of tilting the vehicle 12 in either direction.

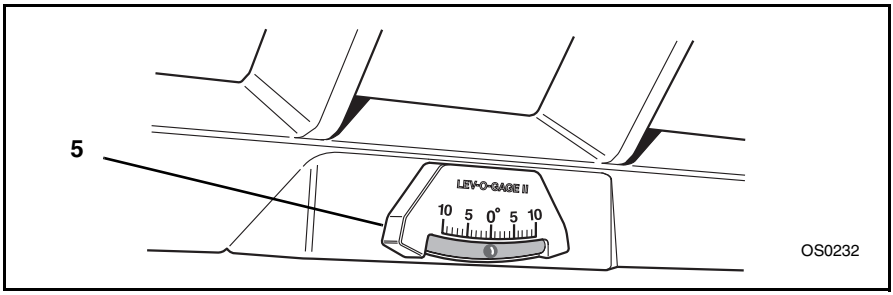

DANGER: Use of the frame sway control with the boom raised above horizontal can cause tipover resulting in death or serious personal injury. Always use the frame sway control to level the vehicle before raising the boom above horizontal. If the vehicle cannot be leveled using the frame sway control, reposition the vehicle.

Frame Level Indicator

The frame level indicator (5) is mounted on the top inside of the cab. It is a bubble type indicator which allows the operator to tell if the vehicle has been positioned in a level condition. Always frame sway the vehicle either right or left until the indicator reads zero degrees (0). If zero cannot be achieved, then reposition the vehicle until it is level before placing the load.

Courtesy of Crane.Market

https://truckmanualshub.com/

Auxiliary Hydraulic Control

The auxiliary hydraulic control is used to control the functions of an optional attachment that is mounted to the vehicle and requires a hydraulic supply for operation. Some of the optional attachments that require auxiliary hydraulics are: Side Tilt Carriage, Swing Carriage, 3 ft Truss Boom w/Winch, 10 ft Truss Boom w/Winch, Single Fork Positioning Carriage, Dual Fork Positioning Carriage and Auger.

The button (1) to activate the auxiliary hydraulics is located on the top of the front joystick (2). Pressing the button with your thumb activates the auxiliary hydraulic function. The button must be held down while moving the joystick to the right or left.

IMPORTANT! *Releasing the button while moving the joystick to the left or right will change the function of the joystick back to the transfer carriage extend/retract mode of operation.*

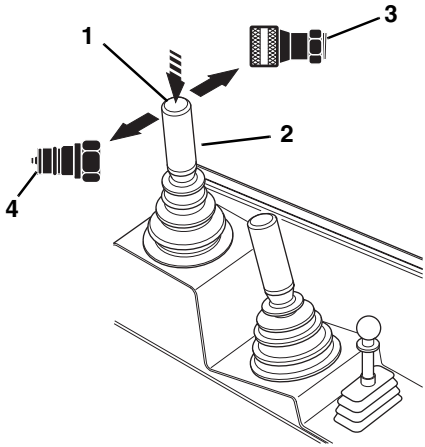

Courtesy of Crane.Market

https://truckmanualshub.com/

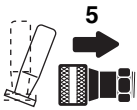

While holding the button down and moving the joystick to the right (3) will provide hydraulic system pressure through the female disconnect coupling for the auxiliary attachment. Hydraulic fluid will return to the tank through the male disconnect coupling.

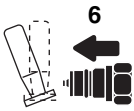

OU0090

While holding the button down and moving the joystick to the left (4) will provide hydraulic system pressure through the male disconnect coupling for the auxiliary attachment. Hydraulic fluid will return to the tank through the female disconnect coupling.

The joystick will provide the following typical functions for each specific attachment if they are connected properly. Operation will be reversed if incorrectly connected. We recommend reversing the disconnect couplings on the hoses that are supplied with the attachment if operation is reversed.

Side Tilt Carriage Operation:

- Control Lever Right (5).....Tilt Right
- Control Lever Left (6) .....Tilt Left

Swing Carriage Operation:

- Control Lever Right (5).....Swing Right
- Control Lever Left (6) .....Swing Left

Auger Operation:

- Control Lever Right (5).....Auger Dig
- Control Lever Left (6) .....Auger Retract

10 Ft. Truss Boom w/Winch or 3 Ft. Truss Boom w/Winch Operation:

- Control Lever Right (5).....Cable Extends
- Control Lever Left (6) .....Cable Retracts

Single Fork Positioning Carriage Operation:

- Control Lever Right (5).....Right Fork Moves to the Right
- Control Lever Left (6) .....Right Fork Moves to the Left

Dual Fork Positioning Carriage Operation:

- Control Lever Right (5).....Both Forks Move Apart (toward outside)
- Control Lever Left (6) .....Both Forks Move Together (toward center)

Courtesy of Crane.Market

https://truckmanualshub.com/

Joystick Operation (Single Joystick Option)

The single joystick option is an assembly containing a single joystick (1) to control boom functions, auxiliary hydraulics, attachment tilt and the PlaceAceô transfer carriage operation. The frame sway is controlled by a separate frame sway joystick (2) which is located behind the single joystick assembly.

The joystick can be operated in two separate modes of operation: without button (3) depressed ìBoom Lift/Lower and Extend/Retractî (Default Mode) and with button (3) depressed and held ìTransfer Carriage Extend/Retract and Auxiliary Hydraulic Male Pressurized/Female Pressurizedî (Secondary Mode). The joystick also has a thumb control (4), on the topside of the joystick, for attachment tilt control which operates in either mode.

IMPORTANT! *The button (3) must be held against the joystick handle during operation of the Secondary Mode. Releasing the button (3) from the Secondary Mode will immediately change the joystick back to the Default Mode of operation.*

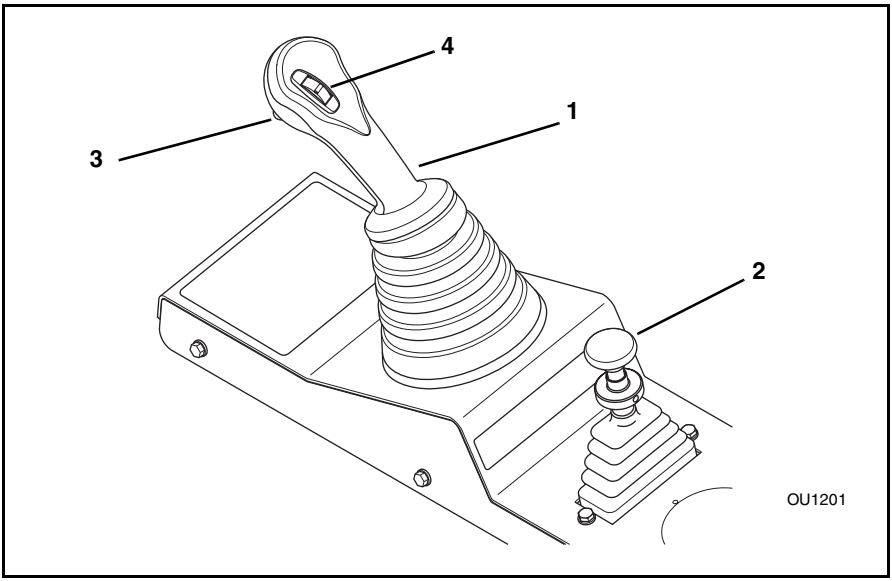

Courtesy of Crane.Market

https://truckmanualshub.com/

Boom Lift/Lower and Extend/Retract (Default Mode)

Front button (3), not depressed, operates the following boom functions. The joystick can be moved from the center position into any of these quadrants. The joystick will return to the center position when released.

Boom Lift (5) ..... move handle backward

Boom Lower (6) ..... move handle forward

Boom Extend (7) ..... move handle to the right

Boom Retract (8) ..... move handle to the left

OU0060

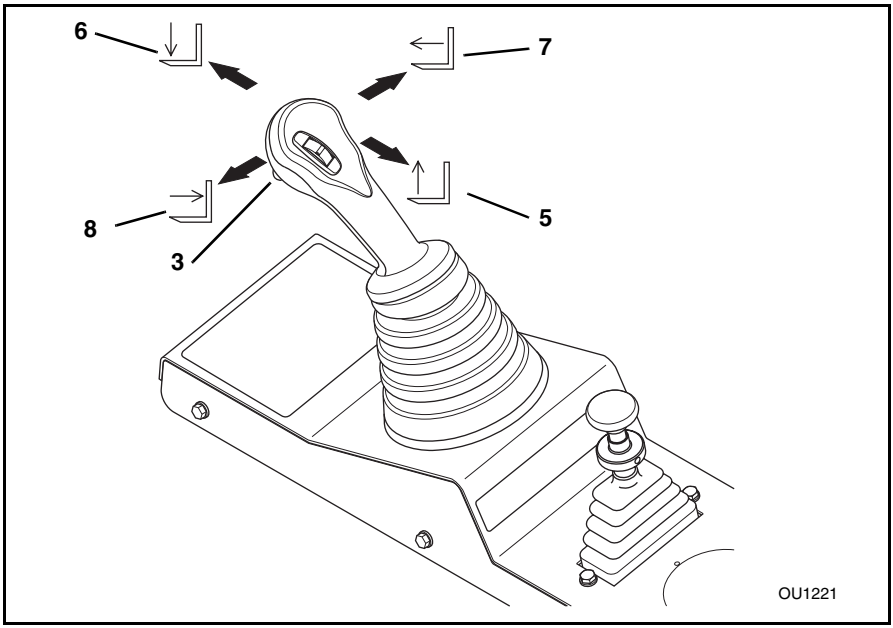

Courtesy of Crane.Market

https://truckmanualshub.com/

Transfer Carriage Extend/Retract and Auxiliary Hydraulic Male Pressurized/ Female Pressurized (Secondary Mode)

Front button (1) depressed and held against the joystick handle operates the following transfer carriage and auxiliary hydraulic functions. The joystick can be moved from the center position into any of these quadrants. The joystick will return to the center position when released.

Transfer Carriage Extend (2)..... move handle forward

Transfer Carriage Retract (3) ..... move handle backward

Auxiliary Hydraulic - Female Pressurized (4)... move handle to the right

OU1230

Auxiliary Hydraulic - Male Pressurized (5)..... move handle to the left

The auxiliary hydraulic control is used to control the functions of an optional attachment that is mounted to the vehicle and requires a hydraulic supply for operation. Some of the optional attachments that require auxiliary hydraulics are: Side Tilt Carriage, Swing Carriage, 3 ft Truss Boom w/Winch, 10 ft Truss Boom w/Winch, Single Fork Positioning Carriage, Dual Fork Positioning Carriage and Auger.

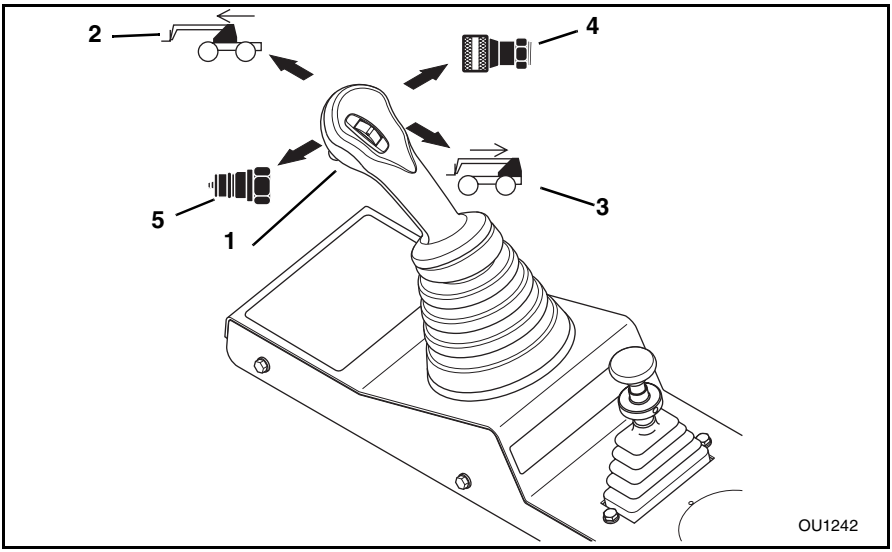

Courtesy of Crane.Market

https://truckmanualshub.com/

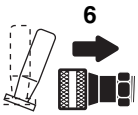

While holding the button in and moving the joystick to the right (4) will provide hydraulic system pressure through the female disconnect coupling for the auxiliary attachment. Hydraulic fluid will return to the tank through the male disconnect coupling.

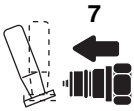

OU0090

While holding the button in and moving the joystick to the left (5) will provide hydraulic system pressure through the male disconnect coupling for the auxiliary attachment. Hydraulic fluid will return to the tank through the female disconnect coupling.

The joystick will provide the following typical functions for each specific attachment if they are connected properly. Operation will be reversed if incorrectly connected. We recommend reversing the disconnect couplings on the hoses that are supplied with the attachment if operation is reversed.

Side Tilt Carriage Operation:

- Control Lever Right (6).....Tilt Right
- Control Lever Left (7) .....Tilt Left

Swing Carriage Operation:

- Control Lever Right (6).....Swing Right
- Control Lever Left (7) .....Swing Left

Auger Operation:

- Control Lever Right (6).....Auger Dig
- Control Lever Left (7) .....Auger Retract

10 Ft. Truss Boom w/Winch or 3 Ft. Truss Boom w/Winch Operation:

- Control Lever Right (6).....Cable Extends
- Control Lever Left (7) .....Cable Retracts

Single Fork Positioning Carriage Operation:

- Control Lever Right (6).....Right Fork Moves to the Right
- Control Lever Left (7) .....Right Fork Moves to the Left

Dual Fork Positioning Carriage Operation:

- Control Lever Right (6).....Both Forks Move Apart (toward outside)
- Control Lever Left (7) .....Both Forks Move Together (toward center)

Courtesy of Crane.Market

https://truckmanualshub.com/

Attachment Tilt (Thumb Control) Operates in Default Mode or Secondary Mode

The thumb control (1), on the topside of the joystick, controls the attachment tilt function and is not affected by the button (2) on the front of the joystick. With your thumb, move the thumb control BACKWARD for attachment tilt UP (3). Move the thumb control FORWARD for attachment tilt DOWN (4). The thumb control will return to the center position when released.

Attachment Tilt UP (3) .....move thumb control BACKWARD

Attachment Tilt DOWN (4) .....move thumb control FORWARD.

OU1210

Frame Sway Joystick

The frame sway joystick (5) is equipped with a lock ring (6) to prevent unintentional operation of the frame sway control.

Lift up and hold the lock ring while moving the handle to the left or right. When frame sway is complete, center the handle and lower the lock ring to lock the handle in the center position.

Frame Sway Right (7)..... LIFT lock ring and move handle to the RIGHT

Frame Sway Left (8)..... LIFT lock ring and move handle to the LEFT

OU0070

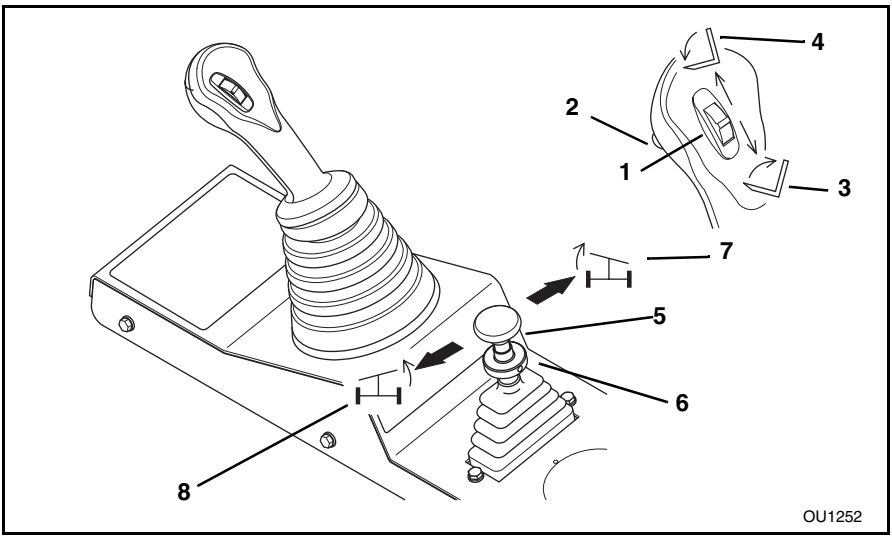

Courtesy of Crane.Market

https://truckmanualshub.com/

Leveling The Vehicle

When placing a load while on a slope, use the frame sway control. Keep the vehicle level. The operator should observe the frame level indicator (9) to assure that the vehicle is level at all times. The frame sway is capable of tilting the vehicle 12 in either direction.

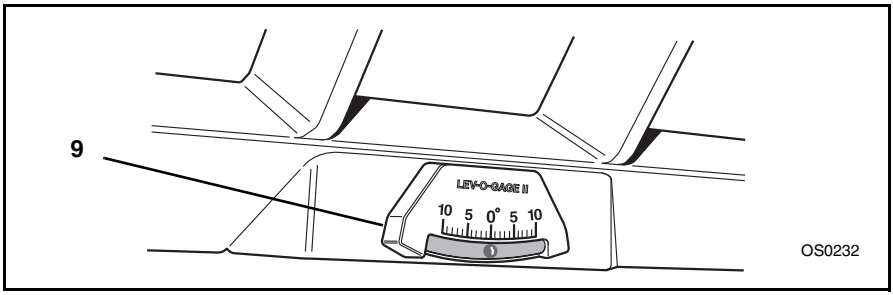

DANGER: Use of the frame sway control with the boom raised above horizontal can cause tipover resulting in death or serious personal injury. Always use the frame sway control to level the vehicle before raising the boom above horizontal. If the vehicle cannot be leveled using the frame sway control, reposition the vehicle.

Frame Level Indicator

The frame level indicator (9) is mounted on the top inside of the cab. It is a bubble type indicator which allows the operator to tell if the vehicle has been positioned in a level condition. Always frame sway the vehicle either right or left until the indicator reads zero degrees (0). If zero cannot be achieved, then reposition the vehicle until it is level before placing the load.

Courtesy of Crane.Market

https://truckmanualshub.com/

Front Dash Panel

The front dash panel (1) provides the operator with important information. It is ìuser friendlyî and only provides the operator with the information needed at any given time.

Front Dash Panel Light Test

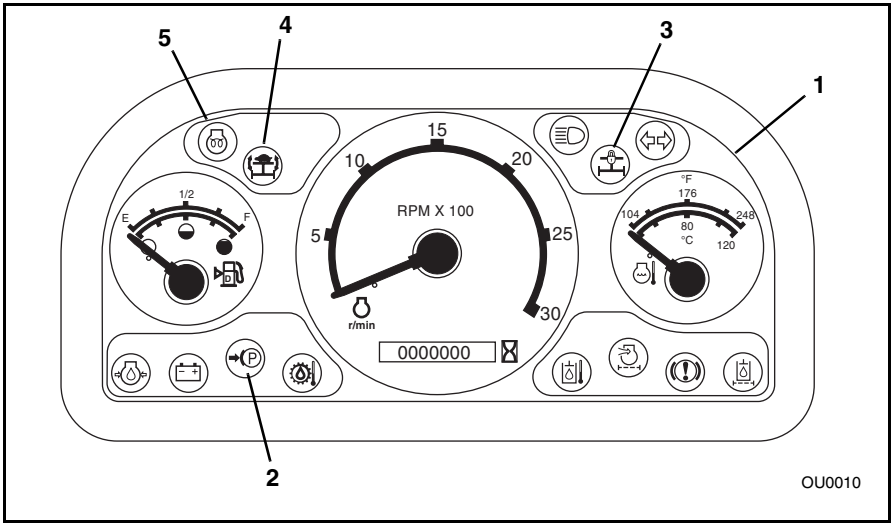

To test the front dash panel lights; turn the ignition switch to the RUN position, ALL the lights (13 total) will come ON for three seconds as a test function. During this time an audible alarm will sound. Replace any bulbs that DO NOT come ON during this test.

Do not forget to refasten your seat belt before operation. Always wear the seat belt when operating the vehicle.

Courtesy of Crane.Market

https://truckmanualshub.com/

Function Indicator Lights

There are four ìhiddenî function indicator lights in the front dash panel that illuminate only when a specific function has been activated. They are:

Parking Brake Indicator (2)

This light illuminates any time the parking brake is applied and the ignition switch is in the RUN position.

OH2260

Stabil-TRAK Mode Indicator Lights (3 & 4)

One of these lights will illuminate when the Stabil-TRAK system has been ACTIVATED in the ìLockedî Mode (3) or the ìSlow Pivotî Mode (4). Refer to ìUnderstanding the Stabil-TRAKô Systemî on page 74 for a detailed explanation.

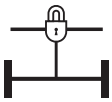

OS1970

OU0050

Engine Air-Intake Heater Indicator (5)

This light illuminates with the ignition switch in the RUN position any time the ambient temperature drops below 40 F (4 C). The engine grid heater then becomes active and the engine should not be cranked until the light goes OFF. Once the light goes OFF it indicates that the grid heater is at the proper temperature and the engine is ready to start.

OU0040

NOTE: *This indicator light may come ON when the engine is running to indicate that the post heat function is active. This is a normal condition when ambient temperatures are below 40 F (4 C).*

Courtesy of Crane.Market

https://truckmanualshub.com/

Warning Indicator Lights

There are seven additional ìhiddenî indicator lights in the front dash panel that will illuminate during critical circumstances. All seven warning indicator lights demand immediate attention and vehicle servicing. In many cases, the vehicle should be shut down AS SOON AS PRACTICAL to prevent serious mechanical failure.

The warning indicator lights are:

Transmission Temperature Warning Indicator (1)

OT0990

This light illuminates when the transmission oil temperature is too high; above 250 F (121 C). An audible alarm will also sound. Stop and idle the vehicle with the transmission in (N) Neutral, allowing time for cooling. If the light does not go out after two minutes, shut the vehicle down.

Hydraulic Oil Temperature Warning Indicator (2)

OT1000

This light illuminates when the hydraulic oil temperature is too high; above 195 F (91 C). Stop and idle the engine, allow time for cooling. If the light does not go out after five minutes, shut the vehicle down.

Engine Oil Pressure Warning Indicator (3)

OT1010

This indicator light will come ON if the engine is not started. This is normal. If the light comes ON while the engine is running, this indicates that the engine oil pressure is too low. When the engine is running an audible alarm will also sound when the low oil pressure light is ON.
SHUT THE VEHICLE DOWN AS SOON AS PRACTICAL.

Courtesy of Crane.Market

https://truckmanualshub.com/

Alternator Charging Warning Indicator (4)

This light illuminates to indicate a weak or improperly working charging system or the batteries are dead. Service the engine alternator or batteries.

OH2560

Engine Air Filter Restriction Warning Indicator (5)

This light illuminates when a restricted engine air filter is detected. If the light is ON, service the air filter(s).

OT1020

Hydraulic Oil Filter Restriction Warning Indicator (6)

This light illuminates when a restricted hydraulic oil filter is detected. If the light is ON, service the hydraulic oil filter.

OT1030

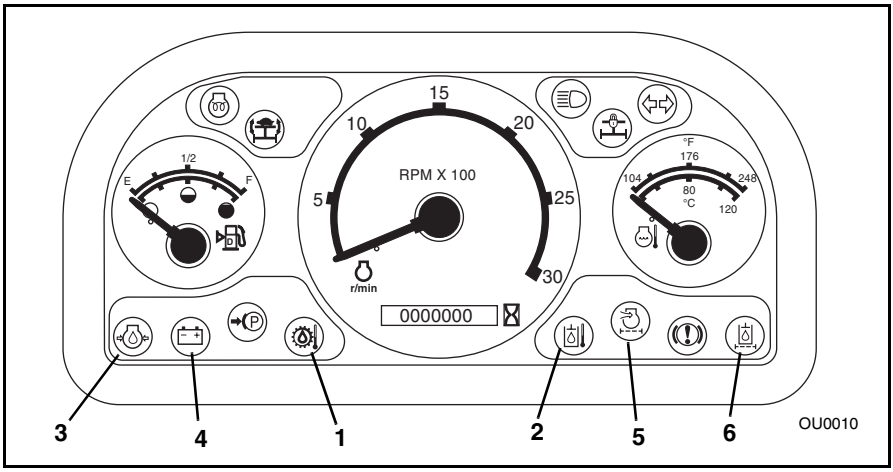

Courtesy of Crane.Market

https://truckmanualshub.com/

Low Brake Pressure Warning Indicator (1)

OM1600

This light is located on the lower right side of the front dash panel.

The light will come ON and the buzzer sounds when service brake hydraulic system pressure drops below the safe operating level. Under normal conditions, the light and buzzer will go out quickly after engine start. If the light or buzzer does not go out or comes ON during vehicle operation, shut off engine immediately, investigate, and repair before operating. **DO NOT** operate vehicle when low brake pressure light or buzzer is on.

WARNING: Operating the vehicle with the service brake system malfunctioning will cause reduced braking ability or no braking ability when the service brake pedal is depressed. Death or serious personal injury could result from the inability to stop or slow the vehicle.

If the low brake pressure light or buzzer remains ON, place the travel select lever in the (N) NEUTRAL DETENT position, engage the parking brake switch and turn the engine OFF.

Have the service brake system serviced before using the vehicle again. Contact your local **Lull** Distributor immediately to repair the system.

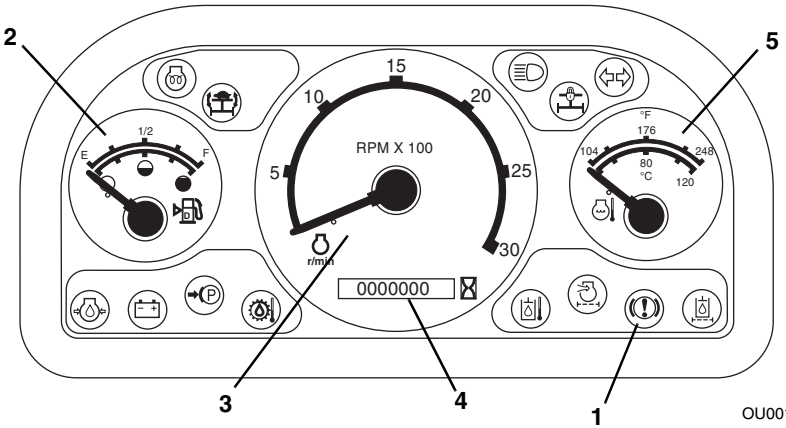

OU0010

Courtesy of Crane.Market

https://truckmanualshub.com/

Gauges and Indicators

Fuel Level Gauge (2)

OH24701

Make sure the vehicle is level to ensure an accurate fuel level reading. The fuel gauge located on the left side of the front dash panel, indicates the amount of fuel in the fuel tank. Refuel before the fuel gauge reaches the ìEî to prevent running out of fuel. Capacity of the fuel tank is 50.2 gallons (190 liters) total capacity with a usable capacity of 45 gallons (171 liters). If the engine ever runs out of fuel, the fuel system will need to be bled. Refer to ìBleeding Fuel Systemî page 121.

Engine Tachometer (3)

OU0020

The tachometer is the gauge in the center of the front dash panel and indicates speed of the engine in revolutions per minute (rpm).

Hourmeter (4)

OU0030

The hourmeter records engine operating hours and has a total readout of 99,999.99 hours. It is located on the front dash panel in the lower portion of the tachometer.

Engine Coolant Temperature Gauge (5)

OT0980

The engine coolant temperature gauge is located on the right side of the front dash panel. Glance at the gauge on a regular basis during operation. The gauge monitors the temperature at which the engine is operating. If the gauge goes over 210 F (99 C) the engine coolant is too hot. Idle the engine for 1 minute prior to shutting the vehicle down. If the radiator is boiling over, SHUT THE VEHICLE DOWN AS SOON AS PRACTICAL.

Courtesy of Crane.Market

https://truckmanualshub.com/

Optional Indicator Lights

There are two additional ìhiddenî indicator lights in the front dash panel that will illuminate only when the vehicle is equipped with the optional road light package.

High Beam Indicator (1)

Whenever the headlights are on ìhighî beam this light will illuminate and remain ON until the headlights are switched to ìlowî beam.

OS1900

Turn Signal Indicator (2)

The turn signal indicator light will illuminate and flash when the turn signals are activated in either direction or when the hazard lights have been activated.

OH2510

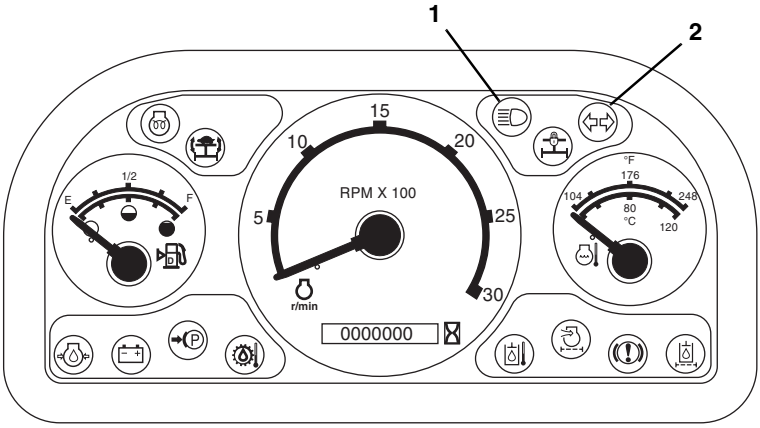

OU0010

Courtesy of Crane.Market

https://truckmanualshub.com/

Optional Features

Worklights (Front, Rear & Boom)

OH2570

The worklights are activated with a single rocker switch (3) located in the upper switch bank on the right side. There are three positions - OFF, Front Worklights and Front and Rear Worklights. The lights only work when the ignition switch is in the RUN position.

- Push the TOP of the rocker switch in to turn all the worklights OFF.

OH2591

- To turn the front worklights ON, position the rocker switch to the CENTER position.

OH2601

- Push the BOTTOM of the rocker switch in to turn all the worklights ON.

OH2611

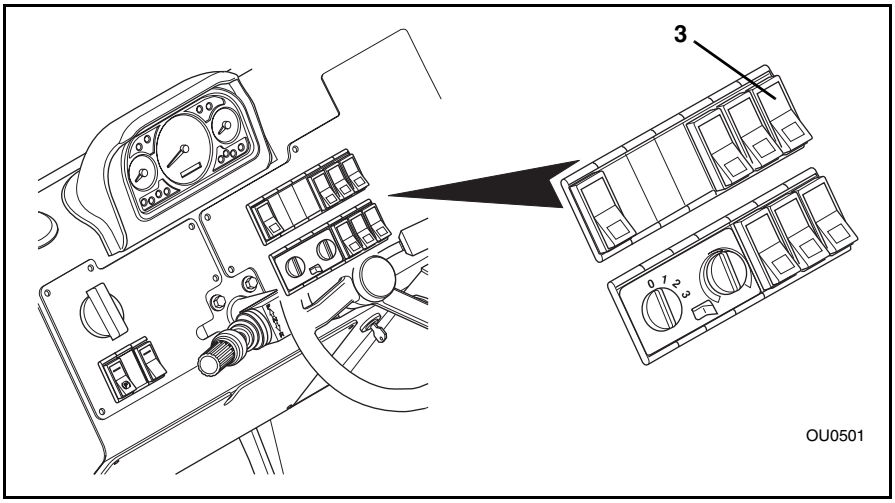

OU0501

Courtesy of Crane.Market

https://truckmanualshub.com/

Parking Lights, Headlights & High/Low Beam Switch

OS1900

These lights will only work when the ignition switch is in the RUN position. Use the turn signal switch (1) to control the high/low beam headlights and to turn ON the parking lights and headlights.

Turn the twist grip end (2) of the turn signal switch counterclockwise to the first position (3) to turn the parking lights ON. Turn the twist grip to the second position (4) to turn the headlights and parking lights ON. Turn the twist grip clockwise to the OFF position (5) to turn all the lights OFF. Pull the turn signal switch toward you to switch from low beam to high beam. When the high beam is ON the high beam indicator light on the front dash panel will illuminate.

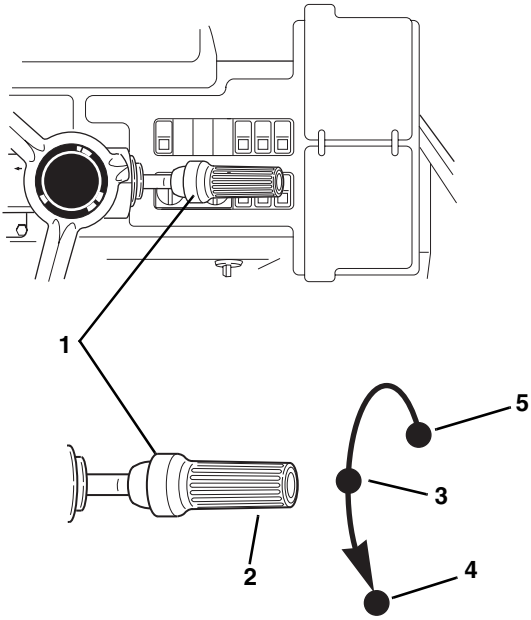

OU0651

Courtesy of Crane.Market

https://truckmanualshub.com/

Directional Signals

OS1910

The directional signals are ACTIVATED from the lever (6) on the right side of the steering wheel and will only work when the ignition switch is in the RUN position.

To activate the left turn signal (7); RAISE the lever. To activate the right turn signal (8); LOWER the lever. To deactivate either directional signal, the lever must be manually returned to the CENTER position. The lever will not cancel automatically after a turn.

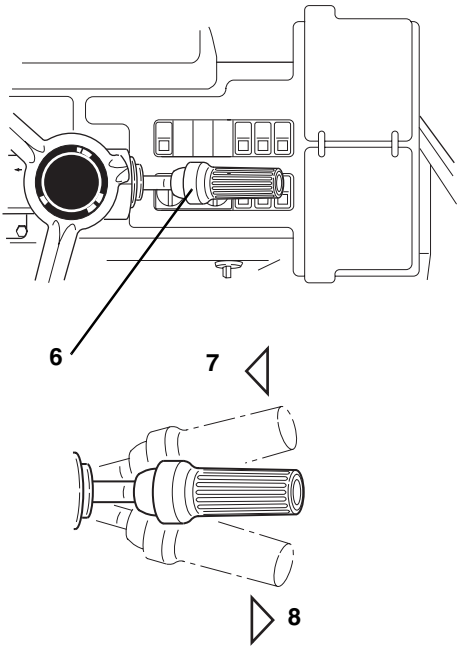

OU0661

Courtesy of Crane.Market

https://truckmanualshub.com/

Emergency Flashers

OS1920

The emergency flashers are activated by a single rocker switch (1) located in the upper bank of switches on the right side of the dash.

- To DEACTIVATE the emergency flashers, push the TOP of the rocker switch IN.

OH2591

- To ACTIVATE the emergency flashers, push the BOTTOM of the rocker switch IN.

OH2611

Beacon Light or Strobe Light

OH2580

The beacon light or strobe light are activated by a single rocker switch (2) located in the upper bank of switches on the right side of the dash. This light will only work when the ignition switch is in the RUN position.

- Push the TOP of the rocker switch in to turn the beacon light or strobe light OFF.

OH2591

- Push the BOTTOM of the rocker switch in to turn the beacon light or strobe light ON.

OH2611

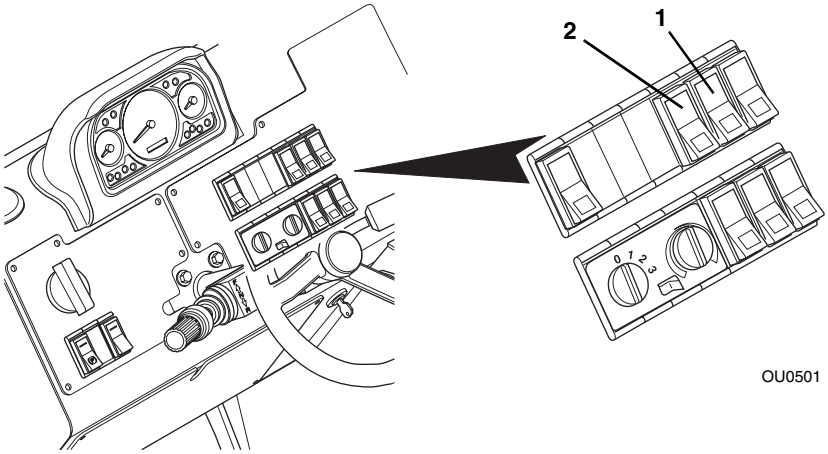

OU0501

Courtesy of Crane.Market

https://truckmanualshub.com/

Door Latches (Closed Cab Only)

There are two door latches for the lower door. The outside latch (3) is a key lockable pull-to-release type. The inside latch (4) is a pull-to-release latch.

Door Window Latch (Closed Cab Only)

The door window (5) can be swung open by releasing the window from inside the cab. Release the window from the door with the window latch handle (6). Pivot the handle out of the way and swing the window open. Swing the window all the way open and lock in place on the outside of the cab. The window can be released from inside the cab using the window release located on the inside of the cab or from the outside, using the outside release (7) located on the cab door window. The inside and outside latches are both turn to release locks.

	CAUTION: **DO NOT** operate the vehicle with the door window swinging free. Damage to the door window could result if door window is not secured in the OPEN or CLOSED position.

The door window must be latched in the OPEN position or the CLOSED position during operation of the vehicle.

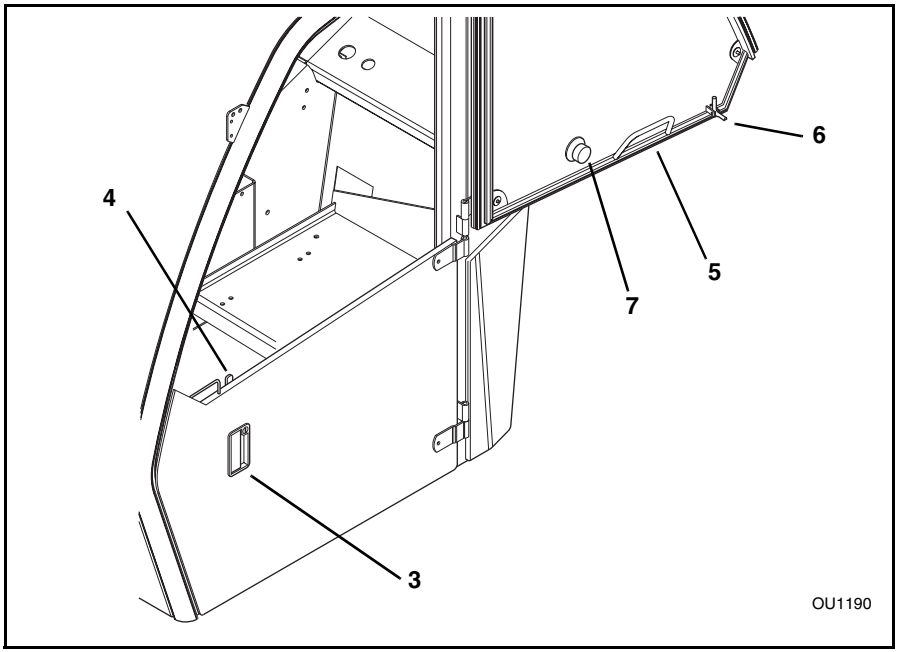

Courtesy of Crane.Market

https://truckmanualshub.com/

Rear Window Latch (Closed Cab Only)

The rear window (1) can be partially opened and secured in place with the rear window latch. To open the window, grab the latch handle (2), PULL UP and then push the window OUTWARD. To close and secure the window, pull the latch handle UP and then INWARD.

NOTE: *In an emergency situation, the operator can exit through the rear window opening by removing the latch pin (3) on the window latch. The window is then free to swing open.*

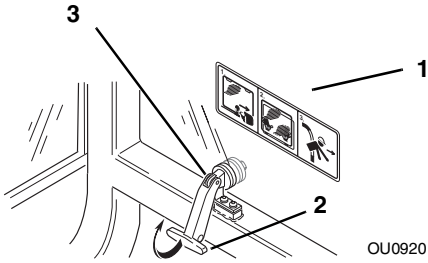

Front Windshield (Closed Cab Only)

Windshield Removal

1. The front windshield (4) can be removed from the cab to provide additional ventilation.
2. Remove the windshield wiper arm assembly (5) from the wiper shaft. Reinstall the two nuts (6) onto the shafts to protect the threads of each shaft. Store the wiper arm assembly in a safe place.
3. To remove the windshield, remove the five capscrews (7) holding the lower retainer plate (8) to the cab. Remove the retainer plate.
4. Carefully push the bottom of the windshield out. Pull the top of the windshield out from under the top retainer (9). Store the windshield in a safe place.

Courtesy of Crane.Market

https://truckmanualshub.com/

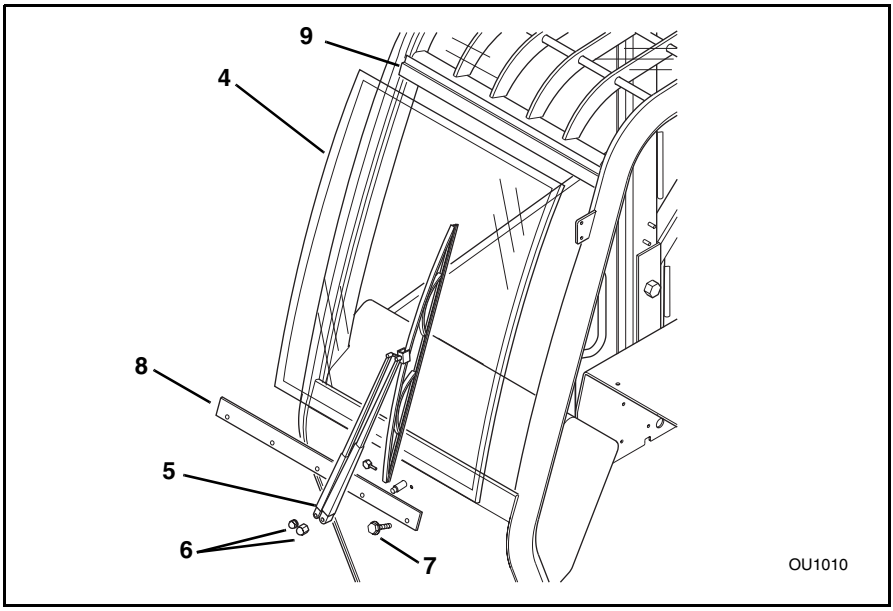

Windshield Installation

IMPORTANT! *Be sure the windshield retainer plate is secured in place after installing the windshield back into the cab. Never operate the vehicle with the windshield in place and the retainer plate missing.*

1. With the seal bulb on the windshield toward the cab, place the top of the windshield under the upper retainer (9). Push the windshield up as far as possible.
2. Place the bottom of the windshield (4) into the windshield opening in the cab. Secure the windshield in place with the lower retainer plate (8) and the five capscrews (7). Tighten all five capscrews securely to hold the windshield in place.
3. Remove the two nuts (6) from the wiper arm shafts. Reassemble the wiper arm assembly (5) to the shafts and secure in place with the two nuts. Reconnect the washer hose to the hose barb.

Courtesy of Crane.Market

https://truckmanualshub.com/

Front Windshield Wiper (Closed Cab Only)

OS19301

This three position rocker switch (1) is located in the lower bank of switches on the right side of the dash. This single rocker switch controls the speed of the front windshield wiper.

- Push the TOP of the rocker switch in to turn the front wiper OFF.

OH2591

- Place the rocker switch in the MIDDLE position to operate the wiper at LOW speed.

OH2601

- Push the BOTTOM of the rocker switch in to operate the wiper at HIGH speed.

OH2611

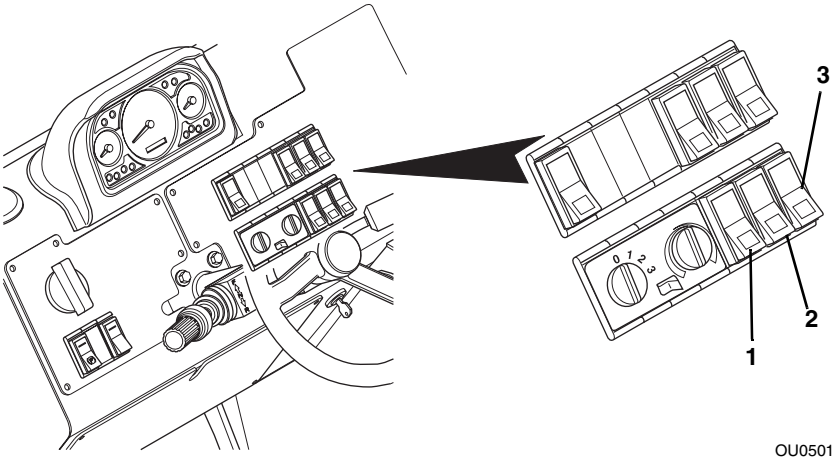

OU0501

Courtesy of Crane.Market

https://truckmanualshub.com/

Windshield Washer Control (Closed Cab Only)

OS19401

This rocker switch (2) is spring loaded to return to the OFF position when released. The switch is located in the lower bank of switches on the right side of the dash.

- Release the switch to deactivate the washer control.

OH2591

- Press and hold the BOTTOM of the rocker switch in to activate the windshield washer. The rocker switch is spring loaded and will return to the OFF position when released.

OH2611

Skylight Wiper/Washer & Rear Window Washer (Closed Cab Only)

OS2100

OM1520

The skylight (roof) wiper/washer rocker switch and rear window washer switch (3) is located in the lower bank of switches on the right side of the dash. This single rocker switch controls the skylight (roof) wiper, skylight (roof) washer along with the rear window washer. When the skylight (roof) washer is activated the rear window washer is also activated.

- Push the TOP of the rocker switch in to turn the skylight (roof) wiper OFF.

OH2591

- Place the rocker switch in the MIDDLE position to turn the skylight (roof) wiper ON. This wiper is a single speed wiper.

OH2601

- Press and hold the BOTTOM of the rocker switch to activate the skylight (roof) and rear window washers. The rocker switch is spring loaded and will return to the skylight (roof) wiper ON position when the washer position is released.

OH2611

Courtesy of Crane.Market

https://truckmanualshub.com/

Rear Window Wiper (Closed Cab Only)

OM1530

The rear window wiper rocker switch (1) is located on the motor housing of the rear wiper.

The switch has two positions: wiper ON (2) and wiper OFF (3).

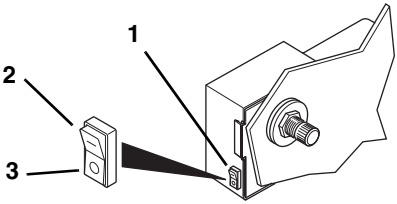

OU0170

Cab Heater/Air Conditioning Controls (Closed Cab Only)

OS1950

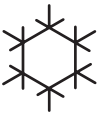

OS1960

The cab heater and air conditioning controls (4) are located in the lower bank of switches on the right side of the dash. From left to right the control panel consists of: a variable speed fan control (5), an A/C on-off switch (6) and a temperature control (7).

Control of air flow is made by opening, closing or redirecting the air vent louvers in seperate locations inside the cab. For instance, if the front glass needs rapid defrosting, redirect the air flow at the front vents (directing the vent louvers toward the glass) and close the remaining vents. This will increase the volume of air flow to the front glass and speed defrosting.

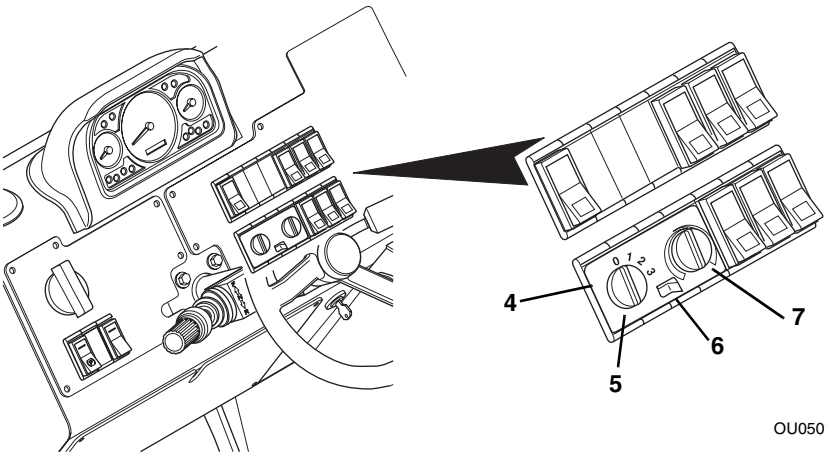

OU0501

Courtesy of Crane.Market

https://truckmanualshub.com/

To heat the cab:

OS1950

- turn A/C switch (6) to the OFF position,
- turn temperature control knob (7) to far right position (RED = HOT),
- direct desired air flow by adjusting vent louvers,
- turn fan control (5) to position ì3î (8) to assure rapid warm-up.

To defrost the cab:

OA1390

- turn temperature control knob (7) to the far right position (RED = HOT),
- direct desired air flow by adjusting vent louvers,
- turn fan control (5) to position ì3î (8) to assure rapid defrost.

To cool the cab:

OS1960

- turn A/C switch (6) to the ON position,
- turn temperature control knob (7) to the far left position (BLUE = COOL),
- direct desired air flow by adjusting vent louvers,
- turn fan control (5) to position ì3î (8) to assure rapid cool-down.

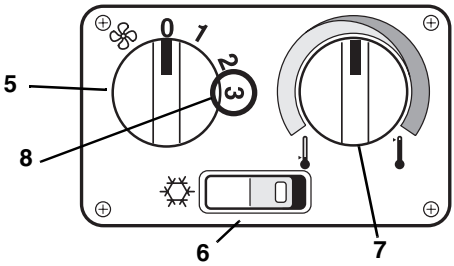

OU0930

Courtesy of Crane.Market

https://truckmanualshub.com/

Carriages

Quick Attach

This vehicle is equipped with a quick attach system for easy attachment changing.

Attachment Removal

Be sure you are performing this procedure on level ground.

1. Come to a complete stop, place the travel select lever in the (N) NEUTRAL DETENT position and engage the parking brake switch.
2. Extend the boom approximately 10 feet (3 meters) and tilt the carriage backward.
3. Exit the vehicle using both hand holds.
4. Raise the quick attach pin lock lever (1) and pull out the pin (2) at the bottom of the quick attach link (3).

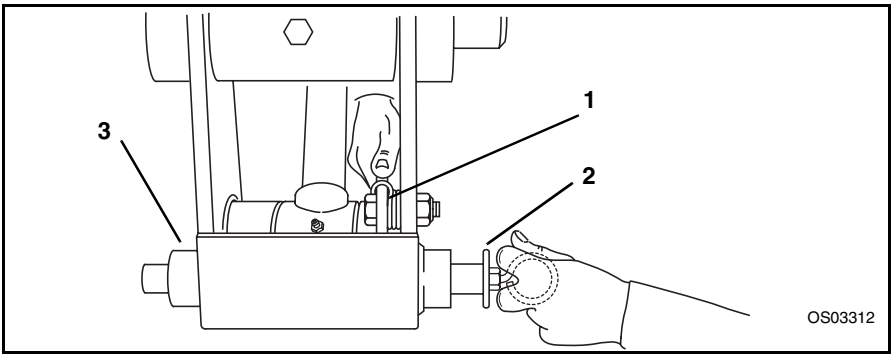

5. Return to the operators compartment, fasten the seat belt and lower the attachment to the ground in a level position. Tilt the attachment forward. This will rotate the quick attach link back away from the attachment.
6. Lower and then retract the boom until the ends of the attachment pivot pin has disconnected from the attachment.

Courtesy of Crane.Market

https://truckmanualshub.com/

Attachment Reconnect

Be sure you are performing this procedure on level ground.

1. Position the vehicle directly behind the attachment to be mounted.
2. Tilt the quick attach backward.
3. Extend the boom approximately 10 feet (3 meters) and drive the vehicle forward until the attachment pivot pins are below and between the two hooks on the attachment.
4. Raise the boom until the attachment pivot pins have seated fully in the hooks of the attachment.
5. Tilt the attachment up slightly. The quick attach link should be tight against the rear of the attachment and the holes in the link and the attachment should be aligned.
6. Place the travel select lever in the (N) NEUTRAL DETENT position, engage the parking brake switch and exit the vehicle using both hand holds.
7. Lift the quick attach lock lever (1). Insert the quick attach pin (2) completely through the attachment and the quick attach link. Be sure the quick attach lock lever has lowered and seated itself into the groove in the quick attach pin.

WARNING: **DO NOT** operate this vehicle unless you are in the seat with the seat belt fastened around you. Death or serious personal injury could result if the belt is not securely fastened.

8. Return to the cab, fasten the seat belt and resume operation.

Courtesy of Crane.Market

https://truckmanualshub.com/

Indicators

Boom Angle Indicator

The boom angle indicator (1) is a bubble type indicator with angular graduations (2) from -20 to +80 . It is located on the left side of the outer boom (3) and is visible from the operators position. Use this indicator to determine the boom angle when reading the capacity chart (see ìUsing the Capacity Chartî on page 71).

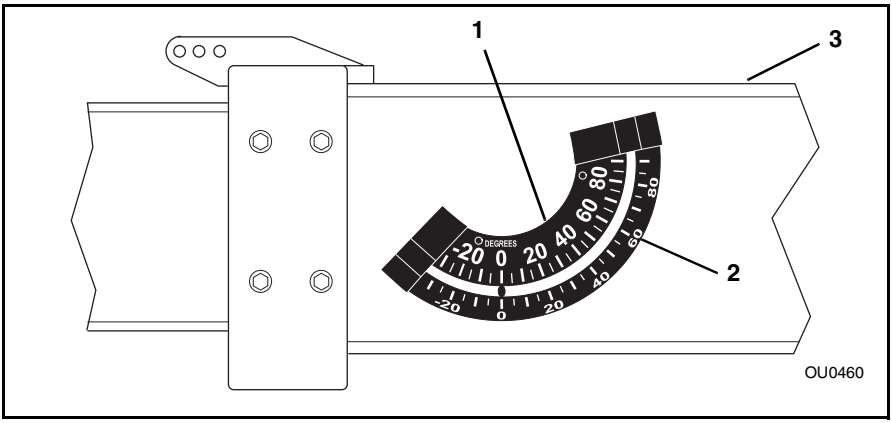

Boom Extension Indicator

The boom extension indicator is a series of letters (4) that become visible as the boom is extended. It is located on the left side of the intermediate boom (5) and is visible from the operators position. Use this indicator to determine the boom extension when reading the capacity chart (see ìUsing the Capacity Chartî on page 71).

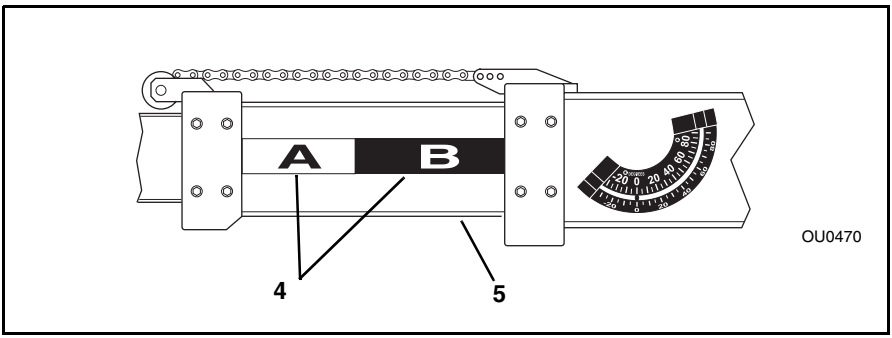

Courtesy of Crane.Market

https://truckmanualshub.com/

Transfer Carriage Extension Indicator

The transfer carriage extension indicator (6) shows the operator the distance the transfer carriage has moved from the fully retracted position. Use this indicator along with the boom extension indicator, boom angle indicator and the load chart booklet supplied with the vehicle to determine safe load placement.

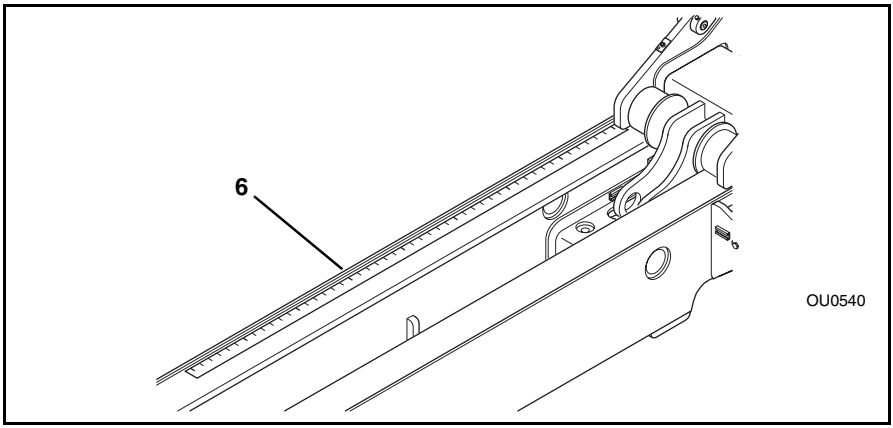

Rear View Mirrors

Three rear view mirrors are provided to aid the operatorís rear visibility. One mirror is mounted on the front left upper corner of the cab (7), one inside the cab (8) and the other mirror is mounted on the front right side of the vehicle (9). All the mirrors are adjustable and need to be adjusted to obtain the best rear view possible for the operator.

NOTE: *To adjust the front mirror (9) on the right side of the frame, the mounting bolt for the mirror must be loosened to permit the mirror head to be adjusted. Tighten the mounting bolt after adjustment is complete.*

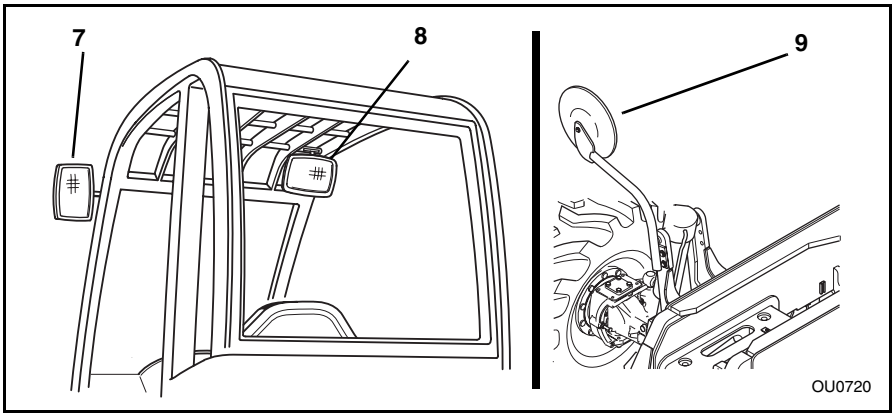

Courtesy of Crane.Market

https://truckmanualshub.com/

Fork Rating

All approved forks for this vehicle are marked with a maximum load capacity rating. This rating is stamped on the left edge of the fork (1) just below the fork pivot shaft (2). The rating is listed in U.S. pounds and based upon a 24" (610 mm) load center (3). This rating specifies the maximum load capacity that the individual fork can safely carry at the maximum load center (4) of 24" (610 mm)

Since forks are always used in multiples, the total rating of any combination of forks will be the sum of their rated capacity. Other than block forks, all forks should be used in matched pairs. Block forks should be used in matched sets.

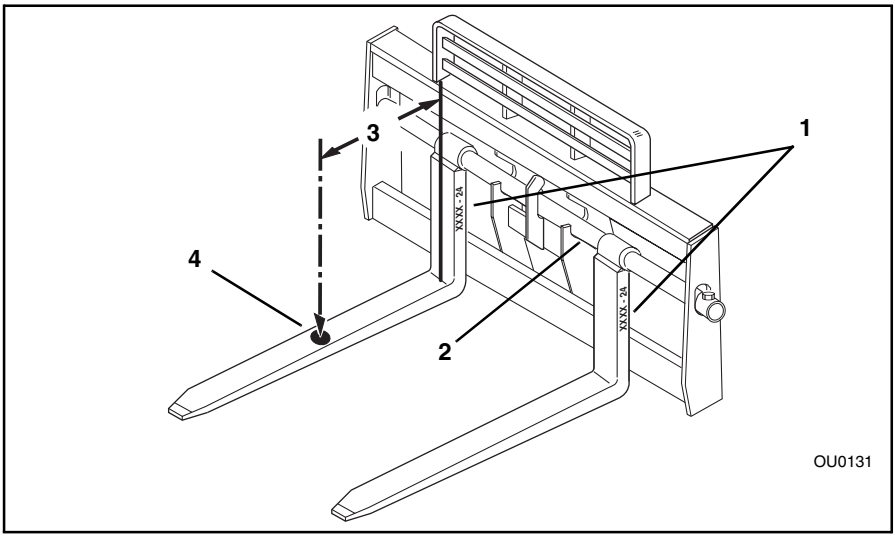

WARNING: **DO NOT** exceed the total rated capacity of the specific pair of forks being used. Forks can break causing loss of load and possible death or serious personal injury to the operator or personnel in the area. If the total rated capacity of the forks exceeds the capacity of the vehicle, the vehicle capacity should not be exceeded.

The maximum load capacity for this vehicle is 9,000 pounds (4.082 Kg). The matched pair or set of forks used on this vehicle should have total load ratings which equal or exceed 9,000 pounds (4.082 Kg). When the load rating of the vehicle differs from the load capacity of the forks, the lower value becomes the overall load capacity.

Courtesy of Crane.Market

https://truckmanualshub.com/

Using the Capacity Chart

The individual capacity charts are located on the dash on the right side of the operatorís compartment. Capacity charts are provided to assist the operator in determining how far in front, how high and at what angle a specific load can be safely handled with this vehicle.

IMPORTANT! *Always determine whether a load chart is required whenever using an attachment with this telescopic material handler. Reproductions of the load charts for all JLG attachments, available as of the date of this publication, are included in the ìLoad Chartî section at the end of this manual. If a load chart for an attachment you would like to use is not included in this manual, contact your* ***Lull*** *Distributor or the JLG Service Department at: (877) 554-5438 or (717) 485-6657 to confirm the attachment you are interested in using may be used and whether a load chart is required.*

The vehicle is equipped with three indicators that will assist the operator in determining how to accurately use the capacity chart. These indicators are:

- boom extend letters (5)
- boom angle indicator (6)
- transfer carriage extension indicator (7)

As the boom is extended, boom extend letters (5) become visible on the left side of the intermediate boom (8). These letters indicate the point (zone) of boom extension and correspond to the capacity chart. For example, when the boom extend ìBî first appears, the boom is at the point of boom extension corresponding to an arc of line ìBî on the capacity chart.

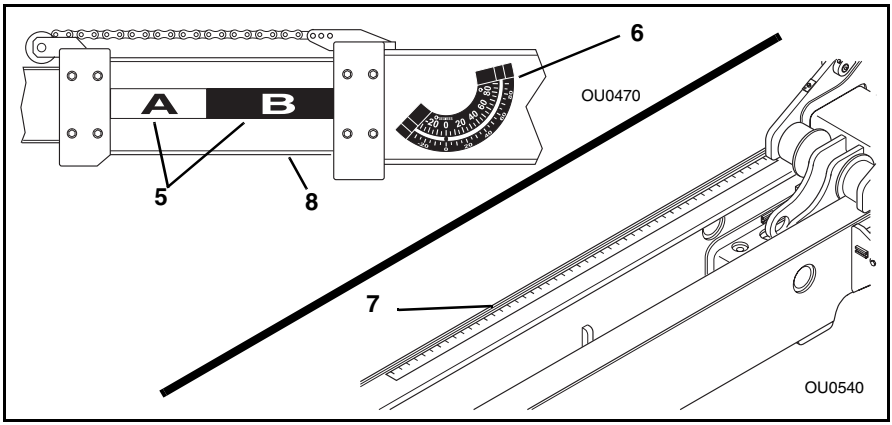

The boom angle indicator (6), located on the left side of the outer boom, indicates the angle of the boom and also corresponds with the angles indicated on the capacity chart.

The transfer carriage extension indicator (7) shows the operator the distance the transfer carriage has moved from the fully retracted position. Use this indicator in conjunction with the boom extend letters and the boom angle indicator to accurately read and use the capacity charts.

Courtesy of Crane.Market

https://truckmanualshub.com/

Operation

To accurately use the capacity chart, the operator must first determine three important things:

1. Weight of the load being lifted.
2. Height of the structure where the load is to be placed.
3. Distance where the load will ultimately be placed in front of the front tires.

Reading Capacity Charts

Example: (1)

1. The operator has placed the load onto the forks, fully retracted the boom, positioned the vehicle perpendicular to the structure and leveled the vehicle.
2. The operator determines that:
   - ï The weight of the load is 7,000 pounds (3.175 kg).
   - ï The height of the structure the load is to be placed upon is 28 feet (8,5 meters) from ground level.
   - ï The distance where the load will ultimately be placed in front of the vehicle is 13 feet (4 meters) from the front of the tires.
   - ï The transfer carriage will remain fully retracted (0").
3. After applying the height of the structure and the distance of load placement away from the vehicle to the sample capacity chart, the operator knows that it will be safe to place the load if the boom extend letter for zone ìEî has not started to show and the boom angle indicator reading does not go below approximately 48 and the transfer carriage will remain fully retracted.

This condition is, however, a maximum limit for this weight, height and distance away from the vehicle. The operator should move the vehicle closer to the structure to assure that the vehicle will not exceed the maximum limits for placing the load.

WARNING: **DO NOT** exceed rated capacities! Any attempt to lift or carry loads in excess of those shown on the capacity chart may cause vehicle tipover, loss of load or structural damage which could result in death or serious personal injury.

IMPORTANT! *When using the PlaceAceô transfer carriage to place a load, be sure to refer to the appropriate load chart that depicts the operation (movement) of the transfer carriage (1" to 80"). This chart applies to any movement of the transfer carriage. The load charts are reproduced at the end of this manual in the ìLoad Chartî section.*

To accurately identify the load charts that apply, refer to the following icons which are also located in the upper right hand corner of each load chart.

- ï Use for any forward movement (1" to 80") of the transfer carriage.
- ï Use for 0" of transfer carriage movement. Fully retracted position only.

OU1080

Courtesy of Crane.Market

https://truckmanualshub.com/

Sample Capacity Chart

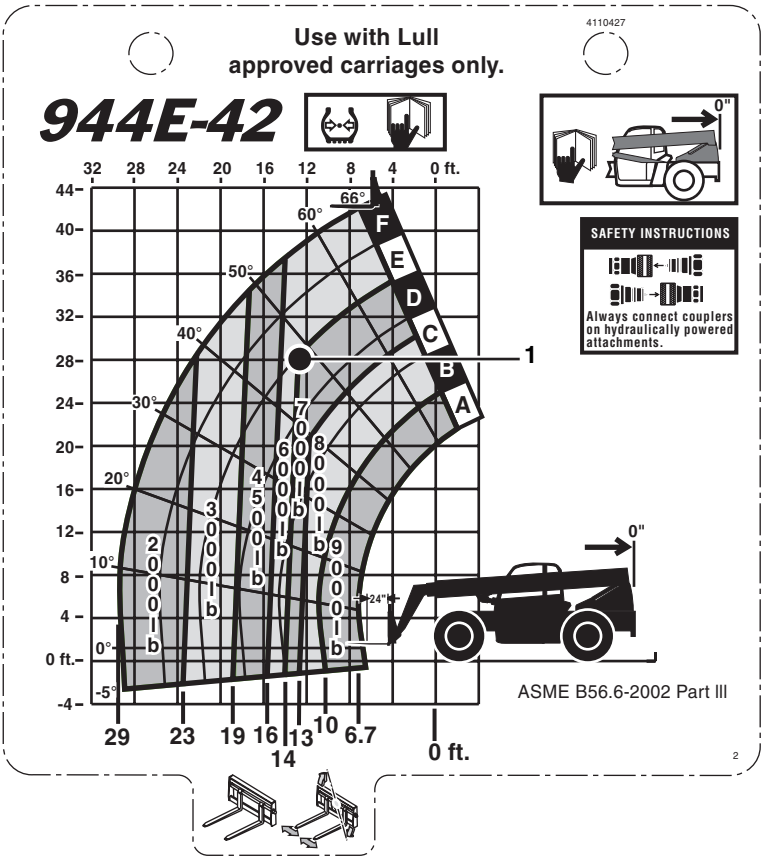

OU1352

Courtesy of Crane.Market

https://truckmanualshub.com/

Stabil-TRAK System

Understanding the Stabil-TRAKô System

OS1970

The following describes the three basic modes of the patented Stabil-TRAK system. The vehicle may operate in any one of these three modes.

Free Pivot Mode

With the boom below 40 (1), the Stabil-TRAK system is in the FREE PIVOT MODE (2) and the rear axle is allowed to pivot freely. The frame sway control will function normally. Both Stabil-TRAK lights on the front dash panel will be OFF (3).

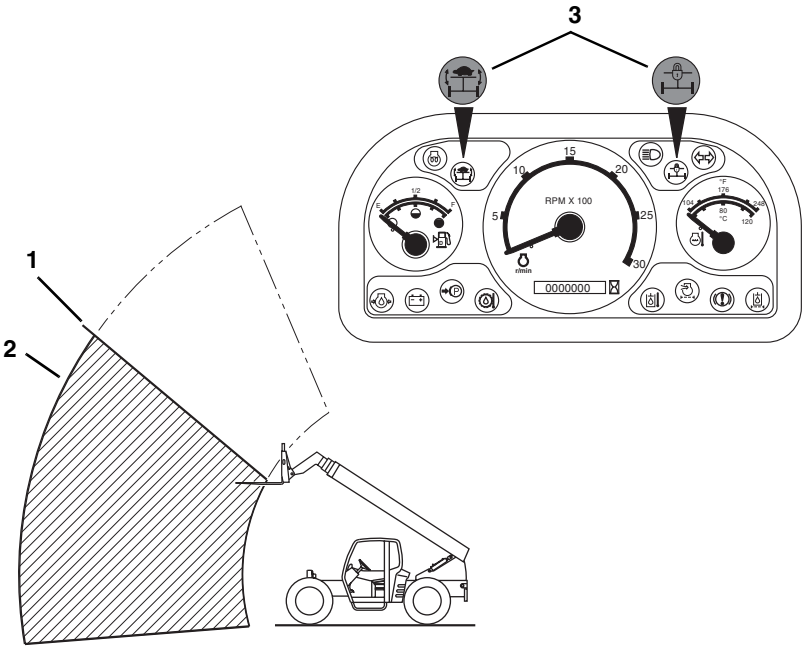

OU0100

Courtesy of Crane.Market

https://truckmanualshub.com/

Locked Mode

With the boom above 40 (4) and by activating one or more of the functions (as follows), the Stabil-TRAK system is in the LOCKED MODE (5). The rear axle is locked so it is rigid with the frame. The Stabil-TRAK lock light on the front dash panel will be ON (6). The Stabil-TRAK slow pivot light on the front dash panel will be OFF (7).

- Engaging the parking brake switch
- Placing the travel select lever in the (N) NEUTRAL DETENT position
- Depressing and holding the service brake pedal

The frame sway control will function slower than normal in this mode.

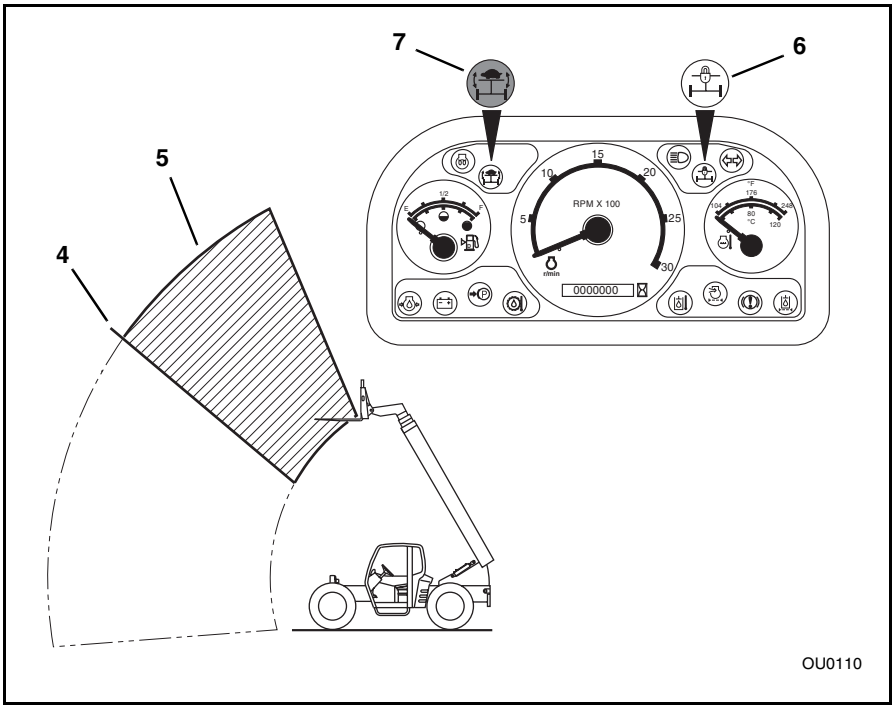

Courtesy of Crane.Market

https://truckmanualshub.com/

Slow Pivot Mode

With the boom above 40 (1), the Stabil-TRAK System is now in the SLOW PIVOT MODE (2) when the service brake pedal is not applied and the transmission is in gear. In this mode the rear axle is UNLOCKED and is allowed to pivot but will respond SLOWLY to changes in terrain. The Stabil-TRAK slow pivot light on the front dash panel will be ON (3). The Stabil-TRAK lock light on the front dash panel will be OFF (4).

The frame sway control will function normally in this mode.

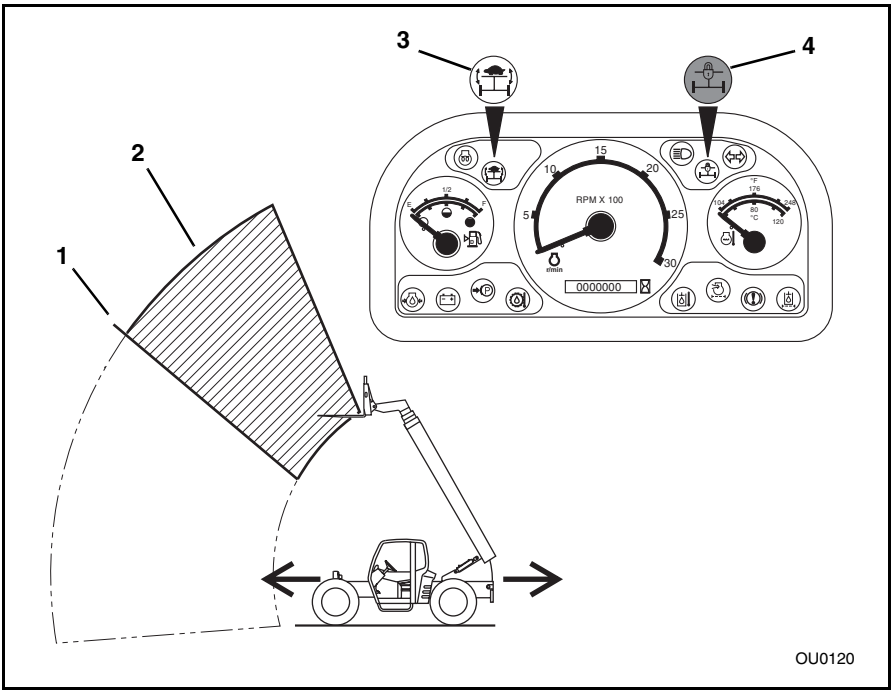

To check that the Stabil-TRAK System is functioning properly, refer to the test procedure on page 77 for the proper system function.

Courtesy of Crane.Market

https://truckmanualshub.com/

Stabil-TRAKô System Test

To test the function of the Stabil-TRAK system, read the Stabil-TRAK System Test Instructions on this page and follow Steps 1 through 9 of the Stabil-TRAK System Test Procedures.

Stabil-TRAKô System Test Instructions

- Test the Stabil-TRAK system with the vehicle on a level surface.
- Remove any attachment from the quick attach before performing the test.
- **DO NOT** extend the boom at any time during the test. Perform the test with the boom fully retracted.
- **DO NOT** transfer the carriage forward any time during the test. Keep the transfer carriage in the fully retracted position.
- **DO NOT** raise the boom above 60 for Steps 3 through 6.
- **DO NOT** raise the boom above 45 for Steps 7 through 9.
- Follow Steps 1 through 9 of the Stabil-TRAK system test procedure exactly as written.

IMPORTANT! *If the Stabil-TRAK lock light goes OFF and the front left tire lowers to the ground at any time during Steps 4 through 7, the test was not performed properly or the Stabil-TRAK system is not functioning properly. Carefully repeat the steps starting with Step 1.*

If the Stabil-TRAK lock light goes OFF and the front left tire lowers to the ground consistently during Steps 4 through 7, the Stabil-TRAK system is not functioning properly and the test should be stopped immediately. Contact your local Lull Distributor immediately to repair the system.

IMPORTANT! *Be sure the transmission disconnect system switch is DEACTIVATED BEFORE the Stabil-TRAK System test is started, and remains deactivated during the entire test.*

NOTE: *The front left tire off of the ground during the test is a visible indication that the stability system is in the locked mode.*

WARNING: **DO NOT** operate this vehicle unless you are in the seat with the seat belt fastened around you. Death or serious personal injury could result if the belt is not securely fastened.

Courtesy of Crane.Market

https://truckmanualshub.com/

Stabil-TRAK System Test Procedures		
FREE PIVOT MODE	**Step 1**	
	a.	Place the vehicle on a level surface with 0 sway.
	b.	Have the boom fully retracted and horizontal.
	c.	Place an 8" (203 mm) wood or cement block in front of the front left tire.
	d.	Enter the vehicle.
	e.	Fasten the seat belt.
	f.	Turn the ignition switch to the RUN position.
	g.	Check to be sure the Stabil-TRAKô lock light and the slow pivot light are both OFF.
	Step 2	
	a.	Turn the ignition switch and start the engine.
	b.	Turn the parking brake switch OFF.
	c.	Move the range select lever to (1) FIRST gear.
	d.	Move the travel select lever to the (F) FORWARD position.
	e.	Drive the vehicle up on the block and stop the vehicle.
	f.	Use the frame sway control to level the vehicle back to 0 .
Service Brake Test	**Step 3**	
	a.	Depress the service brake pedal.
	b.	Move the travel select lever to the (N) NEUTRAL DETENT position.
	c.	Raise the boom to exactly 60 . The Stabil-TRAKô lock light should come ON when the boom angle is at about 40 and remain ON. The Stabil-TRAKô slow pivot light should be OFF.

Courtesy of Crane.Market

https://truckmanualshub.com/

Stabil-TRAK System Test Procedures		
LOCKED MODE	**Step 4**	
Service Brake Test	a.	Use your left foot to depress the service brake pedal.
	b.	Move the travel select lever to the (R) REVERSE position and the range selector to the (2) SECOND gear position.
	c.	Ease your left foot partially off the service brake pedal, just keeping the Stabil-TRAKô lock light ON Approximately 3/4 pedal travel which will be 150 psi (10,3 bar) pressure in the brake valve.
	d.	With your right foot, increase the engine rpm slightly, as necessary, to back the vehicle off the block. The Stabil-TRAKô lock light should remain ON while backing off the block, the front left tire should remain off the ground. If the front left tire drops to the ground, repeat steps 1 thru 4.
	IMPORTANT: *Perform Steps 5 thru 9 with the engine rpm at idle.*	
Neutral Test	**Step 5**	
	a.	Keep the <u>service brake pedal</u> depressed.
	b.	Move the travel select lever to the (N) NEUTRAL DETENT position.
	c.	Take your foot off the service brake pedal. The Stabil-TRAKô lock light should remain ON and the front left tire should remain off the ground.
Park Brake Test	**Step 6**	
	a.	With the <u>travel select lever</u> in the (N) NEUTRAL DETENT position, engage the parking brake switch.
	b.	Move the travel select lever to the (F) FORWARD position. DO NOT depress the service brake pedal. The Stabil-TRAKô lock light should remain ON and the front left tire should remain off the ground.

Courtesy of Crane.Market

https://truckmanualshub.com/

Stabil-TRAK System Test Procedures		
	Step 7	
LOCKED MODE	a.	With the parking brake switch ON, move the travel select lever to the (N) NEUTRAL DETENT position.
	b.	Lower the boom to exactly 45 .
	c.	Frame sway the vehicle no more than 5 to the left.
	d.	Frame sway the vehicle back to 0 .
	e.	Frame sway the vehicle no more than 5 to the right. ***Note:*** *Observe that frame sway will be slower than normal during this test.*
	f.	The Stabil-TRAKô lock light should remain ON and the front left tire should remain off the ground. The front left tire should not raise or lower during frame sway.
	g.	Frame sway back toward 0 , leaving the vehicle swayed to the right approximately 1 to 2 .
	Step 8	
	a.	Depress the service brake pedal fully.
	b.	Disengage the parking brake switch.
	c.	With the range select lever in (1) FIRST gear, move the travel select lever to the (R) REVERSE position.
	d.	Release the service brake pedal to deactivate the Stabil-TRAKô system.
SLOW PIVOT MODE	e.	The Stabil-TRAKô lock light should go OFF and the Stabil-TRAKô slow pivot light should come ON.
	f.	The front left tire should return to the ground while the vehicle travels in reverse.
LOCKED MODE	g.	Depress the service brake pedal to stop the vehicle.

Courtesy of Crane.Market

https://truckmanualshub.com/

Stabil-TRAK System Test Procedures		
	Step 9	
LOCKED MODE	a.	With the service brake pedal depressed and the boom angle at exactly 45 , move the range select lever to (3) THIRD gear.
	b.	Move the travel select lever to (F) FORWARD.
SLOW PIVOT MODE	c.	Release the service brake pedal to deactivate the Stabil-TRAKô system. The Stabil-TRAKô lock light should go OFF and the Stabil-TRAKô slow pivot light should come ON.
	d.	Slowly drive the vehicle forward against the block to stop the vehicle from moving forward.
	e.	With the front left tire against the block, frame sway the vehicle no more than 5 to the left.
	f.	Check that the front left tire remains on the ground. It is normal for the front left tire to raise slightly when swaying to the left, but the tire should immediately lower when the frame sway function is stopped.
	g.	Frame sway the vehicle back to 0 and pause briefly.
	h.	Frame sway the vehicle no more than 5 to the right.
	i.	Check that the front right tire remains on the ground. It is normal for the front right tire to raise slightly when swaying to the right, but the tire should immediately lower when the frame sway function is stopped.
	j.	Frame sway the vehicle back to 0 .
	k.	Depress the service brake pedal.
	l.	Shift the travel select lever to the (N) NEUTRAL DETENT position.
	m.	Lower the boom.

Note: *If Steps 1-9 prove positive, the Stabil-TRAKô system is functioning properly, and the vehicle can be returned to service. If any of these steps indicate that the Stabil-TRAKô system is not functioning properly, contact your local Lull Distributor immediately to repair the system.*

Courtesy of Crane.Market

https://truckmanualshub.com/

This Page Intentionally Left Blank

Courtesy of Crane.Market

https://truckmanualshub.com/

Refueling

Make sure the vehicle is level to assure an accurate fuel level reading. The fuel tank is capable of holding 45 gallons (171 liters) of diesel fuel.

Fuel Types

OS0860

The preferred fuel is ASTM #2 diesel fuel with a minimum Cetane rating of 40. #2 diesel fuel gives the best fuel economy and performance under most operating conditions. Fuels with Cetane ratings higher than 40 may be needed in higher altitudes or extremely low ambient temperatures to prevent misfiring and excessive smoke.

- When operating at temperatures above 32 F (0 C), use standard #2 diesel fuel.
- When operating at temperatures below 32 F (0 C), use a blend of #1 & #2 diesel fuels, most commonly known as winterized #2 diesel.

WARNING: Engine fuel is ***flammable*** and can cause a fire or an explosion. Keep sparks and open flames away from the vehicle and **DO NOT** use smoking materials while refueling.

Courtesy of Crane.Market

https://truckmanualshub.com/

Fuel Cap

The fuel cap (1) is conveniently located on the left side of the vehicle.

The fuel cap meets EPA standards.

To remove the fuel cap:

1. Level the vehicle, ground the attachment, place the travel select lever in the (N) NEUTRAL DETENT position, engage the parking brake switch and turn the ignition switch to the OFF position. Remove the keys from the ignition.

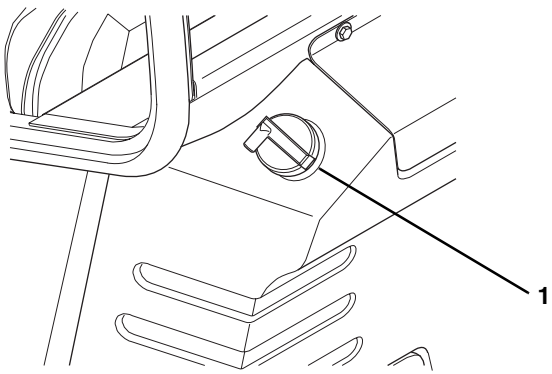

OM1900

WARNING: REMOVE FUEL CAP SLOWLY. Fuel spray may cause personal injury. Fuel can spray out on you if you open the cap too quickly or if you fill the tank too rapidly.

2. **Slowly** unscrew the cap and wait for any ìhissingî noise to stop. Then unscrew the cap all the way and remove the cap from the filler neck.

To install the fuel cap:

Turn the cap clockwise until the cap bottoms on the filler neck. The fuel cap is now properly installed

Courtesy of Crane.Market

https://truckmanualshub.com/

Normal Starting

1. Enter the cab and adjust the seat for comfortable operation.
2. Adjust the mirrors to obtain the best rear view from the operatorís position.

WARNING: **DO NOT** start the engine unless you are in the seat with the seat belt fastened around you. Death or serious personal injury could result if the belt is not securely fastened.

3. Fasten the seat belt.
4. Make sure the parking brake switch is ENGAGED.
5. Place the travel select lever in the (N) NEUTRAL DETENT position.
6. Turn the ignition switch to the START position (fully clockwise) to crank the engine. Release the ignition switch when the engine starts. If the engine fails to start on the first try, wait until the engine and starter come to a complete stop before cranking the engine again.

***IMPORTANT! DO NOT** crank the starting motor continuously for more than 30 seconds. Stop cranking the starter and allow the starter to cool for 2 minutes before engaging the starter again.*

7. After the engine starts, run engine at partial throttle for 30 to 60 seconds before operating the vehicle. Return to idle before engaging the travel or range select levers.
8. Disengage the parking brake switch before you start operating.

Courtesy of Crane.Market

https://truckmanualshub.com/

Cold Starting

The engine is equipped with a 120 volt 750 watt block heater. Block heaters are recommended when temperatures drop below 10 F (-12 C). (Temperature ranges will vary when using different oil weights. Consult the engine manufacturerís manual for other variables.

WARNING: This diesel engine uses a grid heating system inside the induction manifold. **DO NOT** use ether or any high energy fuels to assist starting. An explosion may cause death or serious personal injury or engine damage.

The engine is equipped with a grid heater inside the induction manifold. If the temperature drops below 40 F (4 C) the air-intake heater system will be activated when the ignition switch is turned to the RUN position. When the system is active the air-intake heater light will illuminate on the front dash panel. **DO NOT** turn the ignition switch to START until the air-intake heater light goes OFF.

At temperatures below 10 F (-12 C), operate the engine at moderate speeds for 5 minutes before full loads are applied.

1. Enter the cab and adjust the operatorís seat.

WARNING: **DO NOT** start the engine unless you are in the seat with the seat belt fastened around you. Death or serious personal injury could result if the belt is not securely fastened.

2. Fasten the seat belt. Adjust the mirrors if necessary.
3. Make sure the parking brake switch is ENGAGED.
4. Make sure the travel select lever is in the (N) NEUTRAL DETENT position.
5. Turn the ignition switch to the RUN position. Wait for the engine air-intake heater light on the front dash panel to turn OFF. When the light turns OFF the engine grid heater is at the proper temperature and the engine is ready to start.
6. Turn the ignition switch to the START position to crank the starter.

***IMPORTANT! DO NOT** crank the starting motor continuously for more than 30 seconds. Stop cranking the starter and allow the starter to cool for 2 minutes before engaging the starter again.*

7. As the engine starts, release the ignition switch to the RUN position. Depress the accelerator pedal enough to provide a smooth idle speed.
8. The engine oil pressure warning indicator light should go OFF within five seconds after starting. If the light remains ON, turn the ignition switch OFF immediately and check the oil level or change to a lighter weight oil. Consult the engine manufacturerís manual for alternative oils for cold weather operation.

Courtesy of Crane.Market

https://truckmanualshub.com/

Jump Starting

WARNING: **NEVER** jump start the vehicle directly to the starter solenoid. Death or serious personal injury could result from the vehicle lurching forward or backward and running over the person attempting to jump start the vehicle directly to the starter.

WARNING: To avoid death or serious personal injury when jump starting with another vehicle, be certain that the two vehicles are not touching. Never jump start the vehicle with a frozen battery as it will explode. Keep sparks, flames and lighted smoking materials away from the battery. Lead acid batteries generate explosive gases when charging. Wear safety glasses when working near batteries.

This booster battery must be a 12 volt type. The vehicle used for jump starting must have a negative ground electrical system. To jump start the vehicle, proceed as follows:

1. Connect the positive (+) jumper cable to the positive (+) post of the discharged battery.
2. Connect the other end of the positive (+) jumper cable to the positive (+) post of the booster battery.
3. Connect one end of the negative (-) jumper cable to the negative (-) post of the booster battery.
4. Make the final connection to the furthest point from the battery.
5. Follow the steps in ìNormal Startingî on page 85.
6. Remove the jumper cables in the reverse order of their connection (i.e. negative ground connection first, etc.).

Courtesy of Crane.Market

https://truckmanualshub.com/

How To Pick, Carry & Place A Load

To pick a load, move the forks inward or outward on the fork shaft so that they are aligned with the openings in the pallet. Extend the boom slowly so the forks slide into the openings in the pallet. Raise the boom so that the load is lifted.

To carry a load, position the boom so that the load is as low as possible and the travel area is visible to the operator.

Before placing the load, use the capacity chart to determine safe boom extension range for the applicable load. To place a load, align the forks at the level the load is to be placed and then extend the boom slowly until the load is just above the area where it is to be placed. Lower the boom until the pallet rests in position and the forks are free to retract.

The transfer carriage extension can be used to place the load onto the landing point, being certain that the load on the forks is within the transfer limits shown on the individual capacity charts.

Courtesy of Crane.Market

https://truckmanualshub.com/

Elevating Personnel

This vehicle is designed to lift and transport materials and should not be used to elevate personnel except as explained in this section. Only equipment designed and approved for elevating personnel should be used.

If the vehicle must be used to elevate personnel, use only a compliant work platform. Refer to ìDefining Platforms For Elevating Personnelî on page 89 for requirements. When using a work platform, the following precautions must be taken:

WARNING: Use only a compliant work platform to lift or lower personnel. **Never** drive the vehicle with the work platform in a raised position or with personnel on board, even for a short distance.

Defining Platforms For Elevating Personnel

The requirements for platforms shall include the following:

1. The platform floor must have a slip resistant surface not more than 8" (200 mm) above the normal load supporting surface of the forks.
2. The platform floor dimensions shall not exceed:
   a. Two times the load center distance as listed on the load chart that is attached to the vehicle or shown in the ìLoad Chartî section at the end of this manual. This floor dimension is measured parallel to the longitudinal center plane of the vehicle.
   b. Width of the platform shall not be wider than the width of the vehicle, measured across the load bearing tires plus 10" (250 mm) on each side.
   c. Minimum space requirements for each person on the platform shall not be less than 18" (450 mm) in either direction.
3. The platform shall have a 4" (100 mm) minimum high toe plate around the perimeter of the platform. The toe plate may be omitted at the access opening.
4. Protection must be provided for the personnel on the work platform from any pinch points or moving parts while in their normal working position on the platform.
5. Information prominently indicated on the work platform shall include:
   a. Maximum work load including personnel and equipment.
   b. Weight of the empty platform.
6. Provide a means to securely mount and attach the platform so it can:
   a. Only be centered laterally on the vehicle and retained against the vertical face of the forks, carriage or the lifting mechanism.
   b. Prevent the platform from inadvertent pivoting.

Courtesy of Crane.Market

https://truckmanualshub.com/

7. The platform must have a restraining means such as a guardrail or a means of securing personnel such as a body belt or lanyard for each occupant of the platform.
8. The guardrail or similar structure shall have a nominal height to the platform floor of 42" (1066 mm) around the perimeter of the platform and include a midrail. The guardrail openings may be used to provide alternate access openings provided the opening can be easily made by hinging or removing sections, but must be easily put back into original position when alternate openings are no longer required.
9. The guardrail shall be capable of withstanding a concentrated horizontal force of 200 lb (890 N) applied at the point of least resistance without permanent deformation.
10. A body belt and lanyard is to have an attaching point for freedom of movement, and its length is to limit free fall to 5 feet (1500 mm) measured from the point of attachment to the operator. The complete system shall be capable of withstanding three consecutive drop tests to simulate a 250 lb (113 kg) person falling 6 feet (1800 mm) without allowing the test weight to fall free to the ground. A deceleration device may be included.
11. Lanyards, when provided, shall be arranged so as not to cause a tripping hazard.
12. Body belts, when provided, should have a width of at least 1.75 in. (44 mm).
13. Structural safety factor - all load supporting structural elements of the work platform shall have a structural safety factor of not less than 2 to 1 based on the minimum yield strength of materials used.

Capacity Limitations

The combined mass (weight in pounds) of the platform, load and personnel shall not exceed one-third (33%) of the capacity of the related load center position indicated on the capacity chart. Refer to ìUsing the Capacity Chartî on page 71.

Courtesy of Crane.Market

https://truckmanualshub.com/

Preparation and Set-up

WARNING: **Never** allow anyone to alter or modify any part of the work platform. Any modification to the platform which could result in serious personal injury to anyone on the platform.

1. **DO NOT** alter or modify the work platform in any manner.
2. Make sure that the work platform is securely attached to the quick attach or forks. Follow the platform manufacturerís instructions.
3. Make sure the platform, carriage and forks are secured to prevent them from pivoting from side to side.
4. On side tilt or swing carriages, the carriage must be centered and/or leveled horizontally and vertically. The hydraulic system quick disconnects must also be disconnected and plugged and the carriage securely fastened to prevent any tilting or side to side swinging motion.
5. Ensure the vehicle has a firm footing and is level.
6. Be sure the vehicle is in a level position (side to side) before any operation is begun. Use the frame sway to level the vehicle. If the vehicle cannot be leveled, reposition the vehicle.
7. Place the travel select lever in the (N) NEUTRAL DETENT position.
8. Engage the parking brake switch. Blocking the wheels is also recommended.
9. Level the platform in both the side-to-side and front-to-back directions before use.
10. Before lifting or lowering personnel, be sure the vehicle lifting mechanism operates smoothly through the entire lifting and lowering of the platform and maintains its self leveling function. The vehicle must operate smoothly both empty and loaded.
11. Be sure any lift limiting devices and latches are functioning properly.
12. Any body belt, lanyard or deceleration devices which have sustained any deformation or damage must be replaced before using the work platform again.
13. Before elevating personnel, the area around and under the work platform should be marked to warn anyone on the ground that overhead work is being done.
14. Protection must be provided for the personnel on the work platform from any pinch points or moving parts while in their normal working position on the platform.
15. Provide any overhead protection device as required by worksite conditions or if requested by the user of the platform.

Courtesy of Crane.Market

https://truckmanualshub.com/

Elevating Personnel

WARNING: **Never** operate the Attachment Tilt function to tilt the platform forward or rearward when elevating with personnel aboard. Death or serious personal injury could result.

DANGER: **Never** operate this or any equipment in an area in which overhead or underground cables or power sources exist without first requesting that the appropriate power company or utility company de-energize the lines or take other suitable precautions.

1. Make sure there are no overhead obstructions or electrical wires above the platform before lifting.
2. A trained operator must operate the controls from the operators compartment and must remain with the vehicle at all times. Using extreme caution, lift and lower personnel smoothly and only at their request. The operator should move the platform up and down only in response to instruction from personnel on the platform. If the operator must move the platform, the operator must alert the personnel aboard the platform before moving.
3. Personnel aboard the work platform must maintain a firm footing at all times.
4. Be certain the personnel and related equipment on the platform do not exceed the available space of the platform.
5. The platform shall be lowered to the ground level for personnel to enter or exit the platform through the appropriate platform access opening. Personnel must not climb on any part of the vehicle or over the platform guardrails in an attempt to enter or exit the platform.
6. Always position the platform in the travel position (approximately one foot above ground level) before moving the vehicle.

IMPORTANT! *Make sure that required restraining equipment such as railings, chains, cable, body belts with lanyards, etc. are in place and properly used. Never use railings, planks, ladders, etc. on the platform for the purpose of achieving additional reach or height.*

Courtesy of Crane.Market

https://truckmanualshub.com/

Using Other Attachments

Numerous attachments, marketed by **JLG** are available for this vehicle. The capacity charts attached to this vehicles dash are to be used with **JLG** approved attachments only. Hydraulically powered attachments must only be used on vehicles equipped with auxiliary hydraulics.

IMPORTANT! *This vehicle is intended for the function of lifting only. This vehicle is not designed to PULL, TOW or DRAG other objects.*

JLG makes no representations or warranties, expressed or implied, as to the design, manufacture or fitness for use with this vehicle of any third party source attachment. This vehicle is not intended to be used and should not be used with an attachment that would alter the center of gravity or stability of this vehicle. **JLG** assumes no liability for any third party attachment that would alter the center of gravity or stability.

IMPORTANT! DO NOT *use unapproved attachments.*

Following is a list of some of the attachments available through **JLG** for this vehicle model:

- 48" Standard Carriage
- 48" Side Tilt Carriage
- 50" Standard Carriage
- 50" Side Tilt Carriage
- 60" Standard Carriage
- 60" Side Tilt Carriage
- 72" Framers Carriage
- 72" Framers Tilt Carriage
- Single Fork Positioning Carriage
- Dual Fork Positioning Carriage
- 1-1/4 Cubic Yard Bucket
- Auger Attachment
- Sweeper Attachment
- .5 Cubic Yard Concrete Hopper
- 1 Cubic Yard Concrete Hopper

The standard capacity chart, as shown in the last section of this manual, is applicable for the above listed attachments.

Courtesy of Crane.Market

https://truckmanualshub.com/

The attachments listed below are supplied with their own individual set of capacity charts as shown in the last section of this manual:

- 72" Swing Carriage
- 10 Foot Truss Boom
- 10 Foot Truss Boom w/Winch
- 3 Foot Truss Boom w/Winch

Hydraulically actuated attachments also have a maximum hydraulic pressure rating. Ensure that the maximum rated hydraulic pressure of the attachment is equal to or slightly greater than 3,000 psi (206,8 bar), which is the maximum pressure of the vehicleís auxiliary hydraulics at the quick disconnect couplers.

Courtesy of Crane.Market

https://truckmanualshub.com/

Shut-Off

1. Bring the vehicle to a complete stop using the service brakes.
2. Park the vehicle on level ground.

WARNING: To prevent death or serious personal injury, be certain to lower the boom, engage the parking brake switch, and shut off the engine prior to exiting the vehicle.

3. Place the travel select lever in the (N) NEUTRAL DETENT position and engage the parking brake switch.
4. Lower the boom and ground the attachment.
5. Turn the ignition switch to the OFF position and remove the key.

Courtesy of Crane.Market

https://truckmanualshub.com/

Towing a Disabled Vehicle

Towing a disabled vehicle should only be attempted after exhausting all other options. Every effort should be made to repair the vehicle and move it under its own power. Towing the vehicle improperly can result in damage to the vehicle drivetrain.

IMPORTANT! *In the event the vehicle is disabled and cannot be moved under engine power, the situation must be properly evaluated and dealt with on an individual basis. Contact your local* ***Lull*** *Distributor or the* ***JLG*** *Service Department at (877) 554-5438 or (717) 485-6657 for specific instructions for your particular situation.*

If it is necessary to tow the vehicle a short distance to avoid a potentially hazardous situation such as being in an unsafe area on the worksite or on a roadway, prepare the vehicle for towing as follows;

1. Remove the load from the vehicle.
2. Fully retract the transfer carriage.
3. Fully retract the boom. Position the forks approximately 24" above the ground. Refer to ìEmergency Boom Loweringî on page 98 for proper procedure if required.

WARNING: **BLOCK ALL FOUR WHEELS**. Failure to do so could result in death or serious injury from vehicle roll-away.

4. **Block all four wheels** to prevent any unexpected movement of the vehicle after the parking brake is disabled.
5. Position the towing vehicle in place. Attach a rigid tow bar to the disabled vehicle.
6. Remove the cover (1) from the cab floor to gain access to the valve plate under the cab.
7. Attach a remote portable hydraulic pressurizing unit to the park brake gauge port (2) on the accumulator charge/secondary function valve (3) located under the cab floor.
8. Clear the area of any unnecessary personnel.
9. Have an operator seated in the seat.
10. Turn the ignition switch to the ON position (with the engine not running), release the park brake (park brake switch OFF).

Courtesy of Crane.Market

https://truckmanualshub.com/

11. Pressurize the park brake with the pressurizing unit. Pump pressure into the park brake system. **DO NOT** exceed 650 psi (45 bar). Close the pump needle valve on the pressurizing unit.

CAUTION: **DO NOT** exceed 650 psi (45 bar) when pressurizing the park brake. Applying too much pressure may damage the brake seals.

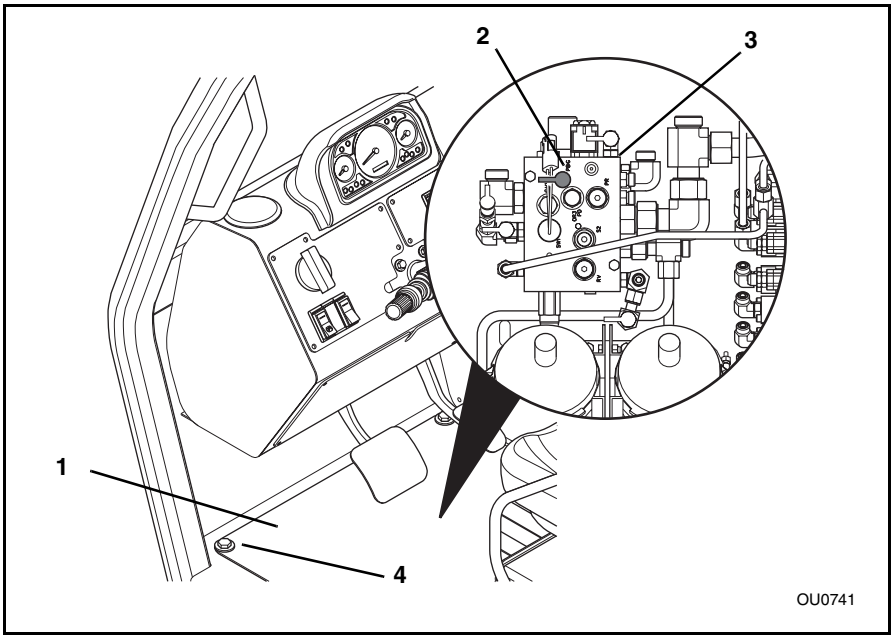

12. Watch the pressure gauge on the pressurizing unit to ensure that the pressure in the park brake system does not drop during the towing operation.
13. Carefully remove the blocks from the four wheels of the vehicle.
14. The vehicle can now be towed or pushed out of the way. ***Tow or push the vehicle at a very slow speed!***
15. Place the cab floor plate back inside the cab when towing is complete. Reinstall the capscrews and torque the capscrews (4) to 18 lb-ft (25 Nm).

Courtesy of Crane.Market

https://truckmanualshub.com/

Emergency Boom Lowering

This section discusses emergency boom lowering procedures:

Part I: *In case of loss of engine power or hydraulic pump failure.*

Part II: *In case of hydraulic line failure.*

Part I

Loss of Engine Power or Hydraulic Pump Failure

IMPORTANT! *In the event of total loss of engine power or hydraulic pump failure with an elevated load, the situation must be properly evaluated and dealt with on an individual basis. Contact your local* ***Lull*** *Distributor or the* ***JLG*** *Service Department at (877) 554-5438 or (717) 485-6657 for specific instructions for your particular situation.*

In any event, the vehicle should be secured until the situation has been properly evaluated. Secure the vehicle by following the procedures below:

1. Clear the area around the vehicle of all personnel.
2. Block all four wheels.
3. Section off a large area under the boom with string or tape to restrict any personnel from entering this potentially dangerous area.

WARNING: **DO NOT** get under a raised boom unless the boom is blocked up. Always block the boom before doing any servicing that requires the boom to be up.

4. Temporarily block up or support the outer boom so it cannot be lowered.
5. If the load is in a position where it can be removed safely, completely remove the load from the carriage, otherwise leave the load in place.
6. Place an accident prevention tag on both the ignition switch and steering wheel. If you do not have a safety tag, place tape over the ignition switch.

Part II Hydraulic Line Failure

In case of hydraulic line failure, there are step-by-step procedures available to assist you in safely retracting and then lowering the boom. Read Part II from start to finish before performing any of these procedures so you fully understand the process and the danger involved. If you are unsure about any part of these procedures contact your local **Lull** Distributor or the **JLG** Service Department at (877) 554-5438 or (717) 485-6657 for specific instructions for your particular situation.

IMPORTANT! *For boom retract and lower, the hydraulic lines MUST be replaced, then retract and lower the boom in its normal fashion.*

IMPORTANT! *Be aware that the boom must first be retracted and then lowered to avoid vehicle tipover.*

Courtesy of Crane.Market

https://truckmanualshub.com/

In any case of hydraulic line failure, it is critical to correctly identify which hydraulic line has failed. Identify the hydraulic line that has failed and use the table on page 100 to determine which Step to follow to retract and lower the boom. The hydraulic lines are:

- Boom Extend Line - Extend Cylinder to Block (1)
- Boom Retract Line - Extend Cylinder to Block (2)
- Boom Extend Line - Block to Frame Bulkhead (3)
- Boom Retract Line - Block to Frame Bulkhead (4)
- Boom Lower Line - Lift Cylinder to Block (5)
- Boom Lift Line - Lift Cylinder to Block (6)
- Boom Lower Line - Block to Frame Bulkhead (7)
- Boom Lift Line - Block to Frame Bulkhead (8)

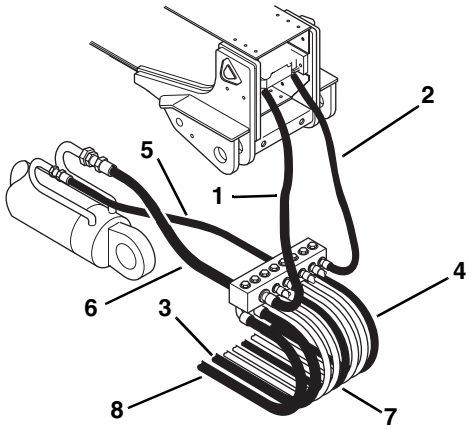

OU1060

Courtesy of Crane.Market

https://truckmanualshub.com/

HYDRAULIC LINE THAT FAILED	NORMAL STEPS	
	FOLLOW THIS STEP IF PARTS ARE AVAILABLE	FOLLOW THIS STEP IF PARTS ARE NOT AVAILABLE
BOOM **LIFT** LINE (LIFT CYLINDER TO BLOCK OR BLOCK TO FRAME BULKHEAD)	STEP 1	STEP 2
BOOM **LOWER** LINE (LIFT CYLINDER TO BLOCK OR BLOCK TO FRAME BULKHEAD)	STEP 1	Refer to STEP 1
BOOM **EXTEND** LINE (EXTEND CYLINDER TO BLOCK OR BLOCK TO FRAME BULKHEAD)	STEP 1	STEP 2
BOOM **RETRACT** LINE (EXTEND CYLINDER TO BLOCK OR BLOCK TO FRAME BULKHEAD)	STEP 1	Refer to STEP 1

STEP 1

1. Clear the area of any unnecessary personnel.
2. Block all four wheels.

WARNING: **DO NOT** get under a raised boom unless the boom is blocked up. Always block the boom before doing any servicing that requires the boom to be up.

3. If the load is in a position where it can be removed safely, completely remove the load from the carriage; otherwise, leave the load in place.
4. Temporarily block up or support the outer boom.

WARNING: Wear protective clothing and proper eye protection when working with or around hydraulic oil. Wait for hydraulic oil to cool before attempting to repair the failure. Hot hydraulic oil can cause severe burns and other serious injury.

Courtesy of Crane.Market

https://truckmanualshub.com/

5. Replace the failed hydraulic line with a new part.
   - Boom Extend Line - Extend Cylinder to Block (1)
   - Boom Retract Line - Extend Cylinder to Block (2)
   - Boom Extend Line - Block to Frame Bulkhead (3)
   - Boom Retract Line - Block to Frame Bulkhead (4)
   - Boom Lower Line - Lift Cylinder to Block (5)
   - Boom Lift Line - Lift Cylinder to Block (6)
   - Boom Lower Line - Block to Frame Bulkhead (7)
   - Boom Lift Line - Block to Frame Bulkhead (8)
6. Check the hydraulic oil level, add oil if needed.
7. Remove the blocking or support from the outer boom.
8. Return to the cab, fasten your seat belt and start the engine.
9. Tilt the carriage upward, if necessary, for clearance before retracting the boom. It may also be necessary to lift the boom up slightly, if possible, to gain clearance.
10. Slowly retract the boom.
11. Slowly lower the boom and ground the carriage.
12. Shut off the engine.
13. Completely remove the load from the carriage, if you havenít already done so.
14. Return to the cab, fasten your seat belt and start the engine.
15. Cycle the lift/lower and extend/retract cylinders several times to bleed air from the system. Check for leaks.
16. Recheck the hydraulic oil level. Add oil if necessary.

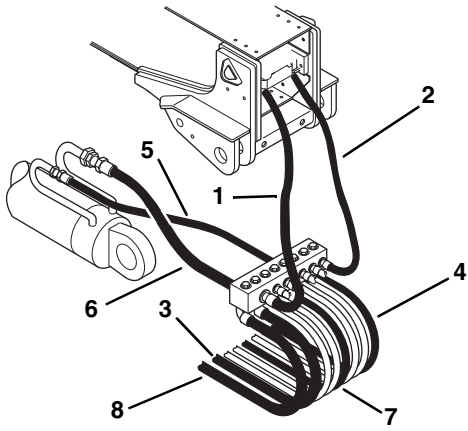

OU1060

Courtesy of Crane.Market

https://truckmanualshub.com/

STEP 2

USE IN CASE OF:

BOOM LIFT LINE FAILURE - Lift Cylinder to Block (1)

BOOM LIFT LINE FAILURE - Block to Frame Bulkhead (2)

BOOM EXTEND LINE FAILURE - Extend Cylinder to Block (3)

BOOM EXTEND LINE FAILURE - Block to Frame Bulkhead (4)

1. Clear the area of any unnecessary personnel.
2. Block all four wheels.

WARNING: Wear protective clothing and proper eye protection when working with or around hydraulic oil. Wait for hydraulic oil to cool before attempting to repair the failure. Hot hydraulic oil can cause severe burns and other serious injury.

3. Place a container under the failed hose to catch any hydraulic oil that may escape during this procedure.
4. Return to the cab, fasten your seat belt and start the engine.
5. Slowly retract the boom.
6. Slowly lower the boom and ground the carriage.
7. Shut off the engine.
8. Completely remove the load from the carriage.
9. Place an accident prevention tag on both the ignition switch and steering wheel. If you do not have a safety tag, place tape over the ignition switch.
10. Have the vehicle serviced immediately. Replace any failed hydraulic lines with new parts.
11. Return to the cab, fasten your seat belt and start the engine.
12. Cycle the lift/lower and extend/retract cylinders several times to bleed air from the system. Check for leaks.
13. Recheck the hydraulic oil level. Add oil if necessary.
14. Transfer any waste oil to a container with a cover and label as used oil. Dispose of properly.

Courtesy of Crane.Market

https://truckmanualshub.com/

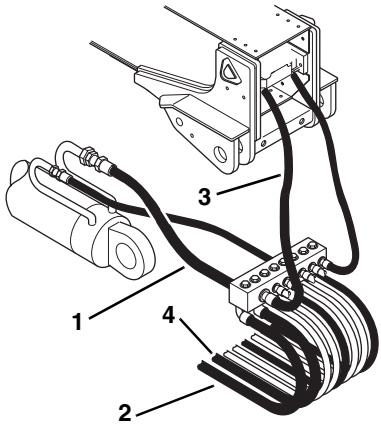

OU1060

Courtesy of Crane.Market

https://truckmanualshub.com/

Introduction

This section of the manual contains a maintenance schedule and checklist with references to pertinent procedures and instructions. To prevent problems before they occur, follow the maintenance schedule.

NOTE: *The Lubrication (1) and Maintenance Chart (2) decals are located inside the engine cover (3). They contain a general maintenance schedule that should be followed to maintain the vehicle in good operating condition. The same schedule information is presented in this manual and the service manual, except they contain a more detailed account of how to perform these specific maintenance operations.*

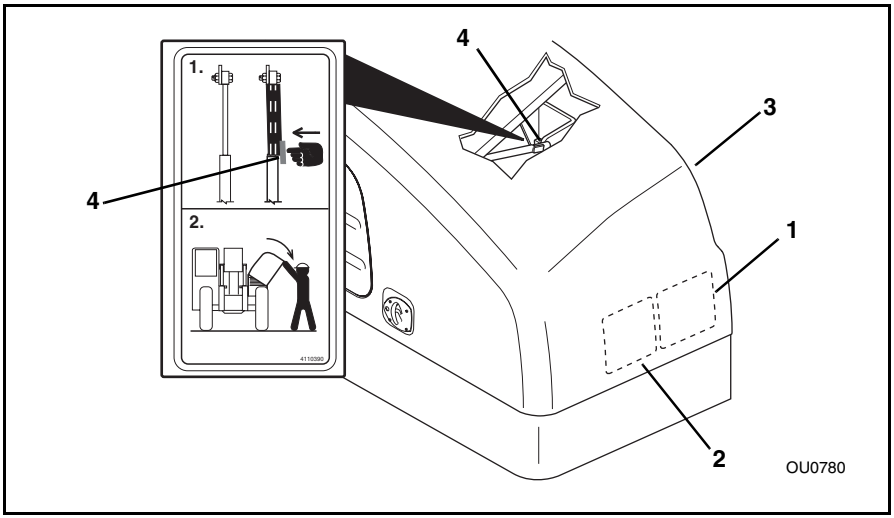

WARNING: **DO NOT** perform service or maintenance on the vehicle with the engine running, with the exception of the transmission level check. Contact with moving parts can cause death or serious personal injury.

Lowering Engine Cover

To release and lower the engine cover from the fully raised position, lift up slightly on the cover and push the upper part of the right gas shock (4) (orange tab) to the left. Line up the upper part of the shock lock tube with the lower part of the gas shock and pull the cover down to the closed position.

Courtesy of Crane.Market

https://truckmanualshub.com/

Maintenance Schedule and Checklist

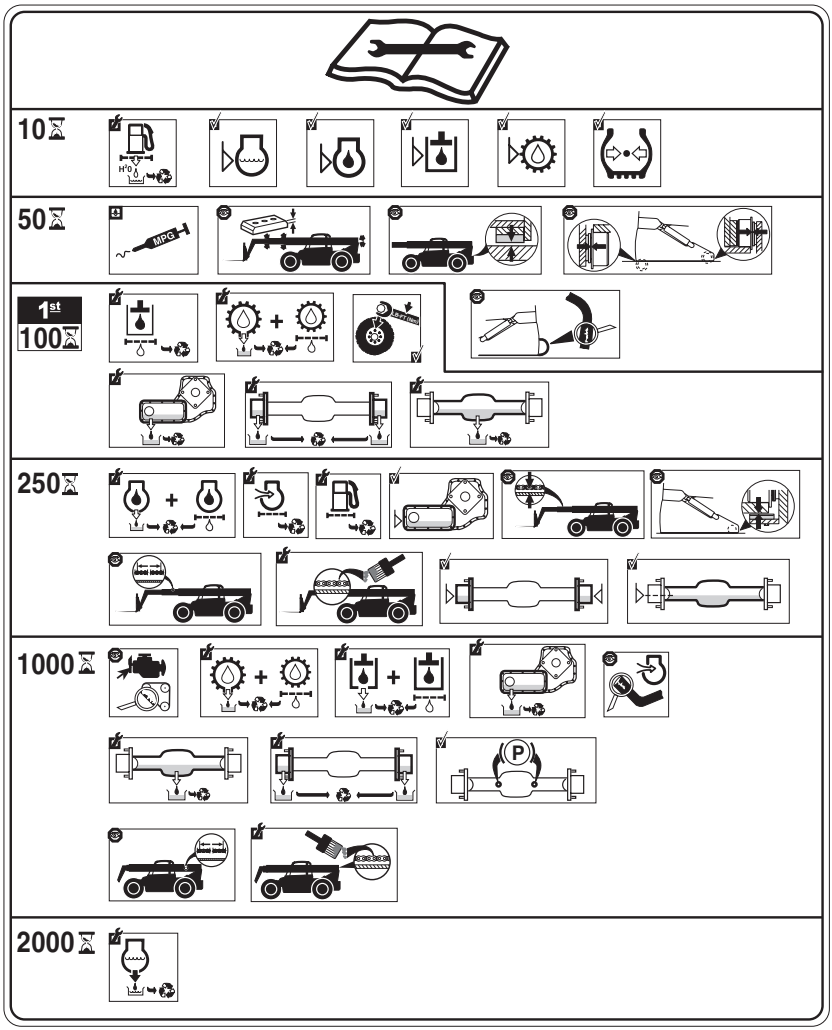

OU0510

Courtesy of Crane.Market

https://truckmanualshub.com/

1. Lubrication Points

OH2680

Lubricate the following grease fittings using Multi-Purpose Grease (MPG) every 50 hours:

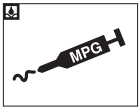

OS1750

NOTE: *Shorten the lubrication interval on all lube points when operating in severe conditions or during high cycling operation.*

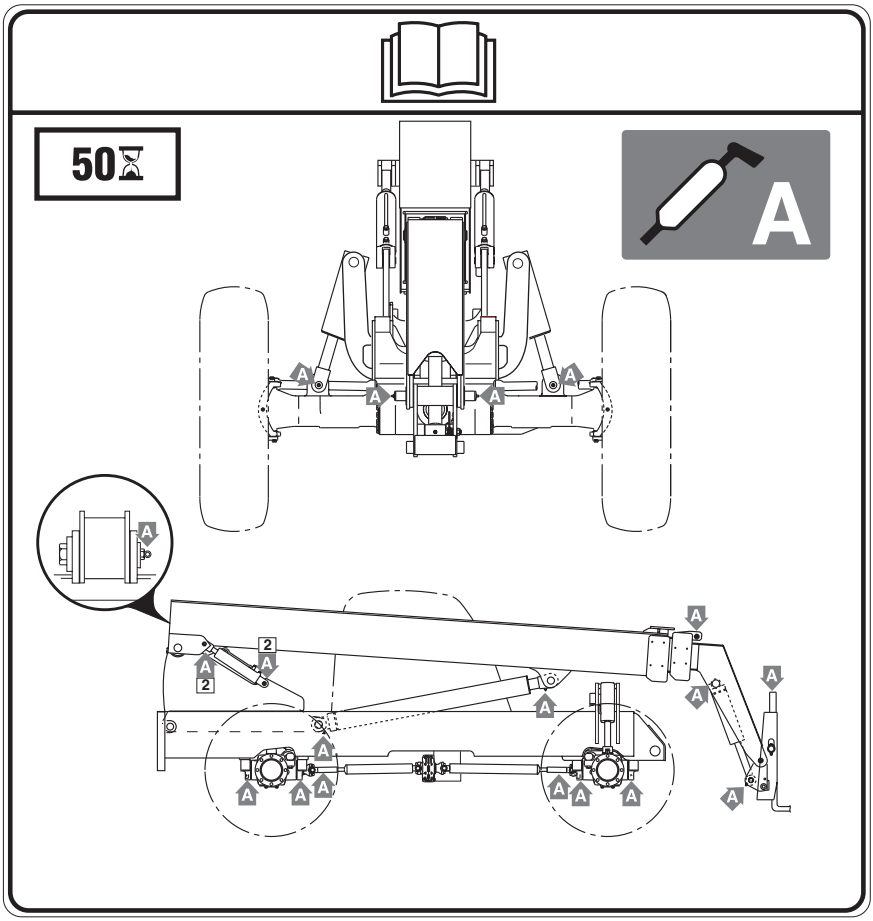

OU0520

Courtesy of Crane.Market

https://truckmanualshub.com/

2. Air Cleaner

The front dash panel illuminates an indicator light that will alert the operator when it senses restricted air flow to the engine. This indicates the air filter(s) needs servicing. **NEVER** operate the vehicle without the air cleaner assembly and both filters in place.

A. Element: Change

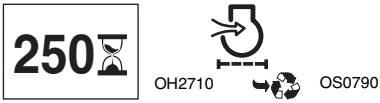

(As Restriction Indicator Indicates or Every 250 Hour Intervals)

Outer Primary Element

All air cleaner manufacturers agree that attempting to clean or wash an element increases the chance for element damage. It is highly recommended that you consider the value of cleaning an element against the risks which could lead to engine damage. Adopt the policy that all elements should be replaced with new and not cleaned.

Inner Element

An inner element should never be washed or reused. Always install a new element. Replace inner elements after every third primary element change. **DO NOT** remove an inner element until you have thoroughly cleaned the inside of the air cleaner canister. This will prevent dirt, which could damage the engine, from entering the induction manifold.

CAUTION: **NEVER** run the engine with only the inner element installed. Severe engine damage will result from dust entering the engine.

To change elements:

1. Pull the air cleaner cover lock (1) OUT, turn the air cleaner cover (2) counterclockwise and remove the cover from the air cleaner canister (3).

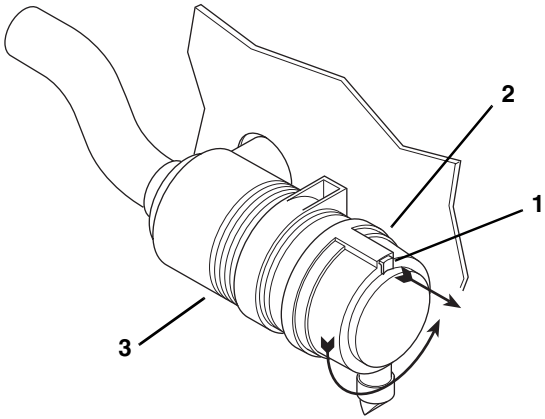

Courtesy of Crane.Market

https://truckmanualshub.com/

2. Remove the primary element (1). Inspect the element for damage. Damaged elements should never be reused.

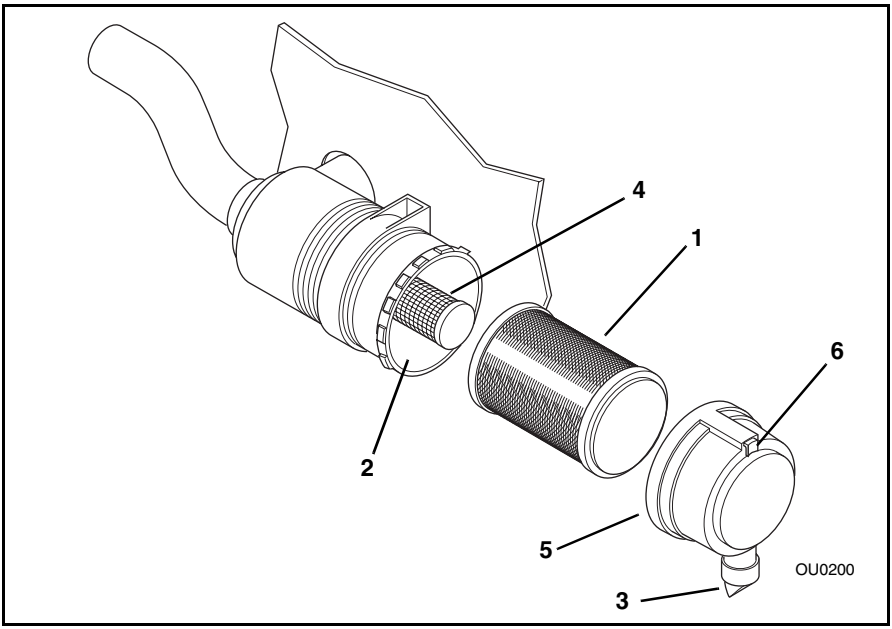

3. Thoroughly clean the interior of the air filter canister (2) and vacuator valve (3).
4. If replacing the inner element (4) at this time, carefully slide the element out. Always discard this element and replace with a new element.
5. Slide the new primary element over the inner element making sure the sealing edge is flush with the base of the air cleaner.

***IMPORTANT! DO NOT** apply any type of petroleum product to the sealing surface of the filter in an attempt to get a more positive seal. This will cause sealing surface damage and allow dirt to by-pass the filter. Use liquid dishwashing soap (Ivory, Dawn, etc.) on the seal of the filter only.*

6. Position the canister cover (5) in place, turn clockwise to lock into position and secure in place by pushing the air cleaner cover lock (6) all the way in.

B. Air Intake System-Inspection

(1000 Hour Intervals)

OH2690

OT0880

Inspect the intake piping for cracked hoses, loose clamps or punctures which can allow dirt or debris to enter the combustion chamber. If dirt or debris are allowed to enter the combustion chamber, they can severely damage the engine. If necessary, tighten or replace parts to prevent air intake system leakage.

Courtesy of Crane.Market

https://truckmanualshub.com/

3. Optional Closed Cab Air Filters

The optional closed cab has two air filters. These filters require periodic maintenance.

Recirculation Air Filter

Periodically remove and inspect the recirculation air filter (7) located directly behind the seat. Remove the two thumb screws (8) holding the vent cover and filter (7) to the heater assembly housing (9). Gently hand wash with water. A mild detergent may also be used if the filter is saturated with dirt.

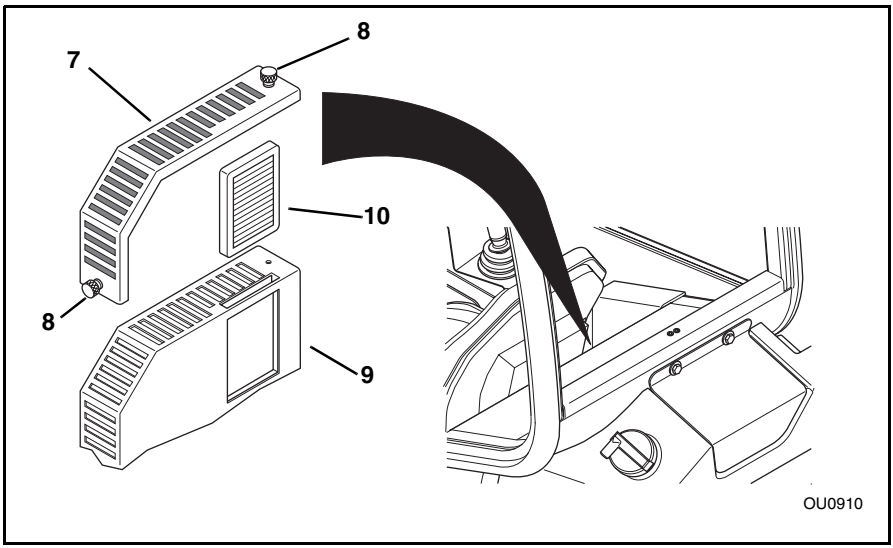

Fresh Air Intake Filter

The fresh air intake filter (10) cleans outside air when pressurizing the cab. Check the condition of the filter by removing the recirculation filter to gain access to the fresh air filter. Pull the fresh air filter out of the pocket in the heater assembly housing.

When operating in normal conditions, inspect the filter weekly. When operating in extreme conditions, inspect the filter daily. Clean the filter by removing the filter and shaking it. Be sure the filter is seated all the way into the pocket in the heater assembly housing. Reassemble the recirculation filter to the heater assembly housing.

The filter should be replaced at 250 hour intervals under normal operating conditions and at 50 hour intervals under extreme operating conditions.

NOTE: *Correctly position the filter so the air flow is directed into the cab.*

Courtesy of Crane.Market

https://truckmanualshub.com/

4. Engine Cooling System

A. Engine Coolant Level Check

(10 Hour Intervals)

OH2660

OS0800

1. Level the vehicle, ground the attachment, place the travel select lever in the (N) NEUTRAL DETENT position, engage the parking brake switch and shut off the engine.
2. Unlatch and open the engine cover.
3. Check the coolant level in the overflow bottle (1). When the coolant is hot, the bottle should be 1/2 to 3/4 full. When the coolant is cool, the bottle should be 1/4 to 1/2 full. Add coolant (50/50 mixture of ethylene glycol and water) as required through the overflow bottle.

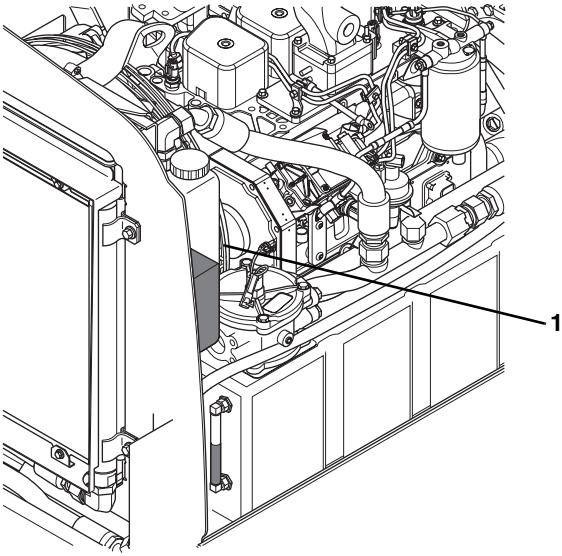

OU1260

Courtesy of Crane.Market

https://truckmanualshub.com/

B. Drain and Flush Radiator

(2000 Hour Intervals)

OH2700

OS0810

1. Level the vehicle, ground the attachment, place the travel select lever in the (N) NEUTRAL DETENT position, engage the parking brake switch and shut off the engine.

WARNING: **DO NOT** attempt this procedure when the engine is hot. Wait for the engine, muffler and tailpipes to cool down before proceeding. Failure to do so could result in severe burns.

2. Unlatch and open the engine cover. Allow time for the engine to cool down before proceeding. Draining and flushing the engine cooling system while the engine is still hot can cause cracks in the engine block.

WARNING: **NEVER** remove the radiator cap while the engine is hot. The cooling system is under pressure. Hot coolant can cause severe burns or eye injury. Wear protective clothing and safety glasses.

3. Slowly turn the radiator cap (2) to the first stop and allow any pressure to escape. Remove the radiator cap.

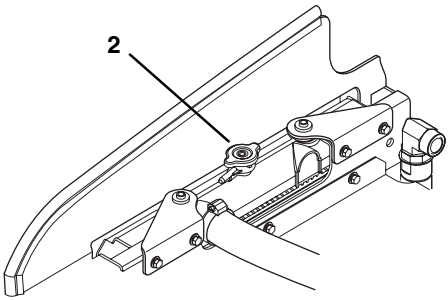

MU1440

Courtesy of Crane.Market

https://truckmanualshub.com/

4. Locate the petcock (1) on the bottom of the radiator. Place a hose (2) onto the petcock and channel the coolant into a container. Open the petcock and allow the coolant to drain.
5. Flush the radiator with clean water and allow to drain. After radiator is drained, close the petcock and remove the hose.
6. Transfer to used coolant to a properly labeled container and dispose of properly.

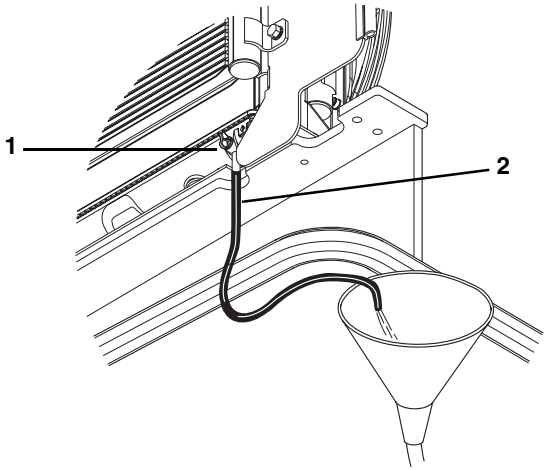

7. Drain the contents of the overflow bottle (3) by removing the overflow hose (4) from the radiator fill neck (5). Use the hose to channel the coolant into a container. Transfer the used coolant to a properly labeled container and dispose of properly.
8. Reattach the overflow hose to the radiator fill neck.

Courtesy of Crane.Market

https://truckmanualshub.com/

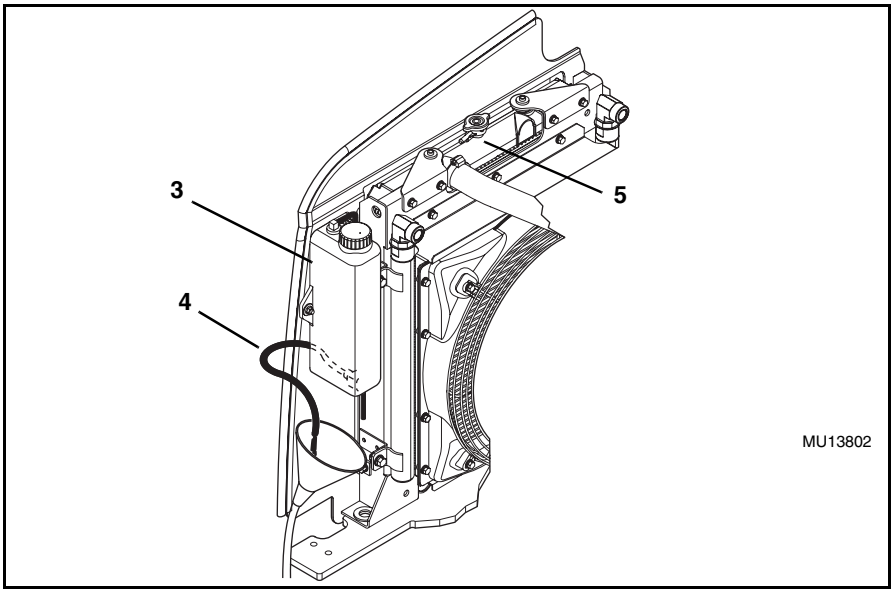

9. Fill the radiator completely with a 50/50 mixture of ethylene glycol and water. Replace the radiator cap. Add coolant to the overflow bottle until the bottle is 1/2 to 3/4 full. This ìoverfillingî will compensate for any air in the cooling system.
10. Clean any dirt and debris from the radiator fins and core.
11. Start the engine and run the vehicle to the normal operating temperature, then shut off the engine. While the engine is cooling, check for leaks.
12. Allow the engine to cool. Check the coolant level in the radiator again, top off the radiator with a 50/50 mixture of ethylene glycol and water. Replace the radiator cap.
13. The overflow bottle should be 1/4 to 1/2 full. If not, fill to this level with a 50/50 mixture of ethylene glycol and water.
14. Close and latch the engine cover.

Courtesy of Crane.Market

https://truckmanualshub.com/

5. Engine Oil and Filter

Engine Oil Recommendations

The use of quality engine oil combined with the appropriate oil and filter change intervals are critical factors in maintaining engine performance and durability.

Use 15W40 motor oil that at least meets the manufacturers minimum recommended oil specifications as defined in their operator manual.

A. Oil Level Check

(10 Hour Intervals)

OH2660

OS0820

1. Level the vehicle, ground the attachment, place the travel select lever in the (N) NEUTRAL DETENT position, engage the parking brake switch and shut off the engine.
2. Unlatch and open the engine cover.
3. Remove the engine dipstick (1). Check the oil mark on the dipstick. The oil should be between the full (2) and add (3) marks within the crosshatched area of the dipstick.
4. Add oil if necessary. Replace the dipstick.

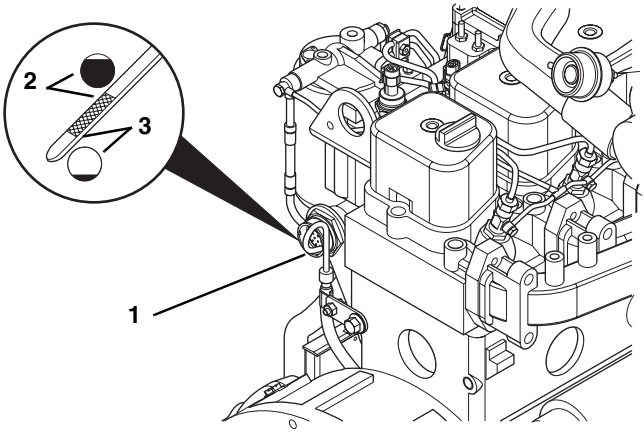

OU1270

Courtesy of Crane.Market

https://truckmanualshub.com/

B. Oil and Filter Change

(250 Hour Intervals)

OH2710

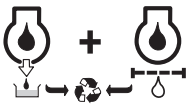

OS0830

1. Operate the engine until warm (approximately 5 minutes).
2. Level the vehicle, ground the attachment, place the travel select lever in the (N) NEUTRAL DETENT position, come to a complete stop, engage the parking brake switch and shut off the engine.
3. Unlatch and open the engine cover.
4. Place a receptacle under the engines oil pan drain plug (4). The drain plug is located under the engine on the frame side.
5. Remove the drain plug (4) and drain the oil from the engine oil pan.
6. Allow the oil to drain completely into the receptacle. Transfer the oil to a container with a cover and label the container as used motor oil. Dispose of properly.

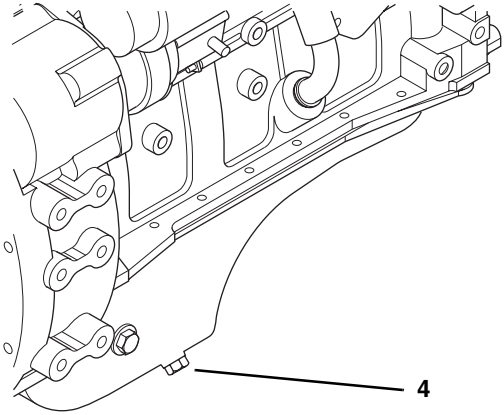

OU0303

Courtesy of Crane.Market

https://truckmanualshub.com/

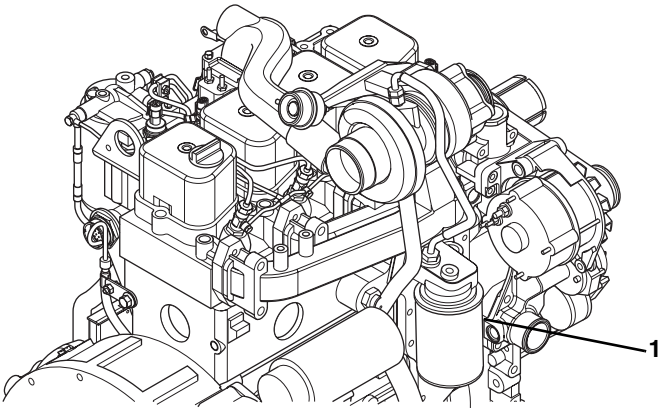

7. Remove the oil filter (1) and clean the filter sealing surface.
8. Apply a thin coat of clean engine oil to the new filter mating surface.
9. Install the new oil filter and hand tighten. Use an oil filter wrench or strap to tighten the filter down another 1/4 to 1/2 turn.

Courtesy of Crane.Market

https://truckmanualshub.com/

10. Install the drain plug (2) into the oil pan and tighten securely.

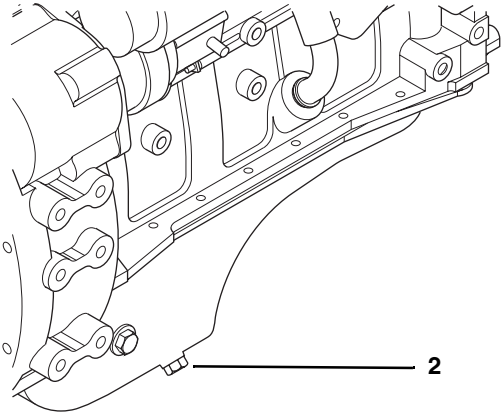

11. Remove the engine oil fill cap (3) and add 15W40 motor oil. (Refer to engine manufacturers manual for recommended oil type for various conditions.) Engine oil capacity with filter change is 10.5 quarts (10 liters).
12. Reinstall oil fill cap (3). Start engine and allow to run for several minutes.
13. Shut off engine. Wait several minutes and check the oil level on the dipstick (4). Add oil if necessary. **DO NOT** overfill.
14. Look for oil leaks at the filter and drain plug. Tighten if necessary.

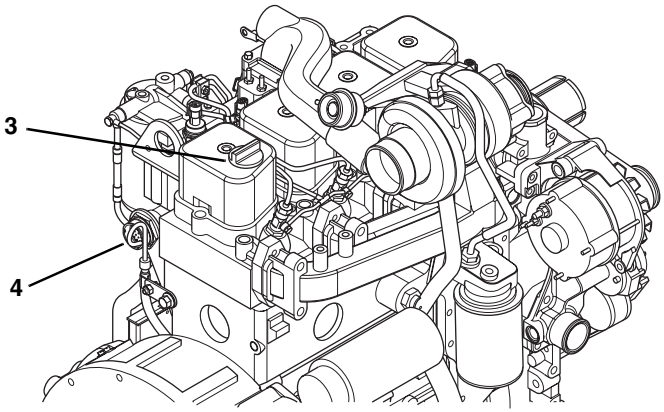

Courtesy of Crane.Market

https://truckmanualshub.com/

6. Engine Fuel System

A. Drain Water from Fuel Water Separator/Filter

(10 Hour Intervals)

OH2660

OS0851

Unlatch and open the engine cover. Loosen the drain cock (1) on the underside of the fuel filter (2) and allow all the water to drain into a container until clear fuel is visible. Dispose of properly. Tighten drain cock after draining. Close and latch engine cover.

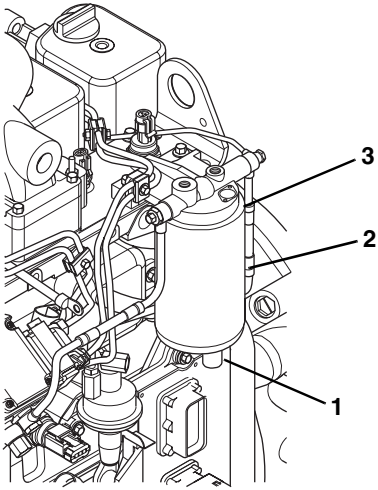

OU1290

Courtesy of Crane.Market

https://truckmanualshub.com/

B. Change Fuel Filter

(250 Hour Intervals)

OH2710

OS0870

The fuel filter (2) must be changed at shorter intervals with evidence of water or contaminated fuel.

1. Unlatch and open the engine cover.
2. Clean around the fuel filter head (3).
3. Unscrew the fuel filter and dispose of properly.
4. Clean the gasket surface of the filter head and replace the o-ring.
5. Fill the new fuel filter with clean No. 2 diesel fuel.
6. Lubricate the o-ring seal with clean No. 2 diesel fuel.
7. Install the fuel-filled filter and hand tighten. **DO NOT** overtighten.

NOTE: *Mechanical over-tightening may distort the threads or damage the sealing ring.*

8. Close and latch the engine cover.

Controlled venting is provided at the injection pump through the fuel drain manifold. Small amounts of air introduced by changing the fuel filter element will be vented automatically as long as the element was filled with fuel prior to installation.

Courtesy of Crane.Market

https://truckmanualshub.com/

C. Replace In-line Fuel Strainer

(250 Hour Intervals)

250 OH2710

1. Unlatch and open the engine cover.
2. The fuel strainer (1) is located down line from the engines lift pump (2). Loosen the two hose clamps (3) that secure the strainer in place.
3. Remove the old strainer and dispose of properly.
4. Install the new strainer with arrow (4) pointing toward the lift pump.
5. Assemble the hoses to the strainer and tighten the hose clamps.
6. Remove air from the fuel system (see ìBleeding Fuel Systemî on page 121).
7. Close and latch the engine cover.

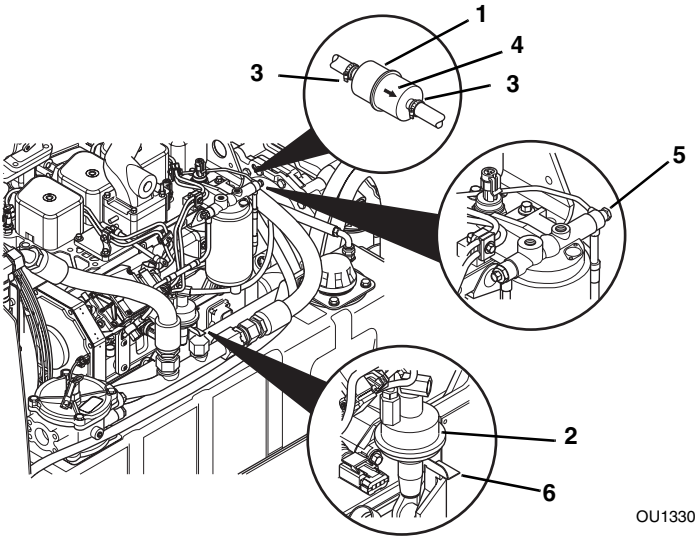

Courtesy of Crane.Market

https://truckmanualshub.com/

D. Bleeding Fuel System

Air must be vented from the fuel system whenever any component between the fuel tank and the injection pump has been disconnected, or when the system has been emptied or run out of fuel.

WARNING: **DO NOT** bleed the fuel system of a hot engine. Doing so could create a fire hazard. Allow the engine to cool before bleeding the fuel system.

***IMPORTANT! DO NOT** attempt to start the engine until the injection pump has been filled and primed with fuel. Serious damage to the lift pump will result due to lack of proper lubrication.*

1. To vent the low pressure lines and fuel filter, open the vent screw (5) located on the filter head.
2. Operate the hand plunger (6) on the lift pump (2) until fuel flowing from the fitting is free of air.
3. Tighten the vent screw (5) and torque to 7 lb-ft (9 Nm).

The process to vent the high pressure fuel lines involves energizing the starter motor to rotate the crankshaft which will, in turn, pump any unwanted air from the fuel lines.

CAUTION: When using the starting motor to vent the fuel system, **DO NOT** energize the starter solenoid or crank the engine for more than 15 seconds at a time; wait two minutes between engagements.

Courtesy of Crane.Market

https://truckmanualshub.com/

WARNING: **KEEP CLEAR** of spraying fuel. Fuel can spray when venting high pressure lines. The fuel pressure is sufficient to penetrate the skin and cause serious bodily injury. Wear protective clothing and safety glasses.

4. To vent the high pressure fuel lines (1), loosen one fitting (2) at the injector (3).
5. Turn the ignition switch to the START position and crank the engine for a maximum of 15 seconds or until fuel, free of air, comes out of the injector fitting.
6. Tighten the fitting. Torque to 22 lb-ft (30 Nm).
7. Repeat Steps 4-6 for each fitting until the engine runs smoothly.
8. With the engine running, visually check for leaks. Turn ignition switch OFF.

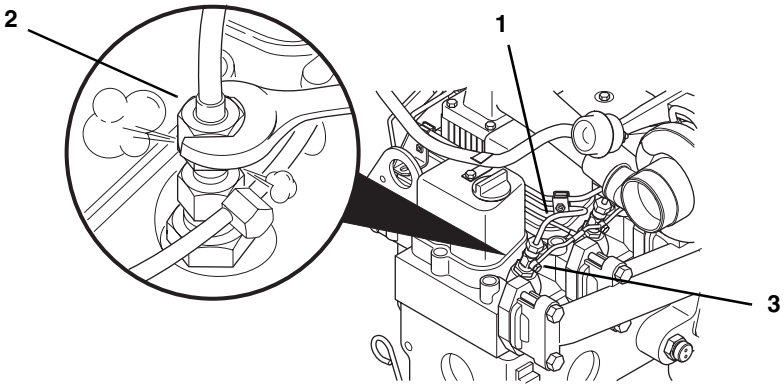

OU0250

Courtesy of Crane.Market

https://truckmanualshub.com/

7. Engine Fan Belt

Engine Fan Belt Check

(1000 Hour Intervals)

OH2690

OS08802

1. Level the vehicle, ground the attachment, place the travel select lever in the (N) NEUTRAL DETENT position, engage the parking brake switch and shut off the engine.
2. Unlatch and open the engine cover.
3. Inspect the fan belt (4). Replace if cracked or frayed.
4. This engine is equipped with an automatic belt tensioner (5). Inspect the tensioner bearing. Spin the bearing and check for rough spots under hand pressure.
5. Spin the fan and check for wobble or excessive play. Maximum play should be .006 inch (0,15 mm).
6. To install the fan belt (4); first position the belt over the fan pulley (6), crankshaft pulley (7), alternator pulley (8) and onto the tensioner pulley (5) then, while holding the tensioner (5) toward the center of the engine, slide the belt over the water pump pulley (9). Release the tensioner to apply tension on the belt. To hold the tensioner toward the center of the engine, insert a 3/8" breaker bar into the square hole (10) in the tensioner arm.
7. Close and latch the engine cover.

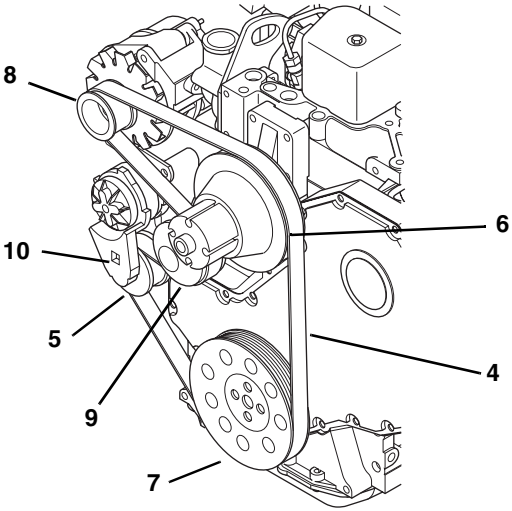

OU0240

Courtesy of Crane.Market

https://truckmanualshub.com/

8. Air Conditioner Compressor Belt (Optional)

Air Conditioner Compressor Belt Check

(1000 Hour Intervals)

1000

OH2690

1. Level the vehicle, ground the attachment, place the travel select lever in the (N) NEUTRAL DETENT position, engage the parking brake switch and shut off the engine.
2. Unlatch and open the engine cover.
3. Inspect the air conditioner compressor belt (1). Replace if cracked or frayed.
4. Check the tension of the belt midway between the fan pulley (2) and the compressor pulley (3). The belt deflection should be 3/16" (4,8 mm) with an applied force of 5-1/2 lb (2,5 kg).
5. Adjust the tension on the belt by loosening the bolts (4) on the compressor bracket (5). Adjust the belt with the nut on the adjustment rod end (6). Tighten the compressor bracket bolts when adjustment is complete.
6. Close and latch the engine cover.

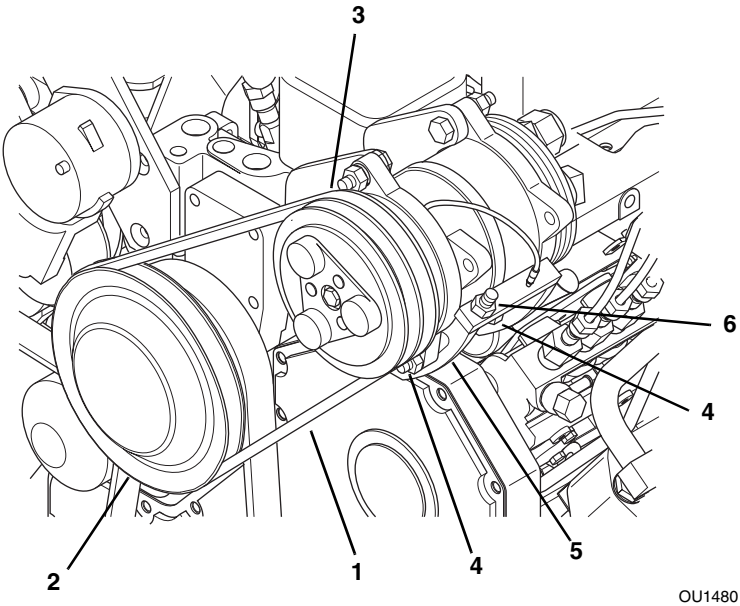

OU1480

Courtesy of Crane.Market

https://truckmanualshub.com/

9. Hydraulic Oil and Filter

A. Hydraulic Oil Level Check

(10 Hour Intervals)

10 OH2660 OS0660

1. Level the vehicle, place the travel select lever in the (N) NEUTRAL DETENT position and engage the parking brake switch.
2. Lower and retract the boom, level and lower the attachment to the ground, transfer the transfer carriage to the rear position and shut off the engine.
3. Unlatch and open the engine cover.
4. Allow the hydraulic oil to cool.
5. Locate the sight glass (7) along the rear wall of the hydraulic tank. Check the level of the hydraulic oil in the tank. The oil level should be in the center of the sight glass when oil is cold. If oil is not visible, remove the hydraulic oil fill cap (8) or (9) and add hydraulic oil (ISO Grade 46 Hydraulic Oil) until the oil level is visible in the center of the sight glass. It is recommended that the fill port (9) be used to add oil. The oil is added through the filter which will help to prevent contaminates from entering the hydraulic system. **DO NOT** overfill. **DO NOT** add oil through the hydraulic oil tank breather (10) mounted on the engine side panel.
6. Reinstall the hydraulic oil fill cap (8) on the tank or the cap (9) on the fill tube on top of the tank.
7. Close and latch the engine cover.

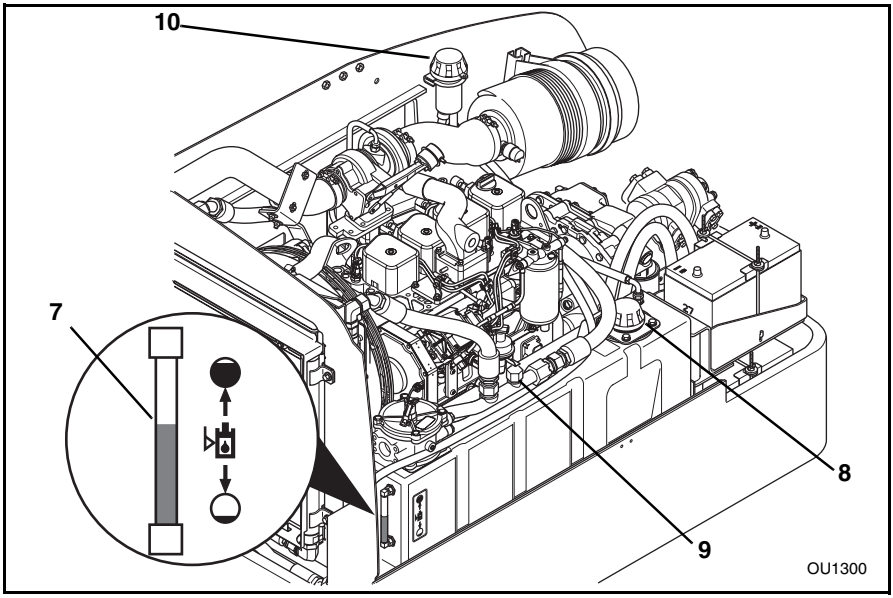

Courtesy of Crane.Market

https://truckmanualshub.com/

B. Hydraulic Oil & Filter Change

(First 100 Hours - Filter Only)

OU0530

OT0840

(1000 Hour Intervals - Oil & Filter)

OH2690

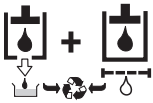

OS0840

Change the hydraulic oil filter after the first 100 hours of operation and change the hydraulic oil and filter every 1000 hours of operation thereafter. The hydraulic filter must be changed anytime the hydraulic oil filter restriction warning indicator light on the front dash panel comes ON. See page 51 for the location of this light on the front dash panel.

1. Level the vehicle, ground the attachment, place the travel select lever in the (N) NEUTRAL DETENT position and engage the parking brake switch.
2. Fully retract all hydraulic cylinders and shut off the engine.
3. Unlatch and open the engine cover. Allow the oil to cool.

WARNING: **DO NOT** change the hydraulic oil or filter with the engine running. Contact with moving parts can cause death or serious personal injury.

4. Clean around the hydraulic filter head cover (1). Loosen but do not remove the washer head bolts (2) that secure the filter head cover to the hydraulic filter housing (3).
5. Rotate the cover clockwise and remove the cover (1). Retain the o-ring seal (4) located in the groove on top of the filter housing.
6. Remove the spring (5) from the top of the filter. Remove the filter (6) with center assembly from the filter chamber.
7. Remove the center assembly (7) from the filter, discard the filter.
8. Inspect the inside of the filter chamber (8), if contamination is evident, the chamber can be pulled straight out and cleaned. Be sure to retain the o-ring (9) under the lip of the chamber. Reassemble the chamber and o-ring. Be sure the chamber is seated tight against the inside of the filter housing.
9. Install a new filter (6) onto the center assembly (7). Push the filter all the way on.
10. Insert the filter into the filter chamber (8) and seat completely over the tube at the bottom of the chamber.
11. Reposition the spring (5) with the wide side up, on top of the filter.
12. Reposition the cover on top of the housing, rotate the cover counterclockwise into position under the washer head bolts. Torque all four washer head bolts to 9 lb-ft (12 Nm).

Courtesy of Crane.Market

https://truckmanualshub.com/

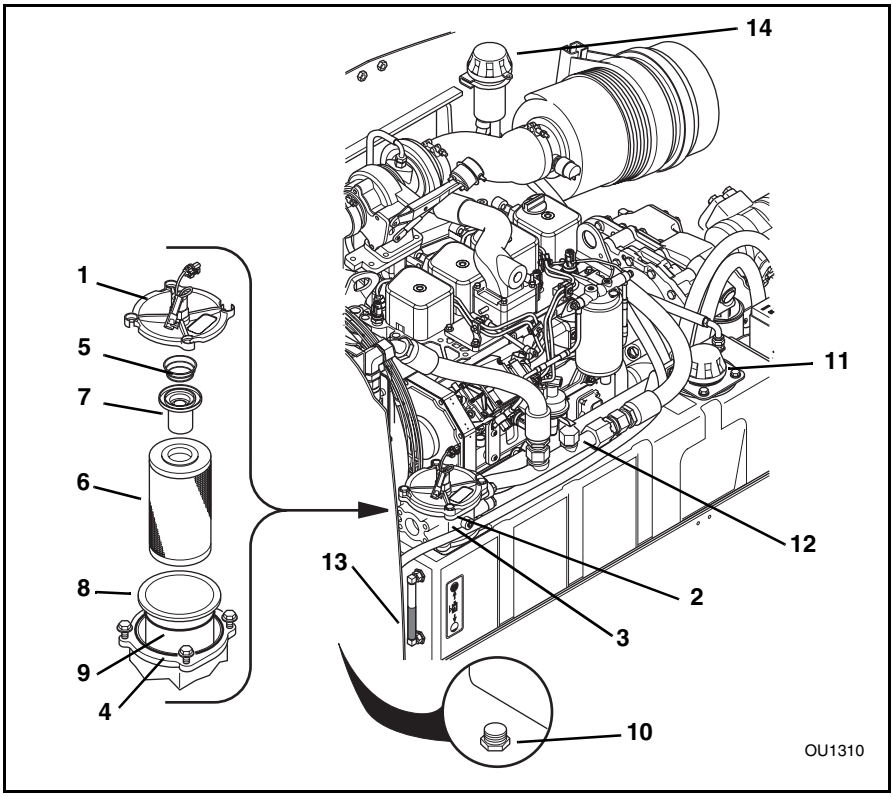

13. Place a receptacle under the hydraulic reservoir drain plug (10). The receptacle must be large enough to hold 35 gallons (132 liters) of oil. Remove the drain plug and allow the oil to drain into the receptacle. Transfer the oil to a container with a cover and label the container as used oil. Dispose of properly.
14. Re-install the drain plug (10) into the reservoir. Torque the drain plug to 25-40 lb-ft (34-54 Nm)
15. Remove the fill cap (11) located toward the front of the hydraulic reservoir. It is recommended that the fill port (12) be used to add oil. The oil is added through the filter which will help to prevent contaminates from entering the hydraulic system. Fill with hydraulic oil (ISO Grade 46 Hydraulic Oil) until the oil level is in the center of the sight glass (13) when oil is cold and all cylinders retracted. Reservoir capacity is 33.5 gallons (127 liters). Re-install the fill cap (11). **DO NOT** add oil through the hydraulic oil tank breather (14).
16. Close and latch the engine cover.
17. Run vehicle and operate all hydraulic functions. Cycle all modes of controls to purge air from the system.
18. Check for leaks.

Courtesy of Crane.Market

https://truckmanualshub.com/

10. Transmission Oil and Filter

Approved Universal Tractor Fluid	
JOHN DEERE	JDM J20C (HY-GARD)
FORD/NEW HOLLAND	ESN-M2C134-D (HYDRAULIC OIL 134)
MASSEY FERGUSON	M-1141 (PERMATRAN III)
CHEVRON	CHEVRON 1000 THF

A. Transmission Oil Level Check

(10 Hour Intervals)

OH2660

OS0890

1. Level the vehicle, ground the attachment, place the travel select lever in the (N) NEUTRAL DETENT position and engage the parking brake switch.
2. Check the transmission oil level with the engine at idle and the oil at normal operating temperature.
3. Remove the transmission dipstick (1). Check oil level.
4. Add Universal Tractor Fluid to transmission as required to bring the level up to the full mark.

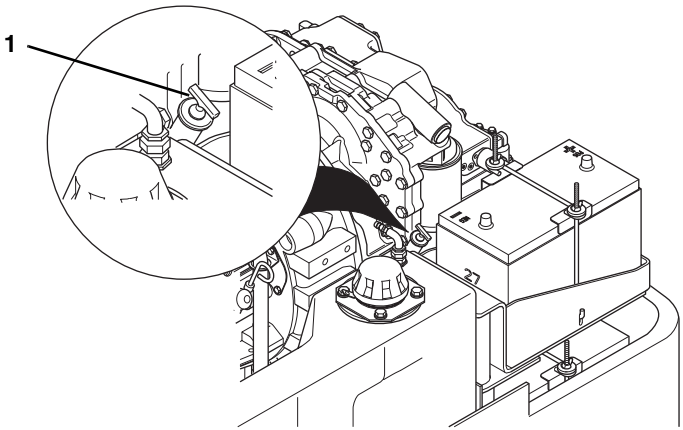

OU0290

Courtesy of Crane.Market

https://truckmanualshub.com/

B. Transmission Oil & Filter Change

(First 100 Hours)
(1000 Hour Intervals)

OU0530

OH2690

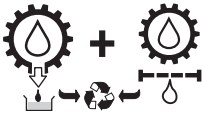
OS0950

1. Level the vehicle, ground the attachment, place the travel select lever in the (N) NEUTRAL DETENT position, engage the parking brake switch and shut off the engine.
2. Unlatch and open the engine cover. Allow the engine and transmission to cool.
3. Place a receptacle under the transmission drain plug (2). Remove the drain plug and allow the Universal Tractor Fluid to drain into the receptacle. Transfer the used oil into a suitable container with a cover and label the container as used oil. Dispose of properly.

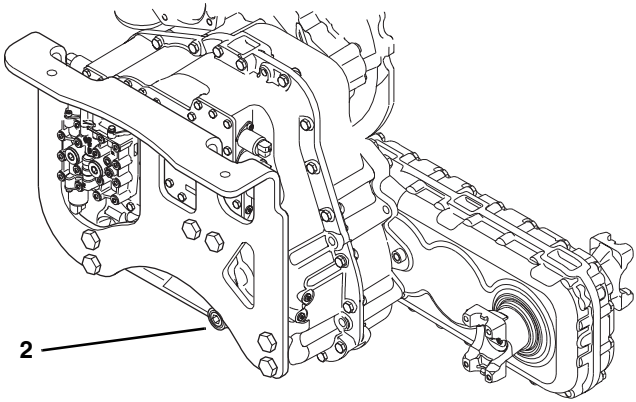

OU0800

4. Clean and re-install the drain plug into the transmission housing. Torque the drain plug (2) to 26 lb-ft (35 Nm)

Courtesy of Crane.Market

https://truckmanualshub.com/

5. Loosen, do not remove the upper battery tray retainer bolt (1). Swing the upper battery tray out to gain access to the transmission filter.
6. Remove the filter (2) and dispose of properly. Clean the mating surface where the filter mounts.
7. Apply a thin film of clean Universal Tractor Fluid to the new filter gasket. Carefully install a new filter (2).
8. Swing the upper battery tray back into position and tighten the battery tray retainer bolt.
9. Remove the dipstick (3) and fill with Universal Tractor Fluid. The maximum capacity of the entire transmission system is 15.9 quarts (15 liters). Re-install the dipstick.

NOTE: *To avoid over filling the transmission, all the oil will not drain out of the torque converter and the oil cooler. Start by adding 9 to 9.5 quarts (8,5 to 9 liters) of oil into the transmission only.*

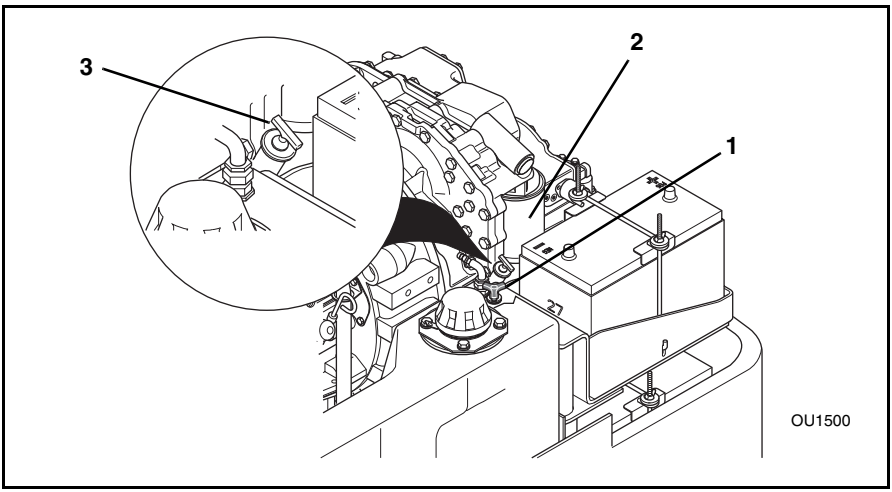

10. Check the transmission level and add oil as required following the procedures outlined in ìTransmission Oil Level Checkî on page 128.
11. Close and latch the engine cover.

Courtesy of Crane.Market

https://truckmanualshub.com/

11. Transfer Case Oil

Approved Universal Tractor Fluid	
JOHN DEERE	JDM J20C (HY-GARD)
FORD/NEW HOLLAND	ESN-M2C134-D (HYDRAULIC OIL 134)
MASSEY FERGUSON	M-1141 (PERMATRAN III)
CHEVRON	CHEVRON 1000 THF

A. Transfer Case Oil Level Check

(250 Hour Intervals)

OH2710

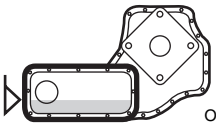
OU0560

1. Place the vehicle on level ground, ground the attachment, level the vehicle side-to-side, place the travel select lever in the (N) NEUTRAL DETENT position, engage the park brake switch and shut off the engine.
2. Clean the area around the transfer case oil fill/level plug (4).
3. Remove the oil fill/level plug from the transfer case and check the oil level.
4. Add oil as required through the oil fill/level plug hole (4). Bring the oil level up even with the oil fill/level plug hole. Refer to the chart on this page for oil recommendations.
5. Clean and re-install the oil fill/level plug (4) and torque to 26 lb-ft (35 Nm).

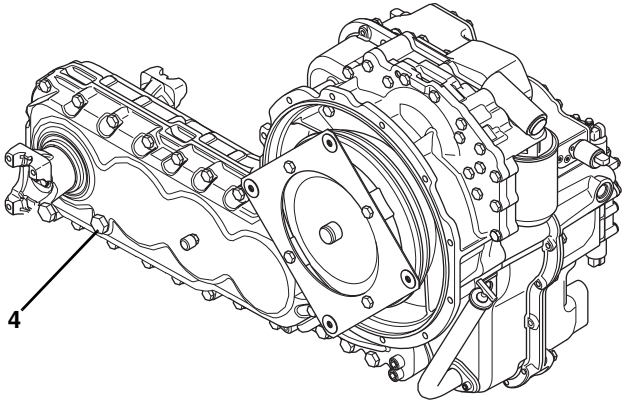

OU0810

Courtesy of Crane.Market

https://truckmanualshub.com/

B. Transfer Case Oil Change

(First 100 Hour Intervals) and (1000 Hour Intervals)

OU0530

OH2690

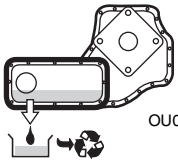

OU0550

1. Place the vehicle on level ground, ground the attachment, level the vehicle side to side, place the travel select lever in the (N) NEUTRAL DETENT position, engage the park brake switch and shut off the engine.
2. Clean the area around the transfer case oil fill/level plug (1) and the oil drain plug (2).
3. Place a receptacle under the transfer case drain plug.
4. Remove the oil fill/level plug (1).
5. Remove the oil drain plug (2) from the transfer case (3).
6. Allow the oil to drain completely into the receptacle. Transfer the oil into a container with a cover and label the container as used oil. Dispose of properly.
7. Clean and re-install the transfer case oil drain plug (2). Torque to 26 lb-ft (35 Nm).
8. Fill the transfer case with oil through the oil fill/level plug hole (1). Fill until the level is up to even with the oil fill/level plug hole The capacity is 1.7 qt (1,6 liters). Refer to the chart on page 131 for oil recommendations.
9. Clean and re-install the oil fill/level plug (1). Torque to 26 lb-ft (35 Nm).

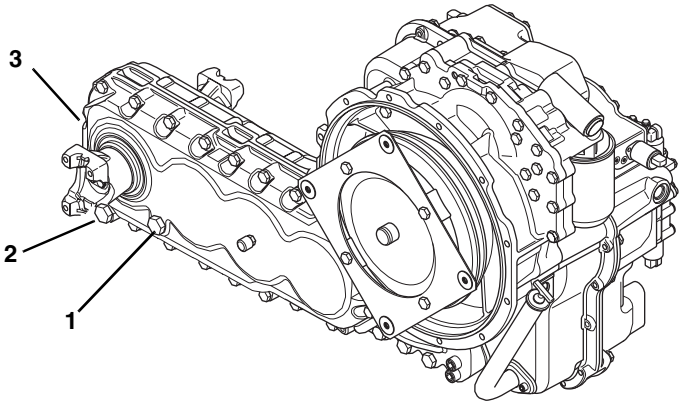

OU0810

Courtesy of Crane.Market

https://truckmanualshub.com/

12. Axle Oil

A. Axle Oil Level Check

(250 Hour Intervals)

250

Approved Universal Tractor Fluid	
JOHN DEERE	JDM J20C (HY-GARD)
FORD/NEW HOLLAND	ESN-M2C134-D (HYDRAULIC OIL 134)
MASSEY FERGUSON	M-1141 (PERMATRAN III)
CHEVRON	CHEVRON 1000 THF

1. Level the vehicle, ground the attachment, place the travel select lever in the (N) NEUTRAL DETENT position, engage the parking brake switch and shut off the engine.
2. Clean the area around the axle fill plug (4) and the axle level plugs (5) and remove the plugs from the axle housing.
3. Add Universal Tractor Fluid to bring the oil level up and even with the level plug holes.
4. Re-install the axle fill plug (4) and torque to 37 lb-ft (50 Nm).
5. Re-install the axle level plugs (5) and torque to 37 lb-ft (50 Nm).

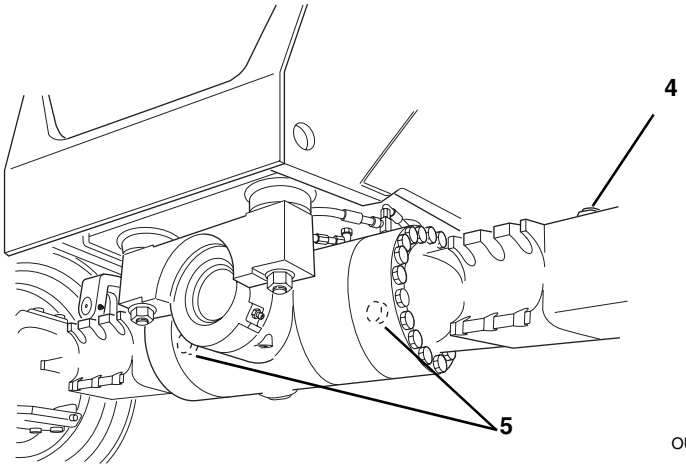

Courtesy of Crane.Market

https://truckmanualshub.com/

B. Axle Oil Change

(First 100 Hours)

(1000 Hour Intervals)

OH2690

OU0530

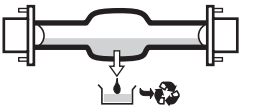

OU0600

NOTE: *At the 1000 Hour Interval Oil Change also inspect the brake disc wear. Refer to ìBrake Disc Inspectionî on page 135 and follow the inspection procedure. After brake disc inspection is complete, reassemble the level plugs using new o-rings.*

1. Level the vehicle, ground the attachment, place the travel select lever in the (N) NEUTRAL DETENT position, engage the parking brake switch and shut off the engine.
2. Clean the area around the axle drain plug (3), the axle fill plug (1) and the axle level plugs (2).
3. Place a receptacle under the axle drain plug (3). Remove the plug from the axle housing and allow the oil to drain completely.
4. Transfer the oil to a container with a cover and label the container as used oil. Dispose of properly.

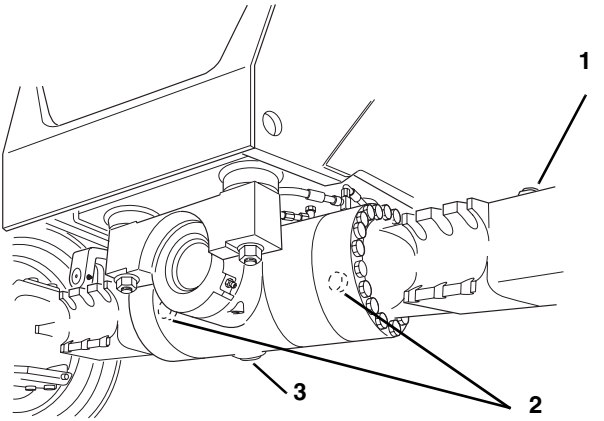

OU0750

5. Clean off the axle drain plug (3) and re-install. Remove the axle fill plug (1) and the axle level plugs (2) from the axle housing. Check brake disc wear at this time. Refer to ìBrake Disc Inspectionî on page 135
6. Fill the axle with Universal Tractor Fluid through the axle fill hole until the oil level is even with the axle level holes (2). The axle capacity is:

   Front Axle.....10.6 quarts (10 liters)

   Rear Axle .....9.5 quarts (9 liters)
7. Fill axle slowly, the oil has to run across the differential. Allow time for the oil to run across the differential. Axle level is correct when oil is up to both level plugs (2).

Courtesy of Crane.Market

https://truckmanualshub.com/

8. Reassemble the level plugs (2) using new o-rings. Torque to 37 lb-ft (50 Nm).
9. Re-install the axle fill plug (1) into axle housing. Torque to 37 lb-ft (50 Nm).

13. Brake Disc Inspection

Brake Disc Wear Check

(1000 Hour Intervals)

OH2690

OU0570

Check the brake discs for wear every 1,000 hours of operation or yearly.

If the brake discs require service due to wear, the axle should be checked, serviced and repaired only by experienced service technicians who are aware of all safety instructions and particular component features.

A. Front Axle

WARNING: BLOCK ALL FOUR WHEELS. Failure to do so could result in death or serious injury from vehicle roll-away.

1. **Block all four wheels** to prevent any unexpected movement of the vehicle after the parking brake is disabled.
2. Remove the cover (4) from the cab floor to gain access to the valve plate under the cab.
3. Attach a remote portable hydraulic pressurizing unit to the park brake gauge port (5) on the accumulator charge/secondary function valve (6) located under the cab floor.

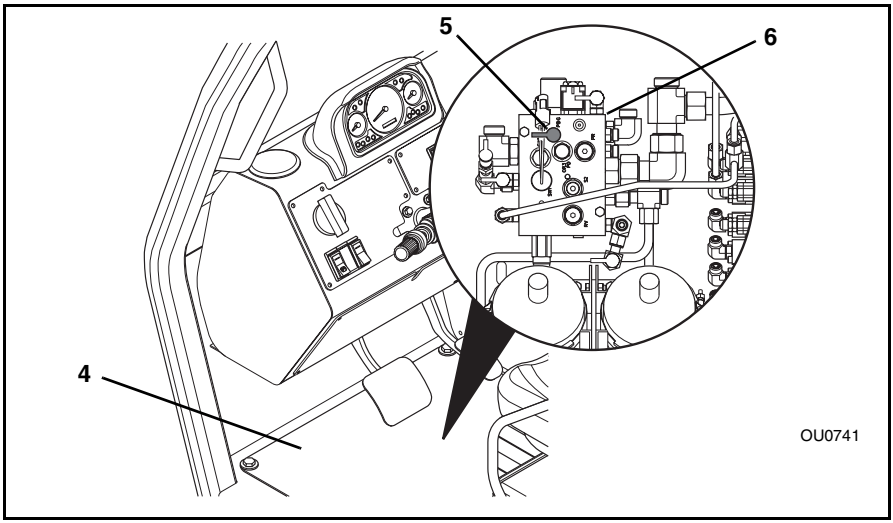

Courtesy of Crane.Market

https://truckmanualshub.com/

4. Turn the ignition switch to the ON position (with the engine not running), release the park brake (park brake switch OFF).
5. Pressurize the park brake with the pressurizing unit. Pump pressure into the park brake system. **DO NOT** exceed 650 psi (45 bar). Close the pump needle valve on the pressurizing unit.

CAUTION: **DO NOT** exceed 650 psi (45 bar) when pressurizing the park brake. Applying too much pressure may damage the brake seals.

6. Working through the level plug hole (1), carefully use a screwdriver to spread the brake discs apart.

***IMPORTANT! DO NOT** damage the surfaces of the brake discs when spreading the brake discs*

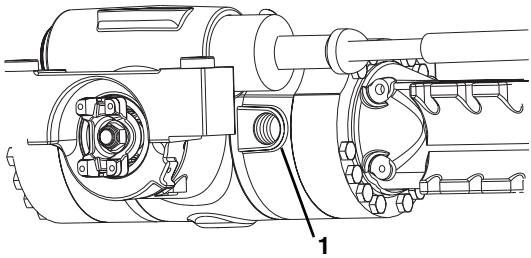

7. Using a feeler gauge, check the gap (2) between the brake discs (3). If the gap is greater than .22" (5,6 mm), replace the brake discs.

***NOTE:** If the brake discs are worn beyond .22" (5,6 mm), the brake disc must be replaced on both sides of the axle at the same time.*

8. Repeat step 6 and step 7 for the other side of the axle.
9. Continue with step 6 of ìB. Axle Oil Changeî on page 134.

Courtesy of Crane.Market

https://truckmanualshub.com/

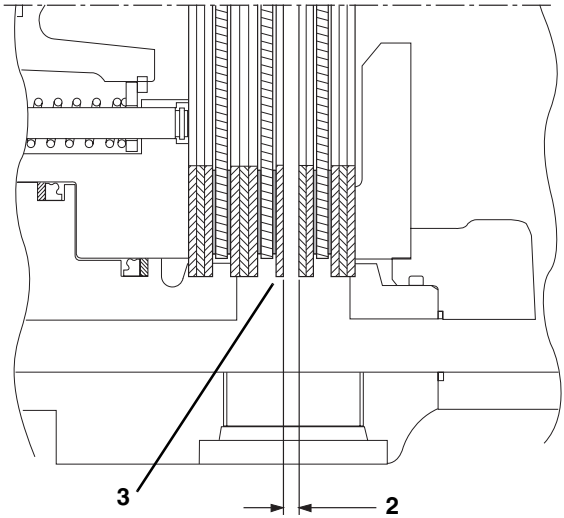

B. Rear Axle

1. Working through the level plug hole (1), carefully use a screwdriver to spread the brake discs apart.

IMPORTANT! DO NOT *damage the surfaces of the brake discs when spreading the brake discs.*

2. Using a feeler gauge, check the gap (2) between the brake discs (3). If the gap is greater than .167" (4,25 mm), replace the brake discs.

NOTE: *If the brake discs are worn beyond .167" (4,25 mm), the brake disc must be replaced on both sides of the axle at the same time.*

3. Repeat step 1 and step 2 for the other side of the axle.
4. Continue with step 6 of ìB. Axle Oil Changeî on page 134.

Courtesy of Crane.Market

https://truckmanualshub.com/

14. Wheel End Oil

WARNING: **DO NOT** perform service or maintenance on this vehicle with the engine running. Contact with moving parts can cause death or serious personal injury.

Approved Universal Tractor Fluid	
JOHN DEERE	JDM J20C (HY-GARD)
FORD/NEW HOLLAND	ESN-M2C134-D (HYDRAULIC OIL 134)
MASSEY FERGUSON	M-1141 (PERMATRAN III)
CHEVRON	CHEVRON 1000 THF

A. Wheel End Oil Level Check

(250 Hour Intervals)

250

1. Position the vehicle on level ground, move the vehicle forward or backward enough to ensure that the lower edge of the wheel end (1) fill/drain plug hole (2) is positioned horizontally (3).
2. Ground the attachment, place the travel select lever in the (N) NEUTRAL DETENT position, engage the parking brake switch and shut off the engine.
3. Clean the area around the wheel end fill/drain plug (2). Slowly remove the plug. Check the oil level.
4. Add Universal Tractor Fluid to bring the oil level up and even with the plug hole.
5. Clean and re-install the wheel end fill/drain plug (2). Torque to 37 lb-ft (50 Nm).

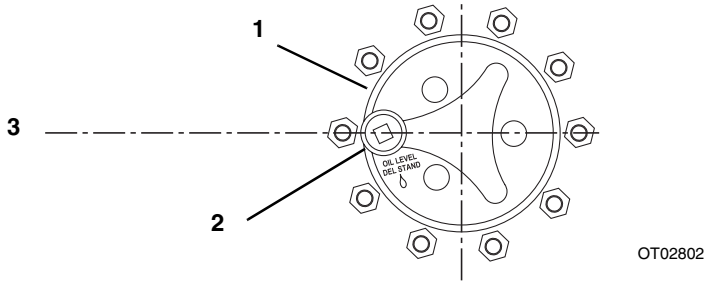

Courtesy of Crane.Market

https://truckmanualshub.com/

B. Wheel End Oil Change

(First 100 Hours)

(1000 Hour Intervals)

OU0530

OH2690

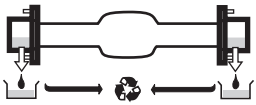

OU0580

1. Position the vehicle on level ground, move the vehicle forward or backward enough to ensure that the wheel end fill/drain plug (4) is in the 6 oíclock position (5).

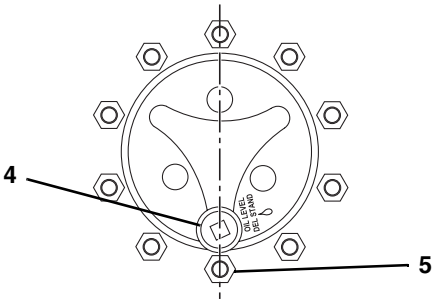

OT02902

2. Ground the attachment, place the travel select lever in the (N) NEUTRAL DETENT position, engage the parking brake switch and shut off the engine.
3. Clean the area around the wheel end fill/drain plug (5). Slowly loosen the plug. Hold a receptacle under the wheel end and remove the plug from the wheel end.
4. Allow the oil to drain completely into the receptacle. Transfer the oil to a container with a cover and label the container as used oil. Dispose of properly.
5. Reposition the vehicle so the wheel end fill/drain plug is positioned horizontally (3).
6. Fill the wheel end with Universal Tractor Fluid to the level of the drain plug (2). Wheel end capacity is approximately:

   Front Axle..... 1.3 quarts (1,2 liters)

   Rear Axle ..... 1.7 quarts (1,6 liters)
7. Clean and re-install the wheel end fill/drain plug (2). Torque to 37 lb-ft (50 Nm).

Courtesy of Crane.Market

https://truckmanualshub.com/

15. Wheels and Tires

A. Tire Air Pressure Check

(10 Hour Intervals)

OH2660

OS0900

DANGER: **LOW TIRE PRESSURE** can result in tipover. **MAINTAIN** proper tire pressure at all times.

Check all four tires:

1. Remove the valve stem cap.
2. Check tire pressure using a good quality gauge. You cannot tell if a tire is properly inflated simply by looking at it.
3. Add air if required. Fill the tire(s) to:

   Standard Tires 15.5 - 25, 12 ply.....65 psi (448 kPa)

   Optional Rock Tire: 15.5 - 25, 12 ply.....65 psi (448 kPa)

   Optional Radial Tire: 15.5R25 2 star.....65 psi (448 kPa)
4. **DO NOT** overinflate.
5. Replace the valve stem cap.

Courtesy of Crane.Market

https://truckmanualshub.com/

B. Wheel Lug Nut Torque Check

(First 100 Hours)

OU0530

OU0150

1. Wire brush the area around the lug nuts if necessary. There are separate lockwashers (1) under the lug nuts (2). Be sure the lockwashers are installed under each lug nut.
2. Using the torque sequence (A thru K) shown below, alternately check the torque of each of the ten lug nuts. The recommended torque should be 430-470 lb-ft (583-637 Nm).

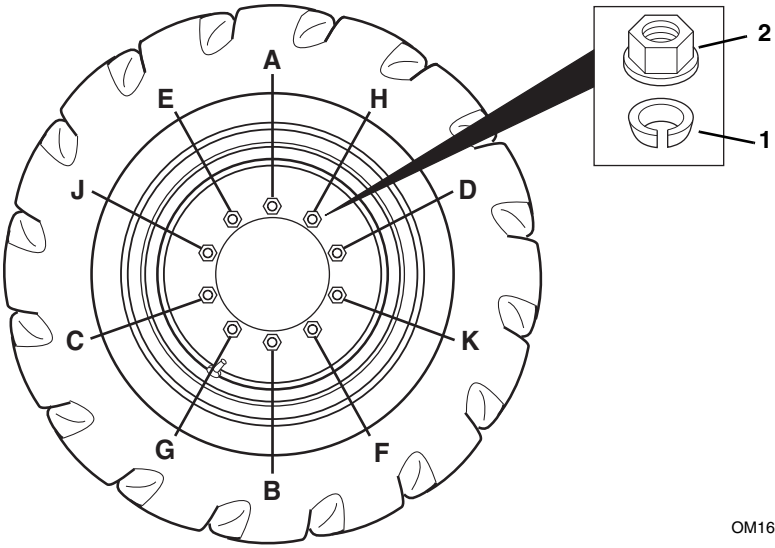

OM1620

C. Replacing Tires

WARNING: Mis-matched tire sizes and PLY or star ratings may compromise vehicle stability and may result in vehicle tipover.

IMPORTANT! *The Standard Tire size and ply rating for this vehicle is: 15.5 - 25, 12 PLY. Make sure any replacement tire, including optional tires, are of the same size and ply or star rating.* ***DO NOT*** *use lower PLY or star rated tires on this vehicle.*

Courtesy of Crane.Market

https://truckmanualshub.com/

16. Battery

WARNING: Lead-acid batteries produce flammable and potentially explosive gases. To avoid personal injury when checking, testing or charging batteries:

- **DO NOT** use smoking materials near batteries.
- Keep arcs, sparks and open flames away from batteries.
- Provide ventilation and wear safety glasses.

The batteries in this vehicle are a maintenance free battery and shipped in the vehicle filled with electrolyte and charged. A warning indicator light will illuminate on the display panel when the alternator is no longer able to charge the batteries. To service the batteries:

1. Level the vehicle, ground the attachment, place the travel select lever in the (N) NEUTRAL DETENT position, engage the parking brake switch and shut off the engine. Unlatch and open the engine cover.
2. The batteries (1) are located inside the engine pod, in front of the hydraulic oil reservoir (2). The upper battery must be rotated out of the way to gain access to the lower battery.
3. Wearing safety glasses, visually inspect the batteries for cleanliness. Check terminals for corrosion. Check the cable connections to ensure proper tightness. Replace a battery if it has a cracked, melted or damaged case.

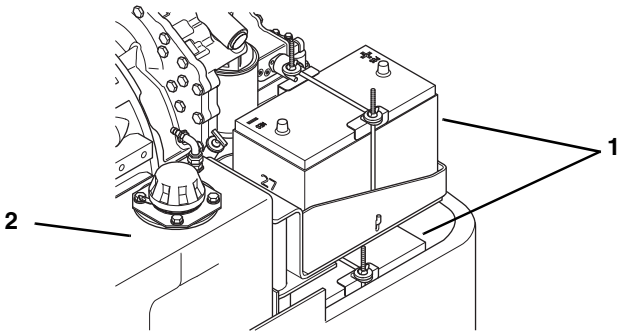

Courtesy of Crane.Market

https://truckmanualshub.com/

17. Fuse & Relay Replacement

Fuses and Relays (Fuse Block)

The fuses and relays in this vehicle protect the electrical system. The fuses most often fail if there is a short or grounded wire in the applicable circuit. The fuses will have to be replaced if they fail. If fuses continually fail, check the system for shorts, grounds or defective electrical components.

The fuse and relay block is mounted under the lower right side of the operators side console (3). To gain access, remove the cover plate (4) from the right side console.

Remove the plastic cover (5) from the fuse and relay block.

Refer to the charts on page 144 through page 147 for the locations of fuses and relays within the fuse block.

When reassembling the cover to the side console, torque the capscrews to 7-8 lb-ft (9,5-10,6 Nm).

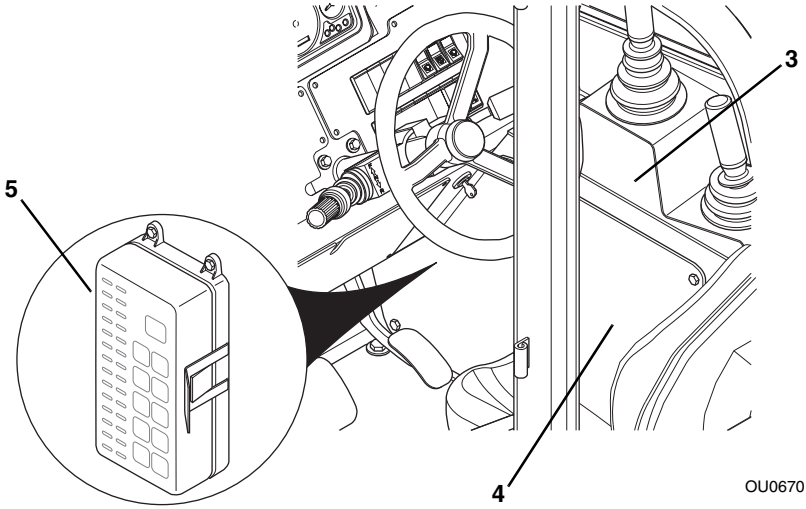

Courtesy of Crane.Market

https://truckmanualshub.com/

Relay Locations

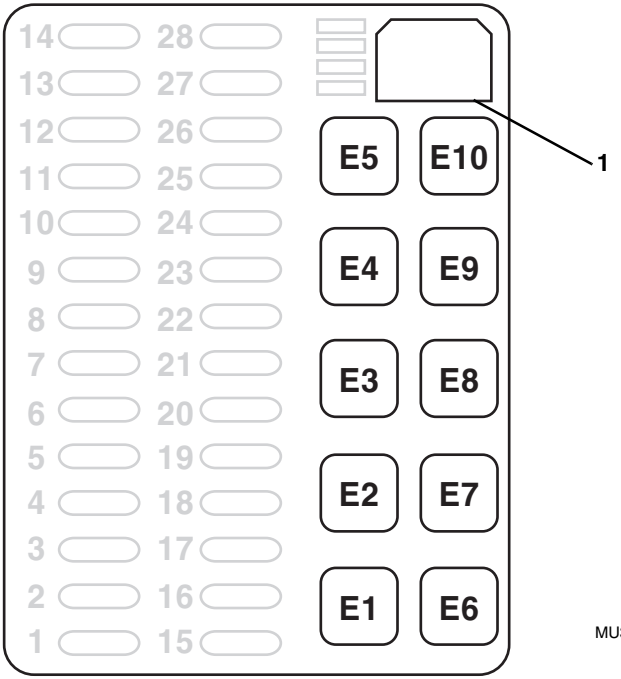

Courtesy of Crane.Market

https://truckmanualshub.com/

No.	Volt	Circuit Controlled
E1	12 Volt	Transmission Control
E2	12 Volt	Ignition
E3	12 Volt	Neutral Start
E4	12 Volt	Back-Up Alarm
E5	ñ	Open
E6	12 Volt	Stability Lock
E7	12 Volt	Boom Proximity
E8	12 Volt	Light Power (Opt)
E9	12 Volt	Cab Power (Opt)
E10	ñ	Open

Flasher

The flasher (1) for the optional roadlights is located in the upper right hand corner of the fuse block. Pull the flasher straight out to replace.

Courtesy of Crane.Market

https://truckmanualshub.com/

Fuse Locations

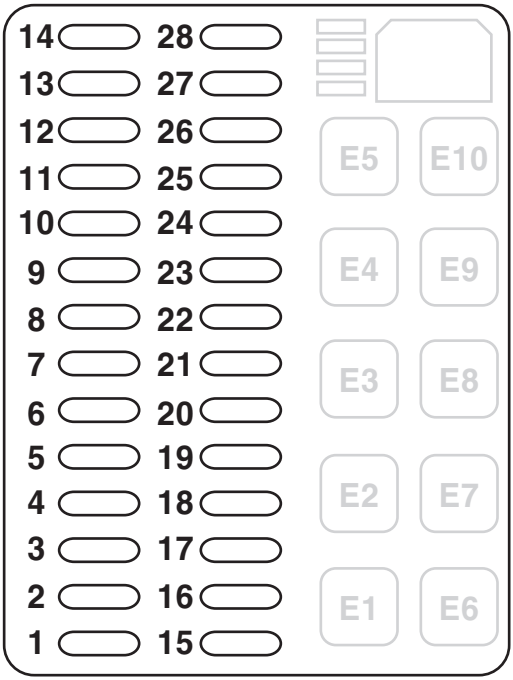

MU3390

Courtesy of Crane.Market

https://truckmanualshub.com/

No.	Amp	Color	Circuit Protected
1	40 Amp	Orange	Open Cab Vehicle Main
2	15 Amp	Blue	Ignition Control
3	15 Amp	Blue	Transmission
4	7.5 Amp	Brown	Fuel Solenoid
5	20 Amp	Yellow	Ignition Power
6	10 Amp	Red	Back-Up Alarm/Horn
7	10 Amp	Red	Stability Circuit
8	10 Amp	Red	Dash
9	ñ	ñ	Open
10	7.5 Amp	Brown	Auxiliary Hydraulics
11	ñ	ñ	Open
12	ñ	ñ	Open
13	ñ	ñ	Open
14	3 Amp	Violet	ECM Indicator Light
15	40 Amp	Orange	Closed Cab Main (Opt)
16	10 Amp	Red	Front wiper (Opt)
17	25 Amp	Clear	Heater Fan (Opt)
18	7.5 amp	Brown	Roof Wiper (Opt)
19	7.5 Amp	Brown	Rear Wiper (Opt)
20	10 Amp	Red	Beacon/Strobe (Opt)
21	7.5 Amp	Brown	Brake Lights (Opt)
22	20 Amp	Yellow	Headlights (Opt)
23	15 Amp	Blue	Turn Signals (Opt)
24	20 Amp	Yellow	Worklights/Roadlights (Opt)
	30 Amp	Green	Worklights (Opt)
25	40 Amp	Orange	Lights Main (Opt)
26	25 Amp	Clear	Condenser Fan (Opt)
27	ñ	ñ	Open
28	ñ	ñ	Open

Courtesy of Crane.Market

https://truckmanualshub.com/

Cold Start Grid Heater Fuses

The two 125 amp fuses (1) that protect the cold start grid heater are located under the engine hood and are mounted on the lip of the engine panel.

1. Unlatch and open the engine cover.
2. To access the fuses; open the protective covers (2) from the engine panel side. Allow the covers to rotate on the tethers on the engine side of the holder (3).
3. Remove the two hex nuts (4) and lockwashers (5) securing the fuse (1) and wires to the fuse holder (3). Remove the fuse and replace with a new fuse.
4. Place the new fuse and then the wires onto the studs of the holder. Secure the fuse and wires in place with the lockwashers (5) and hex nuts (4). Torque the hex nuts to 7-9 lb-ft (10-12 Nm).
5. Snap the protective cover back in place. Be sure the cover snaps securely in place on the holder.
6. Close and latch the engine cover when complete.

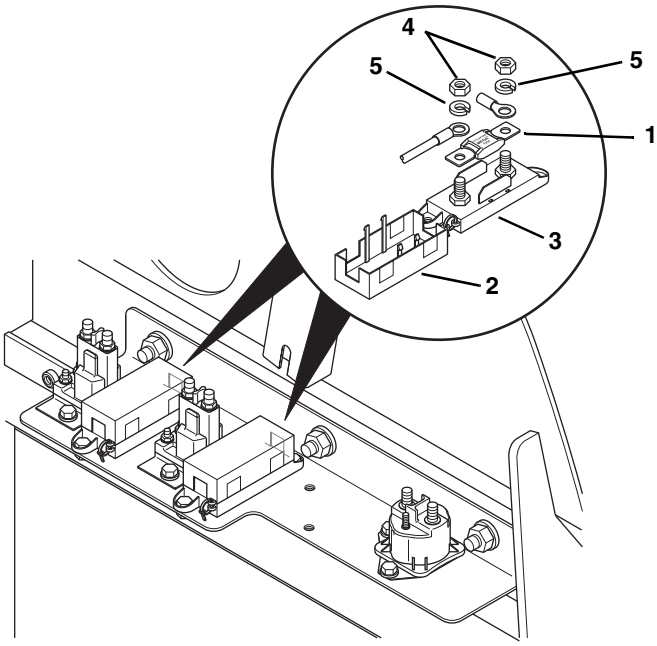

Courtesy of Crane.Market

https://truckmanualshub.com/

ECM Fuses and Relay

The two fuse holders (6), that protect the ECM diagnostic system, are located under the engine hood and are tie wrapped to the wire harness on the top of the engine bell housing. One holder contains three 7.5 amp (brown) fuses and the other holder contains three 10 amp (red) fuses.

There is one 12 volt relay (7) mounted to the engine panel behind the air cleaner. This relay controls the engine fuel pump. To replace the relay, remove the relay from the engine panel, then remove the relay from the wire harness connector (8).

1. Unlatch and open the engine cover.
2. Locate the two fuse holders. Remove the clear plastic protective cover (9) from the holder (6).
3. Remove the failed fuse from the holder and replace with a new fuse.
4. Reassemble the plastic cover onto the fuse holder and securely snap the cover in place. Replace any tie wraps that were removed, securing the fuse holders to the wire harness.
5. Close and latch the engine cover.

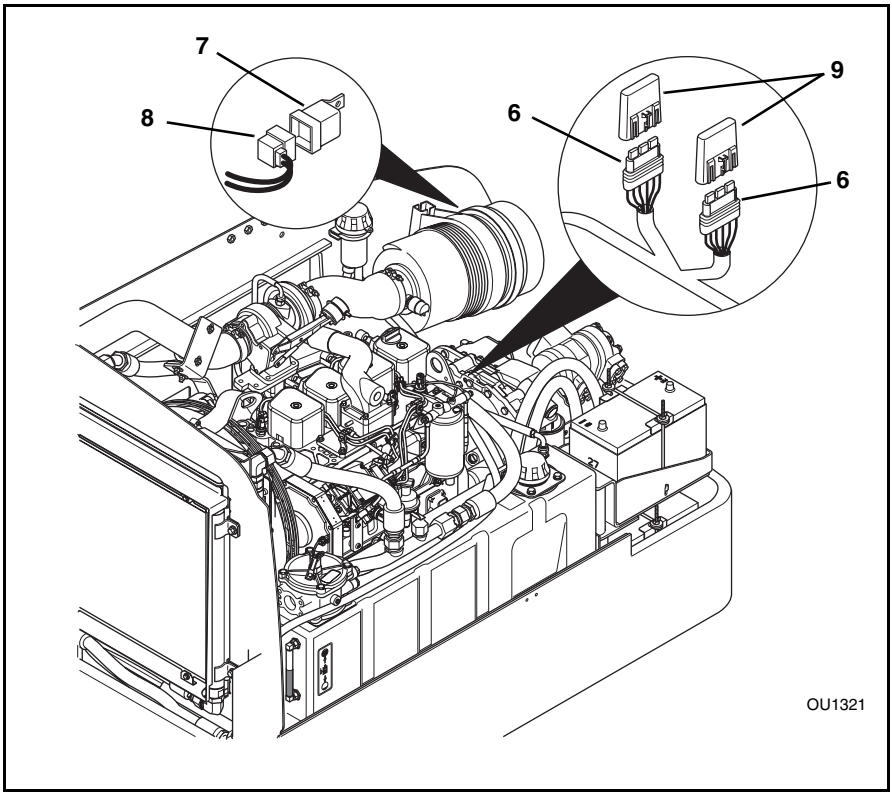

Courtesy of Crane.Market

https://truckmanualshub.com/

18. Boom Chains and Wear Pads

A. Boom Chain Tension Check

(250 Hour Intervals)

OH2710

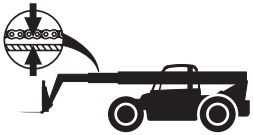

OU0840

Check the boom chain tension by measuring the top boom extend chain sag.

NOTE: *The attachment should remain attached to the quick attach for these checks.*

1. Park the vehicle on level ground. Place the travel select lever in the (N) NEUTRAL DETENT position, engage the parking brake switch and raise the boom to a horizontal (level) position.
2. Fully extend the boom, then retract it 2" (51 mm) (one inch per section). Turn the vehicle OFF.
3. Measure the sag (1) in the top boom extend chain (2) between the bottom of the chain and the top of the intermediate boom (3) at their closest point (1). Acceptable boom chain sag is between 3.00" (76 mm) and 4.00" (102 mm). If the measurement is less than 3.00" (76 mm) or more than 4.00" (102 mm), the boom chain needs to be adjusted. Refer to the ìBoom Chain Tension Adjustmentî to adjust the chain.

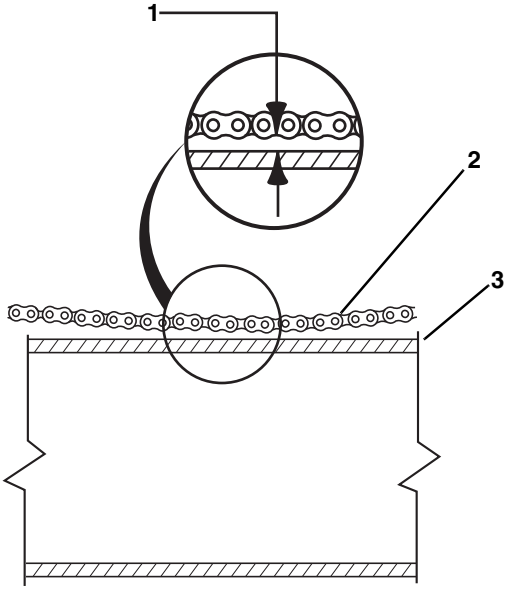

OA0491

Courtesy of Crane.Market

https://truckmanualshub.com/

B. Top Boom Chain Tension Adjustment

(As required)

NOTE: *Always perform the ìBoom Chain Tension Checkî on page 150 before adjusting the boom chain tension.*

1. Park the vehicle on level ground. Place the travel select lever in the (N) NEUTRAL DETENT position, engage the parking brake switch and raise the boom to a horizontal (level) position. retract the boom completely and turn the vehicle OFF.
2. Adjust the extend chain by tightening or loosening the retract chain adjustment nut (4) on the front underside of the outer boom (5).

   If the chain sag measurement is less than 3.00" (76 mm) the retract chain adjustment nut needs to be tightened.

   If the chain sag measurement is more than 4.00" (102 mm) the retract chain adjustment nut needs to be loosened.

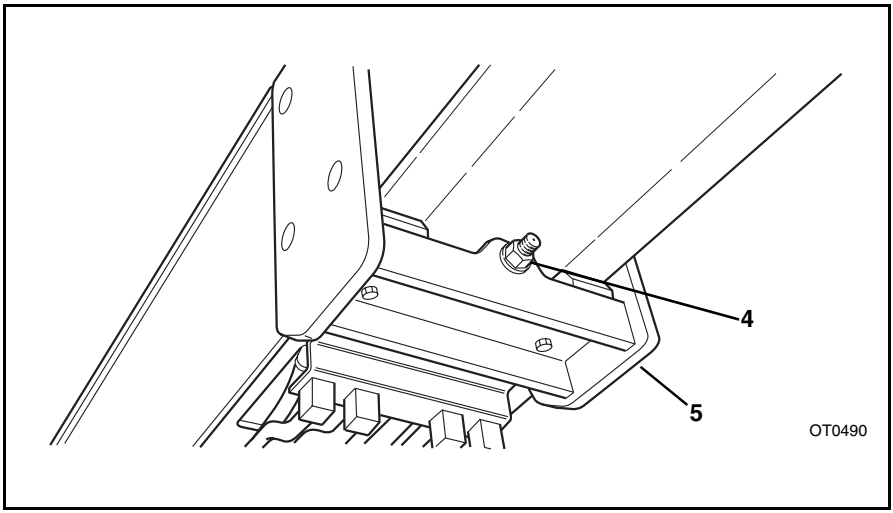

Courtesy of Crane.Market

https://truckmanualshub.com/

3. Return to the cab, start the engine and cycle the boom all the way out and all the way in several times.
4. Fully extend the boom, then retract it 2" (51 mm) (one inch per section). Turn the vehicle OFF.
5. Measure the sag (1) in the top boom extend chain (2) between the bottom of the chain and the top of the intermediate boom (3) at their closest point (1). Acceptable boom chain sag is between 3.00" (76 mm) and 4.00" (102 mm). If the measurement is still less than 3.00" (76 mm), the boom chain need to be readjusted.

NOTE: *If all the adjustment has been used up on the retract chain adjustment nut and the extend chain is not within the range of 3.00" (76 mm) and 4.00" (102 mm) the clevis at the top front of the outer boom will need to be repositioned.*

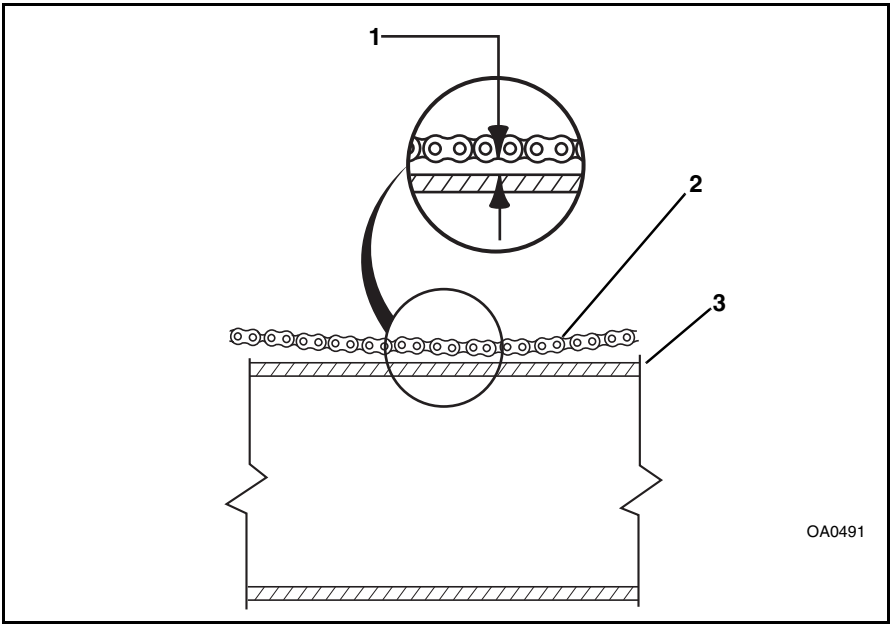

Courtesy of Crane.Market

https://truckmanualshub.com/

Reposition Extend Chain Clevis

NOTE: *Before proceeding with the repositioning of the extend chain clevis, check the chain for any chain stretch that might have occurred. Refer to ìElongation - Extend Chain Onlyî on page 157.*

1. Return to the cab, start the engine and fully retract the boom. With the boom horizontal, extend the boom out approximately 2 ft (610 mm) and shut the vehicle OFF.
2. At the front underside of the outer boom (4), loosen the retract chain adjustment nut (5). Back the nut off until the top of the nut is flush with the end of the threaded clevis.
3. This step will require the help of an assistant. Return to the cab, start the engine. Have the assistant watch at the front underside of the outer boom. The person in the cab should slowly retract the boom until the retract chain adjustment nut touches the clevis mounting tab (6) on the underside of the outer boom.

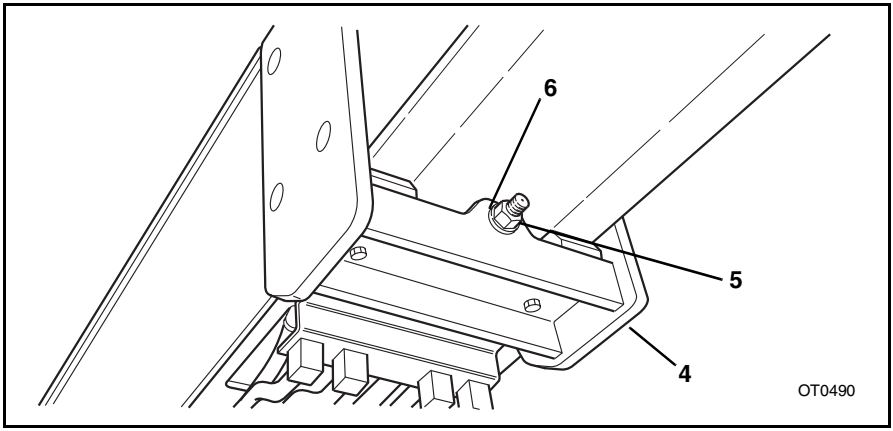

Courtesy of Crane.Market

https://truckmanualshub.com/

4. At the front top of the outer boom (1), remove one of the retaining rings (2) from the clevis mounting pin (3). Remove the pin from the mounting plates. Inspect the pin for wear or other damage. Replace the pin if damaged.
5. Move the extend chain clevis (4) to the next hole toward the rear of the mounting plates. Coat the mounting pin with an anti-seize compound and reinsert the pin through the mounting plates and the clevis. Reassemble the retaining ring.

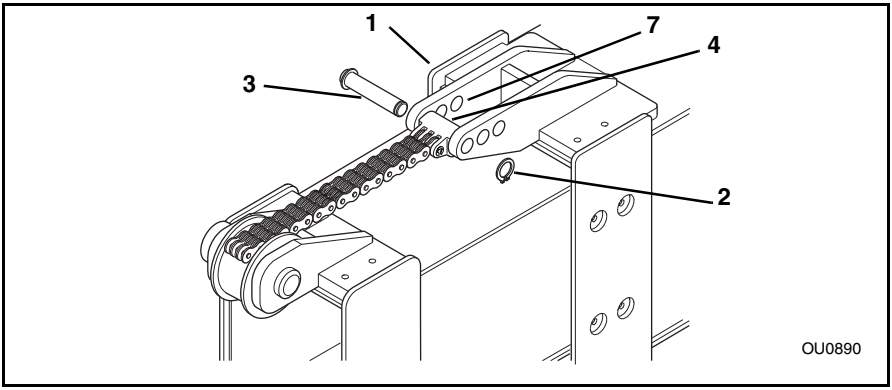

6. Return to the cab, start the engine and fully retract the boom. Shut the vehicle OFF.
7. At the front underside of the outer boom (5), tighten the retract chain adjustment nut (6) to remove the excess slack from the chains.

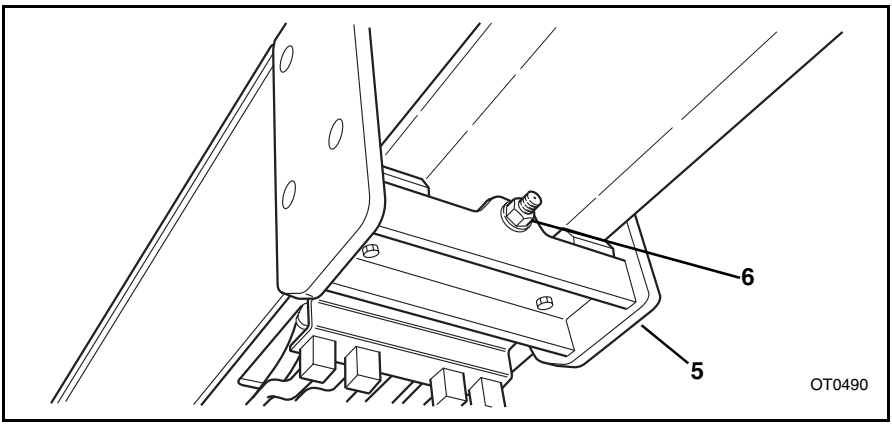

8. Recheck extend chain tension. Refer to ìTop Boom Chain Tension Adjustmentî on page 151, and readjust.

NOTE: *If the extend chain still cannot be adjusted within the range of 3.00" (76 mm) and 4.00" (102 mm) the clevis can be repositioned to the last hole in the mounting plates on the front of the outer boom (7). If all adjustment has been used up, the chain and clevis must be replaced. Refer to the Service Manual for procedure.*

Courtesy of Crane.Market

https://truckmanualshub.com/

C. Boom Chain Inspection

Extend Chains
(250 Hour Intervals)

Retract Chains
(1000 Hour Intervals)

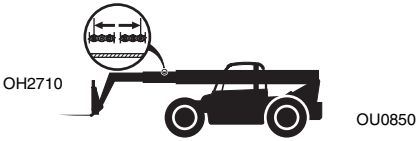

WARNING: Worn pins, stretched or cracked links or corrosive environments can cause chain failure. A chain failure could result in uncontrolled boom movement, loss of load or vehicle instability and could cause death or serious injury and/or property damage.

Under normal operating conditions the boom extend chains will need to be inspected every 250 hours of operation and the boom retract chains every 1000 hours of operation. Environmental conditions and dynamic impulse/shock loads can drastically affect normal operating conditions.

Environments in which material handling vehicles operate can vary widely from outdoor moisture to temperature to mildly corrosive or highly corrosive industrial atmospheres, in addition to abrasive exposures such as sand and grit. Some effects can be as follows:

- Moisture - Corrosive rusting reduces chain strength by pitting and cracking.
- Temperature - Low temperature reduces chain strength by embrittlement. Going in and out of cold storage results in moisture from condensation.
- Chemical Solutions or Vapors - Corrosive attack on the chain components and/or the mechanical connections between the chain components. Cracking can be (and often is) microscopic. Going from microscopic cracking to complete failure can be either abrupt or may require an extended period of time.
- Abrasives - Accelerated wearing and scoring of the articulating members of the chain (pins and plates), with a corresponding reduction in chain strength. Due to the inaccessibility of the bearing surfaces (pin surfaces and plate apertures), wear and scoring are not readily noticeable to the naked eye.

Dynamic shock loading can impose abnormal loads above the endurance limit of a leaf chain.

- High velocity movement of load, followed by sudden, abrupt stops.
- Carrying loads in suspension over irregular surfaces such as railroad tracks, potholes, and rough terrain.
- Attempting to ìinchî loads which are beyond the rated capacity of the vehicle.

Courtesy of Crane.Market

https://truckmanualshub.com/

The above load cycles and environmental conditions make it impossible to predict chain life. It is therefore necessary to conduct frequent inspections until replacement life can be predicted.

The boom chainís normal life expectancy can be expressed as a maximum percent of elongation. This is generally 3%. As the chain flexes back and forth over the sheave, the bearing joints (pins and inside link plates) gradually incur wear due to articulation.

Inspection Guidelines

1. Park the vehicle on level ground. Place the travel select lever in the (N) NEUTRAL DETENT position, engage the parking brake switch and raise the boom to a horizontal (level) position.
2. Fully extend the boom until the extend chain is taut. Shut the engine off.

   The extend chains will be visible for inspection with the vehicle in this state.

   While doing the chain inspection, check all chain clevis ends for distortion or cracking and sheaves for bearing wear or grooving from the chain.
3. Inspect the retract chain every 1000 hours of operation. Refer to the Service Manual for proper procedure.
4. Inspect the chains for the following conditions:

Edge Wear - Extend Chain

To inspect the edge wear of the retract chain refer to the Service Manual for proper procedure.

Check the chain for wear on the link plate edges caused by running back and forth over the sheave. The maximum reduction of material should not exceed 5%. This can be compared to a normal link plate height by measuring a portion of chain that does not run over the sheave.

The new extend chain link measures .950" (24 mm) (1). If the measurement of the worn chain is less than .903" (23 mm) (2), the chain must be replaced.

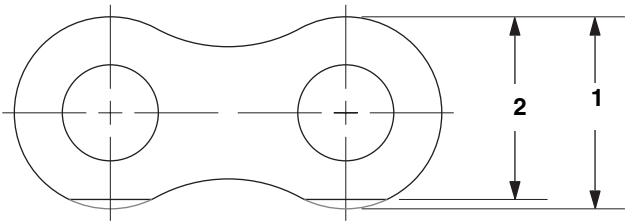

MM2051

Courtesy of Crane.Market

https://truckmanualshub.com/

Elongation - Extend Chain Only

When the original length (3) of 12.00" (305 mm) per foot of new chain has elongated from wear to a length (4) of 12.36" (313 mm), the chain must be discarded and replaced.

It is important to measure the chain in the section that moves over the sheaves because it receives the most frequent articulation. Measuring the chain near its clevis terminals could give an inaccurate reading. The ends of the chains, near the clevis terminal, will not have flexed as frequently, if at all, as nearer the middle of the chains.

Measure across a span of 13 pins at the center of the extend chain. Measure from pin center to pin center. Because the retract chain is inside the boom you will not be able to measure the chain. Refer to the Service Manual for inspection of the retract chain.

The maximum measurement allowed is 12.36" (313 mm). If the measurement is more than 12.36" (313 mm), the chain must be replaced.

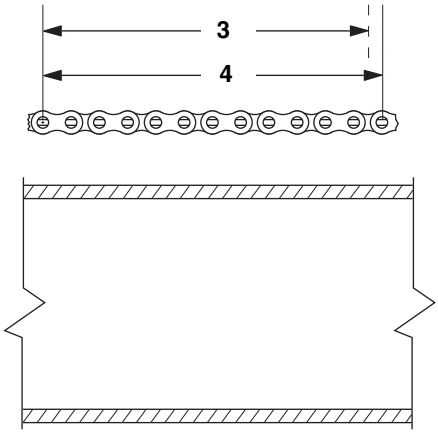

OU0900

Courtesy of Crane.Market

https://truckmanualshub.com/

Turning or Protruding Pins

Highly loaded chain, operating with inadequate lubrication can generate abnormal frictional forces between pin and link plates. When chain is allowed to operate in this condition, a pin or series of pins, can begin to twist out of a chain, resulting in failure.

Examine the pin head rivets to determine if the ìVEEî flats are still in correct alignment (1). Chain with rotated/displaced heads (2) or abnormal pin protrusion (3) should be replaced immediately.

DO NOT attempt to repair the chain by welding or driving the pin(s) back into the chain. Once the press fit integrity between outside plates and pins has been altered, it cannot be restored.

Any wear pattern on the pin heads or the sides of the link plates indicates misalignment in the system. This condition damages the chain as well as increases frictional loading and should be corrected. Contact your local **Lull** Distributor or the **JLG** Service Department at (877) 554-5438 or (717) 485-6657 for specific instructions.

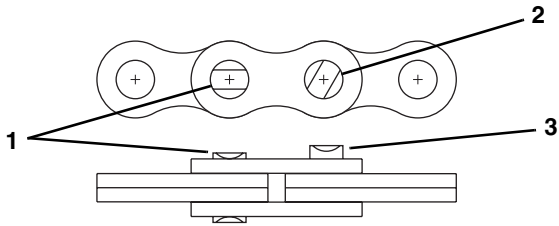

MM2060

Distorted or Battered Link Plates

Distorted or battered link plates (4) on a leaf chain cause tight joints and prevent flexing.

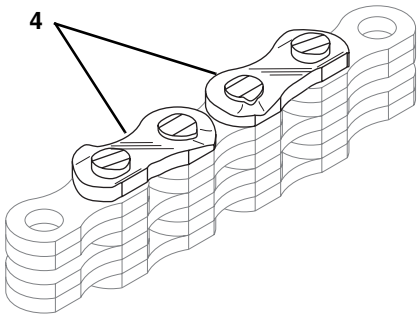

MA9340

Courtesy of Crane.Market

https://truckmanualshub.com/

Cracked Plates

Inspect the chains very carefully, front and back as well as side to side, for any evidence of cracked plates. If any one crack is discovered, the chain should be replaced in its entirety.

it is important, however to determine the cause of the crack before installing a new chain so the condition does not repeat itself.

The types of cracks are:

- **Fatigue Cracking** - Fatigue cracks (5) are a result of repeated cyclic loading beyond the chainís endurance limit.

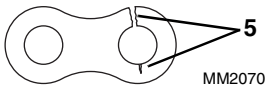

- **Stress Corrosion Cracking** - The outside link plates are particularly susceptible to stress corrosion cracking (6).

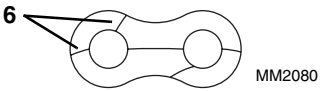

- **Corrosion Fatigue Cracking** - Corrosion fatigue cracks are very similar to fatigue cracks in appearance. Corrosion fatigue is the combined action of an aggressive environment and cyclic stress.

Other Modes of Failure

- **Ultimate Strength Failure** - These types of failures are caused by overloads far in excess of the design load. Either fractured plates (7) or enlarged holes (8) can occur. If either of these failures occurs, the chain should be replaced immediately.

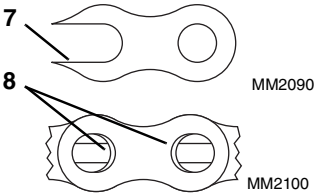

- **Tight Joints** - All joints in the chain should flex freely. Tight joints (9) resist flexing. If the problem is caused by dirt or foreign substance packed in the joints, clean and lubricate thoroughly before re-installing the chain. If the problem is caused by corrosion and rust or bent pins, replace the chain.

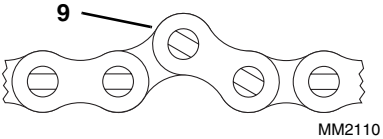

Courtesy of Crane.Market

https://truckmanualshub.com/

D. Chain Lubrication

Extend Chains
(250 Hour Intervals)

OH2710

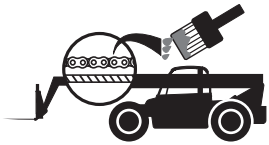

OU0860

Retract Chains

(1000 Hour Intervals or Annually)

OH2690

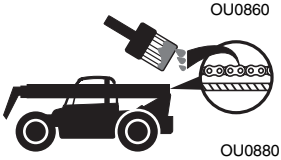

OU0880

After inspection and before being returned to service, chains must be lubricated with a quality chain lubricant (ìLUBRIPLATEî Chain & Cable Fluid, ìLPS3î or equivalent).

The lubricant must penetrate the chain joint to prevent wear. Applying lubricant to the external surfaces will prevent rust, but the chains should be articulated to make sure the lubricant penetrates to the working surfaces between the pins and links.

To prepare the chain for lubrication, the chain plates should be brushed with a stiff brush or wire brush to clear the space between the plates so that lubricant can penetrate to the working surfaces.

Lubricant may be applied with a narrow paint brush or directly poured on, but the chain should be well flooded with lubricant and the boom should be extended and retracted to be sure that the lubricant penetrates to the working surfaces. All surplus lubricant should be wiped away from the external surfaces. DO NOT use a solvent for this wiping operation.

Regular application of lubricant is necessary to make sure that all working surfaces are adequately lubricated. In extremely dusty conditions, it may be necessary to lubricate the chains more often.

Lubrication of chains on vehicles working consistently in extreme hot or cold conditions requires special consideration. It is important that a reputable lubrication specialist, a **Lull** Distributor or the vehicle distributor be consulted for guidance.

Courtesy of Crane.Market

https://truckmanualshub.com/

E. Wear Pad Inspection (Boom)

(50 Hour Intervals)

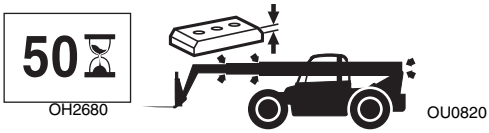

Visually inspect the boom wear pads between the boom sections at the rear and front of the boom for excessive wear.

The average expected life of the wear pads will vary depending upon vehicle use, weight of the loads, operating conditions and the location of the boom pads inside the boom.

If the vehicle is used continuously and the weights of the loads are at or near capacity, or if you are operating the vehicle in very dusty or dirty conditions, the pads will wear much faster. The pads that are under most stress from the weight of the load will also wear faster than other pads. For example, the lower pads at the front of the boom and the upper pads at the rear of the boom are under more stress than pads attached to any other surface of the boom. Consequently, the lower pads at the front and the upper pads at the rear will require service more often.

F. Wear Pad Replacement (Boom)

(As Wear Pad Indicators Indicate)

Each boom wear pad (1) is manufactured with a convenient wear pad indicator. This is the angled cut (2) at each end of all wear pads.

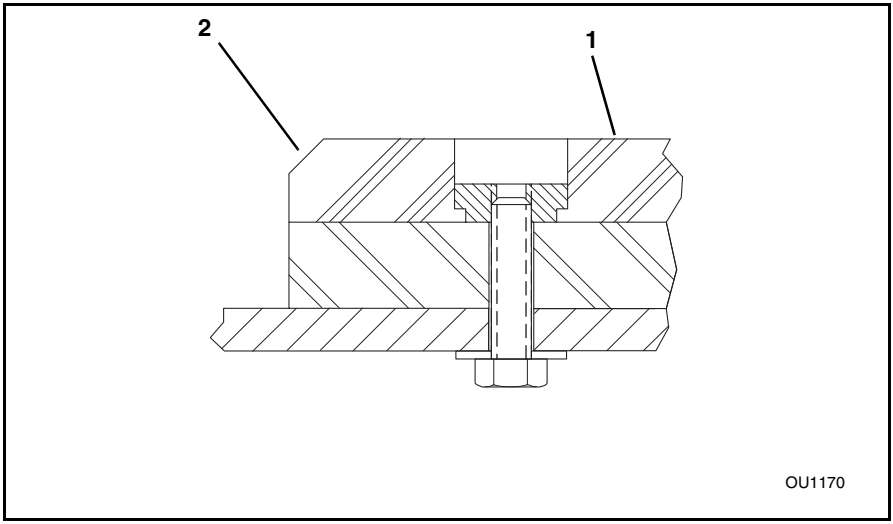

Courtesy of Crane.Market

https://truckmanualshub.com/

The total thickness (1) of a new wear pad (2) is .625" (16 mm). The angled cut (3) will provide a total wear thickness (4) of .25" (6 mm) on load bearing pads or .18" (4,6 mm) on the side non load bearing pads. This will leave approximately .375" (10 mm) of total unused base material.

The pads must never be worn past the angled cut indicator because the metal pad insert (5), that holds the pads in place, will begin to wear into the boom pad sliding surfaces. If the pad wears past this point, the metal insert in the pad will begin to gouge the boom plate surfaces. Contact your local **Lull** Distributor.

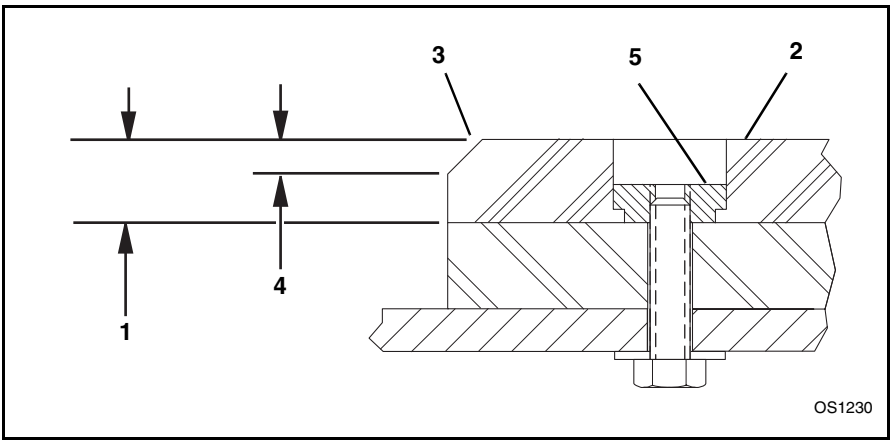

Replacement of boom wear pads must be performed by a **Lull** Distributor when the wear pads indicate.

IMPORTANT! *The boom has been factory lubricated for proper wear pad break-in and will normally not require further lubrication. However, after replacing any wear pad(s), or after prolonged periods of inoperation, light lubrication with ìLPS3î or ìLUBRIPLATEî chain or cable fluid (or equivalent) of the boom wear surfaces is recommended to keep the wear pads and the boom wear surfaces lubricated properly. Light lubricating of the boom wear surfaces is also recommended in salt air climates, after cleaning with pressure washer using solvents or when the vehicle is to be put in storage, to prevent rusting.*

Courtesy of Crane.Market

https://truckmanualshub.com/

19. Transfer Carriage Rollers and Wear Pads

Transfer Carriage Rear Wear Pad Check

(50 Hour Intervals)

OH2680

OU0830

NOTE: *The attachment should remain attached to the quick attach for these checks.*

1. Park the vehicle on level ground. Place the travel select lever in the (N) NEUTRAL DETENT position, engage the parking brake switch and raise the boom to a horizontal (level) position.
2. Leave the transfer carriage completely retracted.
3. Fully extend the boom. The attachment must remain slightly off the ground. Turn the vehicle OFF.
4. At the rear of the transfer carriage, use a feeler gauge to check the gap (6) between the wear pads (7) and the top of the rail (8). This gap should not be more than .06" (1,5 mm). If the gap is greater than .06" (1,5 mm) the wear pads require shimming.

NOTE: *Additional shims are available by contacting your local Lull Distributor.*

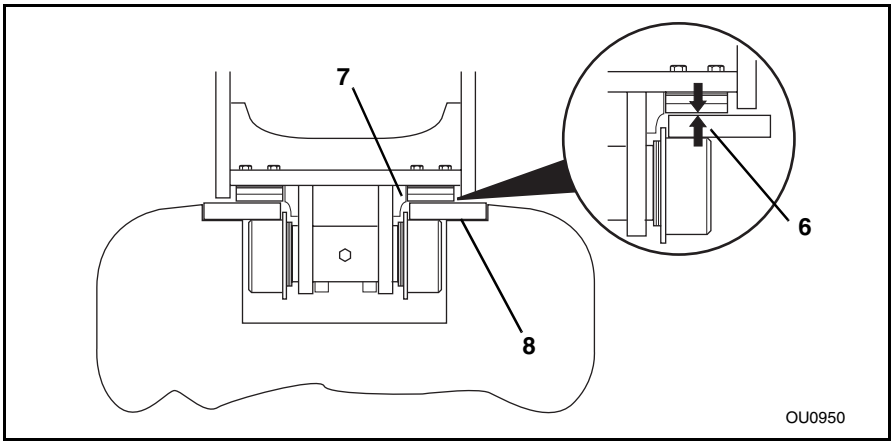

5. Check the thickness of the wear pads. The wear pad has a total thickness of .75" (19 mm). When the wear pad is worn down to .5" (13 mm) the pads should be replaced.

Courtesy of Crane.Market

https://truckmanualshub.com/

Wear Pad Shimming

(As Required)

NOTE: *The attachment should remain attached to the quick attach for this procedure.*

1. Park the vehicle on level ground. Place the travel select lever in the (N) NEUTRAL DETENT position, engage the parking brake switch and raise the boom to a horizontal (level) position.
2. Leave the transfer carriage completely retracted.
3. Fully extend the boom. The attachment must remain slightly off the ground. Turn the vehicle OFF.
4. Remove the two capscrews (1) holding each wear pad and shims to the transfer carriage (2).
5. Add the required shims (3) between the wear pad (4) and the transfer carriage (2).
6. Secure in place with the two capscrews (1) and torque to 28-49 lb-ft (38-67 Nm).

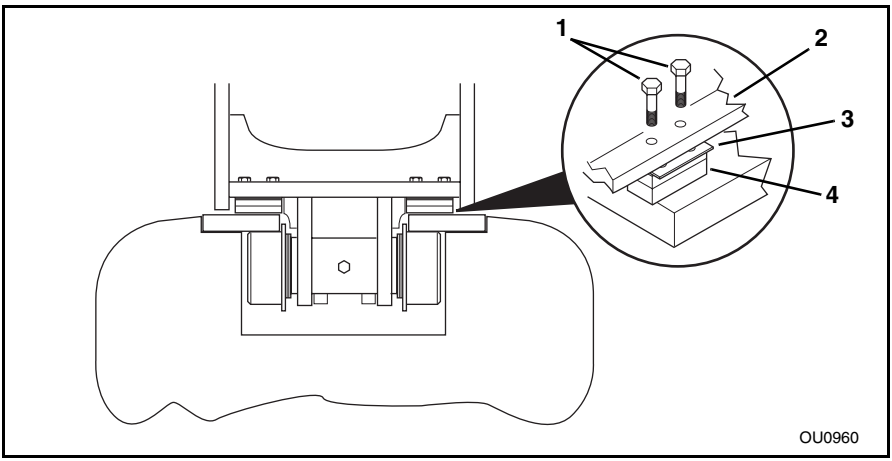

Rear Roller Gap Check

(50 Hour Intervals)

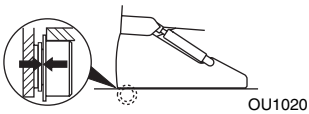

NOTE: *The attachment should remain attached to the quick attach for these checks.*

1. Park the vehicle on level ground. Place the travel select lever in the (N) NEUTRAL DETENT position, engage the parking brake switch and raise the boom to a horizontal (level) position.
2. Fully retract the boom and fully retract the transfer carriage. Shut the vehicle OFF.

Courtesy of Crane.Market

https://truckmanualshub.com/

3. This procedure will require the gap check to be made in three separate locations. Transfer carriage all the way retracted, transfer carriage all the way forward and the transfer carriage moved forward about halfway.
4. With the transfer carriage all the way retracted, use a rawhide hammer to tap the rollers (5) against the rails (6). Check the gap (7) between the roller and the existing shims (8) with a feeler gauge. Check both rear rollers and record the gap on each side.
5. Start the engine and move the transfer carriage all the way forward. Shut the vehicle OFF. Use a rawhide hammer to tap the rollers against the rails and again check the gap (7) between the roller and the existing shims of each roller with the transfer carriage in this position. Record the gap of each roller.
6. Start the engine and move the transfer carriage about halfway back. Shut the vehicle OFF. Use a rawhide hammer to tap the rollers against the rails and once again check the gap (7) between the roller and the existing shims of each roller with the transfer carriage in this position. Record the gap of each roller.
7. Find the location that had the smallest gap. This is the position that the roller gap will be adjusted to, if necessary. The maximum total gap of both sides should not exceed .06" (1,5 mm).
8. If the total gap is larger than .06" (1,5 mm), the rollers need to be shimmed.

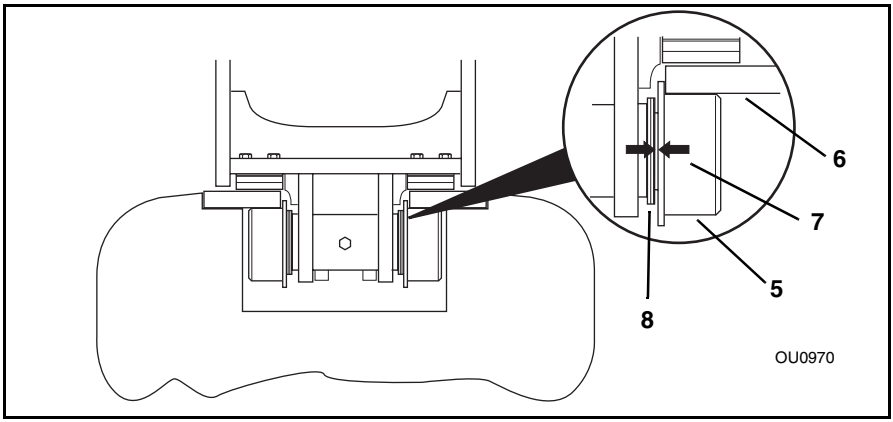

Rear Roller Shimming

(As Required)

Refer to the Service Manual for proper shimming procedures.

Courtesy of Crane.Market

https://truckmanualshub.com/

Front Roller Gap Check

(50 Hour Intervals)

OH2680

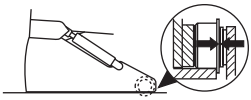

OU1030

NOTE: *The attachment should remain attached to the quick attach for these checks.*

1. Park the vehicle on level ground. Place the travel select lever in the (N) NEUTRAL DETENT position, engage the parking brake switch and raise the boom to a horizontal (level) position.
2. Fully retract the boom and fully retract the transfer carriage. Shut the vehicle OFF.
3. This procedure will require the gap check to be made in three separate locations. Transfer carriage all the way retracted, transfer carriage all the way forward and the transfer carriage moved forward about halfway.
4. With the transfer carriage all the way retracted, use a rawhide hammer to tap the rollers (1) against the rails (2). Check the gap (3) between the roller and the existing shims (4) with a feeler gauge. Check both front rollers and record the gap on each side.
5. Start the engine and move the transfer carriage all the way forward. Shut the vehicle OFF. Use a rawhide hammer to tap the rollers against the rails and again check the gap (3) between the roller and the existing shims of each roller with the transfer carriage in this position. Record the gap of each roller.
6. Start the engine and move the transfer carriage about halfway back. Shut the vehicle OFF. Use a rawhide hammer to tap the rollers against the rails and once again check the gap (3) between the roller and the existing shims of each roller with the transfer carriage in this position. Record the gap of each roller.
7. Find the location that had the smallest gap. This is the position that the roller gap will be adjusted to, if necessary. The maximum total gap of both sides should not exceed .06" (1,5 mm).
8. If the total gap is larger than .06" (1,5 mm), the rollers need to be shimmed.

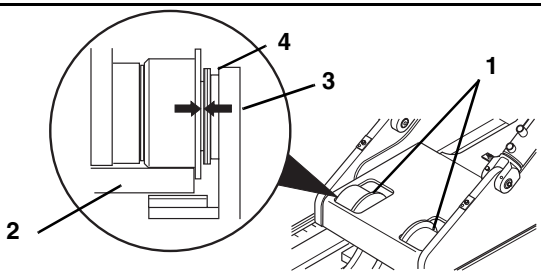

OU0980

Front Roller Shimming

(As Required)

Refer to the Service Manual for proper shimming procedures.

Courtesy of Crane.Market

https://truckmanualshub.com/

Front Upstop Wear Pad Check

(250 Hour Intervals)

OH2710

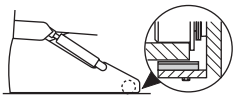

OU1050

The front upstop wear pads (5) are located under the frame rails at the front of the transfer carriage.

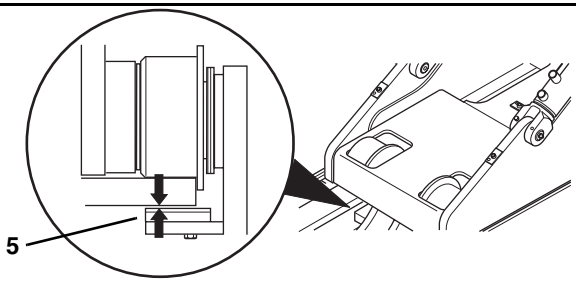

OU1000

Each wear pad (5) is manufactured with a convenient wear pad indicator. This is the angled cut (6) at each end of all wear pads

The total thickness (7) of a new wear pad (5) is .625" (16 mm). The angled cut (6) will provide a total wear thickness (8) of .25" (6 mm). This will leave approximately .375" (10 mm) of total unused base material.

The pads must never be worn past the angled cut indicator because the metal pad insert (9), that holds the pads in place, will begin to wear into the rail surfaces. If the pad wears past this point, the metal insert in the pad will begin to gouge the metal surfaces.

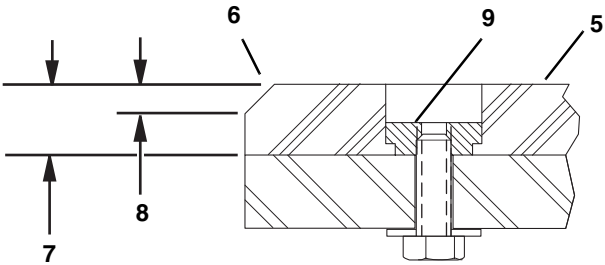

OU0990

Courtesy of Crane.Market

https://truckmanualshub.com/

Front Upstop Wear Pad Gap Check

(250 Hour Intervals)

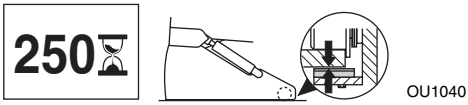

NOTE: *The attachment should remain attached to the quick attach for these checks.*

1. Park the vehicle on level ground. Place the travel select lever in the (N) NEUTRAL DETENT position, engage the parking brake switch and raise the boom to a horizontal (level) position.
2. Fully retract the boom and fully retract the transfer carriage. Shut the vehicle OFF.
3. Check the gap (1) between the top of the wear pad (2) and the bottom of the rail (3). The maximum gap should be .12" (3 mm).

Front Upstop Wear Pad Shimming

(As Required)

Refer to the Service Manual for proper shimming procedures.

Front Upstop Wear Pad Replacement

(As Wear Pad Indicator Indicates)

When replacing the upstop wear pads (2), remove the two capscrews (4) holding each wear pad to the plate under the rail at the front of the transfer carriage.

Place the new wear pads with original shims in place and secure with the two capscrews (4). Torque the capscrews to 25-45 lb-ft (34-61 Nm).

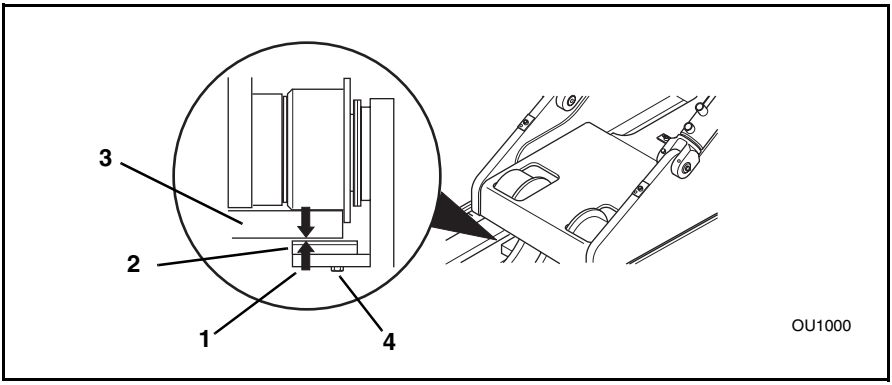

Courtesy of Crane.Market

https://truckmanualshub.com/

Roll Back Hose Inspection

(50 Hour Intervals)

OH2680

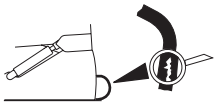

OU1180

With the transfer carriage fully forward, check the roll back hoses and hose protector sleeves for wear.

- Inspect all hoses (5) for wear. Replace any hoses when the steel braids are first visible.
- Hoses with protective sleeves (6), check the sleeves for worn areas. If a worn area is detected, rotate the sleeve to a new wear area. If excessively worn, replace the protective sleeve with a new sleeve.

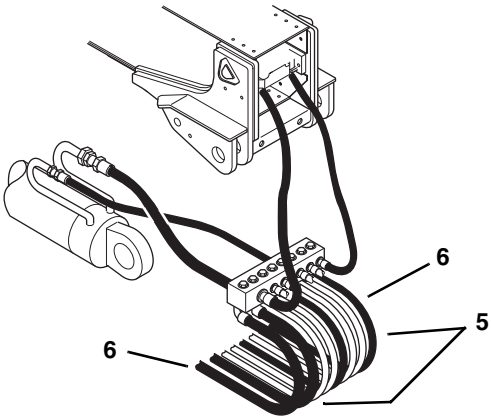

OU1060

Courtesy of Crane.Market

https://truckmanualshub.com/

Storage and Transport

Storage

A. Before Storing

Perform the following steps prior to placing the vehicle in storage:

1. Clean the entire vehicle. DO NOT remove the grease coating from the boom chains.
2. Apply corrosion inhibitor to the exposed metal on the top of the frame rails in front of the transfer carriage rollers.
3. Lubricate all grease fittings as described in ìMaintenance Schedule and Checklistî on page 105
4. Prepare the engine for storage (refer to the engine manual).
5. Apply multi-purpose grease to all exposed hydraulic cylinder rods.
6. Remove the batteries from the vehicle. Store the batteries in a dry place where the batteries will not be subject to temperatures near or below freezing.
7. If the ambient temperature is expected to drop below freezing at anytime during the storage period, make sure the engine coolant is either completely drained from the radiator and engine block or that the amount of anti-freeze in the system is adequate to keep the coolant from freezing.
8. Preferably, store the vehicle inside where it will remain dry. If it must be stored outside, park it on lumber laid on flat level ground or on a concrete slab and cover with a tarp.

B. Removing From Storage

After removing the vehicle from storage and before operating it, perform the following steps:

1. Reinstall the properly charged batteries. Secure the hold-down brackets and attach battery cables.
2. Change the engine oil and filter to remove condensation or other residuals.
3. If the coolant has been drained from the engine block and radiator, refill with a 50/50 mixture of fresh anti-freeze and water. For detailed information, see ìDrain and Flush Radiatorî on page 111.
4. Wipe off any multi-purpose grease that was applied to the vehicles hydraulic cylinder rods prior to storing.
5. Pressure wash the areas in front of the transfer carriage to remove the corrosion inhibitor before operating the transfer carriage.
6. Refer to ìMaintenance Schedule and Checklistî on page 105. Perform all the maintenance checks listed under the 10 Hour Intervals.
7. Review and familiarize yourself and any other operator with all the safe and proper operating procedures contained in this manual.

Courtesy of Crane.Market

https://truckmanualshub.com/

Transport

When transporting the vehicle, make use of all tie down locations on the vehicles frame.

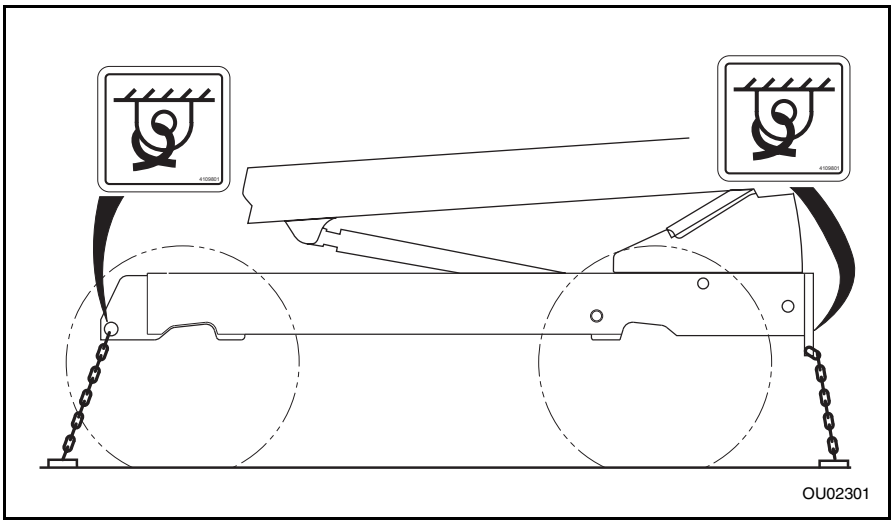

NOTE: *The user assumes all responsibility for choosing the proper method of transportation, and the proper selection and use of transportation and tiedown devices, making sure the equipment used is capable of supporting the weight of the vehicle being transported and that all manufacturerís instructions and warnings, regulations and safety rules of their employer, the Department of Transportation and/or any other state or federal laws are followed.*

Courtesy of Crane.Market

https://truckmanualshub.com/

Parking Brake/Transmission De-Clutch Test Procedures

To check that the parking brake/transmission de-clutch system is functioning properly, perform the following tests.

IMPORTANT! *These tests should be performed in (1) FIRST gear only.*

WARNING: **DO NOT** operate this vehicle unless you are in the seat with the seat belt fastened around you. Death or serious personal injury could result if the belt is not securely fastened.

Test 1 - Transmission De-Clutch

Step 1

a. Place the vehicle on a level surface.
b. Clear the area in front and behind the vehicle of any obstacles.
c. Fasten your seat belt.
d. Turn the ignition switch and start the engine.
e. With the parking brake applied, move the range select lever to (1) FIRST gear.
f. Move the travel select lever to (F) FORWARD.
g. Depress the throttle pedal fully. The unit should not move.

Step 2

a. Remove your foot from the throttle pedal.
b. Move the travel select lever to (R) REVERSE.
c. Depress the throttle pedal fully. The unit should not move.
d. Remove your foot from the throttle pedal.
e. Move the travel select lever to the (N) NEUTRAL DETENT position.

Test 2 - Transmission De-Clutch/Parking Brake Activation

a. With the vehicle unloaded, disengage the parking brake.
b. Move the travel select lever to (F) FORWARD.
c. Move the unit **slowly** in a forward direction (approximately 1 mph [1,6 kmh]).
d. Engage the parking brake. The unit should stop abruptly.

Courtesy of Crane.Market

https://truckmanualshub.com/

Test 3 - Park Brake Hold Performance

a. With the rated load of 9,000 lbs (4.082 Kg) on the forks, drive the vehicle forward up a 15% grade (15 ft. rise over 100 ft. run).

b. Stop the vehicle using the service brakes, apply the park brake, shift the transmission into the NEUTRAL (N) DETENT position.

c. Take your foot off the service brake pedal. The vehicle should not move.

d. Apply the service brakes, shift the transmission into REVERSE (R), move the park brake switch to the OFF position and back down off the grade.

e. Repeat ìTest 3î by backing up the grade and checking the park brake holding performance.

If the parking brake or transmission de-clutch does not pass these tests, do the following.

1. **Immediately** remove the vehicle from service.

WARNING: BLOCK ALL FOUR WHEELS. Failure to do so could result in death or serious personal injury from vehicle roll away.

2. Block all four wheels to prevent the vehicle from moving.
3. Place the accident prevention tags (1) on the ignition switch (2) and steering wheel (3).
4. Service the parking brake immediately or contact your local **Lull** Distributor to repair the system.

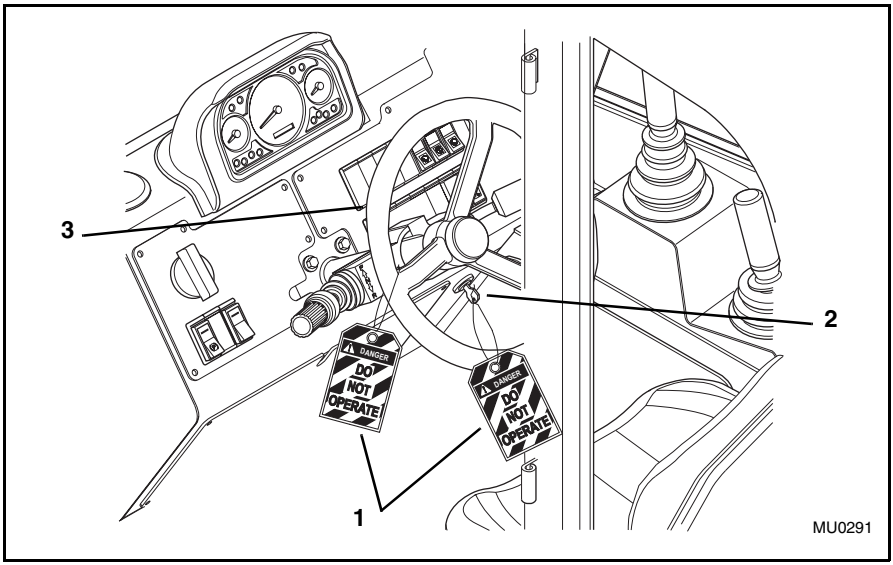

Courtesy of Crane.Market

https://truckmanualshub.com/

Fluid & Lubrication Capacities

Engine Crankcase Oil:

Capacity with Filter Change..... 10.5 quarts (10 liters)
Filter Capacity.....0.85 quart (0,80 liter)
Type Of Oil.....15W40

Fuel Tank:

Total Capacity .....50.2 gallons (190 liters)
Usable Capacity .....45 gallons (171 liters)
Type of Fuel

Below 32 F (0 C) ..... Winterized #2 Diesel
Above 32 F (0 C) .....Standard #2 Diesel

Cooling System:

Total Cooling System Capacity (w/o heater)..... 14.6 quarts (13,8 liters)
Overflow Bottle Capacity ..... 3.2 quarts (3 liters)
Type of Coolant.....50/50 ethylene glycol and water

Hydraulic System:

System Capacity.....50.2 gallons (190 liters)
Reservoir Capacity to Full Mark .....33.5 gallons (127 liters)
Type Of Oil.....ISO Grade 46 Hydraulic Oil

Transmission:

Capacity with filter change..... 15.9 quarts (15 liters)
Type Of Fluid ..... Universal Tractor Fluid (See Chart On page 128)
Filter Capacity.....1 quart (1 liter)

Axles:

Differential Housing Capacity - Front Axle..... 10.6 quarts (10 liters)
Differential Housing Capacity - Rear Axle ..... 9.5 quarts (9 liters)
Type Of Fluid ..... Universal Tractor Fluid (See Chart On page 133)

Wheel Ends:

Wheel End Capacity - Front Axle ..... 1.3 quarts (1,2 liters)
Wheel End Capacity - Rear Axle..... 1.7 quarts (1,6 liters)
Type Of Fluid ..... Universal Tractor Fluid (See Chart On page 138)

Courtesy of Crane.Market

https://truckmanualshub.com/

Transfer Case:

Transfer Case Capacity ..... 1.7 quarts (1,6 liters)
Type Of Fluid ..... Universal Tractor Fluid (See Chart On page 131)

Tires

Air Pressure:

Standard Tire: 15.5 - 25, (12 Ply minimum) ..... 65 psi (448 kPa)
Optional Rock Tire: 15.5 - 25, 12 Ply ..... 65 psi (448 kPa)
Optional Radial Tire: 15.5R25 2 star ..... 65 psi (448 kPa)

Tire ballast (Minimum per Tire):

Optional Foam Filled Tire 15.5 - 25, 12 Ply .....798 lb (362 Kg)

Wheel Lug Nut Torque:

Torque .....430-470 lb-ft (583-637 Nm)

Maximum Ground Pressure (w/full load):

Standard Tires: 15.5 - 25, 12 Ply..... 70 psi (483 kPa)
Optional Rock Tire: 15.5 - 25, 12 Ply ..... 80 psi (552 kPa)
Optional Radial Tires: 15.5R25 2 star ..... 70 psi (483 kPa)

Footprint (w/full load):

Standard Tires: 15.5 - 25, 12 Ply.....263 sq. in. (1697 cm^2)
Optional Rock Tire: 15.5 - 25, 12 Ply .....230 sq. in. (1484 cm^2)
Optional Radial Tires: 15.5R25 2 star .....260 sq. in. (1677 cm^2)

Weights

Basic Vehicle With 48" Standard Carriage:

Curb Weight (with Open Cab) .....26,968 lbs (12.232 Kg)
Curb Weight (with Closed Cab).....27,208 lbs (12.341 Kg)

Maximum Rated Capacity:

Standard Carriage.....9,000 lbs (4.082 Kg)

Courtesy of Crane.Market

https://truckmanualshub.com/

Vehicle Dimensions

With Standard 15.5 - 25, 12 Ply Tires:

(A) Length (less forks) ..... 253 inches (6.426 mm)
(B) Width..... 101 inches (2.565 mm)
(C) Height ..... 95.5 inches (2.426 mm)
(D) Wheelbase..... 131 inches (3.327 mm)
(E) Ground Clearance ..... 16 inches (406 mm)
(F) Tread Center ..... 84 inches (2.134 mm)
(G) Turning Clearance Curb to Curb (Radius)..... 150 inches (3.810 mm)
(H) Turning Clearance (Radius)..... 155 inches (3.940 mm)
(J) Max. Forward Reach (TC Rearward) .....29 feet (8,8 meters)
(J) Max. Forward Reach (TC Forward).....35.6 feet (10,8 meters)
(K) Maximum Lift Height.....42.2 feet (12,9 meters)
(L) TransAction Distance ..... 80 inches (2.032 mm)

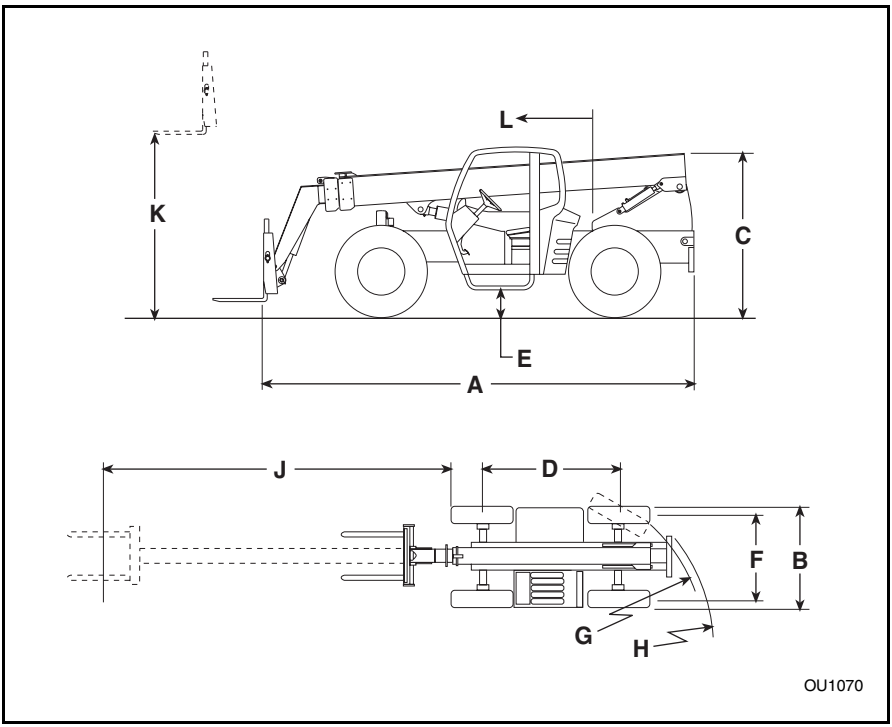

Courtesy of Crane.Market

https://truckmanualshub.com/

Electrical System

Rating: ..... 12V DC Negative Ground

Number of Batteries: ..... Two

Type:

Maintenance Free ..... 850 Cold Cranking Amps (Each Battery)

Series of Battery: 27

Alternator Rating: ..... 12 Volt - 95 Amp

Engine

Turbocharged Cummins:

Model QSB4.5T

Horsepower ..... 110 hp @ 2500 rpm

Courtesy of Crane.Market

https://truckmanualshub.com/

This Page Intentionally Left Blank

Courtesy of Crane.Market

https://truckmanualshub.com/

A

Accelerator Pedal 26
Accident Prevention Tags 5
Additional Operators 5
Air Cleaner 107
Air Conditioning 64
Air Pressure 140
Alternator Charging Warning Indicator 51
Attachment Reconnect 67
Attachment Removal 66
Attachment Tilt 36
Auxiliary Hydraulic Control 40
Avoidance Symbols 9
Axle Oil 133
Axle Oil Change 134

B

Batteries 13
Battery 142
Battery Charging 14
Battery Electrolyte First Aid 14
Beacon Light 58
Bleeding Fuel System 121
Boom Angle Indicator 68, 71
Boom Chain Inspection 155
Boom Chain Tension 150
Boom Chain Tension Check 150
Boom Extend Letters 71
Boom Extend/Retract 37
Boom Extension Indicator 68
Boom Lift/Lower 37
Brake Disc Inspection 135
Brake Pedal 26

C

Carriages 66
Chain Lubrication 160
Change Fuel Filter 119
Changing Travel Direction 33
Chemical Hazards 12
Clearances 16
Clothing and Safety Gear 12
Cold Start Grid Heater Fuses 148
Cold Starting 86
Coolant Drain and Flush 111
Coolant Level 110
Crab Steering Mode 29

D

Decals 20
Defining Platforms For Elevating Personnel 89
Dismounting 12
Door Latch 59
Door Window Latch 59

E

ECM Fuses 149
Electrocution Hazards 16
Elevating Personnel 17, 89
Emergency Boom Lowering 98
Emergency Exit 18
Engine Air Filter Restriction Warning Indicator 51
Engine Coolant Temperature Gauge 53
Engine Fan Belt 123
Engine Function Indicator Lights 31
Engine Oil 114
Engine Oil and Filter Change 115
Engine Oil Pressure Warning Indicator 50
Engine Pre-Heating Indicator 49
Engine Tachometer 53

F

Falling Load Hazard 15, 20
Flashers 58
Fork Rating 70
Fork Sweep 34
Four Wheel Steer Indexing 29
Four Wheel Steering Mode 28
Frame Level Indicator 39, 47, 68
Frame Sway Joystick 38, 46
Free Pivot Mode 74
Fresh Air Intake Filter 109
Front Dash Panel 48
Front Dash Panel Light Test 48

Courtesy of Crane.Market

https://truckmanualshub.com/

Front Joystick 36
Front Roller Gap Check 166
Front Roller Shimming 166
Front Upstop Wear Pad 167
Front Upstop Wear Pad Gap 168
Front Upstop Wear Pad Replacement 168
Front Upstop Wear Pad Shimming 168
Front Wheel Steering Mode 28
Front Windshield 60
Front Windshield Wiper 62
Fuel 83
Fuel Cap 84
Fuel Level Gauge 53
Fuel System 118
Fuel Water Separator/Filter 118
Function Indicator Lights 49
Fuses 143

G

Gauges 53
Gauges and Indicators 68
Gear Select Twist Grip 33

H

Hazard Classification System 3
Hazard Symbols 8
Headlights 56
Heater 64
High Beam Indicator 54
High/Low Beam Switch 56
Horn 26
Horn Button 26
Hourmeter 53
How To Pick, Carry & Place A Load 88
Hydraulic Fluid 13
Hydraulic Oil & Filter Change 126
Hydraulic Oil Filter Restriction Warning Indicator 51
Hydraulic Oil Level 125
Hydraulic Oil Temperature Warning Indicator 50

I

Ignition Switch 27
In-line Fuel Strainer 120
Inner Safety Element 107
Inspection - Pre-Operation 23
Instructional Symbols 6

J

Joystick Operation (Single Joystick Option) 42
Jump Starting 87

L

Leveling The Vehicle 39, 47
Lights 57
Load Moment Indicator 23
Locked Mode 75
Low Brake Pressure Warning Indicator 52
Lowering Boom Hazard 15
Lowering Engine Cover 104
Lube Points 106
Lubrication Points 106
Lug Nut Torque 141

M

Maintenance Schedule 105
Middle Joystick 37
Mirrors 69
Moving Parts Hazard 15

N

New Operators 5
Normal Starting 85

O

Oil Level 114
Oil Recommendations 114
Operators Seat 24
Optional Closed Cab Air Filters 109
Optional Features 55
Optional Indicator Lights 54, 68
Outer Primary Element 107

P

Parking Brake Indicator 49
Parking Brake Switch 30

Courtesy of Crane.Market

https://truckmanualshub.com/

Parking Brake/Transmission De-Clutch Test Procedures 172
Parking Lights 56
Pre-Operation Inspection 23
Preparation and Prevention 15

R

Radiator Drain and Flush 111
Reading Capacity Charts 70
Rear Roller Gap Check 164
Rear Roller Shimming 165
Rear View Mirrors 69
Rear Window 60
Rear Window Washer 63
Rear Window Wiper 64
Recirculation Air Filter 109
Refueling 83
Relays 143
Replacement Parts 2
Replacing Tires 141
Roll Back Hose Inspection 169

S

Sample Capacity Chart 70
Seat Adjustments 24
Seat Belt 12, 25, 48
Serial Number Plate 2
Shifting Gears 33
Shut-Off 95
Skylight Wiper/Washer 63
Slopes 19
Slow Pivot Mode 76
Stabil-TRAK 74
Stabil-TRAK Indicator 49
Stabil-TRAK System Test Instructions 77
Starting Travel 32
Steering Mode Selector 27
Steering Wheel 26
Storage 170
Strobe Light 58

T

Three Mode Steer Select 27
Tilt Steering Wheel Lever 26
Tip Over Hazard 18
Tires 141
Top Boom Chain Tension Adjustment 151
Towing a Disabled Vehicle 96
Transfer Carriage 36
Transfer Carriage Extension Indicator 69, 71
Transfer Carriage Operation 17
Transfer Carriage Rear Wear Pad 163
Transfer Carriage Rollers 163
Transfer Case Oil 131
Transfer Case Oil Change 132
Transmission Disconnect Switch ...30
Transmission Oil 128
Transmission Oil & Filter Change 129
Transmission Temperature Warning Indicator 50
Transport 171
Travel Select Lever 32
Turn Signal Indicator 54
Turn Signals 57

U

Underground Hazards 16
Using Other Attachments 93
Using the Capacity Chart 71

V

Ventilation 20
Visual Obstruction 16

W

Warning Indicator Lights 50, 51, 52
Warranty Registration 2
Wear Pad Inspection 161
Wear Pad Replacement 161
Wear Pad Shimming 164
Wheel End Oil 138
Wheel End Oil Change 139
Windshield Washer Control 63
Worklights 55

Courtesy of Crane.Market

https://truckmanualshub.com/

This Page Intentionally Left Blank

Courtesy of Crane.Market

https://truckmanualshub.com/

This Section Contains Representations Of All The Load Charts Contained In The Operators Cab Of This Vehicle

Courtesy of Crane.Market

https://truckmanualshub.com/

Load Charts

Standard Carriages, Side Tilt Carriages, Single Fork Positioning Carriages and Dual Fork Positioning Carriages (Transfer Carriage Forward Movement)

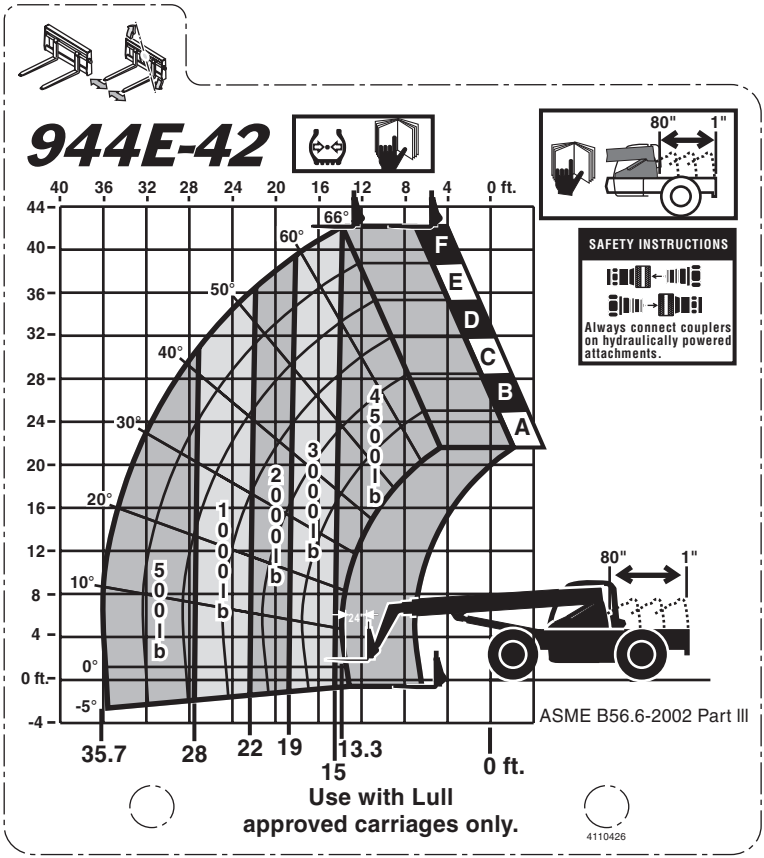

OU1362

Courtesy of Crane.Market

https://truckmanualshub.com/

Standard Carriages, Side Tilt Carriages, Single Fork Positioning Carriages and Dual Fork Positioning Carriages (Transfer Carriage Fully Retracted)

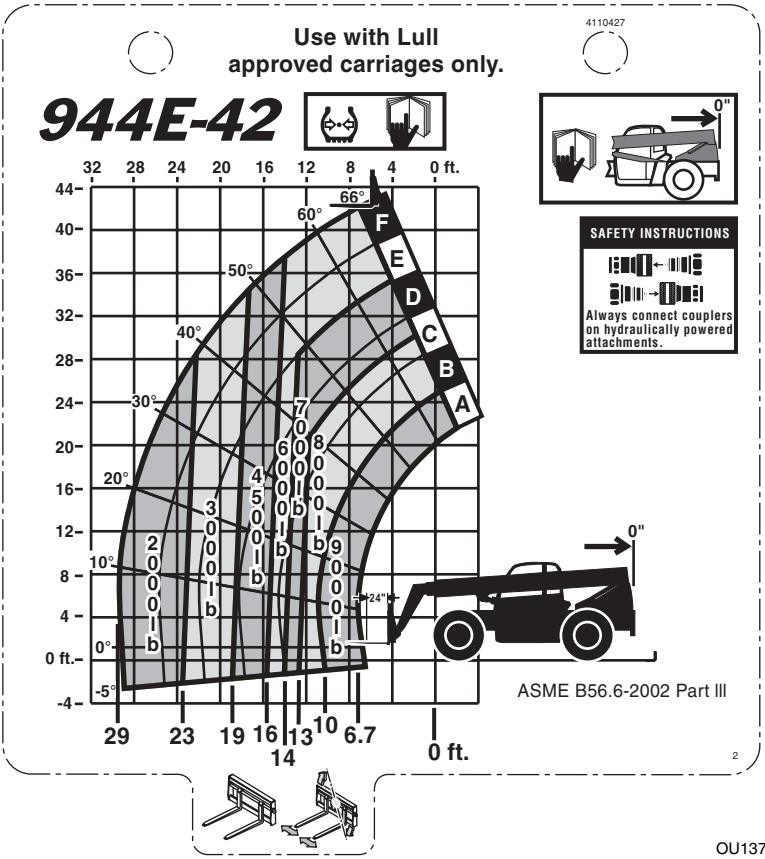

Courtesy of Crane.Market

https://truckmanualshub.com/

Load Charts

Swing Carriage (Transfer Carriage Forward Movement)

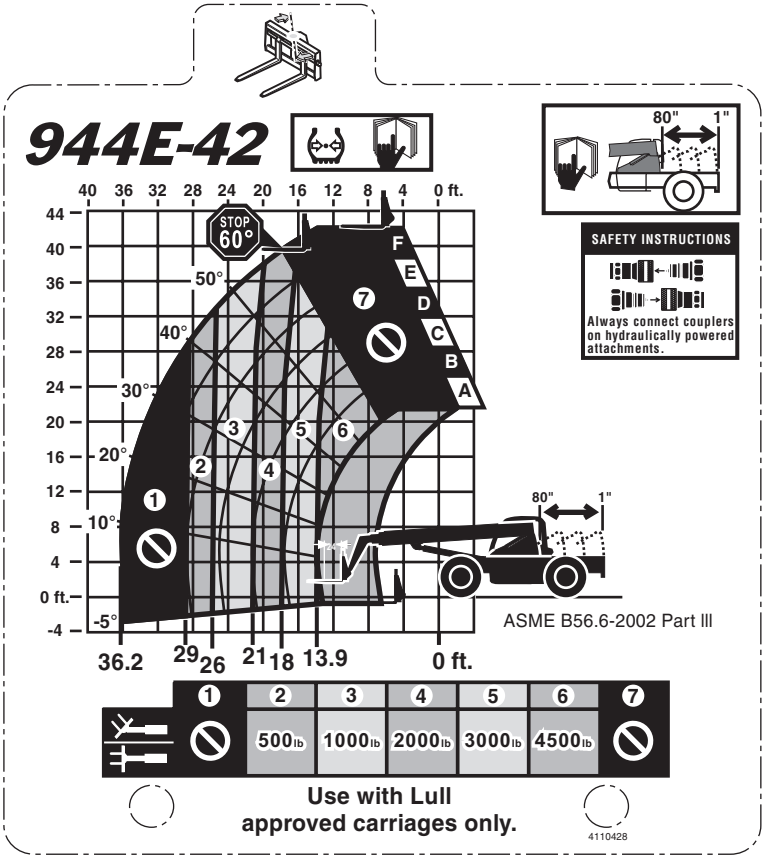

OU1381

Courtesy of Crane.Market

https://truckmanualshub.com/

Swing Carriage (Transfer Carriage Fully Retracted)

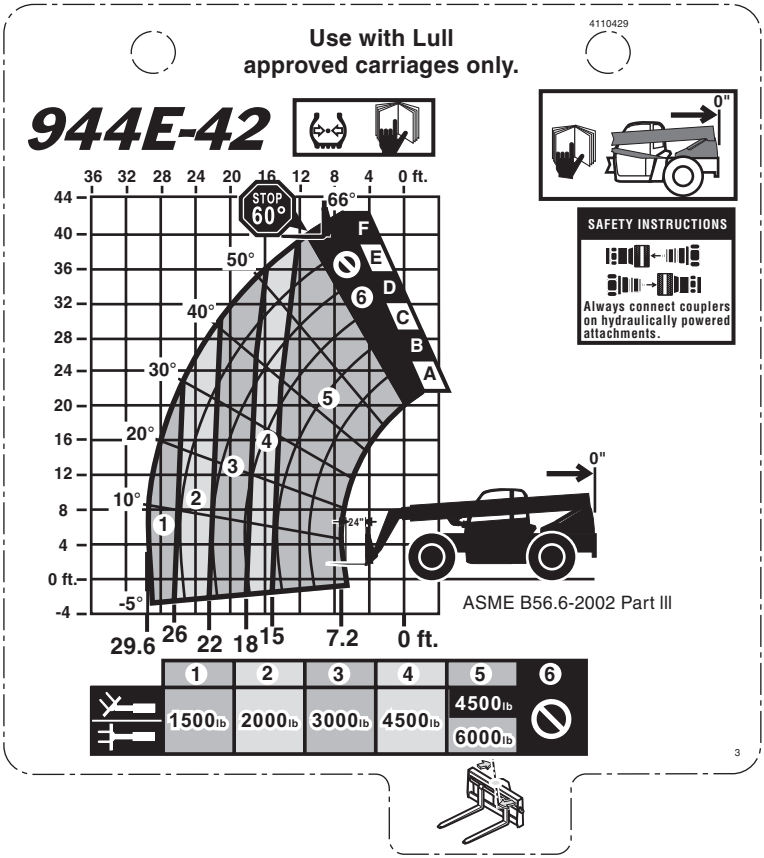

OU1391

Courtesy of Crane.Market

https://truckmanualshub.com/

Load Charts

10 Ft. Truss Boom & 10 Ft. Truss Boom w/Winch (Transfer Carriage Forward Movement)

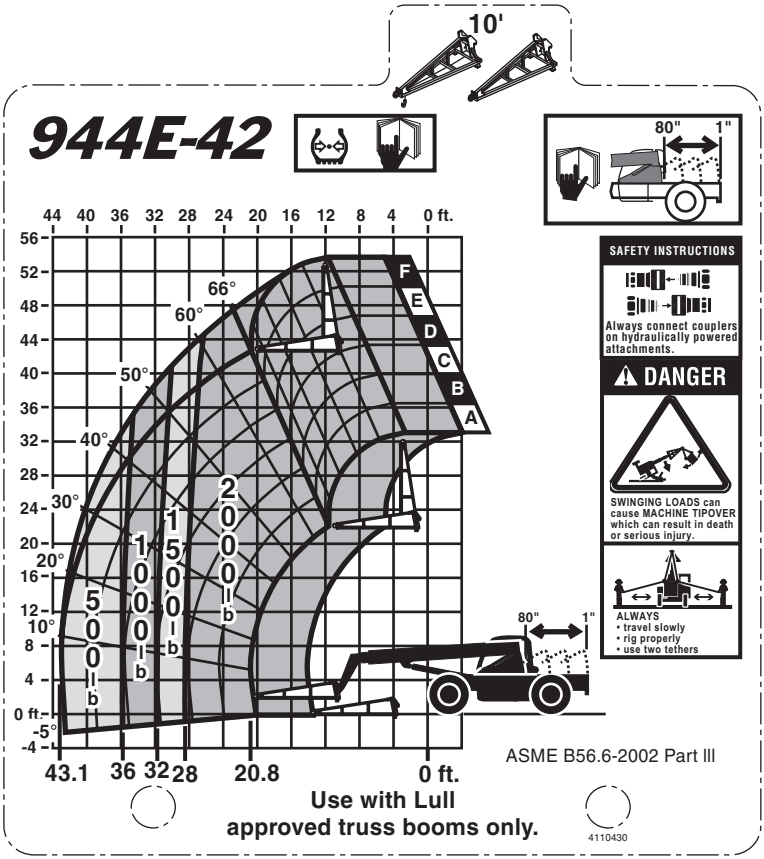

OU1401

Courtesy of Crane.Market

https://truckmanualshub.com/

10 Ft. Truss Boom & 10 Ft. Truss Boom w/Winch (Transfer Carriage Fully Retracted)

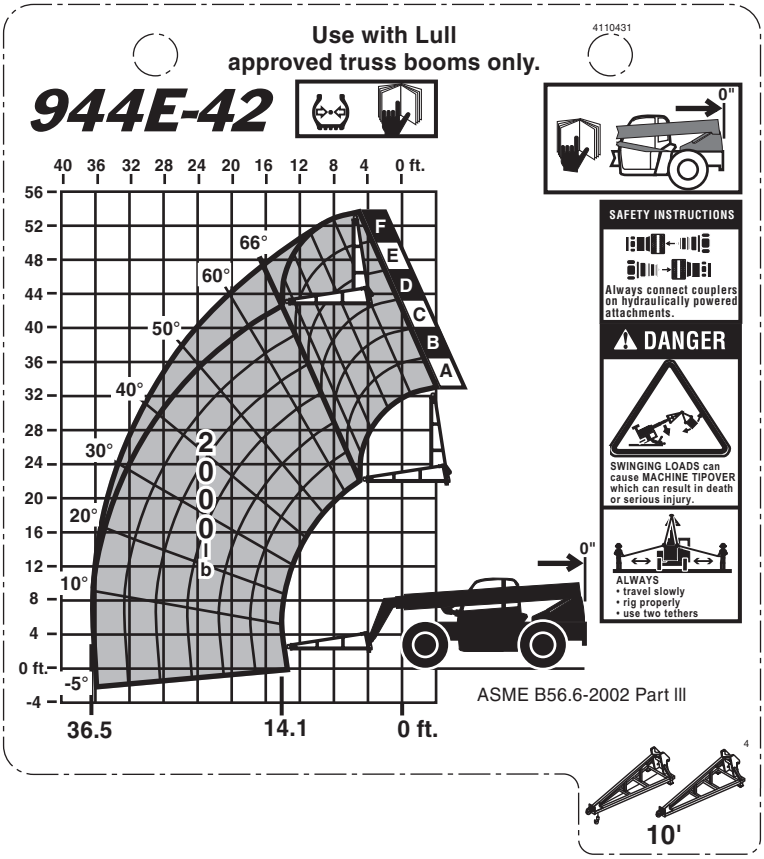

OU1411

Courtesy of Crane.Market

https://truckmanualshub.com/

Load Charts

3 Ft. Truss Boom w/Winch
(Transfer Carriage Forward Movement)

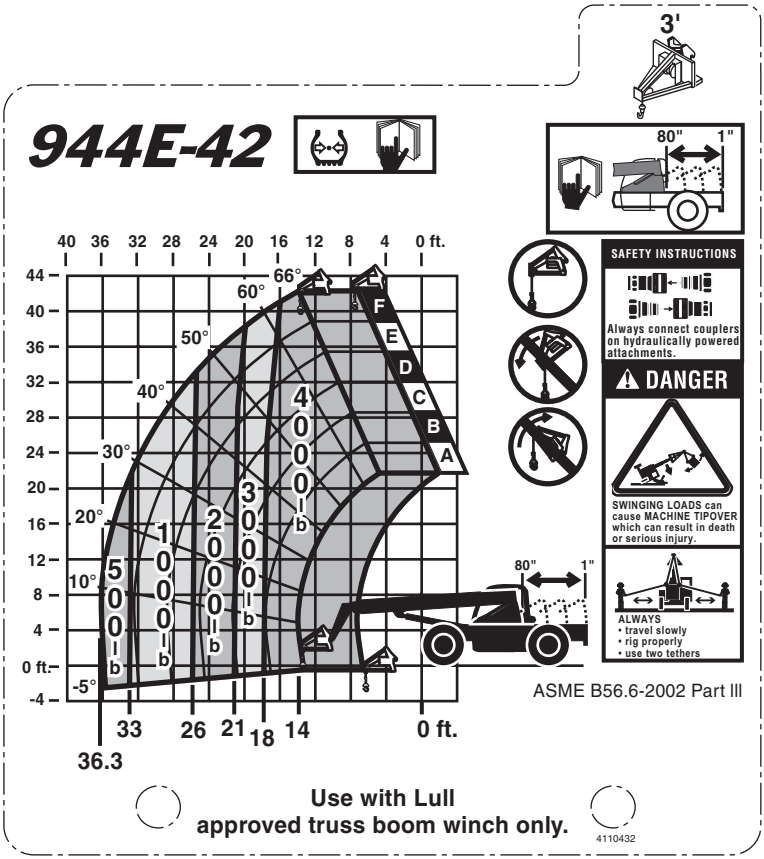

OU1421

Courtesy of Crane.Market

https://truckmanualshub.com/

3 Ft. Truss Boom w/Winch (Transfer Carriage Fully Retracted)

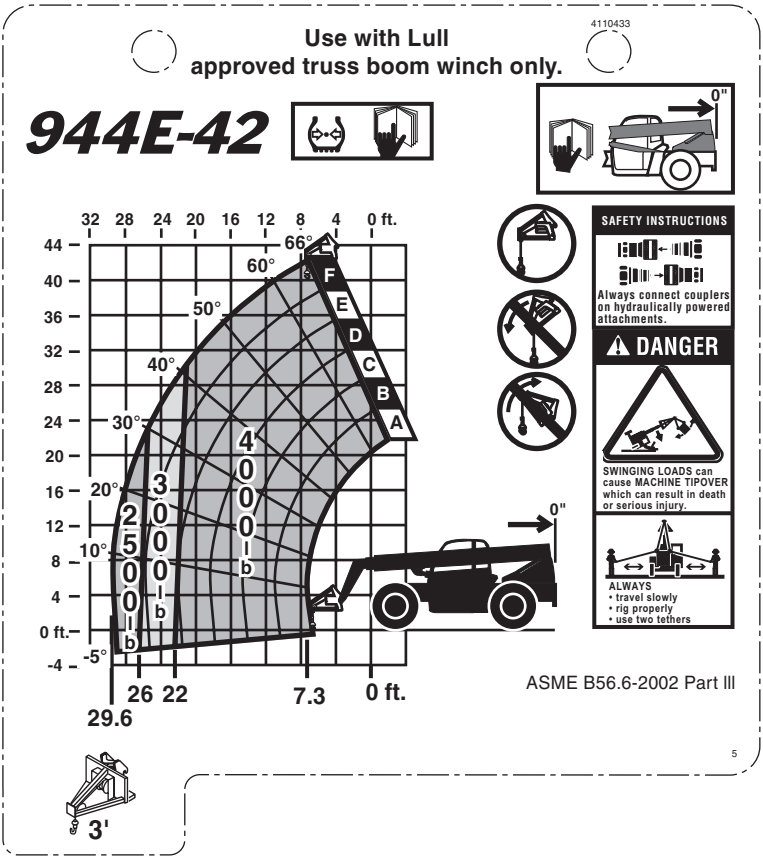

OU1431

Courtesy of Crane.Market

https://truckmanualshub.com/

This Page Intentionally Left Blank

Courtesy of Crane.Market

https://truckmanualshub.com/

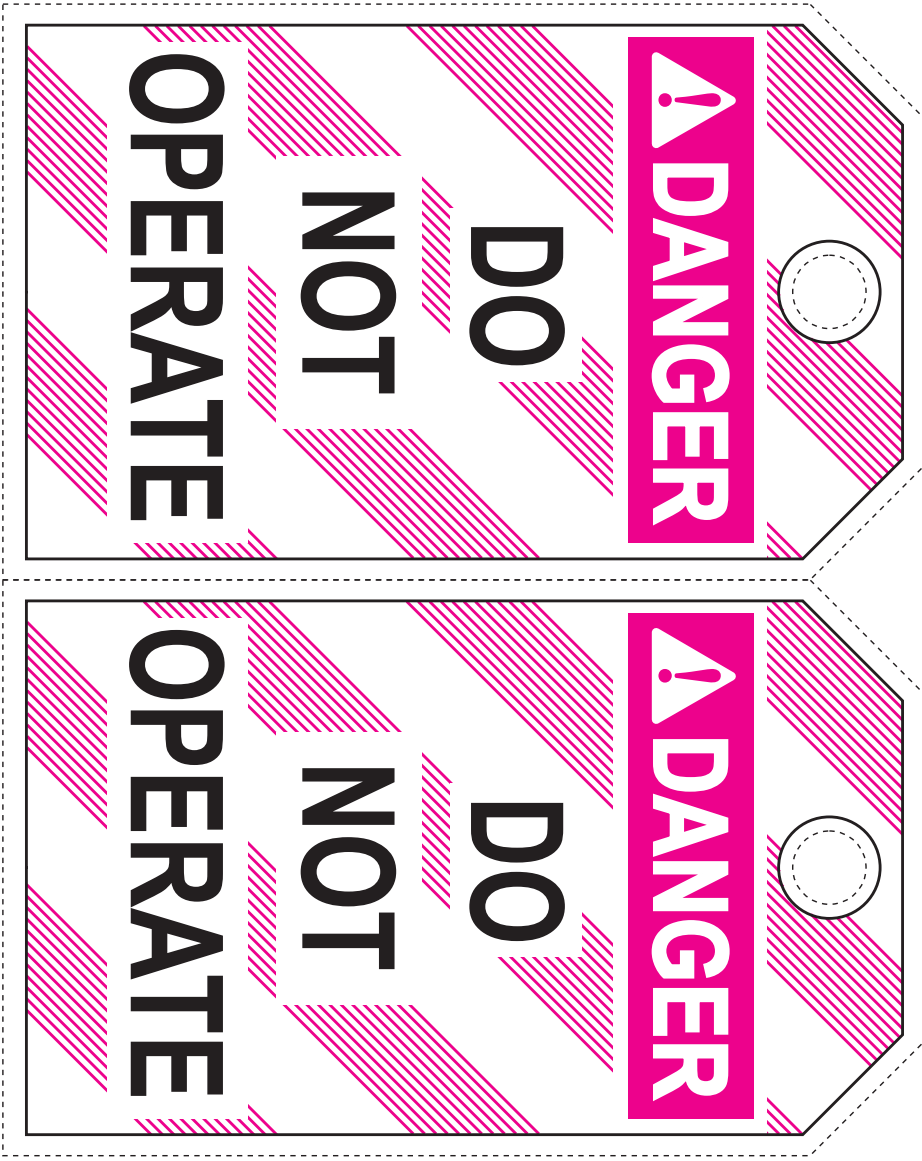

Courtesy of Crane.Market

https://truckmanualshub.com/

Accident Prevention Tags

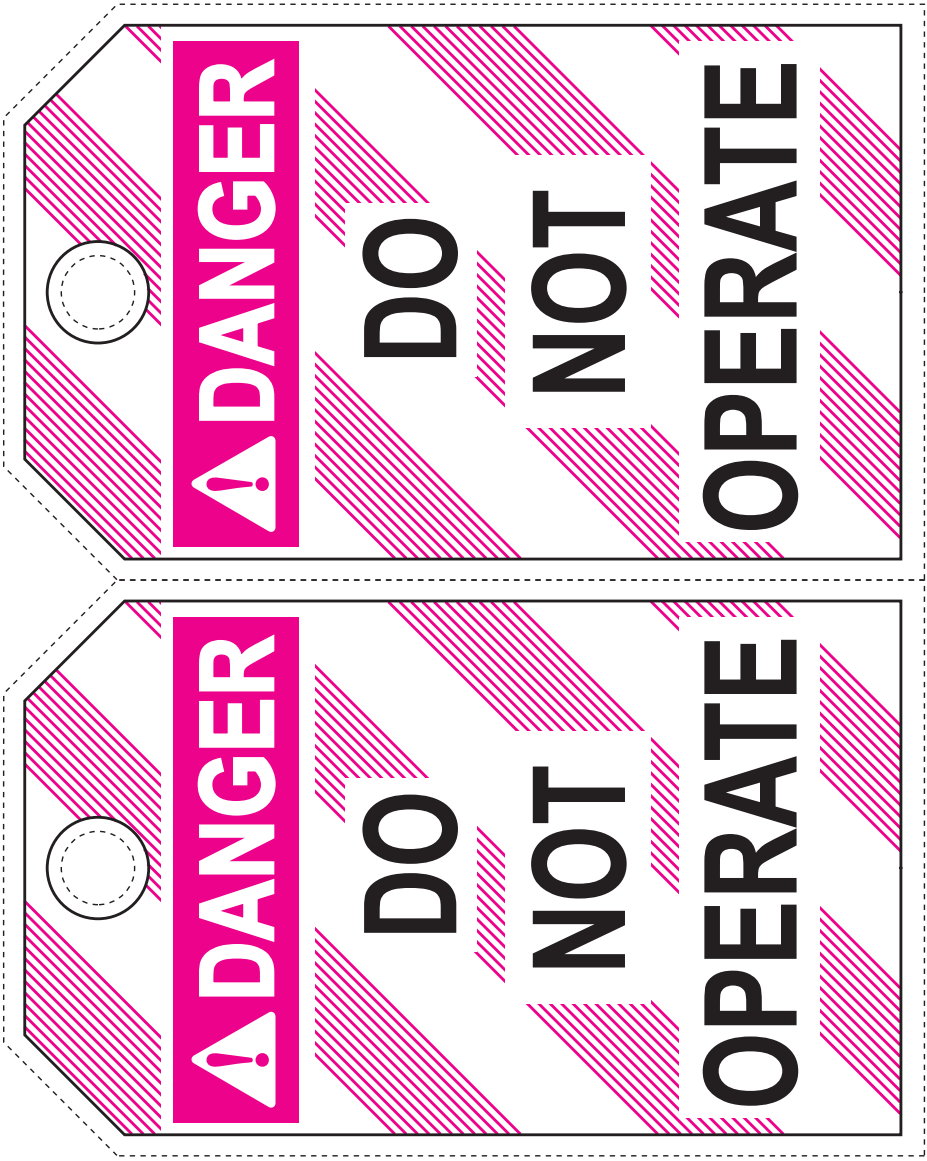

8990401 Origin 5/00

OS2180

Courtesy of Crane.Market

https://truckmanualshub.com/

An Oshkosh Corporation Company

TRANSFER OF OWNERSHIP

To Product Owner:

If you now own but ARE NOT the original purchaser of the product covered by this manual, we would like to know who you are. For the purpose of receiving safety-related bulletins, it is very important to keep JLG Industries, Inc. updated with the current ownership of all JLG products. JLG maintains owner information for each JLG product and uses this information in cases where owner notification is necessary.

Please use this form to provide JLG with updated information with regard to the current ownership of JLG products. Please return completed form to the JLG Product Safety & Reliability Department via facsimile or mail to address as specified below.

Thank You,
Product Safety & Reliability Department
JLG Industries, Inc.
13224 Fountainhead Plaza
Hagerstown, MD 21742
USA
Telephone: +1-717-485-6591
Fax: +1-301-745-3713

NOTE: Leased or rented units should not be included on this form.

Mfg. Model: _____

Serial Number: _____

Previous Owner: _____

Address: _____

_____

Country: _____ **Telephone: (_____)** _____

Date of Transfer: _____

Current Owner: _____

Address: _____

_____

Country: _____ **Telephone: (_____)** _____

Who in your organization should we notify?

Name: _____

Title: _____

Courtesy of Crane.Market

https://truckmanualshub.com/

Courtesy of Crane.Market

https://truckmanualshub.com/

Courtesy of Crane.Market

https://truckmanualshub.com/

An Oshkosh Corporation Company

JLG Industries, Inc.
1 JLG Drive
McConnellsburg PA. 17233-9533
USA
Phone: +1-717-485-5161
Customer Support Toll Free: 1-877-554-5438
Fax: +1-717-485-6417

JLG Worldwide Locations

JLG Industries (Australia)
P.O. Box 5119
11 Bolwarra Road
Port Macquarie
N.S.W. 2444
Australia
Phone: +61 265 811 111
Fax: +61 265 810 122

JLG Latino Americana Ltda.
Rua Eng. Carlos Stevenson,
80-Suite 71
13092-310 Campinas-SP
Brazil
Phone: +55 193 295 0407
Fax: +55 193 295 1025

JLG Industries (UK) Ltd
Bentley House
Bentley Avenue
Middleton
Greater Manchester
M24 2GP
England
Phone: +44 (0)161 654 1000
Fax: +44 (0)161 654 1001

JLG France SAS
Z.I. de Baulieu
47400 Fauillet
France
Phone: +33 (0)5 53 88 31 70
Fax: +33 (0)5 53 88 31 79

JLG Deutschland GmbH
Max-Planck-Str. 21
D - 27721 Ritterhude-Ihlpohl
Germany
Phone: +49 (0)421 69 350 20
Fax: +49 (0)421 69 350 45

JLG Equipment Services Ltd.
Rm 1107 Landmark North
39 Lung Sum Avenue
Sheung Shui N.T.
Hong Kong
Phone: +852 2639 5783
Fax: +852 2639 5797

JLG Industries (Italia) s.r.l.
Via Po. 22
20010 Pregnana Milanese - MI
Italy
Phone: +39 029 359 5210
Fax: +39 029 359 5845

JLG Europe B.V.
Polaris Avenue 63
2132 JH Hoofddorp
The Netherlands
Phone: +31 (0)23 565 5665
Fax: +31 (0)23 557 2493

JLG Polska
Ul. Krolewska
00-060 Warsawa
Poland
Phone: +48 (0)914 320 245
Fax: +48 (0)914 358 200

JLG Industries (Scotland)
Wright Business Centre
1 Lonmay Road
Queenslie, Glasgow G33 4EL
Scotland
Phone: +44 (0)141 781 6700
Fax: +44 (0)141 773 1907

Plataformas Elevadoras
JLG Iberica, S.L.
Trapadella, 2
P.I. Castellbisbal Sur
08755Castellbisbal, Barcelona
Spain
Phone: +34 93 772 4 700
Fax: +34 93 771 1762

JLG Sverige AB
Enkopingsvagen 150
Box 704
SE - 176 27 Jarfalla
Sweden
Phone: +46 (0)850 659 500
Fax: +46 (0)850 659 534

Courtesy of Crane.Market