https://truckmanualshub.com/

# AR 440

| OPERATING WEIGHT | ENGINE OUTPUT | SHOVEL CAPACITY |
|---|---|---|
| **5,400 - 5,800 kg** | **55.4 kW (74.3 HP)** | **1.0 - 1.6 m³** |

weycor
BY ATLAS WEYHAUSEN

https://truckmanualshub.com/

# FIRST IMPRESSIONS COUNT!

weycor wheel loaders are more than the sum of their parts. They reflect true passion, a fascination with technology and 'Made in Germany' quality. It's thanks to the innovative spirit of our people, their dedication to detail and their passion for powerful engine technology that this new generation of wheel loaders has been developed.

**5,400**(1) KG
OPERATING WEIGHT

**55.4**(2) KW (74.3 HP)
ENGINE OUTPUT

**1.0** $M^3$
SHOVEL CAPACITY

WEYCOR TRADITION EST. 1971

### Operating data

| | |
|---|---|
| Shovel capacity | **1.0 $m^3$** |
| Track width | **1,510 mm** |
| Turning radius (outer shovel edge) | **4,478 mm** |
| Tear out force | **5,160 daN** |
| Torque | **4,100 daN** |
| Tipping load, straight | **4,490 kg** |
| Tipping load, articulated | **3,990 kg** |
| Lifting capacity at ground level | **4,590 daN** |
| Operating weight | **5,400 kg** |

### Specifications

| **Differing data for use of pallet forks** (3) **(500 mm distance to center of gravity)** | |
|---|---|
| Static tipping load, straight and articulated | **3,170 kg** |
| Lifting capacity | **2,536 daN** |
| Payload 80% even surface (4) | **2,536 kg** |
| Payload 60% uneven surface (4) | **1,902 kg** |

| **Sound level** | |
|---|---|
| Average sound power level $L_WA$ (5) | **100.0 dB(A)** |
| Guaranteed sound power level $L_WA$ (5) | **101.0 dB(A)** |
| Sound pressure level $L_PA$ (6) | **77.0 dB(A)** |
| Vibration values hand/arm/whole body vibration (7) | **< 2.5/0.5 $m/s^2$** |

(3) Loads must always be moved to the ground. (4) According to ISO 8313 and EN 474-3.
(5) According to 2000/14/EC and Annexes. (6) According to ISO 6396. (7) According to ISO 8041.

### Important Information on Shovel Size / Shovel Contents:

The details contained in this brochure relate solely to the weycor shovels referred to in the respective data sheet, with the associated technical parameters and configurations on which the respective CE approval for the device is based. The volume of the specific usable shovel depends on the material-specific bulk weights (t/$m^3$) of the shovel contents, which you can take as approximations from the data sheet's TABLE OF SPECIFIC WEIGHTS IN t/$m^3$. Regardless of this, neither the wheel loader's permissible working weight nor its permissible tipping loads may be exceeded. If the wheel loader is equipped with shovels that are not manufactured and licenced by Atlas Weyhausen GmbH, the buyer and / or the operator is solely responsible for compliance with the relevant statutory regulations and licensing requirements – particularly those relating to road-traffic and road-traffic-licensing law.

(1) Service weight may vary with different equipment.
(2) Power output ISO 14396, exhaust gas aftertreatment according to EU 2016/1628.
All technical data refer exclusively to the standard unit.

https://truckmanualshub.com/

# DETAILS THAT MAKE AN IMPRESSION

It is demanding to meet the new legal requirements for exhaust emissions. The challenge is to create also tangible benefits for our customers. We are proud to have achieved both in the development of the current wheel loader generation: more power - less consumption, plus a number of others innovations that really make a difference on tough construction sites.

**Comfortable cabin**
In addition to the excellent circumferential visibility in the wheel loader, its clearly arranged controls and its ergonomic design.

**Easy maintenance**
Low-maintenance and quick, easy servicing is achieved by central, consolidated, easy-to-reach service points.

**Powerful drive unit**
weycor wheel loaders are equipped with state-of-the-art engines which combine high power reserves for challenging operations with up-to-date low emission values.

**State of the art kinematics**
weycor Z-kinematics is characterised by high frictional forces and excellent lifting heights. The very good parallel guide provides the optimal prerequisites for using pallet forks. When the hoist is lowered with the shovel, the shovel returns automatically to the digging position. The boom that is tapered towards the top provides the best possible view of the attachment and working area at all times, even under difficult operating conditions.

**Hydraulic quick-change attachment**
By allowing you to change the wheel loader's attachments in a few seconds, it turns the vehicle into an all-rounder.

**Articulated-pendulum joint**
In weycor wheel loaders, we use robust, low-maintenance articulated-swivel joints almost exclusively in conjunction with rigid axes. With an oscillation of ±12° in the rear carriage and an articulation angle of 40°, these provide outstanding cross-country mobility, protect the ground and offer extreme manoeuvrability. With their low centre of gravity, weycor wheel loaders have a high tilt stability even under extreme conditions.

**Inching Pedal**
As the only manufacturer, our wheel loaders have a separate inching pedal as standard. This prevents the possibility of moving against the operating brake, in contrast to the combination of a brake/inch pedal. A generously proportioned inching range facilitates precise distribution of shearing and lifting forces. The result: less wear and lower fuel consumption.

**Spring-loaded brake**
The spring-loaded or negative brake in weycor wheel loaders is a closed brake system (oil bath multiple-disc brake) which holds the wheel loader securely in position on a slope when the brake or inch function is activated and automatically locks all four wheels when the engine is at a standstill. The multiple-disc brake runs in the oil bath and is particularly low-maintenance and low-wearing as a result.

https://truckmanualshub.com/

# INNOVATIVE ENGINE TECHNOLOGY

**TD 2.9 L4 – intelligent efficient**
We have been convinced of the quality of Deutz engines for over 40 years. Our cooperation with Deutz also offers numerous benefits for the AR 440: such as the electronic engine control with intelligent connection to the drive management. This ensures the best engine performance with low fuel consumption.

**Mighty performance**
55.4 kW at a maximum of 2,200 rpm

**Compliance with emission standards**
EU Stage 5 - DOC + DPF from 2019

**Deutz engine technology: TD 2.9 L4**
Water-cooled 4-cylinder inline engine with cooled, external exhaust gas recirculation with turbocharging and with charge air cooling. The powerful Common Rail injection system and highly-efficient combustion process with cooled external exhaust gas recirculation ensure optimum engine performance at low fuel consumption and exhaust emissions.
Through the use of the diesel particulate filter, the engines comply with the EU Stage V emissions standard 2019. For ease of machine installation engine foot print and all major installation interfaces will stay unchanged for Stage V.

https://truckmanualshub.com/

# TECHNICAL DATA

| **Engine** | |
|---|---|
| Model | TD 2.9 L4 |
| Design | water-cooled |
| Output | 55.4 kW (74.3 HP) at 2,200 rpm |
| Max. torque | 260 Nm at 1,600 rpm |
| Cubic capacity | 2,924 $cm^3$ |
| Number of cylinders | 4 in line |

| **Electrical system** | |
|---|---|
| Operating voltage | 12 V |
| Battery | 12 V / 100 Ah |
| Generator | 14 V / 95 A |
| Starter | 12 V / 2,6 kW |

**Drive**

Output-regulated hydrostatic drive with pressure cut off and closed circuit acting on all 4 wheels.
Speed with standard tires:
**Operating speed range** 0–6.5 km/h
**Road speed range** 0–20 km/h
**Optional high speed** 0–40 km/h
1st and 2nd hydraulic gear can be engaged under load, forward/backward travel also. Forward/backward travel, speed ranges and off-position operational via weycor joystick. Drive operated by accelerator and separate inching pedal for best distribution of the hydraulic power for thrust and lifting forces.

**Brakes**

**Standard brake:** Multi-disc brake in oil bath acting on all 4 wheels. Supplementary brake functions via inching pedal and hydrostatic drive acting on all 4 wheels.
**Parking brake:** Parking brake as springloaded brake acting on all 4 wheels. In case of standstill of engine the spring-loaded brake is automatically reactivated.

**Axles**

Rigid axles with planetary reduction gears in wheel hubs, connecting electrically 100%- differential lock in front and rear axle.

**Steering**

Fully hydraulic center pivot steering
Front and rear wheels follow the same track
Steering angle of 40° to each side, ±12° angular movement at rear of vehicle
Operating pressure of steering hydraulics 175 bar
Emergency steering function

**Tires** (Special tires upon request)

**Standard:** 12.5-20 MPT – Multi-purpose tires for sand and gravel surfaces, woodland, roads and paths
**Special tires:** 400/70 R20 XMCL – Wheel loader tires for clay, sand, gravel, fields and greenland, fortified roads
405/70 R20 EM – Construction machine tires for clay, sand, gravel, asphalting, roads, gardening and landscaping

**Hydraulic system**

Gear pump for loading and steering hydraulics
Priority valve favoring steering hydraulics
Lowering brake dependent of load
3rd hydraulic section serial
Loading hydraulic hydraulically pre-activated by weycor joystick, including float position
Operating pressure 265 bar, Delivery of pump 62 l/min
Option: Loading hydraulics electrically pre-activated

| **Fuel/oil capacities** | |
|---|---|
| Diesel | 100 Liter |
| Hydraulic oil | 76 Liter |
| Engine oil | 8 Liter |
| Front axle | 4.6 Liter |
| Rear axle | 5.1 Liter |
| Gear oil | 0.9 Liter |
| Cooling liquid | 13 Liter |

| **Loading equipment** | |
|---|---|
| Powerful and solid Z-kinematics with high tear out force | |
| Hydraulic quick change device | |
| Activation of all functions by weycor joystick | |
| Parallel movement while using pallet forks | |
| Automatic shovel return to excavation position | |
| Locking device acc. to German StVZO for road travel | |
| **Lifting** | **5.3 s** |
| **Lowering** | **3.8 s** |
| **Tipping** | **1.7 s** |

**Equipment** – Series

Rear driving mirrors, foldable
Heatable rear screen
Comfortable access to cab from both sides
Activation of all functions by weycor joystick
Control lights for speed range, forward/backward travel
Lights acc. to German StVZO for road travel
Individually adjustable driver's seat with adjustable right arm rest
Engine oil heating with heat exchange and 4-stage fan
Front windscreen ventilation, variable output
Sound absorbing ROPS cab
Windscreen wipe and wash unit in front and rear
Sun visor, coat hook, ceiling lamp, stow facility
Adjustable steering column
Heat protection glazing with largetinted screens
Control lights for engine oil pressure, overheating, hydraulic oil temperature, battery power, parking brake and air filter
Central dashboard with indicators for preheating, engine temperature, fuel, working hour meter
weycor joystick with knurled wheel and slide switch

**Equipment** – Option

Load check valve for lifting and working cylinders
Trailer coupling
High speed version 40 km/h
Main battery switch
Special paintings and oils
Corrosion prevention against salt
weycor diagnostic system (ADS) for monitoring engine parameters with integrated electronic anti-theft device
Warning beacon
Heatable and air cushioned seats
Radio
Doors with sliding windows, left and right side

https://truckmanualshub.com/

# TECHNICAL DATA

| | AR 440 with standard shovel | AR 440 with pallet forks |
|---|---|---|
| A | 5,137 mm | 5,552 mm |
| B | 2,661 mm | 2,661 mm |
| C | 4,080 mm | 3,712 mm |
| C1 | 3,296 mm | 3,105 mm |
| C2 | 2,616 mm | 1,424 mm |
| D | 10 mm | 6 mm |
| E | 503 mm | 283 mm |
| E1 | - | 1,106 mm |
| E2 | - | 588 mm |
| F | 421 mm | 421 mm |
| G | 2,099 mm | 2,099 mm |
| H | 1,861 mm | 1,861 mm |
| I | 2,050 mm | 1,030 mm |
| K | - | 1,122 mm |
| L | 1,331 mm | 1,331 mm |
| R | 1,985 mm | 1,985 mm |
| R1 | 3,865 mm | 3,865 mm |
| R2 | 4,314 mm | 4,314 mm |
| W | 4,390 mm | 4,390 mm |
| Z | - | 1,621 mm |

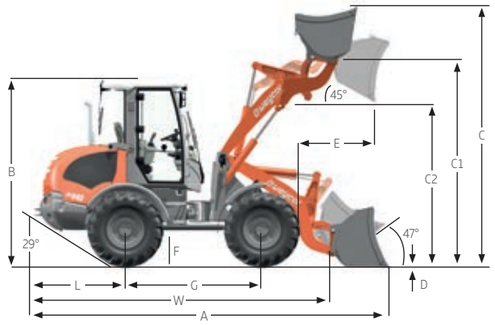


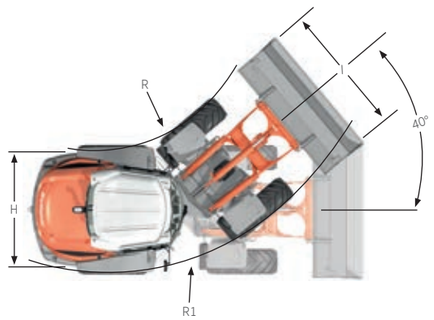


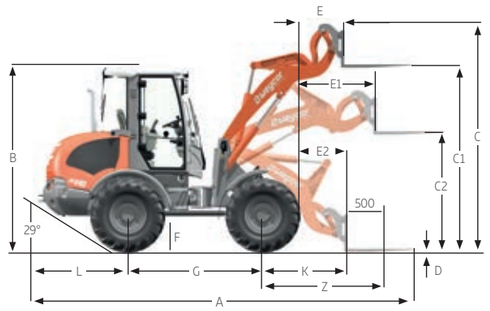


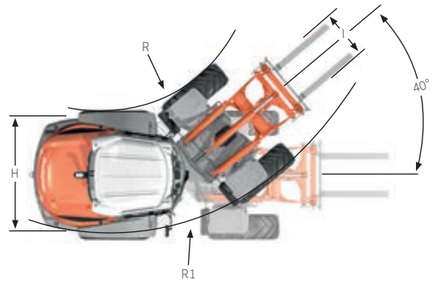


**With standard shovel** | **With pallet forks**

| Specific gravity for material handling weight (t/m³) | | | | | | | |
|---|---|---|---|---|---|---|---|
| **Construction** | | | | **Industry** | | **Landscaping, Agriculture** | |
| Concrete | 1.9 | Sand (watery) | 2.1 | Ember | 0.7 | Agricultural crop | 0.7 |
| Soil (dry) | 1.5 | Sandstone | 2.4 | Brown coal briquette | 0.8 | Grain | 0.6 |
| Soil (watery) | 2.0 | Shale | 2.2 | Ferrous product | 7.8 | Hay | 0.3 |
| Rock (fill) | 2.4 | Sediment | 2.1 | Iron ore | 2.3 | Potash | 1.1 |
| Granite | 1.8 | Crushed stone | 1.5 | Cullet | 1.9 | Compost | 1.0 |
| Limestone | 1.6 | De-icing salt | 1.3 | Gas coke | 0.4 | Flour | 0.5 |
| Gravel (dry) | 1.9 | Clay | 1.6 | Timber | 0.8 | Clay (watery) | 2.3 |
| Gravel (watery) | 2.1 | Cement | 1.7 | Mineral coal | 1.2 | Phosphate fertiliser | 2.2 |
| Loam | 1.7 | Clinker (stacked) | 1.8 | Paper | 0.9 | Turf (watery) | 1.1 |
| Plaster | 2.2 | | | Slag | 1.0 | Turf (dry) | 0.4 |
| Sand (dry) | 1.9 | | | Slag concrete | 2.7 | Mineral fertiliser | 1.0 |

https://truckmanualshub.com/

en_01_2021_005

You can find our current product range and more exciting details at: **www.weycor.de**

Under our policy of continuous improvement, we reserve the right to change specifications and design without prior notice, errors expected. The technical data refer only to the standard version, illustrations do not necessarily show the standard version of the machine. Not all products are available in all markets.

**weycor is a brand of ATLAS WEYHAUSEN GMBH.**

**ATLAS WEYHAUSEN GMBH** · D – 27793 Wildeshausen
Phone +49 (0) 44 31 – 98 10 · info@weycor.de · **www.weycor.de**

weycor BY ATLAS WEYHAUSEN