https://truckmanualshub.com/

https://truckmanualshub.com/

WE HAVE THE SOLUTION FOR YOUR NEEDS

SISU

DESIGN

VEHICLE TECHNOLOGY
PROJECT SERVICES COMPRISE,
IN ADDITION TO VEHICLE DESIGN,
FOR EXAMPLE;
RESEARCH
SITE SURVEYS
ANALYSES
FIELD TESTING
TRAINING

SOLUTIONS

You name it – We have it
High Mobility Vehicles and Platforms for e.g.
- Aerial platforms
- Fire vehicles
- Heavy duty tippers
- Service vehicles
- Towing trucks
- Work Over Rigs
- Numerous other solutions also available

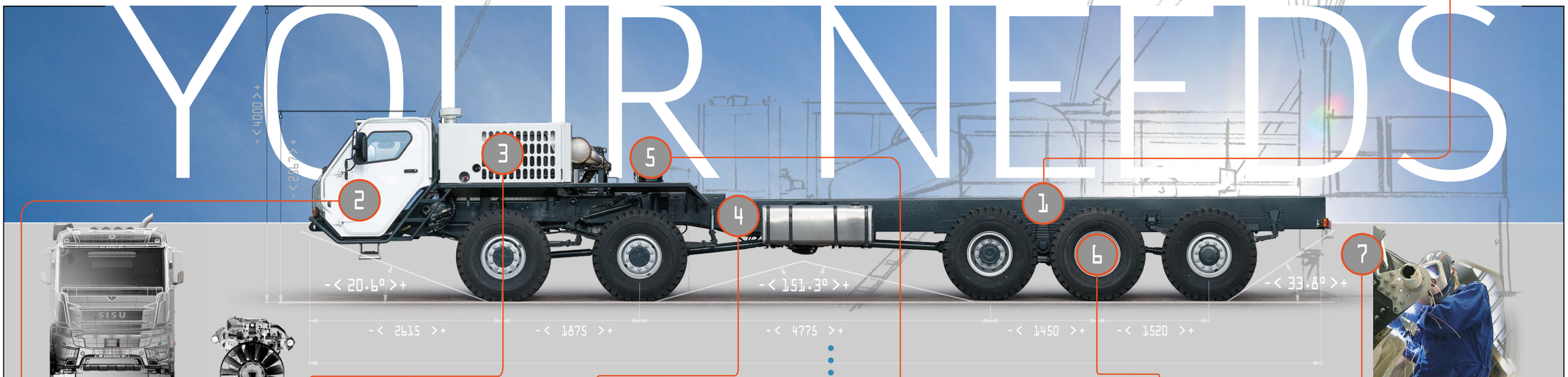

CABIN
Both standard and task-specific special cabins and related protection features are available.

POWERTRAIN
The powertrain options are designed individually according to the requirements of the customer and the usage of the truck. Various engine types complying to different emission standards are available and the transmission can be automatic, automated manual or manual.

CHASSIS
Components are selected and placed taking into account the end use of the vehicle. Modular design ensures cost-effective solutions for various tasks.

COMPONENTS
As an independent manufacturer Sisu Auto uses components from the leading manufacturers worldwide. Use of standard truck components in special vehicles ensures low service costs and high operational availability even in demanding operations

AXLES
All SISU vehicles are characterized by high payload and mobility. Therefore number of axles and axle configuration is always chosen for optimal manoeuvrability and performance in all conditions.

ASSEMBLY
Skilled assembly staff on in-house production line results in high quality products. Combined with our flexible vehicle design team it also enables integration of customer-furnished equipment during production.

- NEEDS
- REQUIREMENTS
- DESIGN
- SOLUTION

< EXAMPLE CASE

- The ongoing Workover Rig project shall have a great impact in our operations and productivity, Mr. Ewald Stoecke, Team Leader from OMV Petrom Workover & Well Intervention Business Unit, says. The Sisu 10x10 platform shall give the Workover Rigs totally new mobility, thus enabling increased operational availability, Mr. Stoecke continues and adds that the drop in maintenance costs over expected lifetime of >25 years is likewise an important factor.

SISU solution answers to the needs and requirements of the Customer. Each product is intended for its' specific end use, responding to the task in question without compromises.

REQUIREMENT:
Off-road capable support vehicles for international truck competitions

SOLUTION:
Sisu 6x4, Sisu 6x6 and Sisu 8x8 vehicle platforms

CUSTOMER:
NP <<Kamaz-Avtosport>>

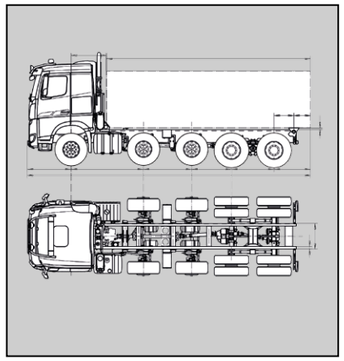

REQUIREMENT:
Cost effective tipper vehicle for mining use

SOLUTION:
SISU 10x4 tipper vehicle with heavy duty chassis and axles for tipper use with payload 60t

PROSPECT:
Brönnöy Kalk AS

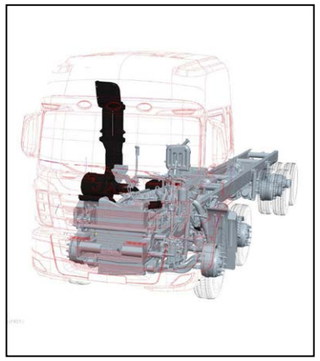

REQUIREMENT:
Technology consultation and product development for 8x2 truck chassis for mass production

SOLUTION:
Conversion of Customers' existing 8x4 configuration to 8x2 configuration.
Analyses and testing led to new design for axles, suspension and frame structures.

CUSTOMER:
Anhui Jianghuail Automobile Co.Ltd

https://truckmanualshub.com/

YOUR CASE

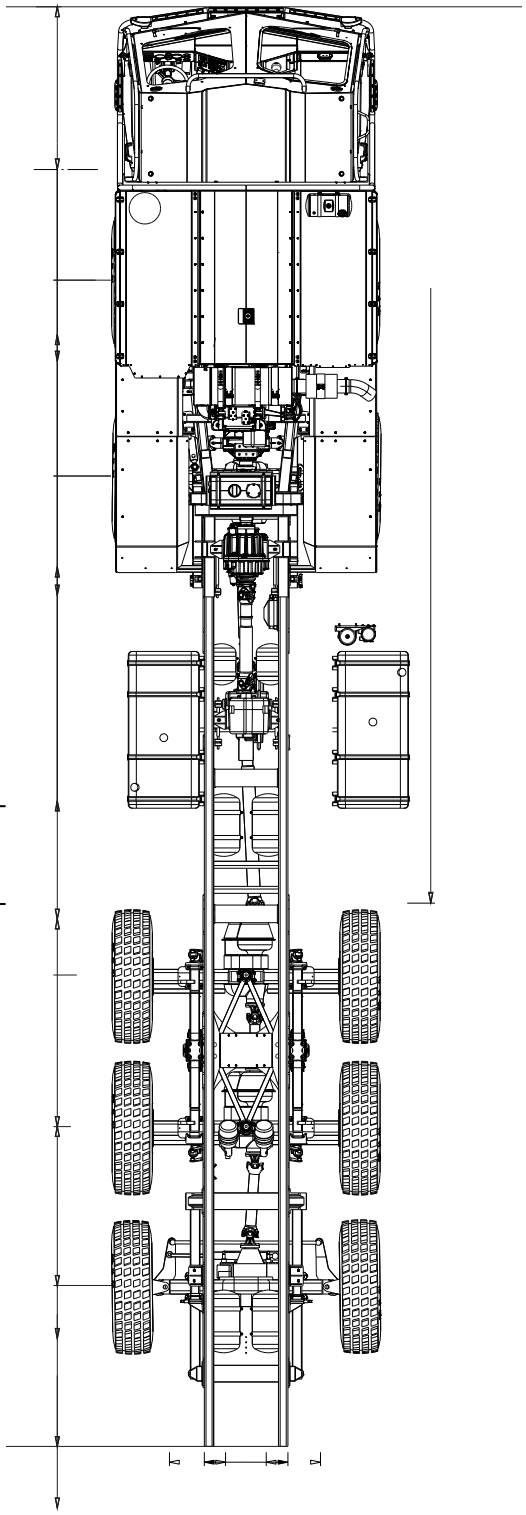

NEED TO IMPROVE

- ☐ MOBILITY
- ☐ AVAILABILITY
- ☐ ECONOMY
- ☐ PAYLOAD
- ☐ PERFORMANCE
- ☐ PRODUCTIVITY
- ☐ OTHER

TECHNOLOGY PROJECTS

- ☐ VEHICLE DESIGN
- ☐ RESEARCH
- ☐ SURVEY
- ☐ ANALYSIS
- ☐ FIELD TESTING
- ☐ TRAINING
- ☐ OTHER

SISU VEHICLE CONFIGURATION

PAYLOAD

- ☐ < 20 t
- ☐ > 20 t
- ☐ > 40 t
- ☐ > 50 t
- ☐ > 60 t
- ☐ Other

DRIVETRAIN

- ☐ 4x4
- ☐ 6x4
- ☐ 6x6
- ☐ 8x8
- ☐ 10x2
- ☐ 10x10
- ☐ Other

ENGINE

- ☐ Euro III
- ☐ Euro V
- ☐ Euro VI
- ☐ Tier 3
- ☐ Tier 4
- ☐ Other

TRANSMISSION

- ☐ Automatic
- ☐ Automated manual
- ☐ Manual

POWER TAKE-OFF

- ☐ Engine PTO
- ☐ Transmission PTO
- ☐ Transfer case PTO
- ☐ Other

CABIN

- ☐ Standard on-road
- ☐ Task-specific
- ☐ Task-specific protected
- ☐ Off-road
- ☐ Other

CHASSIS

- ☐ With subframe for superstructures
- ☐ Integration of supersrtuctures without subframe
- ☐ Special design
- ☐ Other

Oy Sisu Auto Ab

A producer and designer of Factory ready vehicle solutions since 1931

Oy Sisu Auto Ab is a supplier of vehicles intended for demanding tasks and harsh conditions.
Additional information of Sisu products and Sisu services is available online on website

Oy Sisu Auto Ab
Pl 68, Fi-10301 Karjaa
Finland

Tel. +358 10 2751
fax +358 19 236 044

www. sisuauto.com

info@sisuauto.com
firstname.lastname@sisuauto.com