CLAAS

LEXION 470 - 420 Montana

Technical Systems

Electric/Hydraulic System

Supplement

SERVICE & PARTS

The present document exclusively describes all special electric and hydraulic functions of the LEXION Montana series.

Explanations and descriptions concerning the basic machine and the front attachments can be found in the relevant Electric System (297 550.x) and Hydraulic System (297 549.x) documents.

D-S - Central terminal compartment on Montana machines 014 501.0 (with RIO module A50) ZE-s-2

D-S - Central terminal compartment on Montana machines 014 501.0 (with HBM module A45) ZE-s-4

Module A35 - Montana control unit, for Montana machines (with RIO module A50) ZE-s-9

Module A35 - Montana control unit, for Montana machines (with HBM module A45) ZE-s-10

Module A36 - Montana gearshift module ZE-s-11

Module A45 - Ground drive hydraulic motor brake restrictor (HBM) ZE-s-12

Module A50 - Montana RIO module ZE-s-12

01s - Main power supply, diesel engine electric starting motor, for Montana machines 01s-2

02s - Starting the diesel engine, diesel engine speed adjustment - for Montana machines 02s-2

04s - Road travel activation, working hydraulics master valve, for Montana machines with module A50 (RIO) 04s-2

04t - Road travel activation, working hydraulics master valve, for Montana machines with module A45 (HBM) 04t-2

05s - Terminal, keyboard, rotary switch, printer, for Montana machines with module A50 (RIO) 05s-2

05t - Terminal, keyboard, rotary switch, printer, for Montana machines with module A45 (HBM) 05t-2

06s - CAN bus, module power supply, for Montana machines with module A50 (RIO) 06s-2

06t - CAN bus, module power supply, for Montana machines with module A45 (HBM) 06t-2

17s - Front attachment drive, reverser drive for Montana machines 17s-2

20s - Raise / lower front attachment, cross levelling – for Montana machines 20s-2

26s - Machine monitoring, for Montana machines 26s-2

41s - Axle control system and front attachment control system,
for Montana machines with module A50 (RIO) 41s-2

41t - Axle control system and front attachment control system,
for Montana machines with module A45 (HBM) 41t-2

42s - Ground drive and brake control,
for Montana machines with module A50 (RIO) 42s-2

42t - Ground drive and brake control,
for Montana machines with module A45 (HBM) 42t-2

Index Index-3

D-S
Central terminal compartment

014 501.0
Montana (with RIO module A50)

D-S - Central terminal compartment on Montana machines
014 501.0 (with RIO module A50)

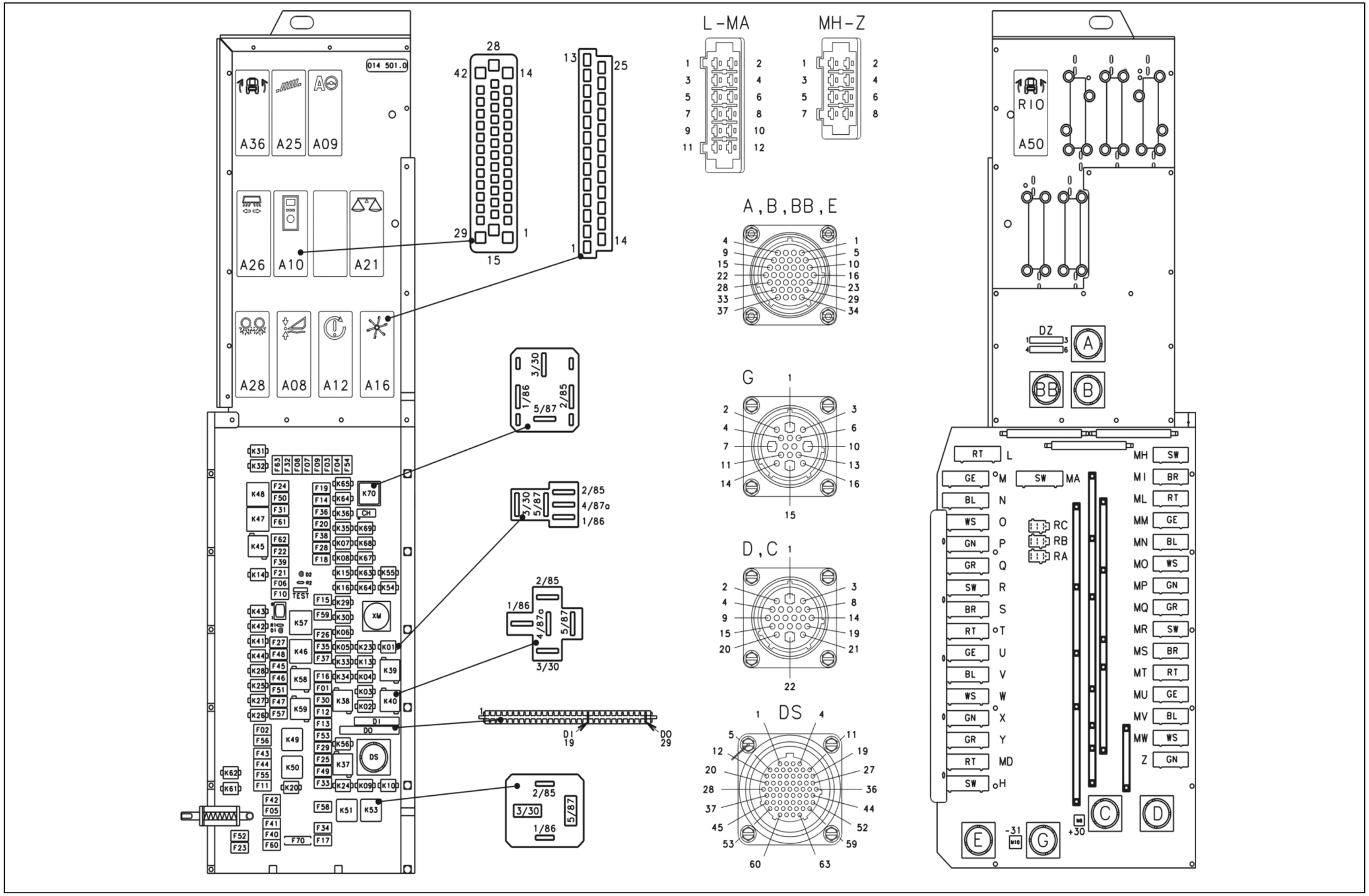

D-S
Central terminal compartment

014 501.0
Montana (with HBM module A45)

D-S - Central terminal compartment on Montana machines
014 501.0 (with HBM module A45)

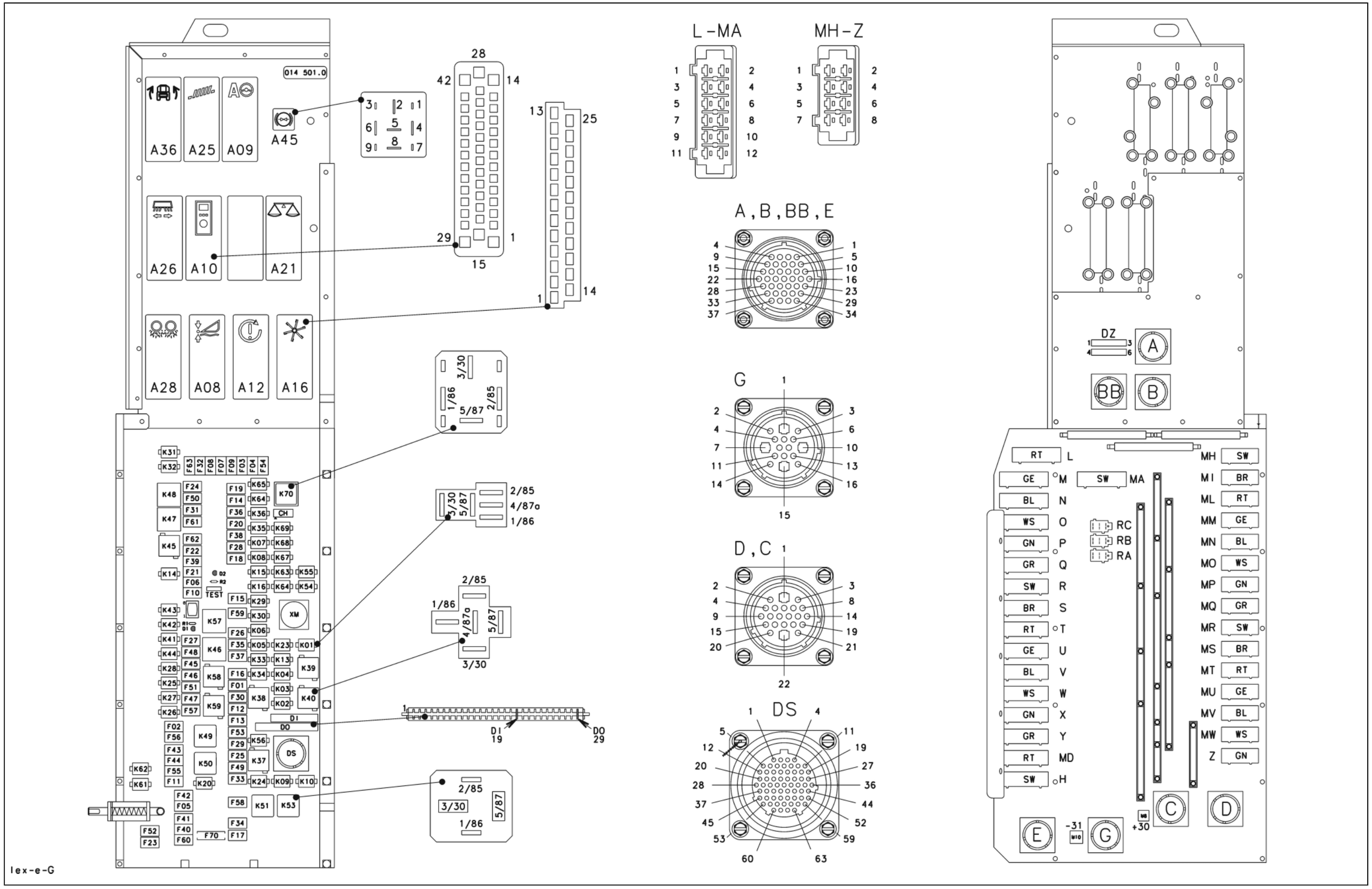

Key to diagram:

Modules

A08	AUTOCONTOUR module (CAC)
A09	AUTOPILOT module
A10	Fieldwork computer module (BIF/CAB)
A12	Speed monitor module (DZW)
A16	Reel controller module (HAS)
A21	YIELD METER module (LEM)
A25	Sieve adjustment module
A26	Deflector adjustment module
A28	Uni-spreader module (VGS)
A36	Electro-hydraulic gearshift module
A45	Ground drive hydraulic motor brake restrictor module (HBM)
A50	RIO module (ground drive hydraulic motor brake restrictor)

Electronic components

DI	Warning device diode PCB
D0	Master valve diode PCB
DS	Diagnosis (63-pin) VIA

Fuses

F1	Dipped headlights circuit
F2	Sieve adjustment module 12 V control unit
F3	CAN connection of performance monitor
F4	+12 V electronic unit
F5	12 V air conditioner fan
F6	##
F7	CAC module
F8	Reel module
F9	Yield meter
F10	Yield meter
F11	Inside work lights
F12	Work lights
F13	Cigarette lighter
F14	Seat socket
F15	Drum/rotor speed adjustment
F16	Concave adjustment
F17	Diagnosis LED
F18	Cutterbar
F19	Engine speed switch
F20	All-wheel drive 12 V switch
F21	Threshing mechanism relay
F22	Fan speed relay
F23	Hazard warning switch 30
F24	Hazard warning switch 15
F25	Fan speed relay
F26	Reel controller
F27	Upper/lower sieve
F28	Autopilot switch
F29	12 V / K56 pin 30
F30	Brake light switch 12 V / Sieve pan light
F31	12 V IMO
F32	12 V IMO
F33	Air conditioner relay
F34	Engine control unit 12 V power supply
F35	CAC module / VGS module

Key to diagram:

	Fuses
F36	Grain tank extension
F37	12 V grain tank drive
F38	Work light
F39	Chopper On/Off pushbutton
F40	Vehicle lighting switch 12 V
F41	Warning beacon
F42	12 V horn / wiper and washer system
F43	Position light, left-hand
F44	Position light, right-hand
F45	Left-hand full beam relay
F46	Left-hand dipped beam relay
F47	Right-hand full beam relay
F48	Right-hand dipped beam relay
F49	Table adjustment
F50	Grain tank extension
F51	Ignition diagnosis plug
F52	Instrument lighting
F53	Returns lighting
F54	Uni-spreader/Autopilot module
F55	Worklight switch
F56	Spare module
F57	Spare module
F58	Spare (connector H)
F59	Engine diagnosis
F60	12 V sockets LP/HP
F61	###
F62	Outside railing worklights relay
F63	12 V sensors power supply
F64	###
F65	###
F70	Ignition switch back-up fuse

Key to diagram:

	Relays
K1	Raise reel
K2	Lower reel
K3	Reel forward
K4	Reel backward
K5	Raise cutterbar
K6	Lower cutterbar
K7	Cutterbar left-hand cross levelling
K8	Cutterbar right-hand cross levelling
K9	Table adjustment forward
K10	Table adjustment backward
K13	Threshing mechanism On/Off
K14	Threshing mechanism On/Off
K15	Cutterbar
K16	Cutterbar
K20	Lighting main relay
K23	Alternator
K24	Air conditioner relay
K25	Left-hand full beam relay
K26	Right-hand full beam relay
K27	Left-hand dipped beam relay
K28	Right-hand dipped beam relay
K29	Drum speed adjustment relay
K30	Drum speed adjustment relay
K31	Grain tank extension up
K32	Grain tank extension down
K33	Concave clearance +
K34	Concave clearance -
K35	Front attachment speed +
K36	Front attachment speed -
K37	Fan speed +
K38	Fan speed -
K39	Reel speed -
K40	Reel speed +

Key to diagram:

	Relays
K41	Upper sieve adjustment -
K42	Upper sieve adjustment +
K43	Lower sieve adjustment -
K44	Lower sieve adjustment +
K45	Work lights
K46	Grain tank unloading tube swing time relay
K47	Flash relay USA
K48	Indicator relay Europe
K49	Road travel main relay
K50	Work lights relay
K51	Relay 15
K53	Start relay
K54	Rotor variator +
K55	Rotor variator -
K56	Plus 15 power supply
K57	Transducer
K58	Alternator relay
K59	Work lights relay
K61	Warning beacon
K62	Warning beacon grain tank 70% full
K63	Fan speed relay
K64	Reel speed relay
K67	Spare relay
K68	Spare relay
K69	Spare relay
K70	Grain tank unloading relay

Module A35 - Montana control unit, for Montana machines (with RIO module A50)

Pin	Function	Component	Measuring variable	Direction	Circuit diagram no.
1	Earth	A41	Earth	Output	05S
2	CAN Low Montana	A41	-	Output	05S
3	CAN High Montana	A41	-	Output	05S
4	Power supply (CAN)	A41	12 V	Output	05S
5	not used	---	---	---	---
6	Parking brake signal	S93	12 V	Input	41S
7	Montana cross levelling sensor signal	B94	0.25-4.75 V	Input	41S
8	Montana feed rake conveyor sensor signal	B95	0.25-4.75 V	Input	41S
9	Right-hand axle angle sensor signal	B92	0.25-4.75 V	Input	41S
10	not used	---	---	---	---
11	Oil quantity increase	Y118	12 V	Output	41S
12	Master valve (Montana)	Y128	12 V	Output	4S, 4t
13	Lower axle, right-hand side	Y116	12 V	Output	41S
14	Raise axle, right-hand side	Y117	12 V	Output	41S
15	Rotate front attachment to the right	Y112	12 V	Output	41S
16	Lower cutting angle	Y111	12 V	Output	41S
17	Power supply (K69)	---	12 V	Input	41S, 4S
18	Power supply (K69)	---	12 V	Input	41S, 4S
19	RS 232	---	---	---	05S
20	RS 232	---	---	---	05S
21	RS 232	---	---	---	05S
22	RS 232 (Boot)	---	---	---	05S
23	not used	---	---	---	---
24	Earth sensors	B91, B92, B93, B94, B95	Earth	Output	41S
25	Cutting angle sensor signal	B93	0.25-4.75 V	Input	41S
26	Left-hand axle angle sensor signal	B91	0.25-4.75 V	Input	41S
27	Power supply of sensors	B91, B92, B93, B94, B95	12 V	Output	41S
28	not used	---	---	---	---
29	Master valve (Working hydraulics)	Y77	12 V	Output	4S
30	Lower axle, left-hand side	Y114	12 V	Output	41S
31	Raise axle, left-hand side	Y115	12 V	Output	41S
32	Rotate front attachment to the left	Y113	12 V	Output	41S
33	Raise cutting angle	Y110	12 V	Output	41S
34	Earth	---	Earth	Input	41S, 4S
35	Earth	---	Earth	Input	41S, 4S

Module A35 - Montana control unit, for Montana machines (with HBM module A45)

Pin	Function	Component	Measuring variable	Direction	Circuit diagram no.
1	Power supply (K69)	---	12 V	Input	41t, 4t
2	Lower axle, left-hand side	Y114	12 V	Output	41t
3	Raise axle, left-hand side	Y115	12 V	Output	41t
4	Raise axle, right-hand side	Y117	12V	Output	41t
5	Lower axle, right-hand side	Y116	12 V	Output	41t
6	Rotate front attachment to the left	Y113	12 V	Output	41t
7	Rotate front attachment to the right	Y112	12 V	Output	41t
8	Raise cutting angle	Y110	12 V	Output	41t
9	Lower cutting angle	Y111	12 V	Output	41t
10	Master valve (Montana)	Y128	12 V	Output	4t
11	Master valve (Working hydraulics)	Y77	12 V	Output	4t
12	Oil quantity increase	Y118	12 V	Output	41t
13	not used	---	---	---	---
14	Earth	---	Earth	Input	41t
15	Power supply (K69)	---	12 V	Input	41t, 4t
16	Left-hand axle angle sensor signal	B91	0.25-4.75 V	Input	41t
17	Montana cross levelling sensor signal	B94	0.25-4.75 V	Input	41t
18	not used	---	---	---	---
19	not used	---	---	---	---
20	not used	---	---	---	---
21	CAN Low (Inclinometer)	B126	-	Output	05t
22	not used	---	---	---	---
23	CAN Low (Montana)	A41	-	Output	05t
24	Earth	A41	Earth	Output	05t
25	RS 232	---	---	---	05t
26	RS 232	---	---	---	05t
27	not used	---	---	---	---
28	Earth	---	Earth	Input	41t
29	Power supply (K69)	---	12 V	Input	4t
30	Right-hand axle angle sensor signal	B92	0.25-4.75 V	Input	41t
31	Cutting angle sensor signal	B93	0.25-4.75 V	Input	41t
32	Parking brake signal	S93	12V	Input	41t
33	Earth sensors	B91, B92, B93, B94, B95, B126	Earth	Output	41t
34	not used	---	---	---	---
35	not used	---	---	---	---
36	CAN High (Inclinometer)	B126	-	Output	05t
37	Power supply (CAN)	A41	12 V	Output	05t
38	CAN High (Montana)	A41	-	Output	05t
39	RS 232 (Boot)	---	---	---	05t
40	RS 232	---	---	---	05t
41	not used	---	---	---	---
42	not used	---	---	---	---

Module A36 - Montana gearshift module

Pin	Function	Component	Measuring variable	Direction	Circuit diagram no.
1	Earth	---	Earth	Input	42s, 42t
2	Power supply (+15)	K56	12 V	Input	42s, 42t
3	Gearbox shifting release	S90	12 V	Output	42s, 42t
4	2nd gear signal	Z83	12 V	Input	42s, 42t
5	1st gear signal	Z82	12 V	Input	42s, 42t
6	Gearbox shift 1st gear	Y107	12 V	Output	42s, 42t
7	Gearbox shift 2nd gear	Y108	12 V	Output	42s, 42t
8	Ground speed control lever neutral signal	Z57	Earth	Input	1s;42s, 42t
9	Ground drive control pressure circuit SH	Y125	12 V	Output	42s, 42t
10	Engine speed maximum reduced	---	12 V – 1st gear 0 V – 2nd gear	Output	42s, 42t
11	Engine speed (Gearshift control)	---	12 V	Input	42s, 42t
12	Parking brake circuit	Y123	12 V	Input	42s, 42t
13	Shifting aid uphill signal	Y121	12 V	Input	42s, 42t
14	Shifting aid downhill signal	Y122	12 V	Input	42s, 42t
15	Working hydraulics master valve	Y77	12 V	Output	4s, 4t
16	Working hydraulics master valve	Y77	12 V	Output	4s, 4t
17	Montana master valve	Y128	12 V	Output	4s, 4t
18	Montana master valve	Y128	12 V	Input	4s, 4t
19	Montana master valve	Y128	12 V	Input	4s
20	Working hydraulics master valve	Y77	12 V	Input	4s, 4t
21	Working hydraulics master valve	Y77	12 V	Input	4s, 4t
22	Working hydraulics master valve	Y77	12 V	Input	4s, 4t
23	Working hydraulics master valve	Y77	12 V	Input	4s, 4t
24	Shifting aid	Y121; Y122	12 V	Output	42s, 42t
25	not used	---	---	---	---

Module A45 - Ground drive hydraulic motor brake restrictor (HBM)

Pin	Function	Component	Measuring variable	Direction	Circuit diagram no.
1	---	---	---	---	---
2	Master valve	Y77	12 V	Output	42t
3	CAN high	-	-	-	6t
4	Power +15	K51/87	12 V	Input	6t
5	---	---	---	---	---
6	Earth (GND)	-31	Earth	Input	6t
7	---	---	---	---	---
8	Brake restrictor	Y124	12 V	Output	42t
9	CAN low	-	-	-	6t

Module A50 - Montana RIO module

Pin	Function	Component	Measuring variable	Direction	Circuit diagram no.
R0/1	+12 V electronic unit	---	---	---	---
R0/2	+12 V power	---	---	---	---
R0/3	Output 1 Montana master valve	Y128	12 V	Output	4s, 42s
R0/4	Ground drive hydraulic motor brake restrictor (output 3)	Y124	12 V	Output	42s
R0/5	Working hydraulics master valve output 2	Y77	12 V	Output	4s, 42s
R0/6	Output 4	---	---	---	---
R0/7	Sensor 1	---	---	---	---
R0/8	Sensor 2	---	---	---	---
R0/9	Earth	---	---	---	---
R0/10	Earth	---	---	---	---
R0/11	Module code 1	---	---	---	---
R0/12	Module code 2	---	---	---	---
R0/13	Module code 3	---	---	---	---
R0/14	Module code 4	---	---	---	---
R0/15	Sensor 3	---	---	---	---
R0/16	Sensor 4				
R1/1	CAN low	---	---	---	6s
R1/2	+12 V electronic unit	---	12 V	Input	2s, 6s
R1/3	+12 V power	---	12 V	Input	2s, 6s
R1/4	CAN high	---	---	---	6s
R1/5	Earth	---	Earth	Input	6s
R1/6	Earth	---	Earth	Input	6s

01s

Main power supply,
Diesel engine electric starting motor

for Montana machines

01s - Main power supply, diesel engine electric starting motor, for Montana machines

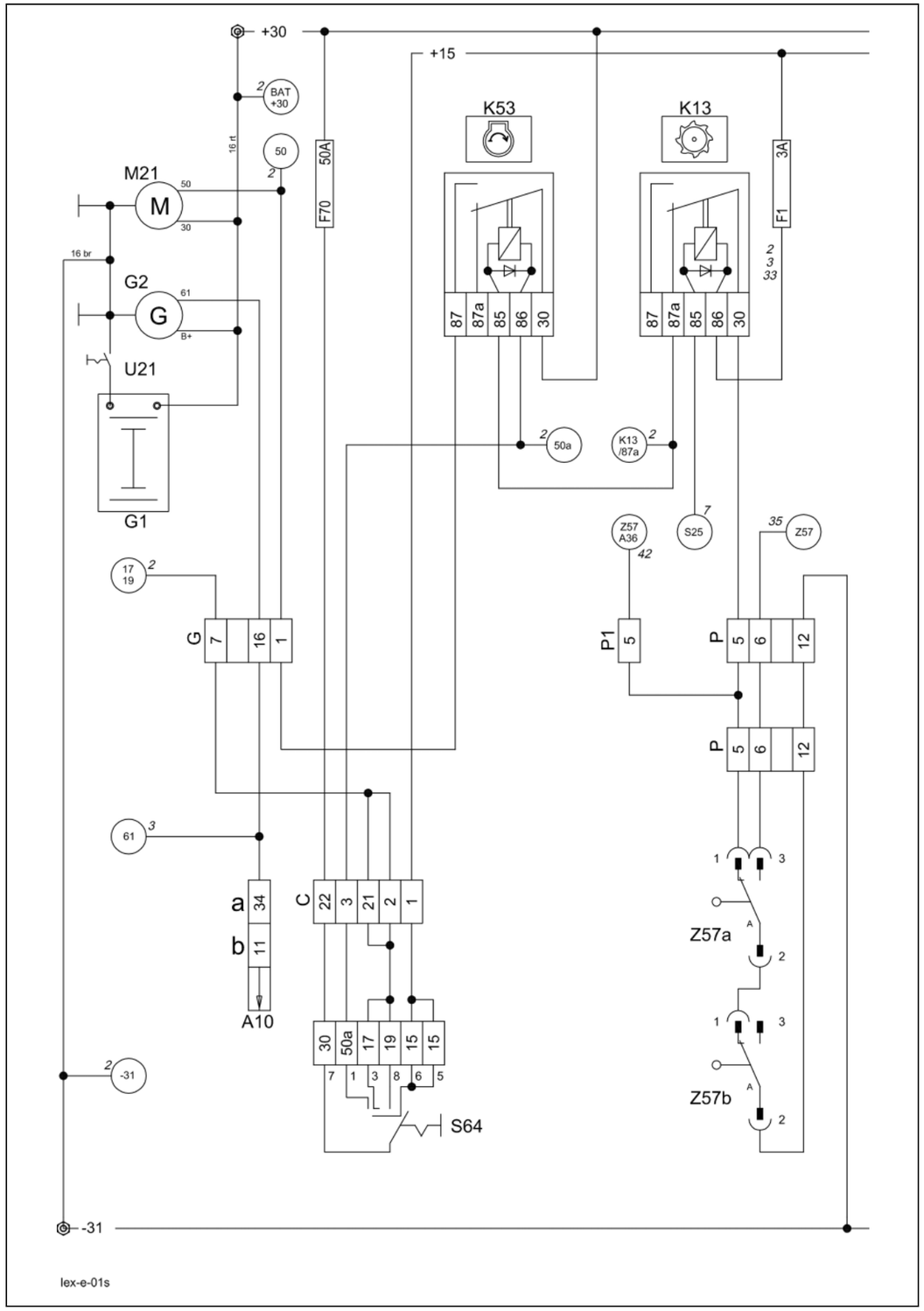

Key to diagram:

		Coordinates
A10	Fieldwork computer module (BIF/CAB)	2-h-20
G1	Battery	7-n-21
G2	Generator	1-g-17
K13	Threshing mechanism relay	3-h-20
K53	Start relay	3-h-20
M21	Electric starting motor	3-n-19
S64	Ignition switch	3-f-18
U21	Battery isolating switch	6-o-20
Z57	Ground speed control lever neutral position switch - safety start switch	3-g-18

Measured value table:

Item	Component	Measured value	Remark
K13	Remote control relay 15 A 30 A	95±10 Ω	(Pin 86/1 – 85/2) (Pin 87a/4 – 30/3) (Pin 87/5 – 30/3)
K53	Remote control relay 70 A	115±10 Ω	(Pin 86/1 – 85/2) (Pin 87/5 – 30/3)

Description of function:

Montana machine:	In this circuit, the difference between the standard machine and the Montana machine is only in a cable branch at connector P to P1. The signal of ground speed control lever in neutral position (Z57) is required on Montana machines for releasing the gear shifting.
Diesel engine electric starting motor	As a safety start switch, relay K53 is supplied with earth only when switches (Z57a/Z57b) on the ground speed control lever are in neutral position and the threshing mechanism is disengaged via relay K13. The ignition lock (S64) then actuates the diesel engine starting motor (M21) via relay K53 with +50a.

Connector pin definition:

Connector P, P1

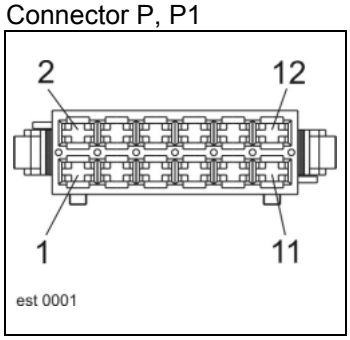

Connector G

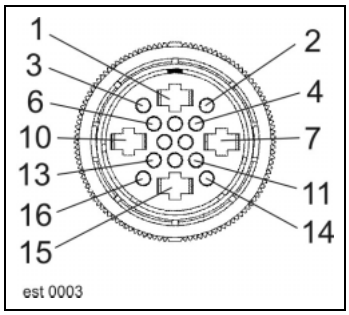

Connector C

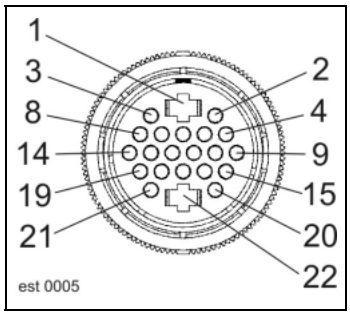

Interconnection list:

from	to 1	to 2	to 3	to 4	to 5	mm²	Colour
C-1	15					6	bk
C-2	G-7	C-21				1.5	bk-rd
C-3	K53-86	K56-86	K52-86			0.75	bk-ye
C-21	G-7	C-2				1.5	bk-rd
C-22	30					6	rd
G-1	K53-87	DS-43				4	bk-ye
G-7	C-2	C-21				1.5	bk-rd
G-16	C-18	K58-86	Cab-34 / Bif-11			0.75	bl
P-5	K13-30					1.5	vi-br
P-6	X-7	DI-7				1.5	vi-ye
P-12	31					2.5	br
P1-5	P-5	A36-8				1.5	vi-bl

02s

Starting the diesel engine, Diesel engine speed adjustment

for Montana machines

02s - Starting the diesel engine, diesel engine speed adjustment - for Montana machines

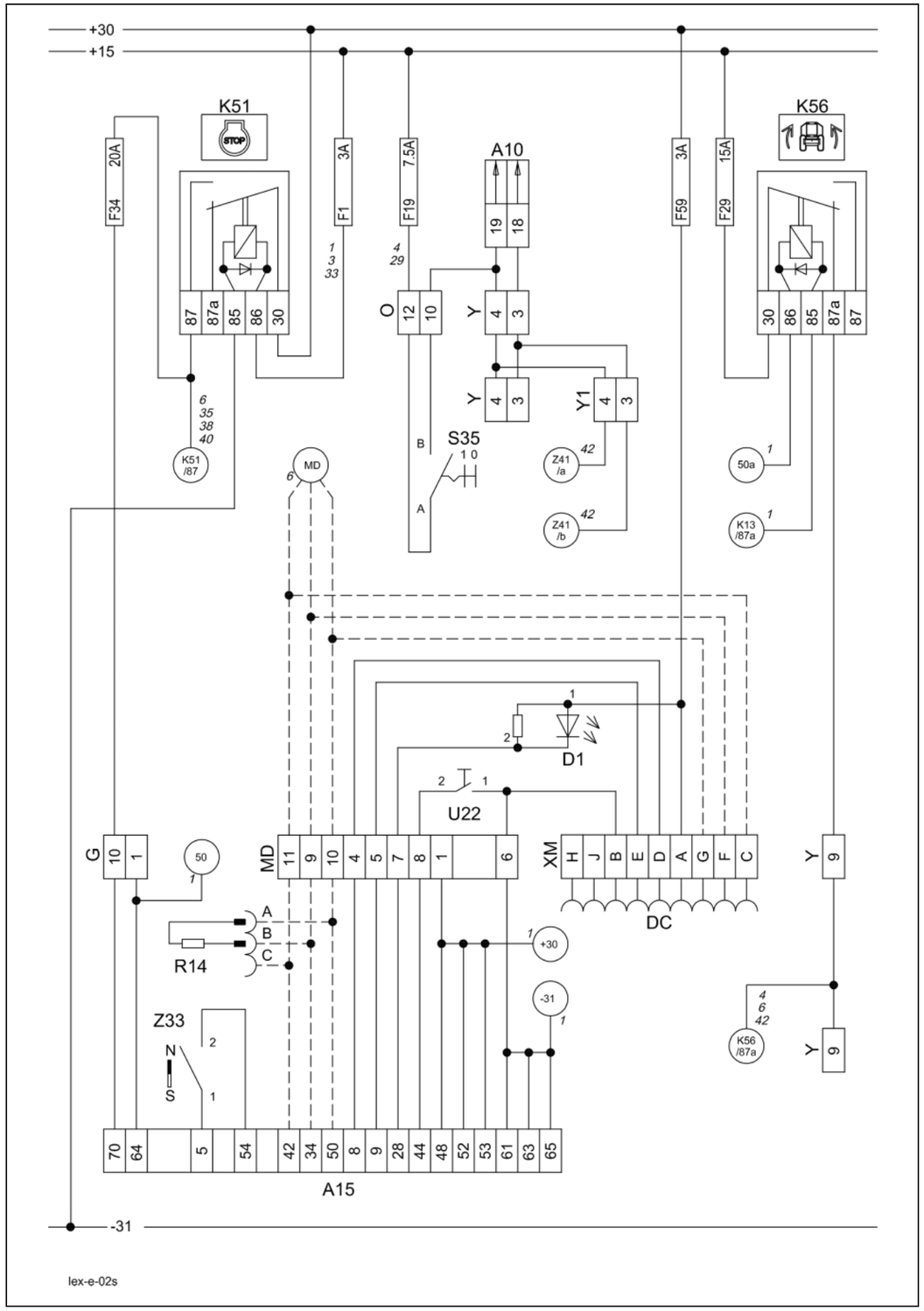

Key to diagram:

		Coordinates
A10	Fieldwork computer module (BIF/CAB)	2-h-20
A15	Electronic engine control module	2-o-18
D1	Diesel engine error code LED	3-h-20
DC	Caterpillar diagnosis	3-h-20
K51	Ignition switch relay	3-h-20
K56	Montana relay	3-h-20
R14	CAN bus matching resistor (J1939)	3-h-20
S35	Engine speed adjustment switch	3-g-17
U22	Diesel engine diagnosis switch	3-h-20
Z33	Coolant level switch without engine cut-off system	1-m-17

Measured value table:

Item	Component	Measured value	Remark
K51	Remote control relay 70 A	115±10 Ω	(Pin 86/1 – 85/2) (Pin 87/5 – 30/3)

Description of function:

Montana machine:

In this circuit, the difference between the standard machine and the Montana machine is only in a cable branch at connector Y to Y1. The gearbox switch on connector Y is dropped for Montana machines.
The Montana functions are supplied with power via the unactuated relay K56. During the starting process, relay K56 is actuated and thus interrupts the power supply.

Starting

The safety start switch circuit of this engine is identical with the one used on the mechanically controlled engines.
The engine controller module (A15) is activated via relay K51 by the ignition lock (S64). During the starting procedure, the engine controller module (A15) receives the speed signal from the sensor provided on the camshaft and starts the injection.

Engine monitoring

All sensors relevant for operation and monitoring of the engine are mounted on the engine wiring loom. Only the water level sensor is connected to the CLAAS wiring loom.
The engine controller module (A15) transmits the signals for displaying the engine speed and the coolant temperature to the CAB module (A10) via the CAN bus J1939. The CAN module (A10) converts this signal to the CLAAS CAN bus, thus allowing display on the terminal.

Engine diagnosis

The number of the engine errors occurred and the corresponding error codes can be displayed in the terminal
(see also the error code list in the Electric System documentation 297550.x - Diagram 2e).
Further diagnosis is carried out via the diagnosis plug in the central terminal compartment, using the Caterpillar diagnosis tool CAT-ET. The display of error codes can also be activated by the diagnosis LED (D1) after actuating the rocker switch (U22).

Diesel engine speed adjustment

The diesel engine speed depends on the position of switch S35 and of the 2nd gear actual value switch (Z83) – see also circuit diagram 42s.
If full throttle speed is selected and the 2nd gear engaged (signal input A36 / pin 4), the connection between Z41a and Z41b inside the Montana gearshift control module (A36) is cut (pins 10 and 11) – see also circuit diagram 42s.
The full throttle speed is reduced to road travel speed, depending on the contry version. The maximum speed which can be achieved now can be configured using the Claas diagnosis system CDS.

LEXION Type	Idle speed (S35)	Full throttle at no load (S35)	20km/h (Z83)	25km/h (Z83)
Montana 470-420	1200 rpm	2100 rpm	1568 rpm	1960 rpm

Connector pin definition:

Connector MD, O, Y, Y1

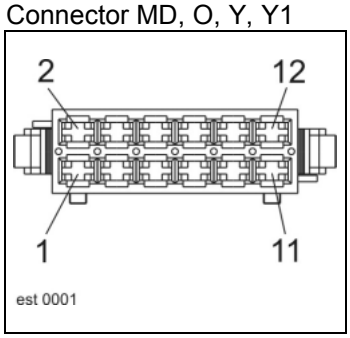

Connector G

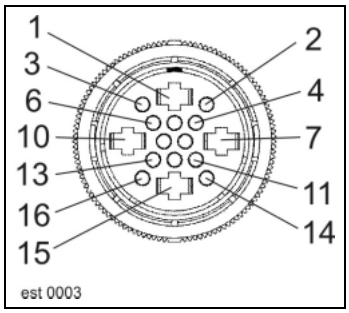

Interconnection list:

from	to 1	to 2	to 3	to 4	to 5	mm²	Colour
G-1	K53-87	DS-43	A15-64	M21-50		4	bk-ye
G-10	F34-A	DS-4	A15-70			4	bk-rd
Y-3	W-7	DS-2	Cab-18			1.5	br-wh
Y-4	W-6	DS-1	O-10	Cab-19		1.5	br-ye
Y-9	K56-87a	DS-3				1.5	bk
O-10	W-6	DS-1	Y-4	Cab-19		1.5	wh-rd
O-12	F19-A					2.5	bk
MD-1	30	A15-48	A15-52	A15-53		0.5	wh
MD-4	A15-8	XM-D				0.5	wh
MD-5	A15-9	XM-E				0.5	wh
MD-6	31	A15-61	A15-62	A15-63	XM-B		
	U22-1					0.5	wh
MD-7	A15-28	D2-K				0.5	wh
MD-8	A15-44	U22-2				0.5	wh
MD-9	A15-34	R14-B				0.5	wh
MD-10	A15-50	R14-A				0.5	wh
MD-11	A15-42	R14-C				0.5	wh
XM-A	F59-A					0.5	wh
XM-B	MD-6	U22-1				0.5	wh
XM-C	MD-11					0.5	wh
XM-D	MD-4					0.5	wh
XM-E	MD-5					0.5	wh
XM-F	MD-9					0.5	wh
XM-G	MD-10					0.5	wh
Y1-3	Y-3	A36-10				1.5	br-gr
Y1-4	Y-4	A36-11				1.5	br-ye
Y1-9	Y-9	A50-RI-2+3	XSA-C4	XSA-B5	A36-2	1.5	bk

4s

Road travel activation, master valve

for Montana machines (with RIO module A50)

04s - Road travel activation, working hydraulics master valve, for Montana machines with module A50 (RIO)

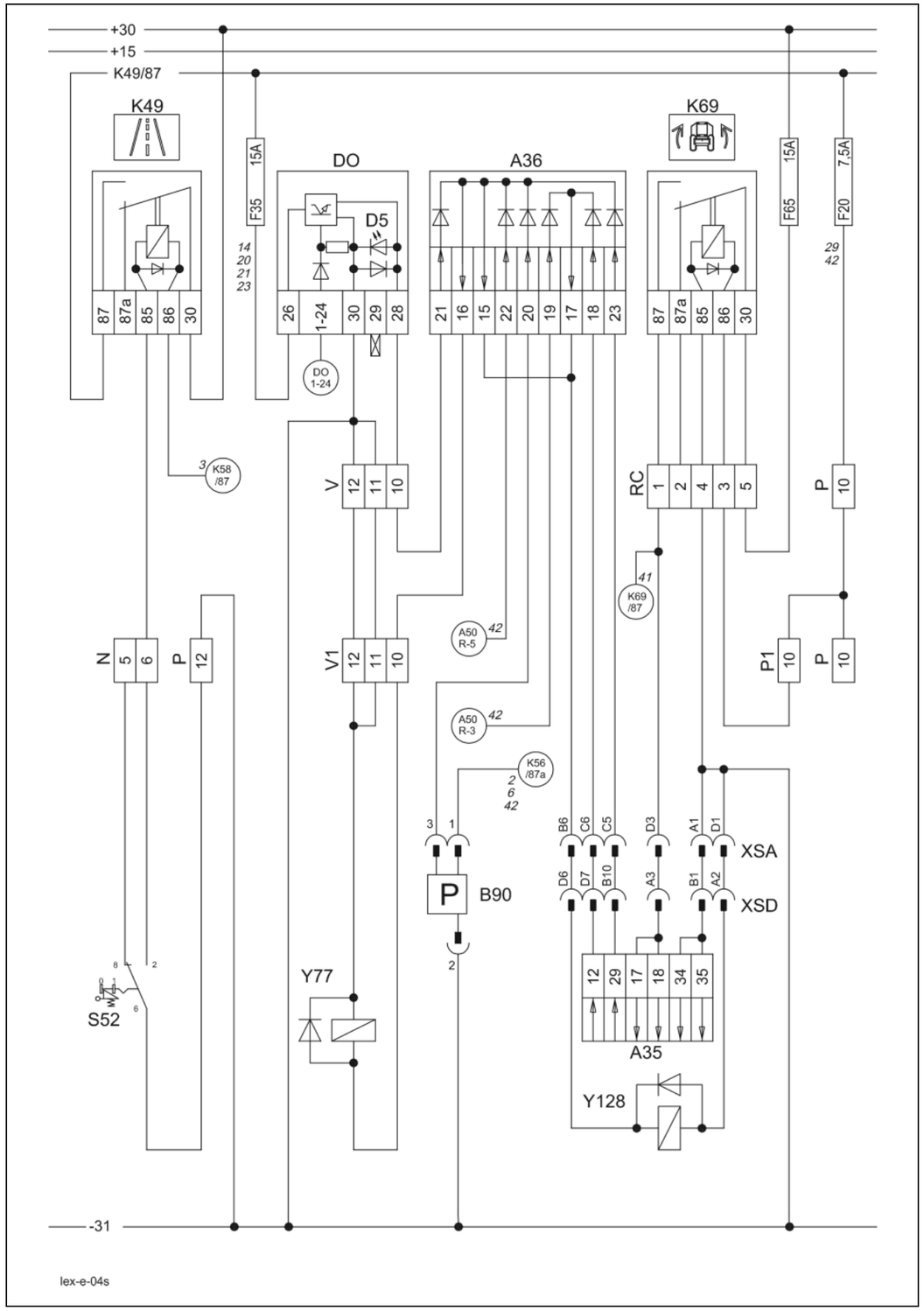

Key to diagram:

Coordinates

A35	Montana control unit module	7-i-18
A36	Montana gearshift control module	2-h-20
B90	Brake accumulator pressure sensor/switch	5-g-20
DO	Master valve diode PCB	3-h-20
D5	Master valve DO diode PCB LED	3-h-20
K49	Road travel main relay	3-h-20
K69	Montana relay	3-h-20
S52	Road travel switch (red)	3-g-17
Y77	Working hydraulics master valve solenoid coil	6-m-21
Y128	Montana master valve solenoid coil	7-h-18

Measured value table:

Item	Component	Measured value	Remark
B90	Brake circuit oil pressure / charge pressure	ON OFF	< 135 bar > 165 bar
K49	Remote control relay 70 A	115±10 Ω	(Pin 86/1 – 85/2) (Pin 87/5 – 30/3)
K69	Remote control relay 15 A 30 A	95±10 Ω	(Pin 86/1 – 85/2) (Pin 87a/4 – 30/3) (Pin 87/5 – 30/3)
Y77 Y128	Solenoid coil	3.8 A 3.2 Ω	

Description of function:

Montana machine:	On Montana machines, actuation of the working hydraulics master valve (Y77) is **always** via the gearshift control module (A36).
Activation of road travel	During road travel, the road travel switch (S52) must be locked in order to cut the power supply for all unnecessary electrical and hydraulic functions.
Working hydraulics master valve	In order to be able to build up the necessary working pressure for many hydraulic controls, the neutral hydraulic circulation must be blocked (see also the "Hydraulic system" section). In this case, the solenoid coil (Y77) is actuated in parallel with the function directly via the diode PCB (DO) and the gearshift control module (A36). A LED (D5) provided on the diode PCB indicates the activation of the circuit.
Montana axle hydraulics master valve	For the Montana functions as well, the circulation of the independent axle control system hydraulics must be blocked (see also "Hydraulic System" document). According to the actuated functions, the Montana control unit (A35) actuates the Montana master valve (Y128) and/or the working hydraulics master valve (Y77) via the gearshift control module (A36).
Montana brake pressure accumulator	The sensor/switch (B90) controls the brake system accumulator pressure and, if necessary, actuates the working hydraulics master valve (Y77) via the gearshift control module (A36) in order to recharge the brake circuit accumulator.
Increased brake effect Montana – only with module A50 (RIO)	If the diesel engine speed drops below 2300 rpm while braking, the RIO module (A50) actuates the working hydraulics master valve (Y77) via A50/pin R5 and the axle hydraulics master valve (Y128) via A50/pin R3. This hydraulic load on the diesel engine increases the braking effect. In addition, a brake restrictor is activated in the hydrostatic ground drive – circuit diagram 42s.

Connector pin definition:

Connector N, P, P1, V, V1

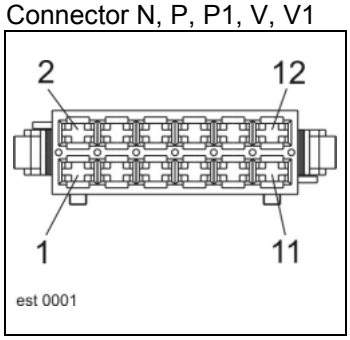

Connector XSA

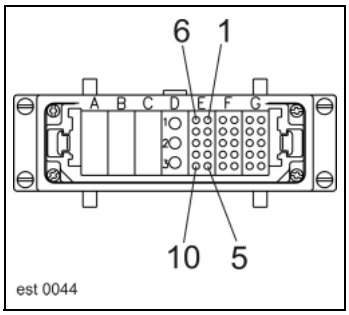

Connector XSA

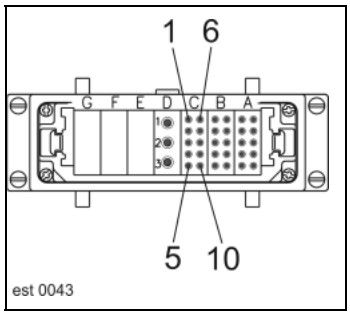

Connector XSD

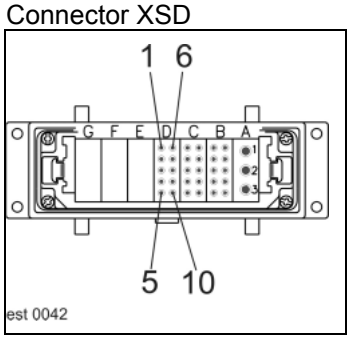

Connector XSD

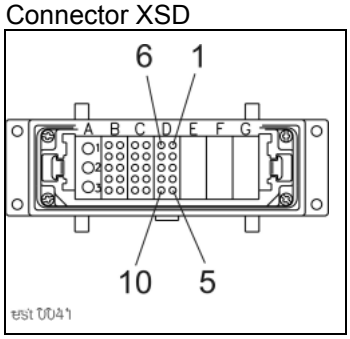

Interconnection list: I

from	to 1	to 2	to 3	to 4	to 5	mm²	Colour
N-5							
N-6	K49-85					0.5	br-bl
P-10	F20-A					1.5	gn-rd
P-12	31					2.5	br
V-10	DO-28	A36-21	DS-50			1.5	pi-wh
V-11	31					2.5	br
V-12	31					2.5	br
P1-10	P-10					1.5	gn-rd
V1-10	A36-15+16					1.5	wh-pi
V1-11	V-11					2.5	br
V1-12	V-12					2.5	br

Interconnection list: II

from	to 1	to 2	to 3	to 4	to 5	mm²	Colour
XSA-A1	XSD-B1					1.5	br
XSA-B6	XSD-D6					1.5	gr-bl
XSA-C5	XSD-B10					1.5	rd-wh
XSA-C6	XSD-D7					1.5	gn-bk
XSA-D1	XSD-A2					4	br
XSA-D3	XSD-A3					4	rd-bk
XSD-A2	XSA-D1					1.5	br
XSD-A3	XSA-D3					1.5	gr-bl
XSD-B1	XSA-A1					1.5	rd-wh
XSD-B10	XSA-C5					1.5	gn-bk
XSD-D6	XSA-B6					4	br
XSD-D7	XSA-C6					4	rd-bk

4t

Road travel activation, master valve

for Montana machines with module A45 (HBM)

04t - Road travel activation, working hydraulics master valve, for Montana machines with module A45 (HBM)

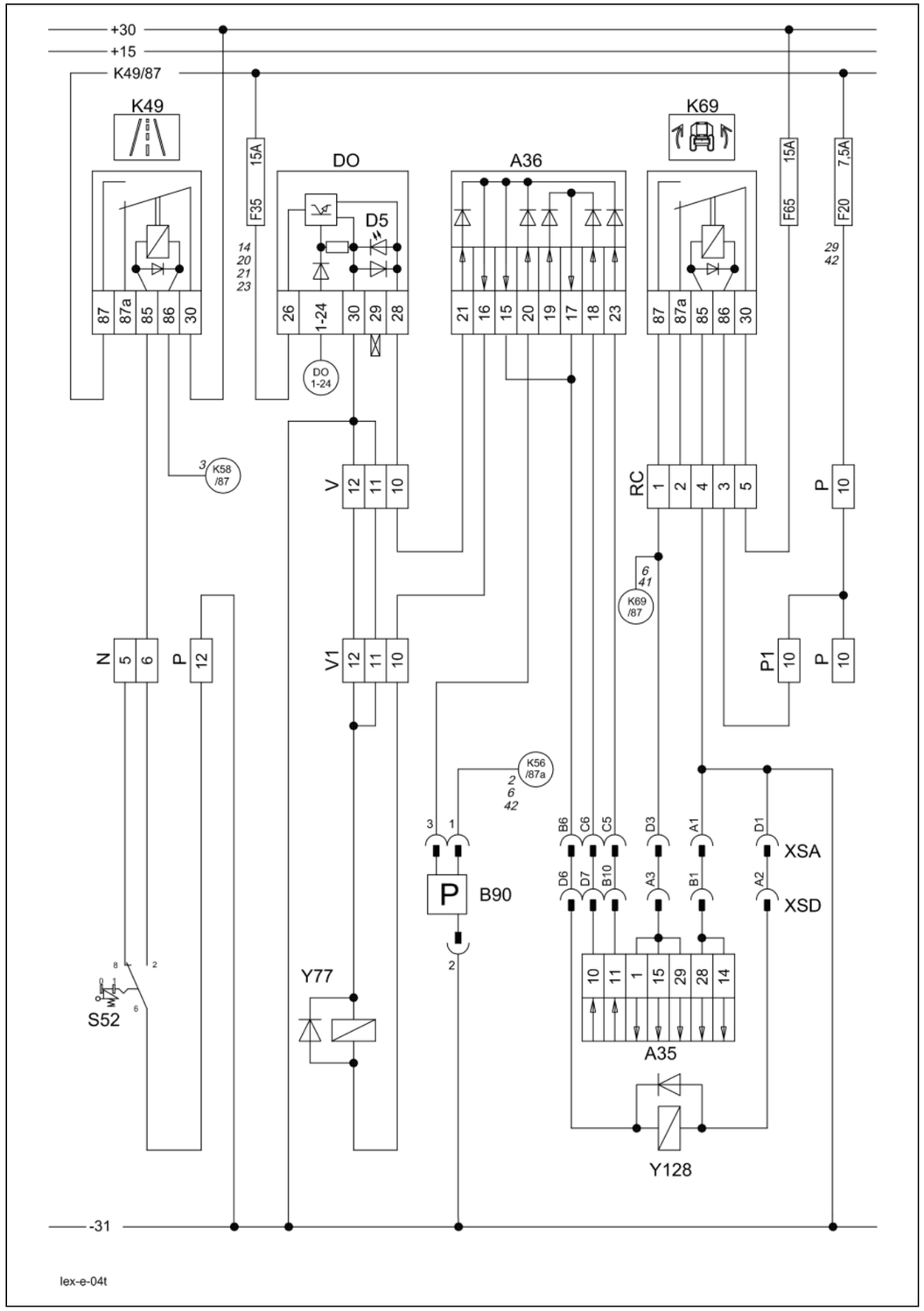

Key to diagram:

Coordinates

A35	Montana control unit module	7-i-18
A36	Montana gearshift control module	2-h-20
B90	Brake accumulator pressure sensor/switch	5-g-20
DO	Master valve diode PCB	3-h-20
D5	Master valve DO diode PCB LED	3-h-20
K49	Road travel main relay	3-h-20
K69	Montana relay	3-h-20
S52	Road travel switch (red)	3-g-17
Y77	Working hydraulics master valve solenoid coil	6-m-21
Y128	Montana master valve solenoid coil	7-h-18

Measured value table:

Item	Component	Measured value	Remark
B90	Brake circuit oil pressure / charge pressure	ON OFF	< 135 bar > 165 bar
K49	Remote control relay 70 A	115±10 Ω	(Pin 86/1 – 85/2) (Pin 87/5 – 30/3)
K69	Remote control relay 15 A 30 A	95±10 Ω	(Pin 86/1 – 85/2) (Pin 87a/4 – 30/3) (Pin 87/5 – 30/3)
Y77 Y128	Solenoid coil	3.8 A 3.2 Ω	

Description of function:

Montana machine:	On Montana machines, actuation of the working hydraulics master valve (Y77) is **always** via the gearshift control module (A36).
Activation of road travel	During road travel, the road travel switch (S52) must be locked in order to cut the power supply for all unnecessary electrical and hydraulic functions.
Working hydraulics master valve	In order to be able to build up the necessary working pressure for many hydraulic controls, the neutral hydraulic circulation must be blocked (see also the "Hydraulic system" section). In this case, the solenoid coil (Y77) is actuated in parallel with the function directly via the diode PCB (DO) and the gearshift control module (A36). A LED (D5) provided on the diode PCB indicates the activation of the circuit.
Montana axle hydraulics master valve	For the Montana functions as well, the circulation of the independent axle control system hydraulics must be blocked (see also "Hydraulic System" document). According to the actuated functions, the Montana control unit (A35) actuates the Montana master valve (Y128) and/or the working hydraulics master valve (Y77) via the gearshift control module (A36).
Montana brake pressure accumulator	The sensor/switch (B90) controls the brake system accumulator pressure and, if necessary, actuates the working hydraulics master valve (Y77) via the gearshift control module (A36) in order to recharge the brake circuit accumulator.
Increased brake effect Montana – only with module A45 (HBM)	If the diesel engine speed drops below 2300 rpm while braking, the HBM module (A45) actuates the working hydraulics master valve (Y77) via A36/pin 22 – Circuit diagram. This hydraulic load on the diesel engine increases the braking effect. In addition, a brake restrictor (Y124) is activated in the hydrostatic ground drive – circuit diagram 42t.

Connector pin definition:

Connector N, P, P1, V, V1

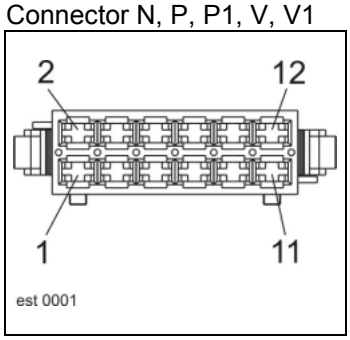

Connector XSA

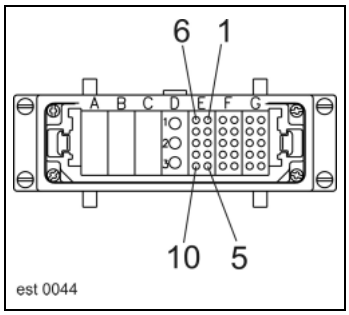

Connector XSA

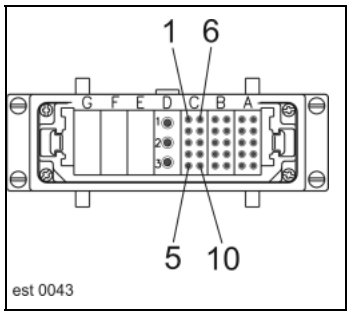

Connector XSD

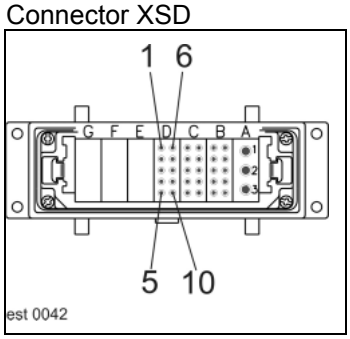

Connector XSD

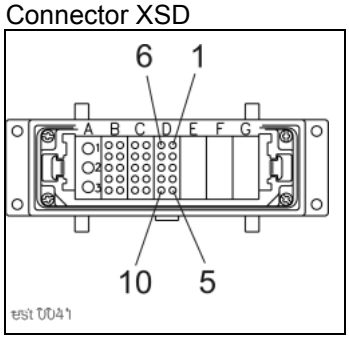

Interconnection list: I

from	to 1	to 2	to 3	to 4	to 5	mm²	Colour
N-5							
N-6	K49-85					0.5	br-bl
P-10	F20-A					1.5	gn-rd
P-12	31					2.5	br
V-10	DO-28	A36-21	DS-50			1.5	pi-wh
V-11	31					2.5	br
V-12	31					2.5	br
P1-10	P-10					1.5	gn-rd
V1-10	A36-15+16					1.5	wh-pi
V1-11	V-11					2.5	br
V1-12	V-12					2.5	br

Interconnection list: II

from	to 1	to 2	to 3	to 4	to 5	mm²	Colour
XSA-A1	XSD-B1					1.5	br
XSA-B6	XSD-D6					1.5	gr-bl
XSA-C5	XSD-B10					1.5	rd-wh
XSA-C6	XSD-D7					1.5	gn-bk
XSA-D1	XSD-A2					4	br
XSA-D3	XSD-A3					4	rd-bk
XSD-A2	XSA-D1					1.5	br
XSD-A3	XSA-D3					1.5	gr-bl
XSD-B1	XSA-A1					1.5	rd-wh
XSD-B10	XSA-C5					1.5	gn-bk
XSD-D6	XSA-B6					4	br
XSD-D7	XSA-C6					4	rd-bk

5s

Terminal, keyboard, rotary switch, printer

for Montana machines with module A50 (RIO)

05s - Terminal, keyboard, rotary switch, printer, for Montana machines with module A50 (RIO)

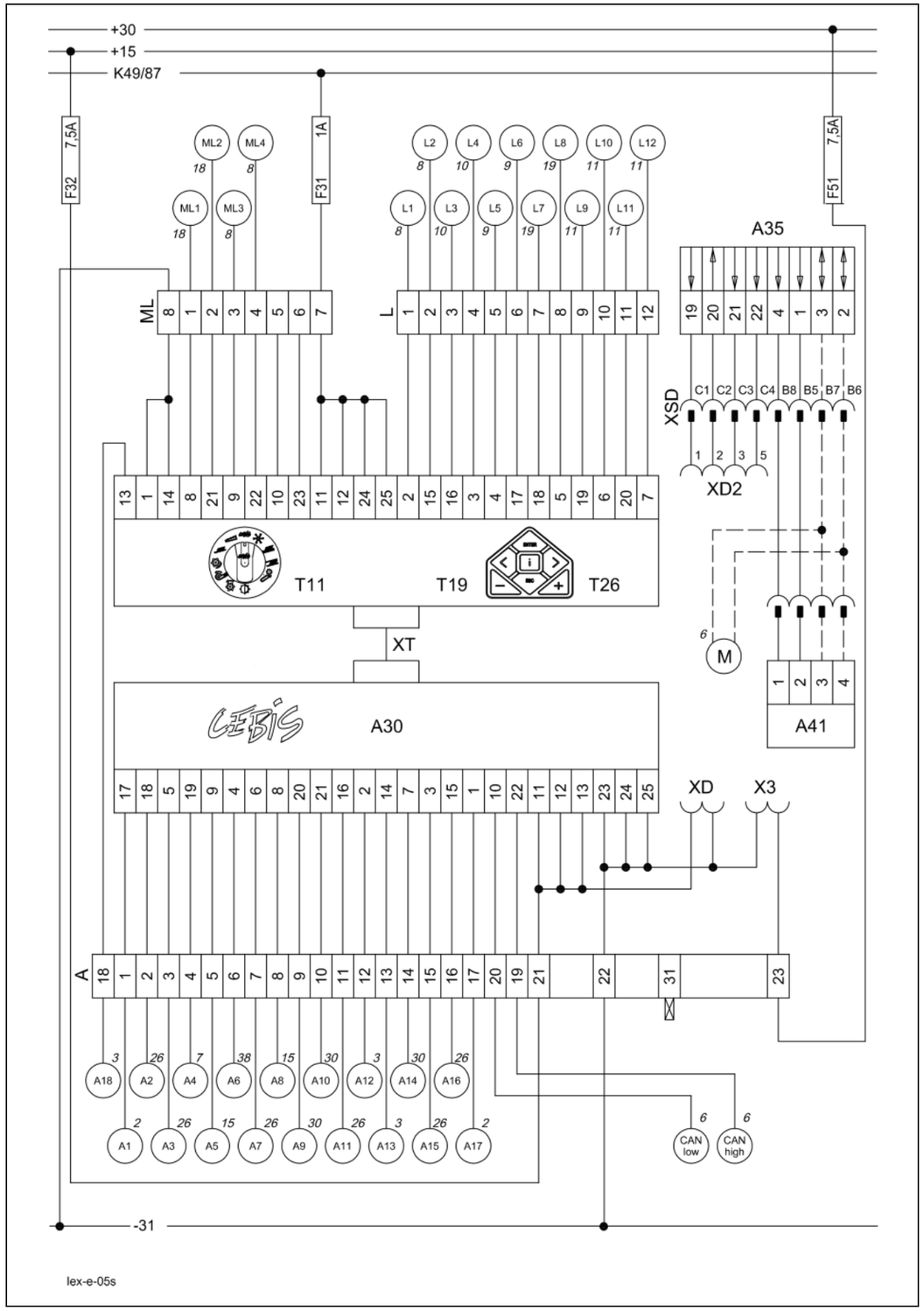

Key to diagram:

		Coordinates
A30	Terminal	3-f-17
A35	Montana control unit module	
A41	Montana terminal	3-f-17
T11	Function pre-selection	3-f-17
T19	Minus	3-f-17
T26	Plus	3-f-17
XD	CAN bus (7-pin) terminal	4-f-17
X3	Printer	4-f-17
XD2	Connector (data loading)	4-f-17

Description of function:

Connectors	The connectors L and ML are connected with the signal outputs to the individual machine functions. Connector A is connected with signal inputs from switches whose actuated or non-actuated states allow the terminal to identify the machine functions. The analog signals of the machine sensors are converted by the corresponding modules (A10/A12) and read by the terminal as digital signals from the CAN bus system.
Power supply / communication Montana terminal (A41)	The Montana terminal (A41) is supplied with power by the Montana control unit module (A35) – see "Pin assignment in modules". The Montana terminal (A41) performs all manual triggering of Montana functions. The Montana terminal (A41) communicates with the Montana control unit module (A35) via an own CAN bus which is independent of the CLAAS system.
Connector XD2	Connector XD2 is used for loading the software of the Montana module (A35).

Connector pin definition:

Connector A

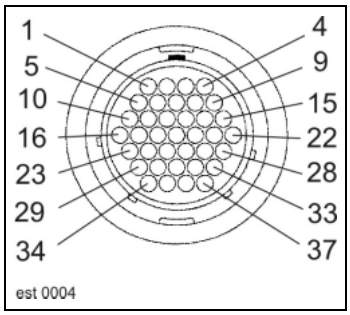

Connector L

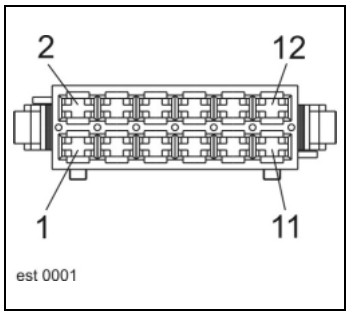

Connector ML

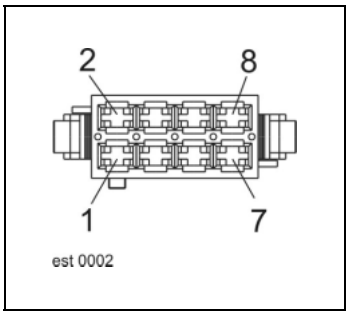

Connector XD

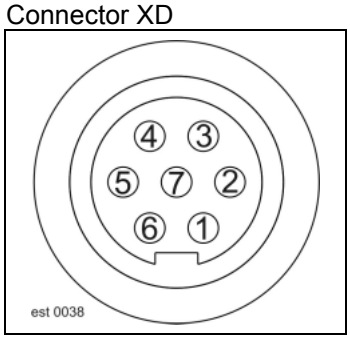

Connector XD2

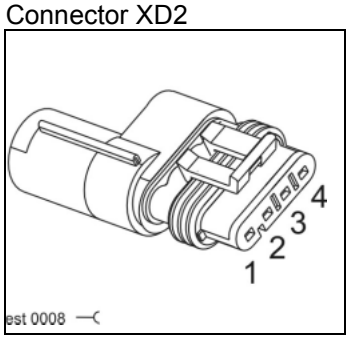

Connector XSD

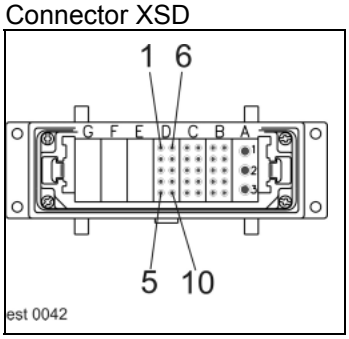

Connector XSD

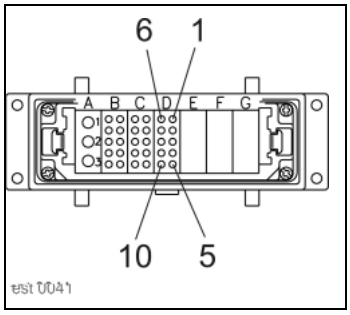

Interconnection list:

from	to 1	to 2	to 3	to 4	to 5	mm²	Colour
ML-1	K35-86					0.5	rd-bl
ML-2	K36-86					0.5	rd-bk
ML-3	K54-86					0.5	br-wh
ML-4	K55-86					0.5	br-gr
ML-7	F-31A	DS-56				1	bk-wh
ML-8	31					1	br
L-1	K29-86					0.5	ye-rd
L-2	K30-86					0.5	ye-br
L-3	K37-86	Cab-16 / Bif-13				0.5	ye-bl
L-4	K38-86	Cab-2 / Bif-12				0.5	ye-bk
L-5	K33-86					0.5	gr-wh
L-6	K34-86					0.5	gr-gn
L-7	K39-86	HAS-13				0.5	gr-rd
L-8	K40-86	HAS-25				0.5	gn-rd
L-9	K41-86	S-5				0.5	gn-br
L-10	K42-86	S-1				0.5	gn-bl

Interconnection list:

from	to 1	to 2	to 3	to 4	to 5	mm²	Colour
L-11	K43-86	S-7				0.5	gn-bk
L-12	K44-86	S-6				0.5	rd-wh
A-1	GY-1					0.5	wh
A-2	B-22					0.5	gn
A-3	B-21					0.5	ye
A-4	MN-4	DS-3				0.5	gr
A-5	B-20	W-11	DS-16	DA1-K	K11-85		
	H-6					0.5	pi
A-6	G-2	K24-85				0.5	bl
A-7	B-19					0.5	rd
A-8	K11-87	DS-15				0.5	bk
A-9	MH-6					0.5	vi
A-10	MH-8					0.5	gr-pi
A-11	T-8	Y-2				0.5	rd-bl
A-12	G-6	DI-13				0.5	wh-gn
A-13	G-4	DI-12				0.5	br-gn
A-14	MH-5	K62-85				0.5	wh-ye
A-15	W-9	DI-4				0.5	ye-br
A-16	W-5					0.5	wh-gr
A-17	K23-87a	G-13				0.5	gr-br
A-18	K57-49a	C-20				0.5	gr
A-19	Cab-40 / Bif-3	DZW-3	MP-3	HAS-3	CAC-3		
	B-13	S-3	MV-3	MW-3	DS-62		
	E-31	MU-3	VGS-3			0.5	pi-br
A-20	Cab-13 / Bif-16	DZW-16	MP-4	HAS-16	CAC-16		
	B-14	S-9	MV-4	MW-4	DS-63		
	E-30	MU-4	VGS-16			0.5	wh-bl
A-21	F-32A					1	bk
A-22	31					1	br
A-23	F-51A	DS-58	DS-59			1	rd
XSD - B5						0.5	wh-br
XSD - B6						0.5	pi
XSD - B7						0.5	wh-ye
XSD - B8						0.5	wh-rd
XSD - C1						0.5	wh-bl
XSD - C2						0.5	wh-gr
XSD - C3						0.5	wh-vi
XSD - C4						0.5	wh

5t

Terminal, keyboard, rotary switch, printer

for Montana machines with module A45 (HBM)

05t - Terminal, keyboard, rotary switch, printer, for Montana machines with module A45 (HBM)

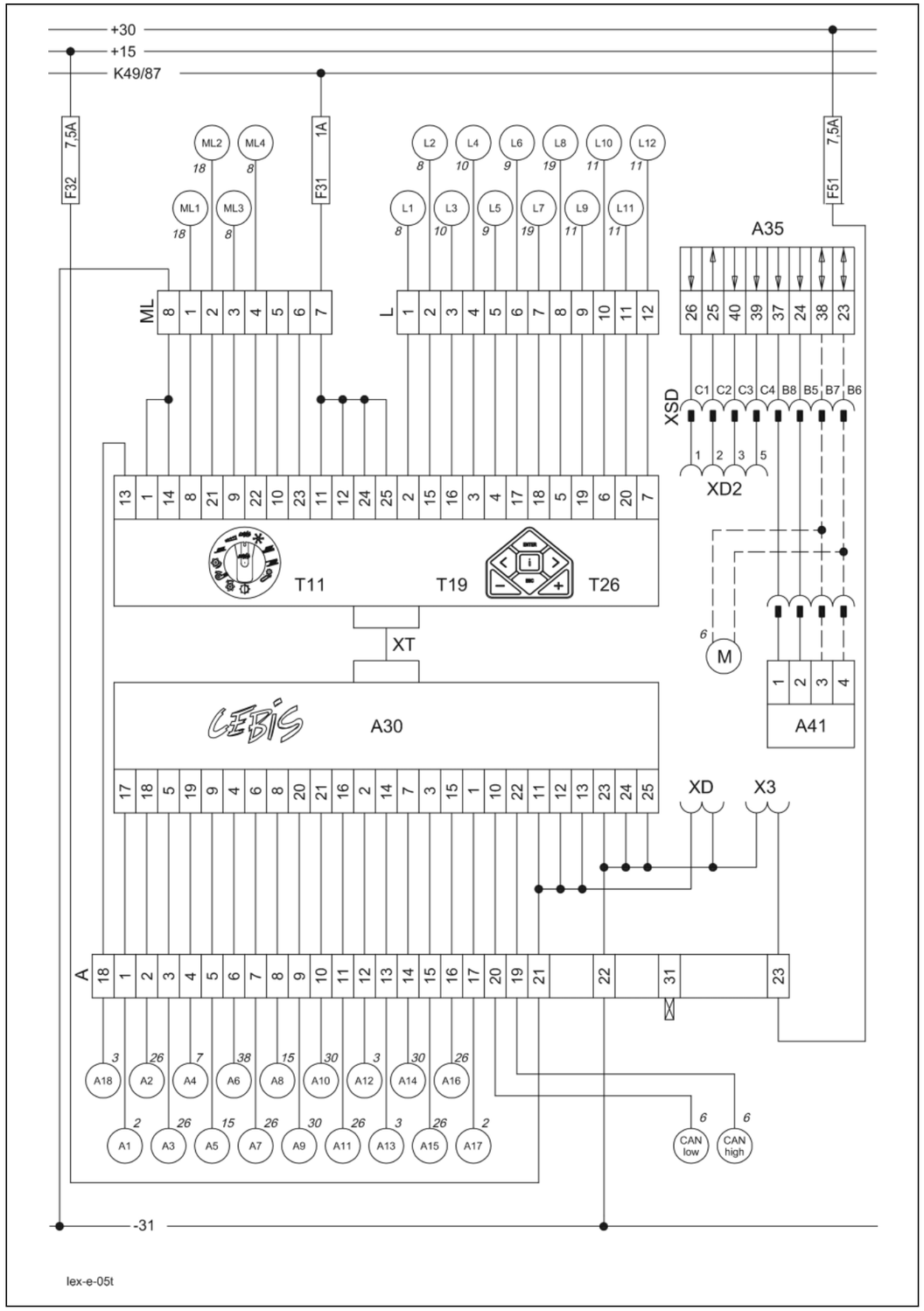

Key to diagram:

Coordinates

A30	Terminal	3-f-17
A35	Montana control unit module	
A41	Montana terminal	3-f-17
T11	Function pre-selection	3-f-17
T19	Minus	3-f-17
T26	Plus	3-f-17
XD	CAN bus (7-pin) terminal	4-f-17
X3	Printer	4-f-17
XD2	Connector (data loading)	4-f-17

Description of function:

Connectors	The connectors L and ML are connected with the signal outputs to the individual machine functions. Connector A is connected with signal inputs from switches whose actuated or non-actuated states allow the terminal to identify the machine functions. The analog signals of the machine sensors are converted by the corresponding modules (A10/A12) and read by the terminal as digital signals from the CAN bus system.
Power supply / communication Montana terminal (A41)	The Montana terminal (A41) is supplied with power by the Montana control unit module (A35) – see "Pin assignment in modules". The Montana terminal (A41) performs all manual triggering of Montana functions. The Montana terminal (A41) communicates with the Montana control unit module (A35) via an own CAN bus which is independent of the CLAAS system.
Connector XD2	Connector XD2 is used for loading the software of the Montana module (A35).

Connector pin definition:

Connector A

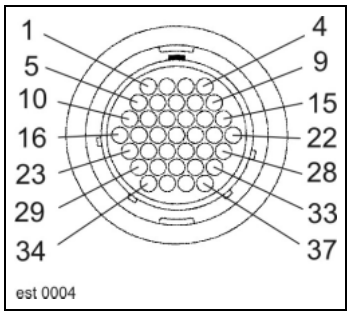

Connector L

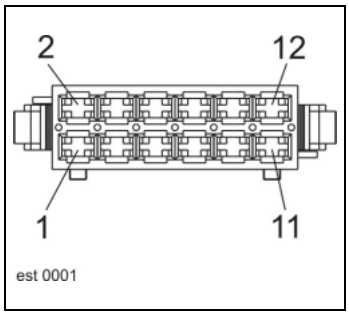

Connector ML

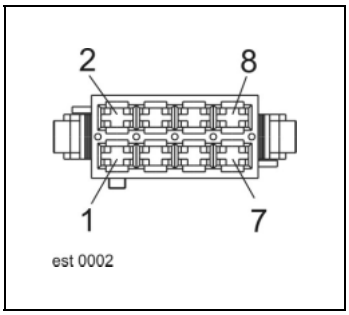

Connector XD

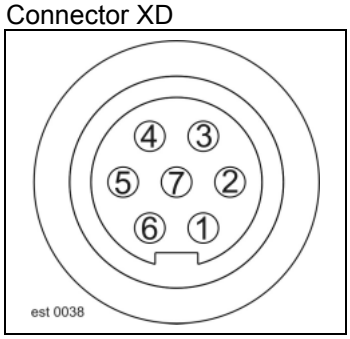

Connector XD2

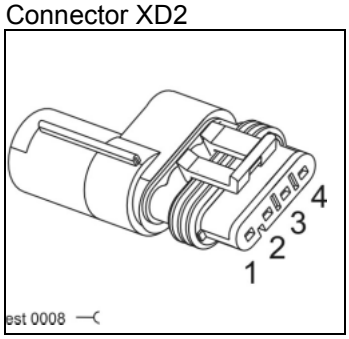

Connector XSD

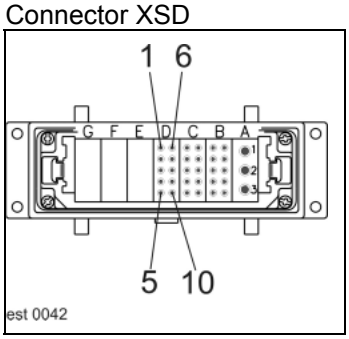

Connector XSD

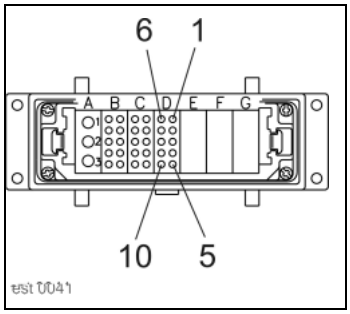

Interconnection list:

from	to 1	to 2	to 3	to 4	to 5	mm²	Colour
ML-1	K35-86					0.5	rd-bl
ML-2	K36-86					0.5	rd-bk
ML-3	K54-86					0.5	br-wh
ML-4	K55-86					0.5	br-gr
ML-7	F-31A	DS-56				1	bk-wh
ML-8	31					1	br
L-1	K29-86					0.5	ye-rd
L-2	K30-86					0.5	ye-br
L-3	K37-86	Cab-16 / Bif-13				0.5	ye-bl
L-4	K38-86	Cab-2 / Bif-12				0.5	ye-bk
L-5	K33-86					0.5	gr-wh
L-6	K34-86					0.5	gr-gn
L-7	K39-86	HAS-13				0.5	gr-rd
L-8	K40-86	HAS-25				0.5	gn-rd
L-9	K41-86	S-5				0.5	gn-br
L-10	K42-86	S-1				0.5	gn-bl

Interconnection list:

from	to 1	to 2	to 3	to 4	to 5	mm²	Colour
L-11	K43-86	S-7				0.5	gn-bk
L-12	K44-86	S-6				0.5	rd-wh
A-1	GY-1					0.5	wh
A-2	B-22					0.5	gn
A-3	B-21					0.5	ye
A-4	MN-4	DS-3				0.5	gr
A-5	B-20	W-11	DS-16	DA1-K	K11-85		
	H-6					0.5	pi
A-6	G-2	K24-85				0.5	bl
A-7	B-19					0.5	rd
A-8	K11-87	DS-15				0.5	bk
A-9	MH-6					0.5	vi
A-10	MH-8					0.5	gr-pi
A-11	T-8	Y-2				0.5	rd-bl
A-12	G-6	DI-13				0.5	wh-gn
A-13	G-4	DI-12				0.5	br-gn
A-14	MH-5	K62-85				0.5	wh-ye
A-15	W-9	DI-4				0.5	ye-br
A-16	W-5					0.5	wh-gr
A-17	K23-87a	G-13				0.5	gr-br
A-18	K57-49a	C-20				0.5	gr
A-19	Cab-40 / Bif-3	DZW-3	MP-3	HAS-3	CAC-3		
	B-13	S-3	MV-3	MW-3	DS-62		
	E-31	MU-3	VGS-3			0.5	pi-br
A-20	Cab-13 / Bif-16	DZW-16	MP-4	HAS-16	CAC-16		
	B-14	S-9	MV-4	MW-4	DS-63		
	E-30	MU-4	VGS-16			0.5	wh-bl
A-21	F-32A					1	bk
A-22	31					1	br
A-23	F-51A	DS-58	DS-59			1	rd
XSD - B5						0.5	wh-br
XSD - B6						0.5	pi
XSD - B7						0.5	wh-ye
XSD - B8						0.5	wh-rd
XSD - C1						0.5	wh-bl
XSD - C2						0.5	wh-gr
XSD - C3						0.5	wh-vi
XSD - C4						0.5	wh

6s

CAN bus, module power supply

for Montana machines with module A50 (RIO)

06s - CAN bus, module power supply, for Montana machines with module A50 (RIO)

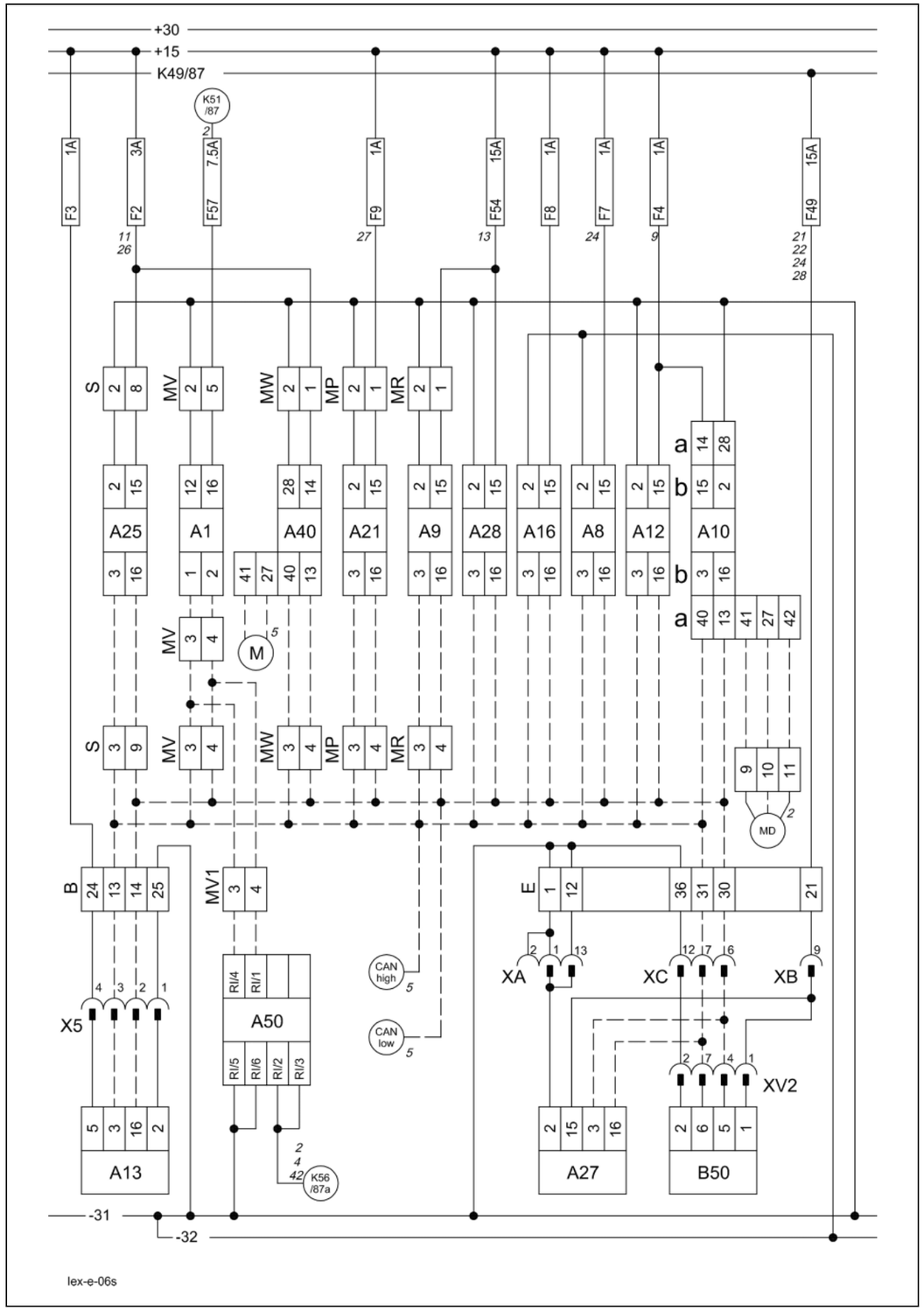

Key to diagram:

Coordinates

A1	AGROCOM terminal	2-h-17
A8	AUTOCONTOUR module (CAC)	2-h-20
A9	AUTOPILOT module	2-h-20
A10	Fieldwork computer module (BIF/CAB)	2-h-20
A12	Speed monitor module (DZW)	2-h-20
A13	Performance monitor module (DKG)	4-p-21
A16	Reel controller module (HAS)	2-h-20
A21	YIELD METER module (LEM)	2-h-20
A25	Sieve adjustment module	2-h-20
A27	VARIO module	2-h-20
A28	Uni-spreader module (VGS)	2-h-20
A40	Axle control system adaptation module	2-h-17
A50	Montana RIO module	2-h-20
B50	AUTOPILOT laser	6-d-26
XA	Multifunction coupling A	8-e-21
XB	Multifunction coupling B	8-e-21
XC	Multifunction coupling C	8-e-21
XV2	AUTOPILOT variant plug	8-e-21
X5	Performance monitor	6-p-20

Description of function:

Montana machine:	On Montana machines, the Montana RIO module (A50) is connected with the CAN bus by a cable branch line from connector MV to MV1.
Yield data	All yield data is saved in the yield meter module (A21) whereas all other performance data is saved in the fieldwork computer / CAN bridge module (A10). It is therefore recommended to transmit these data prior to replacing a defective module, using the diagnosis system CDS3000/CDS5000.
Axle control system adaptation	The CAN bus data of the separate Montana control unit are converted in the axle control system adaptation module A40 and made available to the CLAAS CAN bus system. According to the axle position, the value of the feed rake conveyor position sensor (B35) is offset in the AUTOCONTOUR module (CAC). This allows working in hilly ground with the CAC function "Pre-set cutting height control" and area counting.
AUTOCONTOUR (CAC) Settings for Montana machines	The adaptation of the AUTOCONTOUR (CAC) and the axle control systems requires special settings for Montana machines.
- Cutterbar spring setting	The 5 mm cutterbar spring setting (see also Operator's Manual) must be made at a 50 % axle position.
- Check of cutterbar spring setting	Check setting dimension when travelling downhill with the axle cylinders fully extended. This dimension may be only < 15 mm.
- Learning the CAC limit stops	The limit stops of the CAC sensors must be learned at a 75 % axle position. While doing this, the cutting angle must be adjusted to the working position (cutterbar table surface in parallel with the ground).
- CAC sensitivity	The recommended CAC sensitivity for use with the grain cutterbar is 45 % with Montana machines.
- Drop rate setting (front attachment)	The drop rate must be adjusted with the machine at operating temperature and 50 % axle position. The drop rate is 5 – 6 seconds from the top to the bottom position.
- Set value adjustment of CAC cutting height control	When working in the field, the cutting height control set value (working within the sensor band range) should not be set higher than position 8.

Connector pin assignment:

Connector S

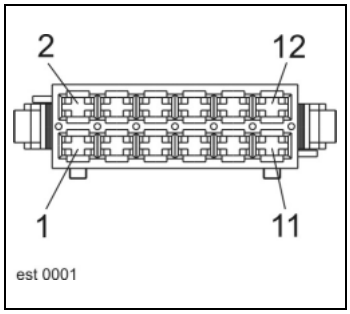

Connector MV, MV1, MP, MR

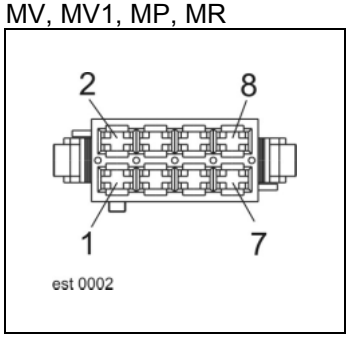

Connector B, E

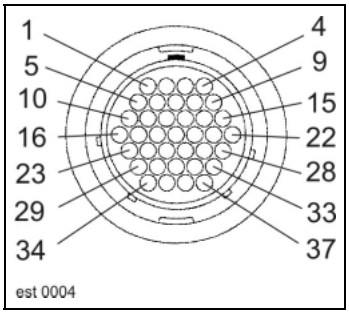

Socket XA

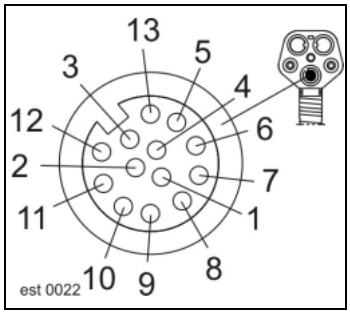

Connector XA

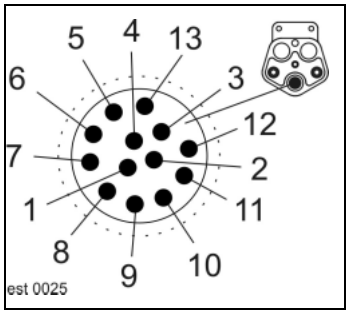

Socket XB

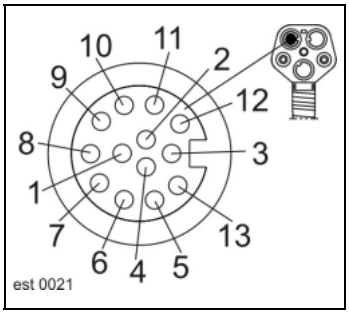

Connector XB

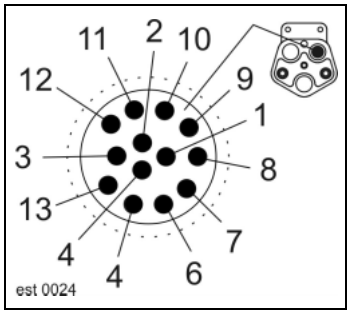

Socket XC

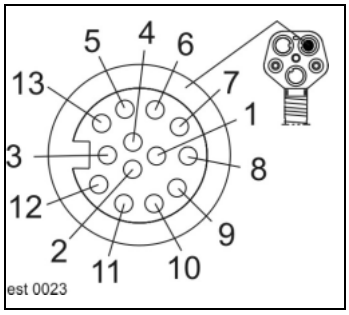

Connector XC

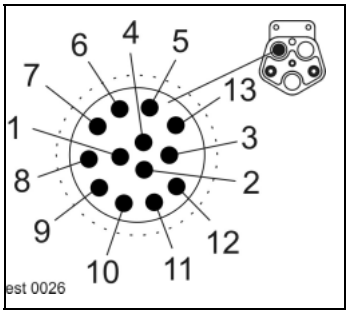

Connector X5

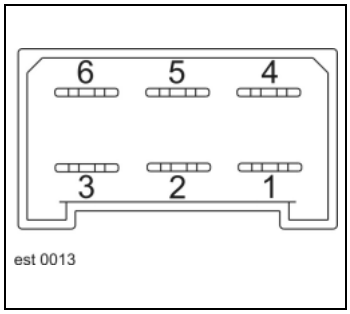

Connector XV2

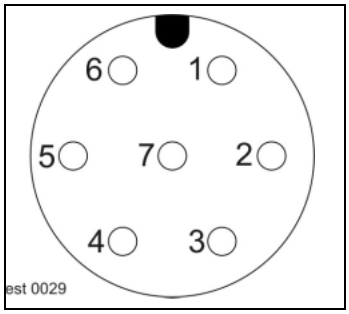

Interconnection list:

from	to 1	to 2	to 3	to 4	to 5	mm²	Colour
S-2	31					0.5	br
S-3	Cab-40 / Bif-3	DZW-3	MP-3	HAS-3	A-19		
	B-13	CAC-3	MV-3	MW-3	DS-62		
	E-31	MU-3	VGS-3	MR-3		0.5	or
S-8	F-2A	MV-1	MW-1			0.5	bk
S-9	Cab-13 / Bif-16	DZW-16	MP-4	HAS-16	A-20		
	B-14	CAC-16	MV-4	MW-4	DS-63		
	E-30	MU-4	VGS-16	MR-4		0.5	ye
MV-1	F2-A	MW-1	S-8			0.5	bk
MV-2	31					1.5	br
MV-3	Cab-40 / Bif-3	DZW-3	CAC-3	HAS-3	A-19		
	B-13	S-3	MW-3	MP-3	DS-62		
	E-31	MU-3	VGS-3	MR-3		0.5	or
MV-4	Cab-13 / Bif-16	DZW-16	CAC-16	HAS-16	A-20		
	B-14	S-9	MW-4	MP-4	DS-63		
	E-30	MU-4	VGS-16	MR-4		0.5	ye
MV-5	F57-A					1.5	bk
MP-1	F9-A					0.5	bk
MP-2	31					1.5	br
MP-3	Cab-40 / Bif-3	DZW-3	CAC-3	HAS-3	A-19		
	B-13	S-3	MV-3	MW-3	DS-62		
	E-31	MU-3	VGS-3	MR-3		0.5	or
MP-4	Cab-13 / Bif-16	DZW-16	CAC-16	HAS-16	A-20		
	B-14	S-9	MV-4	MW-4	DS-63		
	E-30	MU-4	VGS-16	MR-4		0.5	ye
MR-1	F9-A					0.5	bk
MR-2	31					1.5	br
MR-3	Cab-40 / Bif-3	DZW-3	CAC-3	HAS-3	A-19		
	B-13	S-3	MV-3	MW-3	DS-62		
	E-31	MU-3	VGS-3	MP-3		0.5	or
MR-4	Cab-13 / Bif-16	DZW-16	CAC-16	HAS-16	A-20		
	B-14	S-9	MV-4	MW-4	DS-63		
	E-30	MU-4	VGS-16	MP-4		0.5	ye

Interconnection list:

from	to 1	to 2	to 3	to 4	to 5	mm²	Colour
B-13	Cab-40 / Bif-3	DZW-3	CAC-3	HAS-3	A-19		
	MV-3	S-3	MW-3	MP-3	DS-62		
	E-31	MU-3	VGS-3	MR-3		0.5	or
B-14	Cab-13 / Bif-16	DZW-16	CAC-16	HAS-16	A-20		
	MV-4	S-9	MW-4	MP-4	DS-63		
	E-30	MU-4	VGS-16	MR-4		0.5	ye
B-24	F3-A	MU-1				1.5	bk
B-25	31					1.5	br-bl
E-1	31					1.5	br
E-12	31					1.5	br
E-21	F49-A					1.5	bl
E-30	Cab-13 / Bif-16	DZW-16	CAC-16	HAS-16	A-20		
	MV-4	S-9	MW-4	MP-4	DS-63		
	B-14	MU-4	VGS-16	MR-4		0.5	ye
E-31	Cab-40 / Bif-3	DZW-3	CAC-3	HAS-3	A-19		
	MV-3	S-3	MW-3	MP-3	DS-62		
	B-13	MU-3	VGS-3	MR-3		0.5	or
E-36	31					2.5	br
MV1-3	MV-3	A50-RI-4				0.5	or
MV1-4	MV-4	A50-RI-1				0.5	ye

6t

CAN bus, module power supply

for Montana machines with module A45 (HBM)

06t - CAN bus, module power supply, for Montana machines with module A45 (HBM)

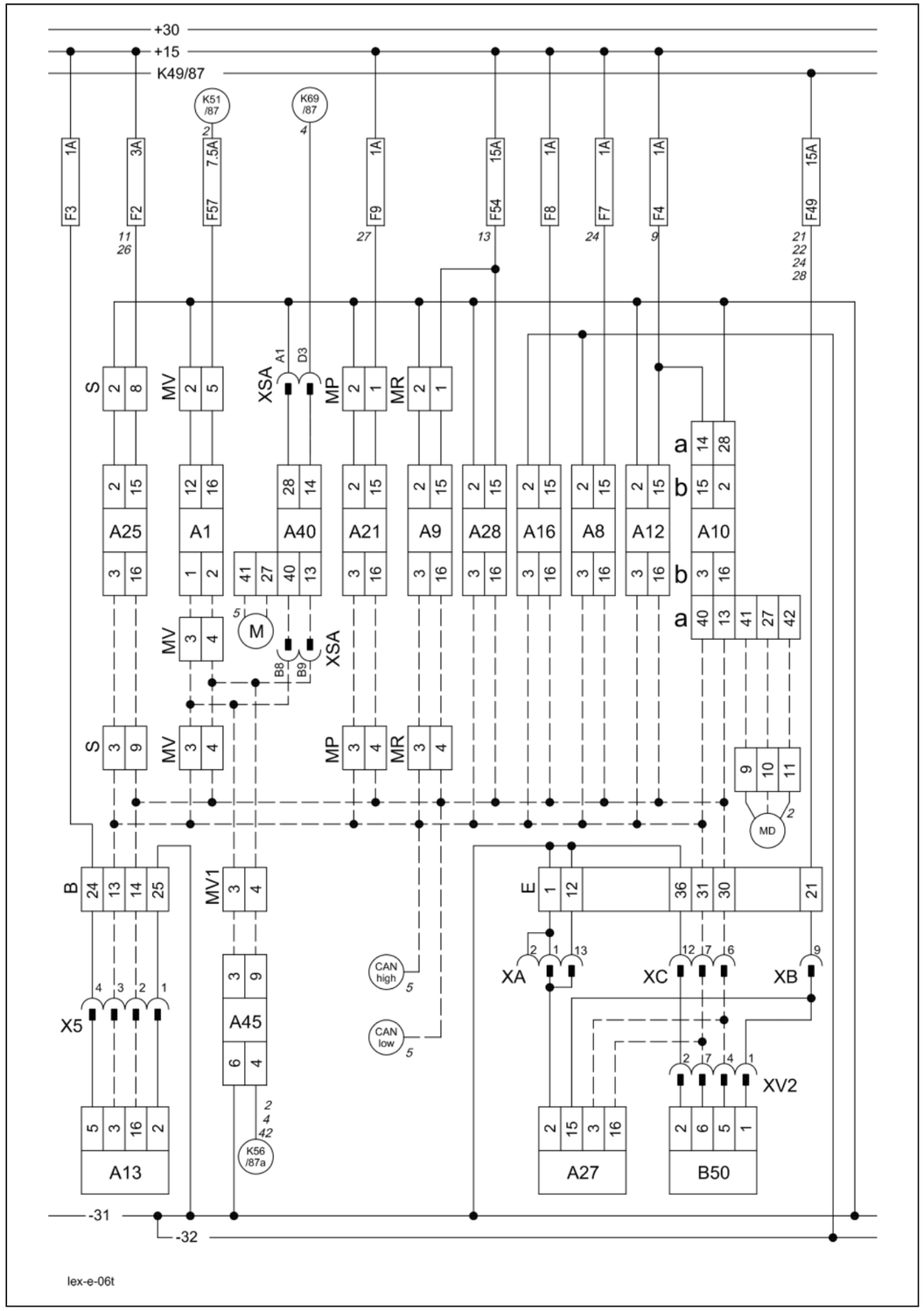

Key to diagram:

		Coordinates
A1	AGROCOM terminal	2-h-17
A8	AUTOCONTOUR module (CAC)	2-h-20
A9	AUTOPILOT module	2-h-20
A10	Fieldwork computer module (BIF/CAB)	2-h-20
A12	Speed monitor module (DZW)	2-h-20
A13	Performance monitor module (DKG)	4-p-21
A16	Reel controller module (HAS)	2-h-20
A21	YIELD METER module (LEM)	2-h-20
A25	Sieve adjustment module	2-h-20
A27	VARIO module	2-h-20
A28	Uni-spreader module (VGS)	2-h-20
A40	Axle control system adaptation module	2-h-17
A45	Ground drive hydraulic motor brake restrictor module (HBM)	2-h-20
B50	AUTOPILOT laser	6-d-26
XA	Multifunction coupling A	8-e-21
XB	Multifunction coupling B	8-e-21
XC	Multifunction coupling C	8-e-21
XV2	AUTOPILOT variant plug	8-e-21
X5	Performance monitor	6-p-20

Description of function:

Montana machine:	On Montana machines, the Montana RIO module (A50) is connected with the CAN bus by a cable branch line from connector MV to MV1.
Yield data	All yield data is saved in the yield meter module (A21) whereas all other performance data is saved in the fieldwork computer / CAN bridge module (A10). It is therefore recommended to transmit these data prior to replacing a defective module, using the diagnosis system CDS3000/CDS5000.
Axle control system adaptation	The CAN bus data of the separate Montana control unit are converted in the axle control system adaptation module A40 and made available to the CLAAS CAN bus system. According to the axle position, the value of the feed rake conveyor position sensor (B35) is offset in the AUTOCONTOUR module (CAC). This allows working in hilly ground with the CAC function "Pre-set cutting height control" and area counting.
AUTOCONTOUR (CAC) Settings for Montana machines	The adaptation of the AUTOCONTOUR (CAC) and the axle control systems requires special settings for Montana machines.
- Cutterbar spring setting	The 5 mm cutterbar spring setting (see also Operator's Manual) must be made at a 50 % axle position.
- Check of cutterbar spring setting	Check setting dimension when travelling downhill with the axle cylinders fully extended. This dimension may be only < 15 mm.
- Learning the CAC limit stops	The limit stops of the CAC sensors must be learned at a 75 % axle position. While doing this, the cutting angle must be adjusted to the working position (cutterbar table surface in parallel with the ground).
- CAC sensitivity	The recommended CAC sensitivity for use with the grain cutterbar is 45 % with Montana machines.
- Drop rate setting (front attachment)	The drop rate must be adjusted with the machine at operating temperature and 50 % axle position. The drop rate is 5 – 6 seconds from the top to the bottom position.
- Set value adjustment of CAC cutting height control	When working in the field, the cutting height control set value (working within the sensor band range) should not be set higher than position 8.

Connector pin assignment:

Connector S

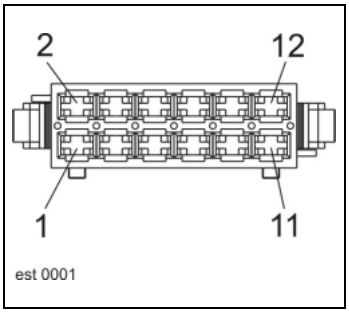

Connector MV, MV1, MP, MR

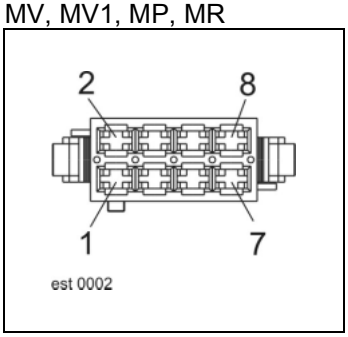

Connector B, E

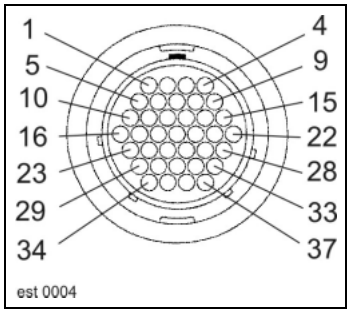

Socket XA

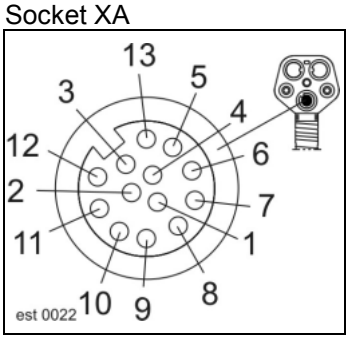

Connector XA

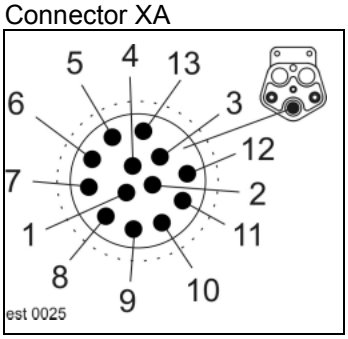

Socket XB

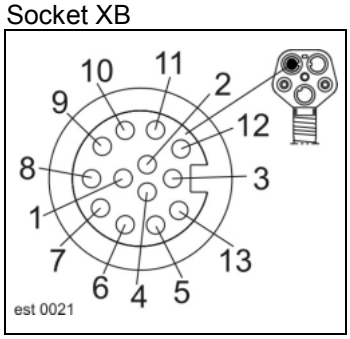

Connector XB

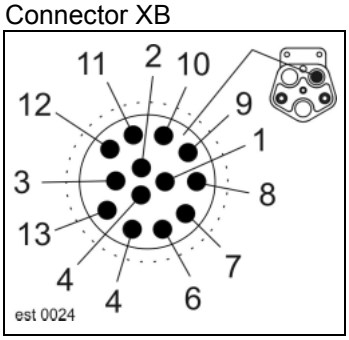

Socket XC

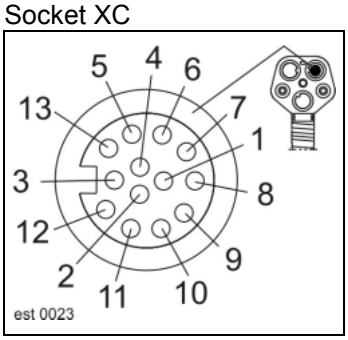

Connector XC

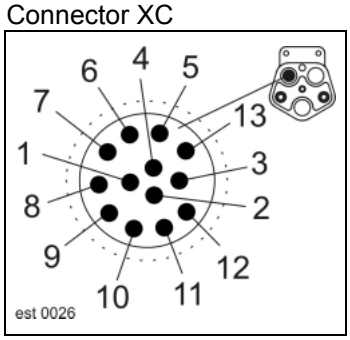

Connector X5

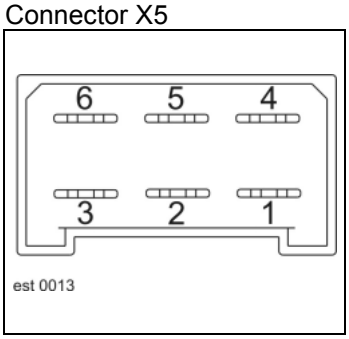

Connector XV2

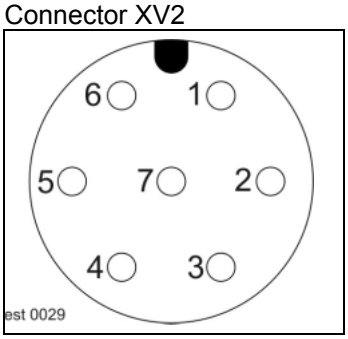

Interconnection list:

from	to 1	to 2	to 3	to 4	to 5	mm²	Colour
S-2	31					0.5	br
S-3	Cab-40 / Bif-3	DZW-3	MP-3	HAS-3	A-19		
	B-13	CAC-3	MV-3	MW-3	DS-62		
	E-31	MU-3	VGS-3	MR-3		0.5	or
S-8	F-2A	MV-1	MW-1			0.5	bk
S-9	Cab-13 / Bif-16	DZW-16	MP-4	HAS-16	A-20		
	B-14	CAC-16	MV-4	MW-4	DS-63		
	E-30	MU-4	VGS-16	MR-4		0.5	ye
MV-1	F2-A	MW-1	S-8			0.5	bk
MV-2	31					1.5	br
MV-3	Cab-40 / Bif-3	DZW-3	CAC-3	HAS-3	A-19		
	B-13	S-3	MW-3	MP-3	DS-62		
	E-31	MU-3	VGS-3	MR-3		0.5	or
MV-4	Cab-13 / Bif-16	DZW-16	CAC-16	HAS-16	A-20		
	B-14	S-9	MW-4	MP-4	DS-63		
	E-30	MU-4	VGS-16	MR-4		0.5	ye
MV-5	F57-A					1.5	bk
MP-1	F9-A					0.5	bk
MP-2	31					1.5	br
MP-3	Cab-40 / Bif-3	DZW-3	CAC-3	HAS-3	A-19		
	B-13	S-3	MV-3	MW-3	DS-62		
	E-31	MU-3	VGS-3	MR-3		0.5	or
MP-4	Cab-13 / Bif-16	DZW-16	CAC-16	HAS-16	A-20		
	B-14	S-9	MV-4	MW-4	DS-63		
	E-30	MU-4	VGS-16	MR-4		0.5	ye
MR-1	F9-A					0.5	bk
MR-2	31					1.5	br
MR-3	Cab-40 / Bif-3	DZW-3	CAC-3	HAS-3	A-19		
	B-13	S-3	MV-3	MW-3	DS-62		
	E-31	MU-3	VGS-3	MP-3		0.5	or
MR-4	Cab-13 / Bif-16	DZW-16	CAC-16	HAS-16	A-20		
	B-14	S-9	MV-4	MW-4	DS-63		
	E-30	MU-4	VGS-16	MP-4		0.5	ye

Interconnection list:

from	to 1	to 2	to 3	to 4	to 5	mm²	Colour
B-13	Cab-40 / Bif-3	DZW-3	CAC-3	HAS-3	A-19		
	MV-3	S-3	MW-3	MP-3	DS-62		
	E-31	MU-3	VGS-3	MR-3		0.5	or
B-14	Cab-13 / Bif-16	DZW-16	CAC-16	HAS-16	A-20		
	MV-4	S-9	MW-4	MP-4	DS-63		
	E-30	MU-4	VGS-16	MR-4		0.5	ye
B-24	F3-A	MU-1				1.5	bk
B-25	31					1.5	br-bl
E-1	31					1.5	br
E-12	31					1.5	br
E-21	F49-A					1.5	bl
E-30	Cab-13 / Bif-16	DZW-16	CAC-16	HAS-16	A-20		
	MV-4	S-9	MW-4	MP-4	DS-63		
	B-14	MU-4	VGS-16	MR-4		0.5	ye
E-31	Cab-40 / Bif-3	DZW-3	CAC-3	HAS-3	A-19		
	MV-3	S-3	MW-3	MP-3	DS-62		
	B-13	MU-3	VGS-3	MR-3		0.5	or
E-36	31					2.5	br
MV1-3	MV-3	A50-RI-4				0.5	or
MV1-4	MV-4	A50-RI-1				0.5	ye

17s

Front attachment drive, reverser drive

for Montana machines

17s - Front attachment drive, reverser drive for Montana machines

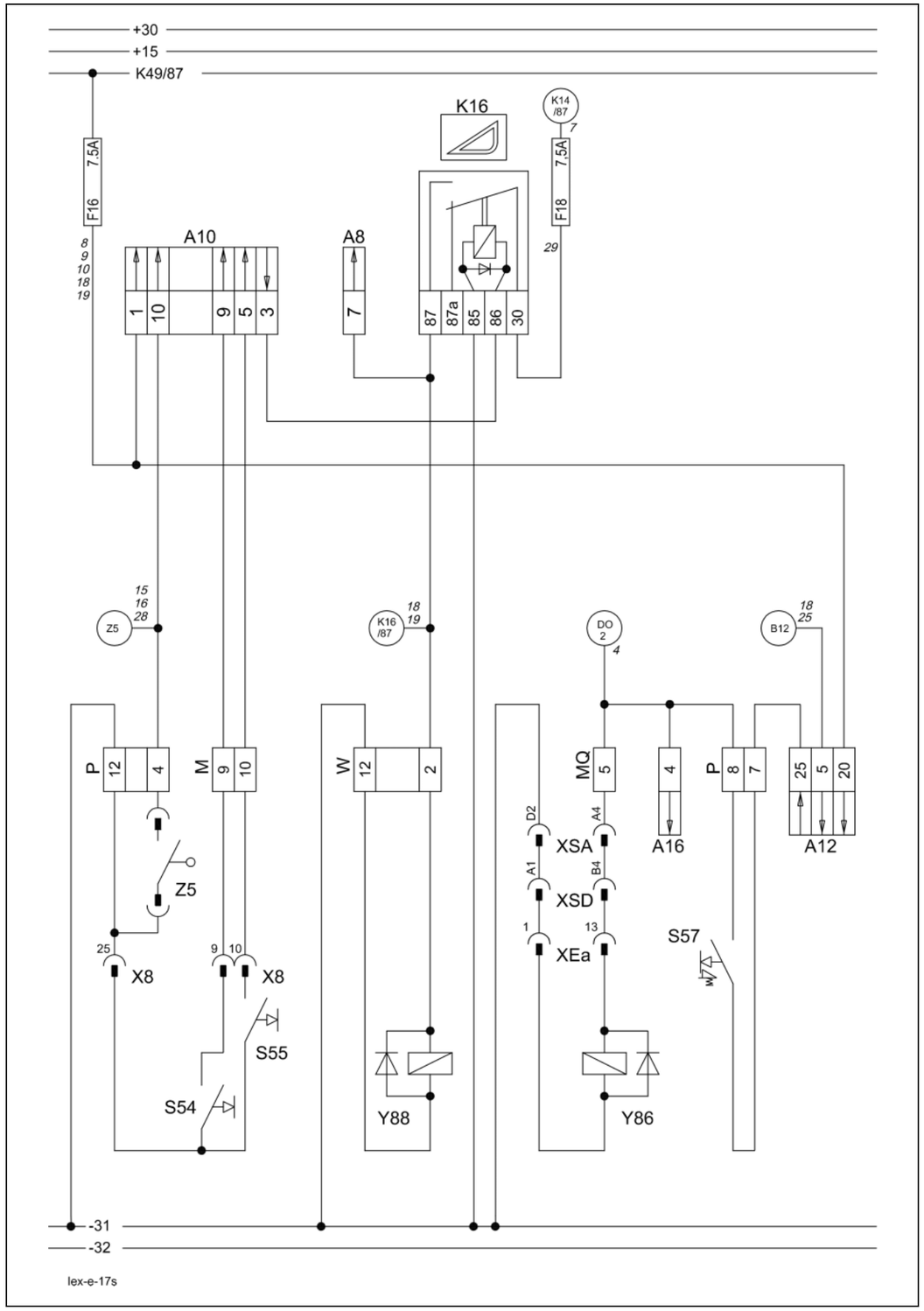

Key to diagram:

Coordinates

A8	AUTOCONTOUR module (CAC)	2-h-20
A10	Fieldwork computer module (BIF/CAB)	2-h-20
A12	Speed monitor module (DZW)	2-h-20
A16	Reel controller module (HAS)	2-h-20
K16	Front attachment ON relay	3-h-20
S54	Front attachment OFF switch	3-g-17
S55	Front attachment ON switch	3-g-17
S57	Front attachment reverse switch	3-g-17
XEa	Montana feed rake conveyor connector	5-g-17
XSA	Montana operator's platform connector	5-h-17
XSD	Montana operator's platform connector	5-h-17
X8	Ground speed control lever connector	4-h-17
Y86	Reverse front attachment solenoid coil	8-e-16
Y88	Front attachment clutch solenoid coil	2-p-19
Z5	Seat contact switch	4-g-18

Measured value table:

Item	Component	Measured value	Remark
K16	Remote control relay 15 A 30 A	95±10 Ω	(Pin 86/1 – 85/2) (Pin 87a/4 – 30/3) (Pin 87/5 – 30/3)
Y86	Solenoid coil	3.8 A 3.2 Ω	
Y88	Solenoid coil	0.75 A 16 Ω	

Description of function:

Montana machine:

In this circuit, the difference between the standard machine and the Montana machine is only two additional connectors (XSA and XSD) to solenoid coil (Y86).

Front attachment ON/OFF

Relay K49 must be actuated by the road travel circuit and the threshing mechanism must be actuated by relay K14 as pre-conditions for the front attachment drive.
When the START button (S55) is actuated, an earth signal is connected to the fieldwork computer module (A10). The fieldwork computer module (A10) now actuates relay K16. Solenoid coil (Y88) is supplied with power – Front attachment ON function.
When the STOP button (S54) is actuated, an earth signal is connected to the fieldwork computer module (A10). The fieldwork computer module (A10) cuts the power supply at relay K16 – Front attachment OFF.

Important! The front attachment circuit depends on the closed seat contact switch (Z5).

Reverse front attachment

The front attachment must not be engaged as a pre-condition for the reversing function. The speed monitor module (A12) connects voltage to the reverse switch (S57) as an additional safety feature only after the feeder housing speed sensor (B12) stops transmitting a signal for approx. 2 seconds.
If these pre-conditions are met, voltage is connected from the speed monitor module (A12) to solenoid coil (Y86) via the reverse switch (S57) – Front attachment reverse function.
The master valve (Y77) is actuated via the diode PCB (DO) in parallel with the solenoid coil (Y86) because this function requires that pressure is built up in the system.

Important! When the reversing function is active, a signal is connected to the reel controller module (A16) which makes the speed adjustment variable displacement pump swing to maximum delivery if hydraulic reel drive is used.

Connector pin definition:

Connector M, P, W

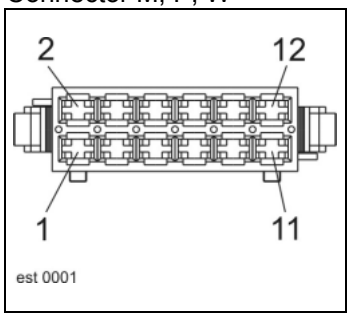

Connector MQ

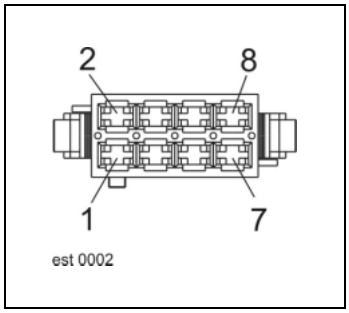

Connector X8

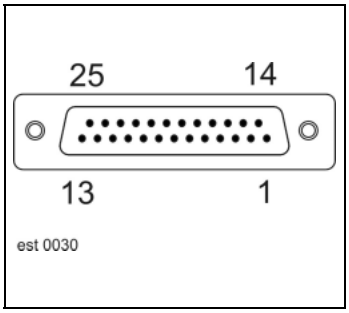

Socket XEa

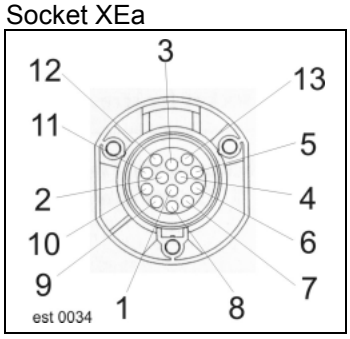

Connector XEa

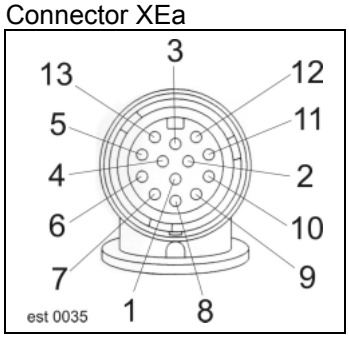

Connector XSA

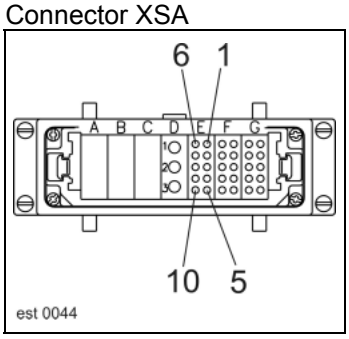

Connector XSD

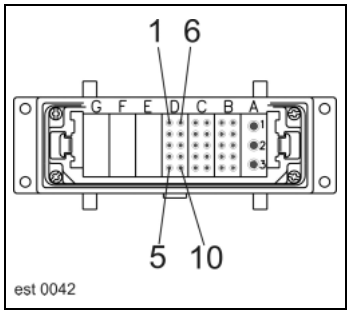

Connector XSD

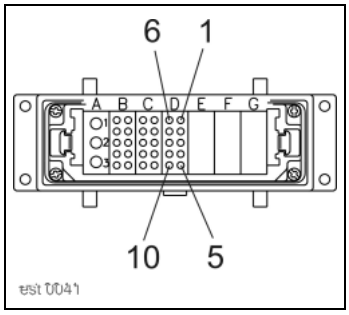

Connector XSA

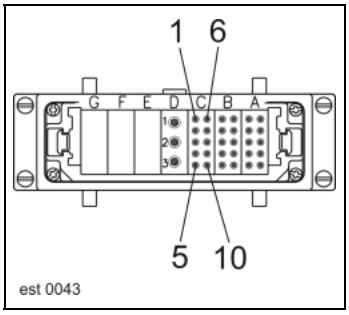

Interconnection list:

from	to 1	to 2	to 3	to 4	to 5	mm²	Colour
M9	CAC-6					0.5	bl-gr
M10	CAC-18					0.5	wh-gn
W-2	K35-30	K16-87	K8-87	K15-30	CAC-7		
	K36-30	H-3	K64-86	DS-53		1	ye-rd
W-12	31					2.5	br
MQ-5	P-8	Do-2	DS-7			1.5	ye-bl
MQ-8	31					2.5	br
P-4	K47-TK	R-1				0.5	bl-gn
P-7	K65-87a					1.5	gr
P-8	MQ-5	DO-2	DS-7			1.5	gr
P-12	31					2.5	br
XEa-1	XSD-A1					1.5	br
XEa-13	XSD-B4					1.5	ye-bl
XSA-A4	XSD-B4					1.5	ye-bl
XSA-D2	XSD-A1					4	br
XSD-A1	XEa-1	XSA-D2				4	br
XSD-B4	XEa-13	XSA-A4				1.5	ye-bl

20s

Front attachment raise / lower, cross levelling

for Montana machines

20s - Raise / lower front attachment, cross levelling – for Montana machines

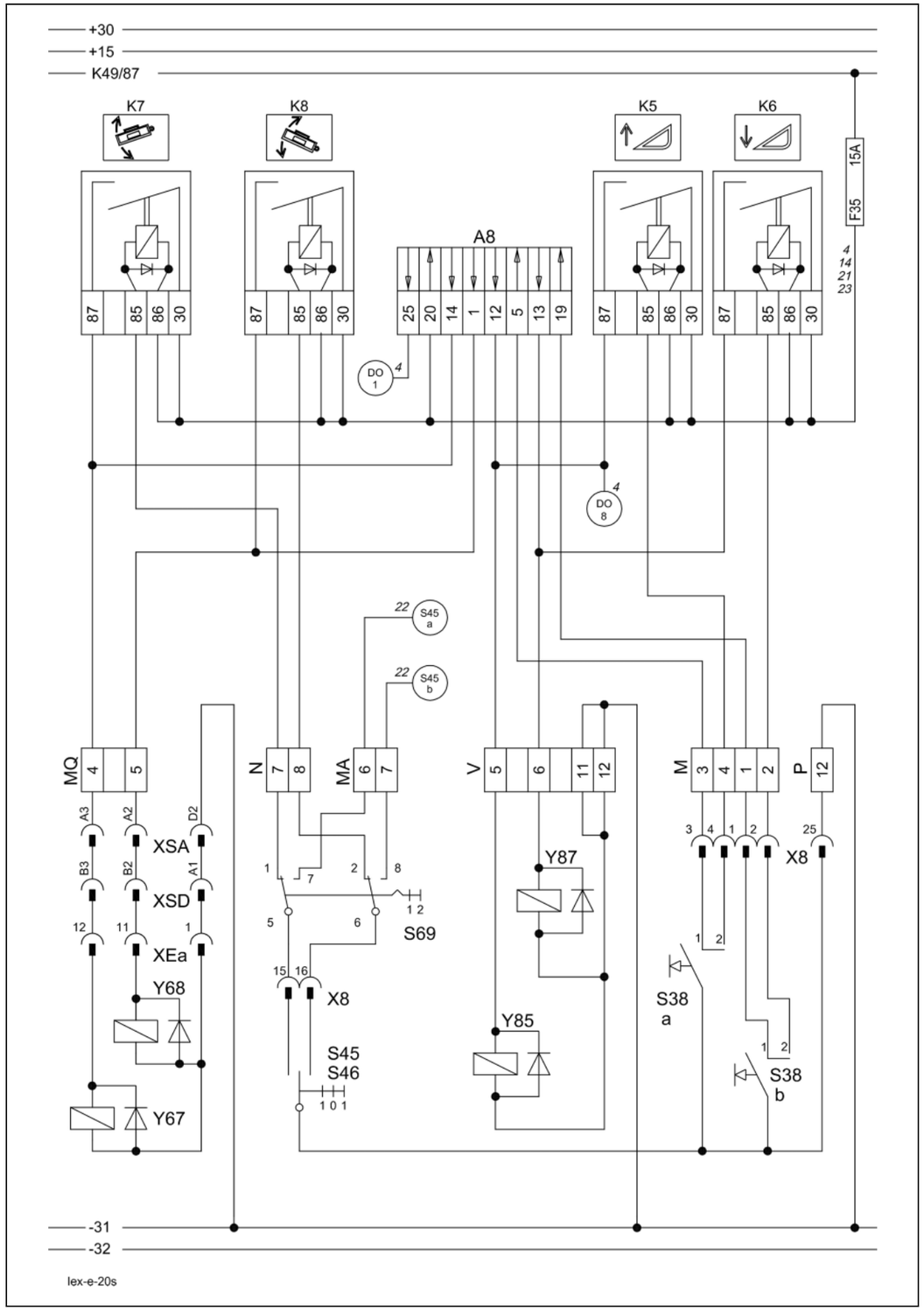

Key to diagram:

		Coordinates
A8	AUTOCONTOUR module (CAC)	2-h-20
K5	Front attachment raise relay	3-h-20
K6	Front attachment lower relay	3-h-20
K7	Left-hand cutterbar transverse control relay	3-h-20
K8	Right-hand cutterbar transverse control relay	3-h-20
S38a	Front attachment raise multifunction pushbutton switch	3-f-18
S38b	Front attachment lower multifunction pushbutton switch	3-f-18
S45	VARIO cutting table adjustment switch	3-f-18
S46	Cutterbar cross levelling switch (manual)	3-g-17
S69	Cross levelling / table adjustment function pre-selection switch	3-g-17
XEa	Montana feed rake conveyor connector	5-g-17
XSA	Montana operator's platform connector	5-h-17
XSD	Montana operator's platform connector	5-h-17
X8	Ground speed control lever connector	4-h-17
Y67	Solenoid coil AUTOCONTOUR cross levelling, left	7-f-16
Y68	Solenoid coil AUTOCONTOUR cross levelling, right	7-f-16
Y85	Raise front attachment solenoid coil	6-m-21
Y87	Lower front attachment solenoid coil	6-m-21

Measured value table:

Item	Component	Measured value	Remark
K 5 K 6 K 7 K 8	Remote control relay 30 A	200±20 Ω	(Pin 86/1 - 85/2) (Pin 87/5 – 30/3)
Y67 Y68 Y85 Y87	Solenoid coil	3.8 A 3.2 Ω	

Description of function:

Montana machine:	In this circuit, the difference between the standard machine and the Montana machine is only two additional connectors (XSA and XSD) to the solenoid coils (Y67 and Y68).
Raise / lower front attachment	When the road travel circuit is unlocked, relays K5 and K6 are supplied with power by relay K49. The pushbuttons (S38a and S38b) have different pressure stages. When actuating the pushbutton slightly to the first stage, earth is connected as a signal to the AUTOCONTOUR module (A8). The module (A8) actuates the respective solenoid coils (Y85 or Y86) in a modulated way – Slowly raise/lower function. When pressing the pushbuttons (S38a or S38b) to the second stage, the corresponding relays K5 and K6 are actuated and consequently also the respective solenoid coils (Y85 or Y86) – Quickly raise/lower function. The master valve (Y77) is actuated via the diode PCB (DO) in parallel with the front attachment raise solenoid coil (Y85) because this function requires that pressure is built up in the system. During automatic cutterbar guiding, the AUTOCONTOUR module (A8) actuates the corresponding solenoid coils until the set values and actual values of the corresponding sensors match.
Cross levelling	When the road travel circuit is unlocked, relays K7 and K8 are supplied with power by relay K49. By actuating the function pre-selection switch (S69) to the cross levelling position, the respective relay K5 or K6 and consequently the corresponding solenoid coil (Y67/Y68) is actuated as a function of switch (S46). The master valve (Y77) is actuated via the diode PCB (DO) in parallel with the cross levelling solenoid coils (Y67/Y68) because this function requires that pressure is built up in the system. During automatic cutterbar guiding, the AUTOCONTOUR module (A8) actuates the corresponding solenoid coils until the set values and actual values of the corresponding sensors match. **Important!** The switch provided at the bottom side of the multi-function handle controls both the VARIO cutting table adjustment (S45) and the manual cutterbar lateral control (S46), depending on the function pre-selection switch (S69).

Connector pin definition:

Connector M, MA, N, P, V

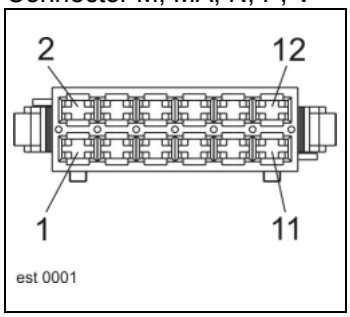

Connector MQ

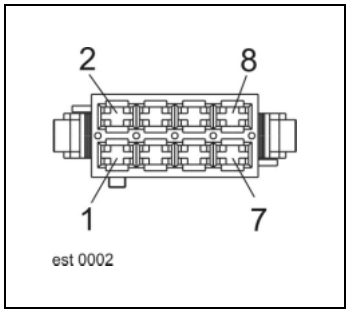

Connector X8

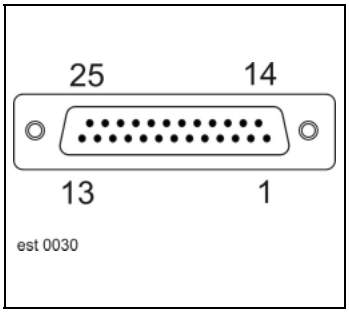

Socket XEa

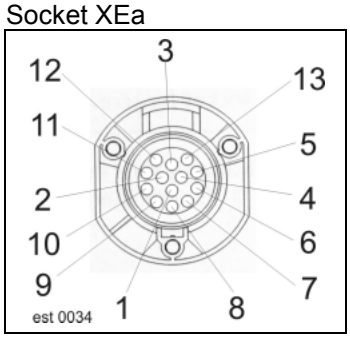

Connector XEa

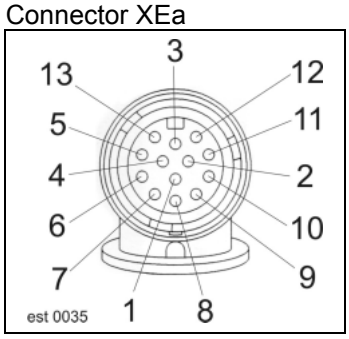

Connector XSA

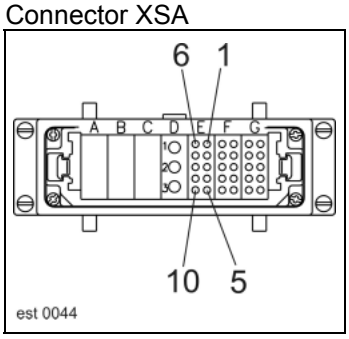

Connector XSD

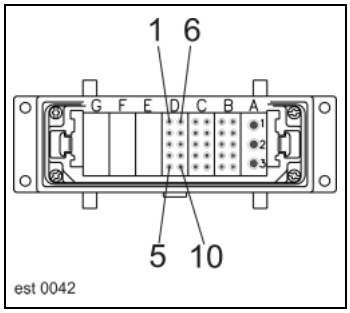

Connector XSD

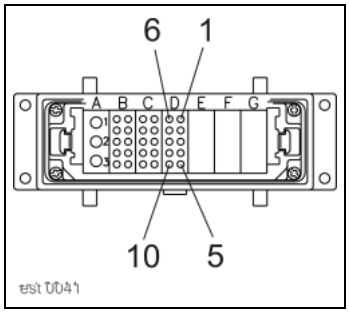

Connector XSA

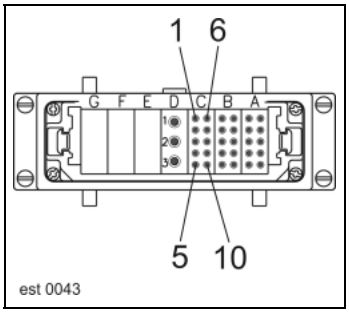

Interconnection list:

from	to 1	to 2	to 3	to 4	to 5	mm²	Colour
MQ-3	K8-87	CAC-1				1.5	ye-vi
MQ-4	K7-87	CAC-14				1.5	ye-br
MQ-8	31					2.5	br
N-7	K7-85					1.5	gn-wh
N-8	K8-85					1.5	gn-ye
MA-6	K9-85					0.5	gr-gn
MA-7	K10-85					0.5	gr-br
V-5	K5-87	CAC-13	Do-8	DS-5		1.5	wh-rd
V-6	K6-87	CAC-12	DS-6			1.5	wh-bk
V-11	31					2.5	br
V-12	31					2.5	br
M-1	CAC-19					0.5	gr-wh
M-2	K6-85					0.5	gr-ye
M-3	CAC-5					0.5	gr-br
M-4	K5-85					0.5	gr-gn
P-12	31					2.5	br
XEa-1	XSD-A1					1.5	br
XEa-11	XSD-B2					1.5	vi-ye
XEa-12	XSD-B3					1.5	ye-br
XSA-A2	XSD-B2					1.5	vi-ye
XSA-A3	XSD-B3					1.5	ye-br
XSA-D2	XSD-A1					4	br
XSD-A1	XEa-1	XSA-D2				4	br
XSD-B2	XEa-11	XSA-A2				1.5	vi-ye
XSD-B3	XEa-12	XSA-A3				1.5	ye-br

26s

Machine monitor

for Montana machines

26s - Machine monitoring, for Montana machines

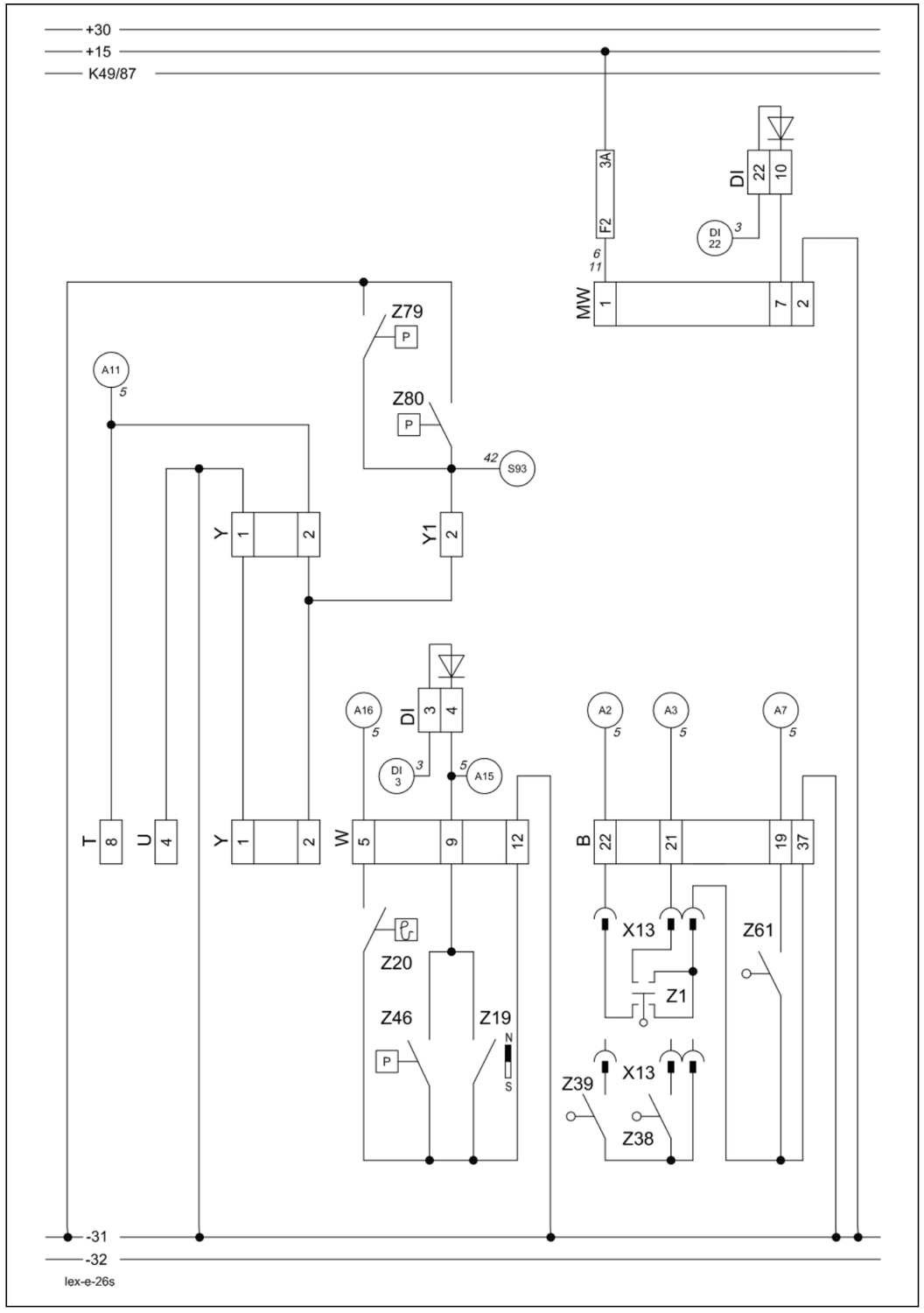

Key to diagram:

		Coordinates
DI	Warning device diode PCB	3-h-20
X13	3D / rear axle connector	3-g-17
Z1	3D sieve pan position switch	6-o-16
Z19	Hydraulic oil level switch (min.)	2-p-20
Z20	Hydraulic oil temperature switch	2-p-20
Z38	Steering position left switch	7-q-16
Z39	Steering position right switch	7-q-16
Z46	Low-pressure hydraulics switch / ground drive oil pressure	2-p-19
Z61	Straw blockage warning switch	2-t-18
		4-t-20
Z79	Left brake circuit pressure switch	5-g-20
Z80	Right brake circuit pressure switch	5-g-20

Description of function:

Montana machine	In this circuit, the difference between the standard machine and the Montana machine is a cable branch at connector Y to Y1. The parking brake switch at the connectors T and U is dropped on Montana machines. In addition to the warning signals for brake lining wear (Z9) and parking brake (Z12), insufficient brake oil pressure (Z80) is also displayed in the terminal.
Filling level warning	If the diesel engine is not started, the terminal (A30) recognizes an earth signal on pin 15 as the signal of the float switch (Z19) and displays the filling level alarm message. At the same time, the earth signal is sent to the pulse generator K57 through the diode PCB (DI).
Oil pressure warning	If the diesel engine is started, the terminal (A30) recognizes an earth signal on pin 15 as the signal of the oil pressure switch (Z46) and displays the oil pressure alarm message. At the same time, the earth signal is sent to the pulse generator K57 through the diode PCB (353).
Warning: Hydraulic oil temperature too high	The earth signal of the hydraulic oil temperature switch (Z20) is connected to terminal (A30) and displayed as an alarm message.
Montana brake oil pressure warning	The earth signal of the left / right brake circuit pressure switch (Z79/Z80) is connected to the terminal (A30) and displayed as an alarm message.

Connector pin definition:

Connector T, U, W, Y, Y1

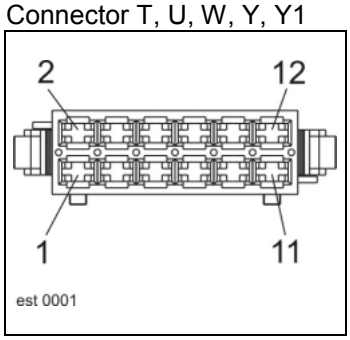

Connector MW

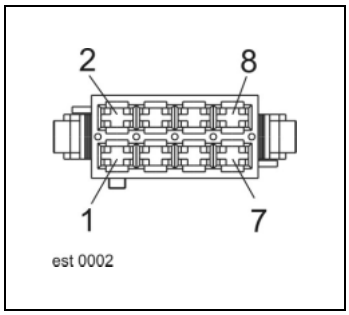

Connector B

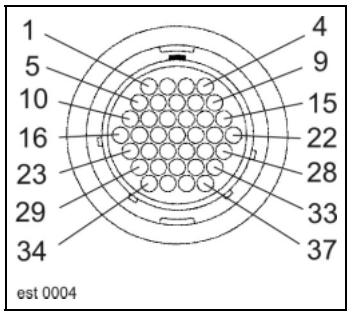

Interconnection list:

from	to 1	to 2	to 3	to 4	to 5	mm²	Colour
T-8	A-11	Y-2				1.5	br-wh
U-4	31					2.5	br
Y-1	31					2.5	br
Y-2	T-8	A-11				0.75	br-rd
W-5	A-16					0.75	br-wh
W-9	A-15	DI-4				1	gn-rd
W-12	31					2.5	br
B-19	A-7					1	bk-gr
B-21	A-3					1	bl-gr
B-22	A-2					1	bl-vi
B-37	31					1.5	br
MW-1	F2-A	MV-1	S-8			0.5	bk
MW-2	31					1.5	br
MW-7	DI-10					0.5	wh
Y1-2	Y-2					1.5	br-rd

41s

Axle control system, front attachment control system

for Montana machines with module A50 (RIO)

41s - Axle control system and front attachment control system, for Montana machines with module A50 (RIO)

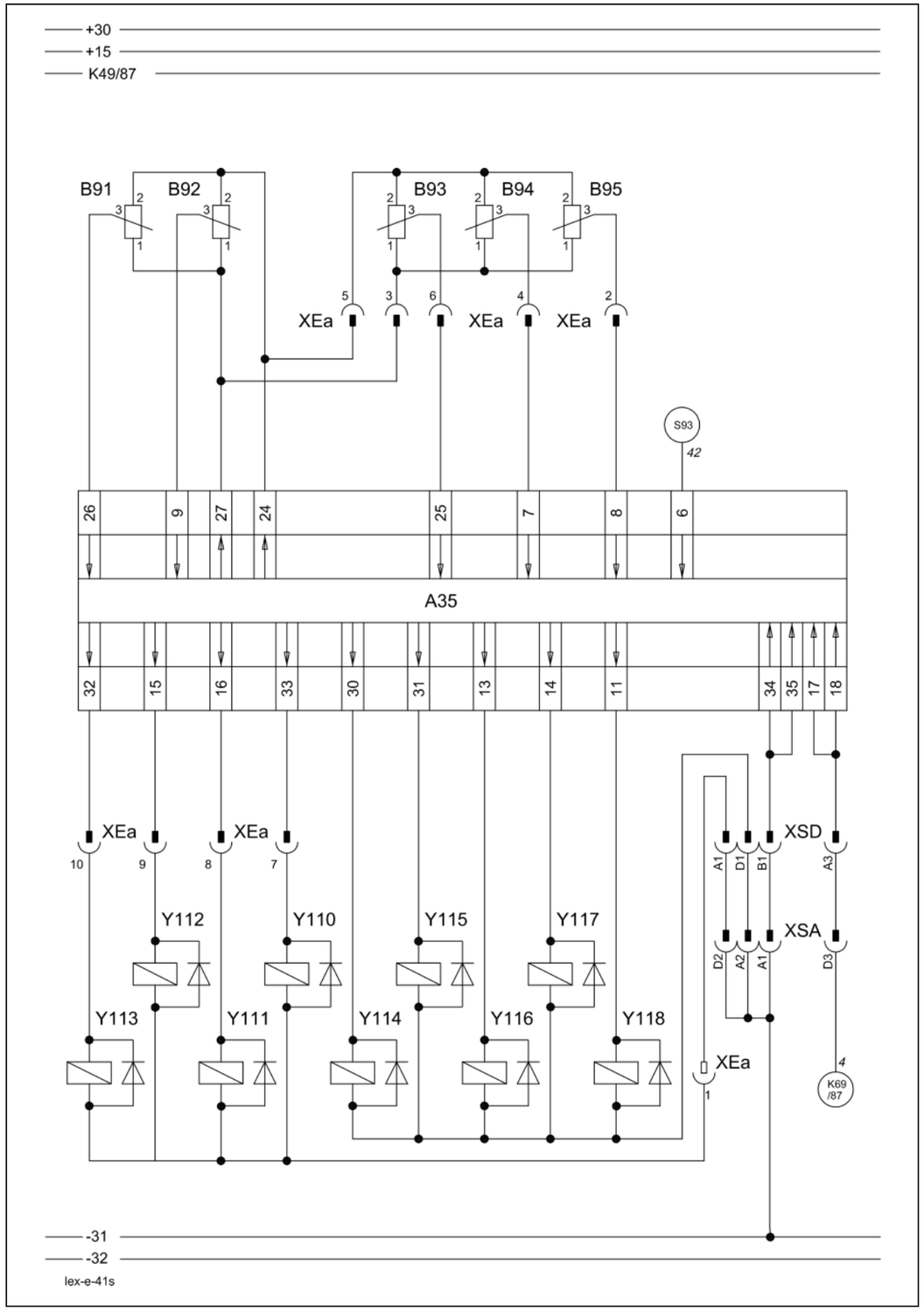

Key to diagram:

Coordinates

A35	Montana control unit module	7-i-18
B91	Axle angle sensor, left	7-j-20
B92	Axle angle sensor, right	7-j-16
B93	Cutting angle sensor	7-e-17
B94	Montana cross levelling sensor	8-e-16
B95	Montana feed rake conveyor position sensor	6-h-16
XEa	Montana feed rake conveyor connector	5-g-17
XSA	Montana operator's platform	5-h-17
XSD	Montana operator's platform	5-h-17
Y110	Raise cutting angle solenoid coil	7-f-16
Y111	Lower cutting angle solenoid coil	7-f-16
Y112	Rotate front attachment to the right solenoid coil	7-f-16
Y113	Rotate front attachment to the left solenoid coil	7-f-16
Y114	Lower axle on left-hand side solenoid coil	7-h-18
Y115	Raise axle on left-hand side solenoid coil	7-h-18
Y116	Lower axle on right-hand side solenoid coil	7-h-18
Y117	Raise axle on right-hand side solenoid coil	7-h-18
Y118	Oil quantity increase solenoid coil	7-h-18

Measured value table:

Item	Component	Measured value	Remark
B91 B92 B93 B94	Sensor	12 V 0.25 V – 4.75 V	(Pin 1-2) (Pin 1-3)
Y110 Y111 Y112 Y113 Y114 Y115 Y116 Y117 Y118	Solenoid coil	3.8 A 3.2 Ω	

Description of function: 1/5

Axle control system and front attachment control system

The system identifies the machine position using an inclination sensor integrated in the Montana module (A35). The solenoid coils (Y114, Y115, Y116, Y117) are actuated by the Montana module (A35) so that the machine is always in a vertical position by means of front axle movements. If the control system speed is not sufficient, the Montana module (A35) additionally actuates an oil quantity increase solenoid coil (Y118) in connection with the working hydraulics master valve (Y77) via the gearshift control module (A36) – circuit diagram 4.

The position of the front attachment is adapted by rotating the front attachment frame (Y112, Y113) and by changing the cutting angle (Y110, Y111). This front attachment control system works independently of the AUTOCONTOUR system.
The Montana module (A35) receives the necessary feedback about the current position of the corresponding function from the respective angle sensors (B91, B92, B93, B94, B95).

Important! All system calibrations using the Montana terminal (A41) require that the Montana control unit module A35 receives the signal from the unactuated parking brake (S93) – circuit diagram 42.

Axle control system diagnosis via Montana terminal A41:

Call up the diagnosis menu with the menu key, the yellow cutting angle increase / decrease keys and the Enter key.

- Diagnosis inputs

Select the inputs section using the yellow keys and the Enter key.

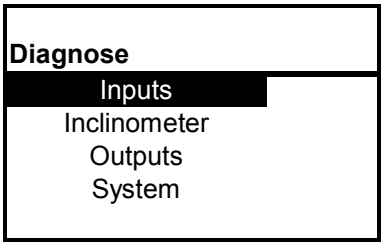

Description of function: 2/5

Go to page 1/6 inputs using the yellow keys and the Enter key.
The parking brake symbol allows checking the function of parking brake switch S93 (symbol) – closed / open.

Diag. Inputs	1/6
Handbrake	
Reserve 1	
Reserve 2	

Go to page 2/6 inputs using the yellow keys and the Enter key.
The sensor value B91 is displayed.

Diag. Inputs	2/6
Cylinder left	
Sensor:	3.30 V
Cal.min.:	0.12 V
Cal.max.:	4.99 V
Position:	65.3%

Go to page 3/6 inputs using the yellow keys and the Enter key.
The sensor value B92 is displayed.

Diag. Inputs	3/6
Cylinder right	
Sensor:	2.01 V
Cal.min.:	0.00 V
Cal.max.:	4.86 V
Position:	41.3%

Go to page 4/6 inputs using the yellow keys and the Enter key.
The sensor value B93 is displayed.

Diag. Inputs	4/6
Cutting angle	
Sensor:	3.47 V
Cal.min.:	2.64 V
Cal.max.:	3.80 V
Position:	71.8%

Description of function: 3/5

Go to page 5/6 inputs using the yellow keys and the Enter key.
The sensor value B94 is displayed.

Diag. Inputs	5/6
Cross inclinat.	
Sensor:	1.57 V
Cal.min.:	1.18 V
Cal.max.:	2.53 V
Position:	28.7%

Go to page 6/6 inputs using the yellow keys and the Enter key.
The sensor value B95 is displayed.

Note: Sensor B95 is not used by the system.

Diag. Inputs	6/6
Feeder housing	
Sensor:	2.78 V
Cal.min.:	0.00 V
Cal.max.:	4.86 V
Position:	57.2%

Description of function: 4/5

- Inclinometer diagnosis

Press menu key.
Select the inclinometer section using the yellow keys and the Enter key.

Diagnose
Inputs
Inclinometer
Outputs
System

Go to page 1/1 Inclinometer using the yellow keys and the Enter key.
The inclinometer is integrated in module A35.
The most recently calibrated values cal. X / cal. Y can be compared with the current actual values of angle X and angle Y.

Diag. Inclino.	1/1
Angle X:	52 inc.
Cal. X:	155 inc.
Angle Y:	71 inc.
Cal. Y:	201 inc.

- Diagnosis outputs

Press menu key.
The outputs section cannot be used for axle control system diagnosis since the diagnosis mode does not allow axle control system operating functions.

Diagnose
Inputs
Inclinometer
Outputs
System

Description of function: 5/5

- Power supply diagnosis

Press menu back key. Select the system section using the yellow keys and the Enter key.

Diagnose
Inputs
Inclinometer
Outputs
System

Go to page 1/1 system using the yellow keys and the Enter key. The power supply 2 value displays the current supply voltage of module A35. The power supply 1 value is not used by the system.

Diag. System	1/1
Supply 1:	4.89 V
Supply 2:	12.5 V

Connector pin definition:

Socket XEa

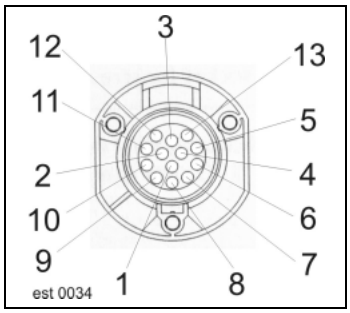

Connector XEa

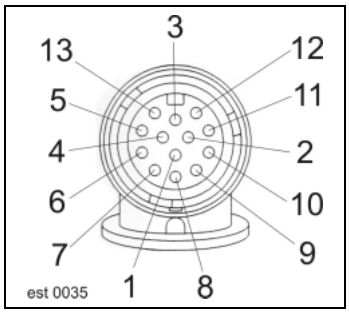

Connector XSA

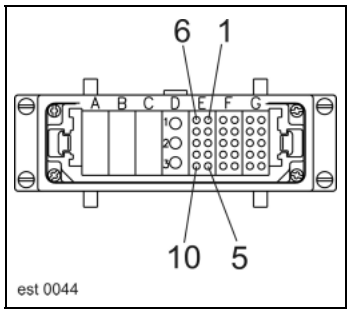

Connector XSD

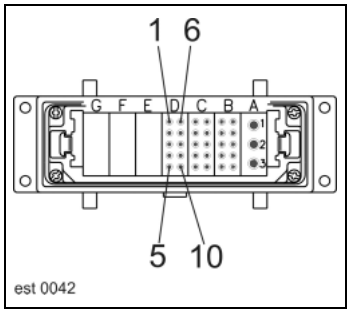

Connector XSD

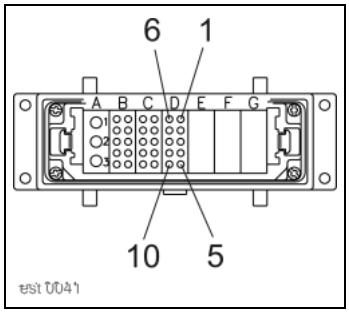

Connector XSA

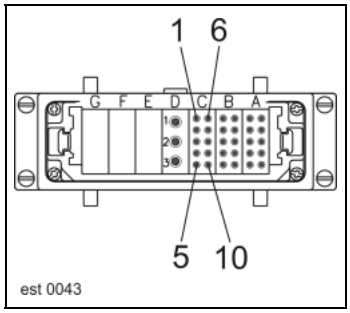

Interconnection list:

from	to 1	to 2	to 3	to 4	to 5	mm²	Colour
XEa-1	XSD-A1					1.5	br
XEa-2						0.75	br-rd
XEa-3						0.75	vi-bl
XEa-4						0.75	gn-vi
XEa-5						0.75	br-bl
XEa-6						0.75	bl-bk
XEa-7						1.5	gr-vi
XEa-8						1.5	gr-ye
XEa-9						1.5	bl-gr
XEa-10						1.5	gr-wh
XSA-A1	XSD-B1					1.5	br
XSA-A2	XSD-B2					1.5	vi-ye
XSA-D2	XSD-A1					4	br
XSA-D3	XSD-A3					4	rd-bk
XSD-A1	XEa-1	XSA-D2				4	br
XSD-A3	XSA-D3					4	rd-bk
XSD-B1	XSA-A1					1.5	bk-rd
XSD-B5						1.5	wh-br
XSD-B6						1.5	wh-pi
XSD-B7						1.5	wh-ye
XSD-B8						1.5	wh-rd
XSD-D1	XSA-B1					1.5	gr-bk

41t

Axle control system,
front attachment control system

for Montana machines with module A45 (HBM)

41t - Axle control system and front attachment control system, for Montana machines with module A45 (HBM)

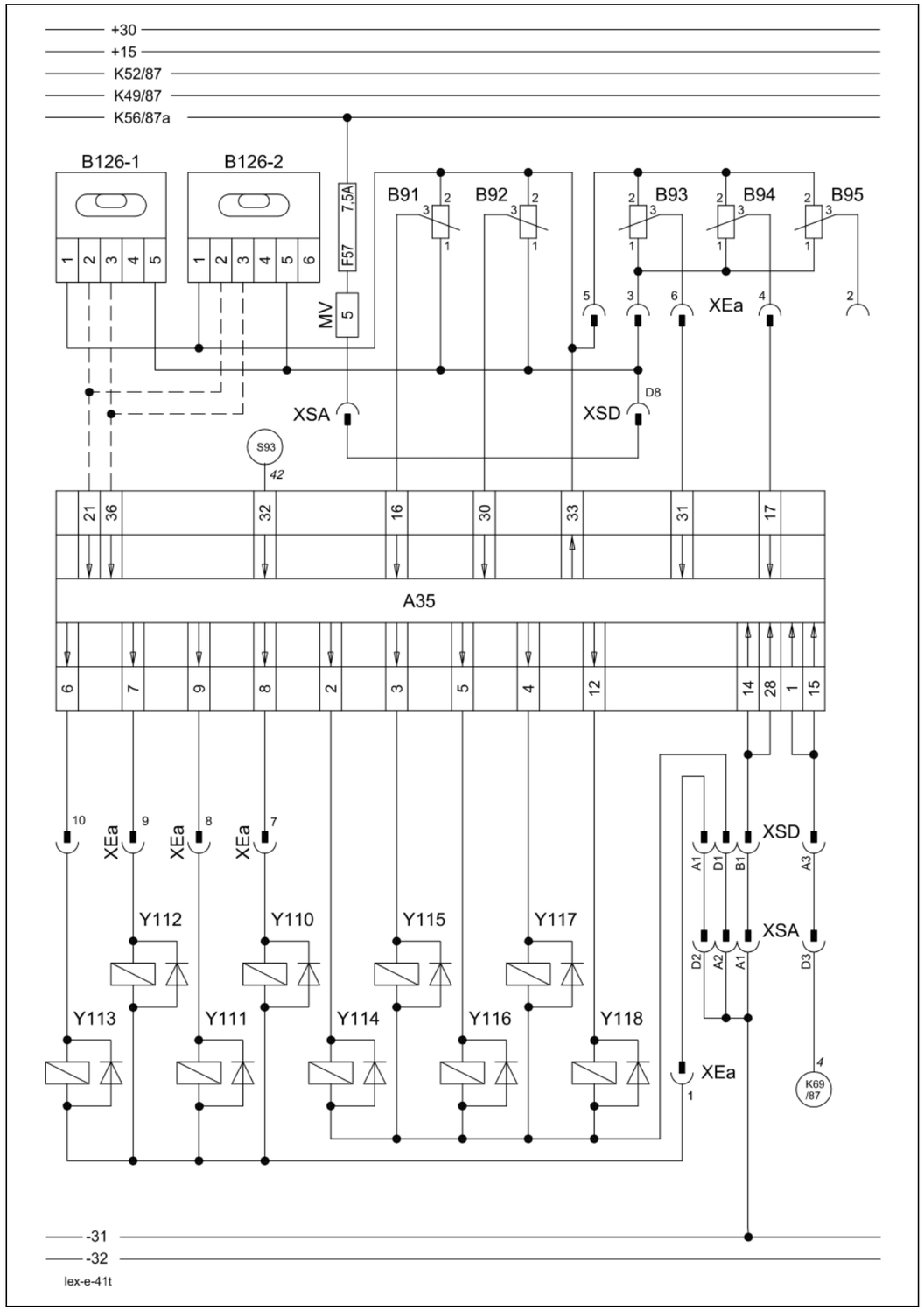

Key to diagram: Coordinates

A35	Montana control unit module	7-i-18
B91	Axle angle sensor, left	7-j-20
B92	Axle angle sensor, right	7-j-16
B93	Cutting angle sensor	7-e-17
B94	Montana cross levelling sensor	8-e-16
B95	Montana feed rake conveyor position sensor	6-h-16
B126-1	Axle control system inclination sensor 1	
B126-2	Axle control system inclination sensor 2	
XEa	Montana feed rake conveyor connector	5-g-17
XSA	Montana operator's platform	5-h-17
XSD	Montana operator's platform	5-h-17
Y110	Raise cutting angle solenoid coil	7-f-16
Y111	Lower cutting angle solenoid coil	7-f-16
Y112	Rotate front attachment to the right solenoid coil	7-f-16
Y113	Rotate front attachment to the left solenoid coil	7-f-16
Y114	Lower axle on left-hand side solenoid coil	7-h-18
Y115	Raise axle on right-hand side solenoid coil	7-h-18
Y116	Lower axle on right-hand side solenoid coil	7-h-18
Y117	Raise axle on right-hand side solenoid coil	7-h-18
Y118	Oil quantity increase solenoid coil	7-h-18

Measured value table:

Item	Component	Measured value	Remark
B91	Sensor	12 V	(Pin 1-2)
B92		0.25 V – 4.75 V	(Pin 1-3)
B93			
B94			
B95			
Y110	Solenoid coil	3.8 A	
Y111		3.2 Ω	
Y112			
Y113			
Y114			
Y115			
Y116			
Y117			
Y118			

Description of function: 1/5

Axle control system and front attachment control system

The system identifies the machine position using the inclination sensors B126-1 / B126-2 which transmit their values to the Montana module (A35) via an internal CAN bus. The solenoid coils (Y114, Y115, Y116, Y117) are actuated by the Montana module (A35) so that the machine is always in a vertical position by means of front axle movements. If the control system speed is not sufficient, the Montana module (A35) additionally actuates an oil quantity increase solenoid coil (Y118) in connection with the working hydraulics master valve (Y77) via the gearshift control module (A36) – circuit diagram 4.

The position of the front attachment is adapted by rotating the front attachment frame (Y112, Y113) and by changing the cutting angle (Y110, Y111). This front attachment control system works independently of the AUTOCONTOUR system.
The Montana module (A35) receives the necessary feedback about the current position of the corresponding function from the respective angle sensors (B91, B92, B93, B94, B95).

Important! All system calibrations using the Montana terminal (A41) require that the Montana control unit module A35 receives the signal from the unactuated parking brake (S93) – circuit diagram 42.

Axle control system diagnosis via Montana terminal A41

Call up the diagnosis menu with the menu key, the yellow cutting angle increase / decrease keys and the Enter key.

- Diagnosis inputs

Select the inputs section using the yellow keys and the Enter key.

Diag. Inclino.	2/2
Angle X:	0.9 Deg
Cal. X:	-1.6 Deg
Angle Y:	1.1 Deg
Cal. Y:	-2.9 Deg

Description of function: 2/5

Go to page 1/6 inputs using the yellow keys and the Enter key.
The parking brake symbol allows checking the function of parking brake switch S93 (symbol) – closed / open.

Diagnose
Inputs
Inclinometer
Outputs
System

Go to page 2/6 inputs using the yellow keys and the Enter key.
The sensor value B91 is displayed.

Diagnose
Inputs
Inclinometer
Outputs
System

Go to page 3/6 inputs using the yellow keys and the Enter key.
The sensor value B92 is displayed.

Diag. System	1/1
Supply 1:	4.89 V
Supply 2:	12.5 V

Go to page 4/6 inputs using the yellow keys and the Enter key.
The sensor value B93 is displayed.

Diag. Inputs	4/6
Cutting angle	
Sensor:	3.47 V
Cal.min.:	2.64 V
Cal.max.:	3.80 V
Position:	71.8%

Description of function: 3/5

Go to page 5/6 inputs using the yellow keys and the Enter key.
The sensor value B94 is displayed.

Diag. Inputs	5/6
Cross inclinat.	
Sensor:	1.57 V
Cal.min.:	1.18 V
Cal.max.:	2.53 V
Position:	28.7%

Go to page 6/6 inputs using the yellow keys and the Enter key.
The sensor value B95 is displayed.

Note: Sensor B95 is not used by the system.

Diag. Input	6/6
Feeder housing	
Sensor:	2.78 V
Cal.min.:	0.00 V
Cal.max.:	4.86 V
Position:	57.2%

Description of function: 4/5

- Inclinometer diagnosis

Press menu key.
Select the inclinometer section using the yellow keys and the Enter key.

Diagnose
Inputs
Inclinometer
Outputs
System

Go to page 1/2 Inclinometer using the yellow keys and the Enter key.
The values of sensor B126-1 are displayed.

The most recently calibrated values cal. X / cal. Y can be compared with the current actual values of angle X and angle Y.
The sensor value B126-1 can be compared with sensor B126-2 - page 2/2.

Diag. Inclino.	1/2
Angle X:	0.9 Deg
Cal. X:	-1.6 Deg
Angle Y:	1.1 Deg
Cal. Y:	-2.9 Deg

Go to page 2/2 Inclinometer using the yellow keys and the Enter key.
The values of sensor B126-2 are displayed.

The most recently calibrated values cal. X / cal. Y can be compared with the current actual values of angle X and angle Y.
The sensor value B126-2 can be compared with sensor B126-1 - page 1/2.

Diag. Inclino.	2/2
Angle X:	0.9 Deg
Cal. X:	-1.6 Deg
Angle Y:	1.1 Deg
Cal. Y:	-2.9 Deg

Description of function: 5/5

- Output diagnosis

Press menu key.
The outputs section cannot be used for axle control system diagnosis since the diagnosis mode does not allow axle control system operating functions.

Diagnose
Inputs
Inclinometer
Outputs
System

- Power supply diagnosis

Press menu back key. Select the system section using the yellow keys and the Enter key.

Diagnose
Inputs
Inclinometer
Outputs
System

Go to page 1/1 system using the yellow keys and the Enter key. The power supply 2 value displays the current supply voltage of module A35. The power supply 1 value is not used by the system.

Diag. System	1/1
Supply 1:	4.89 V
Supply 2:	12.5 V

Connector pin definition:

Socket A35

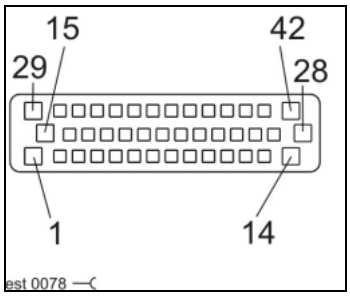

Socket XEa

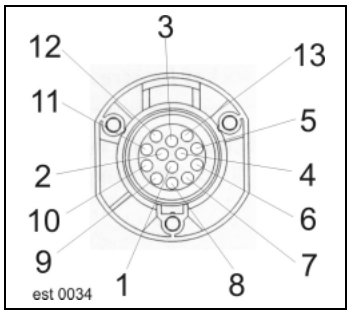

Connector XEa

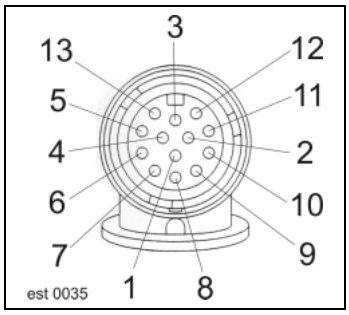

Connector XSA

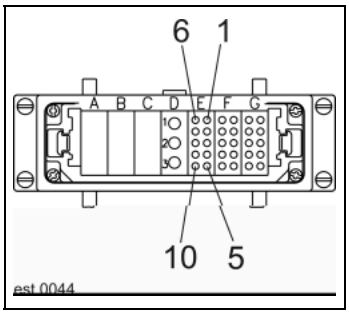

Connector XSD

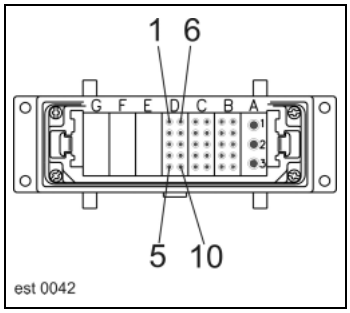

Connector XSD

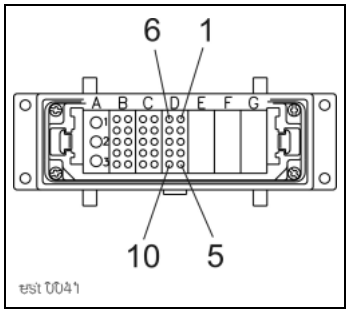

Connector XSA

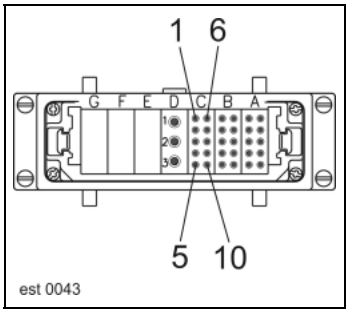

Interconnection list:

from	to 1	to 2	to 3	to 4	to 5	mm²	Colour
XEa-1	XSD-A1					1.5	br
XEa-2						0.75	br-rd
XEa-3						0.75	vi-bl
XEa-4						0.75	gn-vi
XEa-5						0.75	br-bl
XEa-6						0.75	bl-bk
XEa-7						1.5	gr-vi
XEa-8						1.5	gr-ye
XEa-9						1.5	bl-gr
XEa-10						1.5	gr-wh
XSA-A1	XSD-B1					1.5	br
XSA-A2	XSD-B2					1.5	vi-ye
XSA-D2	XSD-A1					4	br
XSA-D3	XSD-A3					4	rd-bk
XSD-A1	XEa-1	XSA-D2				4	br
XSD-A3	XSA-D3					4	rd-bk
XSD-B1	XSA-A1					1.5	bk-rd
XSD-B5						1.5	wh-br
XSD-B6						1.5	wh-pi
XSD-B7						1.5	wh-ye
XSD-B8						1.5	wh-rd
XSD-D1	XSA-B1					1.5	gr-bk

42s

Ground drive and brake control

for Montana machines with module A50 (RIO)

42s - Ground drive and brake control, for Montana machines with module A50 (RIO)

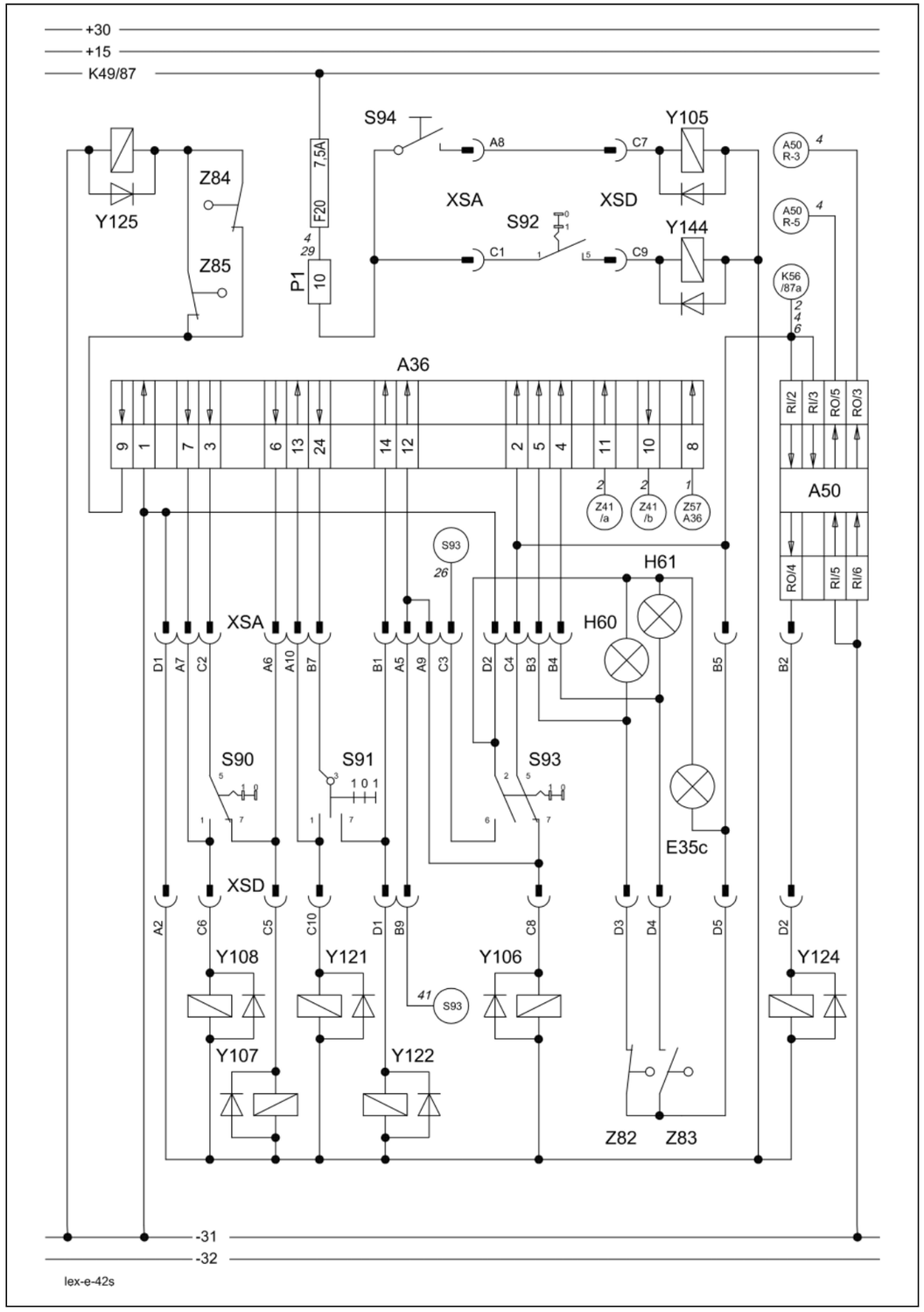

Key to diagram:

		Coordinates
A36	Montana gearshift control module	2-h-20
A50	Montana RIO module	2-h-20
E35	Instrument lighting	3-g-17
H60	1st gear signal light	3-g-17
H61	2nd gear signal light	3-g-17
S90	Gearshift control switch	3-g-17
S91	Shifting aid switch	3-g-17
S92	Hydraulic motor fast/slow switch	3-g-17
S93	Parking brake switch	3-g-17
S94	Differential lock switch	5-f-19
XSA	Montana operator's platform connector	5-h-17
XSD	Montana operator's platform connector	5-h-17
Y105	Differential lock solenoid coil	7-h-18
Y106	Parking brake solenoid coil	7-h-18
Y107	Gearbox shift 1st gear solenoid coil	7-h-18
Y108	Gearbox shift 2nd gear solenoid coil	7-h-18
Y121	Uphill shifting aid solenoid coil	7-h-18
Y122	Downhill shifting aid solenoid coil	7-h-18
Y124	Ground drive brake restrictor solenoid coil	7-h-18
Y125	Ground drive control pressure solenoid coil	3-q-19
Y144	Hydraulic motor solenoid coil	7-h-18
Z82	1st gear switch (actual value)	8-g-19
Z83	2nd gear switch (actual value)	8-g-19
Z84	Service brake left pedal switch	5-f-20
Z85	Service brake right pedal switch	5-f-20

Measured value table:

Item	Component	Measured value	Remark
Y121 Y122 Y124 Y144	Solenoid coil	3.8 A 3.2 Ω	See lettering
Y105 Y106 Y107 Y108 Y125	Solenoid coil	0.75 A 16 Ω	See lettering

Description of function: 1/2

Gearshift control	Both the gearshift control switch (S90) and the shifting aid switch (S91) are supplied with power only if the signal of the ground speed control lever in neutral position (Z57) and of the actuated parking brake (Z84/Z85) is applied to the gearshift control module (A36). When the shifting aid (S91) is actuated, the Montana master valve (Y128) is actuated via the gearshift control module (A36) – circuit diagram 04s/04t). In addition, the corresponding solenoid coil (Y121, Y122) loads the respective high-pressure circuit in the ground drive, making the hydraulic motor rotate slightly. This allows shifting the 1st gear (Y107) or the 2nd gear (Y108) easily by hydraulic means. The gearbox switches (Z82, Z83) allow indicating the engaged gear in the operating panel (H60, H61) and this gear is kept in position (Y107, Y108) by the feedback to the gearshift control module (A36) even when the parking brake is released. Via the gearshift control module (A36), the gearbox switch 2nd gear (Z83) also cuts the connection with the diesel engine speed adjustment (Z41) so that the road travel speed is automatically set. If none of the mechanical gears (Z82, Z 83) is engaged, no control oil pressure for the ground drive is built up since the gearshift control module (A36) does not actuate the solenoid coil (Y125).
Diesel engine speed adjustment - circuit diagram 2s	The diesel engine speed depends on the position of switch S35 and of the 2nd gear actual value switch (Z83). If full throttle speed is selected and the 2nd gear engaged (signal input A36 / pin 4), the connection between Z41a and Z41b inside the Montana gearshift control module (A36) is cut (pins 10 and 11). The full throttle speed is reduced to road travel speed, depending on the country version.
Parking brake	The parking brake (S93) is applied when solenoid coil (Y106) is not actuated. Besides the warning signals for insufficient brake oil pressure, the applied parking brake (S93) is also displayed in the terminal. If the parking brake (S93) is applied, no control oil pressure for the ground drive is built up since the gearshift control module (A36) does not actuate the solenoid coil (Y125).

Description of function: 2/2

Service brake	When activating the left (Z84) and the right (Z85) service brake, the control oil pressure in the ground drive will also collapse at the solenoid coil (Y125) and the variable-displacement pump will swing back to zero delivery, independent of the ground drive control lever position.
Hydrostatic brake valve system	When the diesel engine speed exceeds the allowed maximum of 2230 rpm (e.g. downhill travel), the RIO Montana module (A50) also receives this information from the fieldwork computer module via the CAN bus. Now the RIO module (A50) actuates the working hydraulics master valve (Y77) via A50/pin R5 and the axle hydraulics master valve (Y128) via A50/pin R3 – circuit diagram 4s. This hydraulic load on the diesel engine increases the braking effect. When the diesel engine speed exceeds 2300 rpm, the brake restrictor (Y124) is additionally actuated in order to restrict the high-pressure circuit in the ground drive. When the speed now drops below 2210 rpm, the brake restrictor (Y124) is deactivated.
Swing angle of hydraulic motor and differential lock.	The hydraulic drive ranges resulting from the changed swivel angle in the hydraulic motor (S92, Y144) and the differential lock inside the axle (S94, Y105) are set manually without any influence from the gearshift control module (A36).

Connector pin definition:

Socket XEa

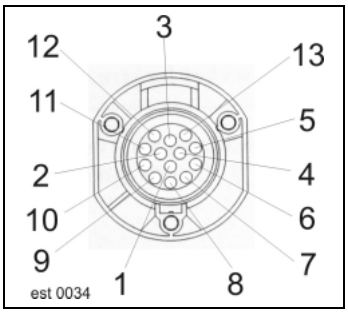

Connector XEa

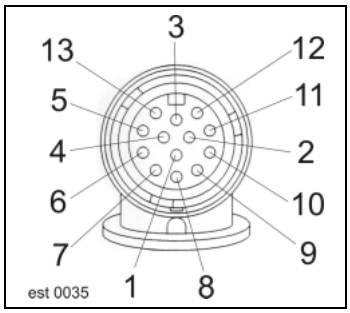

Connector XSA

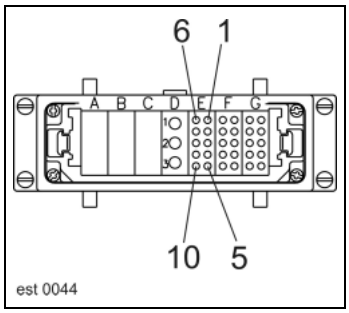

Connector XSD

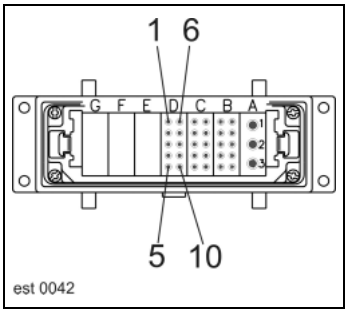

Connector XSD

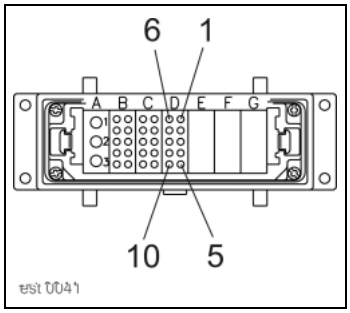

Connector XSA

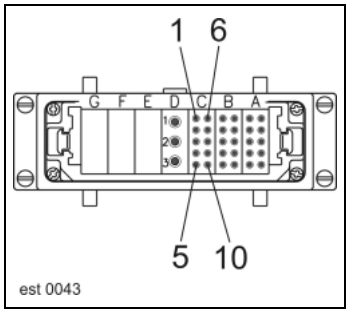

Connector P, P1

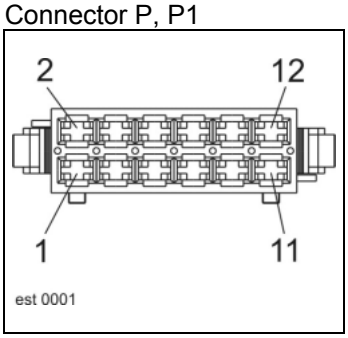

Interconnection list:

from	to 1	to 2	to 3	to 4	to 5	mm²	Colour
P1-10	P-10					1.5	gn-rd
P-10	F20-A					1.5	gn-rd
XSA-A5	XSD-B9					1.5	bk-br
XSA-A6	XSD-C5					1.5	rd-bl
XSA-A7	XSD-C6					1.5	bk-rd
XSA-A8	XSD-C7					1.5	gn-bl
XSA-A9	XSD-C8					1.5	bk-br
XSA-A10	XSD-C10					1.5	ye-rd
XSA-B1	XSD-D1					1.5	gr-bk
XSA-B2	XSD-D2					1.5	gr-gn
XSA-B3	XSD-D3					1.5	bk-bl
XSA-B4	XSD-D4					1.5	bk-ye
XSA-B5	XSD-D5					1.5	bk
XSA-B7						1.5	
XSA-C1						1.5	gn-rd
XSA-C2						1.5	bk-vi
XSA-C3						1.5	br-wh
XSA-C4						1.5	bk
XSA-D1	XSD-A2					4	br
XSA-D2	XSD-A1					4	br
XSD-A2	XSA-D1					4	br
XSD-B9	XSA-A5					1.5	bk-br
XSD-C5	XSA-A6					1.5	rd-bl
XSD-C6	XSA-A7					1.5	bk-rd
XSD-C7	XSA-A8					1.5	gn-bl
XSD-C8	XSA-A9					1.5	bk-br
XSD-C9						1.5	gn-ye
XSD-C10	XSA-A10					1.5	gr-rd
XSD-D1	XSA-B1					1.5	gr-bk
XSD-D2	XSA-B2					1.5	gr-gn
XSD-D3	XSA-B3					1.5	bk-bl
XSD-D4	XSA-B4					1.5	bk-ye
XSD-D5	XSA-B5					1.5	bk

42t

Ground drive and brake control

for Montana machines with module A45 (HBM)

42t - Ground drive and brake control, for Montana machines with module A45 (HBM)

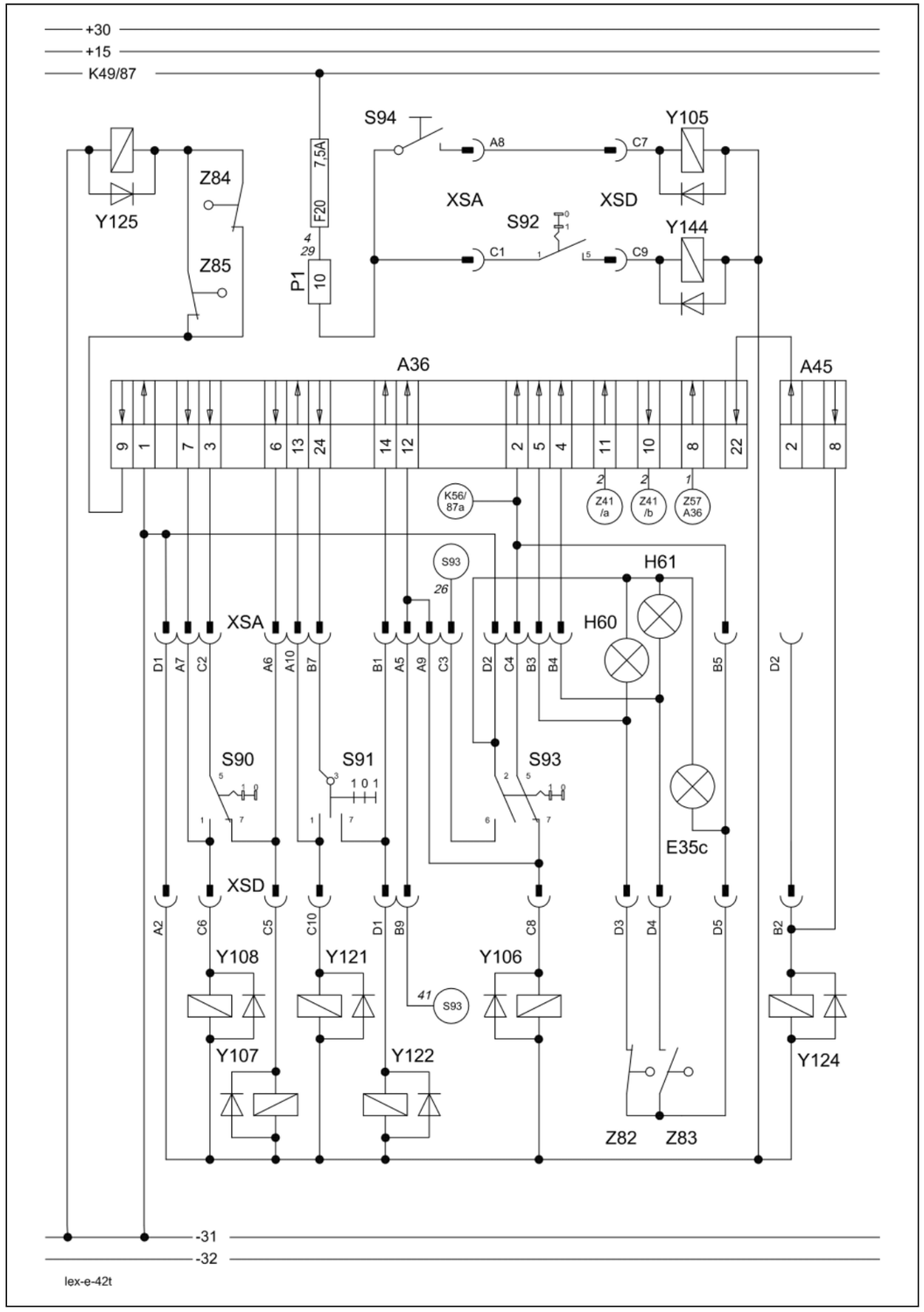

Key to diagram:

		Coordinates
A36	Montana gearshift control module	2-h-20
A45	Ground drive hydraulic motor brake restrictor module (HBM)	2-h-20
E35	Instrument lighting	3-g-17
H60	1st gear signal light	3-g-17
H61	2nd gear signal light	3-g-17
S90	Gearshift control switch	3-g-17
S91	Shifting aid switch	3-g-17
S92	Hydraulic motor fast/slow switch	3-g-17
S93	Parking brake switch	3-g-17
S94	Differential lock switch	5-f-19
XEa	Montana feed rake conveyor connector	5-g-17
XSA	Montana operator's platform connector	5-h-17
XSD	Montana operator's platform connector	5-h-17
Y105	Differential lock solenoid coil	7-h-18
Y106	Parking brake solenoid coil	7-h-18
Y107	Gearbox shift 1st gear solenoid coil	7-h-18
Y108	Gearbox shift 2nd gear solenoid coil	7-h-18
Y121	Uphill shifting aid solenoid coil	7-h-18
Y122	Downhill shifting aid solenoid coil	7-h-18
Y124	Ground drive brake restrictor solenoid coil	7-h-18
Y125	Ground drive control pressure solenoid coil	3-q-19
Y144	Hydraulic motor solenoid coil	7-h-18
Z82	1st gear switch (actual value)	8-g-19
Z83	2nd gear switch (actual value)	8-g-19
Z84	Service brake left pedal switch	5-f-20
Z85	Service brake right pedal switch	5-f-20

Measured value table:

Item	Component	Measured value	Remark
Y121 Y122 Y124 Y144	Solenoid coil	3.8 A 3.2 Ω	See lettering
Y105 Y106 Y107 Y108 Y125	Solenoid coil	0.75 A 16 Ω	See lettering

Description of function: 1/2

Gearshift control	Both the gearshift control switch (S90) and the shifting aid switch (S91) are supplied with power only if the signal of the ground speed control lever in neutral position (Z57) and of the applied parking brake (Z84/Z85) is applied to the gearshift control module (A36). When the shifting aid (S91) is actuated, the Montana master valve (Y128) is actuated via the gearshift control module (A36) – circuit diagram 04s/04t. In addition, the corresponding solenoid coil (Y121, Y122) loads the respective high-pressure circuit in the ground drive, making the hydraulic motor rotate slightly. This allows shifting the 1st gear (Y107) or the 2nd gear (Y108) easily by hydraulic means. The gearbox switches (Z82, Z83) allow indicating the engaged gear in the operating panel (H60, H61) and this gear is kept in position (Y107, Y108) by the feedback to the gearshift control module (A36) even when the parking brake is released. Via the gearshift control module (A36), the gearbox switch 2nd gear (Z83) also cuts the connection with the diesel engine speed adjustment (Z41) so that the road travel speed is automatically set. If none of the mechanical gears (Z82, Z 83) is engaged, no control oil pressure for the ground drive is built up since the gearshift control module (A36) does not actuate the solenoid coil (Y125).
Diesel engine speed adjustment – circuit diagram 2s	The diesel engine speed depends on the position of switch S35 and of the 2nd gear actual value switch (Z83). If full throttle speed is selected and the 2nd gear engaged (signal input A36 / pin 4), the connection between Z41a and Z41b inside the Montana gearshift control module (A36) is cut (pins 10 and 11). The full throttle speed is reduced to road travel speed, depending on the country version.
Parking brake	The parking brake (S93) is being actuated when solenoid coil (Y106) is not actuated. Besides the warning signals for insufficient brake oil pressure, the applied parking brake (S93) is also displayed in the terminal. If the parking brake (S93) is applied, no control oil pressure for the ground drive is built up since the gearshift control module (A36) does not actuate the solenoid coil (Y125).

Description of function: 2/2

Service brake	When activating the left (Z84) and the right (Z85) service brake, the control oil pressure in the ground drive will also collapse at the solenoid coil (Y125) and the variable-displacement pump will swing back to zero delivery, independent of the ground drive control lever position.
Hydrostatic brake valve system	When the diesel engine speed exceeds the allowed maximum of 2230 rpm (e.g. downhill travel), the ground drive hydraulic motor (HBM) brake restrictor module A45 also receives this information from the fieldwork computer module via the CAN bus. Now the ground drive hydraulic motor brake restrictor module (HBM) A45 actuates the working hydraulics master valve (Y77) in order to put a greater load on the drive (A45/pin2 → A36/pin22 → A36/pin16 → Y77) – circuit diagram 4t. When the diesel engine speed exceeds 2300 rpm, the brake restrictor (Y124) is additionally actuated in order to restrict the high-pressure circuit in the ground drive. When the speed now drops below 2210 rpm, the brake restrictor (Y124) is deactivated.
Swing angle of hydraulic motor and differential lock.	The hydraulic drive ranges resulting from the changed swivel angle in the hydraulic motor (S92, Y144) and the differential lock inside the axle (S94, Y105) are set manually without any influence from the gearshift control module (A36).

Connector pin definition:

Socket XEa

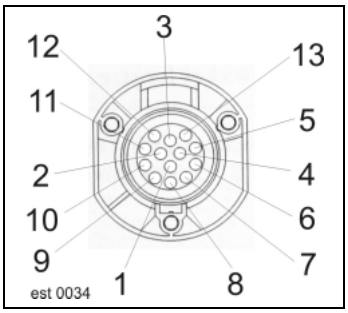

Connector XEa

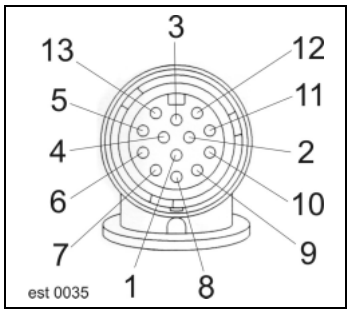

Connector XSA

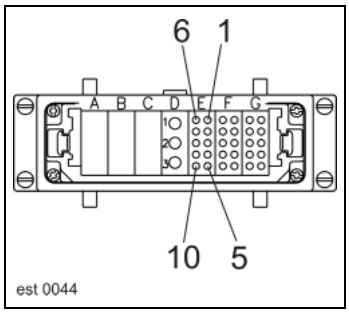

Connector XSD

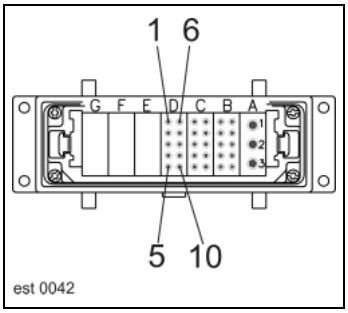

Connector XSD

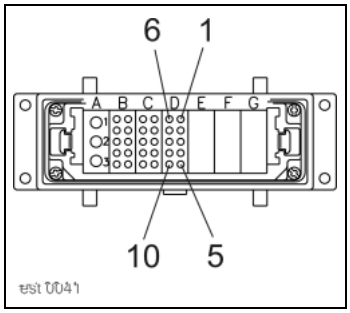

Connector XSA

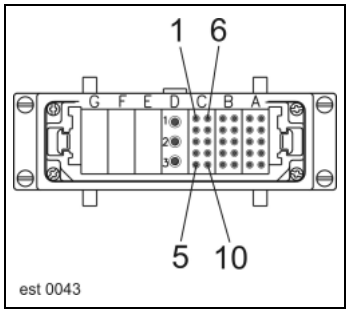

Connector P, P1

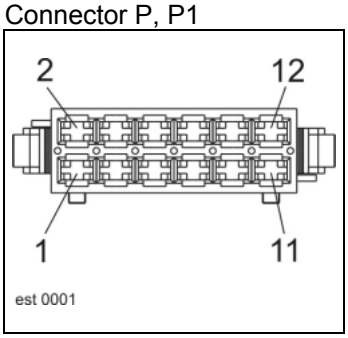

Interconnection list:

from	to 1	to 2	to 3	to 4	to 5	mm²	Colour
P1-10	P-10					1.5	gn-rd
P-10	F20-A					1.5	gn-rd
XSA-A5	XSD-B9					1.5	bk-br
XSA-A6	XSD-C5					1.5	rd-bl
XSA-A7	XSD-C6					1.5	bk-rd
XSA-A8	XSD-C7					1.5	gn-bl
XSA-A9	XSD-C8					1.5	bk-br
XSA-A10	XSD-C10					1.5	ye-rd
XSA-B1	XSD-D1					1.5	gr-bk
XSA-B2	XSD-D2					1.5	gr-gn
XSA-B3	XSD-D3					1.5	bk-bl
XSA-B4	XSD-D4					1.5	bk-ye
XSA-B5	XSD-D5					1.5	bk
XSA-B7						1.5	
XSA-C1						1.5	gn-rd
XSA-C2						1.5	bk-vi
XSA-C3						1.5	br-wh
XSA-C4						1.5	bk
XSA-D1	XSD-A2					4	br
XSA-D2	XSD-A1					4	br
XSD-A2	XSA-D1					4	br
XSD-B9	XSA-A5					1.5	bk-br
XSD-C5	XSA-A6					1.5	rd-bl
XSD-C6	XSA-A7					1.5	bk-rd
XSD-C7	XSA-A8					1.5	gn-bl
XSD-C8	XSA-A9					1.5	bk-br
XSD-C9						1.5	gn-ye
XSD-C10	XSA-A10					1.5	gr-rd
XSD-D1	XSA-B1					1.5	gr-bk
XSD-D2	XSA-B2					1.5	gr-gn
XSD-D3	XSA-B3					1.5	bk-bl
XSD-D4	XSA-B4					1.5	bk-ye
XSD-D5	XSA-B5					1.5	bk

Index

Index:

A	Axle control system	41s-2, 41t-2
	Axle control system control unit	ZE-s-9, ZE-s-10
	Axle control system module	ZE-s-9, ZE-s-10
B	Brake	42s-2, 42t-2
C	CAN bus	06s-2, 06t-2
	Central terminal compartment	ZE-s-2, ZE-s-4
	Cross levelling	20s-2
D	Diesel engine speed adjustment	02s-2
	Diesel engine starting motor	01s-2
F	Front attachment control system	41s-2, 41t-2
	Front attachment drive	17s-2
G	Gearshift control module	ZE-s-11
	Gearshift control unit	ZE-s-11
	Ground drive	42s-2, 42t-2
	Ground drive hydraulic motor brake restrictor (HBM) control unit	ZE-s-12
	Ground drive hydraulic motor brake restrictor module (HBM)	ZE-s-12
H	HBM	ZE-s-4
K	Keyboard	05s-2, 05t-2
M	Machine monitoring	26s-2
	Main power supply	01s-2
P	Power supply of modules	06s-2, 06t-2
R	Raise / lower front attachment	20s-2
	Reverser drive	17s-2
	RIO module	ZE-s-12
	RIO module	ZE-s-2
	Road travel release	04s-2, 04t-2
	Rotary control switch	05s-2, 05t-2
S	Starting the diesel engine	02s-2
T	Terminal	05s-2, 05t-2
W	Working hydraulics master valve	04s-2, 04t-2

Hydraulic System

1 Overall Hydraulic System Circuit Diagram 1-1

1.1 Overall hydraulic system circuit diagram
LEXION MONTANA 470 up to serial no. 541 00023
LEXION MONTANA 430 up to serial no. 542 00047 1-4

1.2 Overall hydraulic system circuit diagram
LEXION MONTANA 470 from serial no. 541 00024
LEXION MONTANA 430 from serial no. 542 00048 1-8

2 Working Hydraulics 2-1

2.1 Montana working hydraulics circuit diagram
LEXION MONTANA 470 up to serial no. 541 00023
LEXION MONTANA 430 up to serial no. 542 00047 2-4

2.2 Montana working hydraulics circuit diagram
LEXION MONTANA 470 from serial no. 541 00024
LEXION MONTANA 430 from serial no. 542 00048 2-8

2.3 AUTO-CONTOUR (CAC) – Front attachment cross levelling
4/3 way solenoid valve with accumulator and lock-up valve unit 2-10
Hydraulic cylinder with ram guide 2-14

2.4 Reverse front attachment
3/2 way solenoid valve 2-18
Hydraulic cylinders 2-20

2.5 Cutting frame adjustment
4/3 way solenoid valve 2-22
Hydraulic cylinders 2-24

2.6 Cutting angle adjustment
4/3 way solenoid valve 2-26
Hydraulic cylinders 2-28

2.7 Service brake (filling the brake accumulator) 2-30
Brake cylinders 2-32

3 Axle Hydraulics 3-1

3.1 Axle hydraulics circuit diagram
LEXION MONTANA 470 up to serial no. 541 00023
LEXION MONTANA 430 up to serial no. 542 00047 3-4

3.2 Axle hydraulics circuit diagram
LEXION MONTANA 470 from serial no. 541 00024
LEXION MONTANA 430 from serial no. 542 00048 3-8

3.3 Axle control system master valve / pressure relief valve 3-10

3.4 Ground drive hydraulic motor brake restrictor (HBM) control
Only LEXION 470 up to serial no. 541 00023
Only LEXION 430 up to serial no. 542 00047 3-12

3.5 Axle control system – Raise / lower axle, oil quantity increase
4/3 way valve, 2/2 way valve, flow control valve 3-14
Hydraulic cylinder with integrated lower brake valve 3-16

3.6 Shifting aid
4/3-way valve 3-18

3.7 Position of components / Axle control system
LEXION 470 up to serial no. 541 00023
LEXION 430 up to serial no. 542 00047 3-20

3.8 Position of components / Axle control system
LEXION 470 from serial no. 541 00024
LEXION 430 from serial no. 542 00048 3-22

4 Low-pressure Hydraulic System 4-1

4.1 Low-pressure hydraulic system circuit diagram 4-4

4.2 Low-pressure hydraulic system solenoid valves
3/2 way differential lock valve, parking brake, gearshift 1st and 2nd gear 4-6

4.3 Hydraulic cylinder of low-pressure hydraulic system
Differential lock 4-8
Parking brake 4-10
Gearshift 1st and 2nd gear 4-12

4.4 Position of low-pressure hydraulic system components Gearbox 4-14

5 Ground drive hydraulics 5-1

5.1 Montana ground drive hydraulics circuit diagram
LEXION MONTANA 470 up to serial no. 541 00023
LEXION MONTANA 430 up to serial no. 542 00047 5-4

5.2 Montana ground drive hydraulics circuit diagram
LEXION MONTANA 470 from serial no. 541 00024
LEXION MONTANA 430 from serial no. 542 00048 5-6

5.3 Ground drive control pressure
2/2 way solenoid valve 5-8

5.4 Motor unit Variable-displacement motor 5-10

5.5 Brake restrictor 5-12

Index Index-1

1

Overall Hydraulic System Circuit Diagram

1.1 Overall hydraulic system circuit diagram
LEXION MONTANA 470 up to serial no. 541 00023
LEXION MONTANA 430 up to serial no. 542 00047 ..... **1-4**

1.2 Overall hydraulic system circuit diagram
LEXION MONTANA 470 from serial no. 541 00024
LEXION MONTANA 430 from serial no. 542 00048 ..... **1-8**

1.1

Montana overall hydraulic system circuit diagram

- LEXION 470 up to serial no. 541 00023

- LEXION 430 up to serial no. 542 00047

1.1 Overall hydraulic system circuit diagram
LEXION MONTANA 470 up to serial no. 541 00023 / LEXION MONTANA 430 up to serial no. 542 00047

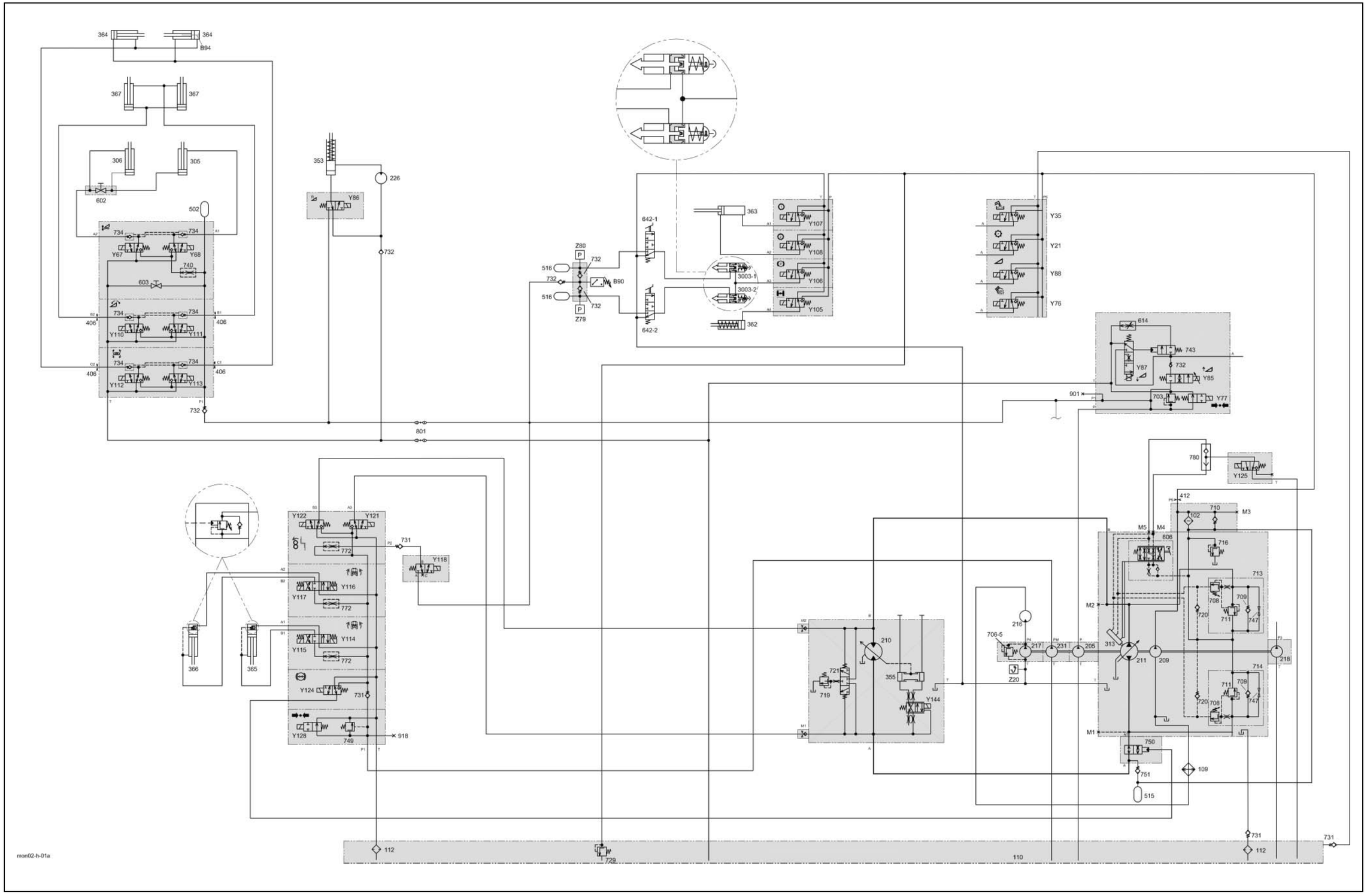

Key to diagram:

102	Pressure filter
109	Hydraulic system oil cooler
110	Oil tank
112	Return filter
205	Working hydraulics pump
209	Ground drive feed pump
210	Ground drive variable displacement motor
211	Ground drive variable-displacement pump
216	Rotary chaff screen drive motor
217	Rotary chaff screen drive pump
218	Steering hydraulics pump
226	Front attachment reverser drive motor
231	Montana axle control system pump
305	AUTOCONTOUR cross levelling right hydraulic cylinder
306	AUTOCONTOUR cross levelling left hydraulic cylinder
313	Ground drive pump servo control hydraulic cylinder
365	Raise/lower axle, left hydraulic cylinder
366	Raise/lower axle, right hydraulic cylinder
353	Reverse front attachment hydraulic cylinder
355	Ground drive motor servo control hydraulic cylinder
362	Differential lock hydraulic cylinder
363	Gearbox shifting hydraulic cylinder
364	Rotate front attachment frame hydraulic cylinder
367	Cutting angle adjustment hydraulic cylinder
3003-1	Service brake / Parking brake right hydraulic cylinder
3003-2	Service brake / Parking brake left hydraulic cylinder
406	Orifice plate F .....0.8 mm
412	Orifice plate M .....2.0 mm
502	AUTOCONTOUR / Cross levelling accumulator 0.75 l / 80 bar
515	Accumulator 0.75 l / 16bar
516	Service brake accumulator 0.75 l / 80 bar
602	AUTOCONTOUR / Cross levelling shut-off valve
603	AUTOCONTOUR / Cross levelling balance screw
606	Ground drive servo control
614	Front attachment lower flow control valve
642-1	Service brake valve, right
642-2	Service brake valve, left
703	Working hydraulics pressure relief valve .....180^{4} bar
706-5	Rotary chaff screen pressure relief valve 150 bar
708	Ground drive pressure cut-off valve
709	Ground drive feed valve
710	Ground drive filter bypass valve
711	Ground drive high-pressure relief valve
713	Ground drive multi-function valve, reverse
714	Ground drive multi-function valve, forward
716	Ground drive feed pressure relief valve
719	Ground drive purge pressure control valve
720	Ground drive control pressure relief valve
721	Ground drive flush-out shuttle valve
729	Low-pressure hydraulic system pressure relief valve .....19^{+4} bar
731	Return line valve (non-return valve)
732	Non-return valve
734	Lock-up valve unit (non-return valve)
740	AUTOCONTOUR cross levelling flow control valve
743	Lower front attachment hydraulic valve
749	Montana pressure relief valve.....180 bar
750	Brake restrictor valve

Key to diagram:

751	External feed valve (non-return valve)
772	Volume flow controller
780	Shuttle valve
801	Quick release coupling
901	Working hydraulics measuring point
918	Axle hydraulics measuring point
B90	Brake circuit charge pressure sensor
B94	Montana cutterbar cross levelling sensor
M1	Ground drive hydraulics high pressure forward measuring point
M2	Ground drive hydraulics high pressure backward measuring point
Y21	Threshing mechanism clutch engage solenoid valve
Y35	Grain tank unloading solenoid valve
Y67	AUTOCONTOUR cross levelling left solenoid valve
Y68	AUTOCONTOUR cross levelling right solenoid valve
Y76	Straw chopper coupling solenoid valve
Y77	Working hydraulics master valve solenoid valve
Y85	Raise front attachment solenoid valve
Y86	Reverse front attachment solenoid valve
Y87	Lower front attachment solenoid valve
Y88	Front attachment clutch solenoid valve
Y105	Differential lock solenoid valve
Y106	Parking brake solenoid valve
Y107	Gearbox shift 1st gear solenoid valve
Y108	Gearbox shift 2nd gear solenoid valve
Y110	Raise cutting angle solenoid valve
Y111	Lower cutting angle solenoid valve
Y112	Rotate front attachment to the right solenoid valve
Y113	Rotate front attachment to the left solenoid valve
Y114	Lower axle on left-hand side solenoid valve
Y115	Raise axle on right-hand side solenoid valve
Y116	Lower axle on right-hand side solenoid valve
Y117	Raise axle on right-hand side solenoid valve
Y118	Additional oil quantity increase valve solenoid valve
Y121	Shifting aid, reverse solenoid valve
Y122	Shifting aid, forward solenoid valve
Y124	Ground drive hydraulic motor brake restrictor (HBM) solenoid valve
Y125	Ground drive control pressure solenoid valve
Y128	Montana master valve solenoid valve
Y144	Ground drive variable displacement motor solenoid valve
Z20	Hydraulic oil temperature actual value switch
Z79	Left brake circuit pressure actual value switch
Z80	Right brake circuit pressure actual value switch

Note: As compared with the standard machine, the pressure cut-off valves (708) of the Montana machines are set to 470 bar.

1.2

Montana overall hydraulic system circuit diagram

- LEXION 470 from serial no. 541 00024

- LEXION 430 from serial no. 542 00048

1.2 Overall hydraulic system circuit diagram
LEXION MONTANA 470 from serial no. 541 00024 / LEXION MONTANA 430 from serial no. 542 00048

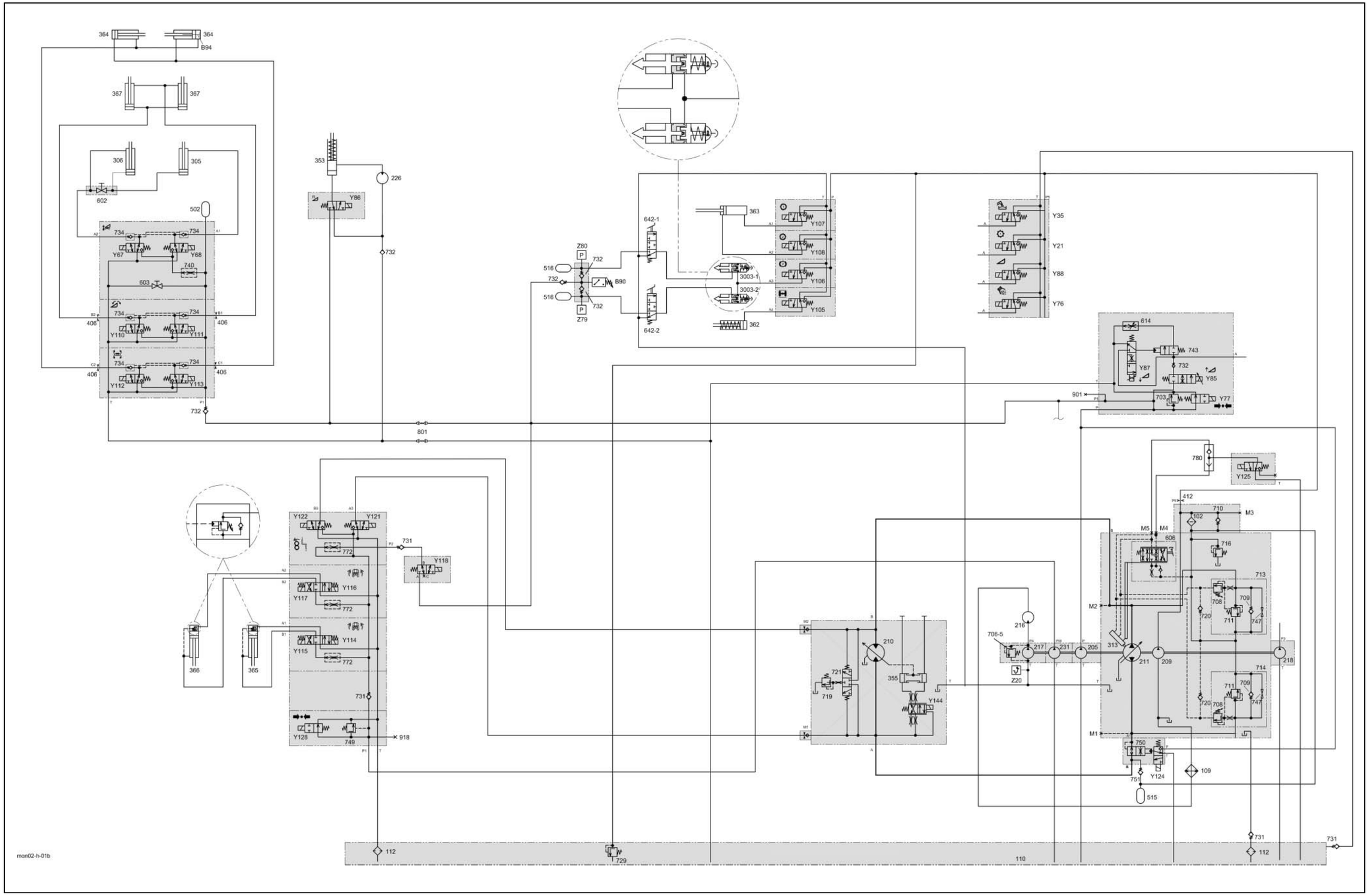

Key to diagram:

102	Pressure filter
109	Hydraulic system oil cooler
110	Oil tank
112	Return filter
205	Working hydraulics pump
209	Ground drive feed pump
210	Ground drive variable displacement motor
211	Ground drive variable-displacement pump
216	Rotary chaff screen drive motor
217	Rotary chaff screen drive pump
218	Steering hydraulics pump
226	Front attachment reverser drive motor
231	Montana axle control system pump
305	AUTOCONTOUR cross levelling right hydraulic cylinder
306	AUTOCONTOUR cross levelling left hydraulic cylinder
313	Ground drive pump servo control hydraulic cylinder
365	Raise/lower axle, left hydraulic cylinder
366	Raise/lower axle, right hydraulic cylinder
353	Reverse front attachment hydraulic cylinder
355	Ground drive motor servo control hydraulic cylinder
362	Differential lock hydraulic cylinder
363	Gearbox shifting hydraulic cylinder
364	Rotate front attachment frame hydraulic cylinder
367	Cutting angle adjustment hydraulic cylinder
3003-1	Service brake / Parking brake right hydraulic cylinder
3003-2	Service brake / Parking brake left hydraulic cylinder
406	Orifice plate F .....0.8 mm
412	Orifice plate M .....2.0 mm
502	AUTOCONTOUR / Cross levelling accumulator 0.75 l / 80 bar
515	Accumulator 0.75 l / 16bar
516	Service brake accumulator 0.75 l / 80 bar
602	AUTOCONTOUR / Cross levelling shut-off valve
603	AUTOCONTOUR / Cross levelling balance screw
606	Ground drive servo control
614	Front attachment lower flow control valve
642-1	Service brake valve, right
642-2	Service brake valve, left
703	Working hydraulics pressure relief valve .....180 bar
706-5	Rotary chaff screen pressure relief valve 150 bar
708	Ground drive pressure cut-off valve
709	Ground drive feed valve
710	Ground drive filter bypass valve
711	Ground drive high-pressure relief valve
713	Ground drive multi-function valve, reverse
714	Ground drive multi-function valve, forward
716	Ground drive feed pressure relief valve
719	Ground drive purge pressure control valve
720	Ground drive control pressure relief valve
721	Ground drive flush-out shuttle valve
729	Low-pressure hydraulic system pressure relief valve .....19^{+4} bar
731	Return line valve (non-return valve)
732	Non-return valve
734	Lock-up valve unit (non-return valve)
740	AUTOCONTOUR cross levelling flow control valve
743	Lower front attachment hydraulic valve
749	Montana pressure relief valve.....180 bar
750	Brake restrictor valve

Key to diagram:

751	External feed valve (non-return valve)
772	Volume flow controller
780	Shuttle valve
801	Quick release coupling
901	Working hydraulics measuring point
918	Axle hydraulics measuring point
B90	Brake circuit charge pressure sensor
B94	Montana cutterbar cross levelling sensor
M1	Ground drive hydraulics high pressure forward measuring point
M2	Ground drive hydraulics high pressure backward measuring point
Y21	Threshing mechanism clutch engage solenoid valve
Y35	Grain tank unloading solenoid valve
Y67	AUTOCONTOUR cross levelling left solenoid valve
Y68	AUTOCONTOUR cross levelling right solenoid valve
Y76	Straw chopper coupling solenoid valve
Y77	Working hydraulics master valve solenoid valve
Y85	Raise front attachment solenoid valve
Y86	Reverse front attachment solenoid valve
Y87	Lower front attachment solenoid valve
Y88	Front attachment clutch solenoid valve
Y105	Differential lock solenoid valve
Y106	Parking brake solenoid valve
Y107	Gearbox shift 1st gear solenoid valve
Y108	Gearbox shift 2nd gear solenoid valve
Y110	Raise cutting angle solenoid valve
Y111	Lower cutting angle solenoid valve
Y112	Rotate front attachment to the right solenoid valve
Y113	Rotate front attachment to the left solenoid valve
Y114	Lower axle on left-hand side solenoid valve
Y115	Raise axle on right-hand side solenoid valve
Y116	Lower axle on right-hand side solenoid valve
Y117	Raise axle on right-hand side solenoid valve
Y118	Additional oil quantity increase valve solenoid valve
Y121	Shifting aid, reverse solenoid valve
Y122	Shifting aid, forward solenoid valve
Y124	Ground drive hydraulic motor brake restrictor (HBM) solenoid valve
Y125	Ground drive control pressure solenoid valve
Y128	MONTANA master valve solenoid valve
Y144	Ground drive variable displacement motor solenoid valve
Z20	Hydraulic oil temperature actual value switch
Z79	Left brake circuit pressure actual value switch
Z80	Right brake circuit pressure actual value switch

Note: As compared with the standard machine, the pressure cut-off valves (708) of the Montana machines are set to 470 bar.

2

Working Hydraulics

2.1 Montana working hydraulics circuit diagram
LEXION MONTANA 470 up to serial no. 541 00023
LEXION MONTANA 430 up to serial no. 542 00047 ..... **2-4**

2.2 Montana working hydraulics circuit diagram
LEXION MONTANA 470 from serial no. 541 00024
LEXION MONTANA 430 from serial no. 542 00048 ..... **2-8**

2.3 AUTO-CONTOUR (CAC) – Front attachment cross levelling
4/3 way solenoid valve with accumulator and lock-up valve unit **2-10**
Hydraulic cylinder with ram guide 2-14

2.4 Reverse front attachment
3/2 way solenoid valve **2-18**
Hydraulic cylinders 2-20

2.5 Cutting frame adjustment
4/3 way solenoid valve **2-22**
Hydraulic cylinders 2-24

2.6 Cutting angle adjustment
4/3 way solenoid valve **2-26**
Hydraulic cylinders 2-28

2.7 Service brake (filling the brake accumulator) **2-30**
Brake cylinders 2-32

2.1

Montana working hydraulics circuit diagram

- LEXION 470 up to serial no. 541 00023

- LEXION 430 up to serial no. 542 00047

2.1 Montana working hydraulics circuit diagram
LEXION MONTANA 470 up to serial no. 541 00023 / LEXION MONTANA 430 up to serial no. 542 00047

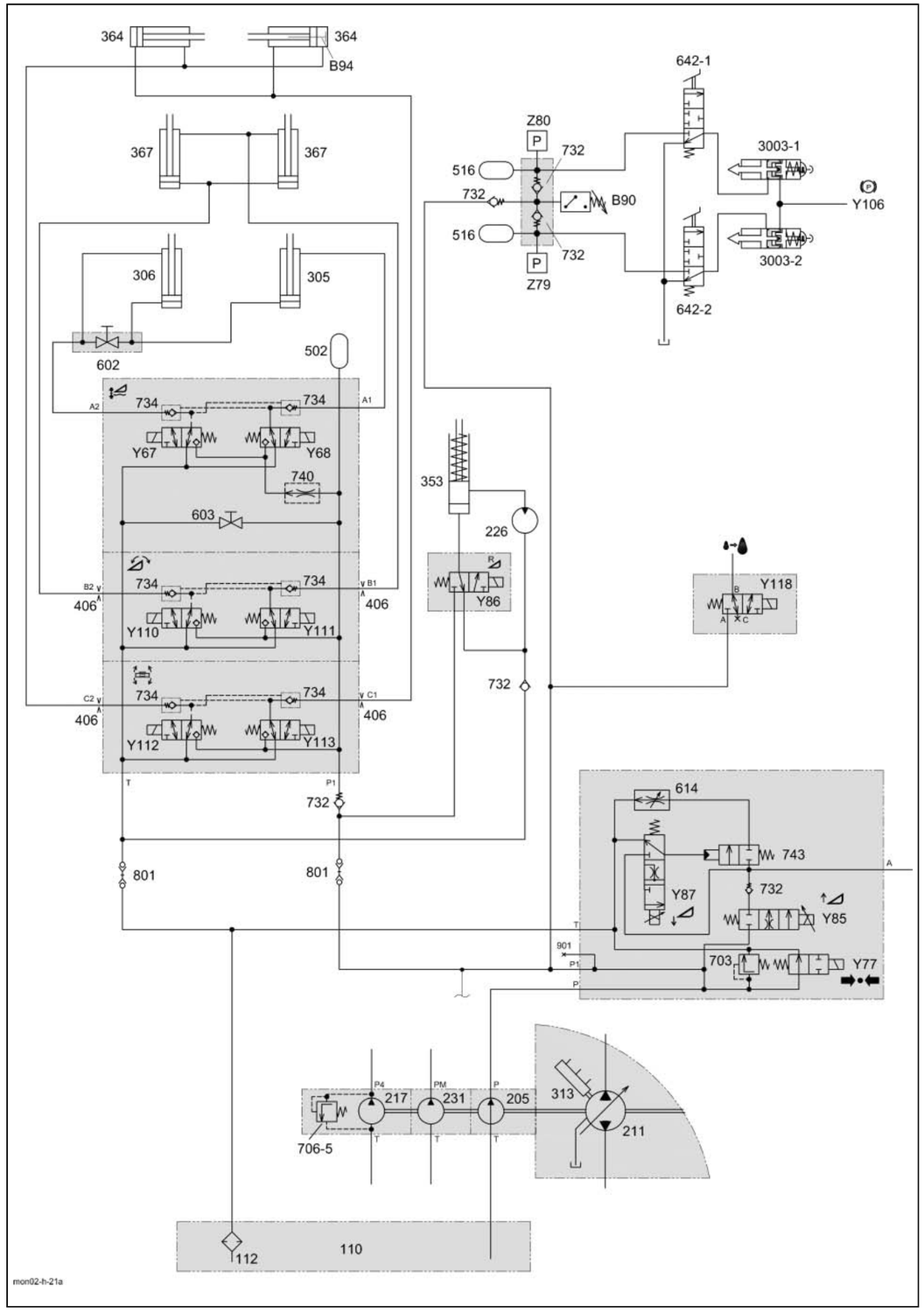

Key to diagram:

110	Oil tank
112	Return filter
205	Working hydraulics pump
211	Ground drive variable-displacement pump
217	Rotary chaff screen drive pump
226	Front attachment reverser drive motor
231	Montana axle control system pump
305	AUTOCONTOUR cross levelling right hydraulic cylinder
306	AUTOCONTOUR cross levelling left hydraulic cylinder
313	Ground drive pump servo control hydraulic cylinder
353	Reverse front attachment hydraulic cylinder
364	Rotate front attachment frame hydraulic cylinder
367	Cutting angle adjustment hydraulic cylinder
3003-1	Service brake / Parking brake right hydraulic cylinder
3003-2	Service brake / Parking brake left hydraulic cylinder
406	Orifice plate F ..... 0.8 mm
502	AUTOCONTOUR / Cross levelling accumulator 0.75 l / 80 bar
516	Service brake accumulator 0.75 l / 80 bar
602	AUTOCONTOUR / Cross levelling shut-off valve
603	AUTOCONTOUR / Cross levelling balance screw
614	Front attachment lower flow control valve
642-1	Service brake valve, right
642-2	Service brake valve, left
703	Working hydraulics pressure relief valve..... 180 bar
706-5	Rotary chaff screen pressure relief valve 150 bar
732	Non-return valve
734	Lock-up valve unit (non-return valve)
740	AUTOCONTOUR cross levelling flow control valve
743	Lower front attachment hydraulic valve
801	Quick release coupling
901	Working hydraulics measuring point

Key to diagram:

B90	Brake circuit charge pressure sensor
B94	Montana cutterbar cross levelling sensor
Y67	AUTOCONTOUR cross levelling left solenoid valve
Y68	AUTOCONTOUR cross levelling right solenoid valve
Y77	Working hydraulics master valve solenoid valve
Y85	Raise front attachment solenoid valve
Y86	Reverse front attachment solenoid valve
Y87	Lower front attachment solenoid valve
Y106	Parking brake solenoid valve
Y110	Raise cutting angle solenoid valve
Y111	Lower cutting angle solenoid valve
Y112	Rotate front attachment to the right solenoid valve
Y113	Rotate front attachment to the left solenoid valve
Y118	Additional oil quantity increase valve solenoid valve
Z79	Left brake circuit pressure actual value switch
Z80	Right brake circuit pressure actual value switch

2.2

Montana working hydraulics circuit diagram

- LEXION 470 from serial no. 541 00024

- LEXION 430 from serial no. 542 00048

2.2 Montana working hydraulics circuit diagram

LEXION MONTANA 470 from serial no. 541 00024 / LEXION MONTANA 430 from serial no. 542 00048

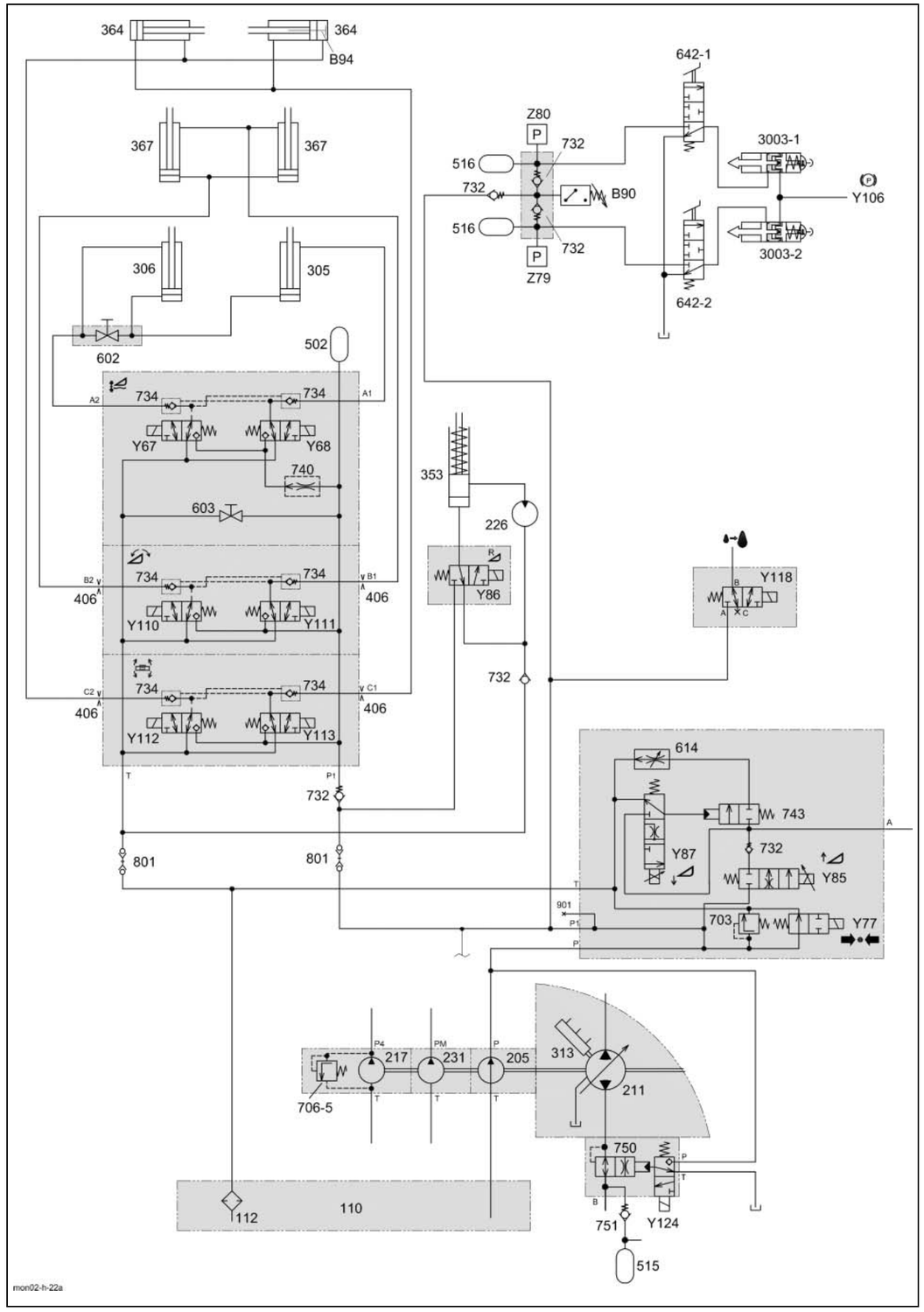

Key to diagram:

110	Oil tank
112	Return filter
205	Working hydraulics pump
211	Ground drive variable-displacement pump
217	Rotary chaff screen drive pump
226	Front attachment reverser drive motor
231	Montana axle control system pump
305	AUTOCONTOUR cross levelling right hydraulic cylinder
306	AUTOCONTOUR cross levelling left hydraulic cylinder
313	Ground drive pump servo control hydraulic cylinder
353	Reverse front attachment hydraulic cylinder
364	Rotate front attachment frame hydraulic cylinder
367	Cutting angle adjustment hydraulic cylinder
3003-1	Service brake / Parking brake right hydraulic cylinder
3003-2	Service brake / Parking brake left hydraulic cylinder
406	Orifice plate F ..... 0.8 mm
502	AUTOCONTOUR / Cross levelling accumulator 0.75 l / 80 bar
515	Accumulator 0.75 l / 16 bar
516	Service brake accumulator 0.75 l / 80 bar
602	AUTOCONTOUR / Cross levelling shut-off valve
603	AUTOCONTOUR / Cross levelling balance screw
614	Front attachment lower flow control valve
642-1	Service brake valve, right
642-2	Service brake valve, left
703	Working hydraulics pressure relief valve..... 180 bar
706-5	Rotary chaff screen pressure relief valve 150 bar
732	Non-return valve
734	Lock-up valve unit (non-return valve)
740	AUTOCONTOUR cross levelling flow control valve
743	Lower front attachment hydraulic valve
750	Brake restrictor valve
751	External feed valve (non-return valve)
801	Quick release coupling
901	Working hydraulics measuring point

Key to diagram:

B90	Brake circuit charge pressure sensor
B94	Montana cutterbar cross levelling sensor
Y67	AUTOCONTOUR cross levelling left solenoid valve
Y68	AUTOCONTOUR cross levelling right solenoid valve
Y77	Working hydraulics master valve solenoid valve
Y85	Raise front attachment solenoid valve
Y86	Reverse front attachment solenoid valve
Y87	Lower front attachment solenoid valve
Y106	Parking brake solenoid valve
Y110	Raise cutting angle solenoid valve
Y111	Lower cutting angle solenoid valve
Y112	Rotate front attachment to the right solenoid valve
Y113	Rotate front attachment to the left solenoid valve
Y118	Additional oil quantity increase valve solenoid valve
Y124	Ground drive hydraulic motor brake restrictor (HBM) solenoid valve
Z79	Left brake circuit pressure actual value switch
Z80	Right brake circuit pressure actual value switch

2.3 AUTO-CONTOUR (CAC) – Front attachment cross levelling

4/3 way solenoid valve with accumulator and lock-up valve unit

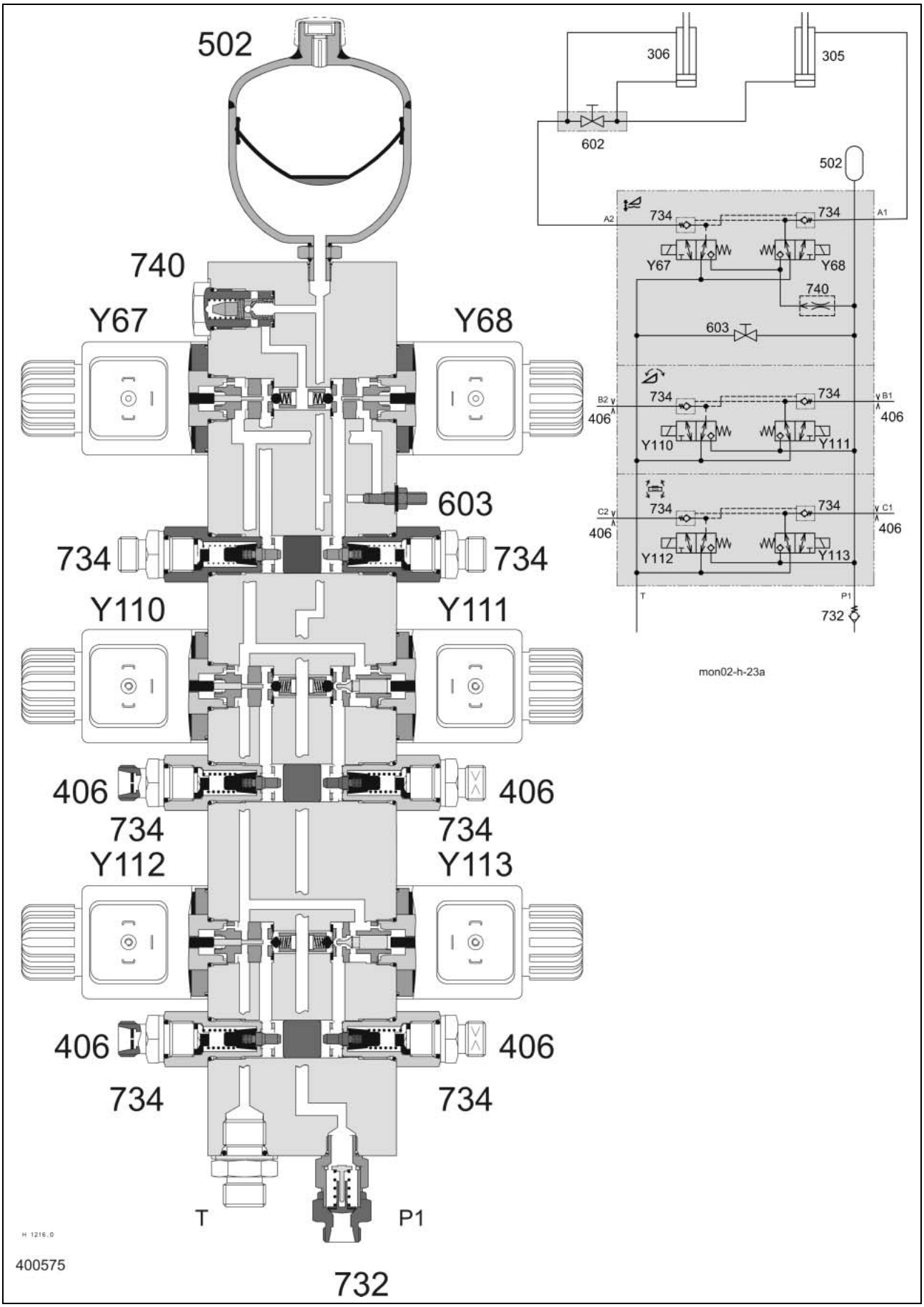

Key to diagram:

305	AUTOCONTOUR cross levelling right hydraulic cylinder
306	AUTOCONTOUR cross levelling left hydraulic cylinder
406	Orifice plate F .....0.8 mm
502	AUTOCONTOUR / Cross levelling accumulator
602	AUTOCONTOUR / Cross levelling shut-off valve
603	AUTOCONTOUR / Cross levelling balance screw
732	Non-return valve
734	Lock-up valve unit (non-return valve)
740	AUTOCONTOUR cross levelling flow control valve
Y67	AUTOCONTOUR cross levelling left solenoid valve
Y68	AUTOCONTOUR cross levelling right solenoid valve
Y110	Raise cutting angle solenoid valve
Y111	Lower cutting angle solenoid valve
Y112	Rotate front attachment to the right solenoid valve
Y113	Rotate front attachment to the left solenoid valve

Note: When dismounting items 502, 732, 740, Y67, Y68, Y110, Y111, Y112 or Y113, the accumulator must be relieved at the pressure relief bolt (603) before dismounting.

Description of function:

AUTOCONTOUR (CAC)

As soon as the cutterbar is engaged, the CAC module (A8) actuates the master valve for approx. 1 sec. The pressure build-up within the system caused by the circulation shut-off valve pre-loads the accumulator (502) via the non-return valve (732).
The CAC module also actuates the master valve if the total actuated time of both solenoid valves (Y67/Y68) exceeds 10 seconds in order to pre-load the accumulator (502) again.

The pressure in this closed system is thus applied at the balls in the valve inserts of solenoid valves (Y67/Y68). The flow control valve (740) here has the task to ensure constant control movements of the cutterbar at different pressure values.

One of the solenoid valves (Y67/Y68) is actuated by the CAC module, depending on the required direction of rotation. The corresponding pilot spool opens the ball in the valve insert and closes the return line to the tank. The rising pressure builds up against the lock-up valve unit valve ram. The latter opens the non-return valve (734) at port A1 or A2.
The return line of a control cylinder is therefore connected with the tank via the valve insert of the unactuated solenoid valve (Y67/Y68). The pressure rising further opens the non-return valve (734) on the opposite port and the control cylinder in question is retracted while the other control cylinder is extended proportionally.

Notes:

AUTO-CONTOUR (CAC) – Front attachment cross levelling
Hydraulic cylinder with ram guide

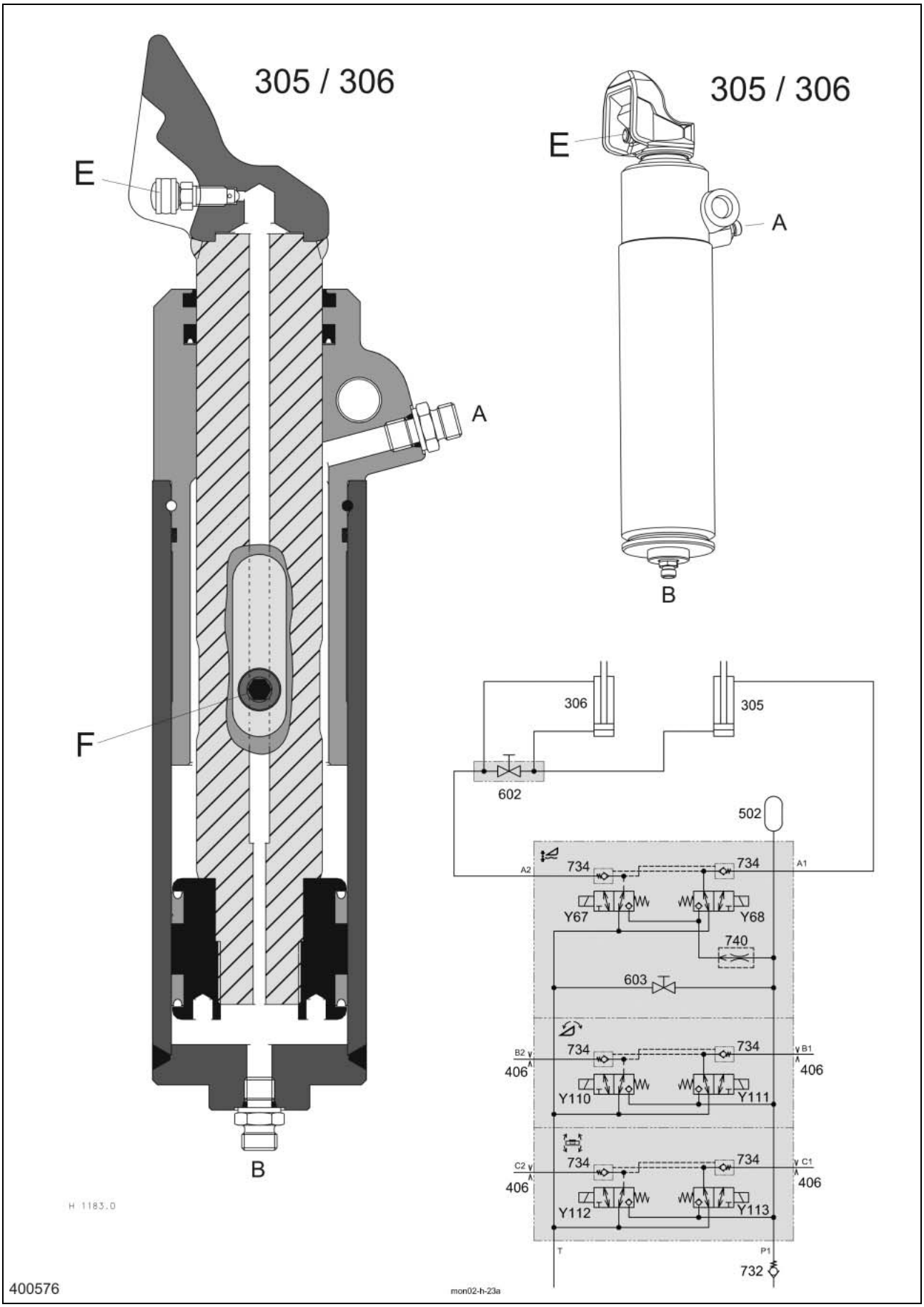

Key to diagram:

305	AUTOCONTOUR cross levelling right hydraulic cylinder
306	AUTOCONTOUR cross levelling left hydraulic cylinder
406	Orifice plate F ..... 0.8 mm
502	AUTOCONTOUR / Cross levelling accumulator
602	AUTOCONTOUR / Cross levelling shut-off valve
603	AUTOCONTOUR / Cross levelling balance screw
732	Non-return valve
734	Lock-up valve unit (non-return valve)
740	AUTOCONTOUR cross levelling flow control valve
Y67	AUTOCONTOUR cross levelling left solenoid valve
Y68	AUTOCONTOUR cross levelling right solenoid valve
Y110	Raise cutting angle solenoid valve
Y111	Lower cutting angle solenoid valve
Y112	Rotate front attachment to the right solenoid valve
Y113	Rotate front attachment to the left solenoid valve
E	Vent plug
F	Anti-twist protection

Note: When dismounting items 502, 732, 740, Y67, Y68, Y110, Y111, Y112 or Y113, the accumulator must be relieved at the pressure relief bolt (603) before dismounting.

Description of function:

Venting the hydraulic cylinders

1. Unhitch front attachment.
2. Open shut-off valve (602).
3. Actuate the cross levelling rocker switch to the right until both hydraulic cylinders (305/306) are fully extended.
4. Loosen the vent plug E on both hydraulic cylinders.
5. Press the cross levelling rocker switch briefly one more time until the oil comes out without bubbles.
6. Close the vent plugs (E) after the air has escaped.
7. Actuate the cross levelling rocker switch in opposite direction until the left-hand hydraulic cylinder (306) is fully retracted.
8. Close shut-off valve (602).
9. Retract and extend the hydraulic cylinders (305/306) several times, using the rocker switch.

Compensating the hydraulic cylinder (for cutterbar and Conspeed)

1. Unhitch front attachment.
2. Open shut-off valve (602).
3. Actuate the cross levelling rocker switch to the right until both hydraulic cylinders (305/306) are fully extended.
4. Actuate the transverse control rocker switch in opposite direction until the right-hand hydraulic cylinder (305) is fully retracted.
5. Close shut-off valve (602).
6. Move both hydraulic cylinders (305/306) to centre position using the transverse control rocker switch.

Description of function:

Lowering the hydraulic cylinder
(for Multimaster)

1. Hitch front attachment.
2. Actuate the transverse control rocker switch so that the right-hand hydraulic cylinder (305) extends and thus turns the front attachment to the left.
3. Open shut-off valve (602).
4. Actuate the transverse control rocker switch in opposite direction so that the right-hand hydraulic cylinder (305) retracts.
5. Close shut-off valve (602).

Notes:

2.4 Reverse front attachment

3/2 way solenoid valve

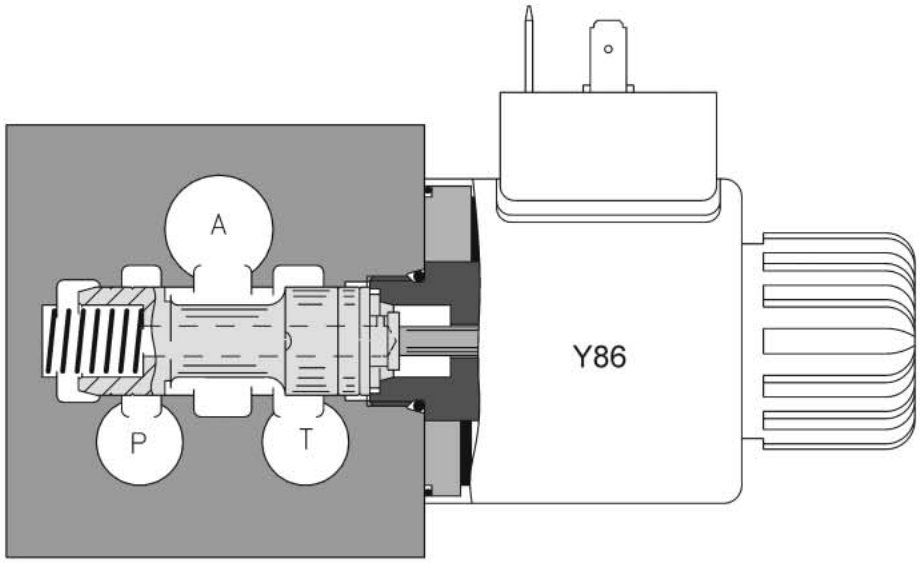

H 1008.3

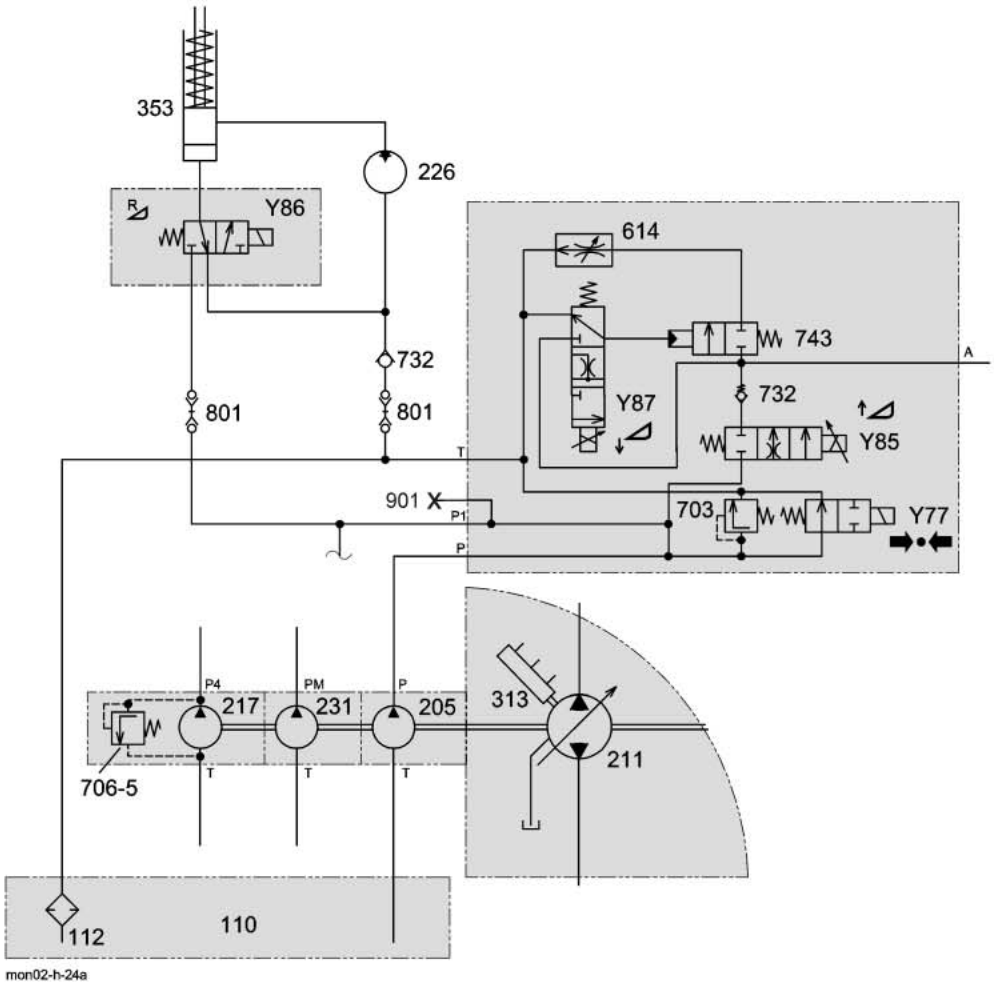

400578

Key to diagram:

110	Oil tank
112	Return filter
205	Working hydraulics pump
211	Ground drive variable-displacement pump
217	Rotary chaff screen drive pump
226	Front attachment reverser drive motor
231	Montana axle control system pump
313	Ground drive pump servo control hydraulic cylinder
353	Reverse front attachment hydraulic cylinder
614	Front attachment lower flow control valve
703	Working hydraulics pressure relief valve ..... 180 bar
706-5	Rotary chaff screen pressure relief valve 150 bar
732	Non-return valve
743	Lower front attachment hydraulic valve
801	Quick release coupling
901	Working hydraulics measuring point
Y77	Working hydraulics master valve solenoid valve
Y85	Raise front attachment solenoid valve
Y86	Reverse front attachment solenoid valve
Y87	Lower front attachment solenoid valve

Description of function:

Neutral function

The spring force displaces the oil from the reverser cylinder (353) via the connection from A to T inside the solenoid valve (Y86) to the tank. During this process, port P is closed by the spool.

Reversing function

The solenoid valve (Y86) and the master valve (Y77) are actuated. The return line to the tank is now closed by the spool in solenoid valve (Y86) and the connection from P to the consumer port A is established. The reversing cylinder (353) now extends and swings the hydraulic motor (226) to the drive gearwheel. Just before reaching its end position, the oil flow from the reversing cylinder (353) to the hydraulic motor (226) is released, ensuring reliable gearwheel engaging. The non-return valve (732) keeps the hydraulic motor (226) from starting when pressure peaks occur in the return line.

Reverse front attachment
Hydraulic cylinders

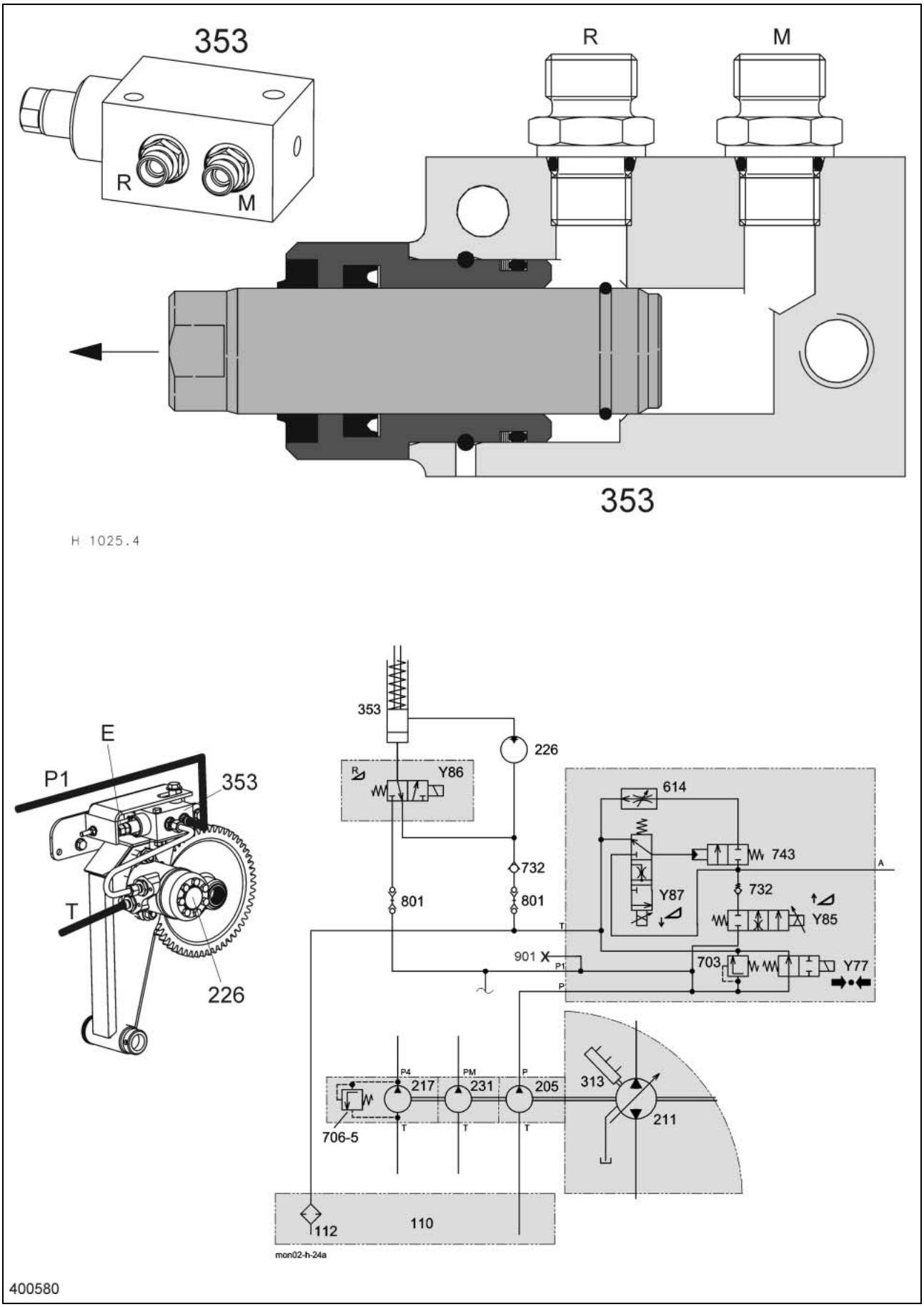

Key to diagram:

110	Oil tank
112	Return filter
205	Working hydraulics pump
211	Ground drive variable-displacement pump
217	Rotary chaff screen drive pump
226	Front attachment reverser drive motor
231	Montana axle control system pump
313	Ground drive pump servo control hydraulic cylinder
353	Reverse front attachment hydraulic cylinder
614	Front attachment lower flow control valve
703	Working hydraulics pressure relief valve ..... 180 bar
706-5	Rotary chaff screen pressure relief valve 150 bar
732	Non-return valve
743	Lower front attachment hydraulic valve
801	Quick release coupling
901	Working hydraulics measuring point
Y77	Working hydraulics master valve solenoid valve
Y85	Raise front attachment solenoid valve
Y86	Reverse front attachment solenoid valve
Y87	Lower front attachment solenoid valve
E	Setscrew

Description of function:

Reversing

When the solenoid valve (Y86) is actuated, the reversing cylinder (353) extends and swings the hydraulic motor (226) to the drive gearwheel. Just before reaching its end position, the oil flow from the reversing cylinder (353) to the hydraulic motor (226) is released, ensuring reliable gearwheel engaging.

The non-return valve (732) keeps the hydraulic motor (226) from starting when pressure peaks occur in the return line.

Adjustment

The reverser support is aligned towards the feed rake conveyor drive shaft by adjusting an eccentric bushing on the reverser cylinder (353). The piston stroke is adjusted using the set screw (E). With the reverser swung in, the set screw (E) must have a play of **0.5 mm** from the end stop, then jam the set screw (E).

Installation position of reverser motor OMP 200

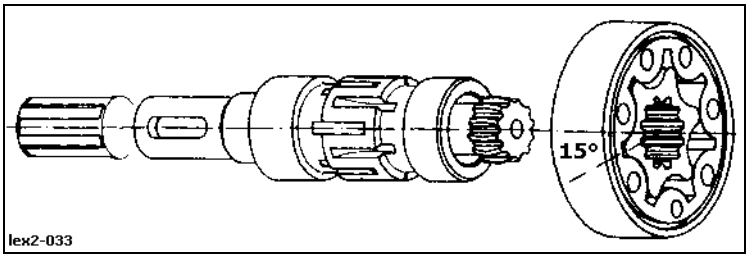

2.5 Cutting frame adjustment

4/3 way solenoid valve

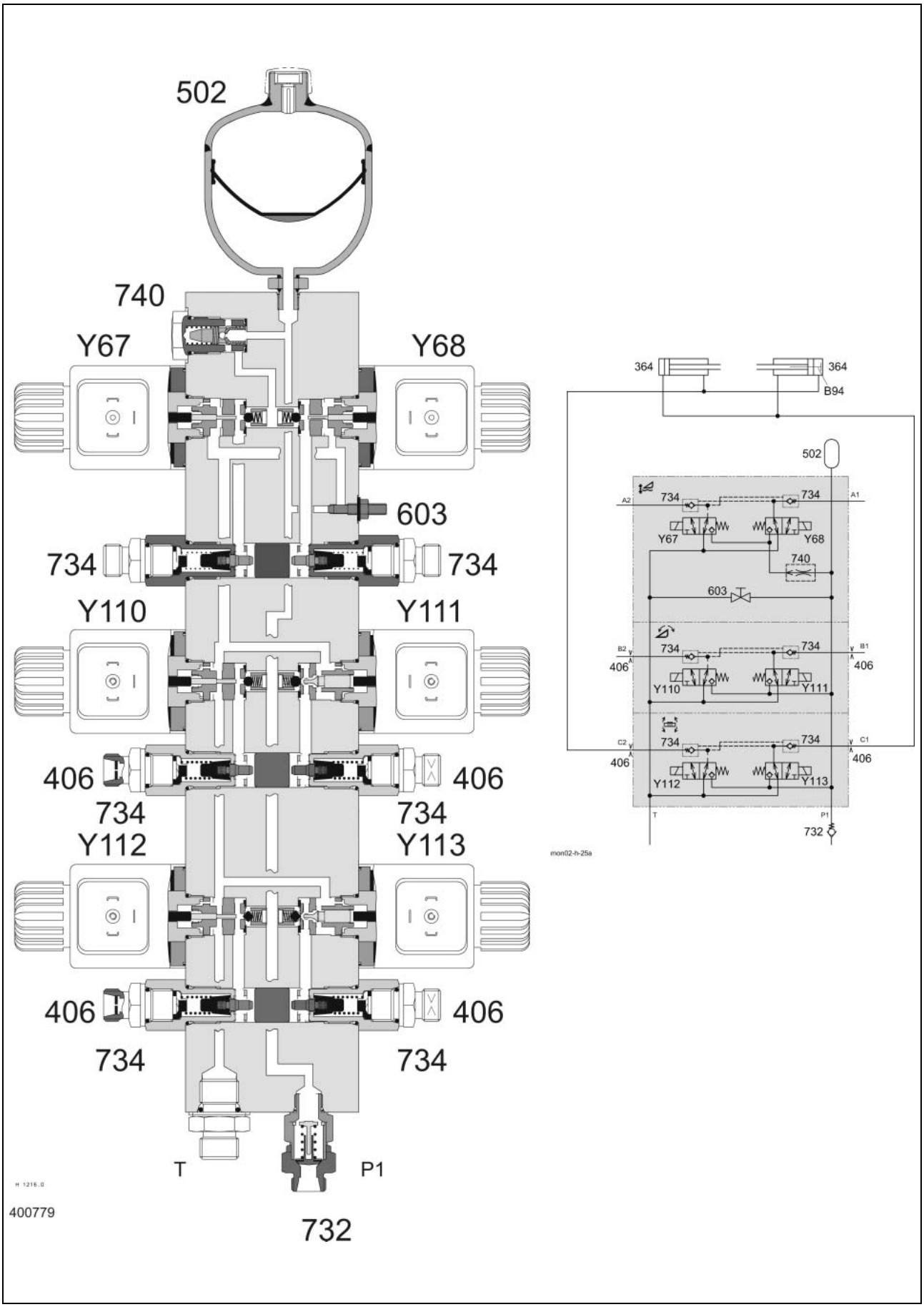

Key to diagram:

364	Rotate front attachment frame hydraulic cylinder
406	Orifice plate F .....0.8 mm
502	AUTOCONTOUR / Cross levelling accumulator
603	AUTOCONTOUR / Cross levelling balance screw
732	Non-return valve
734	Lock-up valve unit (non-return valve)
740	AUTOCONTOUR cross levelling flow control valve
B94	Montana cutterbar cross levelling sensor
Y67	AUTOCONTOUR cross levelling left solenoid valve
Y68	AUTOCONTOUR cross levelling right solenoid valve
Y110	Raise cutting angle solenoid valve
Y111	Lower cutting angle solenoid valve
Y112	Rotate front attachment to the right solenoid valve
Y113	Rotate front attachment to the left solenoid valve

Note: When dismounting items 502, 732, 740, Y67, Y68, Y110, Y111, Y112 or Y113, the accumulator must be relieved at the pressure relief bolt (603) before dismounting.

Description of function:

One of the solenoid valves (Y112/Y113) is actuated by the MONTANA control unit module, depending on the required direction of rotation. The corresponding pilot spool opens the ball in the valve insert and closes the return line to the tank. The rising pressure builds up against the lock-up valve unit valve ram. The latter opens the non-return valve (734) at port C1 or C2.
The return line of the hydraulic cylinders 364 is thus released to the tank via the valve insert of the unactuated solenoid valve (Y112/Y113). The pressure rising further opens the non-return valve (734) at the opposite port and the rotate front attachment frame hydraulic cylinders (364) are retracted or extended.

Cutting frame adjustment
Hydraulic cylinders

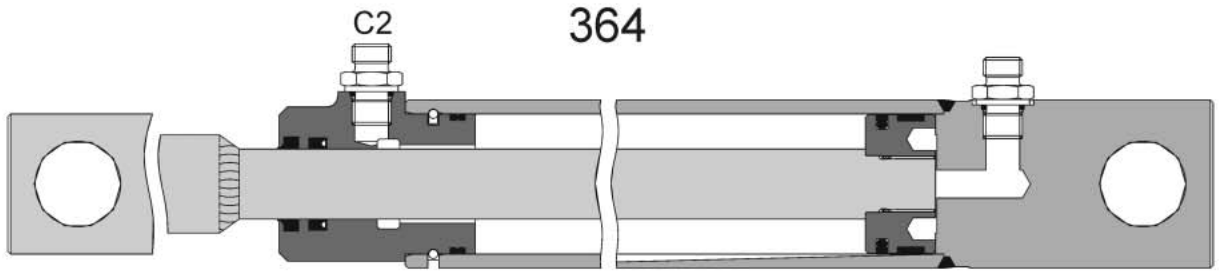

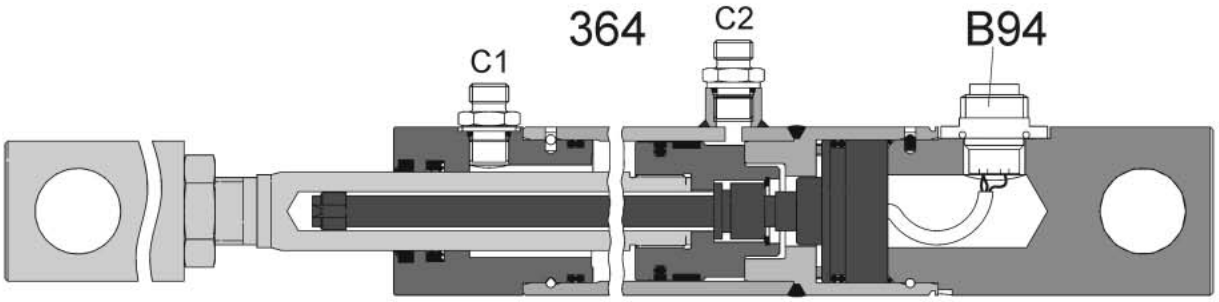

H 1231.0

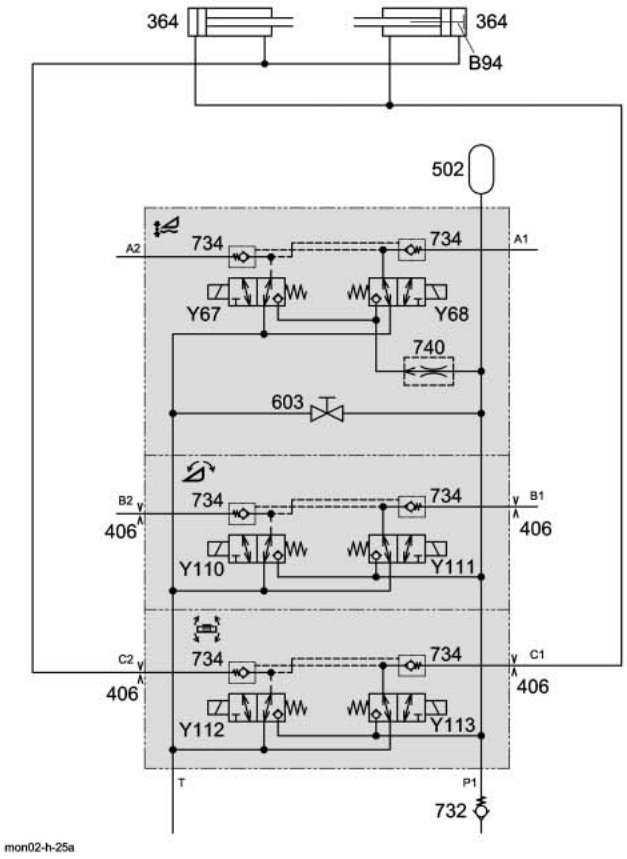

400800

Key to diagram:

364	Rotate front attachment frame hydraulic cylinder
406	Orifice plate F .....0.8 mm
502	AUTOCONTOUR / Cross levelling accumulator
603	AUTOCONTOUR / Cross levelling balance screw
732	Non-return valve
734	Lock-up valve unit (non-return valve)
740	AUTOCONTOUR cross levelling flow control valve
B94	Montana cutterbar cross levelling sensor
Y67	AUTOCONTOUR cross levelling left solenoid valve
Y68	AUTOCONTOUR cross levelling right solenoid valve
Y110	Raise cutting angle solenoid valve
Y111	Lower cutting angle solenoid valve
Y112	Rotate front attachment to the right solenoid valve
Y113	Rotate front attachment to the left solenoid valve

Note: When dismounting items 502, 732, 740, Y67, Y68, Y110, Y111, Y112 or Y113, the accumulator must be relieved at the pressure relief bolt (603) before dismounting.

2.6 Cutting angle adjustment

4/3 way solenoid valve

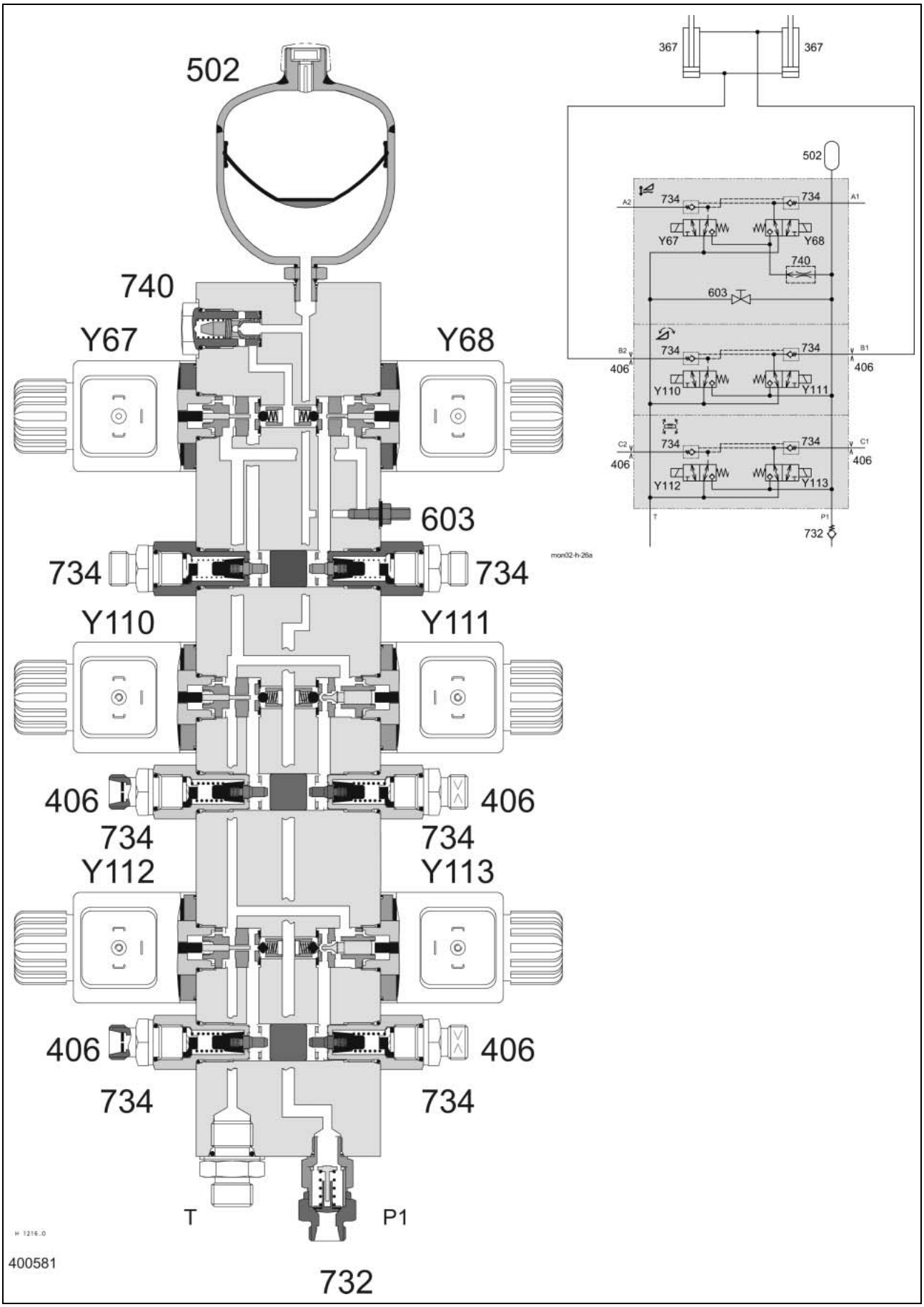

Key to diagram:

367	Cutting angle adjustment hydraulic cylinder
406	Orifice plate F .....0.8 mm
502	AUTOCONTOUR / Cross levelling accumulator
603	AUTOCONTOUR / Cross levelling balance screw
732	Non-return valve
734	Lock-up valve unit (non-return valve)
740	AUTOCONTOUR cross levelling flow control valve
Y67	AUTOCONTOUR cross levelling left solenoid valve
Y68	AUTOCONTOUR cross levelling right solenoid valve
Y110	Raise cutting angle solenoid valve
Y111	Lower cutting angle solenoid valve
Y112	Rotate front attachment to the right solenoid valve
Y113	Rotate front attachment to the left solenoid valve

Note: When dismounting items 502, 732, 740, Y67, Y68, Y110, Y111, Y112 or Y113, the accumulator must be relieved at the pressure relief bolt (603) before dismounting.

Cutting angle adjustment
Hydraulic cylinders

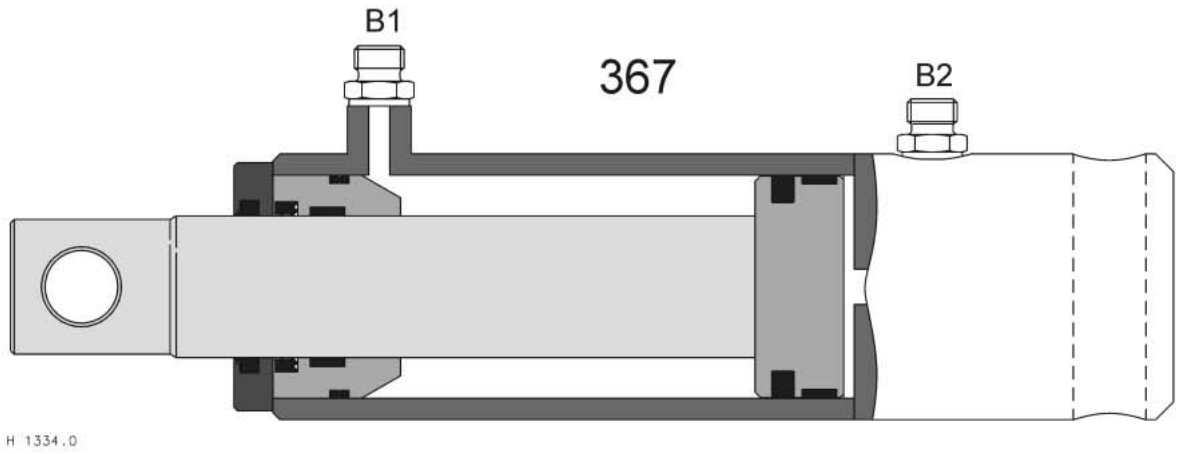

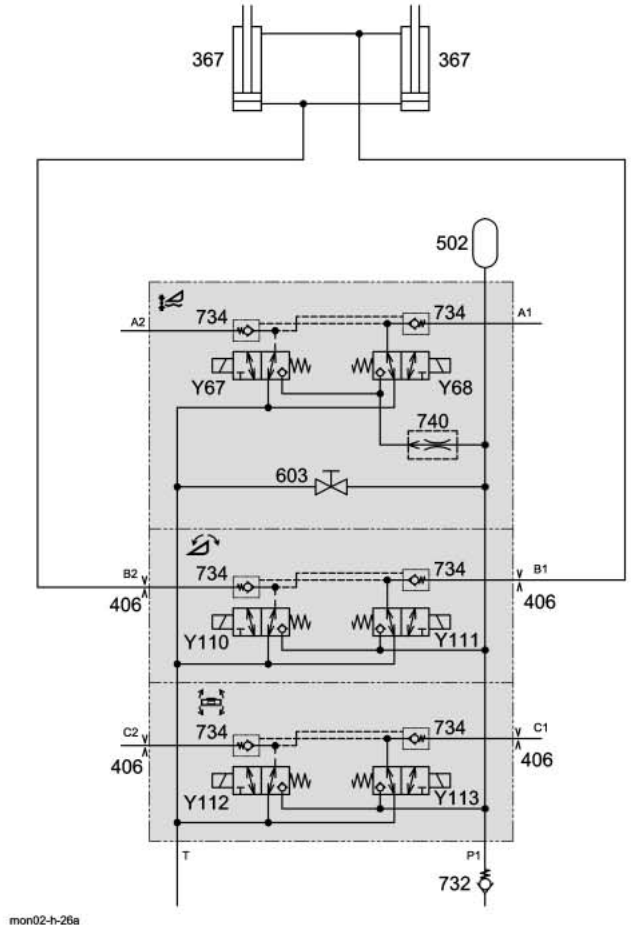

400799

Key to diagram:

367	Cutting angle adjustment hydraulic cylinder
406	Orifice plate F .....0.8 mm
502	AUTOCONTOUR / Cross levelling accumulator
603	AUTOCONTOUR / Cross levelling balance screw
732	Non-return valve
734	Lock-up valve unit (non-return valve)
740	AUTOCONTOUR cross levelling flow control valve
Y67	AUTOCONTOUR cross levelling left solenoid valve
Y68	AUTOCONTOUR cross levelling right solenoid valve
Y110	Raise cutting angle solenoid valve
Y111	Lower cutting angle solenoid valve
Y112	Rotate front attachment to the right solenoid valve
Y113	Rotate front attachment to the left solenoid valve

Note: When dismounting items 502, 732, 740, Y67, Y68, Y110, Y111, Y112 or Y113, the accumulator must be relieved at the pressure relief bolt (603) before dismounting.

2.7 Service brake (filling the brake accumulator)

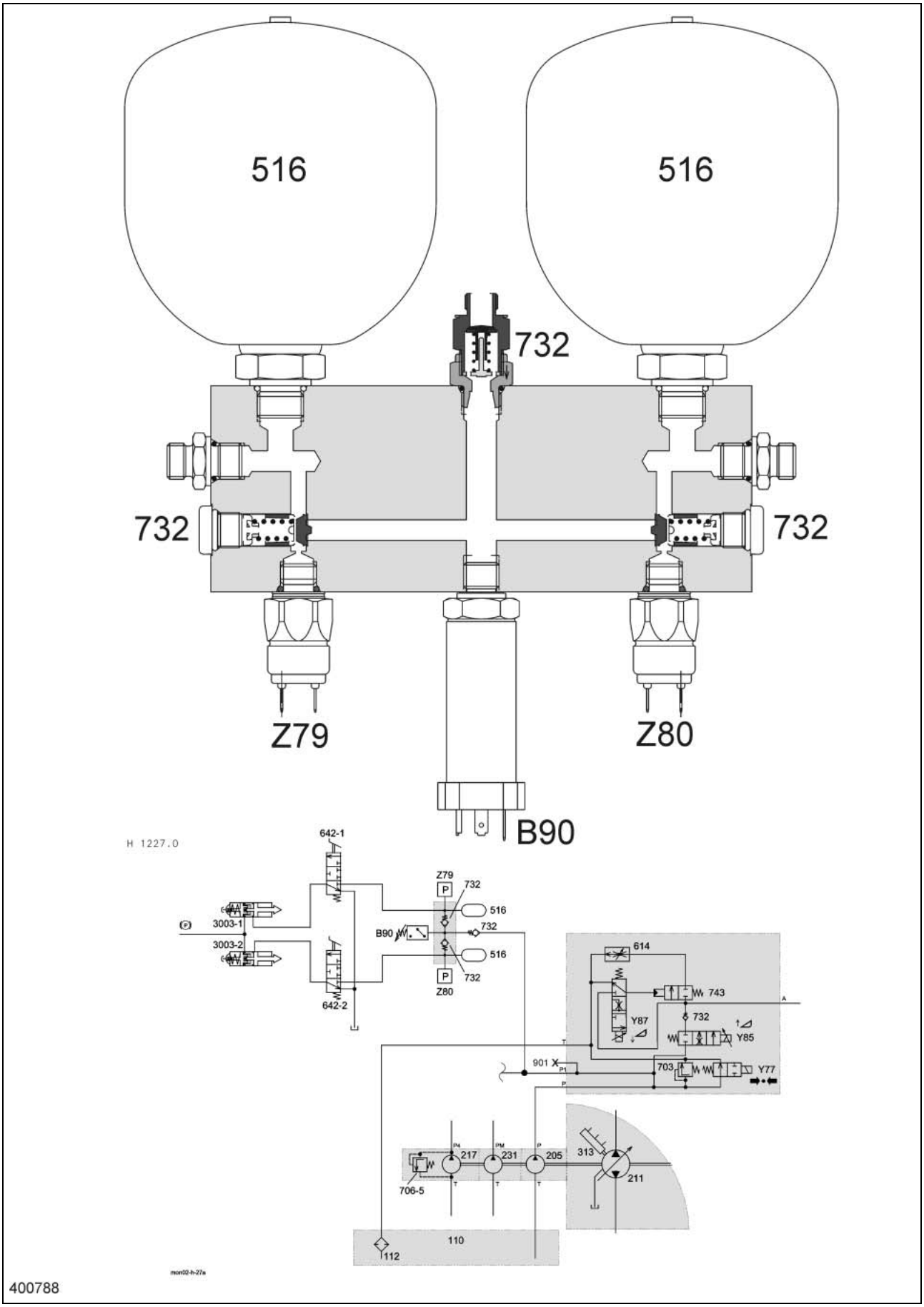

Key to diagram:

3003-1	Service brake / Parking brake right hydraulic cylinder
3003-2	Service brake / Parking brake left hydraulic cylinder
516	Service brake accumulator 0.75 l / 80 bar
642-1	Service brake valve, right
642-2	Service brake valve, left
732	Non-return valve
901	Working hydraulics measuring point
B90	Brake circuit charge pressure sensor
Z79	Left brake circuit pressure actual value switch
Z80	Right brake circuit pressure actual value switch

Description of function:

Montana brake pressure accumulator	The sensor/switch (B90) controls the brake system accumulator pressure and, if necessary, actuates the working hydraulics master valve (Y77) via the gear preselection module (A36) in order to recharge the brake circuit accumulator to 135 - 165 bar.
Montana brake oil pressure warning	The earth signal of the left / right brake circuit pressure switch (Z79/Z80) is connected to the terminal (A30) and displayed as an alarm message.

Service brake
Brake cylinders

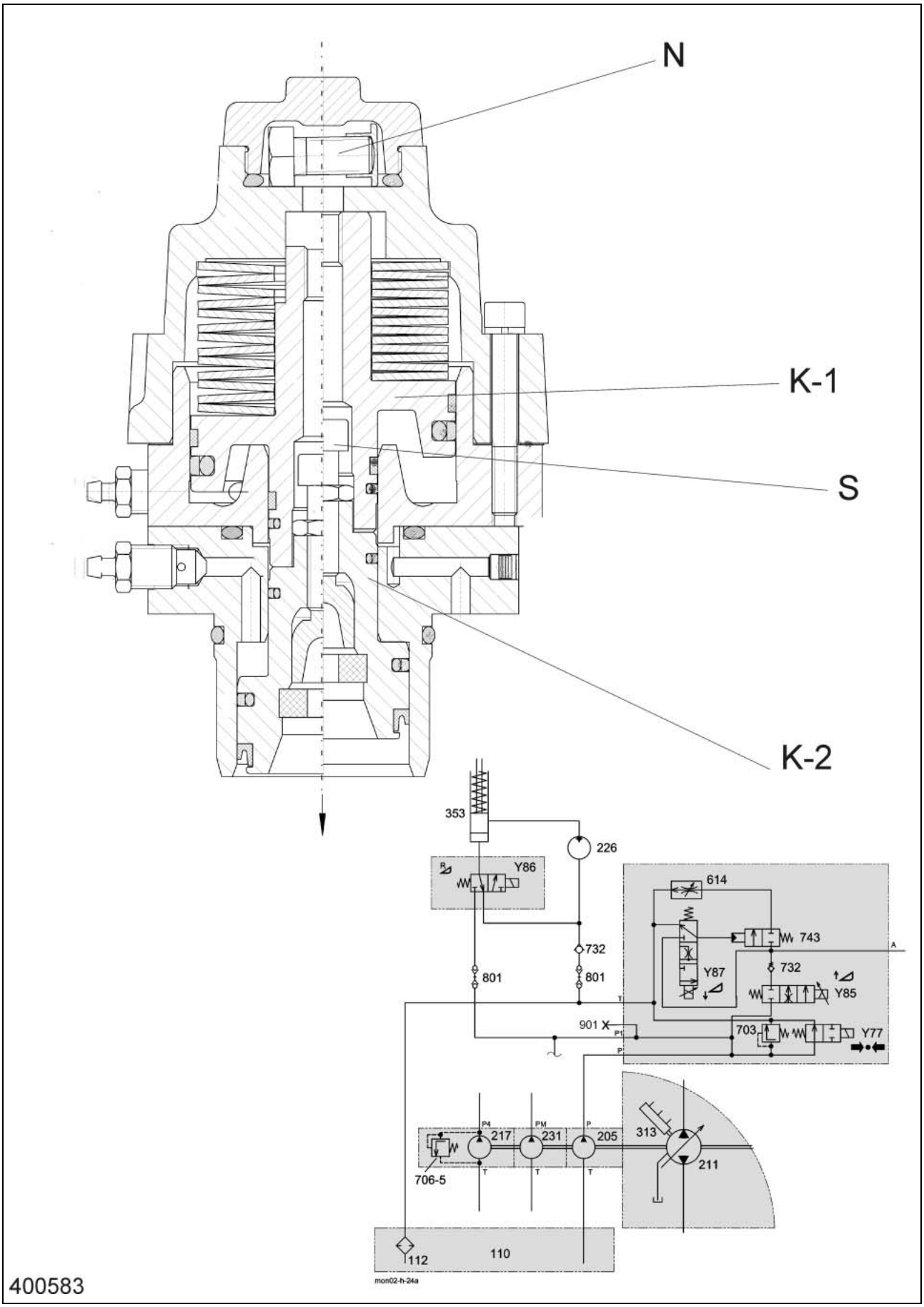

Key to diagram:

K-1	Release parking brake ram
K-2	Service brake ram
N	Parking brake emergency operation (mechanical)
S	Brake air gap adjusting screw
3003-1	Service brake / Parking brake right hydraulic cylinder
3003-2	Service brake / Parking brake left hydraulic cylinder
516	Service brake accumulator 0.75 l / 80 bar
642-1	Service brake valve, right
642-2	Service brake valve, left
732	Non-return valve
901	Working hydraulics measuring point
B90	Brake circuit charge pressure sensor
Z79	Left brake circuit pressure actual value switch
Z80	Right brake circuit pressure actual value switch

Description of function:

Emergency operation

The parking brake system consists of a spring-type accumulator in the brake cylinders. The low-pressure circuit of the machine is used for releasing the parking brake.

If the hydraulic circuit fails (depending on the diesel engine!), the parking brake can be released manually, using screw N. To do this, screw in screw N – see Repair Manual.

Brake air gap

The Montana brake system is a wet multi-disc brake. To ensure free-wheeling of the discs when the brake is not actuated, an air gap can be adjusted at screw S – see Repair Manual.

3

Axle Hydraulics

3.1 Axle hydraulics circuit diagram
LEXION MONTANA 470 up to serial no. 541 00023
LEXION MONTANA 430 up to serial no. 542 00047 ..... **3-4**

3.2 Axle hydraulics circuit diagram
LEXION MONTANA 470 from serial no. 541 00024
LEXION MONTANA 430 from serial no. 542 00048 ..... **3-8**

3.3 Axle control system master valve / pressure relief valve **3-10**

3.4 Ground drive hydraulic motor brake restrictor (HBM) control
Only LEXION 470 up to serial no. 541 00023
Only LEXION 430 up to serial no. 542 00047 ..... **3-12**

3.5 Axle control system – Raise / lower axle, oil quantity increase
4/3 way valve, 2/2 way valve, flow control valve **3-14**
Hydraulic cylinder with integrated lower brake valve 3-16

3.6 Shifting aid
4/3-way valve **3-18**

3.7 Position of components / Axle control system
LEXION 470 up to serial no. 541 00023
LEXION 430 up to serial no. 542 00047 ..... **3-20**

3.8 Position of components / Axle control system
LEXION 470 from serial no. 541 00024
LEXION 430 from serial no. 542 00048 ..... **3-22**

3.1

Axle hydraulics circuit diagram

- LEXION 470 up to serial no. 541 00023

- LEXION 430 up to serial no. 542 00047

3.1 Axle hydraulics circuit diagram
LEXION MONTANA 470 up to serial no. 541 00023 / LEXION MONTANA 430 up to serial no. 542 00047

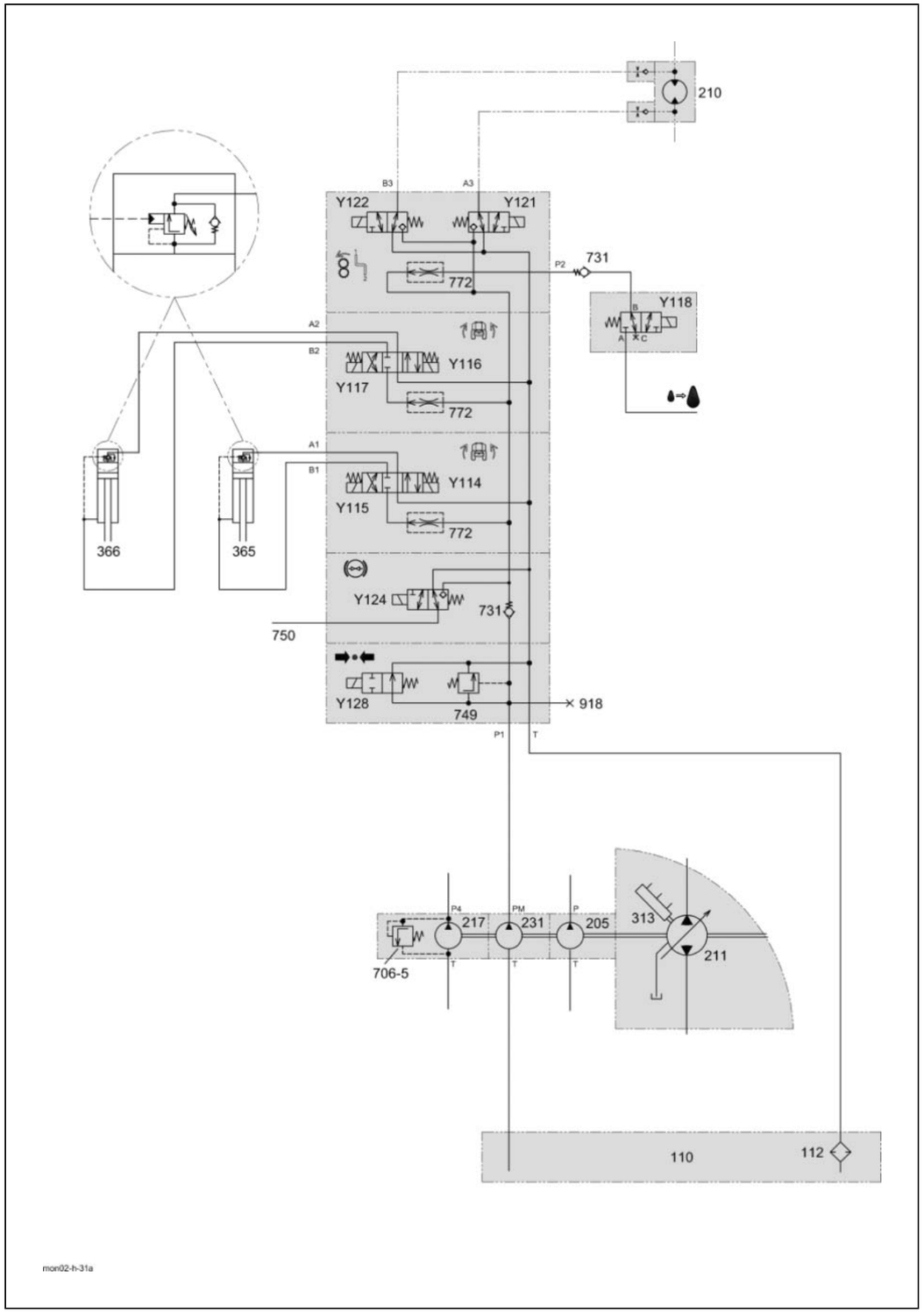

Key to diagram:

110	Oil tank
112	Return filter
205	Working hydraulics pump
211	Ground drive variable-displacement pump
217	Rotary chaff screen drive pump
231	Montana axle control system pump
313	Ground drive pump servo control hydraulic cylinder
365	Raise/lower axle, left hydraulic cylinder
366	Raise/lower axle, right hydraulic cylinder
706-5	Rotary chaff screen pressure relief valve ..... 150 bar
731	Return line valve (non-return valve)
749	Montana pressure relief valve
772	Volume flow controller
918	Axle hydraulics measuring point
Y114	Lower axle on left-hand side solenoid valve
Y115	Raise axle on left-hand side solenoid valve
Y116	Lower axle on right-hand side solenoid valve
Y117	Raise axle on right-hand side solenoid valve
Y118	Additional oil quantity increase valve solenoid valve
Y121	Shifting aid, reverse solenoid valve
Y122	Shifting aid, forward solenoid valve
Y124	Ground drive hydraulic motor brake restrictor (HBM) solenoid valve
Y128	Montana master valve solenoid valve

3.2

Axle hydraulics circuit diagram

- LEXION 470 from serial no. 541 00024

- LEXION 430 from serial no. 542 00048

3.2 Axle hydraulics circuit diagram
LEXION MONTANA 470 from serial no. 541 00024 / LEXION MONTANA 430 from serial no. 542 00048

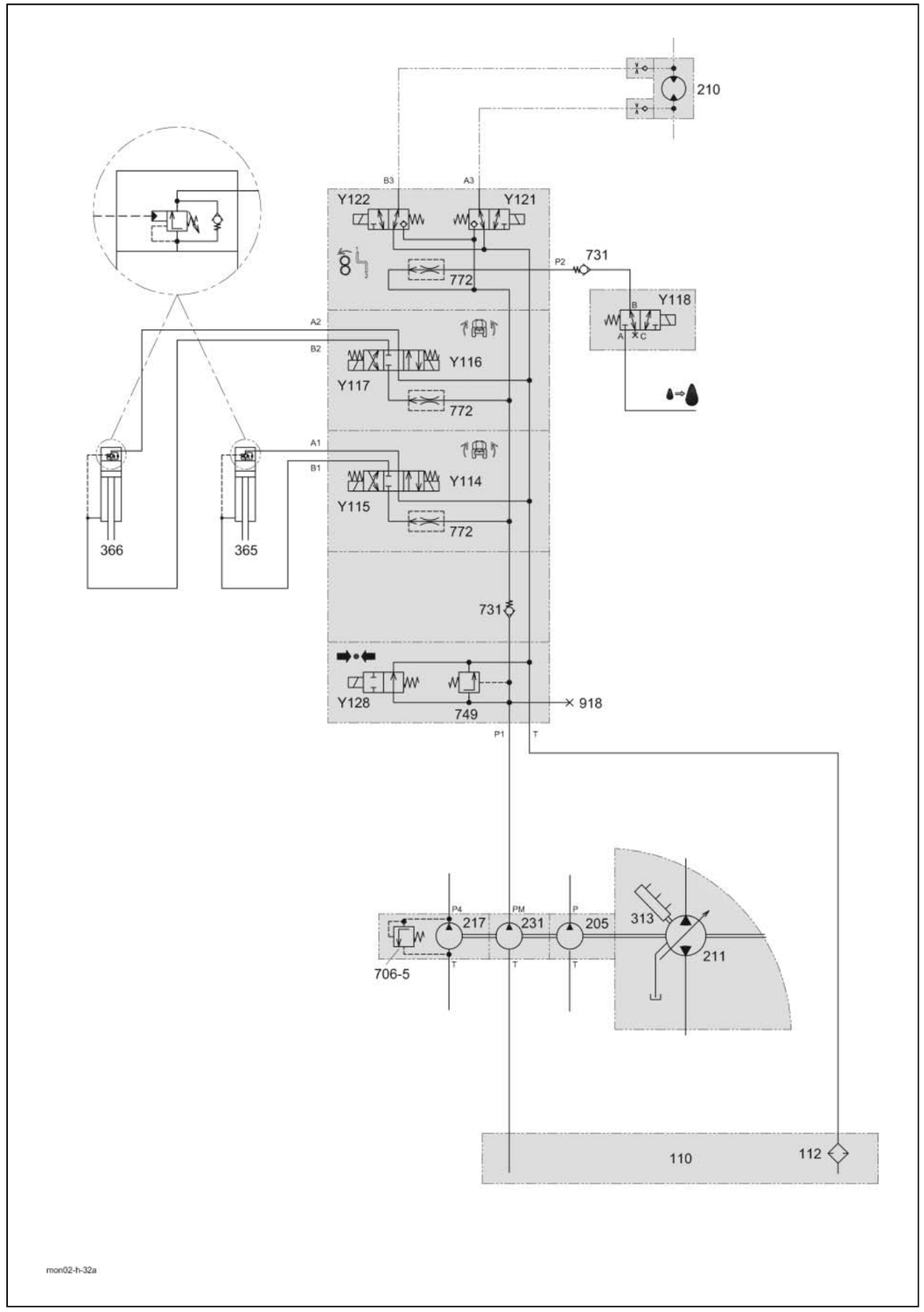

Key to diagram:

110	Oil tank
112	Return filter
205	Working hydraulics pump
211	Ground drive variable-displacement pump
217	Rotary chaff screen drive pump
231	Montana axle control system pump
313	Ground drive pump servo control hydraulic cylinder
365	Raise/lower axle, left hydraulic cylinder
366	Raise/lower axle, right hydraulic cylinder
706-5	Rotary chaff screen pressure relief valve ..... 150 bar
731	Return line valve (non-return valve)
749	Montana pressure relief valve
772	Volume flow controller
918	Axle hydraulics measuring point
Y114	Lower axle on left-hand side solenoid valve
Y115	Raise axle on left-hand side solenoid valve
Y116	Lower axle on right-hand side solenoid valve
Y117	Raise axle on right-hand side solenoid valve
Y118	Additional oil quantity increase valve solenoid valve
Y121	Shifting aid, reverse solenoid valve
Y122	Shifting aid, forward solenoid valve
Y128	Montana master valve solenoid valve

3.3 Axle control system master valve / pressure relief valve

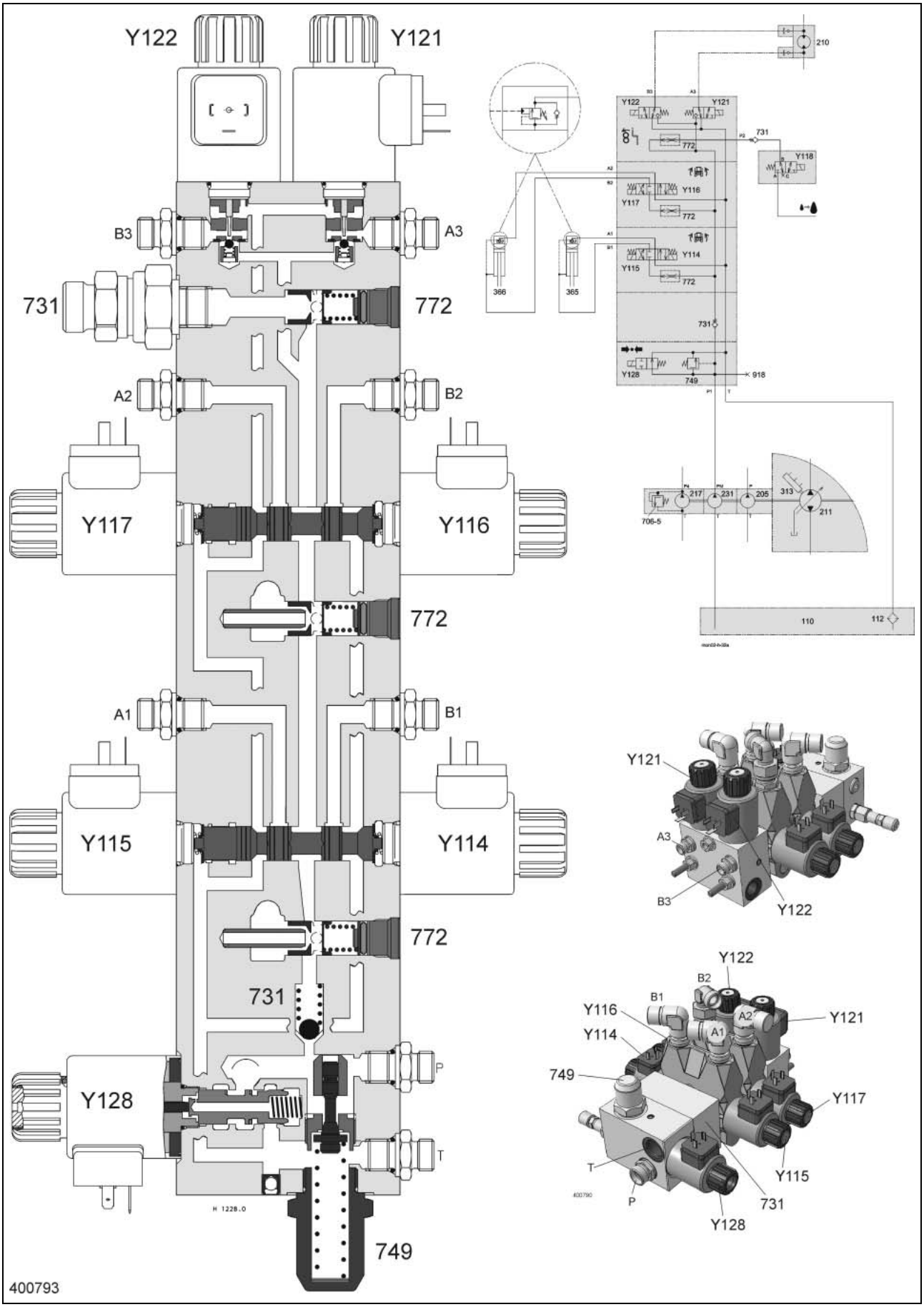

Key to diagram:

110	Oil tank
112	Return filter
205	Working hydraulics pump
211	Ground drive variable-displacement pump
217	Rotary chaff screen drive pump
231	Montana axle control system pump
313	Ground drive pump servo control hydraulic cylinder
365	Raise/lower axle, left hydraulic cylinder
366	Raise/lower axle, right hydraulic cylinder
706-5	Rotary chaff screen pressure relief valve ..... 150 bar
731	Return line valve (non-return valve)
749	Montana pressure relief valve
772	Volume flow controller
918	Axle hydraulics measuring point
Y114	Lower axle on left-hand side solenoid valve
Y115	Raise axle on left-hand side solenoid valve
Y116	Lower axle on right-hand side solenoid valve
Y117	Raise axle on right-hand side solenoid valve
Y118	Additional oil quantity increase valve solenoid valve
Y121	Shifting aid, reverse solenoid valve
Y122	Shifting aid, forward solenoid valve
Y128	Montana master valve solenoid valve

Description of function:

Pressure limitation

The spring in the pressure relief valve (749) is pre-stressed for a system pressure of **180^{+15} bar**. The pressure setting may be modified by removing or adding shims.

- 0.5 mm shim corresponds to approx. 10 bar
- 1.2 mm shim corresponds to approx. 23 bar

Function of master valve

The master valve (Y128) blocks the circulating volume flow from P to T of the open hydraulic system when an axle hydraulics function has been actuated.

In neutral position, the master valve (Y128) is not actuated, the oil thus flows back to the tank. Due to the large channel cross-section, the circulation pressure is very low.

When pressure is successfully built up at a consumer, the master valve (Y128) is actuated simultaneously with the directional control valve of the corresponding function. An internal spool now closes the connection from P to T.

The pressure relief valve (749) opens at a maximum system pressure of 180±15 bar and relieves the pressure to the tank.

3.4 Ground drive hydraulic motor brake restrictor (HBM) control

Only LEXION 470 up to serial no. 541 00023 / Only LEXION 430 up to serial no. 542 00047

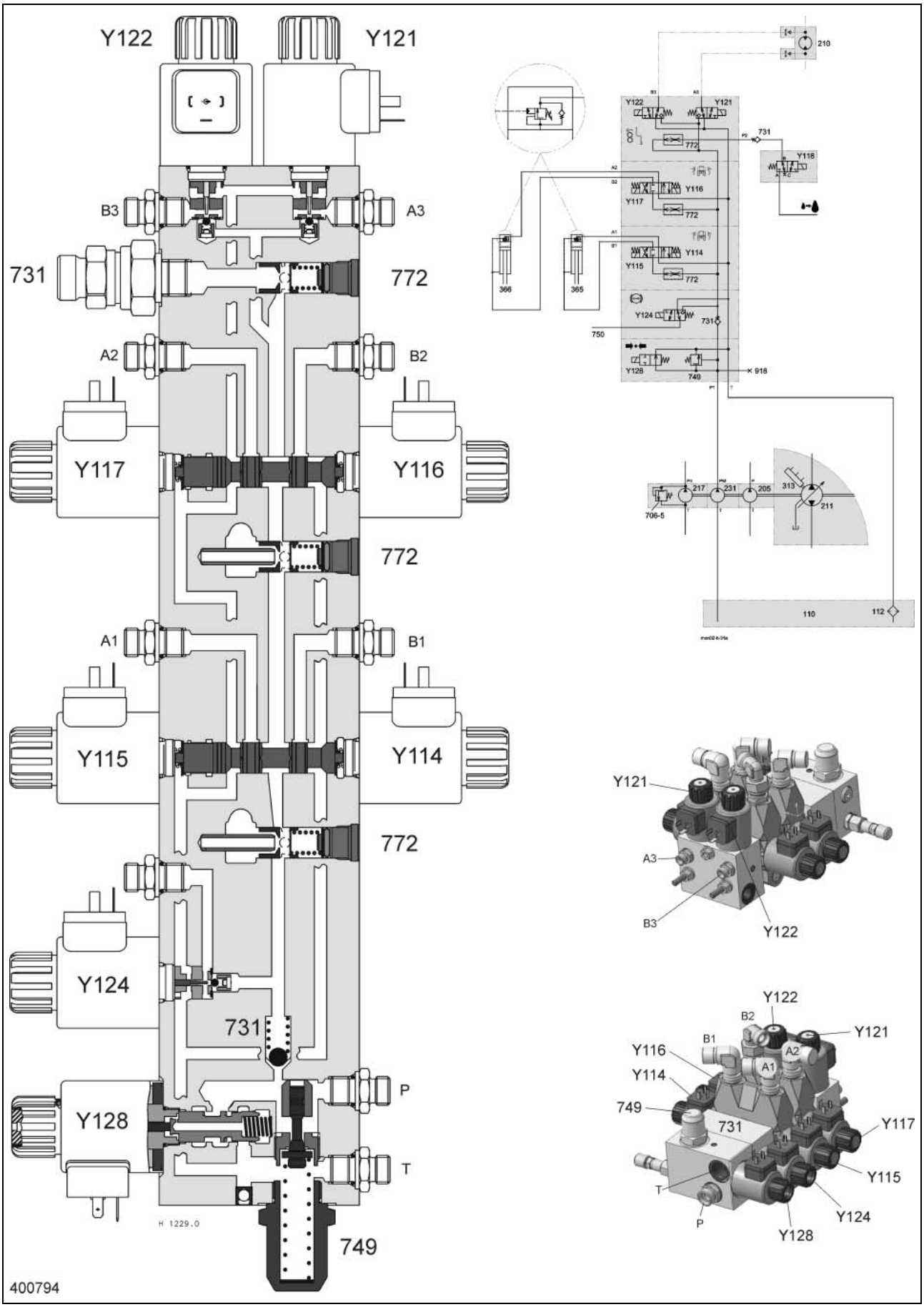

Key to diagram:

110	Oil tank
112	Return filter
731	Return line valve (non-return valve)
749	Montana pressure relief valve
772	Volume flow controller
918	Axle hydraulics measuring point
Y114	Lower axle on left-hand side solenoid valve
Y115	Raise axle on left-hand side solenoid valve
Y116	Lower axle on right-hand side solenoid valve
Y117	Raise axle on right-hand side solenoid valve
Y121	Shifting aid, reverse solenoid valve
Y122	Shifting aid, forward solenoid valve
Y124	Ground drive hydraulic motor brake restrictor (HBM) solenoid valve
Y128	Montana master valve solenoid valve

Description of function:

Ground drive hydraulic motor brake restrictor (Y124)

The ground drive hydraulic motor brake restrictor solenoid valve (Y124) is installed in the axle hydraulics valve combination. However, the brake restrictor valve (750) is mounted to the ground drive pump (211) – see Overall Circuit Diagram up to serial no.
It avoids pump damage and diesel engine damage caused by overspeed.

When travelling downhill, the ground drive variable displacement motor (210) delivers an increased volume flow to the ground drive variable displacement pump (211). This makes the speeds of the ground drive variable displacement pump (211) and of the diesel engine rise.

At a diesel engine speed of > 2300 rpm, the ground drive hydraulic motor brake restrictor solenoid valve (Y124) is energized, the valve is actuated and the axle hydraulics pressure moves internal ram in the brake restrictor valve (750). The restricting effect produced by this creates a ram pressure of approx. 180 bar ahead of the restrictor.

With this ram pressure and a pressure of approx. 450 bar on the opposite pump side, the pressure difference at the ground drive variable displacement pump (211) is reduced. This reduces the torque load of the diesel engine and its speed.

Note: Triggering of the brake restrictor from serial no. 541 00024 and from serial no. 542 00048 is described in the standard machine documentation.

3.5 Axle control system – Raise / lower axle, oil quantity increase

4/3 way valve, 2/2 way valve, flow control valve

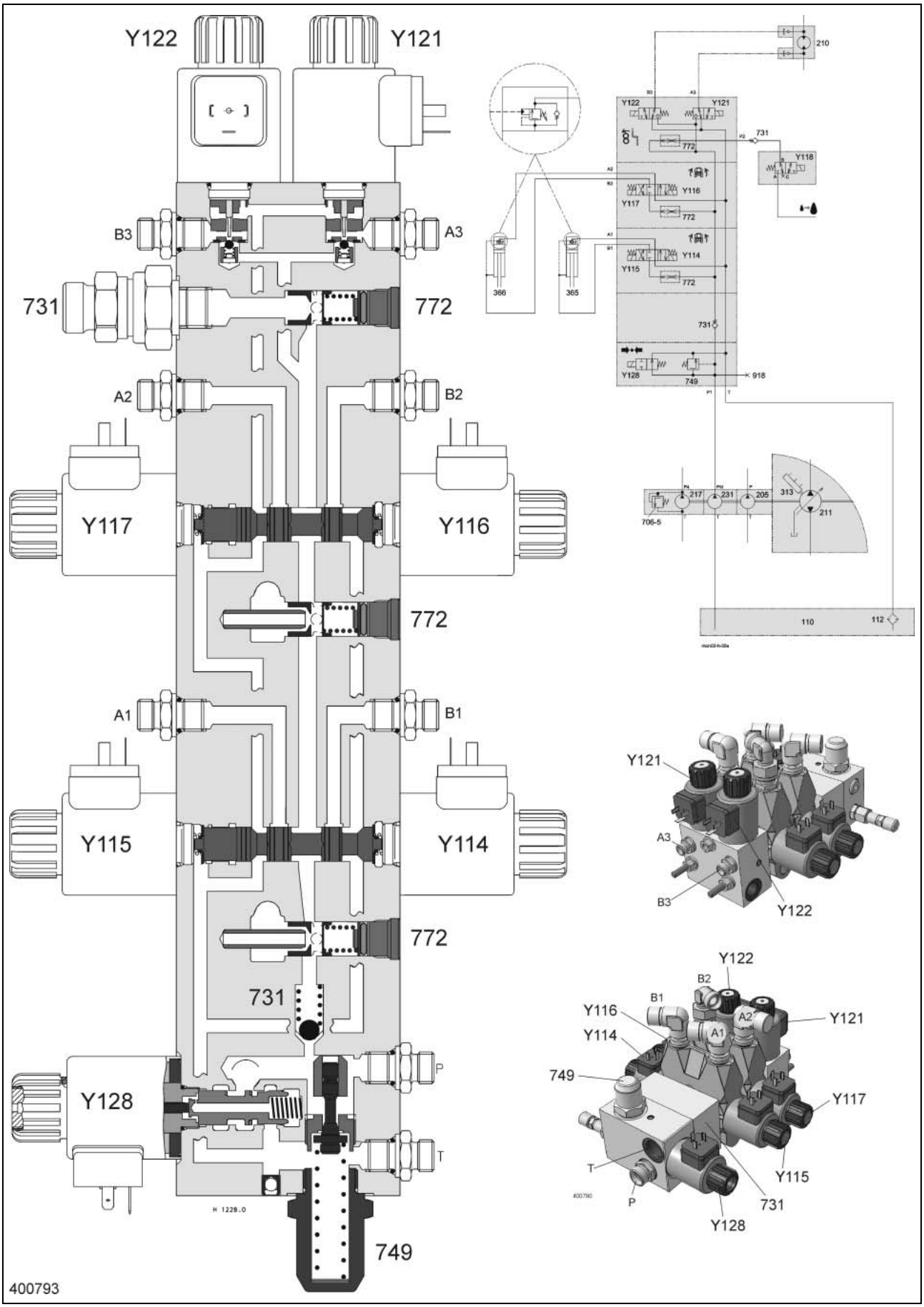

Key to diagram:

110	Oil tank
112	Return filter
205	Working hydraulics pump
211	Ground drive variable-displacement pump
217	Rotary chaff screen drive pump
231	Montana axle control system pump
313	Ground drive pump servo control hydraulic cylinder
365	Raise/lower axle, left hydraulic cylinder
366	Raise/lower axle, right hydraulic cylinder
706-5	Rotary chaff screen pressure relief valve ..... 150 bar
731	Return line valve (non-return valve)
749	Montana pressure relief valve
772	Volume flow controller
918	Axle hydraulics measuring point
Y114	Lower axle on left-hand side solenoid valve
Y115	Raise axle on left-hand side solenoid valve
Y116	Lower axle on right-hand side solenoid valve
Y117	Raise axle on right-hand side solenoid valve
Y118	Additional oil quantity increase valve solenoid valve
Y121	Shifting aid, reverse solenoid valve
Y122	Shifting aid, forward solenoid valve
Y124	Ground drive hydraulic motor brake restrictor (HBM) solenoid valve
Y128	Montana master valve solenoid valve

Description of function:

Raise / lower axle

Depending on the necessary direction of movement, one of the solenoid valves (Y114/Y115 and/or Y116/Y117) and, at the same time, the master valve (Y128) is actuated.

The volume flow controller (772) in the respective hydraulic valves limits the volume flow to 32 l/min. max.

Oil quantity increase

If more volume flow is required while adjusting the raise/lower axle hydraulic cylinder (365/366), the solenoid valve (Y118) is actuated. It is energized and additionally makes the volume flow from the working hydraulics pump (205) available. During this process, the master valve (Y77) is closed – see Overall Circuit Diagram.

The volume flow controller (772) provided in the shifting aid hydraulic valve (Y121/Y122) limits the oil quantity increase volume flow to 25 l/min.

Axle control system – Raise / lower axle, oil quantity increase
Hydraulic cylinder with integrated lower brake valve

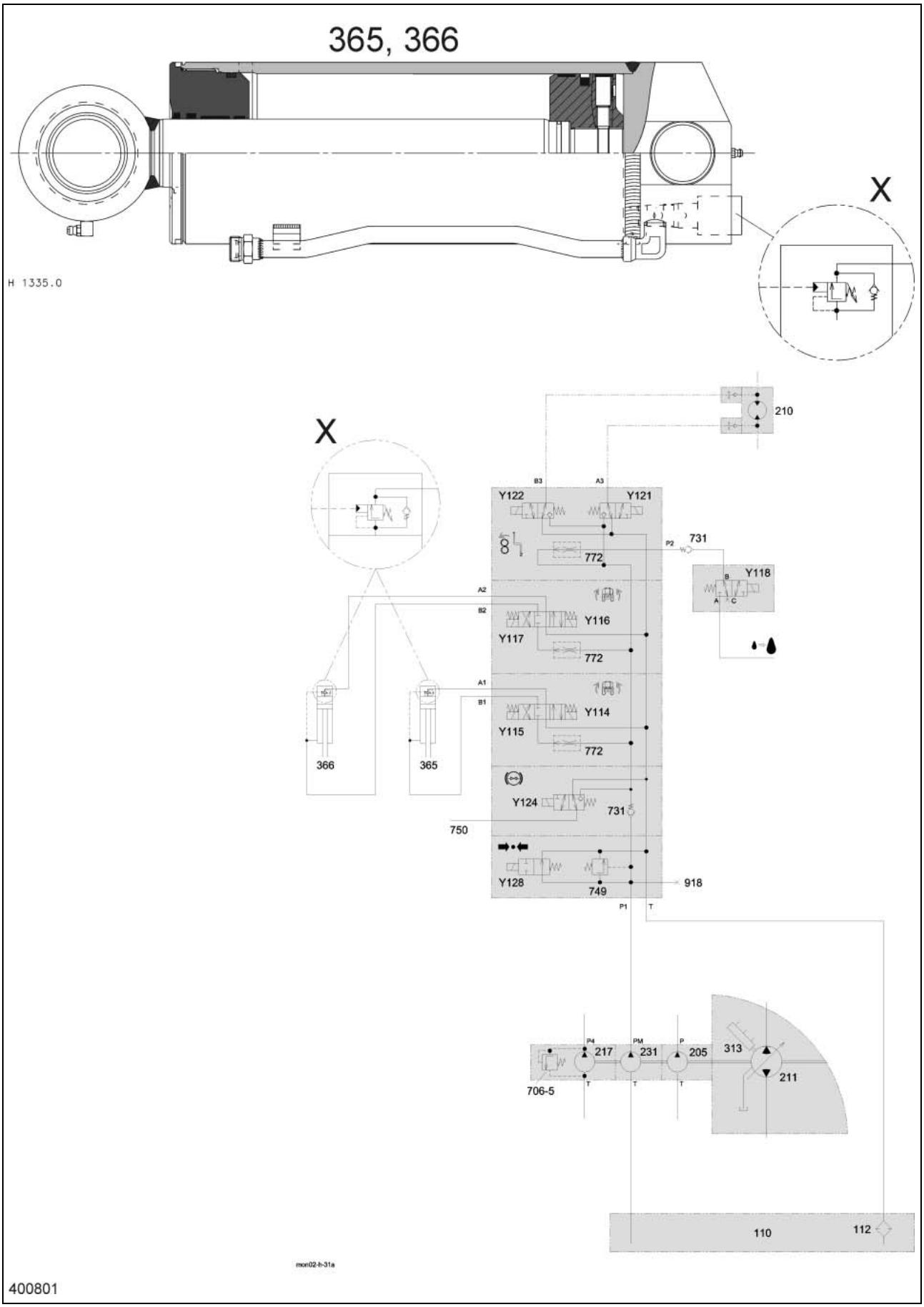

Key to diagram:

110	Oil tank
112	Return filter
731	Return line valve (non-return valve)
749	Montana pressure relief valve
772	Volume flow controller
918	Axle hydraulics measuring point
X	Lower brake valve
Y114	Lower axle on left-hand side solenoid valve
Y115	Raise axle on left-hand side solenoid valve
Y116	Lower axle on right-hand side solenoid valve
Y117	Raise axle on right-hand side solenoid valve
Y121	Shifting aid, reverse solenoid valve
Y122	Shifting aid, forward solenoid valve
Y124	Ground drive hydraulic motor brake restrictor (HBM) solenoid valve
Y128	Montana master valve solenoid valve

Description of function:

Lower brake valve

The integrated lower brake valve (X) serves as a safety component of the axle hydraulics.
To keep the machine from lowering in case a line breaks, the lower brake valve (X) acts as a pilot-controlled non-return valve.
The lower brake valve (X) also protects the axle cylinders against overload. If a pressure above 250 bar occurs, the ram side of the axle cylinders is relieved to the tank via the unactuated solenoid valves (Y114/Y115 and/or Y116/Y117).

3.6 Shifting aid

4/3-way valve

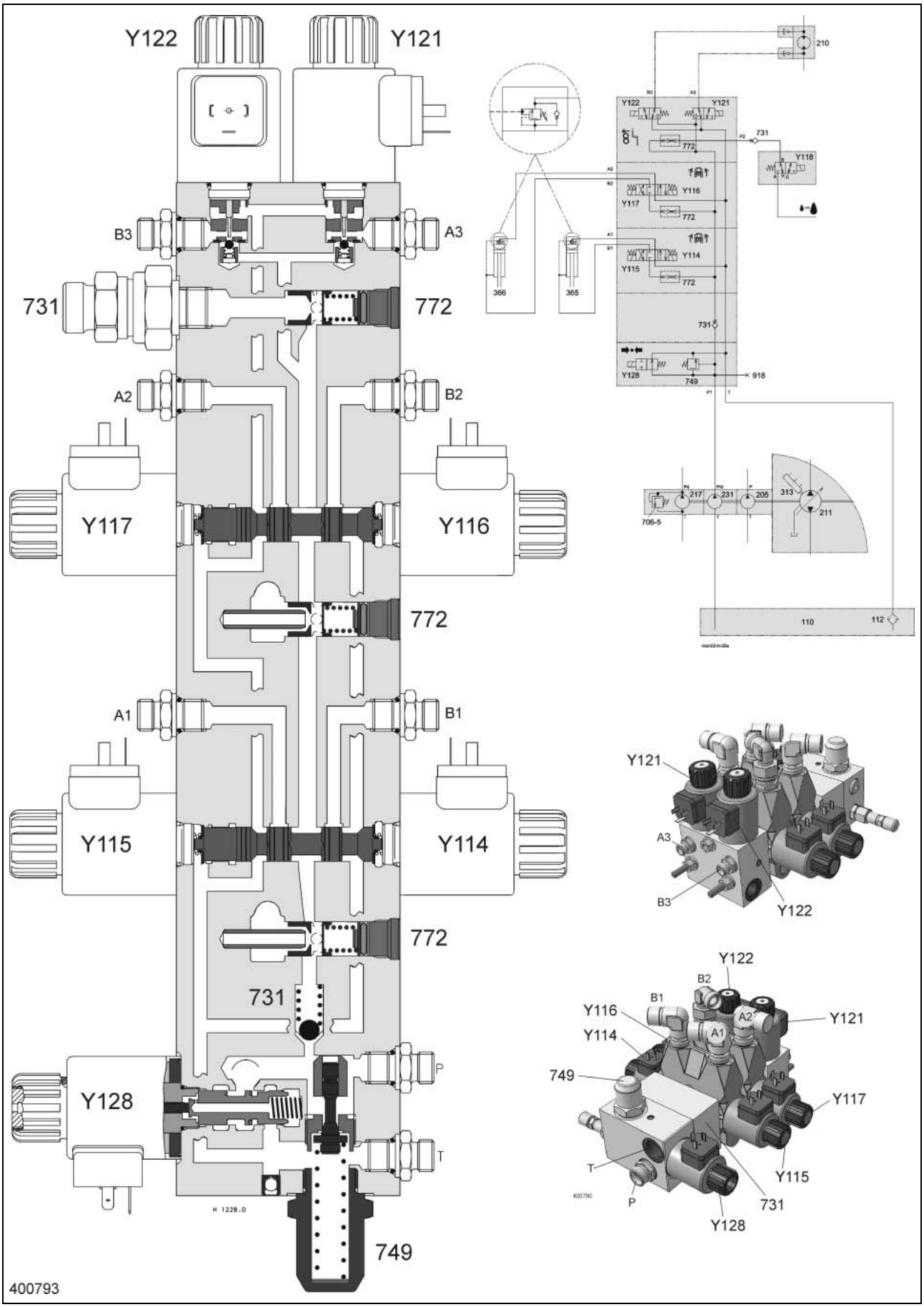

Key to diagram:

110	Oil tank
112	Return filter
205	Working hydraulics pump
210	Ground drive variable displacement motor
211	Ground drive variable-displacement pump
217	Rotary chaff screen drive pump
231	Montana axle control system pump
313	Ground drive pump servo control hydraulic cylinder
365	Raise/lower axle, left hydraulic cylinder
366	Raise/lower axle, right hydraulic cylinder
706-5	Rotary chaff screen pressure relief valve ..... 150 bar
731	Return line valve (non-return valve)
749	Montana pressure relief valve
772	Volume flow controller
918	Axle hydraulics measuring point
Y114	Lower axle on left-hand side solenoid valve
Y115	Raise axle on left-hand side solenoid valve
Y116	Lower axle on right-hand side solenoid valve
Y117	Raise axle on right-hand side solenoid valve
Y118	Additional oil quantity increase valve solenoid valve
Y121	Shifting aid, reverse solenoid valve
Y122	Shifting aid, forward solenoid valve
Y124	Ground drive hydraulic motor brake restrictor (HBM) solenoid valve
Y128	Montana master valve solenoid valve

Description of function:

Shifting aid

When shifting gears, it may happen that the gear cannot be engaged for mechanical reasons (tooth on tooth). In that case, the gear signal light will not light up.

When actuating the shifting aid switch (S91), the solenoid valves (Y122) or (Y121) are energized.

The pressure applied from the axle hydraulics (port P) is directed to the non-return valves via ports (A3) or (B3) (according to the actuation of switch S91). These non-return valves are integrated into the high-pressure ports of the ground drive variable displacement motor (210). Orifice plates which reduce the volume flow to approx. 3…4 l/min. are installed upstream of the non-return valves. With this small volume flow, the ground drive variable displacement motor (210) rotates at a slow speed.

This motion now rotates the gearwheels in the gearbox, thus ensuring engaging of the gearwheels.

3.7 Position of components / Axle control system

LEXION 470 up to serial no. 541 00023 / - LEXION 430 up to serial no. 542 00047

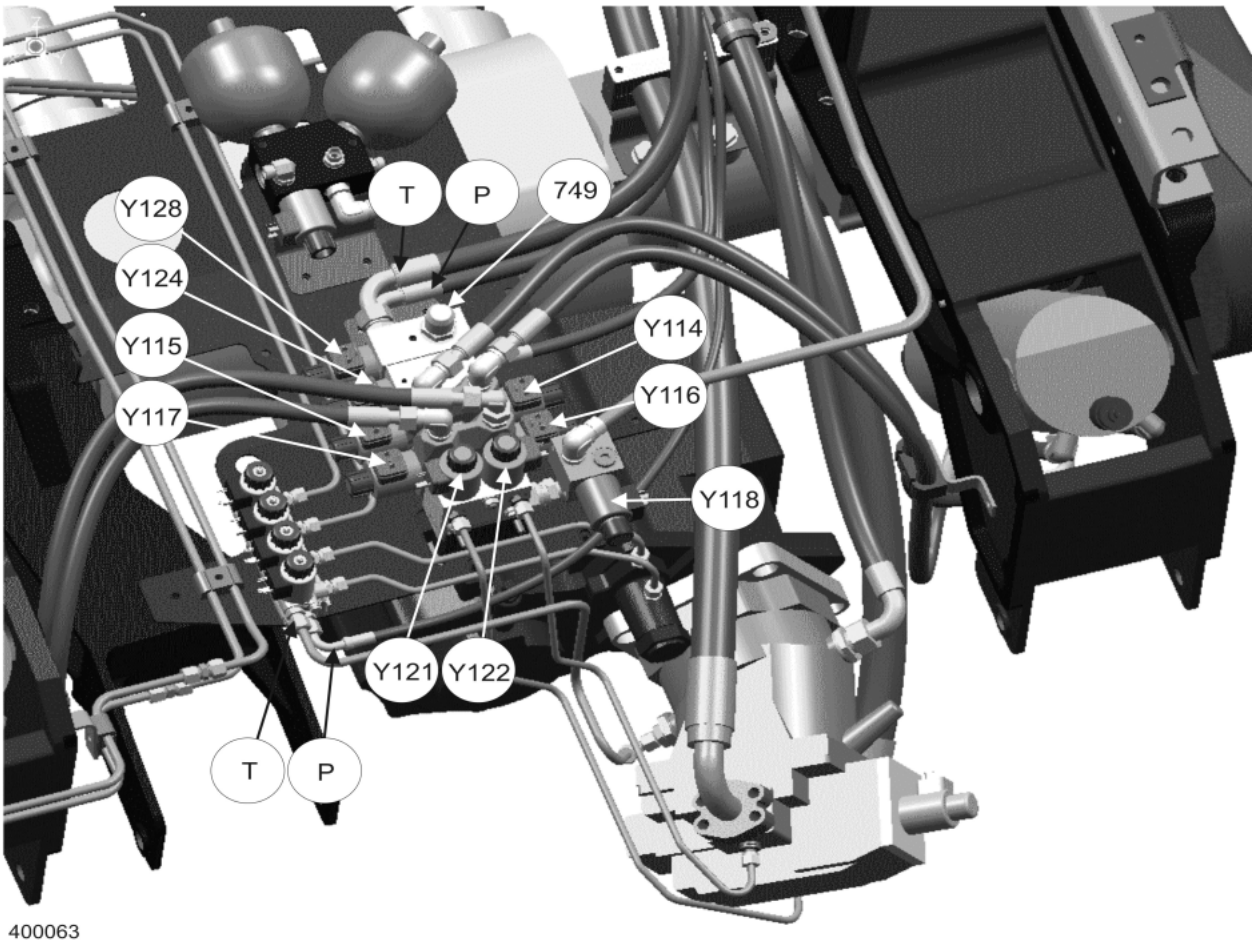

400063

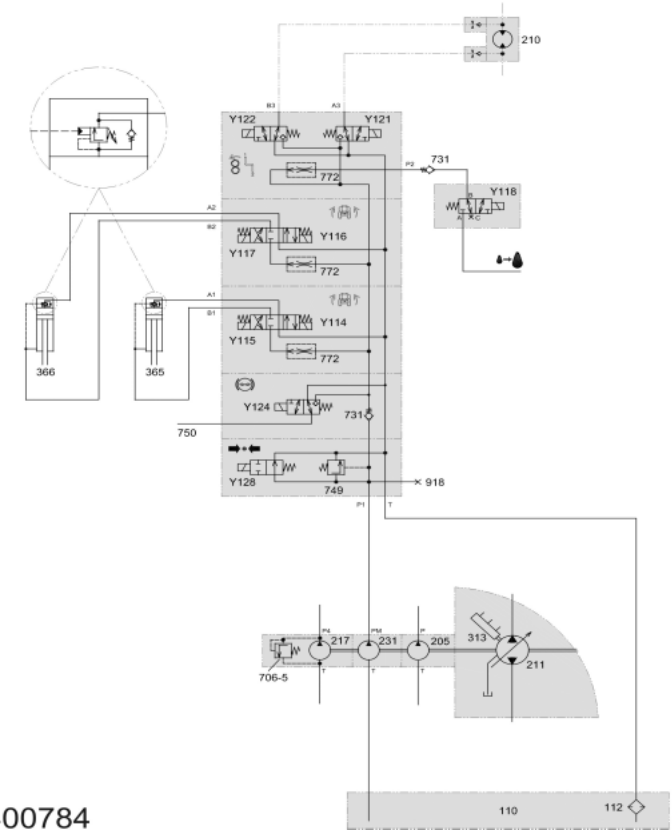

400784

Key to diagram:

110	Oil tank
112	Return filter
205	Working hydraulics pump
210	Ground drive variable displacement motor
211	Ground drive variable-displacement pump
217	Rotary chaff screen drive pump
231	Montana axle control system pump
313	Ground drive pump servo control hydraulic cylinder
365	Raise/lower axle, left hydraulic cylinder
366	Raise/lower axle, right hydraulic cylinder
706-5	Rotary chaff screen pressure relief valve ..... 150 bar
731	Return line valve (non-return valve)
749	Montana pressure relief valve
772	Volume flow controller
918	Axle hydraulics measuring point
Y114	Lower axle on left-hand side solenoid valve
Y115	Raise axle on left-hand side solenoid valve
Y116	Lower axle on right-hand side solenoid valve
Y117	Raise axle on right-hand side solenoid valve
Y118	Additional oil quantity increase valve solenoid valve
Y121	Shifting aid, reverse solenoid valve
Y122	Shifting aid, forward solenoid valve
Y124	Ground drive hydraulic motor brake restrictor (HBM) solenoid valve
Y128	Montana master valve solenoid valve

3.8 Position of components / Axle control system

LEXION 470 from serial no. 541 00024 / LEXION 430 from serial no. 542 00048

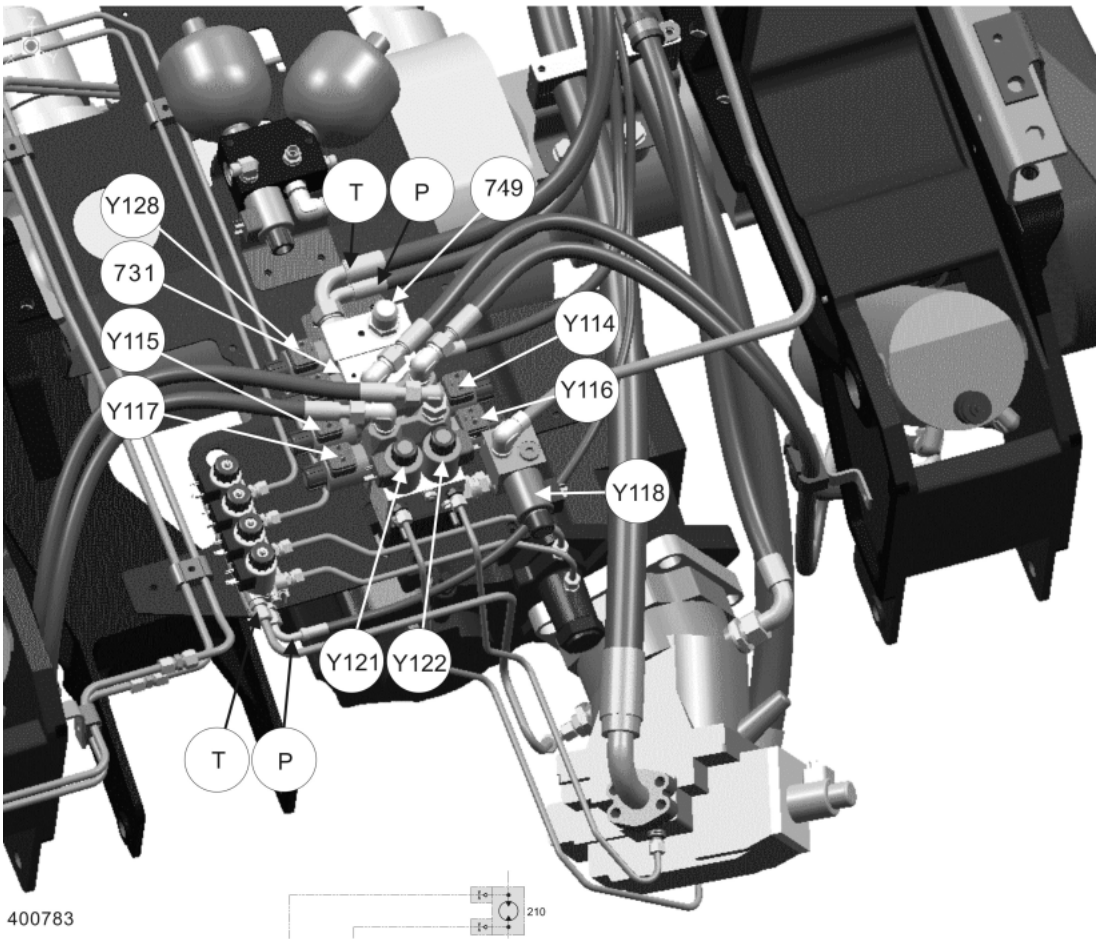

400783

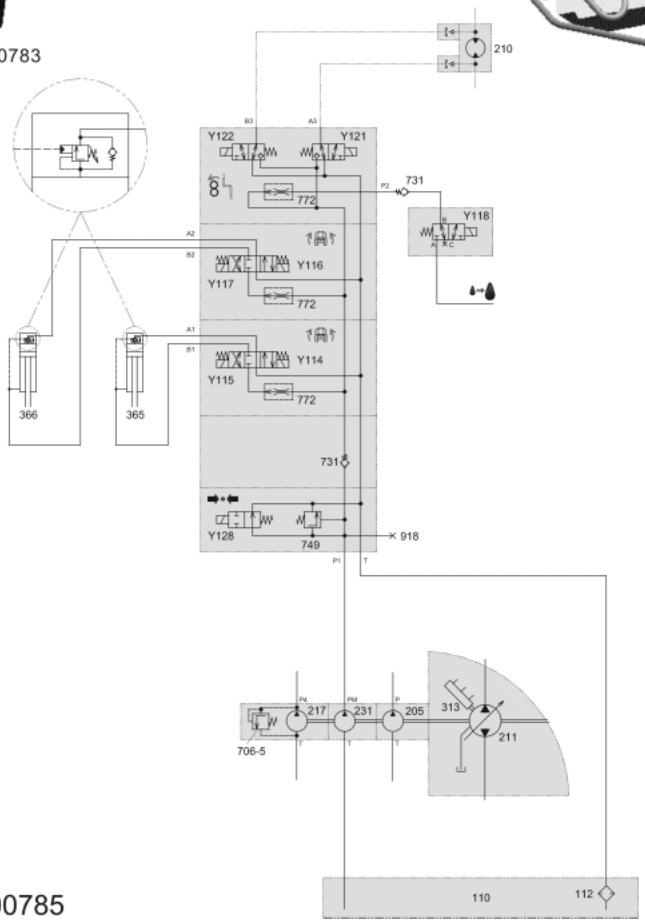

400785

Key to diagram:

110	Oil tank
112	Return filter
205	Working hydraulics pump
210	Ground drive variable displacement motor
211	Ground drive variable-displacement pump
217	Rotary chaff screen drive pump
231	Montana axle control system pump
313	Ground drive pump servo control hydraulic cylinder
365	Raise/lower axle, left hydraulic cylinder
366	Raise/lower axle, right hydraulic cylinder
706-5	Rotary chaff screen pressure relief valve ..... 150 bar
731	Return line valve (non-return valve)
749	Montana pressure relief valve
772	Volume flow controller
918	Axle hydraulics measuring point
Y114	Lower axle on left-hand side solenoid valve
Y115	Raise axle on left-hand side solenoid valve
Y116	Lower axle on right-hand side solenoid valve
Y117	Raise axle on right-hand side solenoid valve
Y118	Additional oil quantity increase valve solenoid valve
Y121	Shifting aid, reverse solenoid valve
Y122	Shifting aid, forward solenoid valve
Y128	Montana master valve solenoid valve

4

Low-pressure Hydraulic System

4.1 Low-pressure hydraulic system circuit diagram **4-4**

4.2 Low-pressure hydraulic system solenoid valves
3/2 way differential lock valve, parking brake, gearshift 1st and 2nd gear **4-6**

4.3 Hydraulic cylinder of low-pressure hydraulic system
Differential lock **4-8**
Parking brake 4-10
Gearshift 1st and 2nd gear 4-12

4.4 Position of low-pressure hydraulic system components Gearbox **4-14**

4.1

Low-pressure hydraulic system circuit diagram

4.1 Low-pressure hydraulic system circuit diagram

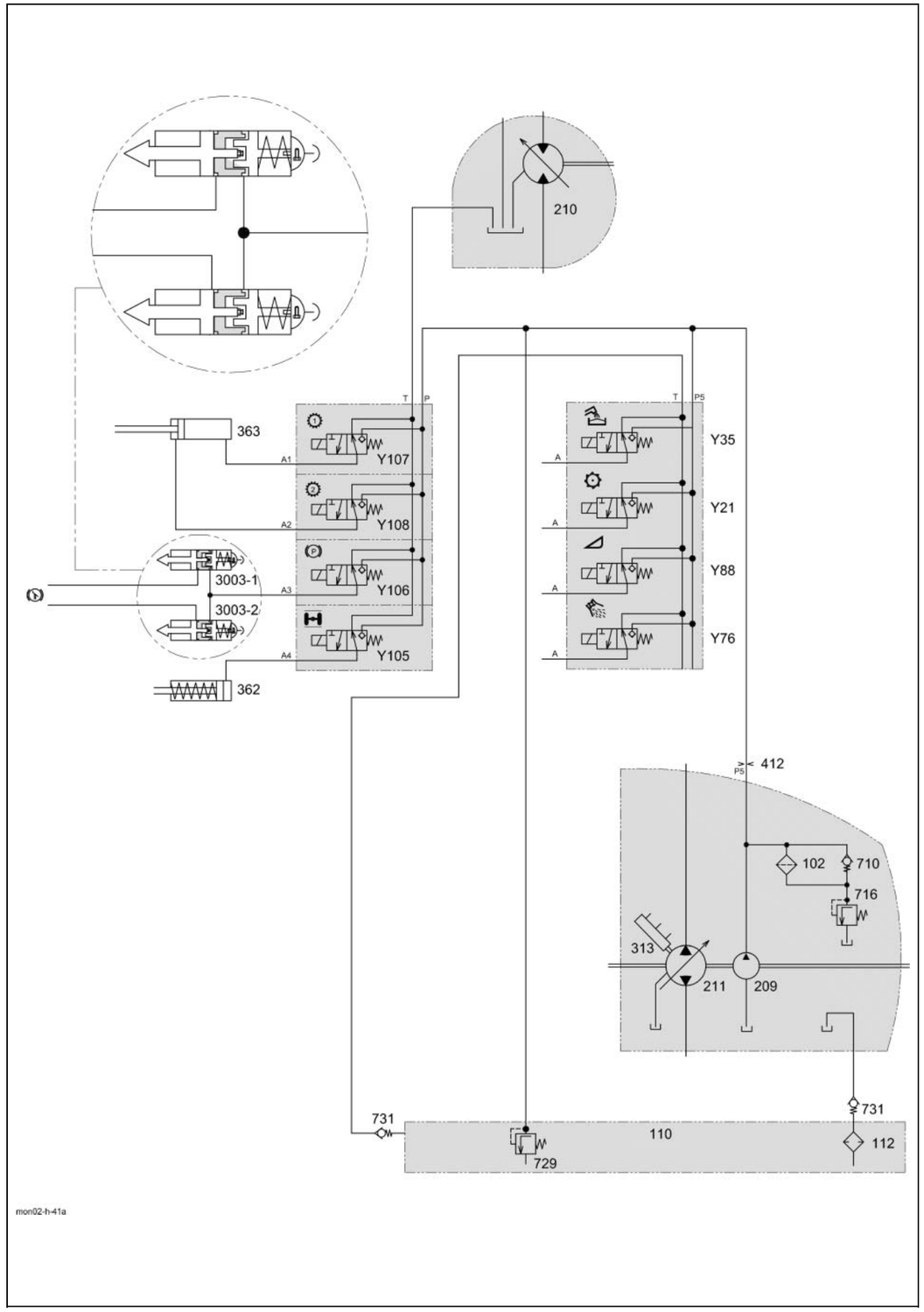

Key to diagram:

102	Pressure filter
110	Oil tank
112	Return filter
209	Ground drive feed pump
210	Ground drive variable displacement motor
211	Ground drive variable-displacement pump
362	Differential lock hydraulic cylinder
363	Gearbox shifting hydraulic cylinder
3003-1	Service brake / Parking brake hydraulic cylinder
3003-2	Service brake / Parking brake hydraulic cylinder
412	Orifice plate M .....2.0 mm
710	Ground drive filter bypass valve
716	Ground drive feed pressure relief valve
729	Low-pressure hydraulic system pressure relief valve.....19^{+4} bar
731	Return line valve (non-return valve)
Y21	Threshing mechanism clutch engage solenoid valve
Y35	Grain tank unloading solenoid valve
Y76	Straw chopper coupling solenoid valve
Y88	Front attachment clutch solenoid valve
Y105	Differential lock solenoid valve
Y106	Parking brake solenoid valve
Y107	Gearbox shift 1st gear solenoid valve
Y108	Gearbox shift 2nd gear solenoid valve

Malfunctions:

When there are malfunctions in the low-pressure hydraulic system, only consumers which have been shut-down can cause a pressure drop in the system. In this way, the reason of a malfunction can be quickly determined by actuating the individual functions while keeping a pressure gauge connected.

Note: The orifice plate (412) limits the oil flow to the low-pressure hydraulic system to **5-7 l/min** at the rated pressure. This ensures that the feed pressure for the hydrostatic ground drive will not collapse even in case of large leaks in the low-pressure hydraulic system.

4.2 Low-pressure hydraulic system solenoid valves

3/2 way differential lock valve, parking brake, gearshift 1st and 2nd gear

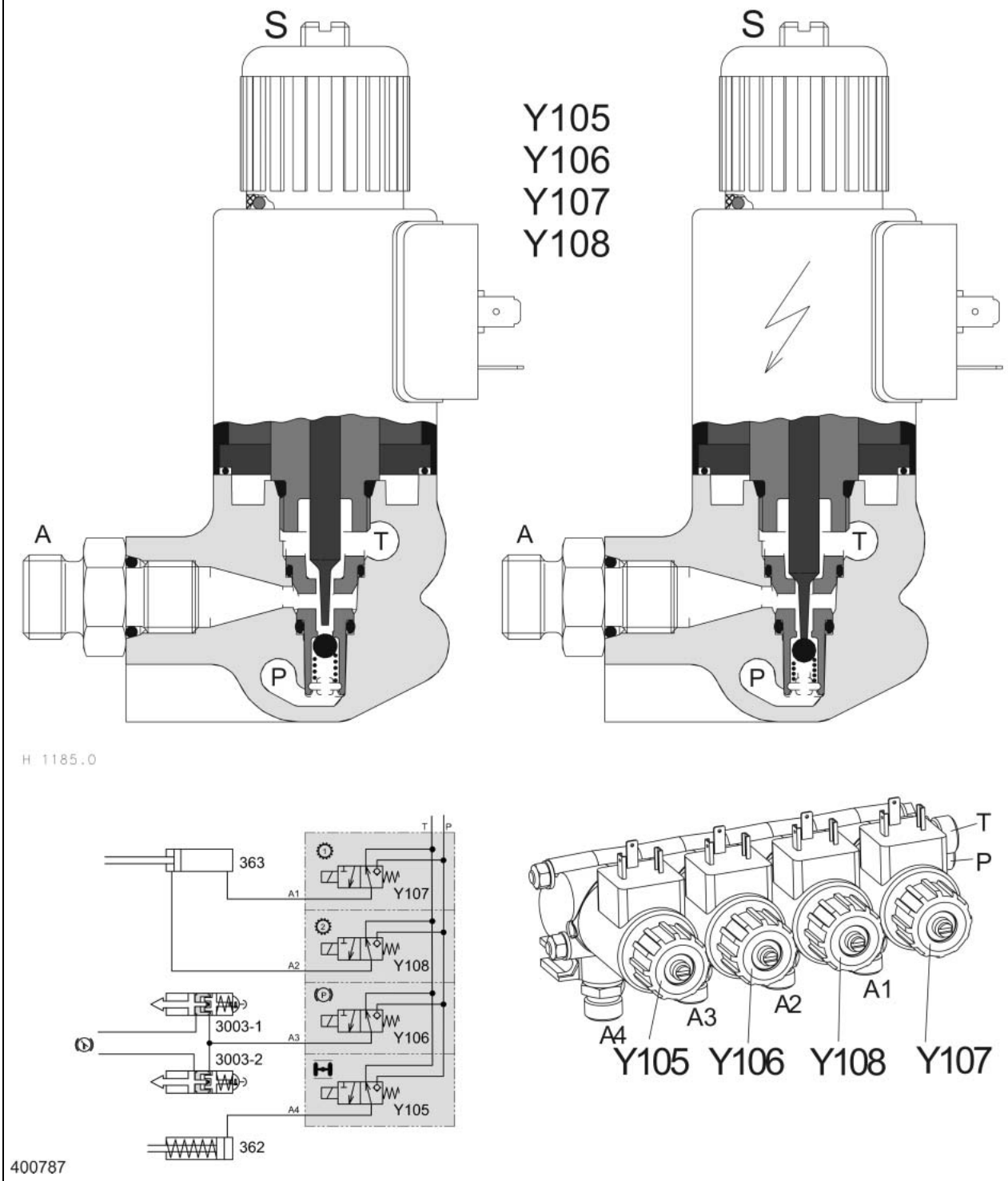

Key to diagram:

362	Differential lock hydraulic cylinder
363	Gearbox shifting hydraulic cylinder
3003-1	Service brake / Parking brake hydraulic cylinder
3003-2	Service brake / Parking brake hydraulic cylinder
Y105	Differential lock solenoid valve
Y106	Parking brake solenoid valve
Y107	Gearbox shift 1st gear solenoid valve
Y108	Gearbox shift 2nd gear solenoid valve
T	Tank port
P	Low-pressure port
A	Hydraulic cylinder port
S	Emergency operation screw

Description of function:

With the solenoid valve (Y105, Y106, Y107,Y108) de-energised, a connection is provided from the hydraulic cylinder (A) to the return line into the tank (T) via the conical seat in the valve insert. Here the low pressure (P) applied is blocked by the spherical seat in the valve insert.

When the corresponding solenoid valve (Y105, Y106, Y107,Y108) for a given function is actuated, the plunger opens the ball in the valve insert and closes the return line (T) with the conical seat. The low-pressure (P) is thus applied to the hydraulic cylinder (362, 363, 3003-1 and 3003-2) via the consumer port (A) whereas the return line to the tank (T) is blocked.

Note: In case of emergency operation, screw (S) must be slightly screwed in up to the stop (otherwise the valve seat will be damaged) to make the conical seat in the valve insert close the return line to the tank (T) tightly.

4.3 Hydraulic cylinder of low-pressure hydraulic system
Differential lock

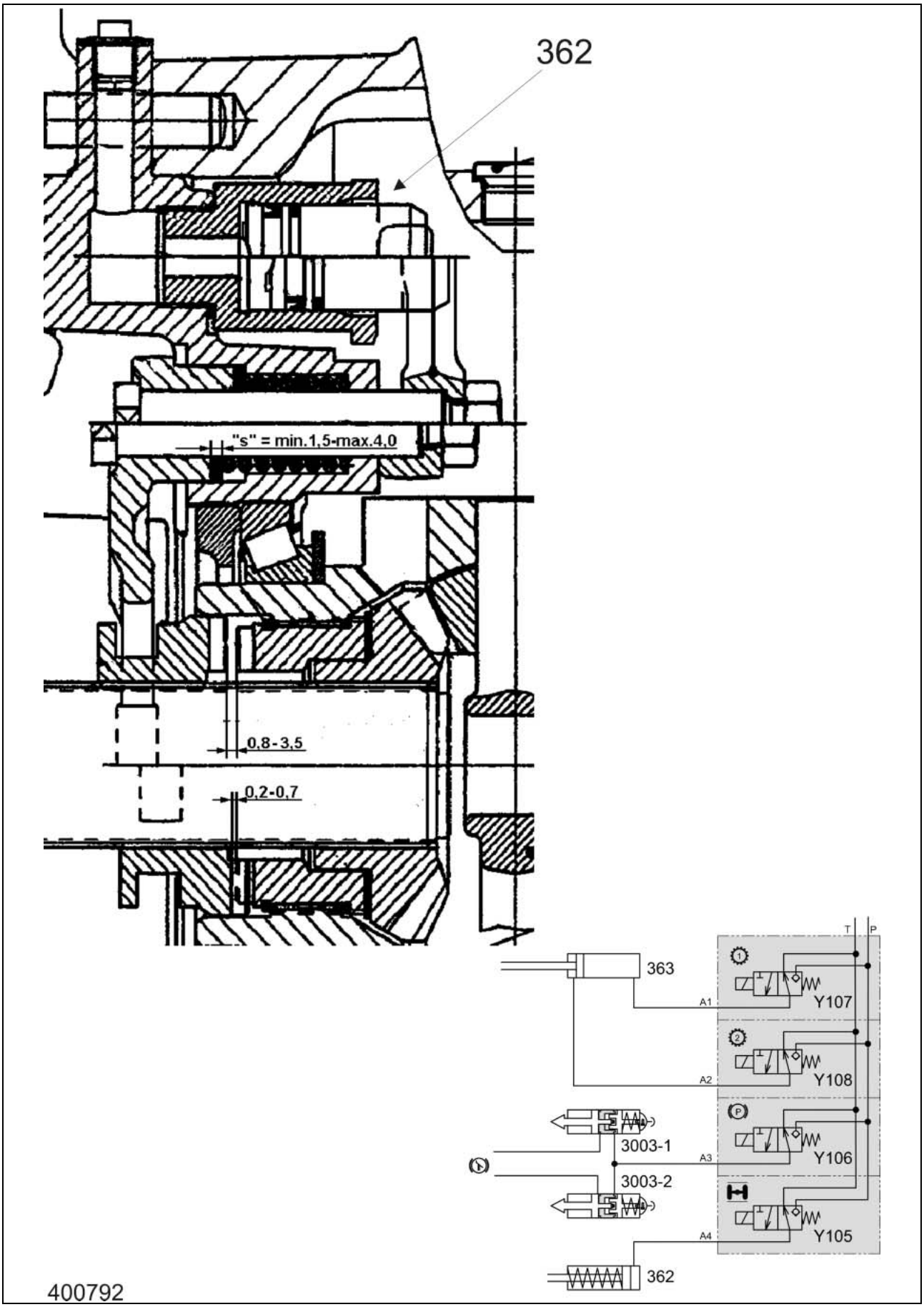

Key to diagram:

362	Differential lock hydraulic cylinder
363	Gearbox shifting hydraulic cylinder
3003-1	Service brake / Parking brake hydraulic cylinder
3003-2	Service brake / Parking brake hydraulic cylinder
Y105	Differential lock solenoid valve
Y106	Parking brake solenoid valve
Y107	Gearbox shift 1st gear solenoid valve
Y108	Gearbox shift 2nd gear solenoid valve
T	Tank port
P	Low-pressure port
A	Hydraulic cylinder port

Description of function:

Using a shifter fork, the hydraulic cylinder (362) actuates the dog sleeve of the differential lock. The dog sleeve travel must be adjusted as shown in the drawing.

Hydraulic cylinders of low-pressure hydraulic system
Parking brake

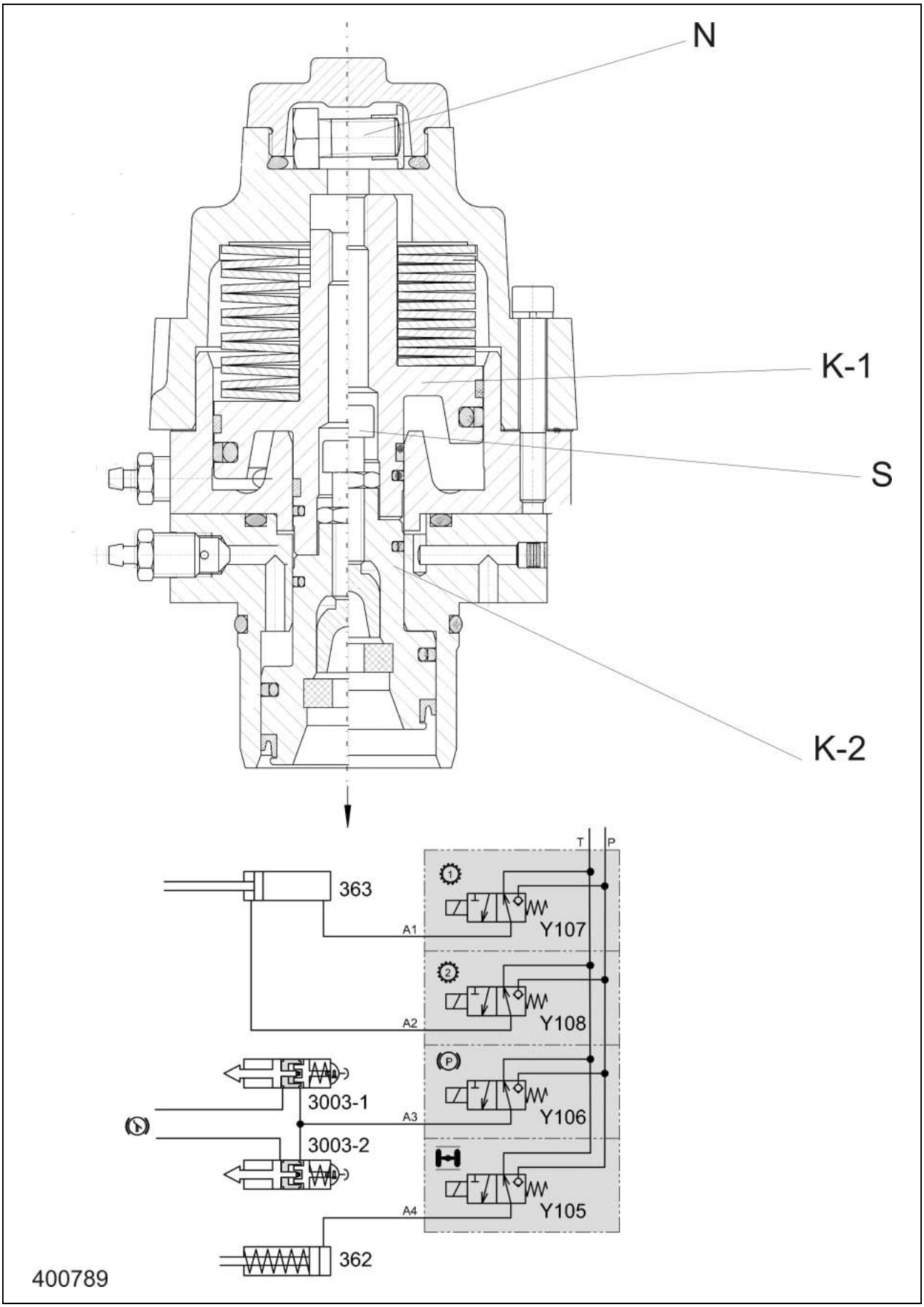

Key to diagram:

K -1	Release parking brake ram
K -2	Service brake ram
S	Brake air gap adjusting screw
N	Parking brake emergency operation (mechanical)
362	Differential lock hydraulic cylinder
363	Gearbox shifting hydraulic cylinder
3003-1	Service brake / Parking brake hydraulic cylinder
3003-2	Service brake / Parking brake hydraulic cylinder
Y105	Differential lock solenoid valve
Y106	Parking brake solenoid valve
Y107	Gearbox shift 1st gear solenoid valve
Y108	Gearbox shift 2nd gear solenoid valve
T	Tank port
P	Low-pressure port
A	Hydraulic cylinder port

Description of function:

Emergency operation

The parking brake system consists of a spring-type accumulator in the brake cylinders. The low-pressure circuit of the machine is used for releasing the parking brake.

If the hydraulic circuit fails (depending on the diesel engine!), the parking brake can be released manually, using screw N. To do this, screw in screw N – see Repair Manual.

Brake air gap

The Montana brake system is a wet multi-disc brake. To ensure free-wheeling of the discs when the brake is not actuated, an air gap can be adjusted at screw S – see Repair Manual.

Hydraulic cylinders of low-pressure hydraulic system
Gearshift 1st and 2nd gear

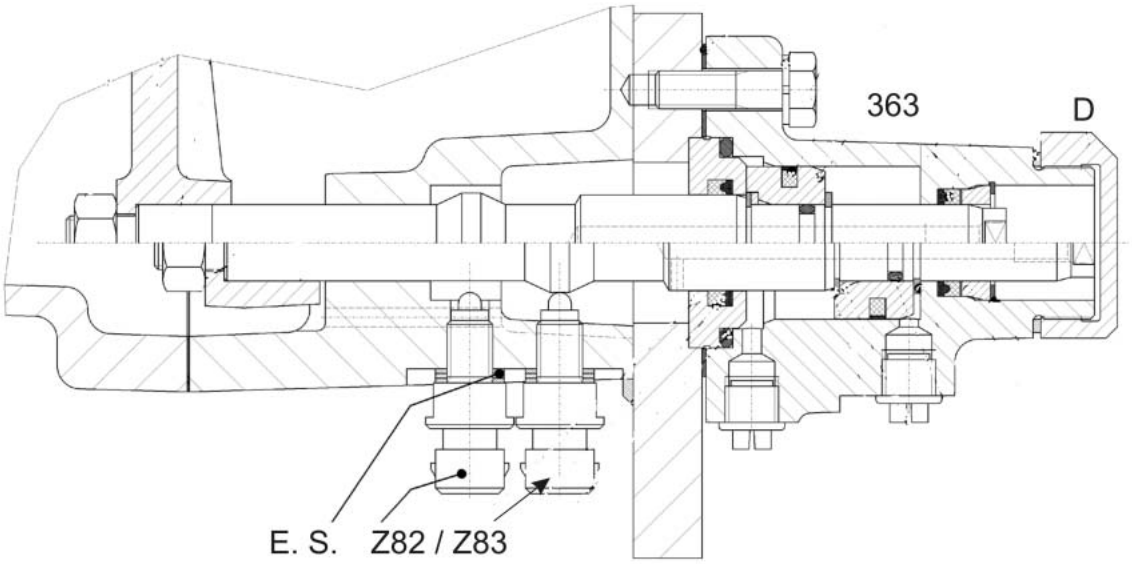

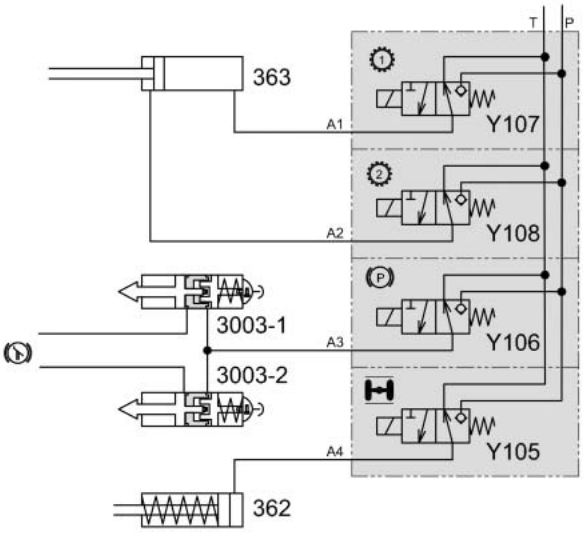

400791

Key to diagram:

362	Differential lock hydraulic cylinder
363	Gearbox shifting hydraulic cylinder
3003-1	Service brake / Parking brake hydraulic cylinder
3003-2	Service brake / Parking brake hydraulic cylinder
Y105	Differential lock solenoid valve
Y106	Parking brake solenoid valve
Y107	Gearbox shift 1st gear solenoid valve
Y108	Gearbox shift 2nd gear solenoid valve
Z82	1st gear engaged actual value switch
Z83	2nd gear engaged actual value switch
T	Tank port
P	Low-pressure port
A	Hydraulic cylinder port
E.S.	Adjusting washers
D	Cap

Description of function:

In gearbox shifting, the shifter rail is actuated via the hydraulic cylinder (363).
Depending on the hydraulic cylinder position, the 1st or 2nd gear is engaged.
The engaged gear is displayed on the instrument panel by means of the actual value switches (Z82/Z83).

Adjustment of actual value switches (Z82/Z83)

The actual value switches (Z82/Z83) are adjusted using adjusting washers (E.S.). The signal change is adjusted to be approx. 3.5 mm ahead of the end position of the shifter rail.

Gearbox shifting emergency operation

Setting the gearbox to neutral manually requires a special tool being part of the machine. To do this, remove cap (D) and screw in the special tool completely – see Repair Manual.

4.4 Position of low-pressure hydraulic system components
Gearbox

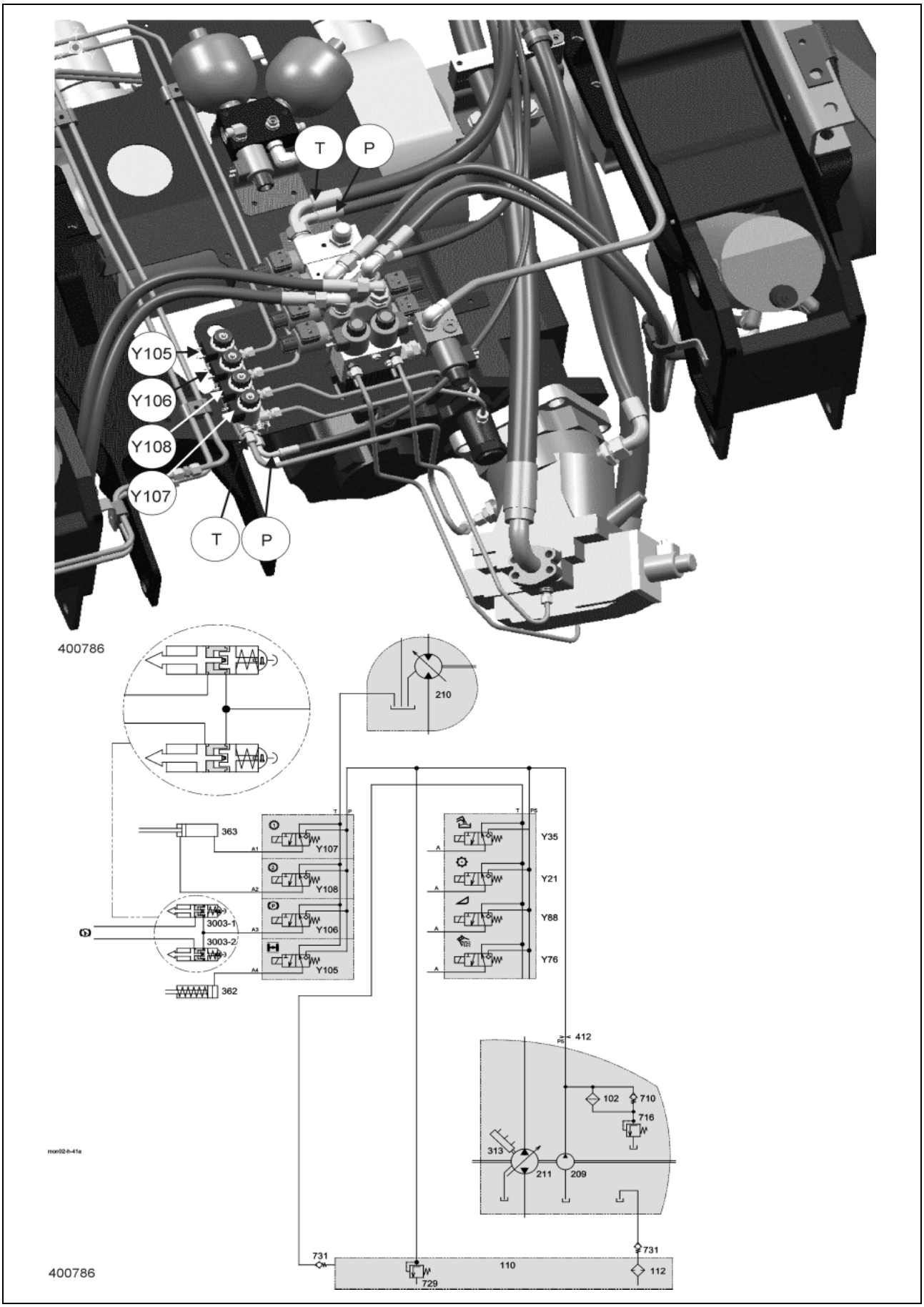

Key to diagram:

102	Pressure filter
110	Oil tank
112	Return filter
209	Ground drive feed pump
210	Ground drive variable displacement motor
211	Ground drive variable-displacement pump
313	Ground drive pump servo control hydraulic cylinder
362	Differential lock hydraulic cylinder
363	Gearbox shifting hydraulic cylinder
3003-1	Service brake / Parking brake hydraulic cylinder
3003-2	Service brake / Parking brake hydraulic cylinder
412	Orifice plate M ..... 2.0 mm
710	Ground drive filter bypass valve
716	Ground drive feed pressure relief valve
729	Low-pressure hydraulic system pressure relief valve ..... 19^{+4} bar
731	Return line valve (non-return valve)
Y21	Threshing mechanism clutch engage solenoid valve
Y35	Grain tank unloading solenoid valve
Y76	Straw chopper coupling solenoid valve
Y88	Front attachment clutch solenoid valve
Y105	Differential lock solenoid valve
Y106	Parking brake solenoid valve
Y107	Gearbox shift 1st gear solenoid valve
Y108	Gearbox shift 2nd gear solenoid valve
T	Tank port
P	Low-pressure port
A	Hydraulic cylinder port

5

Ground drive hydraulics

5.1 Montana ground drive hydraulics circuit diagram
LEXION MONTANA 470 up to serial no. 541 00023
LEXION MONTANA 430 up to serial no. 542 00047 ..... **5-4**

5.2 Montana ground drive hydraulics circuit diagram
LEXION MONTANA 470 from serial no. 541 00024
LEXION MONTANA 430 from serial no. 542 00048 ..... **5-6**

5.3 Ground drive control pressure
2/2 way solenoid valve **5-8**

5.4 Motor unit
Variable-displacement motor **5-10**

5.5 Brake restrictor **5-12**

5.1

Montana ground drive hydraulics circuit diagram

- LEXION 470 up to serial no. 541 00023

- LEXION 430 up to serial no. 542 00047

5.1 Montana ground drive hydraulics circuit diagram
LEXION MONTANA 470 up to serial no. 541 00023 / LEXION MONTANA 430 up to serial no. 542 00047

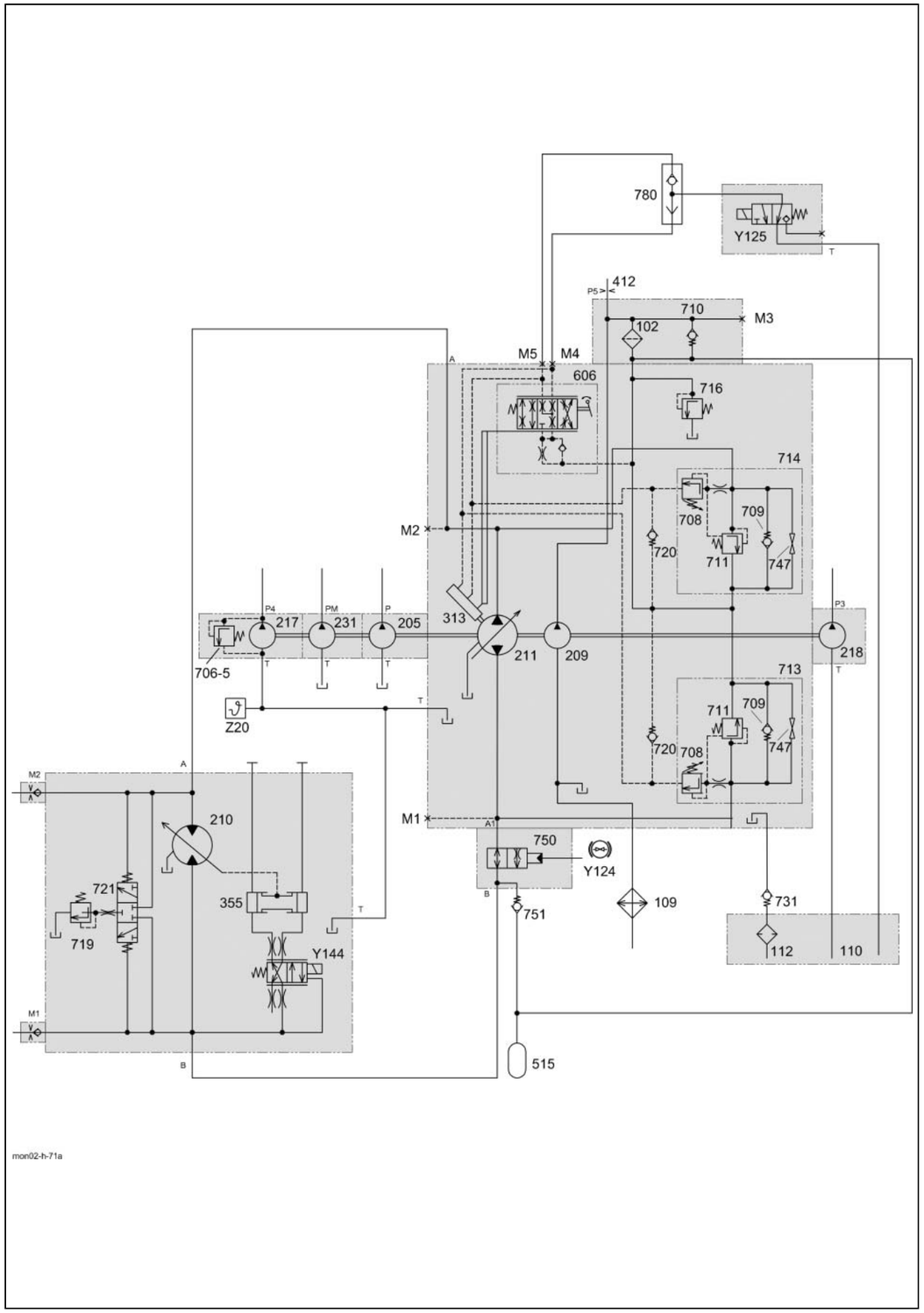

Key to diagram:

102	Pressure filter
109	Hydraulic system oil cooler
110	Oil tank
112	Return filter
205	Working hydraulics pump
209	Ground drive feed pump
210	Ground drive variable displacement motor
211	Ground drive variable-displacement pump
217	Rotary chaff screen drive pump
218	Steering hydraulics pump
231	Montana axle control system pump
313	Ground drive pump servo control hydraulic cylinder
355	Ground drive motor servo control hydraulic cylinder
412	Orifice plate M ..... 2.0 mm
515	Accumulator 0.75 l / 16 bar
606	Ground drive servo control
706-5	Rotary chaff screen pressure relief valve 150 bar
708	Ground drive pressure cut-off valve
709	Ground drive feed valve
710	Ground drive filter bypass valve
711	Ground drive high-pressure relief valve
713	Ground drive multi-function valve, reverse
714	Ground drive multi-function valve, forward
716	Ground drive feed pressure relief valve
719	Ground drive purge pressure control valve
720	Ground drive control pressure relief valve
721	Ground drive flush-out shuttle valve
731	Return line valve (non-return valve)
747	Ground drive short-circuit valve
750	Brake restrictor valve
751	External feed valve (non-return valve)
780	Shuttle valve
M1	Ground drive hydraulics high pressure forward measuring point
M2	Ground drive hydraulics high pressure backward measuring point
M4	Ground drive hydraulics control pressure forward measuring point
M5	Ground drive hydraulics control pressure backward measuring point
Y124	Ground drive hydraulic motor brake restrictor (HBM) solenoid valve
Y125	Ground drive control pressure solenoid valve
Y144	Ground drive variable displacement motor solenoid valve
Z20	Hydraulic oil temperature actual value switch

Note: As compared with the standard machine, the pressure cut-off valves (708) of the Montana machines are set to 470 bar.

5.2

Montana ground drive hydraulics circuit diagram

- LEXION 470 from serial no. 541 00024

- LEXION 430 from serial no. 542 00048

5.2 Montana ground drive hydraulics circuit diagram
LEXION MONTANA 470 from serial no. 541 00024 / LEXION MONTANA 430 from serial no. 542 00048

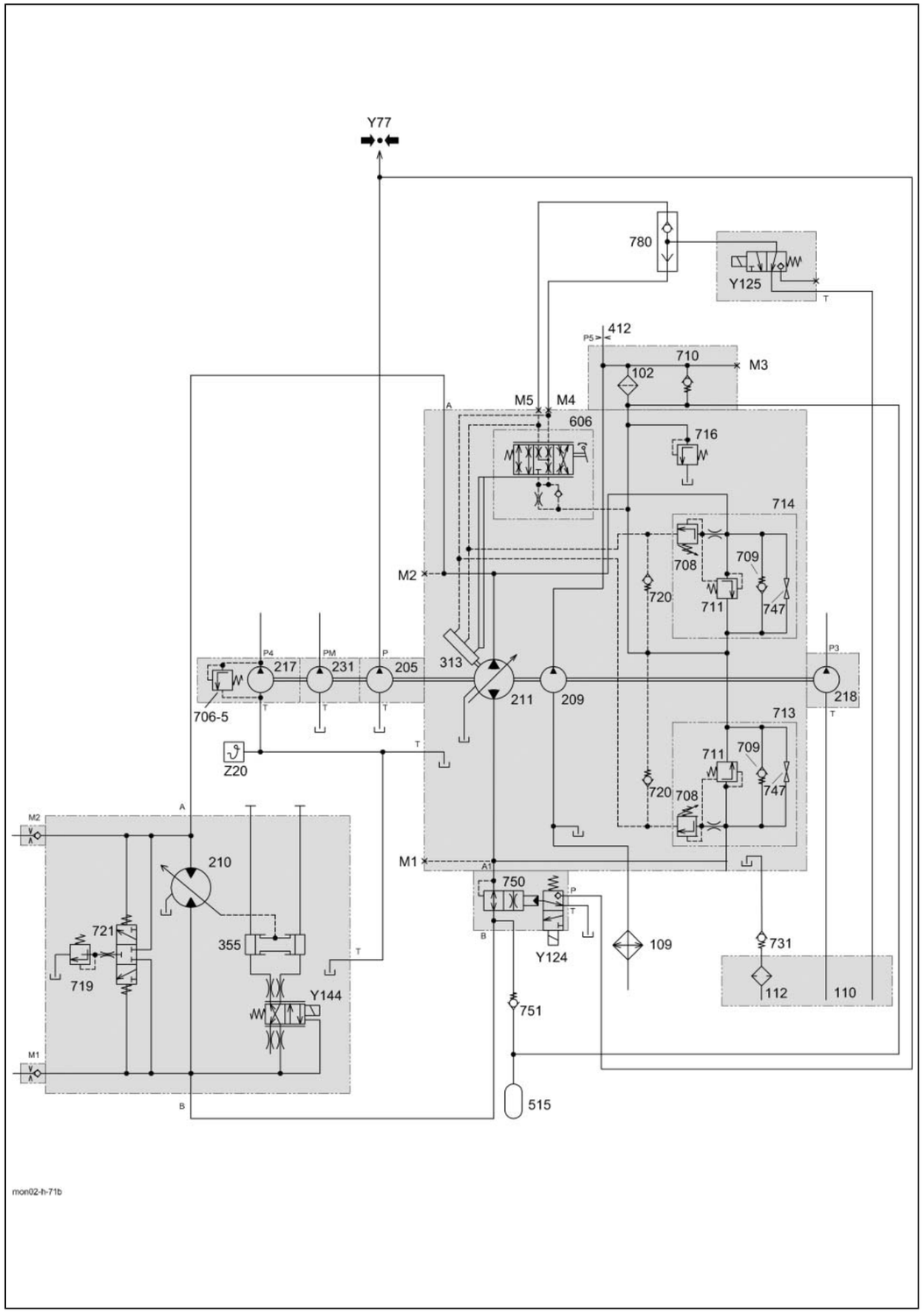

Key to diagram:

102	Pressure filter
109	Hydraulic system oil cooler
110	Oil tank
112	Return filter
205	Working hydraulics pump
209	Ground drive feed pump
210	Ground drive variable displacement motor
211	Ground drive variable-displacement pump
217	Rotary chaff screen drive pump
218	Steering hydraulics pump
231	Montana axle control system pump
313	Ground drive pump servo control hydraulic cylinder
355	Ground drive motor servo control hydraulic cylinder
412	Orifice plate M ..... 2.0 mm
515	Accumulator 0.75 l / 16 bar
606	Ground drive servo control
706-5	Rotary chaff screen pressure relief valve 150 bar
708	Ground drive pressure cut-off valve
709	Ground drive feed valve
710	Ground drive filter bypass valve
711	Ground drive high-pressure relief valve
713	Ground drive multi-function valve, reverse
714	Ground drive multi-function valve, forward
716	Ground drive feed pressure relief valve
719	Ground drive purge pressure control valve
720	Ground drive control pressure relief valve
721	Ground drive flush-out shuttle valve
731	Return line valve (non-return valve)
747	Ground drive short-circuit valve
750	Brake restrictor valve
751	External feed valve (non-return valve)
780	Shuttle valve
M1	Ground drive hydraulics high pressure forward measuring point
M2	Ground drive hydraulics high pressure backward measuring point
M4	Ground drive hydraulics control pressure forward measuring point
M5	Ground drive hydraulics control pressure backward measuring point
Y77	Working hydraulics master valve solenoid valve
Y124	Ground drive hydraulic motor brake restrictor (HBM) solenoid valve
Y125	Ground drive control pressure solenoid valve
Y144	Ground drive variable displacement motor solenoid valve
Z20	Hydraulic oil temperature actual value switch

Note: As compared with the standard machine, the pressure cut-off valves (708) of the Montana machines are set to 470 bar.

5.3 Ground drive control pressure

2/2 way solenoid valve

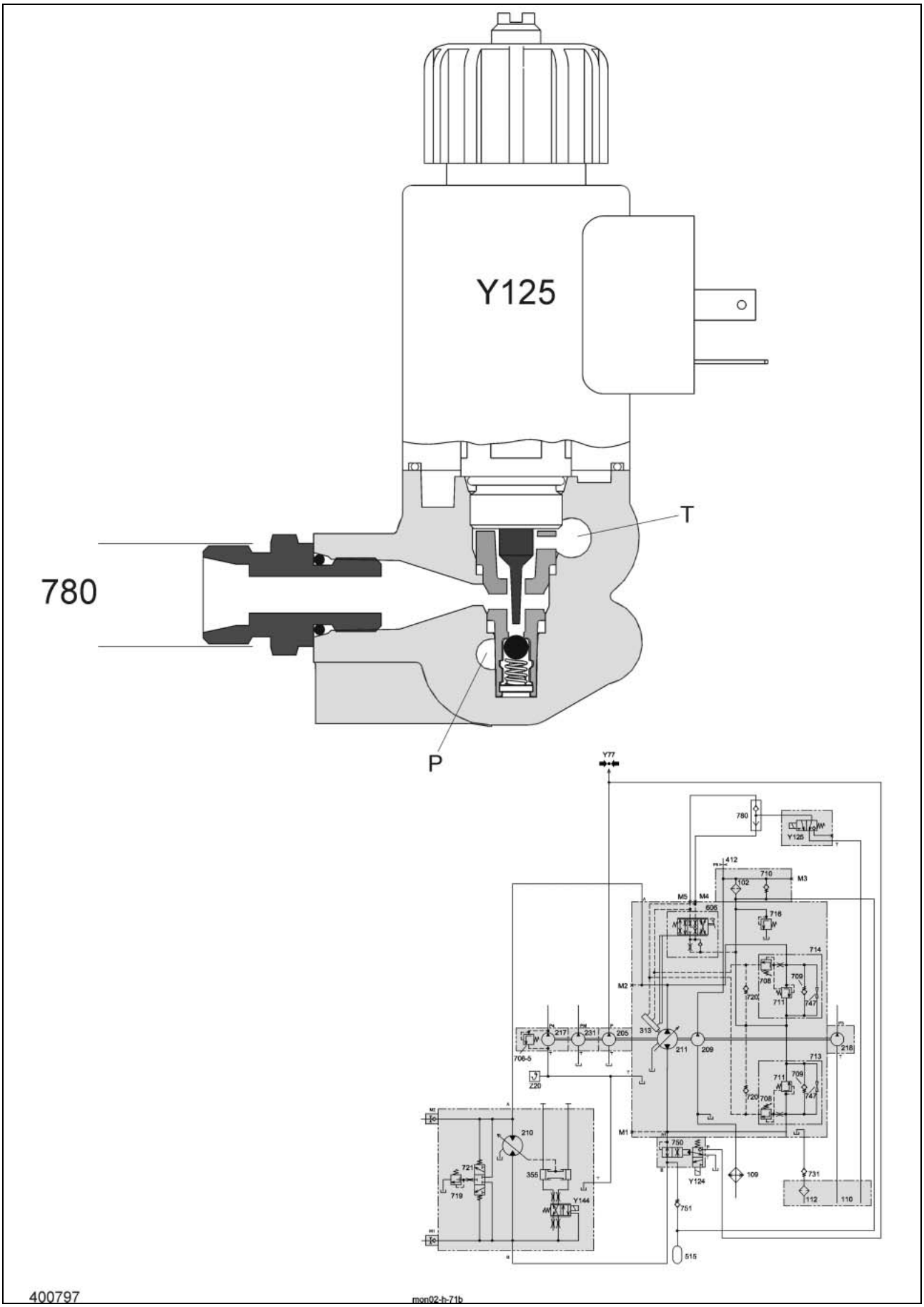

Key to diagram:

102	Pressure filter
109	Hydraulic system oil cooler
110	Oil tank
112	Return filter
205	Working hydraulics pump
209	Ground drive feed pump
210	Ground drive variable displacement motor
211	Ground drive variable-displacement pump
217	Rotary chaff screen drive pump
218	Steering hydraulics pump
231	Montana axle control system pump
313	Ground drive pump servo control hydraulic cylinder
355	Ground drive motor servo control hydraulic cylinder
412	Orifice plate M .....2.0 mm
515	Accumulator 0.75 l / 16 bar
606	Ground drive servo control
706-5	Rotary chaff screen pressure relief valve 150 bar
708	Ground drive pressure cut-off valve
709	Ground drive feed valve
710	Ground drive filter bypass valve
711	Ground drive high-pressure relief valve
713	Ground drive multi-function valve, reverse
714	Ground drive multi-function valve, forward
716	Ground drive feed pressure relief valve
719	Ground drive purge pressure control valve
720	Ground drive control pressure relief valve
721	Ground drive flush-out shuttle valve
731	Return line valve (non-return valve)
747	Ground drive short-circuit valve
750	Brake restrictor valve
751	External feed valve (non-return valve)
780	Shuttle valve
M1	Ground drive hydraulics high pressure forward measuring point
M2	Ground drive hydraulics high pressure backward measuring point
M4	Ground drive hydraulics control pressure forward measuring point
M5	Ground drive hydraulics control pressure backward measuring point
Y77	Working hydraulics master valve solenoid valve
Y124	Ground drive hydraulic motor brake restrictor (HBM) solenoid valve
Y125	Ground drive control pressure solenoid valve
Y144	Ground drive variable displacement motor solenoid valve
Z20	Hydraulic oil temperature actual value switch

Description of function:

The **unactuated** ground drive control pressure solenoid valve (Y125) swings the ground drive variable displacement pump (210) to zero delivery when **both** brake pedals are pressed (Z84, Z85).

The ground drive variable displacement pump (210) also swings to zero delivery when the manual gearbox (Z82/Z83) does not identify an engaged gear.

When the ground drive hydraulics control pressure collapses, the hydraulic pump feed (A) is connected to tank (T).

5.4 Motor unit
Variable-displacement motor

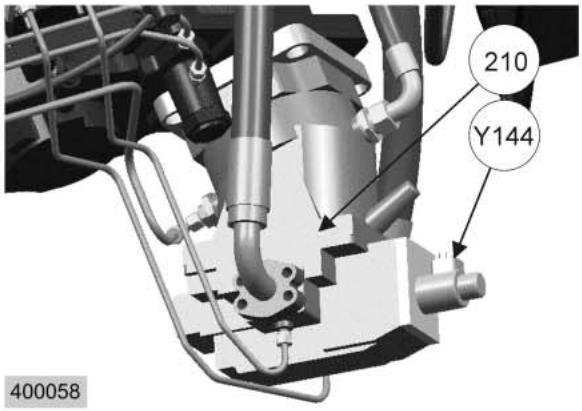

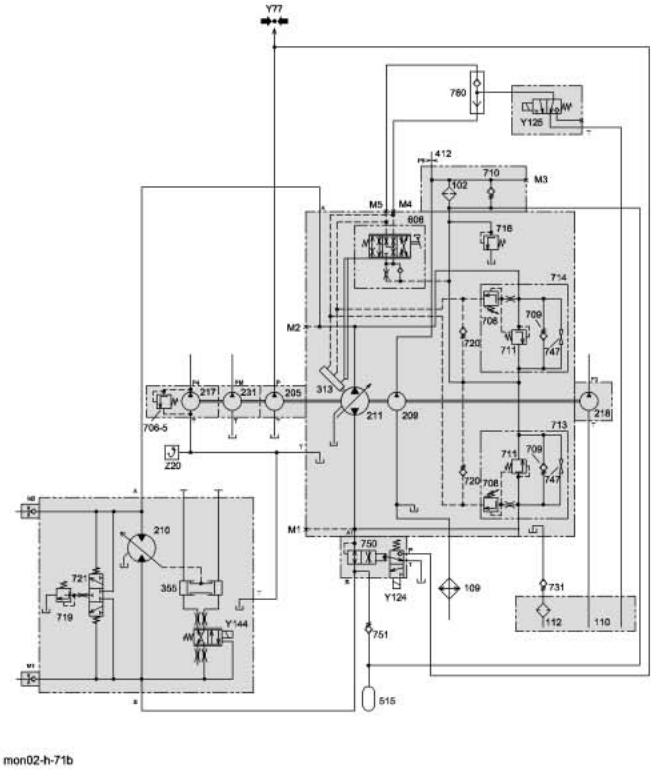

400805

Key to diagram:

102	Pressure filter
109	Hydraulic system oil cooler
110	Oil tank
112	Return filter
205	Working hydraulics pump
209	Ground drive feed pump
210	Ground drive variable displacement motor
211	Ground drive variable-displacement pump
217	Rotary chaff screen drive pump
218	Steering hydraulics pump
231	Montana axle control system pump
313	Ground drive pump servo control hydraulic cylinder
355	Ground drive motor servo control hydraulic cylinder
412	Orifice plate M .....2.0 mm
515	Accumulator 0.75 l / 16 bar
606	Ground drive servo control
706-5	Rotary chaff screen pressure relief valve 150 bar
708	Ground drive pressure cut-off valve
709	Ground drive feed valve
710	Ground drive filter bypass valve
711	Ground drive high-pressure relief valve
713	Ground drive multi-function valve, reverse
714	Ground drive multi-function valve, forward
716	Ground drive feed pressure relief valve
719	Ground drive purge pressure control valve
720	Ground drive control pressure relief valve
721	Ground drive flush-out shuttle valve
731	Return line valve (non-return valve)
747	Ground drive short-circuit valve
750	Brake restrictor valve
751	External feed valve (non-return valve)
780	Shuttle valve
M1	Ground drive hydraulics high pressure forward measuring point
M2	Ground drive hydraulics high pressure backward measuring point
M4	Ground drive hydraulics control pressure forward measuring point
M5	Ground drive hydraulics control pressure backward measuring point
Y77	Working hydraulics master valve solenoid valve
Y124	Ground drive hydraulic motor brake restrictor (HBM) solenoid valve
Y125	Ground drive control pressure solenoid valve
Y144	Ground drive variable displacement motor solenoid valve
Z20	Hydraulic oil temperature actual value switch

Description of function:

When solenoid valve (Y144) is actuated, the ground drive variable displacement motor (210) is set to large input volume. This increases the drive torque (tractive force) and reduces the ground speed.

Actuating switch (S92) in the cab changes the ground drive variable displacement motor (210) to the large input volume by electro-hydraulic means.

Ground drive variable displacement motor high pressure control

When the pressure in the high-pressure circuit of the ground drive variable displacement motor (210) rises above 350 bar, the ground drive variable displacement motor (210) automatically changes to the large input volume by means of an internal hydraulic control unit.

5.5 Brake restrictor

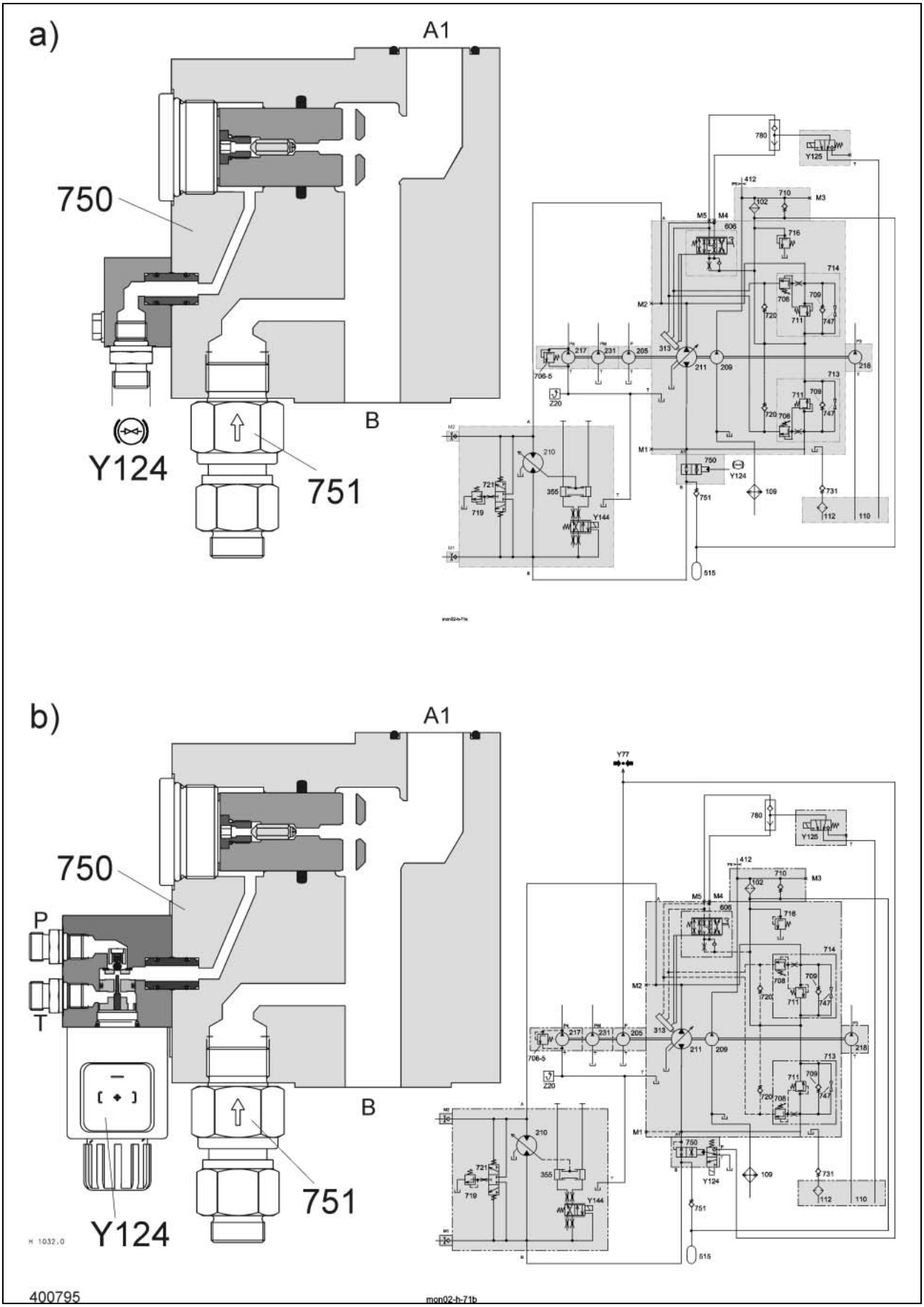

Key to diagram:

102	Pressure filter
109	Hydraulic system oil cooler
110	Oil tank
112	Return filter
205	Working hydraulics pump
209	Ground drive feed pump
210	Ground drive variable displacement motor
211	Ground drive variable-displacement pump
217	Rotary chaff screen drive pump
218	Steering hydraulics pump
231	Montana axle control system pump
313	Ground drive pump servo control hydraulic cylinder
355	Ground drive motor servo control hydraulic cylinder
412	Orifice plate M .....2.0 mm
515	Accumulator 0.75 l / 16 bar
606	Ground drive servo control
706-5	Rotary chaff screen pressure relief valve 150 bar
708	Ground drive pressure cut-off valve
709	Ground drive feed valve
710	Ground drive filter bypass valve
711	Ground drive high-pressure relief valve
713	Ground drive multi-function valve, reverse
714	Ground drive multi-function valve, forward
716	Ground drive feed pressure relief valve
719	Ground drive purge pressure control valve
720	Ground drive control pressure relief valve
721	Ground drive flush-out shuttle valve
731	Return line valve (non-return valve)
747	Ground drive short-circuit valve
750	Brake restrictor valve
751	External feed valve (non-return valve)
780	Shuttle valve
M1	Ground drive hydraulics high pressure forward measuring point
M2	Ground drive hydraulics high pressure backward measuring point
M4	Ground drive hydraulics control pressure forward measuring point
M5	Ground drive hydraulics control pressure backward measuring point
Y77	Working hydraulics master valve solenoid valve
Y124	Ground drive hydraulic motor brake restrictor (HBM) solenoid valve
Y125	Ground drive control pressure solenoid valve
Y144	Ground drive variable displacement motor solenoid valve
Z20	Hydraulic oil temperature actual value switch

a) - up to serial no. 541 00023 / 542 00047
b) - from serial no. 541 00024 / 542 00048

Description of function:

Ground drive hydraulic motor brake restrictor (Y124)

The ground drive hydraulic motor brake restrictor solenoid valve (Y124) is mounted to the ground drive pump (208).

It avoids pump damage and diesel engine damage caused by overspeed.

When travelling downhill, the ground drive variable displacement motor (210) delivers an increased volume flow to the ground drive variable displacement pump (211). This makes the speeds of the ground drive variable displacement pump (211) and of the diesel engine rise.

At a diesel engine speed of > 2300 rpm, the ground drive hydraulic motor brake restrictor solenoid valve (Y124) is energized, the valve actuates and the working hydraulics pressure moves the piston K to the right. The restricting effect produced by this creates a ram pressure of approx. 180 bar ahead of the restrictor.
With this ram pressure and a pressure of approx. 450 bar on the opposite pump side, the pressure difference at the ground drive variable displacement pump (211) is reduced. This reduces the torque load of the diesel engine and its speed.

At a diesel engine speed of < 2200 rpm, the ground drive hydraulic motor brake restrictor solenoid valve (Y124) is deenergized, the restricting effect by piston K is cancelled.

Note: As early as at an allowed diesel engine speed limit of 2230 rpm (e.g. when travelling downhill), the load on the drive is increased by actuating the master valves (see also Electric System – Circuit diagram 4).

Index

Index:

A	Accumulator	2-10
	AUTO-CONTOUR (CAC)	2-10
	Axle control system	3-14
	Axle hydraulics	3-01
	Axle hydraulics circuit diagram	3-04, 3-08
B	Brake accumulator	2-30
	Brake cylinder	2-32
	Brake restrictor	5-12
C	Cutting angle adjustment	2-26
	Cutting frame adjustment	2-22
D	Differential lock	4-06
F	Flow control valve	3-14
	Front attachment cross levelling	2-10
G	Gearbox shift 1st gear, 2nd gear	4-06, 4-12
	Ground drive control pressure	5-08
	Ground drive hydraulics	5-01
L	Lower brake valve	3-14
	Low-pressure hydraulics	4-01
	Low-pressure hydraulics circuit diagram	4-04
M	Master valve	3-10
	Montana ground drive hydraulics circuit diagram	5-04, 5-06
	Montana working hydraulics circuit diagram	2-04, 2-08
	Motor unit	5-10
O	Oil quantity increase	3-14
	Overall hydraulic system	1-01
	Overall hydraulic system circuit diagram	1-02, 1-08
P	Parking brake	4-06, 4-10
	Position of components / Axle control system	3-20
	Position of components / Low-pressure hydraulics Gearbox	4-14
	Pressure relief valve	3-10
R	Raise / lower axle	3-14
	Reverse front attachment	2-18
S	Service brake	2-30
	Shifting aid	3-18
V	Variable displacement motor	5-10
W	Working hydraulics	2-01

CLAAS KGaA mbH
Postfach 1163
33426 Harsewinkel
Tel. +49 (0)5247 12-0
www.claas.com

299 122.1
SYS LEXION Montana 470-420
Supplement: Electric System / Hydraulic System
EN - 04.04 - BEV - NF
Printed in Germany