https://truckmanualshub.com/

BEA17E1-01

KOMATSU

SHOP MANUAL

FG10/14/15/18-17
FG15H/18H-17
FD15/18-17

KOMATSU FORKLIFT

https://truckmanualshub.com/

https://truckmanualshub.com/

SHOP MANUAL

FG10/14/15/18-17
FG15H/18H-17
FD15/18-17

MACHINE MODEL	SERIAL NO.	ENGINE
FG10/14/15/18-17	**630001 and up**	**H15**
FG15H/18H-17	**630001 and up**	**H20II**
FD15/18-17	**630001 and up**	**4D92E**

https://truckmanualshub.com/

PRECAUTIONS WHEN PERFORMING THE SERVICE WORK

Always pay attention to "Safety" before starting any work — this is important.
Never attempt any work where danger to yourself or to other persons.
Whenever work requiring safety precautions are described in this manual, a flag mark ⚠ inserted, always make double sure that safety measures are taken.
Other unmarked work, should always be performed after studying and using your common sense to prevent accidents.

DESCRIPTION OF THE SYMBOLS

The symbols described below are used in this manual for convenience and better understanding.

Symbol	Item	Description
⚠	**Safety**	Special safety precautions are needed to perform the work.
★	**Note**	Special technical precautions are needed to perform the work.
kgm	**Tightening torque**	Fastening parts that require specified tightening force when assembling.
kg	**Weight**	Weight of parts or systems
	Coat	Places to be coated with adhesives, etc. when assembling

https://truckmanualshub.com/

SECTION INDEX

00. FOREWORD

01. GENERAL AND SPECIFICATIONS

10. TESTING AND ADJUSTING

20. REMOVAL AND INSTALLATION

30. DISASSEMBLY AND ASSEMBLY

40. MAINTENANCE STANDARD

50. STRUCTURE AND FUNCTION

60. TROUBLESHOOTING

70. CONVERSION TABLE

https://truckmanualshub.com/

https://truckmanualshub.com/

01. GENERAL AND SPECIFICATIONS

Specifications 01- 2
Periodic replacement of consumable parts 01- 9
Safety items for maintenance 01-10
Standard tightening torque for bolts 01-18
Standard tightening torque for pipe joint 01-19

https://truckmanualshub.com/

SPECIFICATIONS

Unit: mm

Item	Symbol	Model			
		1.0 t	1.35 t	1.5 t	1.75 t
Overall length	A	2,920	3,125	3,155	3,190
Overall width	B	1,070			
Overall height	C	2,025			
Overall height with mast extended	D	3,955			
Maximum lifting height	E	3,000			
Mast lowered height	F	1,995			
Free lift height	G	140			
Fork length	H	770	920		
Front overhang	I	400	405		
Wheelbase	J	1,375			
Fork spread	K	970			
Front wheel tread	L	890			
Rear wheel tread	M	905			
Min. turning radius	N	1,870	1,925	1,955	1,990
Front tire size	–	6.50–10–10PR(I)			
Rear tire size	–	5.00–8–8PR(I)			

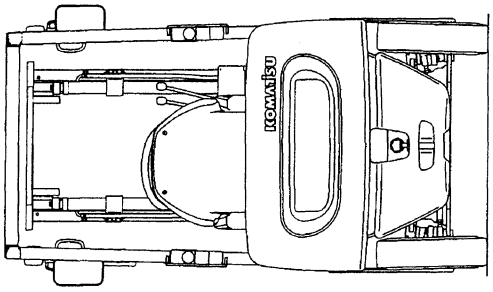

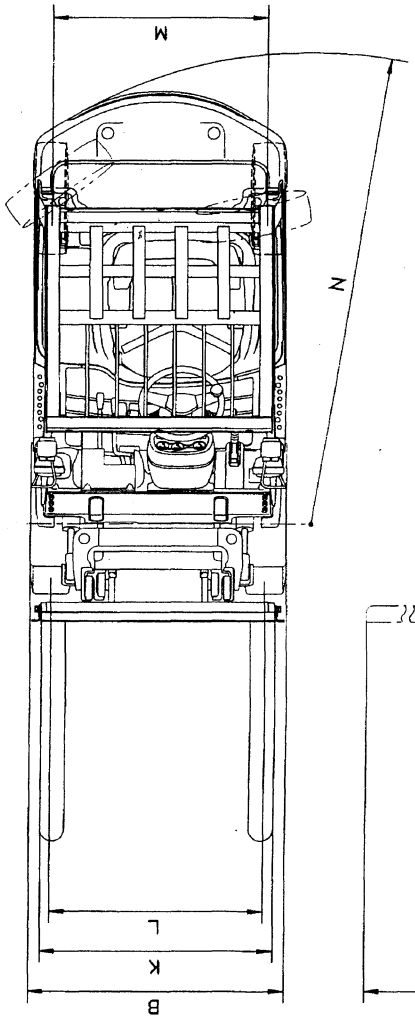

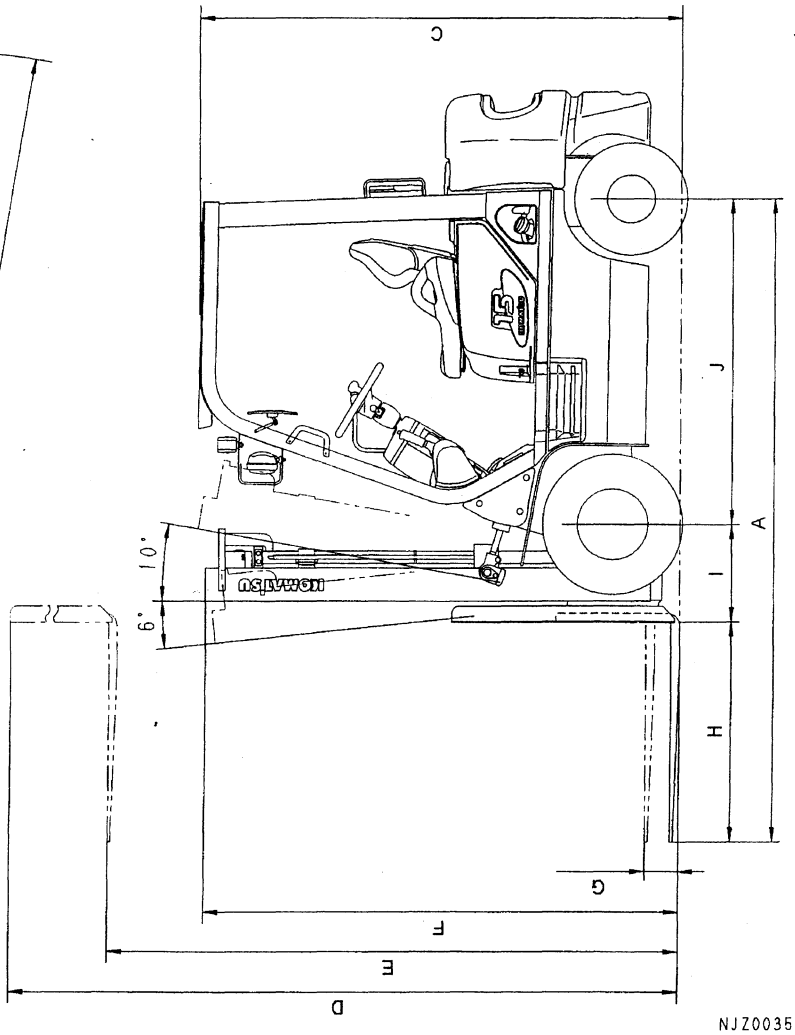

NJZ00351

https://truckmanualshub.com/

1.0-TON GASOLINE TRUCK

No.	Classification	Item				Unit	Komatsu AX m/c FG10-17(STD)
1	Performance	Max. load				kN{kgf}	9.81{1,000}
2		Center of load				mm	500
3		Maximum lifting height				mm	3,000
4		Free lift height				mm	140
5		Slant angle of mast (Forward/Reverse)				deg.	6/10
6		Fork	Lifting speed	With load		mm/s	600
7				With no load		mm/s	660
8			Lowering speed	With no load		mm/s	550
9		Travel speed (with no load) Clutch/Torque converter		Forward	1st gear	km/h	8.5/19.0
10					2nd gear	km/h	19.0/–
11				Reverse	1st gear	km/h	8.5/18.5
12					2nd gear	km/h	19.0/–
13		Traction force with load (Clutch/Torque converter)				kN{kgf}	11.3{1,150}/10.3{1,050}
14		Gradeability with load (Clutch/Torque converter)				deg.	20.8/19.1
15		Min. turning radius				mm	1,870
16		Width of theoretical minimum aisle for rightangle turn				mm	1,825
17		Width of theoretical minimum aisle for rightangle stacking				mm	3,370
18	Dimensions/Mass	Fork size (Length)				mm	770
19		Overhang of fork				mm	400
20		Overall length (To front end of fork)				mm	2,150
21		Overall width				mm	1,070
22		Overall height		Top of head guard		mm	2,025
23				Top of mast		mm	1,995
24		Fork spread				mm	970
25		Wheelbase				mm	1,375
26		Tread		Front wheel		mm	890
27				Rear wheel		mm	905
28		Front tire				—	6.50-10-10PR
29		Rear tire				—	5.00-8-8PR
30		Minimum ground clearance (Under mast)				mm	120
31		Mass of truck (Clutch/Torque converter)				kg	2,115/2,140
32		Head clearance				mm	1,040
33	Engine	Manufacturer				—	Nissan
34		Name				—	H15
35		Number of cylinder-total displacement				cc	4-1,486
36		Rated output/speed				kW{HP}/rpm	28.5{39}/2,500
37		Max. torque/speed				Nm{kgf·m}/rpm	115{11.7}/1,600
38		Type of combustion				—	Wedge type
39	Other items	Forward/Reverse stability ratio				—	1.50
40		Lifting height which does not lower load				mm	4,000
41		Noise at operator's seat (Hi)				db(A)	81
42		Vibration of steering wheel				—	A
43		Fuel tank capacity				ℓ	37
44		Step		Type		—	Open step
45				Height		mm	375
46		Floor height				mm	585

https://truckmanualshub.com/

1.35-TON GASOLINE TRUCK

No.	Classification	Item				Unit	Komatsu AX m/c FG14-17(STD)
1	Performance	Max. load				kN{kgf}	13.2{1,350}
2		Center of load				mm	500
3		Maximum lifting height				mm	3,000
4		Free lift height				mm	140
5		Slant angle of mast (Forward/Reverse)				deg.	6/10
6		Fork	Lifting speed	With load		mm/s	600
7				With no load		mm/s	660
8			Lowering speed	With no load		mm/s	550
9		Travel speed (with no load) Clutch/Torque converter		Forward	1st gear	km/h	8.5/19.0
10					2nd gear	km/h	19.0/–
11				Reverse	1st gear	km/h	8.5/18.5
12					2nd gear	km/h	19.0/–
13		Traction force with load (Clutch/Torque converter)				kN{kgf}	11.3{1,150}/10.3{1,050}
14		Gradeability with load (Clutch/Torque converter)				deg.	17.0/15.7
15		Min. turning radius				mm	1,925
16		Width of theoretical minimum aisle for rightangle turn				mm	1,850
17		Width of theoretical minimum aisle for rightangle stacking				mm	3,430
18	Dimensions/Mass	Fork size (Length)				mm	920
19		Overhang of fork				mm	405
20		Overall length (To front end of fork)				mm	2,205
21		Overall width				mm	1,070
22		Overall height		Top of head guard		mm	2,025
23				Top of mast		mm	1,995
24		Fork spread				mm	970
25		Wheelbase				mm	1,375
26		Tread		Front wheel		mm	890
27				Rear wheel		mm	905
28		Front tire				—	6.50-10-10PR
29		Rear tire				—	5.00-8-8PR
30		Minimum ground clearance (Under mast)				mm	120
31		Mass of truck (Clutch/Torque converter)				kg	2,415/2,440
32		Head clearance				mm	1,040
33	Engine	Manufacturer				—	Nissan
34		Name				—	H15
35		Number of cylinder-total displacement				cc	4-1,486
36		Rated output/speed				kW{HP}/rpm	28.5{39}/2,500
37		Max. torque/speed				Nm{kgf·m}/rpm	115{11.7}/1,600
38		Type of combustion				—	Wedge type
39	Other items	Forward/Reverse stability ratio				—	1.50
40		Lifting height which does not lower load				mm	4,000
41		Noise at operator's seat (Hi)				db(A)	81
42		Vibration of steering wheel				—	A
43		Fuel tank capacity				ℓ	37
44		Step		Type		—	Open step
45				Height		mm	375
46		Floor height				mm	585

https://truckmanualshub.com/

1.5-TON GASOLINE TRUCK

No.	Classification	Item				Unit	Komatsu AX m/c FG15-17(STD)	Komatsu AX m/c FG15H-17(Hi-power)
1	Performance	Max. load				kN{kgf}	14.7{1,500}	14.7{1,500}
2		Center of load				mm	500	500
3		Maximum lifting height				mm	3,000	3,000
4		Free lift height				mm	140	140
5		Slant angle of mast (Forward/Reverse)				deg.	6/10	6/10
6		Fork	Lifting speed	With load		mm/s	600	630
7				With no load		mm/s	660	670
8			Lowering speed	With no load		mm/s	550	550
9		Travel speed (with no load) Clutch/Torque converter		Forward	1st gear	km/h	8.5/19.0	–/19.5
10					2nd gear	km/h	19.0/–	–/–
11				Reverse	1st gear	km/h	8.5/18.5	–/19.0
12					2nd gear	km/h	19.0/–	–/–
13		Traction force with load (Clutch/Torque converter)				kN{kgf}	11.3{1,150}/10.3{1,050}	14.3{1,460}/14.7{1,500}
14		Gradeability with load (Clutch/Torque converter)				deg.	15.2/14.6	19.6/20.6
15		Min. turning radius				mm	1,955	1,955
16		Width of theoretical minimum aisle for rightangle turn				mm	1,860	1,860
17		Width of theoretical minimum aisle for rightangle stacking				mm	3,460	3,460
18	Dimensions/Mass	Fork size (Length)				mm	920	920
19		Overhang of fork				mm	405	405
20		Overall length (To front end of fork)				mm	2,235	2,235
21		Overall width				mm	1,070	1,070
22		Overall height		Top of head guard		mm	2,025	2,025
23				Top of mast		mm	1,995	1,995
24		Fork spread				mm	970	970
25		Wheelbase				mm	1,375	1,375
26		Tread		Front wheel		mm	890	890
27				Rear wheel		mm	905	905
28		Front tire				—	6.50-10-10PR	6.50-10-10PR
29		Rear tire				—	5.00-8-8PR	5.00-8-8PR
30		Minimum ground clearance (Under mast)				mm	120	120
31		Mass of truck (Clutch/Torque converter)				kg	2,535/2,560	2,535/2,560
32		Head clearance				mm	1,040	1,040
33	Engine	Manufacturer				—	Nissan	Nissan
34		Name				—	H15	H20-II
35		Number of cylinder-total displacement				cc	4-1,486	4-1,982
36		Rated output/speed				kW{HP}/rpm	28.5{39}/2,500	36{48.5}/2,450
37		Max. torque/speed				Nm{kgf·m}/rpm	115{11.7}/1,600	157{16.0}/1,600
38		Type of combustion				—	Wedge type	Wedge type
39	Other items	Forward/Reverse stability ratio				—	1.50	1.52
40		Lifting height which does not lower load				mm	4,000	4,000
41		Noise at operator's seat (Hi)				db(A)	81	83
42		Vibration of steering wheel				—	A	A
43		Fuel tank capacity				ℓ	37	37
44		Step		Type		—	Open step	Open step
45				Height		mm	390	390
46		Floor height				mm	600	600

https://truckmanualshub.com/

1.75-TON GASOLINE TRUCK

No.	Classification	Item				Unit	Komatsu AX m/c FG18-17(STD)	Komatsu AX m/c FG18H-17(Hi-power)
1	Performance	Max. load				kN{kgf}	17.2{1,750}	17.2{1,750}
2		Center of load				mm	500	500
3		Maximum lifting height				mm	3,000	3,000
4		Free lift height				mm	140	140
5		Slant angle of mast (Forward/Reverse)				deg.	6/10	6/10
6		Fork	Lifting speed	With load		mm/s	600	630
7				With no load		mm/s	660	670
8			Lowering speed	With no load		mm/s	550	550
9		Travel speed (with no load) Clutch/Torque converter		Forward	1st gear	km/h	8.5/19.0	–/19.5
10					2nd gear	km/h	19.0/–	–/–
11				Reverse	1st gear	km/h	8.5/18.5	–/19.0
12					2nd gear	km/h	19.0/–	–/–
13		Traction force with load (Clutch/Torque converter)				kN{kgf}	11.3{1,150}/10.3{1,050}	14.3{1,460}/14.7{1,500}
14		Gradeability with load (Clutch/Torque converter)				deg.	13.7/14.4	19.6/20.6
15		Min. turning radius				mm	1,990	1,990
16		Width of theoretical minimum aisle for rightangle turn				mm	1,880	1,880
17		Width of theoretical minimum aisle for rightangle stacking				mm	3,495	3,495
18	Dimensions/Mass	Fork size (Length)				mm	920	920
19		Overhang of fork				mm	405	405
20		Overall length (To front end of fork)				mm	2,270	2,270
21		Overall width				mm	1,070	1,070
22		Overall height		Top of head guard		mm	2,025	2,025
23				Top of mast		mm	1,995	1,995
24		Fork spread				mm	970	970
25		Wheelbase				mm	1,375	1,375
26		Tread		Front wheel		mm	890	890
27				Rear wheel		mm	905	905
28		Front tire				—	6.50-10-10PR	6.50-10-10PR
29		Rear tire				—	5.00-8-8PR	5.00-8-8PR
30		Minimum ground clearance (Under mast)				mm	120	120
31		Mass of truck (Clutch/Torque converter)				kg	2,715/2,740	2,715/2,740
32		Head clearance				mm	1,040	1,040
33	Engine	Manufacturer				—	Nissan	Nissan
34		Name				—	H15	H20-II
35		Number of cylinder-total displacement				cc	4-1,486	4-1,982
36		Rated output/speed				kW{HP}/rpm	28.5{39}/2,500	36{48.5}/2,450
37		Max. torque/speed				Nm{kgf·m}/rpm	115{11.7}/1,600	157{16.0}/1,600
38		Type of combustion				—	Wedge type	Wedge type
39	Other items	Forward/Reverse stability ratio				—	1.50	1.52
40		Lifting height which does not lower load				mm	3,500	3,500
41		Noise at operator's seat (Hi)				db(A)	81	83
42		Vibration of steering wheel				—	A	A
43		Fuel tank capacity				ℓ	37	37
44		Step		Type		—	Open step	Open step
45				Height		mm	390	390
46		Floor height				mm	600	600

https://truckmanualshub.com/

1.5-TON DIESEL TRUCK

No.	Classification	Item				Unit	Komatsu AX m/c FD15-17(STD)
1	Performance	Max. load				kN{kgf}	14.7{1,500}
2		Center of load				mm	500
3		Maximum lifting height				mm	3,000
4		Free lift height				mm	140
5		Slant angle of mast (Forward/Reverse)				deg.	6/10
6		Fork	Lifting speed	With load		mm/s	600
7				With no load		mm/s	630
8			Lowering speed	With no load		mm/s	550
9		Travel speed (with no load) Clutch/Torque converter		Forward	1st gear	km/h	9.0/19.0
10					2nd gear	km/h	19.0/–
11				Reverse	1st gear	km/h	9.0/18.5
12					2nd gear	km/h	19.0/–
13		Traction force with load (Clutch/Torque converter)				kN{kgf}	11.3{1,150}/10.3{1,050}
14		Gradeability with load (Clutch/Torque converter)				deg.	17.5/18.4
15		Min. turning radius				mm	1,955
16		Width of theoretical minimum aisle for rightangle turn				mm	1,860
17		Width of theoretical minimum aisle for rightangle stacking				mm	3,460
18	Dimensions/Mass	Fork size (Length)				mm	920
19		Overhang of fork				mm	405
20		Overall length (To front end of fork)				mm	2,235
21		Overall width				mm	1,070
22		Overall height		Top of head guard		mm	2,025
23				Top of mast		mm	1,995
24		Fork spread				mm	970
25		Wheelbase				mm	1,375
26		Tread		Front wheel		mm	890
27				Rear wheel		mm	905
28		Front tire				—	6.50-10-10PR
29		Rear tire				—	5.00-8-8PR
30		Minimum ground clearance (Under mast)				mm	120
31		Mass of truck (Clutch/Torque converter)				kg	2,625/2,650
32		Head clearance				mm	1,040
33	Engine	Manufacturer				—	Yammar
34		Name				—	4D92E
35		Number of cylinder-total displacement				cc	4-2,659
36		Rated output/speed				kW{HP}/rpm	36{48.5}/2,450
37		Max. torque/speed				Nm{kgf·m}/rpm	147{15.0}/1,800
38		Type of combustion				—	—
39	Other items	Forward/Reverse stability ratio				—	1.60
40		Lifting height which does not lower load				mm	4,000
41		Noise at operator's seat (Hi)				db(A)	86
42		Vibration of steering wheel				—	A
43		Fuel tank capacity				ℓ	37
44		Step		Type		—	Open step
45				Height		mm	390
46		Floor height				mm	600

https://truckmanualshub.com/

1.75-TON DIESEL TRUCK

No.	Classification	Item				Unit	Komatsu AX m/c FD18-17(STD)
1	Performance	Max. load				kN{kgf}	17.2{1,750}
2		Center of load				mm	500
3		Maximum lifting height				mm	3,000
4		Free lift height				mm	140
5		Slant angle of mast (Forward/Reverse)				deg.	6/10
6		Fork	Lifting speed	With load		mm/s	600
7				With no load		mm/s	630
8			Lowering speed	With no load		mm/s	550
9		Travel speed (with no load) Clutch/Torque converter		Forward	1st gear	km/h	9.0/19.0
10					2nd gear	km/h	19.0/–
11				Reverse	1st gear	km/h	9.0/18.5
12					2nd gear	km/h	19.0/–
13		Traction force with load (Clutch/Torque converter)				kN{kgf}	11.3{1,150}/10.3{1,050}
14		Gradeability with load (Clutch/Torque converter)				deg.	15.8/16.4
15		Min. turning radius				mm	1,990
16		Width of theoretical minimum aisle for rightangle turn				mm	1,880
17		Width of theoretical minimum aisle for rightangle stacking				mm	3,495
18	Dimensions/Mass	Fork size (Length)				mm	920
19		Overhang of fork				mm	405
20		Overall length (To front end of fork)				mm	2,270
21		Overall width				mm	1,070
22		Overall height		Top of head guard		mm	2,025
23				Top of mast		mm	1,995
24		Fork spread				mm	970
25		Wheelbase				mm	1,375
26		Tread		Front wheel		mm	890
27				Rear wheel		mm	905
28		Front tire				—	6.50-10-10PR
29		Rear tire				—	5.00-8-8PR
30		Minimum ground clearance (Under mast)				mm	120
31		Mass of truck (Clutch/Torque converter)				kg	2,805/2,830
32		Head clearance				mm	1,040
33	Engine	Manufacturer				—	Yammar
34		Name				—	4D92E
35		Number of cylinder-total displacement				cc	4-2,659
36		Rated output/speed				kW{HP}/rpm	36{48.5}/2,450
37		Max. torque/speed				Nm{kgf·m}/rpm	147{15.0}/1,800
38		Type of combustion				—	—
39	Other items	Forward/Reverse stability ratio				—	1.57
40		Lifting height which does not lower load				mm	3,500
41		Noise at operator's seat (Hi)				db(A)	86
42		Vibration of steering wheel				—	A
43		Fuel tank capacity				ℓ	37
44		Step		Type		—	Open step
45				Height		mm	390
46		Floor height				mm	600

https://truckmanualshub.com/

PERIODIC REPLACEMENT OF CONSUMABLE PARTS

For operation safety, **never fail to perform periodic maintenance or make periodic replacement of the consumable parts listed in the following.**
These parts may deteriorate in time and are susceptible to wear. It is difficult to estimate the degree of wear at time of periodic maintenance; therefore, even if no apparent wear is found, always replace with new parts within the prescribed period of replacement (or earlier if trouble is found).
Note that periodic replacement has nothing to do with guarantee service.

No.	Part Name	Period of Replacement
1	Master cylinder and wheel cylinder caps, dust seals	Every 1 year
2	Brake hose or tube	Every 1 or 2 years
3	Brake reservior tank and tube	Every 2 to 4 years
4	Power steering hose	Every 2 years
5	Stop lamp switch (Oil pressure type)	Every 2 years
6	Fuel hose	Every 2 to 4 years
7	Rubber parts of power steering	Every 2 years
8	Lift chain	Every 2 to 4 years
9	Hose of load handling	Every 1 or 2 years

https://truckmanualshub.com/

SAFETY ITEMS FOR MAINTENANCE

FOR SAFETY OPERATION

⚠ USE QUALIFIED PERSONNEL FOR INSPECTION AND MAINTENANCE

- Only persons authorized by the owner or operator of the equipment and having proper certification (local or national) may carry out inspection, maintenance and repairs of the lift truck.
  If inspection, maintenance, or repair work is carried out incorrectly, it is very dangerous.

⚠ MAINTENANCE LOCATION

- When carrying out inspection and maintenance, use a level, dry, dust-free area.
- If the work is carried out inside a building, make sure that there is ample ventilation.

⚠ PRECAUTIONS FOR INSPECTION AND MAINTENANCE

- To be prepared in the event of a fire, have a fire extinguisher nearby and make sure that you know how to use it.
- Before carrying out inspection, lower the forks to the ground and stop the machine.
- Do not run the engine unless it is necessary.
- Place the directional lever, speed lever, and work equipment control levers in neutral.

⚠ PRECAUTIONS WHEN CARRYING OUT INSPECTION AND MAINTENANCE

- Wipe off any oil or grease. Immediately wipe up any oil that has leaked.
  If the lift truck is dirty, it becomes difficult or impossible to find cracks or other problems. Always clean the lift truck before starting inspection. (See page 1-26)
- Do not smoke or allow any flame to exist under any circumstances.
  Do not use any cloth which is soaked in fuel, oil, or grease. There is danger that it may catch fire.
- Wear suitable clothes for the job.
- Use suitable safety and protective equipment (hard hat, safety boots, safety glasses, gloves) for the job.
- When working on top of the lift truck, be careful not to fall.
- Do not put your feet under the forks.
- When opening or closing the floor plate or engine hood, be careful not to get your hands or body caught.
- When carrying out inspection with the forks raised, insert a stand under the inner mast to prevent the forks and mast from dropping.
- When carrying out job with another worker, decide who is the leader and carry out the job in accordance with instructions from that person.
- After repairing, make sure that the trouble has been corrected by performing a trial run.
- During the trial run, start/operate the lift truck carefully because it is possible that the trouble has not been fully corrected or that defective parts have not been removed.

https://truckmanualshub.com/

⚠ USE SUITABLE TOOLS

- Always use tools that are suited for inspection and maintenance.
  It is extremely dangerous to use broken tools or tools designed for another purpose.

A0055120

⚠ REPLACE SAFETY CRITICAL PARTS PERIODICALLY

- Even if no abnormality is found, always replace safety critical parts periodically. As time passes, these parts deteriorate and may cause fire or failure in the work equipment system.
- However, if these parts show any abnormality before the replacement interval has passed, they should be repaired or replaced immediately.

⚠ PRECAUTIONS WITH HIGH TEMPERATURE COOLANT

- Immediately after using the lift truck, the engine coolant is at high temperature and high pressure. Do not remove the radiator cap under these conditions.
  Hot water may spurt out and cause burns.
- When removing the radiator cap, turn it slowly to release the internal pressure.
- When checking the coolant level, stop the engine and wait for the engine and radiator to cool down before checking. For lift trucks equipped with a subtank or reservoir, check the level in the subtank.
- When adding water on lift trucks equipped with a subtank, add the water to the subtank.

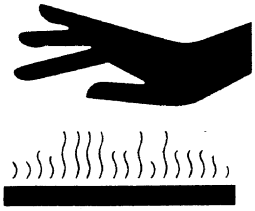

A0055050

https://truckmanualshub.com/

⚠ PRECAUTIONS WITH HIGH PRESSURE, HIGH TEMPERATURE OIL

- Immediately after using the lift truck, the oil is at high temperature. Do not drain the oil or replace the filter when the oil is hot. Hot oil may spurt out and cause burns.
- When carrying out inspection and maintenance, wait for the oil temperature to go down, and carry out the operation in the order given in this manual.
- Do not forget that the work equipment circuits are always under pressure. Do not add oil, drain oil, or carry out maintenance or inspection before completely releasing the internal pressure. (For details on releasing the oil pressure, see page 3-37.)
- If oil is leaking under high pressure from small holes, it is dangerous if the jet of high-pressure oil hits your skin or eyes. Always wear safety glasses and thick gloves, and use a piece of cardboard or a sheet of plywood to check for oil leakage.
- Release the internal pressure before checking the accumulator piping.
- If you are hit by a jet of high-pressure oil, consult a doctor immediately.

A0055180

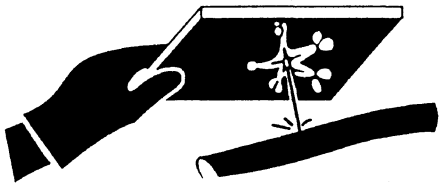
A0055190

⚠ ROTATING FAN AND BELT

- It is extremely dangerous if you or any tool touches or gets caught in the fan or fan belt when the fan is rotating. Never touch the fan when it is rotating.
- Always stop the engine before inspecting rotating parts.
- When inspecting the areas around rotating parts, do not allow anything to come close which may get caught.

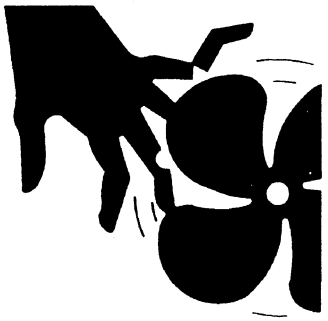
AB801500

https://truckmanualshub.com/

⚠ BE CAREFUL NOT TO GET CAUGHT OR FALL

- Never put your hands or feet into the mast structure. There is danger that you will get caught in moving parts and be seriously injured.
- Do not use the mast as a ladder. If you slip, there is danger that you will fall.

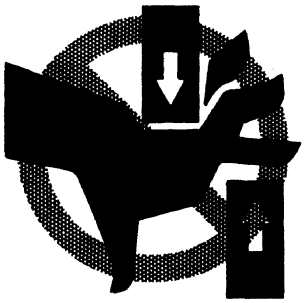

AB801320

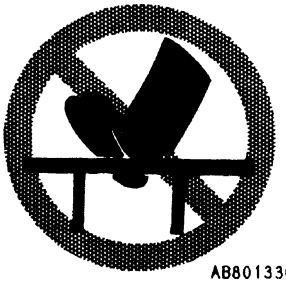

AB801330

⚠ CHECKING AND INFLATING TIRES

- If the tire inflation pressure is low, it will affect truck stability. However, do not inflate the tires immediately. The inflation pressure may have gone down because of damage to the rim. If the rim is damaged or cracked and the tires are inflated, there is danger that the rim will break when the tire is under high pressure, and this may cause personal injury or death.
- For safety, when checking tire pressure, place your body in front of the tread face of the tire. Do not check from the side face of the tire.
- Suitable qualifications are needed for tire inflation work. Always have the work carried out by properly qualified personnel.
- The tire inflation pressure on a forklift truck is several times higher than the pressure on an automobile. When the tires are being inflated, there is danger that dirt or dust may be thrown up by the compressed air and enter your eyes, so always wear safety glasses.

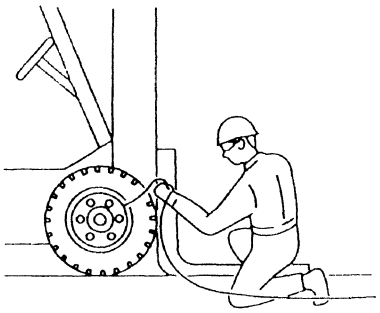

AB801510

https://truckmanualshub.com/

⚠ HANDLING TIRES

Disassembly and assembly of tires should be carried out by tire dealer.
The tire inflation pressure is extremely high, so caution is needed when handling tires.

- The wheel is fitted with mounting nuts. It also has rim nuts and bolts used to join the rim halves. When removing the tire from the lift truck, do not loosen the rim nuts and bolts. The tire is under high pressure, and there is a singnificant risk that the rim nuts and bolts may fly off. Relief tire inflation pressure before removing.
- When the tires have been replaced, carry out a test drive and check again for any loose mounting nuts. If the tightening torque is low, tighten to the specified torque.

⚠ JACKING UP LIFT TRUCK (when checking or replacing tires)

- Do not go under the forklift truck when it is jacked up.
- Check the following before jacking up the lift truck.(For details, see page 3-41.)
  1) Check that there is no one on the lift truck.
  2) Check that there is no load on the forks.
- When jacking up, stop when the tires come off the ground surface. Put blocks under both sides of the frame to prevent the lift truck from coming down.
- Put blocks under any tires contacting the ground to prevent the lift truck from moving.

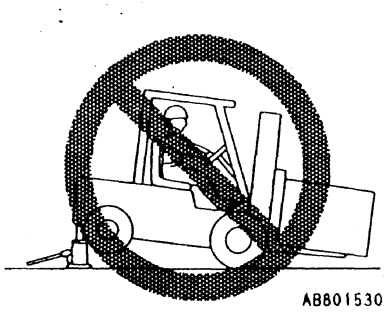
AB801530

⚠ LIFTING LIFT TRUCK (when checking tires)

- Lift truck slinging work should be carried out by a qualified person who has completed a course in correct lifting methods.
- Fit wire ropes to the specified lifting points.
- When lifting the lift truck, check that the wire ropes have ample strength and are not damaged.
- Block the tires contacting the ground to prevent the lift truck from moving.
- Insert blocks to prevent the truck from coming down.
- Do not go under the lift truck during the lifting operation.
- If the specified lifting point is the counterweight, check that the counterweight mounting bolts are tightened to the specified torque before carrying out the lifting operation. Check also that there is no damage to the lifting portion on the counterweight.

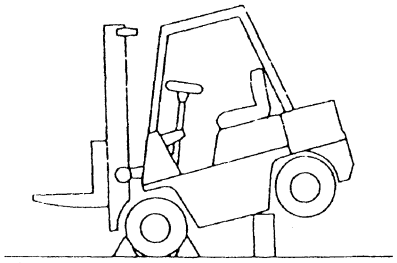
AB801540

https://truckmanualshub.com/

⚠ BATTERY HAZARD PREVENTION

- Battery electrolyte contains sulfuric acid and can quickly burn the skin and eat holes in clothing. If you spill electrolyte on yourself, immediately flush the area with a large quantity of water.
- Battery electrolyte can cause blindness if splashed into the eyes. If electrolyte gets into your eyes, flush them immediately with large quantities of water and consult a doctor at once.
- If you accidentally drink electrolyte, drink a large quantity of water, or milk mixed with beaten eggwhite or vegetable oil. Call a doctor or poison prevention center immediately.
- When working with batteries, ALWAYS wear safety glasses or goggles.
- Batteries generate hydrogen gas. Hydrogen gas is highly EXPLOSIVE, and is easily ignited with a small spark or flame. Do not smoke or create any spark near the battery.
- Before working with batteries, stop the engine and turn the starting switch to the OFF position.
- When removing the battery, remove the cable from the negative ⊖ terminal first. When installing the battery, install the cable to the positive ⊕ terminal first.
- Avoid short-circuiting the battery terminals through accidental contact with tools or other metal objects across the terminals.
- Tighten the battery terminals securely. Loose terminals can generate sparks and lead to an explosion.
- When removing or installing the battery, confirm which is the positive ⊕ terminal and negative ⊖ terminal. Be careful not to connect the cables to the opposite terminals.
- Tighten the battery caps securely.
- When cleaning the battery, leave the battery caps tightened.

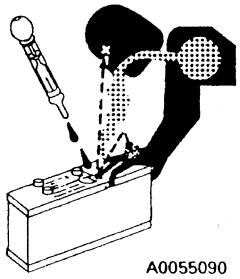
A0055090

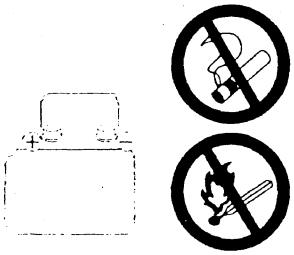
A0055100

⚠ DO NOT PUT METAL OBJECTS ON TOP OF BATTERY

- Never place any metal objects on top of the battery. There is danger that they will cause a short circuit and start a fire.

https://truckmanualshub.com/

⚠ PRECAUTIONS WHEN CHARGING

When the battery is charged, hydrogen gas is generated and the battery is heated by the chemical change. To prevent the danger of gas explosion, always do as follows.

- Carry out the charging operation in a well-ventilated place.
- Do not smoke or allow any flame.
- Start the charging operation when the temperature of the battery electrolyte is below 35°C (95°F). (If the temperature goes above 50°C (122°F) during the charging operation, wait for it to go down below 35°C (95°F) before starting charging operation again.)
- When using a battery charger to charge the battery, take the battery caps off.

⚠ STARTING WITH BOOSTER CABLES

- ALWAYS wear safety glasses or goggles when starting the lift truck with booster cables.
- When starting using the battery of another lift truck, do not allow the two lift trucks to touch.
  For details of the order of operations when using a booster cable.
- Stop the engine before connecting the cables.
- Be extremely careful not to let the cables get caught in the fan or fan belt.
- Connect the batteries in parallel: positive to positive and negative to negative. Never connect positive to negative.

⚠ DO NOT PUSH START

- Do not push the lift truck to start the engine. There is danger that the lift truck may suddenly start and operate unexpectedly.

⚠ HANDLING BRAKE FLUID

It is dangerous if the brakes do not work because in this condition, the lift truck cannot be stopped. Always do the following.

- Check the level of the brake fluid periodically.
- Always use the specified brake fluid.
- Check that the breather of the brake fluid reserve tank is not clogged.
- Be careful not to let dirt or dust get into the brake fluid reserve tank.

https://truckmanualshub.com/

⚠ HANDLING ANTIFREEZE

- Antifreeze can be a flammable. Keep away from flame when handling.
- Antifreeze is poisonous, so do not drink it. If you drink it by mistake, drink large amounts of water, vomit it out, and get medical attention immediately. Follow safety precautions on container.

⚠ WASTE MATERIALS

- Obey appropriate laws and regulations when disposing of harmful objects such as oil, fuel, solvent, filters, and batteries.

https://truckmanualshub.com/

STANDARD TIGHTENING TORQUE FOR BOLTS

For unspecified bolts and nuts, use the torques specified in this list.
Select a proper torque corresponding to the width across flats (b) of bolts and nuts.
When replacing bolts and nuts,always use genuine Komatsu Forklift parts the same size as the previous ones.

Thread diameter of bolt (mm) (a)	Width across flat (mm) (b)	Tightening torque		
		Nm	Kgfm	lbft
6	10	13.2 ± 1.4	1.35 ± 0.15	9.73 ± 1.03
8	13	31.4 ± 2.9	3.2 ± 0.3	23.2 ± 2.1
10	17	65.7 ± 6.8	6.7 ± 0.7	48.5 ± 5.0
12	19	112 ± 9.8	11.5 ± 1.0	82.6 ± 7.2
14	22	177 ± 19	18.0 ± 2.0	131 ± 14
16	24	279 ± 29	28.5 ± 3	206 ± 21
18	27	383 ± 39	39 ± 3	282 ± 29
20	30	549 ± 58	56 ± 6	405 ± 43
22	32	745 ± 78	76 ± 8	549 ± 58
24	36	927 ± 98	94.5 ± 10	684 ± 72
27	41	1320 ± 140	135 ± 15	973 ± 100
30	46	1720 ± 190	175 ± 20	1270 ± 140
33	50	2210 ± 240	225 ± 25	1630 ± 180
36	55	2750 ± 290	280 ± 30	2030 ± 210
39	60	3280 ± 340	335 ± 35	2420 ± 250

https://truckmanualshub.com/

STANDARD TIGTENING TORQUE FOR PIPE JOINTS

Elbows, nipples and unions

Width across flats B (mm)	22	30	36
Width D (mm)	19	22	30
Tightening torque Nm {kgfm}	29.4 – 39.2 {3 – 4}	78.5 – 103 {8 – 10.5}	117.7 – 161.8 {12 – 16.5}
Port size (inch)	3/4-16UNF	7/8-14UNF	—
Tightening torque Nm {kgfm}	68.6 – 73.6 {7 – 7.5}	78.5 – 83.3 {8 – 8.5}	—

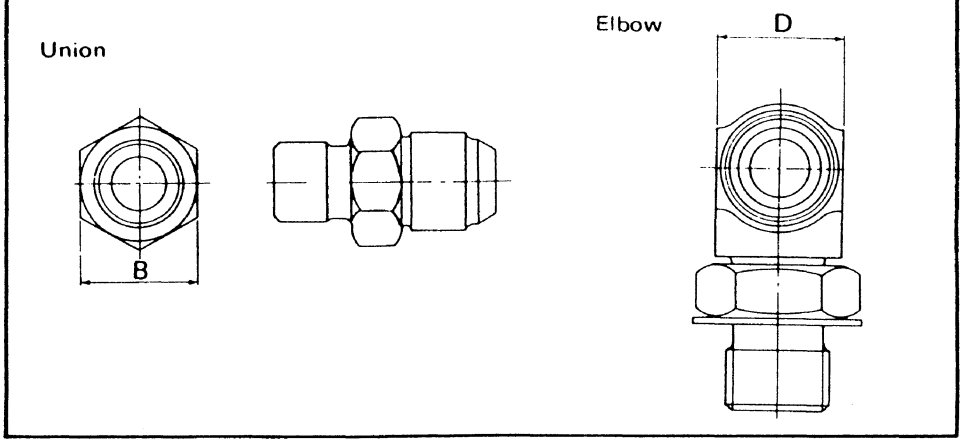

High-pressure rubber hoses, pipes and sleeve nuts

Width across flats B (mm)	19	24	27	32	36
Bore A (mm)	14	18	22	24	30
Tightening torque Nm {kgfm}	19.6 – 29.4 {2 – 3}	23.5 – 68.6 {3 – 7}	58.8 – 98.1 {6 – 10}	108 – 167 {11 – 17}	147 – 206 {15 – 21}

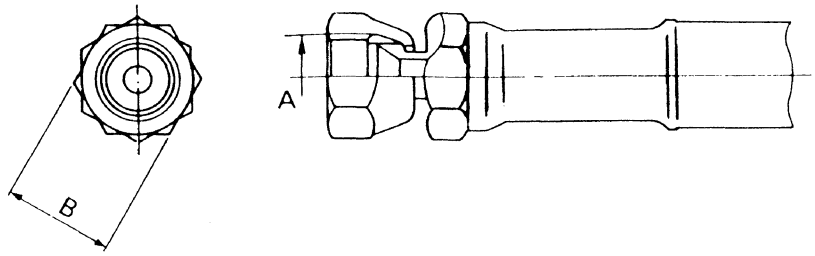

https://truckmanualshub.com/

https://truckmanualshub.com/

10. TESTING AND ADJUSTNG

Service data (Gasoline engine lift truck) 10- 2
Service data (Diesel engine lift truck) 10- 4
Gasoline engine 10- 6
Diesel engine 10- 8
Air cleaner 10-10
Method of adjusting ignition timing 10-11
Measuring method for compression 10-13
Adjusting method of valve clearance 10-14
Tightening torque for cylinder mounting bolts 10-15
Differential case 10-16
TORQFLOW transmission case 10-17
Hydraulic tank 10-18
Measuring hydraulic drift of lift cylinder, tilt cylinder 10-19
Adjusting clutch/brake pedal 10-20
Adjusting inching/brake pedal (TORQFLOW truck) 10-21
Adjusting accelerator pedal 10-22
Adjusting parking brake lever 10-24
Bleeding air 10-25
Adjusting spring-up angle of steering column 10-27
Gasoline engine lift truck 10-28
Diesel engine lift truck 10-29
Check items for each equipment 10-31

https://truckmanualshub.com/

SERVICE DATA (GASOLINE ENGINE LIFT TRUCK)

Component		Check item		Unit	FG10/14/15/18-17	FG15H/18H-17
Engine	Engine proper	Engine model		—	Nissan H15	Nissan H20II
		Idling speed		rpm	750 – 850	750 – 850
		Max. speed		rpm	2950 – 3150	2850 – 3050
		Torque converter stall speed		rpm		1880
		Compression		MPa/rpm	1.28(13.0kgf/cm²)/300	1.23(12.5kgf/cm²)/300
	Lubricating, cooling system	Engine oil capacity		ℓ	3.8(1.00USgal,0.84UKgal)	3.8(1.00USgal,0.84UKgal)
		Coolant capacity		ℓ	8.0(1.58USgal,1.32UKgal)	9.1(2.40USgal,2.00UKgal)
		Fan belt tension		mm	11–13 (0.43–0.51 in) (Finger pressure: 98N) 11–13 (0.43–0.51 in) (Finger pressure: 10 kgf)	11–13 (0.43–0.51 in) (Finger pressure: 98N) 11–13 (0.43–0.51 in) (Finger pressure: 10 kgf)
	Fuel system	Injection timing		BTDC°	—	—
		Injection order		—	—	—
		Injection pressure		MPa	—	—
		Fuel tank capacity		ℓ	37(9.77USgal,8.14UKgal)	37(9.77USgal,8.14UKgal)
	Intake, exhaust system	Valve clearance	Intake	mm	0.38 (0.015 in)(Warm)	0.38 (0.015 in)(Warm)
			Exhaust	mm	0.38 (0.015 in)(Warm)	0.38 (0.015 in)(Warm)
	Electrical system	Distributor point gap		mm	Full transistor	Full transistor
		Spark plug gap		mm	0.8–0.9(0.031–0.035 in)	0.8–0.9(0.031–0.035 in)
		Spark plug type		—	BP4ES (NGK)	BP4ES (NGK)
		Ignition timing		BTDC°/rpm	6/650	4/650
		Firing order		—	1 – 3 – 4 – 2	1 – 3 – 4 – 2
		Battery electrolyte specific gravity		—	Min. 1.24 (20°C)	Min. 1.24 (20°C)
Power train	Torque converter	Stall speed		rpm		1880
		Inlet port oil pressure		MPa	0.29–0.68(3–7 kgf/cm²)	0.29–0.68(3–7 kgf/cm²)
		Outlet port oil pressure		MPa	0.22–0.44(2.2–4.5kgf/cm²)	0.22–0.44(2.2–4.5kgf/cm²)
	TORQFLOW transmission	Relief pressure		MPa	1.06–1.46(10.8–14.9kgf/cm²)	1.06–1.46(10.8–14.9kgf/cm²)
		Clutch actuation pressure		MPa	0.91–1.31(9.3–13.4kgf/cm²)	0.91–1.31(9.3–13.4kgf/cm²)
		Lubricating oil pressure		MPa	0.1–0.39(1–4 kgf/cm²)	0.1–0.39(1–4 kgf/cm²)
		Oil capacity		ℓ	10 (2.64 USgal, 2.20 UKgal) [including torque converter 2.5 ℓ (0.66 USgal, 0.54 UKgal)]	
	Differential	Oil capacity	TORQFLOW truck	ℓ	4 (1.58 USgal, 1.32 UKgal)	4 (1.58 USgal, 1.32 UKgal)
			Clutch type truck	ℓ	11 (2.90 USgal, 2.42 UKgal) [including transmission case 7 ℓ (1.85 USgal, 1.54 UKgal)]	

https://truckmanualshub.com/

Component		Check item		Unit	FG10/14/15/18-17	FG15H/18H-17
Travel system	Tires	Inflation pressure	Front wheel	MPa	0.69 (7.0 kgf/cm²)	
			Rear wheel	MPa	0.78 (8.0 kgf/cm²)	
		Tread depth		mm	1.6 (0.06 in) (at tread wigth 1/4)	
	Hub nut	Tightening torque	Front wheel	Nm	157 – 245 (16 – 25 kgfm)	
			Rear wheel	Nm	83 – 147 (8.5 – 15 kgfm)	
	Rim bolt	Tightening torque	Front wheel	Nm	88 – 123 (9.0 – 12.5 kgfm)	
			Rear wheel	Nm	59 – 74 (6.0 – 7.5 kgfm)	
Steering, braking system	Power steering system	Belt tension		mm	—	
		Pump relief pressure		MPa	7.35 – 7.84 (75 – 80 kgf/cm²)	
	Steering wheel	Play		mm	30 – 60 (1.2 – 2.4 in) (Engine idling state)	
	Rear axle	Min. turning radius		mm	1-ton truck: 1870±100 (73.7±4.0 in) 1.35-ton truck: 1925±100 (75.8±4.0 in) 1.5-ton truck: 1955±100 (77.0±4.0 in) 1.75-ton truck: 1990±100 (78.4±4.0 in)	
		Support thrust clearance		mm	Max. 0.5 (0.02 in)	Max. 0.5 (0.02 in)
	Clutch pedal	Play		mm	3 – 5 (0.12 – 0.2 in)	3 – 5 (0.12 – 0.2 in)
	Inching pedal	Play		mm	2 – 3 (0.08 – 0.12 in)	2 – 3 (0.08 – 0.12 in)
		Interconnected travel		mm	35–41 (1.38–1.61 in)	35–41 (1.38–1.61 in)
	Brake pedal	Play		mm	13–17 (0.51–0.67 in)	13–17 (0.51–0.67 in)
		Pedal height when depressed mm		mm	90–100 (3.54–3.94 in)	90–100 (3.54–3.94 in)
	Brake	Brake fluid capacity		ℓ	0.15 (0.040USgal, 0.033UKgal)	0.15 (0.040USgal, 0.033UKgal)
		Parking brake operating effort		N	Min. 196 (20 kgf)	Min. 196 (20 kgf)
		Tightening torque for back plate mounting bolt		Nm	157–196(16– 20kgfm)	157–196(16– 20kgfm)
Loading system	Fork	Thickness at fork root		mm	1-ton truck: Min. 26 (1.025 in) 1.35-ton truck: Min. 30 (1.18 in) 1.5-ton truck: Min. 30 (1.18 in) 1.75-ton truck: Min. 33 (1.30 in)	
		Difference in height		mm	Max. 15 (0.59 in)	Max. 15 (0.59 in)
		Amount of opening at tip		mm	Max. 35 (1.38 in)	Max. 35 (1.38 in)
	Chain	Length of 17 links		mm	Max. 275.5 (10.85 in)	Max. 275.5 (10.85 in)
	Cylinder	Hydraulic drift (lift cylinder)		mm/15min	Max. 75 (2.95 in) (Cylinder position)	
		Hydraulic drift (tilt cylinder)		mm/15min	Max. 45 (1.77 in) (Cylinder position)	
	Hydraulic system	Relief pressure		MPa	17.2 – 17.6 (175 – 180 kgf/cm²)	
		Oil capacity		ℓ	31 (8.19 USgal, 6.82 UKgal)	

https://truckmanualshub.com/

SERVICE DATA (DIESEL ENGINE LIFT TRUCK)

Component		Check item		Unit	FG15/18-17
Engine	Engine proper	Engine model		—	Komatsu 4D92E
		Idling speed		rpm	750 – 800
		Max. speed		rpm	2700 – 2750
		Compression		MPa/rpm	2.94(30kgf/cm²)/250
	Lubricating, cooling system	Fan belt tension		mm	10–15 (0.39–0.59 in) (Finger pressure: 98N) 10–15 (0.39–0.59 in) (Finger pressure: 10 kgf)
	Fuel system	Injection timing		BTDC°	ATDC6
		Injection order		—	1 – 3 – 4 – 2
		Injection pressure		MPa	11.8 (120 kgf/cm²)
	Intake, exhaust system	Valve clearance	Intake	mm	0.2 (0.0079 in)(Cold)
			Exhaust	mm	0.2 (0.0079 in)(Cold)
	Electrical system	Distributor point gap		mm	—
		Spark plug gap		mm	—
		Ignition timing		BTDC°/rpm	—
		Firing order		—	—
Travel system	Tires	Inflation pressure	Front wheel	MPa	0.7 (7.0 kgf/cm²)
			Rear wheel	MPa	0.8 (8.0 kgf/cm²)
	Hub nut	Tightening torque	Front wheel	Nm	157 – 245 (16 – 25 kgfm)
			Rear wheel	Nm	83 – 147 (8.5 – 15 kgfm)
	Rim bolt	Tightening torque	Front wheel	Nm	88 – 123 (9.0 – 12.5 kgfm)
			Rear wheel	Nm	59 – 74 (6.0 – 7.5 kgfm)
Steering, braking system	Steering wheel	Play		mm	30 – 60 (1.2 – 2.4 in)
	Clutch pedal	Play		mm	1 – 3 (0.04 – 0.12 in)
	Inching pedal	Play		mm	2 – 3 (0.08 – 0.12 in)
		Interconnected travel		mm	35 – 41 (1.38 – 1.61 in)
	Brake pedal	Play		mm	13 – 17 (0.51 – 0.67 in)
		Pedal height when depressed		mm	90 – 100 (3.54 – 3.94 in)
	Brake	Parking brake operating effort		N	Min. 196 (20 kgf)
		Tightening torque for back plate mounting bolt		Nm	147–196(15– 20kgfm)

https://truckmanualshub.com/

Component		Check item	Unit	FG15/18-17
Loading system	Fork	Thickness at fork root	mm	1.5-ton truck: Min. 30 (1.18 in) 1.75-ton truck: Min. 33 (1.30 in)
	Chain	Length of 17 links	mm	Max. 275.5 (10.85 in)
	Cylinder	Hydraulic drift (lift cylinder)	mm/15min	Max. 75 (2.95 in) (Cylinder position)
		Hydraulic drift (tilt cylinder)	mm/15min	Max. 45 (1.77 in) (Cylinder position)
	Hydraulic system	Relief pressure	MPa	17.2 – 17.6 (175 – 180 kgf/cm^2)

https://truckmanualshub.com/

GASOLINE ENGINE

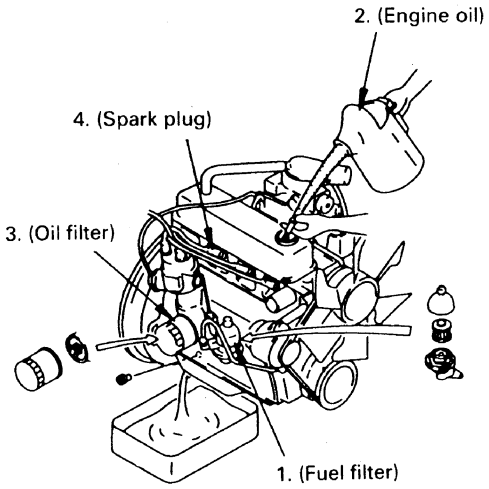

AE803730

1. REPLACEMENT OF FUEL FILTER

1) Loosen the nut to take out the filter after removing the glass-bowl.

2) Drain dirt and water and clean the cartridge.

3) Put a new filter into the cartridge.

★ If the gasket in the glass-bowl is found defective, replace it with a new one.

2. CHANGE OF ENGINE OIL

1) Drain engine oil filter removing the drain plug.

2) Tighten the plug before filling engine oil to the specified capacity.

3) Check on engine oil by use of an oil gauge.

Capacity

H15 engine	3.8 ℓ (1,00US gal, 0.84UK gal)
H20II engine	3.8 ℓ (1,00US gal, 0.84UK gal)

https://truckmanualshub.com/

3. REPLACEMENT OF OIL FILTER

1) Remove the cartridge by use of a filter wrench.

2) Clean the filter face and coat a new cartridge (both the seal and the screw) with engine oil before fixing it.

★ After fixing the new cartridge, start the engine to check on any oil leakage.

4. CHECKING ON SPARK PLUG

1) Remove the plug by the special plug wrench.

2) Clean carbon off the top and its vicinity of the plug.

3) Measure the plug gap by a gauge.

Brand plug

H15, H20II engine	BP4ES, BPR4ES (NGK)

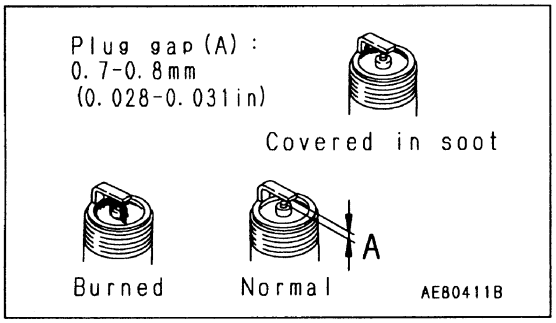

https://truckmanualshub.com/

DIESEL ENGINE

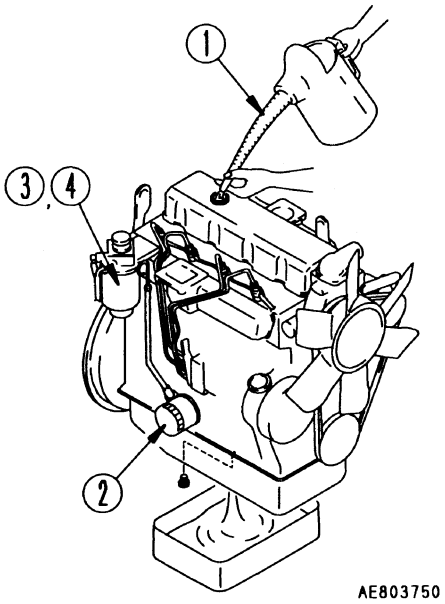

[4D92E Engine]

1. CHANGE ENGINE OIL

1) Remove the drain plug, drain the oil, then tighten the plug again.

2) Remove the dipstick.

3) Add the specified amount of engine oil, and be careful not to let it overflow.

4) Check the oil level with the dipstick.

Refill amount

4D92E engine	7.5ℓ (1.98 US gal, 1.65 UK gal)

2. REPLACE ENGINE OIL FILTER

1) Using a filter wrench, remove the cartridge.

2) Clean the filter holder, coat the thread and the seal of the new cartridge with engine oil, then install.

NOTICE:
After installing the cartridge, start the engine and check that there is no leakage of oil from the filter mounting surface.

https://truckmanualshub.com/

3. DRAIN WATER FROM FUEL FILTER

1) Loosen the combination sensor plug and drain the water and sediment accumulated at the bottom.

NOTE:
- **Fuel is drained out at the same time, so prepare a container to catch it.**
- **Always be sure to wipe up any spilled fuel.**

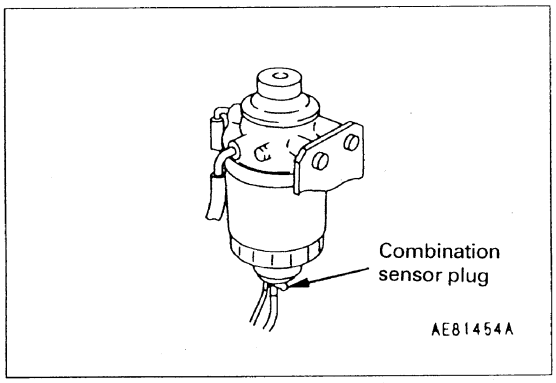

4. REPLACE FUEL FILTER

1) Remove the combination sensor plug at the bottom of the cartridge.

2) Using a filter wrench, remove the cartridge.

3) Install the combination sensor plug to the new cartridge.

4) Fill the new cartridge with fuel, coat the packing surface thinly with engine oil, then install.

5) Loosen plug ① and pump knob ② up and down until no more bubbles come out with the fuel.

6) Tighten plug ①.

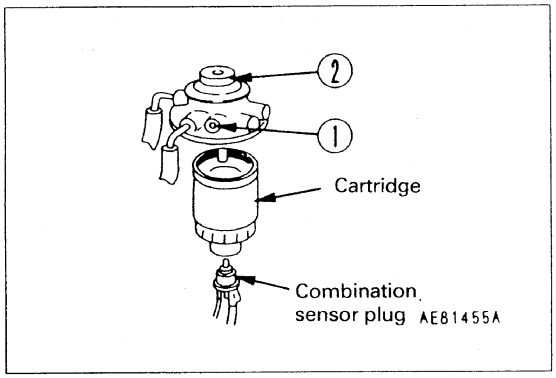

https://truckmanualshub.com/

AIR CLEANER

⚠ CAUTION

- Never clean or replace the air cleaner while the engine is running.
- When using compressed air to clean the element, there is danger that dust will fly and get into your eyes, so always wear protective glasses.

NOTICE:

- **If oil, grease, or carbon are stuck to the element, clean the element with special element cleaner. Follow the instructions given with the cleaner.**
- **In heavy-duty operating environments or conditions, clean and replace the element more frequently.**

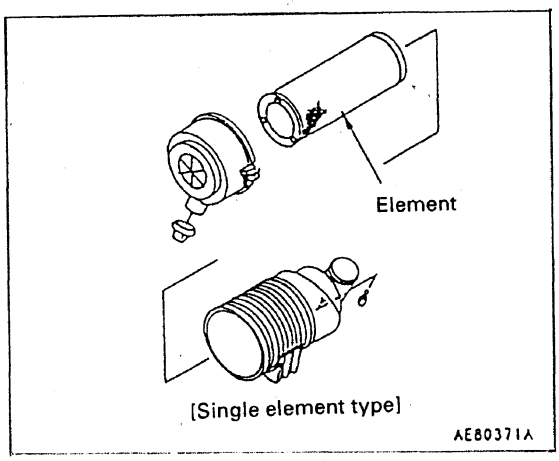

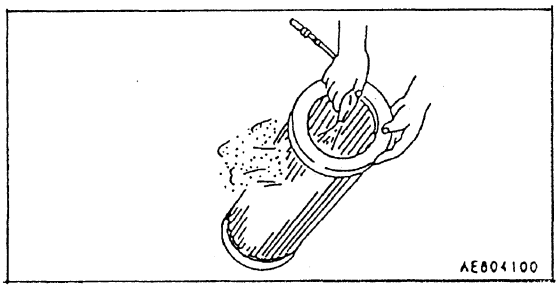

CLEANING

1. Remove the element, blow the element from the inside with dry compressed air at 0.69 MPa {7 kg/cm²} and clean the whole circumference.
2. After cleaning the element, install it again.

TESTING

Check visually that there is no damage to the element.

REPLACE ELEMENT

1. Remove the element.
2. Remove the inner element.
3. Cover the air connector with a clean cloth or cloth tape to prevent dirt from getting in.
4. Clean the inside of the body, then remove the cover installed in Step 3.
5. Install a new element.

https://truckmanualshub.com/

METHOD OF ADJUSTING IGNITION TIMING

1. Connect the timing advance tester as shown in the diagram on the right.
2. Turn the power switch ON, and adjust the timing position of the advance adjustment knob.
3. Start the engine and run at the specified idling speed.
4. Shine the timing light and check that the indicator and timing mark stamped on the crankshaft pulley and flywheel are aligned.
5. If the timing is misaligned, turn the distributor to the right or left to adjust.
6. Check that the injection timing advances quickly when the engine speed is raised.

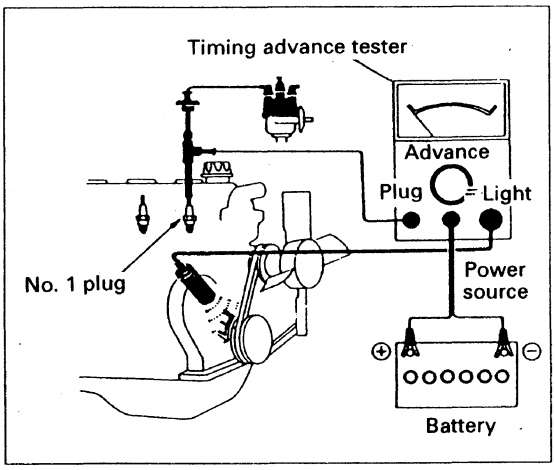

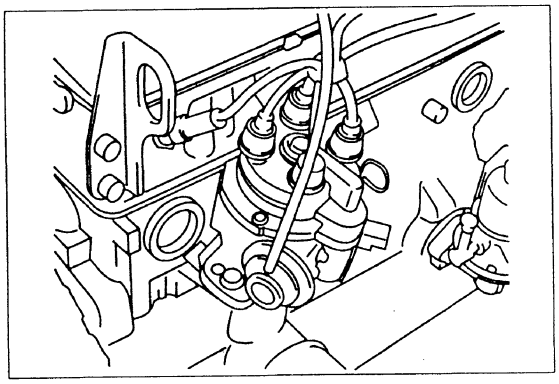

https://truckmanualshub.com/

METHOD OF ADJUSTING FUEL INJECTION TIMING

TESTING AND ADJUSTING FUEL INJECTION TIMING MARK (4D92E)

When carrying out disassembly and assembly

① Align the fuel injection pump with the match mark.
② Align the top mark to a point 6* beyond top.
③ Check that the plunger lift is 1 mm.
④ If it is not 1 mm, adjust the mounting angle of the pump body.

When checking

Carry out Steps ②, ③, and ④ for disassembly and assembly.

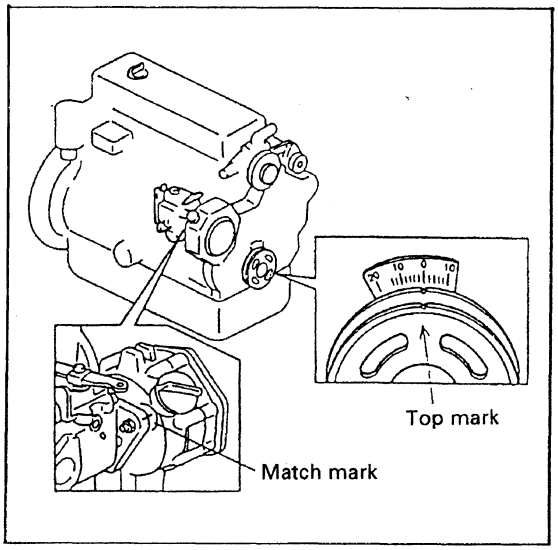

https://truckmanualshub.com/

MEASURING METHOD FOR COMPRESSION

1. Warm up the engine to get the coolant temperature of 75 — 85°C.

2. Stop the engine, then remove all the spark plugs (on gasoline engines) or nozzle holders (on diesel engines) and the air cleaner.

3. Disconnect the coil cord from the ignition coil (on gasoline engines). Set the fuel control lever to the non-injection position or disconnect the wiring of the fuel cut solenoid (on diesel engines).

4. Fit the adapter to the nozzle holder mounting of the cylinder which is to be checked and tighten to the specified torque (on diesel engines).

5. Install a compression gauge to the cylinder to be checked.

6. For pneumatic governor, press the accelerator pedal fully to the floor and crank the engine with the starter motor to get the maximum reading of the gauge.
   ★ Take measurements more than two times on each engine to avoid measurement errors and average the values.
   ★ Discharged battery will not give sufficient revolutions. Use fully charged battery.

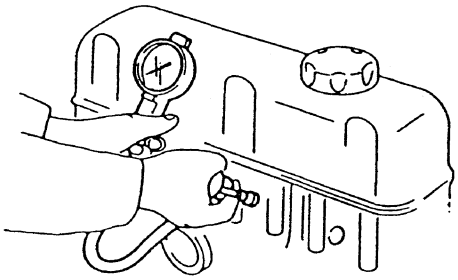

Gasoline engine

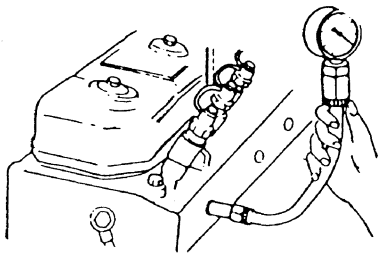

Diesel engine

Causes for insufficient compression

1. Poor adjustment of valve clearance
2. Pressure leakage from the valve seat
3. Seize of valve stems
4. Defective or broken valve springs
5. Pressure leakage from the cylinder head gasket
6. Sticking or breakage of piston rings
7. Wear of piston rings or cylinders

https://truckmanualshub.com/

ADJUSTMENT METHOD OF VALVE CLEARANCE

1. Remove the cylinder head cover.

2. Turn the crankshaft to match the top mark of the crank pulley and the pointer and confirm that the compression upper dead center is attained by No.1 cylinder or No.4 cylinder.

   ★ Upper dead center of the piston is confirmed by the cylinder with its closed intake and exhaust valves, that is, with both the locker arms being in free state.

3. Adjustment of clearance is performed beginning with the cylinder at the compression upper dead center.

   ★ **When No.1 cylinder is at the compression T. D. C.**
   Adjust the valves marked with ● for clearance listed on the table and give a turn to the crankshaft in the positive direction. Then adjust the remaining valves marked with ○ for clearance.

   ★ **When No.4 cylinder is at the compression T. D. C.**
   Adjust the valves marked with ○ for clearance listed on the table and give a turn to the crankshaft in the positive direction. Then adjust the remaining valves marked with ● for clearance.

4. Loosen locknut (8) of adjusting screw (7) and insert a specified thickness gauge between valve stem (6) and locker arm (5) to allow the gauge to move smoothly and adjust the gap. Then, tighten the locknut to fix the adjustment screw.

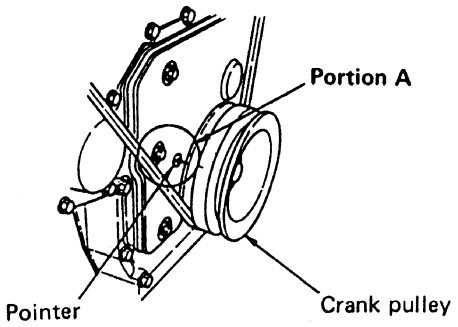

Detail of portion A

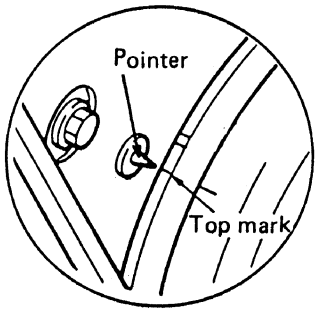

Engine with ignition sequence of 1-2-4-3

Cylinder No.	1		2		3		4	
Intake valve	●		○		●		○	
Exhaust valve		●		●		○		○

Engine with ignition sequence of 1-3-4-2

Cylinder No.	1		2		3		4	
Intake valve	●		●		○		○	
Exhaust valve		●		○		●		○

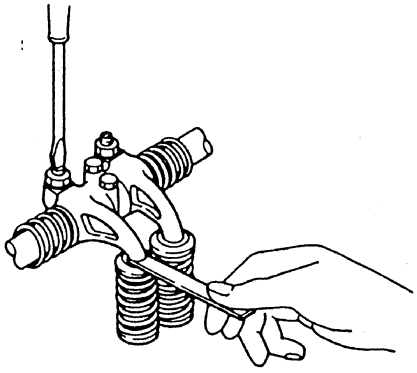

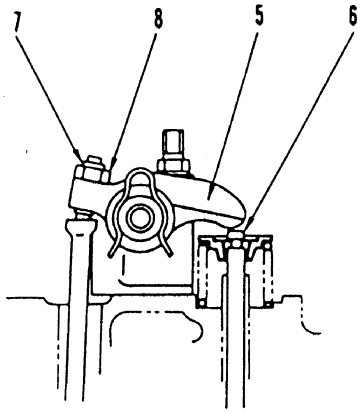

https://truckmanualshub.com/

TIGHTENING TORQUE FOR CYLINDER MOUNTING BOLTS

H15, H20II GASOLINE ENGINE

Put the copper sheet side of the head gasket on the block side, then set it on top of the block.
Set the cylinder head in position, coat the cylinder bolts with engine oil, then tighten in the order shown in the diagram on the right to the specified tightening torque as follows.

kgm	①29.4 Nm {3.0 kgfm} ②78.4 Nm {8.0 kgfm}	Tighten temporarily
	③Loosen	
	④29.4 Nm {3.0 kgfm} ⑤73.5 – 83.3 Nm {7.5 – 8.5 kgfm}	Tighten again

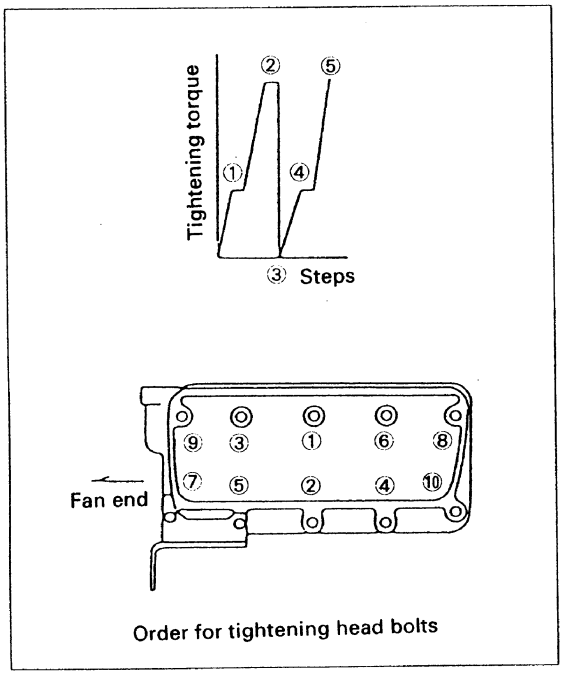

Order for tightening head bolts

4D92E DIESEL ENGINE

1. Coat the head bolt thread and seat surface with oil, then install uniformly by hand.

2. Tighten the bolts in two stages. Use the order shown in the diagram on the right (the opposite order to the order used during assembly).

Torque	1st step	T = 58.8 Nm {6 kgfm}
	2nd step	T = 117.6 Nm {12 kgfm}

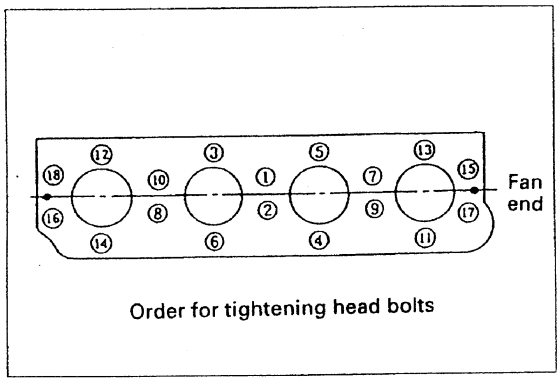

Order for tightening head bolts

https://truckmanualshub.com/

DIFFERENTIAL CASE

★ In case of a machine equipped with clutches, the same oil is used for both the differential casing and the transmission casing. For a machine equipped with torque converter, each casing uses its own oil. Therefore, individual checking and refilling oil are required for the differential casing and the TORQFLOW mission casing.

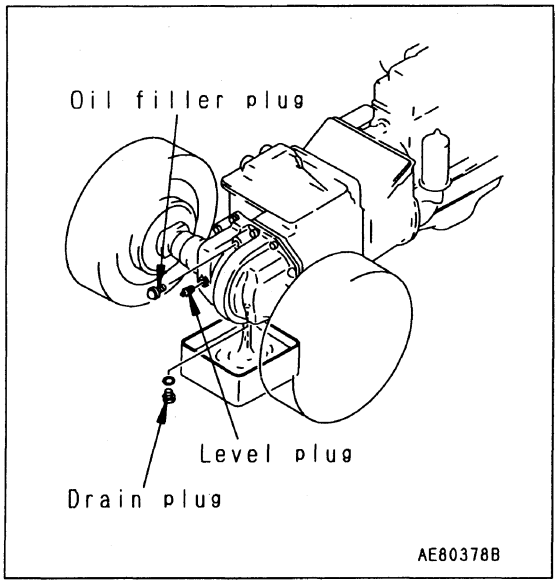

CHECK OIL LEVEL

Remove the level plug to see that the oil is nearly up to the lower level of the plug hole.

★ Remove the filler plug and refill the oil, if necessary.

REPLACING OIL

1. Remove the oil filler plug, and drain through the drain plug.
2. After draining, tighten the drain plug and refill the specified volume of oil.
3. Check the oil level after filling.

Oil capacity

Clutch type machine	11 ℓ (2.90 US gal, 2.42UK gal) including transmission case 7ℓ (1.85 US gal, 1.54 UK gal)
Torque converter type machine	4 ℓ (1.58 US gal, 1.32 UK gal)

https://truckmanualshub.com/

TORQFLOW TRANSMISSION CASE (TORQFLOW type only)

Change oil level: 10 ℓ (2.64 US gal, 2.20 UK gal)
Including torque converter 2.5 ℓ
(2.66 US gal, 0.54 UK gal)

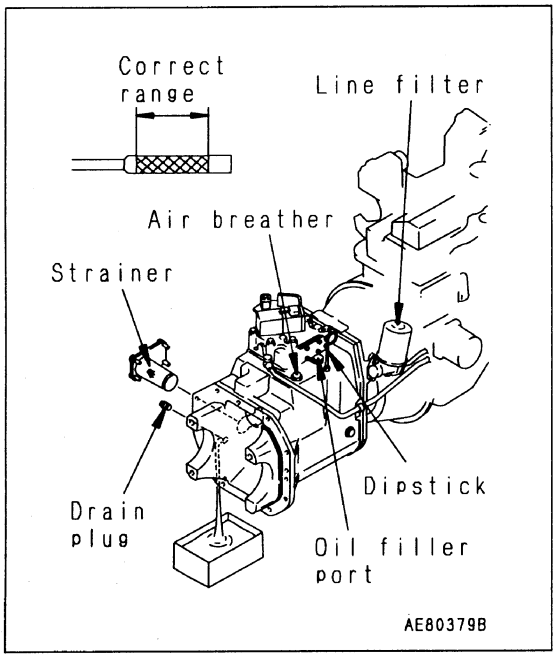

OIL LEVEL CHECK

1. Open inspection plate, and oil level can be checked using dipstick.
2. Add oil through oil filler plug if necessary.
   Always check oil level using dipstick after adding oil.

CHANGE

1. Remove drain plug.
2. When changing oil, remove strainer and clean it with flushing oil.
3. Blow dry compressed air from the inside of strainer to outside and install when completely dry.
4. Add specified amount of oil.
5. Check oil level after changing oil.

https://truckmanualshub.com/

HYDRAULIC TANK

Changing hydraulic tank
Cleaning strainer
Replacing line filter
Cleaning breather

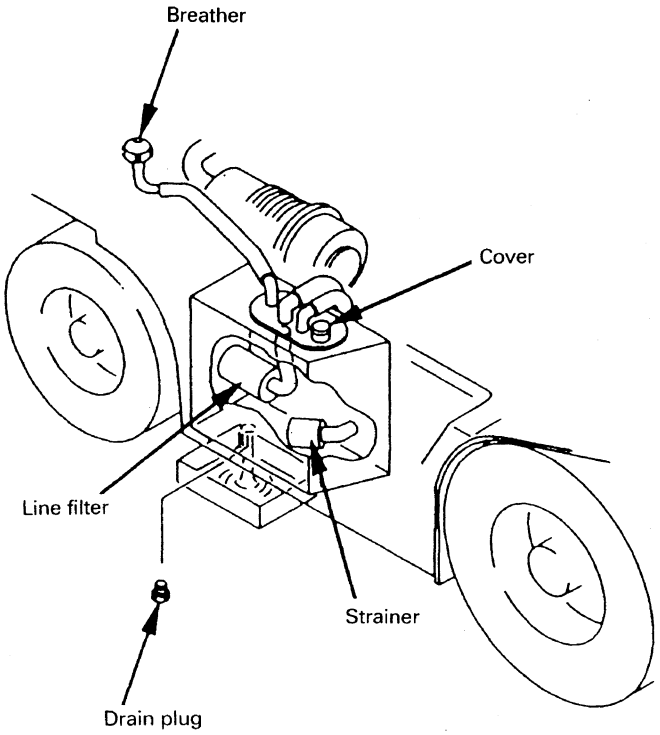

AE81457A

1. Change oil after removing drain plug on tank bottom.
2. When changing oil, remove strainer and clean it with flushing oil.
3. Blow dry compressed air from inside of strainer to outside and install when completely dry.
4. Remove line filter and replace with new one.
5. Pour specified amount of oil through breather hole. Check the oil level with oil gauge.

   Oil capacity: 31 ℓ
   (8.19 US gal, 6.82 UK gal)
6. Start engine. Fully raise and lower mast and also fully tilt it forward and backward several times.

https://truckmanualshub.com/

MEASURING HYDRAULIC DRIFT OF LIFT CYLINDER, TILT CYLINDER

⚠ PRECAUTIONS WHEN MEASURING

1. When measuring, never let anyone go under the load.
2. Do not put your feet on the mast stays or dashboard and climb up when measuring the hydraulic drift of the lift cylinder. If you measure the hydraulic drift when doing this, there is danger that you may get your hands or feet caught in the mast.
   Always use a strong, stable stand when measuring.
3. Before measuring, check that the hydraulic oil level is correct and that the hydraulic oil is not dirty or mixed with any other brand of oil.
4. Always carry out the measurement on flat horizontal ground in front of a strong platform which will support the truck if it should tip over to the front.

METHOD OF MEASURING

1. Stop the lift truck 500 mm (19.7 in) in front of the platform.
2. Operate the lift and tilt repeatedly to set the hydraulic oil temperature to 50°C.
3. Set the rated load on the forks and secure it to the fork carriage with wire.
4. Raise the load approx. 1500 mm (59.1 in) and set the mast perpendicular.

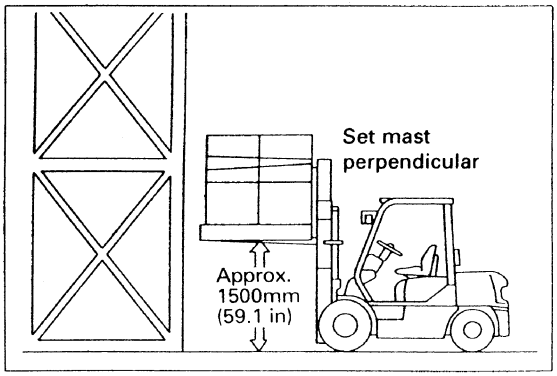

[Hydraulic drift of lift cylinder]

5. Wait for 3 minutes, then place a ruler against the lift cylinder piston rod and make a mark.
6. Measure the hydraulic drift over the next 15 minutes.

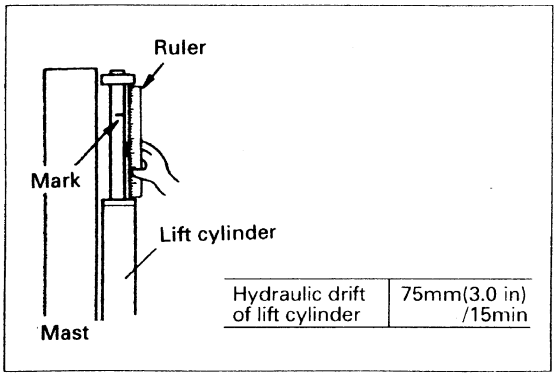

Hydraulic drift of lift cylinder	75mm(3.0 in) /15min

[Hydraulic drift of tilt cylinder]

5. Wait for 3 minutes, then place a ruler against the tilt cylinder piston rod and make a mark.
6. Measure the hydraulic drift over the next 15 minutes.

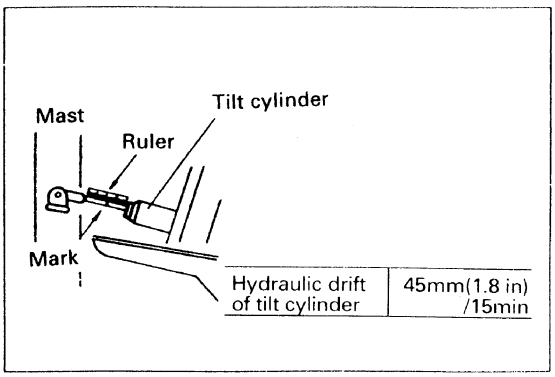

Hydraulic drift of tilt cylinder	45mm(1.8 in) /15min

https://truckmanualshub.com/

ADJUSTING CLUTCH/BRAKE PEDAL

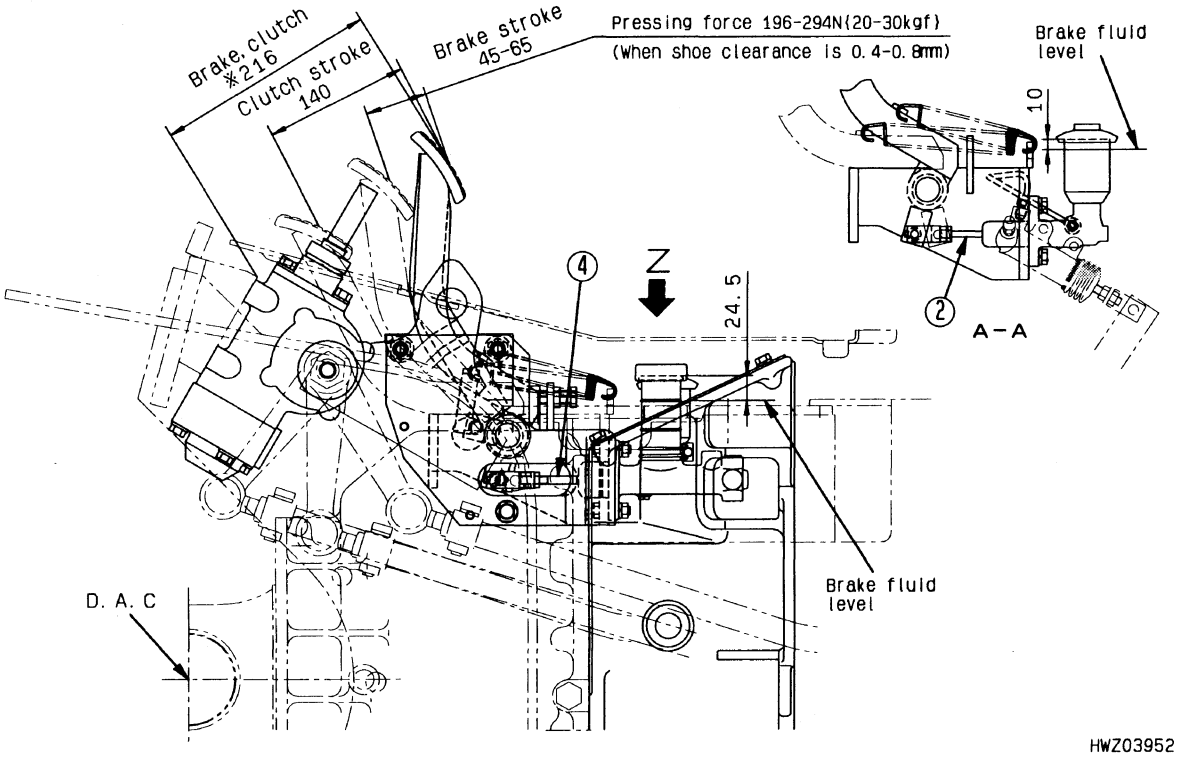

PROCEDURE FOR ADJUSTING CLUTCH PEDAL

1. Set stopper bolt ① so that the height of the pedal from the steering bracket is 216 mm (8.5 in).
2. Adjust rod ② of the master cylinder so that the pedal play is 1 – 3 mm (0.04 – 0.12 in). (Loosen the nut and turn the rod.)

PROCEDURE FOR ADJUSTING CLUTCH PEDAL

1. Set stopper bolt ③ so that the height of the pedal from the steering bracket is 216 mm (8.5 in).
2. Adjust rod ④ of the master cylinder so that the pedal play is 13 – 17 mm (0.5 – 0.67 in). (Loosen the nut and turn the rod.)

Procedure for adjusting stop lamp switch
After adjusting the brake pedal height, set so that clearance (B) is 0.5 – 1.5 mm (0.02 – 0.06 in).

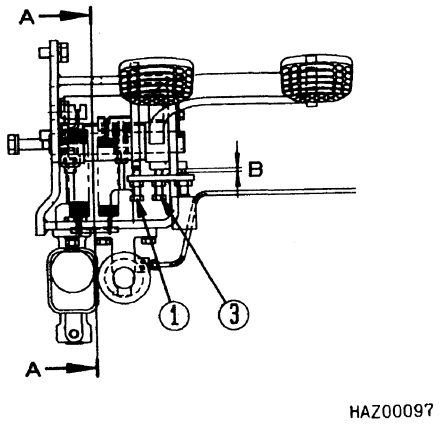

View Z

ADJUSTING INCHING/BRAKE PEDAL (TORQFLOW TRUCK)

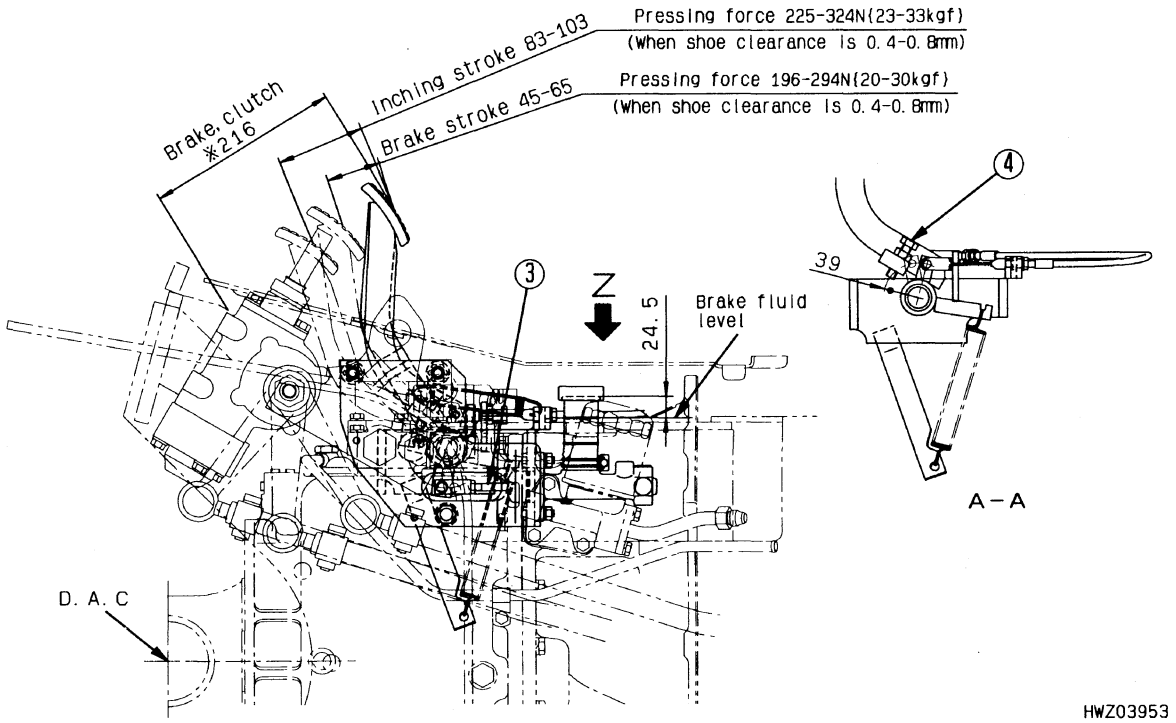

PROCEDURE FOR ADJUSTING PEDAL

1. Set bolts ① and ② so that the height of both the brake and inching pedals from the steering bracket is 216 mm (8.5 in).
2. Adjust rod ③ of the master cylinder so that the brake pedal play is 13 – 17 mm (0.5 – 0.67 in). (Loosen the nut and turn the rod.)
3. Adjust bolt ④ so that the inching pedal in interconnected with the brake pedal when the travel is 35 – 41 mm (1.38 – 1.62 in).

Procedure for adjusting stop lamp switch

After adjusting the brake pedal height, set so that clearance (B) is 0.5 – 1.5 mm (0.02 – 0.06 in).

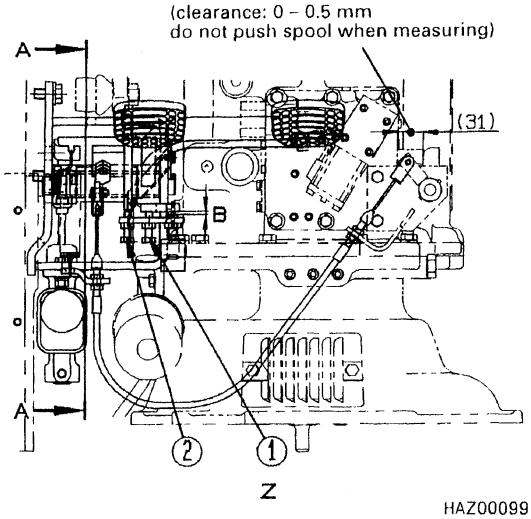

https://truckmanualshub.com/

ADJUSTING ACCELERATOR PEDAL (H15, H20II Engine)

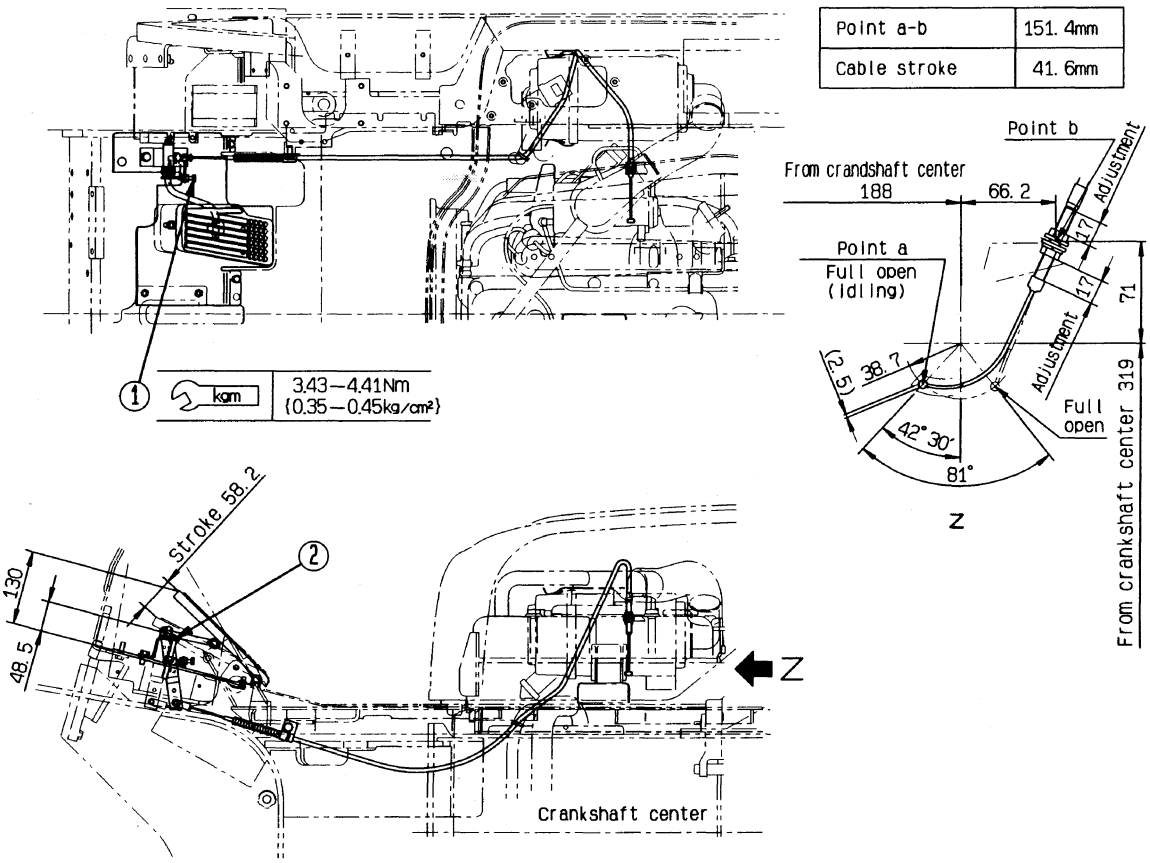

PROCEDURE FOR ADJUSTING PEDAL

1. Set stopper bolt ① so that the pedal height is 130 mm (5.1 in).

2. Set stopper bolt ② temporarily to a height of 48.5 mm (1.9 in).

3. After assembling the cable, adjust the outer casing mount of the cable so that the pedal has a play of 1 – 2 mm (0.04 – 0.08 in).

4. Adjust the height of stopper bolt ② again so that the lever at the engine end is fully open when the pedal is fully depressed.

https://truckmanualshub.com/

ADJUSTING ACCELERATOR PEDAL (4D92E Engine)

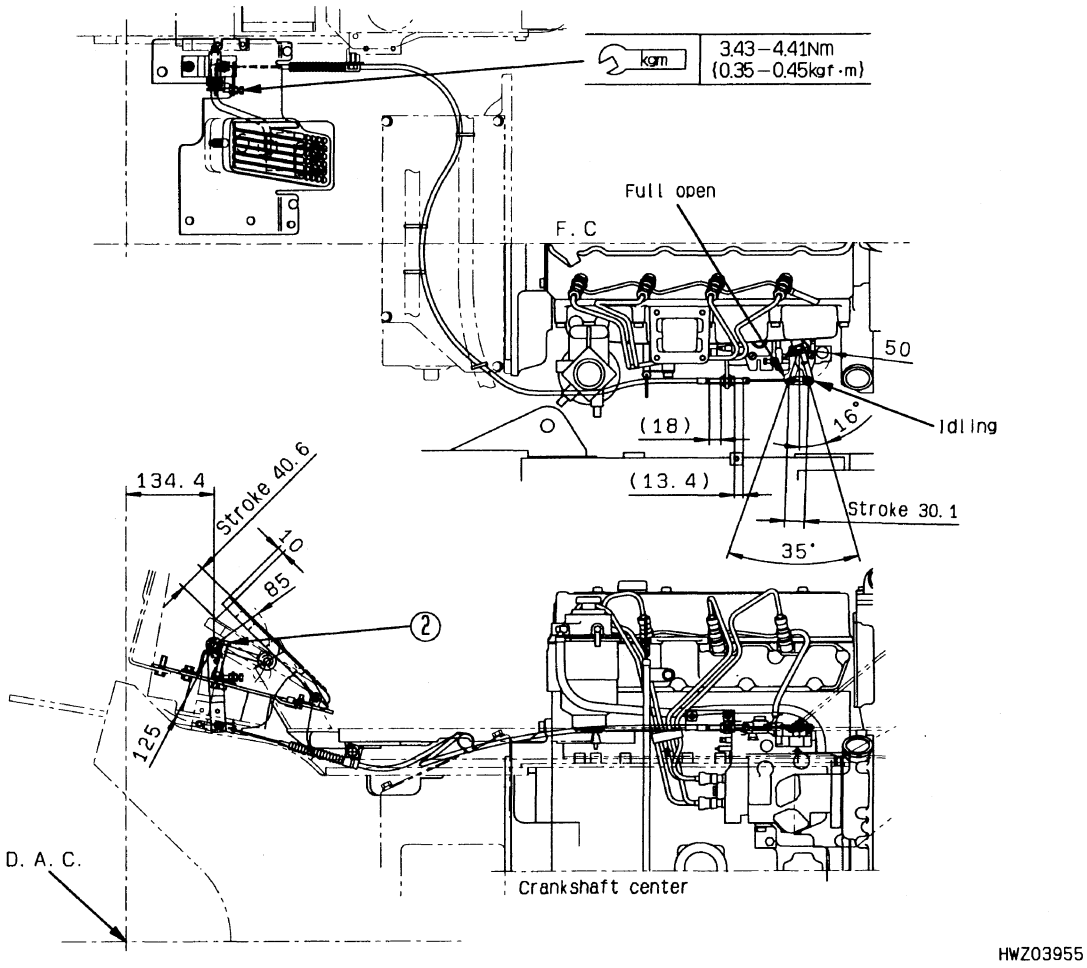

PROCEDURE FOR ADJUSTING PEDAL

1. Set stopper bolt ① so that the pedal height is 130 mm (5.1 in).

2. Set stopper bolt ② temporarily to a height of 60.5 mm (2.4 in).

3. After assembling the cable, adjust the outer casing mount of the cable so that the pedal has a play of 1 – 2 mm (0.04 – 0.08 in).

4. Adjust the height of stopper bolt ② again so that the lever at the engine end is fully open when the pedal is fully depressed.

https://truckmanualshub.com/

ADJUSTING PARKING BRAKE LEVER

★ Put blocks securely under the front and rear wheels.

1. Press the push button and set parking brake lever (1) to the RELEASED position.
2. Pull the parking brake lever enough to remove the play in the cable.
3. When the lever is released, adjustment bolt (2) will come up, so use a screwdriver to tighten so that the operating effort of the lever is the specified value.
4. Align stopper (3) with the width across flats of adjustment bolt (2).

Operating effort of lever	Min.196 N {20 kgf}

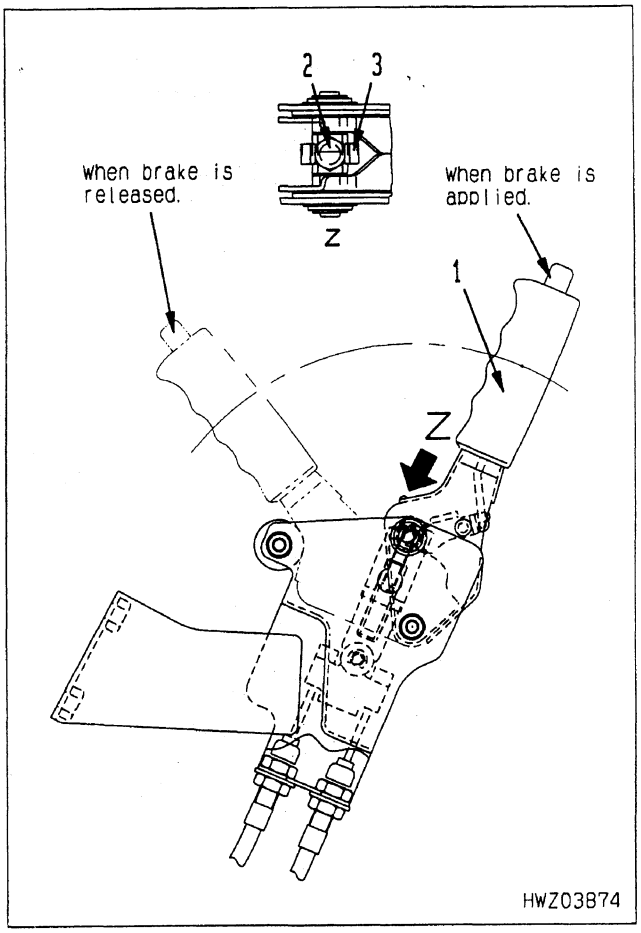

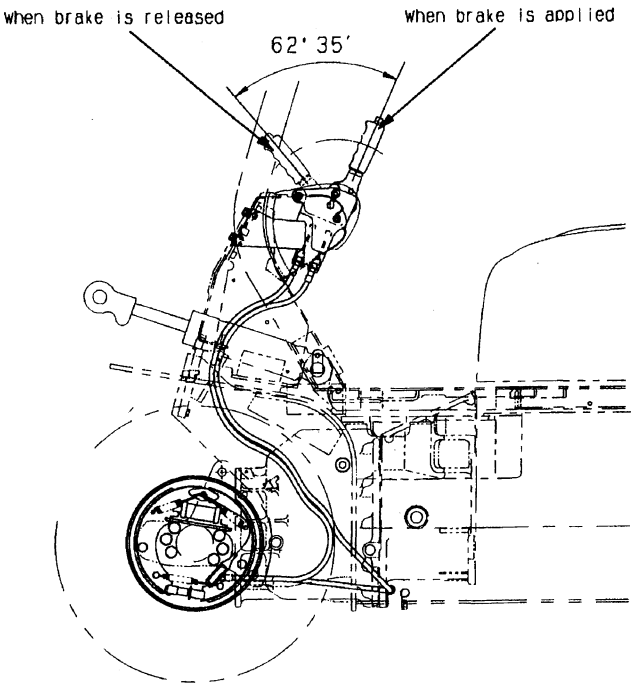

BLEEDING AIR

BRAKE PIPING

1. Remove the cap from the air bleed plug, fit one end of a vinyl hose to the plug, and put the other end of the hose in a container of brake fluid.
2. Loosen the air bleed plug approx. 3/4 turns and depress the brake pedal.
3. Tighten the air bleed plug, then release the brake pedal.
4. Repeat Steps 2 and 3 until no more bubbles come out from the hose.
5. When all the air has been completely removed, tighten the plug and install the cap.

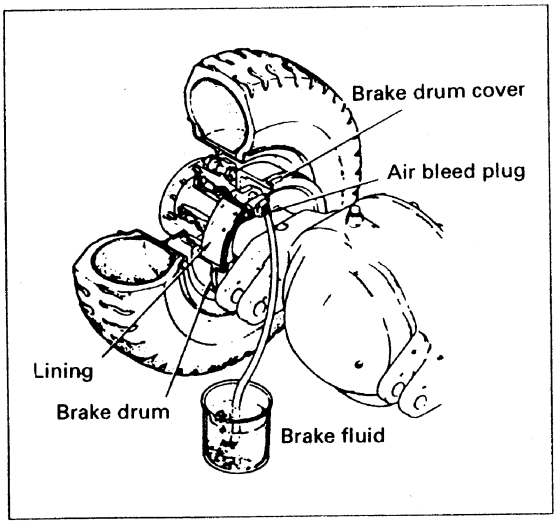

CLUTCH PIPING

1. Remove the cap from the air bleed plug, fit one end of a vinyl hose to the plug, and put the other end of the hose in a container of brake fluid.
2. Loosen the air bleed plug approx. 3/4 turns and depress the clutch pedal.
3. Tighten the air bleed plug, then release the clutch pedal.
4. Repeat Steps 2 and 3 until no more bubbles come out from the hose.
5. When all the air has been completely removed, tighten the plug and install the cap.

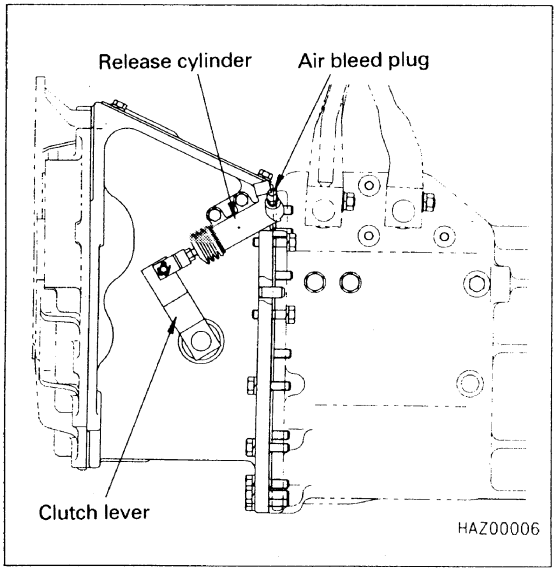

https://truckmanualshub.com/

LIFT CYLINDER

1. Start the engine and run it at low idling.

2. Raise and lower the mast.
   ★ Stop the mast approx. 100 mm before the maximum height and the lowest position.

3. Repeat Step 2 four or five times.

4. Raise and lower the mast to the maximum height and lowest position.

5. Repeat Step 4 four or five times.

FUEL PIPING
(diesel engine lift truck)

1. Loosen plug (1) and move knob (2) up and down until no more bubbles come out with the fuel.

2. After completely bleeding the air, tighten plug (1).

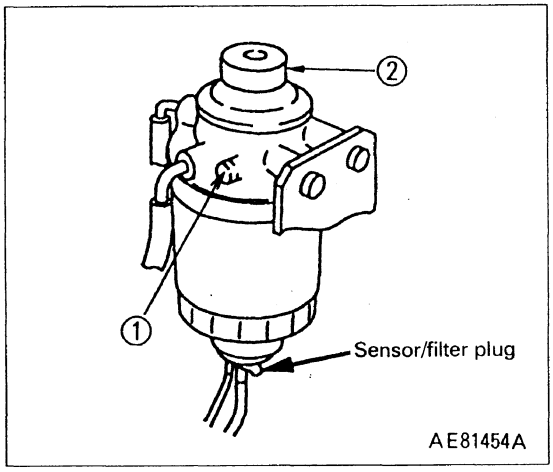

https://truckmanualshub.com/

ADJUSTING SPRING-UP ANGLE OF STEERING COLUMN

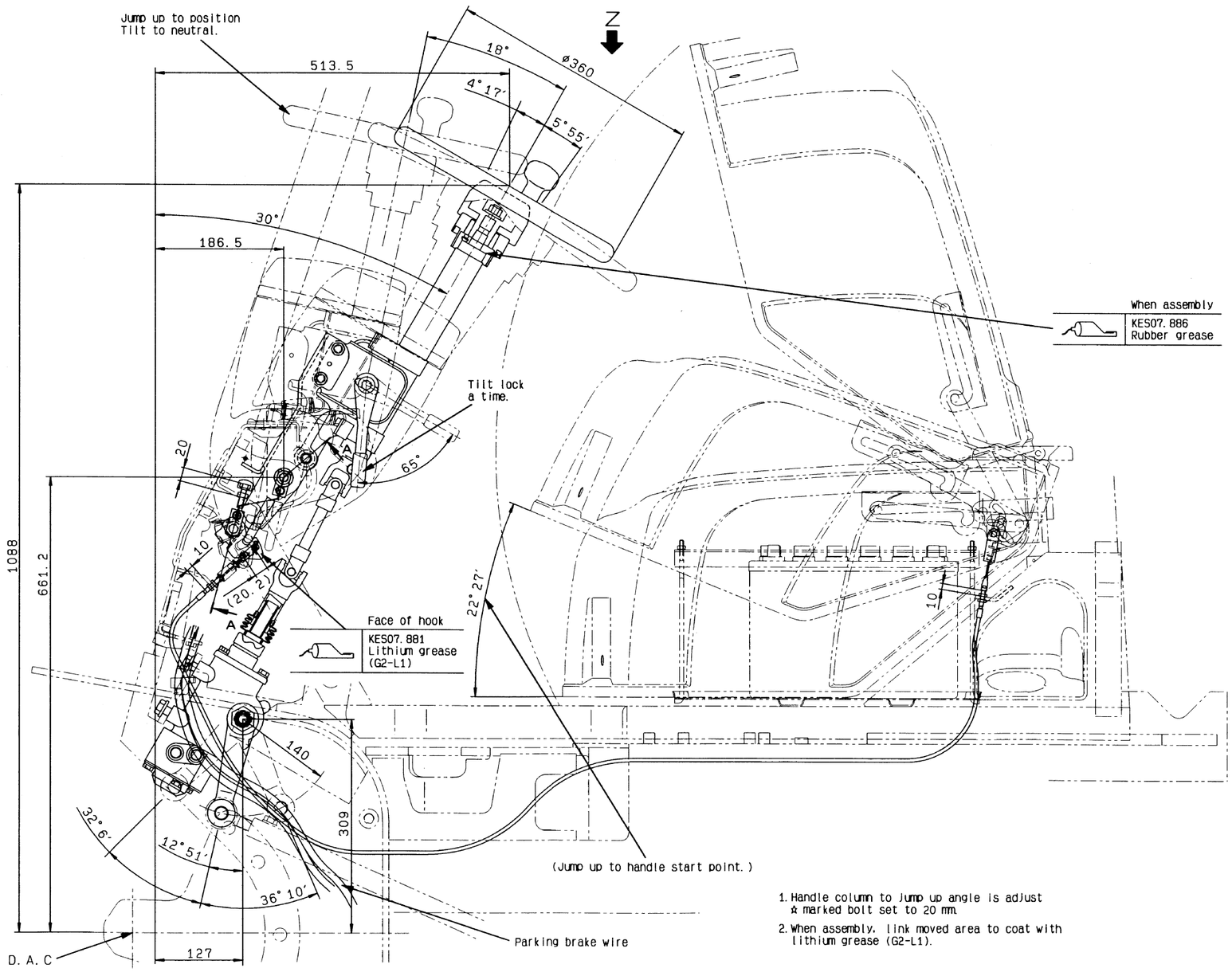

1. Handle column to jump up angle is adjust ☆ marked bolt set to 20 mm.
2. When assembly, link moved area to coat with lithium grease (G2-L1).

HWZ03956

https://truckmanualshub.com/

GASOLINE ENGINE LIFT TRUCK
[FG10/14/15/18-17, FG15H/18H-17]

NOTE:
Always use genuine Komatsu Forklift oil and grease. (Oil, grease, and anti-freeze are available from Komats Forklift distributors.)

⚠ CAUTION
Never use the wrong type of brake fluid.

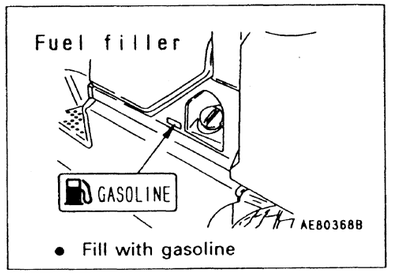

- Fill with gasoline

Lubrication point	Type of fluid	Ambient temperature (-4 -20, 14 -10, 32 0, 50 10, 68 20, 86 30, 104°F 40°C)	Capacity
Engine oil pan	Engine oil	SAE30-CD	3.8 ℓ 1.00 USgal, 0.84 UK gal
TORQFLOW transmission case	Engine oil	SAE10W-CD	10 ℓ 2.64 USgal, 2.20 UK gal
Differential case	Gear oil	SAE80 SAE90	TORQFLOW Transmission lift truck: 4 ℓ 1.06 US gal, 0.88 US gal Clutch type lift truck: 11 ℓ 2.90 US gal, 2.42 UK gal
Hydraulic tank	Hydraulic oil	SAE10W-CD SAE10W-CD	31 ℓ 8.18 US gal, 6.82 UK gal
Fuel tank	Gasoline		37 ℓ 9.76 US gal, 8.14 UK gal
Brake reservoir tank	Brake fluid	SAE70R-1, SAE70R-3	0.15 ℓ 0.040 US gal, 0.033 UK gal
Clutch reservoir tank	Brake fluid	SAE70R-1, SAE70R-3	0.1 ℓ 0.026 US gal, 0.022 UK gal
Greasing points	Lithium grease	NLGI No. 2	—
Cooling system	Fresh water, coolant (FLL-CT)	Add antifreeze	H15 engine: 8.0 ℓ 2.11 US gal, 1.76 UK gal H20II engine: 9.1 ℓ 2.40 US gal, 2.00 UK gal

https://truckmanualshub.com/

DIESEL ENGINE LIFT TRUCK
[FD15/18-17]

NOTE:
- **Never use fuel mixed with kerosene.**
- **Always use genuine Komatsu Forklift oil and grease. (Oil, grease, and anti-freeze are available from Komatsu Forklift disributors.)**

⚠ CAUTION

Never use the wrong type of brake fluid.

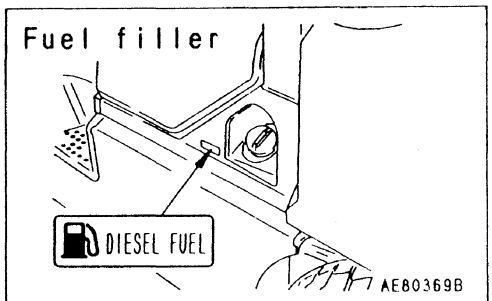

- Fill with diesel fuel.

Lubrication point	Type of fluid	Ambient temperature (-4 14 32 50 68 86 104°F / -20 -10 0 10 20 30 40°C)	Capacity
Engine oil pan	Engine oil	SAE10W-CD; SAE30-CD	9.2 ℓ 2.43 USgal, 2.02 UK gal
TORQFLOW transmission case	Engine oil	SAE10W-CD	10 ℓ 2.64 USgal, 2.20 UK gal
Differential case	Gear oil	SAE80; SAE90	TORQFLOW Transmission lift truck: 4 ℓ 1.06 US gal, 0.88 US gal Clutch type lift truck: 11 ℓ 2.90 US gal, 2.42 UK gal
Hydraulic tank	Hydraulic oil	SAE5W-CD; SAE10W-CD	31 ℓ 8.18 US gal, 6.82 UK gal
Fuel tank	Diesel	ASTM D975 No. 2; ASTM D975 No.1	37 ℓ 9.76 US gal, 8.14 UK gal
Brake reservoir tank	Brake fluid	SAE70R-1, SAE70R-3	0.15 ℓ 0.040 US gal, 0.033 UK gal
Clutch reservoir tank	Brake fluid	SAE70R-1, SAE70R-3	0.1 ℓ 0.026 US gal, 0.022 UK gal
Greasing points	Lithium grease	NLGI No. 2	—
Cooling system	Fresh water, coolant (FLL-CT)	Add antifreeze	4D92E engine: 9.2 ℓ 2.43 US gal, 2.04 UK gal

https://truckmanualshub.com/

https://truckmanualshub.com/

CHECK ITEMS FOR EACH EQUIPMENT

Component	Check item	Details of check
Engine	1. Ease of starting, abnormal noise	• Set forward/reverse to the neutral position, pull the parking brake lever, then start the engine and check the following. 1. Does engine start smoothly? 2. Is there any abnormal noise? 3. Does preheating plug work normally? 4. Do accelerator pedal and levers work smoothly?
	2. Engine rotation, exhaust gas color	• Depress the accelerator pedal and check for the following. 1. Combustion instability 2. Abnormal noise 3. Abnormal explosion 4. Irregular engine vibration 5. Irregular rise in engine speed 6. Leakage of exhaust gas 7. Abnormal exhaust gas color When idling: No color When pedal is depressed: Faint black color
	3. Idling speed	• After warming up the engine, run at idling and check the following. 1. Idling speed FG10 – 18: 750 – 850 rpm FG15H, 18H: 750 – 850 rpm FD15, 18: 750 – 800 rpm 2. Max. speed FG10 – 18: 2950–3150 rpm FG15H, 18H: 2850–3050 rpm FD15, 18: 2700–2750 rpm
	4. Air cleaner	• Check the air cleaner and element for the following. 1. Cracked, damaged element 2. Loose air cleaner mount 3. Dirty, damaged element ★ For details of the method of cleaning and replacing the element, see TESTING AND ADJUSTING.

https://truckmanualshub.com/

Component	Check item	Details of check
Engine	5. Cylinder head	Check for loose cylinder head mounting bolts ★ For details of the tightening method and tightening torque for engine cylinder head mounting bolts, see TESTING AND ADJUSTING.
	6. Valve clearance	**Valve clearance** Unit: mm (in)

Model	Engine	Intake valve	Exhaust valve
FG10 – 18	H15	0.38 (Hydraulic lifter)	0.38 (Hydraulic lifter)
FG15H, 18H	H20II	0.38 (Warm) (0.015)	0.38 (Warm) (0.015)
FD15, 18	4D92E	0.2 (Cold) (0.0177)	0.2 (Cold) (0.0177)

★ For details of the method of adjusting, see TESTING AND ADJUSTING.

7. Compression pressure	**Compression** Unit: MPa{kgf/cm²}/rpm

Model	Standard	Repair limit
FG10 – 18	1.27 {13.0}/300	1.09 {11.0}/300
FG15H, 18H	1.23 {12.5}/300	1.03 {10.5}/300
FD15, 18	2.94 {30}/250	2.35 {24}/200

★ For details of the method of measuring, see TESTING AND ADJUSTING.

8. Injection pressure (diesel engine lift truck)

Pressure at start of injection

Install a nozzle tester to the nozzle when checking.

Unit: MPa {kgf/cm²}

Injection pressure	4D92E	11.3 – 12.3 {115 – 125}

Adjustment:
Adjust with adjustment screw.

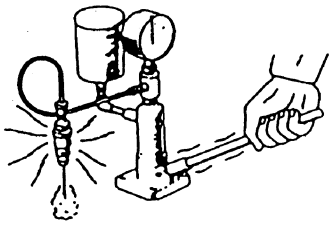

https://truckmanualshub.com/

Component	Check item	Details of check
Engine	9. Injection spray condition (diesel engine lift truck)	Check the spray condition of the injection nozzle. If the defective: Remove nozzle from holder, remove carbon stuck to the nozzle, then wash in diesel oil. 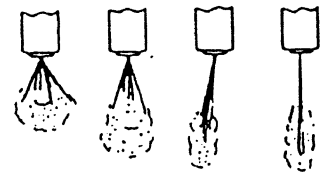 No good No good No good Good
	10. Turbocharger	Check for the following. 1. Abnormal vibration 2. Abnormal noise 3. Leakage of gas
	11. Engine mount	Check for the following. 1. Crack, deformed bracket 2. Loose, missing mounting bolts, nuts 3. Damaged, deteriorated anti-vibration rubber
	12. Lubricating system	1. Engine oil 1) Oil level Check the oil level with the oil level gauge, and add oil if the level is low. H15 engine: 4.0 ℓ (1.06USgal, 0.88UK gal) 4D92E engine: 4.8 ℓ (1.27USgal, 1.06UK gal) H20II engine: 3.8 ℓ (1.00USgal, 1.08UK gal) 2) Discoloration and deterioration Replace if there is any discoloration or deterioration. 3) Leakage of oil 2. Engine oil filter The condition cannot be judged visually, so replace the filter periodically.

https://truckmanualshub.com/

Component	Check item	Details of check
Engine	13. Fuel system	Check for the following. 1. Leakage of fuel 2. Damage, deterioration of hoses and pipes 3. Fuel filter The condition cannot be judged visually, so replace the filter periodically.
	14. High-pressure gas fuel system	Check for the following. 1. Leakage of gas 2. Cracked, damaged piping 3. Loose, damaged cylinder mount bracket
	15. Blow-by gas reduction system	Check for the following. 1. Actuation of valve 2. Clogged, damaged piping
	16. Coolant, radiator	1. Coolant level 2. Leakage of water from hose 3. Cracked, heat-hardening of hose 4. Radiator cap ⚠ Never remove the radiator cap when the cooling is hot. Boiling water may spurt out. ⚠ When removing the radiator cap after the cooling water temperature has gone down, turn the cap slowly to release the pressure before removing it. 1) Pressure regulator valve Push the cap spring down with your finger and check that there is the proper tension. 2) Negative pressure valve Pull the valve, then release it and check that it closes. ★ If the packing is damaged, replace the whole radiator cap assembly.

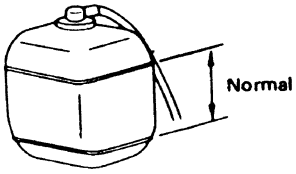

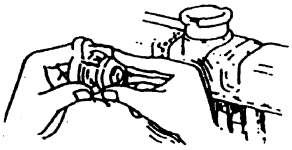

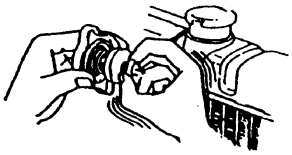

https://truckmanualshub.com/

Component	Check item	Details of check
Engine	17. Fan, fan belt	1. Fan belt 1) When checking the fan belt: • Check the inside of the belt also. • If the bottom of the pulley is shining, the belt will slip, so replace it. 2) Deflection Press the belt at a point midway between the fan pulley and alternator pulley to check. Unit: mm (in) H15 engine: 11 – 13 (0.31 – 0.51) (Finger pressure 98 N) 4D92E engine: 10 – 15 (0.31 – 0.51) (Finger pressure: 10 kgf) H20II eingne: 11 – 13 (0.43 – 0.51) (Finger pressure 98 N) 11 – 13 (0.43 – 0.51) (Finger pressure: 10 kgf) **Adjustment**: Loosen the alternator mounting nut and adjustment bar bolt, then move the position of the alternator to adjust. 2. Fan, fan cover (shroud) 1) Cracked, deformed fan 2) Loose fan mounting bolts 3) Cracked, deformed shroud 4) Loose shroud mounting bolts
	18. Distributor (gasoline engine lift truck)	1. Cracked cap 2. Damaged cable 3. Point gap Point gap: Full transistor

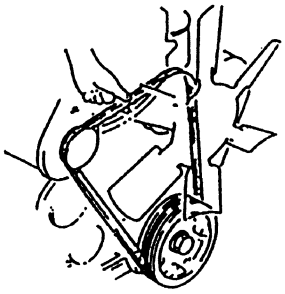

https://truckmanualshub.com/

Component	Check item	Details of check
Engine	19. Spark plug ignition timing (gasoline engine lift truck)	1. Spark plug 1) Gap Remove the plug with a plug wrench, then measure the gap with a gauge. * If the plug is burned or is not within the specified range, replace the plug. 2) Cleaning of the plug or the surrounding area. 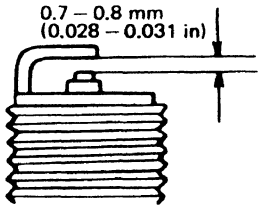 2. Ignition timing 1) Start the engine and run at idling. 2) Using a timing light, check with the timing mark on the crankshaft pulley and front cover. 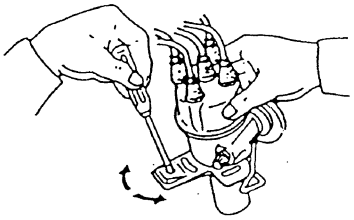 **Adjustment:** Turn the distributor to adjust. Ignition timing (BTDC°/rpm): H15 6°/650 rpm; H20II 4°/650 rpm
	20. Charging system, wiring	Check the following. 1. Specific gravity of battery electrolyte Specific gravity of battery electrolyte: 1.280, 1.240 — Charge condition: Fully charged, 1/4 discharged — Need for charging: No Specific gravity of battery electrolyte: 1.210, 1.130 — Charge condition: 1/2 discharged, Fully discharged — Need for charging: Yes If the charge is low, check the alternator. 2. Battery electrolyte level 3. Loose, corroded battery terminals 4. Loose wiring connections 5. Damaged wiring 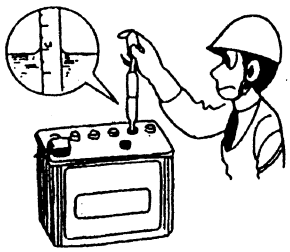

https://truckmanualshub.com/

Component	Check item	Details of check
Power train	21. Clutch	1. Abnormal noise Check for abnormal noise when the clutch pedal is depressed fully. 2. Pedal height (from floor plate) When free: 140 – 150 mm (5.5 – 5.9 in) 3. Engaging, disengaging of clutch The clutch must disengage completely when the clutch pedal is fully depressed. The clutch must engage before the clutch pedal is fully released. 4. Play Play: 3 – 5 mm (0.12 – 0.2 in) 5. Leakage of oil from clutch cylinder or piping
	22. Transmission	1. Shift lever (clutch type lift truck) 1) Play at neutral position 2) Ease of entering gear shift position, play at each gear shift position 2. Forward/reverse lever (TORQFLOW truck) • Operate the lever and check the following. 1) Play (neutral position, gear shift position) 2) Ease of entering each shift position 3. Transmission 1) Abnormal noise

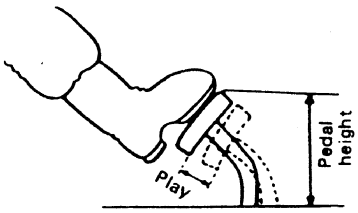

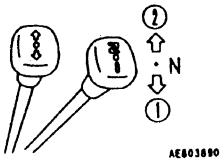

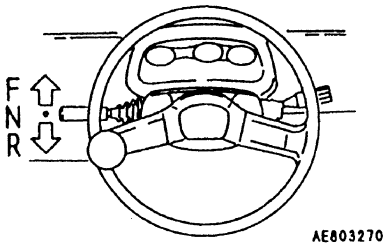

https://truckmanualshub.com/

Component	Check item	Details of check
Power train	22. Transmission (continued)	2) Oil leakage If oil is oozing out and dripping, replace the packings. 3) Oil level Stop the lift truck on level ground and check with the oil level gauge. 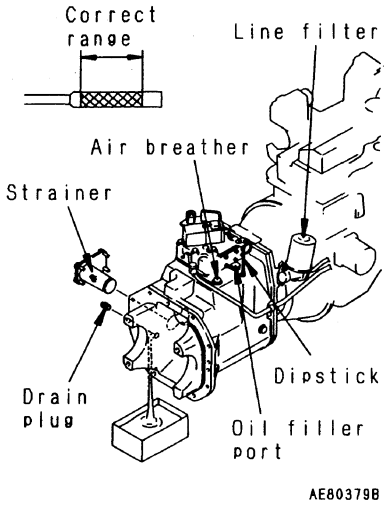 Oil capacity: 10ℓ (2.5ℓ oil inside torque converter) 4. Inching pedal (TORQFLOW truck) 1) Protrusion of inching spool Check with the pedal fully released. (Figure on right) Protrusion: 31 mm (1.22 in) 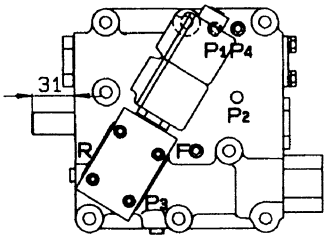 2) Interconnected stroke Adjust with the adjustment bolt so that the inching pedal interconnects with the brake pedal at the specified value. Interconnected stroke: 35 – 41 mm (1.38 – 1.61 in) 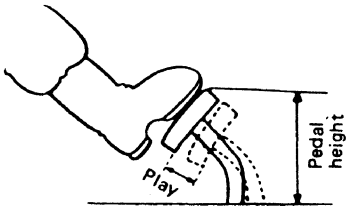 3) Pedal height When free: 140 – 150mm (5.5 – 5.9 in) 4) Play Play: 2 – 3 mm (0.08 – 0.12 in)

Component	Check item	Details of check
Power train	23. Torque converter	⚠ When carrying out the following checks, apply the parking brake securely and put blocks under the wheels.

1. Clutch actuation pressure
   Place the forward/reverse lever at FORWARD or REVERSE, then depress the accelerator pedal and measure the pressure.

Clutch actuation pressure	0.91 – 1.31 MPa {9.3 – 13.4 kgf/cm²}

2. Stall speed
   Place the forward/reverse lever at FORWARD and REVERSE, run the engine at maximum speed, and measure the engine speed at that point.

H15	2400 ± 150 rpm	4D92E	1830 ± 150 rpm
H20II	1880 ± 150 rpm		

☆ This operation raises the torque converter oil temperature, so do not continue the operation for a long time.

Position of hydraulic ports on torque converter assembly

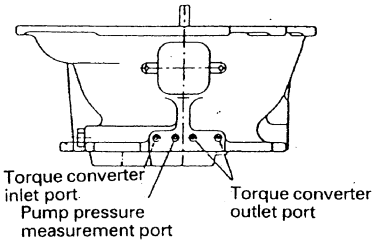

Position of hydraulic ports on control valve assembly

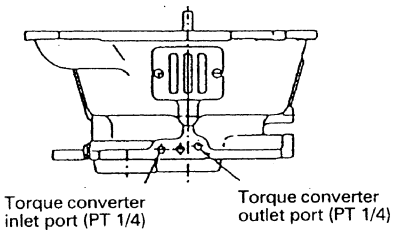

3. Torque converter inlet port pressure: 0.29 – 0.68 MPa {3 – 7 kgf/cm²}

4. Torque converter outlet port pressure:
   0.22 – 0.44 MPa {2.5 – 4.5 kgf/cm²}

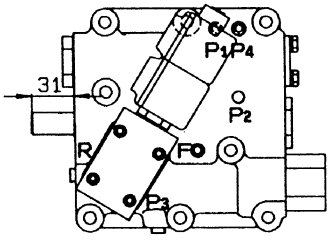

HAZ001BB

Component	Check item	Details of check
Power train	24. Drive shaft	Not applicable to this model
	25. Differential	1. Abnormal noise when traveling 2. Oil level in differential case (For the clutch type truck: Including transmission case) 3. Oil leakage ★ For details of the method of measuring the oil level and changing the oil, see TESTING AND ADJUSTING. 4. Leakage of oil from case 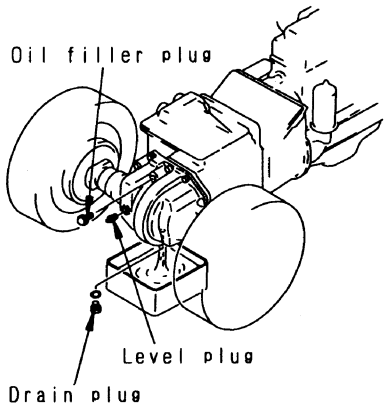
	26. Final drive	Not applicable to this model

https://truckmanualshub.com/

Component	Check item	Details of check
Travel system	27. Front axle	1. Deformation, cracks, damage Check visually or check with the crack detection method. (Be particularly careful to check the welds and area around the main frame mounting bolts.) 2. Loose mounting bolts Tightening torque for bolts used for mounting to frame kgm: 343 – 427 Nm (35.0 – 43.5 kgfm)
	28. Rear axle	1. Deformation, cracks, damage Check visually or check with the crack detection method. 2. Center pin play 3. Thrust clearance Clearance **a**: Max. 2.0 mm (0.08 in) Push the axle to one side when measuring the clearance or measure the clearance at the front and rear. Adjusting: If the clearance is more than 2.0 mm (0.08 in), adjust with shims to bring it within 0.5 mm (0.02 in). Bolt 1 (kgm): 245 – 309 Nm {25.0 – 31.5 kgfm} 4. Loose cap mounting bolts
	29. Tire	1. Inflation pressure Unit: kPa {kgf/cm²} Front tire: 690 {7.0} Rear tire: 780 {7.0} 2. Cracks in tread, side wall If the cracks are serious, replace the tire. 3. Depth of tread (amount of wear) For pneumatic (air-filled) tires: Measure the depth of the tread at a position 1/4 of the tread width and check that the depth is at least 1.6 mm (0.06 in). 4. Abnormal wear Uneven wear, stepped wear 5. Metal pieces stuck in tire

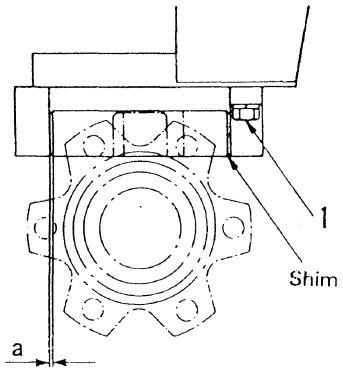

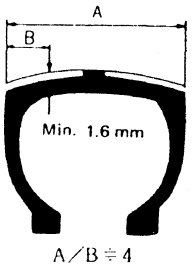

https://truckmanualshub.com/

Component	Check item	Details of check
Travel system	30. Wheel	1. Tightening torque for hub nuts Unit: Nm (kgfm) Front wheel: 157 – 245 (16 – 25) Rear wheel: 83 – 147 (8.5 – 15) 2. Deformation, cracks in side ring Check visually or check with the crack detection method. 3. Tightening torque for rim mating nuts Unit: Nm (kgfm) Front wheel: 88 – 123 (9.0 – 12.5) Rear wheel: 59 – 74 (6.0 – 7.5)

https://truckmanualshub.com/

Component	Check item	Details of check
Steering system	31. Steering wheel	1. Shaking, pulling, dragging 2. Operating effort Play Play: 30 – 60 mm (At engine idling) (1.2 –1.4 in) ★ Adjustment: Adjust at gear box 3. Looseness, play 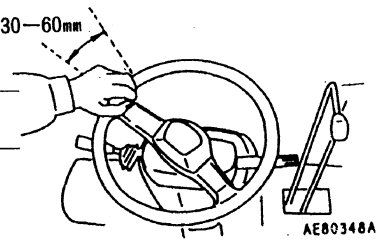
	32. Steering gear box	1. Oil leakage 2. Tightening torque for mounting bolts kgm: 98 – 123 Nm {10.0 – 12.5 kgfm}
	33. Rod, arms (steering linkage)	1. Cracks, damage, curvature 2. Missing, broken split pins 3. Loose, missing mounting bolts 4. Play in movable parts, connections
	34. Knuckle	1. Wheel bearing • Jack up and check for the following. 1) Play Use your hands to move the tire at the top and bottom to check. 2) Abnormal noise, rotate the tire by hand to check 2. King pin 1) Play 2) Cracks, damage 3. Knuckle Damage Check visually or check with the crack detection method.

Component	Check item	Details of check
Steering system	35. Left, right turning radius	Measure minimum turning radius 1) Have an assistant operate the lift truck with the turning radius at the minimum. 2) Fit a piece of chalk to the end of a stick, fix it to the side of the outermost part of the counterweight, and draw a circle on the road surface. 3) Measure the circle on the road surface. 4) Carry out the check both when turning left and when turning right. 1.0-ton truck: Within 1870 mm (73.7 in) ± 5% 1.35-ton truck: Within 1925 mm (75.7 in) ± 5% 1.5-ton truck: Within 1955 mm (77.0 in) ± 5% 1.75-ton truck: Within 1990 mm (78.4 in) ± 5% Difference between right and left: Within ±100 mm (3.9 in) Adjustment: Adjust with stopper bolt
	36. Steering wheel	1. Loose, missing stopper bolts 2. Contact between wheels and other parts of the lift truck
	37. Power steering system	1. Leakage of oil from power steering cylinder or hose 2. Damaged, deteriorated hoses 3. Loose, missing mounting bolts 4. Interference with chassis 5. Oil pressure Install an oil pressure gauge to oil pressure measurement port (2) in the diagram on the left, then turn the steering wheel fully and measure the oil pressure. Oil pressure: 7.4 MPa {75 kgf/cm²} 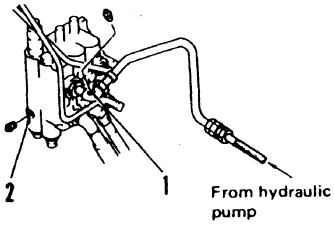
	38. Steering chain	Not applicable to this model

https://truckmanualshub.com/

Component	Check item	Details of check
Braking system	39. Travel brake	1. Brake pedal 1) Pedal height When depressed: 90 – 100 mm (3.54 – 3.94 in) 2) Play Play: 13 – 17 mm (0.51 – 0.67 in) 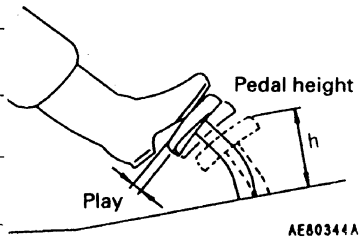 2. Braking effect • Travel at maximum speed on a flat, dry paved surface, then stop the machine suddenly, and check for the following. 1) Pulling of steering wheel 2) Dragging of brakes 3) Abnormal noise 4) Stopping distance When unloaded: Within 5 m (197 in) (when traveling at 20 km/h) When loaded: Within 2.5 m (98.5 in) (when traveling at 10 km/h)
	40. Parking brake	1. Parking brake lever 1) Operating effort for lever Min. 245 N {25 kgf} 2) Braking force Check that the parking brake can hold the lift truck when it is stopped on the slope given below. When unloaded: Slope of 11.2° or above When loaded: Slope of 8.5° or above 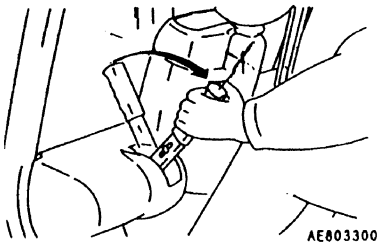
	41. Rod, link, cables	1. Damage, looseness, play 2. Broken split pins
	42. Brake piping	Check the pipes, hoses, and joint visually for the following. 1. Damage 2. Oil leakage 3. Contact 4. Deteriorated hoses 5. Loose mounting bolts

Component	Check item	Details of check
Braking system	43. Oil brake	1. Actuation of master cylinder, wheel cylinder Depress the brake pedal and check the following. 1) Operating effort 2) Change in operating effort 3) Change in position of pedal when kept depressed 4) Return of pedal when released ★ If there is any change in the position when the pedal is kept depressed, and there is no external leakage of oil, it means that there is an abnormality in the brake valve. 2. Brake reservoir tank 1) Oil level 2) Dirt in oil, leakage 3. Deterioration of wheel cylinder Clearance between cylinder and piston: Within 0.2 mm (0.008 in) 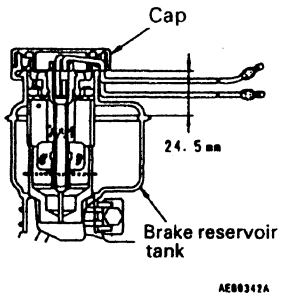
	44. Air brake	Not applicable to this model
	45. Brake booster	Not applicable to this model
	46. Brake shoe, lining	1. Brake shoe Operating condition, rust, wear 2. Peeling, damage, wear of lining Lining thickness (remaining thickness to rivet): Min. 2 mm (0.08 in) 3. Corrosion of anchor pin 4. Deterioration of return spring Free length: Max. 105 mm (4.1 in) Thickness of hook portion: Min. 2.0 mm (0.08 in)

https://truckmanualshub.com/

Component	Check item	Details of check
Braking system	47. Brake drum	Cracks, damage, wear of drum Measure the following dimension and check that it is within the service limit. Inside diameter of drum: Within 256 mm (10.09 in)
	48. Back plate	1. Deformation, cracks, damage 2. Tightening torque for mounting bolt Unit: Nm {kgfm} kgm: Loctite #271 (thread hole) 157 – 196 (16.0 – 20.0) 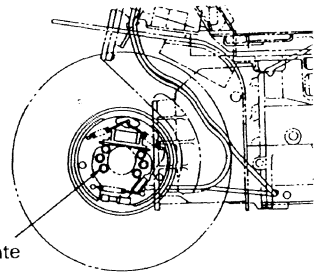
	49. Brake disc 50. Pad	Not applicable to this model
	51. Parking brake drum 52. Lining	Common with the travel brake drum, lining (see Nos. 46, 47)

https://truckmanualshub.com/

Component	Check item	Details of check
Loading system	53. Fork (1)	1. Deformation, cracks, wear at fork stopper pin 2. Check that the opening of the fork tips and difference in height are within the specified range. 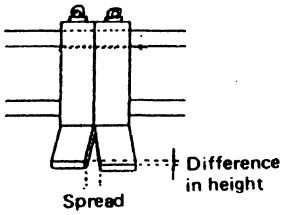 Opening: Within 35 mm (1.4 in) Difference in height: Within 15 mm (0.6 in)
	54. Fork (2)	1. Cracks, wear at upper hook, lower hook portion 2. Cracks, wear at fork root Check that the thickness of the fork root is within the specified value. 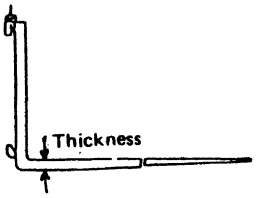 1.0-ton truck: Min. 26 mm (1.03 in) 1.35-ton truck: Min. 30 mm (1.18 in) 1.5-ton truck: Min. 30 mm (1.18 in) 1.75-ton truck: Min. 33 mm (1.30 in) ★ From time to time, use the crack detection method to check the fork root and hook, where stress is concentrated.
	55. Mast (1)	1. Deformation, cracks, damage to mast Check the following places visually or check with the crack detection method. • Mast stay • Tilt cylinder bracket • Roller shaft weld 2. Wear, play in mast roller, cracks in roller shaft Set the mast perpendicular, raise the forks approx. 10 cm from the ground, then check that the following clearances are within the specified value. Clearance between outer mast and inner mast: Left-to-right: Within 2.0 mm (0.08 in); Front-to-rear: Within 2.5 mm (0.1 in) Clearance between inner mast and fork carriage: Left-to-right: Within 2.0 mm (0.08 in); Front-to-rear: Within 2.5 mm (0.1 in)
	56. Mast (2)	1. Play in mast support Check that there is an oil groove in the bushing at the mast support. 2. Loose mast cap mounting bolts Tightening torque kgm: 157 – 196 Nm {16 – 20 kgfm}

https://truckmanualshub.com/

Component	Check item	Details of check
Loading system	57. Fork carriage	1. Deformation, cracks, damage to fork carriage 2. Wear, play in roller 3. Cracks in roller shaft
	58. Lift chain	1. Tension Set the mast perpendicular, raise the forks approx. 10 cm from the ground, then push the lift chain at the mid point with your finger and check that there is no difference in the tension. Adjustment: Adjust with the chain stopper 2. Elongation Measure the length between 17 links and check that it is within the specified value. Length between 17 links: Within 275.5 mm (10.85 in) 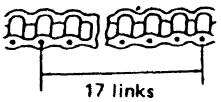 3. Thread of anchor bolt Check visually that there is no abnormality.
	59. Chain wheel	Deformation, damage, play in wheel • Check contact surface with chain visually. • Turn by hand and check for play in the bearing.
	60. Attachment (1)	1. Installation to chassis 2. Loose bolts, nuts
	61. Attachment (2)	1. Cracks, deformation, damage, wear at all parts 2. Actuation, abnormal noise at all parts

Component	Check item	Details of check
Hydraulic system	62. Hydraulic tank	1. Oil leakage 2. Oil level Check the oil level with the oil level gauge and add oil if necessary. (Check the dirtiness of the oil also.) 3. Clean strainer 4. Replace line filter ★ For details of the method of checking the oil level and changing the oil, see TESTING AND ADJUSTING. 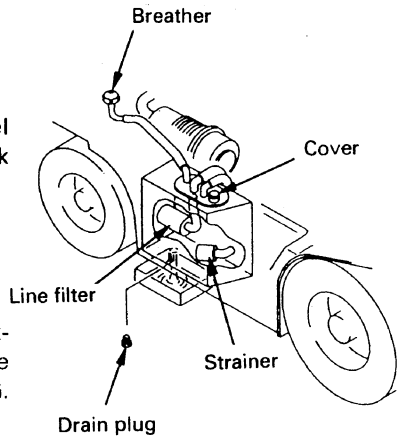
	63. Chassis piping	1. Cracks, damage, deterioration, twisting of piping 2. Oil leakage 3. Loose mounting bolts, nuts
	64. Attachment piping	1. Cracks, damage, deterioration, twisting of piping 2. Oil leakage 3. Loose mounting bolts, nuts
	65. Hydraulic pump	1. Oil leakage 2. Abnormal vibration 3. Abnormal noise
	66. Oil motor	1. Oil leakage 2. Abnormal vibration 3. Abnormal noise
	67. Lift cylinder	1. Actuation, oil leakage 2. Dents, cracks, curvature, scratches on rod 3. Tightening torque for mounting bolts kgm: 196 – 427 Nm (20 – 43.5 kgfm)

Component	Check item	Details of check
Hydraulic system	68. Tilt cylinder	1. Actuation, oil leakage 2. Dents, cracks, curvature, scratches on rod 3. Tightening torque for mounting bolts kgm: 59 – 123 Nm (6.0 – 12.5 kgfm)
	69. Reach cylinder	Not applicable to this model
	70. Attachment cylinders	1. Actuation, oil leakage 2. Dents, cracks, curvature, scratches on rod 3. Looseness of mounting bolts
	71. Hydraulic drift of lift cylinder, tilt cylinder	Load the forks with the maximum payload, set the mast perpendicular, raise the forks approx. 1 m from the ground, then check that the hydraulic drift is within the specified value given below. Hydraulic drift of lift cylinder: When measured at fork — Within 100 mm (4 in) (for 15 min); When measured at cylinder — Within 50 mm (2 in) (for 15 min) Hydraulic drift of tilt cylinder: 45 mm (1.8 in) (for 15 min) **Adjustment:** Replace the control valve, cylinder packing 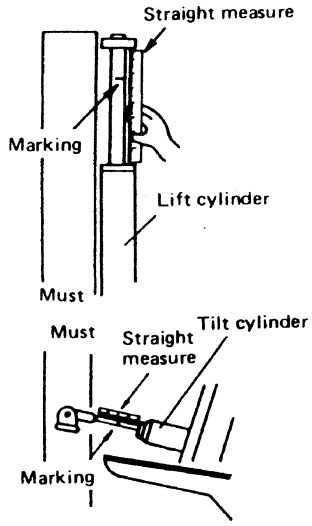
	72. Directional control valve (1)	1. Actuation, oil leakage 2. Loose mounting bolts
	73. Directional control valve (2)	**Measure relief pressure** 1) Install an oil pressure gauge to relief pressure measurement port (1). 2) Raise the forks to the maximum lifting height, measure the oil pressure when the oil is relieved, and check that it is within the specified pressure. Unit: MPa (kgf/cm²) Relief set pressure: 17.2 (175) 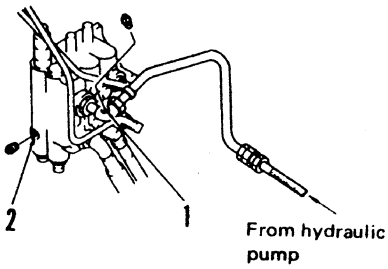

https://truckmanualshub.com/

Component	Check item	Details of check
Hydraulic system	74. Solenoid valve	1. Actuation, abnormal noise 2. Abnormal generation of heat 3. Oil leakage

Component	Check item	Details of check
Chassis, safety systemm	75. Chassis frame, chassis	1. Cracks, deformation 2. Loose, missing mounting bolts, nuts
	76. Cab	1. Cracks, deformation 2. Corrosion, leakage of rain 3. Opening/closing of door, lock, play, breakage
	77. Seat	1. Actuation 2. Loose mounting bolts
	78. Equipment for getting on/off lift truck, anti-slip devices	1. Cracks, damage, deformation 2. Loose mounting bolts
	79. Display panel	1. Damage 2. Mounting condition
	80. Overhead guard	1. Loose mount 2. Deformation, cracks, damage
	81. Backrest	1. Loose mounting bolts 2. Cracks, deformation, damage
	82. Lights, gauges, warning devices	1. Lighting up of lamps 2. Mounting condition, breakage, entry of water 3. Actuation of gauges
	83. Rear view mirror, reflectors	1. Dirt, damage 2. Reflection
	84. Oil, grease	1. Oil, greasing condition 2. Actuation of auto-greasing system
Overall test	85. Function of all systems	Carry out travel, operation test to check

https://truckmanualshub.com/

https://truckmanualshub.com/

20. REMOVAL AND INSTALLATION

Overall assembly and assembly drawing 20- 2
Engine mount bolt 20- 4
Weight table 20- 5
Mast 20- 6
Lift cylinder 20- 8
Engine 20-10
Clutch or torque converter and tlansmission,
front axle 20-15
Rear axle, power steering 20-20
Wheel brake 20-23

https://truckmanualshub.com/

OVERALL ASSEMBLY AND ASSEMBLY DRAWING

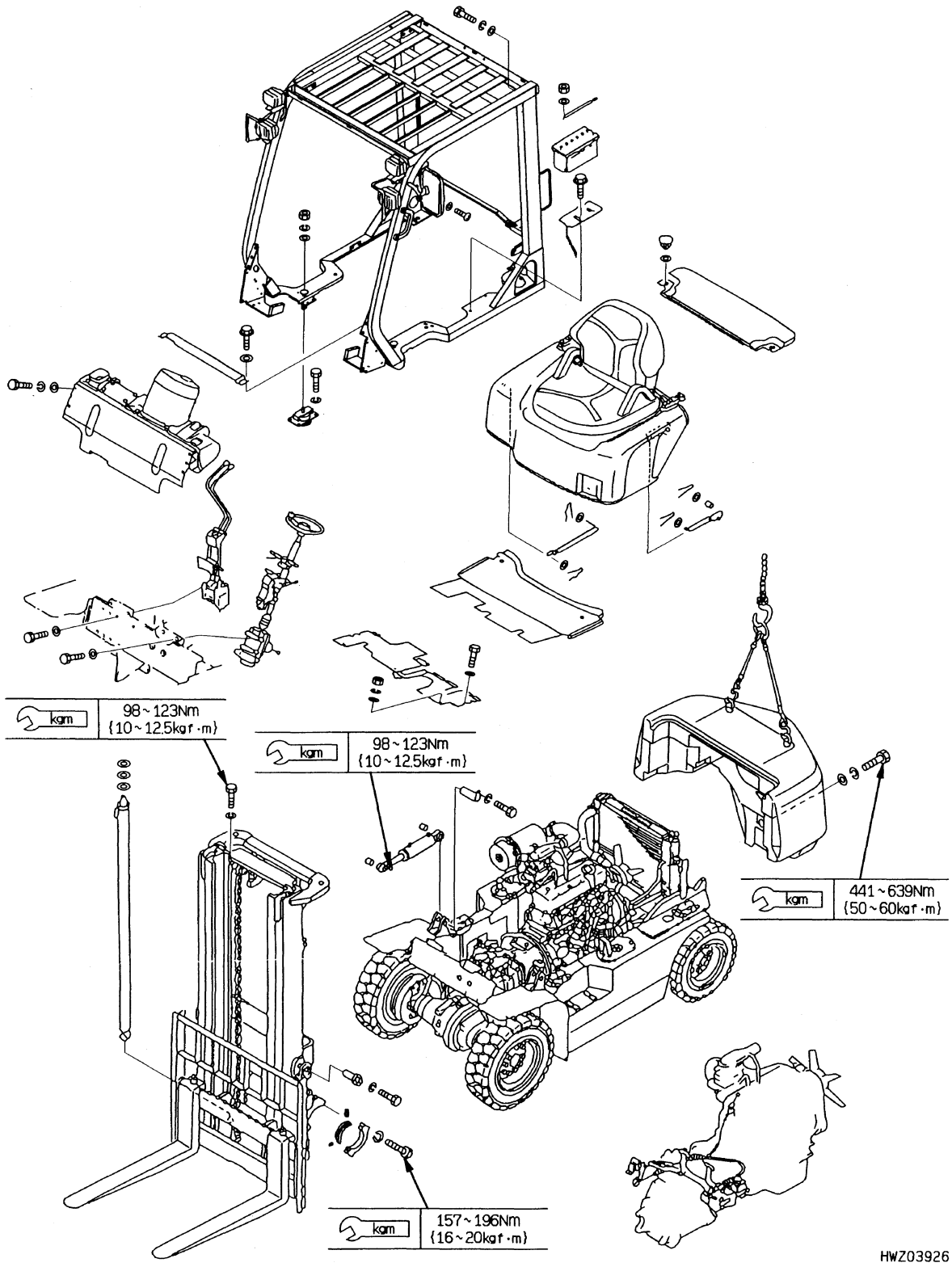

https://truckmanualshub.com/

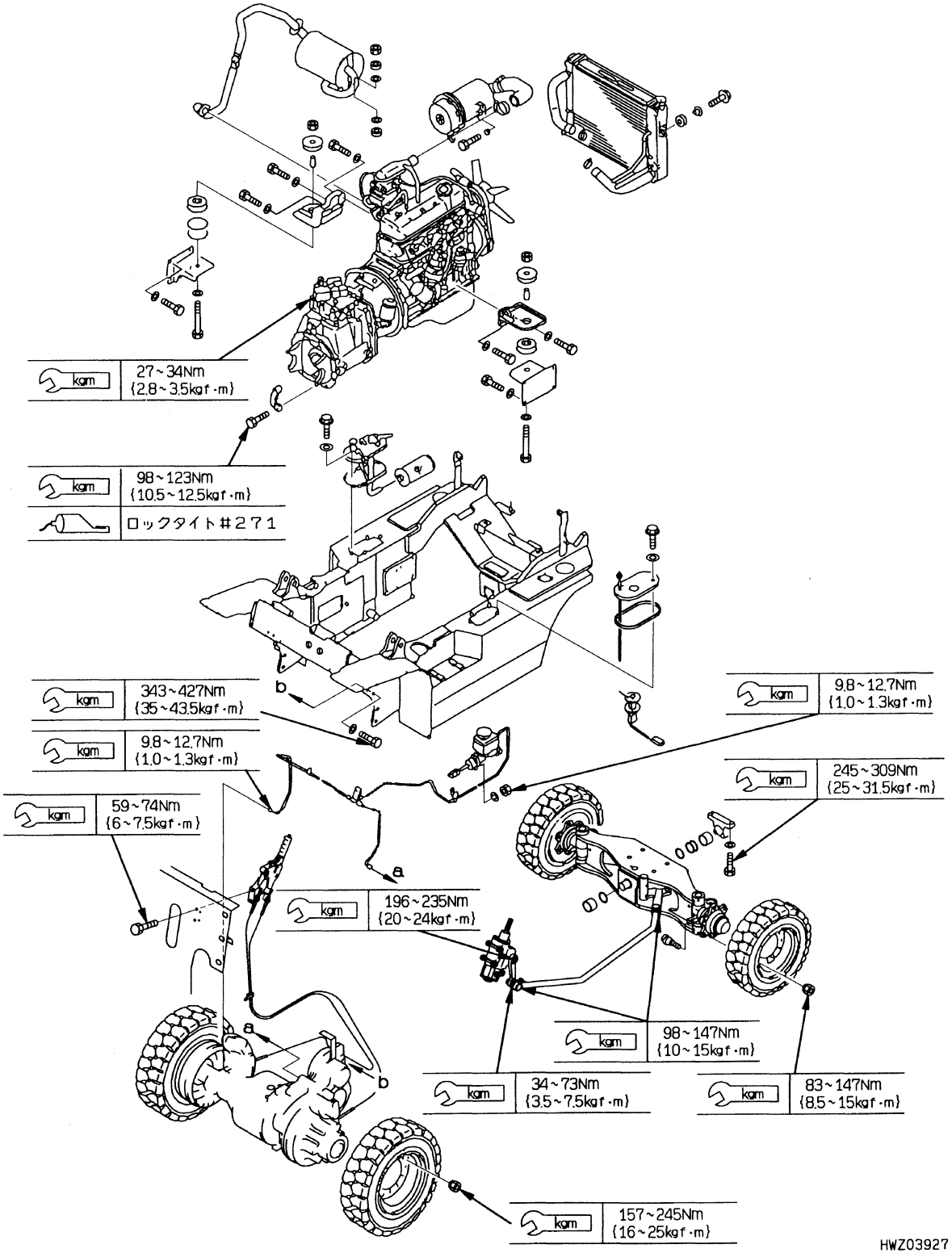

https://truckmanualshub.com/

ENGINE MOUNTING BOLT

H15, H20II ENGINE

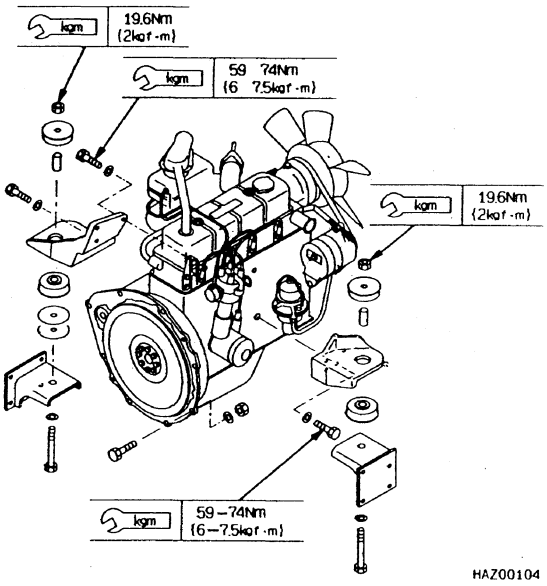

4D92E ENGINE

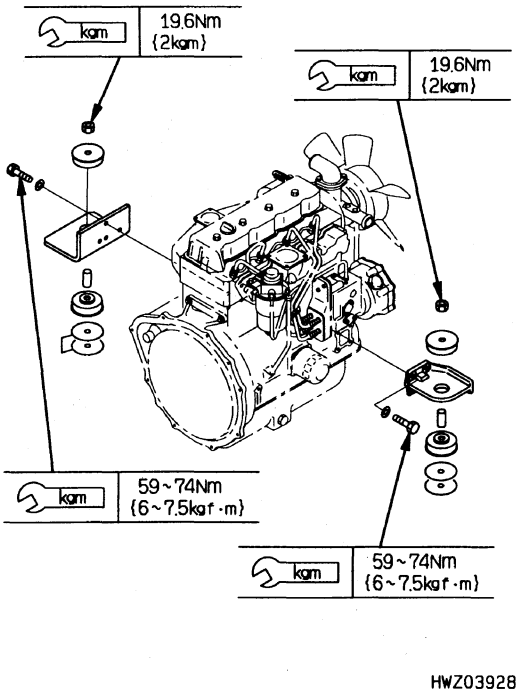

https://truckmanualshub.com/

WEIGHT TABLE

Name and type of lift truck		1 ton	1.35 ton	1.5 ton	1.75 ton	Remarks
Engine assembly	H15	160 kg (355 lb)				
	H20II	160 kg (355 lb)				
	4D92E	230 kg (510 lb)				
Clutch assembly		50 kg (110 lb)				
Touque converter		58 kg (130 lb)				
Tramsmission	Clutch type	75 kg (165 lb)				
	TORQFLOW type	95 kg (210 lb)				
Axle	Front	120 kg (265 lb)				
	Rear	63 kg (140 lb)				
Wheel	Front	23 kg (50 lb)				
	Rear	12 kg (27 lb)				
Overhead guard		109 kg (240 lb)				
Counterweight		475 kg (1,050 lb)	765 kg (1,690 lb)	885 kg (1,950 lb)	1,060 kg (2,340 lb)	
Mast assembly		265 kg (585 lb)				Except fork, finger cover, buck left
Cylinder	Lift	20 kg (45 lb)				for 3 m
	Tilt	7.8 kg (17 lb)				
	Power steering	10.6 kg (24 lb)				
Finger cover		70 kg (155 lb)		74 kg (165 lb)		
Fork (each)		28 kg (6 lb)	34 kg (75 lb)			
Backrest		16 kg (35 lb)				
Pump		3.5 kg (8 lb)				
Control valve		8 kg (18 lb)				
Steering gear box		9 kg (20 lb)				

https://truckmanualshub.com/

MAST

REMOVAL

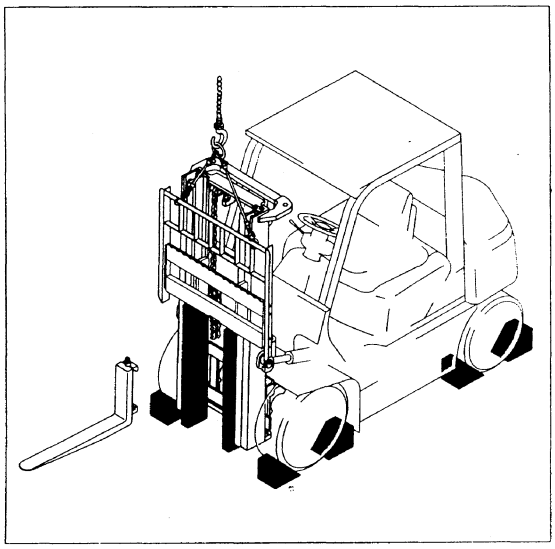

1. Put blocks under front and rear tires.
2. Remove forks.
3. Lift fork carriage with crane so that hydraulic piping can be removed.
4. Put block under fork carriage.
5. Operate work equipment control levers several times to release remaining pressure in hydraulic piping, then remove piping.

★ After removing the piping, fit a blind plug immediately to prevent the hydraulic oil from flowing out and to prevent dirt or dust from getting in.

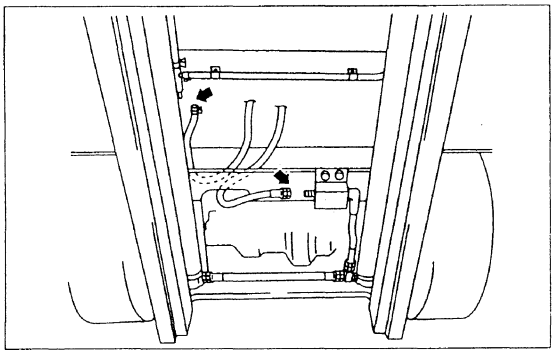

6. Raise fork carriage slightly with crane, and remove block.
7. Lower fork carriage.
8. Fit crane to mast.
9. Remove tilt pin.
10. Remove mast cap.

⚠ Tilt the mast forward before removing the mast cap. If the mast cap is removed with the mast tilted back, there is danger that the mast may fall over.

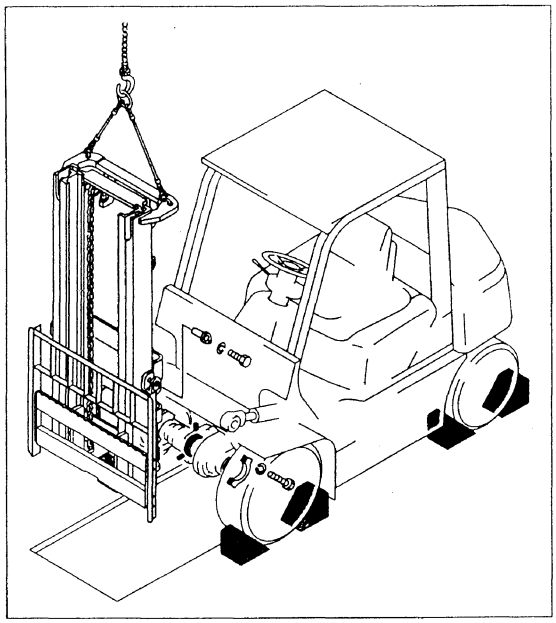

11. Remove mast.

⚠ When carrying the removed mast horizontally, fix the lower stay and the finger bar by the annealing wire with twisted.

kg Weight of engine (for 1.5 ton)

3 m	4 m	4.5 m	5 m
450 kg (990 lb)	530 kg (1170 lb)	560 kg (1235 lb)	590 kg (1330 lb)

https://truckmanualshub.com/

⚠ Put blocks under the bottom of the mast and lay the mast assembly horizontal so that the fork carriage is at the top.

⚠ When laying the mast assembly down, be extremely careful that the crane hook does not come loose from the mast.

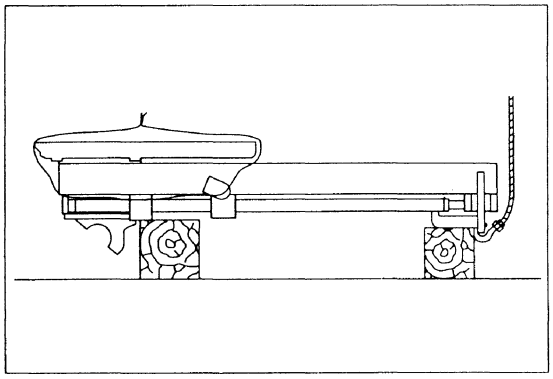

INSTALLATION

Carry out installation in the reverse order to removal, and pay careful attention to the following points.

1. **Tightening mast cap mounting bolts**

kgm	157 – 196 Nm {16 – 20 kgfm}

2. **Knocking in tilt cylinder pin**
   Hold the mast with a crane, operate the tilt lever to align the holes, then knock in the tilt cylinder pin.

   ★ A spherical bushing is used at the cylinder head, so it is easy for the bushing to come out of position when the pin is knocked in. To avoid this, do not use force when knocking in the pin.

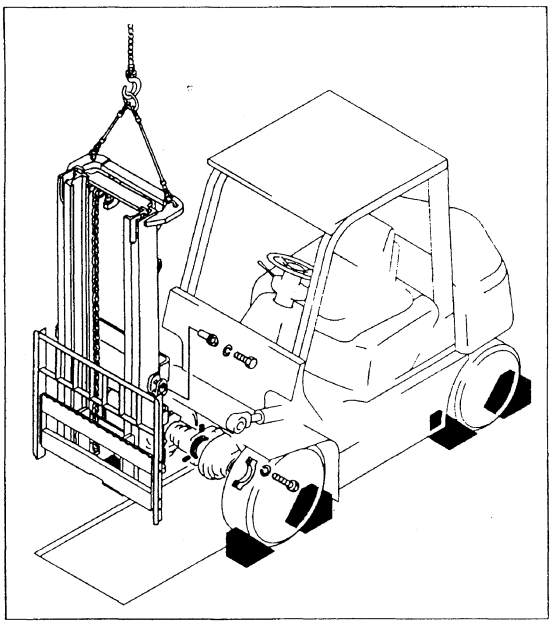

https://truckmanualshub.com/

LIFT CYLINDER

REMOVAL

As an example, the removal of a tilt cylinder will be explained here:

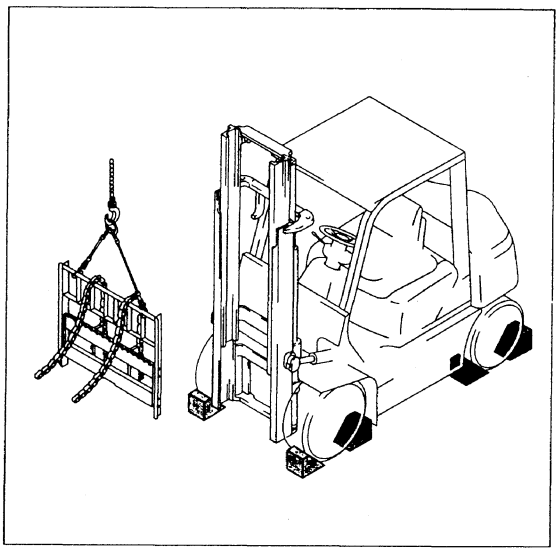

1. Upright the mast and place blocks to the front and wheels as illustrated in the right.
2. Lift the backrest about 30 cm (12 in) by a crane.
3. Remove the cotter pin shown below to separate the chain from the stopper and take out the chain from the rollers.

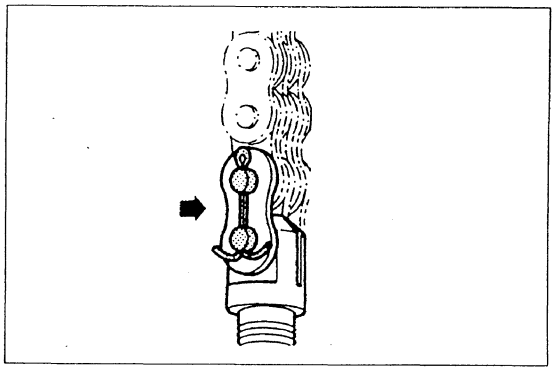

4. Operate the lift lever to raise the mast.
5. Remove the backrest from the mast.
6. Place blocks under the inner mast.
7. Remove the bolt (1)
8. Operate the lift lever to lower the cylinder rod.
9. Operate further the lift cylinder several times to remove pressure from the pipings prior to removal.

★ Plug up the pipings immediately after disconnection to prevent hydraulic oil from leaking and dirt from mixing in.

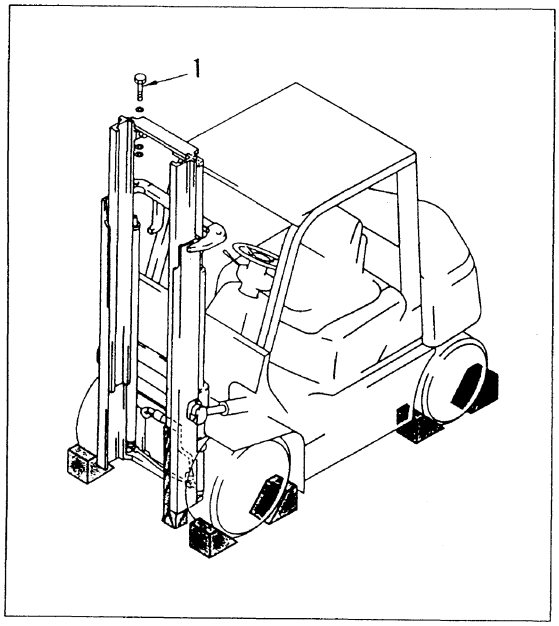

10. Remove the cylinder clamp (2)

11. Lift the cylinder about 30 cm (12 in) by the crane with a sting-belt around the cylinder as illustrated in the right and pull it out downward.

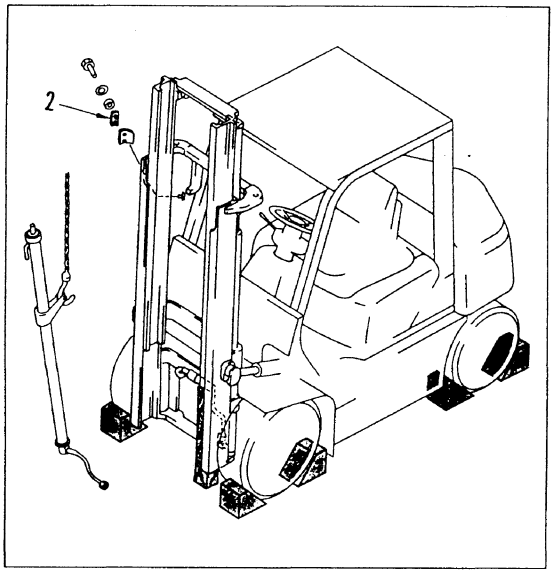

INSTALLATION

Installation shall be performed in the reverse order to removal, paying attention to the following.

Synchronizing of the mast

1. Raise the mast to the maximum lifting height.

2. Check for the play on both sides.

3. Adjust with shims so that the right and left cylinders are synchronized with each other at the highest position.

Angled to left	Insert shims into left cylinder
Angled to right	Insert shims into right cylinder

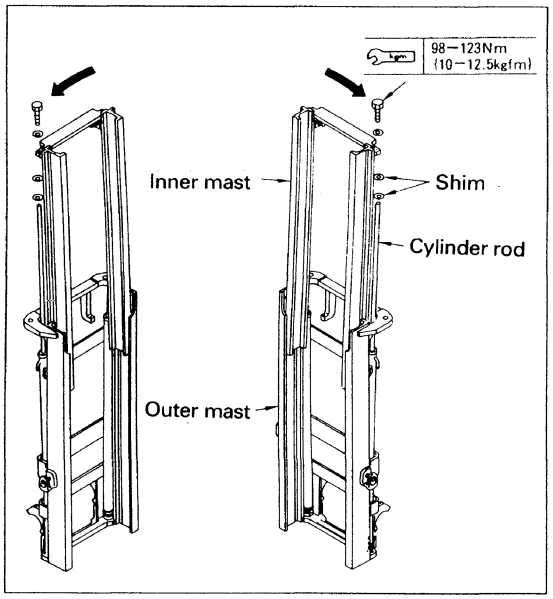

ENGINE

REMOVAL

1. **Overhead guard (ceiling)**
   Engine hood
   Remove engine hood and overhead guard (ceiling)

   ⚠ Fork and attachment must be left on the ground or removed.

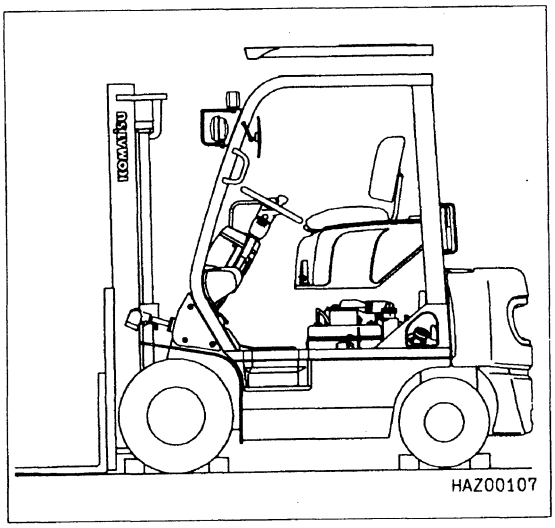

2. **Wiring, battery**
   Remove wiring.

   [H15, H20II engine]

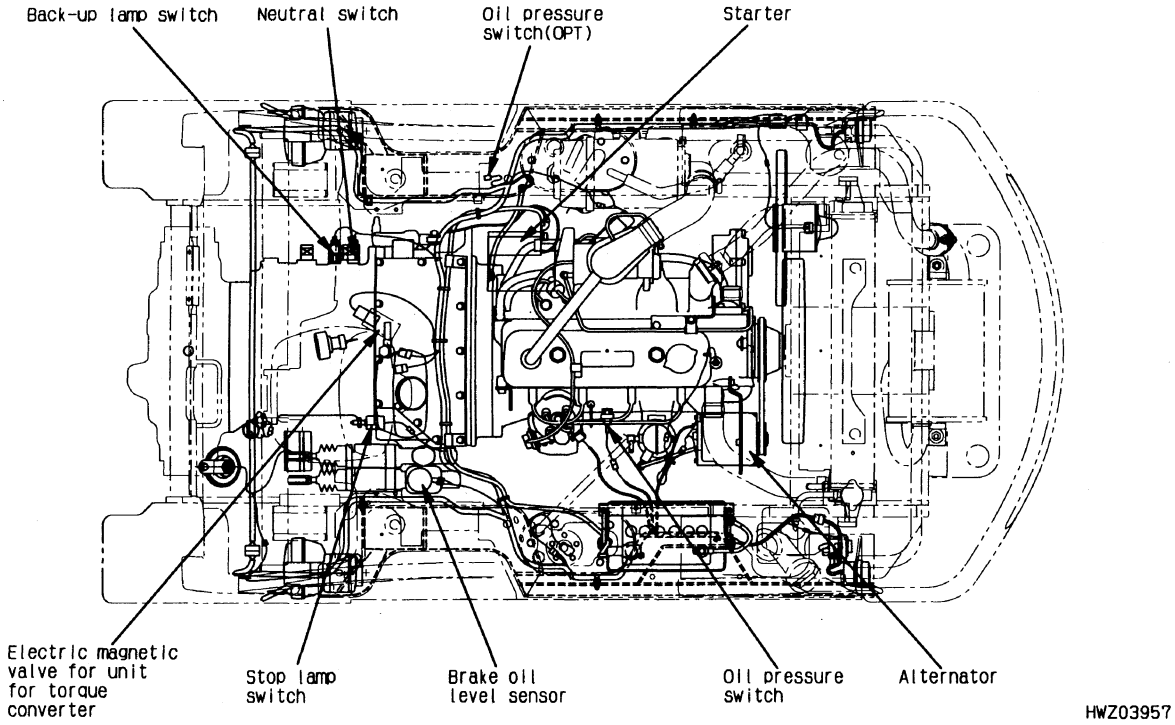

[Gasoline type]

https://truckmanualshub.com/

[4D92E engine]

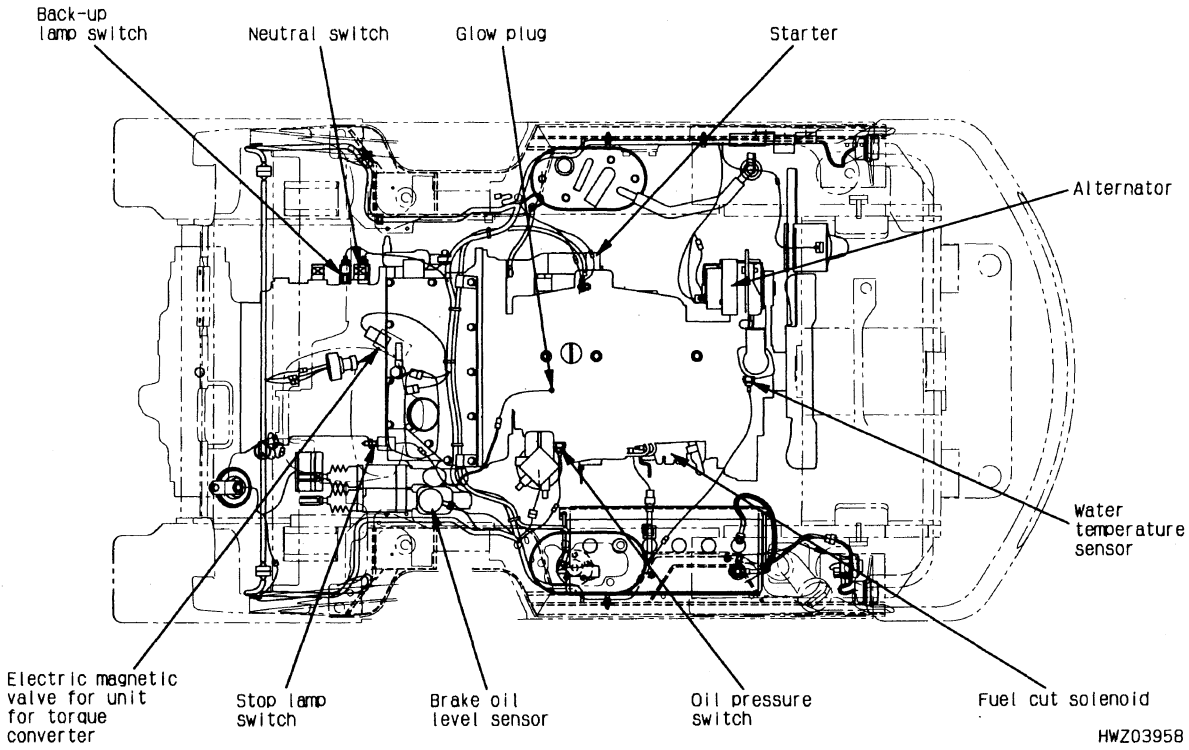

[Diesel type]

3. Accelerator wire

Remove accelerator wire.

https://truckmanualshub.com/

4. Pipes and hoses

Remove the following pipes and hoses

- Piping for Hydraulic Pump
- Piping for Torque Converter Cooler
- Air Cleaner hose
- Radiator hose
- Fuel hoses
- Exhaust pipe

★ Plug up the pipes and hoses immediately after removal.

★ Remove cooling water prior to removal of the radiator hose.

Hydraulic piping

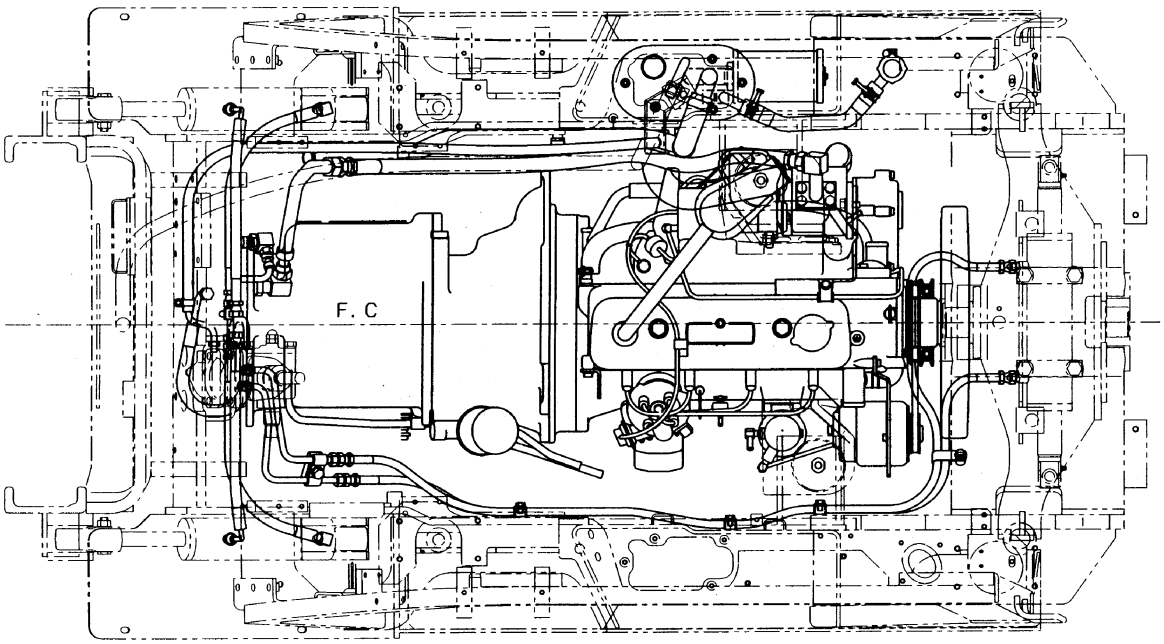

HWZ03932

Air cleaner hose

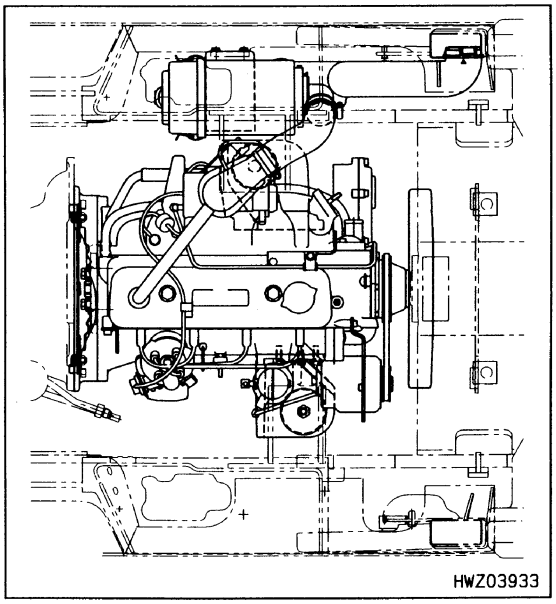

HWZ03933

5. Radiator

Remove radiator.

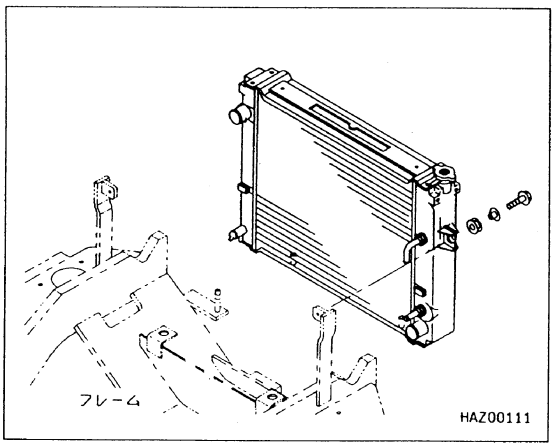

HAZ00111

https://truckmanualshub.com/

6. Pressure plate mounting bolt (Clutch type truck)
Flexible plate mounting bolt (Torque converter type truck)

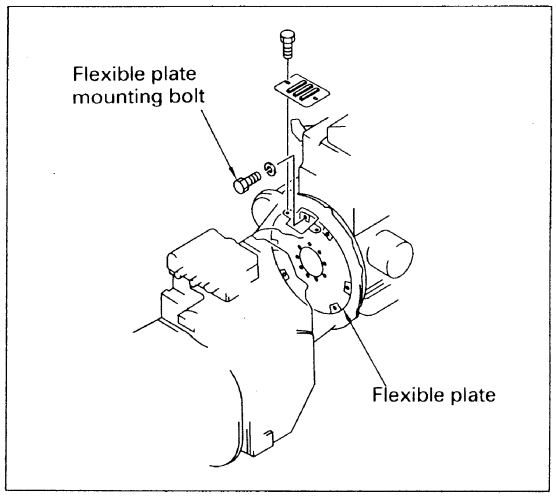

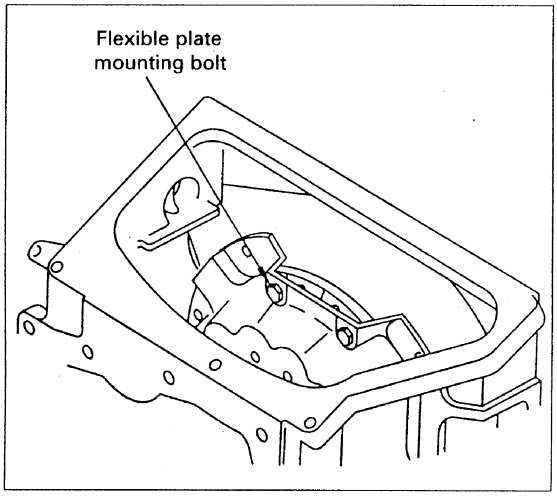

7. Engine

1) Place a wooden block under the transmission case.
2) Lift and hold the engine by a crane.
3) For clutch type trucks, remove the bolts mounting the clutch case.
   For torque converter type trucks, remove the bolts mouting the torque converter case.
4) Remove the left and right bolts mounting the engine.
5) Lift the engine slightly apart from the frame. After sliding the engine a little toward the radiator to lift it higher.

kg The Weight of engines

H15	H20II	4D92E
160 kg (355 lb)	160 kg (355 lb)	230 kg (510 lb)

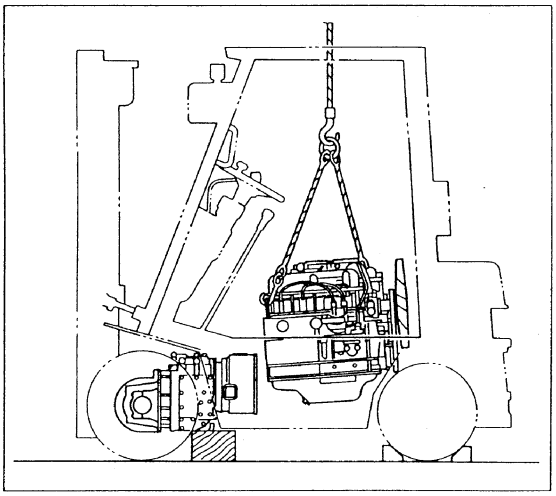

https://truckmanualshub.com/

INSTALLATION

Installation shall be performed in the reverse order to removal paying attention to the following.

1. **Tightening engine mount bolt.**

   Tighten the nuts to the following torque.

kgm	19.6 Nm {2 kgfm}

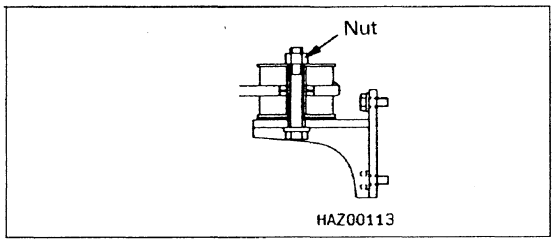

2. **Tightening clutch case mounting bolt (Clutch type truck)**
   Tightning torque converter mounting bolt (Torque converter type truck)

kgm	59 – 74 Nm {6 – 7.5 kgfm}

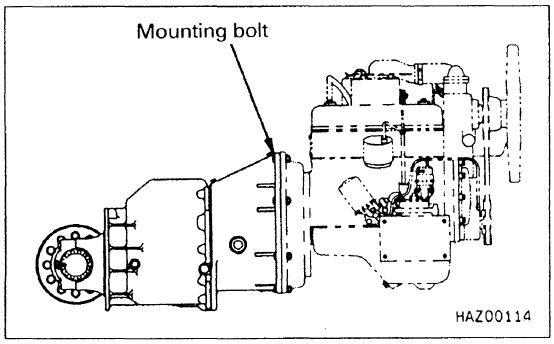

3. **Tightening pressure plate mounting bolt (Clutch type truck)**
   Tightening flexible plate mounting bolt (Torque converter type truck)

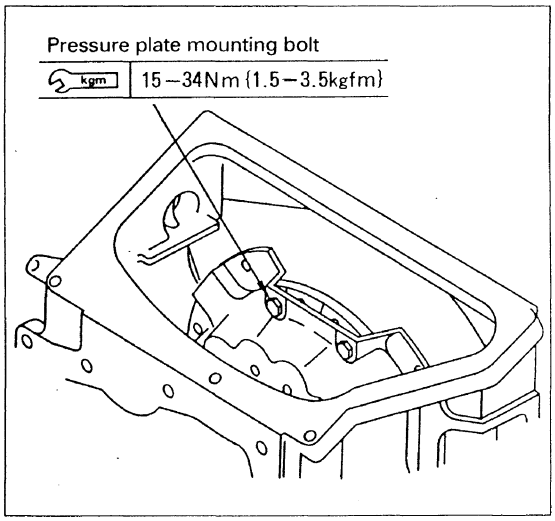

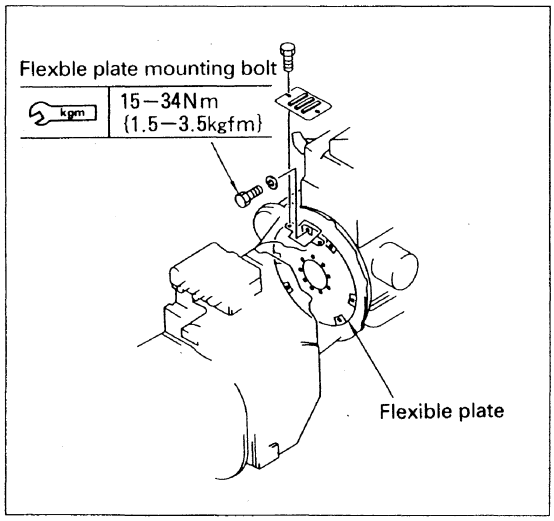

https://truckmanualshub.com/

CLUTCH OR TORQUE CONVERTER AND TRANSMISSION, FRONT AXLE

REMOVAL

MAST

1. **Remove the mast (See also Section "MAST".)**

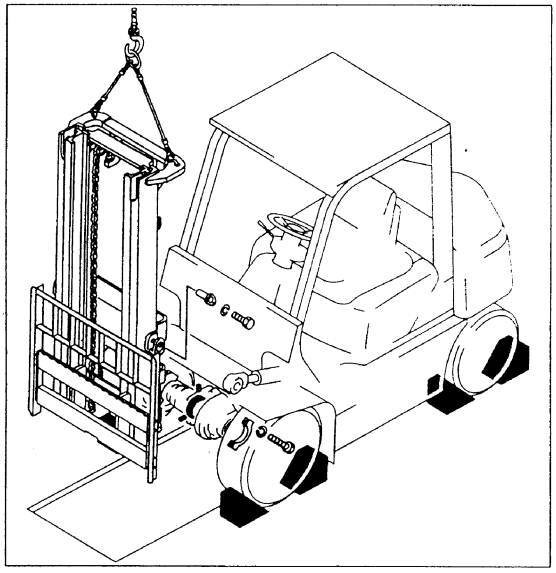

2. **Overhead guard, the engine hoods and couterweight.**

   Remove the overhead guard, the engine hoods and the counterweight

   ★ When the clutch (or the torque converter), transmission and drive axle are to be dismantled in an assembly, the truck frame must be raised in the front after the counterweight is dismantled to prevent the truck from capsizing.

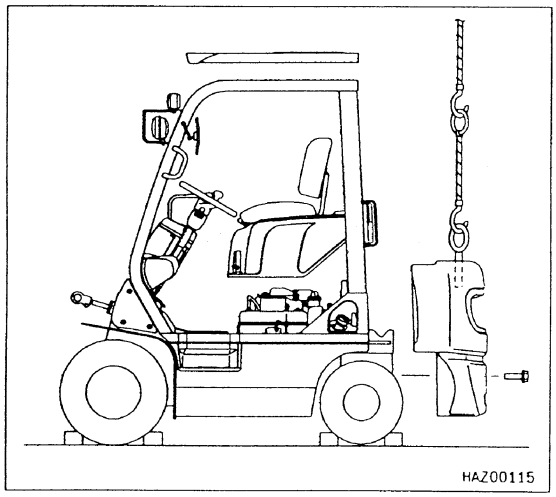

3. **Linkage (for torque converter type trucks only)**

   Disconnect the inching pedal linkage at the point marked by the arrow.
   In addition, disconnect the connector of the directional selector solenoid valve also.

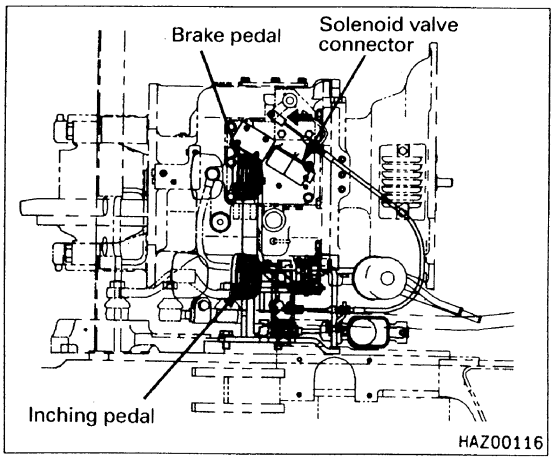

https://truckmanualshub.com/

4. Piping for torque counter cooler (for torque converter type trucks only)

Remove the pipings from the torque converter oil cooler from oil filter the transmission.

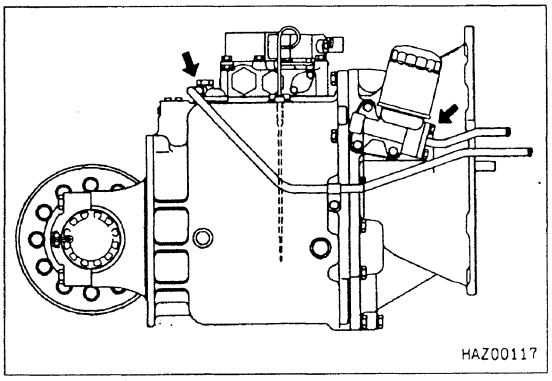

5. F.R lever and H-L lever (for clutch type trucks only)

Remove both the F-R lever and the H-L lever.

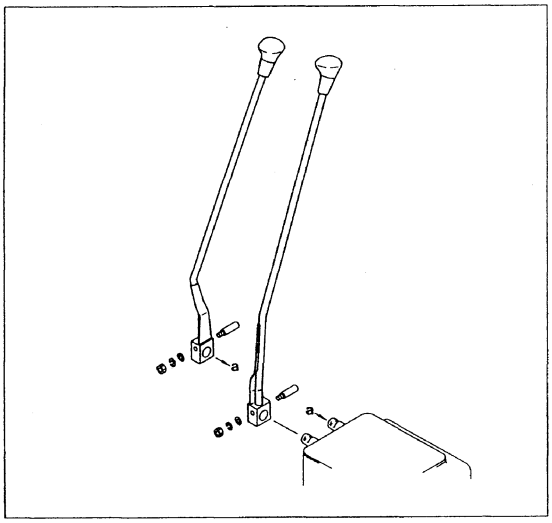

6. Pedal assembly and brake piping

Remove the brake piping and the pedal assembly.

7. Parking brake lever

Remove the parking brake lever.

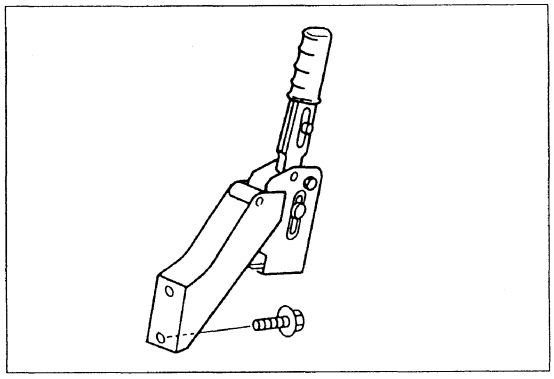

https://truckmanualshub.com/

8. Wiring

Remove the wiring for the Neutral switch.
(See p.20-10, 20-11)

9. Bolts mounting the Pressure Plate (for clutch type trucks)
Bolts mounting the Flexible Plate (for torque converter type trucks)

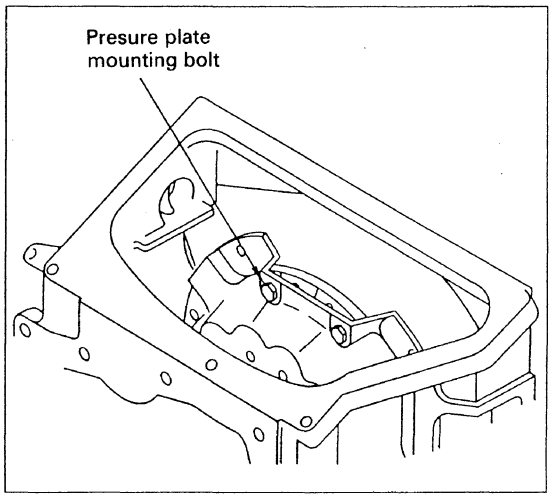

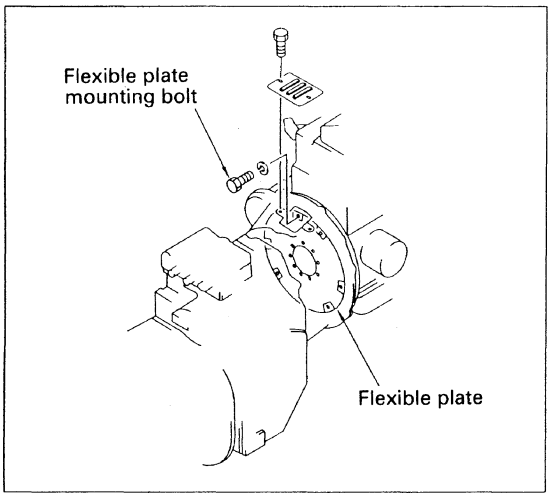

10. (Clutch or torque converter) + transmission + front axle

1) Insert blocks so that the frame may be approx. 10 cm (0.4 in) from the surface.
2) Hoist and hold the engine with a crane.
3) Place a carriage as shown in the drawing on the right to hold three units of equipment.
4) Remove the clutch case mounting bolt (clutch equipped truck).
   Remove torque converter case mounting bolt (torque converter equipped truck).
5) Remove the front support from frame and pull out three units of equipment on the carriage.

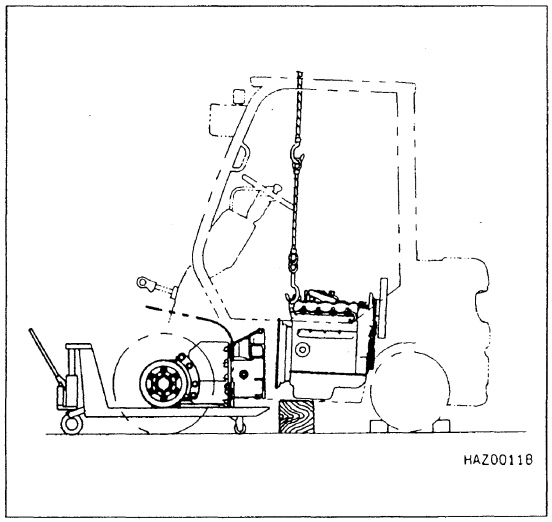

https://truckmanualshub.com/

INSTALLATION

The reverse order to removal must be followed for installation with attention being paid to the following points:

1. **Tightening torque for support to front axle**

kgm	343 – 427 Nm {25 – 31.5 kgfm}

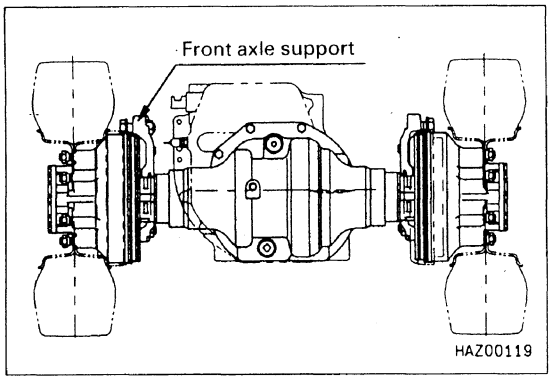

2. **Tightening torques for bolts to mount the pressure plate (for clutch type trucks)**
   Flexible plate (for torque converter type trucks)

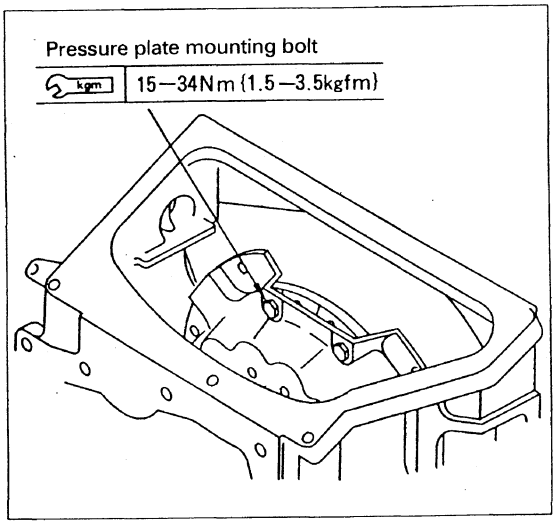

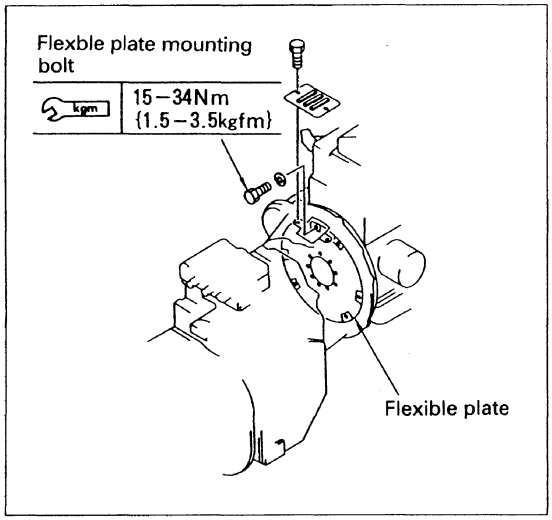

3. **Tightening torque for bolts to the parking brake lever**

kgm	59 – 74 Nm {6 – 7.5 kgfm}

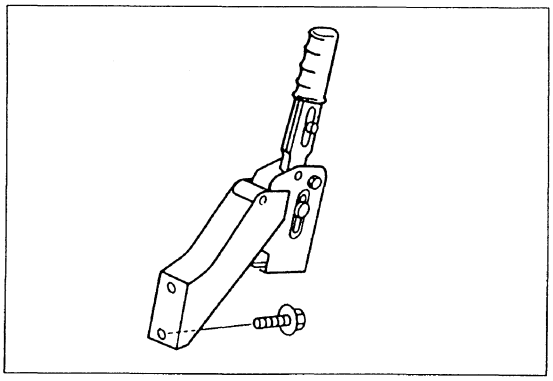

https://truckmanualshub.com/

4. Tightening torque for bolts to the pedal assembly

kgm	98 – 123 Nm {10 – 12.5 kgfm}

5. Tightening torque for the brake piping

kgm	9.8 – 12.7 Nm {1.0 – 1.3 kgfm}

6. Adjust for the pedals

Refer to section "INSPECTION AND MAINTENANCE".

7. Tightening torque for nuts to F-R and Hi-Lo levers

kgm	54 – 74 Nm {5.5 – 7.5 kgfm}

8. Installate of the mast.

See section "MAST".

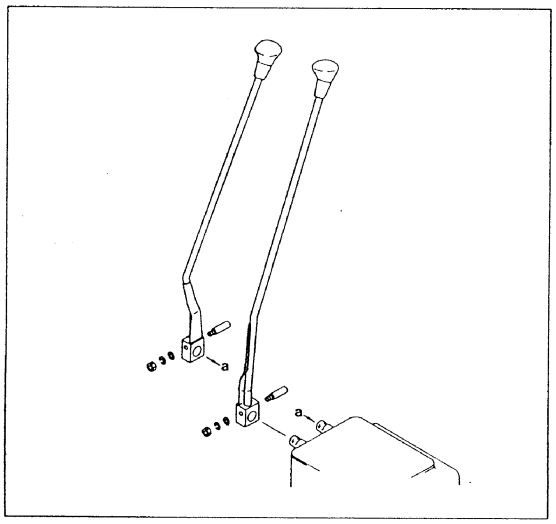

https://truckmanualshub.com/

REAR AXLE, POWER STEERING

REMOVAL

1. Counterweight

1) Lift the truck frame by a crane in the rear and place wooden blocks under the both sides of the frame.
2) Raise the counterweight slightly by a crane. Remove the bolt and dismantle the counterweight from the truck frame.

kg The Weight of Counterweight

1 ton	1.35 ton	1.5 ton	1.75 ton
475 kg (1,050 lb)	765 kg (1,690 lb)	885 kg (1,950 lb)	1,060 kg (2,340 lb)

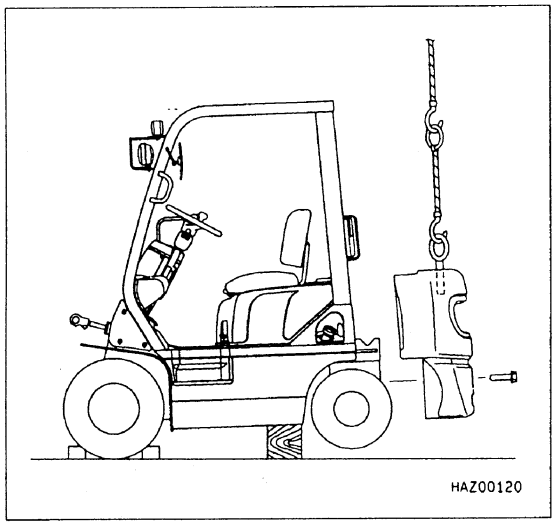

2. Ball socket and bell crank

Remove the ball socket (A) from the bell crank as shown in the right drawing.

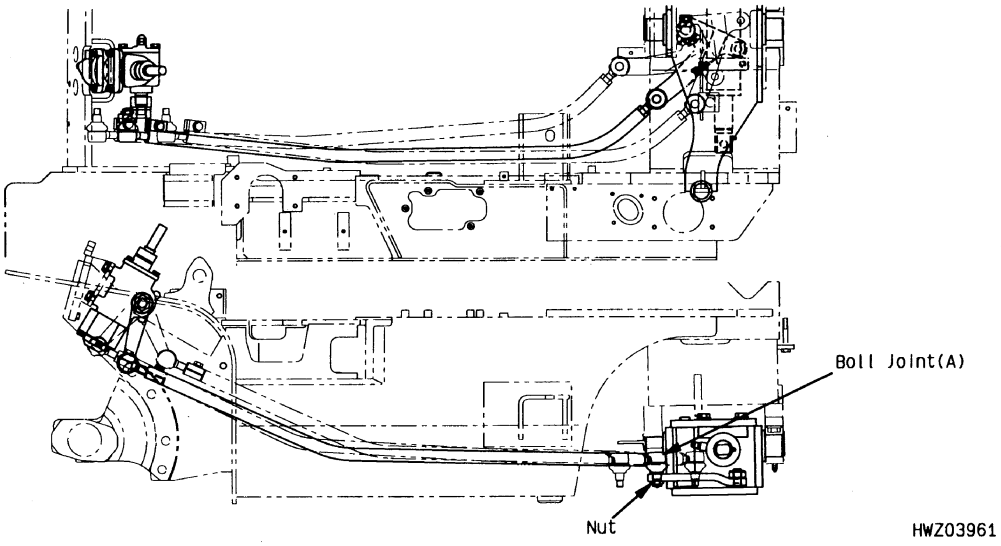

3. Rear axle

1) Place the steering axle over the block on a flat car illustrated in the right.
2) Remove the bolts supporting the steering axle and pull the axle out backward.

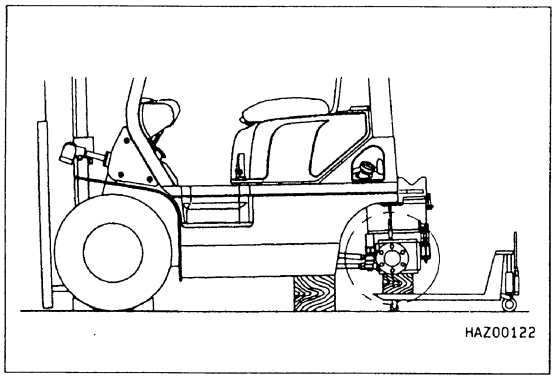

https://truckmanualshub.com/

4. Power steering cylinder

1) Remove the knuckle arm and PS cylinder piston rod link.
2) Remove the mounting bolt of the PS cylinder.
3) Remove the PS cylinder to either the left or right side of the steering axle.

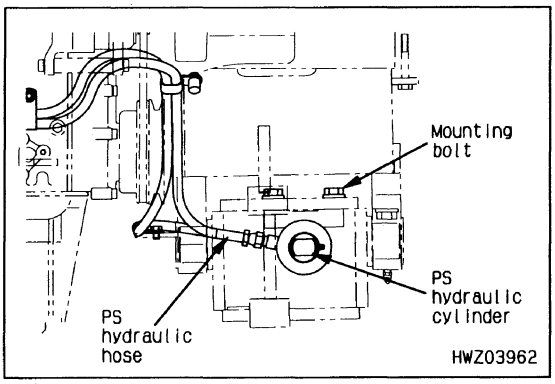

INSTALLATION

Installation must be made in the reverse order to dismantling, paying attention to the following points.

1. Tightening torque for the bolts (1) to support the steering axle.

25 – 31.5 kgm
181 – 228 ftlb
245 – 309 Nm

★ Tightening must be adjusted by the shim to make the opening (a) less than 0.5 mm.

★ The bushing must be tightened so that the holes are in the upward position.

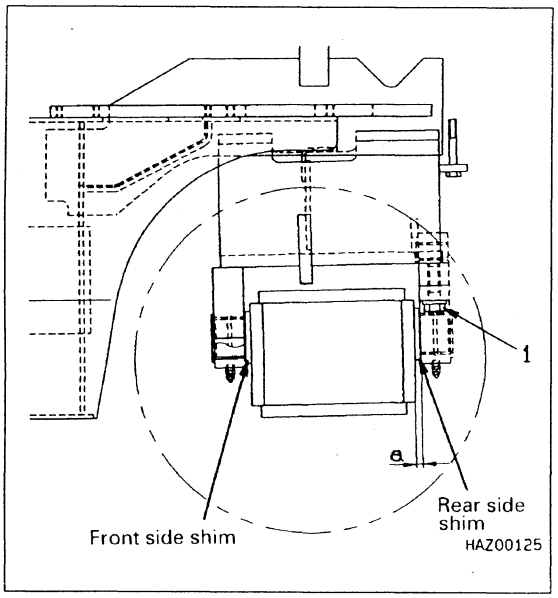

https://truckmanualshub.com/

2. Steering linkage

1) Set the place marked ☆ to the dimension given (9.5 mm)

2) Set the rear wheels and the pitman arm facing straight to the front, then adjust the depth that ball joint ① is screwed in (dimension given at portion #).

3) Tighten bolt ②.

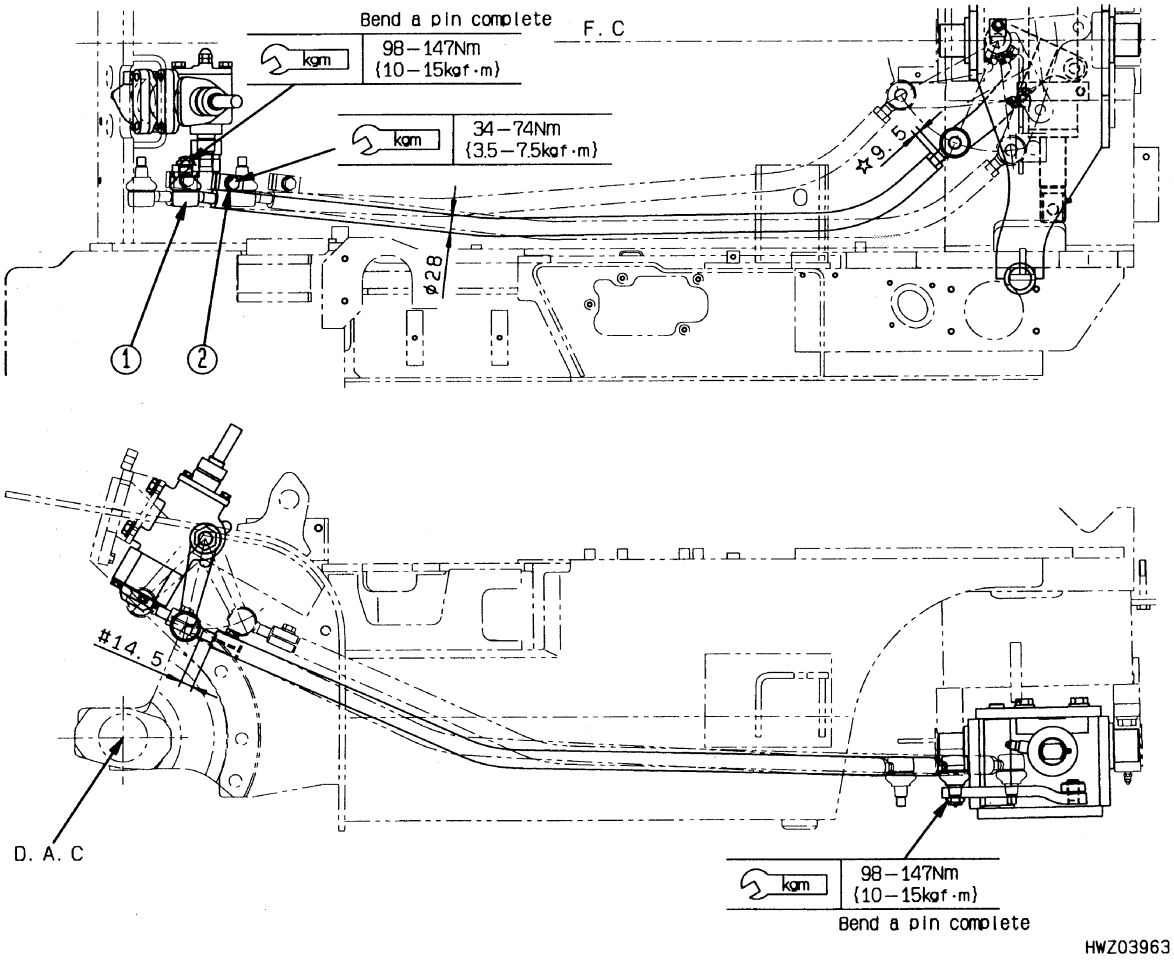

3. Tightening counterweight mounting bolts

kgm	441 – 639 Nm {45 – 65 kgfm}
	Molybdenum disulphide

WHEEL BRAKE

REMOVAL

1. **Front wheel, Torque shaft**
   1) Place blocks to the rear wheel.
   2) Insert blocks under the frame to lift the front wheel.
   3) Apply parking brake.

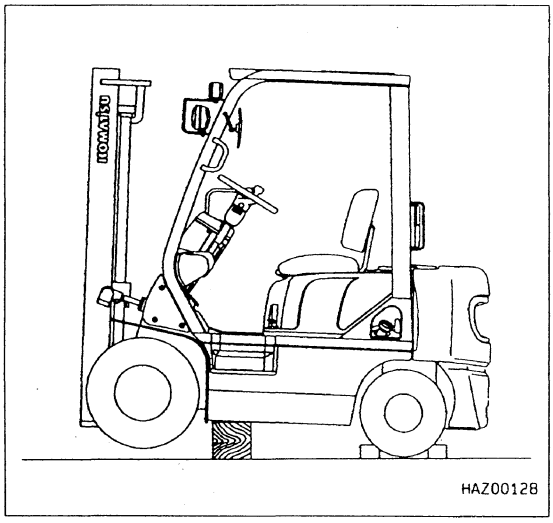

   4) Remove hub nut (1) and then the front wheel.
   5) Remove bolt (2) and torque shaft (3).
   6) Release parking brake.

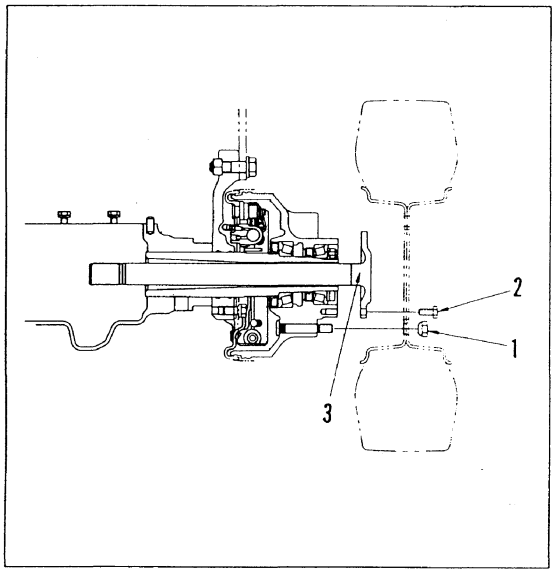

2. **Hub**
   1) Remove bolt (4).
   2) Remove locknut (5) using special tool.

Special tool	3EA-97-99180

   3) Remove the hub not to be twisted upside down.

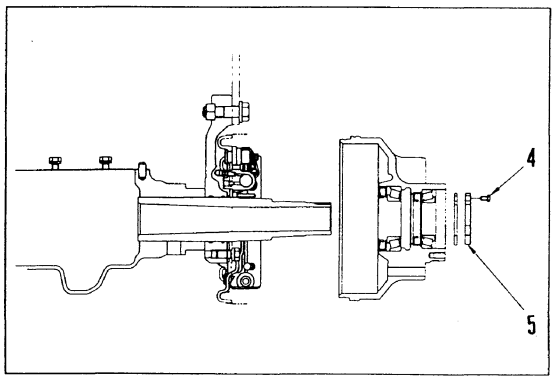

INSTALLATION

1. **Back plate (when removed)**
   Coat mounting bolt with Loctite and tighten.

kgm	157 – 196 Nm {16 – 20 kgfm}
	Loctite # 271

2. **Hub**
   1) Press-fit a new oil seal using special tool.

Special tool	3EA-97-99130

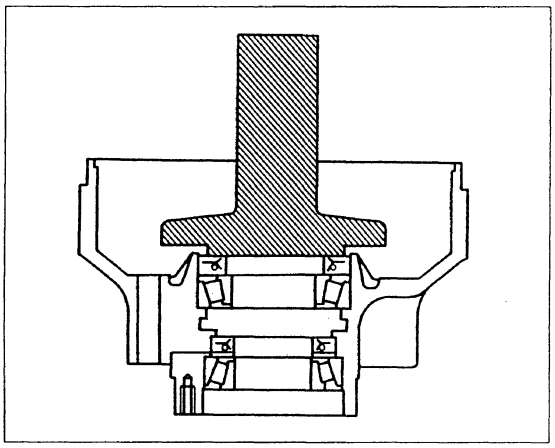

★ Be careful of the direction of the oil seal.
★ Coat the lip surface of the oil seal with grease (G2-LI)

2) Fill grease (G2-LI) in the bearing and fit.
3) Remove dirt or fat and oil in the inside surface of the brake drum completely.
4) Fit the hub to the shaft tube.
5) Tighten locknut (5) so that the starting torque of the hub conforms to the following.

Starting torque	5.9 – 14.7 Nm {60 – 150 kgfm}

6) Coat bolt (4) with Loctite and tighten.

	Loctite # 271

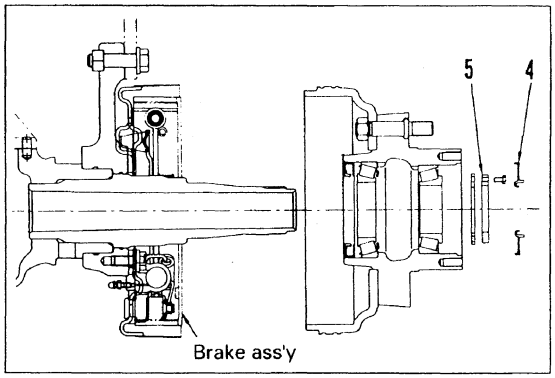

https://truckmanualshub.com/

3. Front wheel, Torque shaft

1) Fit torque shaft (3) and tighten bolt (2).

kgm	59 – 74 Nm {6 – 7.5 kgfm}

2) Fit the front wheel and tighten hub nut (1).

kgm	157 – 245 Nm {16 – 25 kgfm}

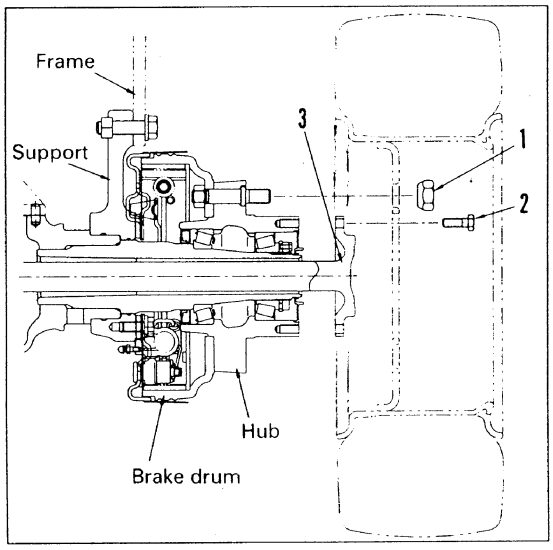

https://truckmanualshub.com/

https://truckmanualshub.com/

30. DISASSEMBLY AND ASSEMBLY

Clutch 30- 2
Clutch master cylinder 30- 6
Clutch release cylinder 30- 7
Clutch transmission 30-13
Torque converter 30-23
TORQFLOW transmission 30-48
Differential 30-61
Wheel brake 30-69
Brake master cylinder 30-72
Combination switch 30-80
Steering gear box 30-84
Power steering cylinder 30-94
Steering axle 30-96
Lift cylinder 30-100
Tilt cylinder 30-102
Control valve 30-103
Hydraulic pump 30-105
Mast 30-115
Fork carriage 30-117

https://truckmanualshub.com/

CLUTCH

DISASSEMBLY AND ASSEMBLY

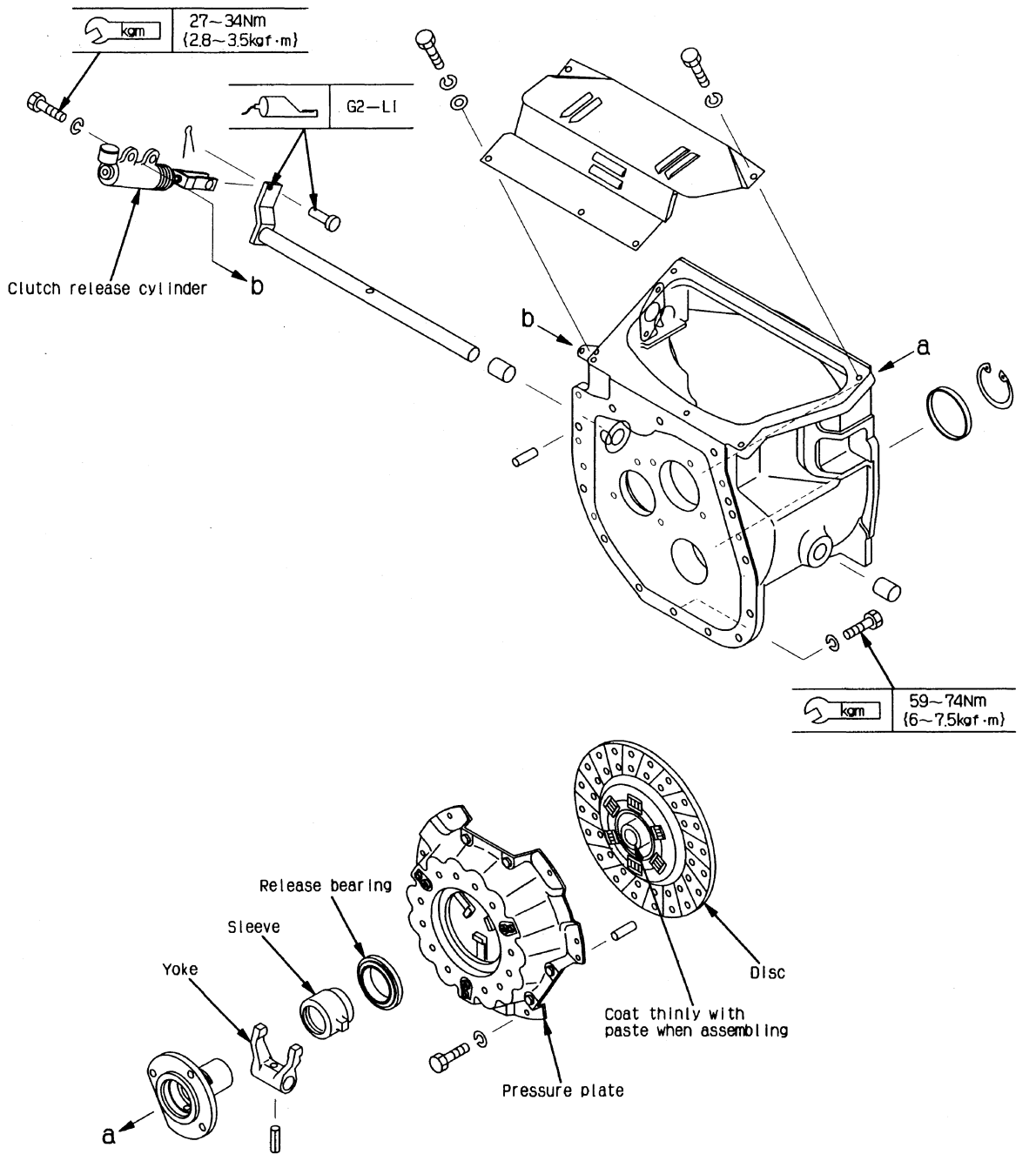

HWZ03964

https://truckmanualshub.com/

CHECHKING AND INSPECTION

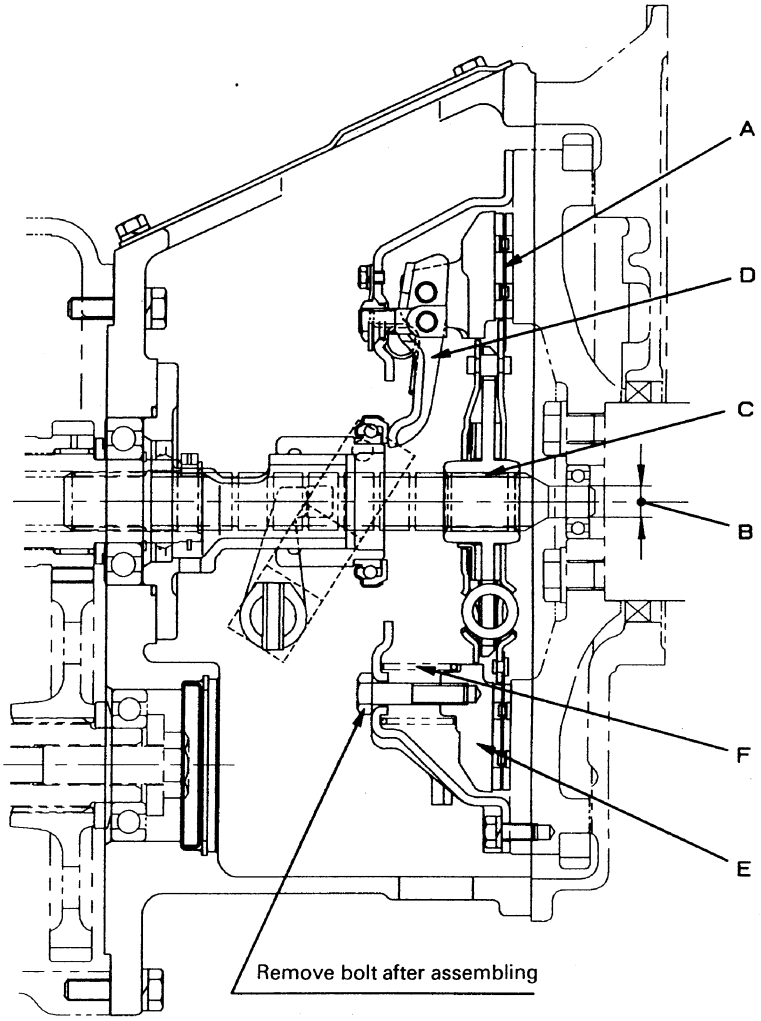

HAZ00131

https://truckmanualshub.com/

Unit: mm (in)

Symbol	Check item		Criteria: Standard size	Criteria: Repair limit	Remedy
A	Thickness of clutch disc (both faces)	5K 4LB1 H20II C240	8.9 (0.35)	0.3 (0.01) (Depth to revet head)	Replace
B	Diameter of drive shaft tip	5K 4LB1 H20II C240	ø15 (0.59)	ø14.85 (0.585)	Correct hard chrome plating
C	Play of spline in rotating direction		—	0.5 (0.02)	Replace
	Face runout of outside circumference		—	0.7 (0.027)	
D	Height of release lever	5K 4LB1 H20II C240	59 (2.3)	—	Replace release bearing if there is any seizure, damage, or wear HAZ00132
	Distance of movement of release lever	5K 4LB1 H20II C240	Max. 12 (0.47)	—	
	Wear-in amount of release lever	5K 4LB1 H20II C240	14 (0.55)	—	
E	Pressure plate		Damage, stepped wear of friction surface		Replace
F	Coil spring		Deformation, deterioration		Replace pressure plate assembly

Method of measuring remaining thickness of clutch disc

- Measure with calipers at both the engine end and pressure plate end. (See diagram on right.)

★ Take the smallest depth to the head of the rivet as the standard when judging.

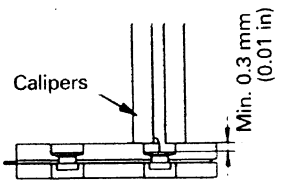

HAZ00133

https://truckmanualshub.com/

DRAWING FOR ASSEMBLY CLUTCH

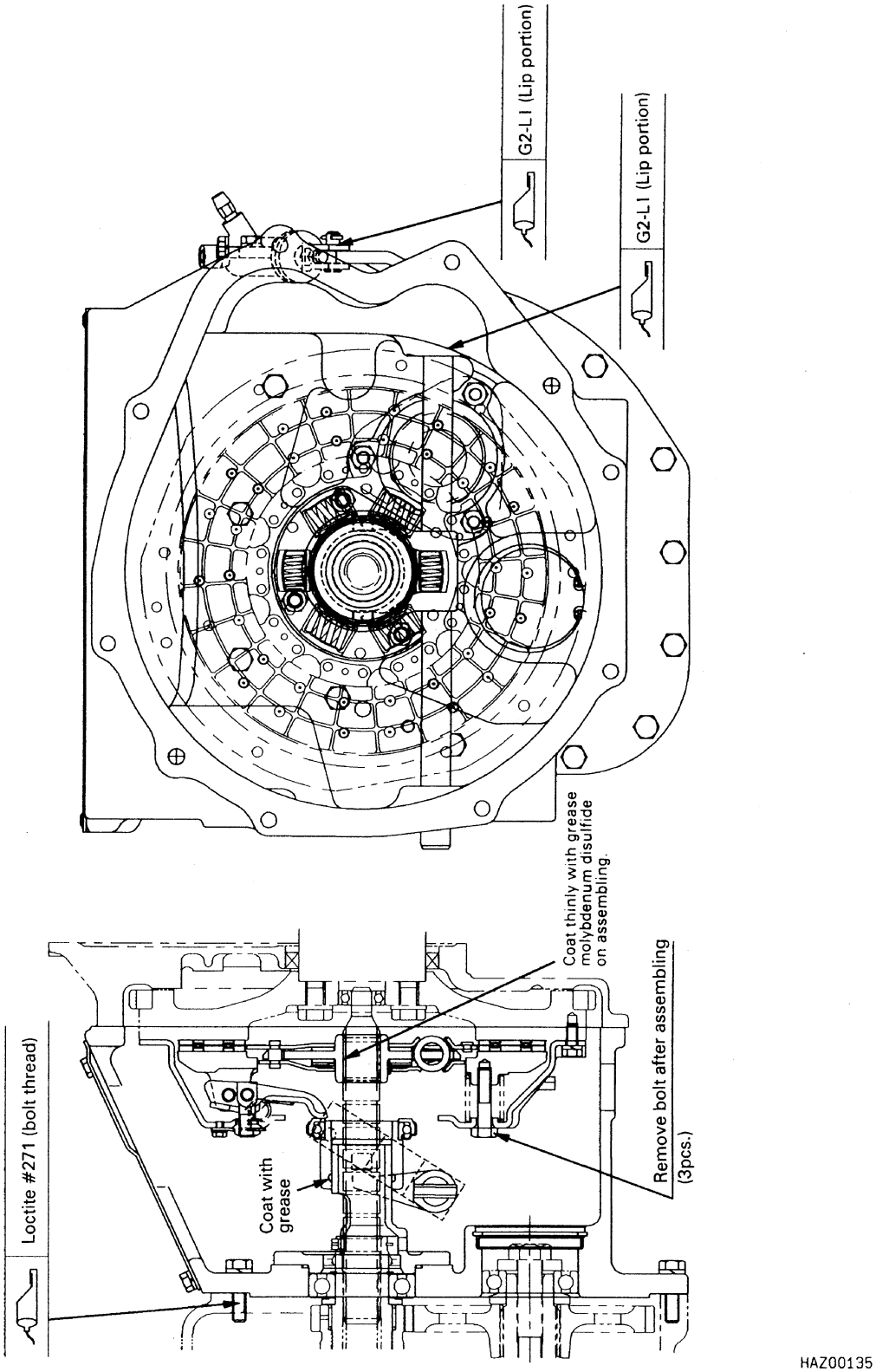

https://truckmanualshub.com/

CLUTCH MASTER CYLINDER

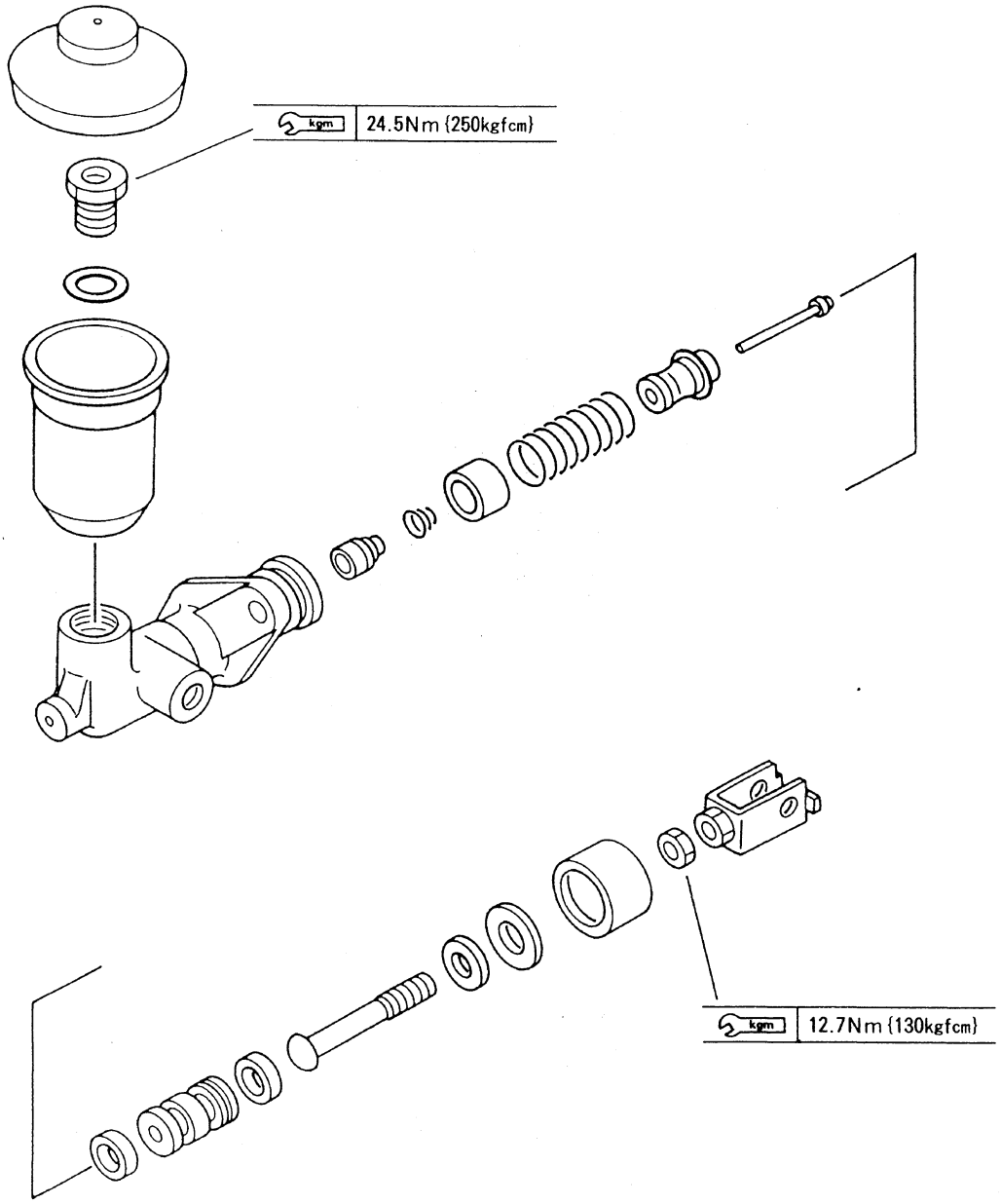

https://truckmanualshub.com/

CLUTCH RELEASE CYLINDER

COMPONENT PARTS

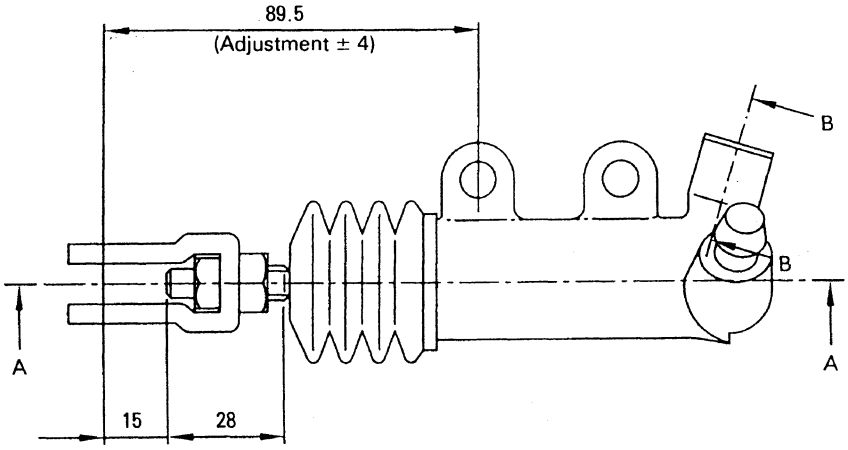

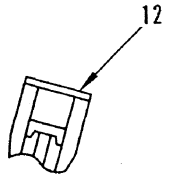

Section B-B

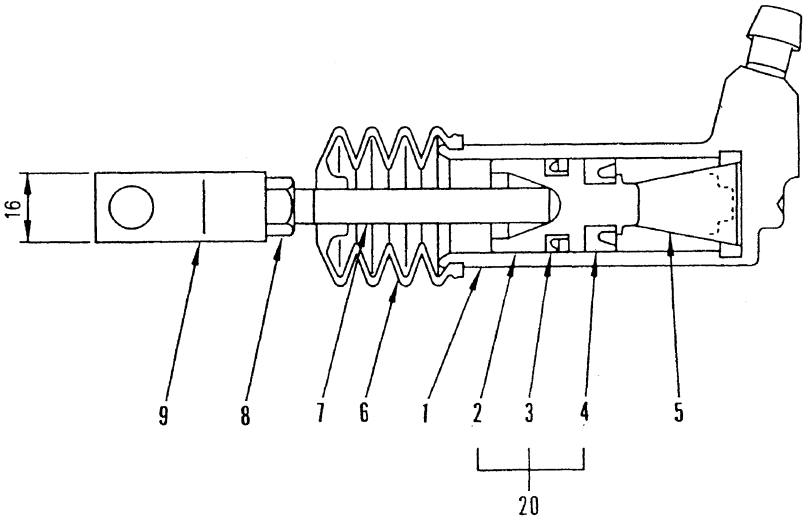

Section A-A

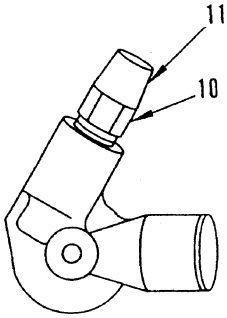

No.	Name	Q'ty
1	Cylinder	1
2	Piston	1
3	S cup	1
4	R cup	1
5	Spring	1
6	Boot	1
7	Push rod	1
8	Nut	2
9	Yoke	1
10	Bleeder valve	1
11	Bleeder cap	1
12	Cap	1
20	Pistonassembly	1

https://truckmanualshub.com/

DISASSEMBLY

1. Remove boot from cylinder.

2. Take out piston assembly from cylinder.

PRECAUTIONS

- **Be careful not to damage the cylinder, piston, or cup.**
- **When carrying out disassembly, make sure that you understand the structure of the cylinder and lay the disassembled parts out in order.**
- **Do not disassemble the piston assembly.**
- **Do not push the outside wall of the cylinder with a vice.**
- **If it is difficult to take out the piston, put a block against the end face of the cylinder, then pump in low pressure air gradually from the discharge port.**

COMPONENT PARTS

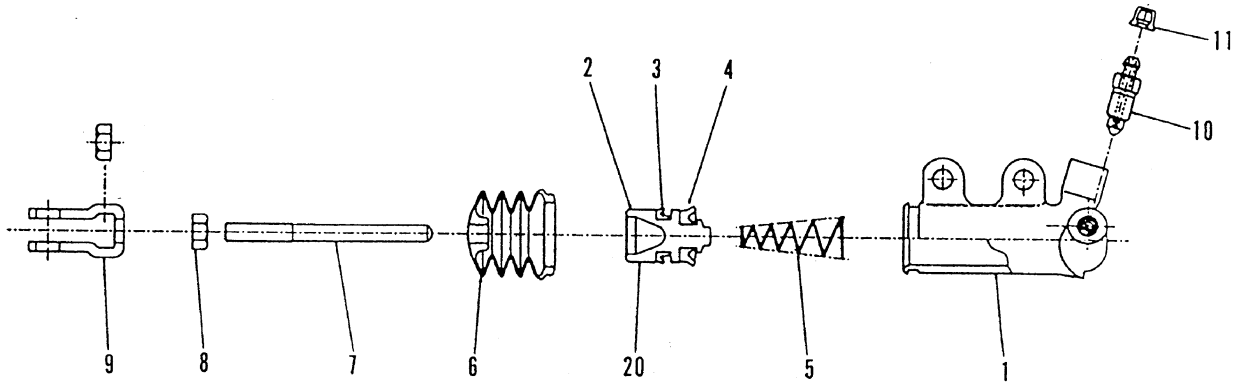

No.	Name	Q'ty
1	Cylinder	1
2	Piston	1
3	S cup	1
4	R cup	1
5	Spring	1
6	Boot	1
7	Push rod	1
8	Nut	2
9	Yoke	1
10	Bleeder valve	1
11	Bleeder cap	1
20	Pistonassembly	1

https://truckmanualshub.com/

TESTING

Part name	Check item	Remedy
Cylinder	Scratches, uneven wear, corrosion of inside surface	• For small scratches, remove with sandpaper • If the scratch will have an adverse effect on the cup, replace the whole cylinder assembly
Piston	Scratches, uneven wear, corrosion of sliding portion	• or small scratches, remove with oilstone • If the scratch will have an adverse effect on the inside surface of the cylinder and cup, replace the whole piston assembly
	Clearance between and cylinder piston	• Replace if the clearance is greater than the limit Clearance limit: 0.15 mm (0.006 in)
Cup	Scratches on lip	• Even if the scratches are small, replace the whole piston assembly
	Pitting of base	• If the pitting is harmful, replace the whole piston assembly
	Wear, swelling	• If there is any abnormal deterioration, wear, or swelling, replace the whole piston assembly
	Interference	• If the value is below the service limit, replace the whole piston assembly Wear limit: 0.4 mm (0.016 in) **Note**: The cup is a specified periodic replacement part Generally speaking, it is safer to replace each time disassembly is carried out.

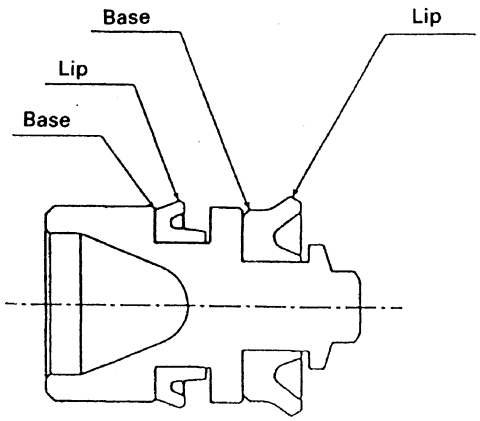

https://truckmanualshub.com/

Part name	Check item	Remedy
Spring	Scratches, wear, inclination	• Replace if there is marked damage
	Free length	• Replace if it is less than the service limit Service limit: 38 mm (1.5 in)
Bleeder valve	Scratches, deformation of seat surface	• Replace if there is marked damage or deformation
Bleeder cap	Cracks, deterioration	• Replace if there are cracks or marked deterioration
Push rod	Curvature, deformation	• Replace if there is curvature or deformation
Boot	Cracks, damage	• Replace if there are cracks or damage
	Interference for cylinder, rod	• Replace if there is no interference or extremely little interference
Yoke	Deformation, wear	• Replace if there is marked deformation or wear

MAINTENANCE STANDARD

	Check item	Standard value	Limit	Remedy
1	Clearance between cylinder and piston	0.020 – 0.105 mm (0.008 – 0.004 in)	0.15 mm (0.006 in)	Replace (cylinder assembly)
2	Interference of cup	Pressure side: Approx. 2 mm (0.08 in) Secondary side: Approx. 0.6 mm (0.023 in)	0.4 mm (0.016 in)	Replace (piston assembly)
3	Free length of spring	43 mm (1.7 in)	38 mm (1.5 in)	Replace
4	Tightening torque for yoke and locknut	7.8 – 11.8 Nm {80 – 120 kgfcm}	—	—
5	Tightening torque for bleeder valve	6.8 – 8.8 Nm {70 – 90 kgfcm}	—	—

https://truckmanualshub.com/

ASSEMBLY

1. Use alcohol or brake fluid to wash all parts that are to be reused.
   For the cup or other rubber parts, do not soak for more than 30 seconds when washing in alcohol.

2. Coat inside surface of cylinder and outside circumference of piston evenly with rubber grease or brake fluid.

3. Assemble spring to piston assembly, then insert in cylinder.

4. Insert push rod, then assemble boot, nut, and yoke in turn to push rod.

kgm	7.8 – 11.7 Nm {80 – 120 kgfcm}

PRECAUTIONS

- **Do not use any fluid apart from alcohol or brake fluid to wash the parts.**
  In particular, never use mineral oil (petroleum, gasoline, etc.)
  (If mineral oil gets on rubber parts, they will swell and become unusable.)

- **After washing the parts, keep them in a clean place to prevent dust or dirt from sticking to them.**

- **Be careful not to let dirt or dust get in, and be careful not to damage the damage the cylinder, piston, or cup.**

https://truckmanualshub.com/

ASSEMBLY DRAWING

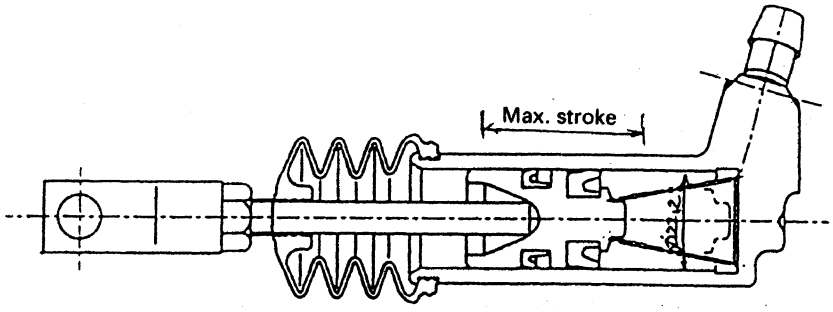

Cross-sectional drawing of cylinder

SPECIFICATIONS

Part Name		22.2 C/0 cylinder assembly
Fluid used		Brake fluid
Cylinder diameter	mm	22.2
Max. stroke	mm	35
Max. pressure	MPa {kgf/cm^2}	9.8 {100}

https://truckmanualshub.com/

CLUTCH TRANSMISSION

DISASSEMBLY

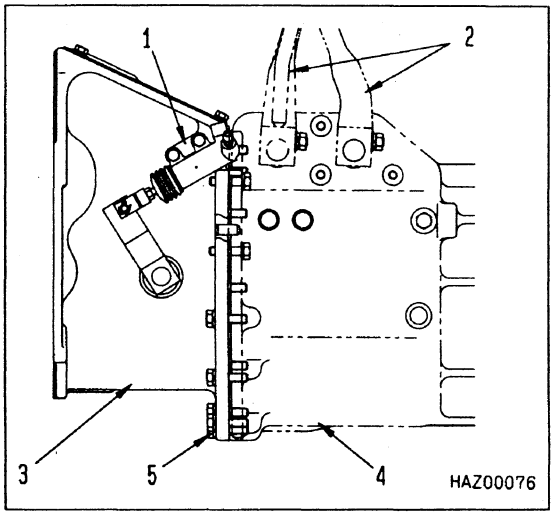

1. Clutch case

(1) Remove clutch release cylinder (1).

(2) Remove F-R, H-L lever (2).

(3) Remove connecting bolts (5) of clutch case (3) and transmission case (4), and separate clutch case.

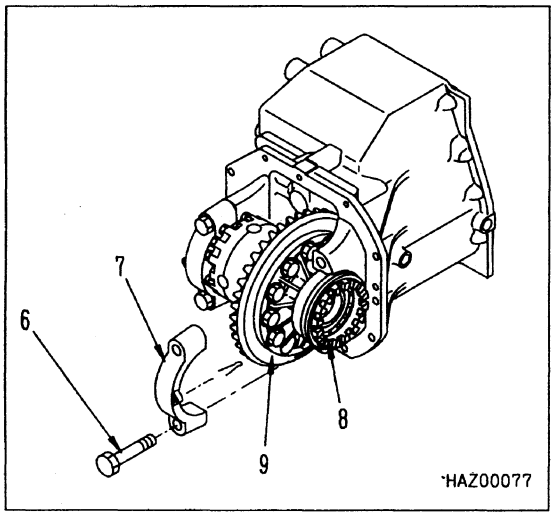

2. Differential

(1) Remove bolt (6), then remove cap (7).

(2) Remove screw (8), then remove differential (9).

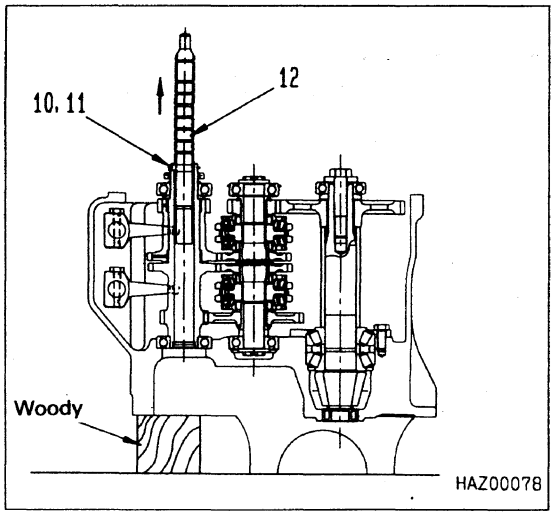

3. Drive shaft

(1) Remove snap ring (10) and pin (11) holding drive shaft to input shaft.

(2) Pull out drive shaft (12).

https://truckmanualshub.com/

4. Output shaft

1) Remove bolt (1), then remove bearing (2).

2) Remove gear (3), then pull out collar (4).

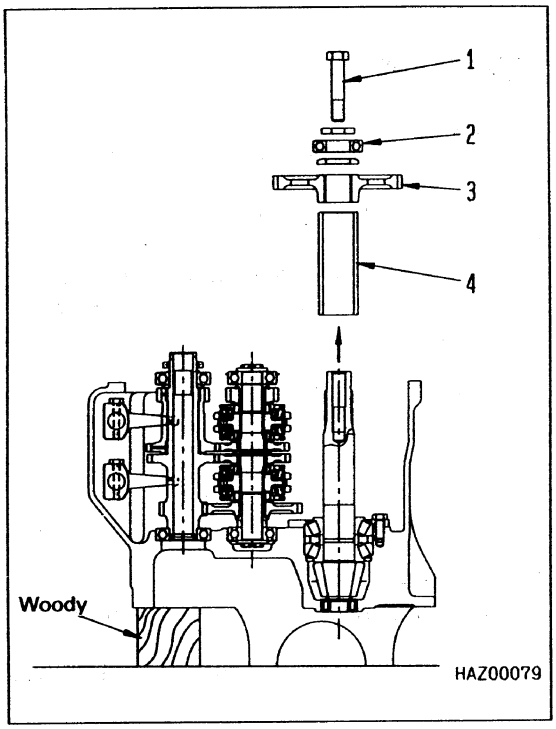

5. Idler shaft

Pull out idler shaft assembly (5) from case.

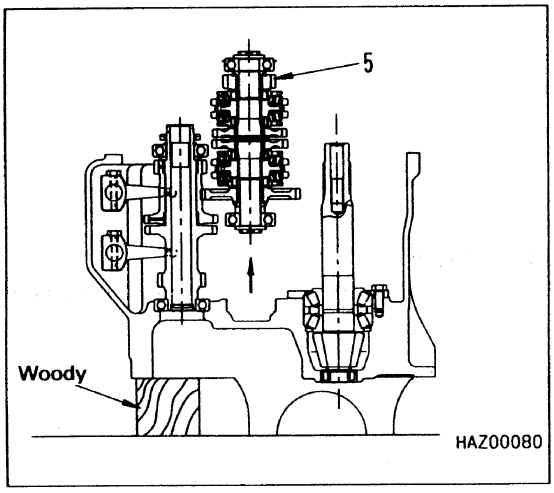

6. Output shaft

Remove bolt (6), then remove cage (7).

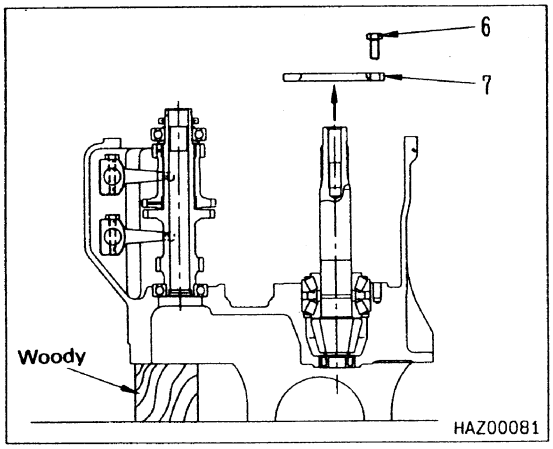

https://truckmanualshub.com/

7. Pinion shaft sub-assembly
Pull out pinion shaft sub-assembly (1) from case.

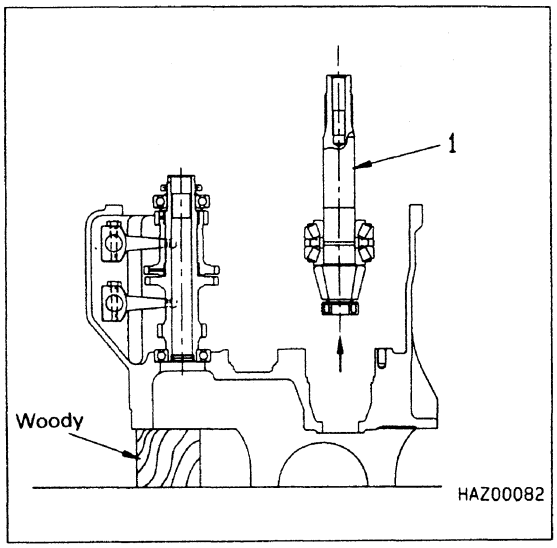

8. Input shaft, shifter yoke
Pull out both input shaft assembly and shifter yoke assembly from case.

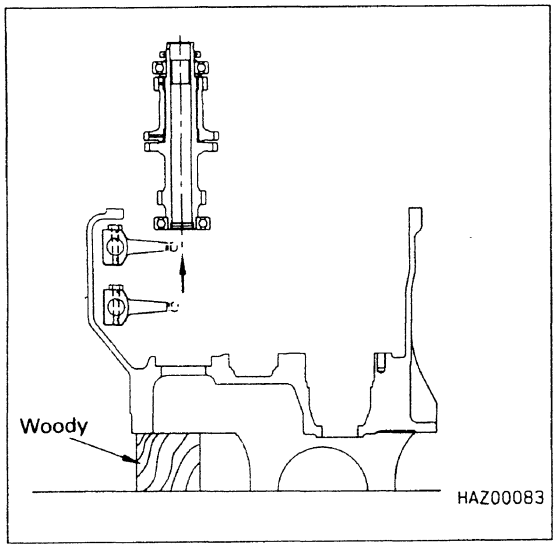

https://truckmanualshub.com/

9. Shifter yoke

1) Remove bolts (1), then remove shaft (2).

2) Remove bolts (3), then remove shaft (4).

3) Remove shifter yoke (5).

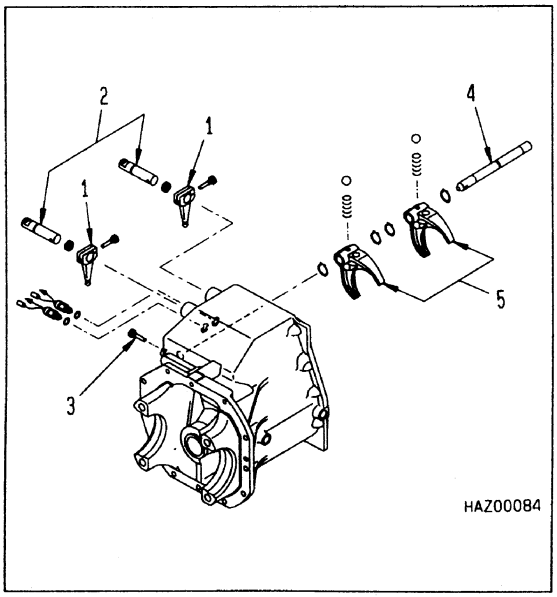

https://truckmanualshub.com/

TESTING

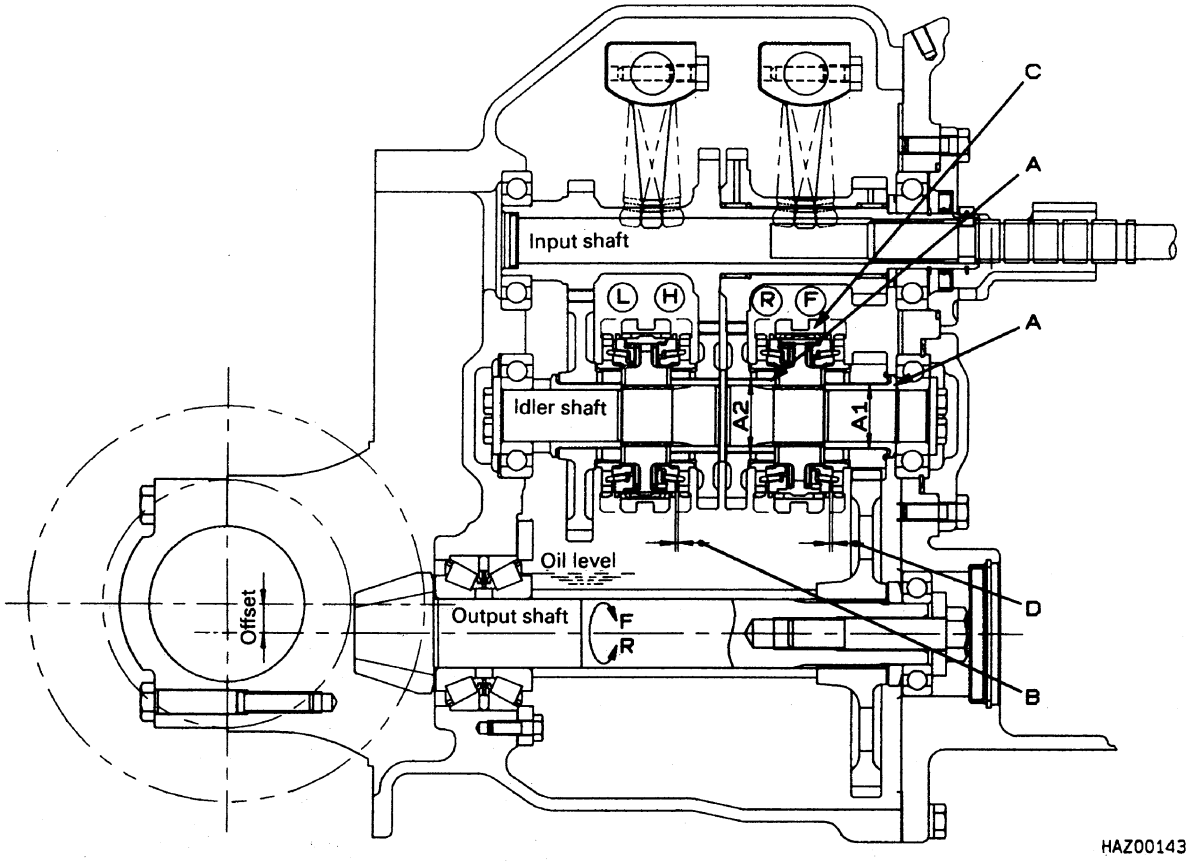

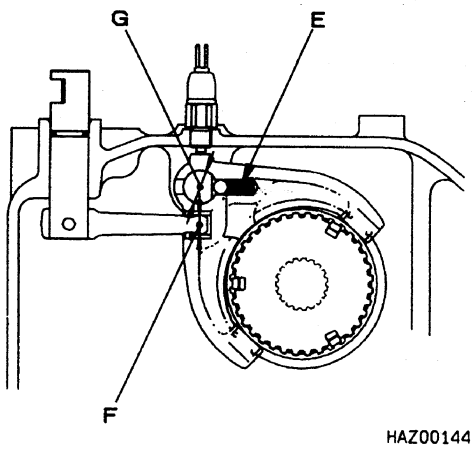

https://truckmanualshub.com/

Unit: mm (in)

Symbol	Check item			Criteria		Remedy
				Standard size	Repair limit	
A	Outside diameter of bushing		A1	38 (1.49)	37.8 (1.489)	Replace
			A2	43 (1.694)	42.8 (1.686)	
B	Clearance between balk ring and H, L gear (*1)			1.2 – 1.8 (0.048 – 0.071)	0.8 (0.03)	Replace as assembly *1
C	Clearance between shifter yoke and sleeve gear (*2)			0.04 – 0.39 (0.002 – 0.015)	1.0 (0.04)	Replace *2
D	Clearance between balk ring and F, R gear			1.2 – 1.8 (0.048 – 0.071)	0.8 (0.03)	Replace
E	Deterioration of spring (free length)			21.0 (0.83)	18 (0.71)	
F	Outside diameter of tip of shift lever			13 (0.51)	12.5 (0.49)	
G	Inside diameter of shifter yoke mount			22 (0.867)	22.1 (0.87)	
—	Gears	Backlash		0.08 – 0.28 (0.03 – 0.014)	—	
		Clearance in thrust direction		0.15 – 0.35 (0.06 – 0.014)	—	
—	Tooth surface			• Damage • Excessive wear, defective tooth contact		
—	Bearing			• Seizure, wear • Abnormal noise, defective rotation		
—	Gasket O-ring Seals			—		Replace with new parts during disassembly and assembly

*1: Dimension when balk ring is moved to outside
*2: Dimension when shifter yoke is pushed fully in either direction

https://truckmanualshub.com/

ASSEMBLY

1. Output shaft sub-assembly

1) Insert shim (2) of calculated thickness to pinion shaft (1).

★ For details of the procedure for adjusting with shims, see "SHIM ADJUSTMENT METHOD".

2) Insert bearing (3).

3) For 3.0-ton truck, add bearing (4).

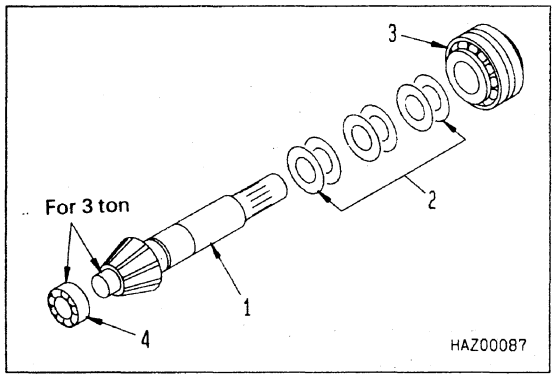

2. Installation of output shaft sub-assembly

1) Insert output shaft sub-assembly inside transmission case, then secure with cage (5) and bolt (6).

Tightening torque for bolts

kgm	64 – 78 Nm {6.5 – 8 kgfm}
	Loctite #271 (thread of hole)

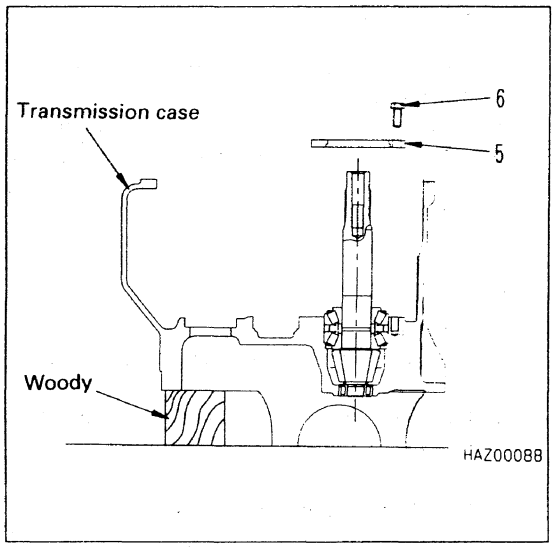

3. Idler shaft assembly

1) Secure bearing (7) in position at both ends of idler shaft with holder (8) and bolt (9).

	Loctite #271 (thread of hole)

2) Install idler shaft assembly and yoke shaft assembly inside case.

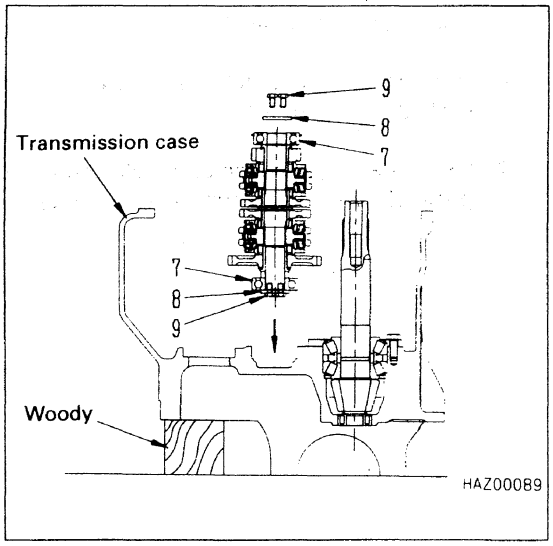

https://truckmanualshub.com/

4. Output shaft

1) Insert spacer (1), gear (2), collar (3), and bearing (4) to output shaft, then secure with washer (5) and bolts (6).

Tightening torque for bolts

kgm	245 – 314 Nm {25 – 32 kgfm}
	Loctite #271 (thread of hole)

5. Input shaft sub-assembly

1) Install input shaft sub-assembly inside case.

2) Change lever
Secure lever (7) with bolt (8).

3) Insert shaft (9), then secure with pin (10) and snap ring (11).

★ Coat the shaft with paste when assembling.

★ After assembling, move the shaft in the axial direction and check that it is held in position securely.

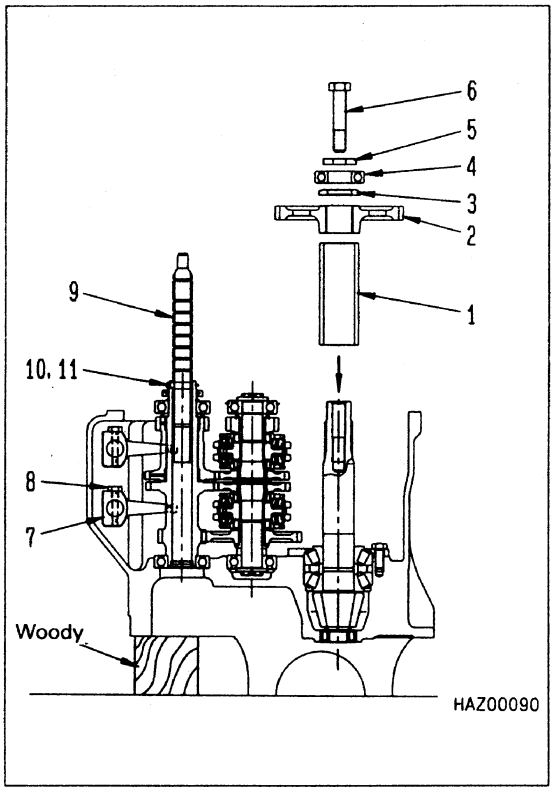

6. Clutch case

1) Knock dowel pin (2) into transmission case (1).

2) Fit gasket (4), then connect clutch case (3) with bolt (5).

3) Install clutch yoke and shifter shaft.

4) Install clutch release cylinder (6).

5) Insert flange (7) to input shaft, then secure to clutch case with bolts (8).

6) Insert cage (10) in clutch case hole at top of idler shaft, then secure with bolt (10).

7) Insert seal (11) in clutch case hole at top of output shaft, then secure with snap ring (12).

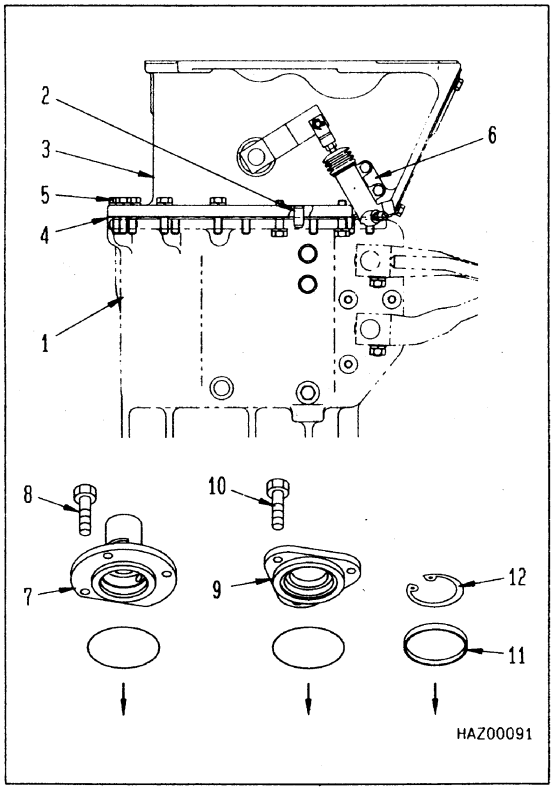

https://truckmanualshub.com/

Method of adjusting shim for pinion shaft assembly

1. **Dimension difference a**
   Read display a at the tip of the pinion shaft.

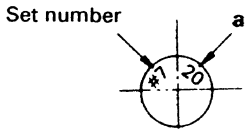

2. **Dimension difference b**
   Read stamped mark b on the case.

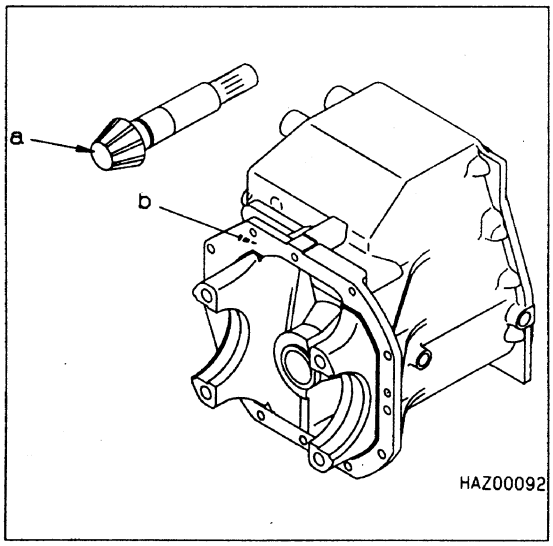

3. **Dimension difference c**
   1) Set the special tool to the bearing as shown in the diagram.

Special tool	3EA-97-99200

   2) Tighten the set bolts.

kgm	88 Nm {9 kgfm}

   3) Calculate C from the following formula

$$C = (8.45 - Ca) \times 100$$

   8.45: Basic dimension of bearing

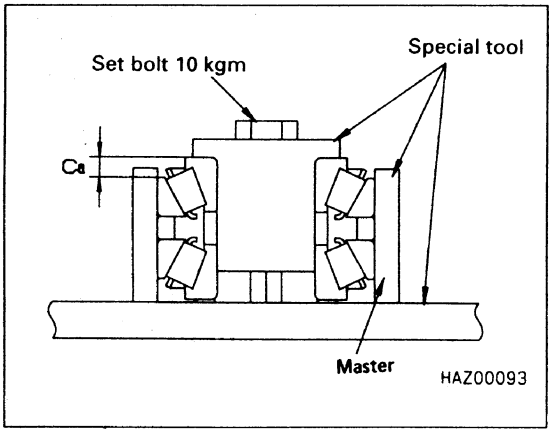

4. **Calculating shim thickness (S)**
   Put the dimension differences a, b, and c calculated above in the following formula and calculate shim thickness (S).

$$S = 0.65 + \frac{a + b + c}{100} \quad \left\{ \begin{array}{l} \text{Round the second} \\ \text{place of decimal} \end{array} \right\}$$

Cross-sectional drawing of clutch transmission

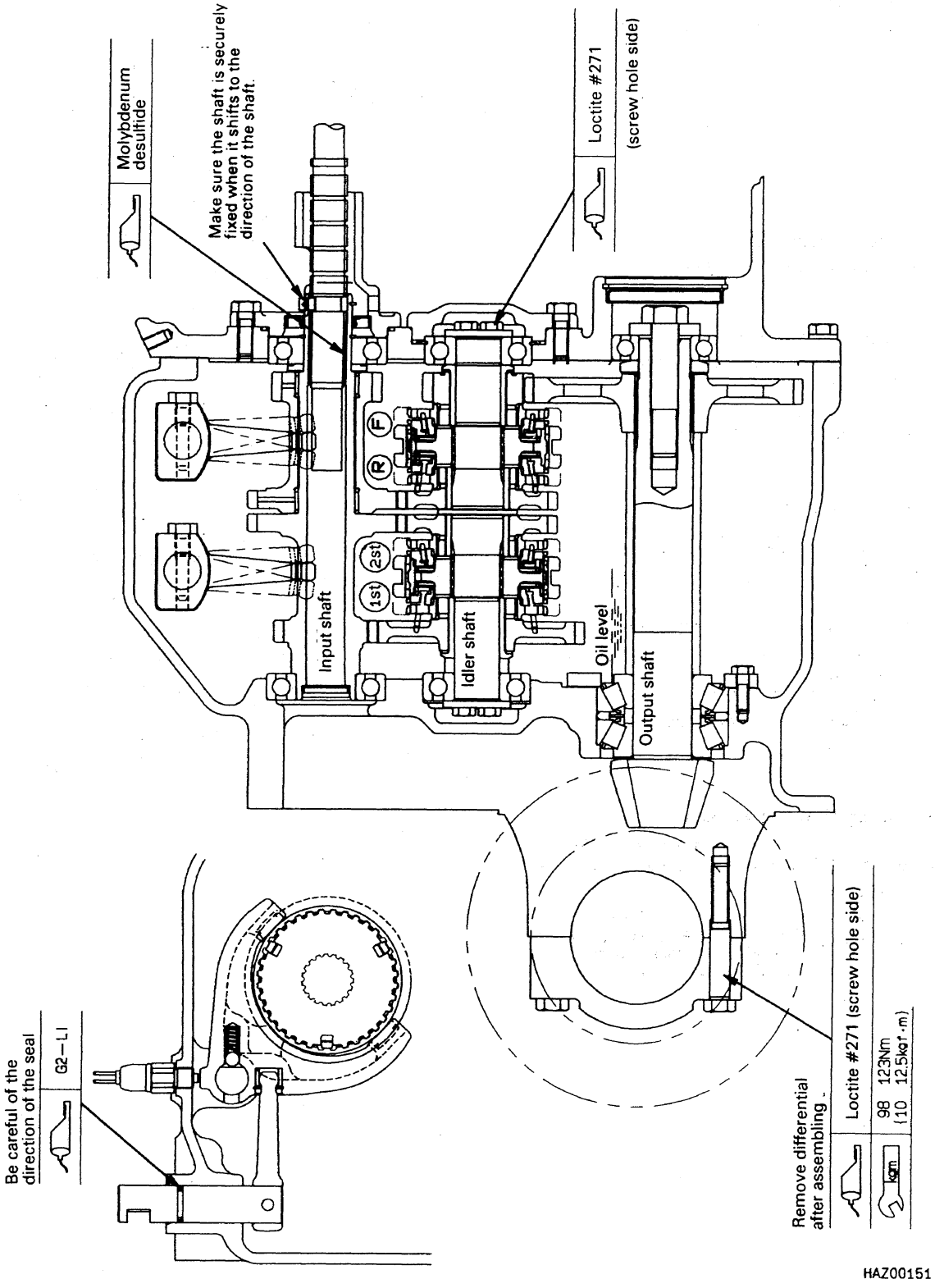

https://truckmanualshub.com/

TORQUE CONVERTER

Wash the outside, then carry out the following operation in a clean place.

DISASSEMBLY

1. **Removal of torque converter assembly**
   Drain oil from inside transmission, then remove torque converter assembly from engine and transmission.

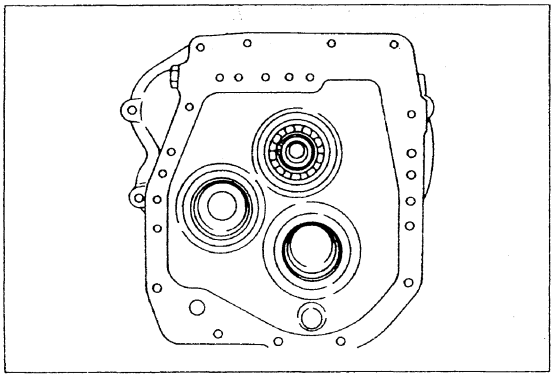

2. **Removal of torque converter**
   Remove torque converter slowly from housing.
   When doing this, be careful not to damage oil seal.

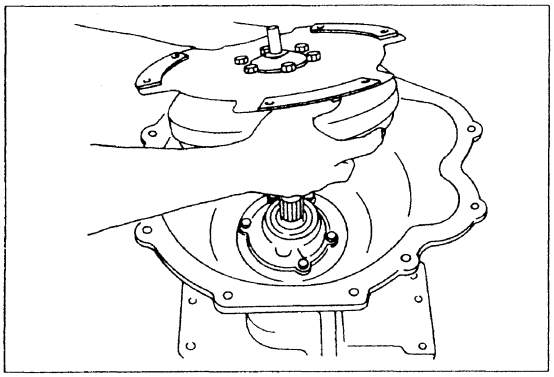

3. **Removal of gear pump**
   Remove pump mounting bolts, then remove gear pump.
   (Socket wrench: 20 mm)

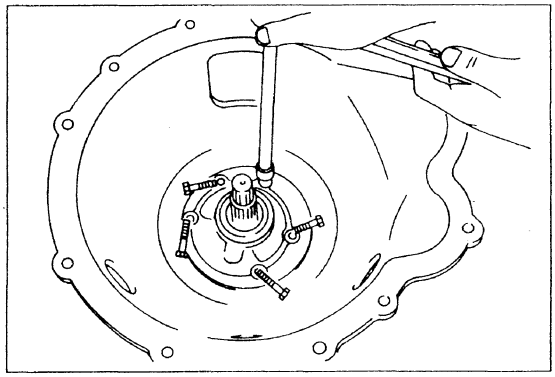

   After removing the pump, remove the O-ring if it is still remaining inside the housing.

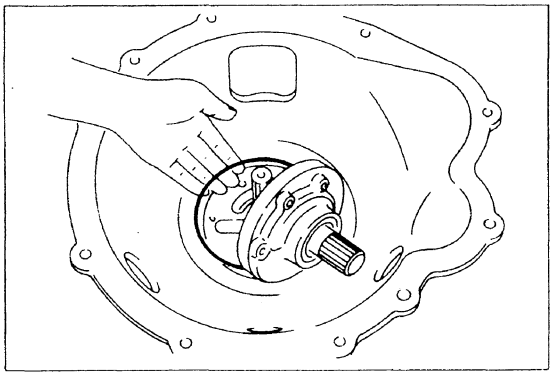

https://truckmanualshub.com/

4. Removal of turbine shaft

Remove snap ring from housing hole.
(Snap ring pliers)

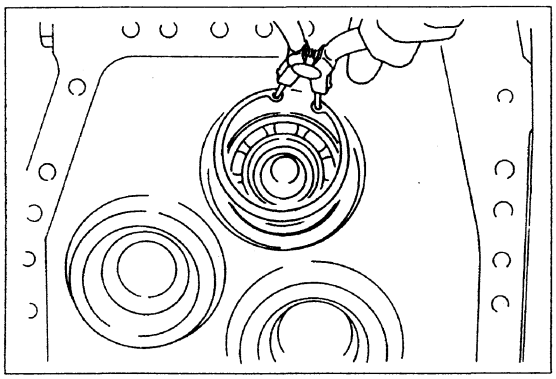

Remove turbine shaft from housing.

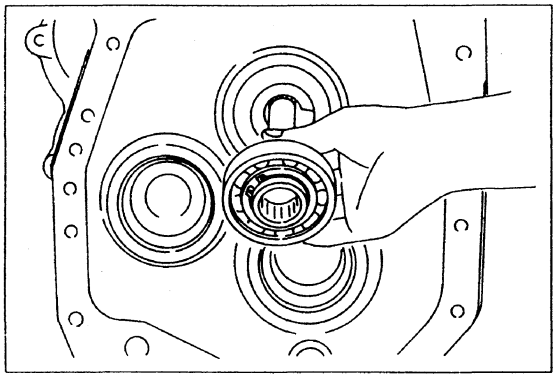

Remove seal ring at tip of turbine shaft.

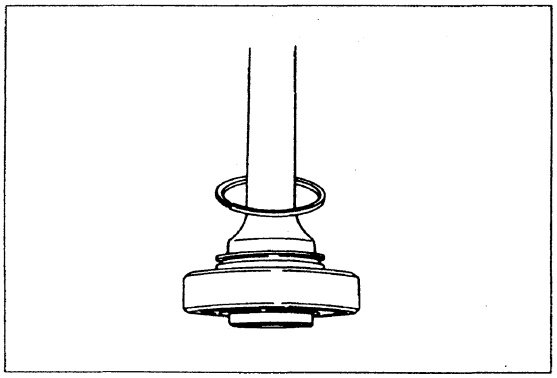

https://truckmanualshub.com/

5. Removal of inlet port relief valve
Remove plug from housing, then remove spring and piston.
(Wrench: 24 mm)

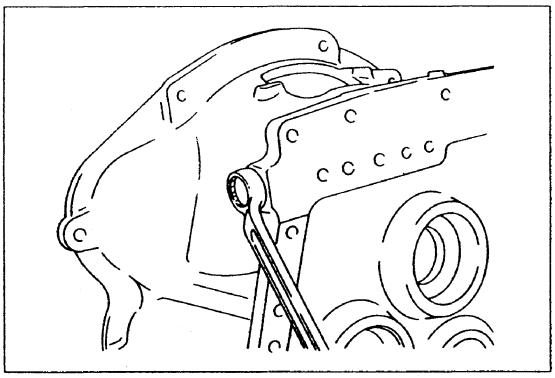

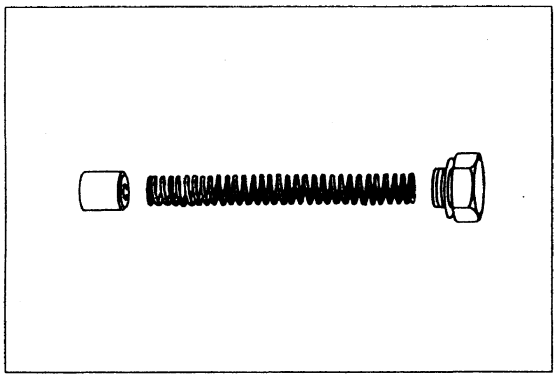

6. Disassembly of gear pump
Remove O-ring and disassemble pump, then remove belleville spring (one place) and disassemble.

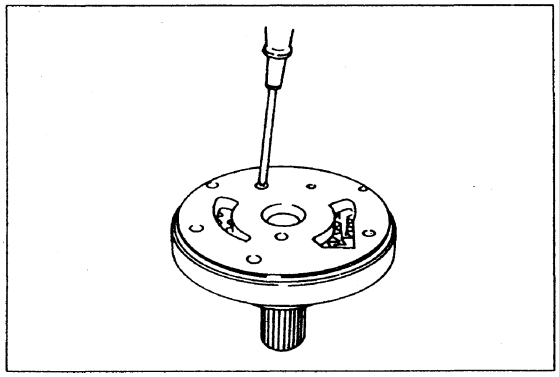

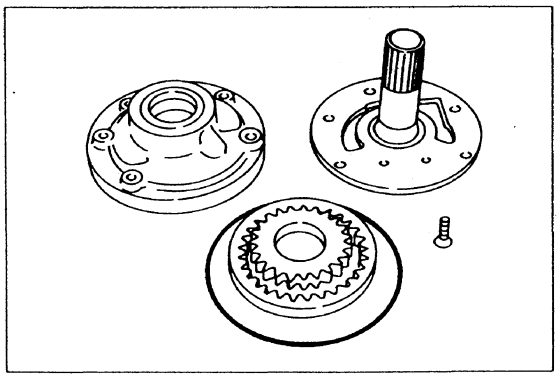

Note: Keep disassembly of the pump to the minimum.

https://truckmanualshub.com/

COMPONENT PARTS

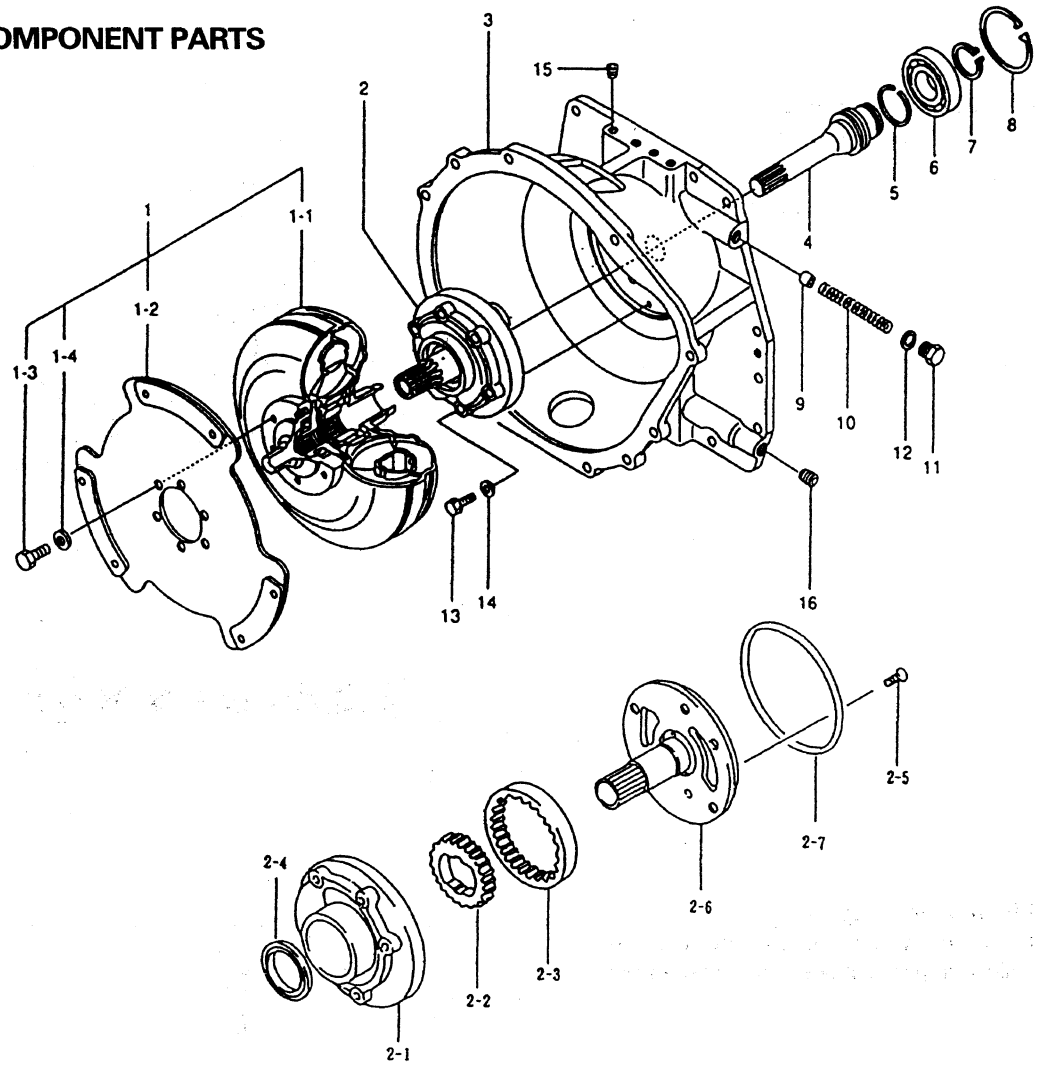

No.	Name	Q'ty	No.	Name	Q'ty
1	Torque converter circuit	1	4	Turbine shaft	1
1-2	Input plate assembly	1	5	Seal ring	1
1-3	Small hexagon bolt	6	6	Ball bearing	1
1-4	Washer	6	7	Snap ring	1
2	Gear pump assembly	1	8	Snap ring	1
2-1	Case assembly	1	9	Piston	2
2-2	Drive gear	1	10	Pressure spring	1
2-3	Driven gear	1	11	Plug	2
2-4	Oil seal	1	12	Gasket	2
2-5	Countersunk head screw	1	13	Hexagon bolt	5
2-6	Stator support	1	14	Gasket	5
2-7	O-ring	1	15	Hexagon socket head plug PT 1/4	4
3	Housing	1	16	Hexagon socket head plug PT 3/4	2

https://truckmanualshub.com/

TESTING

Unit: mm (in)

No.	Check item	Criteria: Standard size	Criteria: Repair limit	No.	Remedy
1	Torque converter inlet port valve Piston and housing hole 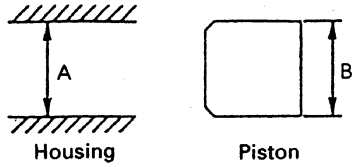 A mm B mm Clearance mm	14 – 14.018 (0.551 – 0.552) 13.96 – 13.97 (0.550 – 0.5504) 0.030 – 0.058 (0.001 – 0.002)	 0.080 (0.003)	3 9	Replace piston
2	Torque converter inlet port valve spring 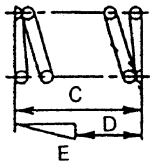 C: Free length D: Installed length E: Installed load C mm D mm E N {kg}	103.4 (4.07) 62.7 (2.47) 75.6 N (77.1 kg) ±5%	 68.1 N (6.94 kg)	10	Replace
3	Gear pump Oil seal and torque converter impeller hub 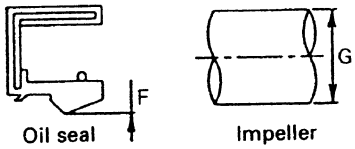 F mm G mm	41.915 – 41.965 (1.651 – 1.653)	41.5 (1.64) 41.815 (1.648)	2-4 1-1	
	Bushing and torque converter impeller hub 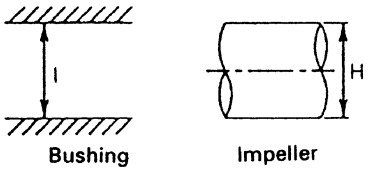 H mm I mm Clearance mm	41.915 – 41.965 (1.651 – 1.653) 42 – 42.039 (1.655 – 1.656) 0.035 – 0.124 (0.001 – 0.005)	 0.17 (0.007)	1-1 2-1	
4	Turbine shaft Housing hole and seal ring groove 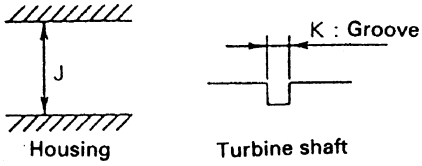 J mm K mm	50.10 – 50.15 (1.974 – 1.976) 2.5 – 2.6 (0.099 – 0.102)	50.25 (1.98) 2.7 (0.106)	3 4	
	Seal ring 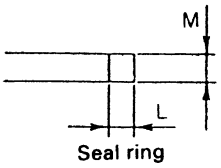 L mm M mm	2.0 – 2.2 (0.079 – 0.087) 2.35 – 2.40 (0.093 – 0.094)	1.8 (0.071) 2.15 (0.085)	5	

The numbers used in the No. column of the table refer to the numbers in the component part drawing.

https://truckmanualshub.com/

ASSEMBLY

Carry out assembly in the reverse order to disassembly. Pay attention to the following points when installing.

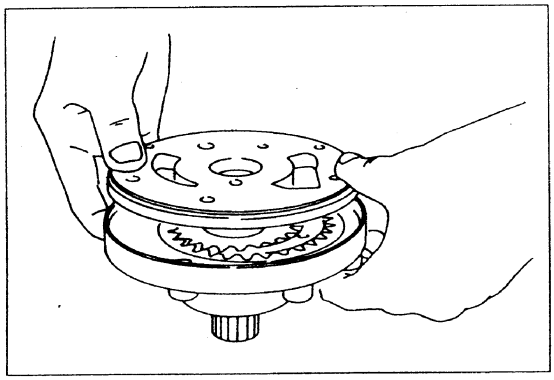

1. **Assembly of control valve**
   Insert the piston and spring correctly to their original position, assemble in the same way as for disassembly, then assemble to the transmission housing.

2. **Assembly of gear pump**
   Insert the pair of gears in the casing, reverse the stator support, and assemble in the same way as for disassembly.
   Tighten the countersunk head screw, and check that the gear rotates smoothly. If it does not rotate, disassemble, and then assemble again.

kgm (Countersunk head screw)	0.98 Nm {0.1 kgfm}

3. **Assembly of inlet port relief valve**
   There are two types of valve, so be sure to assemble them correctly to their original position.

kgm (Plug)	49 Nm {5.0 kgfm}

4. **Assembly of turbine shaft**
   Check that the seal ring is securely inserted, then insert the shaft into the housing.

5. **Assembly of gear pump**
   Insert the O-ring to the pump casing. To prevent the O-ring from breaking or cracking when it is inserted, coat it thinly with lithium grease (Shell Albania Z).

kgm (O-ring)	Lithium grease
(Bolt)	20.6 Nm {2.1 kgfm}

Assemble the O-ring to the casing as shown in the diagram.

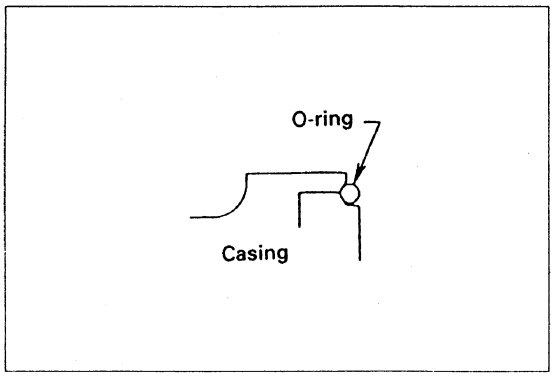

https://truckmanualshub.com/

6. Assembly of torque converter

Insert the torque converter into the pump inside the housing. When doing this, to prevent the oil seal and bushing from breaking or being scratched, fill the area between the oil seal lip 1/3 - 1/2 uniformly with lithium grease, or coat with clean hydraulic oil.

7. Assembly of torque converter assembly

Assemble the torque converter assembly to the transmission and engine. Replace the O-rings and oil seals with new parts.
Be careful to assemble correctly. For details, see the check items in Maintenance standard.
When replacing the oil seal with a new part, coat the outside circumference with semi-dry gasket sealant (for example, Three Bond No. 1211, 1104). Be careful not to get the gasket sealant on the lip or sliding surface of the shaft.

MAINTENANCE STANDARD

1. Checking oil pressure

Location	No.	Check item	Pressure MPa {kgf/cm²}	Port position
Torque converter	1	Torque converter inlet port pressure	0.29 – 0.69 {3 – 7}	Ⓔ

2. Tightening torque for bolts and plugs

Component	No.	Tightening location	Screw specification		Tightening torque Nm {kgfm}		No.
					Target	Maximum	
Torque converter	1	Input plate mount	Hexagon bolt	M10 × 1.5 × 16	57.8 {5.9}	74.5 {7.6}	1-3
	2	Gear pump assembly	Countersunk head screw	M5 × 0.8 × 16	0.98 {0.1}	2.94 {0.3}	2-5
	3	Inlet port valve mount	Plug	M16 × 1.5 × 10	49.0 {5.0}	63.7 {6.5}	11
	4	Gear pump mount	Small hexagon bolt	M8 × 1.25 × 40	20.6 {2.1}	26.5 {2.7}	13
	5	Pressure pickup ports	Hexagon socket head plug	PT 1/4	34.3 {3.5}	43.1 {4.4}	15
	6	Blind plug	Hexagon socket head plug	PT 3/4	56.8 {5.8}	70.6 {7.2}	16

The numbers used in the No. column of the table refer to the numbers in the component part drawing.

https://truckmanualshub.com/

ASSEMBLY DRAWING

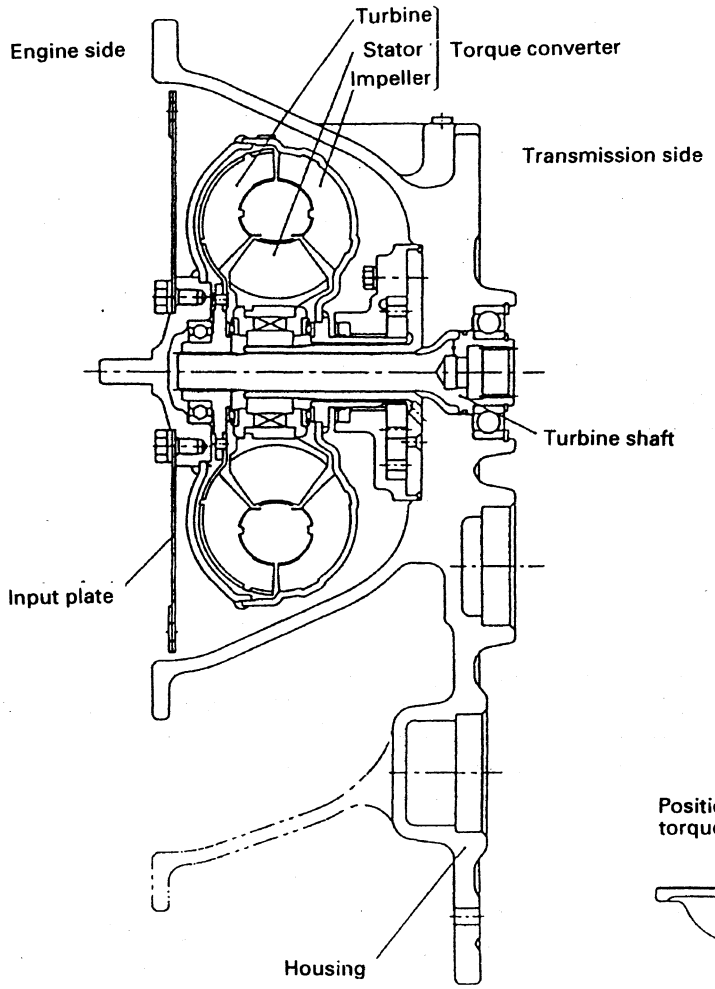

Cross-sectional drawing of torque converter assembly

Positions of hydraulic ports on torque converter assembly

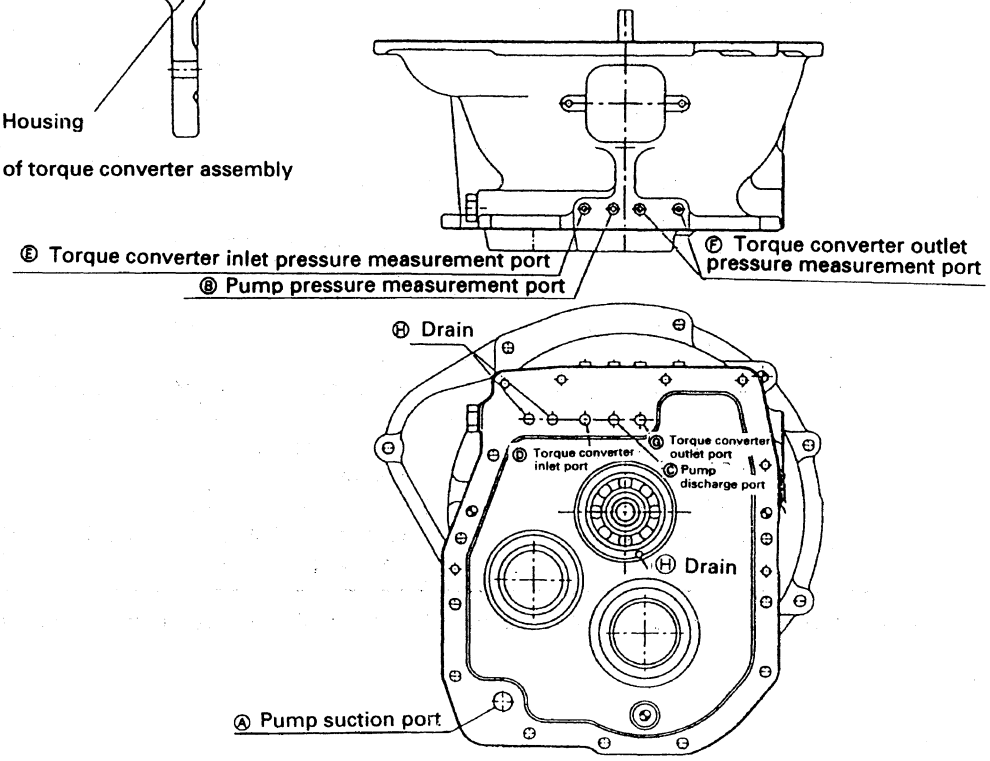

https://truckmanualshub.com/

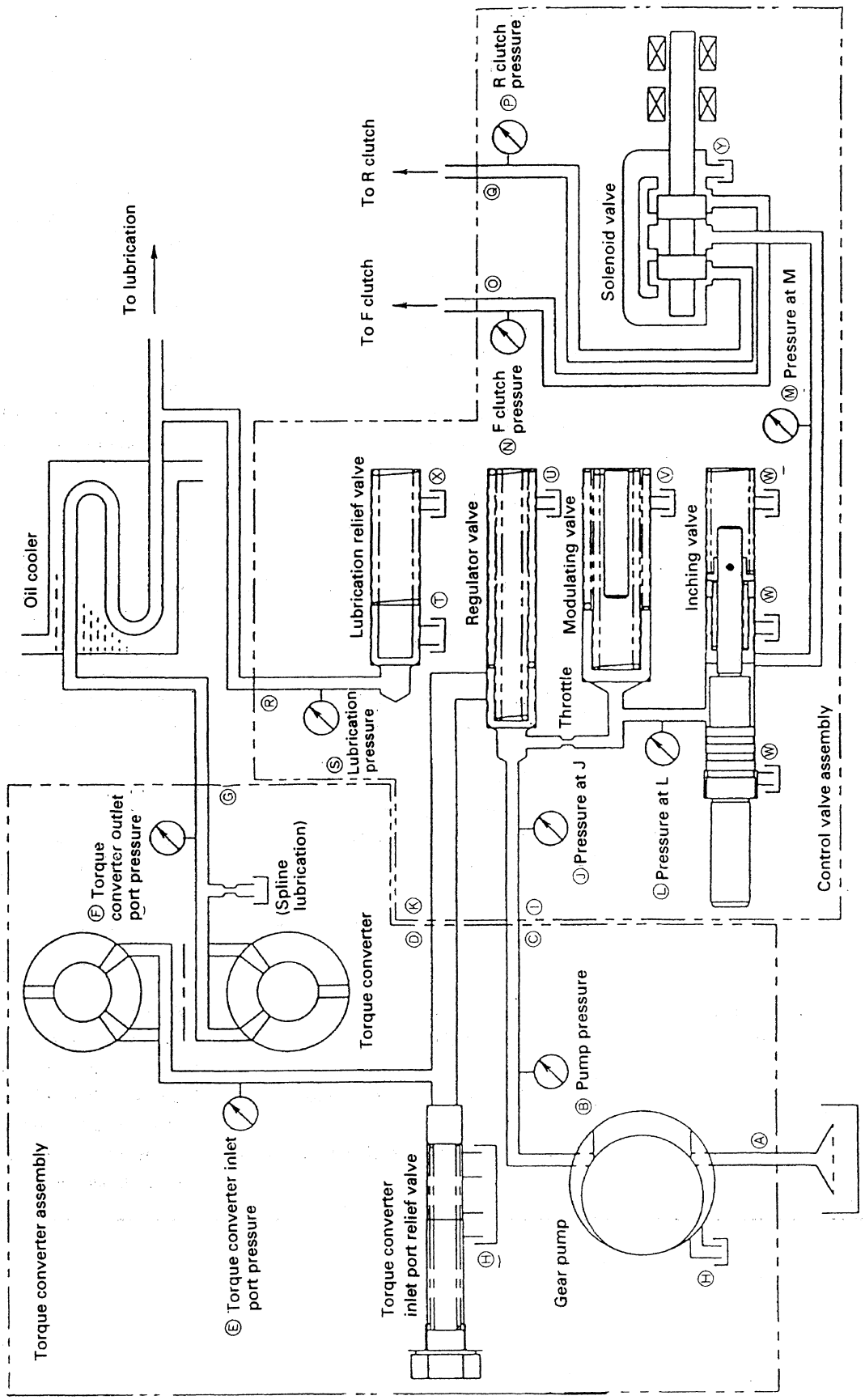

https://truckmanualshub.com/

CAUSES AND REMEDIES FOR FAILURES

No.	Problem	Cause	Remedy
1	Power is not transmitted	A No hydraulic pressure	
		1) Lack of oil	Add oil
		2) Damaged gear pump or drive portion	Disassemble and check, replace with new parts or replace whole assembly
		3) Damaged piping or joint	Disassemble and replace
		4) Broken piston in inlet port relief valve or broken spring	Disassemble and replace
		B Mechanical breakage	
		1) Broken input plate	Disassemble and replace
		2) Broken shaft, gear	Disassemble and replace
		3) Broken spline	Disassemble and replace
2	Output drops	A Hydraulic pressure is too low	
		1) Lack of oil	Add oil
		2) Leakage of air from suction piping	Check joint, gasket, replace parts if necessary
		3) Drop in efficiency of gear pump	Disassemble and replace, replace parts if necessary
		4) Deteriorated spring in inlet port relief valve or defective operation of piston	Disassemble and replace, replace parts if necessary
		5) Worn or broken seal ring	Disassemble and replace
		B Mechanical breakage	
		1) Broken or deformed impeller	Disassemble and replace
		2) Deformed input plate	Disassemble and replace
		C Other	
		1) Non-specified oil is being used	Change to specified oil
3	Oil pressure rises abnormally high	1) Incorrect oil level	Add or drain oil
		2) Contact of impeller	Disassemble and replace, replace parts if necessary
		3) Wear or seizure of bearing	Disassemble and replace, replace parts if necessary
		4) Wear or damage of gear pump	Disassemble and replace, replace parts if necessary

https://truckmanualshub.com/

No.	Problem	Cause	Remedy
4	Abnormal noise is generated	1) Cavitation caused by leakage of air from suction piping or lack of oil	Add oil or check and replace parts if necessary
		2) Failure of gear pump	Disassemble and replace parts or whole assembly
		3) Contact caused by deformed impeller	Disassemble and replace, replace parts if necessary
		4) Breakage of input plate	Disassemble and replace
		5) Breakage of gear	Disassemble and replace
		6) Wear or breakage of bearing	Disassemble and replace
		7) Wear of spline	Disassemble and replace
		8) Loose bolts	Tighten, replace if necessary
5	Oil oozes out or leaks	A Oil seal	
		1) Worn or damaged lip	Disassemble and replace
		2) Dirt caught	Disassemble and replace, replace parts if necessary
		3) Worn or scratched shaft	Correct or replace
		4) Hardening or deterioration of rubber because of abnormal rise in oil temperature	Disassemble and replace
		B O-ring	
		1) Broken O-ring	Disassemble and replace
		2) Scratched mating surface	Correct or replace
		3) Hardening or deterioration of rubber because of abnormal rise in oil temperature	Disassemble and replace
		4) Sudden use in extremely cold temperatures (below -15*C)	Carry out warming-up operation
		C. Plug, screw	
		1) Loose screw	Tighten
		2) Broken screw	Replace
		3) Cracked hole	Replace

https://truckmanualshub.com/

Note: This section (30-37 – 50) applies to the FD10L – 18L.

TORQUE CONVERTER

DISASSEMBLY

1. **Flexible plate assembly, pilot boss**
   Remove plate, flexible plate assembly, and pilot boss.

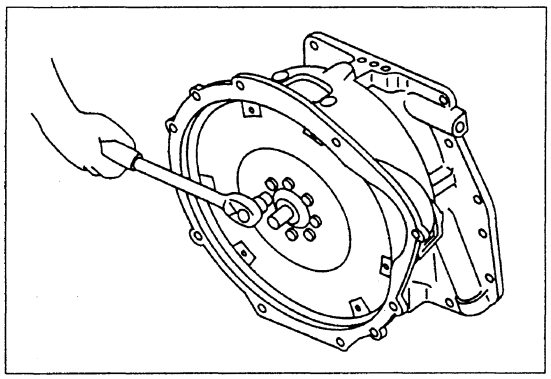

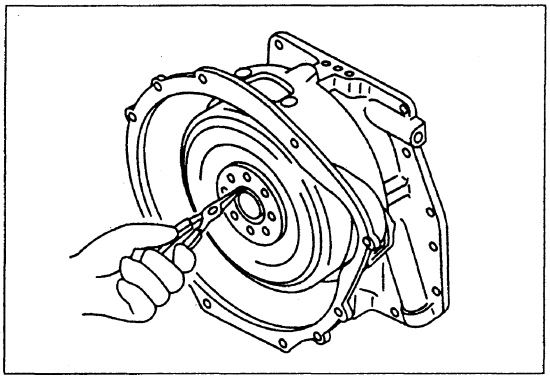

2. **Torque converter assembly**
   1) Remove turbine shaft snap ring.

   2) Remove collar.

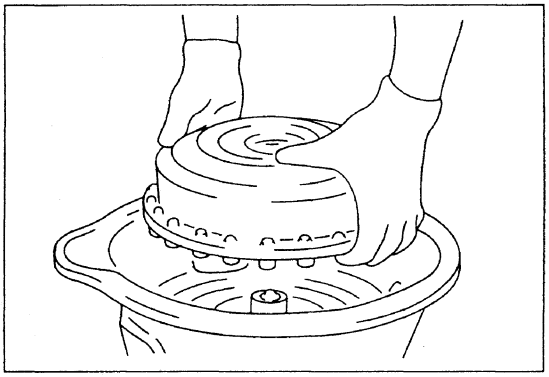

   3) Remove torque converter assembly slowly and be careful not to damage the oil seal.

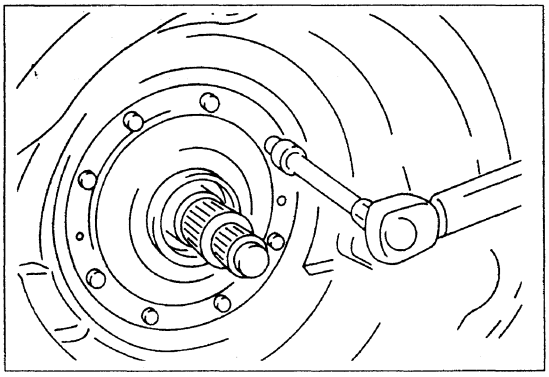

https://truckmanualshub.com/

3. Oil pump case

1) Remove 8 mounting bolts.
2) After removing the bolts, screw them into the forcing tap, and remove the oil pump case, taking care not to damage the oil seal.

★ The drive gear assembly and driven gear may come off, so be careful when doing this.

3) Remove the drive gear assembly.
4) Remove the driven gear.

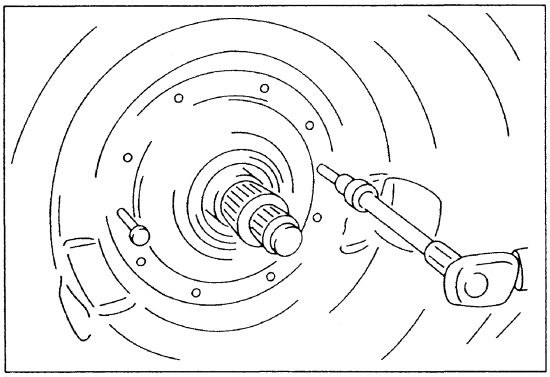

4. Back plate

Take the bolts used to remove the oil pan case and screw them into the forcing tap to remove the back plate.

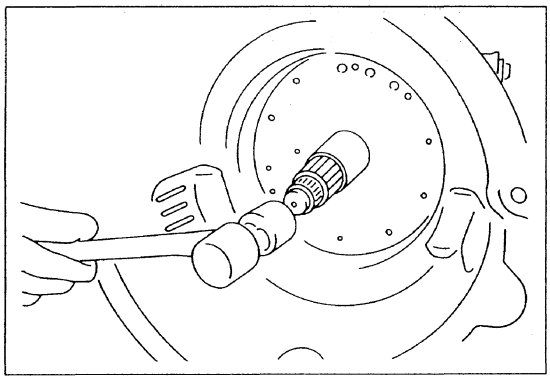

5. Turbine shaft

1) Remove the turbine shaft stopper snap ring (inside torque converter case)
2) Tap the tip of the turbine shaft with a plastic hammer to remove it from the torque converter case.
   (The turbine shaft, bearing, and snap ring will come off as a set.)
3) Remove the seal ring.
4) Remove the snap ring, then use a puller to remove the bearing from the turbine shaft.

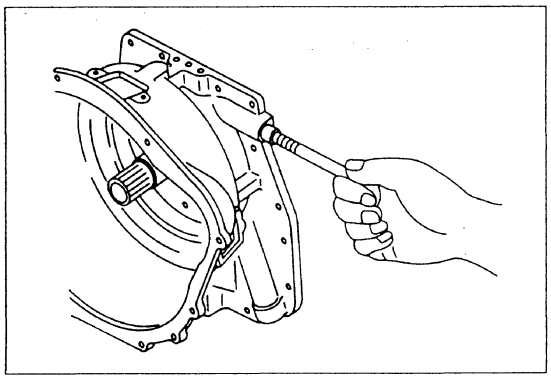

6. Relief valve.

Remove the plug, then remove the spring and piston.

Note: There is an M8 x 1.25 thread in the end face for use when removing the piston.

https://truckmanualshub.com/

7. Disassembly of torque converter assembly

1) Remove the drive cover assembly and pump bolts.

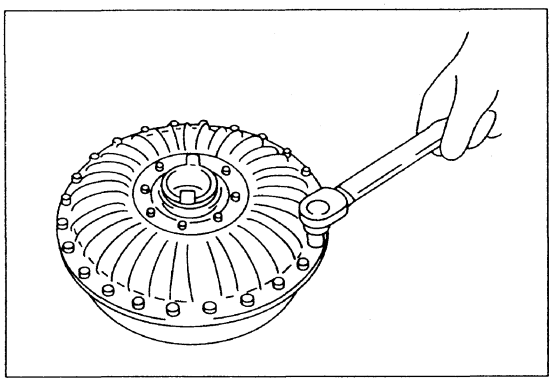

2) Insert screwdrivers into the gap at the flange and remove the drive cover assembly.

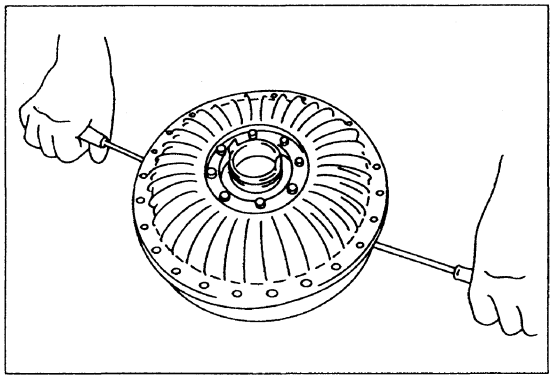

3) Remove the O-ring from the pump, taking care not to damage it.

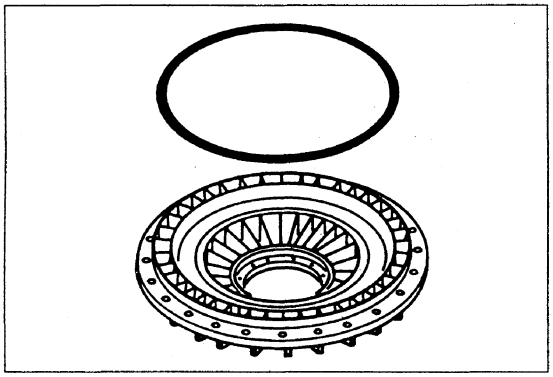

4) Remove the bolts holding the pump and pump boss, then remove the pump boss.

5) Remove the O-ring and seal ring from the pump boss.

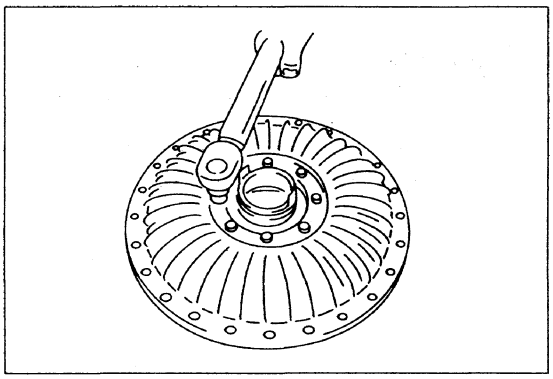

https://truckmanualshub.com/

6) Remove the stator sub-assembly.

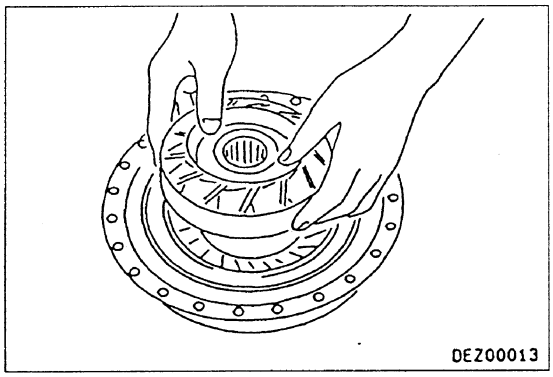

7) Push out the stator hub (inner race) carefully, then remove the spring (leaf spring).
★ When doing this, the roller will suddenly spring out, so be careful not to lose any parts.

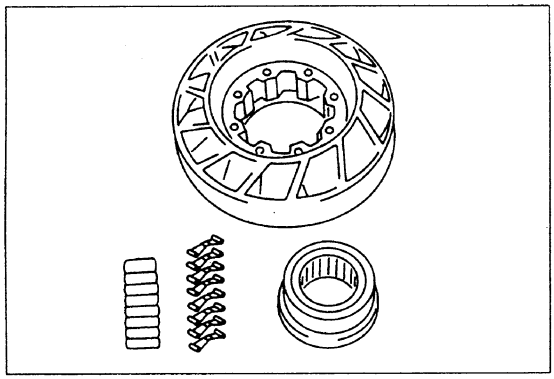

8) Remove the thrust washer, thrust bearing, and thrust washer.

9) Disassemble into the turbine assembly and drive cover assembly. Using a copper bar, tap the boss portion of the turbine assembly and remove it from the drive cover assembly.

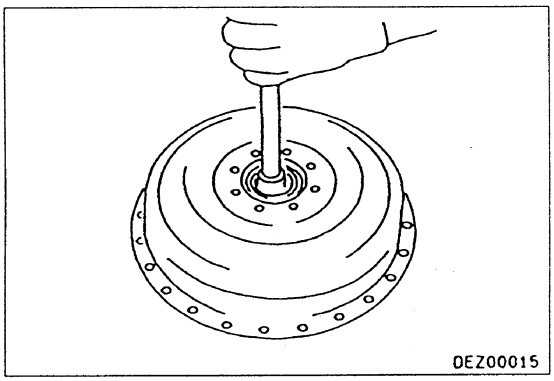

10) Tap the bearing and remove it from the drive cover assembly.

https://truckmanualshub.com/

COMPONENT PARTS

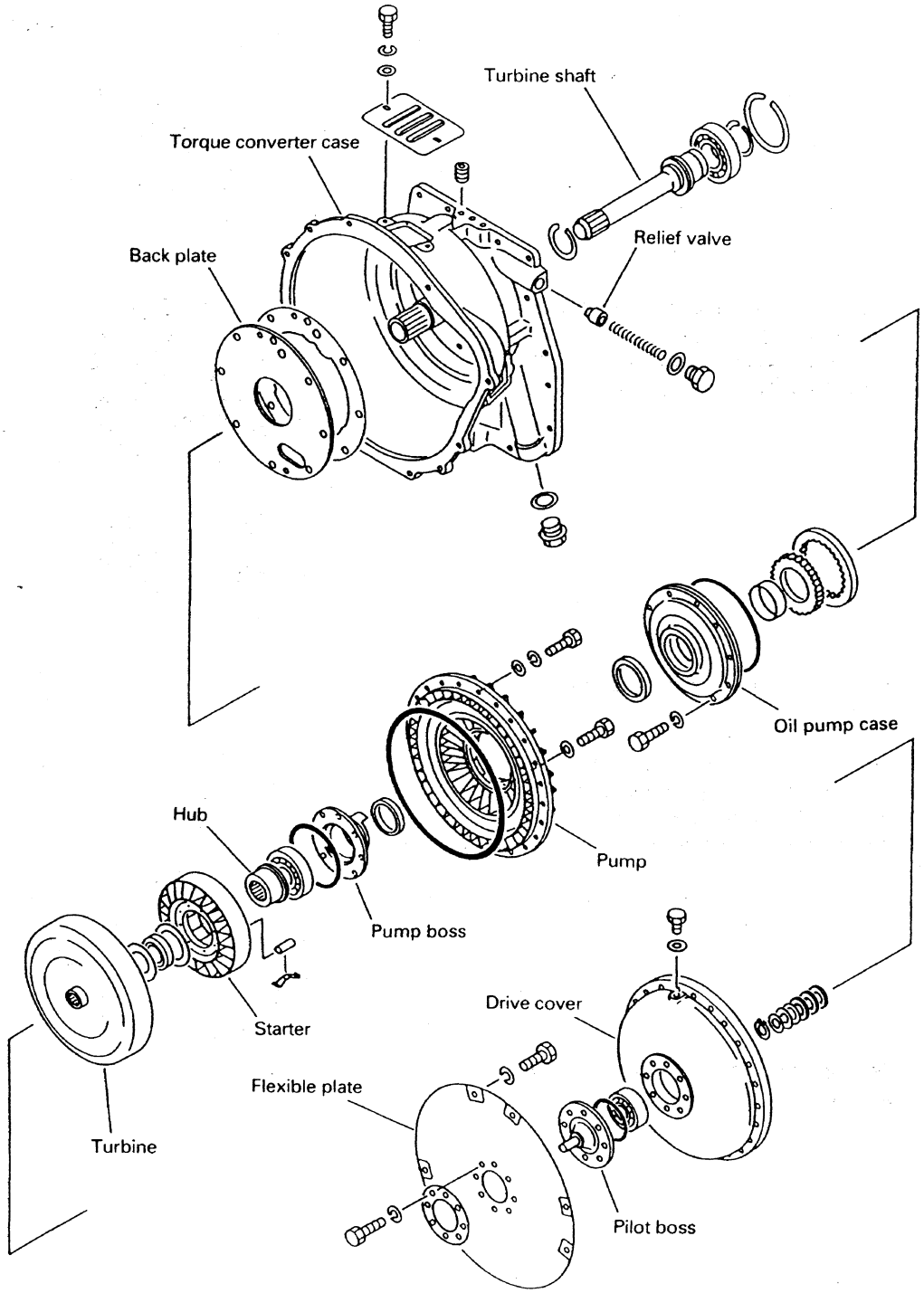

https://truckmanualshub.com/

Unit: mm (in)

Symbol	Inspection item				Criteria: Standard size	Criteria: Repair limit	Remedy
A	Torque converter inlet valve	A1	Piston diameter		14 (0.551)	13.96 (0.550)	Replace
		A2	Torque converter inlet port relief valve spring	Free length	89.9 (3.54)	86.5 (3.41)	
B	Oil seal (inside diameter)				—	59 (2.32)	
C	Pump boss	C1	Outside diameter of oil seal contact surface		60 (2.364)	59.85 (2.358)	
		C2	Width of seal ring groove		25 (0.0985)	2.7 (0.106)	
D	Seal ring	D1	Clearance at end gap when mounted		0.05 – 0.25 (0.002 – 0.09)	0 (0)	
		D2	Ring width		2.33 – 2.40 (0.09 – 0.095)	2.28 (0.09)	
E	Seal ring	E1	Clearance at end gap when mounted		0.05 – 0.25 (0.002 – 0.01)	0 (0)	
		E2	Ring width		2.29 – 2.36 (0.09 – 0.93)	2.1 (0.08)	
F	Turbine shaft (seal ring groove width)				2.5 (0.0985)	2.7 (0.106)	
G	Torque converter case (inside diameter of seal ring sliding portion)				48 (1.891)	48.13 (1.896)	
H	Pump case (seal ring contact surface)				58 (2.285)	58.13 (2.290)	
I	Clearance between gear and pump case				0.06 – 0.10 (0.002 – 0.004)	0.12 (0.005)	
J	Pilot boss (outside diameter of tip)				15 (0.591)	14.85 (0.585)	
K	Roller (stator cam)				8.2 (0.323)	8.05 (0.317)	
L	Oil pump drive gear (inside diameter of bushing)				48 (1.891)	48.10 (1.895)	
M	Stator shaft	M1	Outside diameter of bushing contact surface		48 (1.891)	47.85 (1.885)	
		M2	Outside diameter of bearing contact surface		40 (1.576)	39.87 (1.571)	
N	Hub (outside diameter of roller contact portion)				56 (2.206)	55.91 (2.203)	
O	Thrust washer				2 (0.079)	1.87 (0.074)	
P	Thrust washer				1 (0.04)	0.90 (0.036)	
					—	Check the following visually	
Q	Bearing				—	Wear, problems in rolling	
R	Pump				—	Cracks, damage	
S	Turbine				—	Cracks, damage	
T	Stator				—	Cracks, damage	
U	Drive cover				—	Cracks, damage	

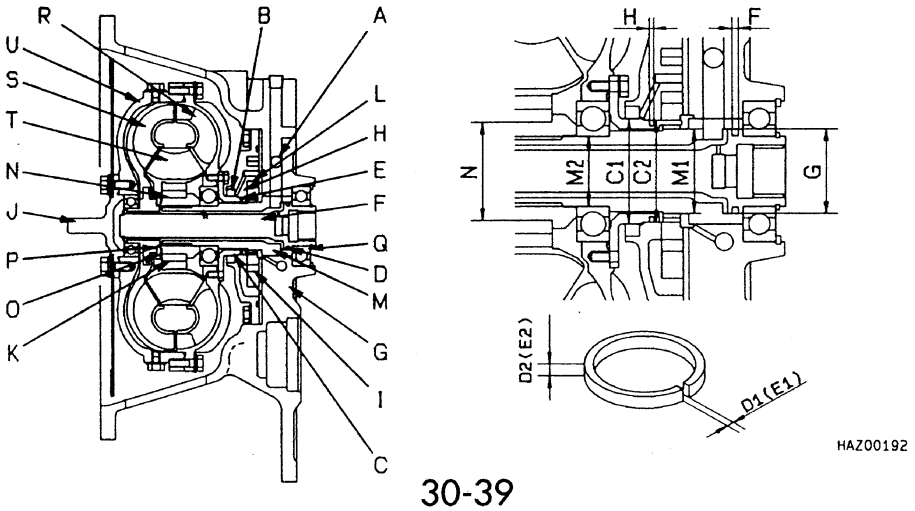

https://truckmanualshub.com/

The symbol in ( ) is the symbol appearing in the INSPECTION table.

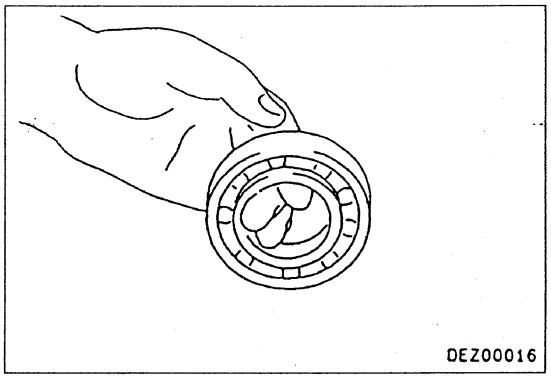

Bearing (Q)

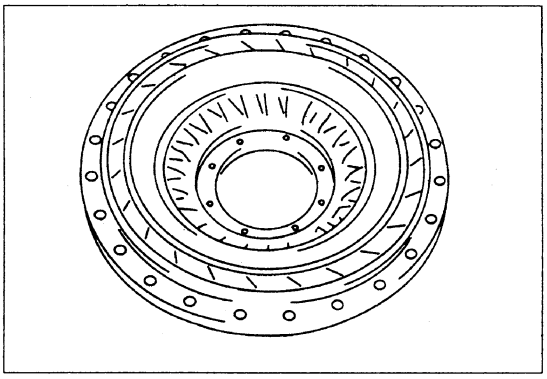
Pump (R)

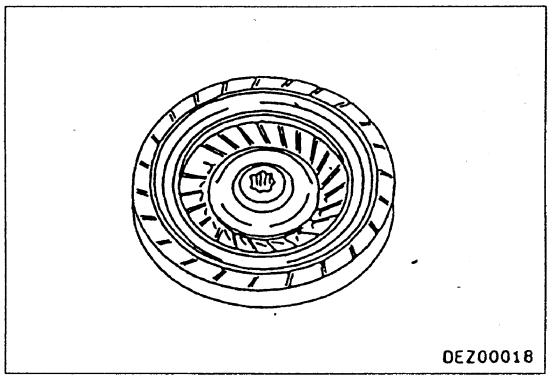

Turbine (S)

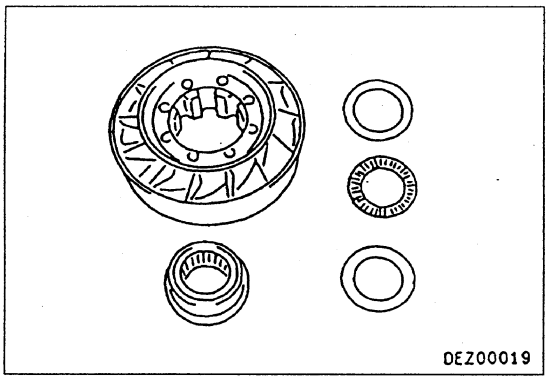

Stater (T)

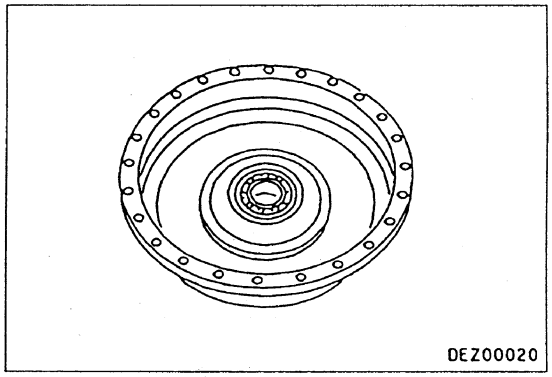

Drive cover (U)

https://truckmanualshub.com/

ASSEMBLY

★ Replace all O-rings, oil seals, seal rings, and packings if they are damaged or if the inspection shows that they are not within the service limit.

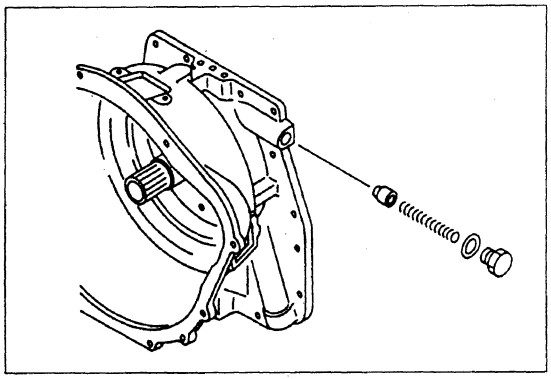

1. Relief valve
Install the relief valve to the torque converter case.

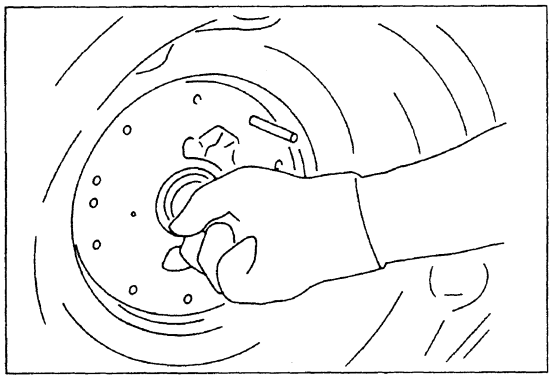

2. Back plate
Use a guide bar to set in position, then install the packing, align the back plate with the pilot in the torque converter case, and install.

3. Oil pump

1) Assembly of oil seal
Assemble the oil seal careful to the pump case. After assembling it, coat the lip of the oil seal with grease.

2) Assembly of oil pump gear
Coat the drive gear assembly and driven gear assembly thoroughly with oil, then assemble to the pump case. Assemble an O-ring to the pump case.

3) Assembly of oil pump
In the condition in Step 2), align with the pilot in the torque converter case and install. When installing, be careful not to let the O-ring or gear fall out from the oil pump case, and be careful not to damage the oil seal or drive gear assembly bushing.

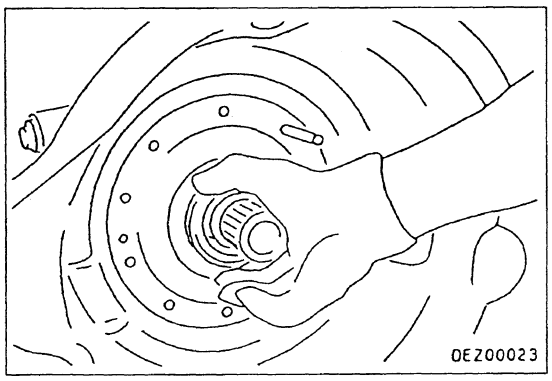

https://truckmanualshub.com/

4. Pump and pump boss

1) Install an O-ring to the pump and coat with grease.

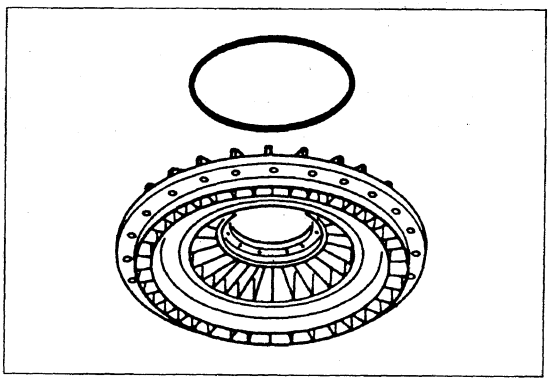

2) Secure the pump boss to the pump with the mounting set bolts.

kgm	9.8 Nm {1.0 kgfm}

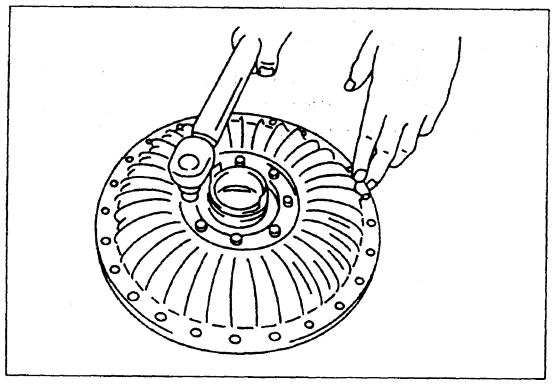

3) Insert the bearing in the pump boss.

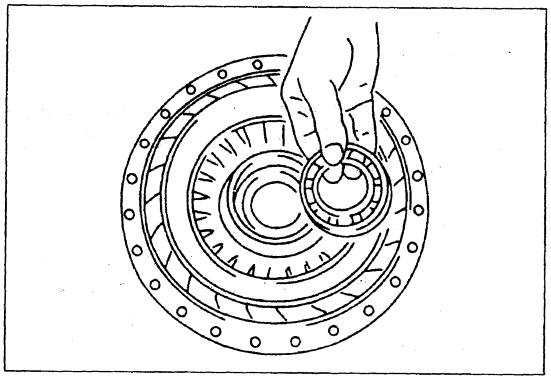

https://truckmanualshub.com/

5. Stator sub-assembly

1) Use a jig like the one shown in Fig. 1, insert the jig half-way into the stator cam, then use a thin screwdriver to push the tip of the spring and assemble each roller carefully.

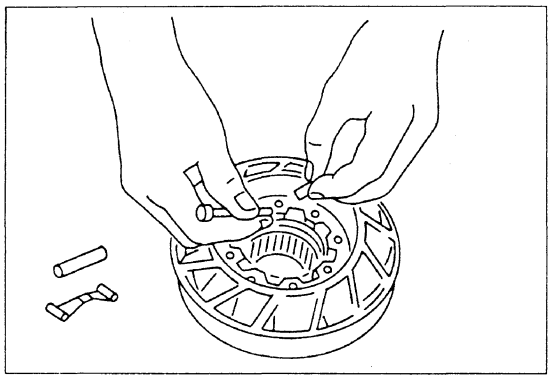

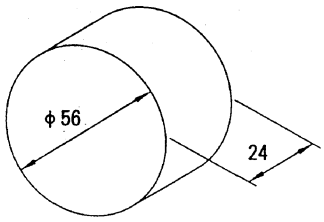

Fig. 1

2) Replace the jig with the stator hub, taking care not to let the rollers come out.

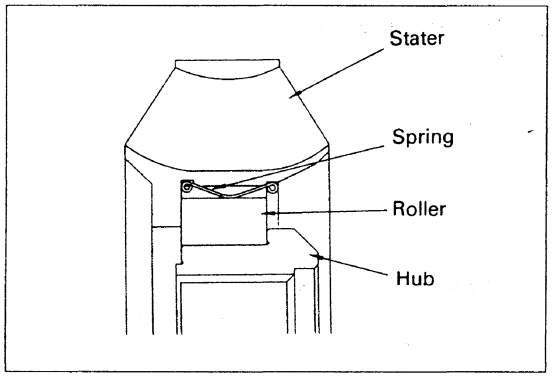

3) Check the rolling condition of the stator.
Hold the hub with your hand, then rotate the stator cam by hand and check in the rotation and lock directions.

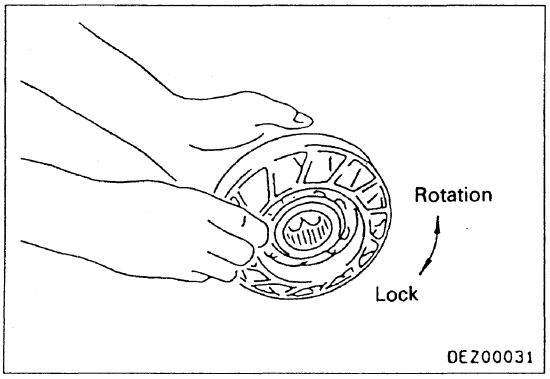

4) Set the stator assembly on top of the pump sub-assembly.

https://truckmanualshub.com/

6. Thrust washer, thrust bearing

Set the thrust washer, thrust bearing, and thrust washer in turn on top of the stator hub.

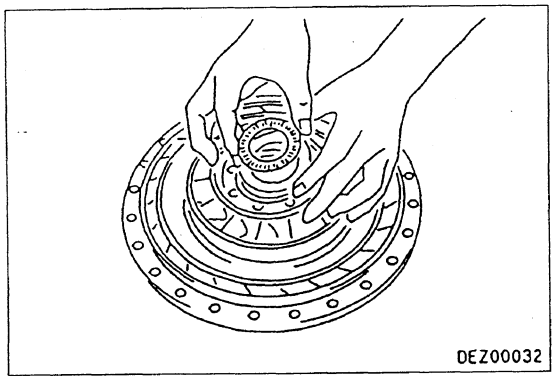

7. Turbine assembly

Align the turbine assembly with the center of the thrust bearing, and assemble.

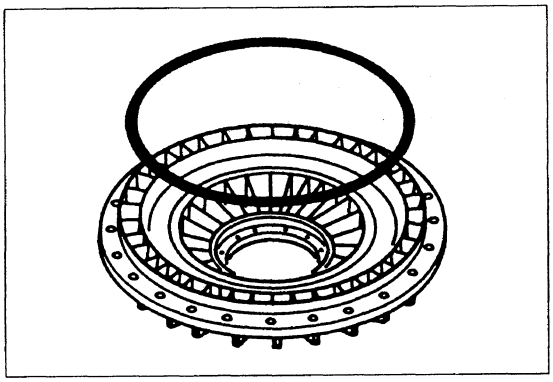

8. Drive cover assembly

1) Coat the O-ring with grease and fit it in the pump groove.

2) Tap the drive cover assembly with a plastic hammer and assemble it to the pump.

3) Tighten the drive cover assembly and pump with the set bolts.

kgm	21.6 Nm {2.2 kgfm}

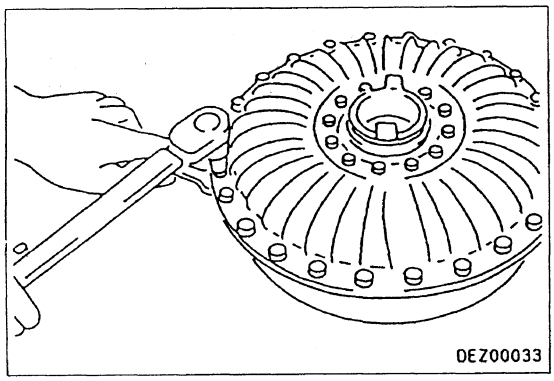

4) Knock the bearing into the drive cover assembly and check the dimension as shown in Fig. 2.
Dimension: Min. 6.5 mm (0.26 in)

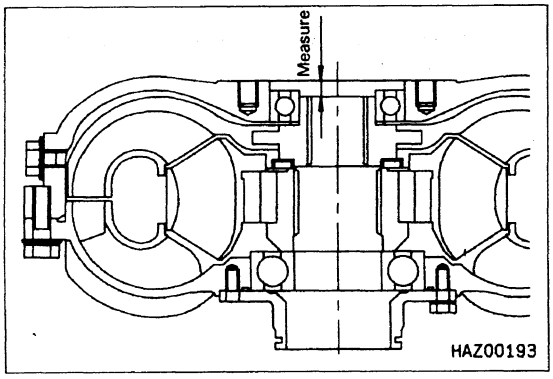

Fig. 2.

https://truckmanualshub.com/

9. Torque converter assembly

1) Install the seal ring in the pump boss groove, then coat with grease.

2) Insert the torque converter assembly to the stator shaft, taking care not to damage the oil seal.

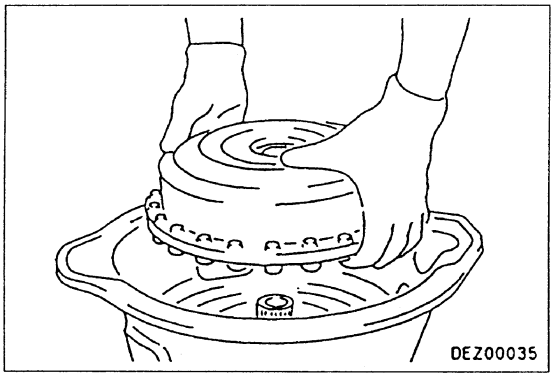

3) Rotate the torque converter assembly carefully and assemble so that the tooth of the pump boss fits in the groove of the drive gear assembly.

10. Turbine shaft

1) Assemble the bearing and snap ring to the turbine shaft.

2) Assemble the seal ring in the turbine shaft groove, then coat with grease.

3) Assemble the turbine shaft to the torque converter case, taking care not to damage the seal ring.

4) Install the snap ring to the torque converter case.

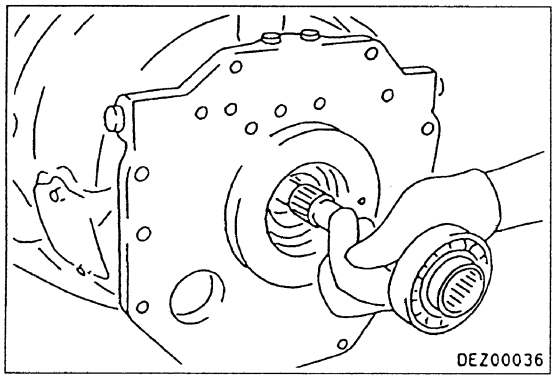

5) Measure the distance between the turbine assembly and the turbine shaft snap ring groove as shown in Fig. 3, and select a collar to make the clearance within 0.5 mm (0.02 in).
There are three types of collar:
2.5 mm (0.0985 in)
3.0 mm (0.12 in)
3.5 mm (0.14 in)

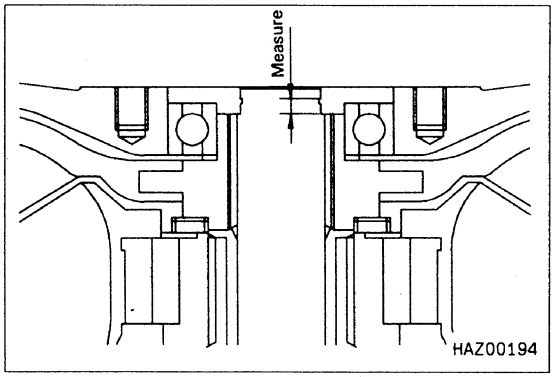

Fig. 3

https://truckmanualshub.com/

6) Assemble the snap ring.

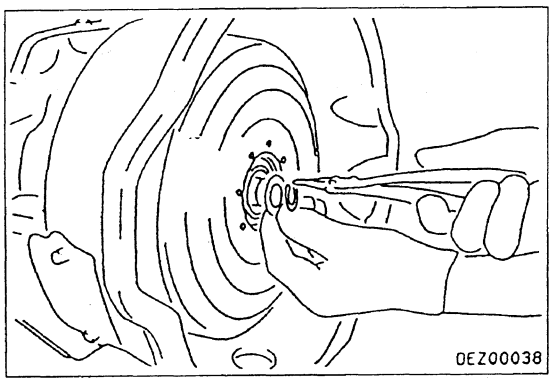

11. Flexible plate assembly, pilot boss

1) Coat the O-ring with grease, fit it in the pilot boss groove, then install it to the drive cover assembly.

2) Fix the flexible plate assembly contact plate and pilot boss at the outside circumference of the flexible plate assembly with set bolts.

kgm	30 Nm {3.1 kgfm}

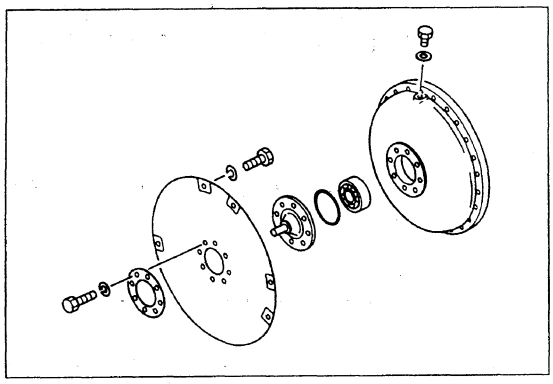

https://truckmanualshub.com/

ASSEMBLY DRAWING

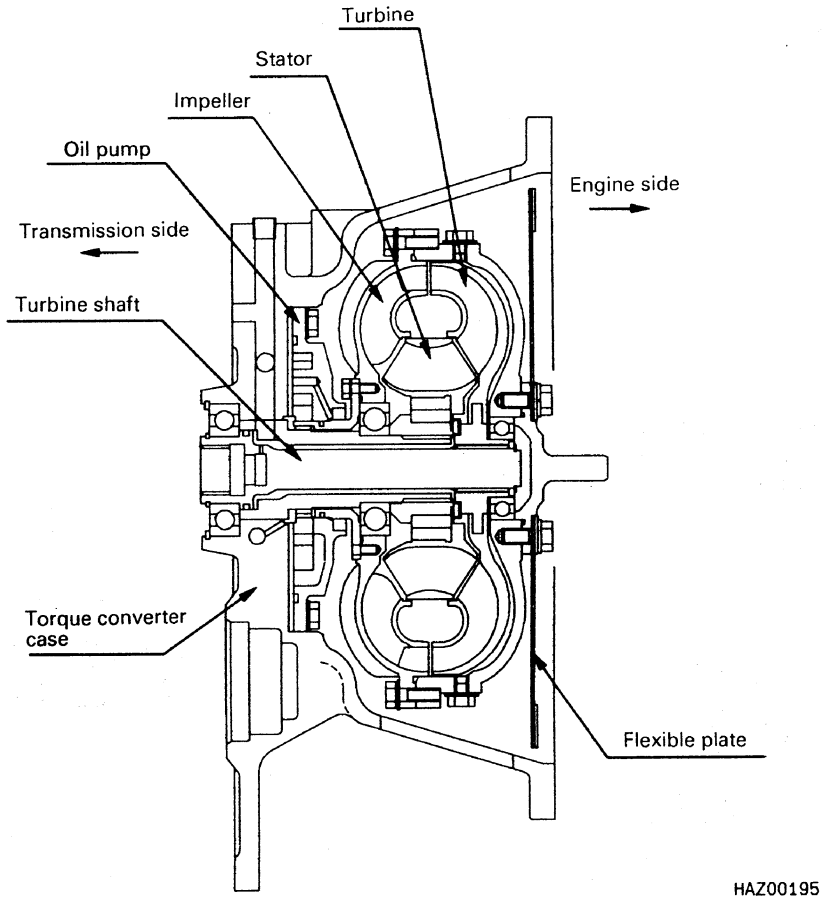

Cross-sectional drawing of torque converter

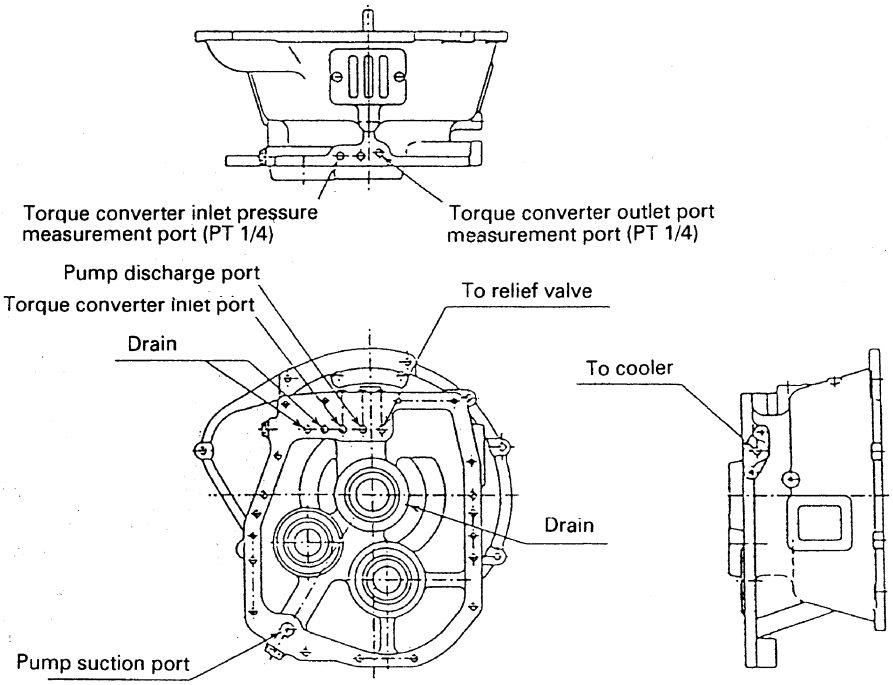

Oil pressure torque converter assembly port

https://truckmanualshub.com/

TORQFLOW TRANSMISSION

DISASSEMBLY

1. **Draining oil**
   Remove drain plug and drain oil from case.

2. **Transmission valve, differential**
   Remove transmission valve mounting bolts (1) and differential cap bolts (2), and separate into transmission valve and differential.

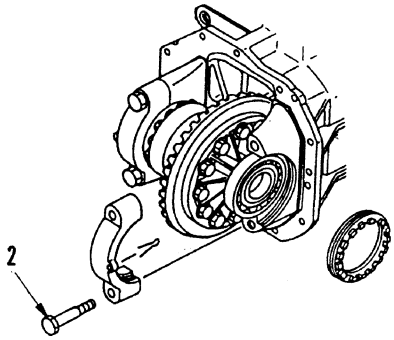

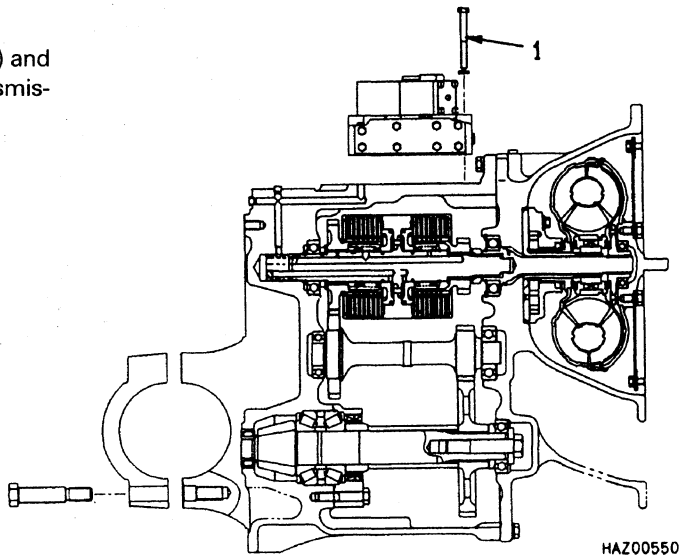

3. **Torque converter**
   1) Use wooden blocks as support and set facing in direction shown in diagram on right.

   2) Remove bolts (1) connecting torque converter and transmission case, and separate torque converter.

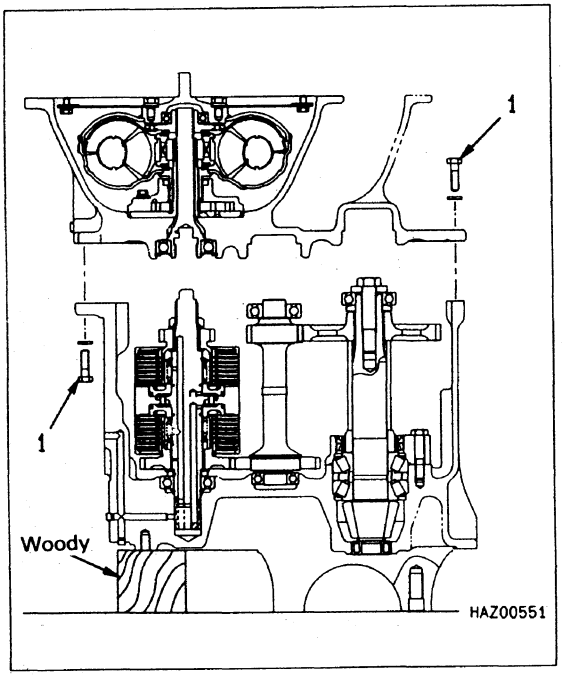

https://truckmanualshub.com/

4. Output shaft sub-assembly

1) Remove output shaft bearing holder bolt (1).

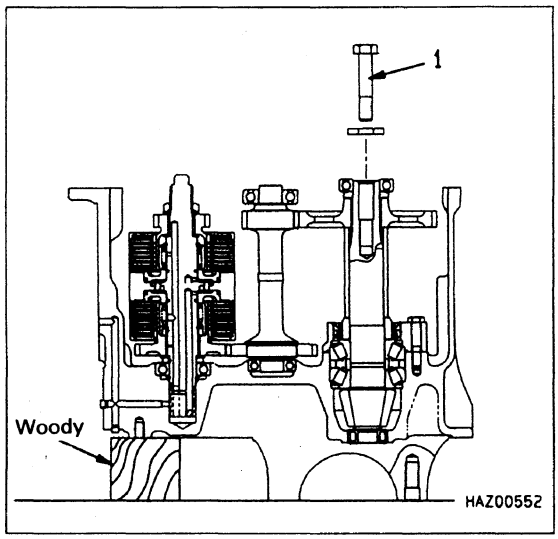

2) Using puller, remove output shaft bearing (2).

3) Remove gear (3) and spacer (4).

4) Remove cage lock bolt (5), then pull out cage (6) and output shaft sub-assembly.

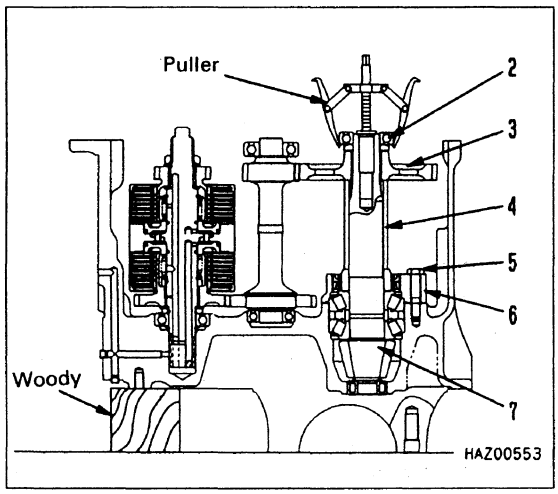

5. Input shaft sub-assembly

1) Pull input shaft sub-assembly (with clutch pack assembly) out from case.

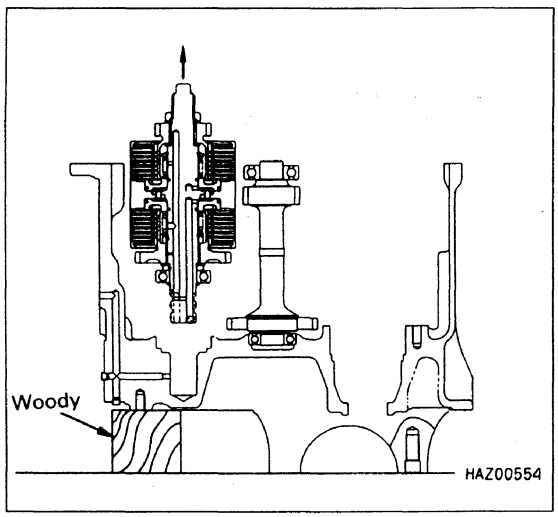

https://truckmanualshub.com/

6. Intermediate shaft sub-assembly

1) Using puller, remove intermediate shaft bearing (1).

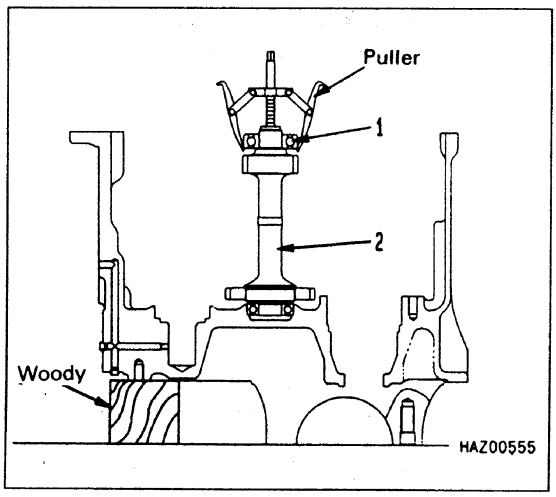

7. Strainer

1) Remove bolts (1), then remove plate (2).

2) Remove strainer (3).

8. Oil level plug

Remove oil level plug (4).

9. Cap, blind plug

Remove cap (5) and blind plug (6).

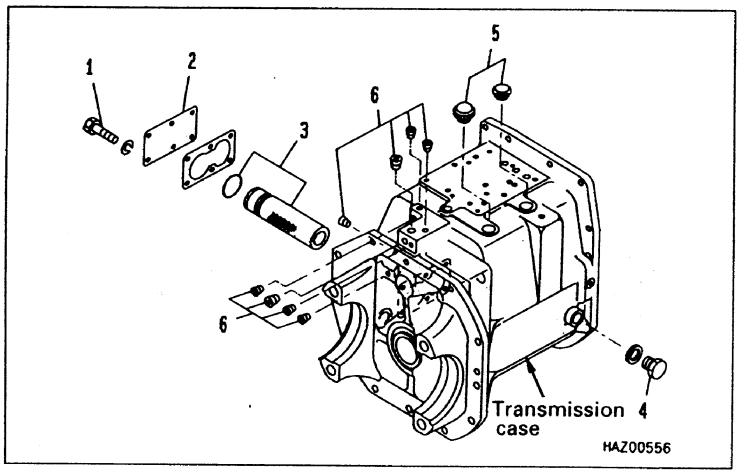

https://truckmanualshub.com/

10. Disassembly of clutch pack assembly

The numbers show the order for disassembly.

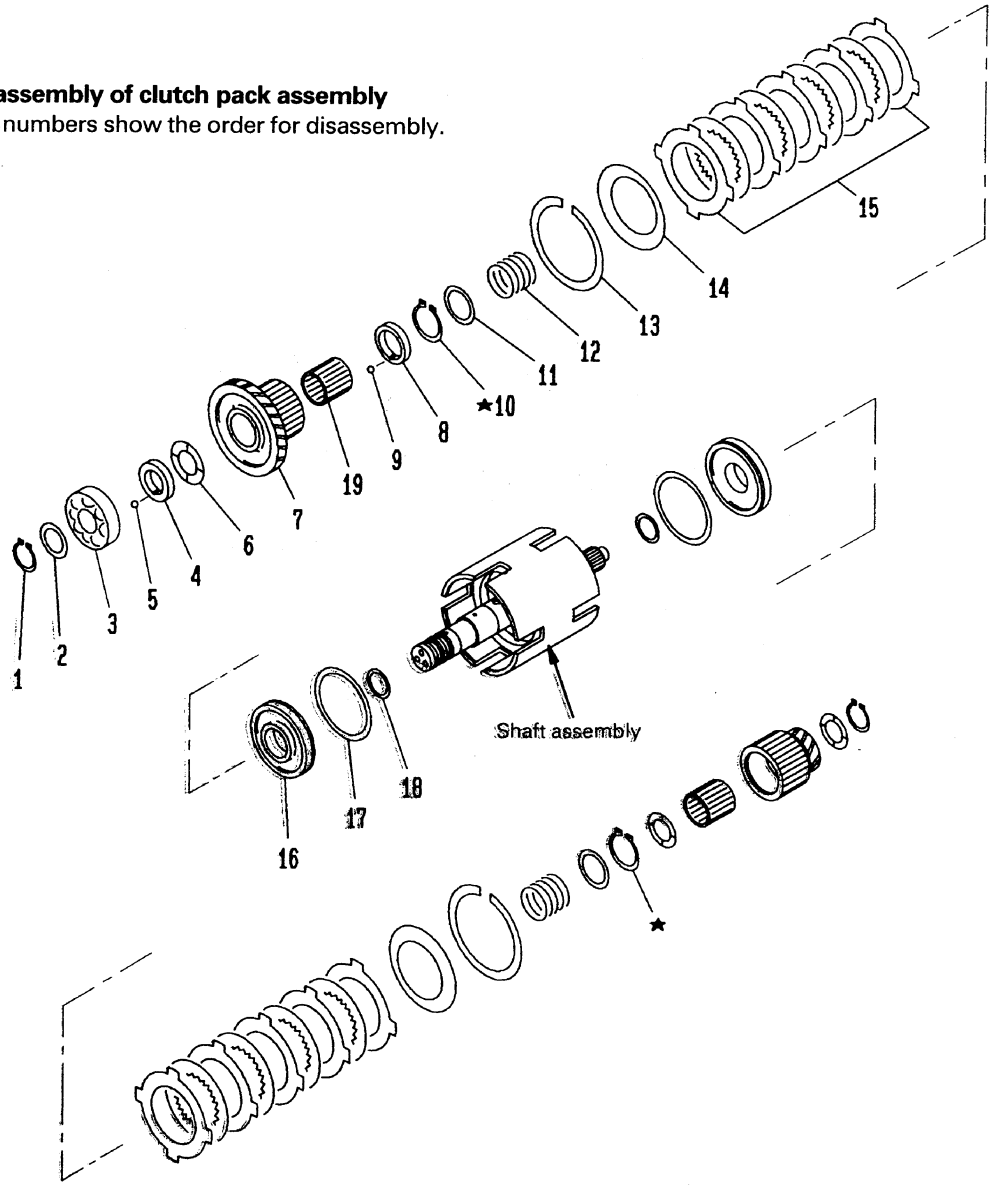

★ When removing snap ring (10), there is danger because it is under tension from the spring.
Always use a special tool to remove it.

Special tool	3EB-97-99000

CAUTION

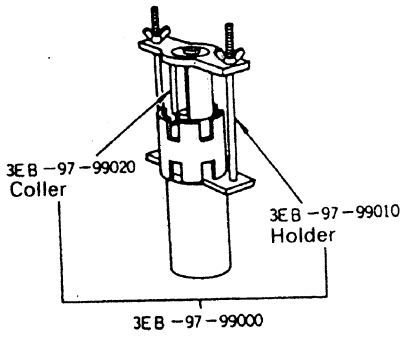

When removing snap ring (10), always use above special tool.

https://truckmanualshub.com/

TESTING

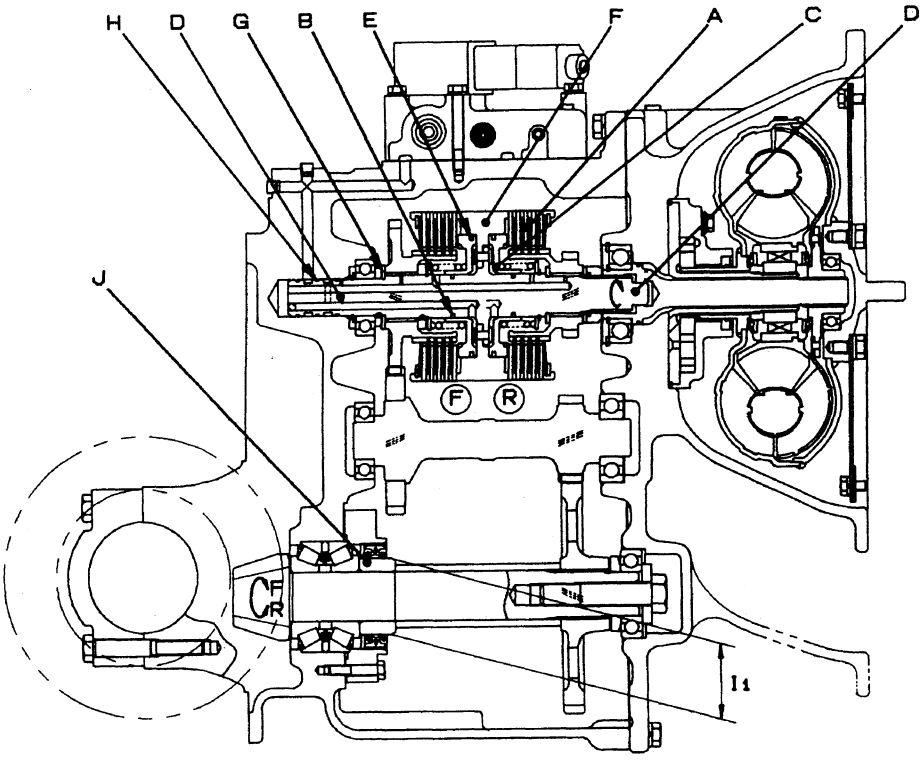

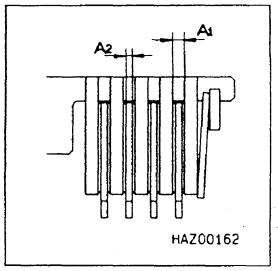

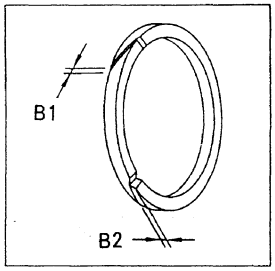

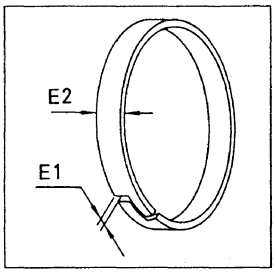

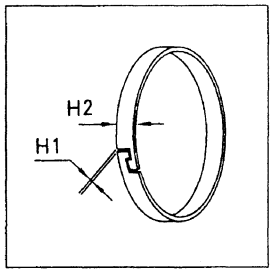

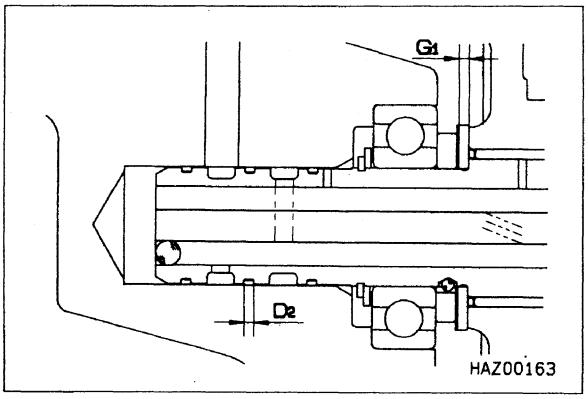

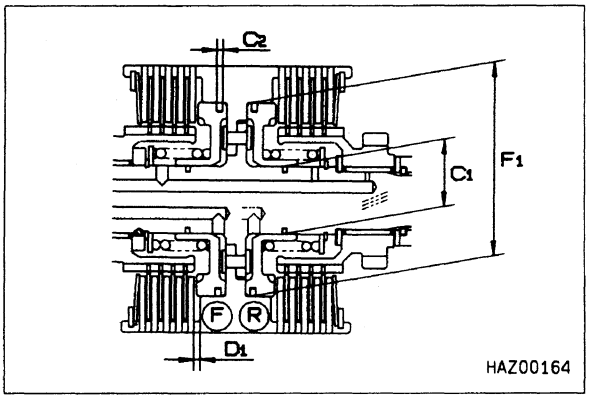

https://truckmanualshub.com/

Unit: mm (in)

Symbol	Check item			Criteria: Standard size	Criteria: Repair limit	Remedy
A	Plate	A1	Thickness of drive plate	3.13 – 3.27 (0.123 – 0.129)	2.9 (0.114)	Replace
		A2	Thickness of driven plate	2.90 – 3.05 (0.114 – 0.120)	2.6 (0.102) (Oil groove depth: Min. 0.2 (0.008))	
B	Seal ring	B1	Clearance at end gap when inserting piston	0.36 – 0.56 (0.014 – 0.022)	—	Replace each time disassembly is carried out
		B2	Depth of oil groove in side face	0.15 – 0.35 (0.006 – 0.014)	There must be oil groove	
		(D1)	Insertion groove width	2.60 – 2.65 (0.102 – 0.104)	2.8 (0.11)	
C	Piston	C1	Inside diameter of seal ring contact surface	35.025 – 35.050 (1.380 – 1.381)	35.2 (1.387)	Replace
		C2	Seal ring insertion groove width	3.1 – 3.2 (0.122 – 0.126)	3.4 (0.134)	
D	Drive shaft	D1	Seal ring insertion groove width	2.60 – 2.65 (0.102 – 0.104)	2.8 (0.11)	
		D2	Seal ring insertion groove width	2.57 – 2.62 (0.101 – 0.103)	2.8 (0.11)	
E	Seal ring	E1	Clearance at end gap when inserting clutch case	0.2 – 0.4 (0.008 – 0.016)	1.0 (0.04)	
		E2	Width	2.97 – 3.01 (0.117 – 0.119)	2.77 (0.109)	
		(C2)	Insertion groove width	3.1 — 3.2 (0.122 – 0.126)	3.4 (0.134)	
F	Clutch case	F1	Inside diameter of seal ring contact surface	100 – 100.054 (3.94 – 3.942)	100.3 (3.952)	
G	Thrust washer	G1	Thickness	2.9 – 3.1 (0.114 – 0.127)	2.5 (0.0985)	
H	Seal ring	H1	Clearance at end gap when inserting cap	0.1 – 0.3 (0.004 – 0.012)	0.65 (0.025)	
		H2	Width	2.47 – 2.51 (0.097 – 0.099)	2.25 (0.089)	
		(D2)	Insertion groove width	2.57 – 2.62 (0.101 – 0.103)	2.8 (0.11)	
I	Retainer	I1	Outside diameter of oil seal contact surface	61.926 – 62.000 (2.440 – 2.443)	61.83 (2.436)	
—	Gears	—	Backlash	0.08 – 0.28 (0.003 – 0.011)	—	
		—	Thrust clearance	0.3 – 0.7 (0.012 – 0.027)	—	
—	Gasket, O-ring, seals			—	—	Replace with new parts during disassembly and assembly

ASSEMBLING

1. Details of clutch pack ass'y

★ The number indecates the sequence of assembling.

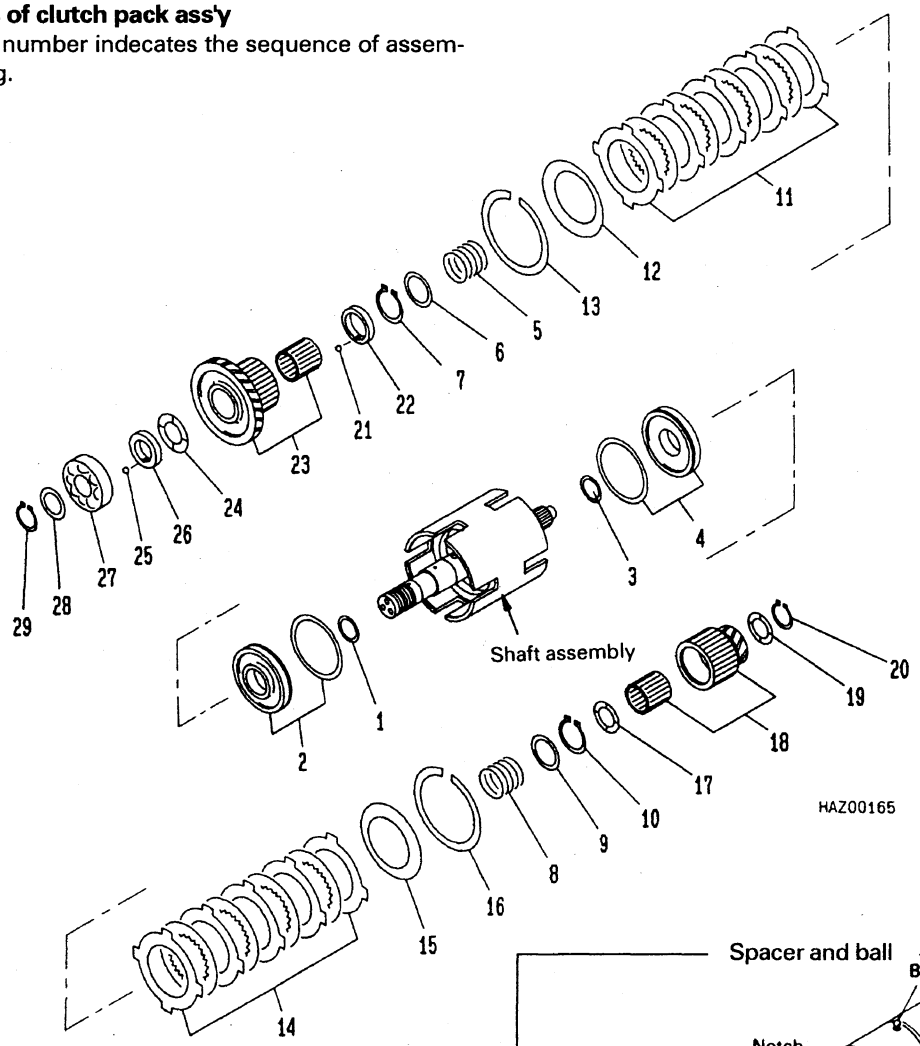

Spacer and ball

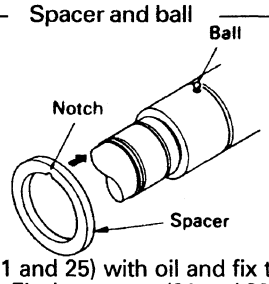

Coat the balls (21 and 25) with oil and fix them on the holes of the shaft. Fix the spacers (21 and 26) to the shaft after matching the ball to the notch of the spacer.

Snap ring (5 and 8)

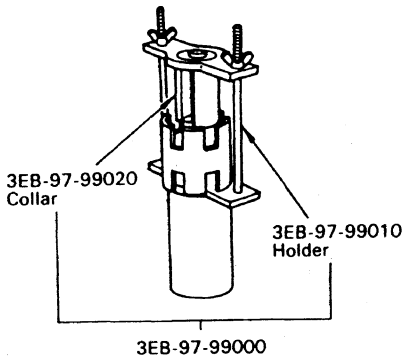

The special tool illustrated above should be used for fixing the snap rings (7 and 10) for the springs (5 and 8).

Clutch piston (2 and 4)

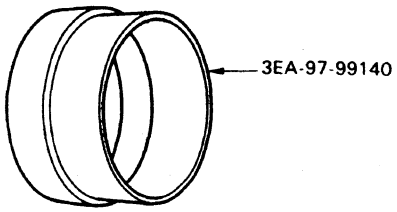

Insert the clutch pistons (2 and 4) into the clutch pack by use of the special tool illustrated above.

https://truckmanualshub.com/

ASSEMBLY

1. Cleaning transmission case, blowing with air

1) Remove cap when cleaning transmission case. [This is because thread tightener is used on the cap mounting bolt.]

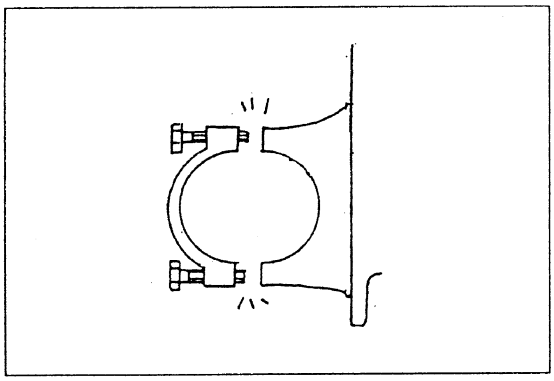

2) Blow machined hole in transmission case with air.

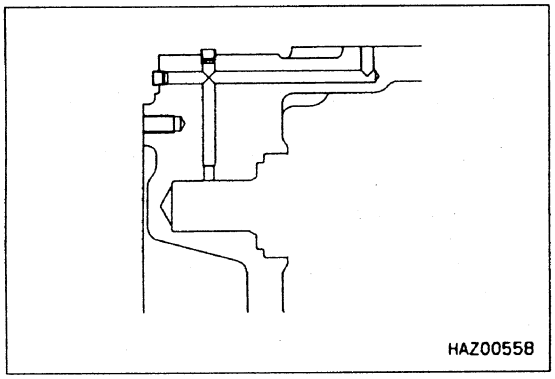

2. Installing blind plug in transmission case

Install blind plug (2) and cap (3) to transmission case (1).

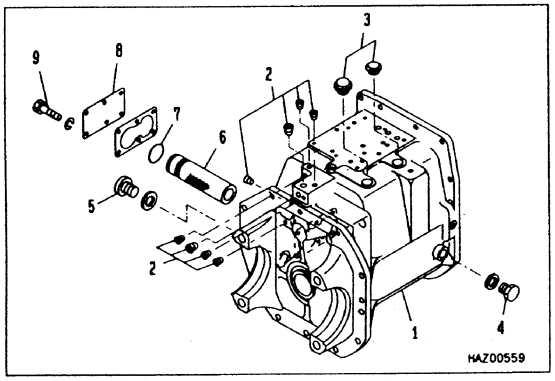

3. Install oil level plug (4) and drain plug (5).

Tightening torque for drain plug

58.8 – 78.4 Nm {6.0 – 8.0 kgfm}

4. Installing strainer

Fit O-ring (7) to filter (6), insert inside case, then install plate (8) with bolts (9).

https://truckmanualshub.com/

5. Output shaft sub-assembly

1) Insert thickness of shim (2) equivalent to difference in mounting dimensions to pinion shaft (1), then insert bearing (3).

★ Standard shim thickness: 1.2 mm

2) For 3.0-ton truck, insert bearing (4) at tip of shaft (1).

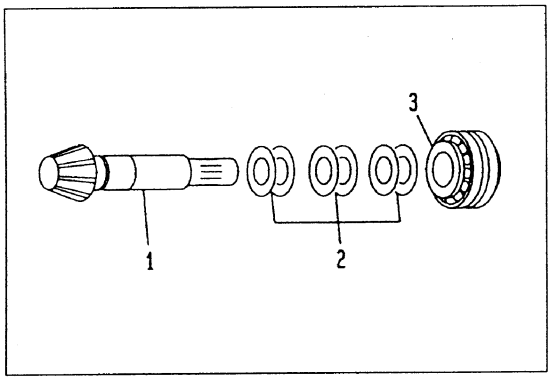

6. Installation of output shaft sub-assembly

1) Fit O-ring (6), race (7), and oil seal (8) to output shaft sub-assembly (5), then insert in transmission case.

★ Coat the oil seal lip surface with G2-LI.

2) Insert O-ring (9) and cage (10), then secure with bolts (11). (See the diagram on the right for the order of tightening.)

Tightening torque for bolts

kgm	20 – 30 Nm {2 – 3 kgfm}
	Loctite #271 (hole thread)

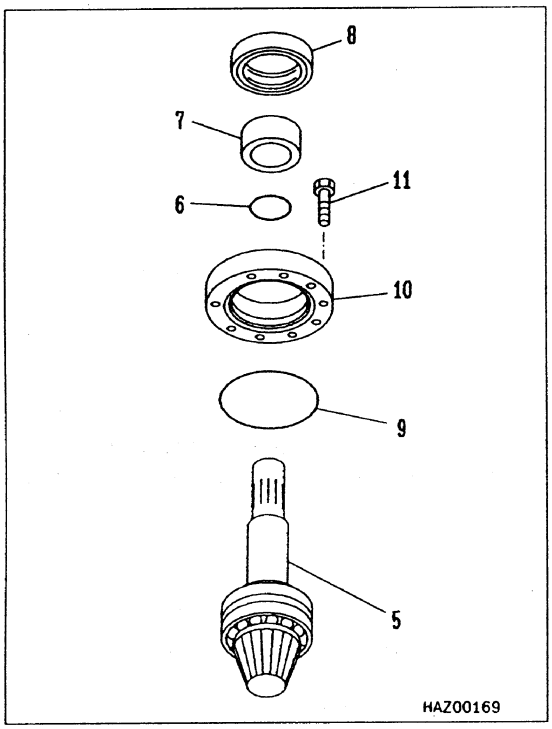

3) Insert spacer (12) and gear (13).

★ Note that the gear differs according to the specification.

Next, insert collar (14), bearing (15), and washer (16), and tighten with bolts (17).

Tightening torque for bolts

kgm	245 – 314 Nm {25 – 32 kgfm}
	Loctite #271 (hole thread)

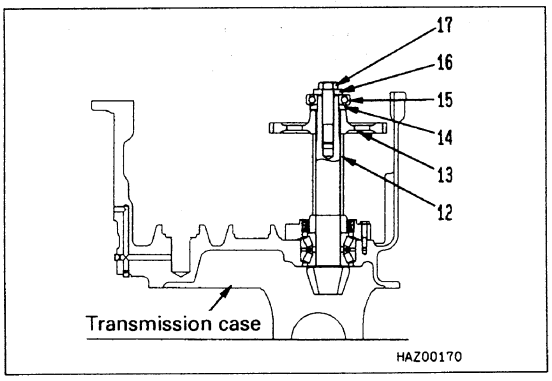

https://truckmanualshub.com/

7. Intermediate shaft sub-assembly

1) Assemble gear (2) to shaft (1).

★ Note that the gear differs according to the specification.

2) Insert bearings (3) and (4).
Bearing (3): Front
Bearing (4): Rear

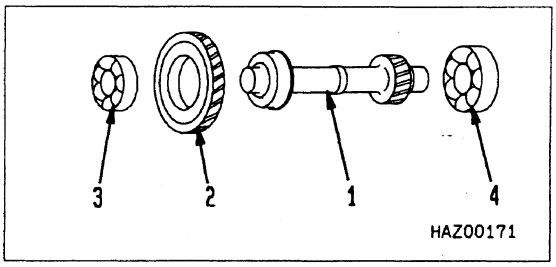

8. Installation of intermediate shaft sub-assembly

Assemble intermediate shaft sub-assembly inside transmission case.

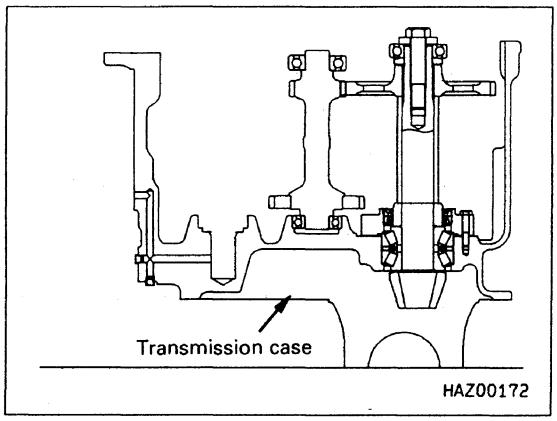

9. Input shaft sub-assembly

1) Fit seal (2) and seal (3) to shaft assembly (1), then assemble piston (4).

2) Install spring (5) and washer (6), then secure in position with snap ring (7).

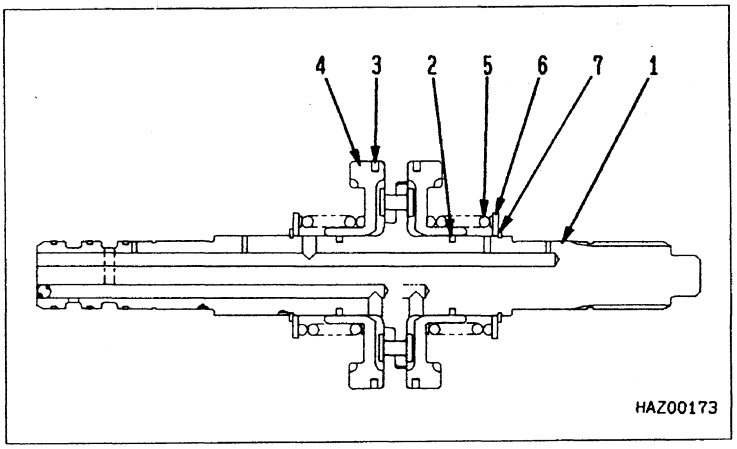

3) Assemble clutch disc (8) and plate (9), then insert plate (10), and secure with ring (11).

4) Installation of R gear
Assemble washer (12) and bearing (13) to gear (14), then insert gear (14) and washer (15), and fix with snap ring (16). Insert spacer (17).

5) Add oil to steel ball (18), fix it in the hole in the shaft, then align the notch in spacer (19) with the ball, and insert.

6) Installation of F gear
Insert bearing (21) in gear (20), assemble to the shaft, then insert washer (22). Add oil to steel ball (23), fix it in the shaft hole, then install spacer (24).
Assemble bearing (25) and spacer (26), then secure with snap ring (27).

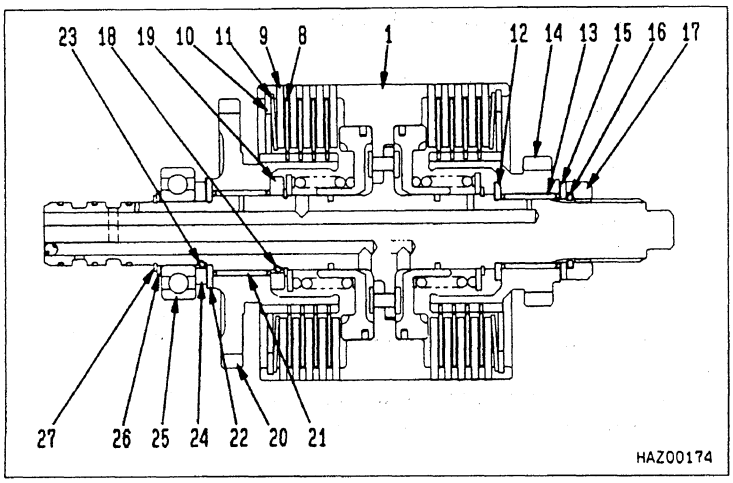

10. Installation of input shaft sub-assembly
Install the seal ring to the input shaft, then assemble inside the transmission case.

11. Installation of torque converter
Fit a gasket, then install to the transmission case with bolts (1).

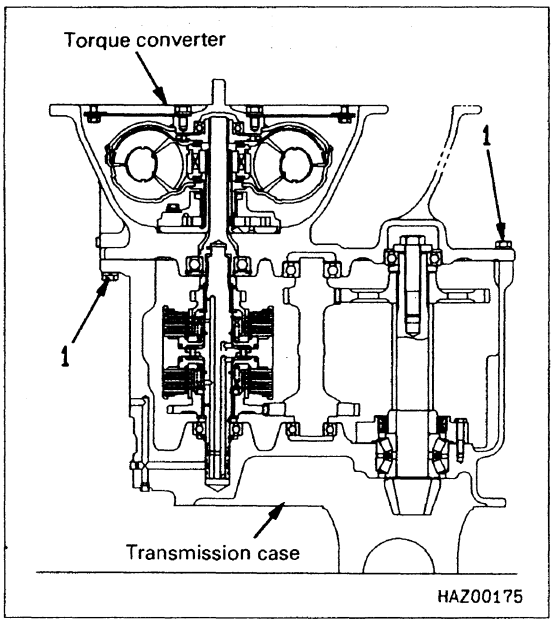

https://truckmanualshub.com/

12. Installation of transmission valve

Fit gasket and install with bolts (1).
(Two of the eight bolts are also used to tighten the inching change bracket.)

Tightening torque for bolts

kgm	27 – 34 Nm {2.8 – 3.5 kgfm}

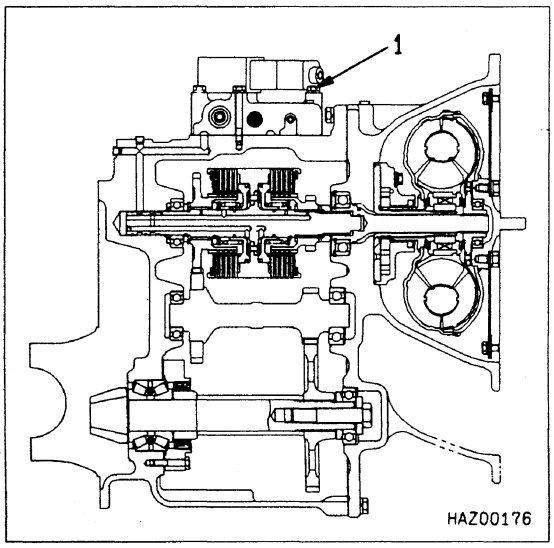

13. Installation of torque converter cooler filter

Install oil filter and piping.

14. Installation of differential

1) Insert screw (1) into differential mounting thread in transmission case, then secure with cap (2) and bolt (3).

Tightening torque for cap bolts

kgm	98 – 123 Nm {10 – 12.5 kgfm}
	Loctite #271 (hole thread)

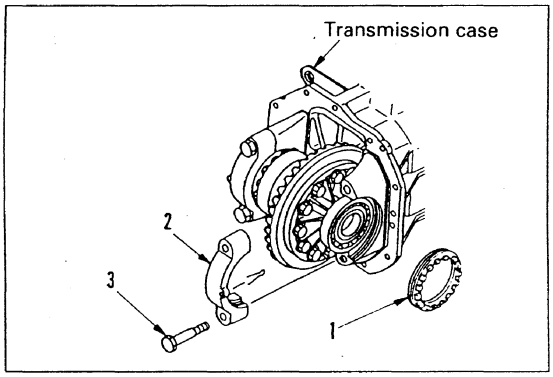

2) Preload
Tighten screw (1) so that pinion and ring gear set preload is 31 – 56 Nm (310 – 570 kgfcm) at ring gear end.

3) Backlash
Adjust so that backlash between bevel gear and pinion gear is 0.15 – 0.23 mm (check with dial gauge).

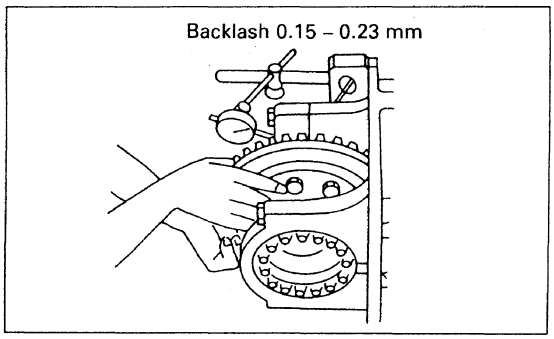

4) Tooth contact
The tooth contact (ℓ) should be 2/5 – 3/4.
- There should be no cross contact (A in diagram on right).
- There should be no contact at the toe or heel.

In particular, there should be no missing tooth contact at the toe end. (B in diagram on right)

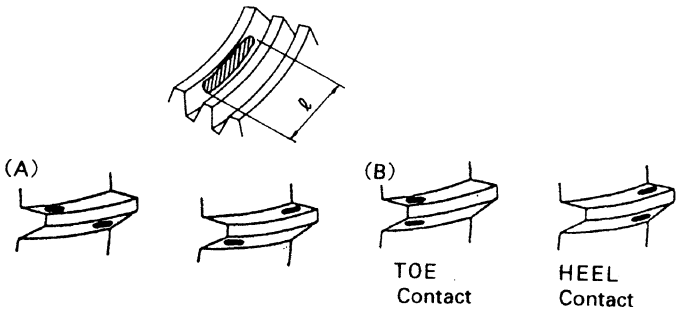

https://truckmanualshub.com/

TORQFLOW TRANSMISSION ASSEMBLY DRAWING

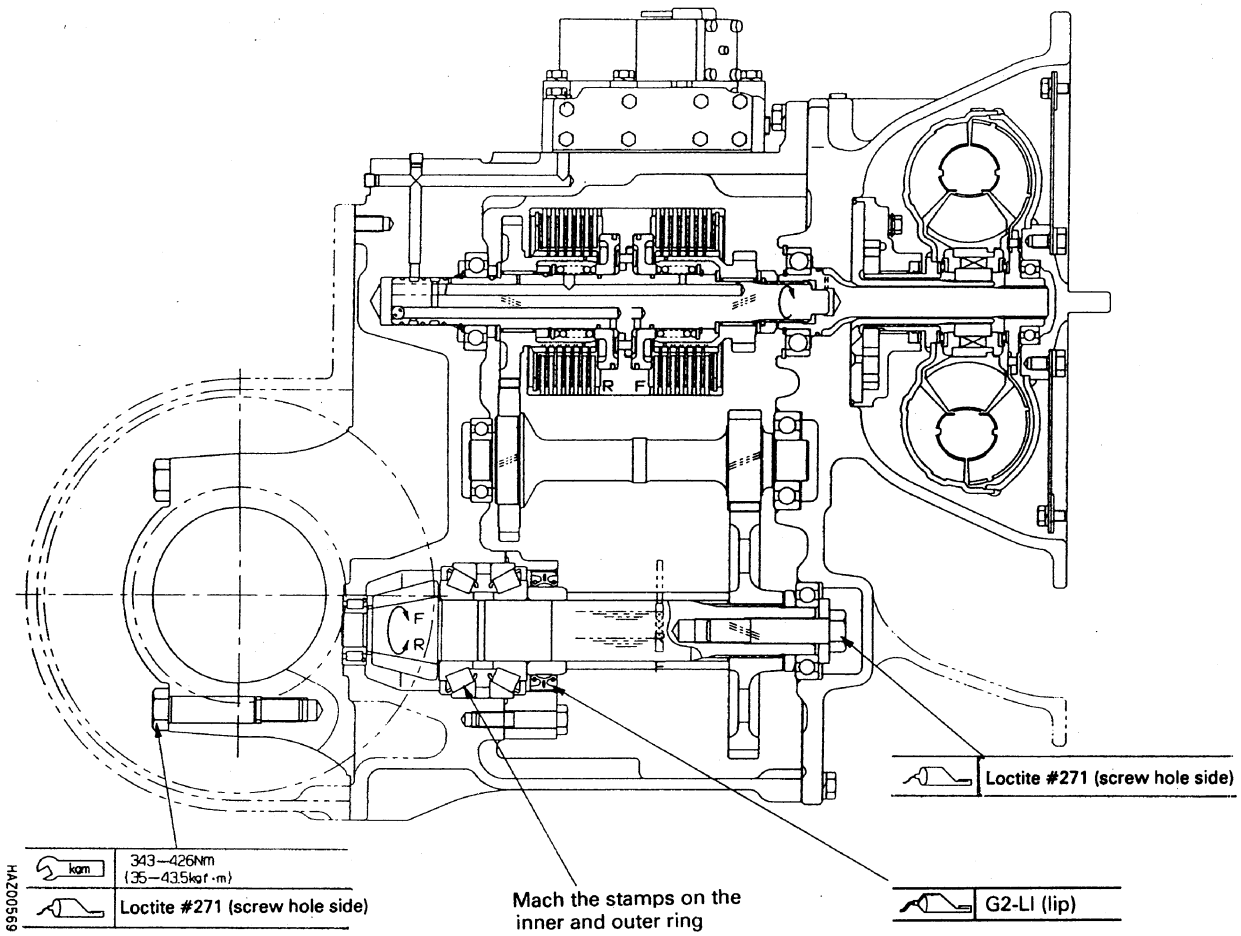

https://truckmanualshub.com/

DIFFERENTIAL

DISASSEMBLY AND ASSEMBLY

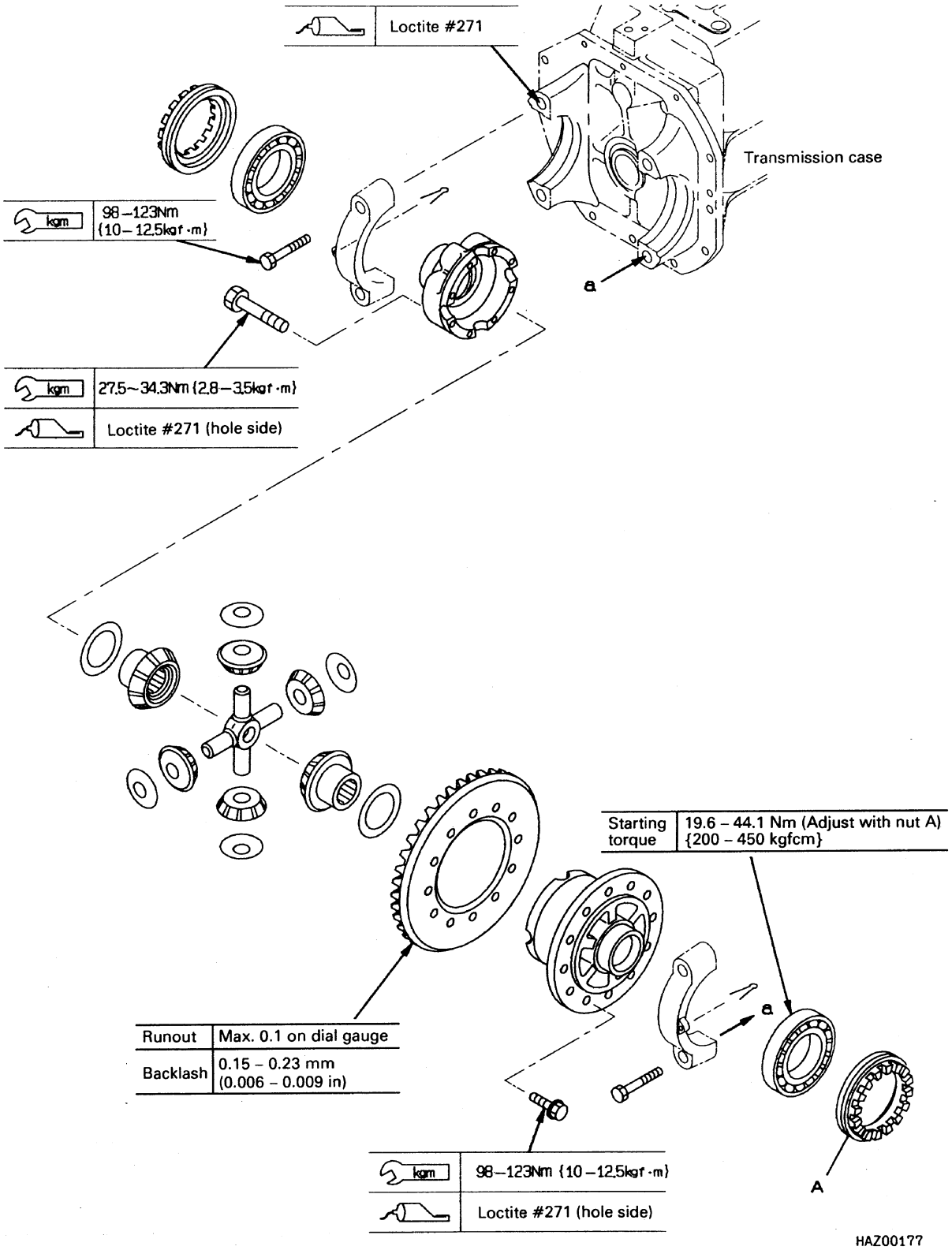

TESTING

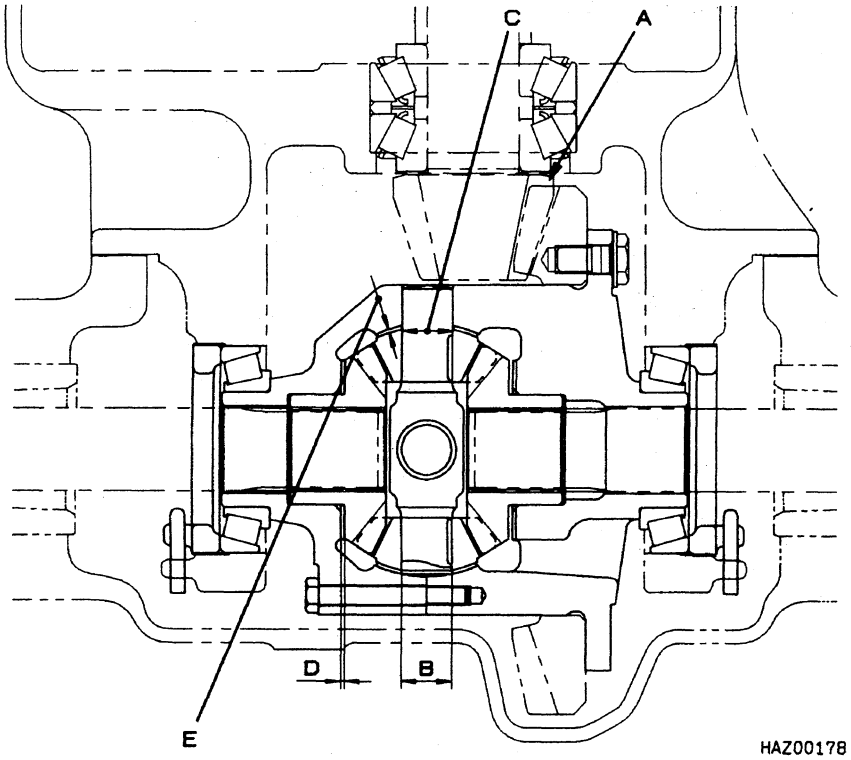

Symbol	Check item	Criteria		Remedy
		Standard size (mm)	Repair limit (mm)	
A	Differential pinion gear and differential side gear	—	If there is damage to tooth surface	Replace (replace bevel gear and pinion as a set)
B	Outside diameter of spider	21.959 – 21.980 (0.865 – 0.866 in)	21.75 (0.857 in)	Replace
C	Inside diameter of differential pinion gear	22.0 – 22.05 (0.8668–0.8678 in)	22.12 (0.871 in)	
D	Thickness of bushing	1.54 – 1.66 (0.061 – 0.065 in)	1.3 (0.05 in)	
E	Thickness of bushing	1.54 – 1.66 (0.061 – 0.065 in)	1.3 (0.05 in)	
—	(Inside diameter of brake drum)	254.0 – 254.2 (10.001–10.015 in)	312 (10.086 in)	
—	Gasket O-ring Seals	—	—	Replace with new parts during disassembly and assembly.

https://truckmanualshub.com/

ADJUSTING DIFFERENTIAL

1. Assembly of differential assembly

1) Assemble differential assembly, then install adjustment screw (1).

2) Coat hole of cap (2) with Loctite #271, then tighten temporarily with bolts (3).

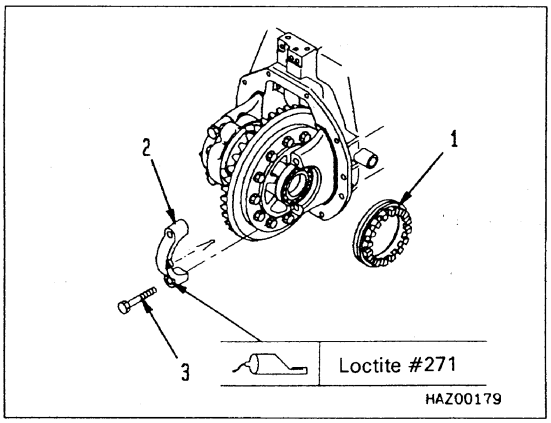

2. Adjusting backlash

★ When tightening adjustment screw (1), use special tool (A).

Special tool (A)	34B-97-99110

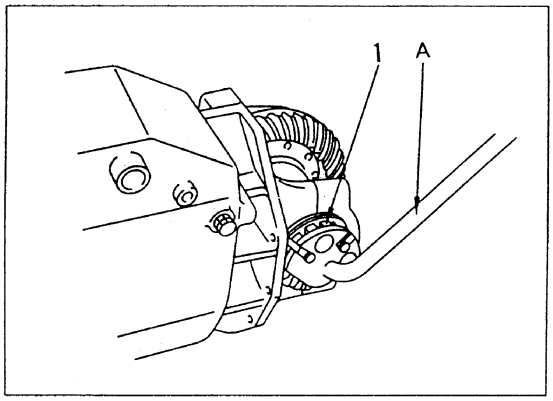

1) When adjusting, turn either left or right adjustment screw (1) back one notch, then tighten other adjustment screw one notch and read dial gauge indicator.

Backlash between ring gear and pinion gear	0.15 – 0.23 mm (0.006 – 0.009 in)

2) Rotate bevel gear and carry out adjustment procedure in Step (1) at four places.

3. Adjusting preload of side bearing

1) Tighten left and right adjustment screws (1) uniformly to adjust preload.

Preload	30.4–55.9 Nm {310–570 kgfcm}
Special tool	3EB-97-99960

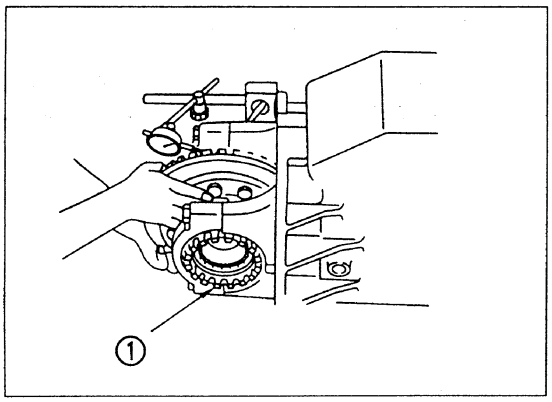

2) Check again that backlash is within specified value.

https://truckmanualshub.com/

4. Adjusting tooth contact

1) Coat tooth surface of bevel gear thinly with red lead (minium).

2) Rotate bevel gear in forward and reverse directions several times.

3) Check tooth contact pattern left on tooth surface. (See diagram below)

Correct tooth contact (no load)

Forward

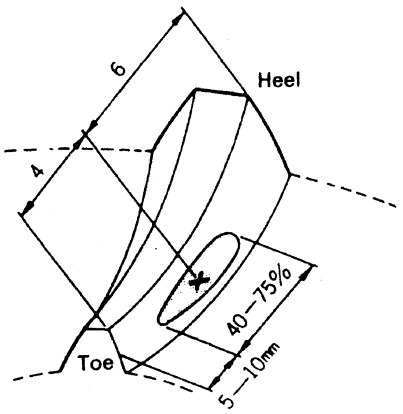

Pattern is in center of tooth surface, covers 40 – 75% of overall length of tooth, and there is weak contact at both ends of pattern.

Reverse

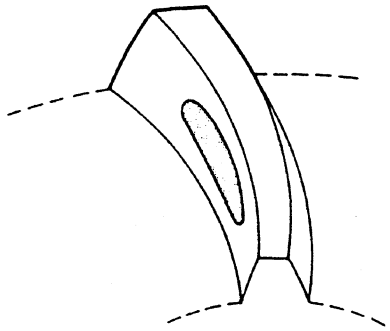

Pattern is in center of tooth surface, covers 40 – 75% of overall length of tooth, and there is weak contact at both ends of pattern.

4. If tooth contact is not correct, adjust as follows. (For details, see next page.)

- Pinion shaft shim
- Backlash of bevel gear
- Preload of bevel gear side bearing

★ The tooth contact must be adjusted correctly for both forward and reverse directions, but if it is impossible to adjust completely in both directions, adjust the forward direction correctly.

https://truckmanualshub.com/

Correcting tooth contact

Increase the shims at the pinion shaft to increase the protrusion of the pinion. (Direction **A**)
Next, move the bevel gear away from the pinion (direction **B**) and adjust the backlash.

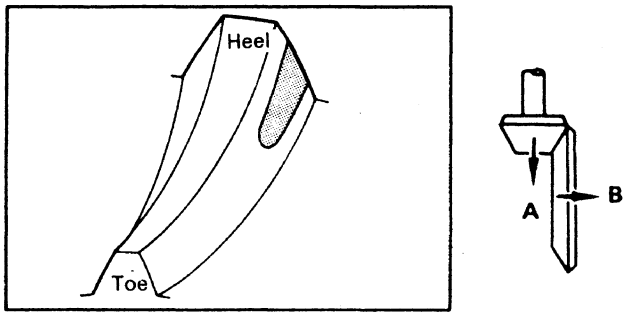

Decrease the shims at the pinion shaft to decrease the protrusion of the pinion. (Direction **A**)
Next, move the bevel gear closer to the pinion (direction **B**) and adjust the backlash.

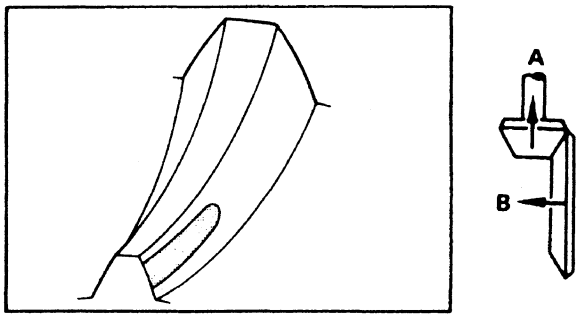

Decrease the shims at the pinion shaft to decrease the protrusion of the pinion. (Direction **A**)
Next, move the bevel gear closer to the pinion (direction **B**) and adjust the backlash.

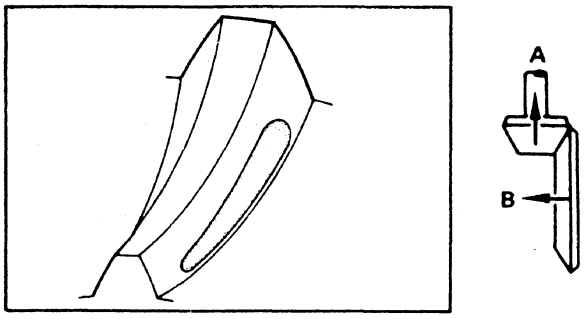

Increase the shims at the pinion shaft to increase the protrusion of the pinion. (Direction **A**)
Next, move the bevel gear away from the pinion (direction **B**) and adjust the backlash.

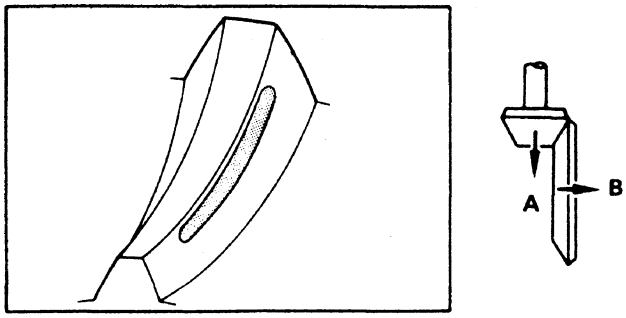

https://truckmanualshub.com/

DIFFERENTIAL ASSEMBLY DRAWING

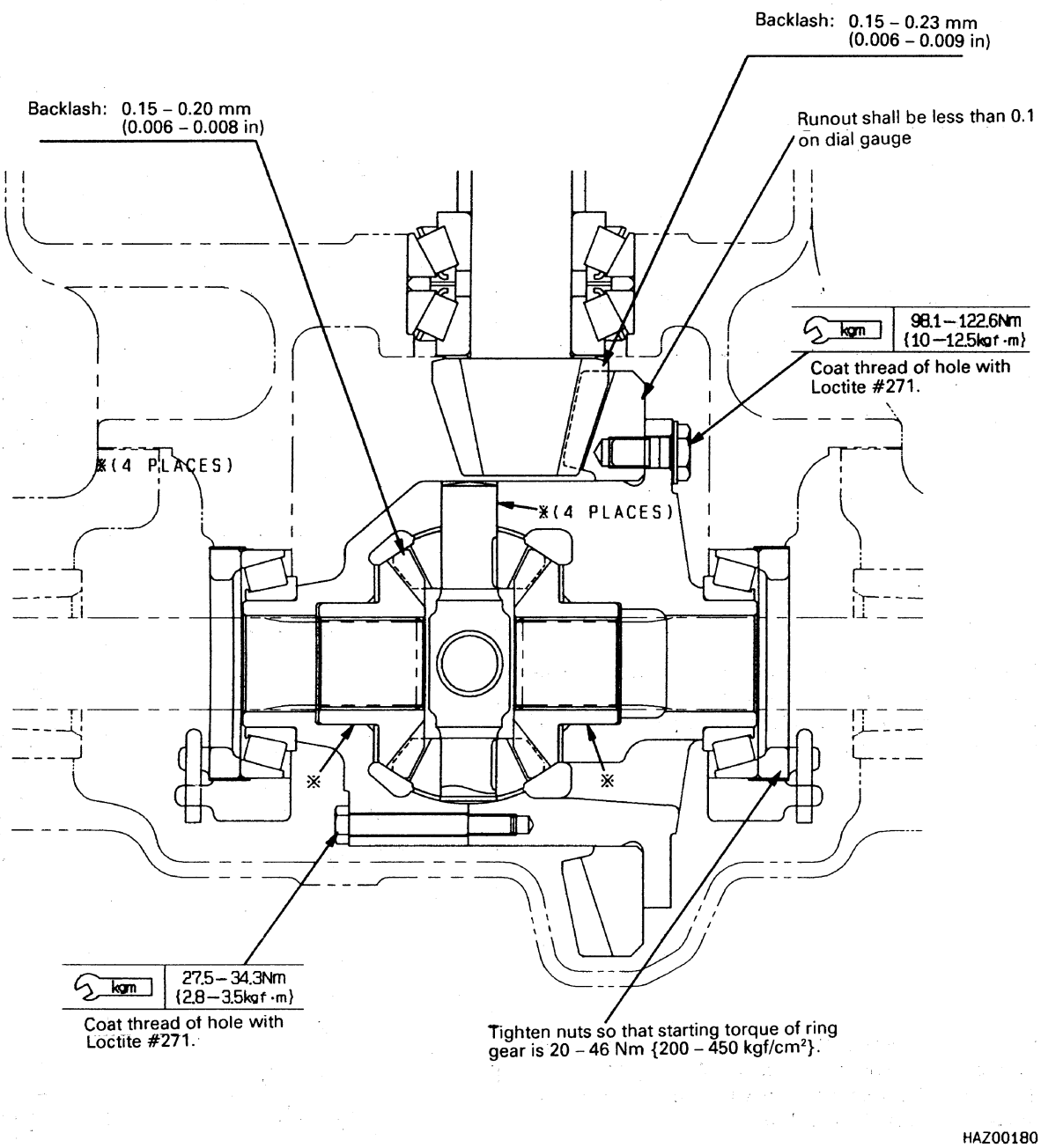

※(6 places): Coat with gear oil GO90 when assembling.

https://truckmanualshub.com/

FRONT AXLE

DISASSEMBLY AND ASSEMBLY

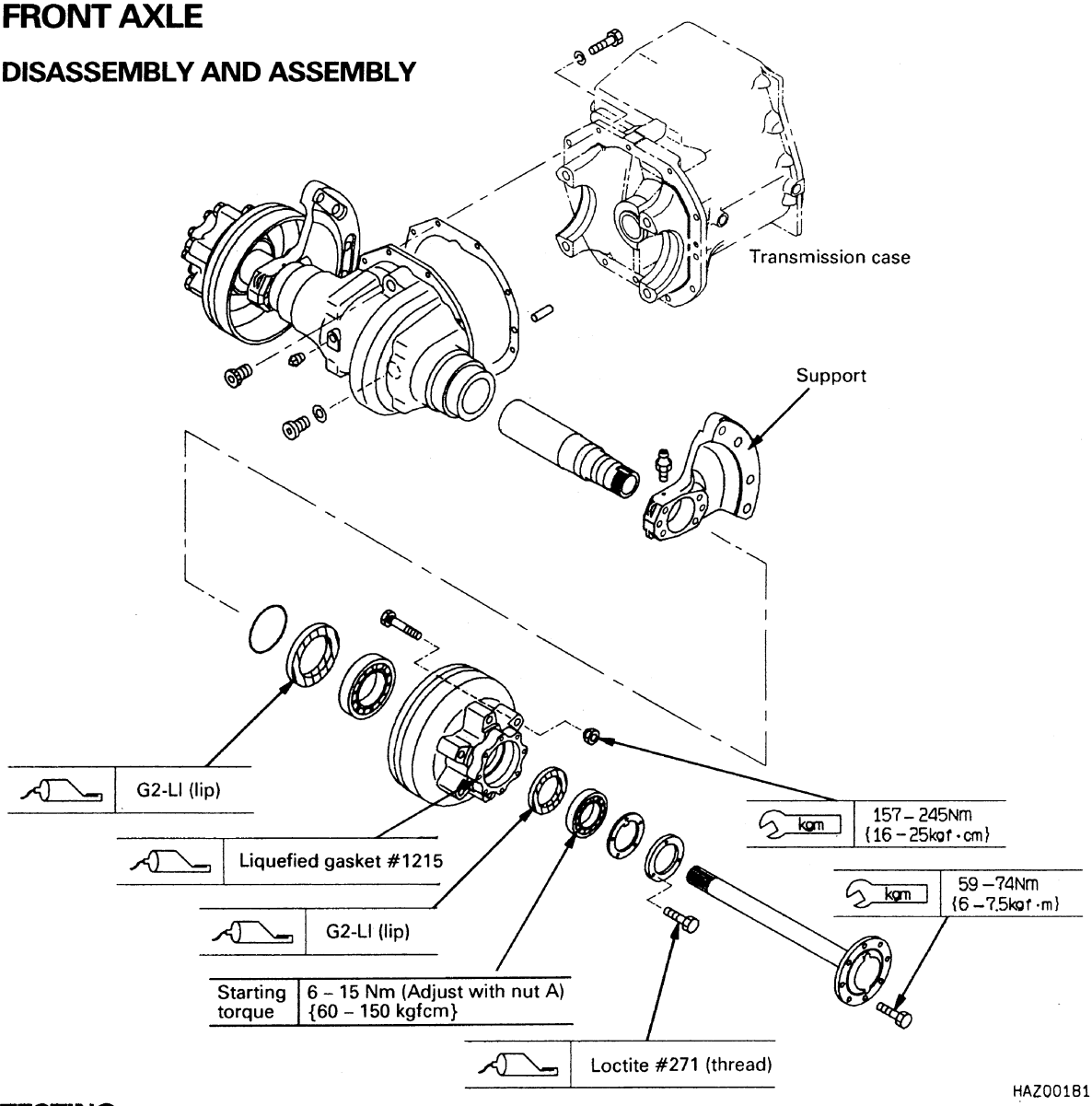

TESTING

Unit: mm (in)

Check item	Criteria		Remedy
	Standard size (mm)	Repair limit(mm)	
Inside diameter of brake drum	254 – 254.2 (10.001 – 10.015)	256 (10.086)	Replacement
Play of hub	0	0	Replacement of bearing
Front axle	Distortion, cracks and damages		Replacement
Right and left ends of axle housing	Distortion, cracks and damages		
Brake drum	Un even wear in inner face of the drum		

https://truckmanualshub.com/

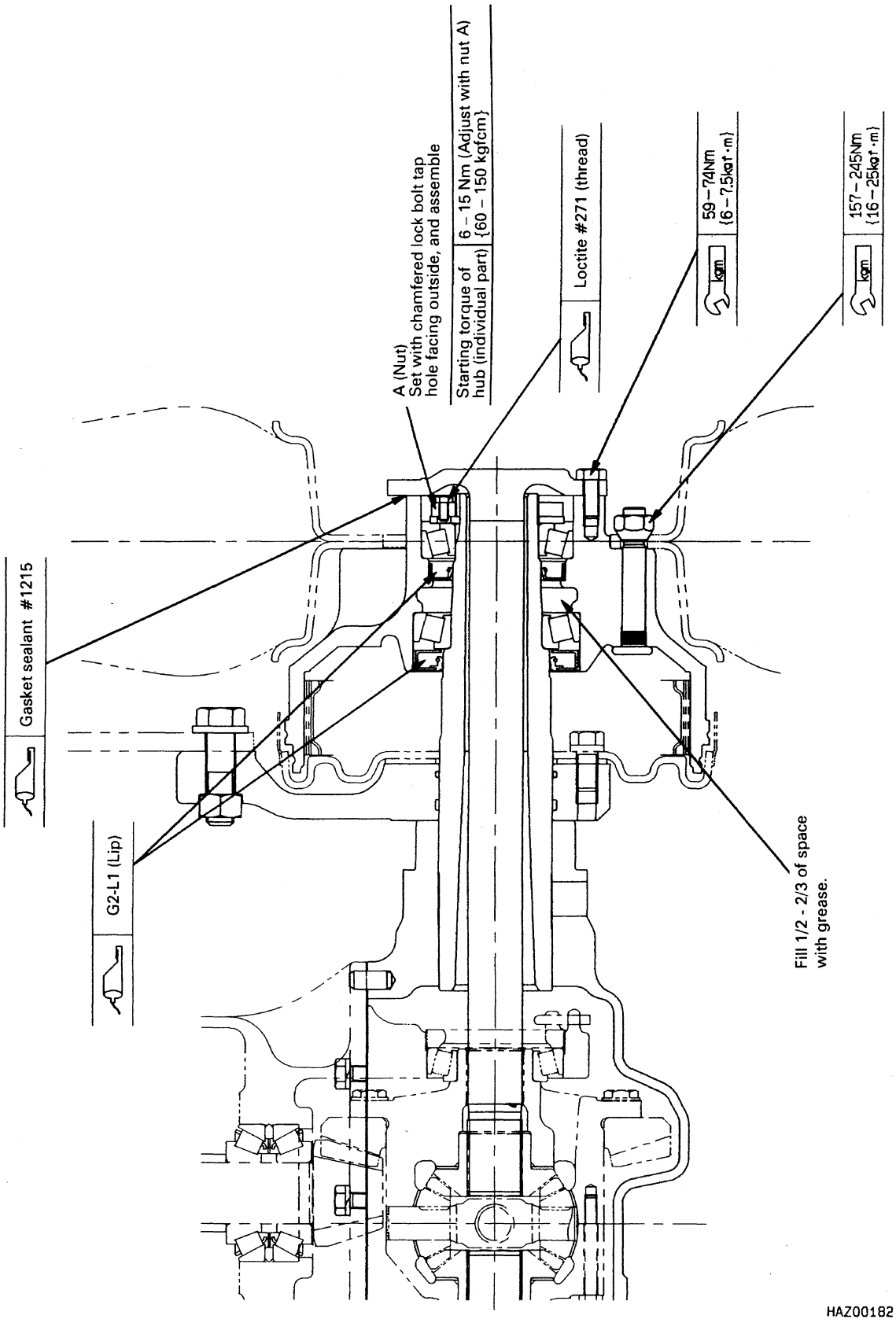

https://truckmanualshub.com/

WHEEL BRAKE

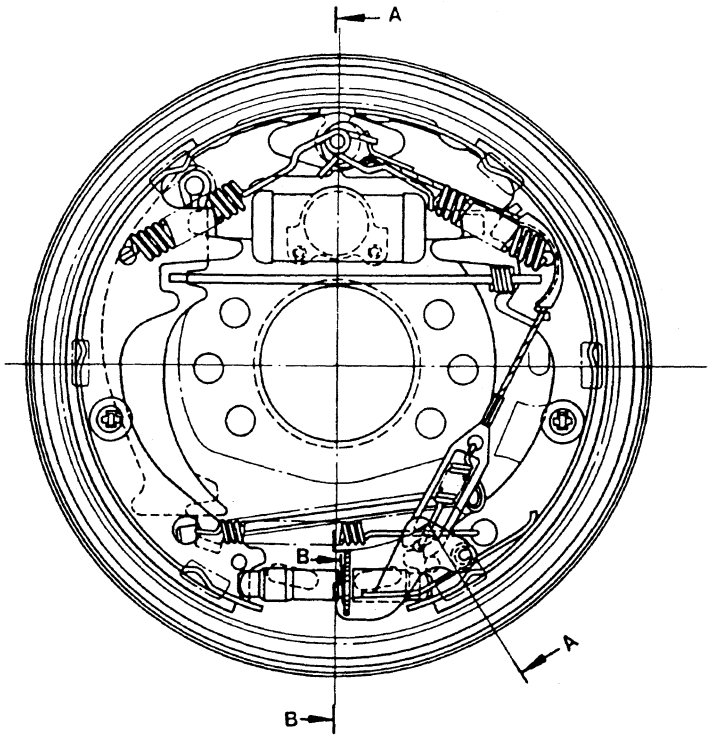

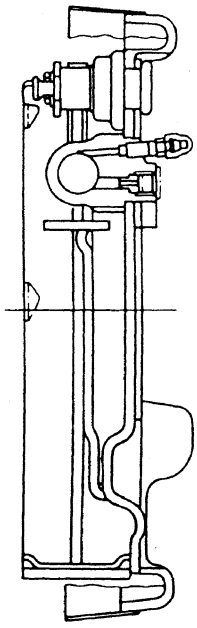

Section A-A

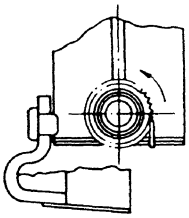

Section B-B

Item		Unit	Wheel brake
Type		—	Front wheel, internal expanding, hydraulic
Structure		—	Duo servo
Inner diameter of brake drum		mm (in)	254 (10.00)
Lining	Material	—	Resin mooled (Adhesive type)
	Width	mm (in)	48.5Unit: mm (in) (1.909)
	Thickness	mm (in)	48.5 (0.177)
Inner diameter of wheel cylinder		mm (in)	22.22 (0.875)

https://truckmanualshub.com/

DISASSEMBLY AND ASSEMBLY

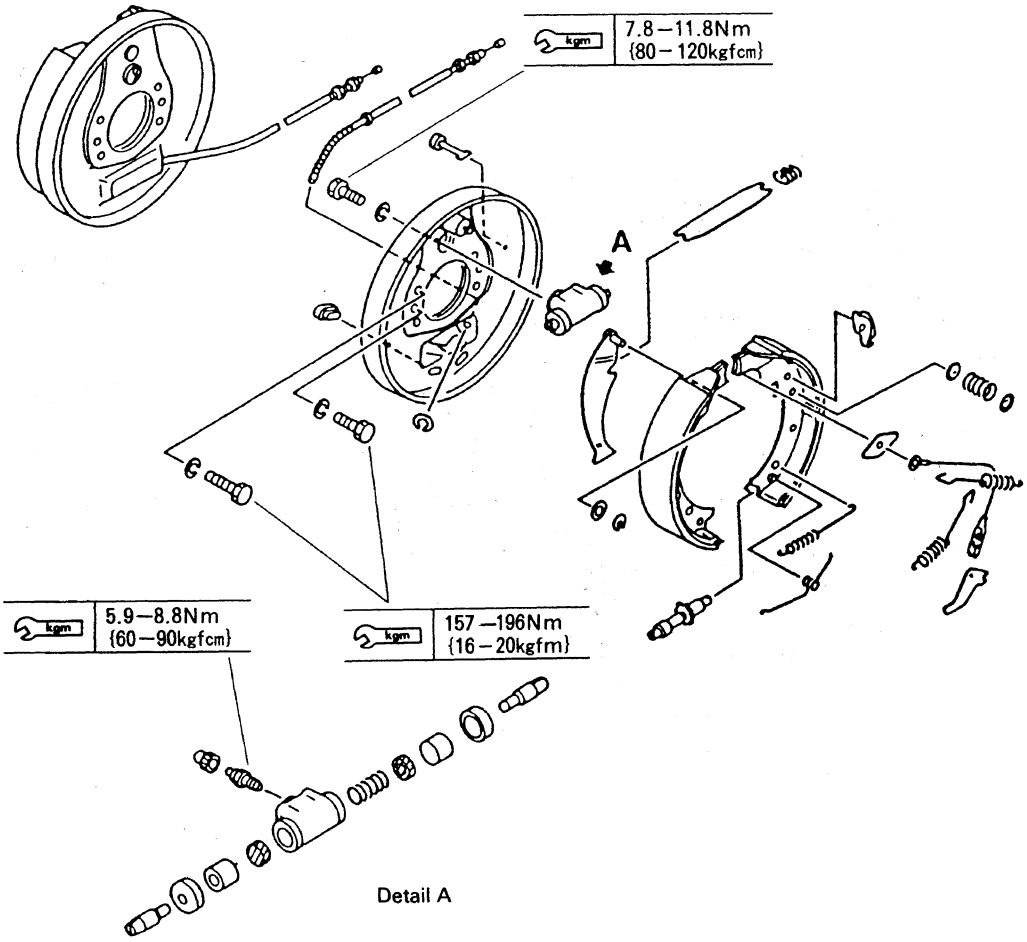

TESTING

Unit: mm (in)

Check item	Criteria		Remedy
	Standard size	Repair limit	
Thickness of lining	4.5 (0.177)	2.0 (0.08)	Replace
Deterioration of return spring	Free length: 97 (3.82)	105 (4.14)	
Thickness of return spring hook portion	2.6 (0.102)	2.0 (0.08)	
Clearance between piston and cylinder	0 – 0.05 (0 – 0.002)	0.2 (0.008)	

Check for scratches on the wheel cylinder sliding surface and for damage or deterioration of the cap.

https://truckmanualshub.com/

1. **Adjustment of wheel brake**
   Jack up the vehicle and extended the adjuster-screw to stick the shoe and lining fast to the brake drum. Return the screw by 25 – 30 teeth.

   ★ When returning the screw, raise the adjuster-lever as shown in the drawing (right) to keep the lever free from unreasonable load. Bending the lever by accident may result in malfunction.

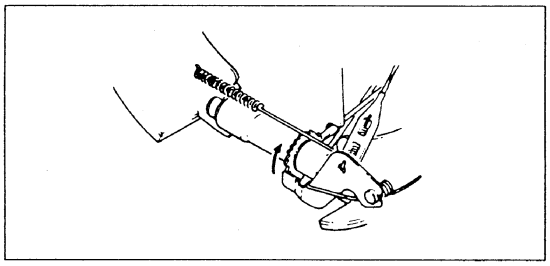

2. **Test after adjustment**
   Pull the cable by finger to the direction shown by the arrow in the drawing (right) and the lever engages with the next tooth. Release the cable and the lever returns to the original position after skipping one tooth.

   When the lever fails to function as described above, inspect the lever above the adjuster screw.

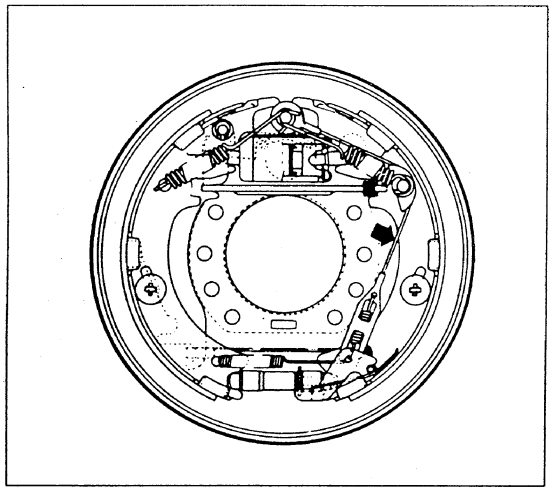

   Right position of lever
   The adjuster-wheel at a distance of 5 – 7 mm (0.2 – 0.28 in) from the center of the adjuster-screw. Any incorrect position of the lever may result in malfunction of tooth engagement.

   Countermeasure for malfunction
   1) Make sure that the cable guide is properly fitted to the specified hole on the secondary shoe.
   2) Make sure that the adjuster-spring is properly placed on the primary shoe.
   3) Replace the cable with a new one, if necessary.
   4) Replace the adjuster-lever with a new one.
   5) Replace the adjuster assembly, if necessary.

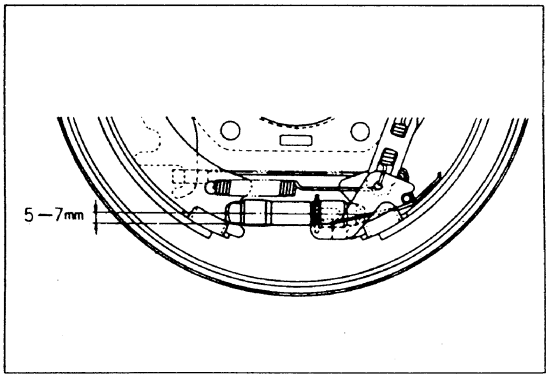

https://truckmanualshub.com/

BRAKE MASTER CYLINDER

ASSEMBLY DRAWING

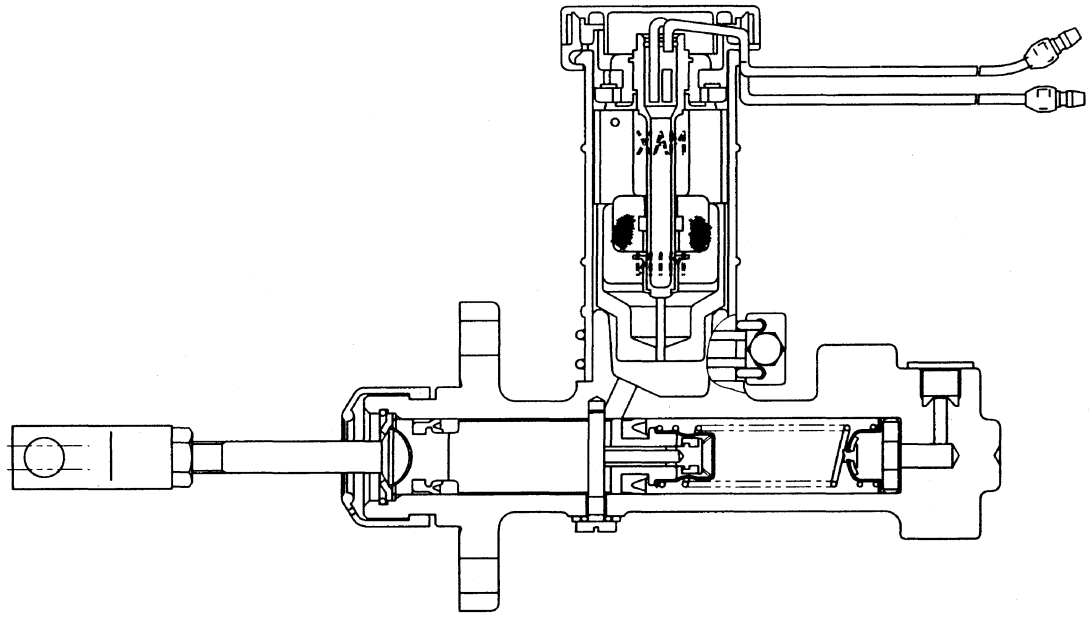

Cross-sectional drawing of master cylinder

HWZ03848

SPECIFICATIONS

Part Name	3/4" master cylinder assembly
Fluid used	Brake fluid
Cylinder diameter	19.05 mm (0.75 in)
Max. stroke	28 mm (1.10 in)
Max. pressure	14.7 MPa {150 kgf/cm^2}
Residual pressure	0.1 MPa {1.0 kgf/cm^2}

https://truckmanualshub.com/

COMPONENT PARTS

NO.	Parts name	Q'ty
1	Cylinder	1
2	Stop wire	1
3	Stop plate	1
4	Piston	1
5	Spring	1
6	Valve ass'y	1
7	Valve seat	1
8	Boot	1
9	Push rod	1
10	:Nut	2
11	Yoke	1
12	Stop pin	1
13	Gasket	1
14	O-ring	1
15	Reservoir	1
16	Indicator ass'y	1
17	Filter	1
18	Clamp	1
19	Cap	1

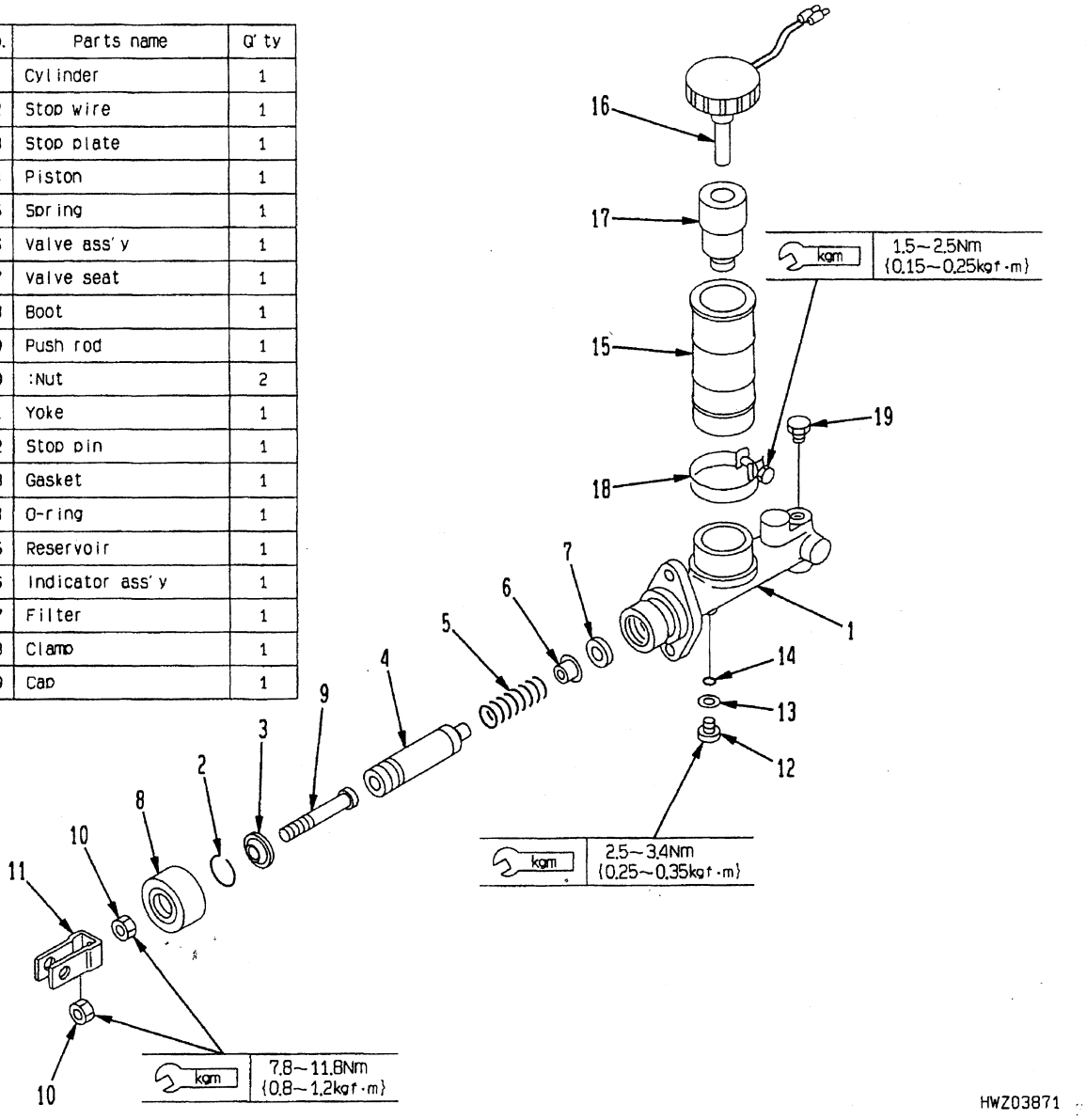

TESTING

Unit: mm (in)

Check item	Criteria		Remedy
	Standard size	Repair limit	
Clearance between cylinder and piston	0.020 – 0.105 (0.0008 – 0.004)	0.15 (0.006)	Replacement cylinder assembly
Interference of cup (outside diameter of cup - inside diameter of cylinder)	0.5 – 0.6 (0.02 – 0.024)	0.3 (0.012)	Replacement piston assembly
Free length of spring	70.8 (2.79)	63 (2.48)	Replacement

https://truckmanualshub.com/

DISASSEMBLY

1. Remove stop pin with flat-headed screwdriver.

2. Remove boot from cylinder, then remove stop wire from cylinder with flat-headed screwdriver.

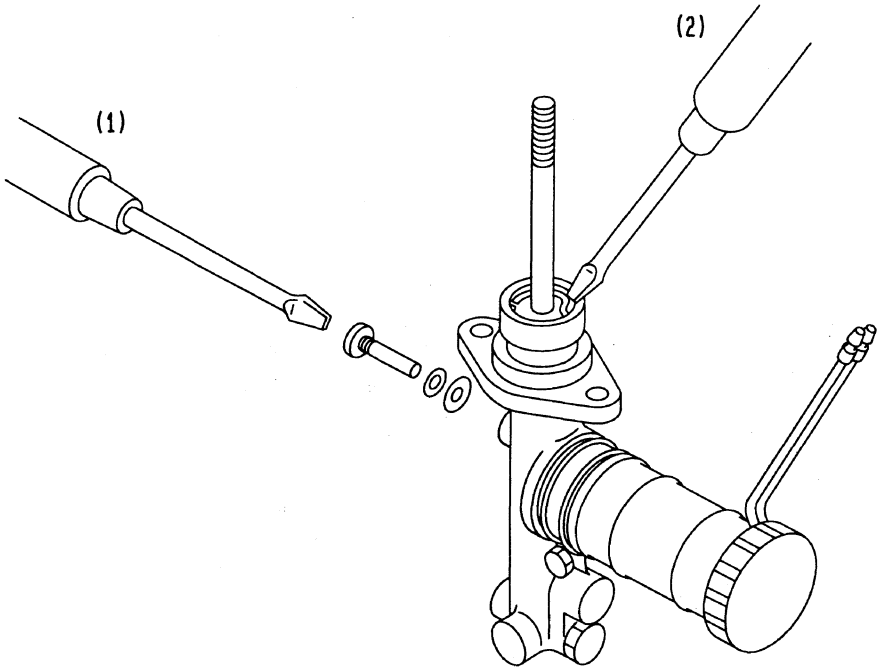

HWZ03850

3. Remove piston assembly, spring, check valve, and valve seat.

Precautions
- **Be careful not to damage the cylinder, piston, or cup.**
- **When carrying out disassembly, make sure that you understand the structure of the cylinder and lay the disassembled parts out in order.**
- **Do not disassemble the piston assembly.**
- **Do not push the outside wall of the cylinder with a vice.**

https://truckmanualshub.com/

TESTING

Part name	Check item	Remedy
Cylinder	Scratches, uneven wear, corrosion of inside surface	• For small scratches, remove with sandpaper • If the scratch will have an adverse effect on the cup, replace the whole cylinder assembly
Piston	Scratches, uneven wear, corrosion of sliding portion	• For small scratches, remove with oilstone • If the scratch will have an adverse effect on the inside surface of the cylinder and cup, replace the whole piston assembly
	Clearance between and cylinder piston	• Replace if the clearance is greater than the limit Clearance limit: 0.15 mm (0.006 in)
Cup	Scratches on lip	• Even if the scratches are small, replace the whole piston assembly
	Pitting of base	• If the pitting is harmful, replace the whole piston assembly
	Wear, swelling	• If there is any abnormal deterioration, wear, or swelling, replace the whole piston assembly
	Interference	• If the value is below the service limit, replace the whole piston assembly Wear limit: 0.3 mm (0.012 in) **Note:** The cup is a specified periodic replacement parts Generally speaking, it is safer to replace each time disassembly is carried out.
Piston assembly	Deformation, scratches, wear of valve rod, valve cup, spring, thimble	• Replace piston assembly if there is any abnormal deformation, scratches, or wear

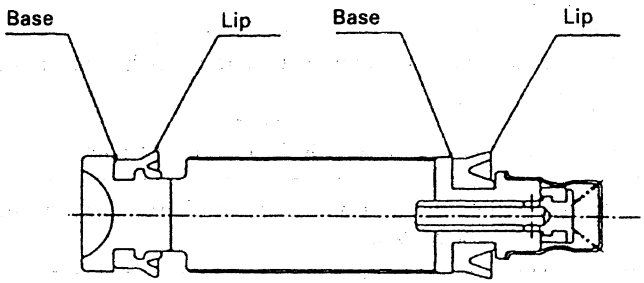

https://truckmanualshub.com/

TESTING

Part name	Check item	Remedy
Spring	Scratches, wear, inclination	• Replace if there is marked damage
	Free length	• Replace if it is below the service limit Service limit: 63 mm (2.48 in)
Stop pin	Deformation, wear, scratches	• Replace if there is any marked deformation, wear, or scratches
Gasket	Scratches, deformation	• Replace if there are any marked scratches • It is recommended to replace any part which has been removed
Check valve	Scratches, deformation, swelling	• Replace if there are any marked scratches, deformation, or swelling
Valve seat	Scratches, deformation, swelling	• Replace if there are any marked scratches, deformation, or swelling
Bleeder valve	Scratches, deformation of seat surface	• Replace if there is marked damage or deformation
Bleeder cap	Cracks, deterioration	• Replace if there are cracks or marked deterioration
Push rod	Curvature, deformation	• Replace if there is curvature or deformation
Stop plate	Deformation, scratches, wear	• Replace if there is any marked deformation or wear
Stop wire	Scratches, deformation, deterioration	• Replace if there are any marked scratches, deformation, or deterioration
Boot	Cracks, damage	• Replace if there are cracks or damage
	Interference for cylinder, rod	• Replace if there is no interference or extremely little interference
Yoke	Deformation, wear	• Replace if there is marked deformation or wear
Reservoir	Cracks	• Replace cylinder assembly even if there are only small cracks
	Discoloration	• Replace cylinder assembly if there is marked discoloration
	Scratches	• Replace cylinder assembly if there are scratches
Indicator assembly	Actuation of alarm	• Move float up and down. If warning lamp does not light up correctly, replace

https://truckmanualshub.com/

MAINTENANCE STANDARD

No.	Check item	Standard value	Limit	Remedy
1	Clearance between cylinder and piston	0.020 – 0.105 mm (0.008 – 0.04 in)	0.15 mm (0.006 in)	Replace (clinder assembly)
2	Interference of cup	Primary side: Approx. 1 mm Secondary side: Approx. 1.4 mm	0.3 mm (0.012 in)	Replace (piston assembly)
3	Free length of spring	70.8 mm (2.78 in)	63 mm (2.48 in)	Replace
4	Tightening torque for stop pin	2.5 – 3.4 Nm {0.25 – 0.35 kgfm}	—	—
5	Tightening torque of yoke and locknut	7.8 – 11.8 Nm {0.8 – 1.2 kgfm}	—	—
6	Tightening torque for clamp	1.5 – 2.5 Nm {0.15 – 0.25 kgfm}	—	—

https://truckmanualshub.com/

ASSEMBLY

1. Use alcohol or brake fluid to wash all parts that are to be reused.
   For the cup or other rubber parts, do not soak for more than 30 seconds when washing in alcohol.

2. Coat inside surface of cylinder and outside circumference of piston evenly with rubber grease or brake fluid.

3. Assemble valve seat and check valve to cylinder.

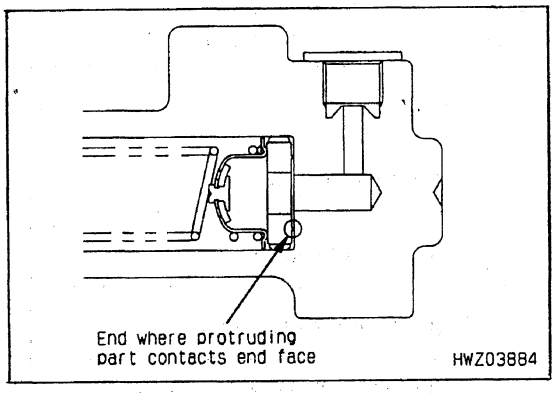

4. Assemble spring to piston assembly, then insert in cylinder.
   When doing this, align the direction of the piston groove with the direction of the stop pin hole in the cylinder.

5. Fit gasket and O-ring to stop pin, then push in piston and install to cylinder.

kgm	2.5 – 3.4 Nm {0.25 – 0.35 kgfm}

6. Insert stop plate, push in piston lightly with a finger, and assemble to cylinder with stop wire.

7. Insert push rod, then assemble boot, nut, and yoke in turn to push rod.

kgm	7.8 – 11.8 Nm {0.8 – 1.2 kgfm}

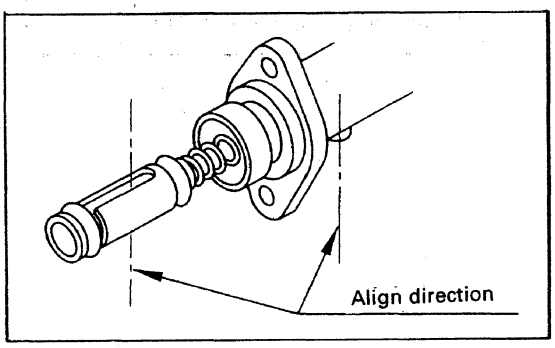

Precautions

- **Do not use any fluid apart from alcohol or brake fluid to wash the parts.**
  In particular, never use mineral oil (petroleum, gasoline, etc.)
  (If mineral oil gets on rubber parts, they will swell and become unusable.)
- **After washing the parts, keep them in a clean place to prevent dust or dirt from sticking to them.**
- **Be careful not to let dirt or dust get in, and be careful not to damage the damage the cylinder, piston, or cup.**

https://truckmanualshub.com/

https://truckmanualshub.com/

COMBINATION SWITCH

COMPONENT PARTS

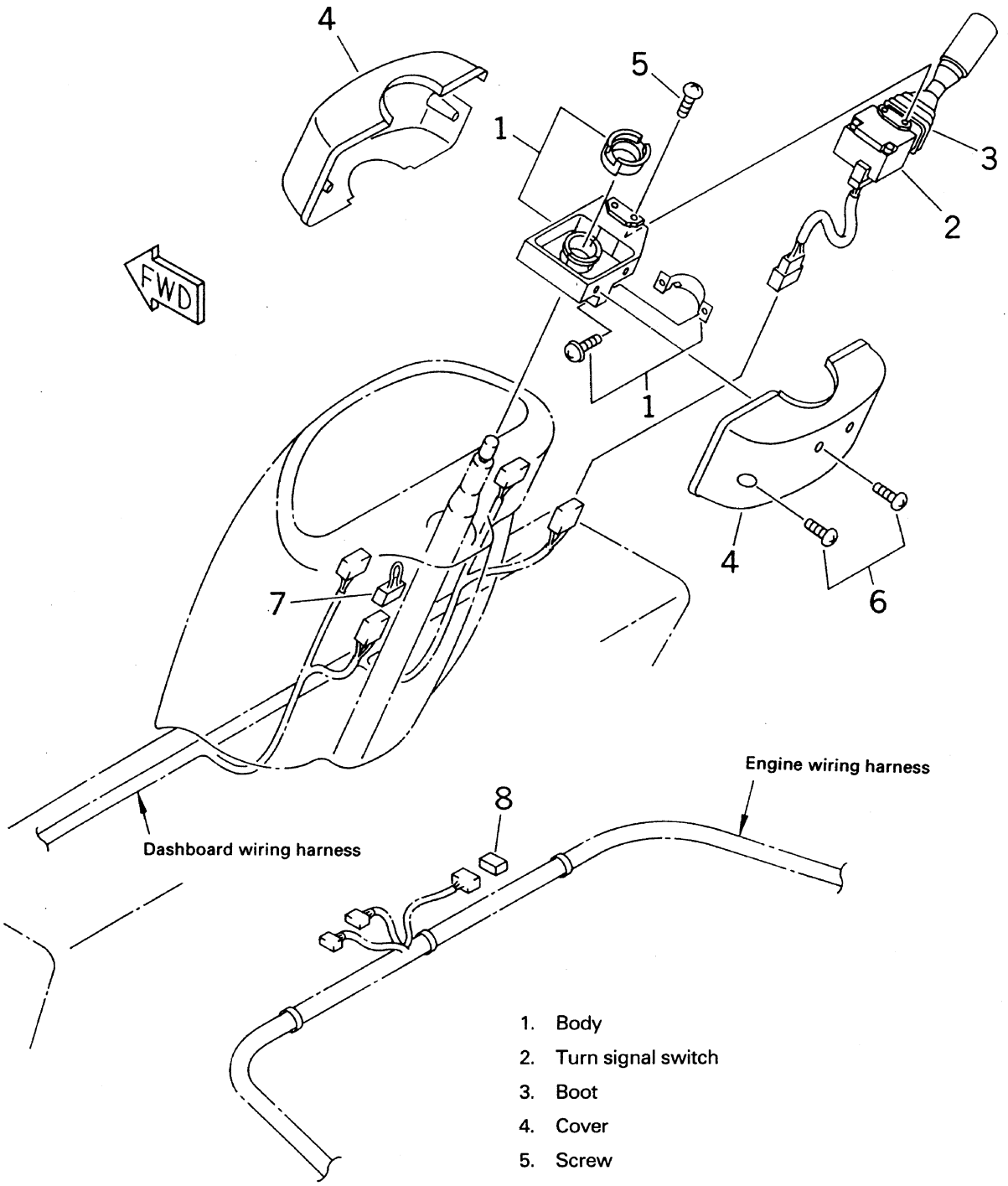

1. Body
2. Turn signal switch
3. Boot
4. Cover
5. Screw
6. Screw
7. Wire
8. Connector

https://truckmanualshub.com/

Checking lighting/turn signal switch

1. Remove connection of 8-pin coupler between combination switch cord and main wiring harness
2. Check continuity between terminals at each position, and check that there is continuity between 0–0.
3. Insulating resistance: Min. 10 MΩ at each terminal with 500 V megger

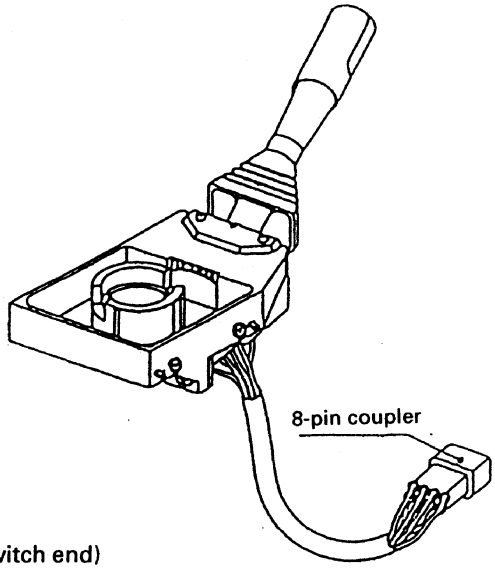

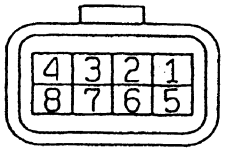

Layout of terminals of 8-pin coupler (combination switch end)

Connection positions for lighting switch

Position \ Circuit		1	2	3	4
Lighting switch	OFF				
	SMALL	○		○	
	HEAD		○	○	
				○	○

Circuit diagram

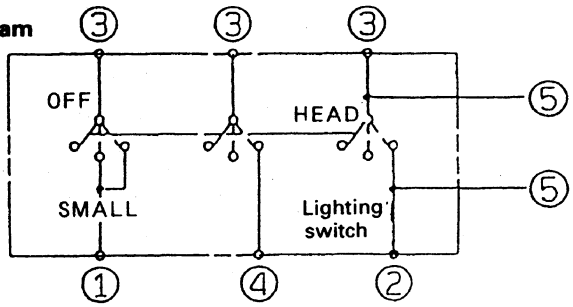

On the clutch specification truck, terminal ⑤ (dimmer circuit) is a dummy circuit.

Connection positions of turn signal switch

Position \ Circuit	6	7	8
R	○	○	
L	○		○

Circuit diagram

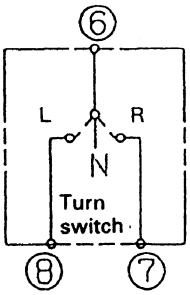

https://truckmanualshub.com/

Replacing combination switch assembly

1. Remove steering column upper cover and lower cover. (Remove 4 screws.)

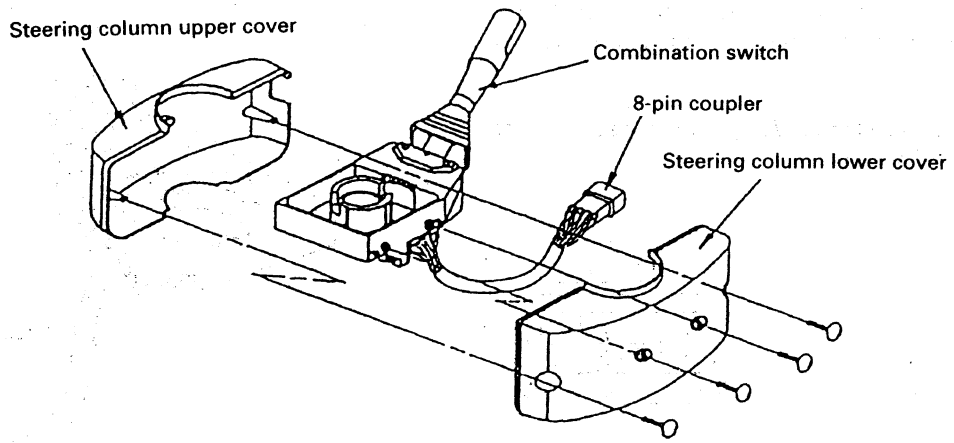

2. Remove connection of 8-pin coupler between combination switch cord and main wiring harness

3. Remove 2 screws of band holding steering shaft and combination switch, then remove switch.

kgm	T = 2.4 Nm {0.25 kgfm}

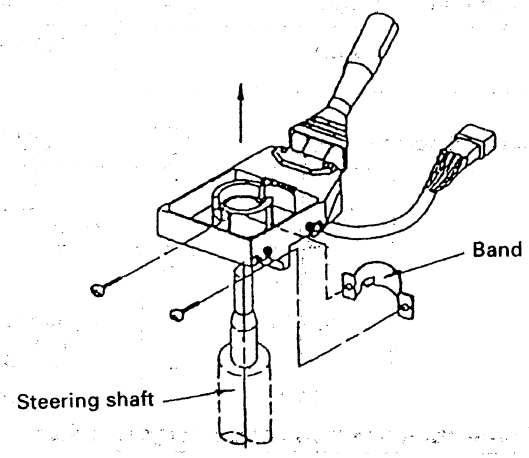

Carry out installation in the reverse order to removal.

https://truckmanualshub.com/

Replacing lighting switch unit

1. Remove steering column upper cover and lower cover. (Remove 4 screws.)

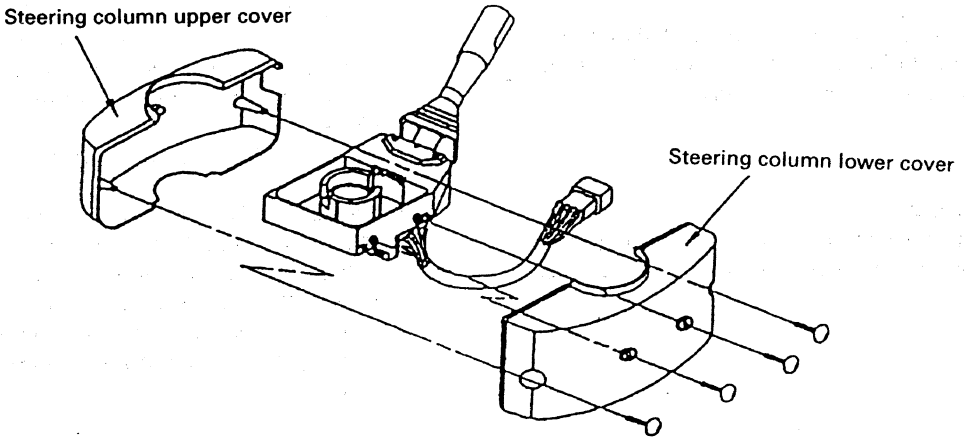

2. Remove 2 lighting switch unit mounting screws and plastic band for gathering wires, then remove switch.

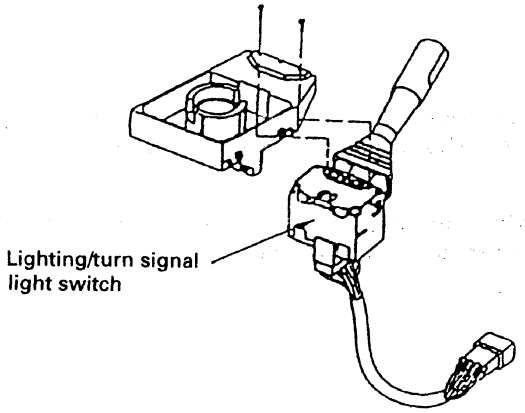

Carry out installation in the reverse order to removal.

https://truckmanualshub.com/

STEERING GEAR BOX

DISASSEMBLY

Precautions when disassembling

① Cleaning function parts
Clean function parts with volatile metel detergent (TRICLEN, CROROSEN, METACLEN), and dry with compressed air.

② Handling oil seals, O-rings and rubber parts
Remove foreign materials with compressed air. In order to clean oil seals, O-ring and rubber part, never use some metal detergents which are dipped before using.
Replace all abnormal parts by new parts.

③ Oil seal
When it is removed from the steering body and the end cover, replace by new oil seal.

④ Needle radial bearing and bushing
The neelde radial bearing, which are press-fitted to the steering body, and the bushing, which are press-fitted to the side cover, are not disassembled. If there are any abnormal it, replace the steering body assembly and the side cover assembly.

1. Rear cover
Loosen bolts, then remove rear cover (1).

★ When removing the rear cover, oil will flow out, so prepare a container to catch it.

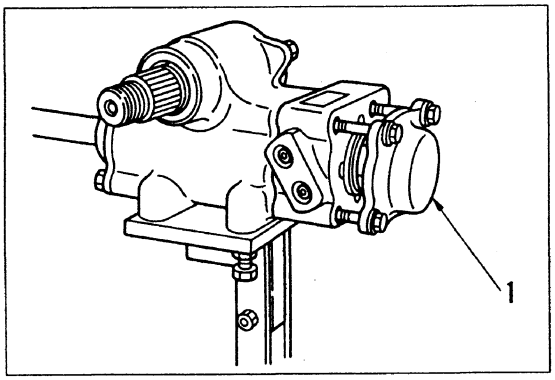

2. Control valve assembly
1) Loosen locknut (2).

2) Remove needle thrust bearing and centering plate.

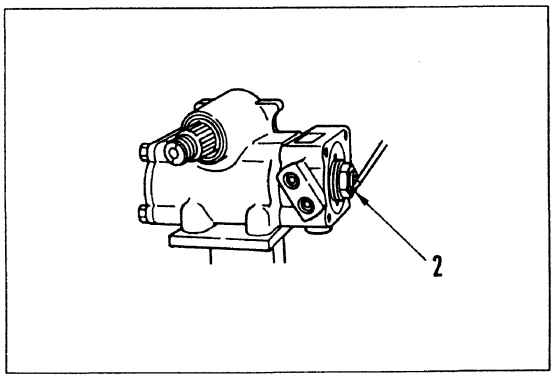

https://truckmanualshub.com/

3) Remove control valve assembly (3).
★ Be careful not to let the valve spool and reaction plunger fall out.

4) Remove centering plate and neutral thrust bearing.

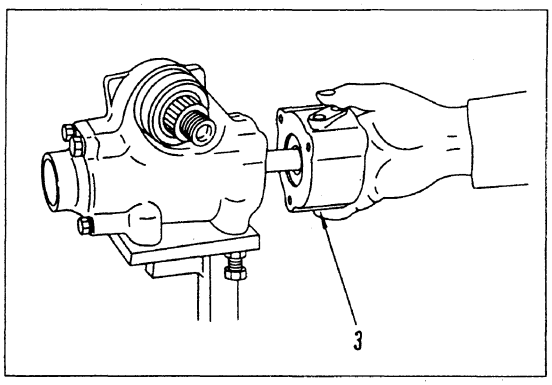

3. Disassembly of control valve assembly
Disassemble the parts shown in the diagram on the right.

★ If the valve spool will not come out easily, slide it two or three times and then remove it. Never hit it in with a hammer.

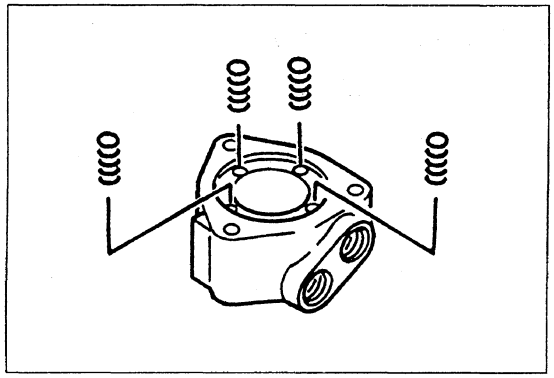

4. Side cover assembly

1) Loosen bolt (4).

2) Loosen nut (5), and remove bracket.

3) Turn adjustment screw (6) to right with a screwdriver, then pull out side cover assembly.

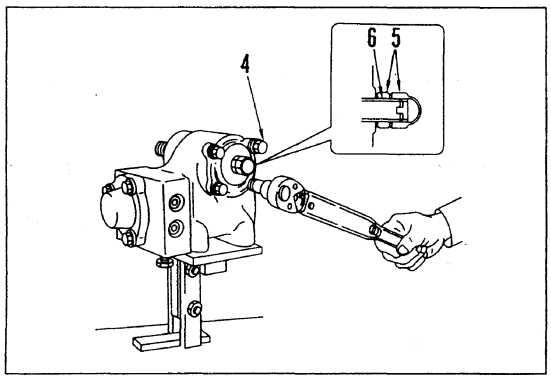

5. Sector shaft assembly
Tap serrated end of sector shaft assembly with a plastic hammer and remove it.

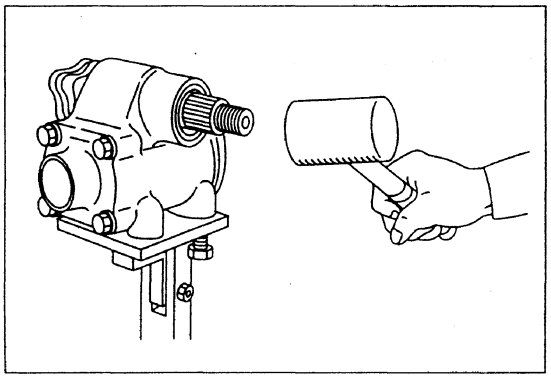

https://truckmanualshub.com/

6. Disassembly of sector shaft assembly

Disassemble the parts shown in the diagram on the right.

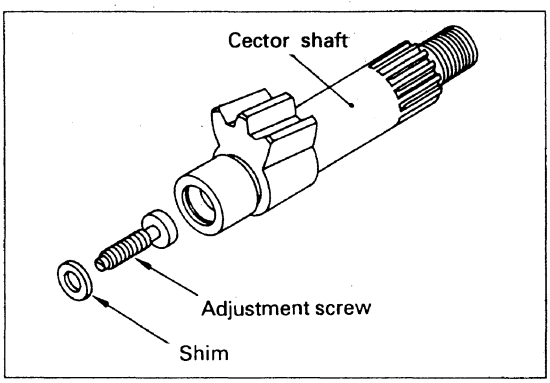

7. End cover assembly

1) Remove dust cover.

2) Loosen bolts (7) and remove end cover.

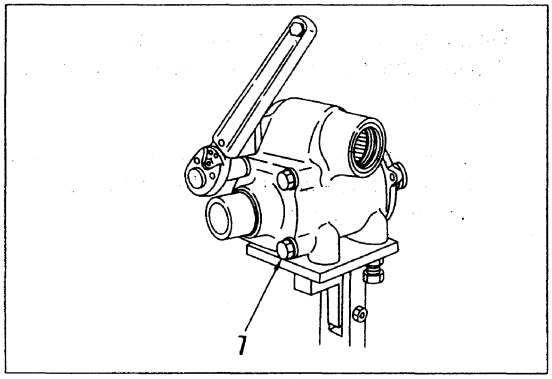

8. Disassembly of end cover assembly

Disassemble the parts shown in the diagram on the right.

★ When using the screwdriver to disassemble the oil seal, be careful not to damage the insertion portion of the bearing on the inside of the end cover.

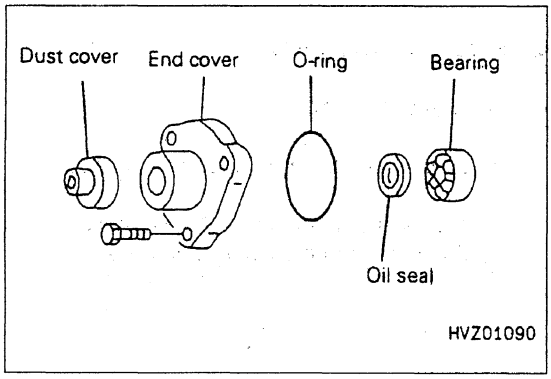

9. Ball screw assembly

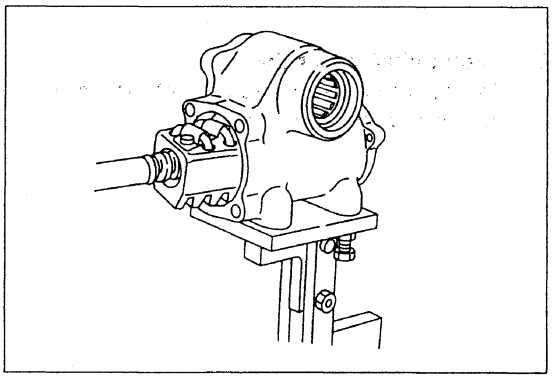

https://truckmanualshub.com/

10. Disassembly of steering body assembly

1) Insert pin in body hole, and remove snap ring.

2) Remove oil seal.

★ When removing the oil seal, be careful not to damage the needle radial bearing of the steering body with the screwdriver.

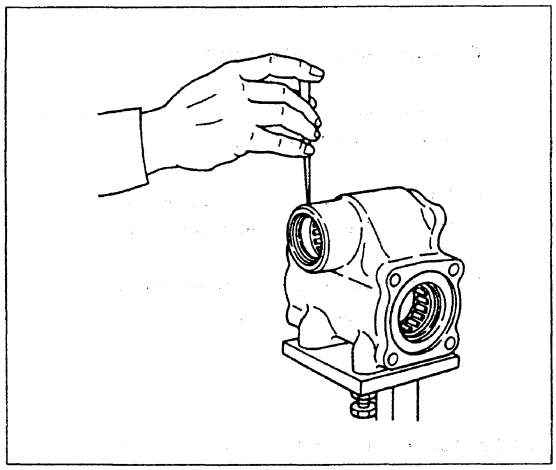

TESTING

Location	Check item	Remedy
Valve spool, valve housing sliding surface	Abnormal wear, rust, scratches	Replace assembly
Valve housing sliding surface	Abnormal wear, rust, scratches	Defective valve housing: replace together with valve spool as assembly
Sector shaft	Scratches, abnormal wear, cracks	Replace
Ball screw assembly	Propulsion force when rotating: Max. 10 kg (Secure ball nut in horizontal position, apply propulsion force to steering shaft, and measure propulsion force when rotating)	Replace assembly
Needle bearin	Abnormality in bearing roller and steering shaft, sector shaft roller tread surface	Replace (replace radial bearing as assembly)

https://truckmanualshub.com/

ASSEMBLY

Precautions when assembly

1) Wash all parts and check that they are clean when assembling.

2) Replace all O-rings, oil seals, and rubber parts. (Replace all the rubber parts once every year.)

3) After making the sub-assembly, carry out the overall assembly.

Assembly of sub-assembly

1. Control valve assembly

(1) Insert valve spool into valve housing.

(2) Insert reaction plunger and reaction spring.

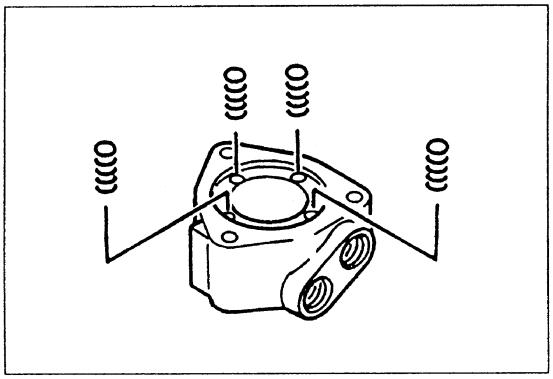

2. Sector shaft assembly

(1) Insert adjustment screw and shim to sector shaft, then secure with snap ring.

★ If there is any play between the sector shaft and adjustment screw, replace with a thicker shim and adjust so that there is no play in the adjustment screw when rotating.

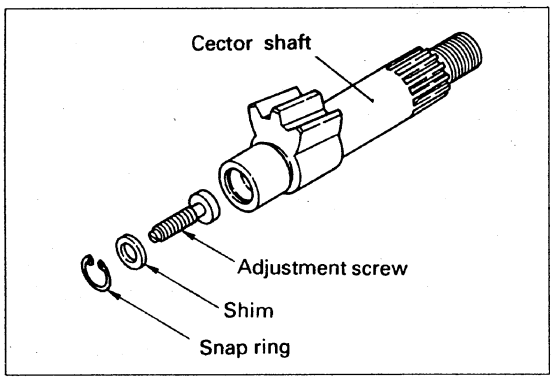

3. End cover assembly

1) Coat outside circumference of oil seal thinly with grease (G2-LI), then press fit to end cover.

★ When press fitting, be careful not to damage the lip on the inside diameter of the oil seal.

2) Insert bearing and secure with snap ring.

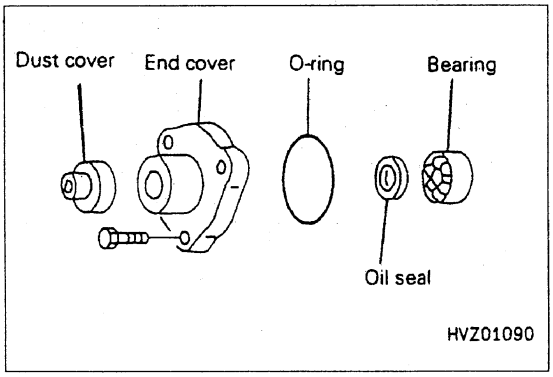

https://truckmanualshub.com/

4. Steering body assembly

1) Coat outside circumference of oil seal thinly with grease (G2-LI), press fit to steering body, then secure with snap ring.

★ When press fitting, be careful not to damage the lip on the inside diameter of the oil seal.

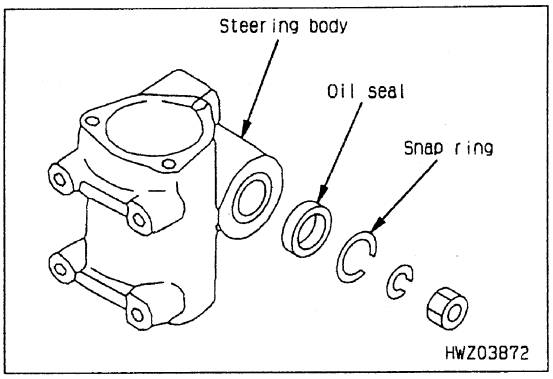

Overall assembly

1. Ball screw assembly

1) Fix steering body assembly in a vice.

2) Insert ball screw assembly, then insert portion of steering shaft with largest diameter into needle radial bearing portion of steering body assembly.

★ When carrying out the rest of the operation, be careful not to let the outside diameter portion of the steering shaft come out from the needle radial bearing.

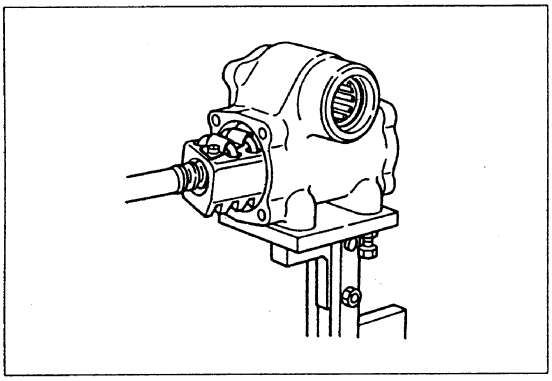

2. End cover assembly

1) Fit O-ring to end cover.

2) Coat end cover O-ring and oil seal lip with grease (G2-LI) and assemble to steering body.

★ Be extremely careful that the O-ring is not cut or pushed out, and that the oil seal is not damaged.

3) Tighten bolts to specified torque.

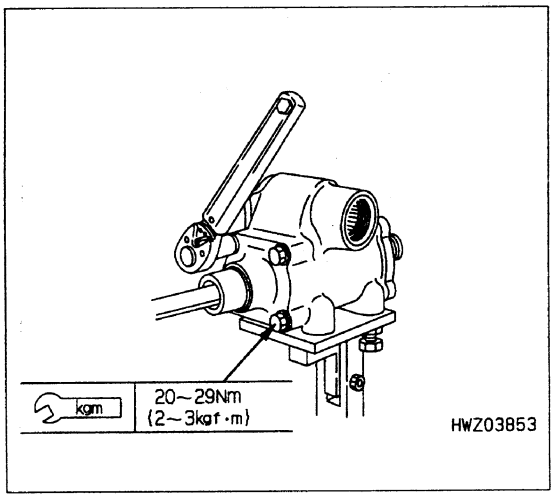

https://truckmanualshub.com/

3. Sector shaft assembly

1) Set ball nut of ball screw assembly (assembled to steering body) at approximately center of stroke.

2) Coat oil seal lip of steering body with grease (G2-LI).

3) Assemble sector shaft so that teeth of ball nut and teeth of sector shaft are meshed when facing straight forward.

★ Be careful not to damage the oil seal lip when assembling the sector shaft.

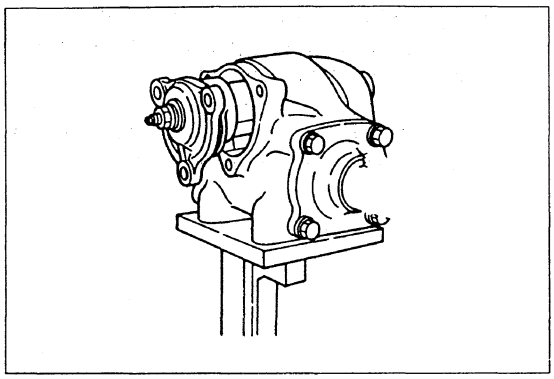

4. Control valve assembly

1) Fit O-ring (1) to steering body.

2) Install needle thrust bearing (2) and centering plate (3).

3) Install control valve assembly (4).

★ Be extremely careful that the O-ring is not cut or pushed out.

4) Install centering plate (5) and needle thrust bearing (6).

5) Tighten locknut (7).

kgm	39 Nm {400 kgfcm}

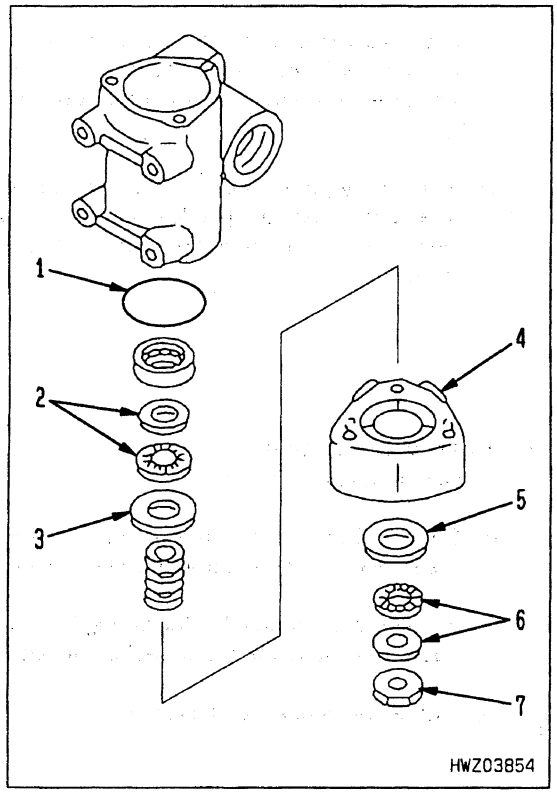

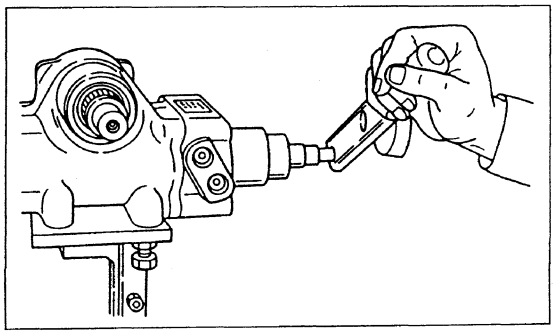

5. Rear cover

1) Fit O-ring to control valve assembly, then tighten bolts to install.

kgm	20 – 29 Nm {2 – 3 kgfm}

★ Be extremely careful that the O-ring is not cut or pushed out.

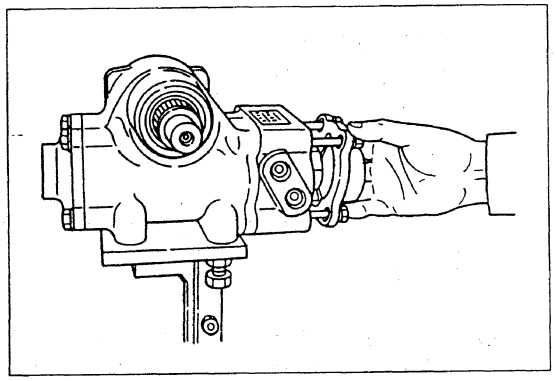

6. Side cover

1) Fit O-ring to side cover.

2) Align threaded portion of side cover with threaded portion of adjustment screw of sector shaft assembly, then use a flat-headed screwdriver to turn adjustment screw to left while assembling side cover.

★ Be extremely careful that the O-ring is not cut or pushed out.

3) Tighten bolts.

kgm	20 – 29 Nm {2 – 3 kgfm}

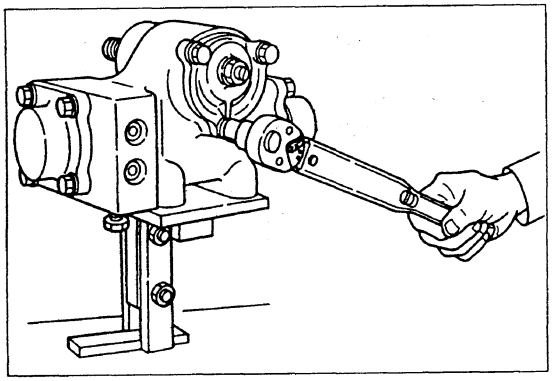

7. Dust cover

Assemble dust cover.

8. Measuring reverse rotation torque

Set steering shaft in free condition, and measure rotating torque of sector shaft in both left and right directions.

Reverse rotation torque	24.5 Nm {2.5 kgfm}

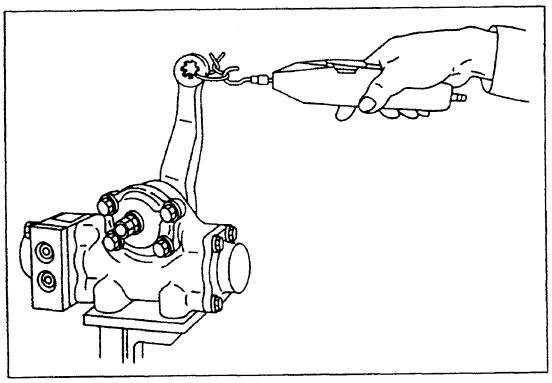

https://truckmanualshub.com/

TESTING AND ADJUSTING

1. Adjusting backlash

1) Set meshing of sector shaft and ball nut facing straight forward.
2) Install pitman arm, then put dial gauge in contact with tip of pitman arm and adjust backlash to 0.

(Tighten adjustment screw to 2 Nm {0.2 kgfm}, turn back two turns, then tighten to 0.25 Nm {0.025 kgfm}.)

3) After adjusting backlash to 0, use pitman arm to turn sector shaft in opposite direction two or three turns, then measure backlash again.

(If the backlash is not 0, adjust until it becomes 0.)

4) Tighten gasket and nuts, and lock adjustment screw in position.

kgm	20 – 29 Nm {2 – 3 kgfm}

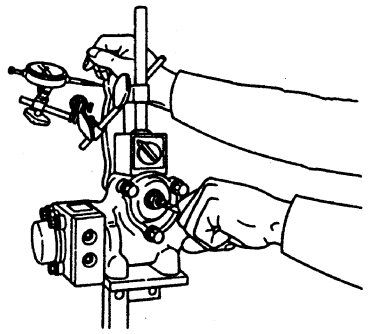

Backlash	0 (when facing straight forward)

2. Measuring normal rotation torque

Set sector shaft in free condition, and measure rotating torque of steering shaft in both left and right directions.

Normal rotation torque	Max. 15 Nm {0.15 kgfm}

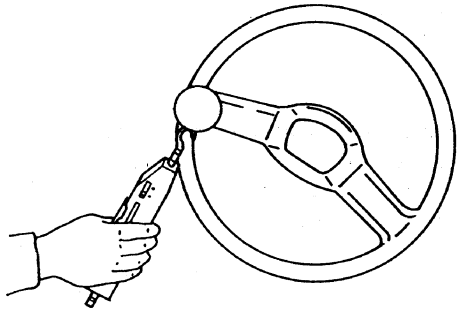

https://truckmanualshub.com/

https://truckmanualshub.com/

POWER STEERING CYLINDER

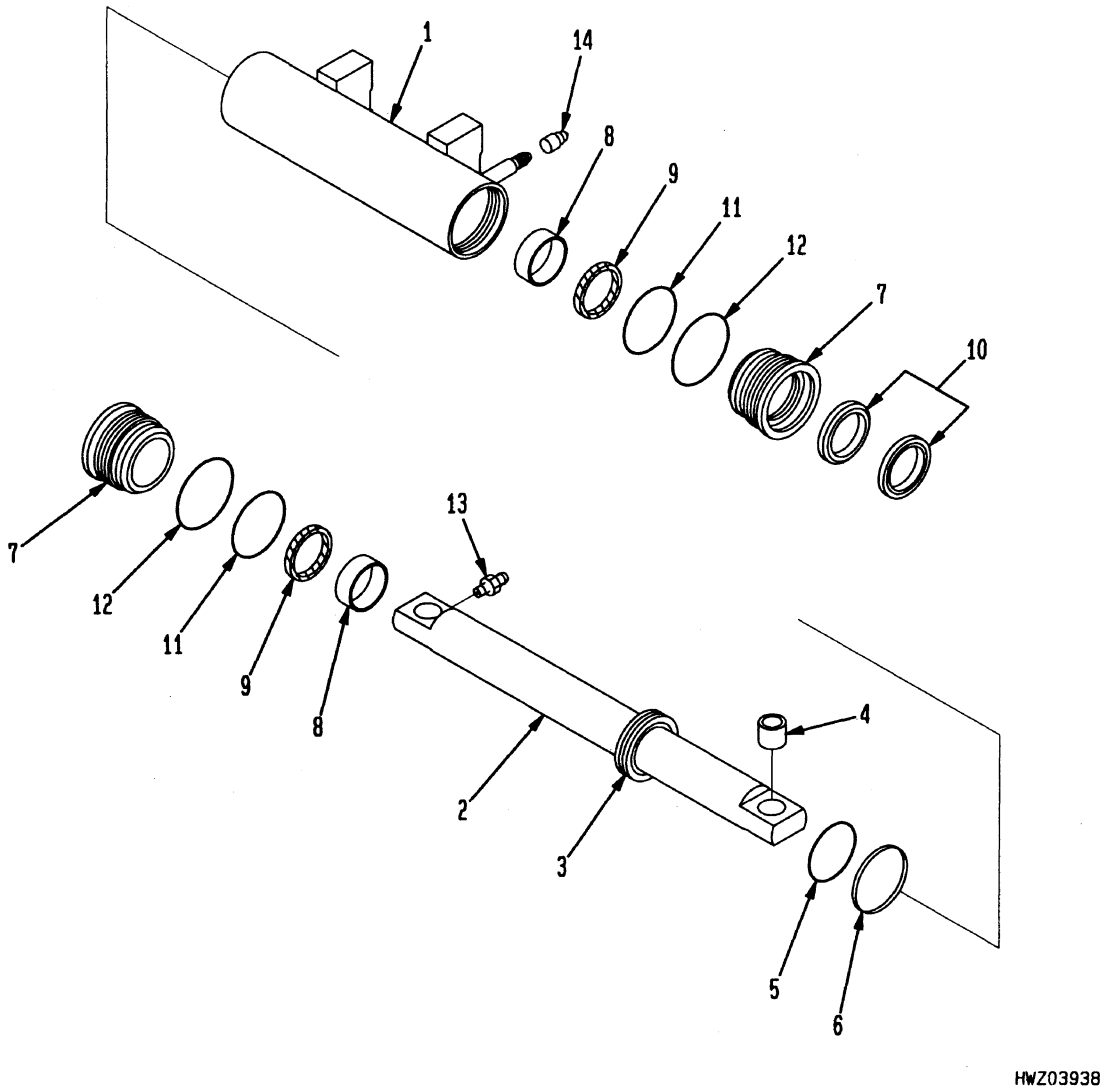

1. Cylinder tube
2. Rod
3. Piston
4. Bushing
5. O-ring
6. Seal
7. Guide
8. Bushing
9. Packing
10. Wiper ring
11. O-ring
12. O-ring
13. Nipple
14. Plug

https://truckmanualshub.com/

TESTING

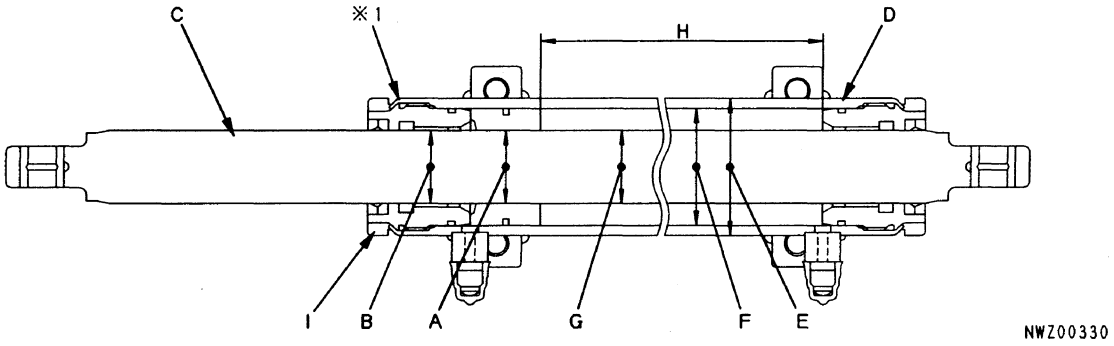

※1. Caulk it at two points on the circumference after tightening head (on both left and right).

Symbol	Check item	Criteria		Remedy
		Standard size (mm)	Repair limit (mm)	
A	Clearance between cylinder and piston	0.05 – 0.25	0.4	Replace
B	Clearance between piston rod and bushing	0.03 – 0.18	0.3	
C	Piston rod	Flaw, dent, streak or concave on claw		
D	Cylinder	Flaw, dent, streak or concave on claw		
E	Outside diameter of cylinder	75		—
F	Inside diameter of cylinder	65		
G	Outside diameter of piston rod	40		
H	Stroke	146		
I	Tightening torque for head	245 – 294 Nm {20 – 30 kgfm}		

https://truckmanualshub.com/

STEERING AXLE

DISASSEMBLY AND ASSEMBLY

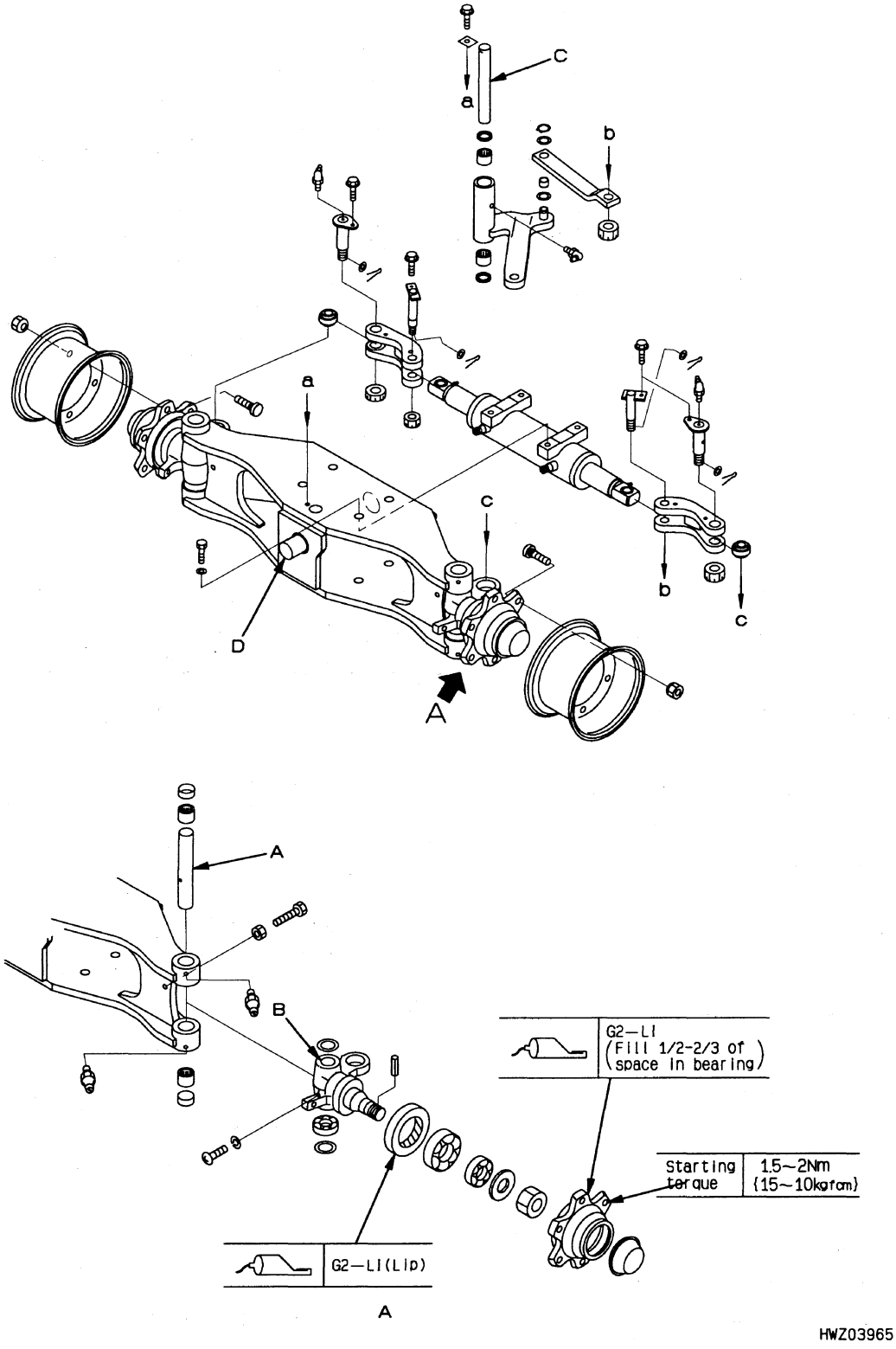

https://truckmanualshub.com/

ASSEMBLY DRAWING

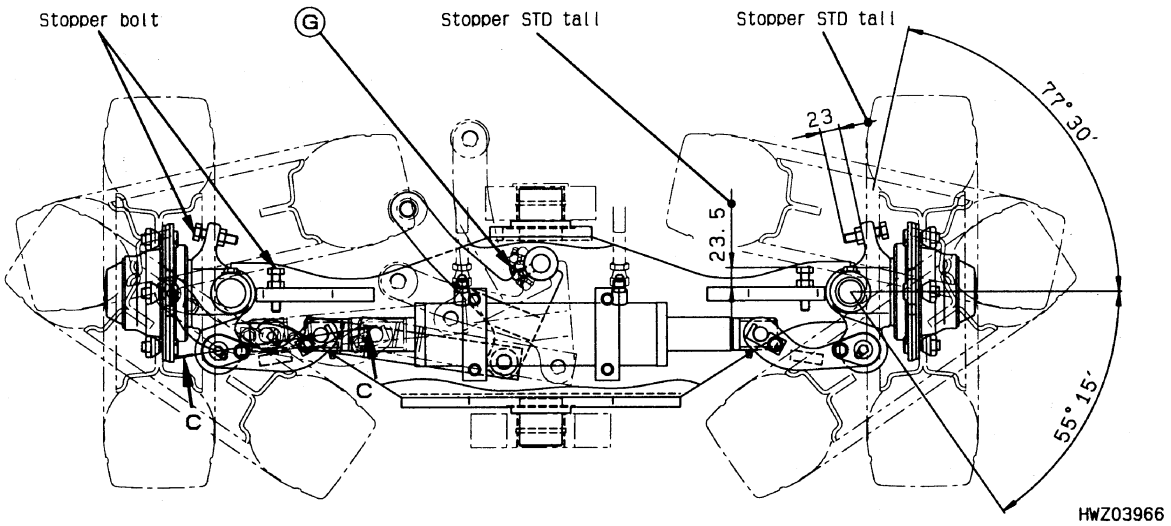

1. **Adjusting stopper bolt**
   Adjust so that the left and right stoppers are both in contact at the same time when the tires are turned fully.

2. **Assembling ball socket**
   When assembling the ball socket to the bellcrank, do not let any grease or paint get on the any of the taper portions.

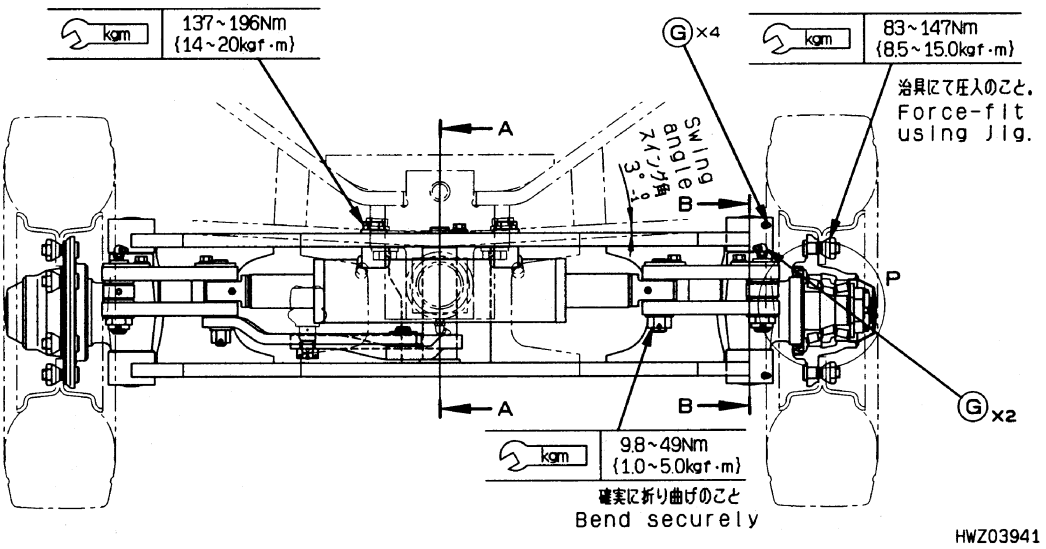

3. **Greasing**
   Use lithium grease (G2-LI) at grease nipple (Ⓖ x 7) and hub.

https://truckmanualshub.com/

DETAILS ON STEERING AXLE

1. Bell crank

1) Lock plate (1)

2) Snap ring (2)
Make sure that the snap ring has completely been engage with the ring groove.

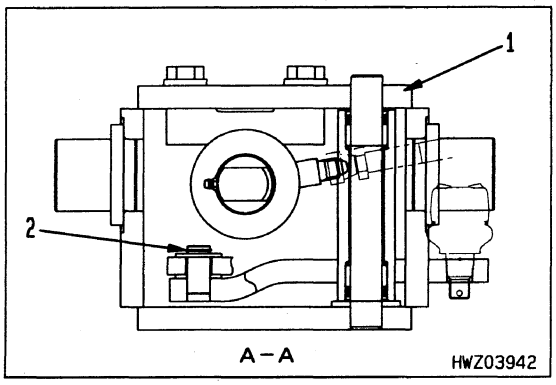

2. King pin

1) Adjust the needle bearing (3) end surface to the boss end surface (the difference between the surfaces can be within a range of 0 – 1).
2) Adjust the plays above and under the knuckle to the minimum using the shim.
Standard: 0.05 to 0.2 mm

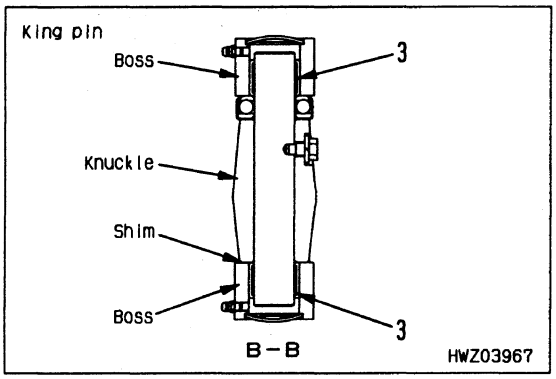

3. Link

1) Completely bend cotter pins (4), (5).

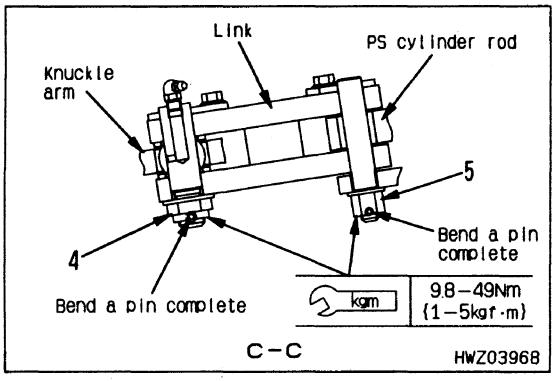

4. Hub

1) Apply sufficient grease (G2-LI) to the hub bearing and also fill 1/2 to 2/3 (shaded portion) of the hub capacity with grease (on both sides).
2) When assembling the hub, apply grease (G2-LI) to the lip of seal (6).
3) Completely bend cotter pin (7) after adjusting the starting torque.

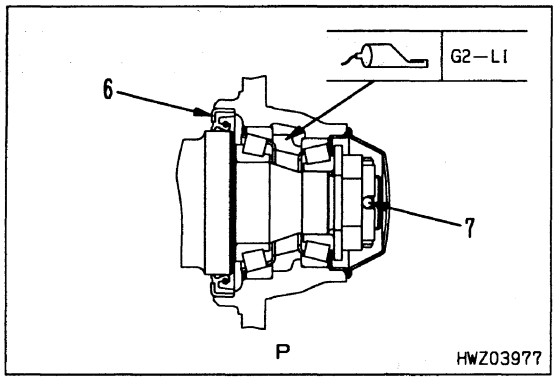

https://truckmanualshub.com/

5. Adjusting the rotation starting torque of the hub

1) Tighten the locknut until it becomes difficult to turn the hub by single hand and turn the hub by 1/4 rotation from that position in the opposite direction. Adjust the rotation starting torque to 19.6 – 25.5 N {2 – 2.6 kgf} using nut by applying a spring scale to the hub bolt and apply pre-load to the tapered roller bearing.

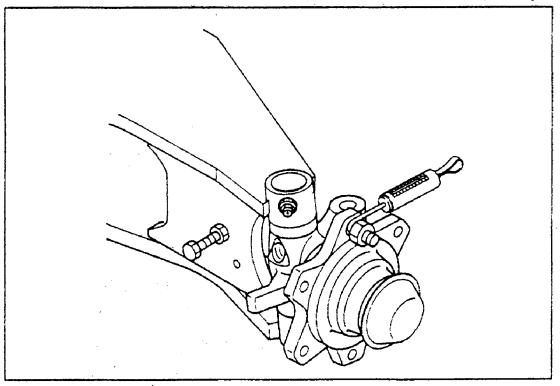

2) After adjustment, insert a cotter pin (rotation stopper) to a place where the nut and shaft holes match and completely bend it.

6. Adjusting the tire steering angles

Set the tire steering angles to the maximum and adjust angle A to 77°30' and B to 55°15' for both sides using stopper bolts (1) to (4).
After adjustment, completely tighten the locknut.

A	77°30'
B	55°15'

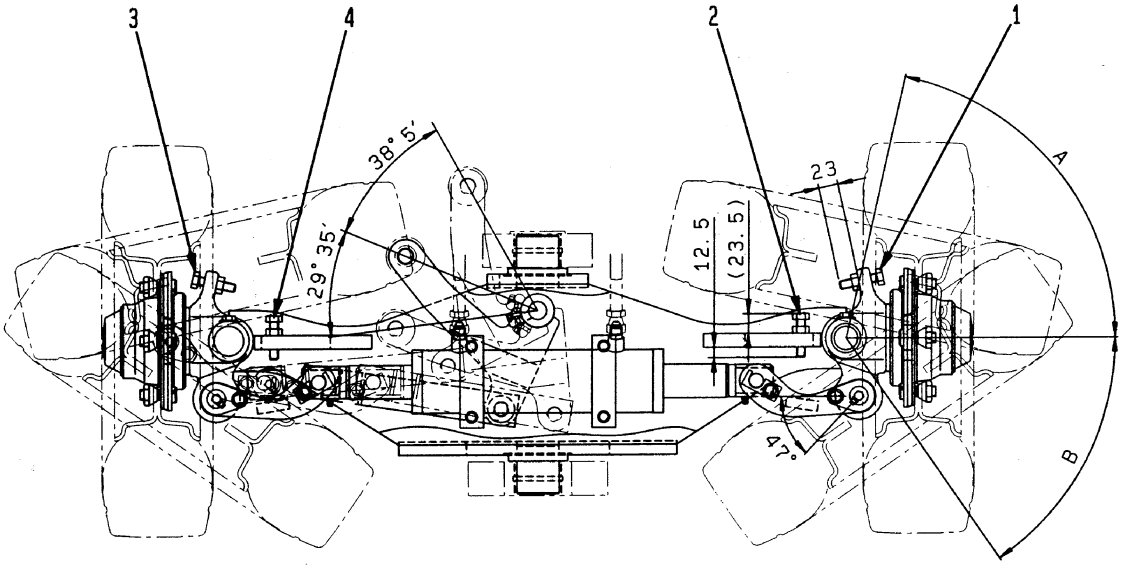

HWZ03946

https://truckmanualshub.com/

LIFT CYLINDER

DISASSEMBLY AND ASSEMBLY

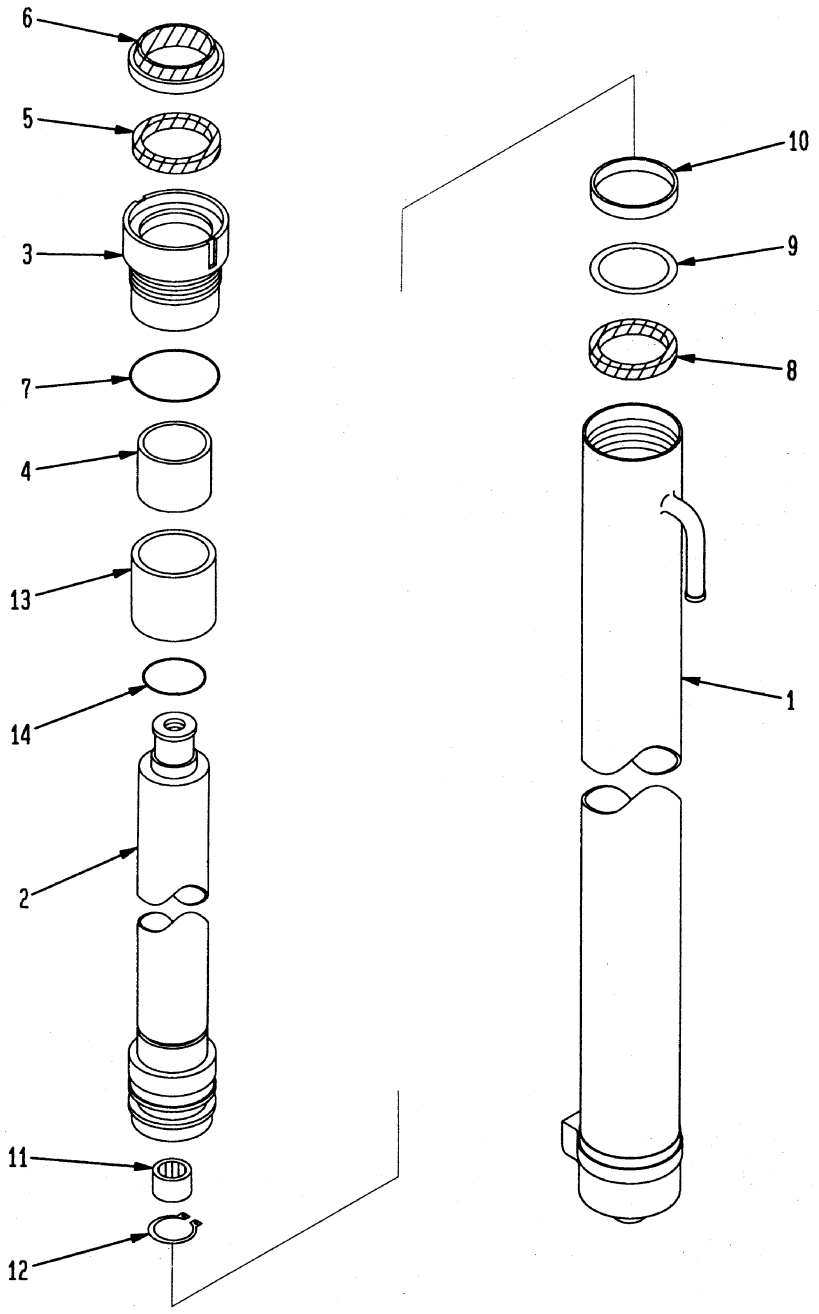

1. Cylinder
2. Piston rod
3. Cylinder head
4. Bushing
5. U-ring
6. Wiper seal
7. O-ring
8. U-ring
9. Back-up ring
10. Bushing
11. Bearing
12. Snap ring
13. Spacer
14. O-ring

https://truckmanualshub.com/

(Mast higher: 3 m)

Item	Unit	
Outer diameter of cylinder	mm	ϕ52
Cylinder bore	mm	ϕ45
Outer diameter of piston rod	mm	ϕ35
Stroke (S)	mm	1505

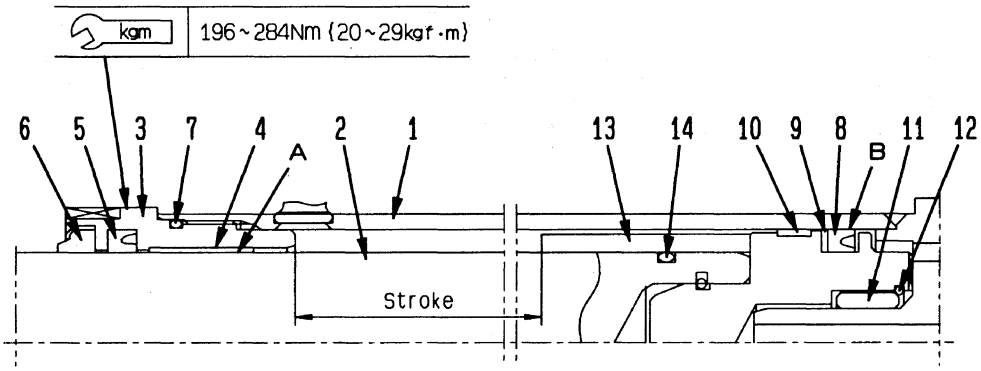

CHECKING AND INSPECTION

Unit: mm (in)

Symbol	Check item	Criteria		Remedy
		Standard size	Repair limit	
A	Clearance between piston rod and bushing	0.06 – 0.235 (0.002 – 0.009)	0.4 (0.016)	Replace of bushing
B	Clearance between piston ring and cylinder	0.05 – 0.30 (0.002 – 0.012)	0.5 (0.020)	Replace of piston ring

https://truckmanualshub.com/

TILT CYLINDER

- Tilting angle can be adjusted by the cooler fixed outside the cylinder.

Diameters of cylinder (Inner Outer)		60 mm × 72 mm (2.36 in × 2.84 in)
Diameter of piston rod		25 mm (0.985 in)
Stroke	6/6°	89.5 mm (3.52 in)
	6/10°	120.5 mm (4.75 in)

1. Rod head
2. Shim
3. (Collar)
4. Dust seal
5. Cylinder head
6. U-packing
7. Cylinder
8. Piston rod
9. Piston
10. O-ring
11. Backup ring
12. Locknut
13. Bushing

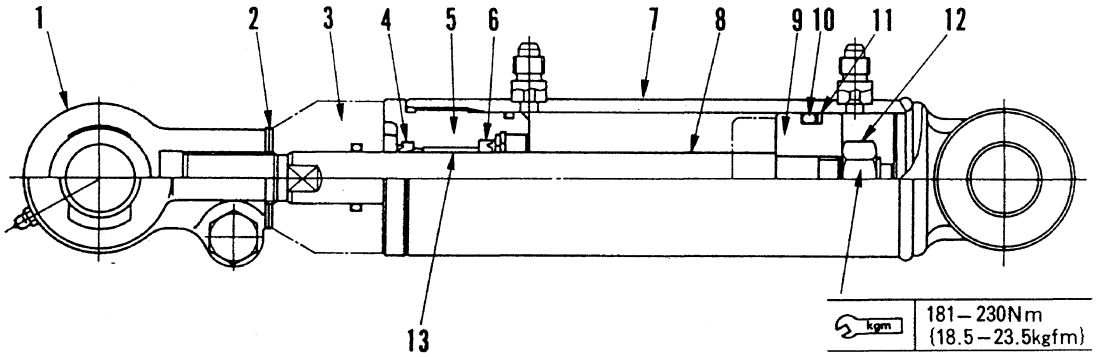

DISASSEMBLING AND ASSEMBLING

- Before disassembling, mark to verify the tightened depth of the rod.
- Use the following special tools to remove the cylinder head.

Special tool	Wrench (3EA-64-13962)
	Bar (3EA-64-13970)

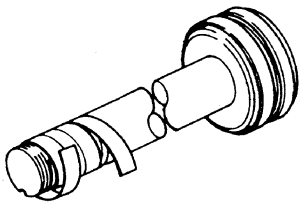

★ Protect the threaded portion of the rod by a tape to the effect neither the dust seal nor the U-packing will be damaged.

CHECKING AND INSPECTION

Unit: mm (in)

Check item	Criteria		Remedy
	Standard size	Repair limit	
Clearance between piston rod and bushing	0.04 – 0.167 (0.0016 – 0.0066)	0.3 (0.012)	Replace bushing
Clearance between rod head bushing and pin	*0.05 – 0.23	0.5 (0.02)	

* In order to measure the lcearance, place a dial gauge at the rod head pin and fix the bushing firmly. The clearance can be obtained by the movement when the bushing has been pushed.

https://truckmanualshub.com/

CONTROL VALVE

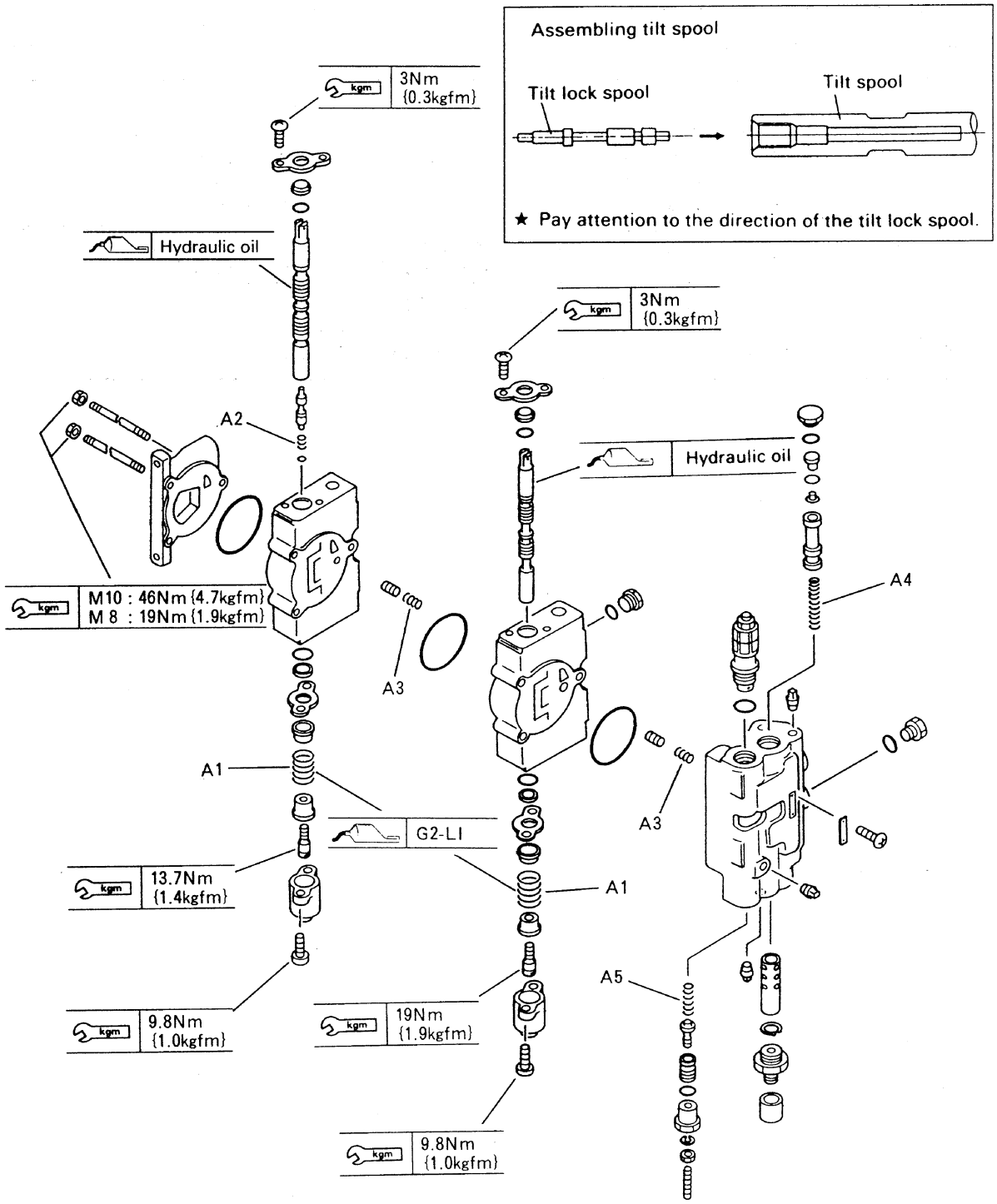

★ Every part must be thoroughly cleaned. Detergent and dust must be removed by compressed air and coat them all with hydraulic oil before assembling.

★ No rags are allowed to be used for removing detergent and dust.

★ As detergent, light oil or trichlene must be used. Caution must be used for fire hazard.

★ Dust seal, U-packing and O-ring must be replaced with new parts coated with grease. Caution must be used not to damage the parts on assembling.

Unit: mm (in)

Symbo	Check item			Criteria		Remedy
				Standard size	Repair limit	
A	Free length of spring	A1	Return spring	56.8 (2.24)	51 (2.01)	Replacement
		A2	Tilt lock spring	26 (1.024)	23.5 (0.926)	
		A3	Check valve	25.4 (1.0)	23 (0.906)	
		A4	Flow divider	112 N (at 55 mm) 11.4 kgf (at 2.2)	112±11 N (at 55 mm) 11.4±1.1 kgf (at 2.2)	
		A5	PS relief valve	33.4 (1.32)	31 (1.22)	
B	Spool and housing			Flushes and scratches		

https://truckmanualshub.com/

HYDRAULIC PUMP

Model	Engine type	Pump model	Pump discharge	Revolution
FG15H, 18H	H20II	KRP4-23CSSBKD	22.9 cm³/rev	Clockwise
FD15, 18	C240	KZP4-27ASSSDD	26.5 cm³/rev	Counterclockwise
FG10 – 18	5K	1PX230	23.0 cm³/rev	Clockwise
FD10L – 18L	4LB1	SGP1A20F1H5-R776	20.4 cm³/rev	Clockwise

KRP4-23CSSBKD
KZP4-27ASSSDD

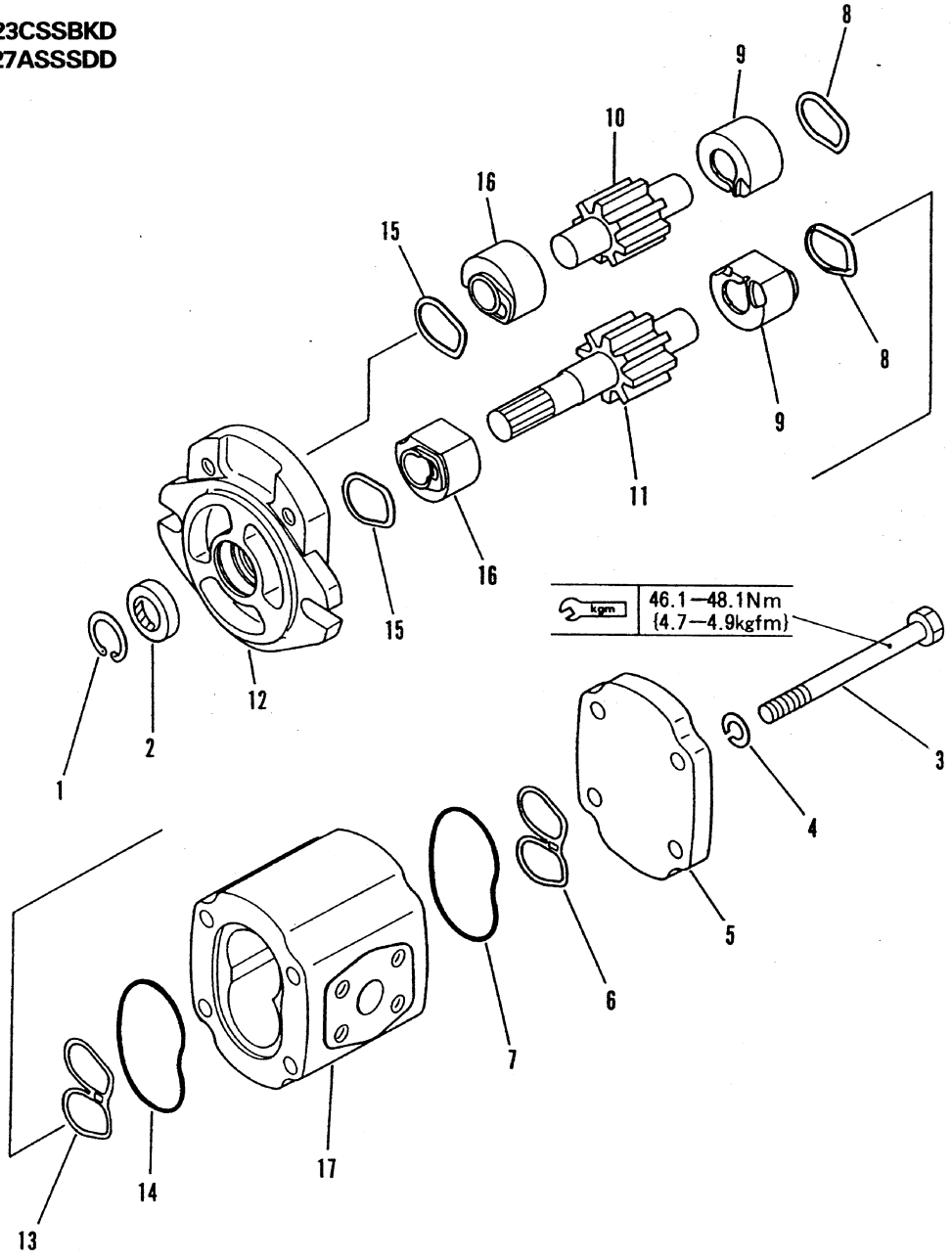

★ Number shows order of disassembly.

https://truckmanualshub.com/

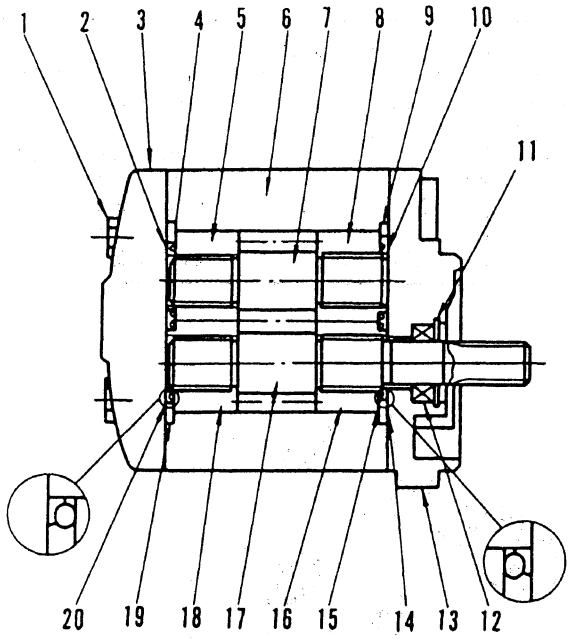

1. Bolt
2. Packing ring L
3. Cover
4. Bushing seal
5. Bushing
6. Body
7. Driven gear
8. Bushing
9. Body seal
10. Packing ring L
11. Snap ring
12. Oil seal
13. Frange
14. Packing ring R
15. Bushing seal
16. Bushing
17. Drive gear
18. Bushing
19. Body seal
20. Packing ring L

CHECKING AND INSPECTION

1. **Checking body for signs of contact with gear**
   For the gear pump to work efficiently, it is necessary for the tip of the teeth to be slightly in contact with the body when the gear rotates.
   1) The dimension A in the figure on the right is more than ø39.180 mm (1.544 in).
   2) The contact covers more than half the inside surface, replace the assembly.

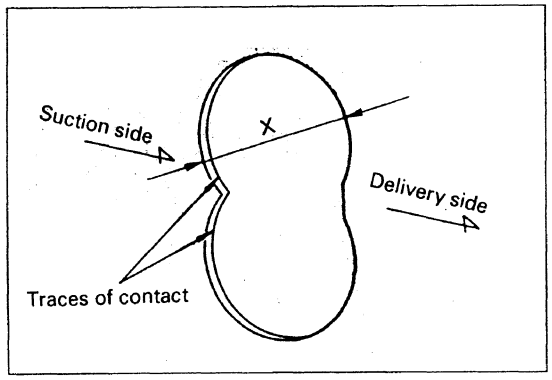

https://truckmanualshub.com/

2. **Checking the bushing for contact with the gear**
   Ideally, the sliding face of the inside diameter should be smooth, with about half the suction side showing shining traces of contact.
   The contact on the side face should be slightly stronger on the intake side with only slight contact on the delivery side.
   1) Replace the bushing if there is contact on the whole of the sliding surface of the inside diameter and there are scratches deep enough for a finger nail to catch in.
   2) Replace the bushing and the gear if there are many scratches around the circumference of the side face and the scratches are deep enough for a finger nail to catch in.
   3) Replace if the measurements are greater than the following.
      Inner diameter: min. ø19.123 mm (0.753 in)
      Overall length: max. 26.411 mm (1.04 in)

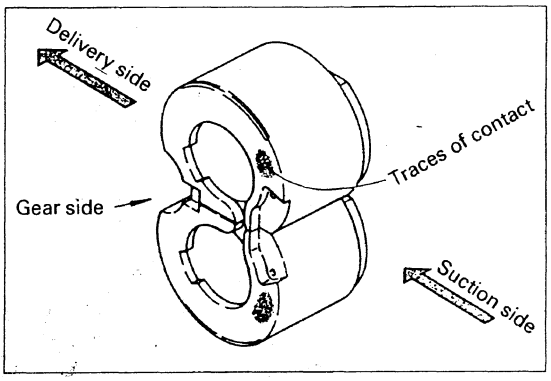

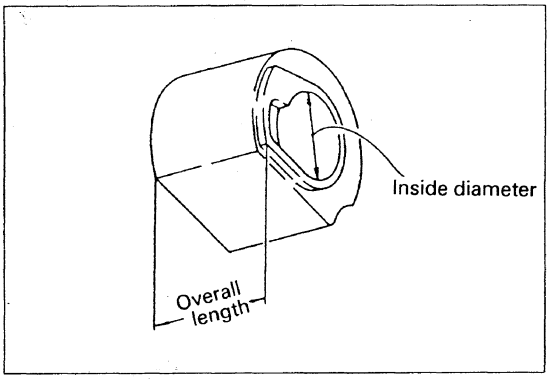

3. **Checking sliding surface of gear in contact with bushing**
   Replace the gear in following cases.
   1) There are scratches on the shaft or the side face of the gear deep enough for a finger nail to catch in.
   2) There is abnormal uneven wear on the face of teeth.
   3) The diameter of the shaft is less than ø18.935 mm (0.746 in).

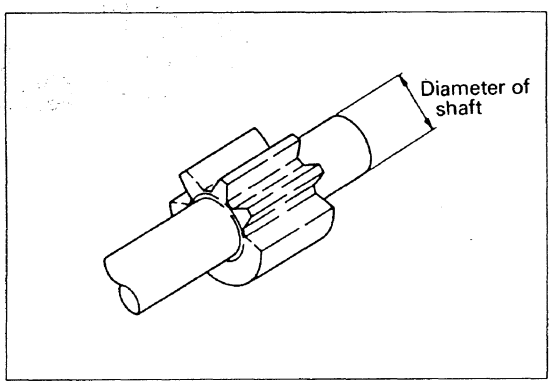

https://truckmanualshub.com/

1PX230

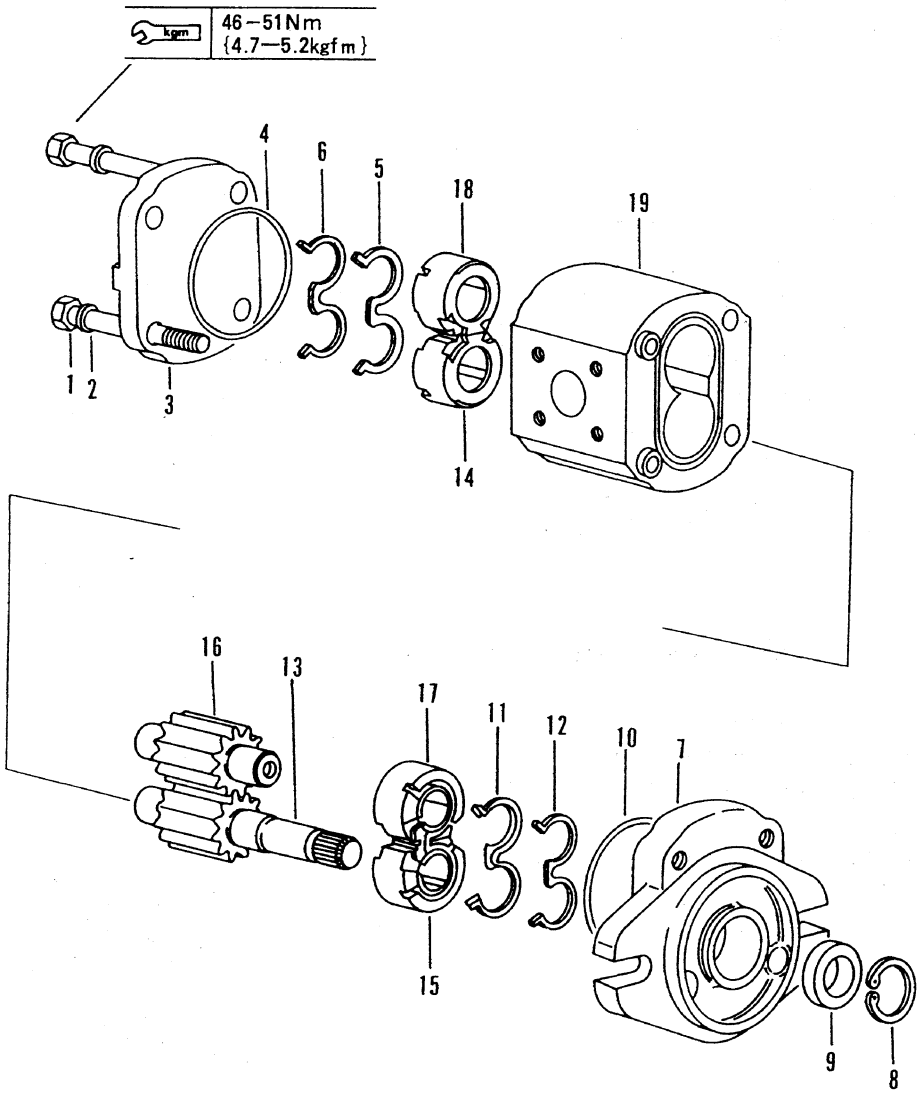

1. Bolt
2. Spring washer
3. End cover
4. Body O-ring
5. Bush seal
6. Back up seal
7. Flange
8. Circlip
9. Shaft seal
10. Body O-ring
11. Bush seal
12. Back up seal
13. Drive shaft and gear
14. Bushing
15. Bushing
16. Drive gear
17. Bushing
18. Bushing
19. Body

★ Number shows order of disassembly.

https://truckmanualshub.com/

SGP1A20F1H5-R776

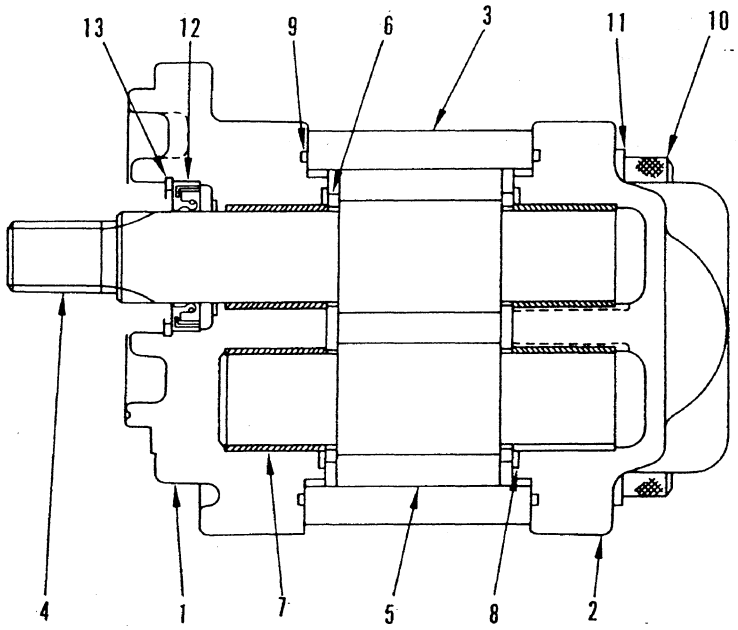

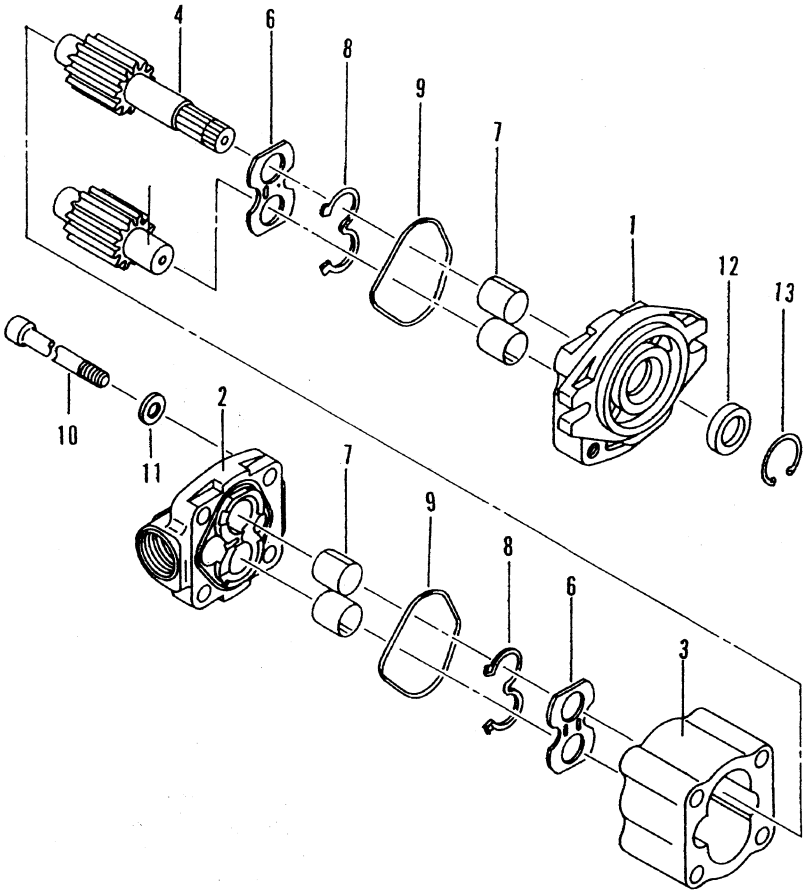

No.	Parts name
1	Front cover
2	Rear cover
3	Body
4	Drive gear
5	Driven gear
6	Side plate
7	Bushing
8	Bush seal
9	Gasket
10	Bolt
11	Washer
12	Oil seal
13	Snap ring

https://truckmanualshub.com/

Preparation

Work stand:	Provided with 83 mm (3.27 in) round holes and equipment to hold pump front cover
Washing fluid:	Pegazol, gasoline, etc.
Grease:	Cosmo Grease Dynamic 3 (Cosmo Oil) or equivalent
Torque wrench:	Tightening torque 88 – 93 Nm (9 – 9.5 kgfm)
Retaining ring pliers:	For holes in C-shape retaining ring 36 mm (1.42 in)
Oil seal inserter:	Pipe of inside diameter 25 mm (0.985 in), outside diameter 35.5 mm (1.4 in), length approx. 50 mm (1.97 in) (Make sure that the end face is finished so that it does not damage the seal.)

Disassembly

1. Fix the pump assembly to the work stand.

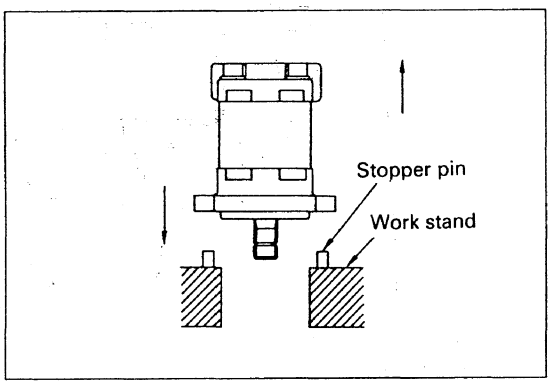

2. Remove the bolts.

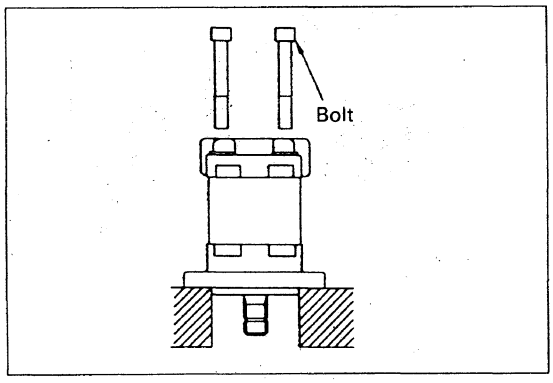

3. Remove the rear cover.
   Remove the external leakage prevention gasket and figure-3-shaped gasket

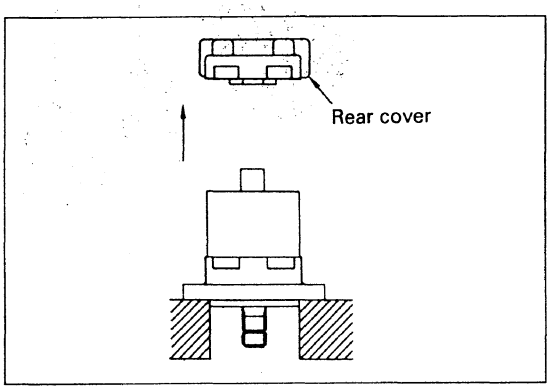

https://truckmanualshub.com/

4. Remove the body.
   Remove the side plate at the rear from the gear shaft.

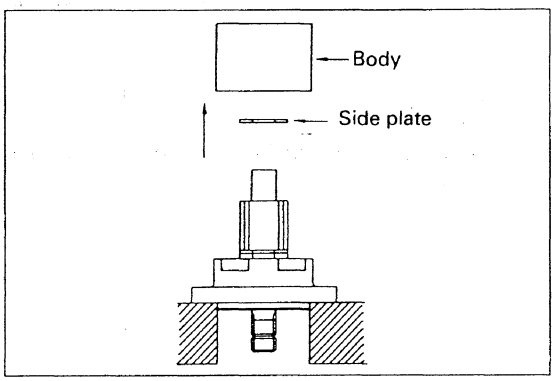

5. Remove the gear.

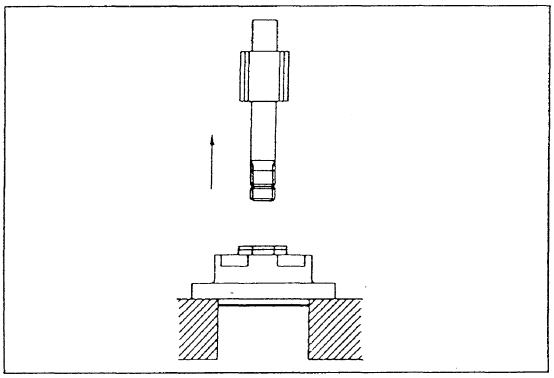

6. Remove the snap ring.
   (Use pliers)

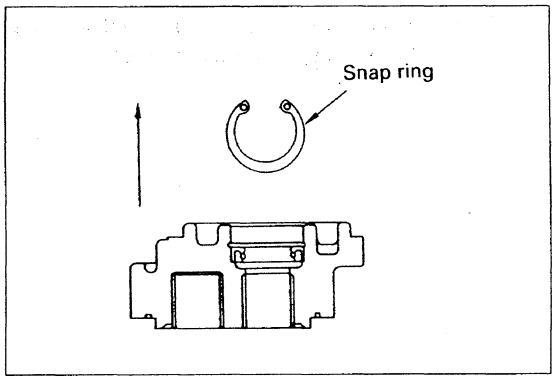

7. Fit the tip of a flat-headed screwdriver under the lip of the oil seal, and remove the oil seal.
   When doing this, be careful not to damage the seal housing.

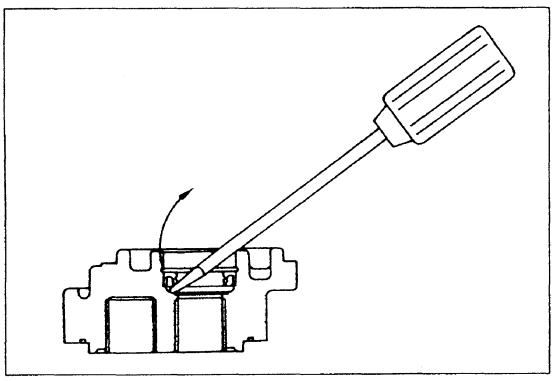

https://truckmanualshub.com/

Assembly

If necessary, replace with new parts. Wash all re-usable parts thoroughly with washing fluid before assembling.

1. Secure the front cover to the work stand.
2. Insert the external leakage prevention gasket in the groove.

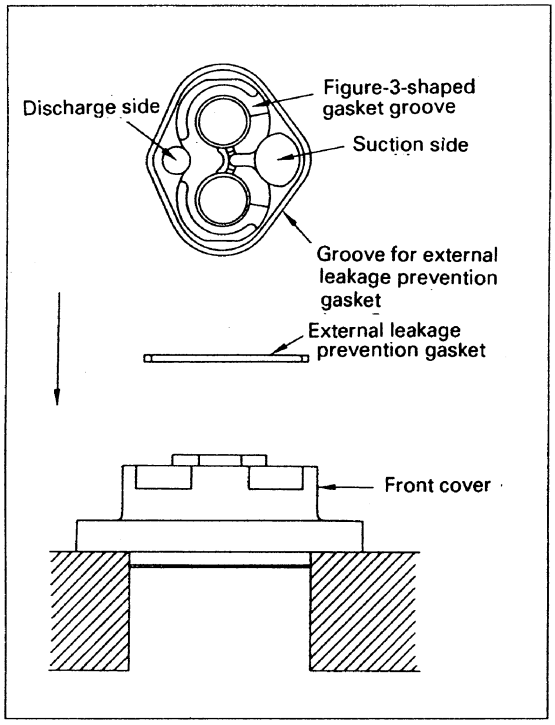

3. Fit the body.
   Assemble with the small port on the discharge side, and the large escape grade at the rear.

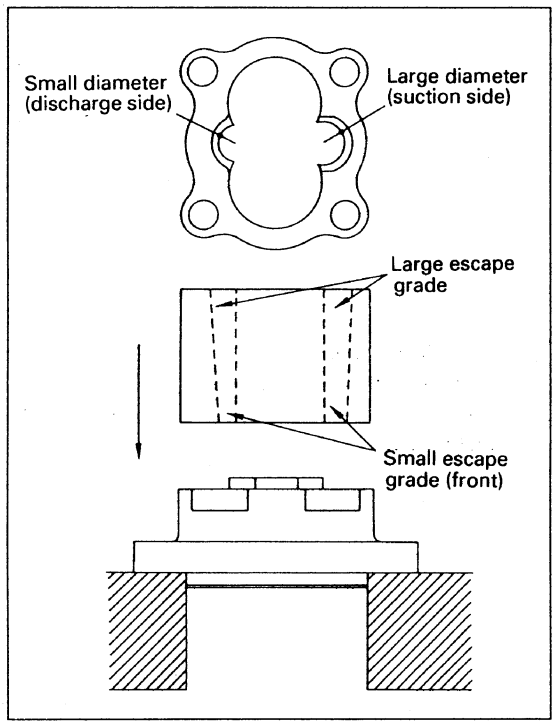

https://truckmanualshub.com/

4. Assemble the figure-3-shaped gasket as shown in the diagram so that the flat face is at the bottom of the groove.

5. Assemble the side plate on top of the figure-3-shaped gasket so that the yellow face is at the gear end and the small diameter is at the discharge side.

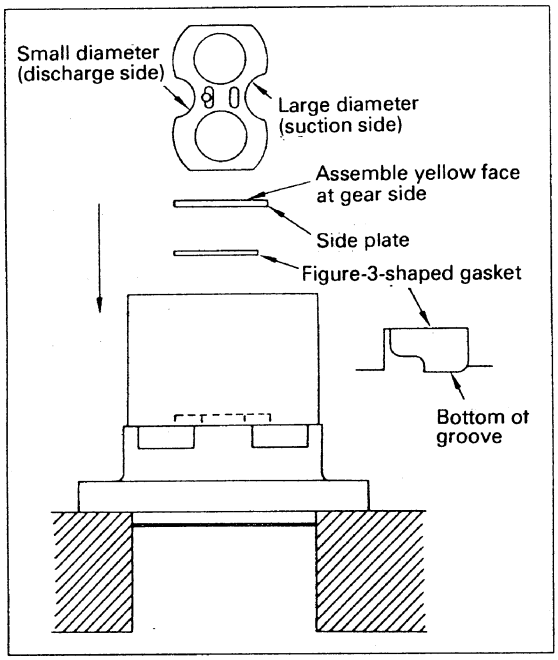

6. Insert the gear.

7. Insert the side plate at the rear end.

8. At the rear cover end, coat the external leakage prevention gasket and figure-3-shaped gasket with grease to prevent them from falling out, then assemble to the body.

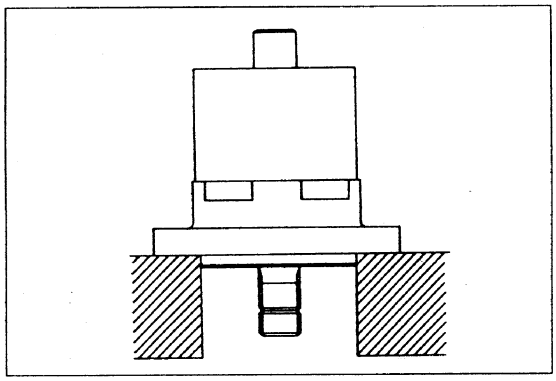

9. Install the oil seal, and tap the seal inserter. Insert perpendicularly and be careful not to damage the lip and outside circumference.

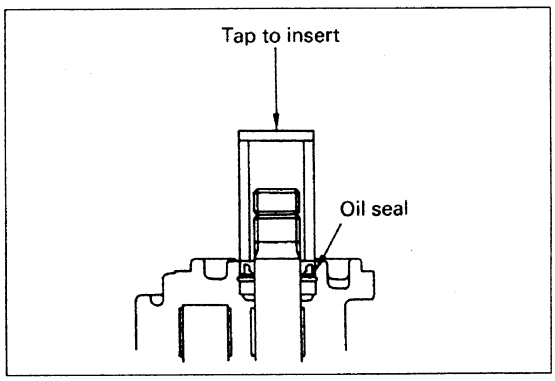

https://truckmanualshub.com/

Failures and causes

No.	Condition of failure	Probable causes	Remedy
1	Oil leakage from oil seal	1) Reverse rotation 2) Abnormally high pressure at suction side 3) Seal lip damaged by dirt 4) Wear or damage to shaft seal portion	1) Remove cause of reverse rotation or abnormally high pressure at suction side 2) Replace oil seal 3) Replace shaft
2	Leakage of oil from join of cover and body	1) Damage or looseness of bolt 2) Damage or drop in sealing performance caused by heat hardening of gasket	1) Remove abnormally high pressure or vibration causing damage or loosening of bolts 2) Replace bolts, gasket
3	Leakage of oil from port	1) Damage or looseness at port joint 2) Damage to joint seal material 3) Damage to port	1) Remove abnormally high pressure or vibration causing damage or loosening of joint 2) Replace joint seal material 3) Replace cover
4	Reduction in discharge amount or lack of pressure	1) Lack of oil in tank 2) Abnormally high temperature of hydraulic oil caused by lack of capacity of cooling device or increase in internal leakage caused by unsuitable viscosity of hydraulic oil 3) Drop in pump performance caused by dirt in hydraulic oil 4) Cavitation 5) Pump failure	1) Correct tank oil level, change to correct type of hydraulic oil, replace cooling device 2) Change dirty hydraulic oil 3) Check length and thickness of suction piping, clean filter, and remove other causes of abnormal negative pressure 4) Replace pump
5	Abnormal rise in temperature of pump or hydraulic oil	1) Abnormal generation of heat by frequent actuation of relief valve 2) Lack of capacity in cooling device 3) Pump failure	1) Change to suitable negative pressure 2) Replace cooling device 3) Replace pump
6	Abnormal noise or vibration	1) Cavitation 2) Entry of air 3) Defective centering during installation 4) Resonance of piping or mounting flange	1) Remove cause of abnormal negative pressure 2) Remove cause of low oil level or entry of air into suction piping 3) Collect installation and centering 4) Strengthen piping or mounting flange to remove cause of resonance

https://truckmanualshub.com/

MAST

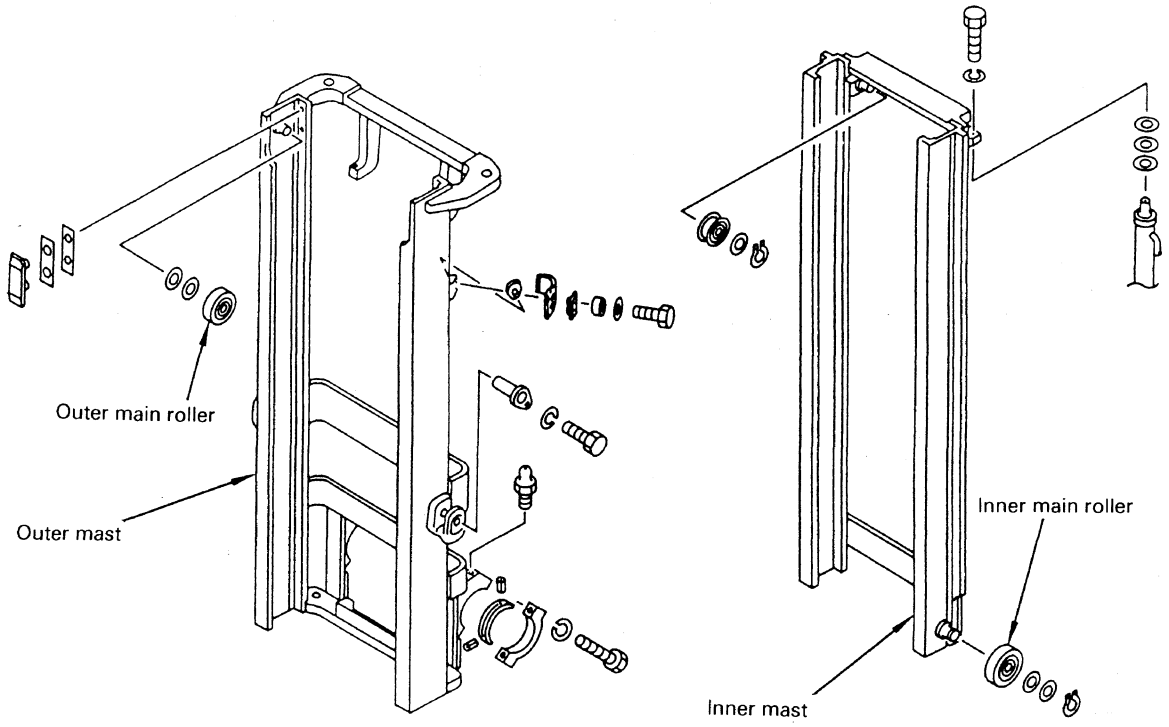

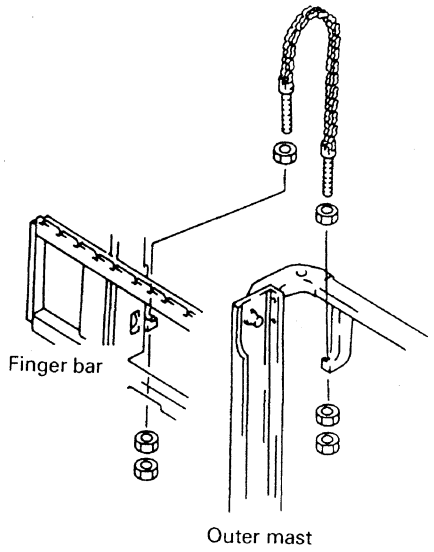

https://truckmanualshub.com/

ADJUSTMENTS

Outer main roller

1. **Selection of roller size**
   Select such rollers (NS and NM) as no difference can be made at the "V" between the left and right masts.

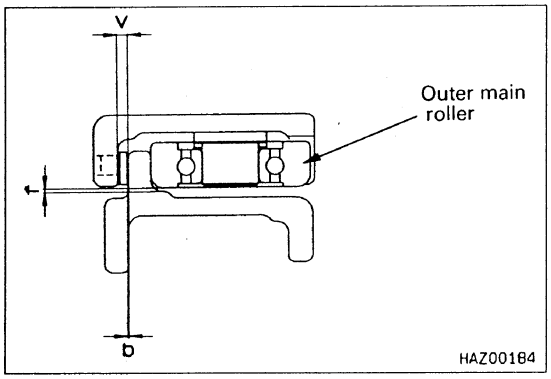

2. **Shim adjustment**
   Use the shims (A) of the same thickness with a clearance 0 – 0.3 mm (0 – 0.012 in) at "f" at the maximum lifting height.
   Put the shims (B) to make the clearance "b" 0.1 – 0.4 mm (0.004 – 0.016 in) all along the inner rail, when the roller is pushed to the rail.

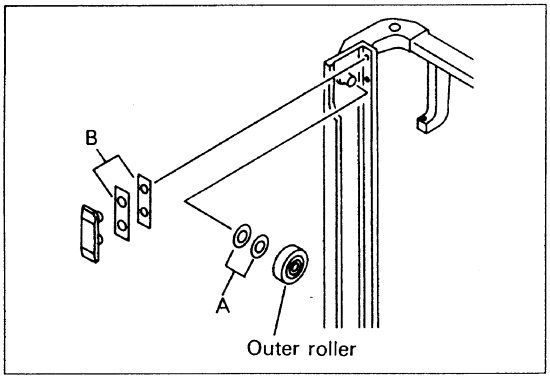

Inner main roller

1. **Selection of roller size**
   Select such rollers (NS, NM, L and NLL) as to make the clearance "a" to be 0.2 – 0.7 mm (0.008 – 0.028 in).

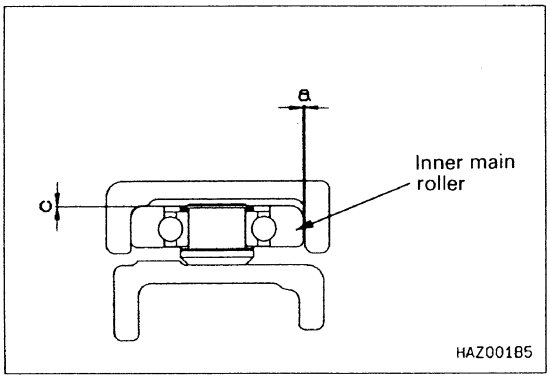

2. **Shim adjustment**
   At the maximum lifting height, insert the shims (C), when the roller is pushed to the rail, to make the clearance "c" to identically 0 – 0.3 mm (0 – 0.012 in), in the left and right rails.

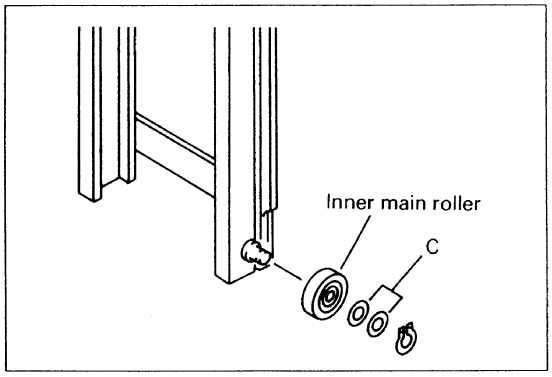

https://truckmanualshub.com/

FORK CARRIAGE

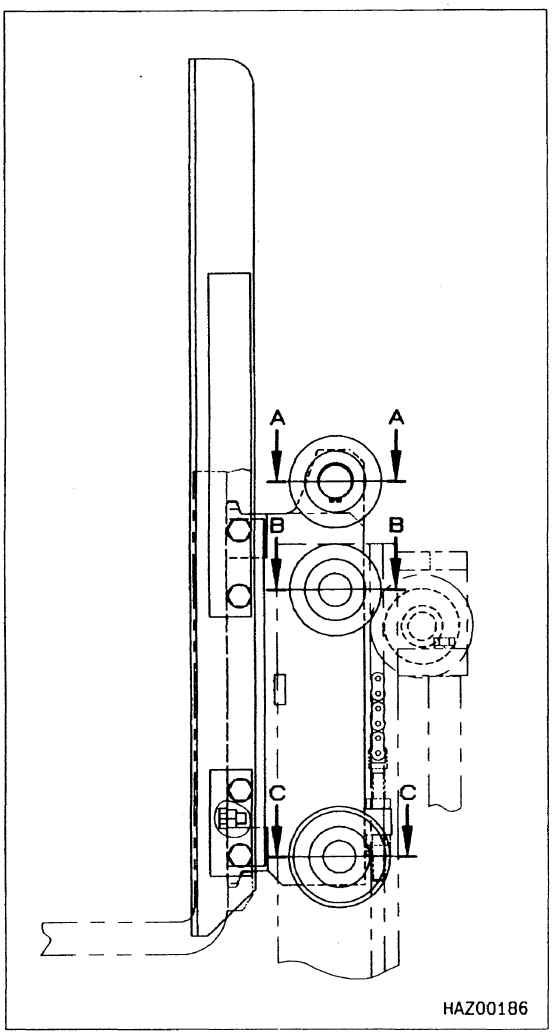

1. Section A-A (3-roller type)

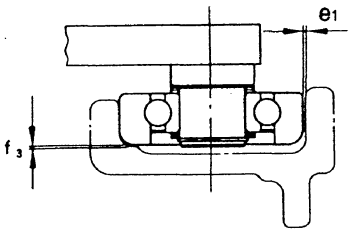

Section A-A (3-roller type only)

1) Select such rollers as to make the clearance "e_1" to be 0.3 – 1.1 mm (0.012 – 0.043 in).
2) Use the shims of the same thickness to make the clearance "f_3" to be 0.4 – 0.7 mm (0.016 – 0.028 in) in the left and right at the top of the fork carriage.

2. Section B-B

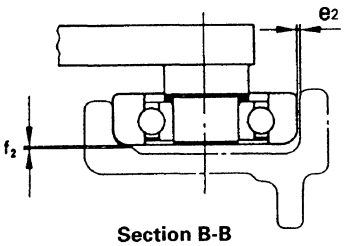

Section B-B

1) Select such rollers as to make the clearance "e_2" to be 0.3 – 1.1 mm (0.012 – 0.043 in).
2) Use the shims of the same thickness to make the clearance "f_2" to be 0.1 – 0.4 mm (0.004 – 0.016 in) (3-roller) and 0.4 – 0.7 mm (0.016 – 0.028 in) (2-roller) in the left and right at the top of the fork carriage.

3. Section C-C

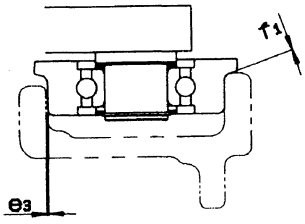

Section C-C HAZ00187

1) Select such rollers as to make the clearance "e_3" to be 0.3 – 1.1 mm (0.012 – 0.043 in).
2) Use the shims of the same thickness to make the clearance "f_1" to be 0 – 0.2 mm (0 – 0.008 in) in the left and right at the top of the fork carriage.

Protrusion "A" (at the lowest position)

The distance between the bottom of the inner mast and the center of the lower roller of the fork carriage.

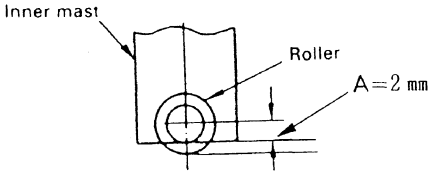

Distance "A"

Model	STD tires		Double tires
	J-lug	U-lug	
FG(D)10/18	27 mm (1.06 in)	30 mm (1.18 in)	45 mm (1.77 in)

https://truckmanualshub.com/

CHECKING AND INSPECTION

Unit: mm (in)

Check item		Criteria		Action required
		Standard size	Repair limit	
Clearance between inner mast and outer mast	To side	0.1 – 0.3 (0.004 – 0.012)	Within 2.0 (0.08)	Adjustment of shims
	To front/rear	0.5 – 1.0 (0.02 – 0.04)	Within 2.0 (0.08)	Replacement with over-sized roller(s)
Clearance between inner mast and fork carriage	To side	0.5 – 2.0 (0.02 – 0.08)	Within 2.5 (0.10)	Adjustment of shims
	To front/rear	0.5 – 1.0 (0.02 – 0.04)	Within 2.0 (0.08)	Replacement with over-sized roller(s)
Depth of oil groove in mast support bushing		Oil groove noted	No oil groove	Replacement of bushing
Thickness of forks (at the basis)	FG(D)10	31 (1.22)	Min. 26 (1.024)	Replacement
	FG(D)14	35 (1.38)	Min. 30 (1.18)	
	FG(D)15	35 (1.38)	Min. 30 (1.18)	
	FG(D)18	35 (1.38)	Min. 33 (1.3)	

https://truckmanualshub.com/

40. MAINTENANCE STANDARD

Clutch release cylinder 40- 3
Clutch 40- 4
Clutch mission 40- 6
Torque converter 40- 8
Wheel brake 40- 9
TORQFLOW transmission 40-10
Differential 40-12
Wheel brake 40-13
Brake master cylinder 40-14
Steering axle 40-16
Power steering cylinder 40-17
Lift cylinder 40-18
Tilt cylinder 40-19
Control valve 40-20
Mast, fork carriage 40-22

https://truckmanualshub.com/

https://truckmanualshub.com/

CLUTCH RELEASE CYLINDER

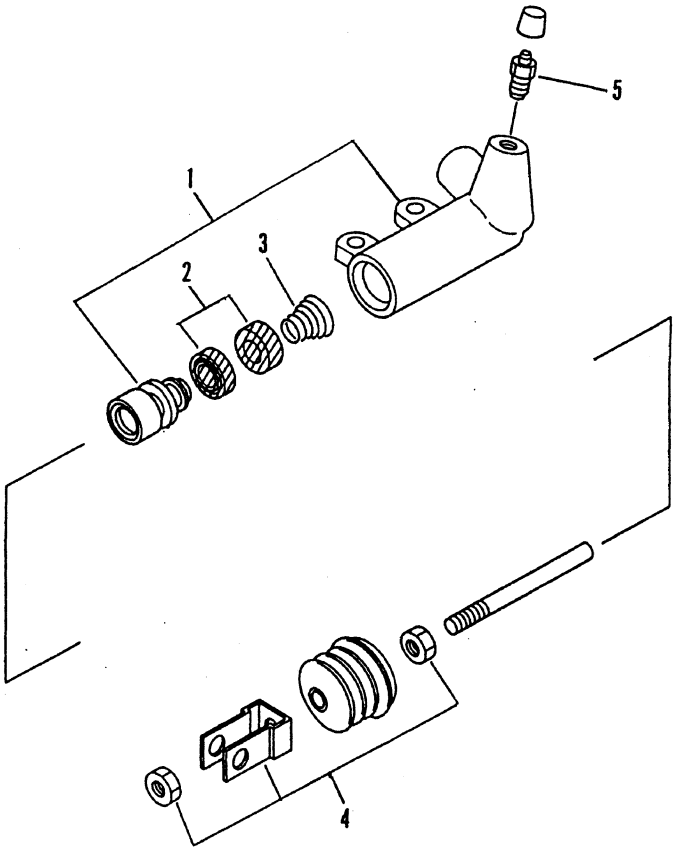

Unit : mm(in)

No.	Check item	Standard value	Limit	Remedy
1	Clearance between cylinder and piston	0.020 – 0.105 (0.008 – 0.004)	0.15 (0.006)	Replace (clinder assembly)
2	Interference of cup	Primary side: Approx. 2 mm (0.08) Secondary side: Approx. 0.6 mm (0.023)	0.4 (0.016)	Replace (piston assembly)
3	Free length of spring	43 (1.7)	38 (1.5)	Replace
4	Tightening torque of yoke and locknut	7.8 – 11.8 Nm {80 – 120 kgfcm}	—	—
5	Tightening torque for bleeder valve	6.8 – 8.8 Nm {70 – 90 kgfcm}	—	—

https://truckmanualshub.com/

CLUTCH

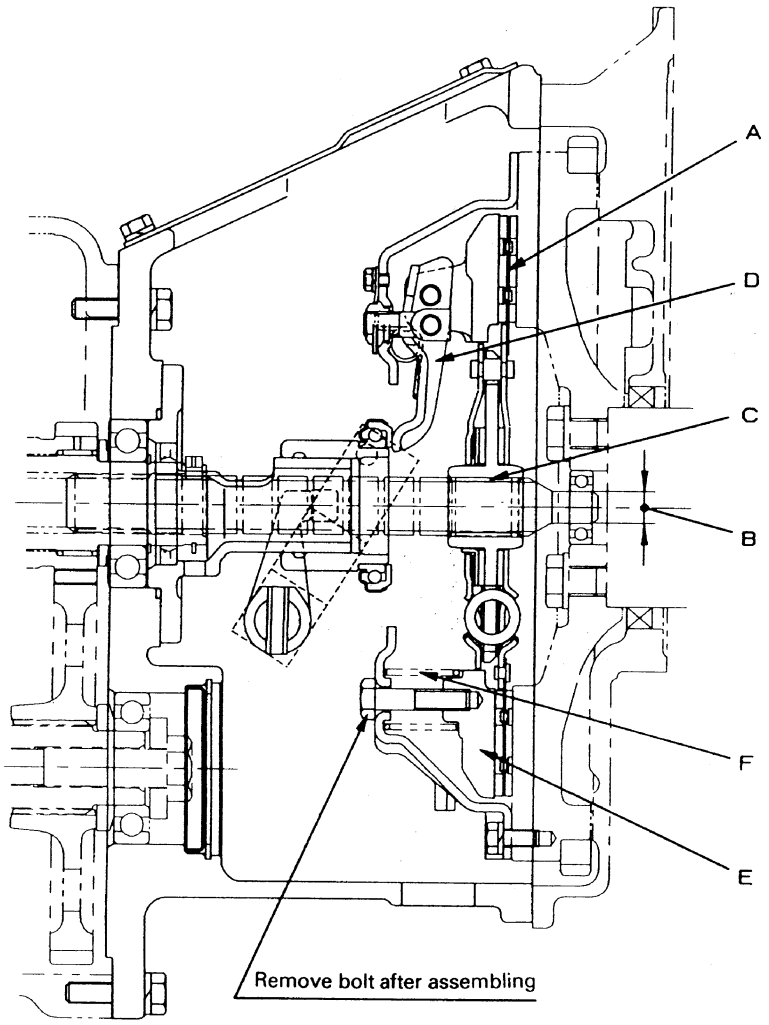

HAZ00131

https://truckmanualshub.com/

Unit: mm (in)

Symbol	Check item		Criteria: Standard size	Criteria: Repair limit	Remedy
A	Thickness of clutch disc (both faces)	5K 4LB1 H20II C240	8.9 (0.35)	0.3 (0.01) (Depth to revet head)	Replace
B	Diameter of drive shaft tip	5K 4LB1 H20II C240	ø15 (0.59)	ø14.85 (0.585)	Correct hard chrome plating
C	Play of spline in rotating direction		—	0.5 (0.02)	Replace
	Face runout of outside circumference		—	0.7 (0.027)	
D	Height of release lever	5K 4LB1 H20II C240	59 (2.3)	—	Replace release bearing if there is any seizure, damage, or wear 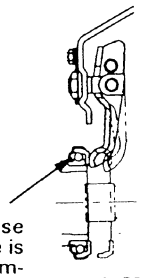 HAZ00132
	Distance of movement of release lever	5K 4LB1 H20II C240	Max. 12 (0.47)	—	
	Wear-in amount of release lever	5K 4LB1 H20II C240	14 (0.55)	—	
E	Pressure plate		Damage, stepped wear of friction surface		Replace
F	Coil spring		Deformation, deterioration		Replace pressure plate assembly

Method of measuring remaining thickness of clutch disc

- Measure with calipers at both the engine end and pressure plate end. (See diagram on right.)

★ Take the smallest depth to the head of the rivet as the standard when judging.

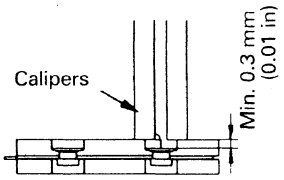

HAZ00133

https://truckmanualshub.com/

CLUTCH MISSION

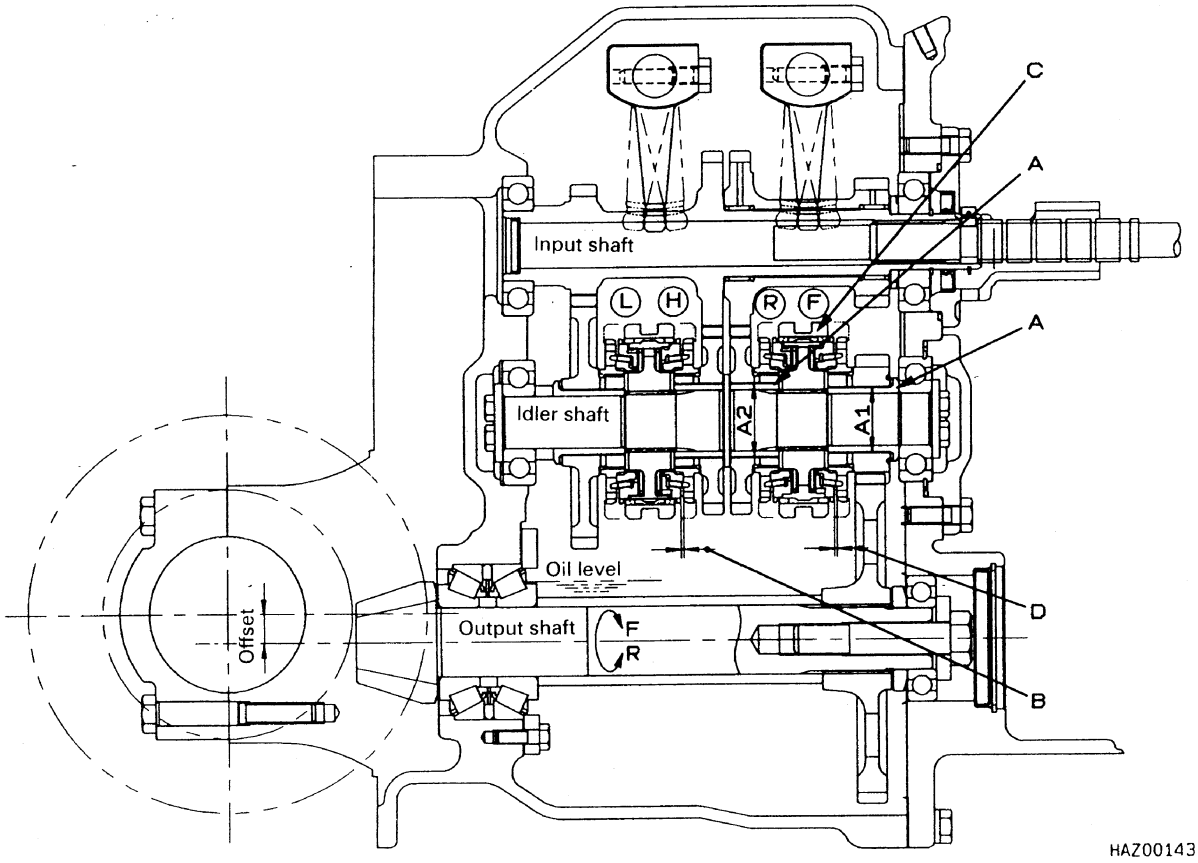

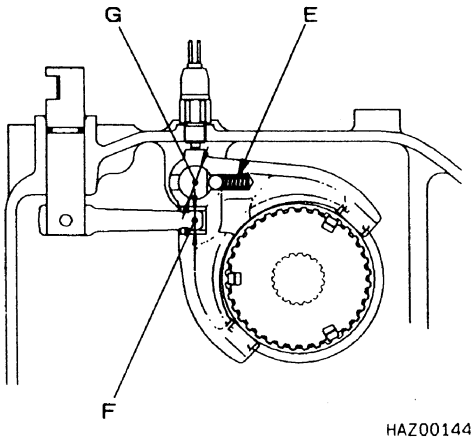

https://truckmanualshub.com/

Unit: mm (in)

Symbol	Check item		Criteria		Remedy
			Standard size	Repair limit	
A	Outside diameter of bushing	A1	38 (1.497)	37.8 (1.489)	Replace
		A2	43 (1.694)	42.8 (1.686)	
B	Clearance between balk ring and H, L gear (*1)		1.2 – 1.8 (0.048 – 0.071)	0.8 (0.03)	Replace as assembly *1
C	Clearance between shifter yoke and sleeve gear (*2)		0.04 – 0.39 (0.002 – 0.015)	1.0 (0.04)	Replace *2
D	Clearance between balk ring and F, R gear		1.2 – 1.8 (0.048 – 0.071)	0.8 (0.03)	Replace
E	Deterioration of spring (free length)		21.0 (0.83)	18 (0.71)	
F	Outside diameter of tip of shift lever		13 (0.51)	12.5 (0.49)	
G	Inside diameter of shifter yoke mount		22 (0.867)	22.1 (0.87)	
—	Gears	Backlash	0.08 – 0.28 (0.03 – 0.011)	—	
		Clearance in thrust direction	0.15 – 0.35 (0.06 – 0.014)	—	
—	Tooth surface		• Damage • Excessive wear, defective tooth contact		
—	Bearing		• Seizure, wear • Abnormal noise, defective rotation		
—	Gasket O-ring Seals		—		Replace with new parts during disassembly and assembly

*1: Dimension when balk ring is moved to outside
*2: Dimension when shifter yoke is pushed fully in either direction

https://truckmanualshub.com/

TORQUE CONVERTER

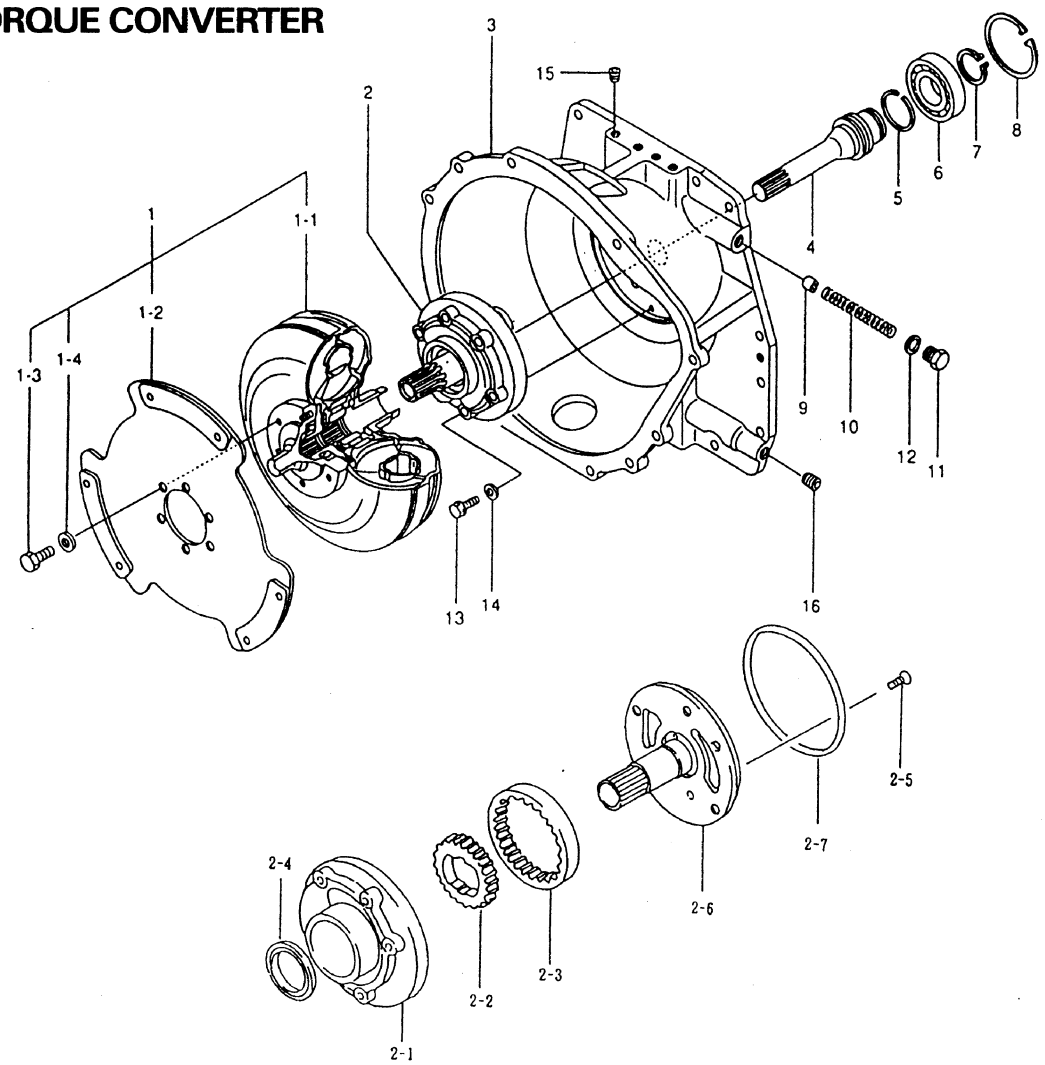

No.	Name	Q'ty	No.	Name	Q'ty
1	Torque converter circuit	1	4	Turbine shaft	1
1-2	Input plate assembly	1	5	Seal ring	1
1-3	Small hexagon bolt	6	6	Ball bearing	1
1-4	Washer	6	7	Snap ring	1
2	Gear pump assembly	1	8	Snap ring	1
2-1	Case assembly	1	9	Piston	2
2-2	Drive gear	1	10	Pressure spring	1
2-3	Driven gear	1	11	Plug	2
2-4	Oil seal	1	12	Gasket	2
2-5	Countersunk head screw	1	13	Hexagon bolt	5
2-6	Stator support	1	14	Gasket	5
2-7	O-ring	1	15	Hexagon socket head plug PT 1/4	4
3	Housing	1	16	Hexagon socket head plug PT 3/4	2

https://truckmanualshub.com/

Unit: mm (in)

No.	Check item	Criteria: Standard size	Criteria: Repair limit	No.	Remedy
1	Torque converter inlet port valve Piston and housing hole 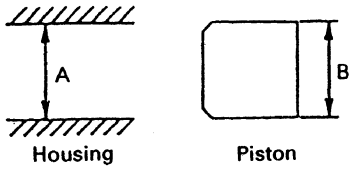 A mm B mm mm	14 – 14.018 (0.551 – 0.552) 13.96 – 13.97 (0.550 – 0.5504) 0.030 – 0.058 (0.001 – 0.002)	0.080 (0.003)	3 9	Replace piston
2	Torque converter inlet port valve spring 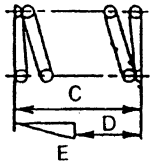 C: Free length D: Installed length C mm E: Installed load D mm E N {kg}	103.4 (4.07) 62.7 (2.47) 75.6 N (77.1 kg) ±5%	68.1 N (6.94 kg)	10	Replace
3	Gear pump Oil seal and torque converter impeller hub 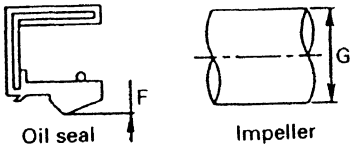 F mm G mm	41.915 – 41.965 (1.651 – 1.653)	41.5 (1.64) 41.815 (1.648)	2-4 1-1	
	Bushing and torque converter impeller hub 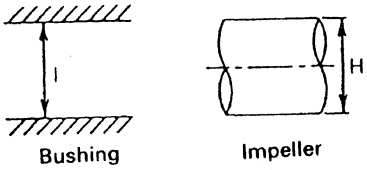 H mm I mm mm	41.915 – 41.965 (1.651 – 1.653) 42 – 42.039 (1.655 – 1.656) 0.035 – 0.124 (0.001 – 0.005)	0.17 (0.007)	1-1 2-1	
4	Turbine shaft Housing hole and seal ring groove 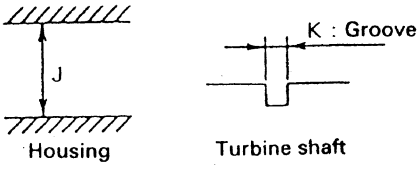 J mm K mm	50.10 – 50.15 (1.974 – 1.976) 2.5 – 2.6 (0.099 – 0.102)	50.25 (1.98) 2.7 (0.106)	3 4	
	Seal ring 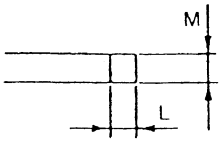 L mm M mm	2.0 – 2.2 (0.079 – 0.087) 2.35 – 2.40 (0.093 – 0.094)	1.8 (0.071) 2.15 (0.085)	5	

The numbers used in the No. column of the table refer to the numbers in the component part drawing.

https://truckmanualshub.com/

TORQFLOW TRANSMISSION

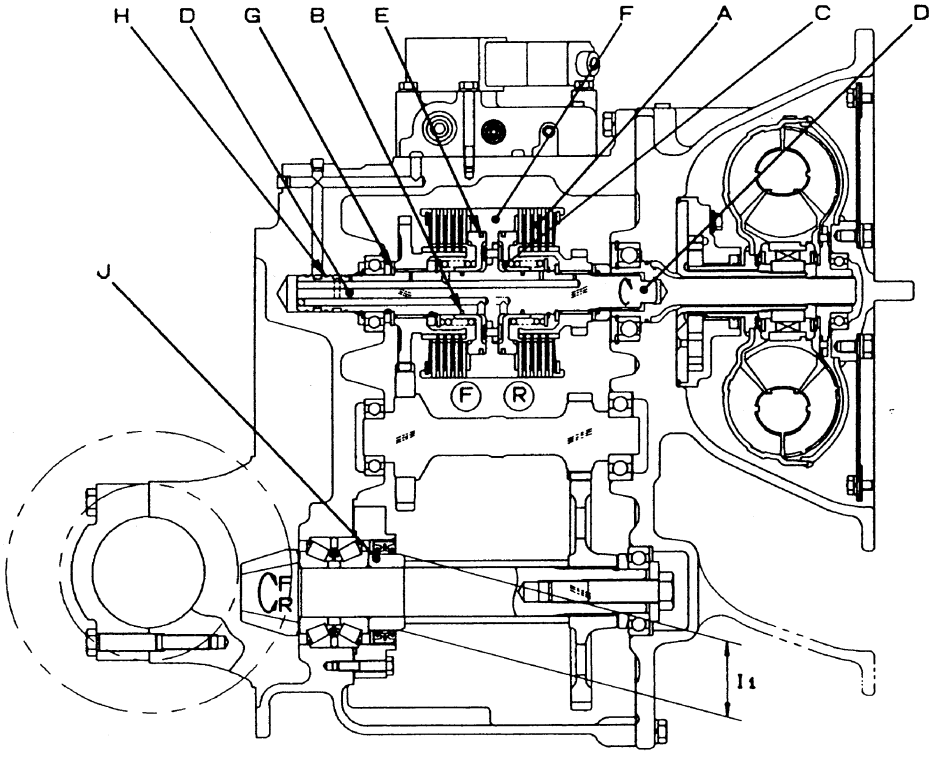

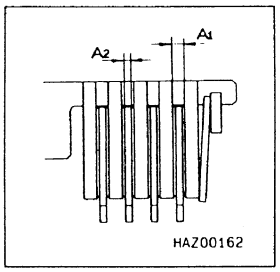

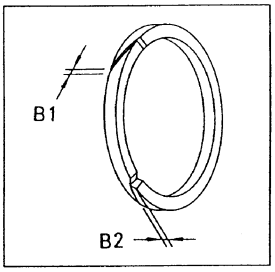

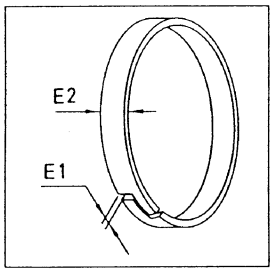

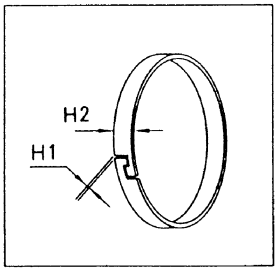

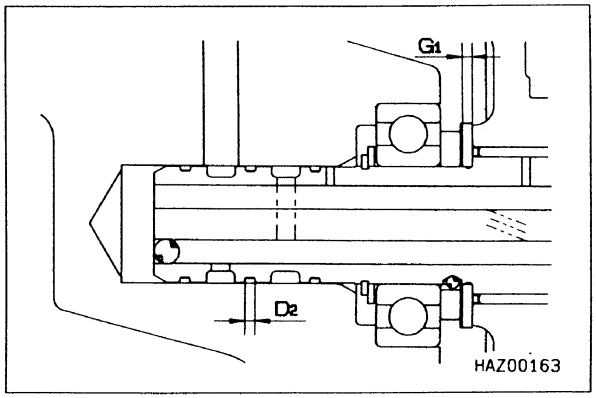

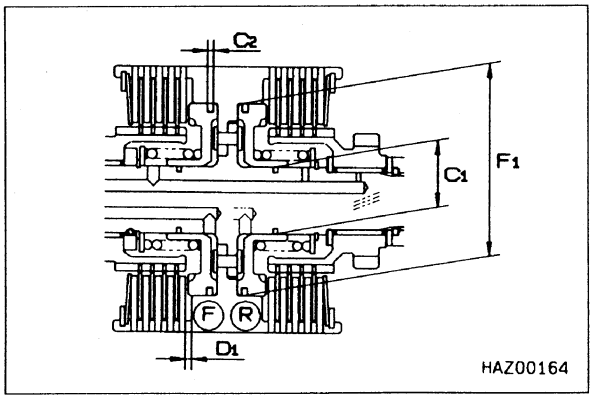

https://truckmanualshub.com/

Unit: mm (in)

Symbol	Check item			Criteria		Remedy
				Standard size	Repair limit	
A	Plate	A1	Thickness of drive plate	3.13 – 3.27 (0.123 – 0.129)	2.9 (0.114)	Replace
		A2	Thickness of driven plate	2.90 – 3.05 (0.114 – 0.120)	2.6 (0.102) (Oil groove depth: Min. 0.2 (0.008))	
B	Seal ring	B1	Clearance at end gap when inserting piston	0.36 – 0.56 (0.014 – 0.022)	—	Replace each time disassembly is carried out
		B2	Depth of oil groove in side face	0.15 – 0.35 (0.006 – 0.014)	There must be oil groove	
		(D1)	Insertion groove width	2.60 – 2.65 (0.102 – 0.104)	2.8 (0.11)	
C	Piston	C1	Inside diameter of seal ring contact surface	35.025 – 35.050 (1.380 – 1.381)	35.2 (1.387)	Replace
		C2	Seal ring insertion groove width	3.1 – 3.2 (0.122 – 0.126)	3.4 (0.134)	
D	Drive shaft	D1	Seal ring insertion groove width	2.60 – 2.65 (0.102 – 0.104)	2.8 (0.11)	
		D2	Seal ring insertion groove width	2.57 – 2.62 (0.101 – 0.103)	2.8 (0.11)	
E	Seal ring	E1	Clearance at end gap when inserting clutch case	0.2 – 0.4 (0.008 – 0.016)	1.0 (0.04)	
		E2	Width	2.97 – 3.01 (0.117 – 0.119)	2.77 (0.109)	
		(C2)	Insertion groove width	3.1 — 3.2 (0.122 – 0.126)	3.4 (0.134)	
F	Clutch case	F1	Inside diameter of seal ring contact surface	100 – 100.054 (3.94 – 3.942)	100.3 (3.952)	
G	Thrust washer	G1	Thickness	2.9 – 3.1 (0.114 – 0.127)	2.5 (0.0985)	
H	Seal ring	H1	Clearance at end gap when inserting cap	0.1 – 0.3 (0.004 – 0.012)	0.65 (0.025)	
		H2	Width	2.47 – 2.51 (0.097 – 0.099)	2.25 (0.089)	
		(D2)	Insertion groove width	2.57 – 2.62 (0.101 – 0.103)	2.8 (0.11)	
I	Retainer	I1	Outside diameter of oil seal contact surface	61.926 – 62.000 (2.440 – 2.443)	61.83 (2.436)	
—	Gears	—	Backlash	0.08 – 0.28 (0.003 – 0.011)	—	
		—	Thrust clearance	0.3 – 0.7 (0.012 – 0.027)	—	
—	Gasket, O-ring, seals			—	—	Replace with new parts during disassembly and assembly

https://truckmanualshub.com/

DIFFERENTIAL

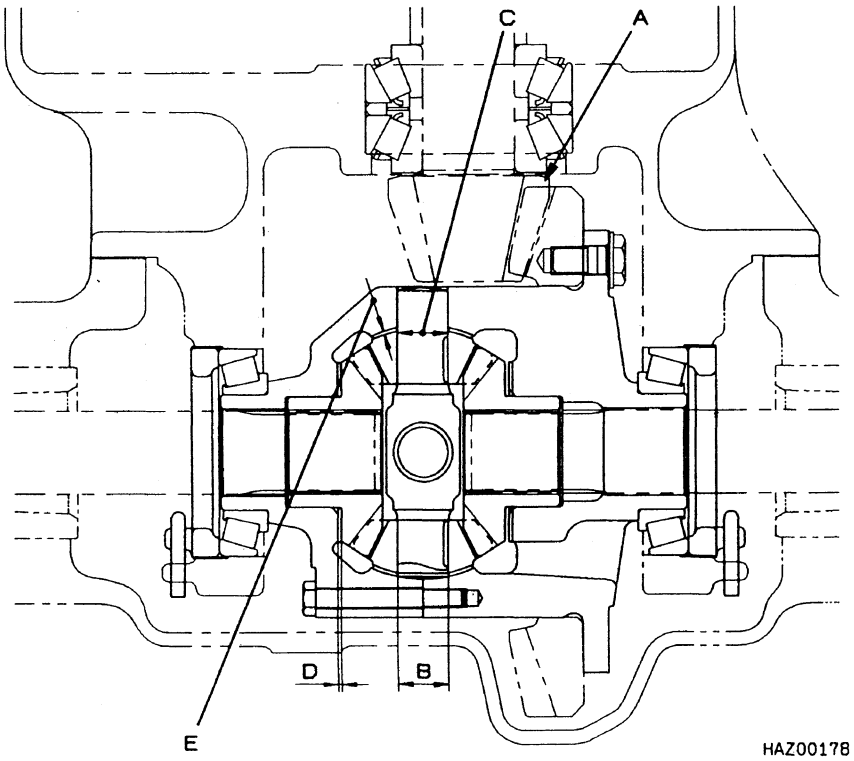

Unit: mm (in)

Symbol	Check item	Criteria		Remedy
		Standard size	Repair limit	
A	Differential pinion gear and differential side gear	—	If there is damage to tooth surface	Replace (replace bevel gear and pinion as a set)
B	Outside diameter of spider	21.959 – 21.980 (0.865 – 0.866)	21.75 (0.857)	Replace
C	Inside diameter of differential pinion gear	22.0 – 22.025 (0.8668–0.8678)	22.12 (0.871)	
D	Thickness of bushing	1.54 – 1.66 (0.061 – 0.065)	1.3 (0.05)	
E	Thickness of bushing	1.54 – 1.66 (0.061 – 0.065)	1.3 (0.05)	
—	(Inside diameter of brake drum)	254.0 – 254.2 (0.001 – 10.015)	256 (10.086)	
—	Gasket O-ring Seals	—	—	Replace with new parts during disassembly and assembly.

https://truckmanualshub.com/

WHEEL BRAKE

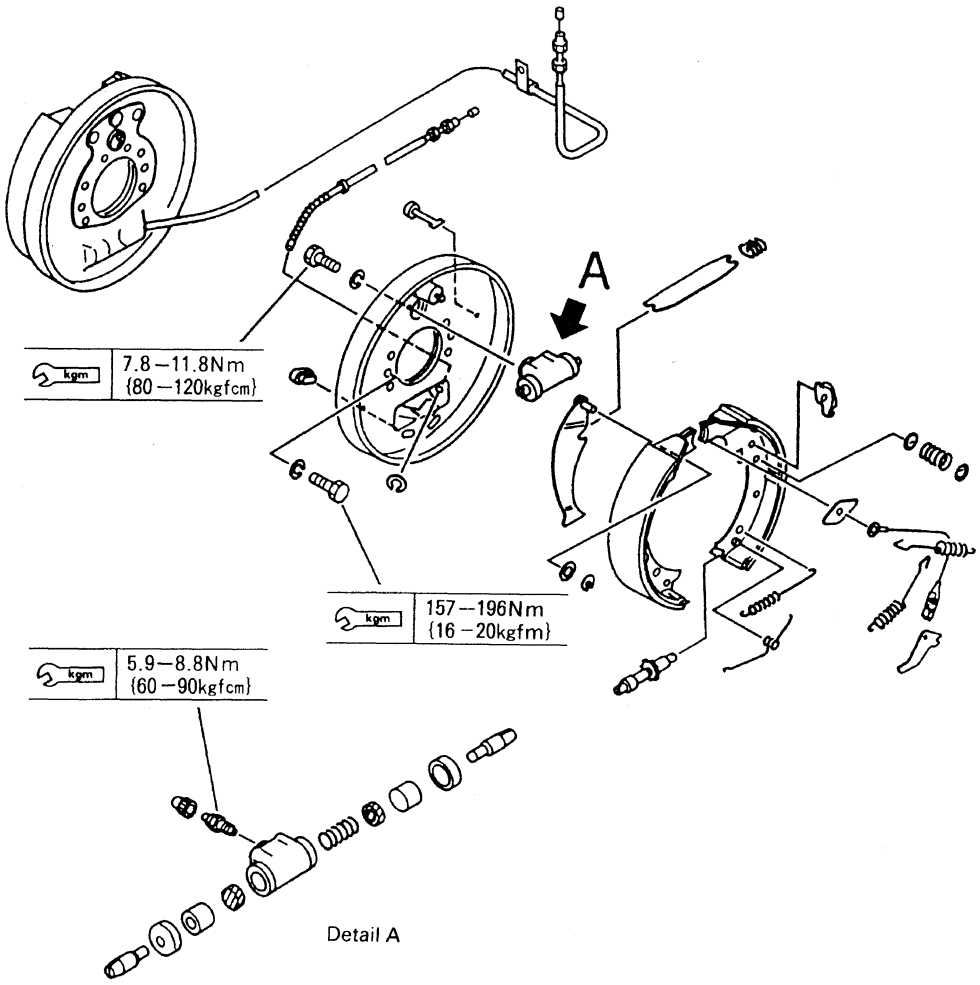

Unit: mm (in)

Check item	Criteria		Remedy
	Standard size	Repair limit	
Thickness of lining	4.5 (0.177)	2.0 (0.08)	Replace
Deterioration of return spring	Free length: 97 (3.82)	105 (4.14)	
Thickness of return spring hook portion	2.6 (0.102)	2.0 (0.08)	
Clearance between piston and cylinder	0 – 0.05 (0 – 0.002)	0.2 (0.008)	

Check for scratches on the wheel cylinder sliding surface and for damage or deterioration of the cup.

https://truckmanualshub.com/

BRAKE MASTER CYLINDER

COMPONENT PARTS

No.	Parts name	Q'ty
1	Cylinder	1
2	Stop wire	1
3	Stop plate	1
4	Piston	1
5	Spring	1
6	Valve ass'y	1
7	Valve seat	1
8	Boot	1
9	Push rod	1
10	:Nut	2
11	Yoke	1
12	Stop pin	1
13	Gasket	1
14	O-ring	1
15	Reservoir	1
16	Indicator ass'y	1
17	Filter	1
18	Clamp	1
19	Cap	1

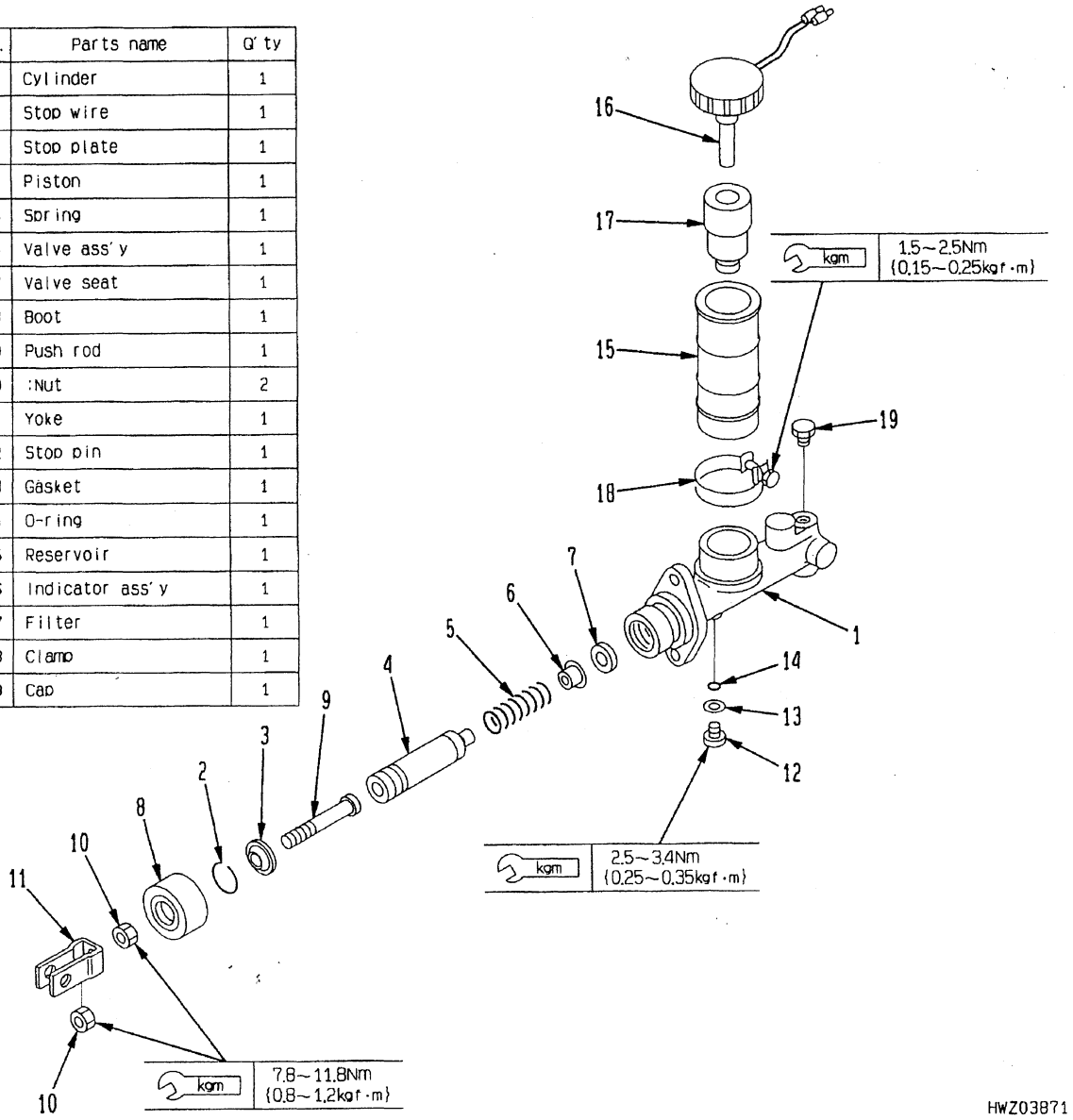

TESTING

Check item	Criteria		Remedy
	Standard size (mm)	Repair limit(mm)	
Clearance between cylinder and piston	0.020 – 0.105	0.15	Replace cylinder assembly
Interference of cup (outside diameter of cup - inside diameter of cylinder)	0.5 – 0.6	0.3	Replace piston assembly
Free length of spring	70.8	63	Replace

https://truckmanualshub.com/

Unit: mm (in)

No.	Check item	Standard value	Limit	Remedy	
1	Clearance between cylinder and piston	0.020 – 0.105 (0.008 – 0.004)	0.15 (0.006)	Replace (cylinder assembly)	1, 30
2	Interference of cup	Primary side: Approx. 1 mm (0.04) Secondary side: Approx. 1.4 mm (0.06)	0.3 (0.012)	Replace (piston assembly)	30
3	Free length of spring	70.8 (2.78)	63 (2.48)	Replace	11
4	Tightening torque for stop pin	2.5 – 3.4 Nm {0.25 – 0.35 kgfm}	—	—	18
5	Tightening torque of yoke and locknut	7.8 – 11.8 Nm {0.8 – 1.2 kgfm}	—	—	16, 17
6	Tightening torque for clamp	1.5 – 2.5 Nm {0.15 – 0.25 kgfm}	—	—	24

https://truckmanualshub.com/

STEERING AXLE

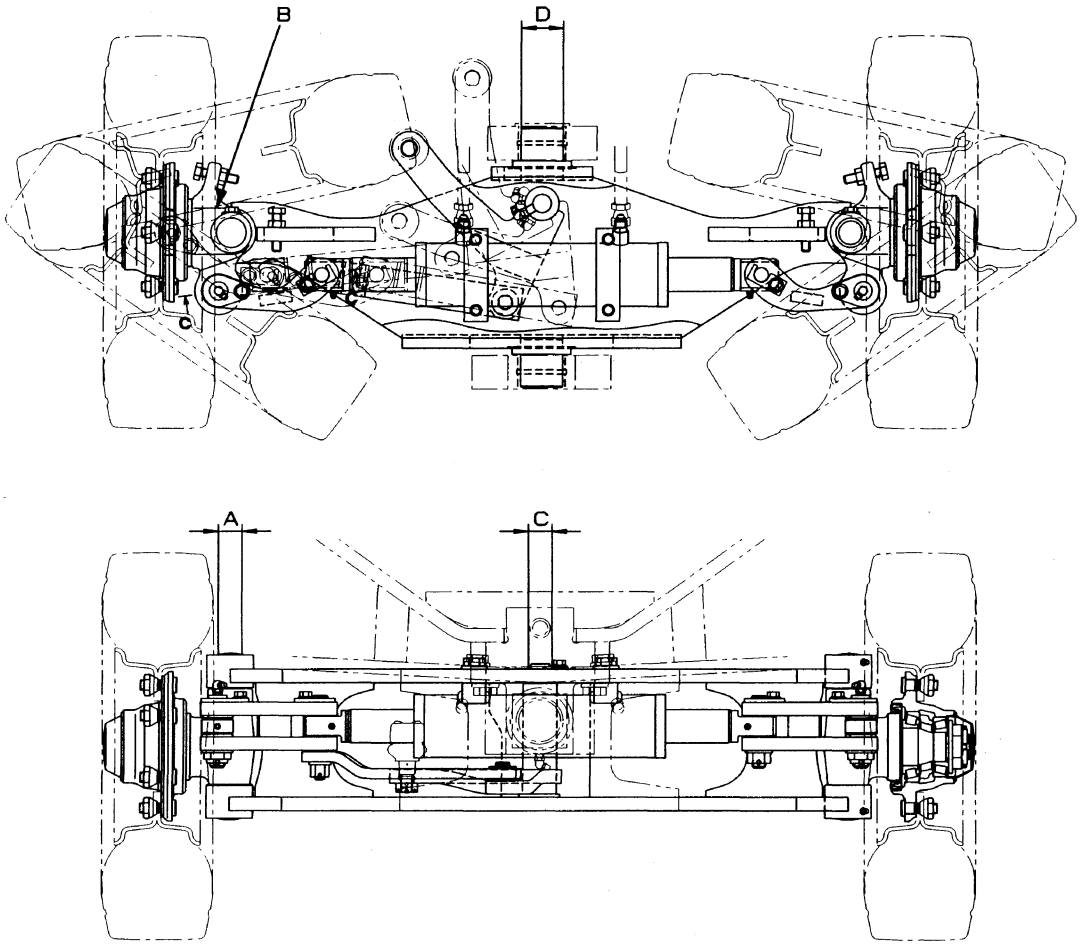

HWZ03948

Unit: mm (in)

Symbol	Check item	Criteria		Remedy
		Standard size	Repair limit	
A	Diameter of king pin	28 (1.103)	27.8 (1.095)	Replace
B	Vertical play of knuckle	—	0.2 (0.008)	Adjust shim
C	Diameter of bellcrank pin	28 (1.103)	27.8 (1.095)	Replace
D	Diameter of center pin	50 (1.97)	49.5 (1.95)	
—	Steering axle, hub, knuckle, bearing	• Cracks • Damage, peeling • Seizure, defective rotation, abnormal noise		

These symbols correspond to the alphabetical codings in the drawing at left.

POWER STEERING CYLINDER

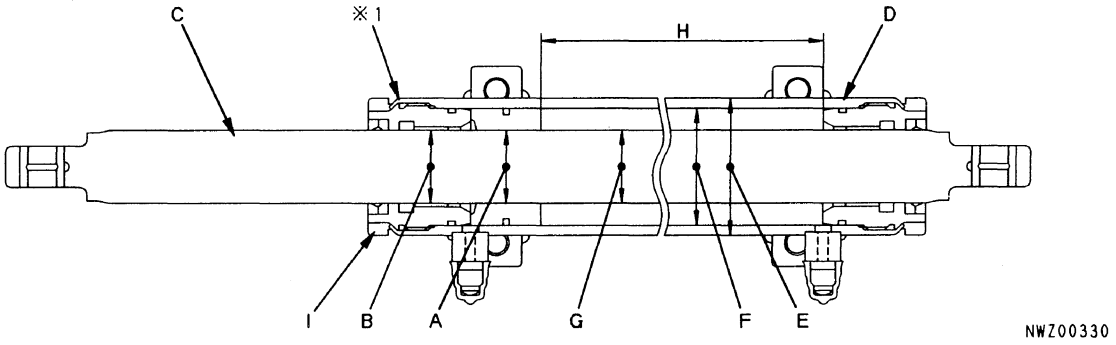

※1. After tightening, caulk 1 place on periphery (on both sides).

Unit: mm (in)

Symbol	Check item	Criteria		Remedy
		Standard size	Repair limit	
A	Clearance between cylinder and piston	0.05 – 0.25 (0.002 – 0.010)	0.4 (0.016)	Replace
B	Clearance between piston rod and bushing	0.03 – 0.18 (0.001 – 0.007)	0.3 (0.012)	
C	Piston rod	Flaw, bruise, scratch, dent felt with nail		
D	Cylinder	Flaw, bruise, scratch, dent felt with nail		
E	Outside diameter of cylinder	75 (2,953)		—
F	Inside diameter of cylinder	65 (2,559)		
G	Diameter of piston rod	40 (1,575)		
H	Stroke	146 (5,748)		
I	Tightening torque for head	245 – 294 Nm {20 – 30 kgfm}		

https://truckmanualshub.com/

LIFT CYLINDER

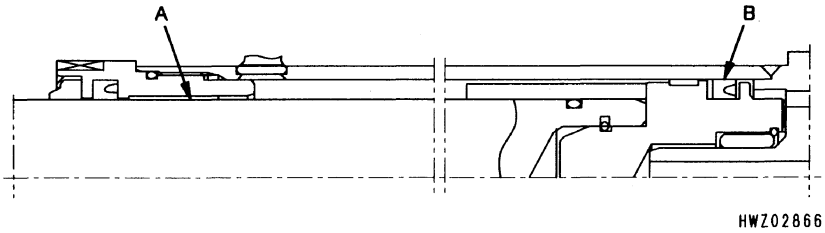

Unit: mm (in)

Symbol	Check item	Criteria		Remedy
		Standard size	Repair limit	
A	Clearance between piston rod and bushing	0.06 – 0.235 (0.002 – 0.009)	0.4 (0.016)	Replace of bushing
B	Clearance between piston ring and cylinder	0.05 – 0.30 (0.002 – 0.012)	0.5 (0.020)	Replace of piston ring

https://truckmanualshub.com/

TILT CYLINDER

- Tilting angle can be adjusted by the cooler fixed outside the cylinder.

Diameters of cylinder (Inner Outer)		60 mm x 72 mm (2.36 in x 2.84 in)
Diameter of piston rod		25 mm (0.985 in)
Stroke	6/6°	89.5 mm (3.52 in)
	6/10°	120.5 mm (4.75 in)

1. Rod head
2. Shim
3. (Collar)
4. Dust seal
5. Cylinder head
6. U-packing
7. Cylinder
8. Piston rod
9. Piston
10. O-ring
11. Backup ring
12. Locknut
13. Bushing

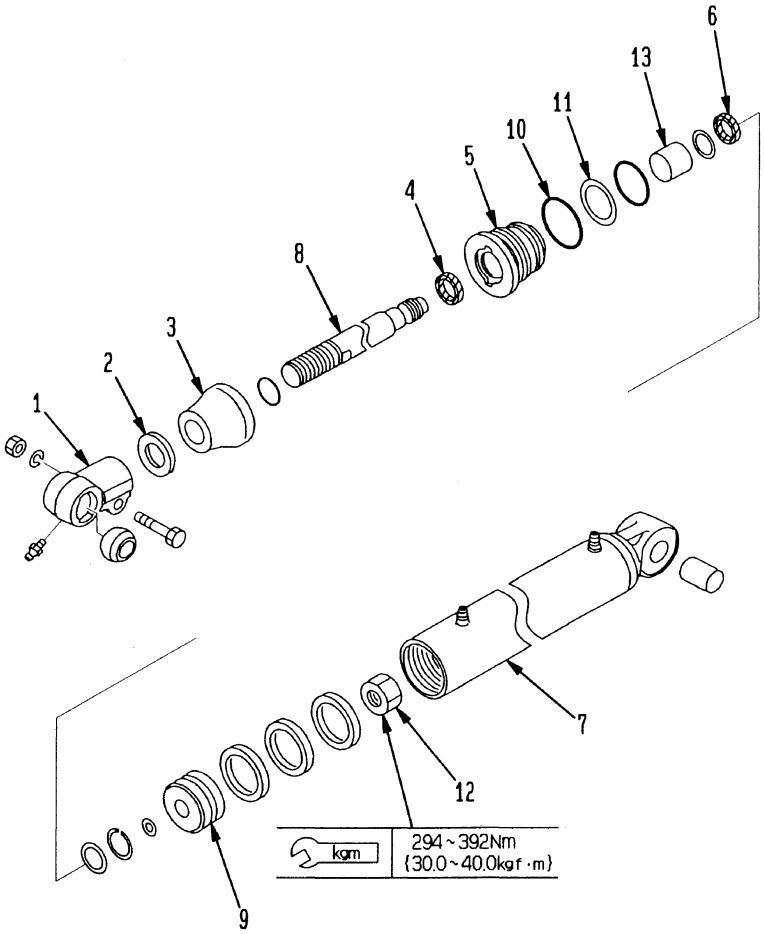

HWZ03949

Check item	Criteria		Remedy
	Standard size (mm)	Repair limit(mm)	
Clearance between piston rod and bushing	0.04 – 0.167 (0.0016 – 0.0066 in)	0.3 (0.012 in)	Replace bushing
Clearance between rod head bushing and pin	*0.05 – 0.23	0.5 (0.02 in)	

* In order to measure the lcearance, place a dial gauge at the rod head pin and fix the bushing firmly. The clearance can be obtained by the movement when the bushing has been pushed.

CONTROL VALVE

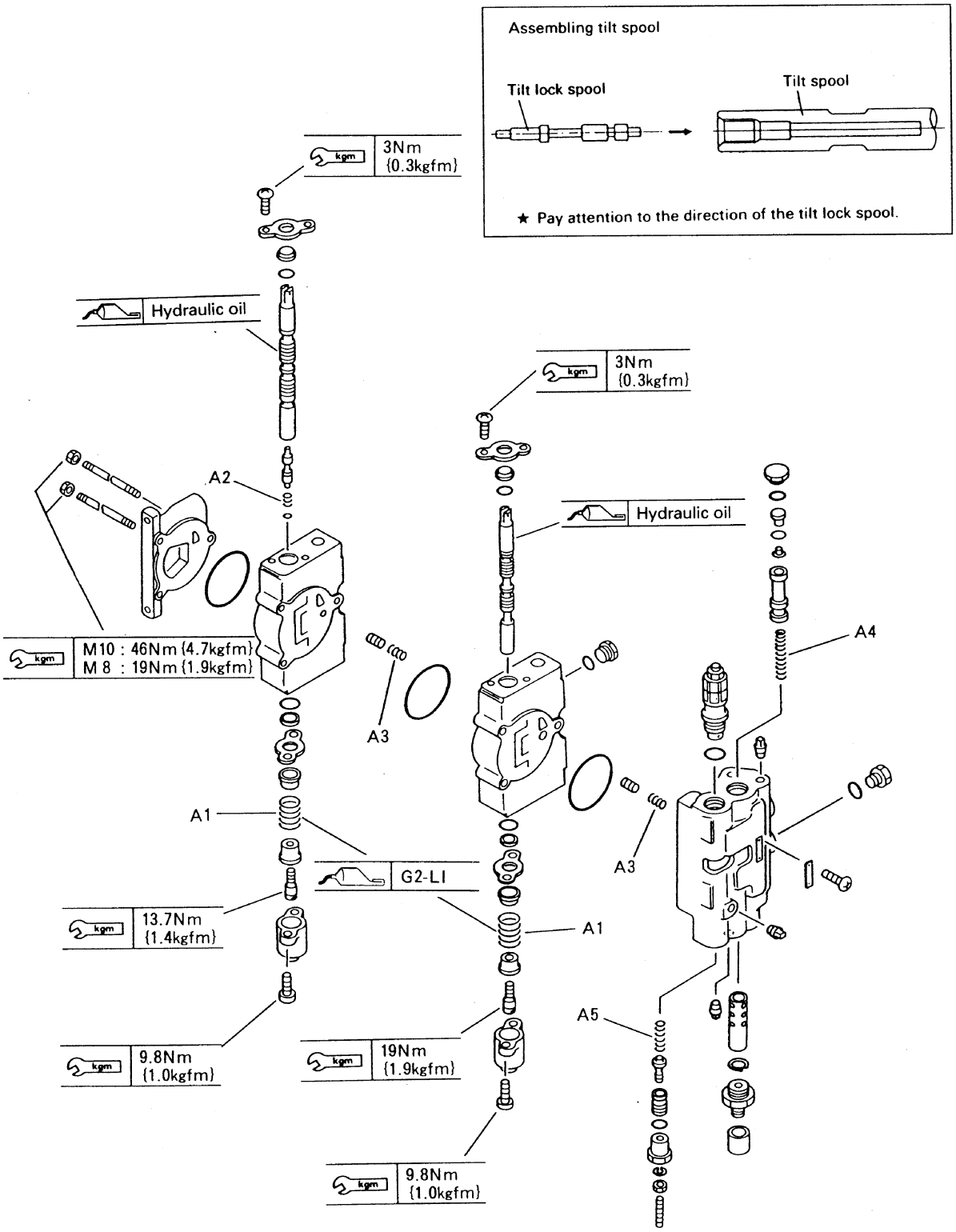

Unit: mm (in)

Symbol	Check item			Criteria		Remedy
				Standard size	Repair limit	
A	Free length of spring	A1	Return spring	56.8 (2.24)	51 (2.01)	Replacement
		A2	Tilt lock spring	26 (1.024)	23.5 (0.926)	
		A3	Check valve	25.4 (1.0)	23 (0.906)	
		A4	Flow divider	112 N (at 55 mm) 11.4 kgf (at 2.2)	112±11 N (at 55 mm) 11.4±1.1 kgf (at 2.2)	
		A5	PS relief valve	33.4 (1.32)	31 (1.22)	
B	Spool and housing			Flushes and scratches		

https://truckmanualshub.com/

MAST, FORK CARRIAGE

Unit: mm (in)

Check item		Criteria		Remedy
		Standard size	Repair limit	
Clearance between inner mast and outer mast	To side	0.1 – 0.3 (0.004 – 0.012)	Within 2.0 (0.08)	Adjustment of shims
	To front/rear	0.5 – 1.0 (0.02 – 0.04)	Within 2.0 (0.08)	Replacement with
Clearance between inner mast and fork carriage	To side	0.5 – 2.0 (0.02 – 0.08)	Within 2.5 (0.10)	Adjustment of shims
	To front/rear	0.5 – 1.0 (0.02 – 0.04)	Within 2.0 (0.08)	Replacement with over-sized roller(s)
Depth of oil groove in mast support bushing		Oil groove noted	No oil groove	Replacement of bushing
Thickness of forks (rat the basis)	FG(D)10	31 (1.22)	Min. 26 (1.024)	Replacement
	FG(D)14	35 (1.38)	Min. 30 (1.18)	
	FG(D)15	35 (1.38)	Min. 30 (1.18)	
	FG(D)18	35 (1.38)	Min. 33 (1.3)	

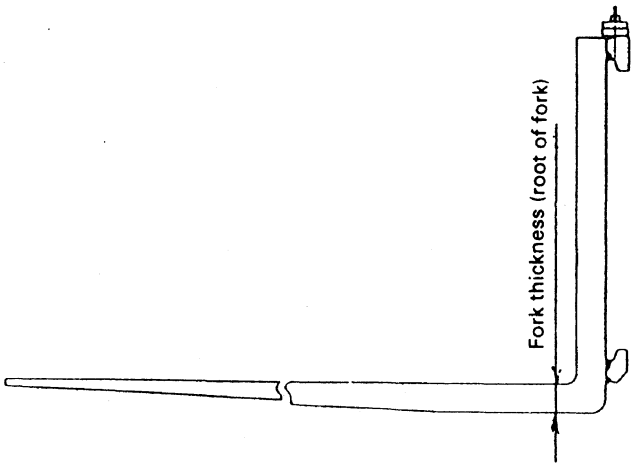

https://truckmanualshub.com/

50. STRUCTURE AND FUNCTION

Hydraulic circuit diagram 50-2
Electrical circuit diagram 50-4
Mast assembly drawing 50-6
Fork carriage assembly drawing 50-7

HYDRAULIC CIRCUIT DAIGRAM

1. WORK EQIPMENT CONTROL SYSTEM

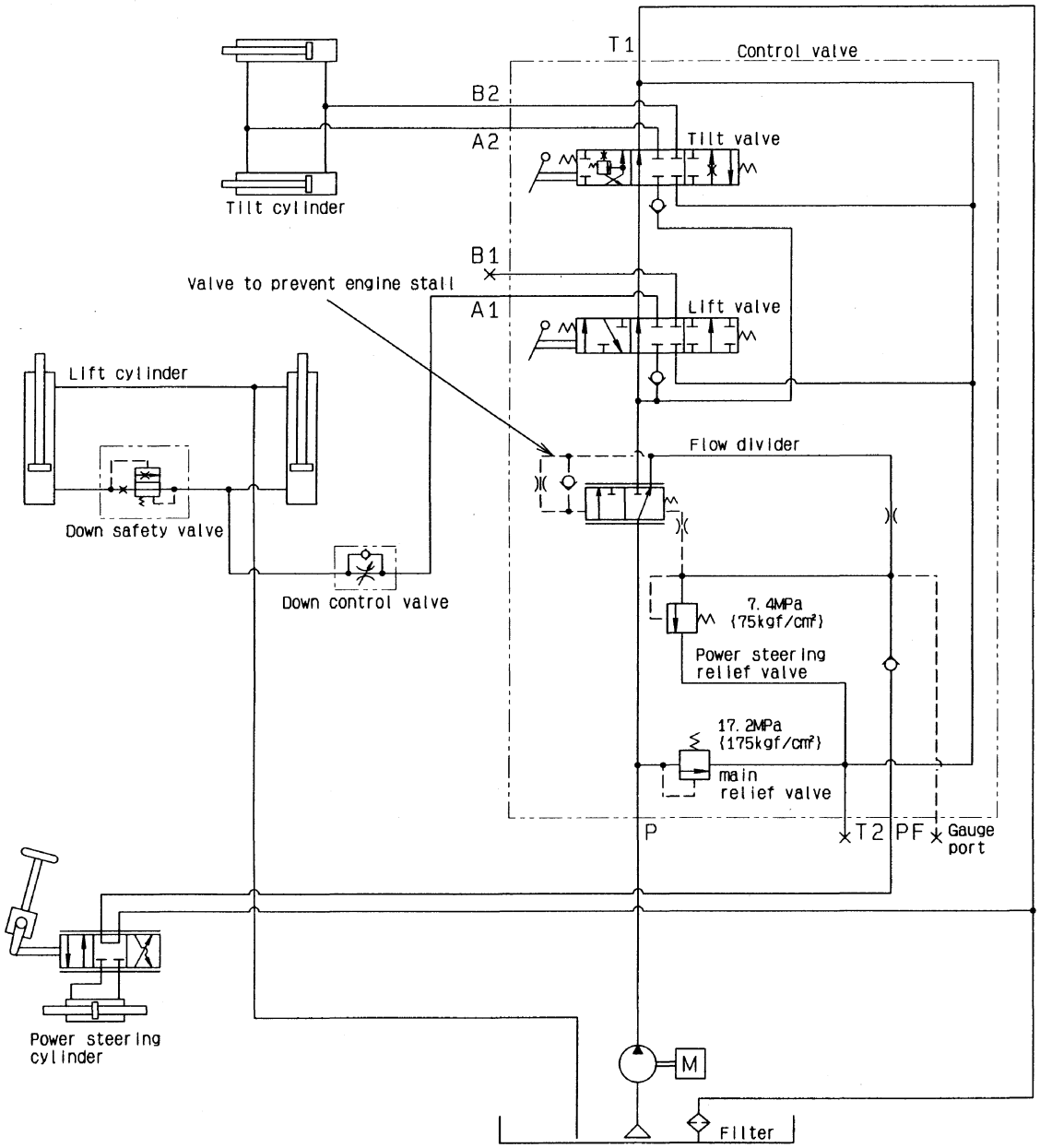

HWZ03969

https://truckmanualshub.com/

2. TORQUE CONVERTER AND TRANSMISSION SYSTEM

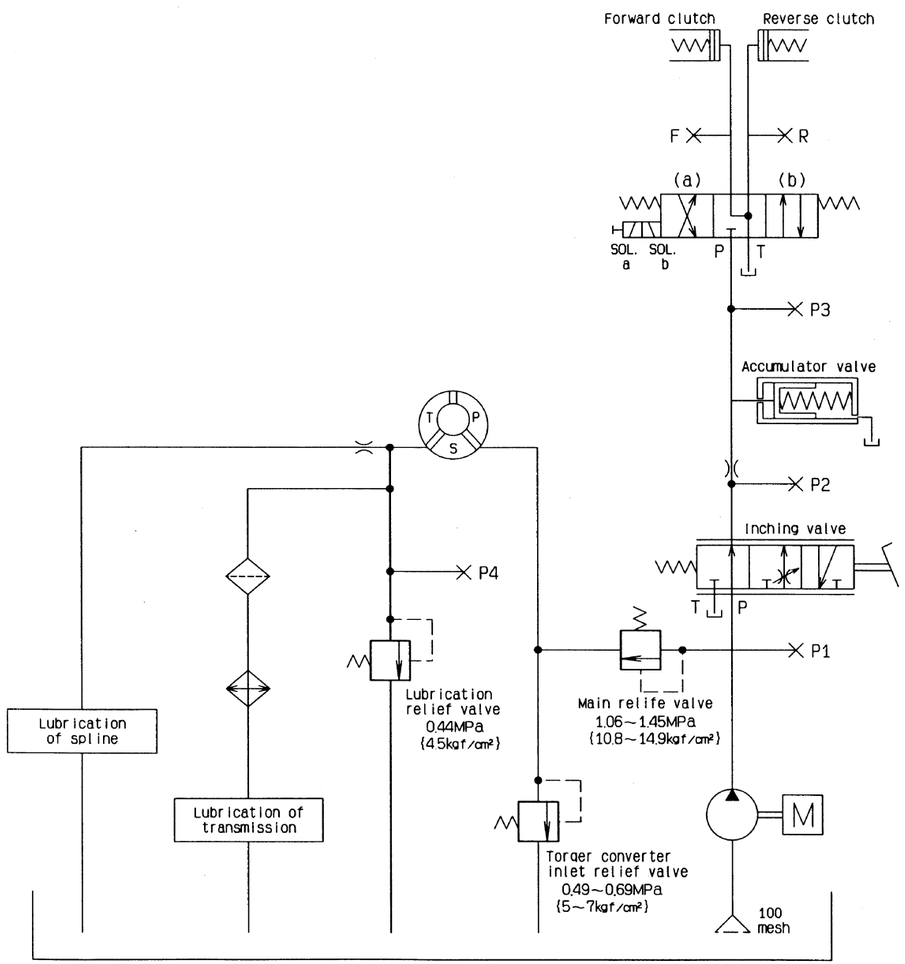

HWZ03970

https://truckmanualshub.com/

ELECTRICAL CIRCUIT DIAGRAM

1. H15, H20II GASOLINE ENGINE TRUCKS

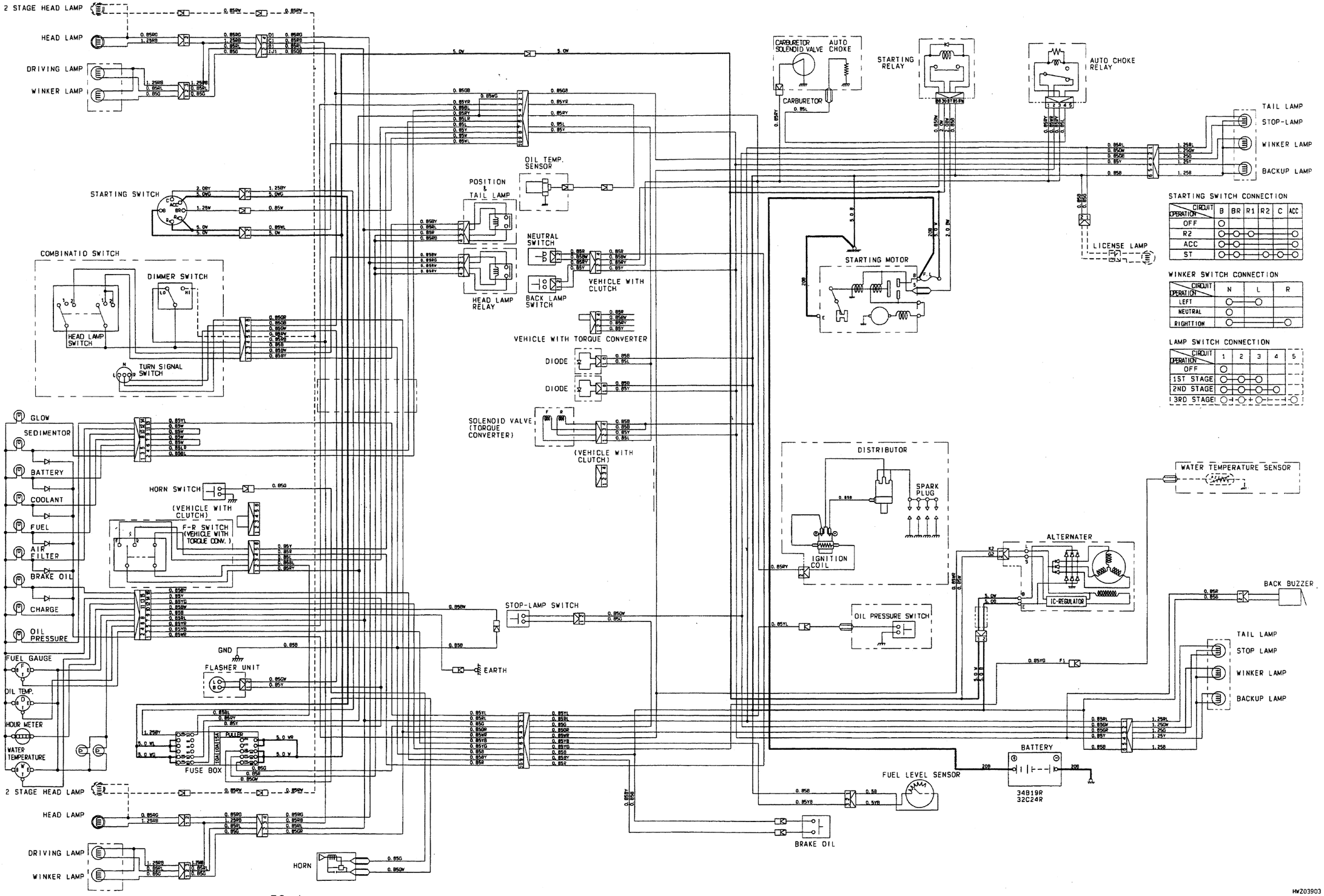

STARTING SWITCH CONNECTION

OPERATION \ CIRCUIT	B	BR	R1	R2	C	ACC
OFF	○					
R2	○	○	○			○
ACC	○	○				○
ST	○	○		○	○	○

WINKER SWITCH CONNECTION

OPERATION \ CIRCUIT	N	L	R
LEFT	○	○	
NEUTRAL	○		
RIGHTTION	○		○

LAMP SWITCH CONNECTION

OPERATION \ CIRCUIT	1	2	3	4	5
OFF	○				
1ST STAGE	○	○	○		
2ND STAGE	○	○	○	○	
3RD STAGE	○	○	○		○

https://truckmanualshub.com/

2. 4D92E DIESEL ENGINE TRUCK

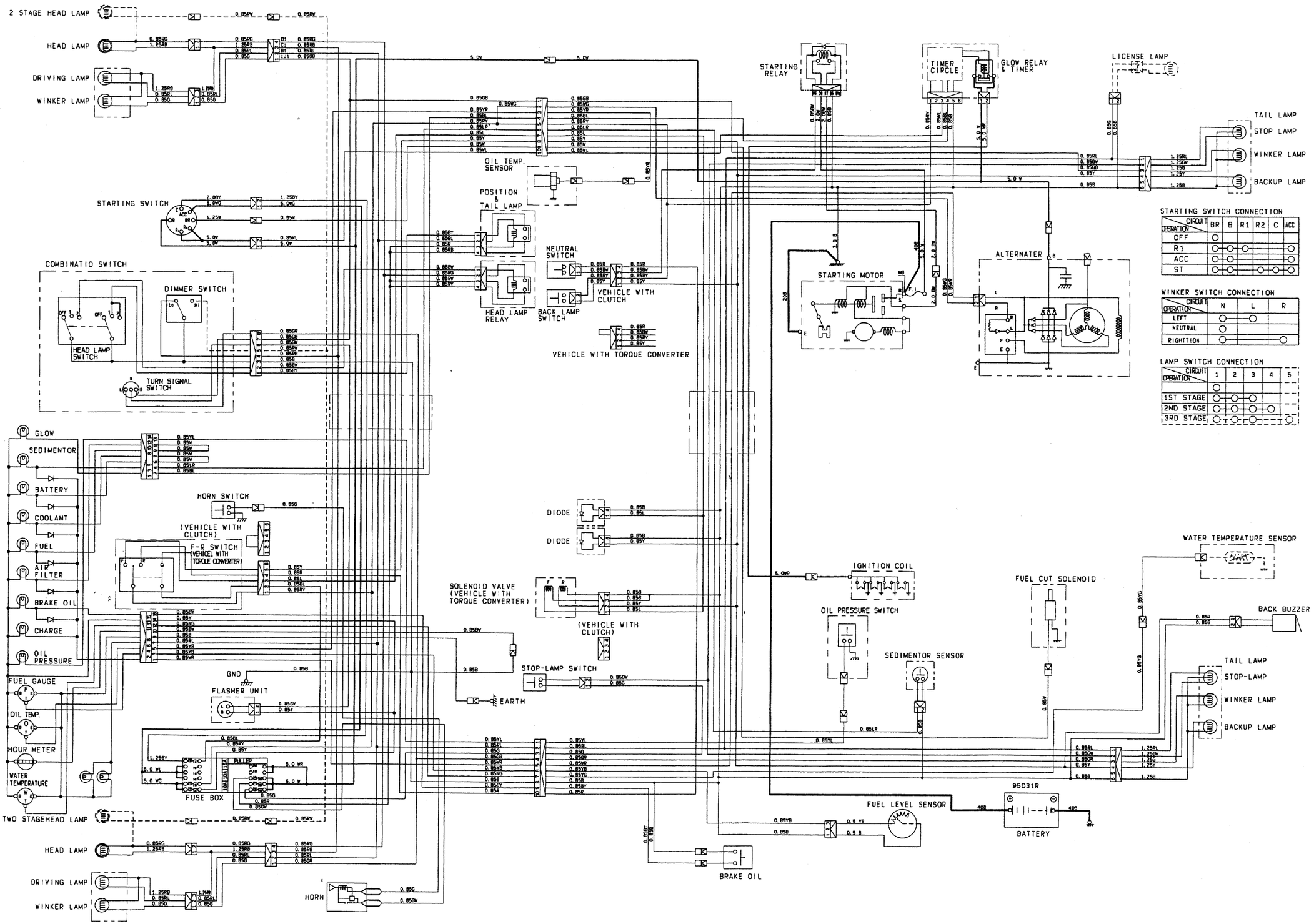

STARTING SWITCH CONNECTION

CIRCUIT / OPERATION	BR	B	R1	R2	C	ACC
OFF	○					
R1	○	○	○			○
ACC	○	○				○
ST	○	○		○	○	○

WINKER SWITCH CONNECTION

CIRCUIT / OPERATION	N	L	R
LEFT	○	○	
NEUTRAL	○		
RIGHTTION	○		○

LAMP SWITCH CONNECTION

CIRCUIT / OPERATION	1	2	3	4	5
	○				
1ST STAGE	○	○	○		
2ND STAGE	○	○	○	○	
3RD STAGE	○	○	○	○	○

https://truckmanualshub.com/

MAST ASSEMBLY DRAWING

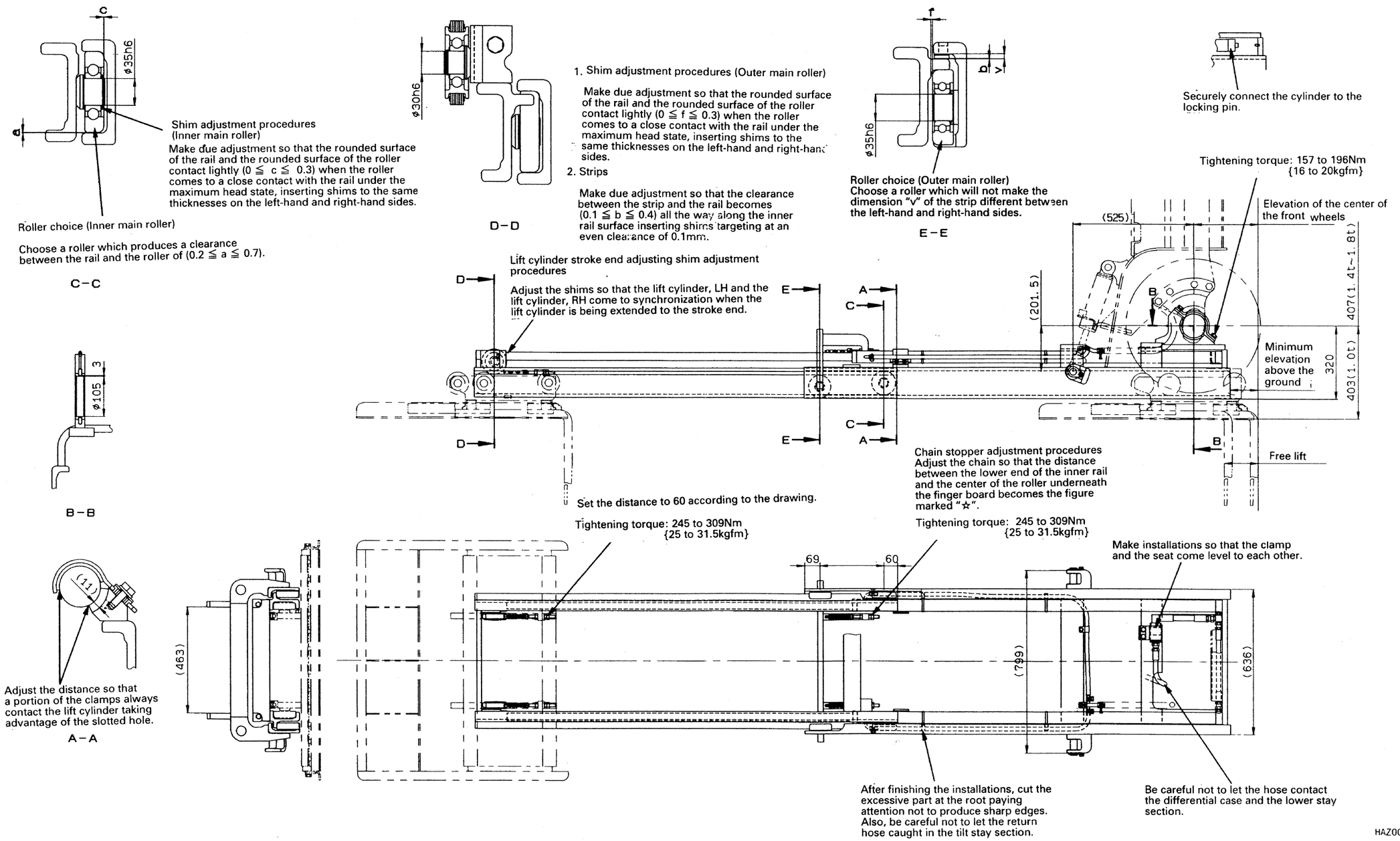

https://truckmanualshub.com/

FORK CARRIAGE ASSEMBLY DRAWING

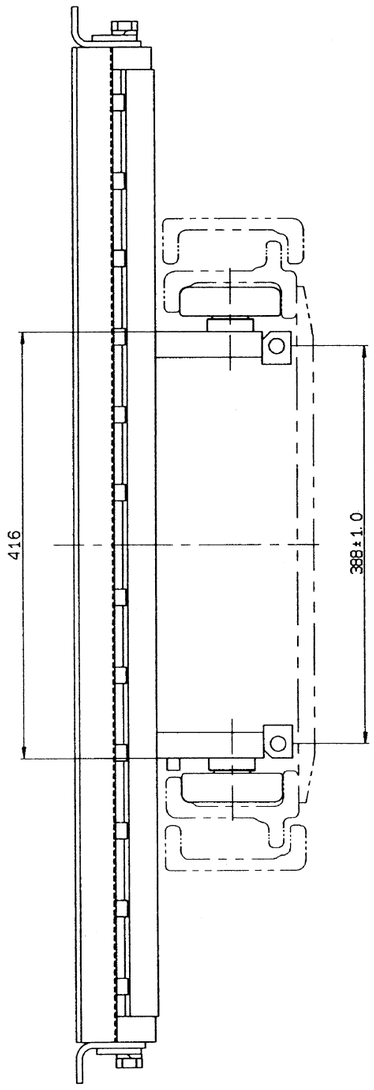

Z

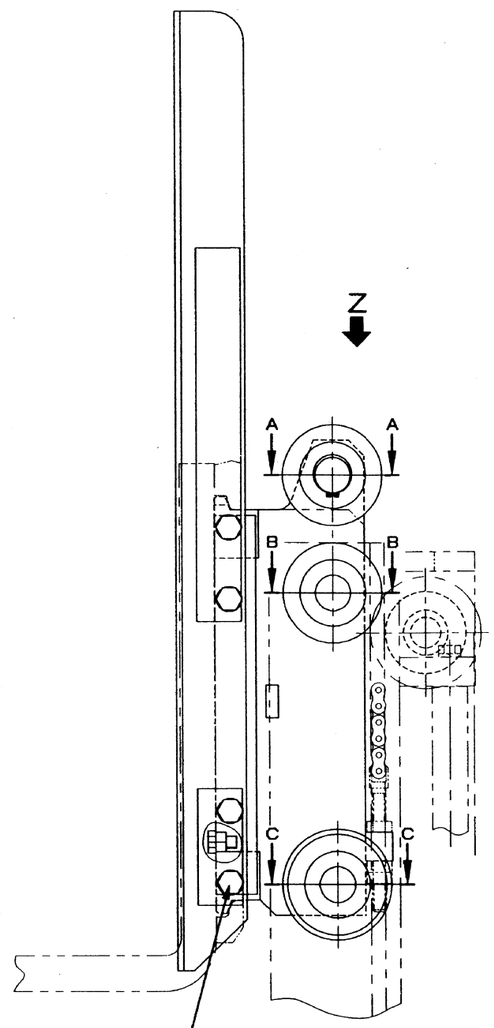

Fine thread bolt
Depress the back-rest onto the board surface before tightening the bolts.

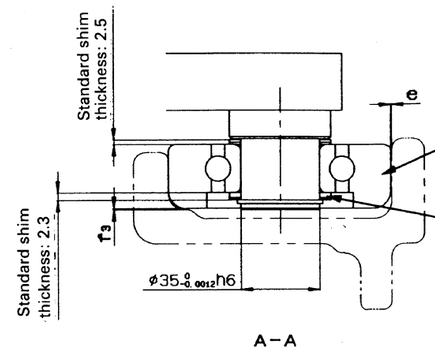

A–A

Choose a roller which produces a clearance "e" between the rail and the roller of 0.3 to 1.1.

Make due adjustment so that the clearance " " between the rail and the roller becomes 0.4 to 0.7 when the finger bar is being positioned at its upper end, inserting shims to the same thicknesses on the left-hand and right-hand sides.

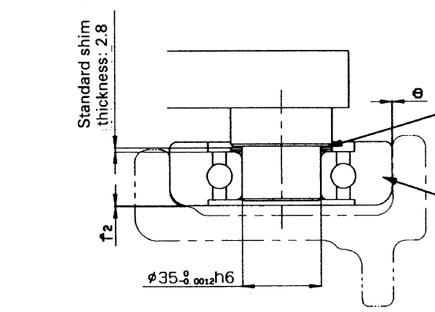

B–B

Make due adjustment so that the clearance " " between the rail and the roller becomes 0.1 to 0.4 when the finger bar is being positioned at its upper end, inserting shims to the same thicknesses on the left-hand and right-hand sides.
Standard shim thickness: 2.8

Choose a roller which produces a clearance "e" between the rail and the roller of 0.3 to 1.1.

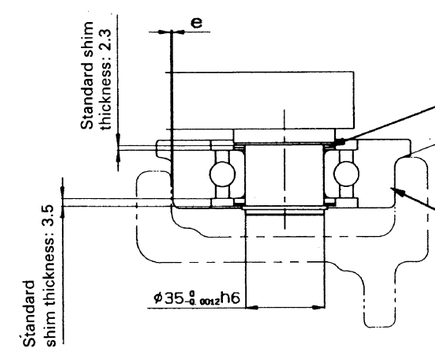

C–C

Make due adjustment so that the surface of the rail and the surface of the roller come to a light contact ($0 \leqq f1 \leqq 0.2$) when the finger board is being positioned at its upper end, inserting shims to the same thicknesses on the left-hand and right-hand sides.

Choose a roller which produces a clearance "e" between the rail and the roller of 0.3 to 1.1.

HAZ00190

https://truckmanualshub.com/

https://truckmanualshub.com/

60. TROUBLESHOOTING

4D92E Diesel engine 60-2
Torque converter 60-7
Hydraulic pump 60-9

https://truckmanualshub.com/

4D92E DIESEL ENGINE

If any abnormal phenomenon appears, taking the necessary action before the problem develops into a serious failure is important in ensuring the service life of the engine.

See the "Troubleshooting chart" and "Troubleshooting using compression pressure" and take the necessary action.

https://truckmanualshub.com/

1. Troubleshooting chart

The chart below shows common problems and abnormalities and their probable causes.

Cause \ Abnormality		Defective starting				Lack of engine output			Defective exhaust gas color		Excessive knocking during combustion	Abnormal noise from engine	Variation in combustion noise	Hunting		Excessive vibration of engine	Poor return to low speed	Excessive fuel consumption	Lubricating oil				Excessive blowby	Coolant		Air supply		Exhaust temperature rises	Remedy
			Engine starts but then stops			Exhaust gas color			When operating																				
			Exhaust gas																										
		Engine does not start	None	Little	Large amount	Normal	White	Black	White	Black				When idling	When operating				Excessive consumption	Dilution of oil by fuel	Water in oil	Low oil pressure		Overheats	Low water temperature	Pressure drops	Pressure rises		
Engine system	Defective intake, exhaust valve clearance	O	O			O						O														O		O	Adjust valve clearance
	Leakage of compression from valve seat					O		O		O		O						O					O			O		O	Grind valve seat
	Seizure of intake, exhaust valve	O			O	O		O		O					O	O				O			O			O			Correct or replace
	Blow-out from head gasket					O															O			O					Replace gasket
	Piston ring stuck or broken	O			O		O		O			O		O		O			O	O			O	O				O	Replace piston ring
	Wear of piston ring, piston, cylinder	O			O		O		O										O	O			O						Carry out honing or use oversize part
	Seizure of crankshaft pin bearing, shaft bearing	O	O									O		O	O	O							O						Repair or replace
	Defective positioning of piston ring end gap		O				O												O				O						Correct position of end gap
	Reverse assembly of piston ring						O		O										O				O						Correct assembly
	Wear of crankshaft pin and journal bearing					O						O		O	O	O						O							Measure and replace
	Loose connecting rod bolt											O				O						O							Tighten to specified torque
	Foreign substance in combustion chamber	O										O							O				O						Disassemble and repair
	Excessive gear backlash											O																	Adjust meshing of gear
	Wear of intake, exhaust valve guide						O												O				O						Measure and replace
	Defective governor		O											O	O	O	O												Repair and adjust
	Defective intake, exhaust valve timing	O					O	O	O	O		O																	Adjust valve clearance, check opening/closing timing of intake/exhaust valve
Cooling system	Excessive cooling by radiator								O									O							O				Defective thermostat (stays closed)
	Insufficient cooling by radiator							O																O				O	Defective thermostat (stays open), fan belt slipping
	Lack of coolant							O																O				O	Check for water leakage from cooling system, clean cooling system
	Cracked water jacket																				O	O		O					Repair or replace
	Loose fan belt							O																O				O	Adjust belt tension
	Defective thermostat							O	O															O	O				Check or replace

https://truckmanualshub.com/

Cause \ Abnormality		Defective starting				Lack of engine output			Defective exhaust gas color					Hunting					Lubricating oil					Coolant		Air supply			Remedy
			Engine starts but then stops			Exhaust gas color			When operating																				
			Exhaust gas																										
		Engine does not start	None	Little	Large amount	Normal	White	Black	White	Black	Excessive knocking during combustion	Abnormal noise from engine	Variation in combustion noise	When idling	When operating	Excessive vibration of engine	Poor return to low speed	Excessive fuel consumption	Excessive consumption	Dilution of oil by fuel	Water in oil	Low oil pressure	Excessive blowby	Overheats	Low water temperature	Pressure drops	Pressure rises	Exhaust temperature rises	
Lubricating system	Improper lubricating oil	○	○			○													○			○	○						Use proper lubricating oil
	Leakage from oil piping																		○			○							Repair
	Insufficient discharge from trochoid pump																					○							Check and repair
	Clogging of lubricating oil filter																					○	○						Clean or replace
	Defective pressure regulating valve																					○							Clean, adjust, or replace
	Lack of lubricating oil		○																			○							Add proper lubricating oil
Fuel system	Timing of fuel injection pump too advanced								○	○	○					○													Check and adjust
	Timing of fuel injection pump too retarded						○	○	○	○								○										○	Check and adjust
	Improper fuel					○	○	○	○	○			○																Use proper fuel
	Water in fuel system	○			○		○		○				○	○	○														Check and repair
	Clogged fuel filter	○	○			○																							Clean or replace
	Air in fuel system	○	○				○																						Bleed air
	Fuel pipe clogged, cracked	○	○			○																							Clean or replace
	Insufficient supply of fuel to fuel injection pump	○	○			○																							Check fuel tank valve, fuel filter, fuel pipe, fuel feed pump
	Uneven injection from fuel injection pump						○	○	○	○			○	○	○	○												○	Check and adjust
	Excessive fuel injection									○								○	○				○	○			○	○	Check and adjust
	Defective spray from fuel injection nozzle						○	○	○	○			○	○	○	○		○											Check and adjust
	Priming impossible	○																											Dirt caught in valve inside priming pump (disassemble and clean)
	Clogged strainer at fuel filter inlet port					○																							Clean strainer
Air, exhaust gas system	Clogged air filter				○			○		○			○													○			Clean
	Engine used at high ambient temperature or high altitude							○		○								○						○		○			Use high-output engine
	Clogged exhaust pipe							○		○			○															○	Clean
Electrical system	Defective starting motor	○																											Repair or replace
	Defective alternator	○																											Repair or replace
	Disconnected wiring	○																											Repair
	Drop in battery voltage	○																											Charge

https://truckmanualshub.com/

2. Troubleshooting using compression pressure

Measure the engine compression pressure to judge if there is any abnormality in important internal parts.

(1) Method of measuring compression pressure

1) Carry out the warming-up operation to warm up the engine, then remove the fuel injection pipes and fuel injection valves for all cylinders.

2) Set the regulator handle to the STOP position and crank with the starting motor for approx. 4 - 5 seconds.

3) Install a compression gauge to the engine cylinder to be measured, crank with the starting motor until the measured value is stable, then measure the compression pressure.
(Do not crank with the starting motor for more than 15 seconds. Wait for at least 30 seconds before cranking again.)

Standard value for compression pressure	2.84 – 3.04 MPa (29 – 31 kgf/cm²)/250 rpm
Limit for compression pressure	2.35 MPa(24 kgf/cm²)/250 rpm

Reference: Compression pressure at each speed

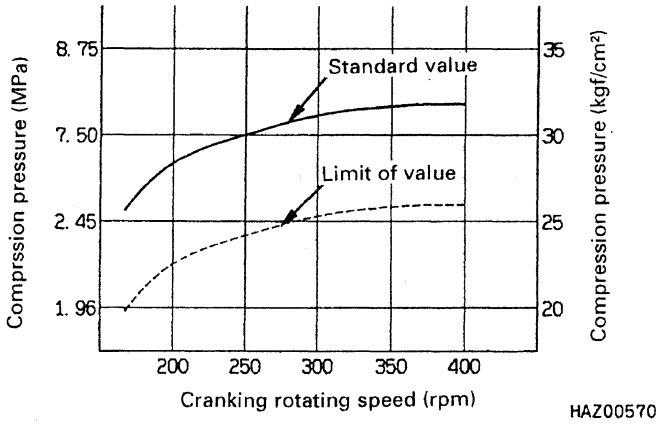

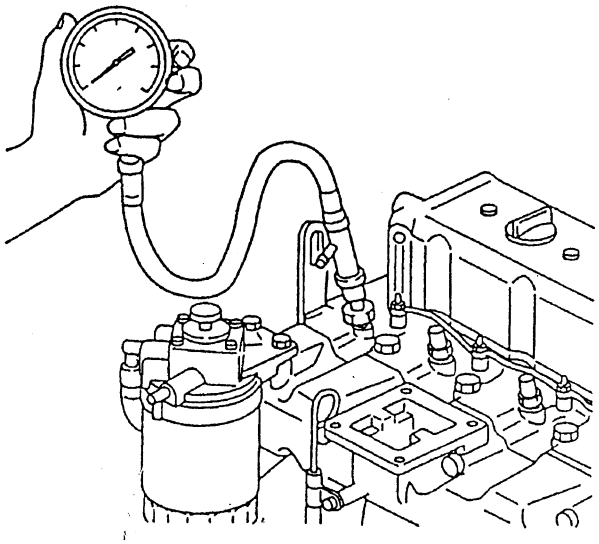

https://truckmanualshub.com/

(2) Phenomena when compression pressure drops

The blowby gas increases, and this causes improper starting, lack of output, increase in oil consumption, and premature deterioration of the lubricating oil. These problems then lead to premature wear of all parts and result in a reduction in the service life of the engine.

(3) Measurement values and troubleshooting of abnormalities

If the measured value is below the standard value, use the table below for reference when checking.

No.	Item	Remedy
1	Clogged, broken air cleaner element, defective air-tightness of seal	1. Clean element 2. Replace element
2	Defective adjustment of valve clearance, defective valve timing	1. Adjust valve clearance 2. Check gear train
3	Leakage of gas from head gasket, nozzle protector	1. Check tightening torque of head bolts 2. Replace gasket 3. Replace protector
4	Leakage of gas from intake, exhaust valve seat	Check cylinder head, valves
5	Scratched, worn cylinder, piston, ring	Check cylinder, piston, ring

https://truckmanualshub.com/

TORQUE CONVERTER

1. Causes and remedies for failures

No.	Problem	Cause	Remedy
1	Power is not transmitted	A No hydraulic pressure	
		1) Lack of oil	Add oil
		2) Damaged gear pump or drive portion	Disassemble and check, replace with new parts or replace whole assembly
		3) Damaged piping or joint	Disassemble and replace
		4) Broken piston in inlet port relief valve or broken spring	Disassemble and replace
		B Mechanical breakage	
		1) Broken input plate	Disassemble and replace
		2) Broken shaft, gear	Disassemble and replace
		3) Broken spline	Disassemble and replace
2	Output drops	A Hydraulic pressure is too low	
		1) Lack of oil	Add oil
		2) Leakage of air from suction piping	Check joint, gasket, replace parts if necessary
		3) Drop in efficiency of gear pump	Disassemble and replace, replace parts if necessary
		4) Deteriorated spring in inlet port relief valve or defective operation of piston	Disassemble and replace, replace parts if necessary
		5) Worn or broken seal ring	Disassemble and replace
		B Mechanical breakage	
		1) Broken or deformed impeller	Disassemble and replace
		2) Deformed input plate	Disassemble and replace
		C Other	
		1) Non-specified oil is being used	Change to specified oil
3	Oil pressure rises abnormally high	1) Incorrect oil level	Add or drain oil
		2) Contact of impeller	Disassemble and replace, replace parts if necessary
		3) Wear or seizure of bearing	Disassemble and replace, replace parts if necessary
		4) Wear or damage of gear pump	Disassemble and replace, replace parts if necessary

https://truckmanualshub.com/

No.	Problem	Cause	Remedy
4	Abnormal noise is generated	1) Cavitation caused by leakage of air from suction piping or lack of oil	Add oil or check and replace parts if necessary
		2) Failure of gear pump	Disassemble and replace parts or whole assembly
		3) Contact caused by deformed impeller	Disassemble and replace, replace parts if necessary
		4) Breakage of input plate	Disassemble and replace
		5) Breakage of gear	Disassemble and replace
		6) Wear or breakage of bearing	Disassemble and replace
		7) Wear of spline	Disassemble and replace
		8) Loose bolts	Tighten, replace if necessary
5	Oil oozes out or leaks	A Oil seal	
		1) Worn or damaged lip	Disassemble and replace
		2) Dirt caught	Disassemble and replace, replace parts if necessary
		3) Worn or scratched shaft	Correct or replace
		4) Hardening or deterioration of rubber because of abnormal rise in oil temperature	Disassemble and replace
		B O-ring	
		1) Broken O-ring	Disassemble and replace
		2) Scratched mating surface	Correct or replace
		3) Hardening or deterioration of rubber because of abnormal rise in oil temperature	Disassemble and replace
		4) Sudden use in extremely cold temperatures (below -15*C)	Carry out warming-up operation
		C. Plug, screw	
		1) Loose screw	Tighten
		2) Broken screw	Replace
		3) Cracked hole	Replace

HYDRAULIC PUMP

Failures and causes

No.	Condition of failure	Probable causes	Remedy
1	Oil leakage from oil seal	1) Reverse rotation 2) Abnormally high pressure at suction side 3) Seal lip damaged by dirt 4) Wear or damage to shaft seal portion	1) Remove cause of reverse rotation or abnormally high pressure at suction side 2) Replace oil seal 3) Replace shaft
2	Leakage of oil from join of cover and body	1) Damage or looseness of bolt 2) Damage or drop in sealing performance caused by heat hardening of gasket	1) Remove abnormally high pressure or vibration causing damage or loosening of bolts 2) Replace bolts, gasket
3	Leakage of oil from port	1) Damage or looseness at port joint 2) Damage to joint seal material 3) Damage to port	1) Remove abnormally high pressure or vibration causing damage or loosening of joint 2) Replace joint seal material 3) Replace cover
4	Reduction in discharge amount or lack of pressure	1) Lack of oil in tank 2) Abnormally high temperature of hydraulic oil caused by lack of capacity of cooling device or increase in internal leakage caused by unsuitable viscosity of hydraulic oil 3) Drop in pump performance caused by dirt in hydraulic oil 4) Cavitation 5) Pump failure	1) Correct tank oil level, change to correct type of hydraulic oil, replace cooling device 2) Change dirty hydraulic oil 3) Check length and thickness of suction piping, clean filter, and remove other causes of abnormal negative pressure 4) Replace pump
5	Abnormal rise in temperature of pump or hydraulic oil	1) Abnormal generation of heat by frequent actuation of relief valve 2) Lack of capacity in cooling device 3) Pump failure	1) Change to suitable negative pressure 2) Replace cooling device 3) Replace pump
6	Abnormal noise or vibration	1) Cavitation 2) Entry of air 3) Defective centering during installation 4) Resonance of piping or mounting flange	1) Remove cause of abnormal negative pressure 2) Remove cause of low oil level or entry of air into suction piping 3) Collect installation and centering 4) Strengthen piping or mounting flange to remove cause of resonance

https://truckmanualshub.com/

https://truckmanualshub.com/

70. CONVERSION TABLE

Millimeters to Inches 70-2
Inches to Millimeters 70-2
Cubic meters to Cubic yards 70-3
Cubic yards to Cubic meters 70-3
Liter to U.S.Gallon 70-4
U.S. Gallon to Liter 70-4
Liter to U.K. Gallon 70-5
U.K. Gallon to Liter 70-5
Kilogram to Pound 70-6
Pound to Kilogram 70-6
Kg/cm^2 to lb/in^2 70-7
Kgm to Ft. lb 70-8
Temperature 70-9

https://truckmanualshub.com/

CONVERSION TABLE

Millimeters to Inches

1 mm = 0.03937 in

	0	1	2	3	4	5	6	7	8	9
0		0.039	0.079	0.118	0.157	0.197	0.236	0.276	0.315	0.354
10	0.394	0.433	0.472	0.512	0.551	0.591	0.630	0.669	0.709	0.748
20	0.787	0.827	0.866	0.906	0.945	0.984	1.024	1.063	1.102	1.142
30	1.181	1.220	1.260	1.299	1.339	1.378	1.417	1.457	1.496	1.536
40	1.575	1.614	1.654	1.693	1.732	1.772	1.811	1.850	1.890	1.929
50	1.969	2.008	2.047	2.087	2.126	2.165	2.205	2.244	2.283	2.323
60	2.362	2.402	2.441	2.480	2.520	2.559	2.598	2.638	2.677	2.717
70	2.756	2.795	2.835	2.874	2.913	2.953	2.992	3.032	3.071	3.110
80	3.150	3.189	3.228	3.268	3.307	3.346	3.386	3.425	3.465	3.504
90	3.543	3.583	3.622	3.661	3.701	3.740	3.780	3.819	3.858	3.898

Inches to Millimeters

	0	0.01	0.02	0.03	0.04	0.05	0.06	0.07	0.08	0.09
0		0.254	0.508	0.762	1.016	1.270	1.524	1.778	2.032	2.286
0.1	2.540	2.794	3.048	3.302	3.556	3.810	4.064	4.318	4.572	4.826
0.2	5.080	5.334	5.588	5.842	6.096	6.350	6.604	6.858	7.112	7.366
0.3	7.620	7.874	8.128	8.382	8.636	8.890	9.144	9.398	9.652	9.906
0.4	10.160	10.414	10.668	10.922	11.176	11.430	11.684	11.938	12.192	12.446
0.5	12.700	12.954	13.208	13.462	13.716	13.970	14.224	14.478	14.732	14.986
0.6	15.240	15.494	15.748	16.002	16.256	16.510	16.764	17.018	17.272	17.526
0.7	17.780	18.034	18.288	18.542	18.796	19.050	19.304	19.558	19.812	20.066
0.8	20.320	20.574	20.828	21.082	21.336	21.590	21.844	22.098	22.352	22.606
0.9	22.860	23.114	23.368	23.622	23.876	24.130	24.384	24.638	24.892	25.146

https://truckmanualshub.com/

Cubic meters to Cubic yards

1 m^3 = 1.308 cu.yd

	0	1	2	3	4	5	6	7	8	9
		1.31	2.62	3.92	5.23	6.54	7.85	9.16	10.46	11.77
10	13.08	14.39	15.70	17.00	18.31	19.62	20.93	22.24	36.62	24.85
20	26.16	27.47	28.78	30.08	31.39	32.70	34.01	35.32	36.62	27.93
30	39.24	40.55	41.86	43.16	44.47	45.78	47.09	48.40	49.70	51.01
40	52.32	53.63	54.94	56.24	57.55	58.86	60.17	61.48	62.78	64.09
50	65.40	66.71	68.02	69.32	70.63	71.94	73.24	74.56	75.86	77.17
60	78.48	79.79	81.10	82.40	83.71	85.02	86.33	87.64	88.94	90.25
70	91.56	92.87	94.18	95.48	96.79	98.10	99.41	100.72	102.02	103.33
80	104.64	105.95	107.26	108.56	109.87	111.18	112.49	113.80	115.10	116.41
90	117.72	119.03	120.34	121.64	122.95	124.26	125.57	126.88	128.18	129.49

Cubic yards to Cubic meters

	0	1	2	3	4	5	6	7	8	9
		0.76	1.53	2.29	3.06	3.82	4.59	5.35	6.12	6.88
10	7.65	8.41	9.18	9.94	10.70	11.47	12.23	13.00	13.76	14.53
20	15.29	16.06	16.82	17.59	18.35	19.12	19.88	20.64	21.41	22.17
30	22.94	23.70	24.47	25.23	26.00	26.76	27.53	28.29	29.05	29.82
40	30.58	31.35	32.11	32.88	33.64	34.41	35.17	35.94	36.70	37.47
50	38.23	38.99	39.76	40.52	41.29	42.05	42.82	43.58	44.35	45.11
60	45.88	46.64	47.41	48.17	48.93	49.70	50.46	51.23	51.99	52.76
70	53.52	54.29	55.05	55.82	56.58	57.35	58.11	58.87	59.64	60.40
80	61.17	61.93	62.70	63.46	64.23	64.99	65.76	66.52	67.28	68.05
90	68.81	69.58	70.34	71.11	71.87	72.64	73.40	74.17	74.93	75.70

https://truckmanualshub.com/

Liter to U.S. Gallon 1 ℓ = 0.2642 U.S. Gal

	0	1	2	3	4	5	6	7	8	9
		0.264	0.528	0.793	1.057	1.321	1.585	1.849	2.113	2.378
10	2.642	2.906	3.170	3.434	3.698	3.963	4.227	4.491	4.755	5.019
20	5.283	5.548	5.812	6.076	6.340	6.604	6.869	7.133	7.397	7.661
30	7.925	8.189	8.454	8.718	8.982	9.246	9.510	9.774	10.039	10.303
40	10.567	10.831	11.095	11.359	11.624	11.888	12.152	12.416	12.680	12.944
50	13.209	13.473	13.737	14.001	14.265	14.529	14.795	15.058	15.322	15.586
60	15.850	16.115	16.379	16.643	16.907	17.171	17.435	17.700	17.964	18.228
70	18.492	18.756	19.020	19.285	19.549	19.813	20.077	20.341	20.605	20.870
80	21.134	21.398	21.662	21.926	22.190	22.455	22.719	22.983	23.247	23.511
90	23.775	24.040	24.304	24.568	24.832	25.096	25.361	25.625	25.889	26.153

U.S. Gallon to Liter 1 U.S. Gal = 3.7854 ℓ

	0	1	2	3	4	5	6	7	8	9
		3.79	7.57	11.36	15.14	18.93	22.71	26.50	30.28	34.07
10	37.85	41.64	45.43	49.21	53.00	56.78	60.57	64.35	68.14	71.92
20	75.71	79.49	83.28	87.06	90.85	94.64	98.42	102.21	105.99	109.78
30	113.56	117.35	121.13	124.92	128.70	132.49	136.27	140.06	143.85	147.63
40	151.42	155.20	158.99	162.77	166.56	170.34	174.13	177.91	181.70	185.49
50	189.27	193.06	196.84	200.63	204.41	208.20	211.98	215.77	219.55	223.34
60	227.12	230.91	234.70	238.48	242.27	246.05	249.84	353.62	257.41	261.19
70	264.98	268.76	272.55	276.33	280.12	283.91	287.69	291.48	295.26	299.05
80	302.83	306.62	310.40	314.19	317.97	321.76	325.55	329.33	333.12	336.90
90	340.69	344.47	348.26	352.04	355.83	359.61	363.40	367.18	370.97	374.76

https://truckmanualshub.com/

Liter to U.S. Gallon 1 ℓ = 0.21997 U.K. Gal

	0	1	2	3	4	5	6	7	8	9
		0.220	0.440	0.660	0.880	1.100	1.320	1.540	1.760	1.980
10	2.200	2.420	2.640	2.860	3.080	3.300	3.520	3.740	3.950	4.179
20	4.399	4.619	4.839	5.059	5.279	5.499	5.719	5.939	6.159	6.379
30	6.599	6.819	7.039	7.259	7.479	7.969	7.919	8.139	8.359	8.579
40	8.799	9.019	9.239	9.459	9.679	9.899	10.119	10.339	10.559	10.778
50	10.998	11.281	11.438	11.658	11.878	12.098	12.318	12.528	12.758	12.978
60	13.198	13.418	13.638	13.858	14.078	14.298	14.518	14.738	14.958	15.178
70	15.398	15.618	15.838	16.058	16.278	16.498	16.718	16.938	17.158	17.378
80	17.598	17.818	18.037	18.257	18.477	18.697	18.917	19.137	19.357	19.577
90	19.797	20.017	20.237	20.457	20.677	20.897	21.117	21.337	21.557	21.777

U.K. Gallon to Liter 1 U.K. Gal = 4.5461 ℓ

	0	1	2	3	4	5	6	7	8	9
		4.55	9.09	13.64	18.18	22.73	27.28	31.82	36.37	40.92
10	45.64	50.01	54.55	59.10	63.65	68.19	72.74	77.28	81.83	86.38
20	90.92	95.47	100.01	104.56	109.11	113.65	118.20	112.74	127.29	131.84
30	136.28	140.93	145.47	150.02	154.57	159.11	163.66	168.21	172.75	177.30
40	181.84	186.39	190.94	195.48	200.03	204.57	209.12	213.67	218.21	222.76
50	227.30	231.85	236.40	240.94	245.49	250.03	254.18	259.13	263.67	268.22
60	272.77	277.31	281.86	286.40	290.95	295.50	300.04	304.59	309.13	313.68
70	318.23	322.77	327.32	331.86	336.41	340.96	345.50	350.05	354.60	359.14
80	363.69	368.23	372.78	377.33	381.87	386.42	390.96	395.51	400.06	404.60
90	409.15	413.69	418.24	422.79	427.33	341.88	436.42	440.97	445.52	450.06

https://truckmanualshub.com/

Kilogram to Pound 1 kg = 2.2046 lb

	0	1	2	3	4	5	6	7	8	9
		2.20	4.41	6.61	8.82	11.02	13.23	15.43	17.64	19.84
10	22.05	24.25	26.46	28.66	30.86	33.07	35.27	37.48	39.68	41.89
20	44.09	46.30	48.50	50.71	51.91	55.12	57.32	59.53	61.73	63.93
30	66.14	68.34	70.55	72.75	74.96	77.16	79.37	81.57	83.78	85.98
40	88.18	90.39	92.59	94.80	97.00	99.21	101.41	103.62	105.82	108.03
50	110.23	112.44	114.64	116.85	119.05	121.25	123.46	125.66	127.87	130.07
60	132.28	134.48	136.69	138.89	141.10	143.30	145.51	147.71	149.91	152.12
70	154.32	156.53	158.73	160.94	163.14	165.35	167.55	169.76	171.96	174.17
80	176.37	178.57	180.78	182.98	185.19	187.39	189.60	191.80	194.01	196.21
90	198.42	200.62	202.83	205.03	207.24	209.44	211.64	213.85	216.05	218.26

Pound to Kilogram 1 lb = 0.4536 kg

	0	1	2	3	4	5	6	7	8	9
		0.454	0.907	1.361	1.814	2.268	2.722	3.175	3.629	4.082
10	4.536	4.990	5.443	5.897	6.350	6.804	7.257	7.711	8.165	8.618
20	9.072	9.525	9.979	10.433	10.886	11.340	11.793	12.247	12.701	13.154
30	13.608	14.061	14.515	14.969	15.422	15.876	16.329	16.783	17.237	17.690
40	18.144	18.597	19.051	19.505	19.958	20.412	20.865	21.319	21.772	22.226
50	22.680	23.133	23.587	24.040	24.494	24.948	25.401	25.855	26.308	26.762
60	27.216	27.699	28.123	28.576	29.030	29.484	29.937	30.391	30.844	31.298
70	31.752	32.205	32.659	33.112	33.566	34.019	34.473	34.927	35.380	35.843
80	36.287	36.741	37.195	37.648	38.102	38.555	39.001	39.463	39.916	40.370
90	40.823	41.277	41.731	42.184	42.638	43.091	43.545	43.999	44.452	44.906

https://truckmanualshub.com/

Kg/cm² to lb/in²

1 kg/cm² = 14.2233 lb/in²

	0	1	2	3	4	5	6	7	8	9
		14.2	28.4	42.7	56.9	71.1	85.3	99.6	113.8	128.0
10	142.2	156.5	170.7	184.9	199.1	213.4	227.6	241.8	256.0	270.2
20	284.5	298.7	312.9	327.1	341.4	355.6	369.8	384.0	398.3	412.5
30	426.7	440.9	455.1	469.4	483.6	497.8	512.0	526.3	540.5	554.7
40	568.9	583.2	597.4	611.6	625.8	640.1	654.3	668.5	682.7	696.9
50	711.2	725.4	739.6	753.8	768.1	782.3	796.5	810.7	825.0	839.2
60	853.4	867.6	881.8	896.1	910.3	924.5	938.7	953.0	967.2	981.4
70	995.6	1010	1024	1038	1053	1067	1081	1095	1109	1124
80	1138	1152	1166	1181	1195	1209	1223	1237	1252	1266
90	1280	1294	1309	1323	1337	1351	1365	1380	1394	1408
100	1422	1437	1451	1465	1479	1493	1508	1522	1536	1550
110	1565	1579	1593	1607	1621	1636	1650	1664	1678	1693
120	1707	1721	1735	1749	1764	1778	1792	1806	1821	1835
130	1849	1863	1877	1892	1906	1920	1934	1949	1963	1977
140	1991	2005	2020	2034	2048	2062	2077	2091	2105	2119
150	2134	2148	2162	2176	2190	2205	2219	2233	2247	2262
160	2276	2290	2304	2318	2333	2347	2361	2375	2389	2404
170	2418	2432	2446	2460	2475	2489	2503	2518	2532	2546
180	2560	2574	2589	2603	2617	2631	2646	2660	2674	2688
190	2702	2717	2731	2745	2759	2773	2788	2802	2816	2830
200	2845	2859	2873	2887	2901	2916	2930	2944	2958	2973
210	2987	3001	3015	3030	3044	3058	3072	3086	3101	3115
220	3129	3143	3158	3172	3186	3200	3214	3229	3243	3257
230	3271	3286	3300	3314	3328	3343	3357	3371	3385	3399
240	3414	3428	3442	3456	3470	3485	3499	3513	3527	3542

https://truckmanualshub.com/

kgm to ft.lb

1 kg.m = 7.233 ft.lb

	0	1	2	3	4	5	6	7	8	9
		7.2	14.5	21.7	28.9	36.2	43.4	50.6	57.9	65.1
10	72.3	79.6	86.8	94.0	101.3	108.5	115.7	123.0	130.2	137.4
20	144.7	151.9	159.1	166.4	173.6	180.8	188.1	195.3	202.5	209.8
30	217.0	224.2	231.5	238.7	245.9	253.2	260.4	267.6	274.9	282.1
40	289.3	396.6	303.8	311.0	318.3	325.5	332.7	340.0	347.2	354.4
50	361.7	368.9	376.1	383.4	390.6	397.8	405.1	412.3	419.5	426.8
60	434.0	441.2	448.5	455.7	462.9	470.2	477.4	484.6	491.8	499.1
70	506.3	513.5	520.8	528.0	535.2	542.5	549.7	556.9	564.2	571.4
80	578.6	585.9	593.1	600.3	607.6	614.8	622.0	629.3	636.5	643.7
90	651.0	658.2	665.4	672.7	679.9	687.1	694.4	701.6	708.8	716.1
100	723.3	730.5	737.8	745.0	752.2	759.5	766.7	773.9	781.2	788.4
110	795.6	802.9	810.1	817.3	824.6	831.8	839.0	846.3	853.5	860.7
120	868.0	875.2	882.4	889.7	896.6	904.1	911.4	918.6	925.8	933.1
130	940.3	947.5	954.8	962.0	969.2	976.5	983.7	990.9	998.2	1005.4
140	1012.6	1019.9	1027.1	1034.3	1041.5	1048.8	1056.0	1063.2	1070.5	1077.7
150	1084.9	1092.2	1099.4	1106.6	1113.9	1121.1	1128.3	1135.6	1142.8	1150.0
160	1157.3	1164.5	1171.7	1179.0	1186.2	1193.4	1200.7	1207.9	1215.1	1222.4
170	1129.6	1236.8	1244.1	1251.3	1258.5	1265.8	1273.0	1280.1	1287.5	1294.7
180	1301.9	1309.2	1316.4	1323.6	1330.9	1338.1	1345.3	1352.6	1359.8	1367.0
190	1374.3	1381.5	1388.7	1396.0	1403.2	1410.4	1417.7	1424.9	1432.1	1439.4

https://truckmanualshub.com/

Temperature

Fahrenheit-Centigrade Conversion. — A simple way to convert a Fahrenheit temperature reading into a Centigrade temperature reading or vice versa is to enter the accompanying table in the center or boldface column of figures.

These figures refer to the temperature in either Fahrenheit or Centigrade degrees.

If it is desired to convert from Fahrenheit to Centigrade degrees, consider the center column as a table of Fahrenheit temperatures and read the corresponding Centigrade temperature in the column at the left.

If it is desired to convert from Centigrade to Fahrenheit degrees, consider the center column as a table of Centigrade values, and read the corresponding Fahrenheit temperature on the right.

°C		°F	°C		°F	°C		°F	°C		°F
− 40.4	− 40	− 40.0	− 11.7	11	51.8	7.8	46	114.8	27.2	81	117.8
− 37.2	− 35	− 31.0	− 11.1	12	53.6	8.3	47	116.6	27.8	82	179.6
− 34.4	− 30	− 22.0	− 10.6	13	55.4	8.9	48	118.4	28.3	83	181.4
− 31.7	− 25	− 13.0	− 10.0	14	57.2	9.4	49	120.2	28.9	84	183.2
− 28.9	− 20	− 4.0	− 9.4	15	59.0	10.0	50	122.0	29.4	85	185.0
− 28.3	− 19	− 2.2	− 8.9	16	60.8	10.6	51	123.8	30.0	86	186.8
− 27.8	− 18	− 0.4	− 8.3	17	62.6	11.1	52	125.6	30.6	87	188.6
− 27.2	− 17	1.4	− 7.8	18	64.4	11.7	53	127.4	31.1	88	190.4
− 26.7	− 16	3.2	− 7.2	19	66.2	12.2	54	129.2	31.7	89	192.2
− 26.1	− 15	5.0	− 6.7	20	68.0	12.8	55	131.0	32.2	90	194.0
− 25.6	− 14	6.8	− 6.1	21	69.8	13.3	56	132.8	32.8	91	195.8
− 25.0	− 13	8.6	− 5.6	22	71.6	13.9	57	134.6	33.3	92	197.6
− 24.4	− 12	10.4	− 5.0	23	73.4	14.4	58	136.4	33.9	93	199.4
− 23.9	− 11	12.2	− 4.4	24	75.2	15.0	59	138.2	34.4	94	201.2
− 23.3	− 10	14.0	− 3.9	25	77.0	15.6	60	140.0	35.0	95	203.0
− 22.8	− 9	15.8	− 3.3	26	78.8	16.1	61	141.8	35.6	96	204.8
− 22.2	− 8	17.6	− 2.8	27	80.6	16.7	62	143.6	36.1	97	206.6
− 21.7	− 7	19.4	− 2.2	28	82.4	17.2	63	145.4	36.7	98	208.4
− 21.1	− 6	21.2	− 1.7	29	84.2	17.8	64	147.2	37.2	99	210.2
− 20.6	− 5	23.0	− 1.1	30	86.0	18.3	65	149.0	37.8	100	212.0
− 20.0	− 4	24.8	− 0.6	31	87.8	18.9	66	150.8	40.6	105	221.0
− 19.4	− 3	26.6	0	32	89.6	19.4	67	152.6	43.3	110	230.0
− 18.9	− 2	28.4	0.6	33	91.4	20.0	68	154.4	46.1	115	239.0
− 18.3	− 1	30.2	1.1	34	93.2	20.6	69	156.2	48.9	120	248.0
− 17.8	0	32.0	1.7	35	95.0	21.1	70	158.0	51.7	125	257.0
− 17.2	1	33.8	2.2	36	96.8	21.7	71	159.8	54.4	130	266.0
− 16.7	2	35.6	2.8	37	98.6	22.2	72	161.6	57.2	135	275.0
− 16.1	3	37.4	3.3	38	100.4	22.8	73	163.4	60.0	140	284.0
− 15.6	4	39.2	3.9	39	102.2	23.3	74	165.2	62.7	145	293.0
− 15.0	5	41.0	4.4	40	104.0	23.9	75	167.0	65.6	150	302.0
− 14.4	6	42.8	5.0	41	105.8	24.4	76	168.8	68.3	155	311.0
− 13.9	7	44.6	5.6	42	107.6	25.0	77	170.6	71.1	160	320.0
− 13.3	8	46.4	6.1	43	109.4	25.6	78	172.4	73.9	165	329.0
− 12.8	9	48.2	6.7	44	111.2	26.1	79	174.2	76.7	170	338.0
− 12.2	10	50.0	7.2	45	113.0	26.7	80	176.0	79.4	175	347.0

https://truckmanualshub.com/

https://truckmanualshub.com/

Komatsu Forklift Co., Ltd.

No. 3-4, 2-Chome, Akasaka, Minato-ku, Tokyo, Japan

Printed in Japan
11-01(02)08001