LUBRICATION & MAINTENANCE

TABLE OF CONTENTS

page

INTERNATIONAL SYMBOLS
DESCRIPTION 2
PARTS & LUBRICANT RECOMMENDATION
DESCRIPTION
LUBRICANT RECOMMENDATIONS 3
FLUID TYPES 3
FLUID TYPES
DESCRIPTION
ENGINE OIL 4
ENGINE OIL - DIESEL ENGINES 5
FUEL REQUIREMENTS - DIESEL ENGINE 5
POWER STEERING FLUID 6
ENGINE COOLANT 6
TRANSFER CASE 7
AXLE 7
MANUAL TRANSMISSION 7
AUTOMATIC TRANSMISSION FLUID 7
BRAKE FLUID 8
OPERATION - AUTOMATIC TRANSMISSION FLUID 8
FLUID CAPACITIES
SPECIFICATIONS
FLUID CAPACITIES 9
MAINTENANCE SCHEDULES
DESCRIPTION
MAINTENANCE SCHEDULES 11
MAINTENANCE SCHEDULES - 24-VALVE CUMMINS TURBO DIESEL 18
MAINTENANCE SCHEDULES - SRT/10 25
JUMP STARTING
STANDARD PROCEDURE 32
HOISTING
STANDARD PROCEDURE 33
TOWING
STANDARD PROCEDURE 37

INTERNATIONAL SYMBOLS

DESCRIPTION

DaimlerChrysler Corporation uses international symbols to identify engine compartment lubricant and fluid inspection and fill locations.

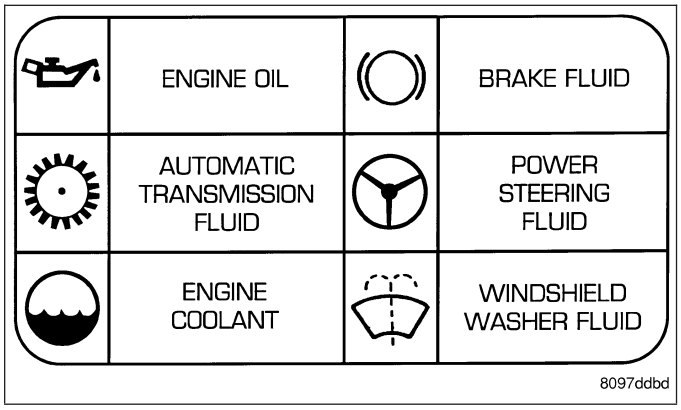

PARTS & LUBRICANT RECOMMENDATION

DESCRIPTION

LUBRICANT RECOMMENDATIONS

Chassis

Component	Fluid, Lubricant, or Genuine Part
Steering Gear & Linkage, Ball Joints, Prop Shafts & Yokes, Wheel Bearings	Mopar® Multi-Purpose Lubricant NLGI Grade 2 EP, GC-LB

Body

Component	Fluid, Lubricant, and Genuine Part
Hinges:	
Door & Hood	Mopar® Engine Oil
Swing Gate	Mopar® Multi-Purpose Lube NLGI Grade 2 EP, GC-LB
Latches: Door, Hood/Safety Catch, Swing Gate	Mopar® Multi-Purpose Lube NLGI Grade 2 EP, GC-LB
Seat Regulator & Track	Mopar® Multi-Purpose Lube NLGI Grade 2 EP, GC-LB
Lock Cylinders	Mopar® Lock Cylinder Lube

FLUID TYPES

When service is required, DaimlerChrysler Corporation recommends that only Mopar® brand parts, lubricants and chemicals be used. Mopar® provides the best engineered products for servicing DaimlerChrysler Corporation vehicles.

Only lubricants bearing designations defined by the following organization should be used to service a DaimlerChrysler Corporation vehicle.

- Society of Automotive Engineers (SAE)
- American Petroleum Institute (API)
- National Lubricating Grease Institute (NLGI)

API QUALITY CLASSIFICATION

This symbol on the front of an oil container means that the oil has been certified by the American Petroleum Institute (API) to meet all the lubrication requirements specified by DaimlerChrysler Corporation.

9400-9

GEAR LUBRICANTS

SAE ratings also apply to multigrade gear lubricants. In addition, API classification defines the lubricants usage. Such as API GL-5 and SAE 75W-90.

FLUID TYPES

DESCRIPTION

ENGINE OIL

WARNING: New or used engine oil can be irritating to the skin. Avoid prolonged or repeated skin contact with engine oil. Contaminants in used engine oil, caused by internal combustion, can be hazardous to your health. Thoroughly wash exposed skin with soap and water. Do not wash skin with gasoline, diesel fuel, thinner, or solvents, health problems can result. Do not pollute, dispose of used engine oil properly. Contact your dealer or government agency for location of collection center in your area.

Only lubricants bearing designations defined by the following organization should be used.

- Society of Automotive Engineers (SAE)
- American Petroleum Institute (API)
- National Lubricating Grease Institute (NLGI)
- Association des Constructeurs Européens d' Automobiles (European Automobile Manufacturers Association) (ACEA)

API SERVICE GRADE CERTIFIED

Use an engine oil that is API Certified. MOPAR® provides engine oils, that meet or exceed this requirement.

SAE VISCOSITY

An SAE viscosity grade is used to specify the viscosity of engine oil. Use only engine oils with multiple viscosities such as 5W-30 or 10W-30. These are specified with a dual SAE viscosity grade which indicates the cold-to-hot temperature viscosity range. Select an engine oil that is best suited to your particular temperature range and variation. **For 3.7L/4.7L engines SAE 5W-30 engine oil is recommended for all operating temperatures. For 5.7L engines SAE 5W-20 engine oil is recommended for all operating temperatures-.These engine oils improve low temperature starting and vehicle fuel economy. Refer to your engine oil filler cap for the recommended engine oil viscosity for your vehicle. Vehicles with 5.7L engines equipped with Multiple Displacement System (MDS) must use SAE 5W-20 oil. Failure to do so may result in improper operation of the Multiple Displacement System (MDS). Refer to Multi Displacement System under Starting and Operating for details. Refer to the engine oil filler cap for the recommened engine oil viscosity for each vehicle.**

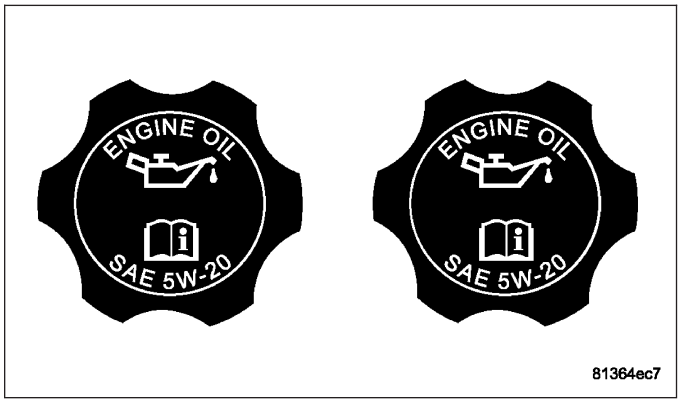

ACEA Categories

For countries that use the ACEA European Oil Categories for Service Fill Oils, use engine oils that meet the requirements of ACEA A1/B1, A2/B2, or A3/B3.

ENERGY CONSERVING OIL

An Energy Conserving type oil is recommended for gasoline engines. The designation of ENERGY CONSERVING is located on the label of an engine oil container.

CONTAINER IDENTIFICATION

Standard engine oil identification notations have been adopted to aid in the proper selection of engine oil. The identifying notations are located on the front label of engine oil plastic bottles and the top of engine oil cans.

This symbol means that the oil has been certified by the American Petroleum Institute (API). DiamlerChrysler only recommend API Certified engine oils. Use Mopar® engine oil or equivalent.

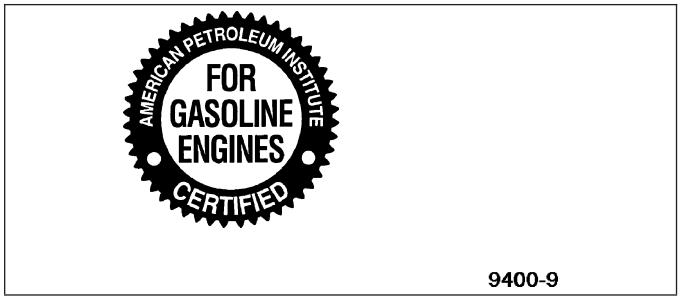

ENGINE OIL - DIESEL ENGINES

Use only Diesel Engine Oil meeting standard **MIL-2104C** or API Classification **CD or higher** or **CCML D4, D5**.

SAE VISCOSITY GRADE

CAUTION: Low viscosity oils must have the proper API quality or the CCMC G5 designation.

To assure of properly formulated engine oils, it is recommended that SAE Grade 10W-40 engine oils that meet Chrysler material standard MS-6395, be used in accordance to ACEA B3, B4 specification. European Grade 10W-40 oils that meet Association des Constructeurs Européens d' Automobiles (European Automobile Manufacturers Association) (ACEA) specifications, are also acceptable.

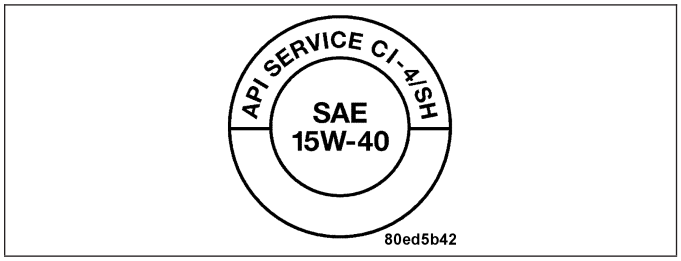

Oils of the SAE 5W-40 grade number are preferred when minimum temperatures consistently fall below -15° C (5° F).

ACEA Categories

For countries that use the ACEA European Oil Categories for Service Fill Oils, use engine oils that meet the requirements of ACEA A1/B1, A2/B2, or A3/B3.

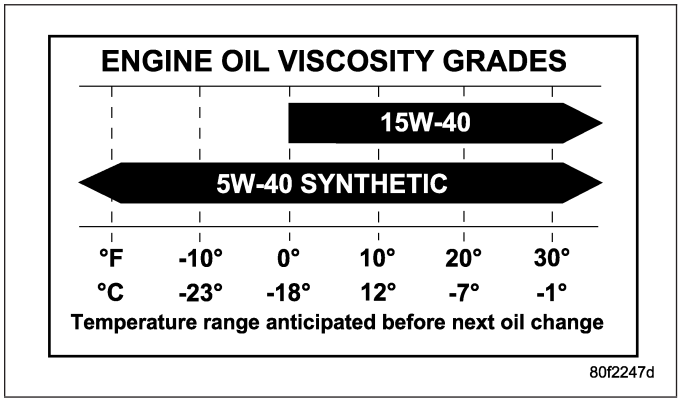

FUEL REQUIREMENTS - DIESEL ENGINE

WARNING: Do not use alcohol or gasoline as a fuel blending agent. They can be unstable under certain conditions and hazardous or explosive when mixed with diesel fuel.

Use good quality diesel fuel from a reputable supplier in your Dodge truck. For most year-round service, number 2 diesel fuel meeting ASTM specification D-975 will provide good performance. If the vehicle is exposed to extreme cold (below 0°F/-18°C), or is required to operate at colder-than-normal conditions for prolonged periods, use climatized No. 2 diesel fuel or dilute the No. 2 diesel fuel with 50% No. 1 diesel fuel. This will provide better protection from fuel gelling or wax-plugging of the fuel filters.

Diesel fuel is seldom completely free of water. To prevent fuel system trouble, including fuel line freezing in winter, drain the accumulated water from the fuel/water separator using the fuel/water separator drain provided. If you buy good-quality fuel and follow the cold-weather advice above, fuel conditioners should not be required in your vehicle. If available in your area, a high cetane "premium" diesel fuel may offer improved cold starting and warm-up performance.

POWER STEERING FLUID

Mopar® ATF +4, Automatic Transmission Fluid is required in the power steering system. Substitute fluids can induce power steering system failure.

Mopar® ATF +4, Automatic Transmission Fluid when new is red in color. The ATF is dyed red so it can be identified from other fluids used in the vehicle such as engine oil or antifreeze. The red color is not permanent and is not an indicator of fluid condition. As the vehicle is driven, the ATF will begin to look darker in color and may eventually become brown. **This is normal.** ATF+4 also has a unique odor that may change with age. Consequently, odor and color cannot be used to indicate the fluid condition or the need for a fluid change.

ENGINE COOLANT

WARNING: Antifreeze is an ethylene glycol base coolant and is harmful if swallowed or inhaled. If swallowed, drink two glasses of water and induce vomiting. If inhaled, move to fresh air area. Seek medical attention immediately. Do not store in open or unmarked containers. Wash skin and clothing thoroughly after coming in contact with ethylene glycol. Keep out of reach of children. Dispose of glycol base coolant properly, contact your dealer or government agency for location of collection center in your area.

WARNING: Do not open a cooling system when the engine is at operating temperature or hot under pressure, personal injury can result. Avoid radiator cooling fan when engine compartment related service is performed, personal injury can result.

CAUTION: Use of Propylene Glycol based coolants is not recommended, as they provide less freeze protection and less corrosion protection.

The cooling system is designed around the coolant. The coolant must accept heat from engine metal, in the cylinder head area near the exhaust valves and engine block. Then coolant carries the heat to the radiator where the tube/fin radiator can transfer the heat to the air.

The use of aluminum cylinder blocks, cylinder heads, and water pumps requires special corrosion protection. Mopar® Antifreeze/Coolant, 5 Year/100,000 Mile Formula (MS-9769), or the equivalent ethylene glycol base coolant with organic corrosion inhibitors (called HOAT, for Hybrid Organic Additive Technology) is recommended. This coolant offers the best engine cooling without corrosion when mixed with 50% Ethylene Glycol and 50% distilled water to obtain a freeze point of -37°C (-35°F). If it loses color or becomes contaminated, drain, flush, and replace with fresh properly mixed coolant solution.

CAUTION: Do not use coolant additives that are claimed to improve engine cooling.

CAUTION: Mopar® Antifreeze/Coolant, 5 Year/100,000 Mile Formula (MS-9769) may not be mixed with any other type of antifreeze. Mixing of coolants other than specified non-HOAT or other HOAT coolant, may result in engine damage that may not be covered under the new vehicle warranty, and decreased corrosion protection.

COOLANT PERFORMANCE

The required ethylene-glycol (antifreeze) and distilled water mixture depends upon climate and vehicle operating conditions. The coolant performance of various mixtures follows:

Pure Distilled Water - Distilled water can absorb more heat than a mixture of water and ethylene-glycol. This is for purpose of heat transfer only. Water also freezes at a higher temperature and allows corrosion.

100 percent Ethylene-Glycol - The corrosion inhibiting additives in ethylene-glycol need the presence of distilled water to dissolve. Without water, additives form deposits in system. These act as insulation causing temperature to rise to as high as 149°C (300°F). This temperature is hot enough to melt plastic and soften solder. The increased temperature can result in engine detonation. In addition, 100 percent ethylene-glycol freezes at -22°C (-8°F).

50/50 Ethylene-Glycol and Distilled Water - Is the recommended mixture, it provides protection against freezing to -37°C (-34°F). The antifreeze concentration **must always** be a minimum of 44 percent, year-round in all climates. If percentage is lower, engine parts may be eroded by cavitation. Maximum protection against freezing is provided with a 68 percent antifreeze concentration, which prevents freezing down to -67.7°C (-90°F). A higher percentage

will freeze at a warmer temperature. Also, a higher percentage of antifreeze can cause the engine to overheat because specific heat of antifreeze is lower than that of water.

CAUTION: Richer antifreeze mixtures cannot be measured with normal field equipment and can cause problems associated with 100 percent ethylene-glycol.

TRANSFER CASE

Recommended lubricant for the NV241 GENII, NV271, NV243, NV244 GENII, and NV273 transfer cases is Mopar® ATF +4, Automatic Transmission Fluid.

AXLE

NOTE: DaimlerChrysler recommends using Mopar® lubricants or lubricants of equal quality.

FRONT AXLE

- C205FD - Mopar® Gear Lubricant 75W-90
- 9 1/4 AA - Mopar® Synthetic Gear Lubricant 75W-90
- 9 1/4 AA EL- Mopar® Synthetic Gear Lubricant 75W-90

REAR AXLE

- 9 1/4 - Mopar® Synthetic Gear Lubricant 75W-140
- 10 1/2 AA - Mopar® Synthetic Gear Lubricant 75W-90
- 10 1/2 AA EL- Mopar® Synthetic Gear Lubricant 75W-90
- 11 1/2 AA - Mopar® Synthetic Gear Lubricant 75W-90
- 248RBI - Mopar® Gear & Axle Lubricant SAE 90

NOTE: Trac-Lok® differentials require Limited Slip Additive in the lubricant. Trac-Rite™ / Trac-Rite EL™ differentials DO NOT require Limited Slip Additive.

MANUAL TRANSMISSION

NOTE: DaimlerChrysler recommends using Mopar® lubricants or lubricants of equal quality.

- Getrag 238 - Mopar® ATF+4 Transmission Fluid
- G 56 - Mopar® ATF+4 Transmission Fluid
- T-56 - Mopar® Synthetic 75W-85 Manual Transmission Lubricant

AUTOMATIC TRANSMISSION FLUID

NOTE: Refer to Service Procedures in this group for fluid level checking procedures.

Mopar® ATF +4, Automatic Transmission Fluid is the recommended fluid for DaimlerChrysler automatic transmissions.

Dexron II fluid IS NOT recommended. Clutch chatter can result from the use of improper fluid.

Mopar® ATF +4, Automatic Transmission Fluid when new is red in color. The ATF is dyed red so it can be identified from other fluids used in the vehicle such as engine oil or antifreeze. The red color is not permanent and is not an indicator of fluid condition. As the vehicle is driven, the ATF will begin to look darker in color and may eventually become brown. **This is normal.** ATF+4 also has a unique odor that may change with age. Consequently, odor and color cannot be used to indicate the fluid condition or the need for a fluid change.

FLUID ADDITIVES

DaimlerChrysler strongly recommends against the addition of any fluids to the transmission, other than those automatic transmission fluids listed above. Exceptions to this policy are the use of special dyes to aid in detecting fluid leaks.

Various “special” additives and supplements exist that claim to improve shift feel and/or quality. These additives and others also claim to improve converter clutch operation and inhibit overheating, oxidation, varnish, and sludge. These claims have not been supported to the satisfaction of DaimlerChrysler and these additives **must not be used.** The use of transmission “sealers” should also be avoided, since they may adversely affect the integrity of transmission seals.

BRAKE FLUID

The brake fluid used in this vehicle must conform to DOT 3 specifications and SAE J1703 standards. No other type of brake fluid is recommended or approved for usage in the vehicle brake system. Use only Mopar brake fluid or an equivalent from a tightly sealed container.

CAUTION: Never use reclaimed brake fluid or fluid from an container which has been left open. An open container of brake fluid will absorb moisture from the air and contaminate the fluid.

CAUTION: Never use any type of a petroleum-based fluid in the brake hydraulic system. Use of such type fluids will result in seal damage of the vehicle brake hydraulic system causing a failure of the vehicle brake system. Petroleum based fluids would be items such as engine oil, transmission fluid, power steering fluid, etc.

OPERATION - AUTOMATIC TRANSMISSION FLUID

The automatic transmission fluid is selected based upon several qualities. The fluid must provide a high level of protection for the internal components by providing a lubricating film between adjacent metal components. The fluid must also be thermally stable so that it can maintain a consistent viscosity through a large temperature range. If the viscosity stays constant through the temperature range of operation, transmission operation and shift feel will remain consistent. Transmission fluid must also be a good conductor of heat. The fluid must absorb heat from the internal transmission components and transfer that heat to the transmission case.

FLUID CAPACITIES

SPECIFICATIONS

FLUID CAPACITIES

DESCRIPTION	SPECIFICATION
FUEL TANK	
1500 Short Box	98 L (26 gal.)*
2500/3500 Short Box	128L (34 gal.)*
All Long Box	132 L (35 gal.)*
ENGINE OIL WITH FILTER	
3.7L	4.7 L (5.0 qts.)
4.7L	5.6 L (6.0 qts.)
5.7L	6.6 L (7.0 qts.)
5.9L DIESEL	11.4 L (12.0 qts.)
8.3L - Oil Service Quantity	8.2L (8.75 qts.)
8.3L - Engine Overhaul Quantity	9.4L (10.0 qts.)
COOLING SYSTEM	
3.7L	15.4 L (16.2 qts.)**
4.7L	15.4 L (16.2 qts.)**
5.7L	15.4L (16.2 qts.)**
5.9L Diesel Engine	28L (29.5 qts.)**
8.3L	15.1L (18 qts.)
POWER STEERING	
Power steering fluid capacities are dependent on engine/chassis options as well as steering gear/cooler options. Depending on type and size of internal cooler, length and inside diameter of cooler lines, or use of an auxiliary cooler, these capacities may vary. Refer to 19, Steering for proper fill and bleed procedures.	
AUTOMATIC TRANSMISSION	
Service Fill - 42RLE	3.8L (4.0 qts)
Overhaul Fill - 42RLE	8.3L (17.6 pts)◊
Service Fill - 45RFE/545RFE	4X2 - 5.2 L (11.0 pts.)
	4X4 - 6.2 L (13.0 pts.)
Overhaul - 45RFE/545RFE	14-16 L (29-33 pts.) ◊
Service Fill - 48RE	3.8 L (4.0 qts.)
Overhaul - 48RE	14-16L (29-33 pts.) ◊
◊ Dry fill capacity. Depending on type and size of internal cooler, length and inside diameter of cooler lines, or use of an auxiliary cooler, these figures may vary. (Refer to 21 - TRANSMISSION/AUTOMATIC/FLUID - STANDARD PROCEDURE)	
MANUAL TRANSMISSION	
DIESEL ENGINE - G56	5.6 L (12 pts.)
5.7L ENGINE - G56	4.7 L (10 pts.)
GETRAG 238	2.2 L (4.6 pts.)
TREMEC T-56	2.27 L (4.8 pts.)
TRANSFER CASE	
NV241 GENII	1.6 L (3.4 pts.)
NV243	1.6 L (3.4 pts.)

DESCRIPTION	SPECIFICATION
NV244 GENII	1.6 L (3.4 pts.)
NV271	1.89 L (4.0 pts.)
NV273	1.89 L (4.0 pts.)
FRONT AXLE ± .03 L (1 oz)	
C205FD	1.6 L (56 oz.)
9 1/4 AA	2.2 L (74 oz.)
9 1/4 AA EL	2.0 L (6.8 oz.)
REAR AXLE ± .03 L (1 oz)	
9 1/4	2.1 L (72 oz.) ***
10 1/2 AA	2.5 L (85 oz.)
10 1/2 AA EL	2.5 L (85 oz.)
11 1/2 AA Open	4.2 L (142 oz.)
11 1/2 AA Trac-Rite	4.0 L (135 oz.)
248RBI (DANA 60)	2.8 L (46 oz.) ****
*** With Trac-Lok add 118 ml (4 oz.) of Limited Slip Additive.	
**** Add 147 ml (5 oz.) of Limited Slip Additive	
** Includes 0.9L (1.0 qts.) for coolant reservoir.	
*Nominal refill capacities are shown. A variation may be observed from vehicle to vehicle due to manufacturing tolerance and refill procedure.	

MAINTENANCE SCHEDULES

DESCRIPTION

MAINTENANCE SCHEDULES

There are two maintenance schedules that show the **required** service for your vehicle.

First is Schedule **"B"**. It is for vehicles that are operated under the conditions that are listed below and at the beginning of the schedule.

- Day or night temperatures are below 32° F (0° C).
- Stop and go driving.
- Extensive engine idling.
- Driving in dusty conditions.
- Short trips of less than 10 miles (16 km).
- More than 50% of your driving is at sustained high speeds during hot weather, above 90° F C (32°).
- Trailer towing.
- Snowplowing.
- Heavy Loading.
- Taxi, police, or delivery service (commercial service).
- Off-road or desert operation.
- **If equipped for and operating with E-85 (ethanol) fuel.**

NOTE: If ANY of these apply to you then change your engine oil every 3,000 miles (5 000 km) or 3 months, whichever comes first and follow schedule "B" of the ″Maintenance Schedules″ section of this manual.

NOTE: If ANY of these apply to you then flush and replace your engine coolant every 102,000 miles (170 000 km) or 60 months, whichever comes first and follow schedule "B" of the ″Maintenance Schedules″ section of this manual.

NOTE: Most vehicles are operated under the conditions listed for Schedule ″B″.

Second is Schedule **"A"**. It is for vehicles that are not operated under any of the conditions listed under Schedule ″B″.

Use the schedule that best describes your driving conditions. Where time and mileage are listed, follow the interval that occurs first.

NOTE: Under no circumstances should oil change intervals exceed 6000 miles (10 000 km) or 6 months whichever comes first.

CAUTION: Failure to perform the required maintenance items may result in damage to the vehicle.

At Each Stop for Fuel

- Check the engine oil level about 5 minutes after a fully warmed engine is shut off. Checking the oil level while the vehicle is on level ground will improve the accuracy of the oil level reading. Add oil only when the level is at or below the ADD or MIN mark.
- Check the windshield washer solvent and add if required.

Once a Month

- Check tire pressure and look for unusual wear or damage.
- Inspect the battery and clean and tighten the terminals as required.
- Check the fluid levels of coolant bottle, brake master cylinder, and transmission and add as needed.
- Check all lights and all other electrical items for correct operation.

At Each Oil Change

- Change the engine oil filter.
- Lubricate Drivetrain/Steering/Suspension Grease Fittings (if equipped)
- Inspect the exhaust system.
- Inspect the brake hoses.
- Inspect the CV joints (if equipped) and front suspension components.
- Check the automatic transmission fluid level.
- Check the manual transmission fluid level.
- Check the coolant level, hoses, and clamps.
- Lubricate Front Drive Shaft Fitting (2500/3500, 4X4).

Schedule “B”

Follow schedule “B” if you usually operate your vehicle under one or more of the following conditions.

- Day or night temperatures are below 32° F (0° C).
- Stop and go driving.
- Extensive engine idling.
- Driving in dusty conditions.
- Short trips of less than 10 miles (16 km).
- More than 50% of your driving is at sustained high speeds during hot weather, above 90° F C (32°).
- Trailer towing.
- Snowplowing.
- Heavy Loading.
- Taxi, police, or delivery service (commercial service).
- Off-road or desert operation.
- **If equipped for and operating with E-85 (ethanol) fuel.**

NOTE: If ANY of these apply to you then change your engine oil every 3,000 miles (5 000 km) or 3 months, whichever comes first and follow schedule “B” of the ″Maintenance Schedules″ section of this manual.

NOTE: If ANY of these apply to you then flush and replace your engine coolant every 102,000 miles (170 000 km) or 60 months, whichever comes first and follow schedule “B” of the ″Maintenance Schedules″ section of this manual.

If none of these apply to you, then change your engine oil at every interval shown on schedule ″A″ of the ″Maintenance Schedules″ section of this manual.

Miles (Kilometers)	**3,000 (5 000)**	**6,000 (10 000)**	**9,000 (15 000)**	**12,000 (20 000)**	**15,000 (25 000)**
Change engine oil and engine oil filter at interval shown or 3 months, whichever comes first.	X	X	X	X	X
Lubricate Front Drive Shaft Fitting (2500/3500, 4X4).	X	X	X	X	X
Rotate tires.		X		X	
Check spare tire for proper pressure and correct stowage.		X		X	
Lubricate outer tie rod ends 2500/3500 (4X4) models only.		X		X	
Change rear axle fluid.					X
Change front axle fluid (4X4).					X
Inspect brake linings.				X	
Inspect engine air cleaner filter, replace if necessary.					X

Miles **(Kilometers)**	**18,000** **(30 000)**	**21,000** **(35 000)**	**24,000** **(40 000)**	**27,000** **(45 000)**	**30,000** **(50 000)**
Change engine oil and engine oil filter at interval shown or 3 months, whichever comes first.	X	X	X	X	X
Lubricate Front Drive Shaft Fitting (2500/3500, 4X4).	X	X	X	X	X
Rotate tires.	X		X		X
Check spare tire for proper pressure and correct stowage.	X		X		X
Lubricate outer tie rod ends 2500/3500 (4X4) models only.	X		X		X
Change rear axle fluid.					X
Change front axle fluid (4X4).					X
Check transfer case fluid level (4X4).					X
Inspect brake linings.			X		
Inspect engine air cleaner filter, replace if necessary.					X
Replace spark plugs.					X
Inspect PCV valve, replace as necessary. **					X

Miles **(Kilometers)**	**33,000** **(55 000)**	**36,000** **(60 000)**	**39,000** **(65 000)**	**42,000** **(70 000)**	**45,000** **(75 000)**
Change engine oil and engine oil filter at interval shown or 3 months, whichever comes first.	X	X	X	X	X
Lubricate Front Drive Shaft Fitting (2500/3500, 4X4).	X	X	X	X	X
Rotate tires.		X		X	
Check spare tire for proper pressure and correct stowage.		X		X	
Lubricate outer tie rod ends 2500/3500 (4X4) models only.		X		X	
Change rear axle fluid.					X
Change front axle fluid (4X4).					X
Inspect brake linings.		X			
Inspect engine air cleaner filter, replace if necessary.					X

Miles **(Kilometers)**	**48,000** **(80 000)**	**51,000** **(85 000)**	**54,000** **(90 000)**	**57,000** **(95 000)**	**60,000** **(100 000)**
Change engine oil and engine oil filter at interval shown or 3 months, whichever comes first.	X	X	X	X	X
Lubricate Front Drive Shaft Fitting (2500/3500, 4X4).	X	X	X	X	X
Rotate tires.	X		X		X
Check spare tire for proper pressure and correct stowage.	X		X		X
Lubricate outer tie rod ends 2500/3500 (4X4) models only.	X		X		X
Flush and replace engine coolant at 60 months, or 102, 000 miles (170 000 km) whichever comes first.					X

Miles **(Kilometers)**	**48,000** **(80 000)**	**51,000** **(85 000)**	**54,000** **(90 000)**	**57,000** **(95 000)**	**60,000** **(100 000)**
Drain and refill transfer case fluid (4X4).					X
Change rear axle fluid.					X
Change front axle fluid (4X4).					X
Change 6-spd manual transmission fluid 2500/3500 models only.					X
Inspect brake linings.	X				X
Inspect engine air cleaner filter, replace if necessary.					X
Replace spark plugs.					X
Inspect and replace ignition cables if necessary.					X
Inspect PCV valve, replace as necessary. **					X
Drain and refill automatic transmission fluid and change main sump filter*.					X

Miles **(Kilometers)**	**63,000** **(105 000)**	**66,000** **(110 000)**	**69,000** **(115 000)**	**72,000** **(120 000)**	**75,000** **(125 000)**
Change engine oil and engine oil filter at interval shown or 3 months, whichever comes first.	X	X	X	X	X
Lubricate Front Drive Shaft Fitting (2500/3500, 4X4).	X	X	X	X	X
Rotate tires.		X		X	
Check spare tire for proper pressure and correct stowage.		X		X	
Lubricate outer tie rod ends 2500/3500 (4X4) models only.		X		X	
Inspect engine air cleaner filter, replace if necessary.					X
Change rear axle fluid.					X
Change front axle fluid (4X4).					X
Inspect brake linings.				X	
Inspect auto tension drive belt and replace if required. (3.7L/4.7L/5.7L).					X

Miles **(Kilometers)**	**78,000** **(130 000)**	**81,000** **(135 000)**	**84,000** **(140 000)**	**87,000** **(145 000)**	**90,000** **(150 000)**
Change engine oil and engine oil filter at interval shown or 3 months, whichever comes first.	X	X	X	X	X
Lubricate Front Drive Shaft Fitting (2500/3500, 4X4).	X	X	X	X	X
Rotate tires.	X		X		X
Check spare tire for proper pressure and correct stowage.	X		X		X
Lubricate outer tie rod ends 2500/3500 (4X4) models only.	X		X		X
Change rear axle fluid.					X

Miles **(Kilometers)**	**78,000** **(130 000)**	**81,000** **(135 000)**	**84,000** **(140 000)**	**87,000** **(145 000)**	**90,000** **(150 000)**
Change front axle fluid (4X4).					X
Check transfer case fluid level (4X4).					X
Inspect brake linings.			X		
Inspect engine air cleaner filter, replace if necessary.					X
Replace spark plugs.					X
Inspect PCV valve, replace as necessary. **					X
Inspect auto tension drive belt and replace if required (3.7L/4.7L/5.7L).****					X

Miles **(Kilometers)**	**93,000** **(155 000)**	**96,000** **(160 000)**	**99,000** **(165 000)**	**102,000** **(170 000)**
Change engine oil and engine oil filter at interval shown or 3 months, whichever comes first.	X	X	X	X
Lubricate Front Drive Shaft Fitting (2500/3500, 4X4).	X	X	X	X
Rotate tires.		X		X
Check spare tire for proper pressure and correct stowage.		X		X
Lubricate outer tie rod ends 2500/3500 (4X4) models only.		X		X
Flush and replace engine coolant, if not replaced at 60 months.				X
Inspect brake linings.		X		

Miles **(Kilometers)**	**105,000** **(175 000)**	**108,000** **(180 000)**	**111,000** **(185 000)**	**114,000** **(190 000)**	**117,000** **(195 000)**	**120,000** **(200 000)**
Change engine oil and engine oil filter at interval shown or 3 months, whichever comes first.	X	X	X	X	X	X
Lubricate Front Drive Shaft Fitting (2500/3500, 4X4).	X	X	X	X	X	X
Rotate tires.		X		X		X
Check spare tire for proper pressure and correct stowage.		X		X		X
Lubricate outer tie rod ends 2500/3500 (4X4) models only.		X		X		X
Drain and refill transfer case fluid (4X4).						X
Change rear axle fluid.	X					X
Change front axle fluid (4X4).	X					X
Change 6-spd manual transmission fluid 2500/3500 models only.						X
Inspect brake linings.		X				X
Inspect engine air cleaner filter, replace if necessary.	X					X
Replace spark plugs.						X
Inspect and replace ignition cables if necessary.						X

Miles (Kilometers)	105,000 (175 000)	108,000 (180 000)	111,000 (185 000)	114,000 (190 000)	117,000 (195 000)	120,000 (200 000)
Inspect PCV valve, replace as necessary. **						X
Inspect auto tension drive belt and replace if required (3.7L/4.7L/5.7L).	X					X
Drain and refill automatic transmission fluid and change main sump and spin-on cooler return filter (if equipped)*.						X
Flush and replace engine coolant at 120 months if not replaced at 102,000 miles (170 000 km).						X

* This applies only if the vehicle is used for frequent trailer towing, snowplowing, fleet vehicle or commercial service.

** This maintenance is recommended by the manufacturer to the owner, but not required to maintain the emissions warranty.

**** This maintenance is not required if the belt was previously replaced.

Inspection and service should also be performed anytime a malfunction is observed or suspected. Retain all receipts.

Schedule “A”

Miles (Kilometers) [Months]	6,000 (10 000) [6]	12,000 (20 000) [12]	18,000 (30 000) [18]	24,000 (40 000) [24]	30,000 (50 000) [30]
Change engine oil and engine oil filter.	X	X	X	X	X
Rotate tires.	X	X	X	X	X
Check transfer case fluid level (4X4).					X
Lubricate Front Drive Shaft Fitting (2500/3500, 4X4).	X	X	X	X	X
Lubricate outer tie rod ends 2500/3500 (4X4) models only.	X	X	X	X	X
Inspect brake linings.			X		
Inspect engine air cleaner filter, replace if necessary.					X
Replace spark plugs.					X

Miles (Kilometers) [Months]	36,000 (60 000) [36]	42,000 (70 000) [42]	48,000 (80 000) [48]	54,000 (90 000) [54]	60,000 (100 000) [60]	66,000 (110 000) [66]
Change engine oil and engine oil filter.	X	X	X	X	X	X
Rotate tires.	X	X	X	X	X	X
Check transfer case fluid level (4X4).					X	
Lubricate Front Drive Shaft Fitting (2500/3500, 4X4).	X	X	X	X	X	X
Lubricate outer tie rod ends 2500/3500 (4X4) models only.	X	X	X	X	X	X
Flush and replace engine coolant at 60 months, if not replaced at 102,000 miles (170 000 km).					X	
Inspect brake linings.	X			X		

Miles **(Kilometers)** **[Months]**	**36,000** **(60 000)** **[36]**	**42,000** **(70 000)** **[42]**	**48,000** **(80 000)** **[48]**	**54,000** **(90 000)** **[54]**	**60,000** **(100 000)** **[60]**	**66,000** **(110 000)** **[66]**
Inspect engine air cleaner filter, replace if necessary.					X	
Replace spark plugs.					X	
Inspect PCV valve, replace as necessary. **					X	
Inspect and replace ignition cables if necessary.					X	

Miles **(Kilometers)** **[Months]**	**72,000** **(120 000)** **[72]**	**78,000** **(130 000)** **[78]**	**84,000** **(140 000)** **[84]**	**90,000** **(150 000)** **[90]**	**96,000** **(160 000)** **[96]**
Change engine oil and engine oil filter.	X	X	X	X	X
Rotate tires.	X	X	X	X	X
Lubricate outer tie rod ends 2500/3500 (4X4) models only.	X	X	X	X	X
Check transfer case fluid level (4X4).				X	
Lubricate Front Drive Shaft Fitting (2500/3500, 4X4).	X	X	X	X	X
Inspect brake linings.	X			X	
Inspect engine air cleaner filter, replace if necessary.				X	
Replace spark plugs.				X	
Inspect PCV valve, replace as necessary. **				X	
Inspect auto tension drive belt and replace if required (3.7L/4.7L/5.7L).				X	

Miles **(Kilometers)** **[Months]**	**102,000** **(170 000)** **[102]**	**108,000** **(180 000)** **[108]**	**114,000** **(190 000)** **[114]**	**120,000** **(200 000)** **[120]**
Change engine oil and engine oil filter.	X	X	X	X
Rotate tires.	X	X	X	X
Drain and refill transfer case fluid (4X4).				X
Lubricate Front Drive Shaft Fitting (2500/3500, 4X4).	X	X	X	X
Flush and replace engine coolant, if not replaced at 60 months.	X			
Flush and replace engine coolant at 120 months, if not replaced at 102,000 miles (170 000 km).				X
Lubricate outer tie rod ends 2500/3500 (4X4) models only.	X	X	X	X
Inspect brake linings.		X		
Inspect auto tension drive belt and replace if required (3.7L/4.7L/5.7L).****	X			X
Inspect and replace ignition cables if necessary.				X
Inspect engine air cleaner filter, replace if necessary.				X
Replace spark plugs.				X

Miles (Kilometers) [Months]	102,000 (170 000) [102]	108,000 (180 000) [108]	114,000 (190 000) [114]	120,000 (200 000) [120]
Inspect PCV Valve, replace as necessary. **				X

** This maintenance is recommended by the manufacturer to the owner, but not required to maintain the emissions warranty.

**** This maintenance is not required if the belt was previously replaced.

Inspection and service should also be performed anytime a malfunction is observed or suspected. Retain all receipts.

WARNING:
You can be badly injured working on or around a motor vehicle. Do only that service work for which you have the knowledge and the right equipment. If you have any doubt about your ability to perform a service job, take your vehicle to a competent mechanic.

MAINTENANCE SCHEDULES - 24-VALVE CUMMINS TURBO DIESEL

There are two maintenance schedules that show the **required** service for your vehicle.

First is Schedule **"B"**. It is for vehicles that are operated under the conditions that are listed below and at the beginning of the schedule.

- Frequent short trips where the engine does not achieve full operating temperature (operating temperature defined as 190° F (66° C) coolant temperature).
- Extensive engine idling (over 10 minutes per hour of operation) at ambient temperatures less than 32° F (0° C).
- Driving in dusty conditions.
- Frequent trailer towing.
- Taxi, police, or delivery service (commercial service).
- Off-road or desert operation.
- Extensive operation at high engine speeds (greater than 2900 rpm) and loads (greater than 70% throttle).

NOTE: Most vehicles are operated under the conditions listed for Schedule ″B″.

Second is Schedule **"A"**. It is for vehicles that are not operated under any of the conditions listed under Schedule ″B″.

Use the schedule that best describes your driving conditions. Where time and mileage are listed, follow the interval that occurs first.

CAUTION: Failure to perform the required maintenance items may result in damage to the vehicle.

At Each Stop for Fuel

- Check the engine oil level about 15 minutes after a fully warmed engine is shut off. Checking the oil level while the vehicle is on level ground will improve the accuracy of the oil level reading. Add oil only when the level is at or below the ADD or MIN mark.
- Check the windshield washer solvent and add if required.
- Drain water from the fuel filter.

Once a Month

- Check tire pressure and look for unusual wear or damage.
- Inspect the batteries and clean and tighten the terminals as required.
- Check the fluid levels of coolant reservoir, brake master cylinder, and transmission and transfer case (if equipped), add as needed.
- **Check Filter Minder™. Replace air cleaner filter element if necessary.**
- Check all lights and all other electrical items for correct operation.

At Each Oil Change

- Change the engine oil filter.
- Inspect the exhaust system.
- Inspect the brake hoses.
- Inspect the CV joints (if equipped) and front suspension components.
- Check the automatic transmission fluid level.
- Check the manual transmission fluid level.
- Check the coolant level, hoses, and clamps.
- Lubricate outer tie rod ends 2500/3500 (4X4) models only.
- Lubricate Front Drive Shaft Fitting (2500/3500, 4X4).

Schedule “B”

Follow schedule “B” if you usually operate your vehicle under one or more of the following conditions.

- Frequent short trips where the engine does not achieve full operating temperature (operating temperature defined as 190° F (66° C) coolant temperature).
- Extensive engine idling (over 10 minutes per hour of operation) at ambient temperatures less than 32° F (0° C).
- Driving in dusty conditions.
- Frequent trailer towing.
- Taxi, police, or delivery service (commercial service).
- Off-road or desert operation.
- Extensive operation at high engine speeds (greater than 2900 rpm) and loads (greater than 70% throttle).

NOTE: If ANY of these apply to you then change your coolant every 102,000 miles (163 000 km) or 60 months, whichever comes first and follow schedule “B” of the ″Maintenance Schedules″ section of this manual.

Miles (Kilometers)	**3,750 (6 000)**	**7,500 (12 000)**	**11,250 (18 000)**	**15,000 (24 000)**	**18,750 (30 000)**
Change engine oil and engine oil filter.		X		X	
Lubricate Front Drive Shaft Fitting (2500/3500, 4X4).	X	X	X	X	X
Rotate tires.		X		X	
Check spare tire for proper pressure and correct stowage.		X		X	
Lubricate outer tie rod ends 2500/3500 (4X4) models only.		X		X	
Inspect water pump weep hole for blockage.				X	
Replace fuel filter element. Clean the water in fuel sensor.				X	
Change rear axle fluid.				X	
Change front axle fluid (4X4).				X	
Inspect brake linings.				X	
Inspect and adjust parking brake if necessary.				X	

Miles (Kilometers)	**22,500 (36 000)**	**26,250 (42 000)**	**30,000 (48 000)**	**33,750 (54 000)**	**37,500 (60 000)**
Change engine oil and engine oil filter.	X		X		X
Lubricate Front Drive Shaft Fitting (2500/3500, 4X4).	X	X	X	X	X
Rotate tires.	X		X		X

Miles (Kilometers)	22,500 (36 000)	26,250 (42 000)	30,000 (48 000)	33,750 (54 000)	37,500 (60 000)
Check spare tire for proper pressure and correct stowage.	X		X		X
Lubricate outer tie rod ends 2500/3500 (4X4) models only.	X		X		X
Inspect drive belt, replace as required.	X				
Inspect fan hub.			X		
Inspect damper.			X		
Inspect water pump weep hole for blockage.			X		
Replace fuel filter element. Clean the water in fuel sensor.			X		
Change rear axle fluid.			X		
Change front axle fluid (4X4).			X		
Check transfer case fluid level (4X4).			X		
Drain and refill automatic transmission fluid. Replace filter and adjust bands (48RE only).			X		

Miles (Kilometers)	41,250 (66 000)	45,000 (72 000)	48,750 (78 000)	52,500 (84 000)	56,250 (90 000)
Change engine oil and engine oil filter.		X		X	
Lubricate Front Drive Shaft Fitting (2500/3500, 4X4).	X	X	X	X	X
Rotate tires.		X		X	
Check spare tire for proper pressure and correct stowage.		X		X	
Lubricate outer tie rod ends 2500/3500 (4X4) models only.		X		X	
Inspect drive belt, replace as required.		X			
Inspect water pump weep hole for blockage.		X			
Replace fuel filter element. Clean the water in fuel sensor.		X			
Inspect brake linings.		X			
Inspect and adjust parking brake if necessary.		X			
Change rear axle fluid.		X			
Change front axle fluid (4X4).		X			

Miles (Kilometers)	60,000 (96 000)	63,750 (102 000)	67,500 (108 000)	71,250 (114 000)	75,000 (120 000)
Change engine oil and engine oil filter.	X		X		X
Lubricate Front Drive Shaft Fitting (2500/3500, 4X4).	X	X	X	X	X
Flush and replace engine coolant at 60 months, if not replaced at 102,000 miles (163 000 km).	X				
Rotate tires.	X		X		X
Check spare tire for proper pressure and correct stowage.	X		X		X
Lubricate outer tie rod ends 2500/3500 (4X4) models only.	X		X		X

Miles (Kilometers)	60,000 (96 000)	63,750 (102 000)	67,500 (108 000)	71,250 (114 000)	75,000 (120 000)
Inspect drive belt, replace as required.			X		
Inspect fan hub.	X				
Inspect damper.	X				
Inspect water pump weep hole for blockage.	X				X
Replace fuel filter element. Clean the water in fuel sensor.	X				X
Inspect front wheel bearings.	X				
Change rear axle fluid.	X				X
Change front axle fluid (4X4).	X				X
Change 6-spd manual transmission (G-56) fluid 2500/3500 models only.	X				
Inspect brake linings.	X				X
Inspect and adjust parking brake if necessary.	X				X
Drain and refill transfer case fluid (4X4).	X				
Drain and refill automatic transmission fluid and change main sump filter (545 RFE only).	X				
Drain and refill automatic transmission fluid. Replace filter and adjust bands (48RE only).	X				

Miles (Kilometers)	78,750 (126 000)	82,500 (132 000)	86,250 (138 000)	90,000 (144 000)	93,750 (150 000)
Change engine oil and engine oil filter.		X		X	
Lubricate Front Drive Shaft Fitting (2500/3500, 4X4).	X	X	X	X	X
Rotate tires.		X		X	
Check spare tire for proper pressure and correct stowage.		X		X	
Lubricate outer tie rod ends 2500/3500 (4X4) models only.		X		X	
Inspect drive belt, replace as required.				X	
Change rear axle fluid.				X	
Change front axle fluid (4X4).				X	
Check transfer case fluid level (4X4).				X	
Inspect fan hub.				X	
Inspect damper.				X	
Inspect water pump weep hole for blockage.				X	
Replace fuel filter element. Clean the water in fuel sensor.				X	
Inspect front wheel bearings.				X	
Inspect brake linings.				X	
Inspect and adjust parking brake if necessary.				X	
Drain and refill automatic transmission fluid. Replace filter and adjust bands (48RE only).				X	

Miles (Kilometers)	97,500 (156 000)	100,000 (160 000)	101,250 (162 000)	105,000 (168 000)	108,750 (174 000)	112,500 (180 000)
Change engine oil and engine oil filter.	X			X		X
Lubricate Front Drive Shaft Fitting (2500/3500, 4X4).	X	X	X	X	X	X
Flush and replace engine coolant, if not replaced at 60 months.			X			
Rotate tires.	X			X		X
Check spare tire for proper pressure and correct stowage.	X			X		X
Lubricate outer tie rod ends 2500/3500 (4X4) models only.	X			X		X
Flush and replace engine coolant.		X				
Inspect drive belt, replace as required.						X
Inspect water pump weep hole for blockage.				X		
Replace fuel filter element. Clean the water in fuel sensor.				X		
Change rear axle fluid.				X		
Change front axle fluid (4X4).				X		
Inspect brake linings.				X		
Inspect and adjust parking brake if necessary.				X		

Miles (Kilometers)	116,250 (186 000)	120,000 (192 000)	123,750 (198 000)	127,500 (204 000)	131,250 (210 000)	135,000 (216 000)
Change engine oil and engine oil filter.		X		X		X
Lubricate Front Drive Shaft Fitting (2500/3500, 4X4).	X	X	X	X	X	X
Rotate tires.		X		X		X
Check spare tire for proper pressure and correct stowage.		X		X		X
Flush and replace engine coolant at 120 months, if not replaced at 102,000 miles (163 000 km).	X					
Lubricate outer tie rod ends 2500/3500 (4X4) models only.		X		X		X
Clean engine air filter assembly.						X
Adjust valve lash clearance.						X
Inspect drive belts, replace as required.						X
Drain and refill transfer case fluid (4X4).		X				
Inspect fan hub.		X				
Inspect damper.		X				
Inspect water pump weep hole for blockage.		X				X
Replace fuel filter element. Clean the water in fuel sensor.		X				X
Inspect front wheel bearings.		X				
Change rear axle fluid.		X				X
Change front axle fluid (4X4).		X				X

Miles (Kilometers)	116,250 (186 000)	120,000 (192 000)	123,750 (198 000)	127,500 (204 000)	131,250 (210 000)	135,000 (216 000)
Change 6-spd manual transmission (G-56) fluid 2500/3500 models only.		X				
Inspect brake linings.		X				X
Inspect and adjust parking brake if necessary.		X				X
Drain and refill automatic transmission fluid and change main sump and spin-on cooler return filter (if equipped) (545 RFE only).		X				
Drain and refill automatic transmission fluid. Replace filter and adjust bands (48RE only).		X				

Inspection and service should also be performed anytime a malfunction is observed or suspected. Retain all receipts.

Schedule “A”

Miles (Kilometers) [Months]	7,500 (12 000) [6]	15,000 (24 000) [12]	22,500 (36 000) [18]	30,000 (48 000) [24]	37,500 (60 000) [30]
Change engine oil and engine oil filter.		X		X	
Lubricate Front Drive Shaft Fitting (2500/3500, 4X4).	X	X	X	X	X
Rotate tires.	X	X	X	X	X
Check spare tire for proper pressure and correct stowage.	X	X	X	X	X
Lubricate outer tie rod ends 2500/3500 (4X4) models only.	X	X	X	X	X
Check transfer case fluid level (4X4).				X	
Inspect water pump weep hole for blockage		X		X	
Replace fuel filter element. Clean the water in fuel sensor.		X		X	
Inspect drive belts, replace as necessary.			X		
Inspect brake linings.			X		
Inspect and adjust parking brake if necessary.			X		
Inspect fan hub.				X	
Inspect damper.				X	
Inspect front wheel bearings.				X	

Miles (Kilometers) [Months]	45,000 (72 000) [36]	52,500 (84 000) [42]	60,000 (96 000) [48]	67,500 (108 000) [54]	75,000 (120 000) [60]
Change engine oil and engine oil filter.	X		X		X
Lubricate Front Drive Shaft Fitting (2500/3500, 4X4).	X	X	X	X	X
Rotate tires.	X	X	X	X	X
Check spare tire for proper pressure and correct stowage.	X	X	X	X	X

Miles **(Kilometers)** **[Months]**	**45,000** **(72 000)** **[36]**	**52,500** **(84 000)** **[42]**	**60,000** **(96 000)** **[48]**	**67,500** **(108 000)** **[54]**	**75,000** **(120 000)** **[60]**
Lubricate outer tie rod ends 2500/3500 (4X4) models only.	X	X	X	X	X
Check transfer case fluid level.			X		
Flush and replace engine coolant at 60 months, if not replaced at 102,000 miles (163 000 km).					X
Inspect drive belts, replace as necessary.	X			X	
Inspect water pump weep hole for blockage	X		X		X
Replace fuel filter element. Clean the water in fuel sensor.	X		X		X
Inspect brake linings.	X			X	
Inspect and adjust parking brake if necessary.	X			X	
Inspect fan hub.			X		
Inspect damper.			X		
Inspect front wheel bearings.			X		
Replace fuel filter element. Clean the water in fuel sensor			X		

Miles **(Kilometers)** **[Months]**	**82,500** **(132 000)** **[66]**	**90,000** **(144 000)** **[72]**	**97,500** **(156 000)** **[78]**	**100,000** **(160 000)**	**105,000** **(168 000)** **[84]**
Change engine oil and engine oil filter.		X			X
Lubricate Front Drive Shaft Fitting (2500/3500, 4X4).	X	X	X	X	X
Rotate tires.	X	X	X	X	X
Check spare tire for proper pressure and correct stowage.	X	X	X	X	X
Lubricate outer tie rod ends 2500/3500 (4X4) models only.	X	X	X	X	X
Flush and replace engine coolant, if not replaced at 60 mos.				X	
Check transfer case fluid level (4X4).		X			
Inspect drive belt, replace as required.		X			
Inspect fan hub.		X			
Inspect damper.		X			
Inspect water pump weep hole for blockage.		X			X
Replace fuel filter element. Clean the water in fuel sensor.		X			X
Inspect front wheel bearings.		X			
Inspect brake linings.		X			
Inspect and adjust parking brake if necessary.		X			
Drain and refill automatic transmission fluid. Replace filter and adjust bands (48 RE only).				X	

Miles (Kilometers) [Months]	112,500 (181 000) [90]	120,000 (193 000) [96]	127,500 (205 000) [102]	135,000 (217 000) [108]	142,500 (229 000) [114]	150,000 (241 000) [120]
Change engine oil and engine oil filter.		X		X		X
Lubricate Front Drive Shaft Fitting (2500/3500, 4X4).	X	X	X	X	X	X
Rotate tires.	X	X	X	X	X	X
Check spare tire for proper pressure and correct stowage.	X	X	X	X	X	X
Lubricate outer tie rod ends 2500/3500 (4X4) models only.	X	X	X	X	X	X
Flush and replace engine coolant at 120 months, if not replaced at 100,000 miles (160 000 km).					X	
Inspect drive belt, replace as required.	X			X		
Drain and refill transfer case fluid (4X4).		X				
Check tranfer case fluid level (4X4).						X
Inspect fan hub.		X			X	
Inspect damper.		X			X	
Inspect water pump weep hole for blockage.		X		X	X	
Replace fuel filter element. Clean the water in fuel sensor.		X		X		X
Inspect front wheel bearings.		X			X	
Inspect brake linings.	X			X		
Inspect and adjust parking brake if necessary.	X			X		
Adjust valve lash clearance.						X

Inspection and service should also be performed anytime a malfunction is observed or suspected. Retain all receipts.

WARNING:
You can be badly injured working on or around a motor vehicle. Do only that service work for which you have the knowledge and the right equipment. If you have any doubt about your ability to perform a service job, take your vehicle to a competent mechanic.

MAINTENANCE SCHEDULES - SRT/10

There are two maintenance schedules that show the **required** service for your vehicle.

First is Schedule **"B"**. It is for vehicles that are operated under the conditions that are listed below and at the beginning of the schedule.

- Day or night temperatures are below 32° F (0° C).
- Stop and go driving.
- Extensive engine idling.
- Driving in dusty conditions.
- Short trips of less than 10 miles (16 km).
- More than 50% of your driving is at sustained high speeds during hot weather, above 90° F C (32°).
- Drag Race Operation.
- Heavy Loading.
- Taxi, police, or delivery service (commercial service).
- Off-road or desert operation.
- **If equipped for and operating with E-85 (ethanol) fuel.**

NOTE: If ANY of these apply to you then change your engine oil every 3,000 miles (5 000 km) or 3 months, whichever comes first and follow schedule "B" of the ″Maintenance Schedules″ section of this manual.

NOTE: If ANY of these apply to you then flush and replace your engine coolant every 102,000 miles (175 000 km) or 60 months, whichever comes first and follow schedule "B" of the ″Maintenance Schedules″ section of this manual.

NOTE: Most vehicles are operated under the conditions listed for Schedule ″B″.

Second is Schedule **"A"**. It is for vehicles that are not operated under any of the conditions listed under Schedule ″B″.

Use the schedule that best describes your driving conditions. Where time and mileage are listed, follow the interval that occurs first.

NOTE: Under no circumstances should oil change intervals exceed 6000 miles (10 000 km) or 6 months whichever comes first.

CAUTION: Failure to perform the required maintenance items may result in damage to the vehicle.

At Each Stop for Fuel

- Check the engine oil level about 5 minutes after a fully warmed engine is shut off. Checking the oil level while the vehicle is on level ground will improve the accuracy of the oil level reading. Add oil only when the level is at or below the ADD or MIN mark.
- Check the windshield washer solvent and add if required.

Once a Month

- Check tire pressure and look for unusual wear or damage.
- Inspect the battery and clean and tighten the terminals as required.
- Check the fluid levels of coolant bottle, brake master cylinder, and transmission and add as needed.
- Check all lights and all other electrical items for correct operation.

At Each Oil Change

- Change the engine oil filter.
- Inspect the exhaust system.
- Inspect the brake hoses.
- Inspect the CV joints (if equipped) and front suspension components.
- Check the automatic transmission fluid level.
- Check the manual transmission fluid level.
- Check the coolant level, hoses, and clamps.

Schedule "B"

Follow schedule "B" if you usually operate your vehicle under one or more of the following conditions.

- Day or night temperatures are below 32° F (0° C).
- Stop and go driving.
- Extensive engine idling.
- Driving in dusty conditions.
- Short trips of less than 10 miles (16 km).
- More than 50% of your driving is at sustained high speeds during hot weather, above 90° F C (32°).
- Drag Race Operation.
- Heavy Loading.
- Taxi, police, or delivery service (commercial service).
- Off-road or desert operation.

- **If equipped for and operating with E-85 (ethanol) fuel.**

NOTE: If ANY of these apply to you then change your engine oil every 3,000 miles (5 000 km) or 3 months, whichever comes first and follow schedule "B" of the ″Maintenance Schedules″ section of this manual.

NOTE: If ANY of these apply to you then flush and replace your engine coolant every 102,000 miles (175 000 km) or 60 months, whichever comes first and follow schedule "B" of the ″Maintenance Schedules″ section of this manual.

If none of these apply to you, then change your engine oil at every interval shown on schedule ″A″ of the ″Maintenance Schedules″ section of this manual.

Miles (Kilometers)	**3,000 (5 000)**	**6,000 (10 000)**	**9,000 (15 000)**	**12,000 (20 000)**	**15,000 (25 000)**
Change engine oil and engine oil filter at interval shown or 3 months, whichever comes first.	X	X	X	X	X
Drain and refill automatic transmission fluid. Replace filter and adjust bands.*					X
Rotate tires.		X		X	
Check spare tire for proper pressure and correct stowage.				X	
Change rear axle fluid.					X
Inspect brake linings.				X	
Inspect engine air cleaner filter, replace if necessary.					X

Miles (Kilometers)	**18,000 (30 000)**	**21,000 (35 000)**	**24,000 (40 000)**	**27,000 (45 000)**	**30,000 (50 000)**
Change engine oil and engine oil filter at interval shown or 3 months, whichever comes first.	X	X	X	X	X
Drain and refill automatic transmission fluid. Replace filter and adjust bands.					X
Rotate tires.	X		X		X
Check spare tire for proper pressure and correct stowage.			X		
Change rear axle fluid.					X
Inspect brake linings.			X		
Inspect engine air cleaner filter, replace if necessary.					X
Replace spark plugs.					X
Inspect and replace, if necessary, the PCV valve.**					X**

Miles (Kilometers)	**33,000 (55 000)**	**36,000 (60 000)**	**39,000 (65 000)**	**42,000 (70 000)**	**45,000 (75 000)**
Change engine oil and engine oil filter at interval shown or 3 months, whichever comes first.	X	X	X	X	X
Drain and refill automatic transmission fluid. Replace filter and adjust bands.*					X
Rotate tires.		X		X	

Miles **(Kilometers)**	**33,000** **(55 000)**	**36,000** **(60 000)**	**39,000** **(65 000)**	**42,000** **(70 000)**	**45,000** **(75 000)**
Check spare tire for proper pressure and correct stowage.		X			
Change rear axle fluid.					X
Inspect brake linings.		X			
Inspect engine air cleaner filter, replace if necessary.					X

Miles **(Kilometers)**	**48,000** **(80 000)**	**51,000** **(85 000)**	**54,000** **(90 000)**	**57,000** **(95 000)**	**60,000** **(100 000)**
Change engine oil and engine oil filter at interval shown or 3 months, whichever comes first.	X	X	X	X	X
Drain and refill automatic transmission fluid. Replace filter and adjust bands.					X
Rotate tires.	X		X		X
Check spare tire for proper pressure and correct stowage.	X				X
Change rear axle fluid.					X
Inspect brake linings.	X				X
Inspect engine air cleaner filter, replace if necessary.					X
Replace spark plugs.					X
Replace ignition cables.					X
Inspect and replace, if necessary, the PCV valve.**					X**
Flush and replace engine coolant at 60 months , if not relaced at 102,000 miles (180 000 km)					X

Miles **(Kilometers)**	**63,000** **(105 000)**	**66,000** **(110 000)**	**69,000** **(115 000)**	**72,000** **(120 000)**	**75,000** **(125 000)**
Change engine oil and engine oil filter at interval shown or 3 months, whichever comes first.	X	X	X	X	X
Drain and refill automatic transmission fluid. Replace filter and adjust bands.*					X
Rotate tires.		X		X	
Check spare tire for proper pressure and correct stowage.				X	
Inspect engine air cleaner filter.					X
Change rear axle fluid.					X
Inspect brake linings.				X	
Inspect auto tension drive belt and replace if required.					X

Miles **(Kilometers)**	**78,000** **(130 000)**	**81,000** **(135 000)**	**84,000** **(140 000)**	**87,000** **(145 000)**	**90,000** **(150 000)**
Change engine oil and engine oil filter at interval shown or 3 months, whichever comes first.	X	X	X	X	X
Drain and refill automatic transmission fluid. Replace filter and adjust bands.					X
Rotate tires.	X		X		X
Check spare tire for proper pressure and correct stowage.			X		
Change rear axle fluid.					X
Inspect brake linings.			X		
Inspect engine air cleaner filter, replace if necessary.					X
Replace spark plugs.					X
Inspect PCV valve, replace as necessary.**					X**
Inspect auto tension drive belt and replace if required.					X

Miles **(Kilometers)**	**93,000** **(155 000)**	**96,000** **(160 000)**	**99,000** **(165 000)**	**100,000** **(170 000)**	**102,000** **(175 000)**
Change engine oil and engine oil filter at interval shown or 3 months, whichever comes first.	X	X	X		X
Rotate tires.		X			X
Check spare tire for proper pressure and correct stowage.		X			
Flush and replace engine coolant, if not replaced at 60 months.					X
Inspect brake linings.		X			

Miles **(Kilometers)**	**105,000** **(180 000)**	**108,000** **(185 000)**	**111,000** **(190 000)**	**114,000** **(195 000)**	**117,000** **(200 000)**	**120,000** **(205 000)**
Change engine oil and engine oil filter at interval shown or 3 months, whichever comes first.	X	X	X	X	X	X
Drain and refill automatic transmission fluid. Replace filter and adjust bands.*	X					
Drain and refill automatic transmission fluid. Replace filter and adjust bands.						X
Rotate tires.		X		X		X
Check spare tire for proper pressure and correct stowage.		X				X
Change rear axle fluid.	X					X
Inspect brake linings.		X				X
Inspect engine air cleaner filter, replace if necessary.	X					X
Replace spark plugs.						X
Replace ignition cables.						X

Miles **(Kilometers)**	**105,000** **(180 000)**	**108,000** **(185 000)**	**111,000** **(190 000)**	**114,000** **(195 000)**	**117,000** **(200 000)**	**120,000** **(205 000)**
Inspect and replace, if necessary, the PCV valve.**						X**
Inspect auto tension drive belt and replace if required.	X					X
Flush and replace engine coolant at 120 months, if not replaced at 102,000 miles (175 000 km).						

* Drain and refill automatic transmission fluid. Replace filter and adjust bands every 15, 000 miles if vehicle is used for frequent wide open throttle upshifts (For example Drag Racing).

‡ This maintenance is not required if previously replaced.

Inspection and service should also be performed anytime a malfunction is observed or suspected. Retain all receipts.

Schedule “A”

Miles **(Kilometers)** **[Months]**	**6,000** **(10 000)** **[6]**	**12,000** **(20 000)** **[12]**	**18,000** **(30 000)** **[18]**	**24,000** **(40 000)** **[24]**	**30,000** **(50 000)** **[30]**
Change engine oil and engine oil filter.	X	X	X	X	X
Rotate tires.	X	X	X	X	X
Check spare tire for proper pressure and correct stowage.		X		X	
Inspect brake linings.			X		
Replace engine air cleaner filter.					X
Replace spark plugs.					X

Miles **(Kilometers)** **[Months]**	**36,000** **(60 000)** **[36]**	**42,000** **(70 000)** **[42]**	**48,000** **(80 000)** **[48]**	**54,000** **(90 000)** **[54]**	**60,000** **(100 000)** **[60]**	**66,000** **(110 000)** **[66]**
Change engine oil and engine oil filter.	X	X	X	X	X	X
Rotate tires.	X	X	X	X	X	X
Check spare tire for proper pressure and correct stowage.	X		X		X	
Flush and replace engine coolant at 60 months, if not replaced at 102,000 miles (180 000 km).					X	
Inspect brake linings.	X			X		
Replace engine air cleaner filter.					X	
Replace spark plugs.					X	
Inspect and replace, if necessary, the PCV valve.**					X**	
Replace ignition cables.					X	

Miles **(Kilometers)** **[Months]**	**72,000** **(120 000)** **[72]**	**78,000** **(130 000)** **[78]**	**84,000** **(140 000)** **[84]**	**90,000** **(150 000)** **[90]**	**96,000** **(160 000)** **[96]**	**100,000** **(170 000)**
Change engine oil and engine oil filter.	X	X	X	X	X	
Drain and refill automatic transmission fluid. Replace filter and adjust bands.						X
Rotate tires.	X	X	X	X	X	
Check spare tire for proper pressure and correct stowage.	X		X		X	
Inspect brake linings.	X			X		
Replace engine air cleaner filter.				X		
Replace spark plugs.				X		
Inspect and replace, if necessary, the PCV valve.**				X**		
Inspect auto tension drive belt and replace if required.				X		

Miles **(Kilometers)** **[Months]**	**102,000** **(180 000)** **[102]**	**108,000** **(190 000)** **[108]**	**114,000** **(200 000)** **[114]**	**120,000** **(210 000)** **[120]**
Change engine oil and engine oil filter.	X	X	X	X
Rotate tires.	X	X	X	X
Check spare tire for proper pressure and correct stowage.		X		X
Flush and replace engine coolant, if not done at 60 mos.	X			
Flush and replace engine coolant at 120 months, if not replaced at 102,000 miles (180 000 km).				X
Inspect brake linings.		X		
Inspect auto tension drive belt and replace if required.	X			X
Replace ignition cables.				X
Replace engine air cleaner filter.				X
Replace spark plugs.				X
Inspect and replace, if necessary, the PCV valve.**				X**

* This maintenance is recommended by the manufacture to the owner, but is not required to maintain the emissions warranty.

‡ This maintenance is not required if previously replaced.

Inspection and service should also be performed anytime a malfunction is observed or suspected. Retain all receipts.

WARNING:
You can be badly injured working on or around a motor vehicle. Do only that service work for which you have the knowledge and the right equipment. If you have any doubt about your ability to perform a service job, take your vehicle to a competent mechanic.

JUMP STARTING

STANDARD PROCEDURE

WARNING: review all safety precautions and warnings in the battery system section of the service manual. (Refer to 8 - ELECTRICAL/BATTERY SYSTEM/BATTERY - STANDARD PROCEDURE)

- **Do not jump start a frozen battery, personal injury can result.**
- **If equipped, do not jump start when maintenance free battery indicator dot is yellow or bright color.**
- **Do not jump start a vehicle when the battery fluid is below the top of lead plates.**
- **Do not allow jumper cable clamps to touch each other when connected to a booster source.**
- **Do not use open flame near battery.**
- **Remove metallic jewelry worn on hands or wrists to avoid injury by accidental arcing of battery current.**
- **When using a high output boosting device, do not allow battery voltage to exceed 16 volts. Refer to instructions provided with device being used.**
  Failure to follow these instructions may result in personal injury.

CAUTION: When using another vehicle as a booster, do not allow vehicles to touch. Electrical systems can be damaged on either vehicle.

TO JUMP START A DISABLED VEHICLE:

1. Raise hood on disabled vehicle and visually inspect engine compartment for:
   - Battery cable clamp condition, clean if necessary.
   - Frozen battery.
   - Yellow or bright color test indicator, if equipped.
   - Low battery fluid level.
   - Generator drive belt condition and tension.
   - Fuel fumes or leakage, correct if necessary.

CAUTION: If the cause of starting problem on disabled vehicle is severe, damage to booster vehicle charging system can result.

2. When using another vehicle as a booster source, park the booster vehicle within cable reach. Turn off all accessories, set the parking brake, place the automatic transmission in PARK or the manual transmission in NEUTRAL and turn the ignition OFF.
3. On disabled vehicle, place gear selector in park or neutral and set park brake. Turn off all accessories.
4. Connect jumper cables to booster battery. RED clamp to positive terminal (+). BLACK clamp to negative terminal (-). DO NOT allow clamps at opposite end of cables to touch, electrical arc will result. Review all warnings in this procedure.
5. On disabled vehicle, connect RED jumper cable clamp to positive (+) terminal. Connect BLACK jumper cable clamp to engine ground as close to the ground cable attaching point as possible.
6. Start the engine in the vehicle which has the booster battery, let the engine idle a few minutes, then start the engine in the vehicle with the discharged battery.

CAUTION: Do not crank starter motor on disabled vehicle for more than 15 seconds, starter will overheat and could fail.

7. Allow battery in disabled vehicle to charge to at least 12.4 volts (75% charge) before attempting to start engine. If engine does not start within 15 seconds, stop cranking engine and allow starter to cool (15 min.), before cranking again.

DISCONNECT CABLE CLAMPS AS FOLLOWS:

- Disconnect BLACK cable clamp from engine ground on disabled vehicle.
- When using a Booster vehicle, disconnect BLACK cable clamp from battery negative terminal. Disconnect RED cable clamp from battery positive terminal.
- Disconnect RED cable clamp from battery positive terminal on disabled vehicle.

HOISTING

STANDARD PROCEDURE

Refer to the Owner's Manual for emergency vehicle lifting procedures.

WARNING: The hoisting and jack lifting points provided are for a complete vehicle. When a chassis or drivetrain component is removed from a vehicle, the center of gravity is altered making some hoisting conditions unstable. Properly support or secure vehicle to hoisting device when these conditions exist.

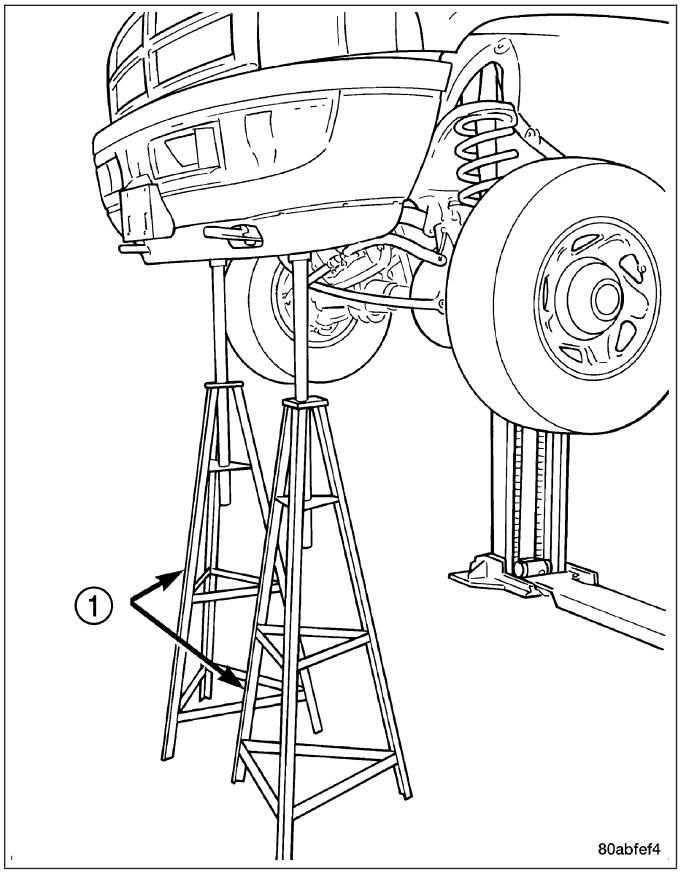

FLOOR JACK

When properly positioned, a floor jack can be used to lift a vehicle. Support the vehicle in the raised position with jack stands at the front and rear ends of the frame rails.

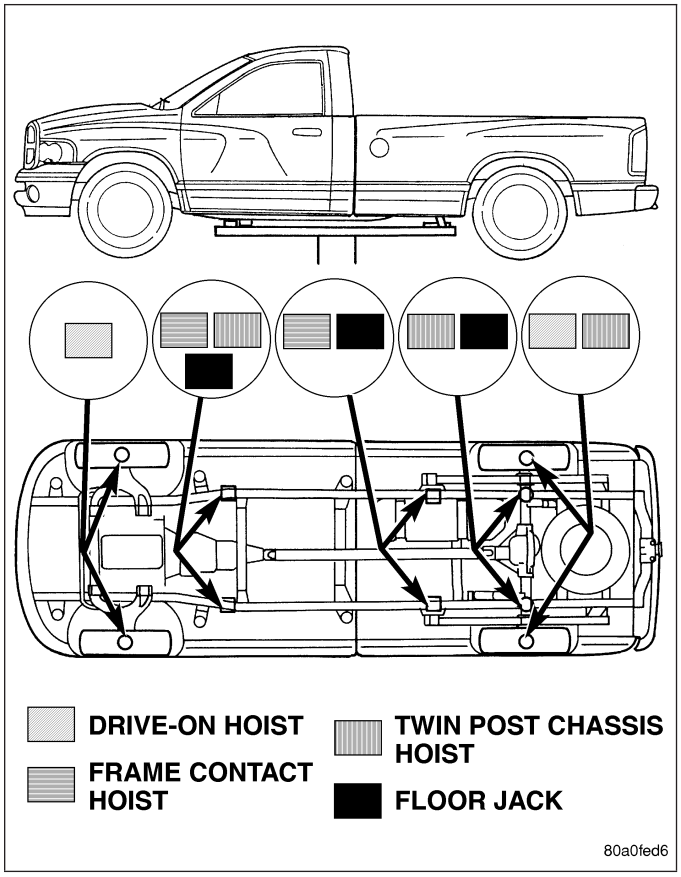

CAUTION: Do not lift vehicle with a floor jack positioned under:

- **An axle tube.**
- **A body side sill.**
- **A steering linkage component.**
- **A drive shaft.**
- **The engine or transmission oil pan.**
- **The fuel tank.**
- **A front suspension arm.**

NOTE: Use the correct front frame rail lifting locations only.

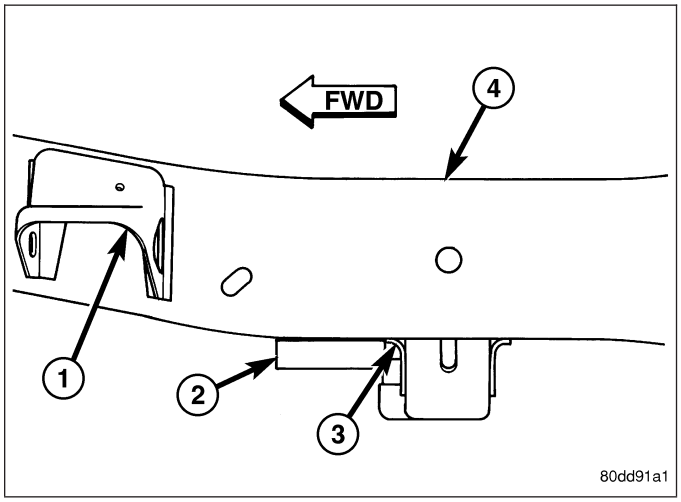

NOTE: Use the correct rear frame rail lifting locations only.

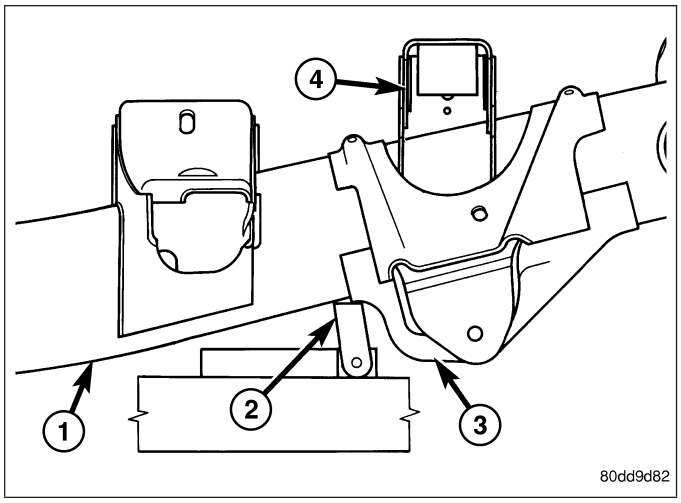

HOIST

A vehicle can be lifted with:

- A single-post, frame-contact hoist.
- A twin-post, chassis hoist.
- A ramp-type, drive-on hoist.

NOTE: When a frame-contact type hoist is used, verify that the lifting pads are positioned properly.

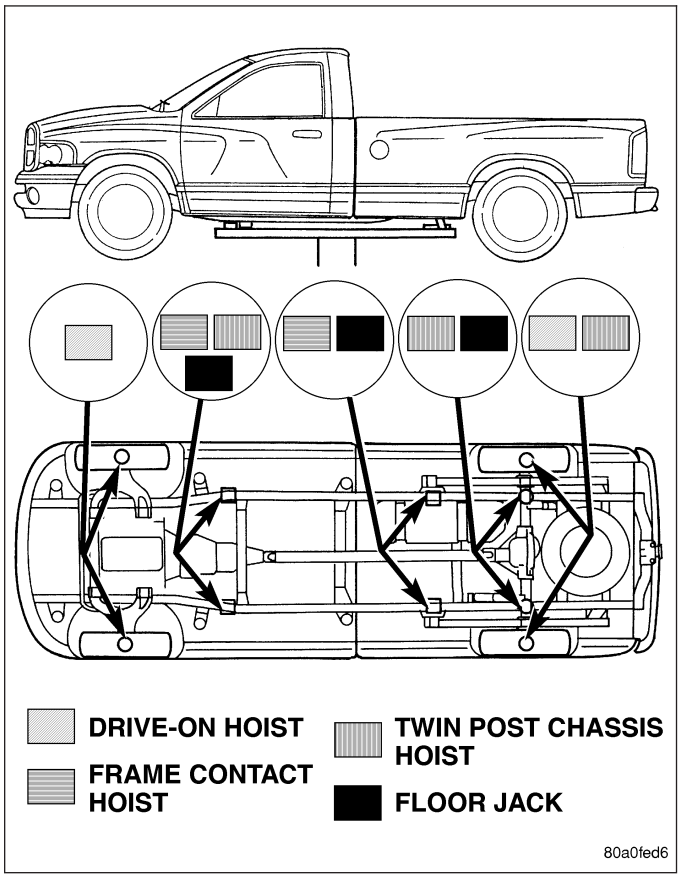

NOTE: The forward lifting pads should be positioned against the forward flange of the transmission crossmember brackets at the bottom of the frame rail.

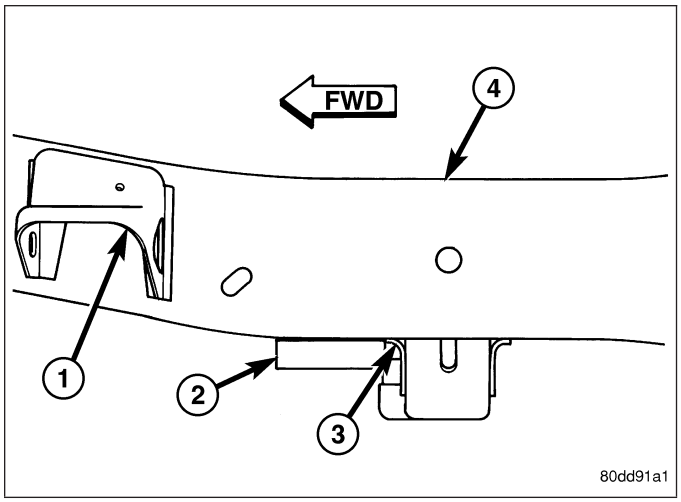

NOTE: The real lifting pads should be wedged between the forward flange of the leaf spring bracket and the frame rail. Safety stands should be placed under the frame rails at the front and rear ends.

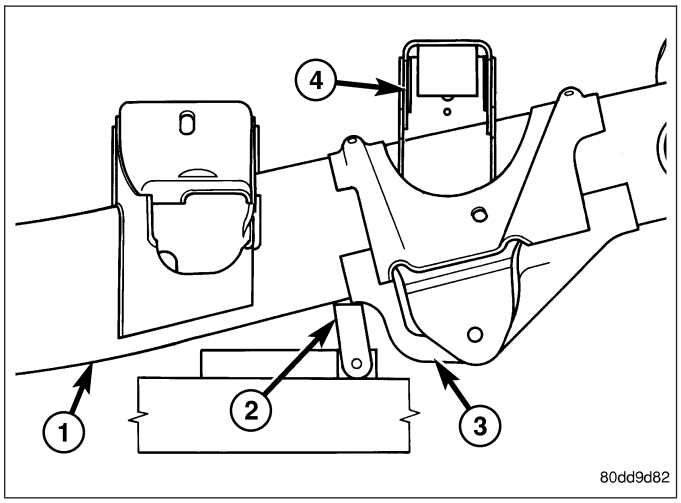

TOWING

STANDARD PROCEDURE

A vehicle equipped with SAE approved sling-type towing equipment can be used to tow all vehicles. When towing a 4WD vehicle using a wheel-lift towing device, use tow dollies under the opposite end of the vehicle. A vehicle with flat-bed device can also be used to transport a disabled vehicle.

A wooden crossbeam may be required for proper connection when using the sling-type, front-end towing method.

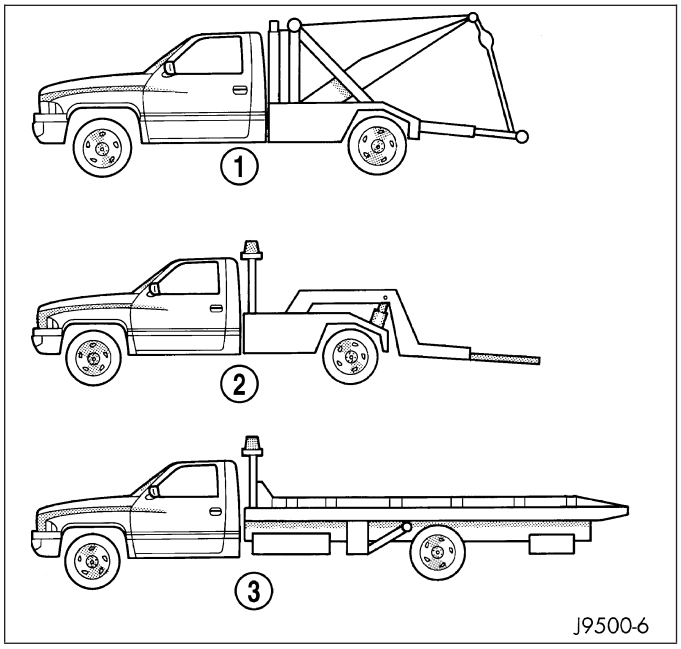

SAFETY PRECAUTIONS

CAUTION: The following safety precautions must be observed when towing a vehicle:

- Secure loose and protruding parts.
- Always use a safety chain system that is independent of the lifting and towing equipment.
- Do not allow towing equipment to contact the disabled vehicle's fuel tank.
- Do not allow anyone under the disabled vehicle while it is lifted by the towing device.
- Do not allow passengers to ride in a vehicle being towed.
- Always observe state and local laws regarding towing regulations.
- Do not tow a vehicle in a manner that could jeopardize the safety of the operator, pedestrians or other motorists.
- Do not attach tow chains, T-hooks, J-hooks, or a tow sling to a bumper, steering linkage, drive shafts or a non-reinforced frame hole.
- Do not tow a heavily loaded vehicle. Damage to the cab, cargo box or frame may result. Use a flatbed device to transport a loaded vehicle.

GROUND CLEARANCE

CAUTION: If vehicle is towed with wheels removed, install lug nuts to retain brake drums or rotors.

A towed vehicle should be raised until lifted wheels are a minimum 100 mm (4 in) from the ground. Be sure there is adequate ground clearance at the opposite end of the vehicle, especially when towing over rough terrain or steep rises in the road. If necessary, remove the wheels from the lifted end of the vehicle and lower the vehicle closer to the ground, to increase the ground clearance at the opposite end of the vehicle. Install lug nuts on wheel attaching studs to retain brake drums or rotors.

RAMP ANGLE

If a vehicle with flat-bed towing equipment is used, the approach ramp angle should not exceed 15 degrees.

TOWING WHEN KEYS ARE NOT AVAILABLE

When the vehicle is locked and keys are not available, use a flat bed hauler. A Wheel-lift or Sling-type device can be used on 4WD vehicles provided **all the wheels are lifted off the ground using tow dollies.**

FOUR-WHEEL-DRIVE VEHICLE TOWING

DaimlerChrysler Corporation recommends that a vehicle be transported on a flat-bed device. A Wheel-lift or Sling-type device can be used provided **all the wheels are lifted off the ground using tow dollies.**

WARNING: When towing a disabled vehicle and the drive wheels are secured in a wheel lift or tow dollies, ensure the transmission is in the park position (automatic transmission) or a forward drive gear (manual transmission).

CAUTION: Many vehicles are equipped with air dams, spoilers, and/or ground effect panels. To avoid component damage, a wheel-lift towing vehicle or a flat-bed hauling vehicle is recommended.