https://truckmanualshub.com/

STC850

STC850 TRUCK CRANE
85 TONS LIFTING CAPACITY

Quality Changes the World

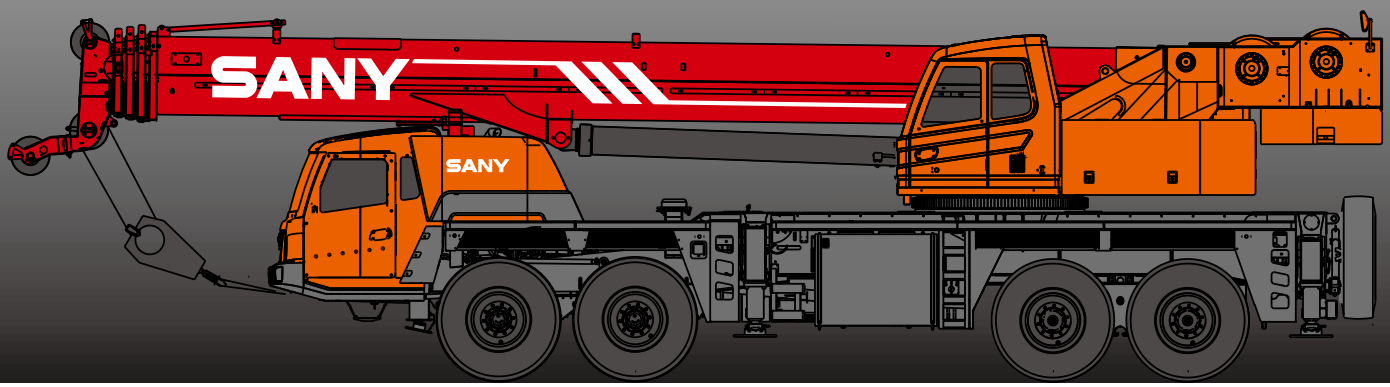

SANY

https://truckmanualshub.com/

SANY Automobile Hoisting Machinery is one of the core business unit of Sany Heavy Industry, mainly engaged in the research and development of high end, mid to large tonnage crane series, including mobile crane, crawler crane, tower crane and loader crane. It has two industrial parks in Ningxiang and Huzhou, since entering the market, the products of Sany Automobile Hoisting Machinery have received worldwide recognition with advanced technology, lean manufacturing, high reliability and excellent service.

https://truckmanualshub.com/

SANY TRUCK CRANE

CONTENT

04 Icon
05 Selling Points
06 Introduction
09 Dimension
10 Technical Parameter
11 Operation Condition
12 Load Chart
18 Wheel Crane Family Map

- Cab
- Carrier frame
- Suspension system
- Hydraulic system
- Outriggers
- Telescopic boom
- Control system
- Engine
- Lattice jibs
- Telescopic system
- Transmission system
- Superlift devices
- Luffing system
- Drive/Steer
- Luffing lattice jib
- Slewing
- Axles
- winch mechanism:
- Counterweight
- Tyres
- Safety system
- Brakes system
- Hoist system
- Electrical system

Excellent and stable chassis performance / chassis system

Double-axle drive is used, providing good trafficability and comfortableness under complex road condition with reliable traveling performance.
All-wheel steering: The third and fourth axles are auxiliary steering axle featuring small turning radius and better trafficability.
The pressure of outriggers could be displayed in control cab.
Engine has the multimode power output function, which reduces power consumption.
The use of tipping over early-warning technology provides high stability and safety of the overall operation.

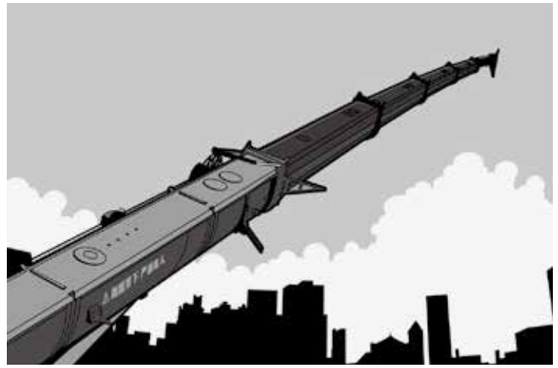

Ultra long, super strong and highly sensitive load lifting capacity

Five-section boom of high strength steel structure and optimized U-shaped cross reduces weight significantly with higher safety rates. Jib mounting angles are 0°, 15°and 30° which ensures fast and convenient change-over between different operating conditions so as to improving working efficiency of the machine.

Highly efficient, stable, energy-saving and adjustable hydraulic system

Hydraulic system load feedback and constant power control is applied to provide strong lifting capacity and good micro-mobility. Unique steering buffer design is adopted to ensure stable braking operation.

Safe, stable, advanced and intelligent electric control system

Self-developed controller SYMC specially designed for engineering machinery is configured. The adoption of CAN-bus full-digital network control technology ensures stable control signal, simple harness and high reliability. Timely feedback of data information can achieve the monitoring of the overall working status in real-time. The load moment limiter equipped with the comprehensive intelligent protection system is used with accuracy within 3% to provide a comprehensive logic and interlock control, thus ensuring more safe and reliable operation.

https://truckmanualshub.com/

Superstructure

Cab

- It is made of anti-corrosion steel plate with ergonomic design such as full-coverage soften interior, panoramic sunroof and adjustable seats etc., and humanized design providing more comfortable and relaxing operation experience. The display of load moment limiter integrates main console and operation display system, which clearly show the data of all operating superstructure conditions for lifting operation.

Hydraulic system

- High-quality key hydraulic components such as main oil pump, rotary pump, main valve, winch motor, and balancing parts etc. are adopted to achieve stable and reliable operation of the hydraulic system. Superior operation performance is guaranteed by accurate parameter matching.
- Through the adoption of load sensitive variable displacement piston pump, pump displacement can be adjusted in real-time, achieving high-precision flow control with no energy loss during operation.
- Electric-controlled main valve has flow compensation, load feedback control function, enabling stable and convenient control of single action and combined action under different operation conditions.
- Winch adopts electric-controlled variable motor to ensure high operation efficiency. Max. single line speeds of main and auxiliary winches is up to 130m/min.
- Slewing system is equipped with the integrated slewing buffer valve with free slipping function to ensure more stable starting and control of the slewing operation and excellent micro-mobility.
- Hydraulic oil tank capacity: 850L.

Control system

- CAN-bus instrument: CAN-bus instrument with a combined intelligent control electrical system is used for easy reading of the traveling parameters at any time. The engine fault warning function is applied to ensure convenient and fast troubleshooting;
- Automatic outrigger system: Electrically controlled outrigger with automatic leveling and fault diagnosis warning function is adopted, which is flexible and fast to operate.
- With fully security protection system, main and auxiliary winches are equipped with over-roll out limiter and height limiters to prevent over-rolling out and over-hoisting of steel rope, including tip-over and limit angle protection.
- Load moment limiter: The adoption of high intelligent load moment limiter system can comprehensively protect lifting operation, ensuring accurate, stable and comfort operation.
- The fault diagnosis system can detect superstructure electricity, hydraulic action, chassis (for major safety failure), engine and gearbox for fault to ensure reliable operation of the crane.

Luffing system

- Dead-weight luffing provides more stable luffing operation at low energy loss
- Luffing angle: -2°~ 80°.

Telescopic system

- Five-section boom is applied with basic boom length of 12.2m, full-extended boom length of 47m, jib length of 17.5m and lifting height of fully extended boom length of 47.3m respectively. Max. lifting height is 64.7m including jib. It is made of fine grain high-strength steel with U-shaped cross section and with telescopic operation controlled independently by dual-cylinder rope.

Slewing system

- 360° rotation can be achieved with Max. slewing speed of 2.0r/min. Hydraulic controlled proportional speed adjustment is applied to provide stable and reliable operation of the system. Unique rotary buffer design ensures more stable braking.

Superstructure

Hoisting system

- With highly efficient winch, larger gear ratio and stable operation are guaranteed.
- Closed winch brake and winch balance valve effectively prevent imbalance of the hook.
- With load sensitive function, the main valve winch is highly effective and energy-saving.
- Two main hooks: 800kg and 320kg, the Max. lifting weight are 85t and 30t,one auxiliary hook:140kg, Max lifting weight is 5t. Wire rope of main winch: non-rotation wire rope :20-1960-U-282-SS GB8918 L245m. Wire rope of auxiliary winch: non-rotation wire rope :20-1960-U-282-SS GB8918 L145m.

Safety system

- Load moment limiter: Load moment limiter calculation system based on lifting load mechanical model is established using an analytical mechanics method with rated lifting accuracy up to ±3% through on-line non-load calibration, providing full protection to lifting operation. In case of overload operation, system will automatically issue an alarm to provide safety protection for manipulation.
- Hydraulic system is configured with the balance valve, overflow valve, and two-way hydraulic lock etc. components, thus achieving stable and reliable operation of the hydraulic system.
- Main and auxiliary winches are equipped with over roll-out limiter to prevent over rolling-out of wire rope.
- Boom and jib ends are equipped with height limiters respectively to prevent over-hoisting of wire rope.
- Boom head is equipped with anemometer and press sensor to indicate the working condition of whole crane in real-time, giving an alarm and cutting off the dangerous action automatically.

Counterweight

- Fixed counterweight is 2000kg. Two flexible counterweight (4500kg+4500kg) are optional.

Chassis

Cab

- Cab is made of new steel material and sealed rubber structure self-developed by SANY, featuring excellent shock absorption and tightness, which is configured with swing-out doors at both sides, pneumatically suspended driver's seat and passenger seat, adjustable steering wheel, large rearview mirror, comfort driver chair having a headrest, anti-fog fan, air conditioner, stereo radio and complete control instruments and meters, providing more comfortable, safe and humanized operation experience.

Carrier frame

- Designed and manufactured by SANY, the heavy box structure is higher and wider. Welded by high-strength steel plate, the rigidity is promoted by 20% comparing to trough-type structure.

Axles

- Axles 3 and 4 are driving & steering axles, axles 1 and 2 are steering axles, with axle and wheel differentials and wheel differential; the use of welding process for axle housing provides stronger load bearing capacity.

Engine

- Type: Inline six-cylinder, water cooled, supercharged and inter-cooling diesel engine
- Rated power: 275kw/2100r/min
- Environment-protection: Emission complies with EuroIII standard
- Capacity of fuel tank: 380L

https://truckmanualshub.com/

Chassis

Transmission system

- Gearbox: 10-gear manual gearbox with large speed ratio range applied, which meets the requirements of low gradeability speed and high traveling speed.
- Transmission shaft: With optimized arrangement of the transmission shaft, the transmission is stable and reliable. For most optimized transmission, face-tooth coupling transmission shaft is used with large transmission torque.

Brakes system

- Air servo brakes are used for all wheels with dual-circuit brake system applied, disc brake are applied to axle 1 and 2 and drum brake are applied to axle 3 and 4. Engine is equipped with an exhaust brake.
- Brakes system includes traveling brake, parking brake, emergency brake and auxiliary brake.
- Traveling brake: All wheels use the air servo brakes and dual-circuit brake system.
- Parking brake: Force driven by accumulator is applied on axle 2,3,4.
- For emergency brake valve, accumulator is used not only for cutting-off brake but also for emergency brake.
- Auxiliary brake is exhaust brake with brake safety ensured while travelling downhill.

Suspension system

- All axles adopt the plate spring suspension systems with plate spring passed 100,000 fatigue tests and with optimization of performance parameters of the front and rear plate springs applied to ensure strength and also to provide comfort ridding.

Steering system

- Hydraulic power mechanical steering system is applied for axle 1,2, with unloading valve installed in the steering gear. Electronic & hydraulic auxiliary steering are applied to axle 3,4. All wheel steering ensures good trafficability.

Outriggers

- Four-point supporting of the H-shaped outriggers ensures easy operation and strong stability with Max. span up to 6.18m×7.8m. They are made of fine-grain high-strength steel sheet with horizontal single-cylinder rope line telescoping for first and second outriggers and with automatic horizontal adjustment applied for outriggers through a vertical cylinder.

Tyres

- (8+1)*385/95R25

Electrical system

- With 2*12V maintenance-free batteries, the crane power can be cut off manually via a mechanical master power switch. The use of CAN-bus control system can achieve information interaction between superstructure and undercarriage.

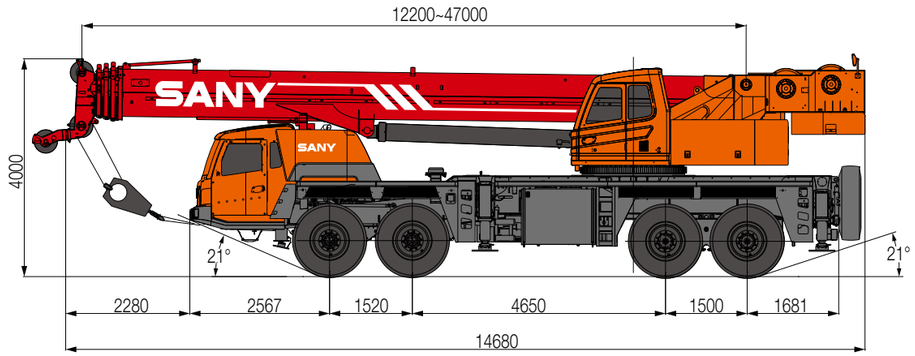

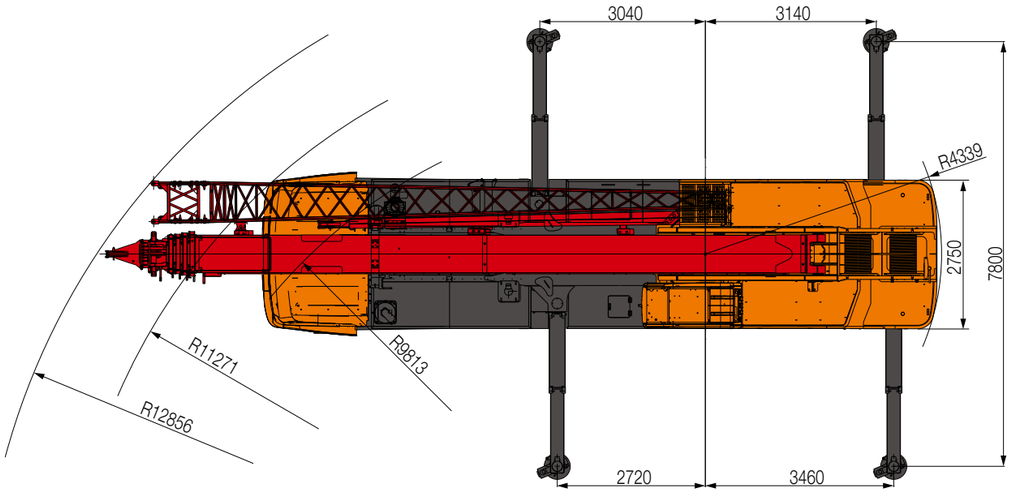

https://truckmanualshub.com/

Type	Item		Parameter
Capacity	Max. lifting capacity		85 t
Dimensions	Overall length		14680 mm
	Overall width		2750 mm
	Overall height		4000 mm
	Axle distance	Axle-1,2	1520 mm
		Axle-2,3	4650 mm
		Axle-3,4	1500 mm
Weight	Overall weight		46570 kg
	Axle load	Axle load-1,2	21600 kg
		Axle load-3,4	24970 kg
	Rated power		275 kW/ 2100 rpm
	Rated torque		1550 N.m/ (1100~1400) rpm
Traveling	Max.traveling speed		80 km/h
	Turning radius	Min.turning radius	10 m
		Min.turning radius of boom head	12.9 m
	Wheel formula		8 × 4
	Min.ground clearance		300 mm
	approach angle		21 °
	Departure angle		21 °
	Max.gradeability		38%
	Fuel consumption per 100km		≤ 50 L
Main Performance Data	Temperature range		– 30 °~ + 60 °
	Min.rated range		3 m
	Tail slewing radius of swingtable		4.339 m
	Boom section		5
	Boom shape		U-shaped
	Max.lifting moment	Base boom	2910.6 kN·m
		Full-extend boom	1411.2 kN·m
		Full-extend boom+jib	683 kN·m
	Boom length	Base boom	12.2 m
		Full-extend boom	47.0 m
		Full-extend boom+jib	64.5 m
	Outrigger span (Longitudinal×Transversal)		6.18 × 7.8 m
	Jib offset		0 °, 15 °, 30 °
Working speed	Max.single rope lifting speed of main winch (no load)		130 m/min
	Max.single rope lifting speed of auxiliary winch (no load)		130 m/min
	Full extension/retraction time of boom		150 / 150 s
	Full lifting/descending time of boom		70 / 90 s
	Slewing speed		2.0 r/min
Aircondition	Aircondition in up cab		Cold and Heating
	Aircondition in low cab		Cold and Heating

STC850 Working Ranges

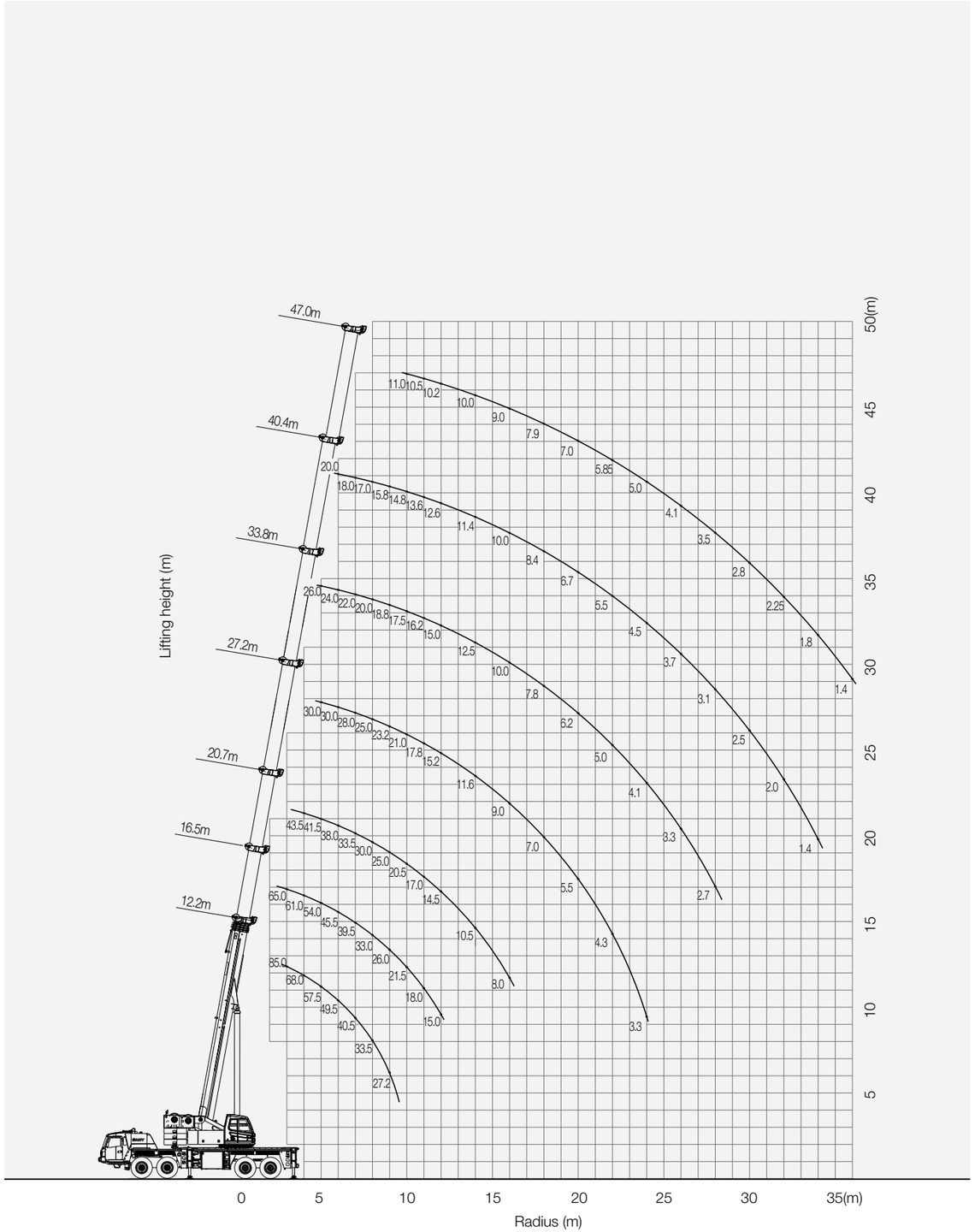

https://truckmanualshub.com/

Unit:Kg

Working Range (m)	2T fixed counterweight, fully extended outriggers, 360°operation							Working Range (m)
	12.2	16.5	20.7	27.2	33.8	40.4	47	
3	85000	62000						3
3.5	75000	58000	44000					3.5
4	67000	56000	43500					4
4.5	62000	54000	42500					4.5
5	54000	49000	41000	30000	26000			5
5.5	48000	46000	39000	30000	25000			5.5
6	45000	42500	37000	30000	24000	20000		6
6.5	38000	35500	33200	28800	23000	19000		6.5
7	33000	30000	29500	27500	22000	18000		7
7.5	28500	26000	25500	26000	21000	17500		7.5
8	25000	22500	22000	22500	20000	17000		8
9	19500	18000	17200	18500	18600	15500		9
10		14000	13800	14800	15500	14500	11000	10
11		11500	11200	12200	13000	13100	10500	11
12		9500	9100	10100	11000	11500	10200	12
14			6200	7200	8050	9200	9700	14
16			4200	5200	6000	6800	7600	16
18				3800	4550	5100	5800	18
20				2700	3400	4000	4700	20
22				1800	2400	3150	3650	22
24					1800	2350	3000	24
26					1200	1750	2100	26
28						1050	1650	28
30						750	1050	30
32							500	32
34								34
Number of lines	12	10	8	6	5	4	3	Number of lines
Telescoping condition(%)								
I	0%	50%	100%	100%	100%	100%	100%	I
II	0%	0%	0%	25%	50%	75%	100%	II

Unit:Kg

Working Range (m)	2T fixed counterweight+4.5 flexible counterweight, fully extended outriggers, over side and rear operation							Working Range (m)
	12.2	16.5	20.7	27.2	33.8	40.4	47	
3	85000	64000						3
3.5	75000	61000						3.5
4	68000	59000	43500					4
4.5	64000	57000	42500					4.5
5	57000	52000	41000	30000	26000			5
5.5	52000	49000	40000	30000	25000			5.5
6	48000	44000	38000	30000	24000	20000		6
6.5	43000	40000	34500	29000	23000	19000		6.5
7	38000	36000	33500	28000	22000	18000		7
7.5	33500	31000	30500	26000	21000	17500		7.5
8	29000	27500	26500	25000	20000	17000		8
9	23000	22000	21000	22000	18800	15500		9
10		17500	17000	18000	17500	14500	11000	10
11		15000	14300	15000	16000	13500	10500	11
12		12500	11800	12500	14000	12500	10200	12
14			8700	9300	10800	11000	10000	14
16			6300	7100	8100	9000	8650	16
18				5400	6400	6900	7100	18
20				4200	4900	5500	5750	20
22				3200	3800	4400	4650	22
24					3000	3300	3950	24
26					2300	2700	3150	26
28						2150	2600	28
30						1650	1900	30
32							1550	32
34							1200	34
36							800	36
Number of lines	12	10	8	6	5	4	3	Number of lines
Telescoping condition(%)								
I	0%	50%	100%	100%	100%	100%	100%	I
II	0%	0%	0%	25%	50%	75%	100%	II

https://truckmanualshub.com/

Unit:Kg

Working Range (m)	2T fixed counterweight+4.5T flexible counterweight+4.5T counterweight, fully extended outriggers, 360°operation							Working Range (m)
	12.2	16.5	20.7	27.2	33.8	40.4	47	
3	85000	65000						3
3.5	75000	63000						3.5
4	68000	61000	43500					4
4.5	64500	60000	42500					4.5
5	57500	54000	41500	30000	26000			5
5.5	53500	50000	40000	30000	25000			5.5
6	49500	45500	38000	30000	24000	20000		6
6.5	45000	42500	35800	29000	23000	19000		6.5
7	40500	39500	33500	28000	22000	18000		7
7.5	36500	36000	32000	26500	21000	17500		7.5
8	33500	33000	30000	25000	20000	17000		8
9	27500	26000	25000	23200	18800	15800		9
10		21500	20500	21000	17500	14800	11000	10
11		18000	17000	17800	16200	13600	10500	11
12		15000	14500	15200	15000	12600	10200	12
14			10500	11600	12500	11400	10000	14
16			8000	9000	10000	10000	9000	16
18				7000	7800	8400	7900	18
20				5500	6200	6700	7000	20
22				4300	5000	5500	5850	22
24				3300	4100	4500	5000	24
26					3300	3700	4100	26
28					2700	3100	3500	28
30						2500	2800	30
32						2000	2250	32
34						1400	1800	34
36							1400	36
Number of lines	12	10	8	6	5	4	3	Number of lines
Telescoping condition(%)								
I	0%	50%	100%	100%	100%	100%	100%	I
II	0%	0%	0%	25%	50%	75%	100%	II

Unit:Kg

2t fixed counterweight

Angle of elevation(°)	Fully extended boom(m)+jib(m)					
	Over side and front operation, 2t fixed counterweight					
	47+10.2			47+17.5		
	0°	15°	30°	0°	15°	30°
80	5500	3800	3300	3300	2000	1430
78	5170	3750	3135	2970	1900	1320
76	4840	3650	2860	2640	1800	1265
74	4180	3500	2695	2310	1700	1210
72	3608	3300	2530	2035	1600	1155
70	3850	3100	2420	1870	1500	1100
68	3520	2900	2310	1760	1400	1067
66	3000	2600	2200	1650	1300	1000
64	2500	2300	2100	1540	1200	900
62	2000	1850	1700	1400	1150	880
60	1600	1500	1400	1250	1050	850
58	1300	1200	1100	1000	900	800
56	900					
Hook (t)	5t					

https://truckmanualshub.com/

Unit:Kg

6.5t counterweight

Angle of elevation(°)	Fully extended boom(m)+jib(m)					
	Outriggers extended, over side and rear operation, 2t fixed counterweight+4.5t flexible counterweight					
	47+10.2			47+17.5		
	0°	15°	30°	0°	15°	30°
80	5500	3700	3200	3300	1900	1300
78	5000	3600	3100	2900	1800	1250
76	4700	3500	2750	2600	1700	1200
74	4300	3400	2600	2300	1600	1150
72	4000	3200	2400	2000	1500	1100
70	3600	3000	2300	1800	1400	1050
68	3300	2700	2200	1700	1300	1000
66	3000	2500	2100	1600	1200	950
64	2400	2200	2000	1400	1100	900
62	2000	1950	1900	1300	1050	850
60	1700	1600	1500	1150	900	800
58	1400	1350	1300	1500	850	750
56	1250	1200	1150	900	800	700
54	1000	950	900	700		
52	800					
Hook (t)	5t					

Unit:Kg

11t counterweight

Angle of elevation(°)	Fully extended boom(m)+jib(m)					
	Outriggers extended, over side and rear operation, 2t fixed counterweight+4.5t flexible counterweight+4.5t flexible counterweight					
	47+10.2			47+17.5		
	0°	15°	30°	0°	15°	30°
80	5500	3700	3200	3300	1900	1300
78	5000	3600	3100	2900	1800	1250
76	4700	3500	2800	2600	1700	1200
74	4300	3400	2650	2300	1600	1150
72	4000	3200	2450	2000	1500	1100
70	3600	3000	2300	1800	1400	1050
68	3300	2700	2200	1700	1300	1000
66	3000	2500	2100	1600	1200	1000
64	2500	2250	2000	1450	1100	950
62	2100	2000	1900	1350	1050	900
60	1900	1750	1600	1250	950	850
58	1600	1500	1400	1150	900	800
56	1500	1350	1200	1050	850	750
54	1100	1000	950	850		
52	900					
Hook (t)	5t					

1. Values listed in the table refer to rated lifting capacity measured at flat and solid gound under the lever state of the crane.
2. Value above heavy line shall be determined by strength of the crane and under this line shall be determined by stability of the crane.
3. Rated load values determined by stability shall comply with ISO 4305.
4. Rated lifting capacity listed in the table included weights of lifting hooks (800kg of main hook 1, 320kg of hook 2 and 140kg of auxiliary hook) and hangers.
5. The value listed in the table are applied to 360° working range if no.5 outrigger is fully extended.
6. Rated lifting capacity with pulley at boom tip shall not exceed 5000kg and then substracts(2300kg)to gain rated lifting capacity if the boom is used to lift after the installation of jib.
7. If actual boom length and range are between two values specified in the table, larger value will determine the lifting capacity.

https://truckmanualshub.com/

STC850 TRUCK CRANE

WHEEL CRANE FAMILY MAP

TRUCK CRANE

STC200
Maximum Load Capacity: 20t
Telescopic Boom: 4 Sections, 10.6-33m

STC250
Maximum Load Capacity: 25t
Telescopic Boom: 4 Sections, 10.85-33.5m

STC250H
Maximum Load Capacity: 25t
Telescopic Boom: 5 Sections, 10.5-39.5m

STC300S
Maximum Load Capacity: 30t
Telescopic Boom: 5 Sections, 10.6-40.5m

STC300TH
Maximum Load Capacity: 30t
Telescopic Boom: 4 Sections, 10.6-33.5m

STC300H
Maximum Load Capacity: 30t
Telescopic Boom: 5 Sections, 10.5-39.5m

STC500
Maximum Load Capacity: 50t
Telescopic Boom: 5 Sections, 11.5-43m

STC550
Maximum Load Capacity: 55t
Telescopic Boom: 5 Sections, 11.5-43m

STC600S
Maximum Load Capacity: 60t
Telescopic Boom: 5 Sections, 11.3-43.5m

STC750
Maximum Load Capacity: 75t
Telescopic Boom: 5 Sections, 11.8-45m

STC800S
Maximum Load Capacity: 80t
Telescopic Boom: 5 Sections, 12.2-47m

STC1000
Maximum Load Capacity: 100t
Telescopic Boom: 5 Sections, 13.5-52m

STC1000C
Maximum Load Capacity: 100t
Telescopic Boom: 6 Sections, 13.25-60m

STC1000S
Maximum Load Capacity: 100t
Telescopic Boom: 5 Sections, 12.26-56m

STC1200S
Maximum Load Capacity: 120t
Telescopic Boom: 7 Sections, 12.6-63.5m

STC1300C
Maximum Load Capacity: 130t
Telescopic Boom: 6 Sections, 13.3-60m

STC1600
Maximum Load Capacity: 160t
Telescopic Boom: 6 Sections, 13.4-62m

STC2200
Maximum Load Capacity: 220t
Telescopic Boom: 6 Sections, 14.55-68m

ALL TERRAIN CRANE

SAC1800
Maximum Load Capacity: 180t
Telescopic Boom: 6 Sections, 13.5-62m

SAC2200
Maximum Load Capacity: 220t
Telescopic Boom: 6 Sections, 13.5-62m

SAC2600
Maximum Load Capacity: 260t
Telescopic Boom: 6 Sections, 15.65-73m

SAC3000
Maximum Load Capacity: 300t
Telescopic Boom: 7 Sections, 15.4-80m

SAC3500
Maximum Load Capacity: 350t
Telescopic Boom: 6 Sections, 16.2-70m

SAC8000
Maximum Load Capacity: 800t
Telescopic Boom: 7 Sections, 17.1-90m

ROUGH-TERRAIN CRANE

SRC250
Maximum Load Capacity: 25t
Telescopic Boom: 4 Sections, 9.9-31.5m

SRC350
Maximum Load Capacity: 35t
Telescopic Boom: 4 Sections, 10-31.5m

SRC550
Maximum Load Capacity: 55t
Telescopic Boom: 4 Sections, 11.25-34.5m

SRC550H
Maximum Load Capacity: 55t
Telescopic Boom: 5 Sections, 11.5-43m

SRC750
Maximum Load Capacity: 75t
Telescopic Boom: 5 Sections, 11.8-45m

SRC1200
Maximum Load Capacity: 120t
Telescopic Boom: 5 Sections, 13-49m

https://truckmanualshub.com/

Quality Changes the World

SANY AUTOMOBILE HOISTING MACHINERY

Address: SANY Industrial Park, Jinzhou Development Zone,
Changsha, Hunan, China.
Service Hotline: 4006098318
Email: crd@sany.com.cn
For more information, please visit: www.sanygroup.com

For our consistent improvement in techonology, specifications may change without notice.
The machines illustrated may show optional equipment which can be supplied at additional cost.

Version: 2015.08

Distributed By: