https://truckmanualshub.com/

FOREWORD

This manual covers the service procedures of the TOYOTA ELECTRIC POWERED FORKLIFT 7FBE10 to 20 series.

Please use these manuals for providing quick, correct servicing of the corresponding forklift models.

This manual deals with the above models as of February 2003. Please understand that disagreement can take place between the descriptions in the manual and actual vehicles due to change in design and specifications. Any change or modifications thereafter will be informed by Toyota Industrial Equipment Parts & Service News.

TOYOTA Material Handling Company
A Division of TOYOTA INDUSTRIES CORPORATION

https://truckmanualshub.com/

SECTION INDEX

NAME	SECTION
GENERAL	0
BATTERY	1
CHARGER (OPT)	2
CONTROLLER	3
MULTI-DISPLAY FUNCTIONS	4
TROUBLESHOOTING	5
MOTOR	6
DRIVE UNIT & FRONT AXLE	7
REAR AXLE	8
STEERING	9
BRAKE	10
BODY & FRAME	11
MATERIAL HANDLING SYSTEM	12
MAST	13
CYLINDER	14
OIL PUMP	15
OIL CONTROL VALVE	16
SAS FUNCTIONS (OPT)	17
APPENDIX	18

https://truckmanualshub.com/

GENERAL

Page

VEHICLE EXTERIOR VIEW..... 0-2

VEHICLE MODELS..... 0-3

FRAME NUMBER..... 0-3

HOW TO USE THIS MANUAL 0-4

- EXPLANATION METHOD 0-4
- TERMINOLOGY..... 0-5
- ABBREVIATIONS 0-5
- SI UNITS 0-6

OPERATING TIPS 0-7

- GENERAL INSTRUCTIONS 0-7
- JACK-UP POINT 0-8
- HOISTING THE VEHICLE 0-9
- WIRE ROPE SUSPENSION ANGLE LIST 0-10
- SAFE LOAD FOR EACH WIRE ROPE SUSPENSION ANGLE 0-10
- MEMBER WEIGHTS..... 0-11
- TOWING THE VEHICLE 0-11
- ELECTRICAL PARTS INSPECTION 0-12
- NOTES ON SAS 0-14

STANDARD BOLT & NUT TIGHTENING TORQUE 0-15

- BOLT STRENGTH CLASS IDENTIFICATION METHOD 0-15
- TIGHTENING TORQUE TABLE 0-16
- PRECOATED BOLTS 0-17

Page

HIGH PRESSURE HOSE FITTING TIGHTENING TORQUE 0-17

RECOMMENDED LUBRICANT QUANTITY AND TYPES 0-18

LUBRICATION CHART..... 0-19

PERIODIC MAINTENANCE..... 0-20

PERIODIC REPLACEMENT OF PARTS AND LUBRICANTS 0-25

https://truckmanualshub.com/

VEHICLE EXTERIOR VIEW

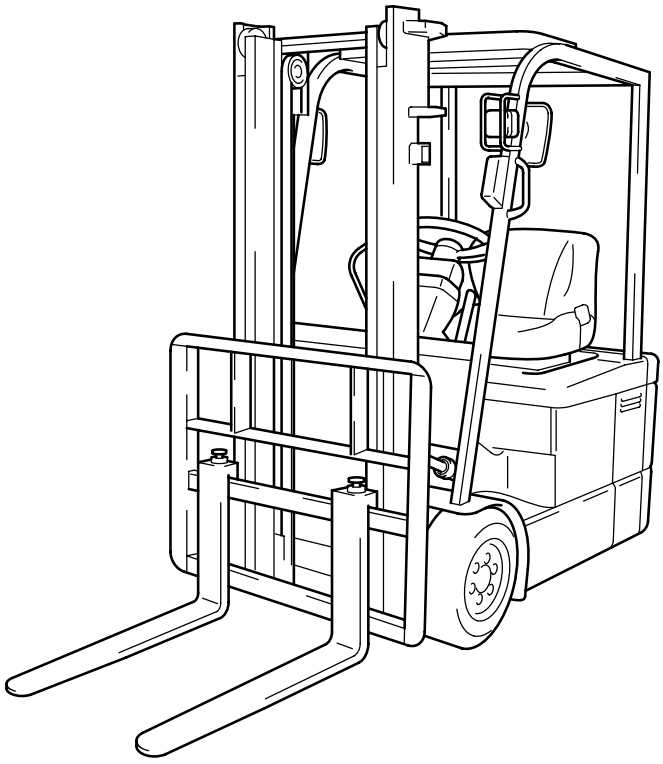

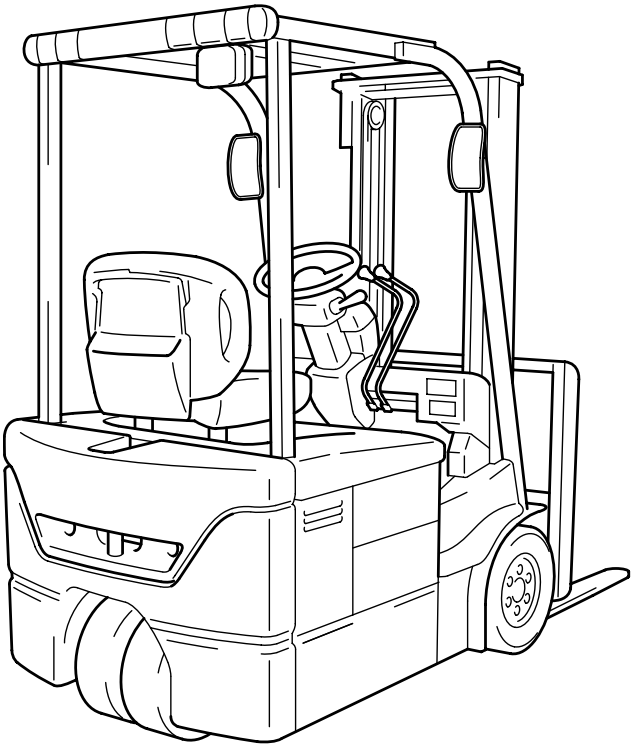

VEHICLE MODELS

Vehicle model code	Payload (ton)	Vehicle Model	Control method	Voltage (V)
10	1.0	7FBE10	AC microcomputer controller	48
13	1.25	7FBE13	↑	↑
15	1.5	7FBE15	↑	↑
18	1.75	7FBE18	↑	↑
20	2.0	7FBE20	↑	↑

FRAME NUMBER

Vehicle model	Drive motor model	Punching format	Punching position
7FBE10	AR09	7FBE13-50011	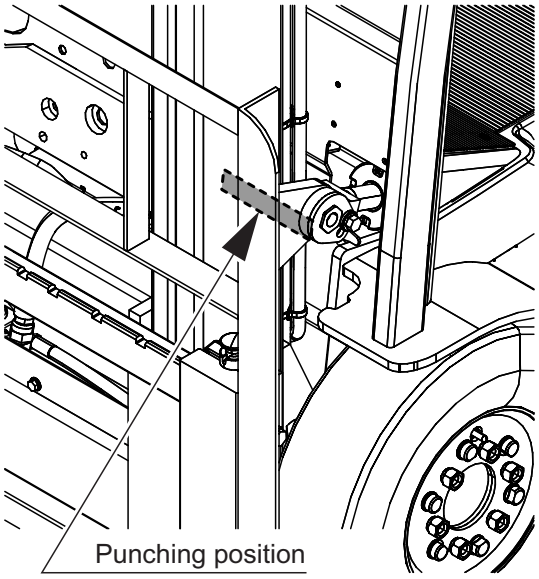
7FBE13			
7FBE15		7FBE18-50011	
7FBE18			
7FBE20		7FBE20-50011	

https://truckmanualshub.com/

HOW TO USE THIS MANUAL

EXPLANATION METHOD

1. Operating procedure
   (1) Operating procedures are described using either pattern A or pattern B.
   Pattern A: Each step of the operation is explained with its own illustration.
   Pattern B: The entire operation is indicated by step numbers in one illustration, followed by cautions, notes, and point operations.

Example of pattern B

DISASSEMBLY · INSPECTION · REASSEMBLY

Tightening torque unit T=N·m(kg·m)[ft·lbf]

- Some step numbers may be omitted in some illustrations.

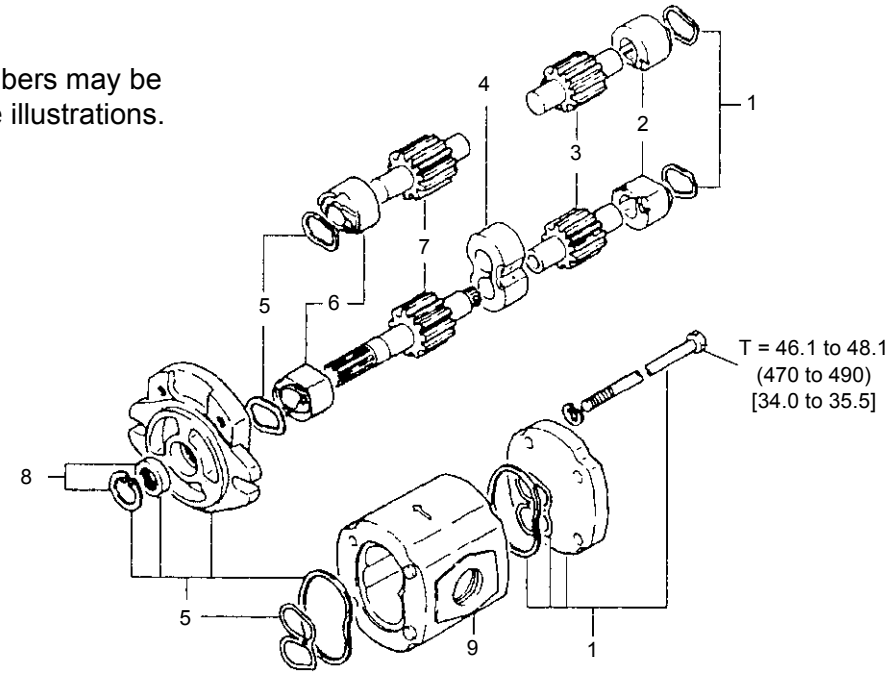

Disassembly Procedure

1 Remove the cover. [Point 1]
2 Remove the bushing. [Point 2]
3 Remove the gear.

Operation to be explained

Point Operations

Explanation of operation point with illustration

[POINT 1]
Disassembly:
Make match marks before removing the pump cover

[POINT 2]
Inspection:
Measure the bushing inside diameter.
Limit 19.12 mm

1. How to read component figures
   (1) The component figures use the illustration in the parts catalog for the vehicle model. Please refer to the catalog to check the part name.

(Example)

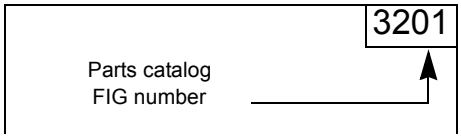

2. Matters omitted from this manual
   (1) This manual omits descriptions of the following jobs, but perform them in actual operation:
      (a) Cleaning and washing of removed parts as required
      (b) Visual inspection (partially described)

TERMINOLOGY

CAUTION:
Important matters, negligence of which may cause accidents. Be sure to observe them.

NOTE:
Important items, negligence of which may cause accidents, or matters in operating procedure which require special attention.

Standard: Value showing the allowable range in inspection or adjustment

Limit: The maximum or minimum value allowed in inspection or adjustment.

ABBREVIATIONS

Abbreviation	Meaning	Abbreviation	Meaning
ASSY	Assembly	SAE	Society of Automotive Engineers (USA)
ATT	Attachment	SAS	System of active stability
LH	Left Hand	SST	Special Service Tool
L/	Less	STD	Standard
OPT	Option	T=	Tightening Torque
O/S	Oversize	○○T	Number of teeth (○○T)
PS system	Power Steering	U/S	Undersize
RH	Right Hand	W/	With

https://truckmanualshub.com/

SI UNITS

Meaning of SI

This manual uses SI units. SI represents the International System of Units, which was established to unify the various systems of units used in the past for smoother international technical communication.

New Units Adopted in SI

Item	New unit	Conventional unit	Conversion rate*1 (1 [conventional unit] = X [SI unit])
Force*2	N (newton)	kgf	1 kgf = 9.80665 N
Torque*2 (Moment)	N·m	kgf·cm	1 kgf·cm = 9.80665 N·m
Pressure*2	Pa (pascal)	kgf/cm^2	1 kgf/cm^2 = 98.0665 kPa = 0.0980665 MPa
↑	↑	mmHg	1 mmHg = 0.133322 kPa
Revolving speed	rpm	rpm	1 rpm = 1 r/min
Spring con-	N/mm	kgf/mm	1 kgf/mm = 9.80665 N/mm
Volume	l	cc	1 cc = 1 mℓ
Power	W	PS system	1 PS = 0.735499 kW
Heat quantity	W·h	cal	1 kcal = 1.16279 W·h
Specific fuel	g/W·h	g/PS·h	1 g/PS·h = 1.3596 g/kW·h

<Reference>

*** 1: X represents the value in SI units as converted from 1 [in conventional units], which can be used as the rate for conversion between conventional and SI units.**

*** 2: In the past, kilogram [kg] representing mass was often used in place of weight kilogram [kgf], which should be used as the unit of force.**

Conversion between Conventional and SI Units

Equation for conversion

Value in SI unit = Conversion rate × Value in conventional unit	Conversion rate: Figure corresponding to X in the conversion rate column in the table above
Value in conventional unit = Value in SI unit ÷ Conversion rate	

When converting, change the unit of the value in conventional or SI units to the one in the conversion rate column in the table above before calculation. For example, when converting 100 W to the value in conventional unit PS, first change it to 0.1 kW and divide by the conversion rate 0.735499.

OPERATING TIPS

GENERAL INSTRUCTIONS

1. Skillful operation
   (1) Prepare the tools, necessary measuring instruments (circuit tester, megohmmeter, oil pressure gauge, etc.) and SSTs before starting operation.
   (2) Check the cable color and wiring state before disconnecting any wiring.
   (3) When overhauling functional parts, complicated sections or related mechanisms, arrange the parts neatly to prevent confusion.
   (4) When disassembling and inspecting a precision part such as the control valve, use clean tools and operate in a clean location.
   (5) Follow the specified procedures for disassembly, inspection and reassembly.
   (6) Always replace gaskets, packing, O-rings, self-locking nuts and cotter pins with new ones each time they are disassembled.
   (7) Use genuine Toyota parts for replacement.
   (8) Use specified bolts and nuts and observe the specified tightening torque when reassembling. (Tighten to the medium value of the specified tightening torque range.) If no tightening torque is specified, use the value given in the “standard tightening torque table”.
2. Protection of functional parts (battery operated vehicles)
   (1) Before connecting the battery plug after vehicle inspection or maintenance, thoroughly check each connector for any connection failure or imperfect connection.
   Failure or imperfect connection of connectors related to controllers, especially, may damage elements inside the controllers.
3. Defect status check
   Do not start disassembly and/or replacement immediately, but first check that disassembly and/or replacement is necessary for the defect.
4. Waste fluid disposal
   Always use a proper container when draining waste fluid from the vehicle.
   Careless discharge of oil, fuel, coolant, oil filter, battery or other harmful substance may adversely affect human health and the environment. Always collect and sort well, and ask specialized companies for appropriate disposal.

https://truckmanualshub.com/

JACK-UP POINT

Always observe the following instructions when jacking up the vehicle:

- **When the fork is loaded, unload it and park the vehicle on a flat surface. Be sure to avoid an inclined or rough surface.**
- **Use a jack with ample capacity and jack up the vehicle at the specified jack-up point. Jacking up at any other point is dangerous.**
- **Always support the load of jacked-up vehicle with wooden blocks at specified points. Supporting the vehicle with the jack only is very dangerous.**
- **Never, under any circumstances, put any part of the body (including hands and feet) under the jacked-up vehicle.**

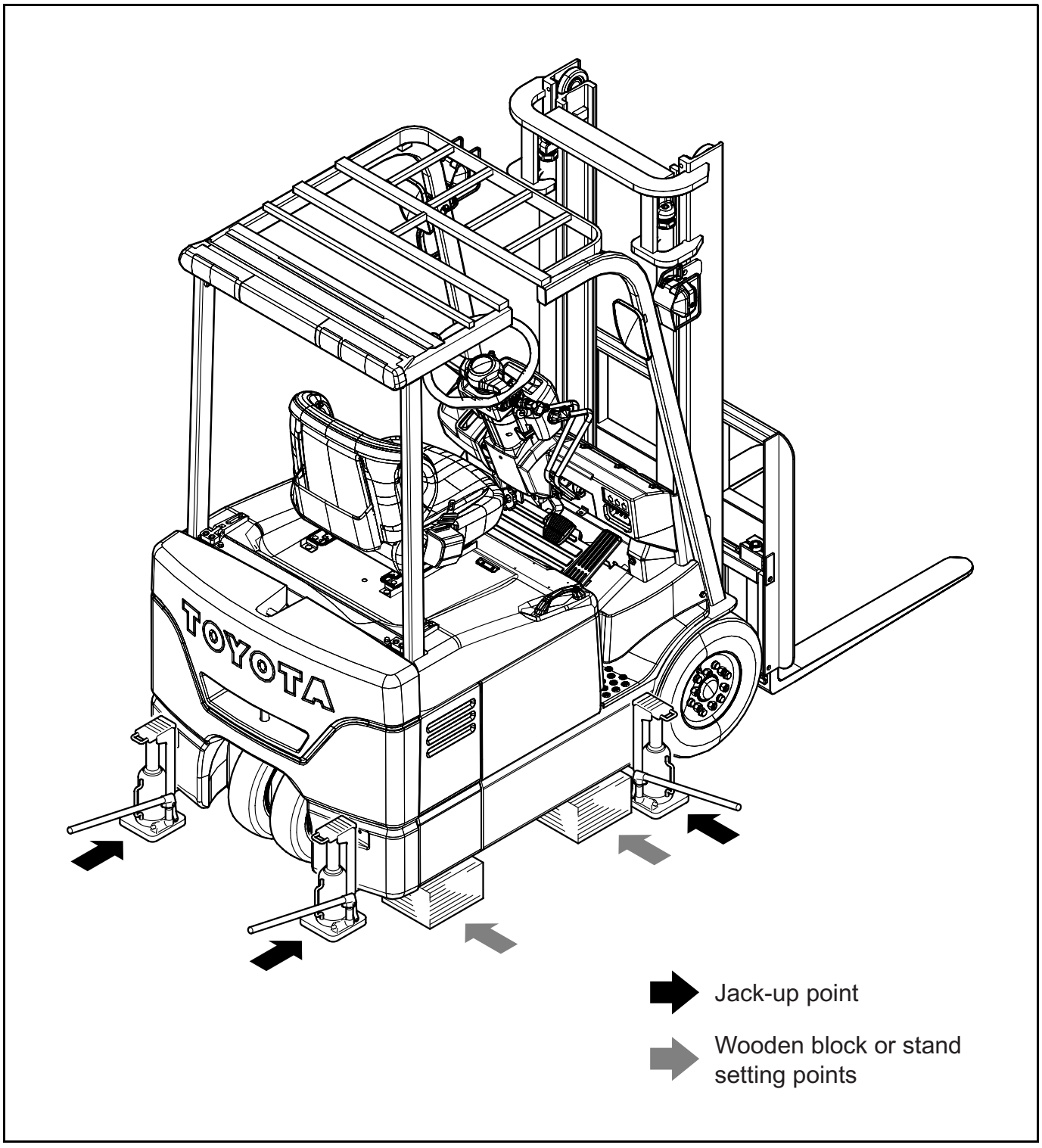

https://truckmanualshub.com/

HOISTING THE VEHICLE

When hoisting the vehicle, always observe the specified hoist attachment section and method. Never hoist by any other attachment section as it is very dangerous.

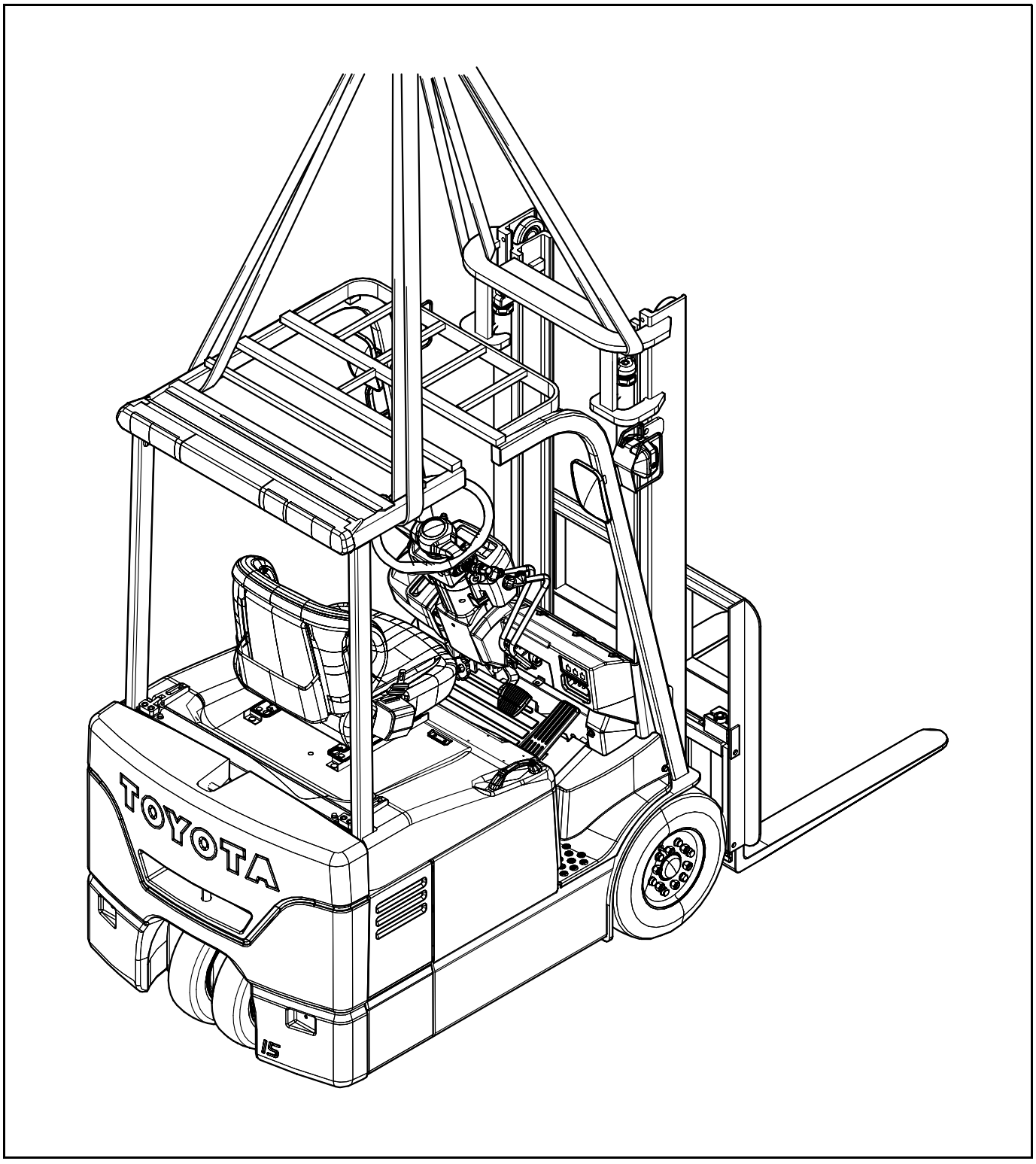

https://truckmanualshub.com/

WIRE ROPE SUSPENSION ANGLE LIST

Suspension Angle	Tension	Compression	Suspension method	Suspension Angle	Tension	Compression	Suspension method
0°	1.00 time	0 time	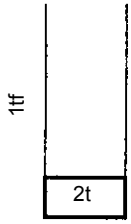	90°	1.41 time	1.00 time	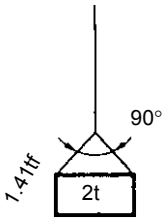
30°	1.04 time	0.27 time	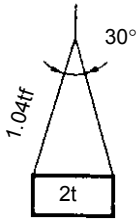	120°	2.00 time	1.73 time	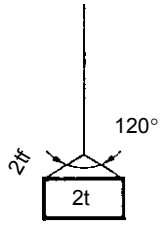
60°	1.16 time	0.58 time	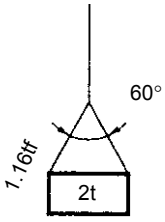				

SAFE LOAD FOR EACH WIRE ROPE SUSPENSION ANGLE

Unit: N (tf) [lbf]

Rope diameter	Cutting load	Single-rope	Two-rope suspension				four-rope suspension			
		0°	0°	30°	60°	90°	0°	30°	60°	90°
6 mm (0.24 in)	21380 (2.18) [4807]	3040 (0.31) [683.6]	6080 (0.62) [1367]	5880 (0.6) [1323]	5200 (0.53) [1169]	4310 (0.44) [970]	12160 (1.24) [2734]	11770 (1.2) [2646]	10400 (1.06) 2337	8630 (0.88) [1940]
8 mm (0.32 in)	31480 (3.21) [7078]	4410 (0.45) [992.3]	8830 (0.9) [1985]	8530 (0.87) [1918]	7650 (0.78) [1720]	6280 (0.64) [1411]	17650 (1.8) [3969]	17060 (1.74) [3937]	15300 (1.56) [3440]	12550 (1.28) [2322]
10 mm (0.4 in)	49230 (5.02) [11690]	6960 (0.71) [1565.6]	14020 (1.43) [3153]	13440 (1.37) [3021]	11770 (1.2) [2646]	9810 (1.0) [2205]	27460 (2.8) [6174]	26480 (2.7) [5954]	23540 (2.4) [5292]	19610 (2.0) [4410]
12.5 mm (0.5 in)	76880 (7.84) [17387]	10980 (1.12) [2469.5]	21570 (2.2) [4851]	21280 (2.1) [4631]	18630 (1.9) [4190]	14710 (1.5) [3308]	43150 (4.4) [9702]	41190 (4.2) [9261]	37270 (3.8) [8379]	29420 (3.0) [6615]
14 mm (0.56 in)	96400 (9.83) [21675]	13730 (1.4) [3087]	27460 (2.8) [6174]	26480 (2.7) [5954]	23540 (2.4) [5292]	18630 (1.9) [4190]	54920 (5.6) [12348]	52960 (5.4) [11907]	47070 (4.8) [10584]	37270 (3.8) [8379]

https://truckmanualshub.com/

MEMBER WEIGHTS

Unit: kg (lbs)

Member	Vehicle model	Weight
BATTERY ASSY	See P1-2	
Drive motor ASSY	All Models	Approx. 37 (82)
Pump motor ASSY	All Models	Approx. 31 (68)
Front axle ASSY W/ drive motor ASSY	All Models	Approx. 122 (269)
Rear axle ASSY W/ rear axle cylinder ASSY	All Models	Approx. 45 (99)
Counterweight	7FBE10	Approx. 405 (893)
	7FBE13	Approx. 598 (1319)
	7FBE15	Approx. 697 (1537)
	7FBE18	Approx. 853 (1881)
	7FBE20	Approx. 1040 (2293)
Mast ASSY W/ lift bracket (W/ lift cylinder, L/ fork, Lifting height 3000mm, V mast)	7FBE10 to 7FBE18	330 (730)
	7FBE20	400 (880)
Vehicle weight	7FBE10	2225 (4906)
	7FBE13	2425 (5347)
	7FBE15	2685 (5920)
	7FBE18	2840 (6262)
	7FBE20	3155 (6957)

TOWING THE VEHICLE

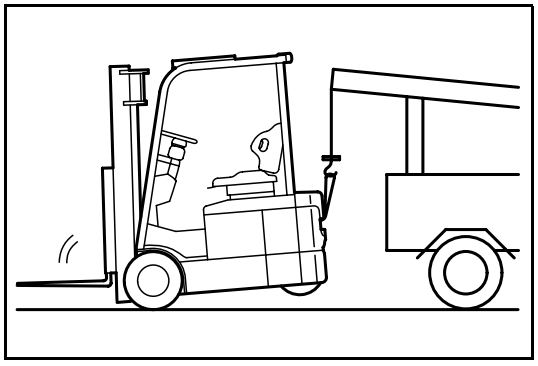

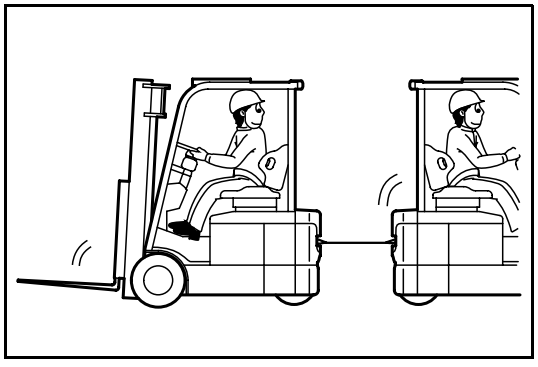

Note the cautions below when towing the vehicle.

1. Lift the rear wheels for towing
2. The traveling speed when towing must not exceed the maximum traveling speed of the forklift.
3. Before starting towing, always set the key switch to OFF and the direction switch to the neutral position.
4. Before towing, either remove the fork or take action to prevent the fork from coming into contact with the ground due to bouncing.

https://truckmanualshub.com/

ELECTRICAL PARTS INSPECTION

1. Always disconnect the battery plug before inspecting or servicing electrical parts.
2. Pay sufficient attention when handling electronic parts.

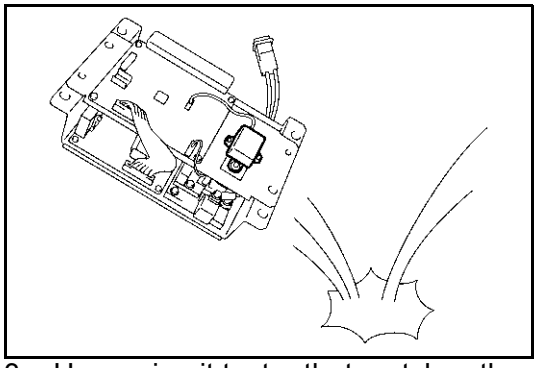

(1) Never subject electronic parts, such as computers and relays, to impact.
(2) Never expose electronic parts to high temperature or moisture.
(3) Do not touch connector terminals, as they may be deformed or damaged due to static electricity.

3. Use a circuit tester that matches the object and purpose of measurement.
   Analog type: This type is convenient for observing movement during operation and the operating condition. Measured value is only a reference

   Digital type: A fairly accurate reading is possible. However, it is difficult to observe operation or movement.

(1) Difference between results of measurement with analog and digital types
∗ The results of measurements using the analog type and the digital type may be different.
Differences between the polarities of the analog type and the digital type are described below.

1) Analog circuit tester

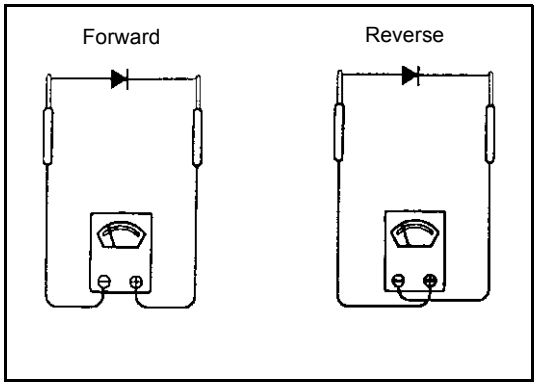

Example of measurement result
Tester range: kΩ range

	Analog type
Forward	Continuity
	11 kΩ
Reverse	No continuity
	∞

2) Digital circuit tester

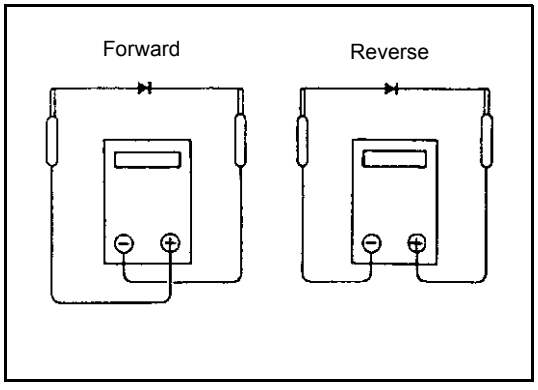

Example of measurement result
Tester range: 2 MΩ range

	Digital type
Forward	No continuity
	1
Reverse	Continuity
	2 MΩ

(2) Difference in result of measurement with a circuit tester
The circuit tester power supply voltage depends on the tester type. 1.5 V, 3.0 V or 6.0 V is used. The resistance of a semiconductor, such as a diode, varies with the circuit tester power supply voltage.
The diode characteristics are shown in the figure below.

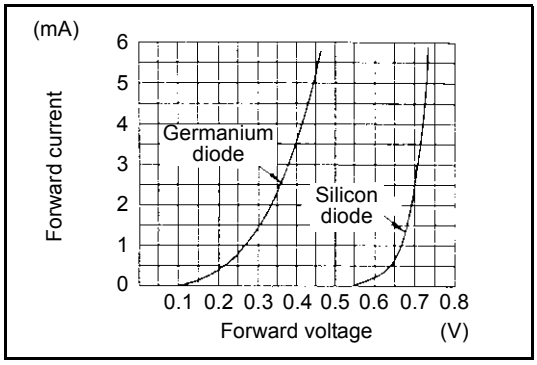

The resistance values of the same semiconductor measured with two types of circuit testers having different power supply voltages are different.
This manual describes the results of measurement with a circuit tester whose power supply voltage is 3.0 V.

(3) Difference in measurement result by measurement range (analog type)
In the analog type circuit tester, changing the measurement range switches over the internal circuit to vary the circuit resistance. Even when the same diode is measured, the measurement result varies with the measurement range.

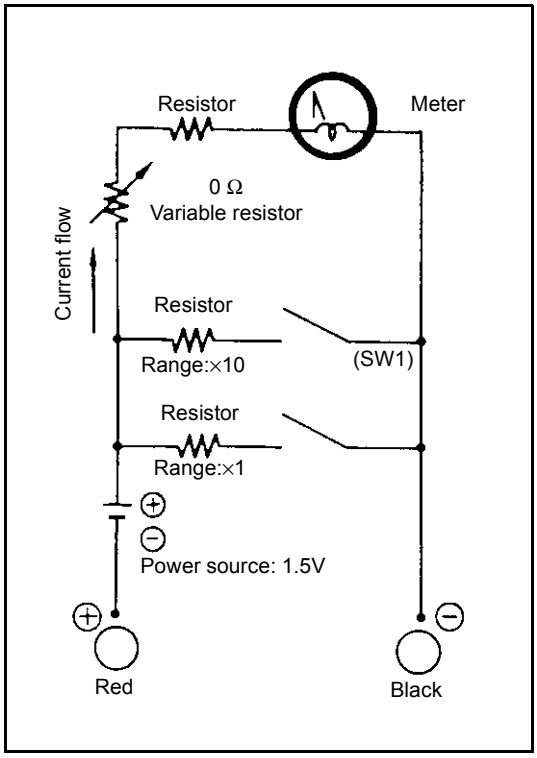

Always use the range described in the repair manual for measurement.

https://truckmanualshub.com/

NOTES ON SAS

1. For the explanations of SAS functions and operation, also see “New Model Feature 7FBE10 to 20 Pub. No.PE314”.
2. See page 17-6 FOR REPAIR WORK of this repair manual before servicing.
3. If repair or replacement is performed in any section of the vehicle that relates to SAS function, perform necessary matching to ensure proper SAS function (see page 4-47).
4. always be sure to operate the vehicle carefully. Be aware of the difference in control features between with and without SAS.
5. Many precision valves are used in the SAS oil control valves. When disassembling or replacing hydraulic parts (valves, piping, etc.), be sure to clean the parts before installation. Periodic change of the hydraulic oil is also very important.
6. As the vehicle is equipped with high-precision electronic devices, modification of electrical parts may cause vehicle failure. Be sure to use genuine Toyota parts for replacement and installation of the electrical parts (auxiliary equipment, optional parts, etc.).

STANDARD BOLT & NUT TIGHTENING TORQUE

Tightening torque of standard bolts and nuts are not indicated throughout the manual.
Use the charts and table below to judge the standard tightening torque.

1. Find the class of the bolt strength on the table below and then find the bolt tightening torque on the tightening torque table.
2. The nut tightening torque can be judged from its corresponding bolt type.

BOLT STRENGTH CLASS IDENTIFICATION METHOD

Identification by bolt shape

	Shape and class		Class
Hexagon head bolt Hexagon bolt (standard)	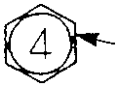	Bolt with raised or etched numeral on head	4 = 4T 5 = 5T 6 = 6T 7 = 7T 8 = 8T
		No mark	4T
Hexagon flange bolt		No mark	4T
Hexagon head bolt (standard)		Bolt with two raised lines on head	5T
Hexagon flange bolt		Bolt with two raised lines on head	6T
Hexagon head bolt (standard)		Bolt with three raised lines on head	7T
Hexagon head bolt (standard)		Bolt with four raised lines on head	8T
Welded bolt	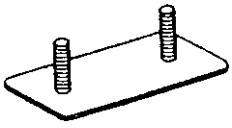		4T
Stud bolt	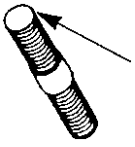	No mark	4T
	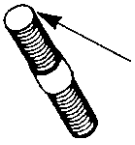	2 mm groove(s) on one/both edge(s)	6T

Identification by part No.

Hexagon head bolt

Part No.
91611-40625

- Length (mm)
- Nominal diameter (mm)
- Class

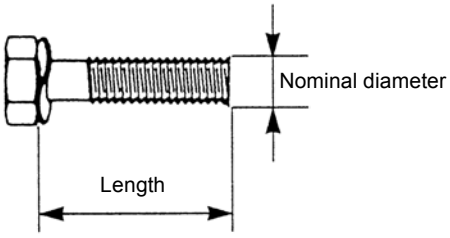

Stud bolt

Part No.
92132-40614

- Length (mm)
- Nominal diameter (mm)
- Class

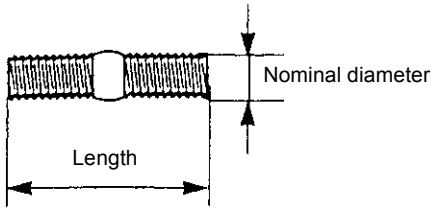

https://truckmanualshub.com/

TIGHTENING TORQUE TABLE

Class	Nominal diameter mm	Pitch mm	Standard tightening torque					
			Hexagon head bolt 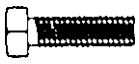			Hexagon flange bolt 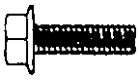		
			N·m	kgf·cm	ft·lbf	N·m	kgf·cm	ft·lbf
4T	6	1.0	5.4	55	48in·lbf	5.9	60	52in·lbf
	8	1.25	13	130	9	14	145	10
	10	1.25	25	260	19	28	290	21
	12	1.25	47	480	35	53	540	39
	14	1.5	75	760	55	83	850	61
	16	1.5	113	1150	83	—	—	—
5T	6	1.0	6.4	65	56in·lbf	7.5	75	65in·lbf
	8	1.25	16	160	12	18	175	13
	10	1.25	32	330	24	36	360	26
	12	1.25	59	600	43	65	670	48
	14	1.5	91	930	67	100	1050	76
	16	1.5	137	1400	101	157	1600	116
6T	6	1.0	7.8	80	69in·lbf	8.8	90	78in·lbf
	8	1.25	19	195	14	21	215	16
	10	1.25	38	400	29	43	440	32
	12	1.25	72	730	53	79	810	59
	14	1.5	110	1100	80	123	1250	90
	16	1.5	170	1750	127	191	1950	141
7T	6	1.0	11	110	8	12	120	9
	8	1.25	25	260	19	28	290	21
	10	1.25	52	530	38	58	590	43
	12	1.25	95	970	70	103	1050	76
	14	1.5	147	1500	108	167	1700	123
	16	1.5	226	2300	166	—	—	—
8T	6	1.0	12	125	9	14	145	9
	8	1.25	29	300	22	32	330	24
	10	1.25	61	620	45	68	690	50
	12	1.25	108	1100	80	123	1250	90
	14	1.5	172	1750	127	196	2000	145
	16	1.5	265	2700	195	299	3050	221

PRECOATED BOLTS

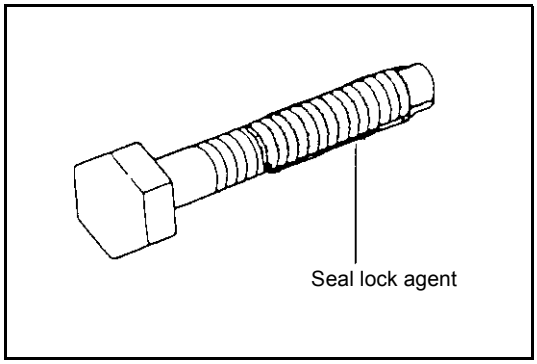

1. Do not replace or restore a precoated bolt as it is in the following cases:
   (1) After it has been removed.
   (2) When it has been moved by tightness check, etc. (loosened or tightened)

NOTE:
For torque check, tighten the bolt at the lower limit of the allowable tightening torque range; if the bolt moves, retighten it according to the steps below.

2. How to reuse precoated bolts
   (1) Wash the bolt and threaded hole.
   (The threaded hole must be washed even when replacing the bolt with a new one)
   (2) Completely dry the washed parts by blowing with air.
   (3) Apply a specified seal lock agent to the threaded portion of the bolt.

HIGH PRESSURE HOSE FITTING TIGHTENING TORQUE

1. When connecting a high pressure hose, wipe the hose fitting and corresponding nipple contact surfaces with a clean cloth to remove foreign matter and dirt. Also check that there are no dents or other damage on the contact surfaces before installation.
2. When connecting the high pressure hose, hold the hose to align the fitting with the nipple and tighten the fitting.
3. The maximum tightening torque must not exceed twice the standard tightening torque.

Nominal diameter of screw	Tightening torque standard N·m (kgf·cm) [ft·lbf]		Inside diameter of hose mm (in)
	Standard	Tightening range	
7/16-20UNF	25 (50) [18.1]	24 to 26 (240 to 270) [17.4 to 19.5]	6 (0.24)
9/16-18UNF	49 (500) [36.2]	47 to 52 (480 to 530) [34.7 to 38.3]	9 (0.35)
3/4-16UNF	59 (600) [43.4]	56 to 62 (570 to 630) [41.2 to 45.6]	12 (0.47)
7/8-14UNF	59 (600) [43.4]	56 to 62 (570 to 630) [41.2 to 45.6]	12 (0.47)
7/8-14UNF	78 (800) [57.9]	74 to 82 (740 to 840) [53.5 to 60.8]	15 (0.59)
1•1/16-12UNF	118 (1200) [86.8]	112 to 123 (1140 to 1250) [82.5 to 90.4]	19 (0.75)
1•5/16-12UNF	137 (1400) [101.3]	130 to 144 (1330 to 1470) [96.2 to 106.4]	25 (0.98)
PF1/4	25 (250) [18.1]	24 to 26 (240 to 270) [17.4 to 19.5]	6 (0.24)
PF3/8	49 (500) [36.2]	47 to 52 (480 to 530) [34.7 to 38.3]	9 (0.35)
PF1/2	59 (600) [43.4]	56 to 62 (570 to 630) [41.2 to 45.6]	12 (0.47)
PF3/4	118 (1200) [86.8]	112 to 123 (1140 to 1250) [82.5 to 90.4]	19 (0.75)
PF1	137 (1400) [101.3]	130 to 144 (1330 to 1470) [96.2 to 106.4]	25 (0.98)

https://truckmanualshub.com/

RECOMMENDED LUBRICANT QUANTITY AND TYPES

Application	Type	Capacity
Drive unit	Castle hypoid gear oil W (API GL-4, SAE 75W-80)	Approx. 0.4 ℓ (0.11 US gal) (Until purring out from the filler port)
Hydraulic oil	STD: Castle hydraulic oil (ISO VG32) Cold storage vehicle: Mobil Aero HFE	See “Hydraulic oil level by lifting height” below
Chassis parts	MP grease Chassis grease special Esso beacon 325	Appropriate amount
Battery	Distilled water	Appropriate amount

Hydraulic oil level by lifting height

Unit:ℓ (US gal)

Lifting height		V mast	SV mast	FV Mast	FSV Mast
To 3000mm (118 in)	Capacity	14 (3.70)	14 (3.70)	17 (4.49)	—
	Hydraulic oil level in the tank	12.4 (3.27)			
To 4000mm (157.5 in)	Capacity	15 (3.96)	15 (3.96)	19 (5.01)	16 (4.22)
	Hydraulic oil level in the tank	14.2 (3.75)			
To 6000mm (236 in)	Capacity	18 (4.75)	—	—	19 (5.01)
	Hydraulic oil level in the tank	17.2 (4.54)			

LUBRICATION CHART

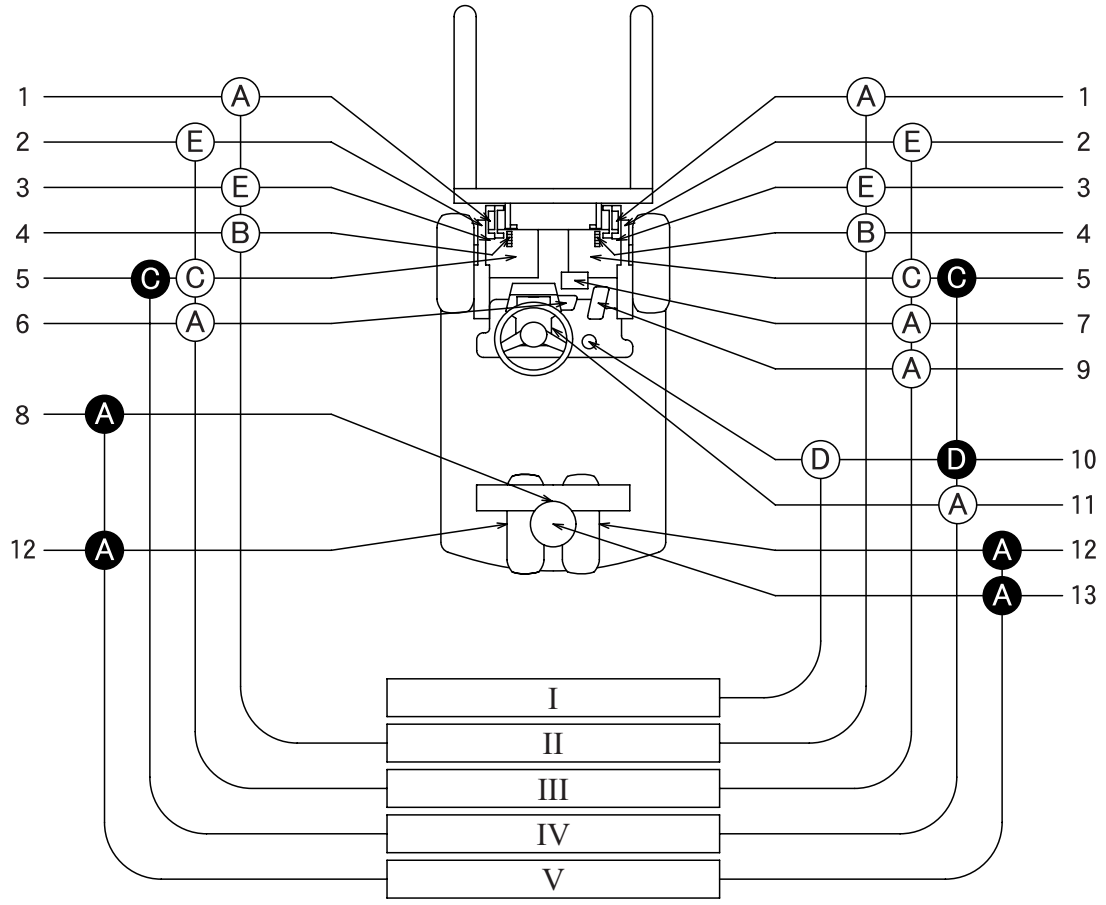

○: Inspection and addition

●: Replacement

A: MP grease

B: Motor oil

C: Gear oil (SAE 75W-80)

D: Hydraulic oil (ISO VG32)

E: Chassis grease special

I. Inspection every 8 hours (daily)

II. Inspection every 40 hours (weekly)

III. Inspection every 170 hours (monthly)

IV. Inspection every 1000 hours (6 monthly)

V. Inspection 2000 hours (annual)

1. Mast strip
2. Tilt cylinder front pin
3. Mast support bushing
4. Lift chain
5. Drive unit
6. Brake link
7. Oil control valve lever pin
8. Steering rack and pinion gear
9. Accelerator link
10. Oil tank
11. Tilt steering lock device
12. Rear wheel bearing
13. Rear axle bearing

https://truckmanualshub.com/

PERIODIC MAINTENANCE

INSPECTION METHOD

I: Inspection · Repair or Replacement if required
M: Measurement · Repair or Adjustment if required
T: Retightening C: Cleaning L: Lubrication
*: For new vehicle *1: Flaw detector

Item	Inspection timing	Every month	Every 3 months	Every 6 months	Every 12 months
		Every 170 hours	Every 500 hours	Every 1000 hours	Every 2000 hours
ELECTRICAL SYSTEM					
Motor	Rotation sound abnormality	I	←	←	←
	Looseness in the connecting parts	T	←	←	←
	Insulation resistance		M	←	←
Battery	Charging level (Display)	I	←	←	←
	Electrolyte level	I	←	←	←
	Electrolyte specific gravity	M	←	←	←
	Looseness in the connecting parts	I	←	←	←
	Abnormality in the upper portion of the battery and/or the case	I	←	←	←
	Insulation resistance		M	←	←
	Voltage measurement of each battery cell after charging				M
Charger	Timer function (Timer test)	I	←	←	←
	Looseness in the connecting parts	T	←	←	←
	HVR function voltage measurement				M
	Operating condition of the magnetic switch, contact contamination, roughness				I
Magnet switch	Contact looseness, damage, abrasion	I	←	←	←
	Operating condition, contamination and abrasion of the auxiliary contact	I	←	←	←
	Mounting condition of the arc shooter				I
	Operating condition and timing				I
	Looseness of the coil installation locations				I
	Mounting condition and looseness of the main circuit lead wire				I
Micro switch	Operating condition and timing	I	←	←	←
	Damage and looseness of installation locations	I	←	←	←
Direction lever	Operating condition, damage	I	←	←	←

Item	Inspection timing	Every month	Every 3 months	Every 6 months	Every 12 months
		Every 170 hours	Every 500 hours	Every 1000 hours	Every 2000 hours
Controller	Operating condition	I	←	←	←
	Interior contamination, damage	C	←	←	←
	Motor input voltage				M
Fuses	Looseness of the installation locations	I	←	←	←
Wiring (incl. charging cable)	Harness deterioration, damage and looseness of the clamp	I	←	←	←
	Looseness of the connections, taping condition	I	←	←	←
	Connecting condition and damage of the battery connector	I	←	←	←
POWER TRANSMISSION SYSTEM					
Drive unit	Oil leak	I	←	←	←
	Oil level	I	←	←	←
	Bolt or nut looseness				T
DRIVE SYSTEM					
Front axle	Damage and deformation				I
Rear axle	Damage and deformation				I
	Looseness of rear axle bearing				I
	Abnormal noise of rear axle bearing				I
Wheels	Tire pressure	M	←	←	←
	Tire crack, damage and abnormal wear	I	←	←	←
	Tire tread depth	M	←	←	←
	Metal piece, stone and other foreign matter on tire	I	←	←	←
	Loosening of wheel nut and bolt	T	←	←	←
	Rim, side ring and disc wheel damage	I	←	←	←
	Looseness and abnormal noise of front wheel bearing	I	←	←	←
	Looseness and abnormal noise of rear wheel bearing	I	←	←	←
STEERING SYSTEM					
Steering wheel	Play, loosening, looseness	I	←	←	←
	Function	I	←	←	←
Steering valve	Oil leak	I	←	←	←
	Looseness of the installation locations	T	←	←	←
Wheels for steering	Turning angle to left and right				I

https://truckmanualshub.com/

Item	Inspection timing	Every month	Every 3 months	Every 6 months	Every 12 months
		Every 170 hours	Every 500 hours	Every 1000 hours	Every 2000 hours
Power steering	Oil leak	I	←	←	←
	Looseness of the installation locations	I	←	←	←
	Damage of power steering hose				I
BRAKING SYSTEM					
Brake pedal	Reserve	M	←	←	←
	Braking performance	I	←	←	←
Parking brake	Operating force and pull margin	I	←	←	←
	Braking performance	I	←	←	←
Rod and cable	Looseness and damage	I	←	←	←
	Operating condition	I	←	←	←
Disc brake	Clearance between disc and pad	M	←	←	←
	Wear of sliding portion and pad				I
	Disc wear and damage				I
	Looseness of the disc installation locations				I
	Operating condition				I
	Return spring fatigue				I
MATERIAL HANDLING SYSTEM					
Fork	Damage or wear of fork or stopper pin	I	←	←	←
	Fork deformation and wear	I	←	←	←
	Cracks at fork root and welded part of tooth				I*1
Mast and lift bracket	Deformation and damage of each part and crack at welded part	I	←	←	←
	Wear and damage of roller	I	←	←	←
	Mast and lift bracket looseness	I	←	←	←
	Wear and damage of mast support bushing				I
	Wear and damage of roller pin				I
	Wear and damage of mast strip	I	←	←	←
Chain and chain wheel	Chain lubrication	I	←	←	←
	Deformation, damage and slackness of chain	I	←	←	←
	Abnormality of chain anchor bolt	I	←	←	←
	Wear, damage and revolution of chain wheel	I	←	←	←
Various attachments	Abnormality and installation condition of each part	I	←	←	←

Item	Inspection timing	Every month Every 170 hours	Every 3 months Every 500 hours	Every 6 months Every 1000 hours	Every 12 months Every 2000 hours
HYDRAULIC SYSTEM					
Cylinder	Looseness, deformation and damage of rod and rod end	I	←	←	←
	Cylinder operation	I	←	←	←
	Natural drop and natural forward tilt	M	←	←	←
	Oil leak and damage	I	←	←	←
	Wear and damage of pin and cylinder bearing	I	←	←	←
	Loosening and damage of cylinder mounting	T	←	←	←
	Lifting speed	M	←	←	←
	Uneven movement	I	←	←	←
Oil pump	Oil leak and abnormal sound	I	←	←	←
Hydraulic oil tank	Oil level and contamination	I	←	←	←
	Oil leak	I	←	←	←
	Tank and oil strainer cleaning			C	←
Hydraulic oil filter	Filter clogging				C
Control lever	Loose linkage	I	←	←	←
	Operation	I	←	←	←
Oil control valve	Oil leak	I	←	←	←
	Safety valve function	I	←	←	←
	Relief pressure measurement				M
Hydraulic hose and piping	Oil leakage, deformation and damage	I	←	←	←
	Looseness	T	←	←	←
SAFETY DEVICES, ETC.					
Head guard and backrest	Looseness of the installation locations	T	←	←	←
	Deformation, crack and damage	I	←	←	←
	Crack at welded portion	I	←	←	←
Lighting system	Function and installation condition	I	←	←	←
Direction indicator	Function and installation condition	I	←	←	←
Horn	Function and installation condition	I	←	←	←
Backup buzzer	Function and installation condition	I	←	←	←
Rear view mirror	Rear reflection status	I	←	←	←
	Dirt, damage	I	←	←	←

https://truckmanualshub.com/

Item	Inspection timing	Every month Every 170 hours	Every 3 months Every 500 hours	Every 6 months Every 1000 hours	Every 12 months Every 2000 hours
Instruments	Operation	I	←	←	←
Seat	Loosening and damage of mounting	I	←	←	←
	Seatbelt damage and function	I	←	←	←
	Deadman seat operation	I	←	←	←
Body	Damage and cracks in frame, cross members, etc.				I
	Bolts and nuts looseness				T
SAS	Functions	I	←	←	←
	Loosening and damage at sensor mounting portion	I	←	←	←
	Damage, deformation, oil leakage and loosened installation of functional parts	I	←	←	←
	Loosening and damage of wire harnesses	I	←	←	←
	Rusting and corrosion of load sensor				I
Others	Grease up	L	←	←	←

https://truckmanualshub.com/

PERIODIC REPLACEMENT OF PARTS AND LUBRICANTS

●: Replacement

Item \ Replacement cycle	Every month	Every 3 months	Every 6 months	Every 12 months
	Every 170 hours	Every 500 hours	Every 1000 hours	Every 2000 hours
Drive unit gear oil			●	←
Hydraulic oil			●	←
Hydraulic oil filter	● New vehicle initial replacement		●	←
Rear wheel bearing grease			●	←
Power steering hose				●Every 2 years
Power steering rubber parts				●Every 2 years
Hydraulic hose				●Every 2 years
Lift chain				●Every 3 years

https://truckmanualshub.com/

https://truckmanualshub.com/

BATTERY

Page

BATTERY COMPARTMENT AND REQUIRED WEIGHT 1-2

SERVICE STANDARDS 1-3

DISPLAY 1-3

TROUBLESHOOTING 1-4

BATTERY ASSY 1-5

REMOVAL · INSTALLATION 1-5

INSPECTION 1-6

REPLACING BATTERY PLUG TERMINAL 1-9

https://truckmanualshub.com/

BATTERY COMPARTMENT AND REQUIRED WEIGHT

When the battery is to be purchased locally, always adjust the weight to satisfy the minimum required weight as shown in the table below.

	Compartment dimension mm (in)			Minimum required battery Weight (W/ case) kg (lb)	Remarks
	Depth X	Width Y	Height Z		
7FBE10·13	451 (17.8)	998 (39.3)	613 (24.1)	520 (1147)	
7FBE15·18	551 (21.7)	↑	↑	655 (1444)	
7FBE20	638 (25.1)	↑	↑	655 (1444)	

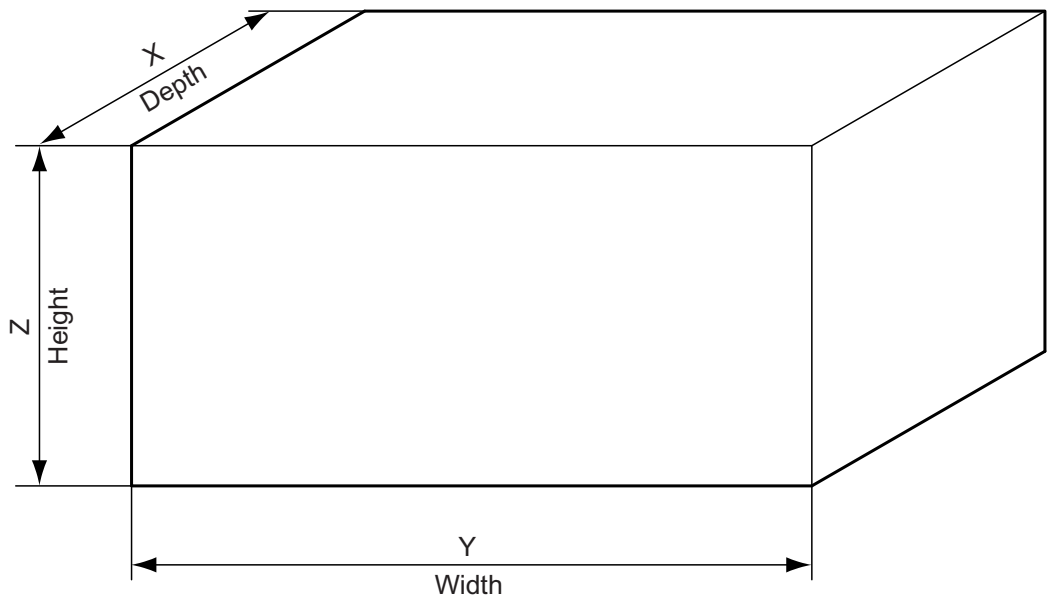

SERVICE STANDARDS

Specific gravity	1.280 [20°C (68°F)]
Specific gravity	1.150 [20°C (68°F)]
Discharge end voltage	42.5V
Electrolyte	Refined dilute sulfuric acid
Fluid to be added	Distilled water
Insulation resistance	1MΩ or more

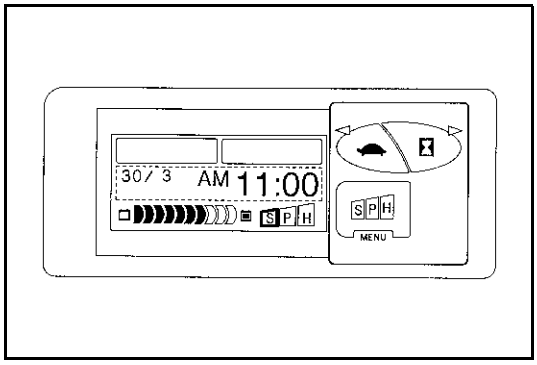

DISPLAY

Battery Charge Indicator

The battery charge indicator indicates 10 levels of battery charge on the LCD.

Battery discharged state %	LEDs									
	10 F	9	8	7	6	5	4	3	2	1 E
0 to 10 (exclusive)	○	○	○	○	○	○	○	○	○	○
10 to 20 (exclusive)	–	○	○	○	○	○	○	○	○	○
20 to 30 (exclusive)	–	–	○	○	○	○	○	○	○	○
30 to 40 (exclusive)	–	–	–	○	○	○	○	○	○	○
40 to 50 (exclusive)	–	–	–	–	○	○	○	○	○	○
50 to 60 (exclusive)	–	–	–	–	–	○	○	○	○	○
60 to 70 (exclusive)	–	–	–	–	–	–	○	○	○	○
70 to 80 (exclusive)	–	–	–	–	–	–	–	○	○	○
80 to 90 (exclusive)	–	–	–	–	–	–	–	–	○	○
90 to 100 (exclusive)	–	–	–	–	–	–	–	–	–	○
100 or more	–	–	–	–	–	–	–	–	–	–

Low Remaining Battery Charge Warning

When the battery charge becomes below the set level, the battery charge indicator blinks and the alarm will sound for five seconds after the key switch is set to the ON position.

Battery Overdischarge Warning

When the battery charge decreases further below the set level after the remaining battery charge warning, any attempt at traveling or material handling operation will cause all charge indicator segments to blink and the alarm to sound to warn the operator.

https://truckmanualshub.com/

TROUBLESHOOTING

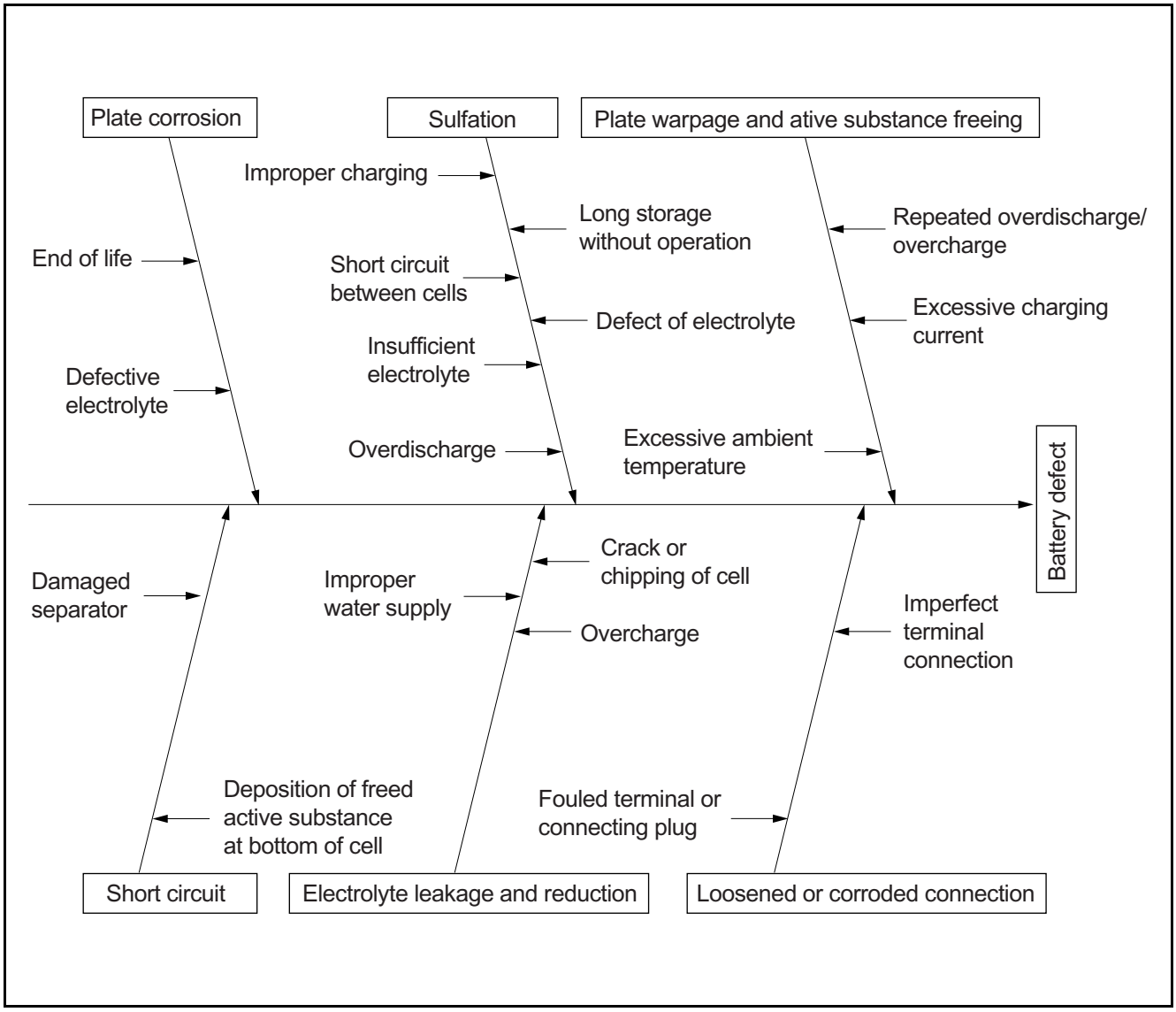

BATTERY ASSY

REMOVAL · INSTALLATION

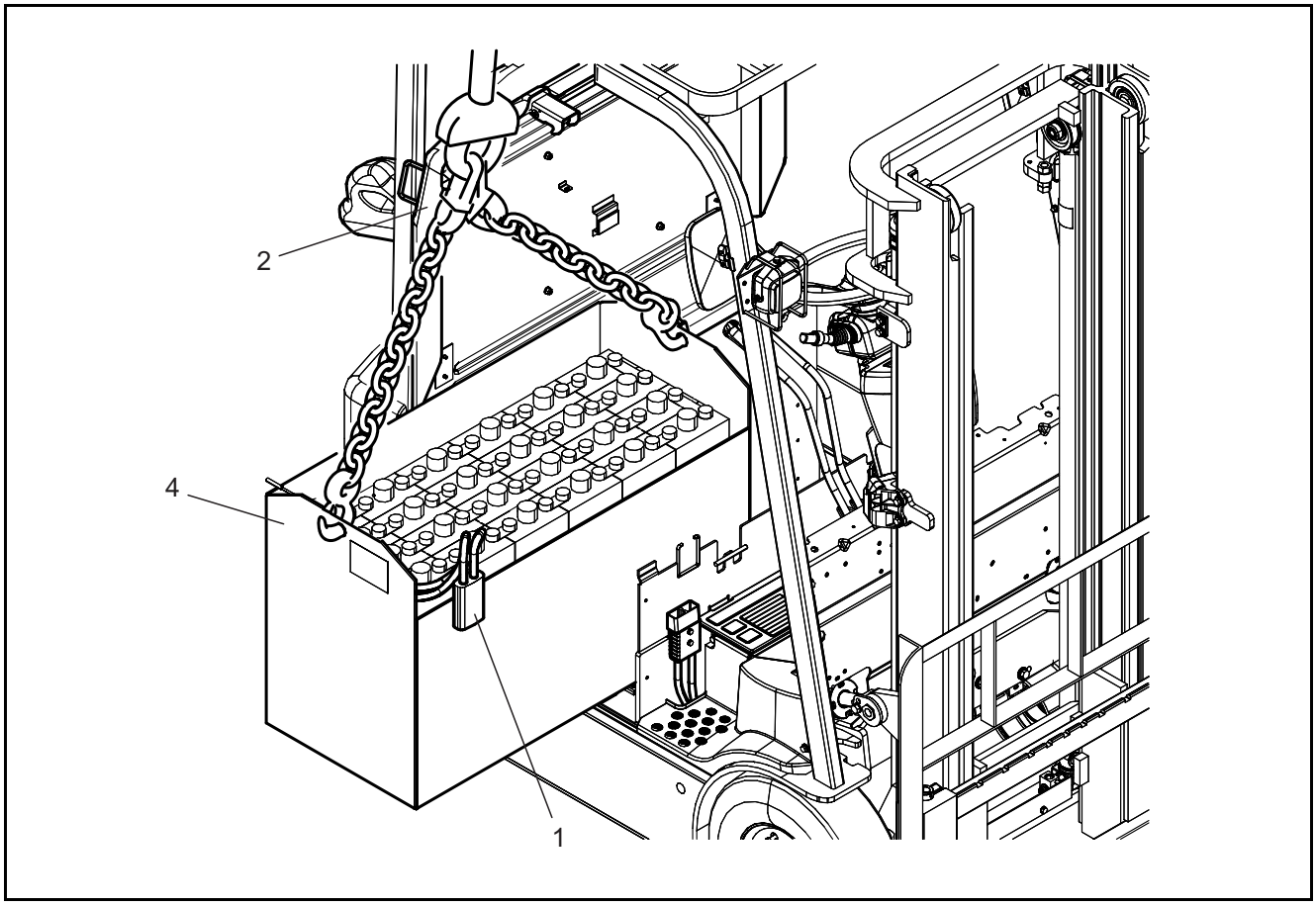

Removal Procedure

1 Disconnect the battery plug.
2 Open the seat stand.
3 Release the steering release lever.
4 Remove the battery ASSY.**[Point 1]**

Installation Procedure

The installation procedure is the reverse of the removal procedure.

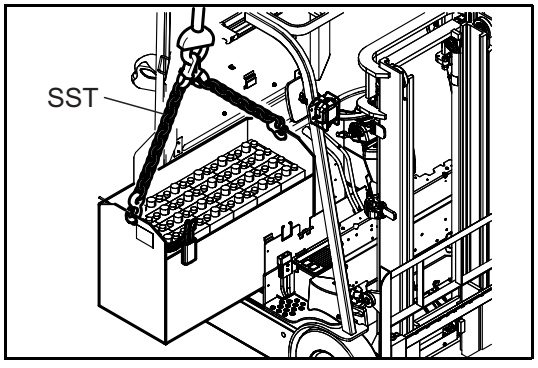

Point Operations

[POINT 1]
Removal · Installation:
SST 25009-13201-71

https://truckmanualshub.com/

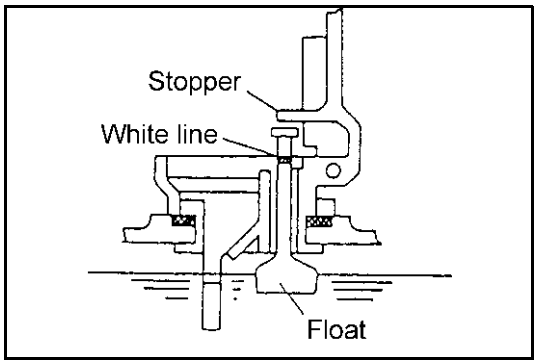

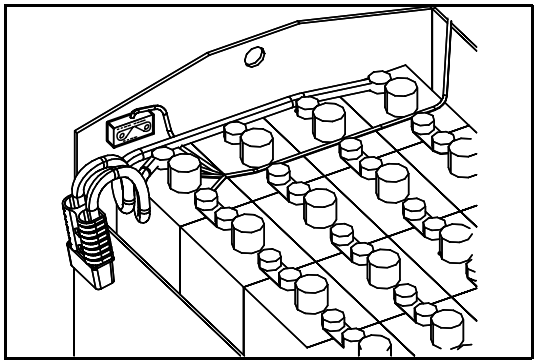

INSPECTION

1. Electrolyte level inspection
   Open the cap, and if the white line on the red float has dropped, water should be added.
   Add water until the white line appears.
   Stop water addition when the white line appears, since addition is excessive when the tip end of the float comes into contact with the stopper.

   As a level gauge is provided at the front of the battery case, the electrolyte level can generally be checked at a glance, but open the cap to check the level when making a periodic inspection.
   The green light of the level gauge lights up to indicate activation of the level gauge sensor, and the red light flashes to indicate the necessity of adding water.

	Red light	Green light
Normal level	Off	On
Insufficient level	Blinking	On

Note:
Never change the installation location of the sensor.

Reference:
The consumption of electrolyte can be calculated by the following equation:
Consumption (cc) = 5 hour capacity × 0.0336 × number of cells × number of charges

Vehicle model	Number of cells	Battery capacity (AH/5HR)
7FBE10	24	280
7FBE13	↑	↑
7FBE15	↑	390
7FBE18	↑	↑
7FBE20	↑	↑

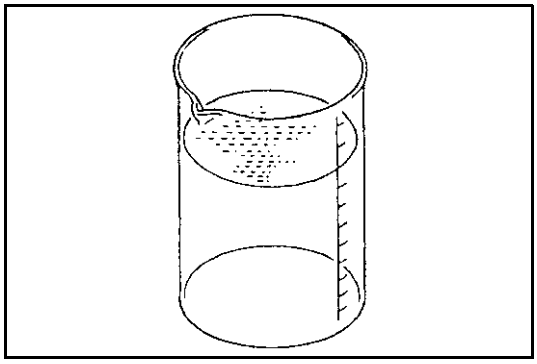

2. Electrolyte inspection
   Electrolyte inspection Battery electrolyte is normal when it is transparent. Check turbidity when inspecting the specific gravity.If it cannot be checked clearly, put the electrolyte in a beaker for inspection.

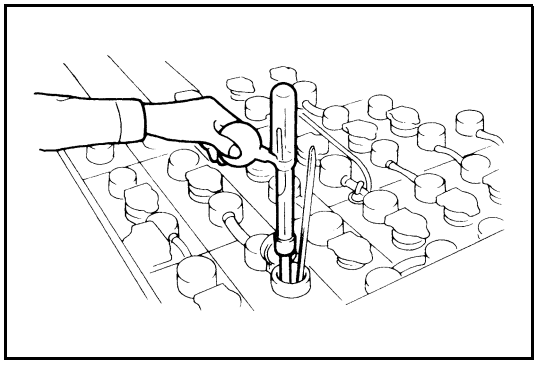

3. Battery electrolyte specific gravity inspection
   Use a hydrometer to measure the specific gravity of the electrolyte.
   Specific gravity upon complete charging .... 1.280[20°C(68°F)]
   Specific gravity upon end of discharge .... 1.150[20°C(68°F)]

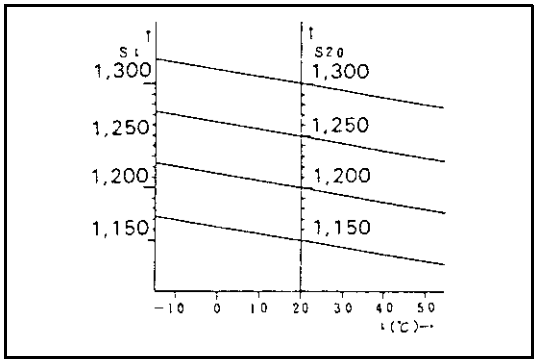

The specific gravity of the electrolyte at 20°C (68°F) is used.68
Equation for converting specific gravity
S_{20}=St+0.0007 (t-20)
S_{20}: Specific gravity at 20°C
St: Specific gravity at t°C
t: Electrolyte temperature upon measurement (°C)

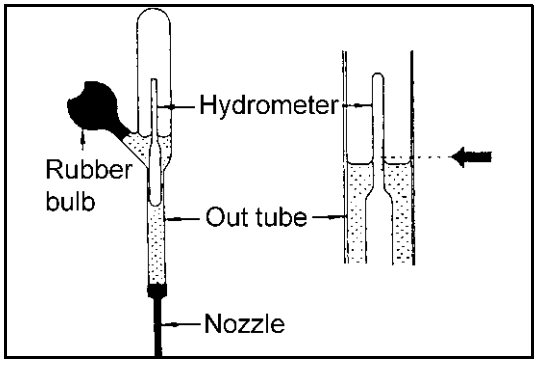

* How to use the hydrometer
   (1) Insert the nozzle of the hydrometer into the electrolyte port and allow the electrolyte to be sucked into its outer tube.
   (2) Let the hydrometer float correctly without contact with the outer tube, top or bottom, and read the scale at the highest point of the electrolyte surface as illustrated at left when the bubbles in the electrolyte disappear.
   (3) After the measurement, wash the inside and outside of the hydrometer well with clear water and store it after wiping water off with clean cloth.

https://truckmanualshub.com/

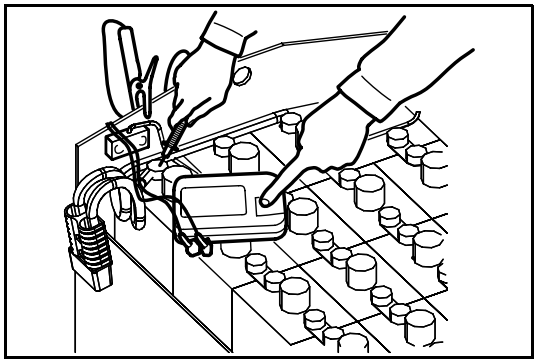

4. Insulation resistance inspection
   Measure the resistance between the battery and battery case with an insulation resistance meter (megohmmeter).
   Insulation resistance .... 1 MΩ or more

Note:
When the insulation resistance is less than 1 MΩ, wash the battery with water after removing it from the vehicle. Fully dry the washed battery and measure the insulation resistance again. Install the battery on the vehicle after confirming that the insulation resistance is 1 MΩ or more.

* Battery control table
Prepare a control table for each battery to record and maintain the inspection results.

Inspection date and time	Inspected cell No.	Specific gravity	Electrolyte temperature	Added water quantity	Remarks	Inspector

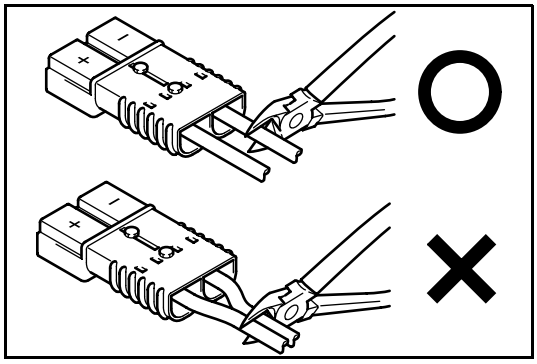

REPLACING BATTERY PLUG TERMINAL

1. Disconnect battery plug cable one by one.

Caution:
Never disconnect more than one cable at the same time.Fatal accident may result by short circuit.

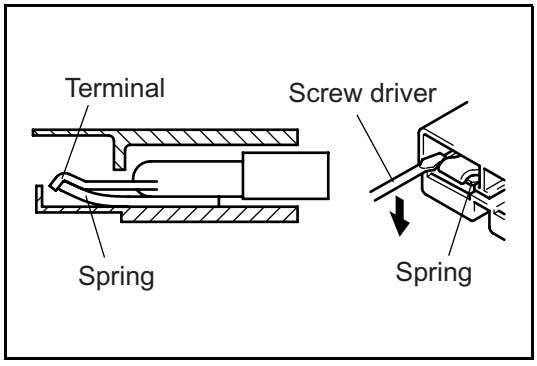

2. Insert a screwdriver from the terminal side, push down the spring at the bottom of the terminal and pull the cable to draw out the terminal.

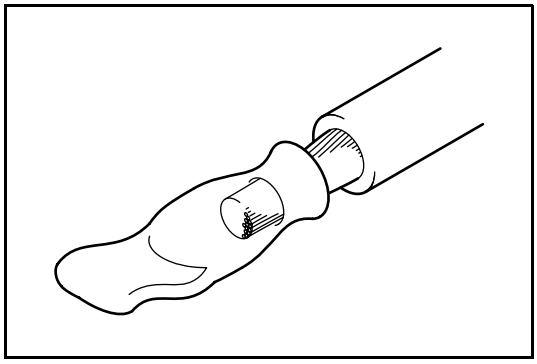

3. Peel off the tip of the cable for Approx. 30mm, solder sufficiently and insert it to the contact portion of the new terminal.

Note:
Be sure to prevent solder from pouring out and adhere to the contact surface of the terminal.

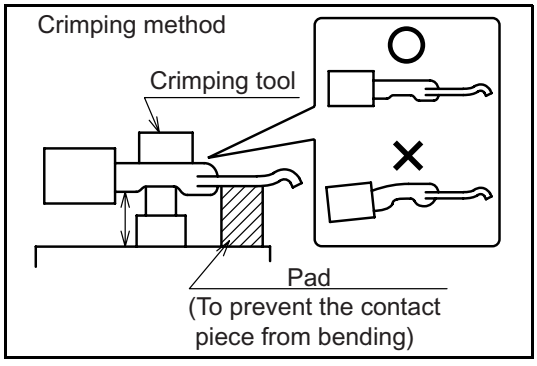

4. When crimping cables, never bend the terminal with a crimping tool.

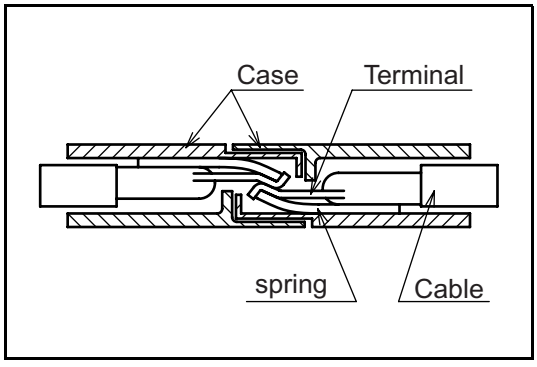

5. Insert the terminal to the battery plug.
   Check that the tip of the terminal goes over the tip of the spring and securely set in the position.

https://truckmanualshub.com/

https://truckmanualshub.com/

CHARGER (OPT)

Page

GENERAL 2-2

ON-VEHICLE CHARGER 2-2

APPLICABLE CHARGER LIST 2-2

SPECIFICATIONS. 2-3

COMPONENTS. 2-4

WIRING DIAGRAM. 2-5

TAP LAYOUT 2-5

BEFORE CHARGING. 2-6

SWITCH BOX 2-7

MAGNETIC SWITCH ASSY 2-9

TRANSFORMER ASSY 2-11

TIMER TEST 2-15

TROUBLESHOOTING 2-16

OFF-VEHICLE CHARGER 2-26

APPLICABLE CHARGER LIST 2-26

GS 2-27

YUASA 2-43

https://truckmanualshub.com/

GENERAL

A fully automatic microcomputer-controlled on-vehicle charger (STD) and a fully automatic microcomputer-controlled off-vehicle charger (OPT) are provided.The on-vehicle charger is not provided on cold storage models.
This manual explains mainly the on-vehicle charger.

ON-VEHICLE CHARGER

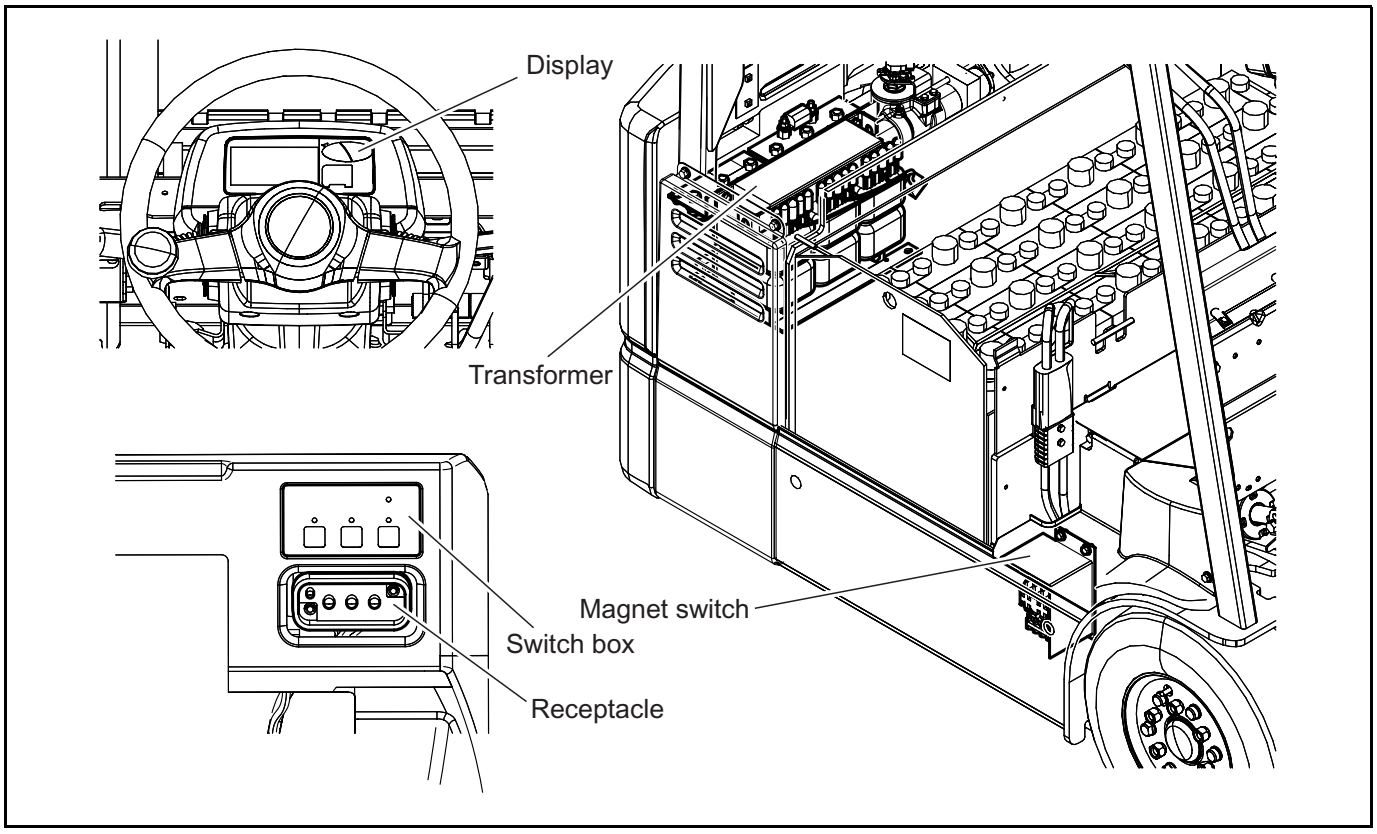

APPLICABLE CHARGER LIST

○:OPT

Transformer model	Power supply voltage	Transformer capacity (kVA) (50/60 Hz)	Battery voltage (V)	Applicable capacity (AH/5hr)	Power supply capacity (A) (50/60 Hz)	Applicable vehicle model				
						7FBE10	7FBE13	7FBE15	7FBE18	7FBE20
K47-227C048-405	200	4.0/3.9	48	280 to 312	15	○	○			
K47-230C048-413	↑	4.8/4.3	↑	365 to 390	15	○	○	○	○	○
K47-260C048-409	↑	7.1/7.0	↑	476 to 645	30			○	○	○

https://truckmanualshub.com/

SPECIFICATIONS

Item		Transformer model	
		K47-227C048-405	K47-230C048-413
Magnetic switch (MSch)	Type	CLK-20JT-F	←
	Rating	20 A	←
	Thermal setting	18 A	←
Transformer (TF)	Capacity (50/60 Hz)	4.0/3.9 kVA	4.8/4.3 kVA
	Insulation	H	←
Diode (Dch)	Type	SKR71/02 (+) SKN71/02 (-)	←
Fuse (Fch)	Capacity	96 V, 80 A	←

Item		Transformer model
		K47-260C048-409
Magnetic switch (MSch)	Type	CLK-35JT-F
	Rating	35 A
	Thermal setting	30 A
Transformer (TF)	Capacity (50/60 Hz)	7.1/7.0 kVA
	Insulation	H
Diode (Dch)	Type	SKR100/04 (+) SKN100/04 (-)
Fuse (Fch)	Capacity	96 V, 100 A

https://truckmanualshub.com/

COMPONENTS

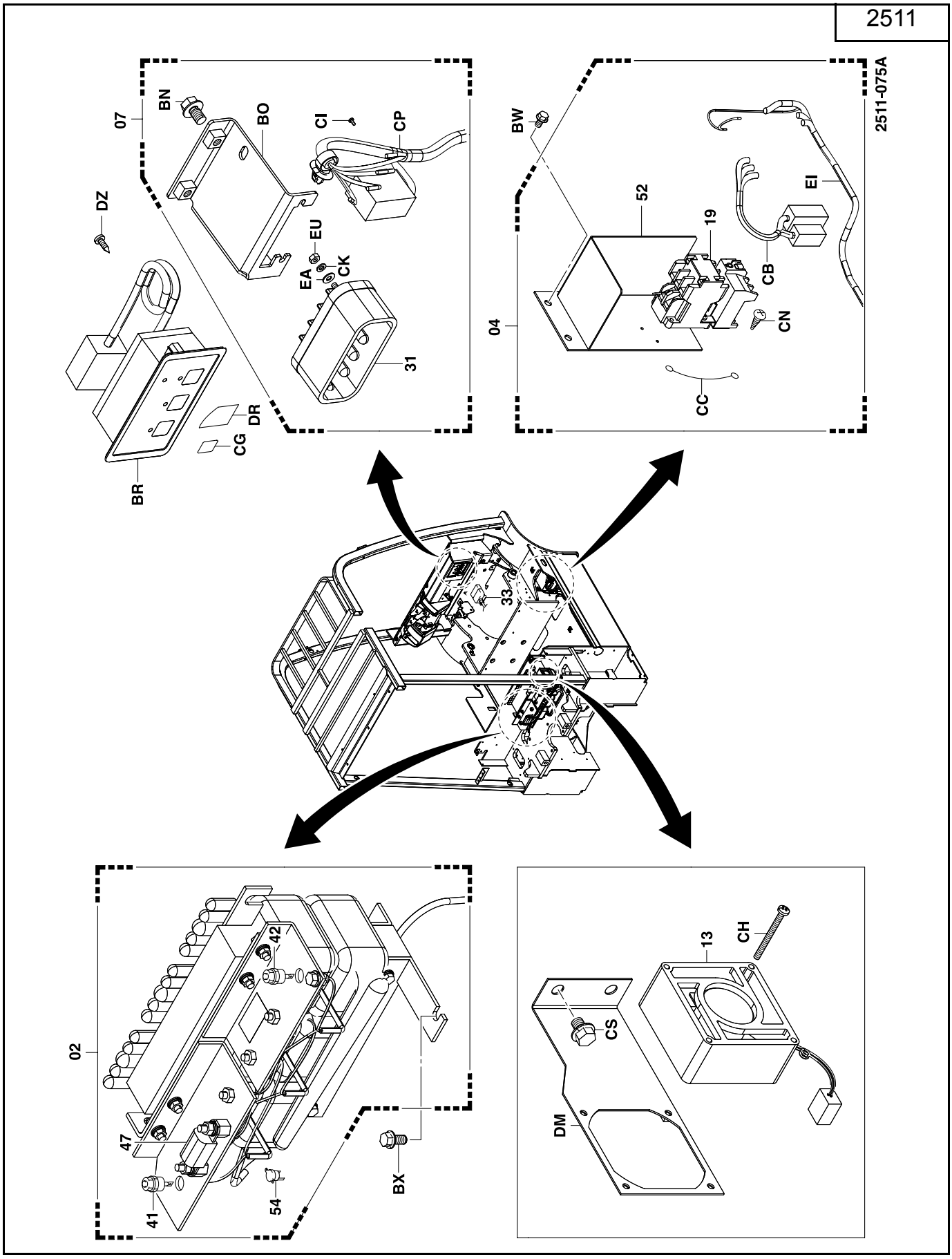

WIRING DIAGRAM

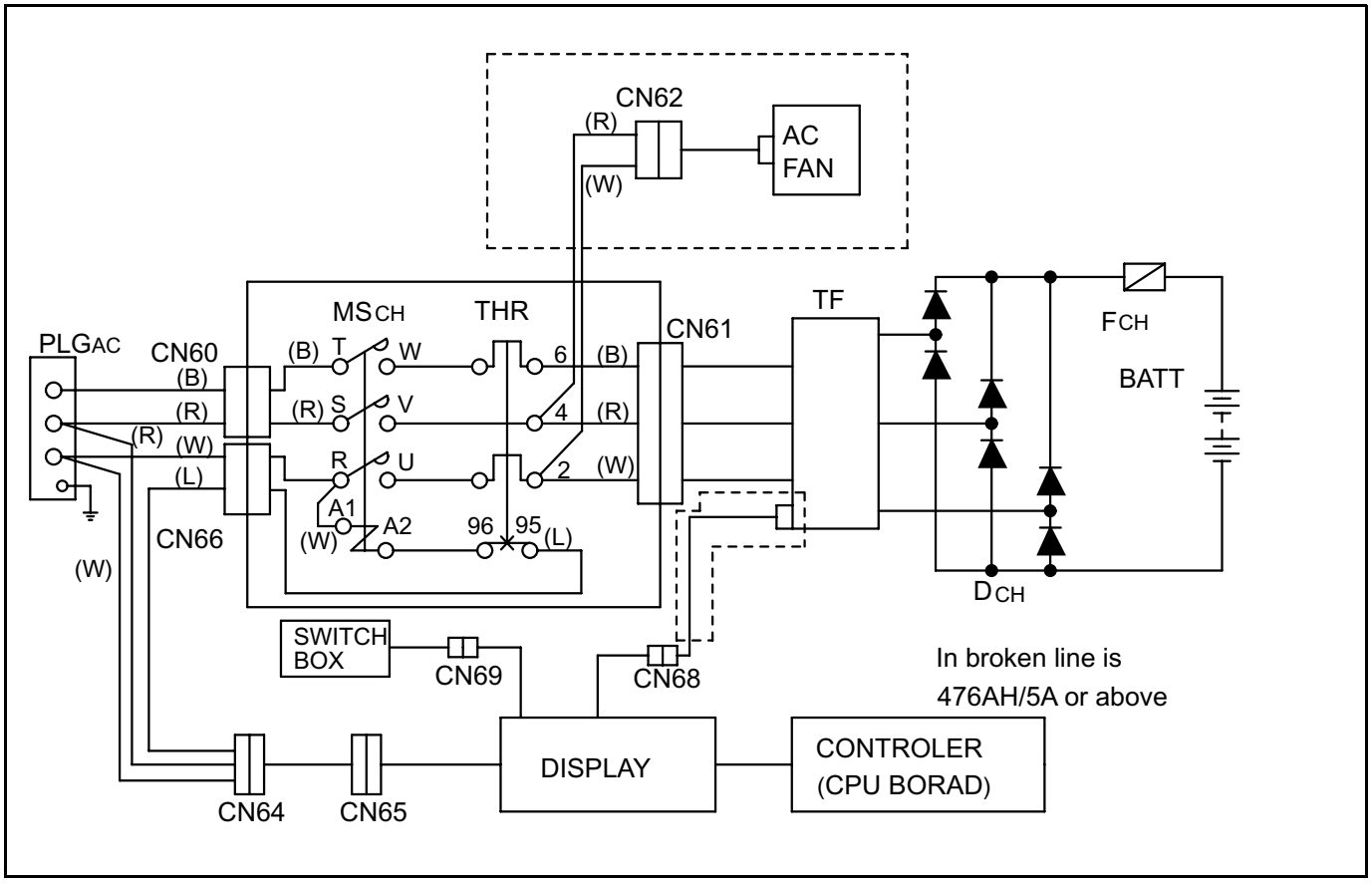

TAP LAYOUT

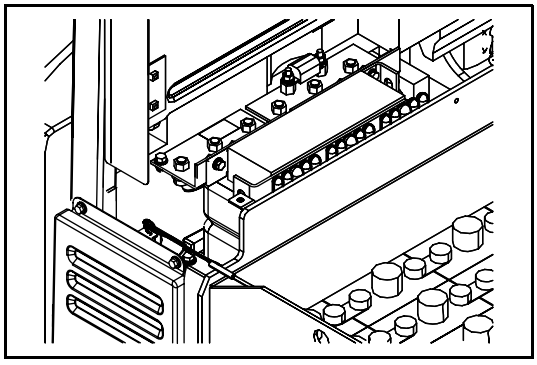

Frequency	Tap position
50 Hz	A
60 Hz	B

Power supply voltage	Tap position
200 V	1
210 V	2
220 V	3

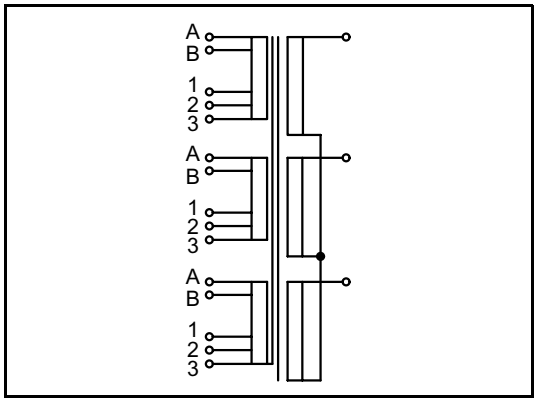

https://truckmanualshub.com/

BEFORE CHARGING

If the ampere capacity at the charging location is insufficient because other electrical appliances are being used, ask an electrical work contractor to provide an exclusive circuit for the charger.
See the “On-vehicle Charger List” (page 2-2) for the AC power supply capacity.

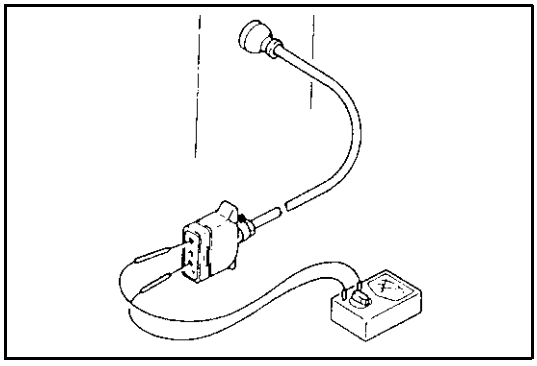

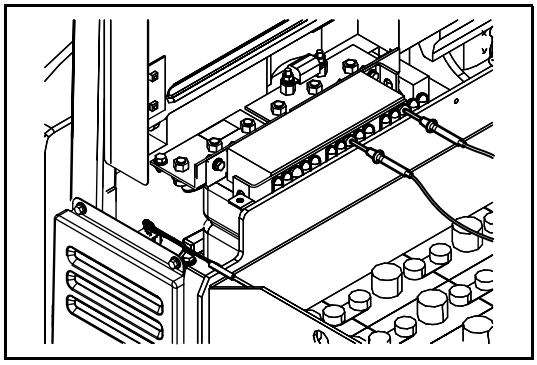

Tap Changer

1. Measure the power supply voltage to be used for charging.
   Tester range: AC (250 or 1000 V)

Note:
Measure the power supply voltage at night (or, if that is impossible, during a time when electrical appliances are not being operated).

2. Set the tap changer.
   (1) Disconnect the battery plug.
   (2) Open the battery hood
   (3) Remove the controller panel cover.
   (4) Remove the tap cover of each phase corresponding to the power supply voltage measured in step 1 above.
   (5) Set the taps.
   (6) Connect the battery plug.
   (7) Connect the charger to the power supply outlet and press the NORMAL button.
   (8) Measure the voltage between the set taps.

Tap	Measured voltage
200 V	199 V or less
210 V	200 to 209 V
220 V	210 to 219 V

Caution:
After tap changer setting, if the error code “F6-2” is displayed during charging, change them to the upgraded ones.

Note:
- **Taps are set to 220 V and 60 HZ at the time of shipment.**
- **Be sure to set the tap changer for voltage and frequency change of phase U, V and W.**
- **For about a week after tap changer setting, keep track of the battery charging state (specific gravity and electrolyte level) to make sure the tap setting is appropriate.**

SWITCH BOX
REMOVAL · INSTALLATION

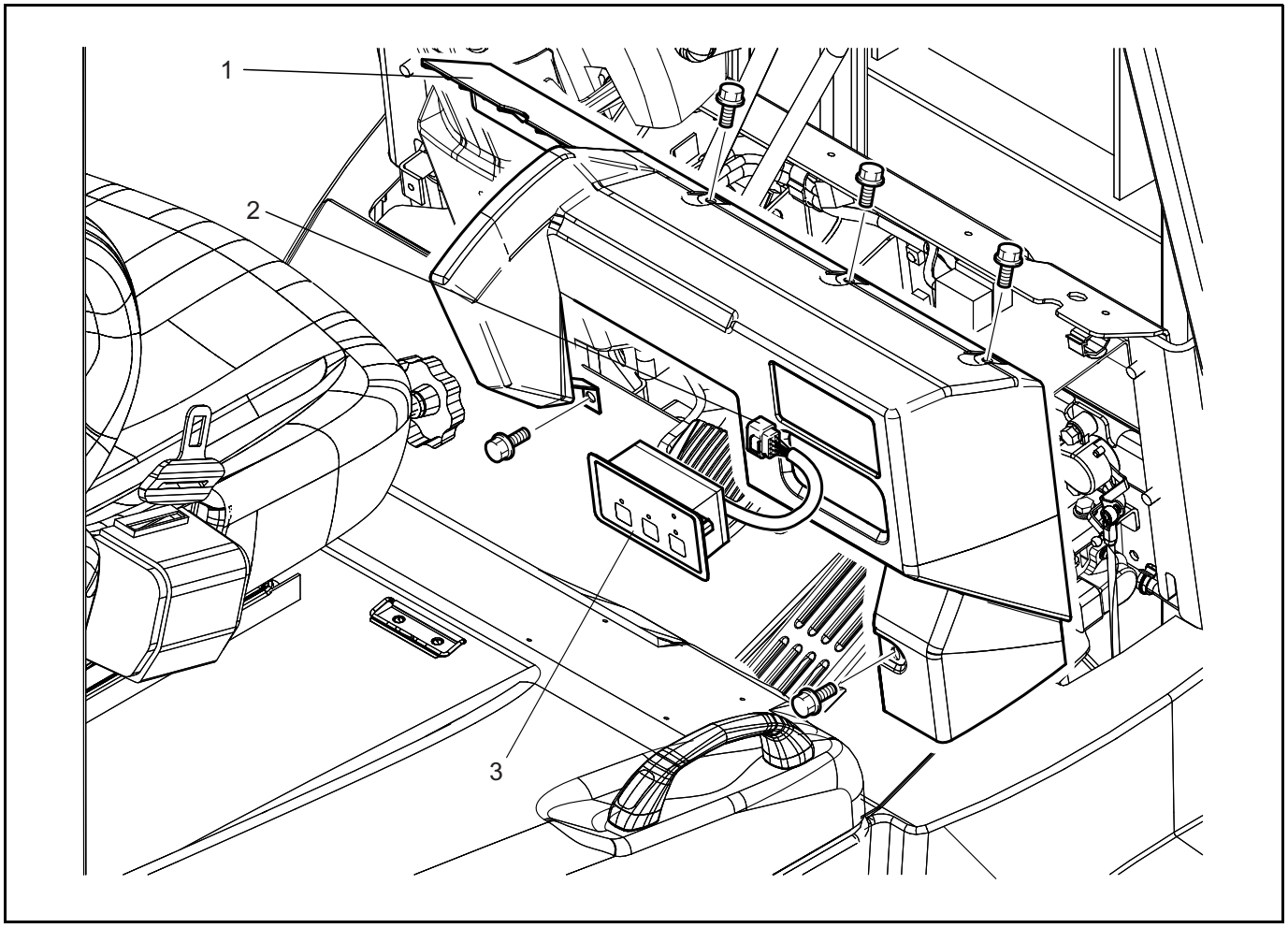

Removal Procedure

1 Remove the right instrument panel.
2 Disconnect the wiring connector.
3 Remove the switch box ASSY.

Installation Procedure

The installation procedure is the reverse of the removal procedure.

https://truckmanualshub.com/

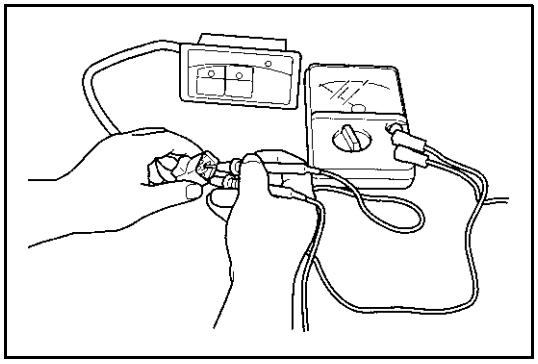

Point Operations

[POINT 1]

Inspection:

Inspect each switch in the ON and OFF positions. (CN69)

	Measurement terminals	ON	OFF	Tester range
NORMAL button	2–8	0 Ω	∞	Ω × 1
EQUAL button	3–8	0 Ω	∞	

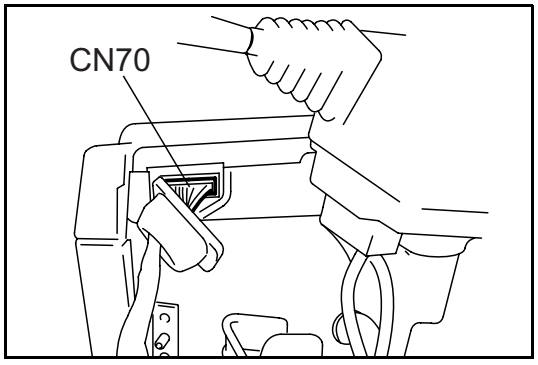

Inspection:

Inspect the applied voltage of the LED.Check the applied voltage of the LED at the display connector (CN70). (CN69 must be connected.)

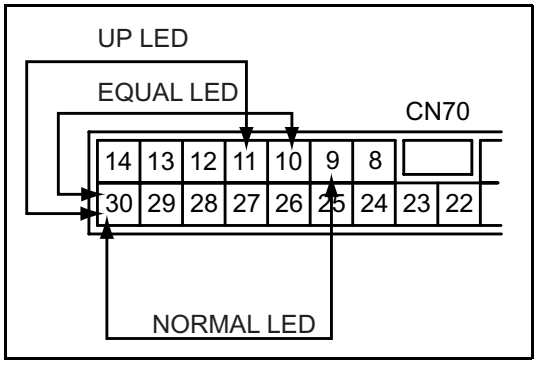

	CN70	Charging in progress (LED on)	Charging stopped (LED off)	Tester range
NORMAL LED	Between 9 and 30 (between Y–B and B–W)	2 V	0 V	10 VDC
EQUAL LED	Between 10 and 30 (between Y–G and B–W)	2 V	0 V	

	CN70	Upon end of test mode (LED on)	Other state (LED off)	Tester range
UP LED	Between 11 and 30 (between Y–W and B–W)	2 V	0 V	10 VDC

https://truckmanualshub.com/

MAGNETIC SWITCH ASSY
REMOVAL · INSTALLATION

T=N·m(kgf·cm)[ft·lbf]

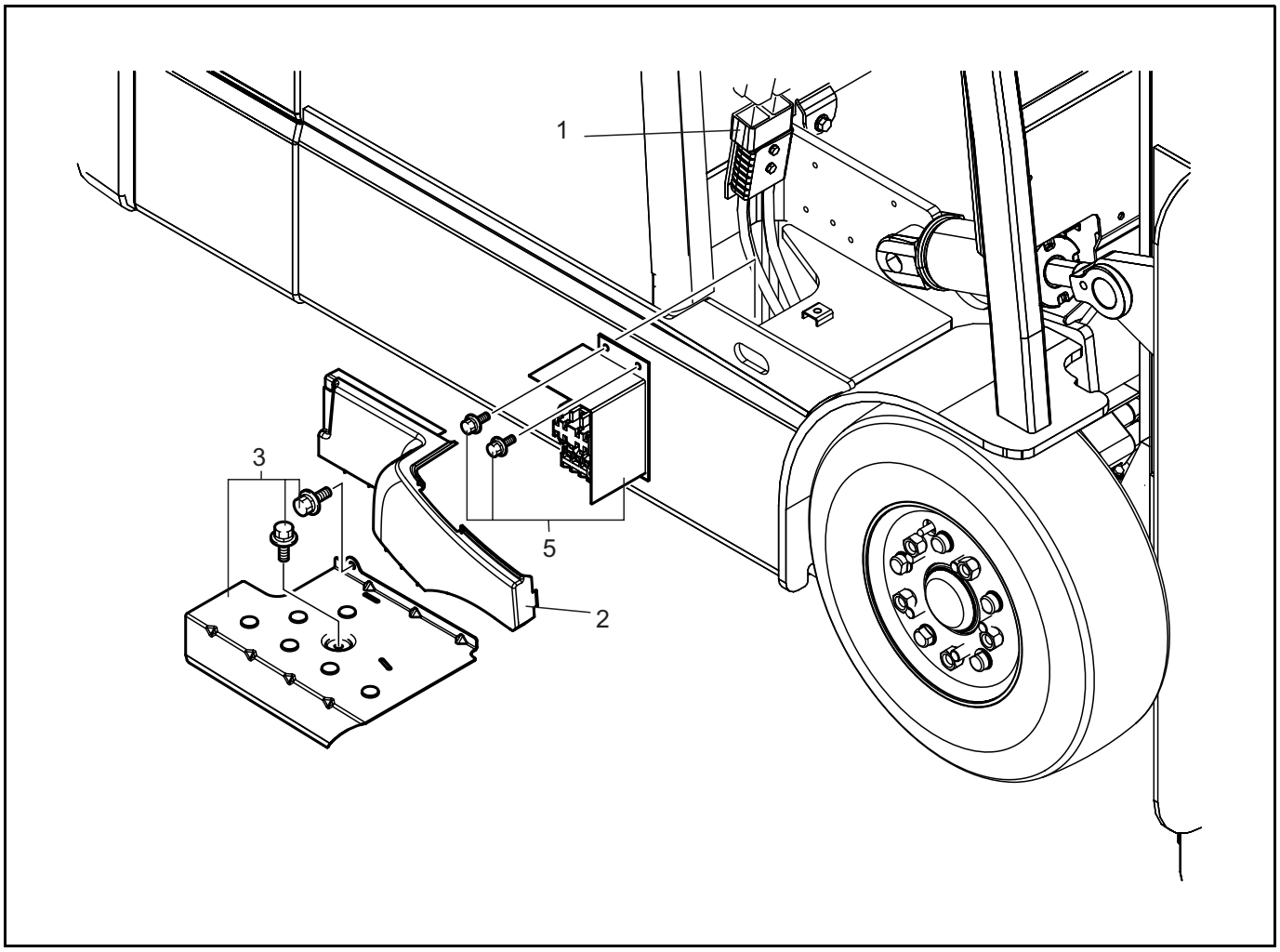

Removal Procedure

1 Disconnect the battery plug.
2 Remove the toe board (front, rear) and tilt cylinder cover.
3 Remove the step
4 Disconnect the wiring connector.
5 Remove the magnetic switch ASSY W/bracket.

Installation Procedure

The installation procedure is the reverse of the removal procedure.

https://truckmanualshub.com/

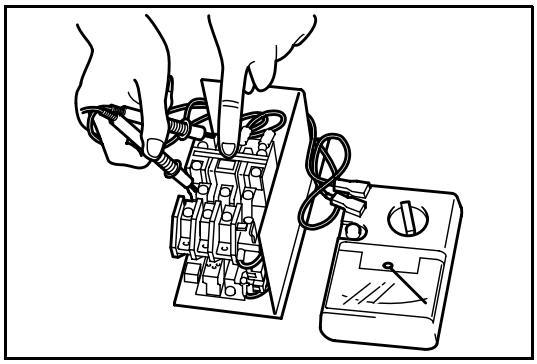

Point Operations

[POINT 1]

Inspection:

Magnetic switch contact continuity inspection.

Tester range		Ω × 1
Measurement terminals		T–W, S–V and R–U
Standard:	MSch ON	0 Ω
	MSch OFF	∞ Ω

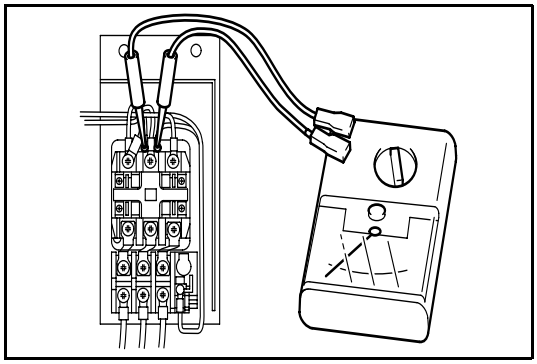

Inspection:

Magnetic switch coil continuity inspection.

Tester range		Ω × 1
Measurement terminals		A1–A2
Standard:	CLK-20JT-F	700 Ω
	CLK-35JT-F	400 Ω

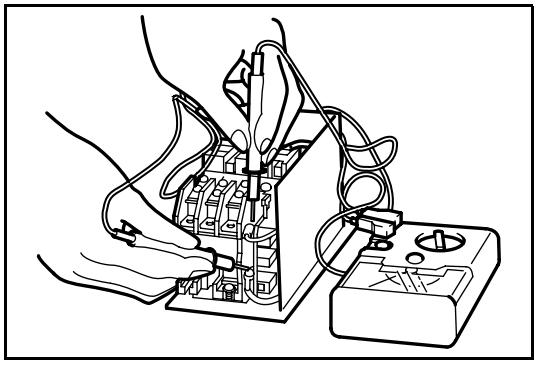

Inspection:

Thermal relay contact continuity inspection.

Tester range		Ω × 1
Measurement terminals		95–96
Standard:	Not operating	0 Ω
	Operating	∞ Ω

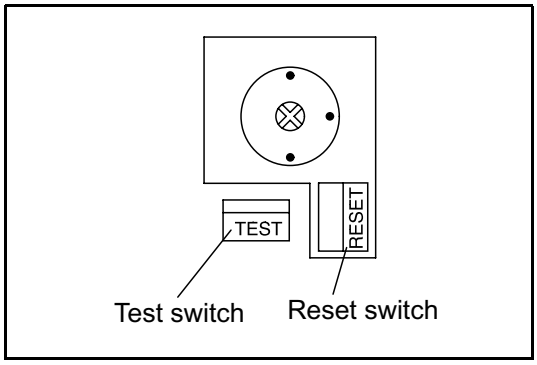

Inspection:

Inspect the reset switch.

Check that the thermal relay is deactivated upon pressing the reset switch while the thermal relay is activated.Do not adjust the thermal relay operating current.

If charging stops due to thermal relay activation while the charger is in use, always check the thermal relay activating cause and reset after taking corrective action.

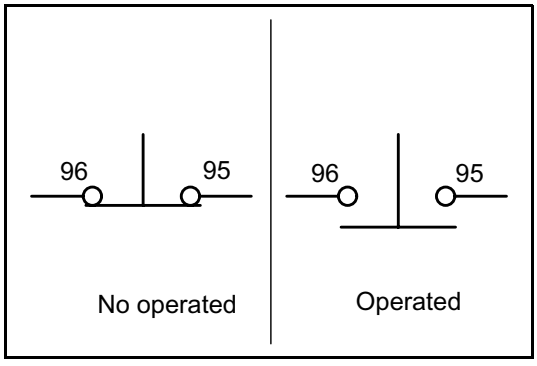

Press the reset switch lightly to reset the thermal relay.

* Test the thermal relay as follows:

Press the reset switch.

https://truckmanualshub.com/

TRANSFORMER ASSY
REMOVAL · INSTALLATION

T=N·m(kgf·cm)[ft·lbf]

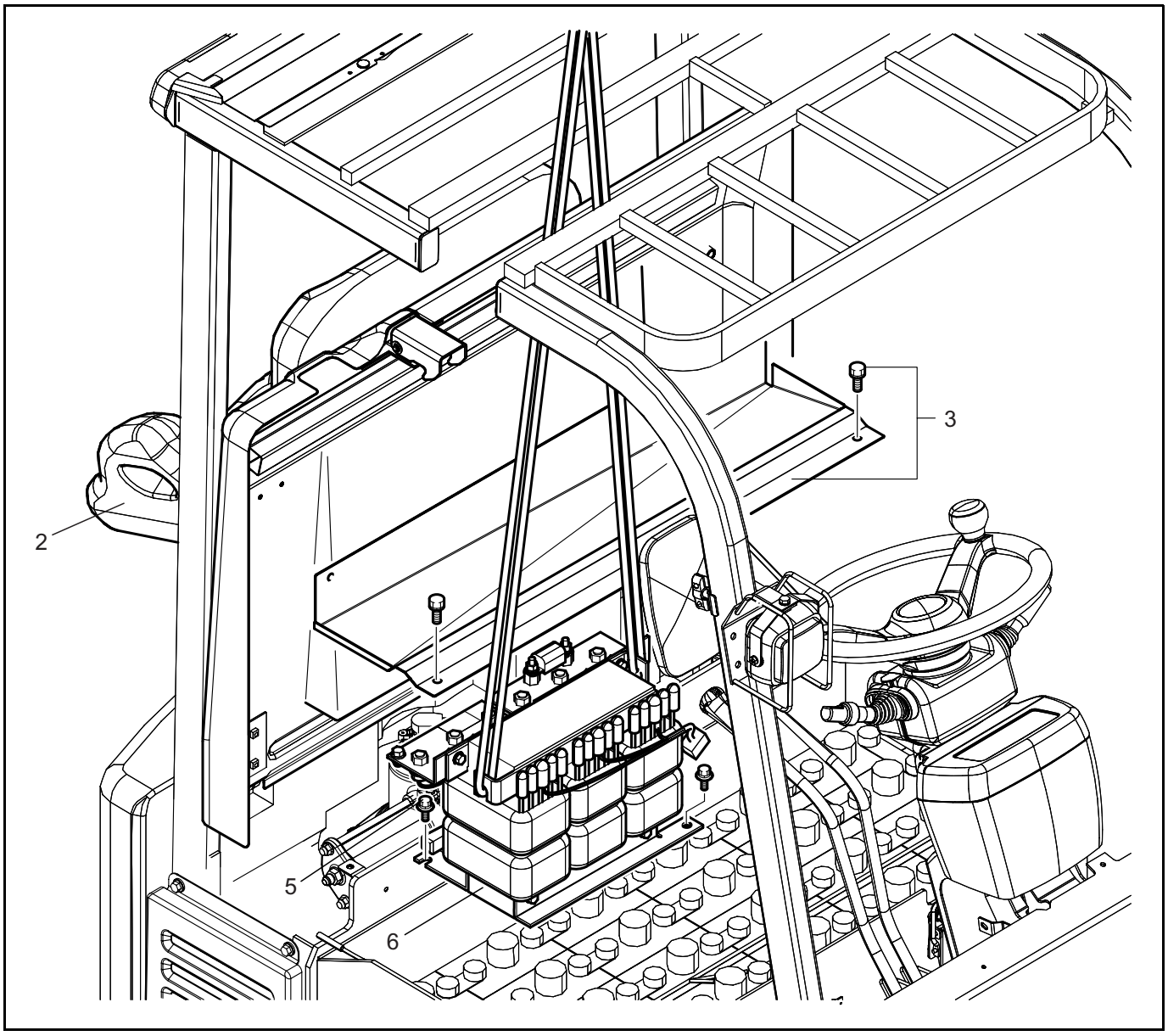

Removal Procedure

1 Disconnect the battery plug.
2 Open the battery hood.
3 Remove the control panel cover.
4 Disconnect wiring of the transformer ASSY.
5 Remove the transformer ASSY set bolts.
6 Remove the transformer ASSY by hoisting it.

Installation Procedure

The installation procedure is the reverse of the removal procedure.

https://truckmanualshub.com/

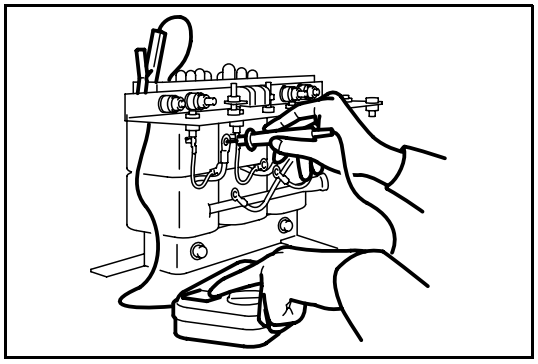

Point Operations

[POINT 1]

Inspection:

Measure the insulation resistance.

Measuring instrument	DC 500 V megohmmeter
Measurement terminals	Each coil terminal – frame
Standard:	1 MΩ or more

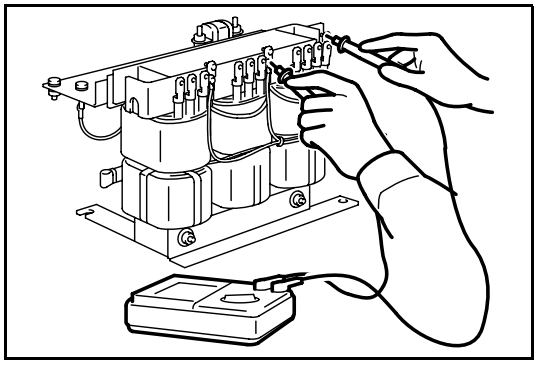

[POINT 2]

Inspection:

Measure the primary coil continuity.

Tester range	Ω × 1
Measurement terminals	U_1–V_1, V_1–W_1, W_1–U_1
Standard:	0 Ω

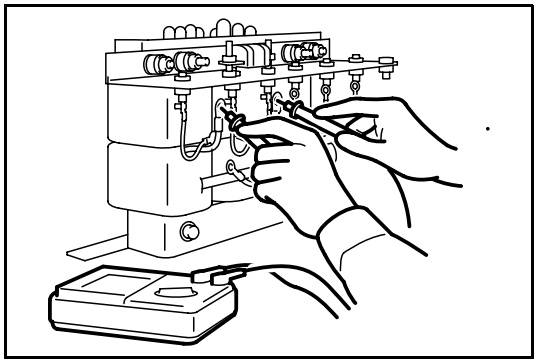

Inspection:

Measure the secondary coil continuity.

Tester range	Ω × 1
Measurement terminals	U_2–V_2, V_2–W_2, W_2–U_2
Standard:	0 Ω

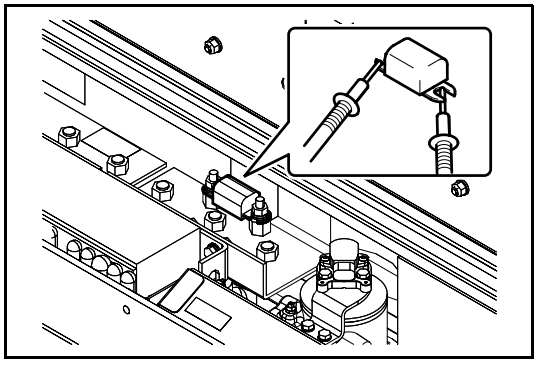

Inspection:

Inspect the fuse.

Standard: 0 Ω

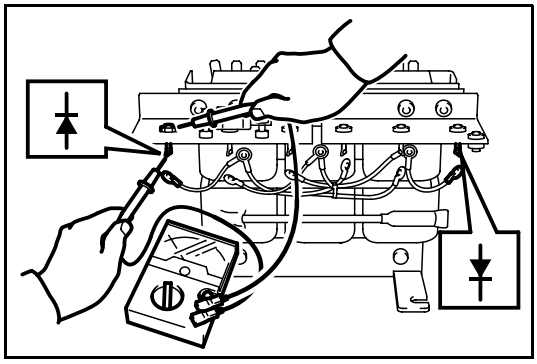

Inspection:

Measure the diode continuity.

Inspect the diodes installed on the radiating fin plate and remove only if an abnormality is found.

Tester range		Ω × 1K
Measurement terminals	Forward	Anode (-) – Cathode (+)
	Reverse	Anode (+) – Cathode (-)
Standard:	Forward	Continuity
	Reverse	∞ Ω

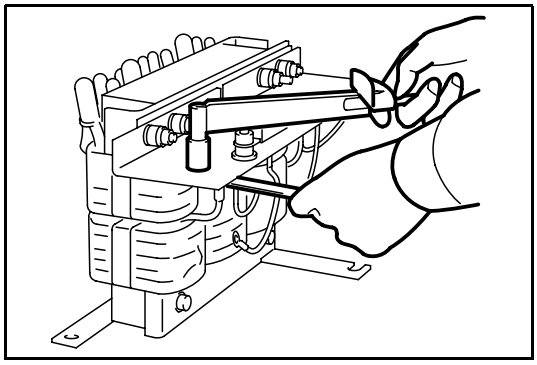

Reassembly:

As two diodes with different polarity are used, be sure to avoid incorrect installation.

Reassembly:

Install each diode by tightening to the specified torque.

SKR71/02, SKN71/02:

4 N·m (41 kgf·cm) [3 ft·lbf]

SKR100/04, SKN100/04:

10 N·m (102 kgf·cm) [7 ft·lbf]

https://truckmanualshub.com/

Inspection after installation

1. Inspect each wiring connection.

Note:
Check each wiring connection by referring to the charger wiring diagram.

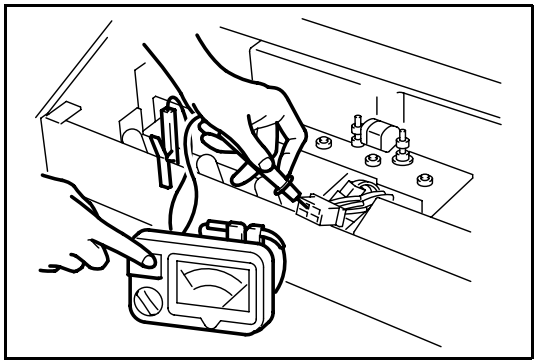

2. Measure the insulation resistance.

Measuring instrument	DC 500 V megohmmeter
Measurement terminals	Each coil terminal–frame
Standard:	1 MΩ or more

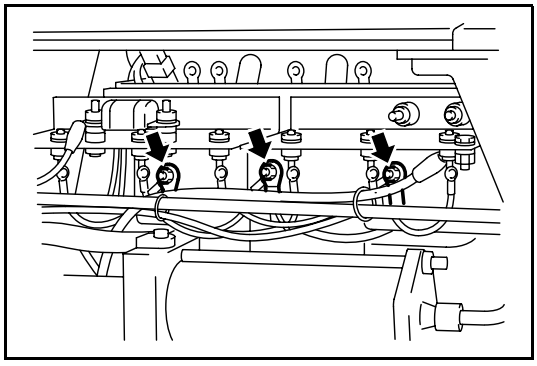

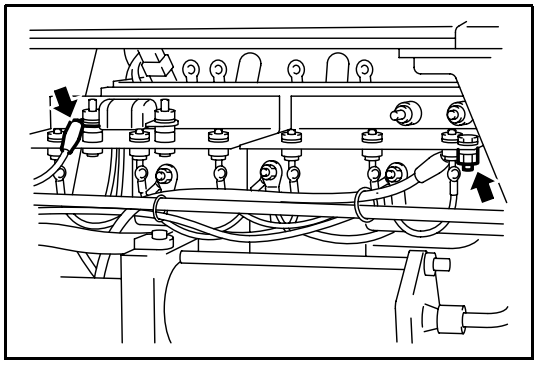

3. Measure the no-load secondary voltages.
   Remove the counterweight (See P11-6)
   Connect the charger plug to a power supply outlet (with the transformer P1 and N1 cables disconnected), start charging (by pressing the NORMAL ON/OFF switch), and measure the following voltages.
   "F7" error is displayed when charging is started with either the P1 or the N1 cable of the transformer disconnected for the purpose of measuring the no-load voltage of the transformer, but this is not abnormal.

   AC voltage

Tester range	AC 250 V – AC 500 V
Measurement terminals	U_2–V_2, V_2–W_2, W_2–U_2
Standard: 50/60(Hz)	K47-230C048-413: 53/54 V Other than the above: 54/56 V

   DC voltage

Tester range	250 VDC
Measurement terminals	P1 and N1 terminals P1 terminal: (+) probe N1 terminal: (-) probe
Standard: 50/60(Hz)	K47-227C048-405: 72/75 V K47-230C048-413: 71/73 V K47-260C048-409: 71/74 V

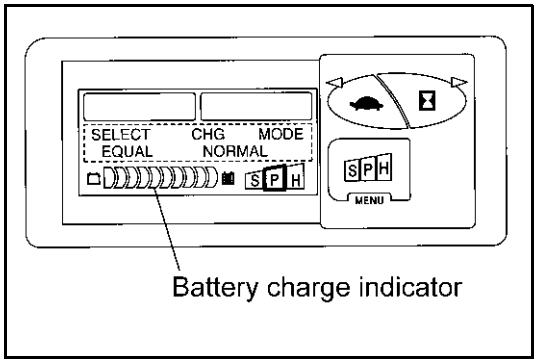

TIMER TEST

OPERATING PROCEDURE

1. Connect the power plug to the receptacle on the vehicle.
2. The initial timer test screen appears on the display.

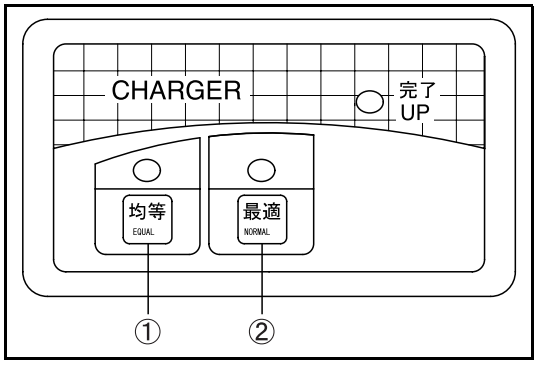

3. When buttons (1) and (2) and are pressed at the same time to start the timer test, “NOW TESTING!” will appear on the screen.

[TIMER TEST IN PROGRESS]

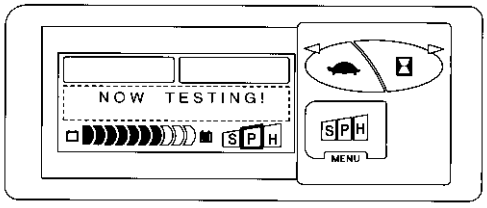

- The bars indicating charge light up at a rate of one per second as the test proceeds. When ten bars are lit up after 10 seconds, the test is complete and “TEST COMPLETED” appears on the screen.
  The LEDs on the operation panel come on in the order of (3)→(4)→(5).

[TIMER TEST COMPLETED]

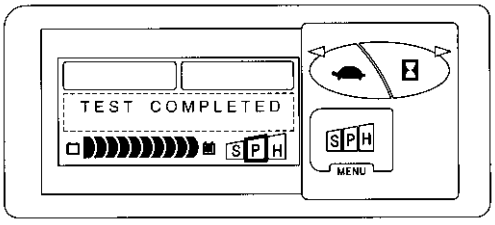

- The magnetic switch turns on when “NOW TESTING!” is displayed, and turns off upon display of “TEST COMPLETED” about ten seconds later.

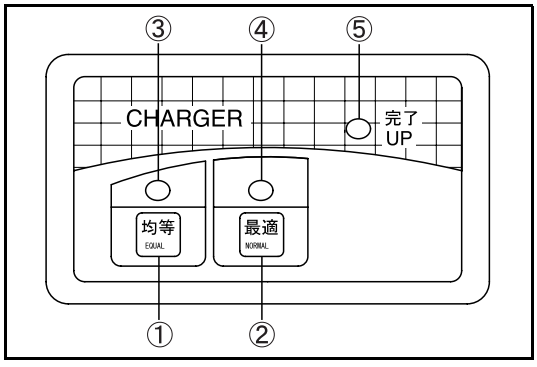

4. The initial screen reappears when any of buttons (1) to (2) is pressed.

https://truckmanualshub.com/

TROUBLESHOOTING

When a Diagnosis Error Code Is Displayed

Error Code F6-1: Safety timer activated

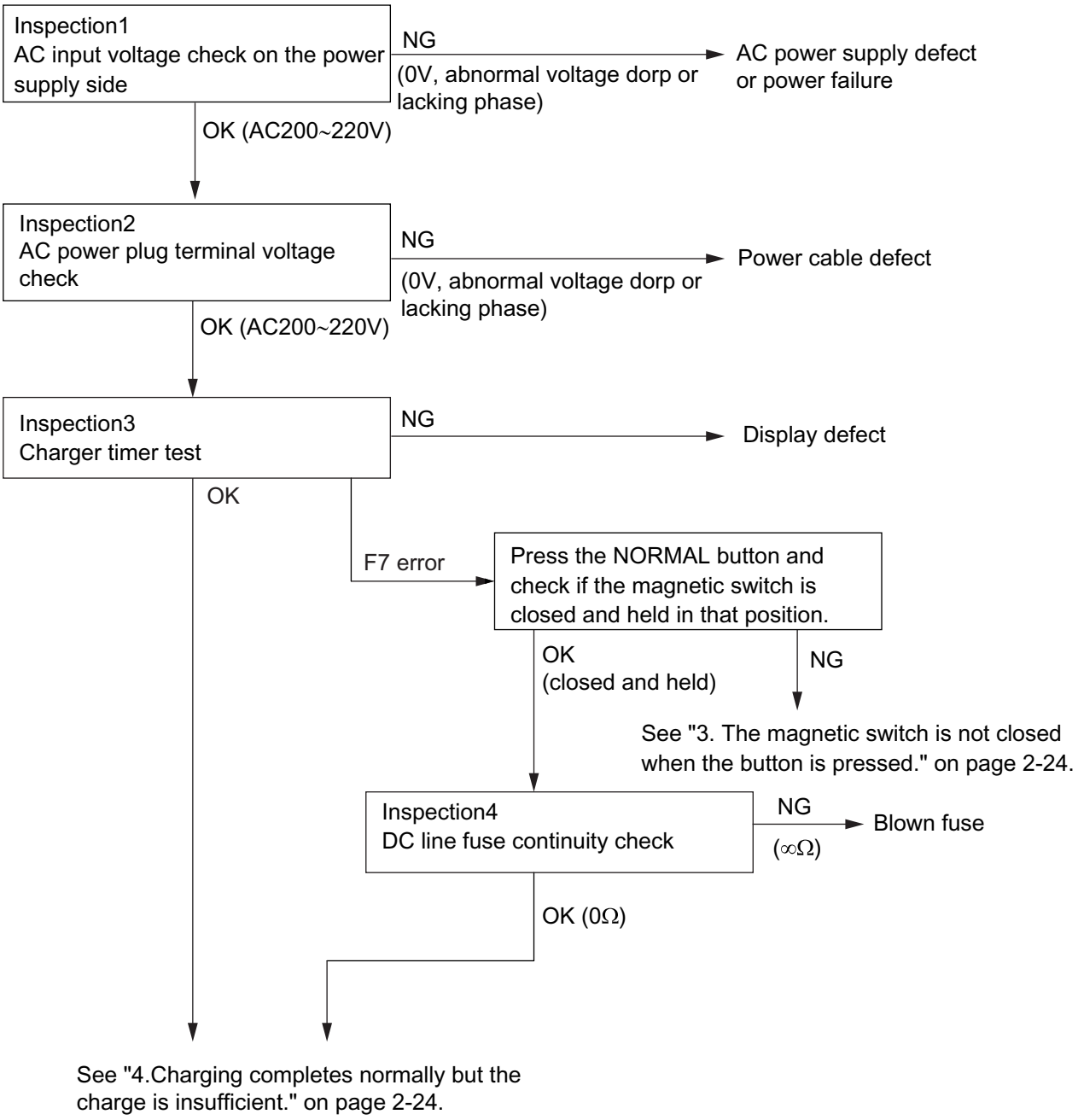

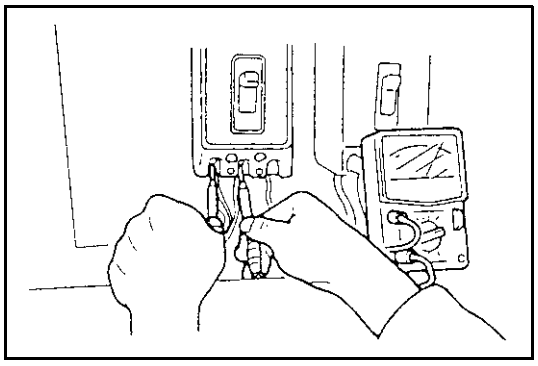

INSPECTION 1. Power supply voltage check

Measurement terminals	Power supply terminal
Tester range	250 VAC
Standard	200 to 220 V

OK (200 to 220 V)
→ To inspection 2
NG (0 V, abnormal voltage drop or lack of phase)
→ Power supply defect

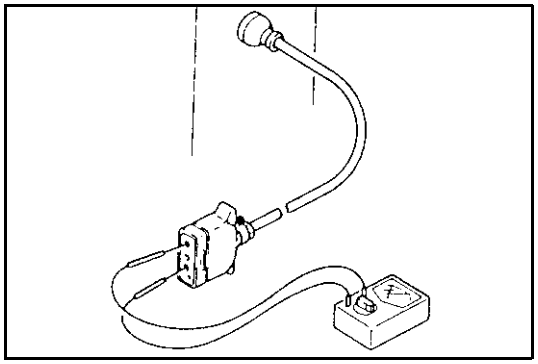

INSPECTION 2. Power supply plug terminal voltage inspection

Measurement terminals	Power plug terminals
Tester range	250 VAC
Standard	200 to 220 V

OK (200 to 220 V)
→ To inspection 3
NG (0 V, abnormal voltage drop or lacking phase)
→ Power cable defect

INSPECTION 3. Charger timer test

See the TIMER TEST section (page 2-15).
OK (200 to 220 V)
→ See “4. Charging cpmpletes normally but the charge is insufficient.” of “No diagnosis error code is displayed” on page 2-24.
NG (0 V, abnormal voltage drop or lack of phase)
→ Display defect

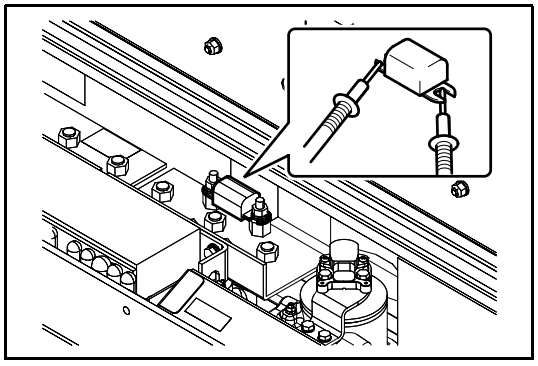

INSPECTION 4. DC side fuse continuity inspection

AC power plug disconnected, charging buttons off and fuse removed

Measurement terminals	Both terminals of DC fuse
Tester range	Ω × 1
Standard	0 Ω

OK (0 Ω)
→ See “4. Charging cpmpletes normally but the charge is insufficient.” of “No diagnosis error code is displayed” on page 2-24.
NG (∞ Ω)
→ Blown fuse

https://truckmanualshub.com/

Error Code F6-2: Overheat Detection (only when battery capacity is 476 AH or above)

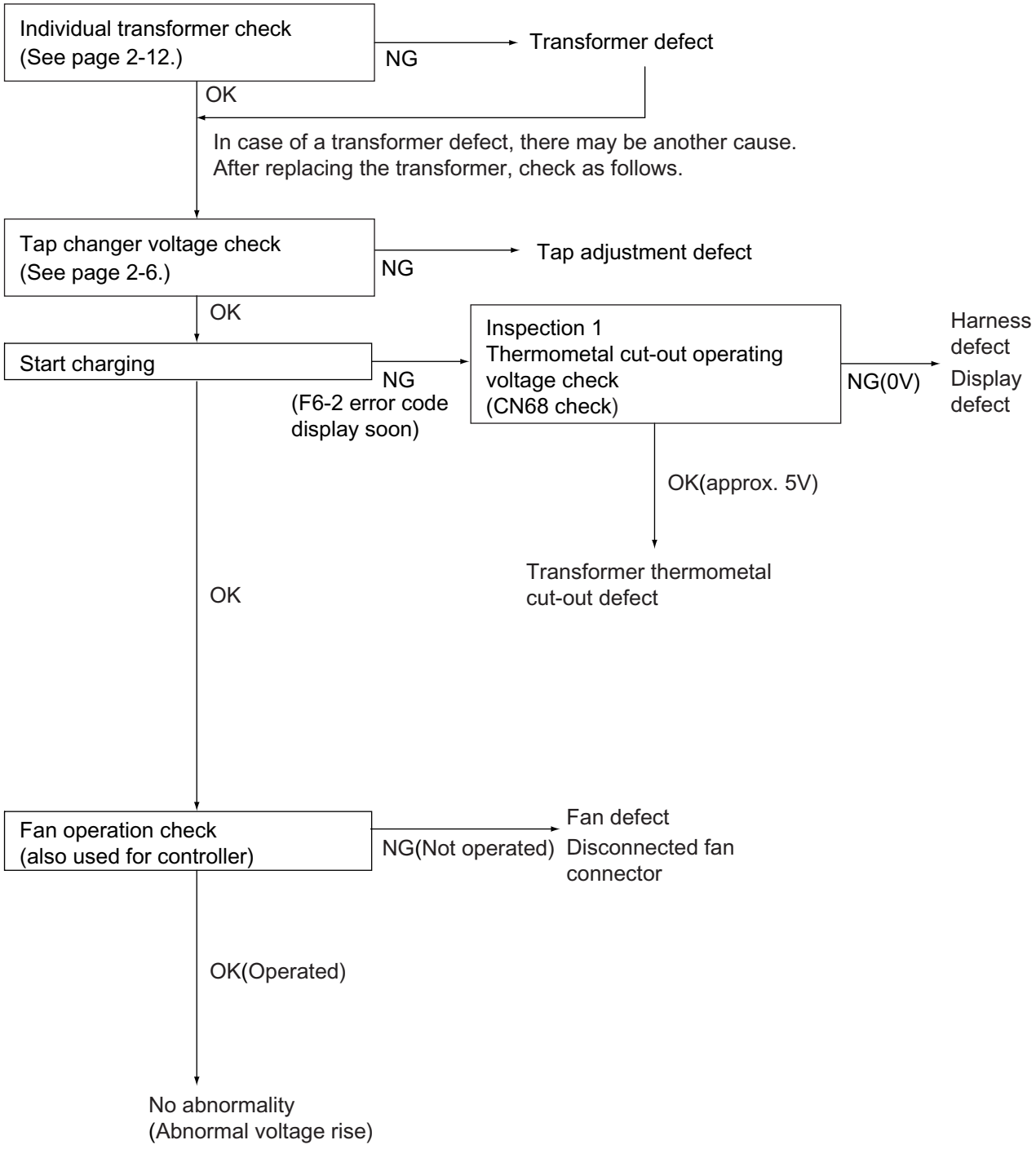

INSPECTION 1. Thermometal cut-out operating voltage check

Measurement terminals	CN68-1(139)(+)–CN68-2(14)(main harness side)
Tester range	DC10V
Standard	Approx. 5V

OK (approx. 5V) → Transformer thermometal cut-out defect
NG → Harness defect, display defect

Error Code F7: Charging start failure

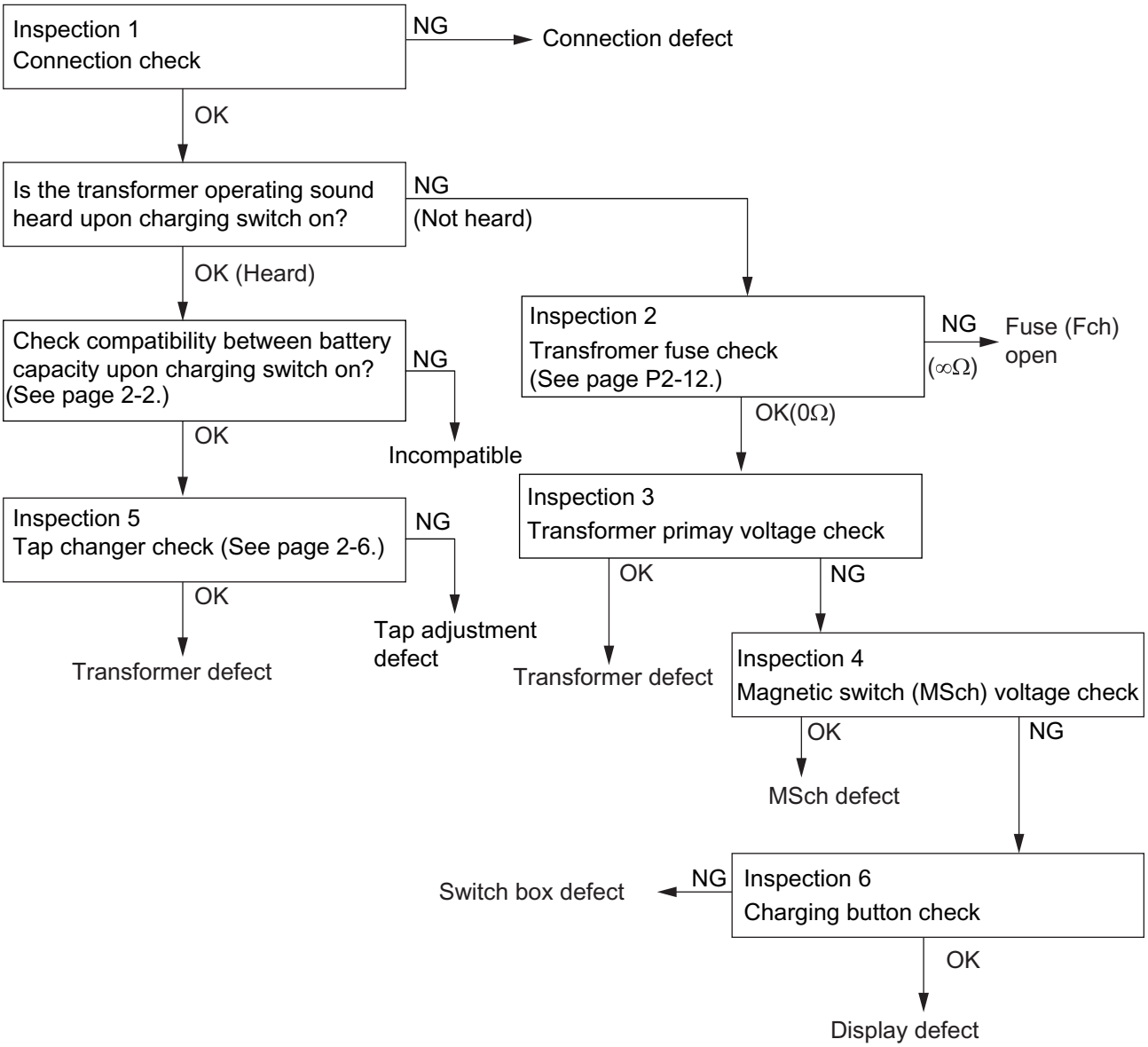

INSPECTION 1. Connection check

(1) Check that the P1 and N1 terminals of the transformer and controller are connected correctly without any looseness.
(2) Check that CN60, CN66 and CN61 are connected correctly.
(3) Check that the AC and DC plugs are free from contact defect.
(No roughness of the terminal or heating during power conduction.)
(4) Check that the power cable is not damaged.
OK → Transformer operating sound check
Not OK → Connection defect

INSPECTION 2. Transformer fuse (Fch) inspection (See page2-12.)

OK (0 Ω) →To inspection 3
NG (∞ Ω) → Open fuse (Fch)

https://truckmanualshub.com/

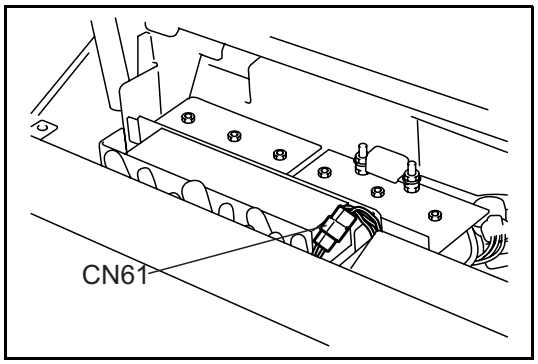

INSPECTION 3. Transformer primary voltage inspection

CN61 connector disconnected, AC plug connected and charging switch ON
OK (200 to 220 V)
→ Transformer defect
NG (other than standard)
→ To inspection 4

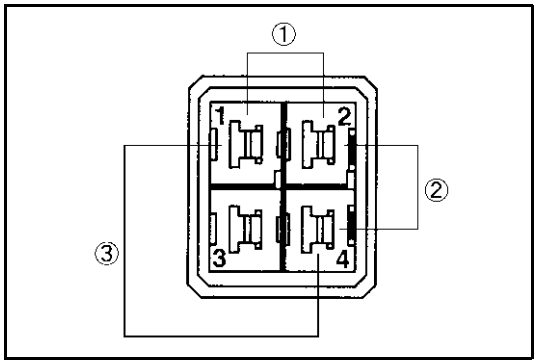

Measure-ment terminals	476AH or more	(1) CN61-1 (U)-CN61-2 (V) (TAB side) (2) CN61-2 (V)-CN61-4 (W) (TAB side) (3) CN61-4 (W)-CN61-1 (U) (TAB side)
	Below 476AH	(1) CN61-1 (U)-CN61-2 (V) (REC side) (2) CN61-2 (V)-CN61-3 (W) (REC side) (3) CN61-3 (W)-CN61-1 (U) (REC side)
Tester range		250 VAC
Standard		200 to 220 V

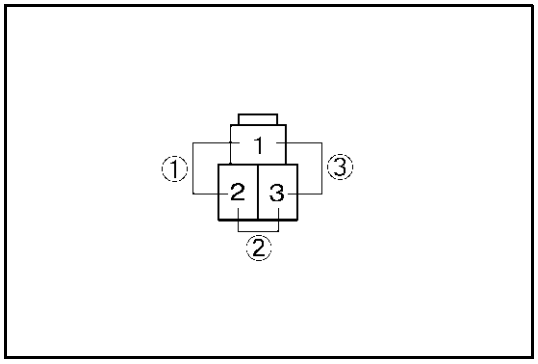

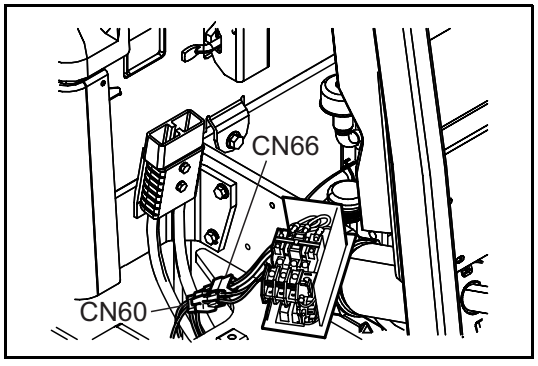

INSPECTION 4. Magnetic switch voltage inspection

CN66 connector disconnected
AC plug connected, charging switch ON/OFF operated)
OK (200 to 220V)
→ MSch defect
NG (other than standard)
→ To inspection 6

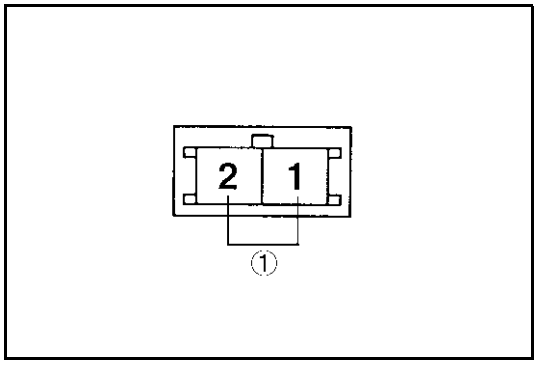

Measurement terminals	(1) CN66-1(R)-CN66-2(95)(REC side)
Tester range	250 VAC
Standard	Charging buttons ON: 200 to 220 V, Charging bottoms OFF: 0 V

INSPECTION 5. Tap changer check (See page 2-6.)

OK → Transformer defect
NG → Tap adjustment defect

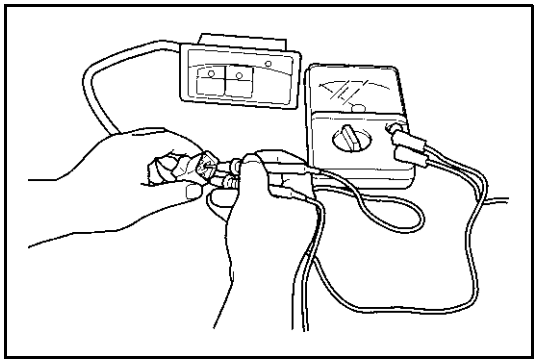

INSPECTION 6. Charging button inspection

CN69 connector disconnection
OK → Display defect
NG → Switch box defect

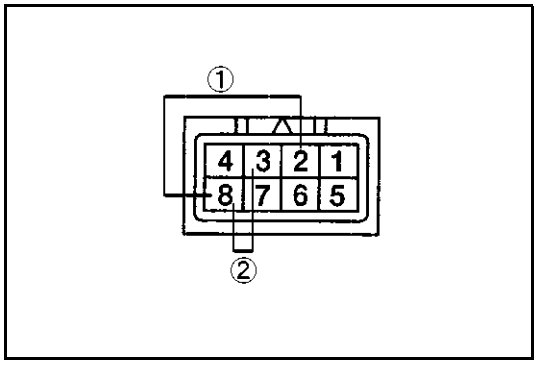

	CN69	Pressed state	Released state	Tester range
(1) NORMAL button	Between 2 and 8	0 Ω	∞	Ω × 1
(2) EQUAL button	Between 3 and 8	0 Ω	∞	

https://truckmanualshub.com/

Error code F8: Charging completion failure

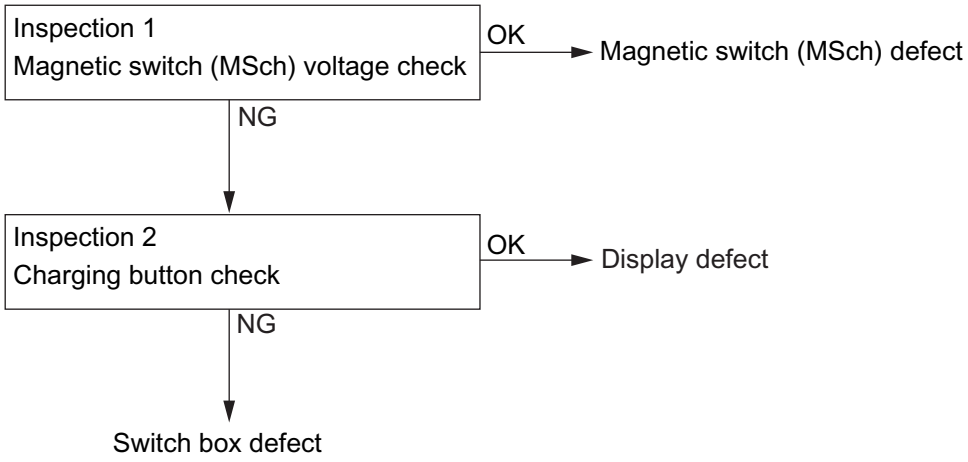

INSPECTION 1. Magnetic switch (MSch) voltage inspection (See page 2-20.)

INSPECTION 2. Charging button inspection (See page 2-21.)

No diagnosis error code is displayed

1. The vehicle does not move at all. (Charging screen appears even though the power plug is not connected.)
   Display defect
2. Charging screen does not appear even though the AC power plug is connected.

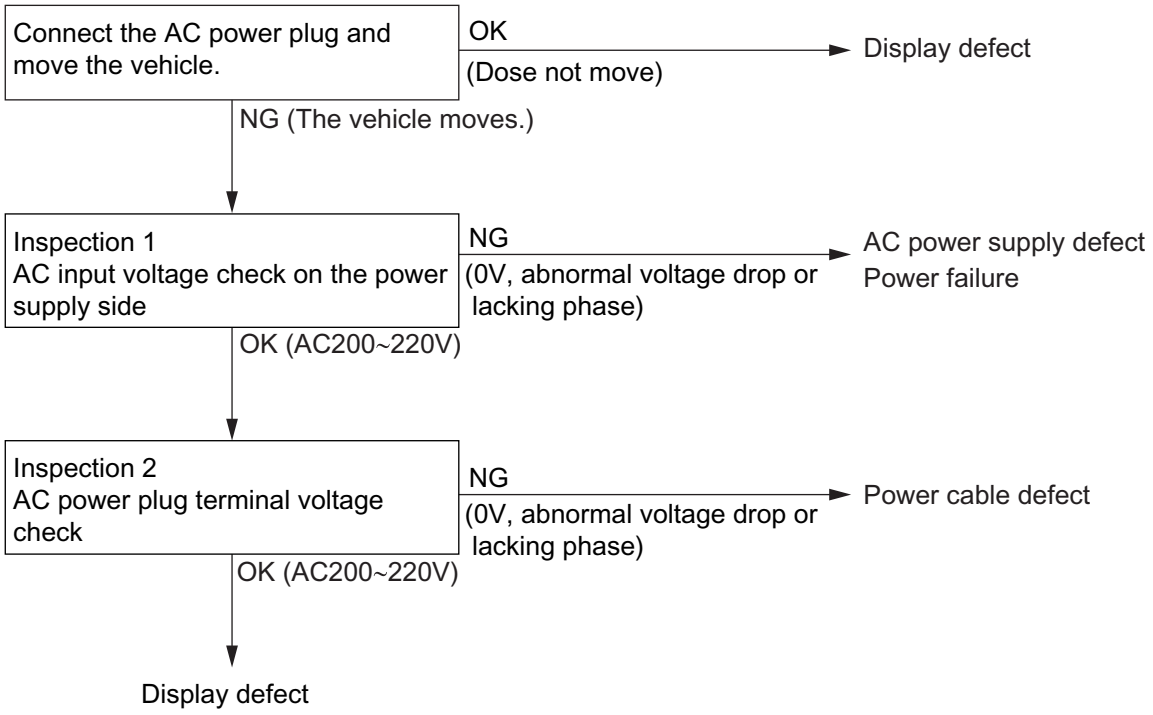

INSPECTION 1. Power supply voltage inspection

See Inspection 1 for diagnosis error code F6-1 (page 2-17).
OK (AC 200 to 220 V)
→ To inspection 2
NG (0 V, abnormal voltage drop or lacking phase)
→ AC power supply defect or power interruption

INSPECTION 2. Power plug terminal voltage inspection

See Inspection 2 for diagnosis error code F6-1 (page 2-17).
OK (AC 200 to 220 V)
→ To inspection 3
NG (0 V, abnormal voltage drop or lacking phase)
→ Power cable defect

https://truckmanualshub.com/

3. The magnetic switch is not suctioned when the charging button is pressed.

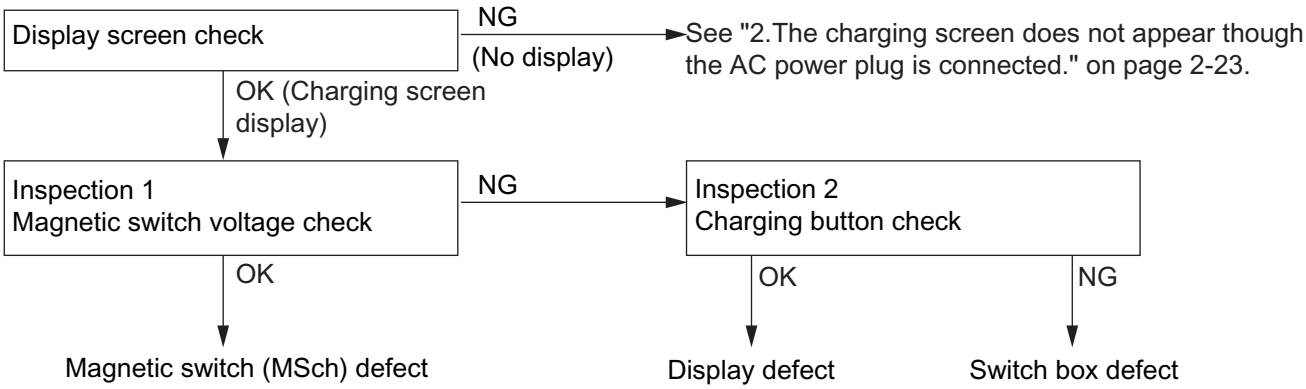

INSPECTION 1. Magnetic switch voltage inspection (See page 2-20.)

INSPECTION 2. Charging button inspection (See page 2-21.)

4. Charging completes normally but the charge is insufficient.

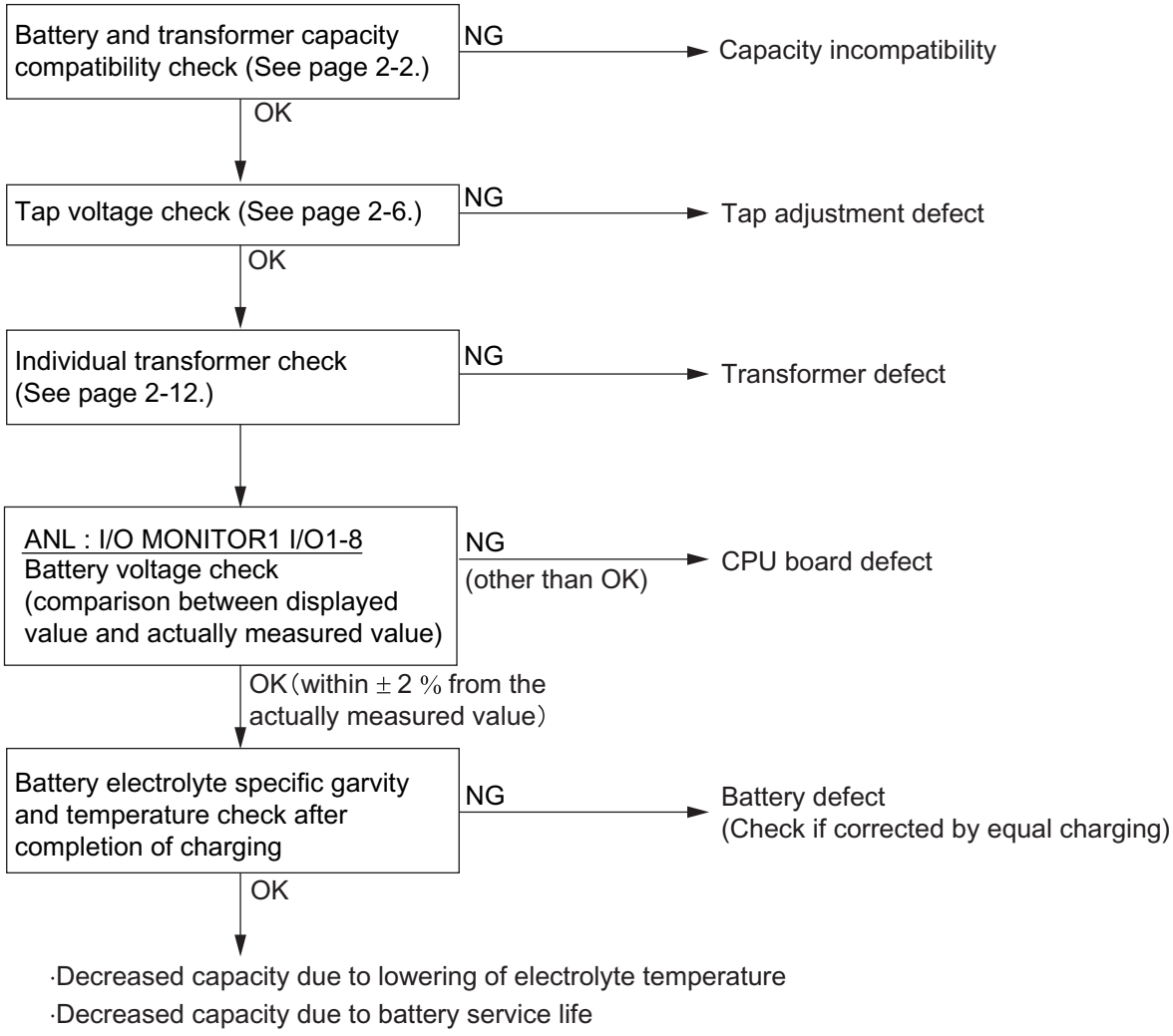

5. Charging progress indicator does not proceed during the timer test.
   Display defect

6. The LED on the button panel (charger operation panel) does not come on.

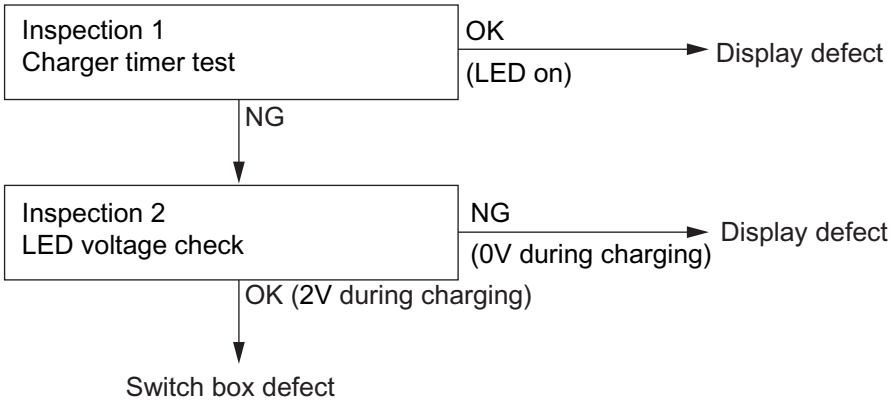

INSPECTION 1. Charger timer test (See page 2-15.)

INSPECTION 2. LED applied voltage inspection (See page 2-8.)
(CN69 connector must be connected.)

	CN70	Charging in progress (LED on)	Charging stopped (LED off)	Tester range
NORMAL LED	Between 9 and 30 (between Y–B and B–W)	2 V	0 V	10 VDC
EQUAL LED	Between 10 and 30 (between Y–G and B–W)	2 V	0 V	

	CN70	Upon end of test mode	Other state (LED off)	Tester range
UP LED	Between 11 and 30 (between Y–W and B–W)	2 V	0 V	10 VDC

https://truckmanualshub.com/

OFF-VEHICLE CHARGER

APPLICABLE CHARGER LIST

Maker	Battery voltage	Power supply voltage	Charger model	Trans-former capacity (kVA) (50/60 Hz)	Applicable capacity (AH/5HR)	Output plug	Power capacity (50/60 Hz)	Weight (kg) [lb]	7FBE10	7FBE13	7FBE15	7FBE18	7FBE20
Japan Storage Battery	48 V	200 V	SG3-69-60JBY-2	5.4/4.7	280 to 312	SB175A	20	40 [88.2]	○	○			
			SG3-69-80JBY-2	7.3/6.5	365 to 390		30/20	44 [97.0]	○	○	○	○	○
			SG3-69-100JBY-2	9.2/8.1	476 to 565		30	60 [132.3]			○	○	○
			SG3-69-130JBY-2	12.0/11.0	645		40	64 [141.1]					○
		400 V	SG3-69-60JBY-2	5.4/4.7	280 to 312		10	40 [88.2]	○	○			
			SG3-69-80JBY-2	7.3/6.5	365 to 390		15/10	44 [97.0]	○	○	○	○	○
			SG3-69-100JBY-2	9.2/8.1	476 to 565		15	60 132.3]			○	○	○
			SG3-69-130JBY-2	12.0/11.0	645		20	64 [141.1]					○
YUASA	48 V	200 V	ZTC48-54AD	4.5	280 to 312		15	40 [88.2]	○	○			
			ZTC48-80AD	6.6	365 to 390		20	60 [97.0]	○	○	○	○	○
			ZTC48-100AD	8.3	476 to 565		30	60 [97.0]			○	○	○
			ZTC48-120AD	9.2	645		30	63 [138.9]					○
		400 V	ZMC48-54AD	4.5	280 to 312		10	40 [88.2]	○	○			
			ZMC48-80AD	6.6	365 to 390		10	60 [97.0]	○	○	○	○	○
			ZMC48-100AD	8.3	476 to 565		15	60 [97.0]			○	○	○
			ZMC48-120AD	9.2	645		15	63 [138.9]					○

GS
GENERAL

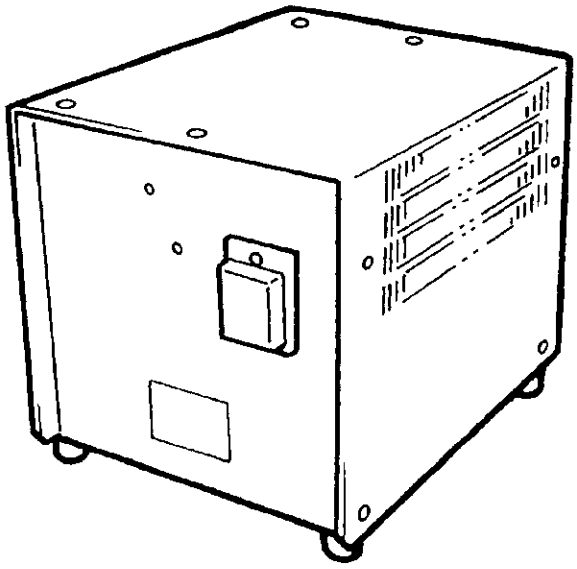

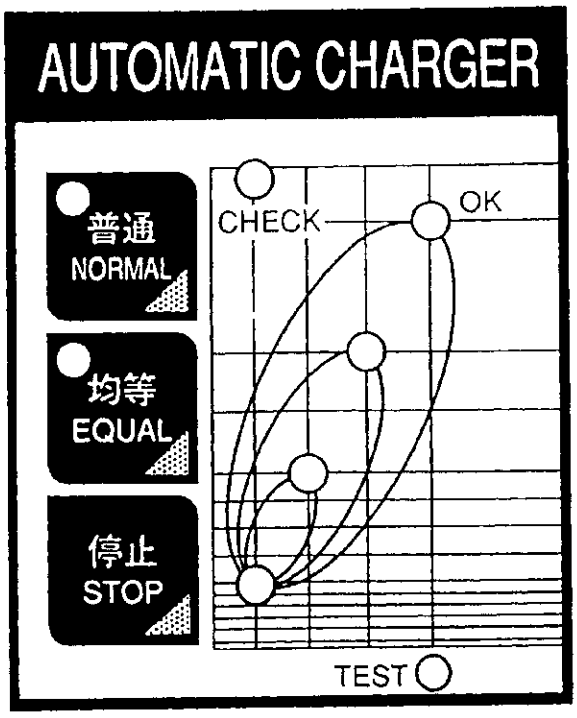

SPECIFICATIONS
200 V POWER SUPPLY VOLTAGE

Item		SG3-69-60JBY-2	SG3-69-80JBY-2
Magnetic switch (MSch)	Type	CLK-15JT	CLK-20JT
	Rating	AC 200 V 50/60 Hz	AC 200 V 50/60 Hz
Thermal relay (THR)	Type	T-11	T-18
	Set value	15 A	18 A
Transformer (TF)	Capacity (50/60 Hz)	5.4/4.7KVA	7.3/6.5 KVA
	Insulation	Class H	Class H
Silicon diode (Dch)	Type	SKR71/02 SKN71/02	SKR71/02 SKN71/02
Timer (AMT)	Operating Voltage setting	Microcomputer control	Microcomputer control
	Timer setting	Microcomputer control	Microcomputer control
	Total timer setting	16 H	16 H
Fuse (Fch)	Capacity	80 A	80 A
AC power supply capacity		14/13 A	19/17A
Charger weight		42 kg	44 kg

https://truckmanualshub.com/

Item		SG3-69-100JBY-2	SG3-69-130JBY-2
Magnetic switch (MSch)	Type	CLK-26JT	CLK-35JT
	Rating	AC 200 V 50/60 Hz	AC 200 V 50/60 Hz
Thermal relay (THR)	Type	T-18	T-35
	Set value	22 A	30 A
Transformer (TF)	Capacity (50/60 Hz)	9.2/8.1 KVA	12.0/11.0 KVA
	Insulation	Class H	Class H
Silicon diode (Dch)	Type	SKR130/02 SKN130/02	45M20 45MA20
Timer (AMT)	Operating Voltage setting	Microcomputer control	Microcomputer control
	Timer setting	Microcomputer control	Microcomputer control
	Total timer setting	16 H	16 H
Fuse (Fch)	Capacity	100 A	150 A
AC power supply capacity		24/21 A	31/27 A
Charger weight		60 kg	64 kg

400 V POWER SUPPLY VOLTAGE

Item		SG3-69-60JBY-2	SG3-69-80JBY-2
Magnetic switch (MSch)	Type	CLK-15JT	CLK-15JT
	Rating	AC 400 V 50/60 Hz	AC 400 V 50/60 Hz
Thermal relay (THR)	Type	T-11	T-11
	Set value	7.5 A	11 A
Transformer (TF)	Capacity (50/60 Hz)	5.4/4.7 KVA	7.3/6.5 KVA
	Insulation	Class H	Class H
Silicon diode (Dch)	Type	SKR71/02 SKN71/02	SKR71/02 SKN71/02
Timer (AMT)	Operating Voltage setting	Microcomputer control	Microcomputer control
	Timer setting	Microcomputer control	Microcomputer control
	Total timer setting	16 H	16 H
Fuse (Fch)	Capacity	80 A	80 A
AC power supply capacity		7.1/6.3 A	9.5/8.4 A
Charger weight		42 kg	44 kg

Item		SG3-69-100JBY-2	SG3-69-130JBY-2
Magnetic switch (MSch)	Type	CLK-15JT	CLK-26JT
	Rating	AC 200 V 50/60 Hz	AC 200 V 50/60 Hz
Thermal relay (THR)	Type	T-11	T-18
	Set value	15 A	22 A
Transformer (TF)	Capacity (50/60 Hz)	9.2/8.1 KVA	12.0/11.0 KVA
	Insulation	Class H	Class H
Silicon diode (Dch)	Type	SKR130/02 SKN130/02	45M20 45MA20
Timer (AMT)	Operating Voltage setting	Microcomputer control	Microcomputer control
	Timer setting	Microcomputer control	Microcomputer control
	Total timer setting	16 H	16 H
Fuse (Fch)	Capacity	100 A	150 A
AC power supply capacity		12/11 A	15/14 A
Charger weight		60 kg	64 kg

https://truckmanualshub.com/

WIRING DIAGRAM

For 200 V

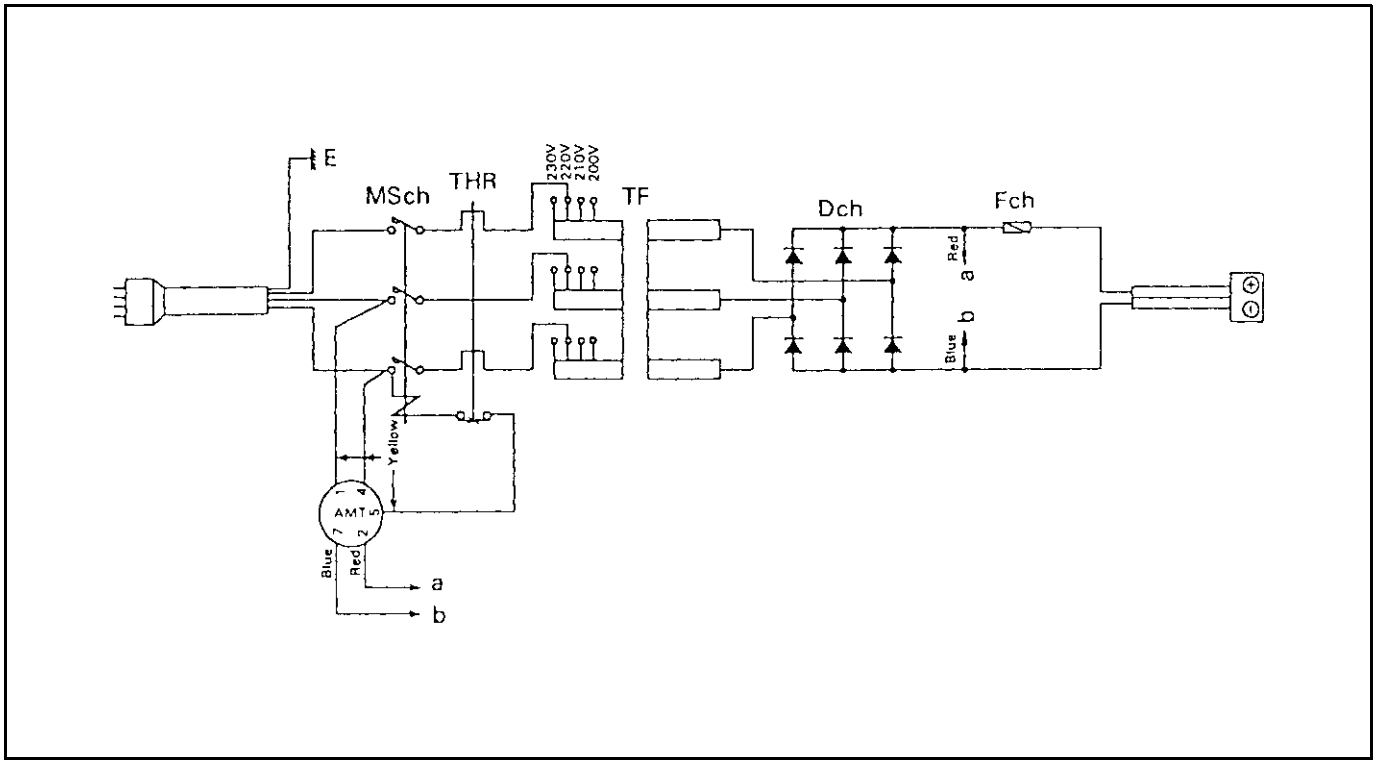

For 400 V

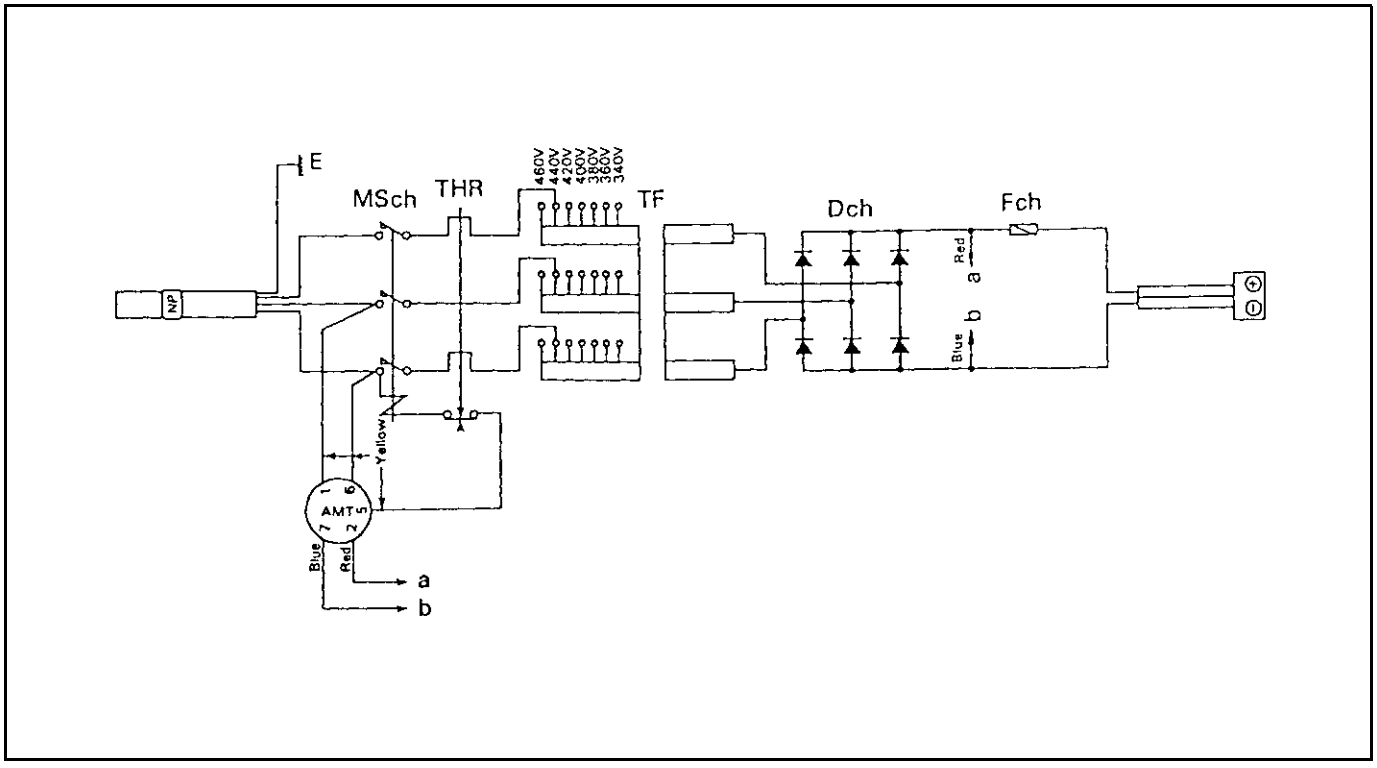

BEFORE CHARGING

If the ampere capacity at the charging location is insufficient because other electrical appliances are being used, ask an electrical work contractor to provide an exclusive circuit for the charger.
This circuit should be provided with circuit breakers or fuses having the capacities shown on P2-27.

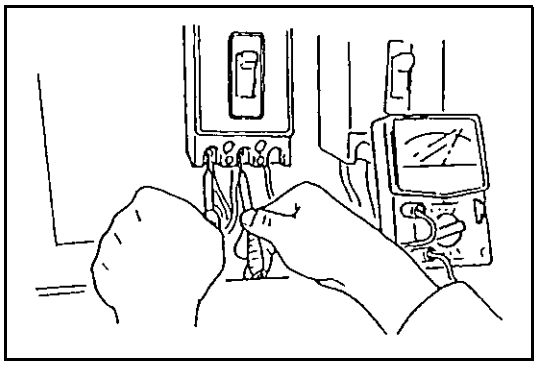

TAP Changer Setting

1. Measure with a circuit tester the supply voltage used for charging.
   Circuit tester range: AC(250 V or 1000 V)

Note:
Measure the supply voltage at night (or during recess when electrical appliances are not used.)

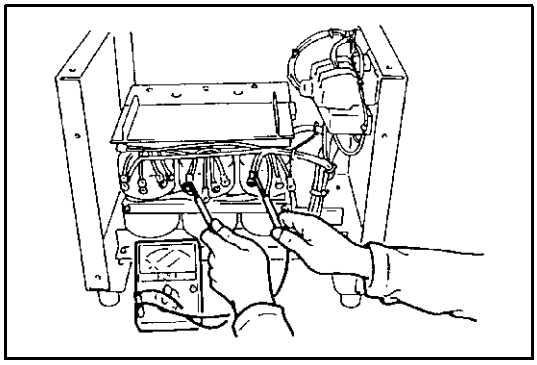

2. Set the tap charger
   (1) Remove the cover of each tap.
   (2) Select the appropriate tap according to the supply voltage measured in step 1 above.
   (3) Manually close the magnetic switch, and measure the voltage at each tap terminal.

200 V

Tap	Measured voltage
200 V	199 V or less
210 V	200 to 209 V
220 V	210 to 219 V
230 V	220 to 229 V

400 V

Tap	Measured voltage
340 V	339 V or less
360 V	340 to 359 V
380 V	360 to 379 V
400 V	380 to 399 V
420 V	400 to 419 V
440 V	420 to 439 V
460 V	440 to 459 V

Note:
- **The tap of the 200 V type is set to 220 V at time of shipment.**
- **Tap changer setting shall be made for the U, V and W phases.**
- **After setting the tap changer, be sure to check the battery charging status (specific gravity and fluid level) for about a week to confirm proper tap setting.**

https://truckmanualshub.com/

TROUBLESHOOTING

Estimated cause	Inspection method	Standard	Remedial action
The thermal relay on the AC side is tripped as soon as charging starts			
Short circuit of MSch	MSch coil continuity inspection Measurement terminals: A_1 and A_2	OK: Several hundred Ω NG: Abnormally low resistance	MSch replacement
TF insulation defect or short circuit between coils	TF insulation inspection Measurement terminals: Between each coil and frame Inspection of short circuit between TF primary and secondary coils Measurement terminals: Between primary and secondary coil terminals	OK: 0.2 MΩ or more NG: Less than 0.2 MΩ OK: 0.2 MΩ or more NG: Less than 0.2 MΩ	TF replacement
Dch defect	Dch resistance inspection in forward and reverse directions Measurement terminals: Both terminals (anode and cathode) of Dch Anode Cathode Forward: Anode – Cathode + Reverse: Anode + Cathode –	OK: Forward Several 10 Ω or more Reverse ∞ Ω NG: Forward 0 Ω → Reverse 0 Ω	Dch replacement
Other short circuit in main circuit	Inspect the short-circuited portion by separating each circuit.	—	Repair of defective portion
Charging does not start though operated correctly for starting charging.			
Interruption or missing phase of input power supply	Voltage measurement at main outlet for power supply Measurement terminals: Between outlet terminals	OK: 200 to 220 V (charger for 200 V) 380 to 440 V (charger for 400 V) NG: 0 V	In case of missing phase, repair after checking the case.
Disconnection in the AC plug	Voltage measurement between R, S and T terminals of MSch	OK: 200~220V (charger for 200 V) 380 to 440 V (charger for 400 V) NG: 0 V	Repair the plug if any phase is missing or no voltage is detected.
Blown fuse on DC side	DC side fuse continuity inspection Measurement terminals: Both terminals of fuse	OK: 0 Ω NG: ∞ Ω	Fuse replacement
MSch coil disconnection	MSch coil continuity inspection Measurement terminals: Between MSch terminals A_1 and A_2	OK: Several hundred Ω NG: ∞ Ω	MSch replacement
AMT defect	AMT inspection Measurement terminals: Between AMT terminals 1 and 5 in wiring diagram	OK: 0 V NG: 200 V (Charger for 200 V) 400 V (Charger for 400 V)	AMT replacement

Estimated cause	Inspection method	Standard	Remedial action
THR contact defect	THR contact inspection Measurement terminals: Between THR terminals 95 and 96	OK: Non operated state 0 Ω Operated state ∞ Ω NG: Non operated state ∞ Ω	THR resetting by lever operation or MSch ASSY replacement
Incomplete charging			
TF tap charger defect	AC input voltage measurement Measurement terminals: Between TF tap charger terminals	—	Change the wiring to match the input voltage
Missing phase in input power supply	Voltage measurement at mains outlet for power supply Measurement terminals: Between mains outlet terminals	OK: 200 to 220 V (Charger for 200 V) 380 to 440 V (Charger for 400 V)	In case of a missing phase, repair after checking the cause.
THR tripping	THR continuity inspection Measurement terminals: Between THR terminals 95 and 96	OK: Non operated state 0 Ω Operated state ∞ Ω NG: Non operated state ∞ Ω	Reset lever operation after checking the THR tripping cause
Dch defect (open circuit)	Inspection of Dch resistance in forward and reverse directions Measurement terminals: Both terminals (anode and cathode) of Dch Anode Cathode Forward: Anode – Cathode + Reverse: Anode + Cathode –	OK: Forward Several ten or more Reverse ∞ Ω NG: Forward ∞ Ω Reverse ∞ Ω	Dch replacement
Disconnection of TF coil	Measurement terminals: Between TH coil terminals	OK: Continuity NG: ∞ Ω	TF replacement
MSch contact defect	MSch secondary voltage measurement Measurement terminals: Voltage measurement between MSch terminals U, V and W	OK: 200 to 220 V (Charger for 200 V) 380 to 440V (Charger for 400 V) NG: 189 V or less (Charger for 200 V) 319 V or less (Charger for 400 V)	MSch contact repair or MSch ASSY replacement
TF terminal tightening defect	Inspection of each TF terminal tightening state	No loosening of each terminal	Retightening of each terminal
Timer setting at short time	Setting time check in test mode	See timer test section.	AMT replacement

https://truckmanualshub.com/

Estimated cause	Inspection method	Standard	Remedial action
Other contact defect in charging circuit	Inspection of tightening state and connector state at each portion	No loosening at each portion	Defective portion repair or retightening
Low battery charge	Inspection of battery fluid specific gravity, battery voltage and fluid level If the battery voltage is less than the standard, inspect the voltage per cell.	NG (Measurement after charging): Specific gravity: 1.150 or less Voltage per cell: 1.75V or less Total voltage of whole cells 24 V battery: 21 V or less 48 V battery: 42.5 V or less 72 V battery: 61 V or less	Battery replacement

SERVICE STANDARDS

Item		Service Standard
Power supply voltage V	For 200 V	200 to 230 V
	For 400 V	340 to 460 V
No-load secondary voltage (The values are the same for 200 V and 400 V.) AC V	SG3-69-45JBY-2	Approx. 56
	SG3-69-60JBY-2	Approx. 55
	SG3-69-80JBY-2	Approx. 57
	SG3-69-100JBY-2	Approx. 58
	SG3-69-130JBY-2	Approx. 56
	SG3-100-100JBY-2	Approx. 85
No-load secondary voltage DC V	24 V	Approx. 37
	36 V	Approx. 56
	48 V	74 to 78
	72 V	Approx. 114
MSch coil resistance Ω	CLK-11HT·15HT	Approx. 970
	CLK-20HT·25HT	Approx. 490
	CLK-35HT	Approx. 300
	CLK-50HT	Approx. 250
Dch resistance in forward		Approx. 25
Dch resistance in reverse		∞
Dch tightening torque N·m (kgf·cm) [ft-lb]	20M10·20MA10	2.35 (24) [1.74]
	20M20·20MA20	2.35 (24) [1.74]
	20M30·20MA30	2.35 (24) [1.74]
	45M10·45MA10	16.7 (170) [12.3]
	45M20·45MA20	16.7(170) [12.3]
	45M30·45MA30	16.7 (170) [12.3]
	70M10·70MA10	22.0 (224) [16.2]
Insulation resistance(500 V Megger) MΩ		0.2 or more

https://truckmanualshub.com/

DISASSEMBLY • INSPECTION • REASSEMBLY

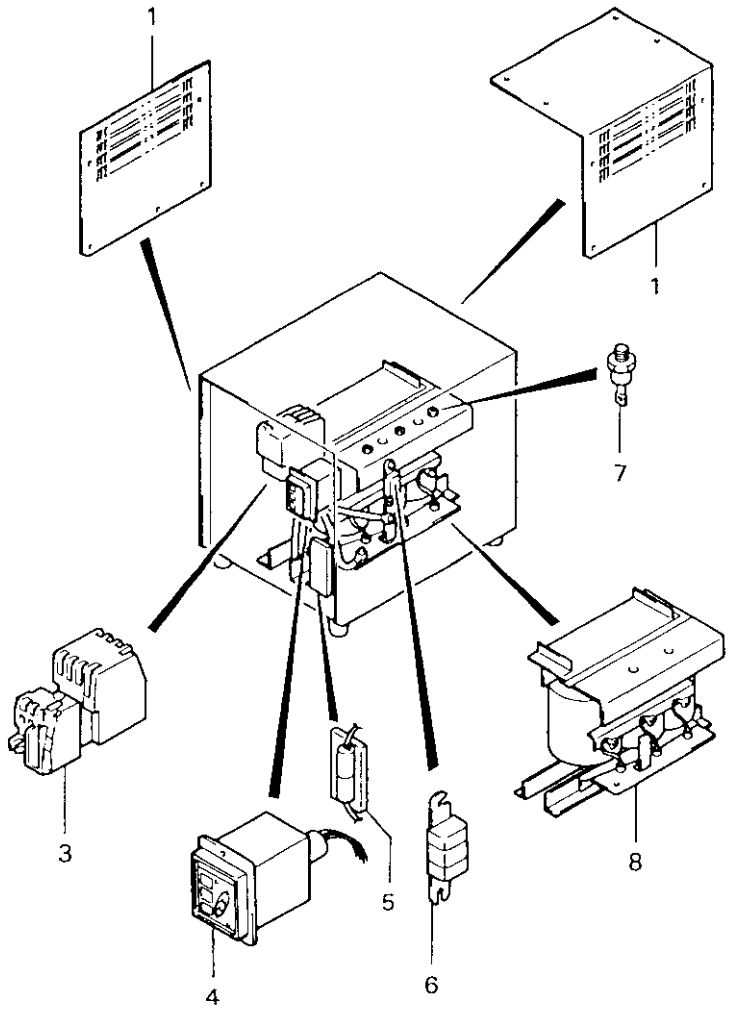

Disassembly Procedure

1 Remove the charger cover.
2 Perform inspections before disassembly. **[Point 1]**
3 Remove the magnetic switch ASSY (MSch). **[Point 2]**
4 Remove the timer ASSY (AMT).
5 Remove the resistor (R1·R2).
6 Remove the fuse (Fch). **[Point 3]**
7 Remove the diode (Dch). **[Point 4]**
8 Remove the transformer (TF).

Note:
Put a tag indicating the connecting position at the time of disassembly to prevent incorrect connection at the time of reassembly.

Reassembly Procedure

The reassembly procedure is the reverse of the disassembly procedure.

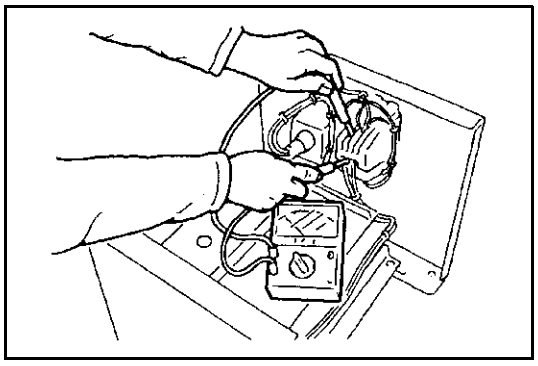

Point Operation

[POINT 1]

Inspection: Inspect the magnetic switch contact continuity.

Circuit tester range		Ω × 1
Measurement terminals		T–W, S–V, R–U
Switch	Msch ON	0 Ω
	Msch OFF	∞ Ω

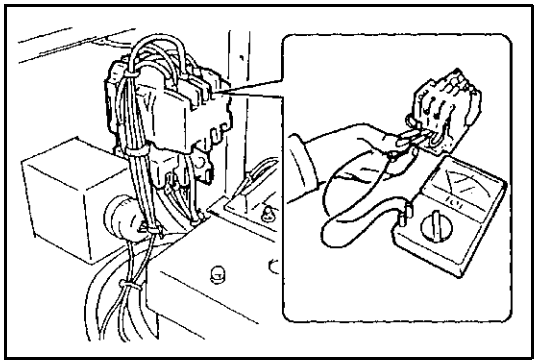

Inspection: Inspect the magnetic switch coil continuity

Resistance between A1 and A2	Circuit tester range
See the Service Standards list.	Ω × 1

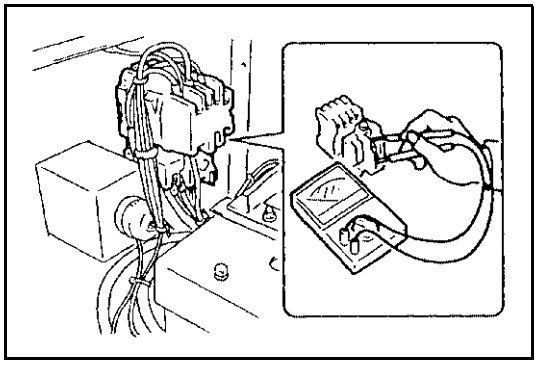

Inspection: Inspect the thermal relay contact continuity.

Circuit tester range		Ω × 1
Measurement terminals		95–96
Switch	Not operated	0 Ω
	Operated state	∞ Ω

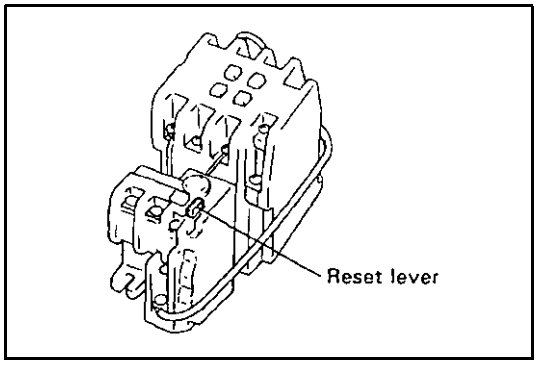

Note:

- **Do not adjust the thermal relay operating current.**
- **If the thermal relay is operated to stop charging while the charger is in use, always check the cause of thermal relay operation, and reset the thermal relay after taking the remedial action.**
- **Push the reset lever lightly to reset the thermal relay.**

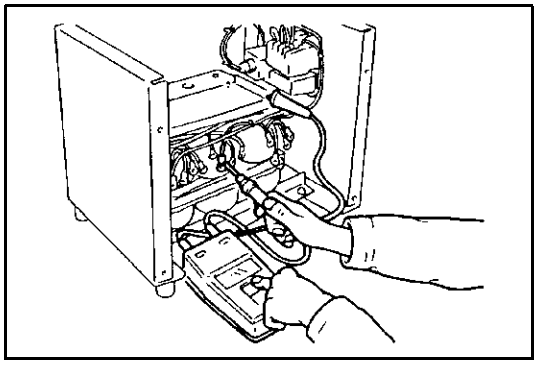

Inspection: Inspect the transformer insulation resistance.

Measurement terminals	Between each coil and frame
Standard value	0.2 MΩ or more

https://truckmanualshub.com/

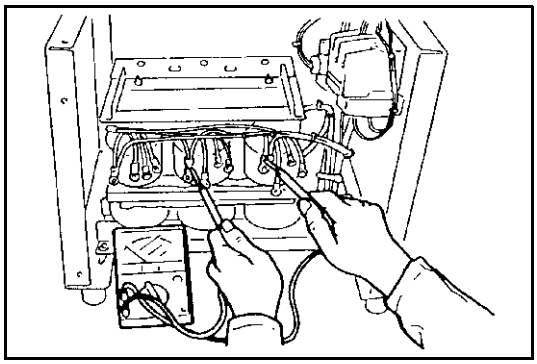

Inspection: Inspect the transformer continuity.

Circuit test range	Ω × 1
Measurement terminals	Primary side U_1–V_1, V_1–W_1 and W_1–U_1 Secondary side U_2–V_2, V_2–W_2 and W_2–U_2
Standard value	0 Ω

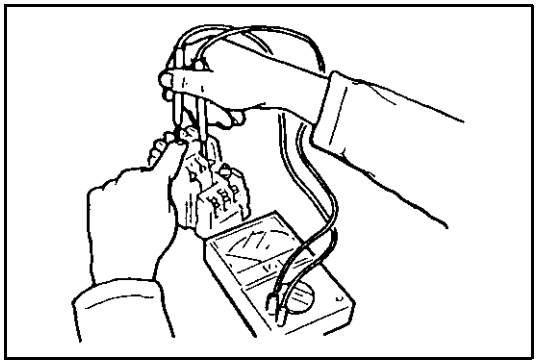

[POINT 2]
Inspection: Inspect the magnetic switch contact continuity.

Circuit tester range		Ω × 1
Measurement terminals		T–W, S–V, R–U
Switch	ON	0 Ω
	OFF	∞ Ω

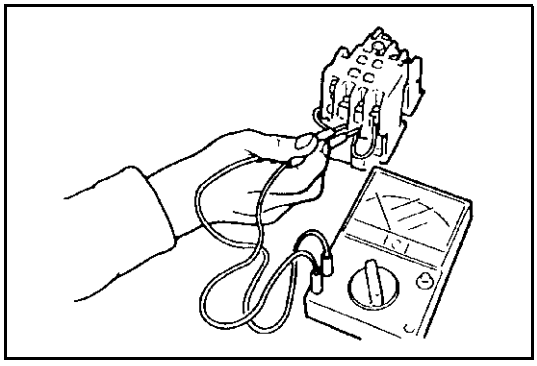

Inspection: Inspect the magnetic switch coil continuity.

Resistance between A1 and A2	Circuit tester range
See the Service Standard list.	Ω × 1

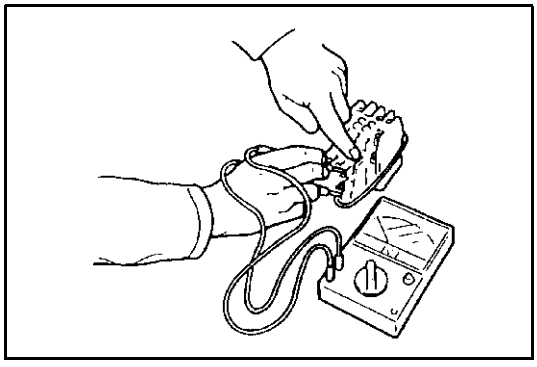

Inspection: Inspect the thermal relay contact continuity.

Circuit tester range		Ω × 1
Measuring terminals		95–96
Switch	Not operated	0 Ω
	In operated state	∞ Ω

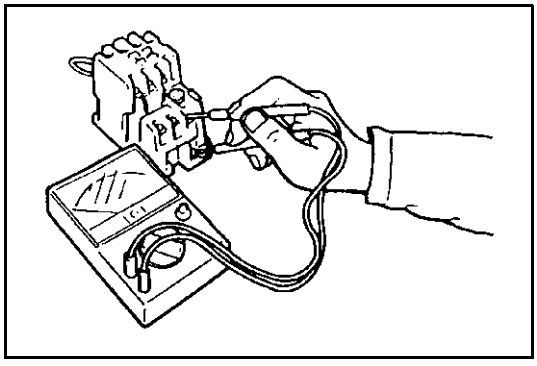

Note:
- **Do not adjust the thermal relay operating current.**
- **If the thermal relay is operated to stop charging while the charger is in use, always check the cause of thermal relay operation, and reset the thermal relay after taking the remedial action.**

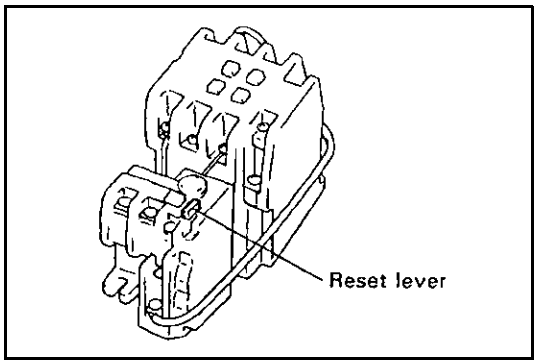

- **Push the reset lever lightly to reset the thermal relay.**

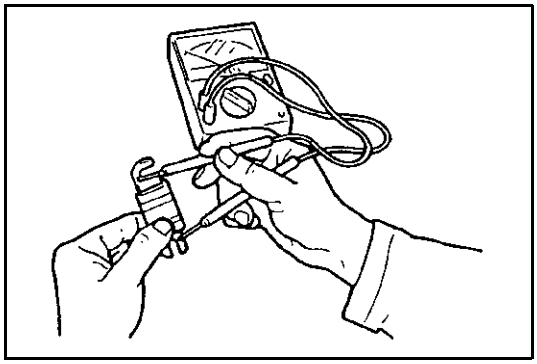

[POINT 3]
Inspection:
Inspect the transformer insulation.
Standard: 0 Ω

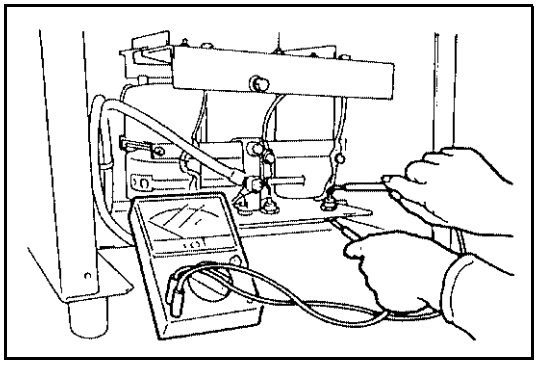

[POINT 4]
Inspection:
Inspect the diode in installed state on the fin. Remove it only when an abnormality is found.

Circuit tester range		Ω × 1
Measurement terminals	Forward	Anode (–) – Cathode (+)
	Reverse	Anode (+) – Cathode (–)
Standard value	Forward	See the Service Standards list.
	Reverse	∞ Ω

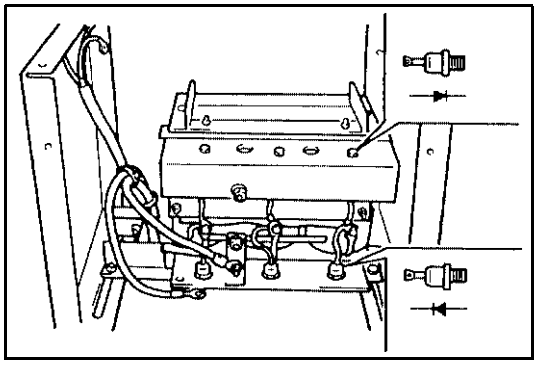

Inspection:
As two diodes having different polarities are used, install in the correct direction.

Note:
In the case of the charger for batteries with the capacity at 320 AH/5 HR or less, the diode mounting direction is the reverse of the direction shown in the figure.

https://truckmanualshub.com/

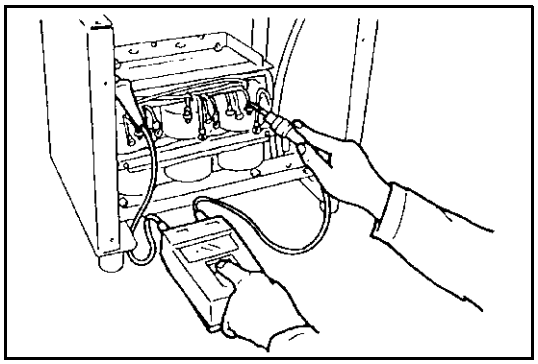

[POINT 5]

Inspection:

Inspect the transformer insulation.

Measurement terminals	Between each coil and frame
Standard value	0.2 MΩ or more

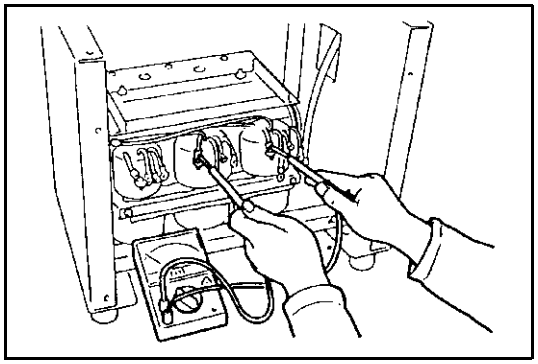

Inspection:

Inspect the transformer coil continuity.

Primary coil

Circuit tester range	Ω × 1
Measurement terminals	U_2–V_2, V_2–W_2 and W_2–U_2
Standard value	0 Ω

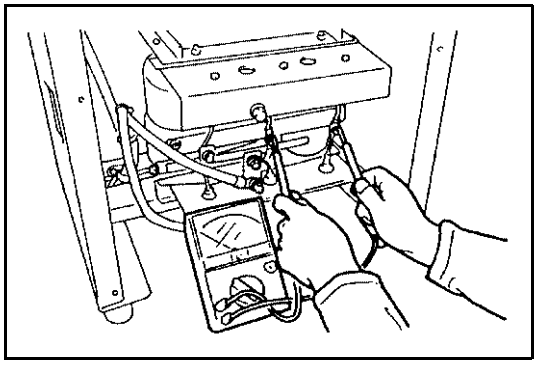

Secondary coil

Circuit tester range	Ω × 1
Measurement terminals	U_2–V_2, V_2–W_2 and W_2–U_2
Standard value	0 Ω

Inspection after Reassembly

1. Inspect each wiring for correctness.

Note:
Check correct wiring at each part by referring to the charger wiring diagram.

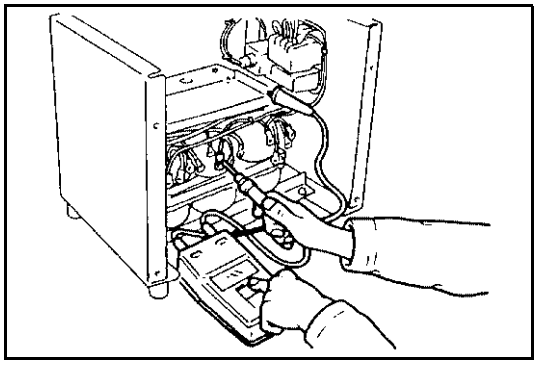

2. Inspect the transformer insulation resistance.

Measurement terminals	Between each coil and frame
Standard value	0.2 MΩ or more

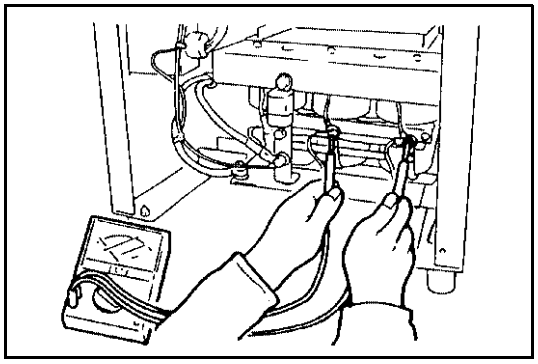

3. Measure the no-load secondary voltage.
   Connect the charger plug to the charger receptacle and start the timer.
   AC voltage

Circuit tester range	AC 250 V · AC 500 V
Measurement terminals	U_2–V_2, V_2–W_2 and W_2–U_2
Standard value	See the Service Standards list

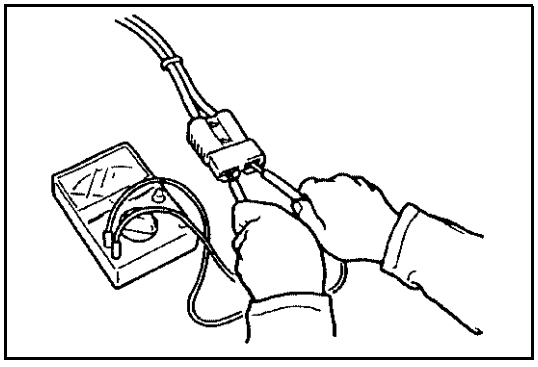

DC voltage

Circuit tester range	250 VDC
Measurement terminals	Both terminals of charger plug (+) terminal – (+) probe (–) terminal – (–) probe
Standard value	See the Service Standards list.

https://truckmanualshub.com/

AMT Test Method

1. Main timer inspection
   (1) Turn on the AC power switch.
   (2) Disconnect the battery plug.
   (to unload the charger and operate the voltage relay.)
   (3) Close the magnetic switch (MSch) forcibly by using an insulating bar and press the NORMAL button (black-blue) or EQUAL button (black-blue) for 5 seconds or more until the TEST LED (red) and CHARGING PROGRESS INDICATOR LEDs (three LEDs excluding the uppermost one) light up. Release the button as soon as they light up, and measure with a stop watch the time until the uppermost LED comes on.
   (4) If the UP LED lights up within the following period of time after TEST LED lights up and all LEDs then immediatelly go out, the main timer is functioning normally.
   When NORMAL button is pressed: UP LED lights up in about 6 seconds later
   When EQUAL button is pressed: UP LED lights up in about 18 seconds later

2. Total timer inspection
   (1) Turn on the POWER switch.
   (2) Connect the battery in discharged state
   (as the main timer is operated first because of voltage relay operation in the fully charged state).
   (3) Press the NORMAL or EQUAL button for 5 seconds, the TEST LED lights up and charging starts. Release the button when the TEST LED lights up and measure with a stop watch the time until the CHECK LED lights up.
   (4) If the CHECK LED lights up within the following period of time after the TEST LED lights up, the total timer is functioning normally. (The UP LED does not light up.)
   CHECK LED lights up in 90 to 100 seconds
   (5) The LED go off when the battery plug is disconnected.

Caution:
If the NORMAL, EQUAL or STOP button is pressed when a fully charged battery is connected, the main timer operates first to light the UP LED and not the CHECK LED. This does not indicate a total timer defect. Inspect again as described above after replacing the battery with a discharged one.

YUASA
GENERAL

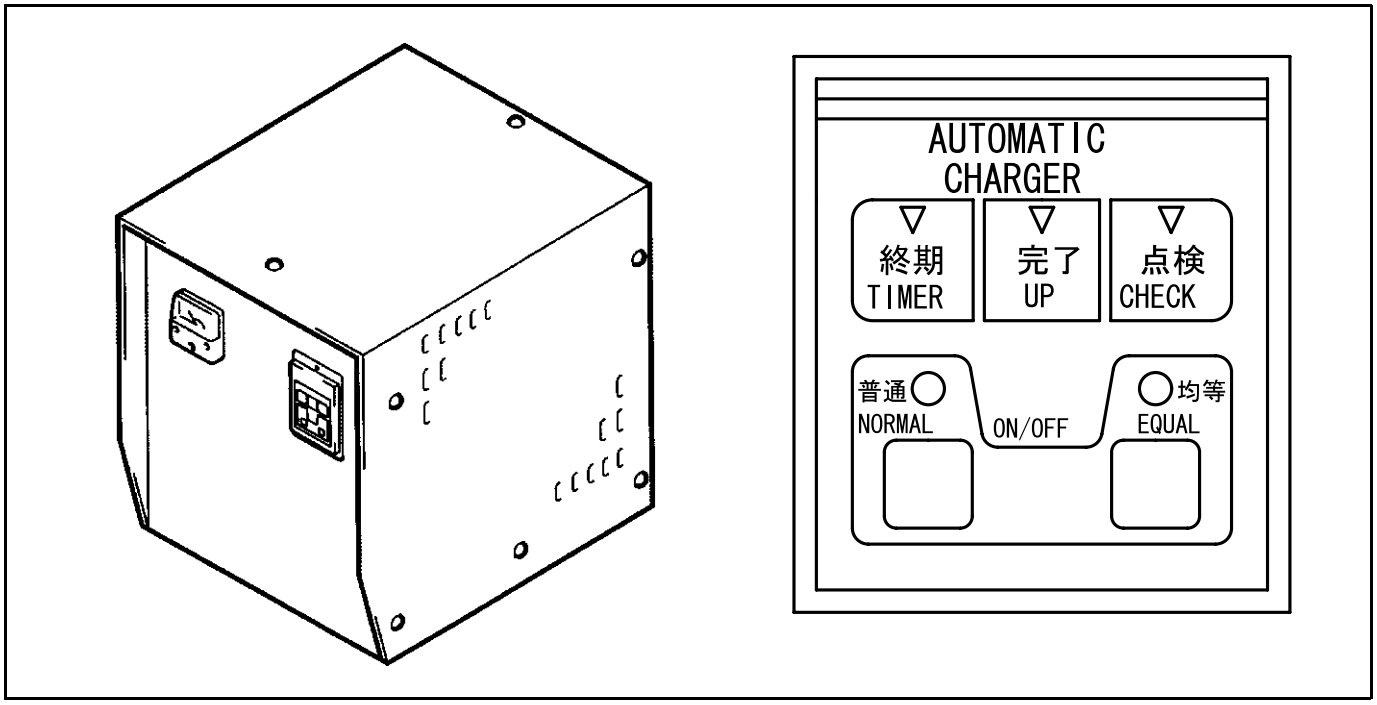

SPECIFICATIONS
200 V POWER SUPPLY VOLTAGE

Item		ZTC48-54AD	ZTC48-80AD
Magnetic switch (MSch)	Type	CLK-20JT	CLK-20JT
	Rating	AC 200 V 50/60 Hz	AC 200 V 50/60 Hz
Thermal relay (THR)	Type	T-18	T-18
	Set value	15 A	21 A
Transformer (TF)	Capacity (50/60 Hz)	4.5 KVA	6.6 KVA
	Insulation	Class B	Class B
Silicon diode (Dch)	Type	20M20 20MA20	20M20 20MA20
Timer (AMT)	Operating voltage setting	Microcomputer control	Microcomputer control
	Timer setting	Microcomputer control	Microcomputer control
	Total timer setting	16 H	16 H
DC Ammeter (A)	Type	DCF-6	DCF-6
	Indicating range	0 to 75 A	0 to 150 A
Fuse (Fch)	Capacity	75 A	100 A

https://truckmanualshub.com/

Item		ZTC48-100AD	ZTC48-120AD
Magnetic switch (MSch)	Type	CLK-20JT	CLK-35JT
	Rating	AC 200 V 50/60 Hz	AC 200 V 50/60 Hz
Thermal relay (THR)	Type	T-18	T-35
	Set value	25 A	33 A
Transformer (TF)	Capacity (50/60 Hz)	8.3 KVA	9.2 KVA
	Insulation	Class H	Class H
Silicon diode (Dch)	Type	45M20 45MA20	45M20 45MA20
Timer (AMT)	Operating voltage setting	Microcomputer control	Microcomputer control
	Timer setting	Microcomputer control	Microcomputer control
	Total timer setting	16 H	16 H
DC Ammeter (A)	Type	DCF-6	DCF-6
	Indicating range	0 to 150 A	0 to 150 A
Fuse (Fch)	Capacity	100 A	150 A

400 V POWER SUPPLY VOLTAGE

Item		ZMC48-54AD	ZMC48-80AD
Magnetic switch (MSch)	Type	CLK-15JT	CLK-15JT
	Rating	AC 400V 50/60 Hz	AC 400 V 50/60 Hz
Thermal relay (THR)	Type	T-11	T-18
	Set value	8 A	11 A
Transformer (TF)	Capacity (50/60 Hz)	4.5 KVA	6.6 KVA
	Insulation	Class B	Class B
Silicon diode (Dch)	Type	20M20 20MA20	20M20 20MA20
Timer (AMT)	Operating voltage setting	Microcomputer control	Microcomputer control
	Timer setting	Microcomputer control	Microcomputer control
	Total timer setting	16 H	16 H
DC Ammeter (A)	Type	DCF-6	DCF-6
	Indicating range	0 to 75 A	0 to 150 A
Fuse (Fch)	Capacity	75 A	100 A

Item		ZMC48-100AD	ZMC48-120AD
Magnetic switch (MSch)	Type	CLK-20JT	CLK-20JT
	Rating	AC 400 V 50/60 Hz	AC 400 V 50/60 Hz
Thermal relay (THR)	Type	T-11	T-18
	Set value	15 A	18 A
Transformer (TF)	Capacity (50/60 Hz)	8.3 KVA	9.2 KVA
	Insulation	Type H	Type H
Silicon diode (Dch)	Type	45M20 45MA20	45M20 45MA20
Timer (AMT)	Operating voltage setting	Microcomputer control	Microcomputer control
	Timer setting	Microcomputer control	Microcomputer control
	Total timer setting	16 H	16 H
DC Ammeter (A)	Type	DCF-6	DCF-6
	Standard	0 to 150 A	0 to 150 A
Fuse (Fch)	Capacity	100 A	150 A

WIRING DIAGRAM

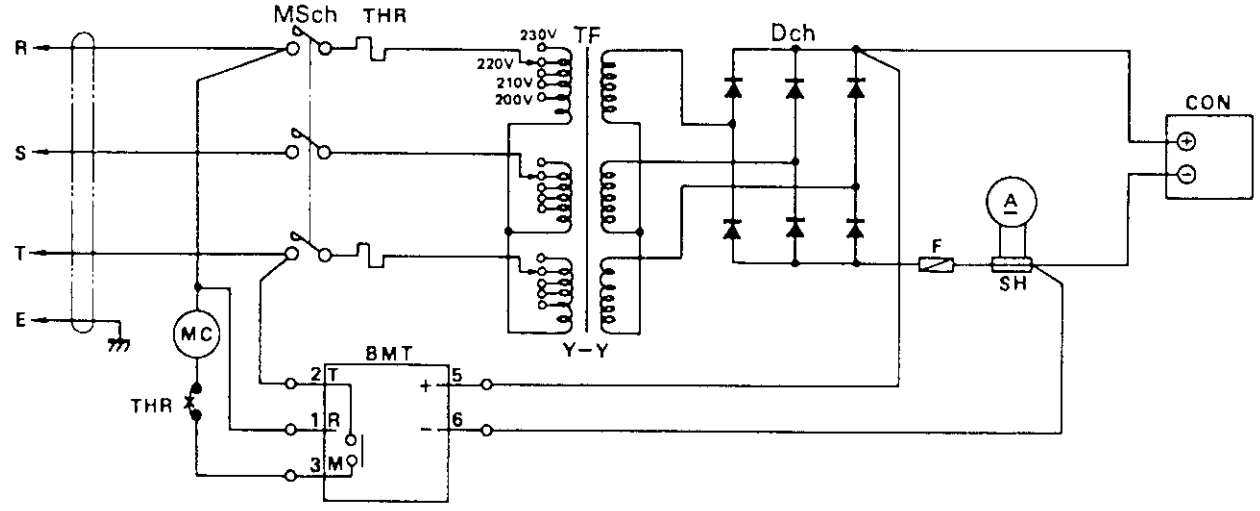

https://truckmanualshub.com/

COMPONENTS

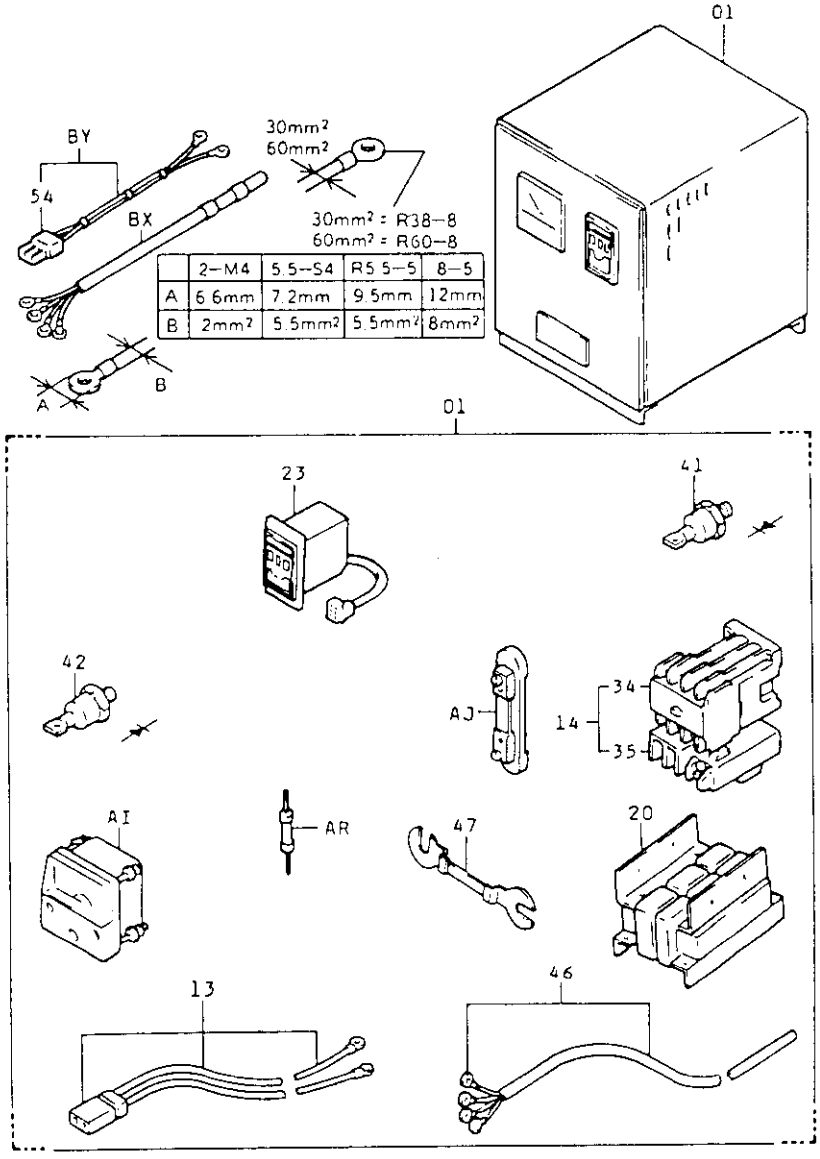

	2–M4	5.5–S4	R5.5–5	8–5
A	6.6mm	7.2mm	9.5mm	12mm
B	2mm²	5.5mm²	5.5mm²	8mm²

01. Battery separate charger
13. Charger cable ASSY (DC)
14. Magnetic switch ASSY
20. Transformer SUB-ASSY
23. Timer ASSY (BMT)
34. Magnetic switch SUB-ASSY
35. Thermal relay SUB-ASSY
41. Silicon element, forward
42. Silicon element, reverse
46. Cable (AC)
47. Fuse
54. Plug
AI. Ammeter
AJ. Shunt
AR. Register
BX. Cord SUB-ASSY (AC)
BY. Cord SUB-ASSY (DC)

BEFORE CHARGING

Off-vehicle Charger Circuit Setup

If the ampere capacity at the charging location is insufficient because other electrical appliances are being used, a separate circuit exclusively for the charger should be installed. This circuit should be provided with circuit breakers or fuses having the capacities shown below.

Type	Power Supply Voltage (V)	Fuse Capacity (A)
ZTC48-54AD	200 to 230	15
ZMC48-54AD	340 to 460	10
ZTC48-80AD	200 to 230	20
ZMC48-80AD	340 to 460	10
ZTC48-100AD	200 to 230	25
ZMC48-100AD	340 to 460	15
ZTC48-120AD	200 to 230	30
ZMC48-120AD	340 to 460	15

https://truckmanualshub.com/

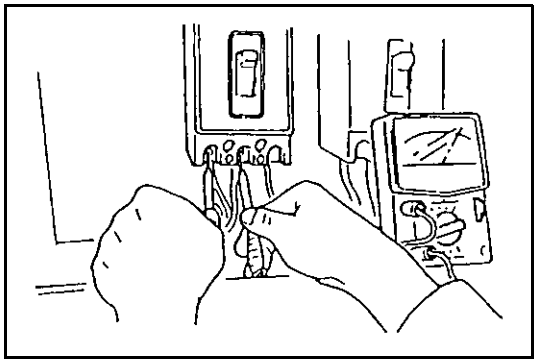

Tap Changer Setting

1. Measure with a circuit tester the power supply voltage to be used for charging.
   Circuit tester range: AC (250 V or 1000 V)

Note:
Measure the power supply voltage at night (or, if that is impossible, during a time when electrical appliances are not being operated).

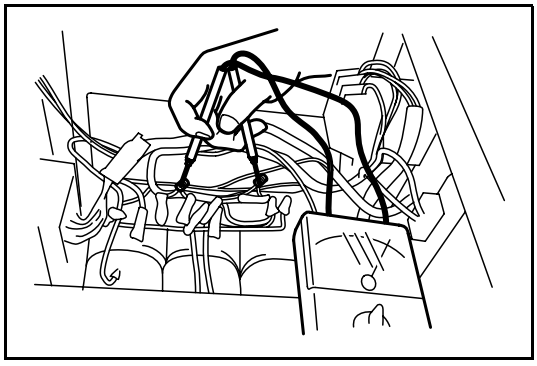

2. Set the tap changer
   (1) Remove the cover of each tap.
   (2) Select the appropriate tap corresponding to the power supply voltage measured in step 1 above.
   (3) Manually close the magnetic switch, and measure the voltage at each tap terminal.

200 V

Tap	Measured voltage
200 V	199V or less
210 V	200 to 209 V
220 V	210 to 219 V
230 V	220 to 229 V

400 V

Tap	Measured voltage
340 V	339V or less
360 V	340 to 359V
380 V	360 to 379V
400 V	380 to 399V
420 V	400 to 419V
440 V	420 to 439V
460 V	440 to 459V

Note:
- **Tap are set to 220 V at the time of shipment.**
- **Be sure to set the changer for phases U, V and W.**
- **For about a week after tap changer setting, keep track of the battery charging state (specific gravity and electrolyte level) to make sure the tap setting is appropriate.**

TROUBLESHOOTING

Estimated cause	Check method	Standard	Remedial action
Thermal relay (THR) actuation as soon as charging starts			
TF insulation defect or short-circuit in coil	TF insulation inspection Measurement terminals: Between each coil terminal and frame Inspection of short-circuit between primary and secondary coil of TF	OK: 3 MΩ or more NG: 3 MΩ or less OK: 3 MΩ or more NG: Less than 3 MΩ	TF replacement
Dch defect (short-circuit)	Inspection of Dch forward and reverse resistance Measurement terminals: Both terminals of Dch (Anode - Cathode) Anode ▶ Cathode Forward: Anode – Cathode + Reverse: Anode + Cathode –	OK: Forward: Over 10 kΩ Reverse: ∞ Ω NG: Forward: 0 Ω Reverse: 0 Ω	Dch replacement
Charging does not start even when the CHARGE ON/OFF switch is pressed to ON. (The timer does not operate.)			
AC power service interruption or lacking phase	Voltage measurement at input receptacle Measurement terminals: Between receptacle terminals	OK: 200 to 230 V (Charger for 200 V) 340 to 460 V (Charger for 400 V) NG: 0 V	Repair after checking the cause for lacking phase
Microcomputer timer (BMT) defect	AMT inspection Measurement terminals: AMT 2-3 in wiring diagram	OK: 0 V NG: 200 V (Charger for 200 V) 400 V (Charger for 400 V)	AMT replacement
Open circuit in MSch coil	MSch coil conduction inspection Measurement terminals: MSch A_1-A_2	OK: See the service standard NG: ∞ Ω	MSch replacement
THR contact defect	THR contact inspection Measurement terminals: THR 95-96	OK: Non-operated state: 0 Ω Operated state: ∞ Ω NG: Non-operated state: ∞ Ω	THR reset lever operation or MSch ASSY replacement
Abnormal noise from MSch			
MSch contact roughening	Visual inspection of MSch contact	NG: Excessive roughening or burn of contact surface	MSch replacement
Dust entrance or corrosion at movable part	Visual inspection of MSch contact	NG: Dust accumulation or corrosion on movable contact	MSch contact correction or MSch replacement

https://truckmanualshub.com/

Estimated cause	Check method	Standard	Remedial action
The ammeter does not defect.			
Blown Fch	Fch conduction check Measurement terminals: Both terminals of Fch	OK: 0 Ω NG: ∞ Ω	Fch replacement
Open circuit in TF	TF coil conduction inspection Measurement terminals: Between TF terminals	OK: 0 Ω NG: ∞ Ω	TF replacement
Dch defect (open circuit)	Dch forward and reverse resistance inspection Measurement terminals: Both terminals of Dch Forward Forward: Anode – Cathode + Reverse: Anode + Cathode –	OK: Forward: Over 10 kΩ Reverse: ∞ Ω NG: Forward: ∞ Ω Reverse: ∞ Ω	Dch replacement
Ammeter defect	Inspection of conduction between ammeter terminals Measurement terminals: Both terminals of ammeter	OK: Over 10 Ω or less NG: ∞ Ω	Ammeter replacement
Insufficient charging or total timer actuation (CHECK LED ON)			
Lacking phase in AC power supply	Voltage measurement at input receptacle Measurement terminals: Between receptacle terminals	OK: 200 to 230 V (Charger for 200 V) 340 to 460 V (Charger for 400 V) NG: 0 V	Repair after checking the cause for lacking phase
Improper TF tap changer setting	Input AC voltage measurement Measurement terminals: Between TF tap changer terminals	—	Wiring change to the taps matching the input voltage
MSch contact defect	Measurement of secondary voltage at MSch contacts Measurement terminals: MSch, U, V and W terminals	OK: 200 to 230 V (Charger for 200 V) 340 to 460 V (Charger for 400 V) NG: 189 V or less 329 V or less	MSch contact repair or MSch replacement
Open circuit in TF	TF wiring conduction inspection Measuring terminals: TF coil terminals	OK: 0 Ω NG: ∞ Ω	TF replacement
Dch defect (open circuit)	Dch forward and reverse resistance measurement Measurement terminals: both terminals of Dch Forward Forward: Anode – Cathode + Reverse: Anode + Cathode –	OK: Forward: Over 10 kΩ Reverse: ∞ Ω NG: Forward: ∞ Ω Reverse: ∞ Ω	Dch replacement
Microcomputer timer (BMT) defect	Set time check in test mode	See page 2-21	BMT replacement

https://truckmanualshub.com/

Estimated cause	Check method	Standard	Remedial action
Blown Fch	Fch conduction inspection Measurement terminals: Both terminals of Fch	OK: 0 Ω NG: ∞ Ω	Fch replacement
Excessive charging or ammeter deflection			
Improper tap changer setting	Input AC voltage measurement Measurement terminals: TF tap changer terminals	—	Wiring change to the tap in reference to the input voltage
Microcomputer timer (BMT) operation	Set time check in test mode	See page 2-21	BMT replacement
Total timer operation (CHECK LED blinking)			
Microcomputer timer defect	—	—	BMT replacement

https://truckmanualshub.com/

SERVICE STANDARDS

Item		Service Standard
Power supply voltage V	for 200 V	200 to 230 V
	for 400 V	340 to 460 V
No-load secondary voltage AC V	ZM(T)C48-54AD	Approx. 56
	ZM(T)C48-80AD	Approx. 55
	ZM(T)C48-100AD	Approx. 57
	ZM(T)C48-120AD	Approx. 58
No-load secondary voltage DC V	for 48 V battery	72
MSch coil resistance Ω	CLK-11HT·15HT	Approx. 970
	CLK-20HT·25HT	Approx. 490
	CLK-35HT	Approx. 300
Dch resistance in forward Ω		Approx. 25
Dch resistance in reverse Ω		∞
Dch tightening torque N·m (kgf·cm) [ft-lb]	20M20·20MA20	2.35 (24) [1.74]
	45M20·45MA20	16.7 (170) [12.3]
Insulation resistance (500 V megohmmeter) MΩ		3 or more

BMT Test Method

Be sure to use a fully charged battery for the test.

1. Main timer inspection
   (1) NORMAL test
   Press the NORMAL button on the BMT panel for 5 seconds or more to start the test. As soon as the NORMAL button is pressed, the magnetic switch is operated and the NORMAL and FINAL LEDs (green) on the BMT panel come on to indicate the start of charging. After 5 seconds, the NORMAL LED (green) starts blinking. The operation stops automatically when the FINAL timer setting (approx. 20 seconds) for the NORMAL test elapses, and the UP LED (green) comes on. To rest the BMT and turn of the UP LED (green), press the NORMAL button again.

   (2) EQUAL test
   Press the EQUAL button on the BMT panel for about 5 seconds or more to start the test. As soon as the EQUAL button is pressed, the magnetic switch is operated and the EQUAL and FINAL LEDs (green) on the BMT panel come on to indicate the start of charging. After 5 seconds, the EQUAL LED (green) starts blinking. The operation stops automatically when the FINAL timer setting (approx. 40 seconds) for the EQUAL test elapses, and the UP LED (green) comes on.
   To reset the BMT and turn of the UP LED (green), press the EQUAL switch again.

2. Total timer inspection
   Press the NORMAL and EQUAL buttons on the BMT panel are simultaneously for about 5 seconds or more.
   As soon as the these buttons are pressed, the magnetic switch is operated and the NORMAL LED (green) on the BMT panel comes on to indicate the start of charging. After 5 seconds, the NORMAL and EQUAL LEDs (green) start blinking. The operation stops automatically when the setting time for the total timer test (approx. 60 seconds) elapses, and the CHECK LED (red) blinks. To reset the BMT and turn of the CHECK LED (red), press the NORMAL or EQUAL button again.

Caution:
If a discharged battery is used for the main timer inspection, the FINAL LED (green) does not come on. In stead, the operation stops automatically when the setting time for the total timer test (approx. 60 seconds) elapses, and the CHECK LED (red) blinks.

https://truckmanualshub.com/

https://truckmanualshub.com/

CONTROLLER

	Page
GENERAL	3-2
SPECIFICATIONS	3-3
COMPONENTS	3-4
BEFORE REPAIR	3-6
CONNECTOR INSPECTION	3-7
CONTROLLER	3-19
MAIN CONTROLLER ASSY	3-19
TRAVELING AC DRIVER	3-20
MATERIAL HANDLING AC DRIVER, CONTACTOR PANEL ASSY	3-21
CHECK MOTOR INPUT VOLTAGE	3-23
REASSEMBLY	3-25
DISPLAY	3-26
DIRECTION SWITCH	3-27
REMOVAL · INSTALLATION	3-27
DISASSEMBLY · INSPECTION · REASSEMBLY	3-29
ACCELERATOR POTENTIOMETER ADJUSTMENT	3-30
BRAKE SWITCH ADJUSTMENT	3-31
FOOT BRAKE	3-31
PARKING BRAKE	3-31
MATERIAL HANDLING LEVER SWITCH ADJUSTMENT	3-32

https://truckmanualshub.com/

Thank you very much for your reading.

Please Click Here Then Get More Information.