https://truckmanualshub.com/

# MODEL 345B
# TRAILER
# OPERATOR'S MANUAL

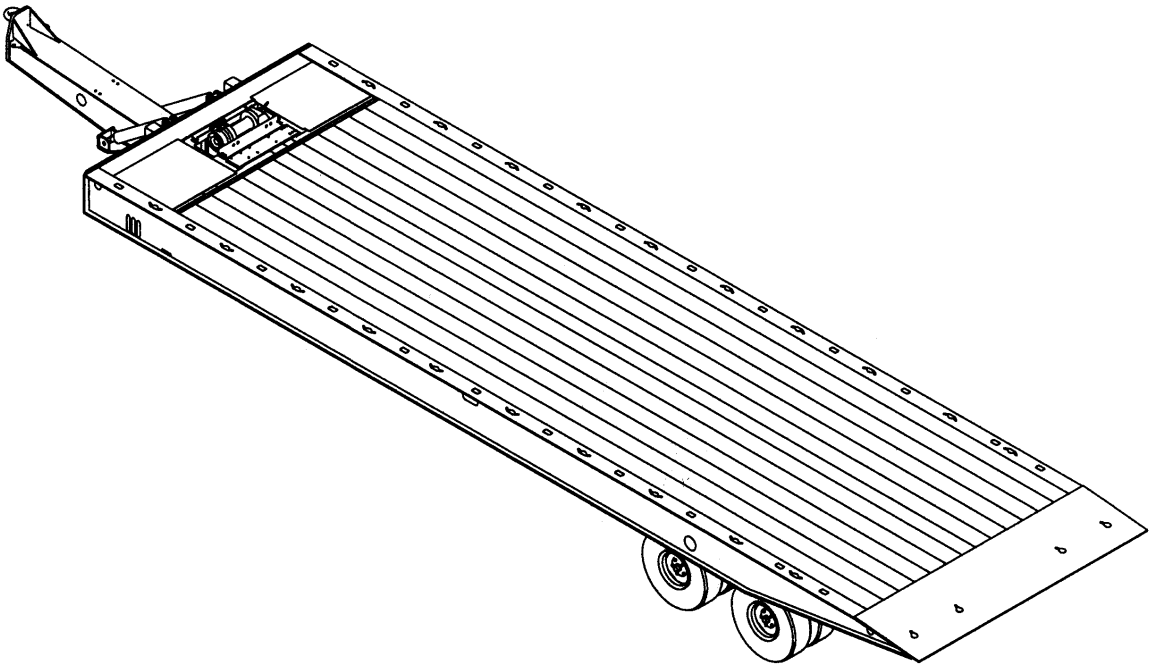

**1900 North Street**
**Marysville, KS 66508**
**(785)562-5381**

**F-272-398** **3/98**

https://truckmanualshub.com/

# WARRANTY

## MANUFACTURER'S GUARANTEE POLICY

### LANDOLL CORPORATION WARRANTY

**LANDOLL warrants each new and unused LANDOLL machine, when properly assembled, adjusted, and operated, to be free of defects in material and workmanship, in normal use and when properly serviced, for a period of twelve (12) months after date of delivery by the Dealer to the original retail purchaser. LANDOLL shall repair or replace, at its option, freight on board (f.o.b.) at its factory or designated DEALER location, any part or parts of such new and unused machine which shall have been reported in writing to LANDOLL within thirty (30) days from date of failure thereof and which LANDOLL inspection shall disclose to have been defective. Defective parts must be returned to the LANDOLL factory, freight prepaid. LANDOLL will not be liable for labor, transportation, or any other charges resulting from replacement of a defective part. This warranty is void if any part not supplied by LANDOLL is used in assembly or repair, or if the machine has been altered, abused, or neglected. LANDOLL repair parts are warranted for ninety (90) days from date of replacement or for the unexpired warranty period of the applicable LANDOLL machine, whichever period is longer. LANDOLL makes no warranty, whatsoever, as to purchased component parts and other trade accessories, except to the extent that such items are warranted by the manufacturer thereof. THIS WARRANTY IS EXCLUSIVE AND IN LIEU OF ALL OTHER WARRANTIES, WHETHER EXPRESSED, IMPLIED, OR STATUTORY (INCLUDING WARRANTIES OF MERCHANTABILITY AND FITNESS FOR PURPOSE), AND LANDOLL SHALL NOT BE LIABLE FOR SPECIAL OR CONSEQUENTIAL DAMAGES OF ANY KIND ON ACCOUNT OF ANY LANDOLL PRODUCT.**

**NO EMPLOYEE OR REPRESENTATIVE IS AUTHORIZED TO CHANGE THIS WARRANTY, VERBALLY OR IN WRITING, OR GRANT ANY OTHER WARRANTY.**

**LANDOLL CORPORATION, WHOSE POLICY IS ONE OF CONTINUOUS IMPROVEMENT, RESERVES THE RIGHT TO MAKE CHANGES WITHOUT OBLIGATION TO MODIFY PREVIOUSLY PRODUCED EQUIPMENT.**

https://truckmanualshub.com/

# MODEL 345B
# TRAILER
# OPERATOR'S MANUAL

**PURCHASED FROM:** _____ **DATE** ____ / ____ / ____

**ADDRESS:** _____

_____

_____

**PHONE NO.:** _____ **SERIAL NO.:** _____

https://truckmanualshub.com/

# REPORTING SAFETY DEFECTS

**If you believe that your vehicle has a defect which could cause a crash or could cause injury or death, you should immediately inform the National Highway Traffic Safety Administration (NHTSA) in addition to notifying Landoll Manufacturing.**

**If NHTSA receives similar complaints, it may open an investigation, and if it finds that a safety defect exists in a group of vehicles, it may order a recall and remedy campaign. However, NHTSA cannot become involved in individual problems between you, your dealer, or Landoll Manufacturing.**

**To contact NHTSA, you may either call the Auto Safety Hotline toll-free at 1-800-424-9393 (or 366-0123 in Washington, D.C. area) or write to: NHTSA, U.S. Department of Transportation, Washington, D.C. 20590. You can also obtain other information about motor vehicle safety from the Hotline.**

**In the event of a defect or problem with your LANDOLL equipment, please notify LANDOLL CORPORATION:**

**LANDOLL CORPORATION**
**SALES AND SERVICE**
**1900 NORTH STREET**
**MARYSVILLE, KANSAS 66508**

**OR PHONE:**
**(785) 562-5381**
**1-800-HAULOLL**
**(1-800-428-5655)**
**FAX NO.: (785) 562-4893**

https://truckmanualshub.com/

# TABLE OF CONTENTS


| SECTION | DESCRIPTION | PAGE NO. |
|---|---|---|
| 1 | INTRODUCTION | 1-1 |
| 2 | STANDARD SPECIFICATIONS | 2-1 |
| 3 | OPERATING INSTRUCTIONS | 3-1 |
| 3-1 | GENERAL | 3-1 |
| 3-2 | PRE-COUPLING OF TRAILER AND TRUCK | 3-2 |
| 3-3 | COUPLING OF THE TOWING VEHICLE TO THE TRAILER | 3-3 |
| 3-4 | CONNECTING TOWING VEHICLE SERVICES TO THE TRAILER | 3-3 |
| 3-5 | TOWING VEHICLE AND TRAILER HOOK-UP AND CHECK-OUT | 3-3 |
| 3-6 | TOWING THE TRAILER | 3-4 |
| 3-7 | PARKING THE TRAILER | 3-5 |
| 3-8 | UNCOUPLING TOWING VEHICLE FROM TRAILER | 3-5 |
| 3-9 | WINCH CONTROLS | 3-6 |
| 3-10 | AXLE CONTROL LEVER | 3-7 |
| 3-11 | TRAILER TILT LEVER | 3-7 |
| 3-12 | LOADING THE TRAILER | 3-8 |
| 3-13 | UNLOADING THE TRAILER | 3-9 |
| 3-14 | AUXILIARY HYDRAULIC POWER ENGINE OPERATION | 3-12 |
| 3-15 | DOCK LEVELER CONTROL | 3-13 |
| 3-16 | REAR IMPACT GUARD SYSTEM | 3-15 |
| 3-17 | ANTI-LOCK BRAKE SYSTEM (ABS) | 3-15 |
| 3-18 | REMOTE OPERATION | 3-16 |
| 3-19 | COLD WEATHER OPERATION | 3-16 |
| 3-20 | HOT WEATHER OPERATION | 3-17 |
| 4 | MAINTENANCE AND LUBRICATION | 4-1 |
| 4-1 | MAINTENANCE SCHEDULE | 4-1 |
| 4-2 | MAINTENANCE PROCEDURES | 4-4 |
| 4-3 | HITCH, FRAME, AND DECK | 4-4 |
| 4-4 | HYDRAULIC SYSTEM | 4-8 |
| 4-5 | ELECTRICAL SYSTEM | 4-8 |
| 4-6 | SUSPENSION MAINTENANCE | 4-9 |
| 4-7 | ALIGNMENT | 4-10 |
| 4-8 | BRAKE SYSTEM MAINTENANCE | 4-13 |
| 4-9 | HUB AND DRUM MAINTENANCE | 4-19 |
| 4-10 | WHEEL BEARING LUBRICATION AND ADJUSTMENT | 4-22 |
| 4-11 | TIRE MAINTENANCE | 4-23 |
| 4-12 | WINCHES | 4-26 |
| 5 | TROUBLESHOOTING | 5-1 |

https://truckmanualshub.com/

# SAFETY PRECAUTIONS

**THIS IS THE SAFETY ALERT SYMBOL. IT IS USED TO ALERT YOU TO POTENTIAL INJURY HAZARDS. OBEY ALL SAFETY MESSAGES THAT FOLLOW THIS SYMBOL TO AVOID POSSIBLE INJURY OR DEATH.**

**⚠DANGER** — **DANGER INDICATES AN IMMINENTLY HAZARDOUS SITUATION WHICH, IF NOT AVOIDED, WILL RESULT IN DEATH OR SERIOUS INJURY.**

**⚠WARNING** — **WARNING INDICATES A POTENTIALLY HAZARDOUS SITUATION WHICH, IF NOT AVOIDED, COULD RESULT IN DEATH OR SERIOUS INJURY.**

**⚠CAUTION** — **CAUTION INDICATES A POTENTIALLY HAZARDOUS SITUATION WHICH, IF NOT AVOIDED, MAY RESULT IN MINOR OR MODERATE INJURY.**

**CAUTION** — **<u>CAUTION USED WITHOUT THE SAFETY ALERT SYMBOL</u> INDICATES A POTENTIALLY HAZARDOUS SITUATION WHICH, IF NOT AVOIDED, MAY RESULT IN PROPERTY DAMAGE.**

https://truckmanualshub.com/

# INTRODUCTION 1

This manual provides operating, servicing, and maintenance instructions, for Model 345B trailer, manufactured by Landoll Corporation, Marysville, Kansas 66508.

**SECTION 1** **gives basic instructions on the use of this manual.**

**SECTION 2** **gives specifications for the trailer, including measurements and component specifications. A Standard Bolt Torque Table is provided to give guidelines for bolt torques to be used when servicing this product.**

**SECTION 3** **gives instructions for the proper operation of the equipment.**

**SECTION 4** **gives general maintenance procedures, a maintenance schedule, and a lubrication schedule. Improper maintenance will void your warranty.**

**IF YOU HAVE ANY QUESTIONS CONTACT:**

**LANDOLL CORPORATION**
**1900 NORTH STREET**
**MARYSVILLE, KANSAS 66508**
**or phone:**
**(785) 562-5381 or**
**(800) 428-5655**
**or FAX:**
**(785) 562-4893**

**SECTION 5** **is a troubleshooting guide to aid in diagnosing and solving problems with the trailer.**

**PARTS LIST** **is a separate manual showing the various assemblies, subassemblies, and systems. Refer to that manual when ordering Landoll replacement parts. Order parts from your Landoll dealer.**

**WARRANTY** **The Warranty Registration form is located with the product documents. Fill it out and mail it within 15 days of purchase. The Warranty is printed inside the front cover.**

**NOTE: IMPROPER ASSEMBLY, MODIFICATION, OR MAINTENANCE OF YOUR LANDOLL MACHINE CAN VOID YOUR WARRANTY.**

**COMMENTS** **Address comments or questions regarding this publication to:**

**LANDOLL CORPORATION**
**1900 NORTH STREET**
**MARYSVILLE, KANSAS 66508**
**ATTENTION: PUBLICATIONS - DEPT. 55**

https://truckmanualshub.com/

https://truckmanualshub.com/

# STANDARD SPECIFICATIONS 2

CAPACITY*. . . . . 40,000 LB. DISTRIBUTED, 30,000 CONCENTRATED IN 10’

OVERALL LENGTH (WITH 48" HITCH): . . . . . 35’ 2"

OVERALL WIDTH: . . . . . .96" OR 102"

WEIGHT (102"WIDE, SPRING SUSPENSION, 7’ HITCH, WOOD DECK, 12M WINCH):. . . . 12,360 LBS.

HITCH: . . . . . PINTLE HOOK WITH HYDRAULIC TILT

LENGTH. . . . . 48", 60" OR 84"

HYDRAULIC TRAVELING AXLE: . . . . . 10’-6"

GROUND LOAD ANGLE: . . . . . 9º

DOCK LEVELER CAPACITY (OPTION): . . . . . 40,000 LB.

HYDRAULIC HOOKUP:

QUICK COUPLERS . . . . . 1/2"
MAXIMUM OPERATING PRESSURE . . . . . 2500 PSI
OPERATING FLOW . . . . . 17 GPM

ELECTRICAL HOOKUP:. . . . . 7-WAY CONNECTOR

AIR HOOK UP: . . . . . GLAD HANDS

SPECIFIC BOLT TORQUES

AIR RIDE SUSPENSION:

EQUALIZER BEAM PIVOT AND ADAPTER BOLTS . . . . . 800 FT.-LBS.
SHOCK ABSORBER MOUNTING . . . . . 150 FT.-LBS.
AIR SPRING MOUNTING: 1/2" . . . . . 35 FT.-LBS.
3/4" . . . . . 35 FT.-LBS.

FOUR SPRING SUSPENSION:

AXLE CLAMP U-BOLTS. . . . . 300 FT.-LBS.
EQUALIZER BEAM PIVOT BOLT . . . . . 480-500 FT.-LBS.
TORQUE ARM BOLT . . . . . 250 FT.-LBS.
TORQUE ARM CLAMP NUTS . . . . . 60 FT.-LBS.

WHEEL FASTENERS - ALL MODELS:

OUTER SPINDLE NUTS . . . . . 250-400 FT.-LBS.
PILOT WHEEL NUTS . . . . . 450-500 FT.-LBS.
DISK WHEEL INNER WHEEL NUTS . . . . . 450-500 FT.-LBS.
DISK WHEEL OUTER WHEEL NUTS . . . . . 450-500 FT.-LBS.
SPOKE WHEEL NUTS . . . . . 200-250 FT.-LBS.

* CAPACITY RATINGS ARE FRAME CAPACITIES ONLY. ACTUAL LOAD CAPACITIES MAY BE RESTRICTED BY FACTORS SUCH AS GROSS AXLE WEIGHT RATINGS (GAWR) OR STATE AND FEDERAL REGULATIONS.

https://truckmanualshub.com/

# LANDOLL CORPORATION
# GENERAL TORQUE SPECIFICATIONS (REV. 4/97)

THIS CHART PROVIDES TIGHTENING TORQUES FOR GENERAL PURPOSE APPLICATIONS WHEN SPECIAL TORQUES ARE NOT SPECIFIED ON PROCESS OR DRAWING.
ASSEMBLY TORQUES APPLY TO PLATED NUTS AND CAPSCREWS ASSEMBLED WITHOUT SUPPLEMENTAL LUBRICATION (AS RECEIVED CONDITION). THEY DO NOT APPLY IF SPECIAL GRAPHITE MOLY-DISULFIDE OR OTHER EXTREME PRESSURE LUBRICANTS ARE USED.
WHEN FASTENERS ARE DRY (SOLVENT CLEANED), ADD 33% TO AS RECEIVED CONDITION TORQUE.
BOLT HEAD IDENTIFICATION MARKS INDICATE GRADE AND MAY VARY FROM MANUFACTURER TO MANUFACTURER.
THICK NUTS MUST BE USED ON GRADE 8 CAPSCREWS.
USE VALUE IN [ ] IF USING PREVAILING TORQUE NUTS.

**TORQUE IS SPECIFIED IN FOOT POUNDS**

| UNC Size | SAE Grade 2 | | SAE Grade 5 | | SAE Grade 8 | | UNF Size | SAE Grade 2 | | SAE Grade 5 | | SAE Grade 8 | |
|---|---|---|---|---|---|---|---|---|---|---|---|---|---|
| 1/4-20 | 4 | [5] | 6 | [7] | 9 | [11] | 1/4-28 | 5 | [6] | 7 | [9] | 10 | [12] |
| 5/16-18 | 8 | [10] | 13 | [16] | 18 | [22] | 5/16-24 | 9 | [11] | 14 | [17] | 20 | [25] |
| 3/8-16 | 15 | [19] | 23 | [29] | 35 | [43] | 3/8-24 | 17 | [21] | 25 | [31] | 35 | [44] |
| 7/16-14 | 24 | [30] | 35 | [43] | 55 | [62] | 7/16-20 | 27 | [34] | 40 | [50] | 60 | [75] |
| 1/2-13 | 35 | [43] | 55 | [62] | 80 | [100] | 1/2-20 | 40 | [50] | 65 | [81] | 90 | [112] |
| 9/16-12 | 55 | [62] | 80 | [100] | 110 | [137] | 9/16-18 | 60 | [75] | 90 | [112] | 130 | [162] |
| 5/8-11 | 75 | [94] | 110 | [137] | 170 | [212] | 5/8-18 | 85 | [106] | 130 | [162] | 180 | [225] |
| 3/4-10 | 130 | [162] | 200 | [250] | 280 | [350] | 3/4-16 | 150 | [188] | 220 | [275] | 320 | [400] |
| 7/8-9 | 125 | [156] | 320 | [400] | 460 | [575] | 7/8-14 | 140 | [175] | 360 | [450] | 500 | [625] |
| 1-8 | 190 | [237] | 408 | [506] | 680 | [850] | 1-14 | 210 | [263] | 540 | [675] | 760 | [950] |
| 1-1/8-7 | 270 | [337] | 600 | [750] | 960 | [1200] | 1-1/8-12 | 300 | [375] | 660 | [825] | 1080 | [1350] |
| 1-1/4-7 | 380 | [475] | 840 | [1050] | 1426 | [1782] | 1-1/4-12 | 420 | [525] | 920 | [1150] | 1500 | [1875] |
| 1-3/8-6 | 490 | [612] | 110 | [1375] | 1780 | [2225] | 1-3/8-12 | 560 | [700] | 1260 | [1575] | 2010 | [2512] |
| 1/1-2-6 | 650 | [812] | 1460 | [1825] | 2360 | [2950] | 1/1-2-12 | 730 | [912] | 1640 | [2050] | 2660 | [3325] |

## METRIC

COARSE THREAD METRIC CLASS 10.9 FASTENERS AND CLASS 10.0 NUTS AND THROUGH HARDENED FLAT WASHERS, PHOSPHATE COATED, ROCKWELL "C" 38-45.
USE VALUE IN [ ] IF USING PREVAILING TORQUE NUTS.

| Nominal Thread Diameter mm | Standard Torque | | | | Nominal Thread Diameter mm | Standard Torque | | | |
|---|---|---|---|---|---|---|---|---|---|
| | Newton-Meters | | Foot-Pounds | | | Newton-Meters | | Foot-Pounds | |
| 6 | 10 | [14] | 7 | [10] | 20 | 385 | [450] | 290 | [335] |
| 7 | 16 | [22] | 12 | [16] | 24 | 670 | [775] | 500 | [625] |
| 8 | 23 | [32] | 17 | [24] | 27 | 980 | [1105] | 730 | [825] |
| 10 | 46 | [60] | 34 | [47] | 30 | 1330 | [1470] | 990 | [1090] |
| 12 | 80 | [101] | 60 | [75] | 33 | 1790 | [1950] | 1340 | [1450] |
| 14 | 125 | [155] | 90 | [115] | 36 | 2325 | [2515] | 1730 | [1870] |
| 16 | 200 | [240] | 150 | [180] | 39 | 3010 | [3210] | 2240 | [2380] |
| 18 | 275 | [330] | 205 | [245] | | | | | |

**Table 2-1 General Torque Specifications**

https://truckmanualshub.com/

## LANDOLL CORPORATION
## HYDRAULIC FITTING TORQUE SPECIFICATIONS
## 37° JIC, ORS, & ORB (REV. 10/97)

THIS CHART PROVIDES TIGHTENING TORQUES FOR HYDRAULIC FITTING APPLICATIONS WHEN SPECIAL TORQUES ARE NOT SPECIFIED ON PROCESS OR DRAWING.
ASSEMBLY TORQUES APPLY TO PLATED CARBON STEEL AND STAINLESS STEEL FITTINGS ASSEMBLED WITHOUT SUPPLEMENTAL LUBRICATION (AS RECEIVED CONDITION). THEY DO NOT APPLY IF SPECIAL GRAPHITE MOLY-DISULFIDE OR OTHER EXTREME PRESSURE LUBRICANTS ARE USED.
BRASS FITTINGS AND ADAPTERS - 65% OF THE TORQUE VALUE FOR STEEL. STAINLESS STEEL, ALUMINUM AND MONEL - THREADS ARE TO BE
LUBRICATED.
**TORQUE IS SPECIFIED IN FOOT POUNDS**

### PARKER BRAND FITTINGS

| Dash Size | 37 Degree JIC | O-Ring (ORS) | O-Ring Boss (ORB) |
|---|---|---|---|
| -4 | 11-13 | 15-17 | 13-15 |
| -5 | 14-16 | — | 21-23 |
| -6 | 20-22 | 34-36 | 25-29 |
| -8 | 43-47 | 58-62 | 40-44 |
| -10 | 55-65 | 100-110 | 57.5-62.5 |
| -12 | 80-90 | 134-146 | 75-85 |
| -16 | 115-125 | 202-218 | 109-121 |
| -20 | 160-180 | 248-272 | 213-237 |
| -24 | 185-215 | 303-327 | 238-262 |
| -32 | 250-290 | — | 310-340 |

## LANDOLL CORPORATION
## HYDRAULIC FITTING TORQUE SPECIFICATIONS
## 37° JIC, ORS & ORB (REV. 10/97)

THIS CHART PROVIDES TIGHTENING TORQUES FOR HYDRAULIC FITTING APPLICATIONS WHEN SPECIAL TORQUES ARE NOT SPECIFIED ON PROCESS OR DRAWING.
ASSEMBLY TORQUES APPLY TO PLATED CARBON STEEL AND STAINLESS STEEL FITTINGS ASSEMBLED WITHOUT SUPPLEMENTAL LUBRICATION (AS RECEIVED CONDITION). THEY DO NOT APPLY IF SPECIAL GRAPHITE MOLY-DISULFIDE OR OTHER EXTREME PRESSURE LUBRICANTS ARE USED.
BRASS FITTINGS AND ADAPTERS - 65% OF THE TORQUE VALUE FOR STEEL.
**TORQUE IS SPECIFIED IN FOOT POUNDS.**

### AEROQUIP BRAND FITTINGS

| Dash Size | 37 Degree JIC | O-Ring (ORS) | O-Ring Boss (ORB) |
|---|---|---|---|
| -4 | 11-12 | 10-12 | 14-16 |
| -5 | 15-16 | — | 18-20 |
| -6 | 18-20 | 18-20 | 24-26 |
| -8 | 38-42 | 32-35 | 50-60 |
| -10 | 57-62 | 46-50 | 72-80 |
| -12 | 79-87 | 65-70 | 125-135 |
| -14 | — | — | 160-180 |
| -16 | 108-113 | 92-100 | 200-220 |
| -20 | 127-133 | 125-140 | 210-280 |
| -24 | 158-167 | 150-165 | 270-360 |
| -32 | 245-258 | — | — |

**Table 2-2 Hydraulic Fitting Torque Specifications**

https://truckmanualshub.com/

https://truckmanualshub.com/

# OPERATING INSTRUCTIONS 3

## 3-1 GENERAL

This section supplies information for operation of the trailer. It describes and locates controls and gives general operation procedures. Read all instructions, warnings, cautions and danger notes before attempting to operate the trailer. Operators must have proper training before operating the trailer.

A hydraulic pump must be coupled to the trailer hydraulic system, or the optional hydraulic engine package started, before using hydraulic controls.

**⚠ WARNING**

**DO NOT OPERATE THE TRAILER WITH ANY KNOWN FAULT THAT MIGHT ENDANGER THE OCCUPANTS, NEARBY WORKERS, OTHER TRAFFIC, THE LOAD, OR THE EQUIPMENT.**

**⚠ WARNING**

**DO NOT OPERATE THE TRAILER UNTIL YOU HAVE READ THE OPERATOR'S MANUAL AND COMPLETELY UNDERSTAND THE PROPER USE AND FUNCTION OF ALL CONTROLS. IMPROPER USE CAN CAUSE PERSONAL INJURY, DAMAGE TO YOUR TRAILER AND CARGO, AND CAUSE TIME-CONSUMING BREAKDOWNS.**

### 3-1.1 Air Brake System

The air brake system of the trailer is operated from the towing vehicle after coupling. The towing vehicle's air system must be coupled to the trailer and charged to 90 psi minimum before the brakes can adequately function.

### 3-1.2 Anti-Lock Brake System (ABS)

The Anti-Lock Brake System of the trailer is constant powered by the auxiliary (blue) circuit of the seven way electrical connector, with backup power from the stop lamp (red) circuit, and ground through the white wire. It is necessary that the blue circuit is hot when the tractor key switch is on. The blue circuit on the trailer may also not be used to power any additional auxiliary devices while the semitrailer is moving forward. If a fault exists in the ABS, normal braking will occur, but the wheels may lock. Service the ABS as soon as possible.

**⚠ CAUTION**

**THE AUXILIARY (BLUE) CIRCUIT IS FOR POWERING THE SEMITRAILER ABS. THIS CIRCUIT MUST BE HOT WHEN THE TRACTOR KEY SWITCH IS ON. NO OTHER ELECTRICAL DEVICES MAY BE POWERED BY THIS CIRCUIT WHILE THE TRAILER IS MOVING FORWARD.**

**⚠ CAUTION**

**IF A FAULT EXISTS IN THE TRAILER ABS, NORMAL BRAKING WILL OCCUR, BUT WHEELS MAY LOCK. SERVICE THE ABS AS SOON AS POSSIBLE.**

https://truckmanualshub.com/

## 3-2 PRE-COUPLING OF TRAILER AND TRUCK

**3-2.1** Slowly back the truck (towing vehicle) up to the front end of the trailer so the hitch of the trailer is centered with the truck. Stop the towing vehicle just inches ahead of the trailer. Set truck parking brake.

**3-2.2** The bolt on hitch can be adjusted to different heights. Make sure the hitch height is at the correct height so the trailer deck is about parallel to the ground when loaded.

**3-2.3** Make sure the towing truck hitch height is at the correct height so the trailer deck is about parallel to the ground when loaded.

**⚠ CAUTION**

**OPERATING PRESSURES GREATER THAN 2500 PSI CAN CAUSE DAMAGE TO THE TRAILER.**

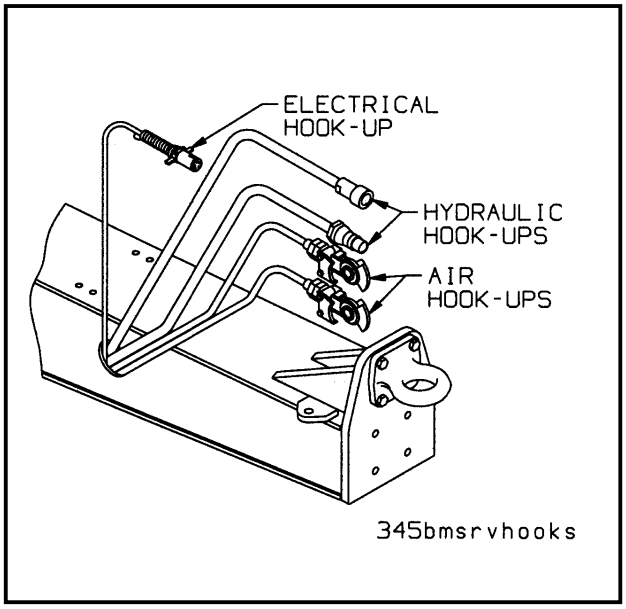


**Figure 3-1 Service Hookups**

**3-2.4** If the trailer hydraulics are powered by the truck hydraulics clean the hydraulic quick couplers and connect the trailer to the truck hydraulic couplers. If trailer is equipped with auxiliary engine hydraulic power start the engine and, after warm up, advance throttle to desired speed.

**3-2.5** Check the trailer hitch height. The hitch should be the same height, to slightly higher, than the hitch of the towing vehicle. If the trailer hitch is bolted to the trailer at the correct height, **according to Steps 3-2.2 and 3-2.3,** raise or lower the hitch by operating the bed tilt hydraulics until the proper height has been obtained.

**⚠ WARNING**

**FAILURE TO CHOCK TRAILER WHEELS COULD ALLOW MOVEMENT OF THE TRAILER RESULTING IN SERIOUS PERSONAL INJURY, DEATH, OR DAMAGE TO PROPERTY IN ITS PATH.**

**3-2.6** Connect the service and emergency air hoses of the towing vehicle to their respective gladhand on the towing truck. The towing vehicle's air hose couplings are attached and locked to the appropriate gladhands; **red emergency line to** the gladhand with the **"EMERGENCY"** tag, and the **blue service line to** the gladhand with the **"SERVICE"** tag **(See Figure 3-1)**.

**a.** Check the air brake operations of the trailer as follows:

1. Apply brakes and inspect brake action on all wheels for prompt application.
2. Release brakes. All brakes should release immediately. Air pressure should discharge quickly from the booster valve.
3. Disconnect the emergency air line from the trailer gladhand. Trailer brakes should promptly set.
4. Re-connect the emergency air line to the trailer. The trailer brakes should release.

**b.** Set the trailer brakes.

https://truckmanualshub.com/

## 3-3 COUPLING OF THE TOWING VEHICLE TO THE TRAILER

**⚠ DANGER**

**KEEP ALL PERSONNEL CLEAR OF FRONT, REAR, AND SIDES OF TOWING VEHICLE AND TRAILER DURING COUPLING, COMPONENT OPERATIONS, AND UNCOUPLING. FAILURE TO STAY CLEAR CAN RESULT IN SERIOUS PERSONAL INJURY OR DEATH.**

**3-3.1** Verify the trailer wheels are chocked and brakes function properly.

**3-3.2** Make sure the towing vehicle's coupler is open.

**3-3.3** Raise or lower the pintle hitch eye to hitch height by activating the bed tilt hydraulic lever, which is the front most lever of the three levers.

**⚠ CAUTION**

**PUSHING THE TRAILER BACKWARDS CAN DAMAGE PARKING STANDS.**

**3-3.4** Slowly back the towing vehicle so the hitch contacts the trailer hitch. Make sure the hitch is centered and will properly connect up. Set the vehicle brakes.

**3-3.5** Lower pintle eye onto truck hitch by tilting bed up and lock the hitch in place.

**3-3.6** Raise the landing gear (parking stands) by first tilting the bed up, activating the front hydraulic lever until the landing gear is off the ground. Remove pins from landing gear and slide landing gear fully up to stowed position. Insert and lock pin holding landing gear in stowed position. Fully lower bed tilt.

### IMPORTANT

**KEEP BRAKES ENGAGED FOR REMAINDER OF HOOKUP, CHECK-OUT PROCEDURES, AND FOR PARKING.**

## 3-4 CONNECTING TOWING VEHICLE SERVICES TO THE TRAILER

**3-4.1** Connect the electrical receptacle on the front of the trailer to the towing vehicle **(See Figure 3-1).** Insure all lights function properly when energized by towing vehicle electrical action.

### IMPORTANT

**THE KEY ON THE PLUG AND THE KEYWAY IN THE SOCKET MUST BE PROPERLY ALIGNED BEFORE INSERTING THE PLUG INTO THE TRAILER SOCKET.**

**3-4.2** It is necessary that the tractor blue wire is connected to the appropriate electrical source on the tractor.

https://truckmanualshub.com/

## 3-5 TOWING VEHICLE AND TRAILER HOOK-UP AND CHECK-OUT

**⚠ WARNING**

**FAILURE TO PROPERLY SET AND CHECK PARKING BRAKE, AND CHOCK WHEELS WHEN PARKING AND DURING STORAGE, COULD ALLOW MOVEMENT OF THE TRUCK/TRAILER RIG RESULTING IN SERIOUS PERSONAL INJURY, DEATH, OR DAMAGE TO PROPERTY IN ITS PATH.**

**3-5.1** Assure landing gear is raised up all the way.

**3-5.2** Attach safety chains from the trailer to the towing vehicle.

**3-5.3** Check your maintenance schedule and be sure everything is up-to-date.

**3-5.4** Set parking brake. If brakes are not properly set, the truck/trailer may roll when removing wheel chocks. Carefully remove all wheel chocks.

## 3-6 TOWING THE TRAILER

**⚠ DANGER**

**ALWAYS CHECK BEHIND AND UNDER THE TRUCK AND TRAILER FOR PERSONS OR OBJECTS BEFORE MOVING. FAILURE TO CHECK CAN LEAD TO SERIOUS PERSONAL INJURY OR DEATH TO OTHERS, OR DAMAGE TO PROPERTY.**

**3-6.1** Driving the towing vehicle with the trailer coupled behind requires constant attention to the overall length of the combination. Turning, passing, acceleration, braking, stopping, and back-up require special attention to the “hinged-in-the-middle” configuration of the trailer. When executing steep grades or turning tight curves, the trailer must not be allowed to push the towing vehicle, or jackknifing the trailer with the towing vehicle may result. Application of the trailer brakes to keep the trailer in tow will help prevent this pushing. Braking should begin before descending a hill or attempting a curve, to assure control.

**3-6.2** Make a moving test of the trailer brakes at low, and medium speeds *before* traveling at highway speed.

**a.** The Anti-Lock Brake System (ABS) warning lamp mounted at left rear side of the trailer should come on when power is supplied to the ABS by turning the tractor keyswitch on. The warning lamp should go off once the trailer exceeds 4 mph. Once the vehicle speed exceeds 4 mph, the light should remain off unless a fault occurs or the keyswitch is turned off, then on again.

**⚠ CAUTION**

**IF A FAULT EXISTS IN THE TRAILER ABS, NORMAL BRAKING WILL OCCUR, BUT WHEELS MAY LOCK. SERVICE THE ABS AS SOON AS POSSIBLE.**

**b.** If the warning lamp does not go off, a fault exists in the trailer ABS. If a fault exists, service using the anti-lock brake system section or the troubleshooting section of this manual.

**3-6.3** Monitor the air pressure gauge on the dash of the towing vehicle. Pressure should not fall below 105 psi at any time.

https://truckmanualshub.com/

**3-6.4** The trailer wheels track to the inside of the towing vehicle during turns. Thus, turning corners requires a wide swing to prevent “curb hopping”, and to allow the trailer to clear any obstacle on the inside of the corner.

**3-6.5** To stop, use a gradual and smooth application of brakes.

**3-6.6** Backing should be done with care. Tail overhang, trailer length, and allowable space must be taken into consideration.

**3-6.7** The load on the trailer should be positioned so a minimum of 8% of the total weight and a maximum of 30% of the total weight is on the hitch.

## 3-7 PARKING THE TRAILER

**3-7.1** Position truck/trailer rig on a level, solid surface.

**3-7.2** Set the *PARKING BRAKE*, *not the trailer hand brake*, and check for proper brake holding.

**3-7.3** Chock wheels of trailer.

**3-7.4** Check for any air leaks in lines, relay valve, brake air chamber, or any other air system component.

## 3-8 UNCOUPLING TOWING VEHICLE FROM TRAILER

**3-8.1** Park the trailer according to instructions in **Section 3-7.**

**3-8.2** Disconnect emergency and service air lines.

**3-8.3** Disconnect the electrical cable and store so end is not on the ground.

**3-8.4** Disconnect safety chains from the towing vehicle.

**3-8.5** Lower the landing gear to the ground. Tilt trailer bed up so next landing gear pin hole is available. Install and lock landing gear pins. Unlock pintle hitch. Tilt trailer bed down until pintle hitch eye lifts off pintle hook.

**3-8.6** Shut off towing vehicle hydraulic supply, disconnect hydraulic hoses.

**3-8.7** Verify that all service lines and safety chains are disconnected and trailer wheels are chocked.

**3-8.8** Pull towing vehicle away from the trailer.

https://truckmanualshub.com/

## 3-9 WINCH CONTROLS

**⚠ DANGER**

**1. THE WINCH IS NOT DESIGNED OR INTENDED TO BE USED FOR LIFTING OR MOVING PEOPLE. USING IT THIS WAY CAN CAUSE SERIOUS INJURY OR DEATH.**
**2. MAKE CERTAIN THE WINCH CABLE SPOOL CLUTCH IS SET TO ENGAGE AND CLUTCH IS FULLY ENGAGE BEFORE LOAD TENSION IS APPLIED TO WINCH CABLE. NEVER ATTEMPT TO DISENGAGE THE WINCH CABLE SPOOL WHEN THE CABLE IS UNDER TENSION. LOSS OF LOAD CONTROL, PROPERTY DAMAGE, INJURY OR DEATH CAN RESULT.**
**3. FAILURE TO LEAVE AT LEAST FIVE WINCH CABLE WRAPS ON THE WINCH CABLE SPOOL COULD ALLOW THE CABLE TO COME OFF THE SPOOL, RESULTING IN SERIOUS PERSONAL INJURY OR DEATH.**

**3-9.1** The **12,000# WINCH CLUTCH HANDLE (See Figure 3-2)** is on the curbside of the winch assembly. The 12,000 pound winch clutch handle has two positions that engage or disengage the winch spool:

**DISENGAGE** In this position, the winch is disengaged. This allows the spool to “free-wheel”. **This is only used when there is no load on the winch cable**. This feature allows the cable to be pulled out fairly fast and does not require operating the hydraulic system.

**ENGAGE** In this position, the winch is engaged. Cable may be “power” spooled on or off the winch spool. The winch is now controlled by the Winch Hydraulic Lever.

**⚠ CAUTION**

**A MINIMUM OF 5 WRAPS OF CABLE MUST BE LEFT ON THE WINCH DRUM.**

**3-9.2** The **HYDRAULIC WINCH CONTROL LEVER** is the center lever **(See Figure 3-3).** It has three positions:

**UP** In this position, the winch reels the winch cable in.

**CENTER** This is the neutral position. This position has some holding power, but cannot be relied upon to hold a load during transport.

**DOWN** In this position, the winch reels the winch cable out.

https://truckmanualshub.com/

## 3-10 AXLE CONTROL LEVER

The **AXLE CONTROL LEVER (See Figure 3-3)** is located on the front, lower deck of the driver's side frame member. It is the rear lever with three positions:

**UP** In this position, the undercarriage slides forward for loading.

**CENTER** This is neutral position.

**DOWN** In this position, the undercarriage slides to the rear. The undercarriage must be in the rear-most position for transport.

## 3-11 TRAILER TILT LEVER

The **TRAILER TILT LEVER (See Figure 3-3)** is located on the front lower deck of the driver's side frame member. It is the front lever with three positions:

**UP** In this position, the front of the trailer raises.

**CENTER** This is neutral position.

**DOWN** In this position, the front of the trailer lowers.

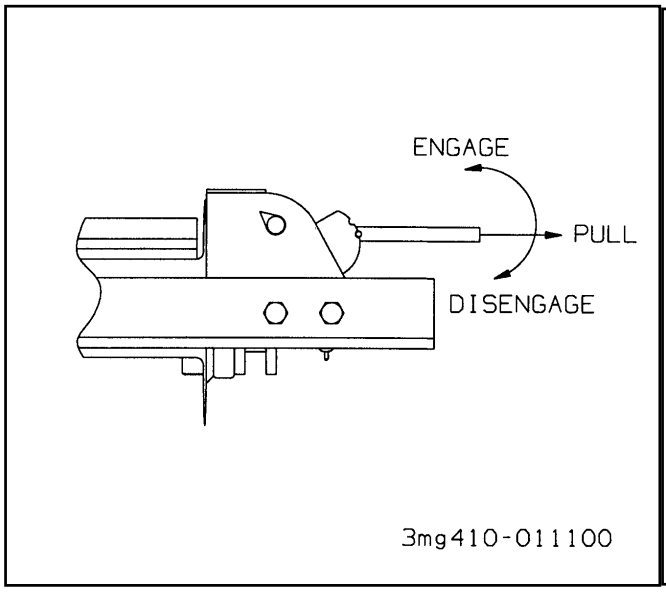


**Figure 3-2 Winch Clutch Handle**

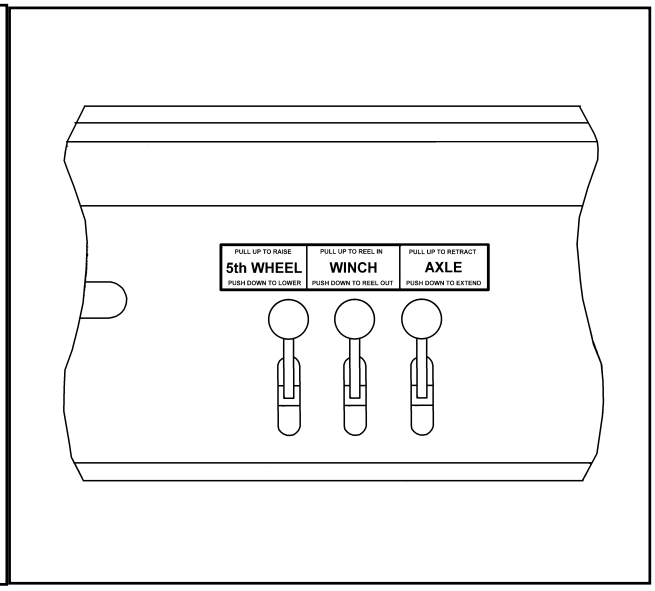


**Figure 3-3 Hydraulic Controls**

https://truckmanualshub.com/

## 3-12 LOADING THE TRAILER

**3-12.1** Practice all standard industrial safety standards **(See Figure 3-4).** Do not load any payload that will overload any component of the trailer or cause an unsafe condition.

**3-12.2** Proper operation requires that the undercarriage be pulled fully forward to create lowest load angle.

**3-12.3** Park the tractor/trailer in a straight line on level even surface. Set the tractor brakes and release the trailer brakes **(See Figure 3-4).**

**3-12.4** Start operation of hydraulic power system. If the hydraulic engine package is installed start and warm up engine following engine operating instructions in **Section 3-14. (Read engine operator's manual.)**

**3-12.5** Alternate between moving the undercarriage forward (out of pockets) and tilting the front of the bed up until the undercarriage is fully forward and the approach plate is on the ground. The weight of the trailer bed should rest partly on approach plate and partly on undercarriage. The object is to have the approach plate resting on the ground whenever the center of gravity of the trailer and load is behind the rear axle of trailer. In loading position, the approach plate should be resting on the ground and the undercarriage fully forward.

**⚠ CAUTION**

**DO NOT ALLOW THE BACK TRAILER AXLE TO LEAVE THE GROUND. THIS CAN RESULT IN DAMAGE TO THE TRAILER.**

**⚠ WARNING**

**IN LOADING OR UNLOADING POSITION, THE APPROACH PLATE SHOULD BE RESTING ON THE GROUND.**

**⚠ WARNING**

**ALWAYS USE LOW LOAD ANGLE TO LOAD AND UNLOAD POWERED PRODUCTS.**

**3-12.6** Winch or drive the load onto the trailer. Insure that the load is steering straight up onto the semitrailer and does not maneuver off the side of the trailer. Continue until load center of gravity is just ahead of the axles, if possible. The load should never place more weight on the kingpin than on the rear axles during loading and unloading.

**⚠ CAUTION**

**MAXIMUM CONCENTRATED LOAD IN A 10 FT. AREA IS 30,000 LBS.**

**⚠ WARNING**

**1. THE TRAILER MUST BE COUPLED TO A TRACTOR AND THE LANDING GEAR RAISED OFF THE GROUND BEFORE OPERATING.**
**2. DO NOT EXCEED THE GROSS AXLE WEIGHT RATINGS FOR ANY AXLE ON YOUR VEHICLE. THE COMBINED WEIGHT OF THE TRAILER AND CARGO MUST NOT EXCEED THE GROSS VEHICLE WEIGHT RATING (GVWR) OF THE TRAILER.**

https://truckmanualshub.com/

**⚠ WARNING**

**THE CENTER OF GRAVITY OF THE LOAD MUST BE IN FRONT OF THE REAR AXLE WHENEVER THE APPROACH PLATE IS NOT SUPPORTED BY THE GROUND. FAILURE TO DO THIS CAN CAUSE THE TRAILER TO TILT BACK RESULTING IN INJURY OR DEATH.**

**3-12.7** Securely tie down the load and attach the winch cable to the front of the load, if it is not already attached. Reel in winch cable until it becomes tight. (Winch cable serves as a safety tiedown in case load tiedown fails, but is not to replace tie downs.)

**3-12.8** If the load center of gravity is not ahead of the rear axle, alternate between tilting the front of the bed up and moving the undercarriage to the rear, until the center of gravity of the trailer load is in front of the rear axle. Keep part of the load on the wheels and part on the approach plate. Never move the undercarriage so far to the rear that the approach plate is lifted off the ground during this procedure.

**3-12.9** When the center of gravity of the trailer and load is in front of the rear axle, fully lower the tilt angle.

**3-12.10** After bed tilt angle is fully lowered, move the undercarriage to the rear until it is in transport position. The trailer deck will lower as the undercarriage rollers go into pockets. Hold **TRAILER TILT** lever in the down position until hydraulic system works against the bottomed out Hydraulic Tilt Cylinders. Hold **AXLE CONTROL** lever in the transport position until hydraulic system works against the fully extended hydraulic axle cylinder.

**3-12.11** Check the position of the payload. If between 8% and 30% of the total weight of trailer plus payload is not on the hitch, then properly secure load before removing tie downs. Move payload to proper position, then secure the load using approved standard tie-down methods.

**3-12.12** Disengage the P.T.O. system of tractor or shut off the hydraulic power engine.

**3-12.13** Recheck that the load is properly secured. Assure maintenance schedule is up-to-date and trailer is ready to be pulled.

## 3-13 UNLOADING THE TRAILER

**⚠ WARNING**

**NEVER TILT THE TRAILER WITHOUT THE LOAD PROPERLY RESTRAINED. FAILURE TO DO SO MAY RESULT IN THE LOAD MOVING RESULTING IN SERIOUS PERSONAL INJURY, DEATH, OR DAMAGE TO PROPERTY IN IT'S PATH.**

**⚠ WARNING**

**DO NOT PULL THE REAR AXLE OF TRAILER FARTHER FORWARD THAN THE CENTER OF GRAVITY OF THE PAYLOAD WHEN REAR APPROACH PLATE IS OFF THE GROUND. FAILURE TO OPERATE CORRECTLY CAN ALLOW FRONT OF TRAILER TO GO UP AND PULL TOWING TRUCK OFF THE GROUND RESULTING IN SERIOUS PERSONAL INJURY, DEATH, OR DAMAGE TO PROPERTY IN ITS PATH.**

https://truckmanualshub.com/

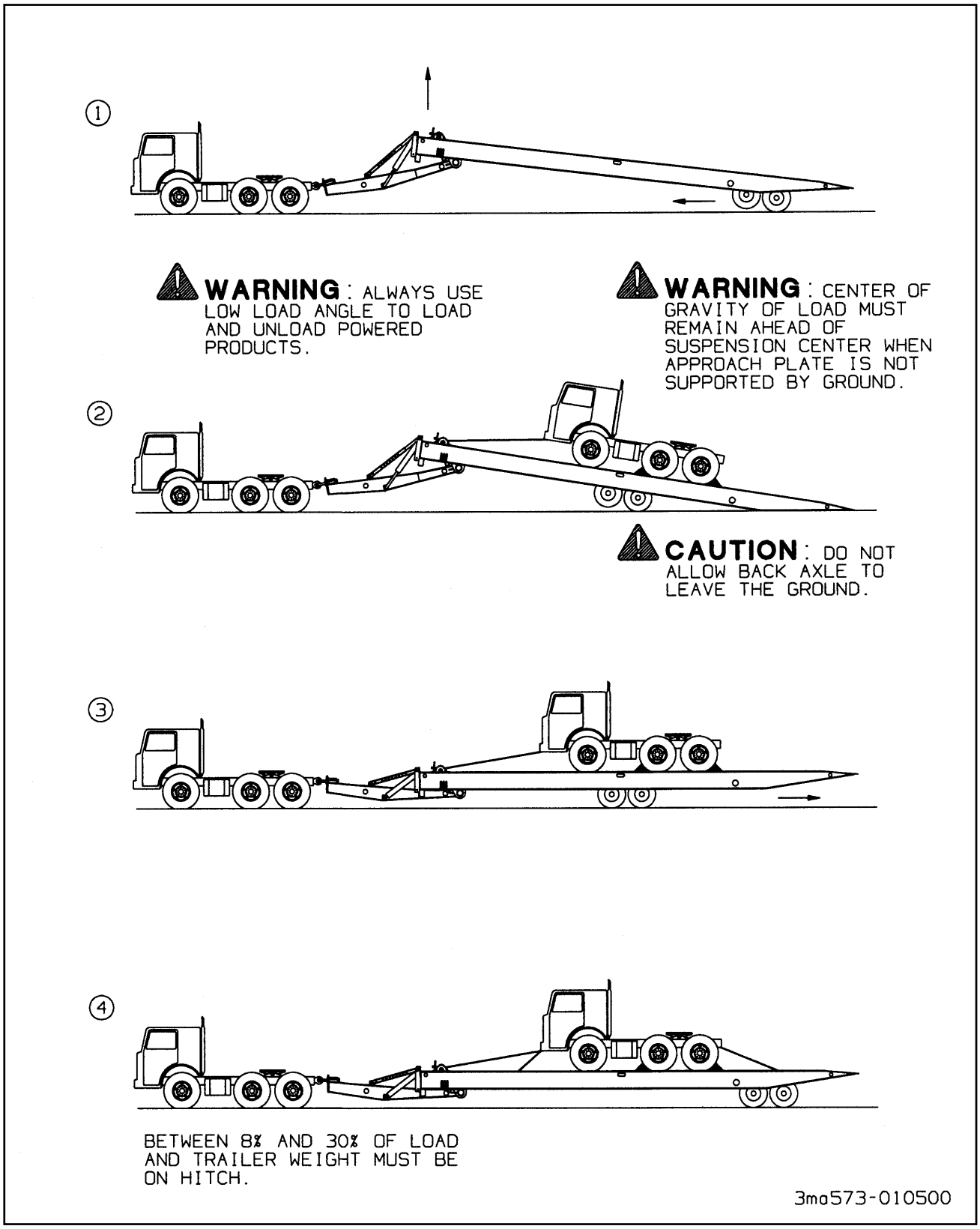


**Figure 3-4 Steps for Loading and Unloading**

https://truckmanualshub.com/

**3-13.1** Practice all standard industrial safety standards **(See Figure 3-4).**

**3-13.2** Park towing vehicle and trailer on relatively level ground.

**3-13.3** Set towing vehicle's brakes.

**3-13.4** Engage the P.T.O. or start the hydraulic power engine.

**3-13.5** Pull the axles forward, out of their pockets.

**3-13.6** Alternate between raising the trailer and pulling the axles forward until the approach plate touches the ground. Never pull the axles forward so far that center of gravity of the load and trailer are behind the rear axle of the trailer unless the approach plate is on the ground. Always use low load angle to unload powered products. To achieve low load angle, the undercarriage has to be all the way forward. The object is to keep a part of the weight on the approach plate, and part of the weight on the wheels while lowering the tilt angle. The maximum load angle is only intended, if required, for unloading non-powered products and to transfer load to tractor. Transfer load to tractor by raising deck and moving axles toward rear until load is forward of the rear axle, thus transferring load to tractor.

**3-13.7** If load is non-powered, insure that the winch cable is firmly attached to the load and tension is on the cable. Tilt trailer according to **Section 3-13.6.** With winch cable firmly attached to load, remove other load securing devices. Use the winch to assist the load down to the end of the approach plate. With end of load resting on the ground, block load from rolling or sliding, if necessary. Disconnect the winch and move the trailer from under the load, allowing the load to move off trailer to the ground.

## ⚠ WARNING

**WHEN REMOVING LOAD, INSURE THAT THE LOAD IS STEERING STRAIGHT SO IT DOES NOT MANEUVER OFF THE SIDE OF THE TRAILER. FAILURE TO DO SO COULD RESULT IN DAMAGE TO EQUIPMENT, INJURY, OR DEATH.**

**3-13.8** If load is powered, tilt trailer according to **Section 3-13.6.** Make sure the trailer tilt is at the lowest load angle. Remove safety secure devices. Take tension off winch cable and remove winch cable. Power load off the trailer.

**3-13.9** Before returning the trailer to transport position, insure that there is sufficient distance between the load and the rear of the trailer so that the trailer does not hit the load when being folded back to transport position.

## ⚠ CAUTION

**BEFORE RETURNING THE TRAILER TO TRANSPORT POSITION, INSURE THAT THERE IS SUFFICIENT DISTANCE BETWEEN THE LOAD AND THE REAR OF THE TRAILER. FAILURE TO DO SO MAY RESULT IN DAMAGE T0 THE TRAILER AND/OR LOAD.**

**3-13.10** Tilt the bed down and move undercarriage rearward to transport position. Hold **TRAILER TILT** lever in the down position until hydraulic system works against the bottomed out Hydraulic Tilt Cylinders. Hold **AXLE CONTROL** lever in the transport position until hydraulic system works against the fully extended hydraulic axle cylinder.

**3-13.11** Reel in winch cable and secure hook.

**3-13.12** Disengage the P.T.O. system of tractor or shut off the hydraulic power engine.

https://truckmanualshub.com/

## 3-14 AUXILIARY HYDRAULIC POWER ENGINE OPERATION

**3-14.1** The Hydraulic Power Supply Engine is used to power the hydraulic functions, should the tractor not be equipped with hydraulic hookups.

### IMPORTANT

**1. CHECK THE FOLLOWING FLUID LEVELS BEFORE STARTING THE ENGINE PACKAGE: ENGINE OIL, FUEL SUPPLY, HYDRAULIC OIL. (CHECK OIL LEVEL WHILE SEMITRAILER IS NOT TILTED AS TILTING WILL CHANGE THE OIL LEVEL IN THE TANK.)**

**2. IF THE ENGINE DOES NOT CRANK, CHECK THE FOLLOWING ON THE BATTERY: CHARGE, FLUID, TERMINALS, AND CABLES. TAKE CORRECTIVE ACTIONS AS NEEDED.**

### ⚠ CAUTION

**IF THE HYDRAULIC FLUID LEVEL IS LOW DURING OPERATION, THE SEMITRAILER MAY NOT OPERATE CORRECTLY, RESULTING IN DAMAGE TO THE SEMITRAILER.**

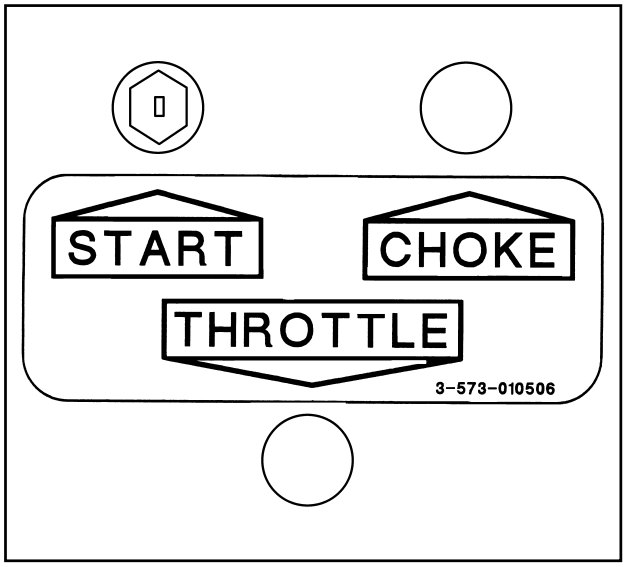


**Figure 3-5 Engine Control Panel**

**3-14.2** The Engine Ignition Switch, Choke and Throttle are on the Engine Control Panel mounted on the driver's side of the trailer. **(See Figure 3-5).**

**3-14.3** The **HYDRAULIC POWER SUPPLY ENGINE THROTTLE** controls the speed at which the engine operates **(See Figure 3-5)**. It is a variable position control:

**HIGH** In this position, the engine throttle is fully open, letting it run at full speed.

**LOW** In this position, the engine throttle is closed, letting the engine run at a slow idle.

**3-14.4** To start pull the choke completely out and set the throttle to the LOW position.

**3-14.5** Turn the ignition key to the START position. The engine should crank and then start.

### ⚠ CAUTION

**DO NOT CRANK ENGINE FOR MORE THAN 30 SECONDS. IF ENGINE DOES NOT START CONSULT THE OWNER'S MANUAL SUPPLIED WITH THE ENGINE.**

**3-14.6** When the engine starts, release the key. Gradually push the choke lever in until the engine runs smoothly.

**3-14.7** Black smoke from the exhaust and a rough running engine usually indicate overchoking.

**3-14.8** To adjust the speed, turn the throttle control in or out, as needed, until the engine runs smoothly at a speed capable of withstanding use of the hydraulic controls. The hydraulic controls should now be functional.

**3-14.9** Before shutting it off, allow the engine to cool down by running at a slow idle for one to two minutes. Then turn the ignition switch to the off position.

**3-14.10** Once the engine is cool, turn or push the throttle and choke control completely in and turn the key to the OFF position.

https://truckmanualshub.com/

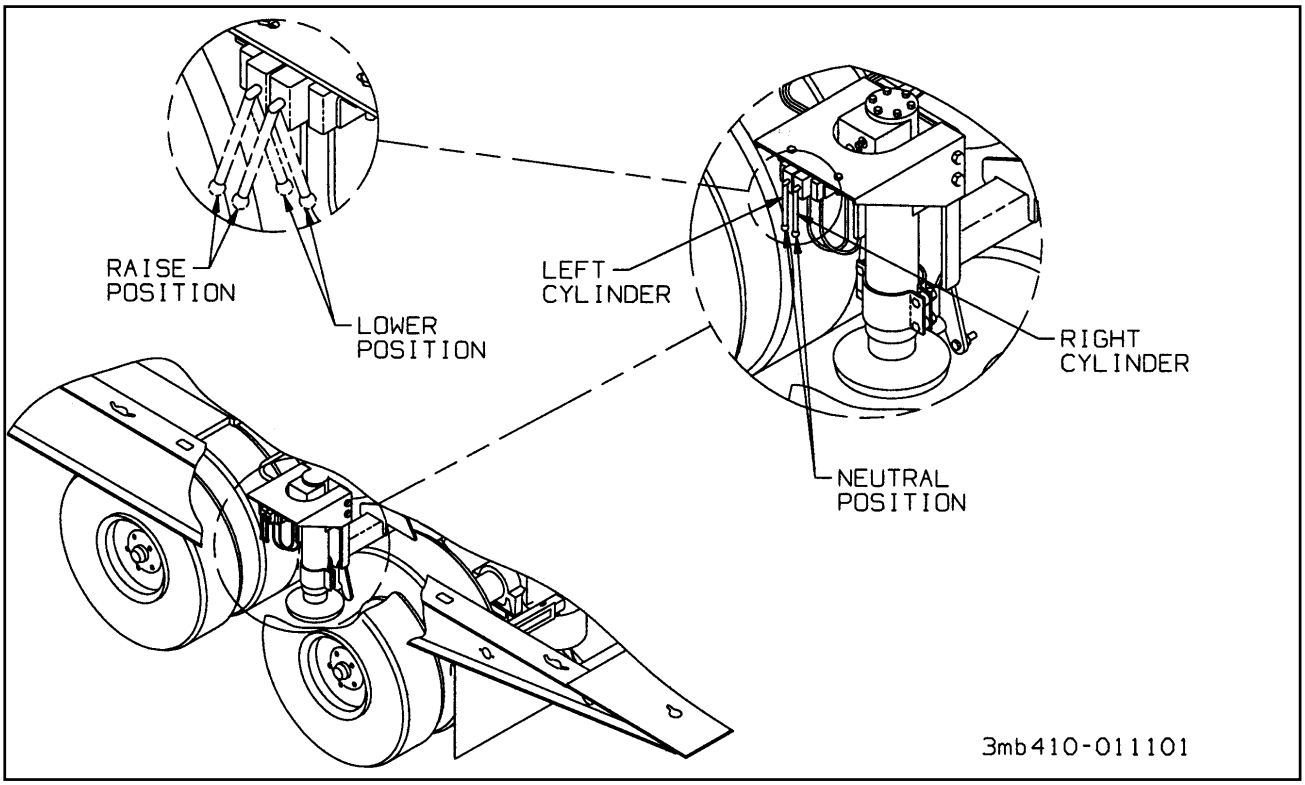


**Figure 3-6 Dock Leveler Controls**

## 3-15 DOCK LEVELER CONTROL

**3-15.1** To activate the dock level hydraulic circuit, pull out on the push-pull selector valve located on the left driver's side of trailer bed near the front.

**3-15.2** The **DOCK LEVELER CONTROLS** are located under the deck, on the driver's side, between the axles **(See Figure 3-6)**. The front-most control adjusts the cylinder on the driver's or street side of the trailer. The rear-most control adjusts the cylinder on the curb-side of the trailer. Both controls have three position.

**IN** When the control for either cylinder is pushed in, toward the center of the trailer, the corresponding side of trailer is lowered.

**CENTER** This position is neutral for either control. When either control is in this position, there is no effect on either cylinder.

**OUT** When the control for either cylinder is pulled out, away from the center of the trailer, the corresponding side of trailer is raised.

**3-15.3** After completion of dock level use return the push-pull selector valve to full in position.

https://truckmanualshub.com/

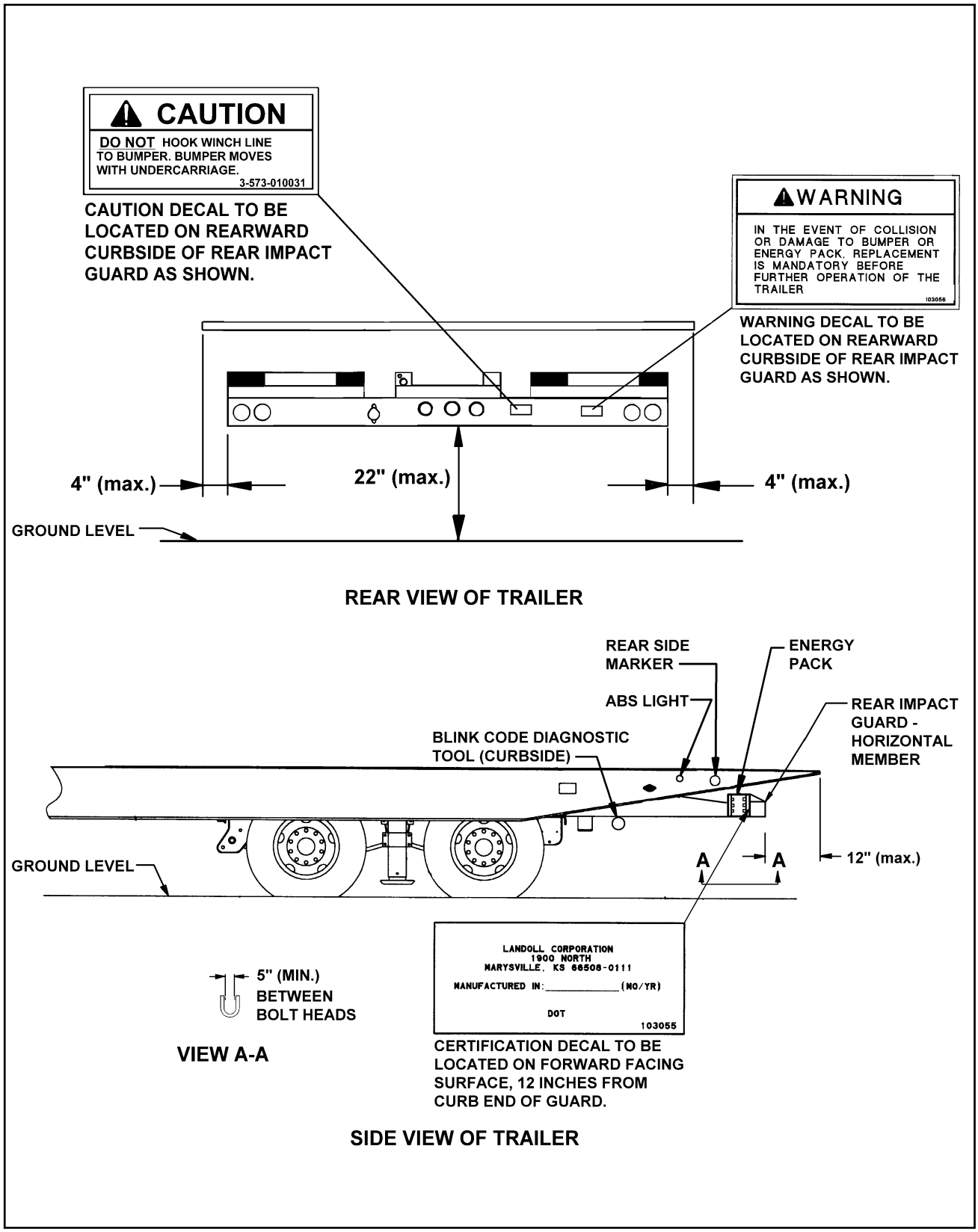


**Figure 3-7 Rear Impact Guard and Antilock Brake System**

https://truckmanualshub.com/

## 3-16 REAR IMPACT GUARD SYSTEM

Vehicle standards FMVSS No. 224, Rear Impact Protection, requires all trailers manufactured after January 26, 1998 shall be equipped with a rear impact guard certified by the manufacturer as meeting FMVSS No. 223, Rear Impact Guards. The guard, or bumper, **(See Figure 3-7)** meets the following requirements:

- **a minimum of 4 inches vertical height**
- **extend laterally to within 4 inches of the sides of the trailer**
- **a ground clearance of no more than 22 inches**
- **placed no more than 12 inches from the rear of the trailer**
- **capable to deflect 5 inches**

The standard also specifies minimum force and energy absorption requirements for the guard. A DOT decal certifies that the guard meets FMVSS No. 223 and 224 standards. The decal is placed **and must remain at all times** on the forward facing surface of the guard, 12 inches inboard of the curb side and of the guard. **See Figure 3-7** for location of decals.

Replace any component that does not allow the above minimum requirements to be met. Any hardware that holds the rear impact guard and becomes damaged or becomes loose shall be removed and replaced. The 3/4" grade 8 screws that hold the bumper energy pack shall be loctited and torqued to 280 ft.-lbs.

**⚠ DANGER**

**ALWAYS CHECK THE CONDITION OF THE REAR IMPACT GUARD SYSTEM. IF GUARD SYSTEM HAS BEEN DAMAGED, IT MUST BE REPLACED. FAILURE TO MAINTAIN GUARD SYSTEM MAY RESULT IN INJURY OR DEATH TO OTHERS.**

## 3-17 ANTI-LOCK BRAKE SYSTEM (ABS)

Vehicle standards FMVSS No. 121, anti-lock brake system requires all trailers with air brake systems to have ABS after March 1, 1998. Each trailer (including a trailer converter dolly) shall be equipped with an anti-lock brake system that controls the wheels of at least one axle of the trailer. Wheels on other axles of the trailer may be indirectly controlled by the anti-lock brake system.

NHTSA Docket 92-29; notice 11 published September 23, 1996 specifies the ABS warning light be mounted near the rear of the left side of the trailer **(See Figure 3-7)**.

- **decal or lens marking with ABS to identify the lamp**
- **the lamp must illuminate one time whenever power is supplied to the ABS. At any time the light remains on when power is supplied there is a malfunction to the system.**

Tandem axle trailers use a four sensor, two modulator system. Sensors are located at each hub of the front and rear axles, and each modulator controls one side of the trailer.

The ABS is constant powered by the auxiliary (blue) circuit, center pin on the semitrailer seven way electrical connector. This circuit must be hot whenever the tractor keyswitch is on. This circuit must also not be used to power any additional electrical devices while the semitrailer is moving forward. However, additional devices such as remote controls may be powered from the auxiliary circuit while the semitrailer is stationary. Back up power to the ABS is supplied through the stop lamp (red) circuit, No. 4 pin on the seven way connector, and ground is supplied by the white wire, No. 1 pin.

https://truckmanualshub.com/

**⚠ CAUTION**

**THE AUXILIARY (BLUE) CIRCUIT IS FOR POWERING THE SEMITRAILER ABS. THIS CIRCUIT MUST BE HOT WHEN THE TRACTOR KEY SWITCH IS ON. NO OTHER ELECTRICAL DEVICES MAY BE POWERED BY THIS CIRCUIT WHILE THE SEMITRAILER IS MOVING FORWARD.**

Malfunction in the ABS is signaled by illumination of the ABS warning lamp located at the left rear side of the semitrailer. The warning lamp will come on and stay on while power is supplied to the ABS on a moving vehicle, if there is a fault. If a fault in the ABS exists, normal braking will still occur, but wheels may lock. The semitrailer is still operable, but the system should be serviced as soon as possible.

**⚠ CAUTION**

**IF A FAULT EXISTS IN THE SEMI-TRAILER ABS, NORMAL BRAKING WILL OCCUR, BUT WHEELS MAY LOCK. SERVICE THE ABS AS SOON AS POSSIBLE.**

The ABS is also equipped with a Blink Code Diagnostic Tool mounted at the right rear corner of the undercarriage or at the very rear of the trailer. This tool is used to identify faults that may occur in the ABS so that they may be repaired.

Refer to ABS maintenance manual supplied with trailer to answer basic questions for the anti-lock brake system, obtain outline procedures on how to adjust, test, remove, and install ABS components, as well as how to test for faults in the system by using “Blink Code Diagnostics”; and illustrates ABS components, wiring, and plumbing installation diagrams.

## 3-18 REMOTE OPERATION

**3-18.1** The wired remote control plugs into an electrical receptacle usually located by the Hydraulic Control Panel. Optional receptacle locations are on the rear street side or both rear street and rear curb sides. The wired remote is available as a single, dual, or triple function. **(See Figure 3-8).**

**3-18.2** A wireless radio remote control is also available as a dual, or triple function.

**3-18.3** The remotes operate any of the hydraulic functions that are desired. The remote components are connected to the hydraulic valve section that the remote is desired to operate. The electrical switches operate the functions of the hydraulic spool valve instead of operating the control levers on the valve.

## 3-19 COLD WEATHER OPERATION

**3-19.1** Cold weather causes lubricants to congeal, insulation and rubber parts to become hard, which may lead to problems found in bearings, electrical systems, and air systems. Moisture attracted by warm parts can condense, collect and freeze to immobilize equipment. The truck/trailer operator must always be alert for indicators of cold weather malfunctions.

**3-19.2** During any extended stop period, neither the service nor parking brake should be used as they can freeze up. Use wheel chocks to secure the vehicle from moving.

**3-19.3** Check all structural fasteners, air system fittings, gaskets, seals and bearings for looseness that can develop due to contraction with cold. Do not over-tighten.

**3-19.4** Check tire inflation. Tire inflation decreases when the temperature decreases.

**3-19.5** Periodically check drain holes in the bottom of the relay valve (for trailers with air brakes) and storage compartments. They must be open at all times to avoid moisture entrapment.

https://truckmanualshub.com/

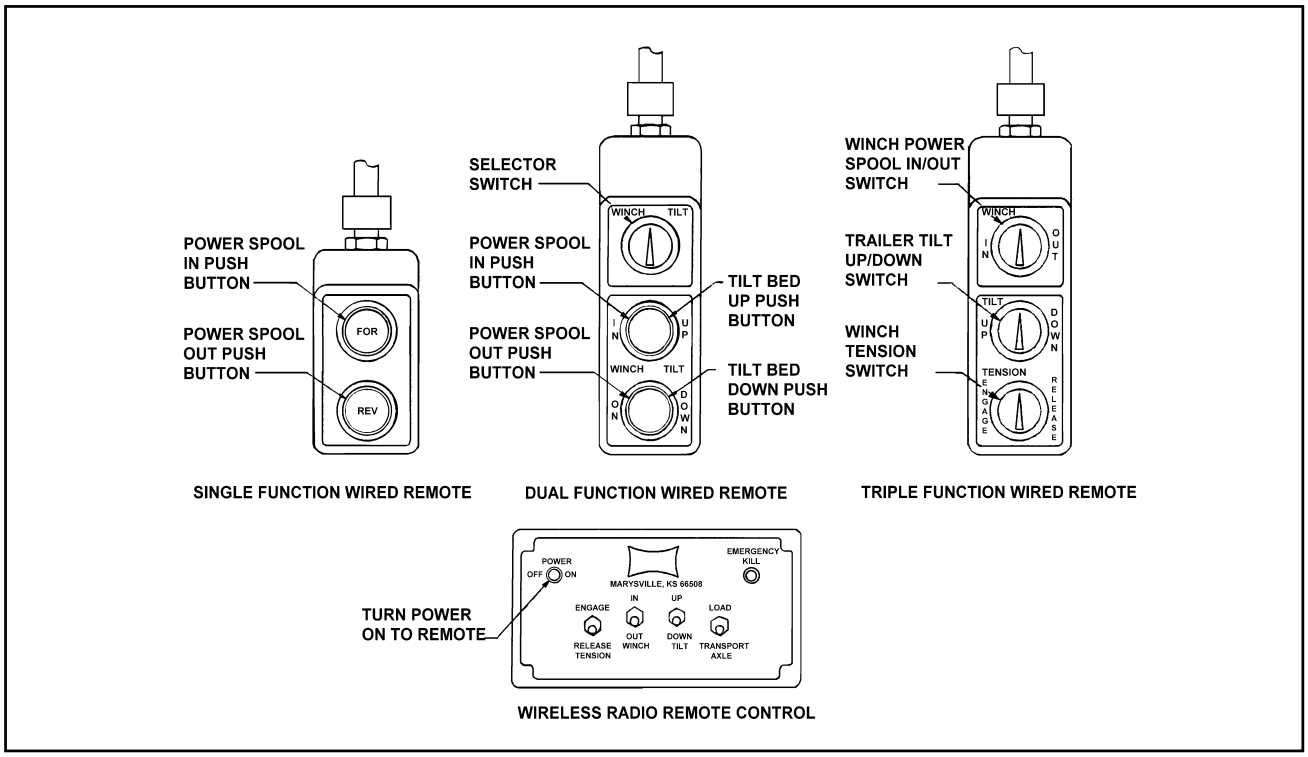


**Figure 3-8 Remote Controls**

## 3-20 HOT WEATHER OPERATION

**3-20.1** Hot weather operation can cause expansion of parts, resulting in tightening of bearings, fasteners, and moving parts. Failure of gaskets or seals can occur.

**3-20.2** The trailer should be parked in the shade if possible. Long exposure to the sun will shorten service life of rubber components (i.e., tires, light and hose grommets, hoses, etc.) and paint life.

**3-20.3** Check tire pressure early in the day before beginning operations while the tire is cool. Put all valve stem caps back on after checking.

**3-20.4** If the area is extremely humid, protect electrical terminals with ignition insulation spray. Coat paint and bare metal surfaces with an appropriate protective sealer.

**3-20.5** For trailers with air brakes, the use of a filter-lubricator in the towing vehicle's air delivery system is recommended.

https://truckmanualshub.com/

https://truckmanualshub.com/

# MAINTENANCE AND LUBRICATION 4

This section contains instructions necessary for proper maintenance of the trailer. The 345B trailer is designed for years of service with minimal maintenance. However, proper maintenance is important for durability and safe operation and is an owner/user responsibility.

**⚠ DANGER**

**OPERATING THE TRACTOR OR TRAILER WITH DEFECTIVE, BROKEN OR MISSING PARTS MAY RESULT IN SERIOUS INJURY OR DEATH; DAMAGE TO THE TRACTOR/TRAILER, ITS CARGO, OR PROPERTY IN ITS PATH.**

## 4-1 MAINTENANCE SCHEDULE

Trailer maintenance includes periodic inspection and lubrication. **Table 4-2, Maintenance Schedule**, lists the recommended maintenance and lubrication tasks by time interval and by accumulated mileage (use whichever occurs first).

### 4-1.1 Inspection

**a.** Inspect the tractor, the trailer, and trailer parts periodically for damage or signs of pending failure. Damaged or broken parts must be repaired or replaced at once. Determine the cause of any binding or hydraulic leakage at once. Correct the problem before using the tractor or trailer.

**b.** Use the Troubleshooting Guide to check for “SYMPTOMS” and “PROBLEMS” of any trailer system not functioning correctly, or where wear, distortion, or breakage are found. Administer “REMEDY” according to the right-hand column of the Troubleshooting Guide.

### 4-1.2 Lubrication

**Figure 4-1 and Table 4-1** details lubrication points and intervals, method of application, and lubricant required, and illustrates the location of each part to be lubricated. During inspections of the trailer, if lubricants are found to be fouled with dirt or sand, those parts should be cleaned with paint thinner, dried, and relubricated immediately. Dirt in a lubricant forms an abrasive compound that will wear parts rapidly.

**⚠ WARNING**

**PAINT THINNER AND OTHER SOLVENTS ARE FLAMMABLE AND TOXIC TO EYES, SKIN, AND RESPIRATORY TRACT. AVOID SKIN AND EYE CONTACT. GOOD GENERAL VENTILATION IS NORMALLY ADEQUATE. KEEP AWAY FROM OPEN FLAMES OR OTHER COMBUSTIBLE ITEMS.**

https://truckmanualshub.com/

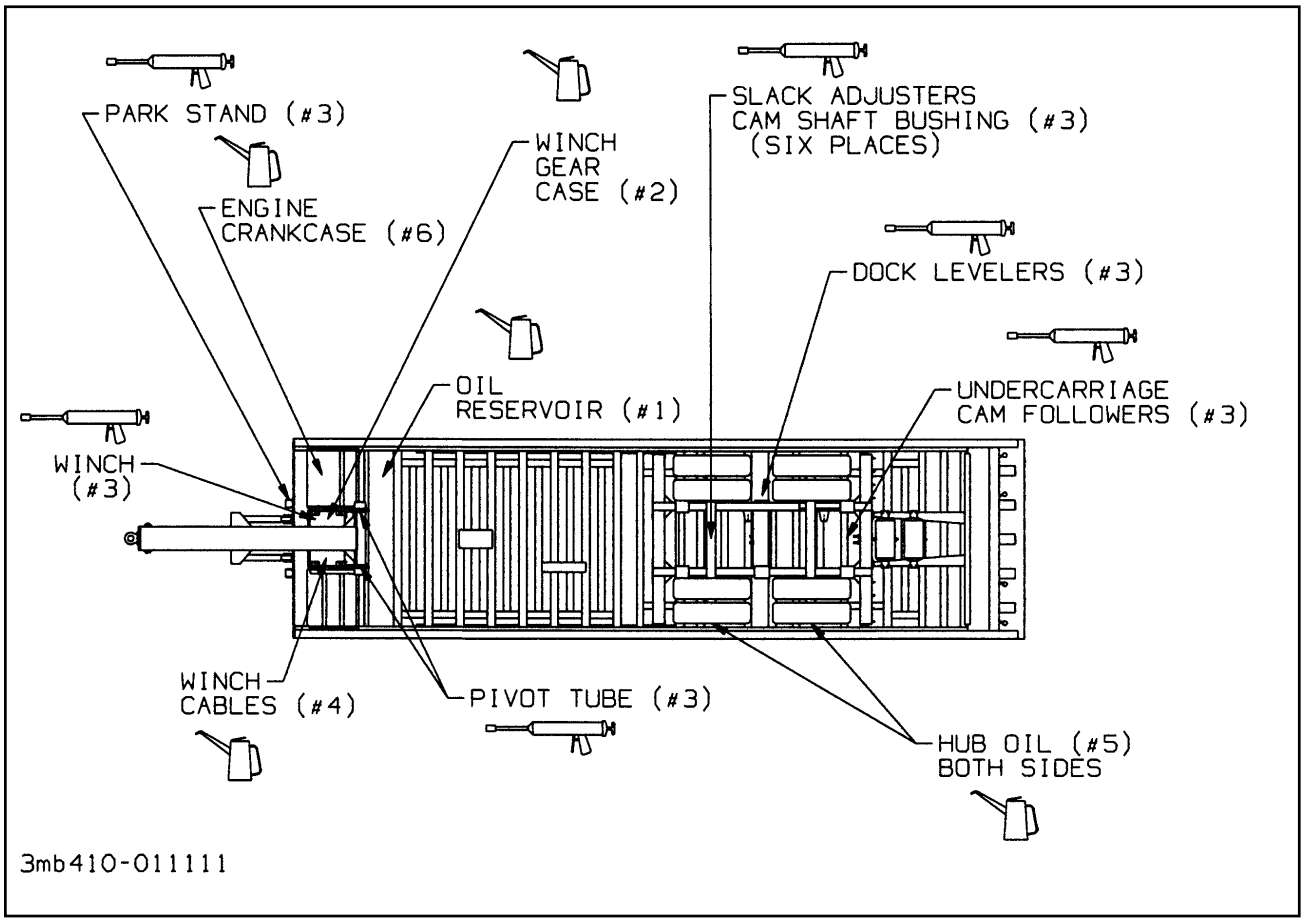


**Figure 4-1 Lubrication Points**

| LUBE | SEASON | BRAND AND PRODUCT (WEIGHT AND/OR TYPE) | | | |
|---|---|---|---|---|---|
| | | AMOCO | EXXON | PHILLIPS | TEXACO |
| 1 | ALL YEAR | Rycon MV | HDX Plus 10W | Mangus Oil A KV 5W-20 | Rando HD-AZ |
| 2 | SUMMER | Permagear EP 460 SAE 140 | Spartan 460 SAE 140 | Phil Gear Lube 460 SAE 140 | Meropa 460 SAE 140 |
| | WINTER | Permagear EP 220 SAE 90 | Spartan 220 SAE 90 | Phil Gear Lube 220 SAE 90 | Meropa 220 SAE 90 |
| 3 | ALL YEAR | Lit-Multi-purpose Grease | Ronex Multi-purpose Grease | Phil Lube M.W. Grease | MarFax All Purpose |
| 4 | ALL YEAR | Industrial Oil 32 | Estic 32 | Condor 32 or Magnus 32 | Regal Oil R&O 32 |
| 5 | ALL YEAR | Gear Lube SAE 80W-90 | Gear Oil GX SAE 80W-90 | Superior MP Gear Oil SAE 80W-90 | Multi-gear EP SAE 80W-90 |
| 6 | ABOVE 0° F | Ultimate Gold 10W-30, 10W-40 | SuperFlow 10W-30, 10W-40 | Tropartic 10W-30, 10W-40 | Havoline 10W-30, 10W-40 |
| | BELOW 32° F | Ultimate Gold 5W-20, 5W-30 | SuperFlow 5W-20, 5W-30 | Tropartic 5W-20, 5W-30 | Havoline 5W-20, 5W-30 |

**Table 4-1 Lubrication Specifications**

https://truckmanualshub.com/

| NORMAL OPERATING SERVICE INTERVALS [a] | | | | | | | | |
|---|---|---|---|---|---|---|---|---|
| **SERVICE INTERVAL : ITEM** | **TIMES** | **1st 5 Hrs** | **Weekly** | **Monthly** | **6 Months** | **Yearly** | **LUBE #** | **NOTES** |
| | **MILES** | **50** | **500** | **2,000** | **12,000** | **25,000** | | |
| LIGHTS | | I | I | | | | | |
| WIRING & CONNECTIONS | | I | | I | | | | |
| FASTENERS | | I, T | | I | | | | b |
| PIVOT PIN, LIFT PINS AND LOCK PINS | | | I | I,L | | | 3 | |
| WINCH CABLE ASSEMBLIES | | I | | I,L | | | 4 | g |
| BRAKE AIR SYSTEM | | I | I | I | | | | |
| ABS VALVES | | | | | | I, C | | |
| BRAKE ADJ & WEAR | | I | | I, T | | | | d |
| SLACK ADJUSTERS | | I | I | | L | | 3 | c |
| CAMSHAFT ASSYS | | I | I | | | L | 3 | c |
| HUB OIL | | I | I, L | | | R | 5 | c |
| WHEEL BEARINGS | | I | | | I, T | | 5 | c |
| TIRE INFLATION & WEAR | | I | I | | | | | e |
| WHEEL LUG NUTS | | I, T | I | I, T | | | | f |
| HYDRAULIC OIL | | I | I | | | R | 1 | c |
| HYDRAULIC FILTER | | R | | | R | | | |
| HOSES (Inspect & Replace as needed) | | I | | I | | I,R | | |
| WINCH GEAR CASE | | I | | I | | | 2 | c |

**I – Inspect, R – Replace, T– Tighten/ Adjust Torque, L – Lubricate, C – Clean**

**NOTES:**

a. Perform at the time shown. Shorten service intervals when operating in severe or dirty conditions.
b. See **Tables 2-1 and 2-2 (Torque Specifications)** for correct torque.
c. See **Table 4-1 (Lube Specification Chart)** for recommended lubricant.
d. Call Landoll Customer Services for procedures to replace.
e. See Serial Number Plate on the front of the trailer for proper inflation requirements.
f. See **Figure 4-19, Stud Tightening Sequence**.
g. Inspect prior to and after each use.

**Table 4-2 Maintenance Schedule**

https://truckmanualshub.com/

## 4-2 MAINTENANCE PROCEDURES

### 4-2.1 Standard Torque Values

**Table 2-1 and 2-2** lists torque values for standard hardware and is intended as a guide for average applications involving typical stresses and mechanical surfaces. Values are based on the physical limitations of clean, plated, and lubricated hardware. In all cases, when an individual torque value is specified, it takes priority over values given in this table. Replace original fasteners with hardware of equal grade.

### 4-2.2 Cleaning

**⚠ WARNING**

**PAINT THINNER AND OTHER SOLVENTS ARE FLAMMABLE AND TOXIC TO EYES, SKIN, AND RESPIRATORY TRACT. AVOID SKIN AND EYE CONTACT. GOOD GENERAL VENTILATION IS NORMALLY ADEQUATE. KEEP AWAY FROM OPEN FLAMES OR OTHER COMBUSTIBLE ITEMS.**

**a.** Wash trailer to remove all accumulated dirt and grime.

**b.** Use any mineral spirits paint thinner (or its equivalent) to remove grease and oil from all parts of the trailer. Rinse degreasing solution off with cold water.

**c.** Inspect trailer for cause of any reported troubles.

**d.** Scrape, sand, prime, and repaint areas where finish is missing or where there is evidence of corrosion.

**e.** Replace any missing or illegible decals. Replace any missing or damaged reflective tape.

**f.** After disassembling any components, thoroughly clean dirt and old lubricant from all parts. Do not use a wire brush on any bearing parts or surfaces - use a stiff bristle brush. Do not use compressed air, or spin bearing parts when cleaning. These practices can throw solvents, dirt, or metal particles into your eyes. Dry clean parts with lint free, clean, soft, absorbent, cloth or paper. Wash and dry hands.

**g.** Inspect seals, seal wiping surfaces, bearing caps, and bearing cones for wear, pitting, chipping, or other damage.

## 4-3 HITCH, FRAME, AND DECK

### 4-3.1 Repairing Structural Defects

If any structural defect is found, the fault must be corrected before further use of the vehicle. To continue usage could endanger the trailer, its load, personnel, traffic, and properties. If any cracks or breaks are found, contact a Landoll authorized service center for repairs. Inspect the deck daily for broken or missing planks or missing attachments. Replace any defective parts promptly.

https://truckmanualshub.com/

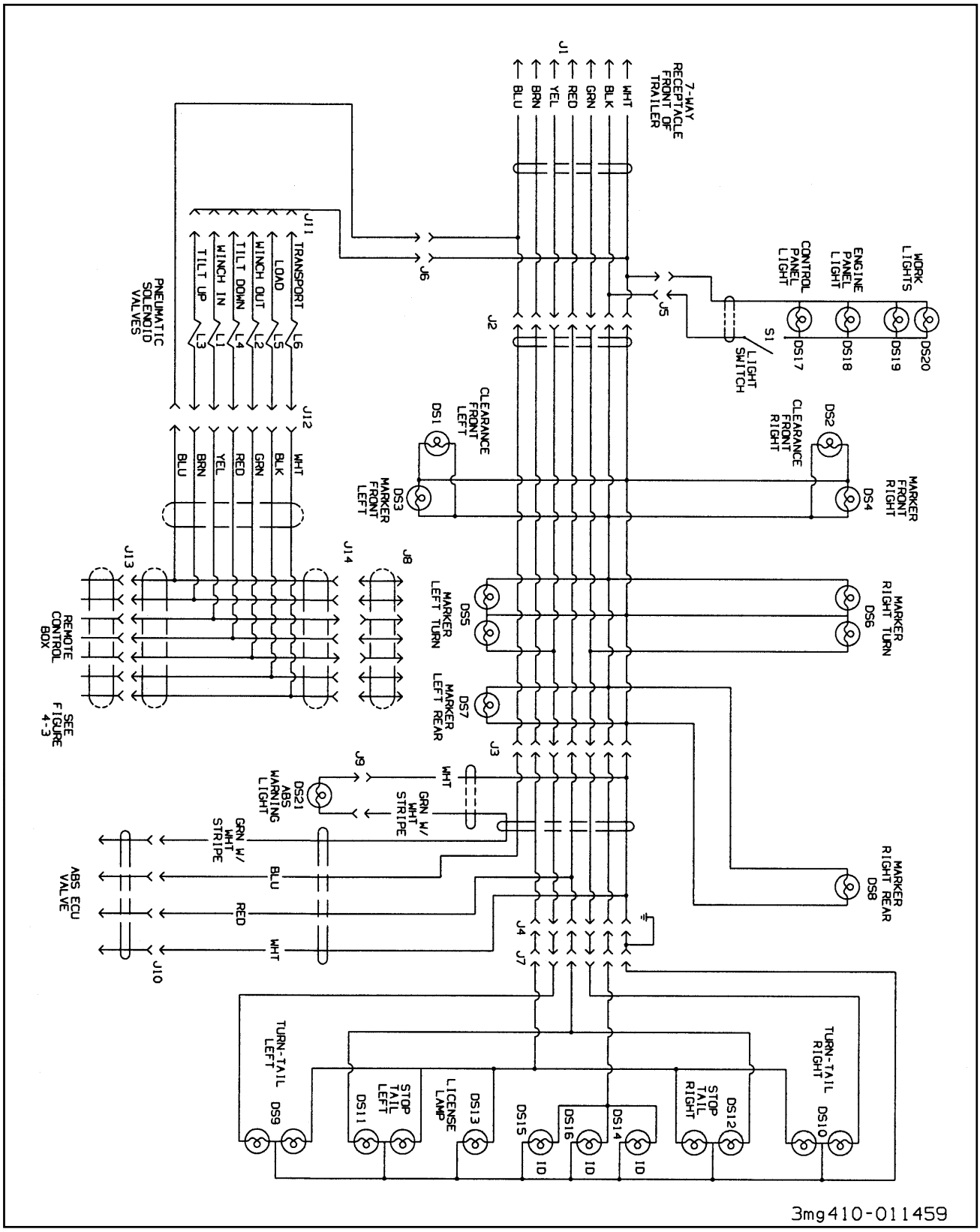


**Figure 4-2 345B Wiring Diagram**

https://truckmanualshub.com/

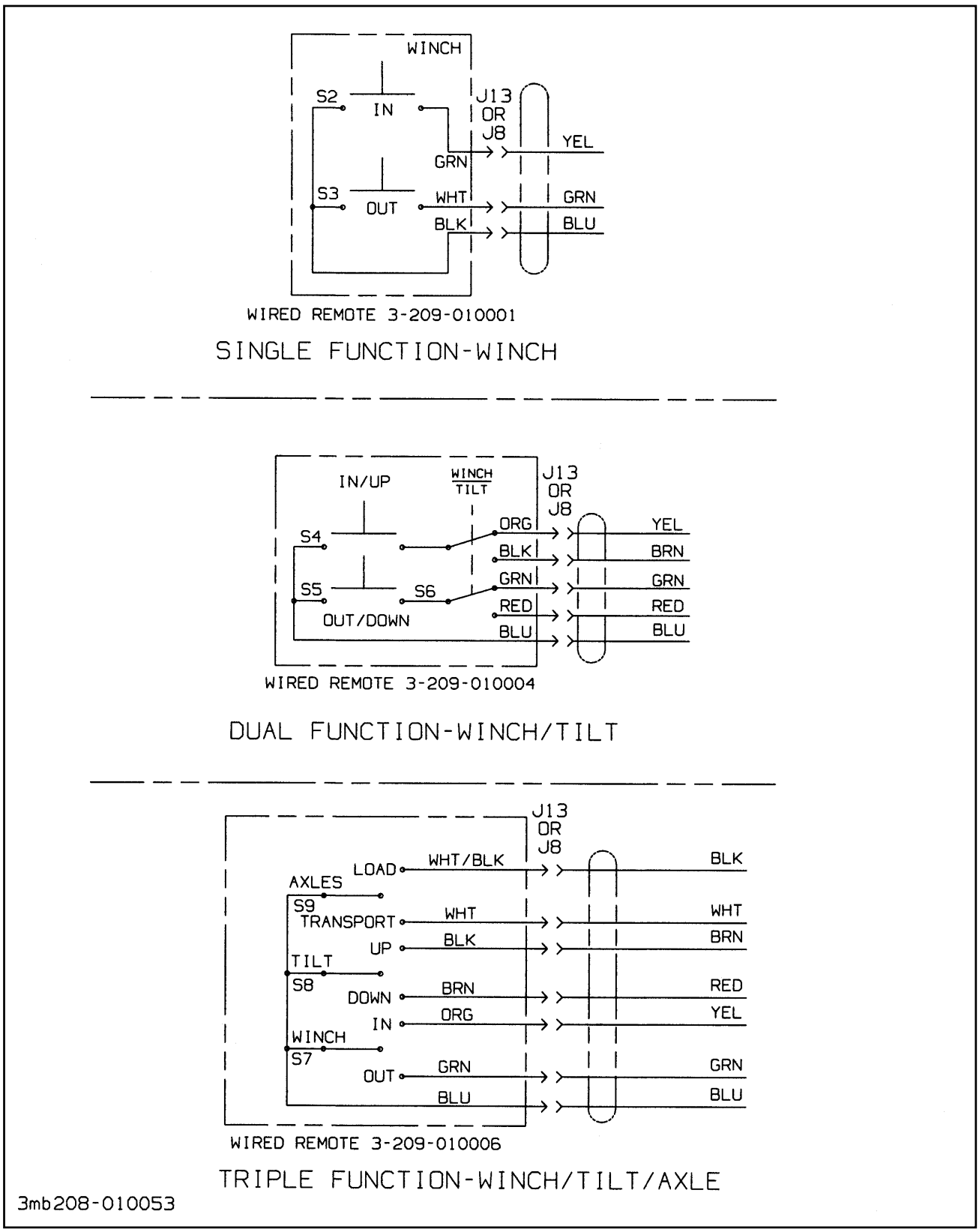


**Figure 4-3 Remote Wiring Diagram**

https://truckmanualshub.com/

| 345B WIRING PARTS LIST | |
|---|---|
| REF. DES. | FUNCTION |
| DS1 | FRONT LEFT CLEARANCE, YELLOW |
| DS2 | FRONT RIGHT CLEARANCE, YELLOW |
| DS3 | FRONT LEFT MARKER, YELLOW |
| DS4 | FRONT RIGHT MARKER, YELLOW |
| DS5 | LEFT SIDE MARKER/TURN, YELLOW |
| DS6 | RIGHT SIDE MARKER/TURN, YELLOW |
| DS7 | LEFT REAR SIDE MARKER, RED |
| DS8 | RIGHT REAR SIDE MARKER, RED |
| DS9 | LEFT TURN/TAIL, RED |
| DS10 | RIGHT TURN/TAIL, RED |
| DS11 | LEFT STOP/TAIL, RED |
| DS12 | RIGHT STOP/TAIL, RED |
| DS13 | LICENSE PLATE LIGHT, RED |
| DS14 | IDENTIFICATION RIGHT, RED |
| DS15 | IDENTIFICATION LEFT, RED |
| DS16 | IDENTIFICATION CENTER, RED |
| DS17 | CONTROL PANEL, LH |
| DS18 | CONTROL PANEL, RH |
| DS19 | FIRST WINCH LIGHT |
| DS20 | FIRST WINCH LIGHT |
| DS21 | ABS MALFUNCTION INDICATOR, YELLOW |
| J1 | FRONT MAIN CONNECTOR |
| J2 | FRONT DECK CONNECTOR |
| J3 | U/C CONNECTOR |
| J4 | U/C MID CONNECTOR |

| 345B WIRING PARTS LIST | |
|---|---|
| REF. DES. | FUNCTION |
| J5 | AUX. LIGHTS PWR/GRND CONN |
| J6 | REMOTE CONTR. PWR/GRND CONN |
| J7 | BUMPER CONNECTOR |
| J8 | REMOTE, CURB REAR |
| J9 | ABS LAMP CONNECTOR |
| J10 | ABS ECU VALVE CONNECTOR |
| J11 | GRND CONN TO SOLENOID VLVS. |
| J12 | PWR & FUNCTION CONNECTION TO SOLENOID VALVES |
| J13 | REMOTE, STREET REAR |
| J14 | CURBSIDE REMOTE CONN |
| L1 | WINCH IN |
| L2 | WINCH OUT |
| L3 | TILT UP |
| L4 | TILT DOWN |
| L5 | AXLE LOAD |
| L6 | AXLE TRANSPORT |
| S1 | WORK LIGHT |
| S2 | WINCH IN |
| S3 | WINCH OUT |
| S4 | WINCH IN/TILT UP |
| S5 | WINCH OUT/TILT DOWN |
| S6 | SELECTOR SWITCH |
| S7 | WINCH IN/OUT |
| S8 | TILT UP/DOWN |
| S9 | AXLES LOAD/TRANSPORT |

**Table 4-3 345B Wiring Parts List**

https://truckmanualshub.com/

## 4-4 HYDRAULIC SYSTEM

**4-4.1 General**

**a.** Check the oil level of the tractor wet kit or hydraulic engine power hydraulic tank weekly, or after any leakage. See **Table 4-1** for proper hydraulic oil. Check the hydraulic oil level with hydraulic cylinders in the retracted position and the hydraulic pump disengaged.

**b.** Overfilling can cause hydraulic fluid overflow during operation.

**c.** Check the lubricating oil level in the engine of the hydraulic engine power option.

**d.** Inspect hydraulic hoses for chafing or damage. Replace if jacket or braid of hose is damaged.

**e.** Replace hydraulic engine power filter as specified in **Table 4-2.**

## 4-5 ELECTRICAL SYSTEM

**4-5.1** Maintenance of the electrical system consists of inspection and minor servicing. Any wire, connection or electrical component showing signs of corrosion, wear, breakage or unraveling must be repaired or replaced.

**4-5.2** Frayed or unraveling wire must have the defective section removed and replaced with wire of the same color and gauge. Seal all connections and insulate.

**4-5.3** Corroded terminals must have the corrosion removed, source of corrosion neutralized and the terminals resealed, protected, and insulated.

**4-5.4** Fuse or circuit breaker burn-out or blow-out usually indicates an electrical short-circuit, although a fuse can occasionally fail from vibration. Insert a second fuse or reset the breaker. If this fuse immediately burns out or the breaker trips, locate the cause of the electrical short and repair.

**4-5.5** A light that repeatedly burns-out usually indicates a loose connection, poor system ground, or a malfunctioning voltage regulator. Locate the source of the problem and repair. System grounds must be grounded to bare metal surfaces. Paint, grease, wax, and other coatings act as insulators. Replacement lamps must be equivalent to the factory installed lamp.

https://truckmanualshub.com/

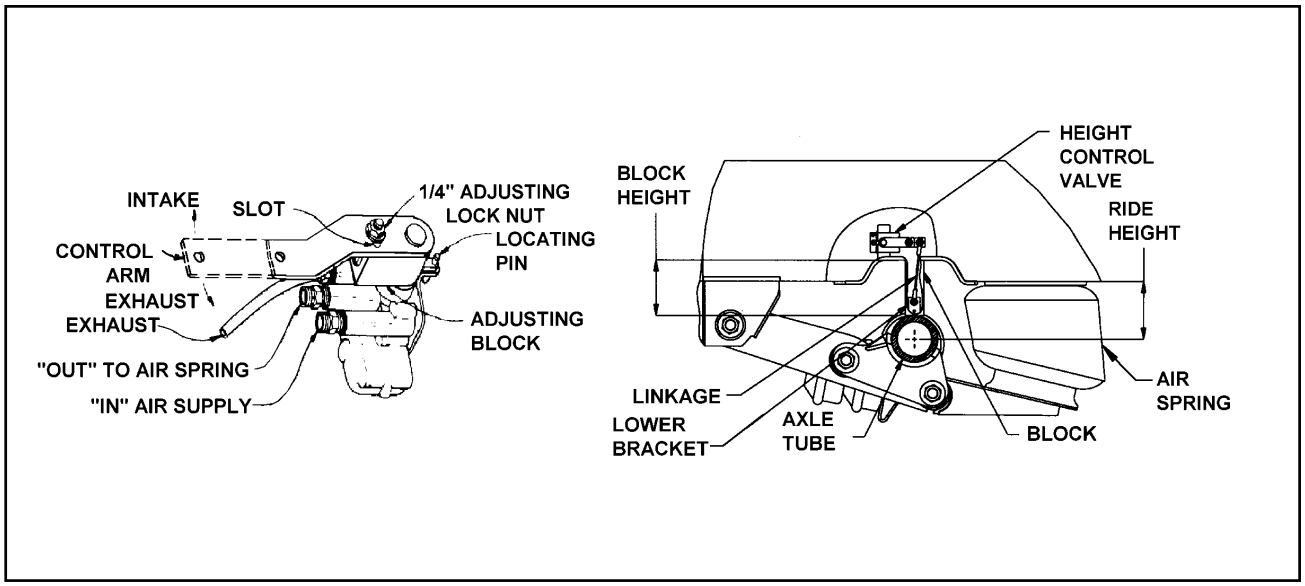


**Figure 4-4 Air Ride Height Adjustment**

## 4-6 SUSPENSION MAINTENANCE

### 4-6.1 Spring Suspension

**a.** Make certain that all springs are properly located on the wear pads. Twisted springs or cocked hangers will cause uneven spring contact with wear pad and will result in excessive wear on the spring suspension. Check the shocks for excessive wear.

**b.** Replacing the equalizer bushings and the torque arm bushings on the spring suspension is a complex operation and should be left to trained service personnel. If the bushings need to be replaced contact a Landoll authorized service center or the Landoll factory for servicing.

### 4-6.2 Air Ride Suspension

**a.** Physically check all nuts, bolts, and air line fittings for proper torque (see torque chart below).

| AIR SUSPENSION TORQUE CHART | | | | |
|---|---|---|---|---|
| Size | 1-1/8"-7 | 1/2"-13 | *3/4"-16 | 3/4"-10 |
| Torque in Ft. Lbs. | 800 | 35 | 35 | 150 |

* Air Spring Connections Only.

**b.** Check all other suspension components for any sign of damage, looseness, wear or cracks.

**c.** With trailer on level surface and air pressure in excess of 65 psi, all air springs should be of equal firmness. The height control valve on right side of front axle controls all air springs on tandem axle suspensions.

### 4-6.3 Air Ride Height Adjustment. (See Figure 4-4 for parts identification).

**a.** Before adjusting, the vehicle must be empty with the kingpin at operating height and have air supplied to the trailer.

**b.** Disconnect linkage at the control arm and raise control arm to the “up” position, raising the trailer until a block can be placed between axle tube and undercarriage frame **(See Figure 4-4).**

**c.** Position the wood block between the axle tube and frame according to table below. Block height is dependent upon suspension ride height and/or axle brake size.

| AIR SUSPENSION RIDE HEIGHT AND BLOCK | | |
|---|---|---|
| Brake Size | Ride Height | Block Height |
| 12-1/4" Dia. | 3.5" | 5" |
| 16-1/2" Dia. | 5.5" | 7" |

https://truckmanualshub.com/

**d.** Lower the trailer by exhausting air from the air springs by moving the control arm to the “down” position (about 45°) until the axle tube is resting on the block.

**e.** Check the ride height to make sure it is correct. Consult Landoll Service Center if correct height cannot be obtained.

**f.** Loosen the 1/4" adjusting lock nut located on the adjusting block, allowing the control arm to move approximately 1 inch. Move the adjusting block until holes align, then insert locating pin. **(See Figure 4-4)**.

**g.** Align the control arm linkage to the control arm lower bracket and re-tighten the 1/4" adjusting lock nut to 2-4 ft.lbs. The ride height valve should now be correctly adjusted.

**h.** Remove the locating pin.

**i.** The block can now be removed by using the height control valve as an improvised jack by disconnecting the control arm at the lower bracket and pushing the control arm to an “up” position.

**j.** Remove the block and reconnect the linkage. This allows the Automatic Height Control Valve to resume normal operation.

**k.** Check the air ride height. If necessary, go through the adjustment procedure again until the proper air ride height is achieved.

**l.** Check the air ride height periodically and adjust as needed.

## 4-7 ALIGNMENT

### 4-7.1 Wheel Alignment

**⚠ DANGER**

**TO PREVENT A LIFE THREATENING ACCIDENT:**

**1. SUPPORT TRAILER AND UNDERCARRIAGE SO TIRES ARE OFF THE GROUND.**

**2. SUPPORT THE TRAILER AND UNDERCARRIAGE ON JACK STANDS WITH SUFFICIENT CAPACITY TO SUPPORT THE TOTAL WEIGHT OF THE TRAILER AND ANY LOAD WHICH IT MAY BE CARRYING.**

When trailer tires show signs of scuffing, feather-edging or uneven wear, examine the trailer for damaged suspension (frame, shocks, linkage, etc.), axle, wheel bearings and wheels. Proper wheel alignment and wheel bearing adjustment is essential for proper tire wear. The simplest form of checking wheel alignment “toe” is by running the trailer over a “SCUFF GAUGE”. A scuff gauge reading of 16 feet or less per mile is considered satisfactory. If a scuff gauge is not readily available, or edge wear on one side of a tire is occurring signifying positive or negative camber, alignment can be checked as follows:

**a.** Remove wheel, hub and bearing assemblies.

**b.** Place a 3-point axle gauge against the front side of the axle, and adjust each axle gauge point to the axle. (Double point end against the inner and outer wheel bearing surfaces of the spindle being checked and the other point on the inner bearing surface on the other spindle.)**(See Figure 4-6).**

**c.** Move the axle gauge and place against the back side of the axle. If either of the points of double point end fails to touch the axle surface, a bent spindle is evident. A point gap of .015" or more is considered excessive tire “toe” and the axle must be replaced **(See Figure 4-6)**.

https://truckmanualshub.com/

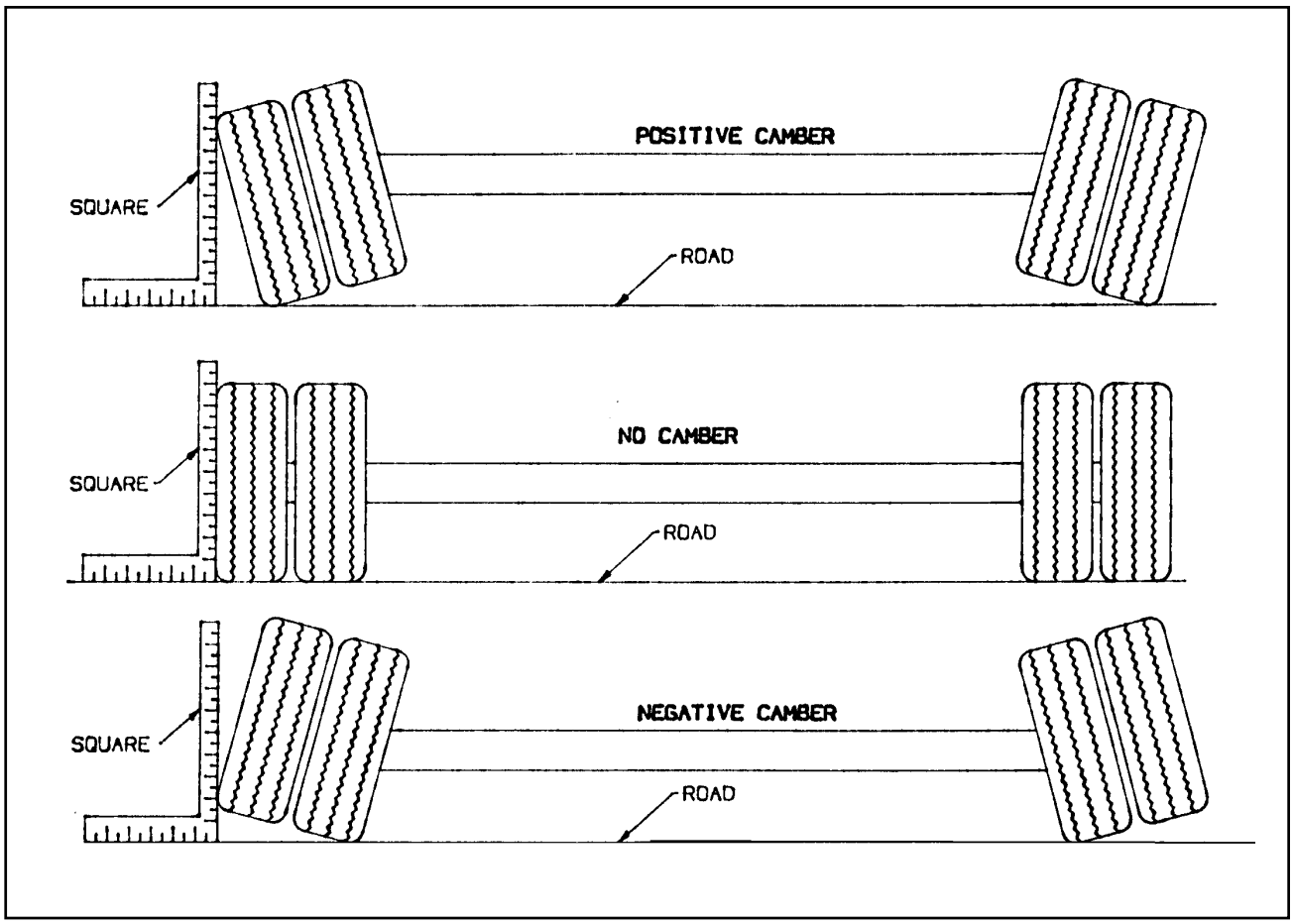


**Figure 4-5 Examples of Camber**

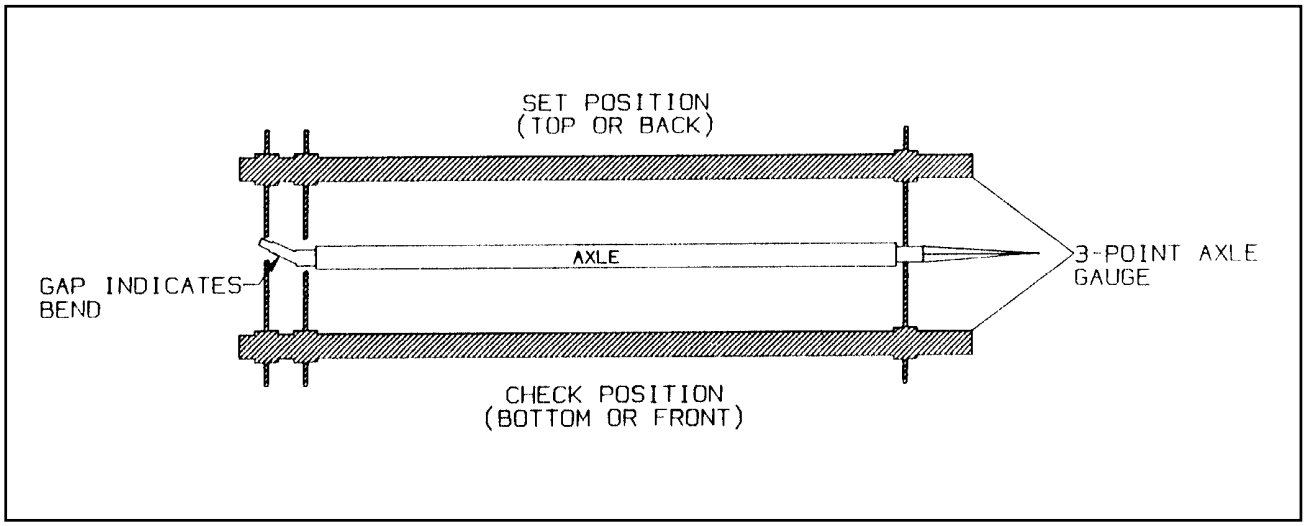


**Figure 4-6 Checking Axle for Bend**

https://truckmanualshub.com/

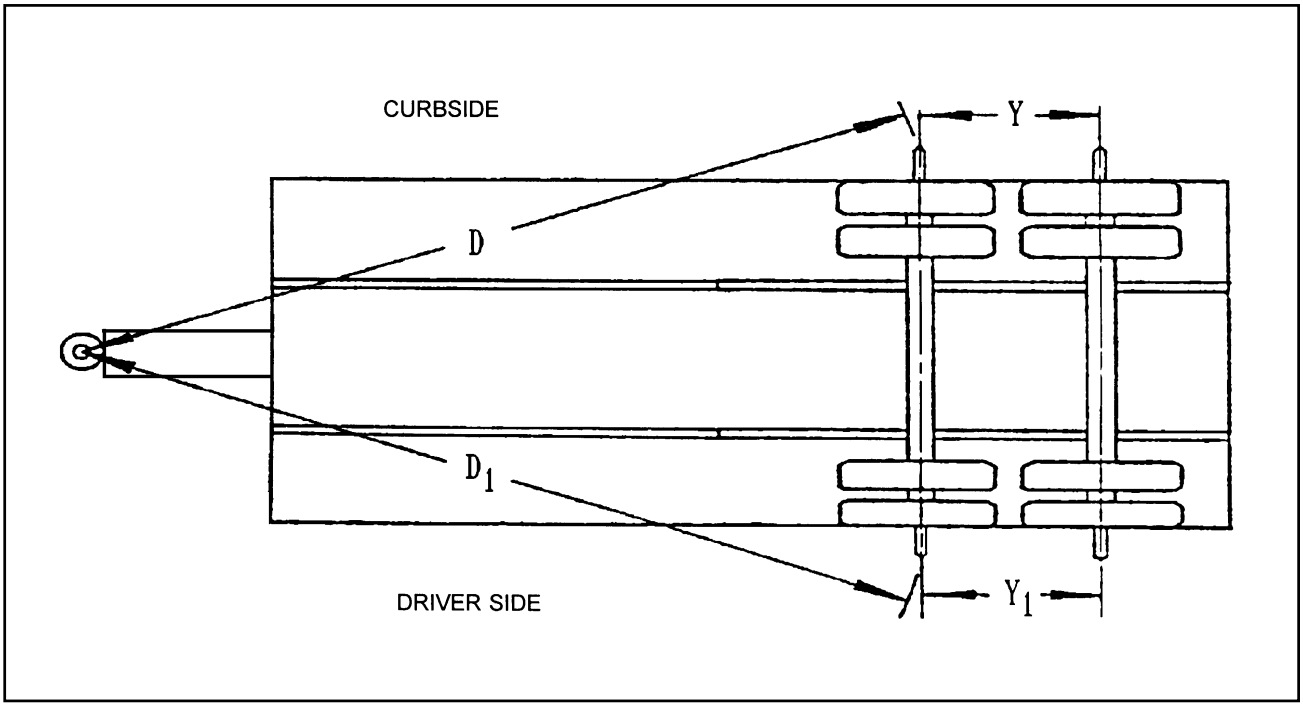


**Figure 4-7 Checking Axle Alignment**

**d.** Follow the same procedures as in **Section 4-7.1 b. and c.,** except place the axle gauge above and below the axle. If gauge point gap is found, the axle has positive or negative camber. The trailer axle has no camber from the factory. If it is found to have positive or negative camber, axle replacement is necessary **(See Figure 4-5** for examples of camber).

### 4-7.2 Axle Alignment

Proper axle to pintle eye alignment is necessary to obtain straight tracking. If axle alignment is off, “dog-tracking” occurs. Check alignment manually or by using a semitrailer alignment machine. In either case, a thorough inspection of the complete suspension must be performed and all defects corrected before aligning.

**a. Manual Alignment Procedure**

1. Position semitrailer on a firm and level surface. Insure that the undercarriage is in the rear most position. Eliminate any suspension binding due to sharp turns or unusual maneuvers.
2. Detach tractor from the semitrailer and jack the trailer up sufficiently to permit measuring from the underside of the trailer.
3. Suspend a plumb bob at axle height from the center of the pintle eye.
4. Measure (D) from the plumb bob to the center point on one end of the axle. Record this measurement **(See Figure 4-7**).
5. Measure (D1) to the other end of the axle in the same manner as in **Step 4.**. Record this measurement **(See Figure 4-7).**
6. Set D about 1/8" shorter than D1 to insure proper trailer tracking on slope of road.
7. The suspensions must be in good repair with no binding or other restrictions before aligning. All defective parts of the suspension or axles must be replaced immediately.

**b. Air Ride Suspension Axles**

The air ride suspension is aligned and adjusted at the factory and it should not be necessary to align the axles. If, however it does become necessary to align the axles, the procedure is as follows:

1. To align air ride suspension axles, locate the front axle equalizer beam pivot bolt in front hanger at front end of lock nut. Rotate the head of the pivot bolt. For axle alignment forward, rotate bolt head clockwise. For axle alignment rearward, rotate the bolt head counter-clockwise. Loosen the suspension pivot bolt lock nut.

https://truckmanualshub.com/

2. Align the front axle using the method outlined in **Section 4-7.2 a.c.**
3. After proper alignment has been obtained, tighten the suspension pivot bolt nut to the torque listed in the table in **Section 4-6.2.**
4. Align the rear axle to the front axle. Locate the rear axle equalizer beam pivot bolt in hanger at front end of driver's side rear axle equalizer beam. Loosen the suspension pivot bolt lock nut. Rotate the head of the pivot bolt. For axle alignment forward, rotate bolt head clockwise. For axle alignment rearward, rotate the bolt head counter-clockwise. The rear axle should be parallel with the front axle, with the dimensions Y and Y1 being the same.
5. Tighten the suspension pivot bolt nut to the torque listed in the table in **Section 4-6.2.**

**c. Spring Suspension Axles**

| SPRING SUSPENSION TORQUE CHART | | | | |
|---|---|---|---|---|
| Size | 1" | 7/8" | 7/8" U-bolt | 1/2" |
| Torque in Ft.Lbs. | 480-500 | 250 | 300 | 55-60 |

1. Loosen the torque arm clamp bolts on the adjustable torque arms and loosen the axle U-bolts.
2. Turn the adjustable torque arm on the front axle until the proper alignment has been achieved using the procedure outlined in **Section 4-7.2 a.c.**
3. Tighten the axle U-bolts to the torques listed in the above table.
4. Tighten the front axle torque arm clamp bolts to the torque listed in the above table.
5. Align the rear axle to the front axle in the same manner using the torque arm for adjusting. The rear axle should be parallel with the front axle, with the dimensions Y and Y1 being the same.
6. Tighten the rear axle U-bolts to the torque values listed in the above table.
7. Tighten the rear axle torque arm clamp bolts to the torque listed in the above table.

## 4-8 BRAKE SYSTEM MAINTENANCE

**⚠ WARNING**

**USE GREAT CARE IF WHEELS OR BRAKE DRUMS MUST BE HANDLED. THEY MAY BE VERY HOT AND CAN CAUSE SERIOUS INJURY.**

**4-8.1 General.**

**a.** Check air hoses for chafing, bends, kinks, or damaged fittings. Replace defective hoses.

**b.** Check the brake system for loose, missing, deformed, or corroded fasteners. Replace and tighten defective hardware.

**c.** Check brake linings for excessive wear or distortion **(See Figure 4-9).**

**d.** Drain air reservoir daily. A drain cock on the bottom of each air reservoir vents the tank to drain collected water and oil. If held open, air pressure in the tanks is relieved, causing the emergency or parking brakes to be applied **(See Figure 4-8).**

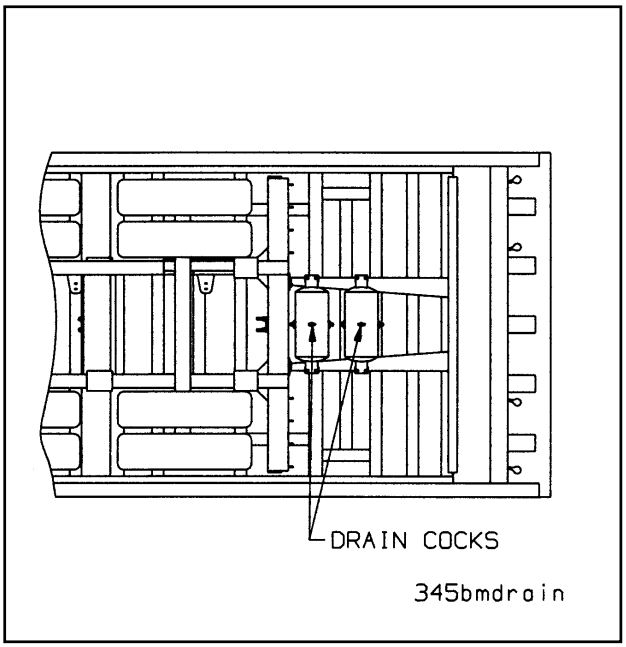


**Figure 4-8 Drain Cock Locations**

https://truckmanualshub.com/

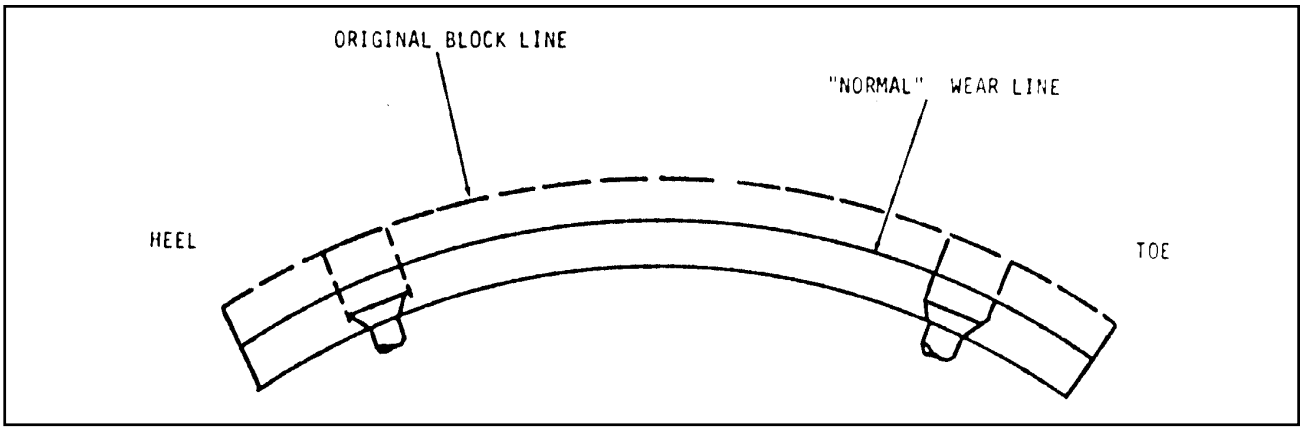


**Figure 4-9 Brake Lining Wear**

### 4-8.2 Spring Air Brake

Check for faulty units. Check the condensation holes on the underside of the brake chambers to make sure they are open. The spring brake has two brake chambers, a service chamber and an emergency chamber or spring chamber. Service brake chambers should be disassembled and cleaned at 50,000 miles or yearly. The diaphragm and any marginal parts should be replaced. When replacing the service diaphragm, replace the corresponding parts for the other chamber on the same axle (to aid in even brake application and release). Examine yoke pin for wear and replace as necessary. The spring chamber should not be serviced. Replace entire unit (both service and spring chamber) if spring chamber becomes faulty.

**⚠ WARNING**

**THE SPRING BRAKE CHAMBER EMPLOYS A SPRING WITH HIGH FORCES. SERVICE SHOULD NOT BE ATTEMPTED. SERIOUS INJURY OR DEATH MAY RESULT.**

### 4-8.3 Replacing the Spring Air Brake Unit

**a. Caging the Power Spring in the Spring Chamber**

1. Chock the trailer wheels.
2. Remove dust cap from the rear of the spring brake chamber **(See Figure 4-10).**
3. Remove the release bolt from it's holding brackets. Insert it into the spring brake chamber until it can be rotated and hooked into place. **DO NOT USE AN IMPACT WRENCH TO CAGE THE SPRING BRAKE!**
4. Turn the nut on the release bolt until the spring brake is caged. This should be 2-1/4 to 2-1/2 inches of release bolt extension.
5. The brakes should now be released. Do not operate loaded trailer with brake manually released.

**b. Uncaging the Power Spring in the Spring Chamber**

1. Chock the trailer wheels.
2. Turn the nut on the release bolt until the spring is released. Remove the release bolt and store it in its brackets.
3. Snap the dust cap back in place on the chamber.

**c. Removal of Brake Unit**

1. Chock all tractor and trailer wheels and drain the air system.
2. Mark the brake chamber for proper air line port alignment for reassembly.
3. CAGE THE POWER SPRING following the steps outlined in **Section 4-8.3 a.**
4. Disconnect the slack adjuster from the connecting rod by removing the clevis pin **(See Figure 4-11).**
5. Mark all air service lines for proper re-installation and disconnect from the brake chamber.
6. Remove the brake chamber from the axle brackets.

https://truckmanualshub.com/

**d. Installation of Brake Unit**

1. CAGE THE POWER SPRING following the steps outlined in **Section 4-8.3 a.**
2. Position the inlet ports by loosening the service chamber clamp bands and rotating the center housing so the ports align with marks made during disassembly. Then re-tighten the clamp bands.
3. Remount the brake unit on the axle brackets and reconnect the air service hoses and the slack adjuster connecting rod **(See Figure 4-11).**

## IMPORTANT

**BE SURE THE SERVICE LINE IS ON THE SERVICE CHAMBER PORT AND THE EMERGENCY LINE IS ON THE SPRING BRAKE PORT.**

**e.** Check for leakage by charging the air system to a minimum of 90 psi and applying soap suds to the brake chamber and connections. If a growing bubble is detected or bubbles are blown away, locate the source of the leak and repair.

**f.** Insure that the clamp band is properly seated and tight **before** uncaging the power spring.

**g.** Uncage the power spring according to **Section 4-8.3 b.**

### 4-8.4 Tandem Relay Valve Maintenance

Every 3600 operating hours, 100,000 miles, or yearly, the Relay Emergency Valve should be disassembled, cleaned, and lubricated by a trained technician.

## ⚠ WARNING

**REPAIR OR REPLACEMENT OF THE RELAY/EMERGENCY VALVE IS A COMPLEX OPERATION AND SHOULD BE PERFORMED BY TRAINED SERVICE PERSONNEL. CONTACT A LANDOLL AUTHORIZED SERVICE CENTER FOR SERVICING.**

### 4-8.5 Brake Assembly Maintenance.

The brake assemblies should be inspected and adjusted every 2,000 miles or monthly. Examine the brake linings visually to locate the lining showing the greatest amount of wear. The wheel and drum should be removed and the linings replaced if the thinnest portion of the lining is 3/8 in. (9.5 mm) or less. Do not allow the linings to wear thin enough that the lining rivet contacts the drum. **(See Figure 4-9)**.

## ⚠ WARNING

**DO NOT ALLOW GREASE TO CONTACT BRAKE LININGS AS THIS COULD RESULT IN REDUCED BRAKING PERFORMANCE.**

**a. Brake Adjustment**: This trailer is equipped with automatic slack adjusters which compensate for brake lining wear and keep brakes adjusted. Brakes should not be adjusted manually except when relining brakes.

**b. Disassembly for 12-1/4" X 7-1/2" Brakes (See Figure 4-10)**

1. Release brakes and back off slack adjuster.
2. Remove slack adjuster lock ring and slack adjuster.
3. Remove drum assembly **(See Figure 4-10)**.
4. Remove anchor pin retainers, washers, and bushings.
5. Remove anchor pins and brake shoes.
6. Remove brake return springs.
7. Remove camshaft lock ring, spacer washer and camshaft
8. Remove roller pin retainers.
9. Remove roller pins and rollers from shoes.
10. Remove camshaft bushings and seals from spider.
11. After removing the shoes, completely inspect all brake components, servicing as necessary.

**c. Reassembly for 12-1/4" X 7-1/2" Brakes**

1. Install new camshaft bushing and seals into the spider.

## IMPORTANT

**WHEN INSTALLING CAMSHAFT SEALS, THE SEAL ON THE SLACK ADJUSTER SIDE IS INSTALLED FACING INTO SPIDER. THIS ALLOWS GREASE TO PURGE OUTSIDE THE BRAKE ASSEMBLY WHEN GREASING THE CAMSHAFT BUSHING.**

2. Install cam roller assemblies onto the brake shoes.
3. Install “D” shaped camshaft washer onto the camshaft.
4. Install the camshaft into the spider. Install spacer washer and lock ring retainer on camshaft before sliding the camshaft through the camshaft support bracket. Install the slack adjuster, washer and lock ring retainer.

https://truckmanualshub.com/

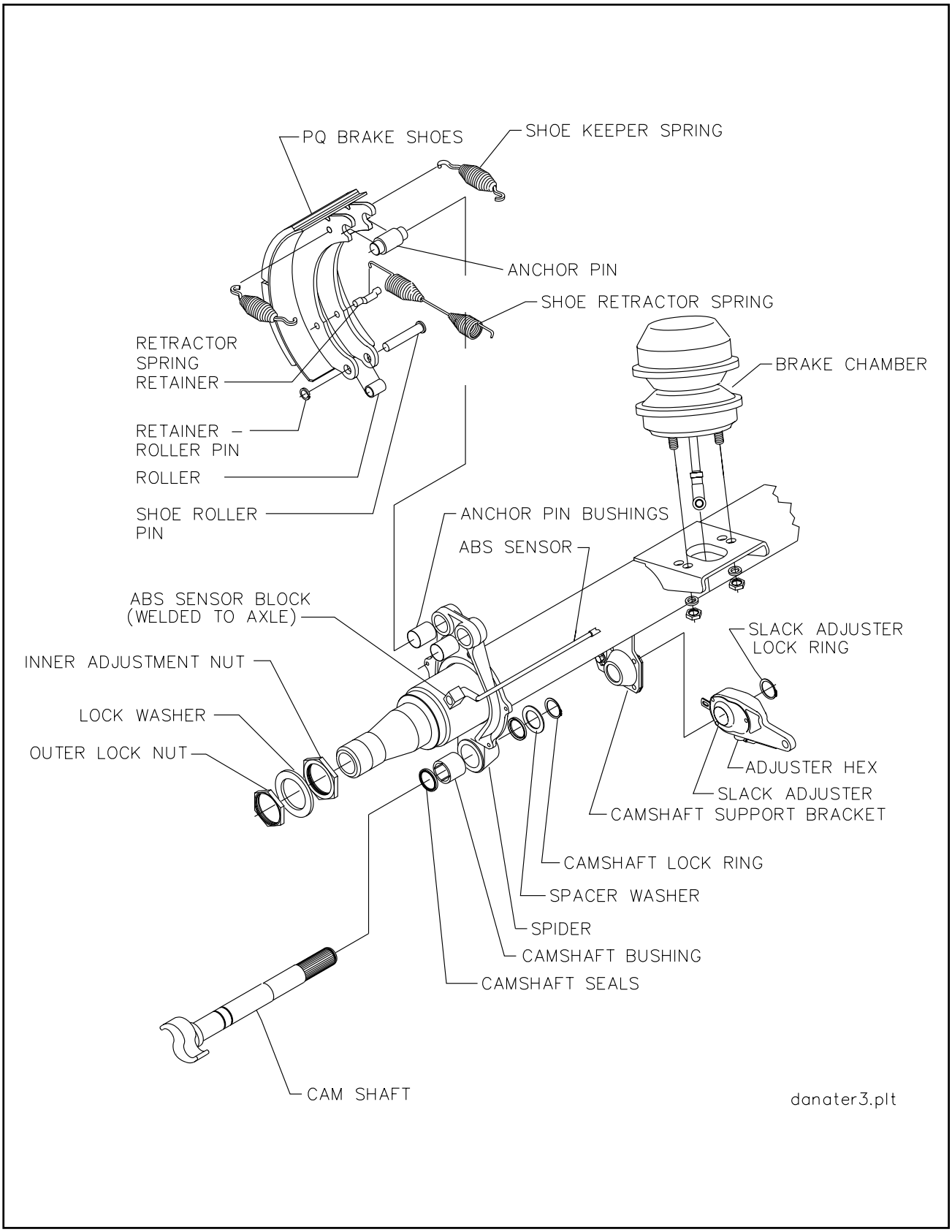


**Figure 4-10 Axle and Brake Assembly**

https://truckmanualshub.com/

5. Install shoes, anchor pin bushings, anchor pins, and spacers onto spider. Install anchor lock rings.

## IMPORTANT

**ALWAYS USE ALL NEW SPRINGS WHEN SERVICING BRAKES.**

6. Install brake return spring.
7. Connect slack adjuster to brake chamber pushrod.
8. Adjust automatic slack adjuster as outlined in **Section 4-8.6 c.**

### 4-8.6 Automatic Slack Adjusters

The trailers automatic slack adjusters provide the means for routine brake adjustment to compensate for lining wear. Inspect slack adjusters every 2,000 miles to assure correct operation.

**a. Operational Check (See Figure 4-11)**

1. Block wheels to prevent vehicle from rolling.
2. Check that the push rod is fully retracted, apply air to release spring brake.
3. Turn adjustment hex counterclockwise to create an excessive clearance condition. (A ratcheting sound will occur.)
4. Make a full service brake application. On release, allow sufficient time for brake to fully retract. During the brake release, observe rotation of the adjustment hex (attach a wrench on the hex to make this movement easier to see). This rotation indicates that an excessive clearance condition has been determined by the slack adjuster, and it is making an adjustment to compensate. On each subsequent brake release the amount of adjustment and push rod travel will be reduced until the desired clearance is achieved
5. The push rod stroke should be 1 1/2" to 2" with an 100 to 105 PSI service brake application.
6. Measure the movement of the push rod from the completely released position to the applied position by marking the push rod where it exits the air chamber before and after application.

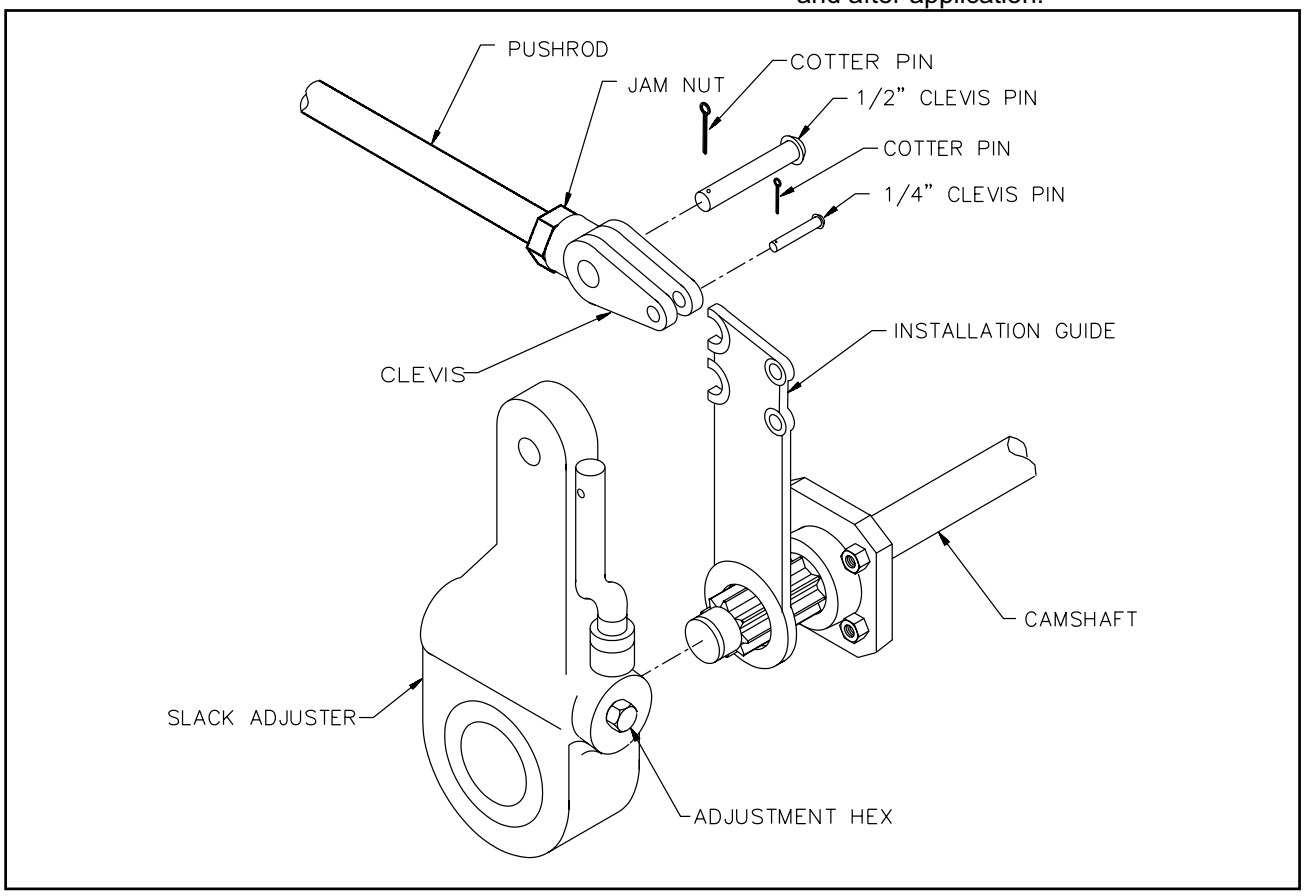


**Figure 4-11 Slack Adjuster**

https://truckmanualshub.com/

7. If the brakes have been running tight, the control arm location should be checked.

**⚠ WARNING**

**IF THE ADJUSTER APPEARS NOT TO BE OPERATING, CHECK THE OTHER BRAKE COMPONENTS FOR PROPER FUNCTION AND ELIMINATE ANY BINDING. RECHECK THE AUTOMATIC SLACK ADJUSTER. IF THE ADJUSTER IS NOT FUNCTIONING, THE UNIT MUST BE REPLACED BECAUSE FAILURE OF PROPER ADJUSTMENT FUNCTION WILL RESULT IN LOSS OF BRAKES.**

**b. Replacing Slack Adjuster (See Figure 4-11)**

**⚠ CAUTION**

**THE INSTALLATION GUIDE MUST BE USED WHEN INSTALLING OR REINSTALLING AUTOMATIC SLACK ADJUSTER. FAILURE TO DO SO MAY RESULT IN IMPROPERLY ADJUSTED BRAKES WHICH MAY CAUSE BRAKE DAMAGE OR LEAD TO BRAKE FAILURE.**

1. Chock wheels to prevent vehicle from rolling. Release spring and service brake. Air chamber push rod must be fully released.
2. To maintain a fully released parking brake, a minimum of 105 psi reservoir pressure must be maintained. If air pressure is not available the spring brake must be manually caged.
3. Remove the existing slack adjuster and clevis - DO NOT REMOVE EXISTING JAM NUT.
4. Install the new clevis (with 1/2" pin) onto the push rod up to the jam nut - DO NOT TIGHTEN JAM NUT.
5. Fit the installation guide over the cam splines so the 1/2" pin slots face the air chamber.
6. Swing the guide into the clevis until the appropriate slot totally engages 1/2" pin.
7. Observe the guide pointer arrow:
   If the guide pointer is <u>above</u> the clevis pointer, adjust clevis CCW for alignment.
   If the guide pointer is <u>below</u> the clevis pointer, adjust clevis CW for alignment.
8. Reposition clevis until the guide pointer aligns with the clevis pointer.
9. Verify by engaging 1/4" pin through the clevis and guide.
10. Tighten jam nut to 50 ft.-lbs. torque min.
11. Remove the guide from cam shaft.
12. If the push rod threads extend through the clevis more than 1/16", remove clevis and cut rod to length.
13. If the push rod is not fully engaged in clevis body, install a new push rod - cut to length.
14. Install the slack adjuster on the cam shaft.
15. Rotate the manual adjuster shaft CW until the slack adjuster arm holes align with the clevis. Install 1/2" and 1/4" pins and cotter pins.

**c. Adjusting Slack Adjuster**

1. Rotate the manual adjuster CW until brake shoes contact drum.
2. Back off manual adjuster 1/2 turn. (CCW)
3. Manually uncage the spring brake.
4. Build up vehicle air pressure.
5. Fully apply and release the brakes several times to check for adequate clearance to all adjacent components.
6. Measure the distance from air chamber to 1/2" pin. Apply brakes with 100-105 psi air pressure and remeasure distance to 1/2" pins.
7. The stroke (difference of these two measurements) must be less than 2 inches.

https://truckmanualshub.com/

## 4-9 HUB AND DRUM MAINTENANCE

**4-9.1** Clean and inspect the brake drums whenever relining the brakes. To be suitable for further service, the brake drum should pass the following checks.

**a.** The brake surface should be free of scoring, excessive heat checks and cracks.

**b.** The brake surface diameter should be within the maximum diameter cast or stamped on the drum.

**c.** The mounting holes and pilot must be round and true.

**d.** The mounting surface must be clean and flat.

**⚠ WARNING**

**FAILURE TO REPLACE FAULTY BRAKE DRUMS WILL RESULT IN AN UNRELIABLE BRAKING SYSTEM, AND MAY LEAD TO AN ACCIDENT.**

**4-9.2** It may be necessary to turn or resurface the braking surface to remove small heat checks or other surface defects resulting from normal use.

**a.** The maximum diameter cast into the back plate portion of the brake drum is the maximum diameter or discard diameter to which the brake drum may be turned or worn and still be usable. If any portion of the brake surface exceeds the maximum diameter it must be discarded. The maximum is .120 over the nominal new diameter unless stated otherwise on the casting. The maximum diameter cast into the brake drum supersedes all published information.

**b.** When resurfacing a drum, allow at least 0.040 inches under the maximum diameter for additional wear.

**⚠ WARNING**

**TURNING A BRAKE DRUM BEYOND 0.040 INCHES UNDER THE MAXIMUM DIAMETER WILL RESULT IN A WEAKER BRAKE DRUM AND MAY RESULT IN AN ACCIDENT.**

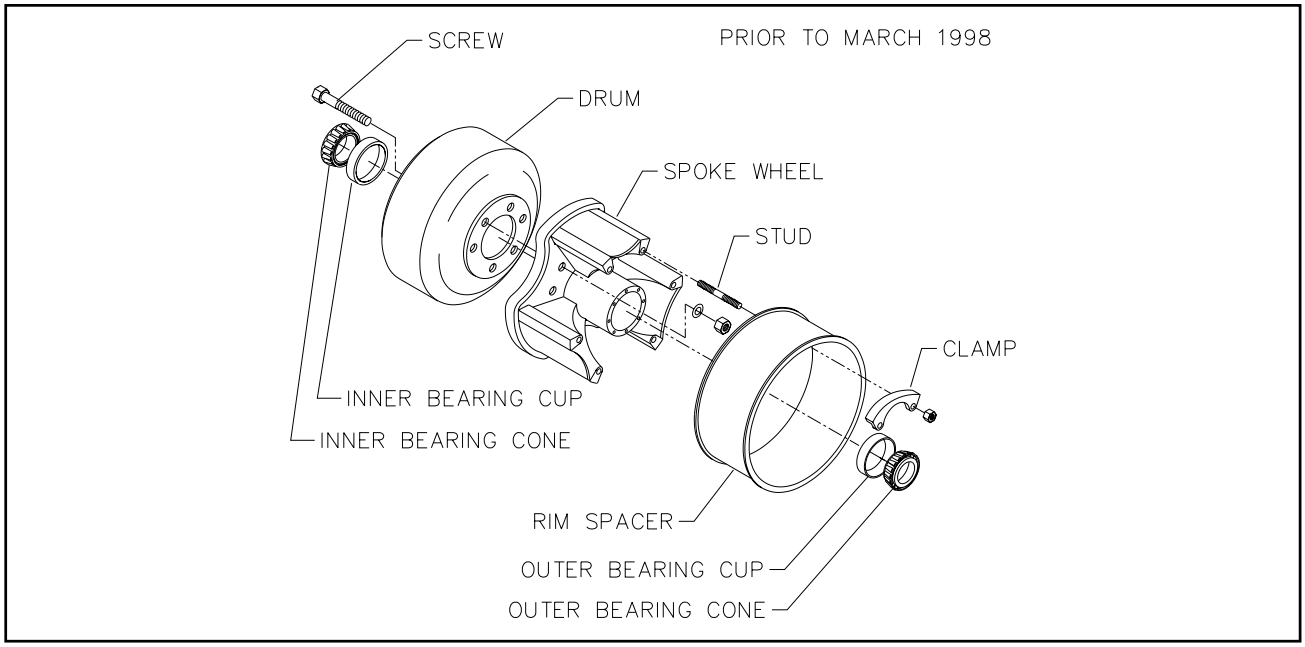


**Figure 4-12 Three Spoke Wheel and Drum**

https://truckmanualshub.com/

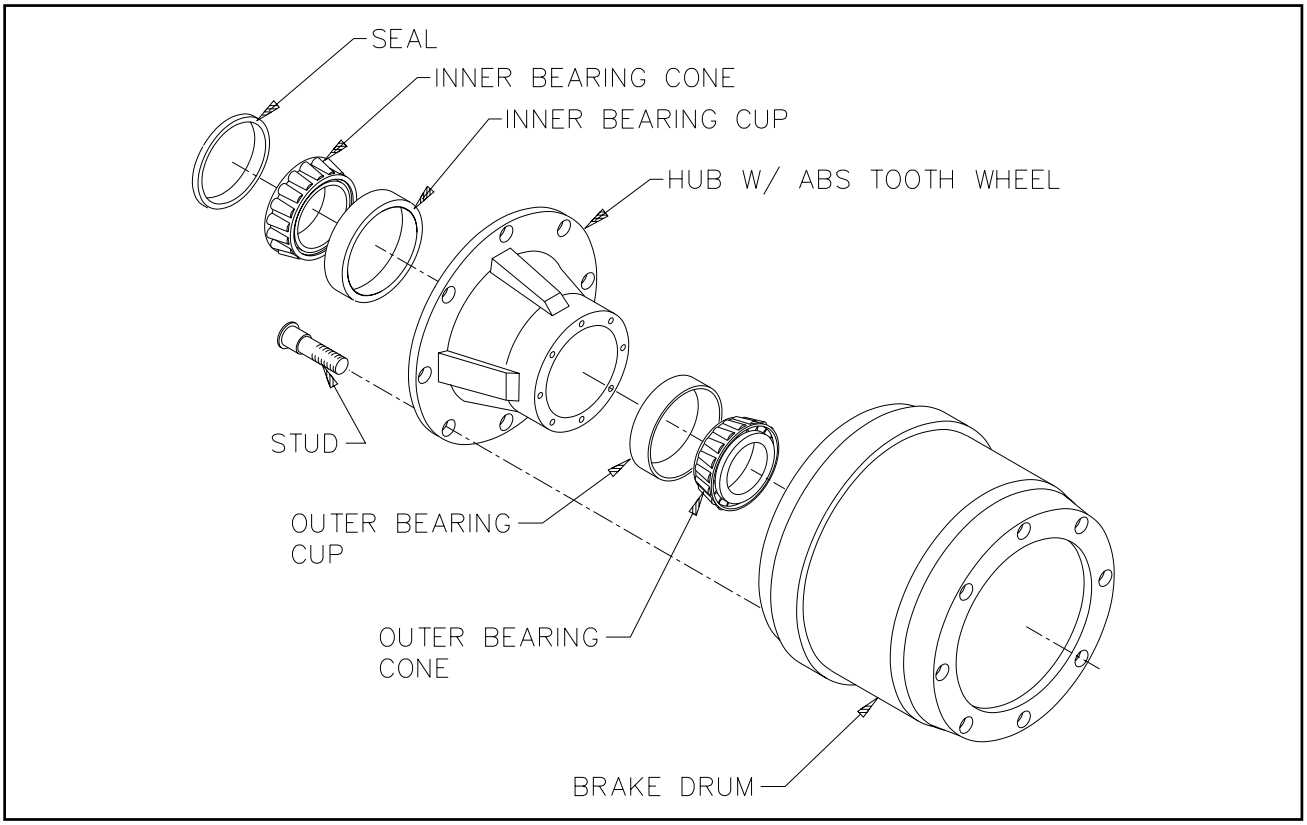


**Figure 4-13 Outboard Mount Hub and Drum**

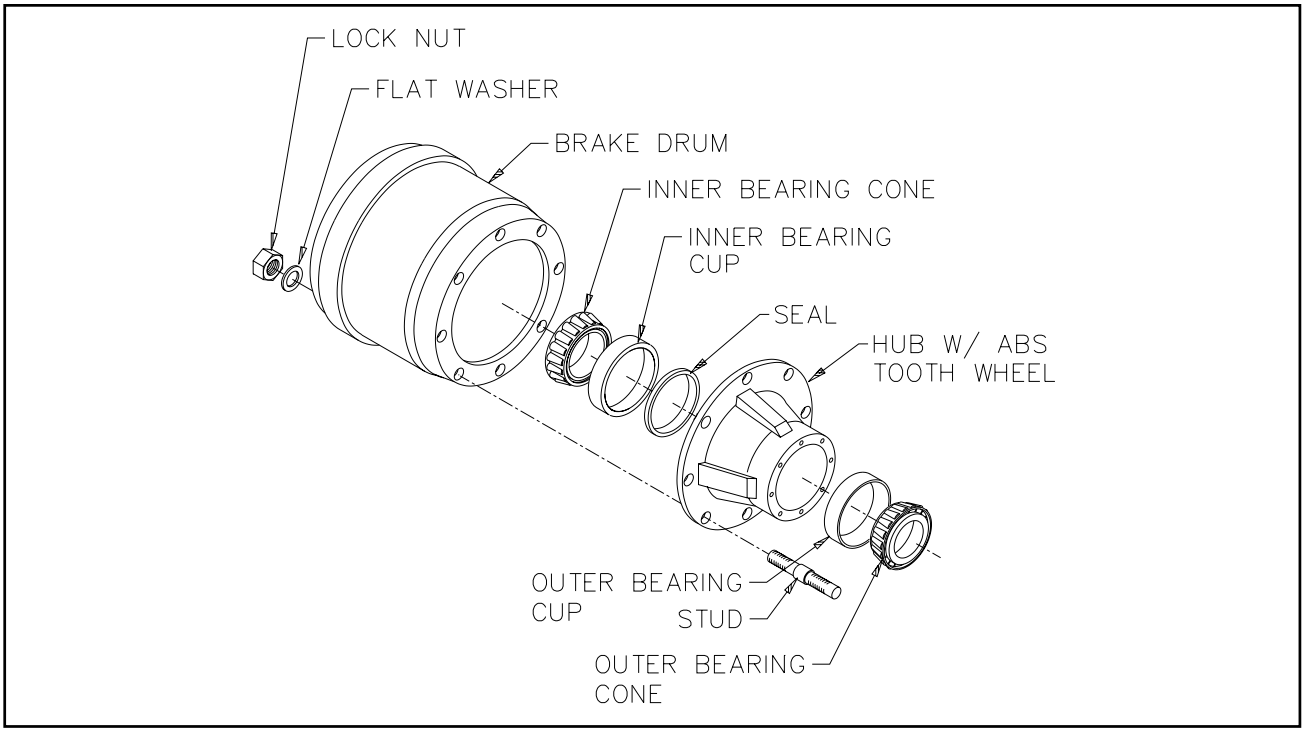


**Figure 4-14 Inboard Mount Hub and Drum**

https://truckmanualshub.com/

**4-9.3** Replacement of the brake drum is required if any of the following conditions exist:

**a.** The brake drum is cracked.

**b.** The brake surface is heat checked, grooved or worn beyond the rebore limit or the maximum diameter.

**c.** The back plate is cracked.

**d.** The bolt holes are elongated.

**e.** The brake drum has been severely overheated.

**f.** The brake drum is out-of-round.

**⚠ CAUTION**

**REPLACE BRAKE DRUMS IN PAIRS TO ACHIEVE THE SAME BRAKING POWER ON BOTH WHEELS AND MAINTAIN AN EVEN BRAKING LOAD ON THE AXLE. FAILURE TO DO THIS MAY SIGNIFICANTLY REDUCE THE PERFORMANCE, SERVICE LIFE, AND/OR SAFETY OF YOUR VEHICLE.**

**4-9.4** Replace the hub and drum as follows **(See Figures 4-12, 4-13, and 4-14):**

**a.** For outboard mount hub and drum remove the brake drum **(See Figure 4-13)**. It may be necessary to release the slack adjuster. For inboard mount **(See Figure 4-14)** and spoke wheel (**See Figure 4-12)** remove drum after hub.

**b.** Remove hub cap and catch lubricant in a pan.

**c.** Remove outer spindle nut, spindle locking washer, inner spindle nut, and bearing. Remove hub from axle.

**d.** Using an appropriate driver, remove inner bearing cone, and seal.

**e.** Using an appropriate driver, remove bearing cups from hub.

**f.** Check that the hub cavity is clean. If the hub is to be reused, clean it thoroughly.

**g.** Insert bearing cups into the hub.

**h.** Install the drum to the hub or wheel unless the drum is outboard mount.

**i.** Clean the mounting surfaces with a good grade commercial cleaner and soft rag. Dry all component parts with a clean, absorbent cloth or paper. Lubricant will not adhere to surfaces wet with solvent.

**j.** For hub and drum, make sure the drum seats flat against the hub flange and mates properly with the hub pilot. There should be no interference between the brake drum pilot chamfer and the corner radius on the hub.

**k.** For spoke wheels, there should be clearance between the spoke and the brake drum or the brake drum will not function properly.

**l.** Install inner bearing, cone, and seal.

**IMPORTANT**

**DO NOT MIX NEW CUPS WITH OLD CONES OR NEW CONES WITH OLD CUPS.**

**m.** If studs are marked “R” or “L”, right hand (R) hubs should be installed on the curbside of the vehicle, left hand (L) hubs should be installed on the driver side.

**⚠ CAUTION**

**FAILURE TO USE THE CORRECT STUD ON THE CORRECT SIDE MAY CAUSE LOOSENING OF THE HUB STUDS DURING OPERATION, RESULTING IN LOSS OF A WHEEL.**

**n.** Place the hub or wheel over the axle spindle being careful to align the hub bore with the axle. Do not damage the seal. Support the hub assembly until the outer bearing cone and spindle nut are installed, to avoid damaging the seal.

**o.** Install the outer bearing cone and inner spindle nut, tightening the nut until it is snug against the outer bearing cone. Remove the hub support allowing the hub to rest on the bearings.

**p.** Install and adjust bearings **(See Wheel Bearing Lubrication and Adjustment).**

**q.** Install the hub cap with the proper gasket. Tighten the cap screws of the hub cap to 15 to 20 ft-lbs. of torque.

**r.** Remove the filler plug and fill the hub cavity to the recommended level with a gear type oil.

**s.** For Outboard Mounted Brake Drum **(See Figure 4-13)** place the drum over the hub and brake shoes being careful not to damage the threads on the studs. Make sure the drum seats flat against the hub flange and mates properly with the hub pilot. There should be no interference between the brake drum pilot chamfer and the corner radius on the hub. If interference exists, the hub will not be able to function properly.

https://truckmanualshub.com/

## 4-10 WHEEL BEARING LUBRICATION AND ADJUSTMENT

With trailer sitting level, the oil level must be checked daily and maintained between the “ADD” and “FULL” lines on the hub cap window. Check for cracked windows, missing filler plugs, and oil leaks. Add hub oil through the “POP-IN” filler plug located in the center of the hub windows. Re-install the “POP-IN” plugs after filling each hub. Adjust wheel bearings and change oil every 50,000 miles or with each brake lining replacement, which ever occurs first.

### 4-10.1 Adjustment

**a.** With a drain pan under the hub cap, remove the hub cap assembly allowing oil to drain.

**b.** Lift the wheel off of the ground.

**c.** Adjust slack adjuster to eliminate brake drag during tire/wheel rotation.

**d.** Remove outer lock nut and inner nut and lock washer.

**e.** Tighten the inner adjustment nut to a minimum of 75 ft.-lbs., while rotating wheel to insure proper seating of the bearings and cups in the wheel hub.

**f.** Loosen the inner adjustment nut so that the wheel will turn freely.

**g.** Retighten the inner adjustment nut to 50 ft.-lbs. while rotating the wheel, to properly position the bearings for the final adjustment.

**h.** Loosen the inner adjustment nut 1/3 turn.

**i.** Install the spindle nut lock washer so that the dowel on the inner nut will align with a hole in the lock washer and the washer tang fits in the spindle keyway.

**j.** Install the outer lock nut and tighten to 250-300 ft.-lbs. End-play of .001" to .010" must be present in the adjusted wheel bearing assembly.

**⚠ DANGER**

**FAILURE TO TORQUE THE OUTER LOCK NUT PROPERLY COULD CAUSE THE WHEEL TO COME OFF DURING VEHICLE OPERATION RESULTING IN PROPERTY DAMAGE OR LOSS OF LIFE.**

**k.** Install the hub cap with a new gasket and fill with oil to the full mark. **See Table 4-1.**

**l.** Adjust brakes according to **See Section 4-8.5-c.**

**m.** Check hub oil level after the wheel has set level in one position for a few minutes to allow the oil to work into the bearings.

https://truckmanualshub.com/

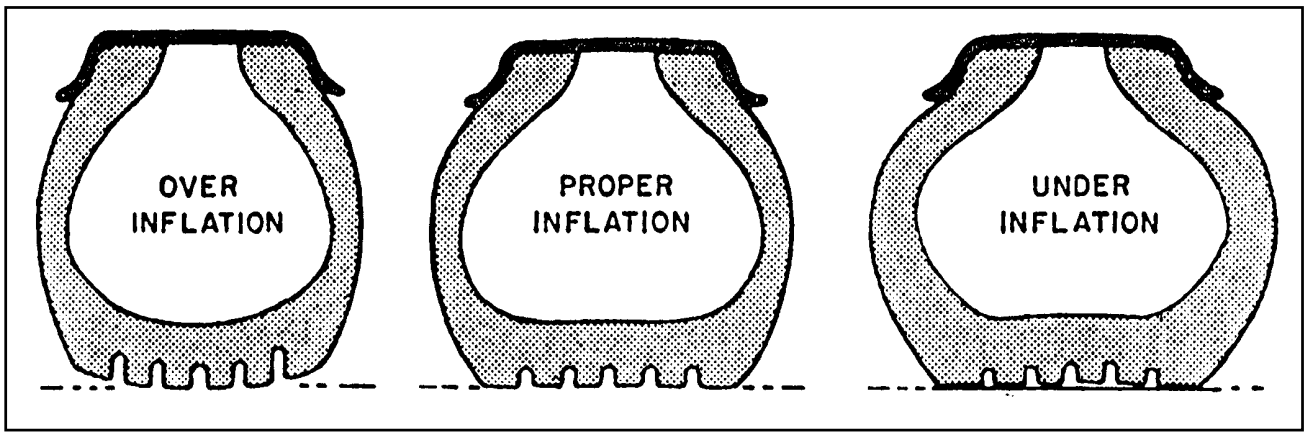


**Figure 4-15 Tire Inflation Examples**

## 4-11 TIRE MAINTENANCE

**4-11.1 Tire Inflation**. Tire inflation will cause tire to ground contact characteristics as shown in **Figure 4-15**. Tire inflation should be checked daily while the tire is cold, and during road stops. Checking the tire pressures while tires are hot will give a faulty increased pressure reading. Adjusting tire air pressure to the specified amount while tires are hot will produce improper tire to road contact and thus abnormal wear. Do not exceed cold inflation pressure listed on the trailer VIN plate located on the front of the trailer. Exceeding cold inflation pressure will result in damaged tire bodies, rims, and wheels. Replace all valve stem caps when pressure checking/adjusting has been completed. Remove any foreign objects from between duals.

**4-11.2 Tire Matching**. Both tires on the same spindle must be the same size in order to properly distribute the load and braking forces between them. The tire must be mounted on a rim and properly inflated before measuring. If there is an allowable difference in size the smaller tire should be mounted to the inside position of the duals.

**a. Tape Measuring Method**: Measure around each tire on the tread surface. A maximum difference of 3/4" is allowed between the two mating tires of a dual **(See Figure 4-16).**

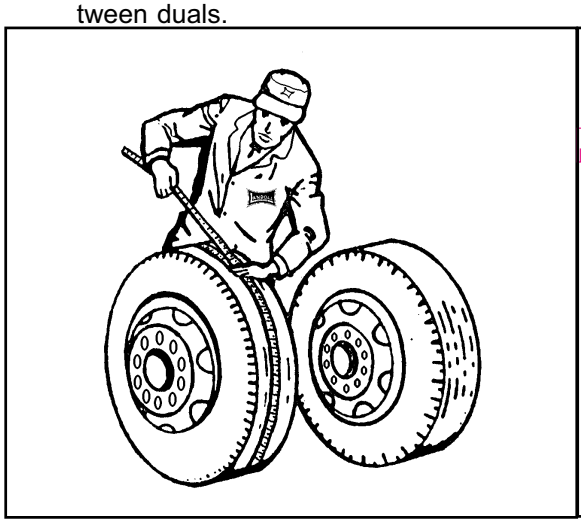

**Figure 4-16 Measuring Tape Method**

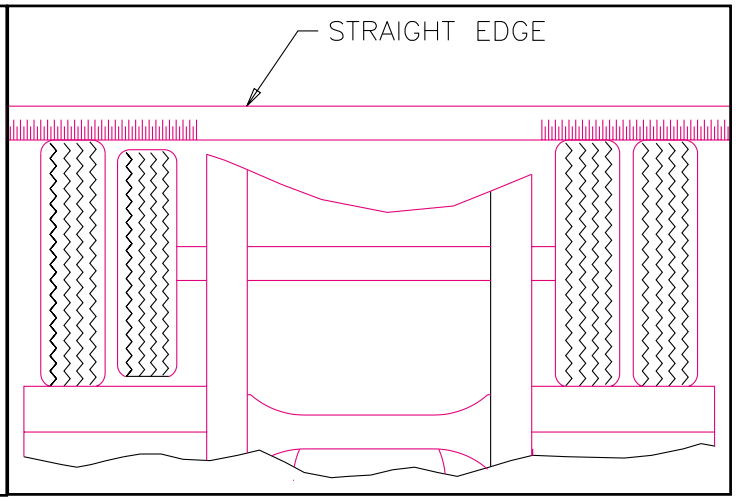


**Figure 4-17 Straight Edge Method**

https://truckmanualshub.com/

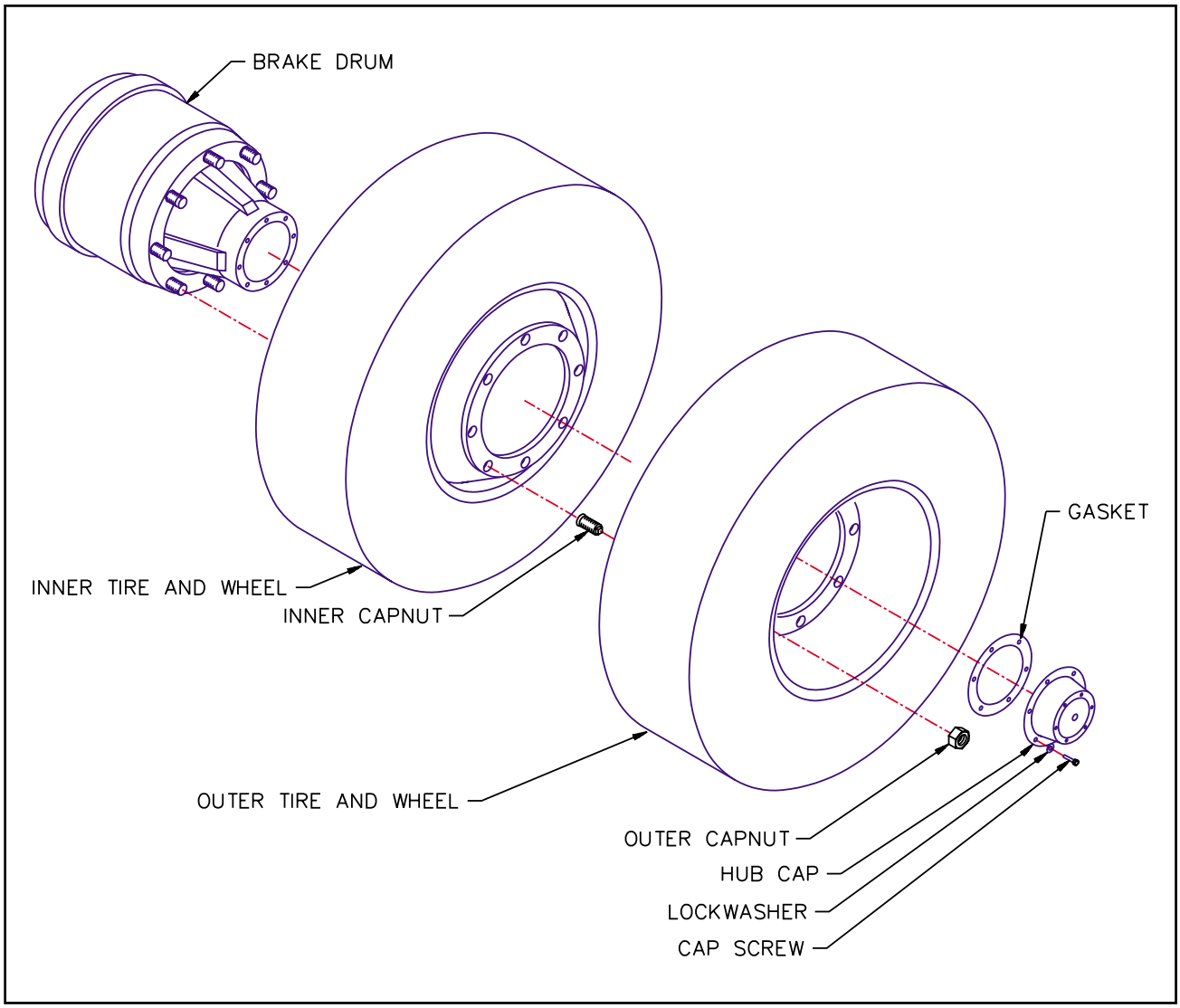


**Figure 4-18 Mounting Tires and Wheels**

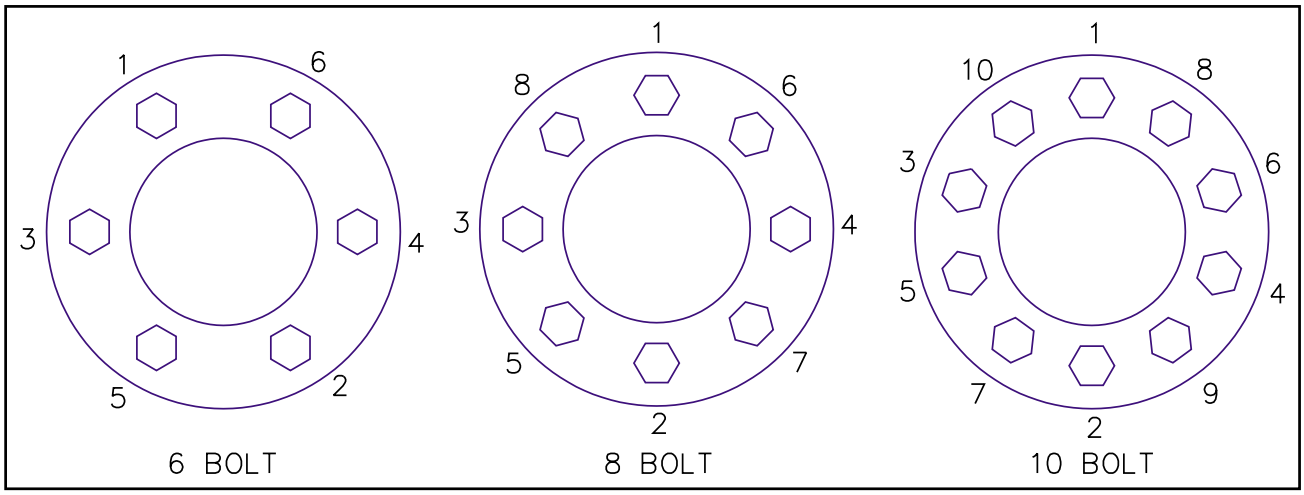


**Figure 4-19 Stud Tightening Sequence**

https://truckmanualshub.com/

**b. Straight Edge or String Method**: (This method cannot be used if tire and wheel assemblies are not mounted on the axle.) Jack trailer up until the wheels are off of the ground. Hold a straight edge against the tires of both ends of an axle. A gap at one tire indicates a smaller tire. A maximum of 1/8" gap is allowed **(See Figure 4-17)**.

### 4-11.3 Mounting Tire and Wheel (Hub Type)

**a.** Make sure that all mounting surfaces are clean and free of rust, dirt or paint. A wire brush may be used to clean these surfaces **(See Figure 4-18)**.

**b.** Position the inner disc wheel over the studs, being careful not to damage the stud threads. Make sure that the disc wheel is flat against the mounting surface and that there is clearance between the disc wheel taper and brake drum.

**c.** For ball seat mounted wheels only, install the inner capnuts on the studs and tighten to fifty foot-pounds using the sequence illustrated in **Figure 4-19**. Make certain that the left-handed threads are installed on the driver side of the vehicle and the right-handed threads are installed on the curbside of the vehicle.

**d.** Tighten the inner capnuts to full torque of 450 to 500 foot-pounds using the sequence shown in **Figure 4-19**.

**e.** For pilot mounted wheels, skip steps c and d.

**f.** Position the outer disc wheel over the capnuts being careful not to damage the inner capnut threads. Be sure the valve stems for both the inner and outer tire are accessible.

**g.** Install the outer capnuts (ball seat) or flange nut (pilot mount) and tighten to 50 foot-pounds using the sequence in **Figure 4-19.** Then tighten to full torque of 450 to 500 foot-pounds for ball seat and 500 to 550 foot-pounds for pilot mount, using the same sequence**.**

**h.** Torque will drop after the first 50 to 100 miles of operation. Check the capnuts for proper torque after this interval and retighten them. Loosen the outer capnuts and retighten the inner and outer capnuts per **steps d to g.**

**⚠ WARNING**

**USE A TORQUE WRENCH TO ASSURE PROPER TORQUE. INSUFFICIENT TORQUE CAN CAUSE STUD BREAKAGE AND DAMAGE WHEEL PILOTS. OVERTORQUE CAN OVERSTRESS THE STUDS AND STRIP THE THREADS.**

### 4-11.4 Mounting Tire and Rim (Spoke Type)

**a.** Slide the inside rim over the wheel so the $28^{o}$ mounting surfaces mate. Be sure the valve stem is pointing out and is centered between two spokes.

**b.** Slide the rim spacer over the wheel and against the inner rim. If the spacer is damaged, replace with a new spacer.

**c.** Slide the outer rim over the wheel. Be sure the valve stem is pointing in and is centered between the same spokes as the inner valve stem.

**d.** Install the rim clamp and nuts. Lightly tighten the rim nuts until they are properly seated.

**e.** After they are properly seated, tighten the rim nuts one-quarter turn at a time, in the order illustrated in **Figure 4-19** to a torque of 200 to 250 foot-pounds.

**f.** Check your rim alignment by placing a block of wood or other object on the floor and rotating the wheel. If the variation exceeds 1/16" for the front wheels or 1/8" for the rear wheels, the rim is not properly mounted. To correct the problem, loosen the nut on the side with the greatest deviation and tighten the nuts opposite to this nut. Recheck the torque.

**g.** Check space between dual wheels. Side walls should not be in contact.

**h.** Torque will drop after the first 50 to 100 miles of operation. Check the capnuts or flange nuts for proper torque after this interval and retighten them.

https://truckmanualshub.com/

## 4-12 WINCHES

Inspect the winch cable before and after **every** usage. If frayed wires, nicks, kinks, worn spots, breaks or any other sign of deterioration or damage is found, immediate replacement is mandatory before further usage. If the trailer is going to be out in the weather for any length of time, it is advisable to oil the winch cable to prevent untimely rusting and deterioration of the cable. See **Table 4-1** for lubrication specifications.

Inspect the winch mechanism thoroughly each week to insure safe, efficient operation.

**⚠ WARNING**

**DO NOT HANDLE THE WINCH CABLE WHEN THE WINCH IS IN THE ENGAGE POSITION. HANDS OR CLOTHING COULD GET CAUGHT IN THE CABLE AND BE PULLED INTO THE SPOOL CAUSING SERIOUS PERSONAL INJURY.**

https://truckmanualshub.com/

# TROUBLESHOOTING

## 5-1 ELECTRICAL

Most electrical system problems show up as a burned out light or fuse, or inoperative electrical component. Wiring, grounds, or components may be at fault. Locate the symptom in this section that best identifies your electrical problem. Check out each possible problem under that symptom. If the problem cannot be located, see an automotive electrical specialist. For maintenance procedures see **Section 4-5.**

| SYMPTOM | PROBLEM: REMEDY |
|---|---|
| NO LIGHTS | **Fuse blown:** replace fuse.<br>**Connection at plug-in:** tighten connection.<br>**Broken or corroded wires:** replace wire.<br>**Ground wire loose:** clean and tighten ground. |
| LIGHTS FLICKERING | **Wires shorted or loose:** locate, insulate, replace, or tighten.<br>**Grounding through fifth wheel:** locate broken ground wire (tractor or trailer). |
| LIGHTS DIM | **Voltage difference between trailer & tractor:** match bulbs with tractor voltage.<br>**Grounding through fifth wheel:** locate broken ground wire (tractor or trailer). |
| LIGHTS BRIGHT & BURN OUT | **Voltage difference between trailer & tractor:** match bulbs with tractor voltage. |
| FUSE BLOW-OUT OR CIRCUIT BREAKER TRIPPING | **Vibration:** locate source of vibration and repair.<br>**Short circuit:** replace fuse and try all accessories. If fuse blows right away, locate short and repair. |
| LAMP BULB BURN OUT | **Vibration:** locate source of vibration and repair.<br>**Short circuit:** replace fuse and try all accessories. If fuse blows right away, locate short and repair.<br>**Loose connection:** check lamp sockets and ground connections.<br>**Intermittent short:** locate short and repair.<br>**Improper voltage:** check voltage regulator output. |

https://truckmanualshub.com/

## 5-2 TIRES - WHEELS - SUSPENSION

Most tire, wheel, and suspension related problems are due to excessive loads, extreme conditions, and improper maintenance. Tire, wheel, and suspension problems can be easily detected and solved by checking the following guide. For maintenance procedures see **Sections 4-4, 4-7, 4-9, 4-10, 4-11 .**

| SYMPTOM | PROBLEM: REMEDY |
|---|---|
| VIBRATIONS WHILE DRIVING | **Improper tire inflation:** inflate to proper pressure.<br>**Tires cupped or have flat spots:** replace tires.<br>**Wheels bent or loose:** replace or tighten.<br>**Tires incorrectly mounted:** remount.<br>**Mud in wheels:** clean wheels.<br>**Tire(s) out of balance:** balance tires.<br>**Brakes dragging:** locate cause and repair.<br>**Object(s) stuck between duals:** remove object(s). |
| **RAPID TIRE WEAR/DETERIORATION:** | |
| CENTER TREAD WEAR | **Over inflation:** deflate to correct inflation. |
| SHOULDER TREAD WEAR - BOTH SHOULDERS | **Under inflation:** increase inflation to correct PSI. |
| SHOULDER TREAD WEAR - ONE SHOULDER | **Axle damage:** straighten or replace axle. |
| OVERALL TREAD WEAR | **Overloading:** check tire load rating.<br>**High speeds:** adjust speed according to road and load conditions.<br>**Incorrect dual matching:** properly match dual tires. |
| TIRE FLAT SPOTS | **Quick stops:** adjust braking practices.<br>**Grabbing brakes:** adjust brakes properly.<br>**Worn or loose wheel bearings:** adjust or replace as needed.<br>**Out of balance wheels and tire:** balance wheels and tires. |
| UNEVEN WEAR | **Undercarriage bushings worn:** replace bushings.<br>**Worn or loose wheel bearings:** adjust or replace as needed.<br>**Out of balance wheels and tires:** balance wheels and tires. |
| **RIM FAILURE*:** | |
| CRACKING | **Overinflated tires:** deflate tire to proper PSI.<br>**High speeds:** adjust speed according to road and load conditions.<br>**High speed cornering:** adjust cornering practices.<br>**Over loading:** check rim load rating. |
| *IN ALL INSTANCES OF RIM FAILURE, REPLACE THE RIM IMMEDIATELY! | |
| BENDING OR WARPING | **Curb-hopping or potholes:** adjust turning practices and adjust speed accordingly with road conditions.<br>**Improper tightening sequence:** follow proper tightening sequence. (**See Figure 4-19.)** |

https://truckmanualshub.com/

## TIRES - WHEELS - SUSPENSION (CONTINUED)

| SYMPTOMS | PROBLEM: REMEDY |
|---|---|
| BROKEN STUDS* | **Over tightening:** use correct torque when mounting. |

*REPLACE BROKEN STUDS BEFORE USING THE SEMITRAILER!

**TRAILER TRACKING PROBLEMS:**

| | |
|---|---|
| TRACKS TO ONE SIDE | **Axle alignment:** re-align axle. |
| TRACKS TO EITHER SIDE | **Broken or bent springs or equalizers:** replace defective parts.<br>**Axles not parallel**: realign axles |

**AIR RIDE HEIGHT PROBLEMS:**

| | |
|---|---|
| TOO HIGH | **Axle to control valve linkage:** readjust linkage.<br>**Height Control Valve internal leak:** repair or replace Valve. |
| TOO LOW | **Axle to control valve linkage:** readjust linkage.<br>**Height Control Valve filter plugged:** clean or replace valve.<br>**Pressure Protection Valve filter plugged:** clean or replace valve.<br>**System air pressure low (65 PSI minimum required):** troubleshoot air supply. |
| UNEVEN FROM SIDE TO SIDE | **Linkage adjustment:** readjust linkage.<br>**Exhaust port plugged:** clean or replace valve(s).<br>**Height control valve internal leak:** repair or replace valve.<br>**Supply line to one height control valve pinched, restricted, or plugged:** repair or replace line. |

## 5-3 BRAKES

For maintenance procedures see **Sections 4-8.**

| SYMPTOM | PROBLEM: REMEDY |
|---|---|
| NO BRAKES OR BRAKES ARE INTERMITTENT | **Brake air system improperly connected:** reconnect hand valves properly.<br>**Relay/Emergency valve plugged:** clean valve.<br>**Defective tractor protection valve:** repair or replace.<br>**Restricted tubing or hose line:** locate and eliminate restriction.<br>**Broken line:** locate break and repair.<br>**Tractor air system failure:** troubleshoot tractor air system and repair. |
| SINGLE BRAKE DRAGGING OR LOCKED | **Broken internal brake component:** locate and replace broken part. **Flat spot on cam roller or cam shaft:** replace and lubricate.<br>**Improper adjustment:** adjust slack adjusters.<br>**Spider bushing or cam bracket bushing binding:** lubricate or replace bushing.<br>**Improper lubrication:** lubricate per **Figure 4-1.**<br>**Worn brake shoe bushing:** replace bushing.<br>**Brake drum distortion:** replace drum.<br>**Broken brake chamber spring:** replace spring.<br>**Brake chamber pushrod binding:** re-align brake chamber bracket.<br>**Air brake line loose or broken:** tighten or repair. |

https://truckmanualshub.com/

## BRAKES (CONTINUED)

| SYMPTOM | PROBLEM: REMEDY |
|---|---|
| UNEVEN BRAKES | See “SINGLE BRAKE DRAGGING OR LOCKED”<br>**Restriction in hose:** locate restriction and remove.<br>**Worn brake linings:** reline brakes.<br>**Grease on linings:** reline brakes.<br>**Broken slack adjuster:** replace slack adjuster.<br>**Leaking brake chamber diaphragm:** replace diaphragm. |
| BRAKES APPLY TOO SLOWLY | **Brakes need adjusting or lubrication:** adjust or lubricate as needed.<br>**Low air pressure in brake system (below 105 PSI):** check tractor<br>air system.<br>**Restricted tubing or hose:** locate restriction and remove.<br>**Defective relay valve:** clean or replace. |
| BRAKES RELEASE TOO SLOWLY | **Brakes need adjusting or lubrication:** adjust or lubricate as needed.<br>**Brake rigging binding:** align brakes or replace bent parts.<br>**Exhaust port of relay valve restricted or plugged:** clean valve.<br>**Tractor pressure too low:** Adjust to provide 105 psi min. |
| ALL BRAKES DO NOT RELEASE | **Air system improperly connected to tractor:** tighten or adjust connections.<br>**Brake valve on tractor is applied:** release brake.<br>**Relay emergency valve in emergency position:** check line pressure and check valve.<br>**Restricted tubing or line:** locate restriction and remove.<br>**Defective tractor protection valve:** troubleshoot tractor air system.<br>**Parking brakes locked:** troubleshoot air system.<br>**Tractor pressure too low:** Adjust to provide 105 psi min. |
| INSUFFICIENT BRAKES | **Brakes need adjusting:** adjust brakes.<br>**Brakes need lubricating:** lubricate brakes.<br>**Brakes need relining:** reline brakes.<br>**Low air pressure:** troubleshoot air system.<br>**Defective relay emergency valve:** repair or replace.<br>**Brakes overheated:** stop and allow brakes to cool, locate cause of overheating. |
| BRAKES GRABBING | **Grease on brake linings:** reline brakes.<br>**Brake rigging binding:** align brakes or replace bent parts.<br>**Defective brake valve on tractor:** repair or replace valve.<br>**Defective relay emergency valve:** repair or replace valve.EX-CESSIVE LEAKAGE WITH BRAKES RELEASED<br>**Relay emergency valve leaking:** repair or replace valve.<br>**Leaking tubing or hose:** replace defective part. |
| EXCESSIVE LEAKAGE WITH BRAKES APPLIED | **Relay emergency valve leaking:** repair or replace valve.<br>**Leaking brake chamber diaphragm:** replace diaphragm.<br>**Leaking tubing or hose:** replace defective part. |

https://truckmanualshub.com/

## BRAKES (CONTINUED)

| SYMPTOM | PROBLEM: REMEDY |
|---|---|
| EXCESSIVE LEAKAGE WITH EMERGENCY SYSTEM ONLY APPLIED - NO LEAKAGE WITH NORMAL BRAKING | **Defective relay emergency valve:** repair or replace valve. |
| EXCESSIVE WATER PRESENT IN BRAKE SYSTEM | **Reservoir not drained often enough:** drain reservoir daily. |
| EXCESSIVE OIL PRESENT IN BRAKE SYSTEM | **Compressor on tractor passing excessive oil:** repair compressor. |
| BRAKE WILL NOT APPLY PROPERLY | **Flat spot on cam roller or camshaft:** replace and lubricate. |
| BRAKES WILL NOT APPLY WHEN EMERGENCY LINE IS DISCONNECTED | **Initial air pressure too low:** allow air system to build up to minimum 90 PSI and stabilize.<br>**Defective relay valve:** repair or replace valve.<br>**Air line leak:** locate leak and repair.<br>**Brake chamber leak:** locate leak and repair or replace. |
| ABS WARNING LIGHT STAYS ON | **Refer to Rockwell WABCO ABS maintenance manual supplied with trailer for system function and use of blink code diagnostics.** |

## 5-4 BRAKE DRUMS

For maintenance procedures see **See Sections 4-6, 4-7, 4-8, 4-9, 4-10.**

| SYMPTOM | PROBLEM: REMEDY |
|---|---|
| EXCESSIVE LOSS OF BRAKES OR FADING | **Overheated brake drums:** check for defective or misadjusted brake linings, distorted or over-machined drums. Also check for operating conditions or loads that create severe or excessive brake applications. |
| BRAKES PULL TO EITHER SIDE | **Drums of different diameters:** replace with drums of same diameter.<br>**Foreign matter in drums:** clean drums out. |
| ROUGH OR NOISY BRAKING ACTION | **Defective drums:** pull drums and inspect for any of the following; Heat spotted drums, grease spotting, blue drums, scored drums, excessive wear at rivet holes or edges, polished drums, out of round drums, unbalanced drums, worn/damaged brake components, foreign matter in drums. Correct situation or replace defective part(s). |
| VIBRATION IN RIDE | **Defective drums or out-of-round:** replace drums.<br>**Out-of-balance drums:** balance drums. |

https://truckmanualshub.com/

## 5-5 HYDRAULIC SYSTEM

Most hydraulic system failures follow the same pattern: a gradual or sudden loss of pressure or flow with a resulting loss of cylinder or motor power. Any one of the system's components may be at fault. By following step-by-step procedures, the trouble can be located in a short time.

| SYMPTOM | PROBLEM: REMEDY |
|---|---|
| SYSTEM INOPERATIVE | **Not enough oil in system:** fill, check for leaks.<br>**Wrong oil in system:** change oil, see specifications.<br>**Filter dirty or clogged:** drain oil and replace filter.<br>**Hydraulic lines dirty or collapsed:** clean or replace as necessary.<br>**Air leaks in pump suction line:** repair or replace as necessary.<br>**Worn or dirty pump: clean, repair or replace.** Check for contaminated oil. Drain and flush.<br>**Badly worn components:** examine for internal leakage. Replace faulty components. Check for cause of wear.<br>**Leakage:** check all components, and relief valve for proper settings.<br>**Excessive load:** check unit specifications for load limits.<br>**Slipping or broken pump drive:** repair or replace couplings. Check for alignment. |
| SYSTEM OPERATES ERRATICALLY | **Air in the system:** check suction side of system for leaks. Repair leaks.<br>**Cold oil:** allow ample warm-up time. Use proper weight oil for operating temperature.<br>**Dirty or damaged components:** clean or repair as needed.<br>**Restriction in filters or lines:** clean and/or replace filter or lines.<br>**Not enough oil in system:** fill and check for leaks. |
| SYSTEM OPERATES SLOWLY | **Oil viscosity too high, or "cold oil".** Allow oil to warm up before operating.<br>**Low pump drive speed:** increase engine speed (check pump owners manual for specifications).<br>**Low oil level:** check reservoir and add oil as necessary.<br>**Air in system:** check suction side for leaks. Repair leaks.<br>**Badly worn pump, valves, cylinders, etc.:** repair or replace faulty component(s) as necessary.<br>**Restrictions in lines or filter:** clean and/or replace filter or lines.<br>**Improper adjustments:** check orifices, relief valves, etc. Adjust as necessary.<br>**Oil leaks:** tighten fittings. Replace seals, gaskets and damaged lines. |
| SYSTEM OPERATES TOO FAST | **Wrong size or incorrectly adjusted restrictor:** replace or adjust as necessary.<br>**Engine running too fast:** reduce engine speed. |

https://truckmanualshub.com/

## HYDRAULIC SYSTEM (CONTINUED)

| SYMPTOM | PROBLEM: REMEDY |
|---|---|
| OVER HEATING OF OIL IN SYSTEM | **Oil passing through relief valve for excessive time:** return control valve to neutral when not in use.<br>**Incorrect, low, dirty oil:** use recommended oil. Fill reservoir with clean oil. Replace filter.<br>**Engine running too fast:** reduce engine speed.<br>**Excessive component internal leakage:** repair or replace component as necessary.<br>**Restriction in filters or lines:** clean and/or replace filter or lines.<br>**Insufficient heat radiation:** clean dirt and mud from reservoir and components.<br>**Malfunctioning component:** repair or replace.<br>**Excess oil going to dock level circuit:** adjust flow divider for 2.5 to 3.1 GPM flow. |
| FOAMING OF OIL | **Incorrect, low, dirty oil:** replace, clean or add oil as needed.<br>**Air leaks:** check suction line and component seals for suction leaks. Replace defective parts. |
| NOISY PUMP | **Low, incorrect, foamy oil:** replace, clean, or add oil as needed.<br>**Suction line plugged:** clean out obstruction or replace line. Flush system, replace filter. |
| LEAKY PUMP | **Damaged or worn shaft seal:** Replace seal and check for misalignment.<br>**Loose or broken parts:** Tighten or replace. |
| CYLINDERS MOVE WITH CONTROL VALVE IN NEUTRAL POSITION | **Leaking cylinder seals or fittings:** Replace worn seals or fittings. **Control valve not centering when released:** Check linkage for binding and repair.<br>**Valve damaged:** Repair or replace. |
| CONTROL VALVE LEAKS | **Seals damaged or worn:** Replace. |
| CYLINDER LEAKS | **Seals worn or damaged:** Replace.<br>**Rod damaged:** Replace.<br>**Barrel damaged:** Replace. |
| CYLINDERS DO NOT FUNCTION, OR CREEP WITH PTO DISENGAGED | **Leaking fittings or cylinder seals:** Tighten loose fittings. Replace worn seals or fittings.<br>**Piloted check valve or O-ring leak:** Replace defective component. |

## 5-6 HYDRAULIC POWER SUPPLY ENGINE PACKAGE

To troubleshoot the engine in the hydraulic engine package, please refer to the owners manual that was provided with the engine package.

https://truckmanualshub.com/

## 5-7 DOCK LEVEL HYDRAULICS

| SYMPTOM | PROBLEM: REMEDY |
|---|---|
| FAILS TO LIFT TRAILER | **Insufficient hydraulic supply pressure:** adjust relief valve for 2400-2500 psi.<br>**Worn hydraulic pump:** service or replace.<br>**Insufficient volume to dock level circuit:** adjust flow divider to provide 2.5 to 3.1 GPM.<br>**Too heavy a load:** reduce load on cylinders. |
| LOWERS UNEVENLY OR ERRATICALLY | **Insufficient volume to dock level circuit:** clean system and new oil and filter.<br>**Dirty oil in check valves:** use same procedure as above. |

https://truckmanualshub.com/

# NOTES:

https://truckmanualshub.com/

Equipment from Landoll Corporation is built to exacting standards ensured by ISO 9001:2008 registration at all Landoll manufacturing facilities.

# Model 345B
# Trailer
# Operator's Manual

## Re-Order Part Number F-272-298

**LANDOLL CORPORATION**
1900 North Street
Marysville, Kansas 66508
(785) 562-5381
**800-428-5655 ~ WWW.LANDOLL.COM**

Copyright 2010. Landoll Corporation
"All rights reserved, including the right to reproduce this material or portions thereof in any form"