https://truckmanualshub.com/

Discount Equipment
www.Discount-Equipment.com

JLG®

Operators and Safety Manual

Model
450A
450AJ

3120748
April 24, 2002

To order go to Discount-Equipment.com

ANSI

NQR ISO9001 REGISTERED COMPANY
UKAS QUALITY MANAGEMENT 015

JLG®

https://truckmanualshub.com/

TO PURCHASE THIS PRODUCT PLEASE CONTACT US

Discount Equipment

Equipment Financing and
Extended Warranties Available

Discount-Equipment.com is your online resource for commercial and industrial quality parts and equipment sales.

561-964-4949

visit us on line @ www.discount-equipment.com

Select an option below to find your Equipment

Search by Manufacturer

Search by Product Type

Request a Quote

We sell worldwide for the brands: Genie, Terex, JLG, MultiQuip, Mikasa, Essick, Whiteman, Mayco, Toro Stone, Diamond Products, Generac Magnum, Airman, Haulotte, Barreto, Power Blanket, Nifty Lift, Atlas Copco, Chicago Pneumatic, Allmand, Miller Curber, Skyjack, Lull, Skytrak, Tsurumi, Husquvarna Target, Stow, Wacker, Sakai, Mi-T-M, Sullair, Basic, Dynapac, MBW, Weber, Bartell, Bennar Newman, Haulotte, Ditch Runner, Menegotti, Morrison, Contec, Buddy, Crown, Edco, Wyco, Bomag, Laymor, EZ Trench, Bil-Jax, F.S. Curtis, Gehl Pavers, Heli, Honda, ICS/PowerGrit, IHI, Partner, Imer, Clipper, MMD, Koshin, Rice, CH&E, General Equipment ,Amida, Coleman, NAC, Gradall, Square Shooter, Kent, Stanley, Tamco, Toku, Hatz, Kohler, Robin, Wisconsin, Northrock, Oztec, Toker TK, Rol-Air, APT, Wylie, Ingersoll Rand / Doosan, Innovatech, Con X, Ammann, Mecalac, Makinex, Smith Surface Prep,Small Line, Wanco, Yanmar

https://truckmanualshub.com/

CALIFORNIA PROPOSITION 65

BATTERY WARNING

Battery posts, terminals and related accessories contain lead and lead compounds, chemicals known to the State of California to cause cancer and reproductive harm.

WASH HANDS AFTER HANDLING !

WARNING:

The engine exhaust from this product contains chemicals known to the State of California to cause cancer, birth defects, or other reproductive harm.

1702961

To order go to Discount-Equipment.com

https://truckmanualshub.com/

FOREWORD

The purpose of this manual is to provide users with the operating procedures essential for the promotion of proper machine operation for its intended purpose. It is important to over-stress proper machine usage. All information in this manual should be READ and UNDERSTOOD before any attempt is made to operate the machine. **YOUR OPERATING MANUAL IS YOUR MOST IMPORTANT TOOL** - Keep it with the machine. **REMEMBER ANY EQUIPMENT IS ONLY AS SAFE AS THE OPERATOR.**

BECAUSE THE MANUFACTURER HAS NO DIRECT CONTROL OVER MACHINE APPLICATION AND OPERATION, PROPER SAFETY PRACTICES ARE THE RESPONSIBILITY OF THE USER AND HIS OPERATING PERSONNEL.

ALL INSTRUCTIONS IN THIS MANUAL ARE BASED ON THE USE OF THE MACHINE UNDER PROPER OPERATING CONDITIONS, WITH NO DEVIATIONS FROM THE ORIGINAL DESIGN. ALTERATION AND/OR MODIFICATION OF THE MACHINE IS STRICTLY FORBIDDEN, WITHOUT WRITTEN APPROVAL FROM JLG INDUSTRIES, PER OSHA REGULATIONS AND APPLICABLE ANSI STANDARDS.

THIS SAFETY ALERT SYMBOL IS USED TO CALL ATTENTION TO POTENTIAL HAZARDS WHICH MAY LEAD TO SERIOUS INJURY OR DEATH IF IGNORED.

Safety of personnel and proper use of the machine are of primary concern, DANGER, WARNING, CAUTION, IMPORTANT, INSTRUCTIONS and **NOTE** are inserted throughout this manual to emphasize these areas. They are defined as follows:

DANGER

DANGER INDICATES AN IMMINENTLY HAZARDOUS SITUATION WHICH, IF NOT AVOIDED WILL RESULT IN SERIOUS INJURY OR DEATH.]

WARNING

WARNING INDICATES A POTENTIALLY HAZARDOUS SITUATION WHICH, IF NOT AVOIDED COULD RESULT IN SERIOUS INJURY OR DEATH.

CAUTION

CAUTION INDICATES A POTENTIALLY HAZARDOUS SITUATION WHICH, IF NOT AVOIDED, MAY RESULT IN MINOR OR MODERATE INJURY. IT MAY ALSO BE USED TO ALERT AGAINST UNSAFE PRACTICES

IMPORTANT

IMPORTANT OR INSTRUCTIONS INDICATES A PROCEDURES ESSENTIAL FOR SAFE OPERATION AND WHICH, IF NOT FOLLOWED, MAY RESULT IN A MALFUNCTION OR DAMAGE TO THE MACHINE.

IMPORTANT

JLG INDUSTRIES MAY HAVE ISSUED SAFETY RELATED BULLETINS FOR YOUR JLG PRODUCT. CONTACT JLG INDUSTRIES INC. OR THE LOCAL AUTHORIZED JLG DISTRIBUTOR FOR INFORMATION CONCERNING SAFETY RELATED BULLETINS WHICH MAY HAVE BEEN ISSUED FOR YOUR JLG PRODUCT. ALL ITEMS REQUIRED BY THE SAFETY RELATED BULLETINS MUST BE COMPLETED ON THE AFFECTED JLG PRODUCT

Due to continuous product improvements, JLG Industries, Inc. reserves the right to make specification changes without prior notification. Contact JLG Industries, Inc. for updated information.

To order go to Discount-Equipment.com

https://truckmanualshub.com/

This page left blank intentionally.

To order go to Discount-Equipment.com

https://truckmanualshub.com/

All procedures herein are based on the use of the machine under proper operating conditions, with no deviations from original design intent... as per OSHA regulations and applicable ANSI standards.

READ & HEED!

The ownership, use, service, and/or maintenance of this machine is subject to various governmental and local laws and regulations. It is the responsibility of the owner/user to be knowledgeable of these laws and regulations and to comply with them. Owner/user/operator/lessor and lessee must be familiar with Sections 6,7,8,9, and 10 of ANSI A92.5-1992. These sections contain the responsibilities of the owner, users, operators, lessors, and lessees concerning safety, training, inspection, maintenance, application and operation. The most prevalent regulations of this type in the United States are the Federal OSHA Safety Regulations*. Listed below, in abbreviated form are some of the requirements of Federal OSHA regulations in effect as of the date of publication of this handbook.

The listing of these requirements shall not relieve the owner/user of the responsibility and obligation to determine all applicable laws and regulations and their exact wording and requirements, and to comply with the requirements. Nor shall the listing of these requirements constitute an assumption of responsibility of liability on the part of JLG Industries, Inc.

1. Only trained and authorized operators shall be permitted to operate the aerial lift.
2. A malfunctioning lift shall be shut down until repaired.
3. The controls shall be plainly marked as to their function.
4. The controls shall be tested each day prior to use to determine that they are in safe operating condition.
5. All personnel in the platform shall, at all times, wear approved fall protection devices and other safety gear as required.
6. Load limits specified by the manufacturer shall not be exceeded.
7. Instruction and warning placards must be legible.
8. Aerial lifts may be field modified for uses other than those intended by the manufacturer only if certified in writing by the manufacturer to be in conformity to JLG requirements and to be at least as safe as it was prior to modification.
9. Aerial lifts shall not be used near electric power lines unless the lines have been de energized or adequate clearance is maintained (See OSHA 29 CFR 1910.67 and 1926.453).
10. Employees using aerial lifts shall be instructed on how to recognize and avoid unsafe conditions and hazards.
11. Ground controls shall not be operated unless permission has been obtained from personnel in the platform, except in case of an emergency.
12. Regular inspection of the job site and aerial lift shall be performed by competent persons.
13. Personnel shall always stand on the floor of the platform, not on boxes, planks, railing or other devices, for a work position.

*Applicable Federal OSHA regulations for the United States, as of the date of publication of this manual, include, but are not limited to, 29 CFR 1910.67, 29 CFR 1926.20, 29 CFR 1926.21, 29 CFR 1926.28, and 29 CFR 1926.453.

To order go to Discount-Equipment.com

https://truckmanualshub.com/

REVISON LOG

Original Issue	-	May, 1998
Revised		June 1, 1999
3-6	-	Updated 9-21-99
3-8	-	Updated 9-21-99
3-6	-	Updated 10-14-99
2-12 and 2-13	-	Updated 11-8-99
5-3	-	Updated 2-2-00
Prop 65 page added	-	Updated 4-20-00
4-1	-	Updated 4-20-00
3-6	-	Updated 9-19-00
3-11	-	Updated 4-24-02

To order go to Discount-Equipment.com

https://truckmanualshub.com/

TABLE OF CONTENTS

SUBJECT - SECTION, PARAGRAPH **PAGE NO.**

SECTION - FOREWORD

SECTION 1 - SAFETY PRECAUTIONS

1.1 General 1-1
1.2 Driving/Towing. 1-1
1.3 Electrocution Hazard. 1-2
1.4 Pre-Operational 1-2
1.5 Driving 1-4
1.6 Operation. 1-5
1.7 Towing and Hauling 1-8

SECTION 2 - PREPARATION AND INSPECTION

2.1 General 2-1
2.2 Preparation For Use 2-1
2.3 Delivery and Frequent Inspection 2-1
2.4 Daily Walk-Around Inspection. 2-5
2.5 Daily Functional Check 2-9
2.6 Battery Maintenance 2-10

SECTION 3 - USER RESPONSIBILITIES AND MACHINE CONTROL

3.1 General 3-1
3.2 Personnel Training 3-1
3.3 Operating Characteristics and Limitations 3-2
3.4 Controls and Indicators. 3-5
3.5 Placards and Decals 3-11

SECTION 4 - MACHINE OPERATION

4.1 Description 4-1
4.2 General 4-1
4.3 Engine Operation 4-2
4.4 Traveling (Driving) 4-2
4.5 Steering 4-3
4.6 Parking and Stowing 4-3
4.7 Platform 4-3
4.8 Boom 4-4
4.9 Lift Up and Platform Level Down Disable Switch Functional Check 4-5
4.10 Shut Down and Park 4-5
4.11 Tie Down and Lifting 4-5
4.12 Oscillating Axle Lockout Test (If Equipped) 4-9
4.13 Towing 4-10

SECTION 5 - OPTIONAL EQUIPMENT

5.1 Dual Fuel System (Gas Engine Only) 5-1
5.2 Oscillating Axle 5-1
5.3 Platform W/soft Touch Proximity System Bumper 5-1
5.4 Four Wheel Drive. 5-1
5.5 Cold Weather Package 5-1
5.6 Travel Alarm. 5-2
5.7 Electric Generator 5-2
5.8 Foam Filled Tires. 5-2
5.9 Rotating Beacon 5-2

To order go to Discount-Equipment.com

https://truckmanualshub.com/

TABLE OF CONTENTS (continued)

SUBJECT - SECTION, PARAGRAPH **PAGE NO.**

5.10 Cylinder Bellows 5-2
5.11 Boom Wipers 5-2
5.12 Hostile Environment Package 5-3
5.13 Motion Alarm 5-3
5.14 Semi-Track 5-3

SECTION 6 - EMERGENCY PROCEDURES

6.1 General 6-1
6.2 Emergency Towing Procedures 6-1
6.3 Emergency Controls and Their Locations 6-1
6.4 Emergency Operation 6-2
6.5 Incident Notification 6-2

SECTION 7 - INSPECTION AND REPAIR LOG

LIST OF FIGURES

FIGURE NO. **TITLE** **PAGE NO.**

2-1. Machine Nomenclature 2-3
2-2. Daily Walk-Around Inspection - Sheet 1 of 3 2-6
2-3. Daily Walk-Around Inspection - Sheet 2 of 3 2-7
2-4. Daily Walk-Around Inspection - Sheet 3 of 3 2-8
2-5. Lubrication Diagram 2-11
2-6. Torque Chart 2-14
3-1. Position of Least Forward Stability 3-3
3-2. Position of Least Backward Stability 3-4
3-3. Ground Control Indicator Panel 3-6
3-4. Ground Control Station 3-7
3-5. Malfunction Indicator Light and Test Button 3-8
3-6. Platform Station - Proportional Controls 3-10
3-7. Danger and Warning Decal Location 3-13
3-8. Control Panel Symbols - Sheet 1 of 2 3-16
3-9. Control Panel Symbols - Sheet 2 of 2 3-17
4-1. Grade and Sideslope 4-3
4-2. Functional Check 4-5
4-3. Machine Tie Down - A Models 4-6
4-4. Machine Tie Down - AJ Models 4-7
4-5. Lifting Chart 4-8
4-6. Drive Disconnect Hub 4-10

LIST OF TABLES

TABLE NO. **TITLE** **PAGE NO.**

1-1 Minimum Safe Approach Distances (M.S.A.D.) to energized (exposed or insulated) power lines and parts 1-2
2-1 Lubrication Chart 2-12
7-1 Inspection and Repair Log 7-1

To order go to Discount-Equipment.com

https://truckmanualshub.com/

SECTION 1. SAFETY PRECAUTIONS

1.1 GENERAL

This section prescribes the proper and safe practices for major areas of machine usage. In order to promote proper usage of the machine, it is mandatory that a daily routine be established based on instructions given in this section. A maintenance program must also be established by a qualified person and must be followed to ensure that the machine is safe to operate.

The owner/user/operator of the machine should not accept operating responsibility until this manual has been read and understood, and operation of the machine, under the supervision of an experienced and qualified person, has been completed. Owner/user/operator must be familiar with Sections 6, 7, 8, 9, and 10 of ANSI A92.5-1992. These sections contain the responsibilities of the owner, users, operators, lessors and lessees concerning safety, training, inspection, maintenance, application and operation. If there is a question on application and/or operation, JLG Industries Inc., should be consulted.

⚠ WARNING

MODIFICATION OR ALTERATION OF AN AERIAL PLATFORM SHALL BE MADE ONLY WITH PRIOR WRITTEN PERMISSION OF THE MANUFACTURER.

1.2 DRIVING/TOWING

Before driving the machine, the user must be familiar with the drive, steer and stopping characteristics. This is especially important when driving in close quarters.

The user should be familiar with the driving surface before driving. The surface should be firm and level and grades should not exceed the allowable grade for the machine.

NOTE: *Remember that the key to safe and proper usage is common sense and its careful application.*

The machine is not equipped with provisions for towing. Refer to Section 6 for emergency towing procedures.

SPECIAL NOTE:

⚠ WARNING

FAILURE TO COMPLY WITH SAFETY PRECAUTIONS LISTED IN THIS SECTION AND ON THE MACHINE COULD RESULT IN MACHINE DAMAGE, PERSONNEL INJURY OR DEATH, AND IS A SAFETY VIOLATION.

To order go to Discountequipment.com

https://truckmanualshub.com/

Table 1-1.Minimum Safe Approach Distances (M.S.A.D.) to energized (exposed or insulated) power lines and parts

Voltage Range (Phase to Phase)	MINIMUM SAFE APPROACH DISTANCE in Feet (Meters)
0 to 300V	AVOID CONTACT
Over 300V to 50 KV	10 (3)
Over 50KV to 200 KV	15 (5)
Over 200 KV to 350 KV	20 (6)
Over 350 KV to 500 KV	25 (8)
Over 500 KV to 750 KV	35 (11)
Over 750 KV to 1000 KV	45 (14)

DANGER: DO NOT maneuver machine or personnel inside PROHIBITED ZONE. ASSUME all electrical parts and wiring are ENERGIZED unless known otherwise.

1.3 ELECTROCUTION HAZARD

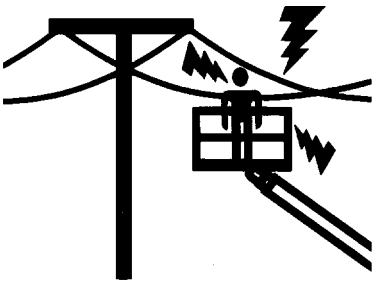

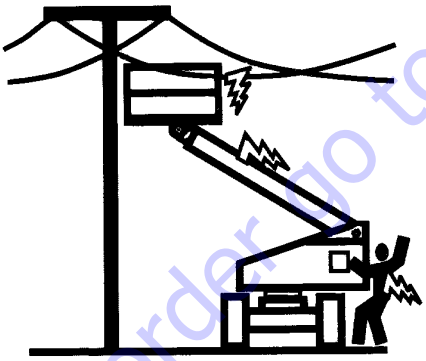

- MAINTAIN SAFE CLEARANCE FROM ELECTRICAL LINES AND APPARATUS. ALLOW FOR BOOM SWAY, ROCK OR SAG AND ELECTRICAL LINE SWAYING. THE MACHINE DOES NOT PROVIDE PROTECTION FROM CONTACT WITH OR PROXIMITY TO AN ELECTRICALLY CHARGED CONDUCTOR.
- MAINTAIN A CLEARANCE OF AT LEAST 10 FEET (3 M) BETWEEN ANY PART OF THE MACHINE OR ITS LOAD AND ANY ELECTRICAL LINE OR APPARATUS CARRYING UP TO 50,000 VOLTS. ONE FOOT ADDITIONAL CLEARANCE IS REQUIRED FOR EVERY ADDITIONAL 30,000 VOLTS OR LESS.

1.4 PRE-OPERATIONAL

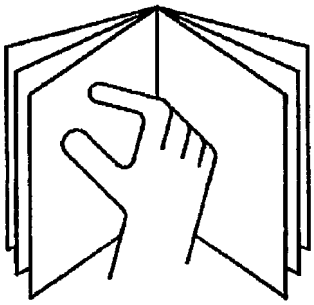

- READ YOUR MANUAL. UNDERSTAND WHAT YOU'VE READ - THEN BEGIN OPERATIONS.
- ALLOW ONLY AUTHORIZED AND QUALIFIED PERSONNEL TO OPERATE MACHINE WHO HAVE DEMONSTRATED THAT THEY UNDERSTAND SAFE AND PROPER OPERATION AND MAINTENANCE OF THE UNIT.

To order go to Discount-Equipment.com

https://truckmanualshub.com/

- AN OPERATOR MUST NOT ACCEPT OPERATING RESPONSIBILITIES UNTIL ADEQUATE TRAINING HAS BEEN GIVEN BY COMPETENT AND AUTHORIZED PERSONS.
- BEFORE OPERATION, CHECK WORK AREA FOR OVERHEAD ELECTRIC LINES, MACHINE TRAFFIC SUCH AS BRIDGE CRANES, HIGHWAY, RAILWAY AND CONSTRUCTION EQUIPMENT.

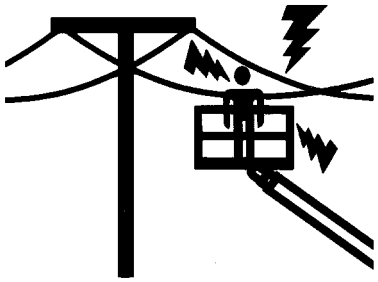

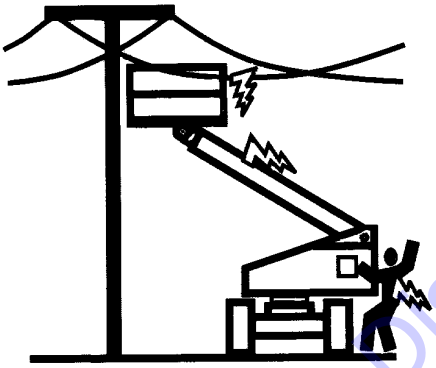

- PRECAUTIONS TO AVOID ALL KNOWN HAZARDS IN THE WORK AREA MUST BE TAKEN BY THE OPERATOR AND HIS SUPERVISOR BEFORE STARTING THE WORK.
- DO NOT OPERATE THIS MACHINE UNLESS IT HAS BEEN SERVICED AND MAINTAINED ACCORDING TO THE MANUFACTURERS SPECIFICATIONS AND SCHEDULE.
- ENSURE DAILY INSPECTION AND FUNCTION CHECK IS PERFORMED PRIOR TO PLACING MACHINE INTO OPERATION.
- NEVER DISABLE OR MODIFY THE FOOTSWITCH OR ANY OTHER SAFETY DEVICE. ANY UNAUTHORIZED MODIFICATION OF THE MACHINE IS A SAFETY VIOLATION AND IS A VIOLATION OF OSHA REGULATIONS AND ANSI STANDARDS.

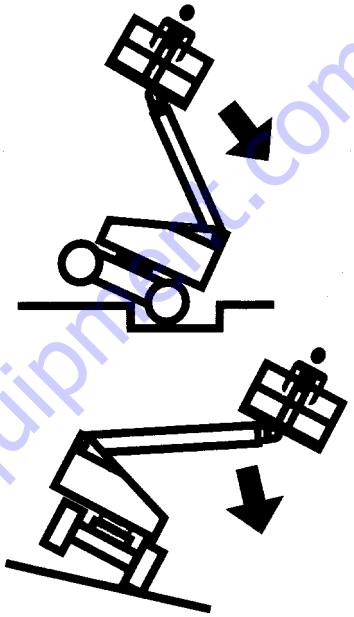

- DO NOT OPERATE MACHINE WHEN WIND CONDITIONS EXCEED 30 MPH (48 KMH).
- NEVER OPERATE BOOM FUNCTIONS (TELE, SWING, LIFT) WHEN MACHINE IS ON A TRUCK, OTHER VEHICLE, OR ABOVE GROUND STRUCTURE.
- THIS MACHINE CAN BE OPERATED IN NOMINAL AMBIENT TEMPERATURES OF 0° F TO 104° F (-20°C TO 40°C). CONSULT FACTORY TO OPTIMIZE OPERATION OUTSIDE THIS RANGE.

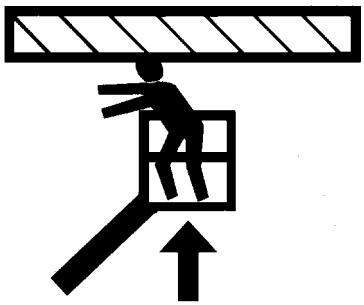

- APPROVED HEAD GEAR MUST BE WORN BY ALL OPERATING AND GROUND PERSONNEL.

To order go to Discount-Equipment.com

https://truckmanualshub.com/

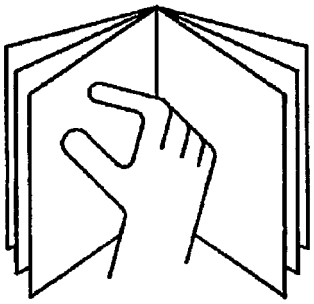

- READ AND OBEY ALL DANGERS, WARNINGS, CAUTIONS AND OPERATING INSTRUCTIONS ON MACHINE AND IN THIS MANUAL.
- BE FAMILIAR WITH LOCATION AND OPERATION OF GROUND STATION CONTROLS.

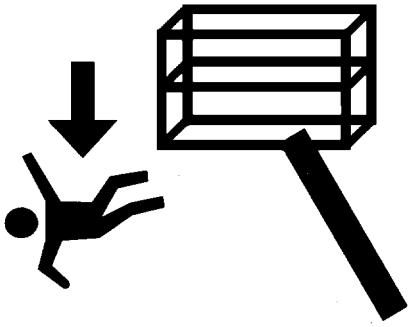

- ALWAYS USE THREE POINT CONTACT WHEN ENTERING OR EXITING THE MACHINE. FACE THE MACHINE WHEN YOU ENTER OR LEAVE. THREE POINT CONTACT MEANS THAT TWO HANDS AND ONE FOOT OR ONE HAND AND TWO FEET ARE IN CONTACT WITH THE MACHINE AT ALL TIMES DURING MOUNT AND DISMOUNT.

1.5 DRIVING

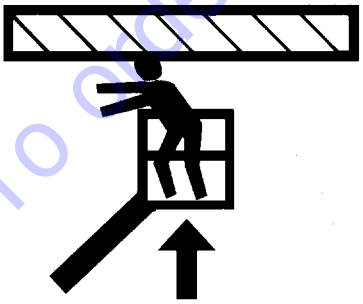

- WATCH FOR OBSTRUCTIONS AROUND MACHINE AND OVERHEAD WHEN DRIVING.
- ALWAYS POSITION BOOM OVER REAR (DRIVE) AXLE IN LINE WITH DIRECTION OF TRAVEL. REMEMBER, IF BOOM IS OVER FRONT (STEER) AXLE, DIRECTION OF STEER AND DRIVE MOVEMENT WILL BE OPPOSITE FROM NORMAL OPERATION.

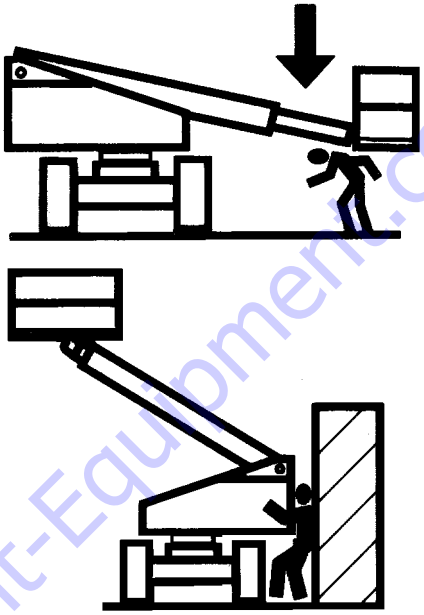

- DO NOT USE DRIVE FUNCTION TO POSITION PLATFORM CLOSE TO OBSTACLES. USE BOOM FUNCTION INSTEAD.
- WHEN DRIVING IN HIGH SPEED, SWITCH TO LOW SPEED BEFORE STOPPING. TRAVEL GRADES IN LOW DRIVE, HIGH ENGINE ONLY.
- DO NOT USE HIGH SPEED DRIVE WHEN IN RESTRICTED OR CLOSE QUARTERS, OR WHEN DRIVING IN REVERSE.
- BE AWARE OF STOPPING DISTANCES WHEN TRAVELING IN HIGH AND LOW SPEEDS.
- ALWAYS POST A LOOKOUT AND SOUND HORN WHEN DRIVING IN AREAS WHERE VISION IS OBSTRUCTED.
- KEEP NON-OPERATING PERSONNEL AT LEAST 6 FEET (2 M) AWAY FROM MACHINE DURING DRIVING OPERATIONS.

To order go to Discount-Equipment.com

https://truckmanualshub.com/

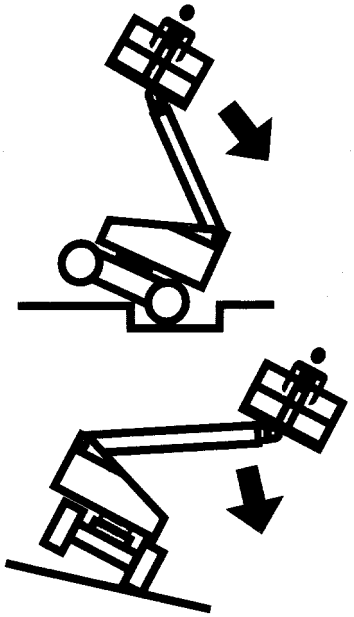

- CHECK TRAVEL PATH FOR PERSONS, DEPRESSIONS, HOLES, BUMPS, DROP-OFFS, OBSTRUCTIONS, DEBRIS, AND COVERINGS WHICH MAY CONCEAL HOLES AND OTHER HAZARDS.
- TRAVEL IS PERMITTED ON GRADES NO GREATER THAN THOSE INDICATED ON THE SERIAL NUMBER PLATE.
- DO NOT DRIVE ON SIDESLOPES WHICH EXCEED 5°.
- OPERATION WITH BOOM RAISED IS RESTRICTED TO FIRM, LEVEL AND UNIFORM SURFACE.
- DO NOT TRAVEL ON SOFT OR UNEVEN SURFACES, AS TIPPING WILL OCCUR.
- ENSURE THAT GROUND CONDITIONS ARE ADEQUATE TO SUPPORT THE MAXIMUM TIRE LOAD.
- DO NOT DRIVE MACHINE NEAR PITS, LOADING DOCKS OR OTHER DROP-OFFS.

1.6 OPERATION

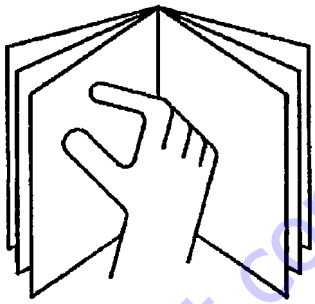

- READ YOUR MANUAL. UNDERSTAND WHAT YOU'VE READ - THEN BEGIN OPERATIONS.

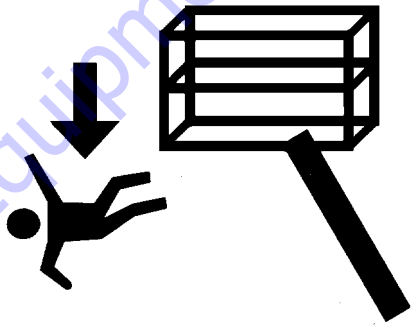

- PRIOR TO ENTERING AND EXITING PLATFORM AT GROUND LEVEL, FULLY LOWER THE BOOM. EXTEND BOOM UNTIL END OF FLY BOOM CONTACTS GROUND. WITH BOOM LIFT IN THIS CONFIGURATION, ENTER AND/OR EXIT PLATFORM THROUGH GATE OPENING.
- OSHA REQUIRES ALL PERSONS IN THE PLATFORM TO WEAR LANYARDS WITH AN APPROVED FALL PROTECTION DEVICE. SECURE LANYARD TO DESIGNATED LANYARD ATTACH POINT ON PLATFORM. KEEP GATE CLOSED AT ALL TIMES.
- TO AVOID FALLING - USE EXTREME CAUTION WHEN ENTERING OR LEAVING PLATFORM ABOVE GROUND. ENTER OR EXIT THRU GATE ONLY. PLATFORM FLOOR MUST BE WITHIN 1 FOOT (30 CM) OF ADJACENT - SAFE AND SECURE - STRUCTURE. ALLOW FOR PLATFORM VERTICAL MOVEMENT AS WEIGHT IS TRANSFERRED TO OR FROM PLATFORM.

To order go to Discount-Equipment.com

https://truckmanualshub.com/

- TRANSFERS BETWEEN A STRUCTURE AND THE AERIAL PLATFORM EXPOSE OPERATORS TO FALL HAZARDS. THIS PRACTICE SHOULD BE DISCOURAGED WHEREVER POSSIBLE. WHERE TRANSFER MUST BE ACCOMPLISHED TO PERFORM THE JOB TWO LANYARDS WITH AN APPROVED FALL PROTECTION DEVICE WILL BE USED. ONE LANYARD SHOULD BE ATTACHED TO THE AERIAL PLATFORM. THE OTHER TO THE STRUCTURE. THE LANYARD THAT IS ATTACHED TO THE AERIAL PLATFORM SHOULD NOT BE DISCONNECTED UNTIL SUCH TIME AS THE TRANSFER TO THE STRUCTURE IS COMPLETE. OTHERWISE, DO NOT STEP OUTSIDE OF PLATFORM.
- DO NOT ADD NOTICE BOARDS OR SIMILAR ITEMS TO THE PLATFORM. ADDITION OF SUCH ITEMS INCREASES THE EXPOSED WIND AREA OF THE MACHINE.
- NEVER POSITION LADDERS, STEPS, OR SIMILAR ITEMS ON UNIT TO PROVIDE ADDITIONAL REACH FOR ANY PURPOSE.
- WHEN RIDING IN OR WORKING FROM PLATFORM, BOTH FEET MUST BE FIRMLY POSITIONED ON THE FLOOR.
- KEEP OIL, MUD AND SLIPPERY SUBSTANCES CLEANED FROM FOOTWEAR AND PLATFORM FLOOR.
- NEVER "WALK" THE BOOM TO GAIN ACCESS TO OR LEAVE PLATFORM.
- NEVER PLACE HANDS OR ARMS IN TOWER BOOM OR UPRIGHT MECHANISM.
- KEEP ALL NON-OPERATING PERSONNEL AT LEAST 6 FEET (2 M) AWAY FROM THE MACHINE AT ALL TIMES.
- IF PLATFORM OR BOOM IS CAUGHT SO THAT ONE OR MORE WHEELS ARE OFF THE FLOOR, ALL PERSONNEL MUST BE REMOVED FROM PLATFORM BEFORE ATTEMPTING TO FREE MACHINE. USE CRANES, FORKLIFT TRUCKS OR OTHER EQUIPMENT TO REMOVE PERSONNEL AND STABILIZE MACHINE MOTION, IF NECESSARY.

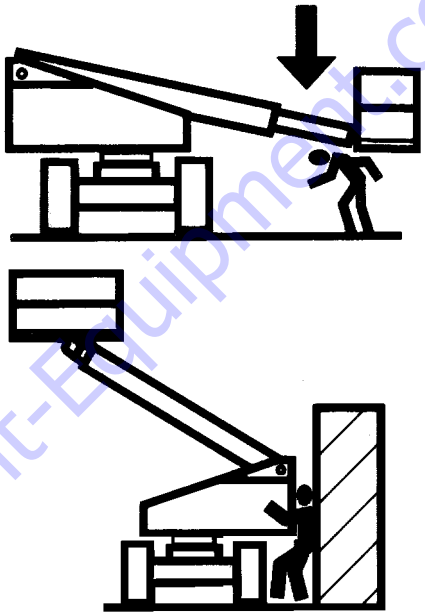

- THE OPERATOR IS RESPONSIBLE TO AVOID OPERATING MACHINE OVER GROUND PERSONNEL AND TO WARN THEM NOT TO WORK, WALK OR STAND UNDER A RAISED BOOM OR PLATFORM. POSITION BARRICADES ON FLOOR IF NECESSARY.

To order go to Discount-Equipment.com

https://truckmanualshub.com/

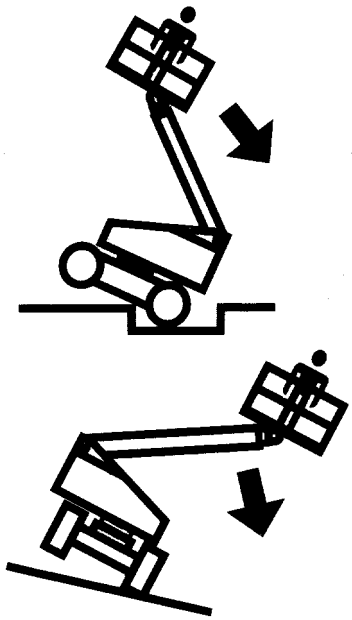

- ENSURE MACHINE IS POSITIONED ON A FIRM, LEVEL AND UNIFORM SUPPORTING SURFACE BEFORE RAISING OR EXTENDING BOOM.

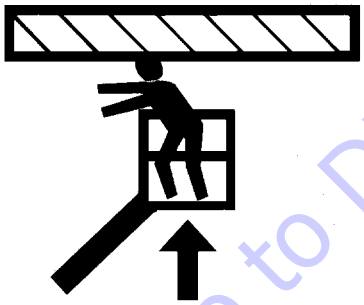

- CHECK CLEARANCES ABOVE, ON SIDES AND BOTTOM OF PLATFORM WHEN RAISING, LOWERING, SWINGING, AND TELESCOPING BOOM.
- EXERCISE EXTREME CAUTION AT ALL TIMES TO PREVENT OBSTACLES FROM STRIKING OR INTERFERING WITH OPERATING CONTROLS AND PERSONS IN PLATFORM.
- ENSURE THAT OPERATORS OF OTHER OVERHEAD AND FLOOR MACHINES ARE AWARE OF THE AERIAL PLATFORMS PRESENCE. DISCONNECT POWER TO OVERHEAD CRANES. POSITION BARRICADES ON FLOOR IF NECESSARY.
- NEVER "SLAM" A CONTROL SWITCH OR LEVER THROUGH NEUTRAL TO THE OPPOSITE DIRECTION. ALWAYS RETURN SWITCH TO NEUTRAL AND STOP; THEN MOVE SWITCH TO THE DESIRED POSITION. OPERATE LEVERS WITH SLOW, EVEN PRESSURE.
- DO NOT CARRY MATERIALS ON PLATFORM RAILING UNLESS APPROVED BY JLG INDUSTRIES INC.
- NEVER PUSH OR PULL THE MACHINE OR OTHER OBJECTS BY TELESCOPING THE BOOM.
- NEVER USE BOOM FOR ANY PURPOSE OTHER THAN POSITIONING PERSONNEL, THEIR TOOLS AND EQUIPMENT.
- NEVER EXCEED MANUFACTURERS RATED PLATFORM CAPACITY - REFER TO CAPACITY DECAL ON MACHINE. DISTRIBUTE LOADS EVENLY ON PLATFORM FLOOR.
- NEVER OPERATE A MALFUNCTIONING MACHINE. IF A MALFUNCTION OCCURS, SHUT DOWN THE MACHINE, RED TAG IT, AND NOTIFY PROPER AUTHORITIES.
- DO NOT REMOVE, MODIFY, OR DISABLE FOOTSWITCH BY BLOCKING OR ANY OTHER MEANS.
- DO NOT ASSIST A STUCK OR DISABLED MACHINE BY PUSHING OR PULLING EXCEPT BY PULLING AT CHASSIS TIE-DOWN LUGS.
- NEVER ATTEMPT USING BOOM AS A CRANE. STRUCTURAL DAMAGE OR TIPPING MAY OCCUR.
- STOW BOOM AND SHUT OFF ALL POWER BEFORE LEAVING MACHINE.
- NO STUNT DRIVING OR HORSEPLAY IS PERMITTED.

To order go to Discount-Equipment.com

https://truckmanualshub.com/

- NEVER ATTEMPT TO FREE A MACHINE STUCK IN SOFT GROUND OR ASSIST A MACHINE UP A STEEP HILL OR RAMP BY USING BOOM "LIFT", "TELESCOPE", OR "SWING" FUNCTIONS.
- NEVER ATTACH WIRE, CABLE, OR ANY SIMILAR ITEMS TO PLATFORM.
- DO NOT PLACE BOOM OR PLATFORM AGAINST ANY STRUCTURE TO STEADY PLATFORM OR SUPPORT STRUCTURES.
- DO NOT USE THE LIFT, SWING, OR TELESCOPE FUNCTIONS FOR THE BOOM, TO MOVE EITHER THE MACHINE OR OTHER OBJECTS.
- HYDRAULIC CYLINDERS SHOULD NEVER BE LEFT FULLY EXTENDED OR RETRACTED FOR ANY LENGTH OF TIME. ALWAYS "BUMP" CONTROL IN OPPOSITE DIRECTION SLIGHTLY WHEN FUNCTION BEING USED REACHES END OF TRAVEL. THIS APPLIES TO MACHINES IN OPERATION OR IN STOWED MODE.
- DO NOT OPERATE ANY MACHINE ON WHICH DANGER, WARNING, CAUTION OR INSTRUCTION PLACARDS OR DECALS ARE MISSING OR ILLEGIBLE.
- MACHINE MUST ALWAYS BE SHUT DOWN WHEN REFUELING. NO SMOKING IS MANDATORY. NEVER REFUEL DURING AN ELECTRICAL STORM. ENSURE THAT FUEL CAP IS CLOSED AND SECURE AT ALL OTHER TIMES.

1.7 TOWING AND HAULING

- DO NOT TOW A MACHINE EXCEPT IN AN EMERGENCY. SEE SECTION 6 FOR EMERGENCY TOWING PROCEDURES.
- LOCK TURNTABLE BEFORE TRAVELING LONG DISTANCES OR BEFORE HAULING MACHINE ON A TRUCK OR TRAILER.

To order go to Discount-Equipment.com

https://truckmanualshub.com/

SECTION 2. PREPARATION AND INSPECTION

2.1 GENERAL

This section provides the necessary information needed by those personnel that are responsible to place the machine in operation readiness, and lists checks that are performed prior to use of the machine. It is important that the information contained in this section be read and understood before any attempt is made to operate the machine. Ensure that all the necessary inspections have been completed successfully before placing the machine into service. These procedures will aid in obtaining maximum service life and safe operation.

IMPORTANT

SINCE THE MACHINE MANUFACTURER HAS NO DIRECT CONTROL OVER THE FIELD INSPECTION AND MAINTENANCE, SAFETY IS THE RESPONSIBILITY OF THE OWNER/OPERATOR.

2.2 PREPARATION FOR USE

Before a new machine is put into operation it must be carefully inspected for any evidence of damage resulting from shipment and inspected periodically thereafter, as outlined in Delivery and Frequent Inspection (see section 2-3). During initial start-up and run, the unit should be thoroughly checked for hydraulic leaks. A check of all components should be made to assure their security.

All preparation necessary to place the machine in operation readiness status is the responsibility of management personnel. Preparation requires good common sense, (i.e. telescope works smoothly and brakes operate properly) coupled with a series of visual inspections. The mandatory requirements are given in the Daily Walk Around Inspection (see section 2-4).

It should be assured that the items appearing in the Delivery and Frequent Inspection and Functional Check are complied with prior to putting the machine into service.

2.3 DELIVERY AND FREQUENT INSPECTION

NOTE: *This machine requires periodic safety and maintenance inspections by an authorized JLG Dealer. A decal located on the frame provides a place to record (stamp) inspection dates. Check decal and notify dealer if inspection is overdue.*

NOTE: *An annual inspection shall be performed on the aerial platform no later than thirteen (13) months from the date of the prior annual inspection. The inspection shall be performed by person(s) qualified as a mechanic on the specific make and model of the aerial platform.*

The following checklist provides a systematic inspection to assist in detecting defective, damaged, or improperly installed parts. The checklist denotes the items to be inspected and conditions to examine.

Frequent inspection shall be performed every 3 months or 150 hours whichever comes first, or more often when required by environment, severity, and frequency of usage.

This inspection checklist is also applicable and must be followed for all machines that have been in storage or for all machines that will be exposed to harsh or changing climates.

These checks are also to be performed after maintenance has been performed on the machine.

Chassis

1. Check front tires and wheel assemblies for loose or worn spindles, components and hardware for security, tires for wear and damage.
2. Check steering assembly for loose or bent tie rod, cylinder and hydraulic lines for leaks and security, and hardware for proper installation.
3. If equipped with 4WD, check drive hubs, hydraulic motors, brakes and hydraulic lines for damage and leaks.
4. Check rear tires and wheel assemblies for security, tires for wear and damage.
5. Check drive hubs, hydraulic motors, brakes and hydraulic lines for damage and leaks.
6. Check oil level in drive hub by removing pipe plug on side and feeling for oil level. (Contact Service Personnel for assistance if needed).

NOTE: *Torque hubs should be one-half full of lubricant.*

7. Check oscillating axle (if equipped) for loose, missing and worn parts, pivot pin and lockout cylinder pins for security, lockout cylinders and hydraulic hoses for damage and leaks.

To order go to Discount-Equipment.com

https://truckmanualshub.com/

Turntable

1. Check turntable for damage, loose or missing parts, and security. Check swing drive and brake for damage, loose or missing parts, hydraulic lines and component housings for evidence of leakage; worm gear for proper mesh with swing gear.
2. Check swing bearing for damage, wear, lubrication and loose or missing bearing bolts.
3. Check solenoid valves and hydraulic lines for damage, leakage, security and electrical connections for tightness and evidence of corrosion.
4. Check ground controls for damage, loose or missing parts, security, electrical connections for evidence of corrosion and tightness and wiring for insulation damage. Assure that all switches function properly.
5. Check battery for damage, loose or missing vent caps, electrical connections for tightness, and evidence of corrosion, hold-down brackets for tightness, and electrolyte for proper water level. Add only clean distilled water to battery.
6. Check engine tray pivot assembly for damage, loose or missing parts, and security.
7. Check engine and accessories for damage, loose or missing parts, leakage and security. Check throttle solenoid and linkage for damage, electrical connections for tightness, and evidence of corrosion and wiring for insulation damage.
8. Check fuel lines for damage, leakage and security.
9. Check all access doors for damage, proper operation of latches, props and security.
10. Check fuel tank for damage, leakage and filler cap for security.
11. Check hydraulic reservoir and hydraulic lines for damage, leakage and security.

NOTE: *JLG recommends replacing the hydraulic filter element after the first 50 hours of operation and then every 300 hours thereafter, unless system indicator require earlier replacement.*

12. Check all pin and shaft retaining hardware for security and wear.
13. Check all electrical cables for defects, damage, loose or corroded connections.

Boom

1. Check Lower Boom and leveling link for damage, missing parts and security.
2. Check all pin and shaft retaining hardware for security and wear.
3. Check hydraulic lines and electrical cable for damage, missing parts and security.
4. Check limit switch connections and plunger for corrosion and security.
5. Check Lower Upright, cross pins and hydraulic lines for damage, wear, lubrication, leakage and security.
6. Check Lower Upright for damage, wear, lubrication and security.
7. Check hydraulic lines mounted on upright for damage, leakage and security.
8. Check boom pivot bushings for wear.
9. Check boom lift cylinder and hydraulic lines for damage, leakage and security. Check lift cylinder cross pins for damage, wear and security.
10. Check all pin and shaft retaining hardware for security and wear.
11. Check Upper Upright, cross pins and hydraulic lines for damage, wear, lubrication, leakage and security.
12. Check Upper Upright for damage, wear, lubrication and security.
13. Check hydraulic lines mounted on upright for damage, leakage and security.
14. Check Upper Boom Lift Cylinder and cross pins and hydraulic lines for damage, wear, lubrication, leakage and security.

To order go to Discount-Equipment.com

https://truckmanualshub.com/

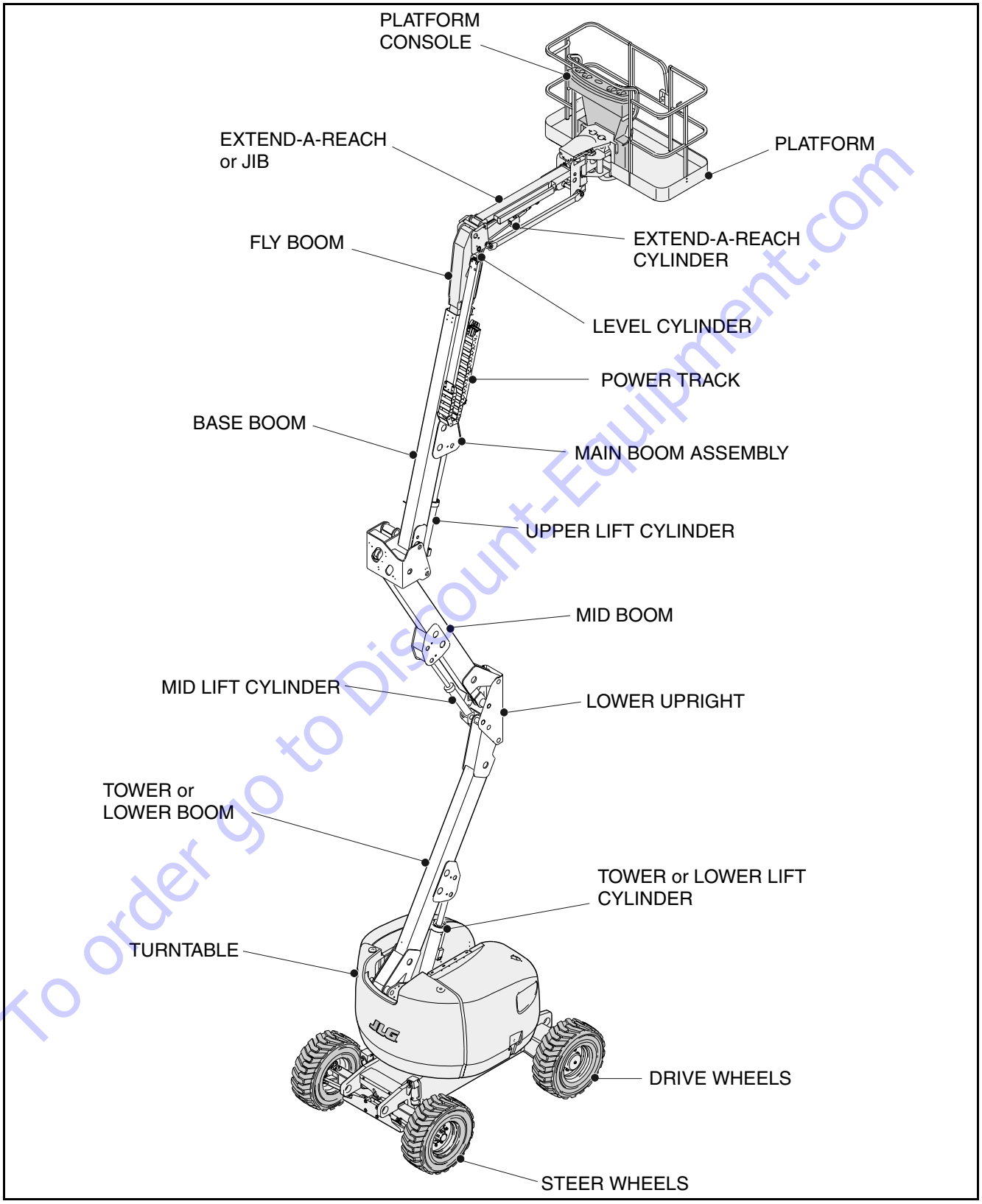

Figure 2-1. Machine Nomenclature

To order go to Discount-Equipment.com

https://truckmanualshub.com/

15. Check Upper Boom pivot pin for damage, wear, lubrication and security.
16. Check Upper Boom for damage, missing parts and security.
17. Check Upper Boom wear pads for damage, missing parts and security.
18. Check Upper Boom telescope cylinder, cross pins and hydraulic lines for damage, wear, lubrication, leakage and security.
19. Check Platform Leveling Cylinder, cross pins and hydraulic lines for damage, wear, lubrication, leakage and security.

Platform

1. Check platform and control console for damage, loose or missing parts, and security.
2. Check control switches and levers for damage, loose or missing parts and security. Assure that levers function properly.
3. Check control switches, levers and electrical connections for tightness and evidence of corrosion, and wiring for defects and chafing damage. Assure that switches function properly.
4. Check access gate hinges, stop, and latch for proper operation, damage and security.
5. Check platform rotator mechanism for proper operation, damage, security. Check hydraulic lines for leakage, damage and security.

NOTE: *Check all DANGER, WARNING, CAUTION and INSTRUCTION placards for legibility and security on the entire machine.*

Torque Requirements

The Torque Chart (Figure 2-6.) consists of standard torque values based on bolt diameter and grade, also specifying dry and wet torque values in accordance with recommended shop practices. This chart is provided as an aid to the operator in the event he/she notices a condition that requires prompt attention during the walk-around inspection or during operation, until the proper service personnel can be notified. The Service and Maintenance manual provides specific torque values and periodic maintenance procedures with a listing of individual components. Utilizing this Torque Chart in conjunction with the preventive maintenance section in the Service and Maintenance manual will enhance safety, reliability, and performance of the machine.

To order go to Discount-Equipment.com

https://truckmanualshub.com/

2.4 DAILY WALK-AROUND INSPECTION

It is the operators responsibility to inspect the machine before the start of each workday. It is recommended that each operator inspect the machine before operation, even if the machine has already been put into service under another operator. This Daily Walk-Around Inspection is the preferred method of inspection.

These checks are also to be performed after maintenance has been performed on the machine.

In addition to the Daily Walk-Around Inspection, be sure to include the following as part of the daily inspection:

1. Overall cleanliness.

   Check all standing surfaces for oil, fuel and hydraulic oil spillage and foreign objects. Ensure overall cleanliness.

2. Placards.

   Keep all information and operating placards clean and unobstructed. Cover when spray painting or shot blasting to protect legibility.

3. Operator's and Safety Manual.

   Ensure a copy of this manual and the ANSI A92.5-1992 Responsibilities, are enclosed in the manual storage box.

4. Machine Log.

   Ensure a machine operating record or log is kept, check to see that it is current and that no entries have been left uncleared, leaving machine in an unsafe condition for operation.

5. Start each day with a full fuel tank.

⚠ WARNING

TO AVOID INJURY, DO NOT OPERATE A MACHINE UNTIL ALL MALFUNCTIONS HAVE BEEN CORRECTED. USE OF A MALFUNCTIONING MACHINE IS A SAFETY VIOLATION.

TO AVOID POSSIBLE INJURY, BE SURE MACHINE POWER IS "OFF" DURING WALK-AROUND INSPECTION.

NOTE: *Check boom limit switches on upright for proper operation and security, both visually and manually. The lower switch cuts out drive speed when the lower boom is above horizontal. The upper switch cuts out drive speed when the upper boom is above horizontal. Only creep drive speed will continue to function.*

6. Check platform footswitch for proper operation. Switch must be released to start engine and depressed to operate machine.

7. Check that drive brakes hold when machine is driven up a grade not greater than specified on the serial number placard and stopped.

NOTE: *On new machines, those recently overhauled, or after changing hydraulic oil, operate all systems a minimum of two complete cycles and recheck oil level in reservoir.*

8. Assure that all items requiring lubrication are serviced. Refer to Figure 2-5., Lubrication Diagram for specific requirements.

To order go to Discount-Equipment.com

https://truckmanualshub.com/

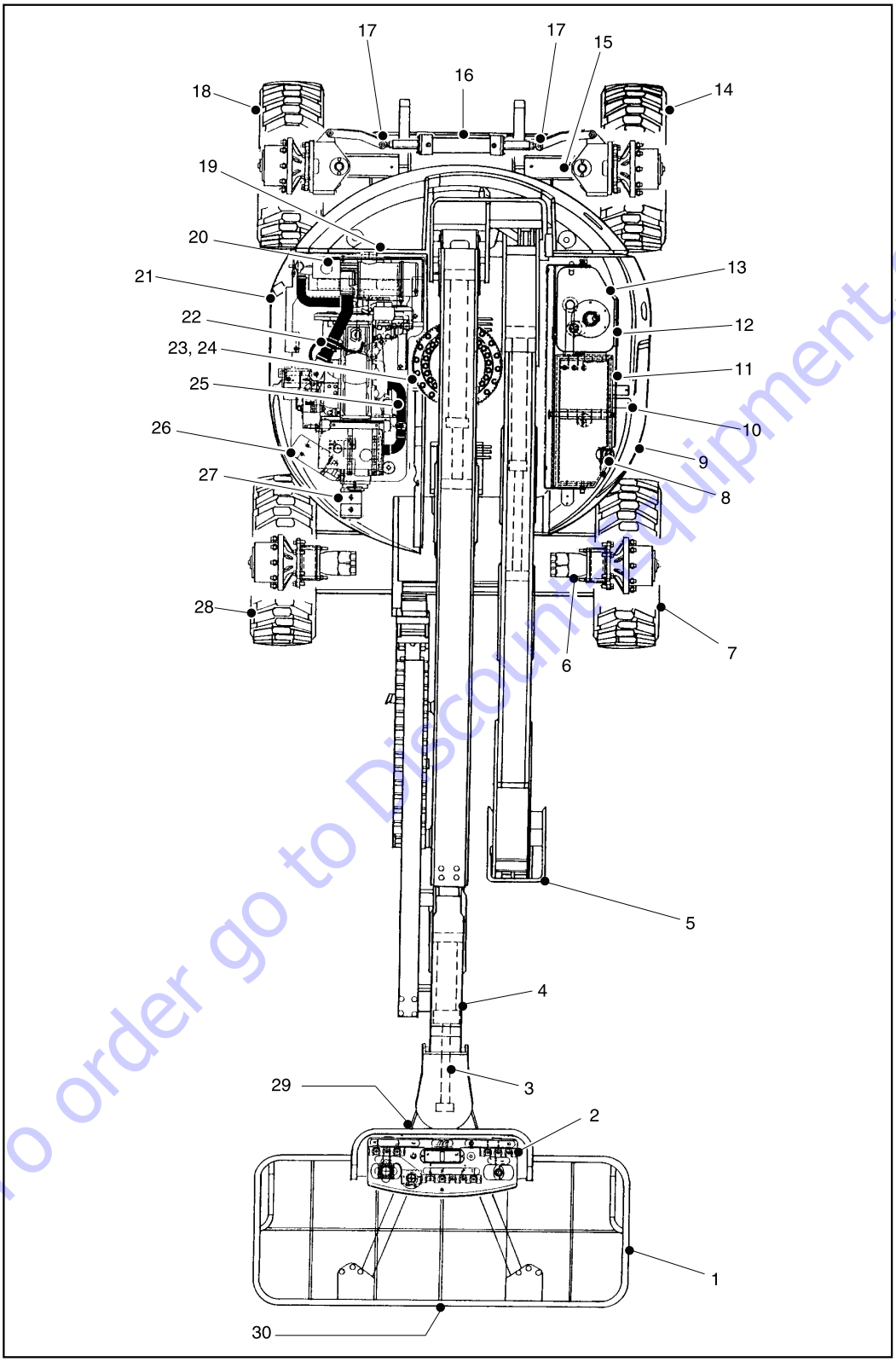

To order go to Discount-Equipment.com

Figure 2-2. Daily Walk-Around Inspection - Sheet 1 of 3

https://truckmanualshub.com/

GENERAL

Begin the "Walk-Around Inspection" at Item 1, as noted on the diagram. Continue to the right (counterclockwise viewed from top) checking each item in sequence for the conditions listed in the Walk-Around Inspection Checklist.

⚠ WARNING

TO AVOID INJURY, DO NOT OPERATE A MACHINE UNTIL ALL MALFUNCTIONS HAVE BEEN CORRECTED. USE OF A MALFUNCTIONING MACHINE IS A SAFETY VIOLATION. TO AVOID POSSIBLE INJURY, BE SURE MACHINE POWER IS OFF DURING WALK-AROUND INSPECTION.

NOTE: *Do not overlook visual inspection of chassis underside. Checking this area often results in discovery of conditions which could cause extensive machine damage.*

1. Platform Assembly - No loose or missing parts, no visible damage. Lockbolts in place. Footswitch in good working order, not modified, disabled or blocked.
2. Platform Control Console - Switches and levers return to neutral and are properly secured, no loose or missing parts, no visible damage, decals/placards secure and legible, control marking legible.
3. Slave Cylinder - No visible damage; pivot pins secure hydraulic hoses undamaged, not leaking.
4. Boom Sections/Uprights/Lift Cylinders and Master Cylinder - No visible damage; pivot pins secure; hydraulic hoses undamaged, not leaking. Uprights in vertical position.
5. Horizontal Limit Switches - Switches operable; no visible damage.
6. Drive Motor, Brake, and Hub - No visible damage; no evidence of leakage.
7. Wheel/Tire Assembly, Right Rear - Properly secured, no loose or missing lug nuts, no visible damage.
8. Hydraulic Filter - Housing secure no visible damage; no evidence of leakage.
9. Hood, Right Side - Properly secured; no loose or missing parts.
10. Control Valve - No loose or missing parts; evidence of leakage; unsupported wires or hoses; damaged or broken wires.
11. Fuel Supply - Filler cap secure, no visible damage to the tank or evidence of leaks.
12. Ground Controls - Switches operable, no visible damage, decals secure and legible.
13. Hydraulic Oil Supply - Recommended oil level sight gauge. (Check level with cold oil, systems shut down, machine in stowed position) Cap in place and secure.
14. Wheel/Tire Assembly, Right Front - Properly secured, no loose or missing lug nuts, no visible damage.
15. Oscillating Axle - No loose or missing hardware; no visible damage.
16. Steer Cylinder - Properly secured; no visible damage or signs of leakage; evidence of proper lubrication.
17. Tie Rod Ends and Steering Spindles - No loose or missing parts; no visible damage.
18. Wheel/Tire Assembly, Left Front - Properly secured, no loose or missing lug nuts, no visible damage.
19. Battery - Proper electrolyte levels; cables tight, no visible damage or corrosion.
20. Engine Air Filter - No loose or missing parts; no visible damage; element clean.
21. Hood, Right Side - Properly secured; no loose or missing parts.
22. Engine Oil Supply - Full mark on dipstick; filler cap secure.

To order go to Discount-Equipment.com

Figure 2-3. Daily Walk-Around Inspection - Sheet 2 of 3

https://truckmanualshub.com/

23. Turntable Bearing - No loose or missing hardware; no visible; evidence of proper lubrication; no evidence of loose bolts or looseness between bearing or structure.
24. Swing Motor and Worm Gear - No loose or missing hardware; no visible damage; evidence of proper lubrication.
25. Muffler and Exhaust System - Properly secured, no evidence of leakage.
26. Auxiliary Power Pump - No loose or missing parts, no evidence of leakage, no damaged wires.
27. Hydraulic Pump - No loose or missing parts, no evidence of leakage.
28. Wheel/Tire Assembly, Left Rear - Properly secured, no loose or missing lug nuts, no visible damage.
29. Rotator Cylinders - No visible damage; cylinder pins secure; hydraulic hoses undamaged and not leaking.
30. Platform Gate - Latch, stop, and hinges in working condition and properly secured; no loose or missing parts.

Figure 2-4. Daily Walk-Around Inspection - Sheet 3 of 3

To order go to Discount-Equipment.com

https://truckmanualshub.com/

2.5 DAILY FUNCTIONAL CHECK

A functional check of all systems must be performed, once the walk-around inspection is complete, in an area free of overhead and ground level obstructions. First, using the ground controls, check all functions controlled by the ground controls. Next, using the platform controls, check all functions controlled by the platform controls.

⚠ WARNING

TO AVOID SERIOUS INJURY, DO NOT OPERATE MACHINE IF ANY CONTROL LEVERS OR TOGGLE SWITCHES CONTROLLING PLATFORM MOVEMENTS DO NOT RETURN TO THE OFF OR NEUTRAL POSITION WHEN RELEASED.

⚠ WARNING

TO AVOID A COLLISION AND INJURY IF PLATFORM DOES NOT STOP WHEN A CONTROL SWITCH OR LEVER IS RELEASED, REMOVE FOOT FROM FOOTSWITCH OR USE EMERGENCY STOP TO STOP THE MACHINE.

NOTE: *When the boom is raised above horizontal, high drive speed is cut out.*

1. Check boom horizontal limit switches to see that they are operable and not damaged. Raise and lower Lower Boom. Check for smooth operation. Check Boom Upright tilting for proper synchronization. If the upright is tilted or the boom will not fully lower, refer to the Boom Synchronizing Procedure in Section 3.

NOTE: *Perform checks from ground controls first, then from platform controls.*

2. Raise, extend, retract and lower Upper Boom. Check for smooth operation.
3. Telescope boom IN and OUT several cycles at various degrees of elevation lengths. Check for smooth telescope operation.
4. Swing turntable to LEFT and RIGHT a minimum of 45 degrees. Check for smooth motion.
5. With the aid of an assistant to monitor the CHASSIS OUT OF LEVEL indicator light on the platform console, manually activate the indicator light by compressing one of the three tilt indicator mounting springs. If the light does not illuminate, shut down machine and contact a qualified service technician before continuing operation.
6. Check that platform self-leveling system functions properly during raising and lowering of boom.
7. Check rotator for smooth operation and assure platform will rotate 75 degrees in both directions from centerline of boom.
8. Drive forward and reverse; check for proper operation.
9. Steer left and right; check for proper operation.
10. Footswitch.

⚠ IMPORTANT

FOOTSWITCH MUST BE ADJUSTED SO THAT FUNCTIONS WILL OPERATE WHEN PEDAL IS APPROXIMATELY AT ITS CENTER OF TRAVEL. IF SWITCH OPERATES WITHIN LAST 1/4" OF TRAVEL, TOP OR BOTTOM, IT SHOULD BE ADJUSTED.

   a. Activate hydraulic system, by depressing footswitch. Operate Telescope and hold control. Remove foot from footswitch, motion should stop. If it does not, shut down machine and contact a certified JLG service technician.
   b. With footswitch depressed, operate Lift and hold control. Remove foot from footswitch, motion should stop. If it does not, shut down machine and contact a certified JLG service technician.
   c. With engine power shut down, depress the footswitch. Attempt to start engine. Engine should not attempt to start when footswitch is depressed. If starter engages or engine turns over, shut down machine and contact a certified JLG service technician.

11. Auxiliary Power.

    Operate each function control switch (e.g. Tele, Lift, and Swing) to assure that they function in both directions using auxiliary power instead of engine power.

12. Ground Controls.

    Place Ground/Platform Select switch to Ground. Start engine. Platform controls should not operate.

To order go to Discount-Equipment.com

https://truckmanualshub.com/

2.6 BATTERY MAINTENANCE

WARNING

TO AVOID INJURY FROM AN EXPLOSION, DO NOT SMOKE OR ALLOW SPARKS OR A FLAME NEAR BATTERY DURING SERVICING.

WARNING

ALWAYS WEAR EYE PROTECTION WHEN SERVICING BATTERIES.

1. The battery is maintenance free except for occasional battery terminal cleaning, as noted in the following.
2. Remove battery cables from each battery post one at a time, negative first. Clean cables with acid neutralizing solution (e.g. baking soda and water or ammonia) and wire brush. Replace cables and/or cable clamp bolts as required.
3. Clean battery post with wire brush then re-connect cable to post. Coat non-contact surfaces with mineral grease or petroleum jelly (Vaseline).
4. When all cables and terminal posts have been cleaned, ensure all cables are properly positioned and are not pinched. Close battery compartment cover.

To order go to Discount-Equipment.com

https://truckmanualshub.com/

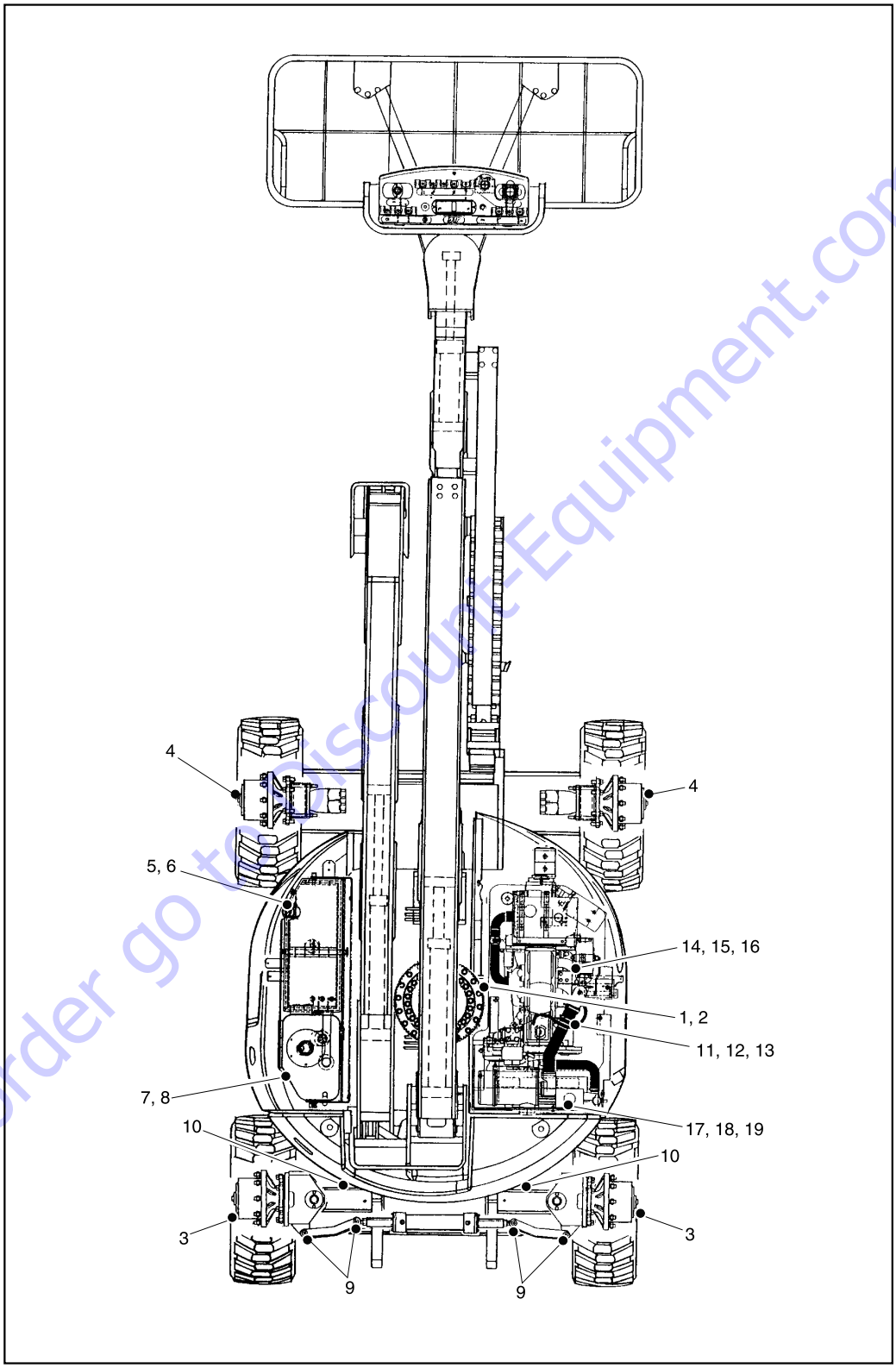

Figure 2-5. Lubrication Diagram

To order go to DiscountEquipment.com

https://truckmanualshub.com/

Table 2-1. Lubrication Chart

	Components	Number/Type Lube Points	Capacity	Lube	Interval		Hours		Comments
					3 Months 150 hrs	6 Months 300 hrs	1 Year 600 hrs	2 Years 1200 hrs	
Lubrication									
1	Swing Bearing - Internal Ball Bearing	2 Grease Fitting	A/R	MPG	X				
2a	Swing Bearing - Teeth	Spray On	A/R	OGL	X				More frequent lubrication intervals may be required.
2b	End Bearings - Worm Gear*	2	A/R	MPG				X	Remove grease fittings and install plugs after greasing.
3	Wheel Bearings (2WD Only)	Repack	A/R	MPG				X	
4	Wheel Drive Hub	Level/Fill Plug	17oz. (1/2 full)	EPGL				X	Change after first 150 hours then every 1200 hours of operation.
5	Hydraulic Return Filter	N/A	N/A	N/A		X			Change after first 50 hours and every 300 hours thereafter or as indicated by condition indicator.
6	Hydraulic Charge Filter	N/A	N/A	N/A		X			Change after first 50 hours and every 300 hours thereafter or as indicated by condition indicator.
7	Hydraulic Oil	Fill Cap	30.6 Gal. Tank 32.7 Gal. System	HO				X	Check level daily. Change every 1200 hours.
8	Suction Strainers (In Tank)	2	N/A	N/A				X	Remove and clean at time of hydraulic oil change.
9	Steer Cylinder	4	A/R	MPG	X				
10	Oscillation Cylinders	2	A/R	MPG	X				
Engines									
11	Oil Change w/Filter - Ford	Fill Cap/Spin-on Element	5 Quarts (4.7 L)	EO	X				Check level daily; change every 150 hours. Adjust final oil level by mark on dipstick.
12	Oil Change w/Filter - Deutz	Fill Cap/Spin-on Element	6.3 qts. (6L) crankcase ** 5 qts (4.5 L) cooler	EO	X				Check level daily; change every 600 hours. Adjust final oil level by mark on dipstick.
13	Oil Change w/Filter - Isuzu	Fill Cap/Spin-on Element	6 qts. (5.6 L) crankcase 6.5 qts (6.1 L) w/cooler	EO	X				Check level daily; change every 150 hours. Adjust final oil level by mark on dipstick.
14	Fuel Filter - Ford	Replaceable Element	N/A	N/A			X		
15	Fuel Filter - Deutz	Replaceable Element	N/A	N/A			X		
16	Fuel Filter - Isuzu	Replaceable Element	N/A	N/A			X		
17	Air Filter - Ford	Replaceable Element	N/A	N/A		X			Or as indicated by condition indicator

To order go to Discount-Equipment.com

Updated 11-8-99

https://truckmanualshub.com/

Table 2-1. Lubrication Chart

	Components	Number/Type Lube Points	Capacity	Lube	Interval		Hours		Comments
					3 Months 150 hrs	6 Months 300 hrs	1 Year 600 hrs	2 Years 1200 hrs	
18	Air Filter - Deutz	Replaceable Element	N/A	N/A		X			Or as indicated by condition indicator
19	Air Filter - Isuzu	Replaceable Element	N/A	N/A		X			Or as indicated by condition indicator

NOTES:

Lubrication intervals are based on machine operation under normal conditions. For machines used in multi shift operations and/or exposed to hostile environments or conditions, lubrication frequencies must be increased accordingly.

* If necessary install grease fittings into worm gear housing and grease bearings.

CAUTION

DO NOT OVERGREASE BEARINGS. OVERGREASING BEARINGS WILL RESULT IN BLOWING OUTER SEAL IN HOUSING.

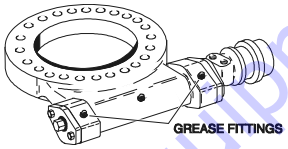

**When changing oil in the Deutz oil cooled engine, drain both the crankcase and the cooler. When refilling it is acceptable to overfill crankcase (11.3 qts. [10.5 L], capacity of both crankcase and cooler combined). Start engine, allow the engine to run until the thermostat opens (approximately 221 degrees F) cooler will fill up within minutes; shut down and wait for approximately two minutes. Check oil level, fill oil to max marking on dipstick.

KEY TO LUBRICANTS

EO	Engine Oil
EPGL	Extreme Pressure Gear Lube
HO	Hydraulic Fluid (Mobil DTE-11M)
MPG	Multi-Purpose Grease
OGL	Open Gear Lubricant - Mobiltac 375 or equivalent

To order go to Discount-Equipment.com

https://truckmanualshub.com/

VALUES FOR ZINC PLATED BOLTS ONLY														UNPLATED CAP SCREWS	
SIZE	THD	BOLT DIA. (IN.)	THREAD STRESS AREA (SQ. IN.)	SAE GRADE 5 BOLTS & GRADE 2 NUTS					SAE GRADE 8 BOLTS & GRADE 8 NUTS					UNBRAKO 1960 SERIES SOCKET HEAD CAP SCREW WITH LOC-WEL PATCH	
				CLAMP LOAD (LB.)	TORQUE (DRY OR LOC. 263)	TORQUE (LUB.)	TORQUE (LOCTITE 262)	TORQUE (LOCTITE 242 OR 271)	CLAMP LOAD (LB.)	TORQUE (DRY OR LOC. 263)	TORQUE (LUB.)	TORQUE (LOCTITE 262)	TORQUE (LOCTITE 242 OR 271)	CLAMP LOAD (LB.)	TORQUE (as received)
					LB. IN.	LB. IN.	LB. IN.	LB. IN.		LB. IN.	LB. IN.	LB. IN.	LB. IN.		LB. FT.
4	40	0.1120	0.00604	380	8	6	—	—	540	12	9	—	—	—	—
	48		0.00661	420	9	7	—	—	600	13	10	—	—	—	—
6	32	0.1380	0.00909	580	16	12	—	—	820	23	17	—	—	—	—
	40		0.01015	610	18	13	—	—	920	25	19	—	—	—	—
8	32	0.1640	0.01400	900	30	22	—	—	1260	41	31	—	—	—	—
	36		0.01474	940	31	23	—	—	1320	43	32	—	—	—	—
10	24	0.1900	0.01750	1120	43	32	—	—	1580	60	45	—	—	—	—
	32		0.02000	1285	49	36	—	—	1800	68	51	—	—	—	—
1/4	20	0.2500	0.0318	2020	96	75	—	105	2860	144	108	—	160	3180	13
	28		0.0364	2320	120	86	—	135	3280	168	120	—	185	3640	14
					LB. FT.	LB. FT.	LB. FT.	LB. FT.		LB. FT.	LB. FT.	LB. FT.	LB. FT.		
5/16	18	0.3125	0.0524	3340	17	13	16	19	4720	25	18	22	30	5240	25
	24		0.0580	3700	19	14	17	21	5220	25	20	25	30	5800	27
3/8	16	0.3750	0.0775	4940	30	23	28	35	7000	45	35	40	50	7750	45
	24		0.0878	5600	35	25	32	40	7900	50	35	45	55	8780	50
7/16	14	0.4375	0.1063	6800	50	35	45	55	9550	70	55	63	80	10630	70
	20		0.1187	7550	55	40	50	60	10700	80	60	70	90	11870	75
1/2	13	0.5000	0.1419	9050	75	55	68	85	12750	110	80	96	120	14190	110
	20		0.1599	10700	90	65	80	100	14400	120	90	108	135	15990	115
9/16	12	0.5625	0.1820	11600	110	80	98	120	16400	150	110	139	165	18200	155
	18		0.2030	12950	120	90	109	135	18250	170	130	154	190	20300	165
5/8	11	0.6250	0.2260	14400	150	110	135	165	20350	220	170	180	240	22600	210
	18		0.2560	16300	170	130	153	190	23000	240	180	204	265	25600	220
3/4	10	0.7500	0.3340	21300	260	200	240	285	30100	380	280	301	420	33400	365
	16		0.3730	23800	300	220	268	330	33600	420	320	336	465	37300	400
7/8	9	0.8750	0.4620	29400	430	320	386	475	41600	600	460	485	660	46200	585
	14		0.5090	32400	470	350	425	520	45800	660	500	534	725	50900	635
1	8	1.000	0.6060	38600	640	480	579	675	51500	900	680	687	990	60600	865
	12		0.6630	42200	700	530	633	735	59700	1000	740	796	1100	66300	915
1-1/8	7	1.1250	0.7630	42300	800	600	714	840	68700	1280	960	1030	1400	76300	1240
	12		0.8560	47500	880	660	802	925	77000	1440	1080	1155	1575	85600	1380
1-1/4	7	1.2500	0.9690	53800	1120	840	1009	1175	87200	1820	1360	1453	2000	96900	1750
	12		1.0730	59600	1240	920	1118	1300	96600	2000	1500	1610	2200	107300	1880
1-1/2	6	1.500	1.1550	64100	1460	1100	1322	1525	104000	2380	1780	1907	2625	115500	2320
	12		1.3150	73000	1680	1260	1506	1750	118100	2720	2040	2165	3000	131500	2440
1-1/2	6	1.500	1.4050	78000	1940	1460	1755	2025	126500	3160	2360	2530	3475	140500	3040
	12		1.5800	87700	2200	1640	1974	2300	142200	3560	2660	2844	3925	158000	3270

Note: These torque values do not apply to cadium plated fasteners.

SAE GRADE 5

SAE GRADE 8

Figure 2-6. Torque Chart

To view or download the full manual visit truckmanualshub.com

https://truckmanualshub.com/

SECTION 3. USER RESPONSIBILITIES AND MACHINE CONTROL

3.1 GENERAL

⚠ IMPORTANT

SINCE THE MANUFACTURER HAS NO DIRECT CONTROL OVER MACHINE APPLICATION AND OPERATION, CONFORMANCE WITH GOOD SAFETY PRACTICES IN THESE AREAS IS THE RESPONSIBILITY OF THE USER AND HIS/HER OPERATING PERSONNEL.

This section provides the necessary information needed to understand control functions. Included in this section are the operating characteristics and limitations, and functions and purposes of controls and indicators. It is important that the user and/or operator read and understand the proper procedures before operating the machine. These procedures will aid in obtaining optimum lift service and safe operation.

3.2 PERSONNEL TRAINING

The aerial platform is a personnel handling device; therefore it is essential that it be operated and maintained only by authorized and qualified personnel who have demonstrated that they understand the proper use and maintenance of the machine. It is important that all personnel who are assigned to and responsible for the operation and maintenance of the machine undergo a thorough training program and check out period in order to become familiar with the characteristics prior to operating the machine.

In addition, personnel operating the machine should be familiar with ANSI standard A92.5-1992 Responsibilities Section. This outlines the responsibilities of the owners, users, operators, lessors and lessees concerning safety, training, inspection, maintenance, application and operation.

Persons under the influence of drugs or alcohol or who are subject to seizures, dizziness or loss of physical control must not be permitted to operate the machine.

Operator Training

Operator training must include instruction in the following areas:

1. Use and limitations of the platform controls, ground controls, emergency controls and safety systems.
2. Knowledge and understanding of this manual and of the control markings, instructions and warnings on the machine itself.
3. Knowledge and understanding of all safety work rules of the employer and of Federal, State and local statutes, including training in the recognition and avoidance of potential hazards in the work place; with particular attention to the work to be performed.
4. Proper use of all required personnel safety equipment, in particular the wearing of a safety harness or other approved fall protection devices with a lanyard attached to the platform at all times.
5. Sufficient knowledge of the mechanical operation of the machine to recognize a malfunction or potential malfunction.
6. The safest means to operate the machine where overhead obstructions, other moving equipment, and obstacles, depressions, holes, drop-offs, etc. on the supporting surface exist.
7. Means to avoid the hazards of unprotected electrical conductors.
8. Any other requirements of a specific job or machine application.

Training Supervision

Training must be done under the supervision of a qualified person in an open area free of obstructions until the trainee has developed the ability to safely control a machine in congested work locations.

Operator Responsibility

The operator must be instructed that he/she has the responsibility and authority to shut down the machine in case of a malfunction or other unsafe condition of either the machine or the job site and to request further information from his/her supervisor or an authorized JLG Distributor before proceeding.

NOTE: *Manufacturer or distributor will provide qualified persons for training assistance with first unit(s) delivered and thereafter as requested by the user or his/her personnel.*

To order go to Discount-Equipment.com

https://truckmanualshub.com/

3.3 OPERATING CHARACTERISTICS AND LIMITATIONS

General

A thorough knowledge of the operating characteristics and limitations of the machine is always the first requirement for any user, regardless of the user's experience with similar types of equipment.

Placards

Important points to remember during operation are provided at the control stations by DANGER, WARNING, CAUTION, IMPORTANT and INSTRUCTION placards. This information is placed at various locations for the express purpose of alerting personnel of potential hazards constituted by the operating characteristics and load limitations of the machine. See FOREWORD for definitions of the above placards.

Capacities

Raising boom above horizontal and/or extension of boom beyond retracted position with or without any load in platform, is based on the following criteria:

1. Machine is positioned on a smooth, firm and level surface.
2. Load is within manufacturer's rated design capacity.
3. All machine systems are functioning properly.
4. Proper tire pressure exists in the tires.
5. Machine is as originally equipped from JLG.

Stability

This machine as originally manufactured by JLG Industries Inc., when operated within its rated capacity on a smooth, firm and level supporting surface, and in accordance with the instructions provided on the machine and this manual, provides a stable machine for all platform positions.

Machine stability is based on two positions which are called FORWARD STABILITY and BACKWARD STABILITY. The machines position of least forward stability is shown in Figure 3-1., and its position of least backward stability is shown in Figure 3-2.

⚠ WARNING

TO AVOID FORWARD OR BACKWARD UPSET, DO NOT OVERLOAD MACHINE OR OPERATE ON AN OUT-OF-LEVEL SURFACE.

Boom Synchronizing Procedure

If the lower boom does not fully lower, use the following procedure.

1. Remove all personnel from the platform.
2. Pull out the red EMS (emergency stop) knob located on the ground control station.
3. Turn the platform/ground select switch to the ground control position.
4. If applicable, start the engine.
5. Pull and hold out the red re-level knob on the synchronizing valve located beside the main control valve.
6. From the ground controls, activate the lift control switch, and raise the lower boom approximately 6 feet (2 m).
7. After raising the lower boom, release the red knob.
8. Activate the lift control switch and fully lower the boom and continue to hold down the switch for an additional 5 seconds.
9. Repeat steps 5 thru 8 if necessary.

To order go to Discount-Equipment.com

https://truckmanualshub.com/

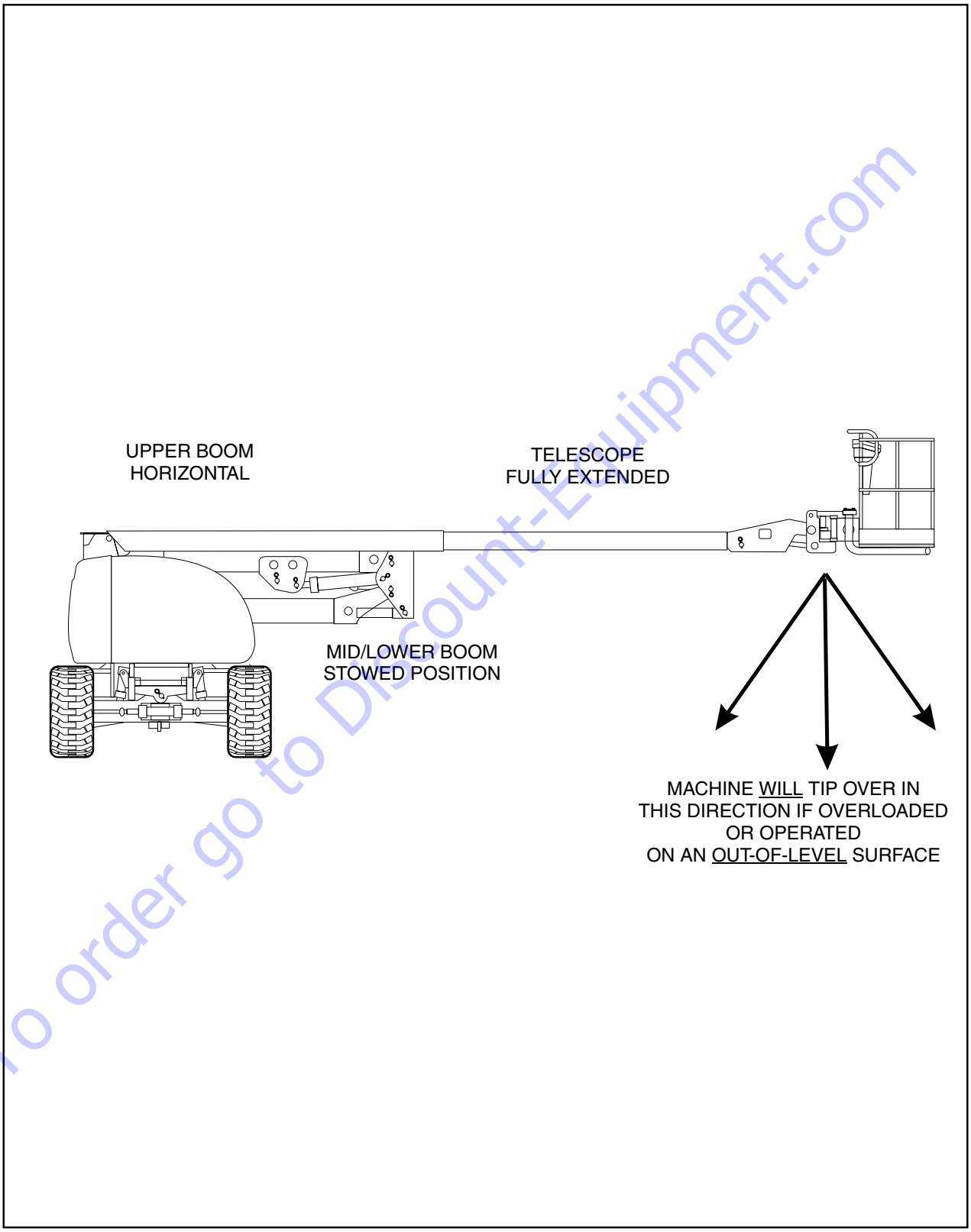

To order go to Discount-Equipment.com

Figure 3-1. Position of Least Forward Stability

https://truckmanualshub.com/

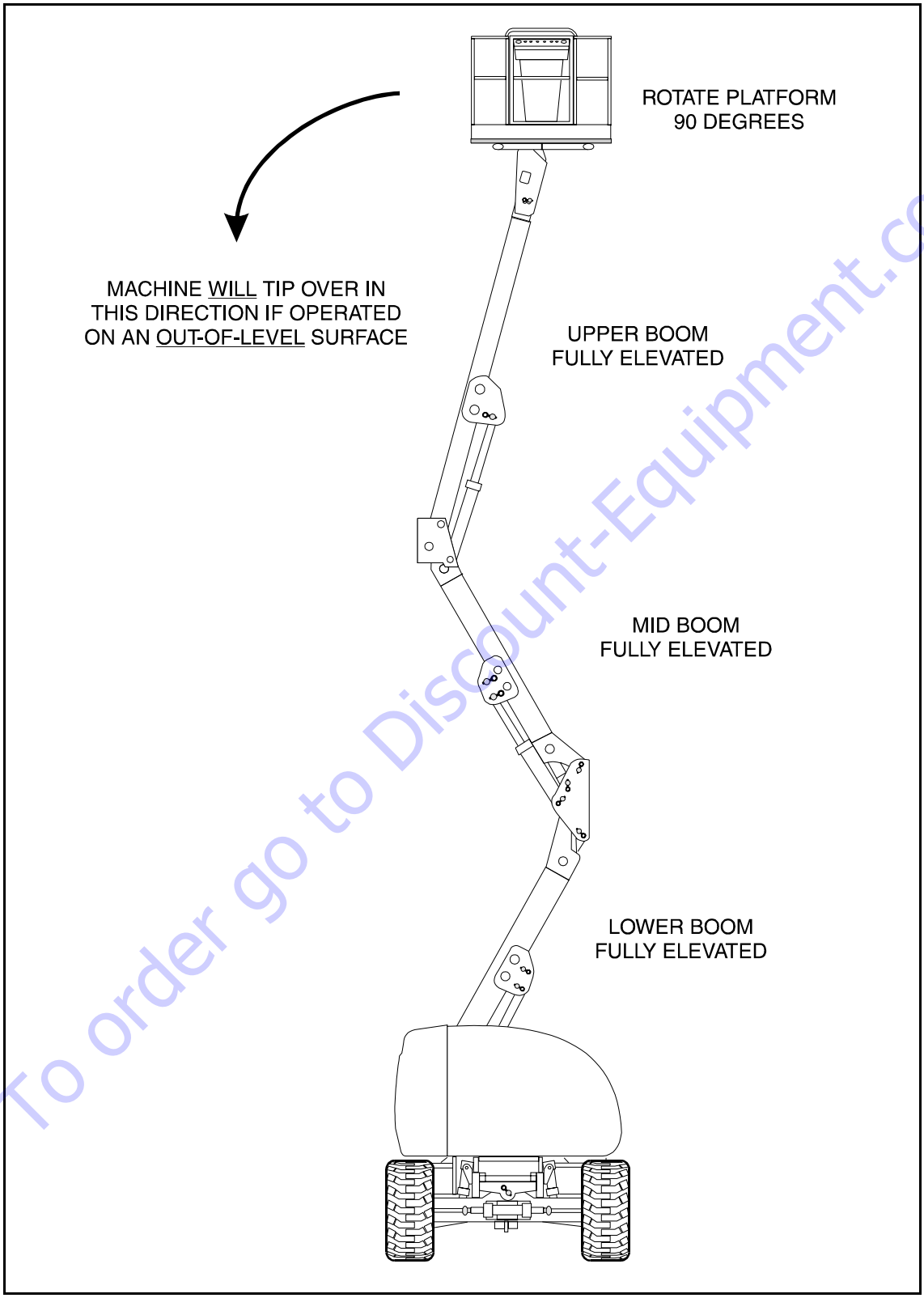

Figure 3-2. Position of Least Backward Stability

To order go to Discount-Equipment.com

https://truckmanualshub.com/

3.4 CONTROLS AND INDICATORS

NOTE: *This machines is equipped with control panels that use symbols to indicate control functions. Refer to Figure 3-8. and Figure 3-9. for the symbols on the decal located on the control box guard in front of the control box or by the ground controls for these control panel symbols and the corresponding functions.*

Ground Controls

PERFORM PRE-OPERATIONAL CHECKS AND INSPECTIONS FROM THE GROUND CONTROL STATION. WHEN PERSONNEL ARE IN THE PLATFORM, OPERATION OF THE BOOM WILL ONLY BE PERFORMED WITH THE PERMISSION OF THE PLATFORM OCCUPANT(S).

NOTE: *When Power/Emergency Stop switch is in the on position and engine is not running, an alarm will sound, indicating Ignition is on.*

⚠ CAUTION

WHEN THE MACHINE IS SHUT DOWN THE MASTER/EMERGENCY STOP SWITCH MUST BE POSITIONED TO THE OFF POSITION TO PREVENT DRAINING THE BATTERY.

1. Power/Emergency Stop Switch.

   Pull out on-off Power/Emergency Stop Switch to turn on engine ignition and power to the electrical system. Push in to shut off engine and remove power from the controls. The Ground Control Emergency Stop Switch must be pulled out to operate the machine from either Ground Control or Platform Control. This allows the machine to be shut down in emergency situations by those untrained in the operation of the lift but who recognize the Emergency Stop Switch. The keyed Master Switch can also be used for the same purpose.

2. Engine Start/ Auxiliary Power Switch.

   A toggle-type Engine Start/Auxiliary Power control switch, on the ground control panel, energizes the engine starter or the electrically operated auxiliary hydraulic pump, when actuated. To start the engine, the switch must be held up until the engine starts. To use auxiliary power, the switch must be held down for duration of auxiliary pump use.

NOTE: *Auxiliary power only works if there is no oil pressure, and is disabled if engine is running.*

   a. The auxiliary pump functions to provide sufficient oil flow to operate the basic machine functions should the main pump or engine fail. The auxiliary pump enables the tower boom lift and telescope and swing to be operated.
   b. It should be noted that the functions will operate at a slower than normal rate because of the lower flow of hydraulic fluid delivered.

NOTE: *When operating on auxiliary power, do not operate more than one function at a time. (Simultaneous operation can overload the 12-volt auxiliary pump motor.)*

   c. Position PLATFORM/GROUND switch to GROUND.
   d. Position POWER/EMERGENCY STOP switch to ON.
   e. Operate appropriate control switch or lever for desired function and hold.
   f. Position ENGINE START/AUXILIARY POWER switch to DOWN and hold.
   g. Release AUXILIARY POWER switch, followed by the selected control switch or lever.
   h. Position the POWER/EMERGENCY STOP SWITCH to off.

3. Control Station Selector.

   A three position, center off, key activated PLATFORM/GROUND SELECT switch supplies power to the platform control console when positioned to PLATFORM. With the switch in GROUND position, power is shut off to the platform control console, and only the controls on the ground control panel are operable.

NOTE: *With the Platform/Ground Select Switch in the center position, power is shut off to controls at both operating stations. Remove the key to prevent the controls from being actuated.*

NOTE: *Engine Start/Auxiliary Power, Main Lift, Swing, Platform Level, Main Telescope, Tower Lift and Platform Rotator control switches are spring-loaded and will automatically return to neutral (off) when released.*

⚠ CAUTION

WHEN OPERATING THE BOOM ENSURE THERE ARE NO PERSONNEL AROUND OR UNDER PLATFORM.

⚠ CAUTION

TO AVOID SERIOUS INJURY, DO NOT OPERATE MACHINE IF ANY CONTROL LEVERS OR TOGGLE SWITCHES CONTROLLING PLATFORM MOVEMENT DO NOT RETURN TO THE OFF POSITION WHEN RELEASED.

To order go to Discount-Equipment.com

https://truckmanualshub.com/

4. Tower Lift.

   The Tower Lift control switch provides raising and lowering of the lower and mid booms when positioned up or down.

5. Main Lift Control.

   The Main Lift control switch provides raising and lowering of the main boom when positioned up or down.

6. Main Telescope Control.

   The Main Telescope control switch provides extension and retraction of the main boom, when positioned to in or out.

7. Swing Control.

   The Swing control switch provides 360 degrees non-continuous turntable rotation when positioned to the right or left.

8. Hourmeter.

   An hourmeter, installed in the bottom left of the Ground Control box, registers the amount of time the machine has been in use, with engine running. By connecting into the oil pressure circuit of the engine, only engine run hours are recorded. The hourmeter registers up to 9,999.9 hours and cannot be reset.

9. Platform Rotate.

   A three position Rotate control switch permits rotation of the platform when positioned to the left or right.

10. Platform Leveling Override.

    A three position Platform Leveling Override control switch allows the operator to compensate for any difference in the automatic self leveling system by positioning the control switch up or down.

11. Articulating Jib Boom. (If Equipped)

    The Articulating Jib Boom control switch provides raising and lowering of the jib when positioned up or down.

12. Battery Charging Indicator.

    When illuminated indicates a problem in the battery or charging circuit, and service is required.

13. Engine Air Filter Indicator.

    When illuminated indicates that the air filter is too restrictive and needs to be replaced.

14. Engine Oil Pressure Indicator.

    When illuminated indicates that engine oil pressure is below normal and service is required.

15. Engine Coolant Temperature (Ford and Isuzu) Indicator.

    When illuminated indicates that engine coolant temperature is abnormally high and service is required.

16. Engine Oil Temperature Indicator (Deutz).

    When illuminated indicates that the temperature of the engine oil, which also serves as engine coolant, is abnormally high and service is required.

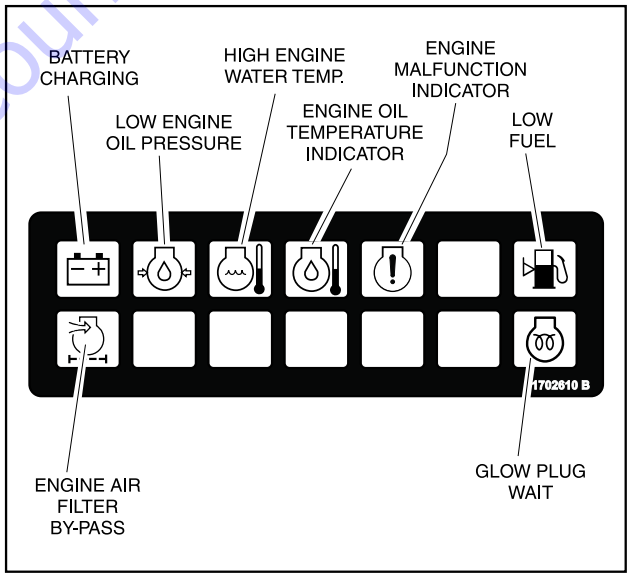

Figure 3-3. Ground Control Indicator Panel

To order go to Discount-Equipment.com

https://truckmanualshub.com/

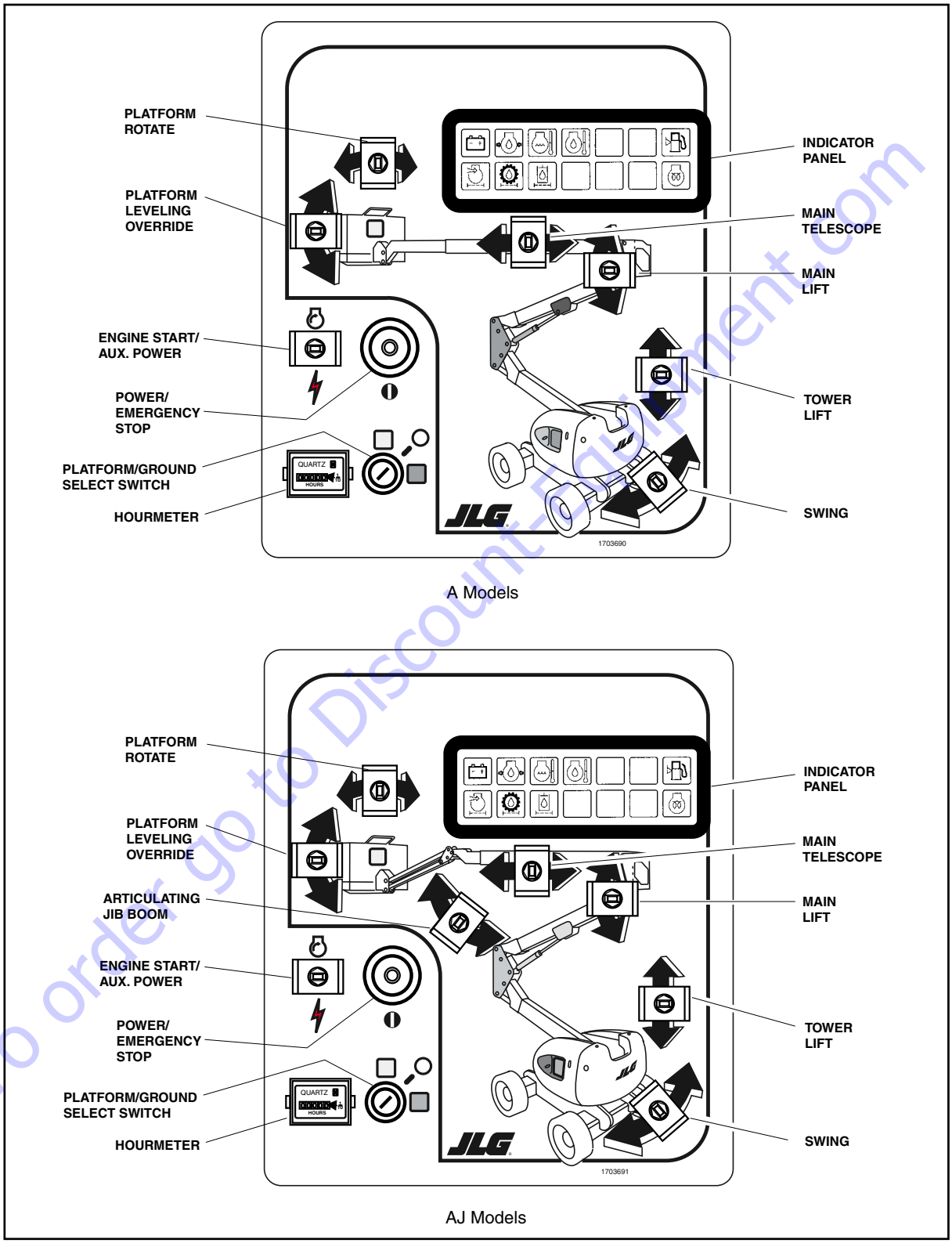

Figure 3-4. Ground Control Station

To order go to Discount-Equipment.com

https://truckmanualshub.com/

17. Low Fuel Level Indicator.

    When illuminated indicates that the fuel level is 1/8 full or less. When the light first turns on, there are approximately four usable gallons of fuel remaining.

18. Glow Plug Wait Indicator.

    When illuminated, indicates the glow plugs are on. The glow plugs are automatically turned on with the ignition circuit and remain on for approximately seven seconds. Start the engine only after the light goes out.

19. Engine Malfunction Indicator Light (Ford Engines after S/N 46089).

    When illuminated, indicates that the Engine Control Module has detected a malfunction in the Electronic Fuel Injection System and a Diagnostic Trouble Code has been set in the ECM. Refer to the Service Manual for instructions concerning the trouble codes and trouble code retrieval.

    The malfunction indicator light will illuminate for 2-3 seconds when the key is positioned to the on position to act as a self test.

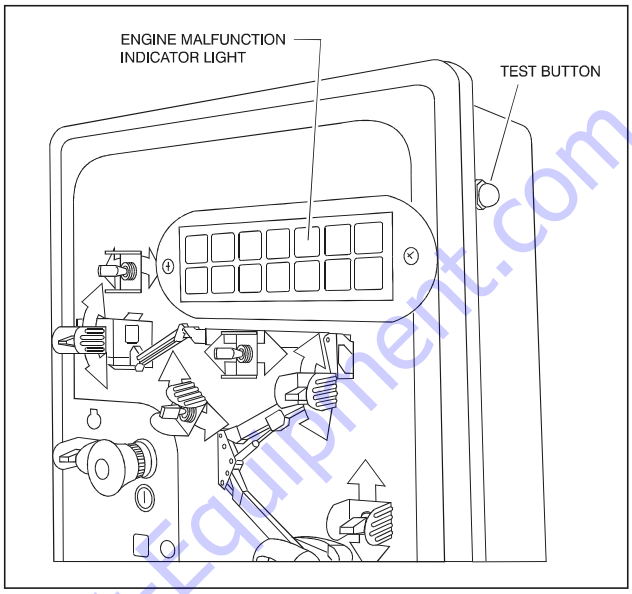

Figure 3-5. Malfunction Indicator Light and Test Button

20. EFI System Test Button (Ford Engines after S/N 46089).

    By pushing and holding the system test button on the side of the ground control box, the Diagnostic Trouble Codes will be displayed on the Malfunction Indicator Light. Refer to the Service Manual for instructions concerning the trouble codes and trouble code retrieval.

To order go to Discount-Equipment.com

https://truckmanualshub.com/

Platform Station

NOTE: *For engine starting, the footswitch must be in the released (up) position. Footswitch must be actuated in order for the platform controls to function.*

NOTE: *These machines have a 7 second delay timer. If function has not been activated within 7 seconds after depressing the footswitch, recycle footswitch.*

1. Footswitch.

   This feature makes it necessary to depress the footswitch to allow operation of the platform controls.

⚠ WARNING

TO AVOID SERIOUS INJURY, DO NOT REMOVE, MODIFY OR DISABLE THE FOOTSWITCH BY BLOCKING OR ANY OTHER MEANS.

⚠ IMPORTANT

FOOTSWITCH MUST BE ADJUSTED SO THAT FUNCTIONS WILL OPERATE WHEN PEDAL IS APPROXIMATELY AT ITS CENTER OF TRAVEL. IF SWITCH OPERATES WITHIN LAST 1/4" OF TRAVEL, TOP OR BOTTOM, IT SHOULD BE ADJUSTED.

2. Power/Emergency Stop.

   An on-off Power/Emergency Stop switch and a separate Engine Start/Auxiliary Power toggle switch on the platform console supply electrical power to the starter solenoid, when the ignition switch is placed in the ON position and the ENGINE START switch is push forward.

3. Enable Indicator. (Green)

   This green illuminator indicates that the footswitch is depressed and the platform controls are ready for use. To enable the controls, depress the footswitch and select any function within seven seconds. The controls will then remain active as long as there is not a delay of seven seconds between stopping one function and starting the next one. If the seven second interval is exceeded, the enable light will go out and the controls will not operate. To enable the controls again, remove your foot from the footswitch and depress the footswitch.

4. Travel Warning Horn.

   A push-type horn switch supplies electrical power to an audible warning device when pressed.

5. Tilt Alarm Warning Light. (Orange)

   This orange illuminator indicates that the chassis is on a slope (over 5 degrees). If illuminated when boom is raised or extended, retract and lower to below horizontal then reposition machine so that it is level before extending boom or raising boom above horizontal. If the boom is above horizontal and the machine is on a 5 degree slope, an alarm will sound and Creep is automatically activated.

⚠ WARNING

IF ILLUMINATED WHEN BOOM IS RAISED OR EXTENDED, RETRACT AND LOWER TO BELOW HORIZONTAL THEN REPOSITION MACHINE SO THAT IT IS LEVEL BEFORE EXTENDING BOOM OR RAISING BOOM ABOVE HORIZONTAL.

6. Tower or Lower Boom Lift.

   The three position center-off toggle switch provides for raising and lowering of the lower and mid booms when positioned up or down.

NOTE: *Main Lift, Swing, and Drive control levers are spring-loaded and will automatically return to neutral (off) position when released.*

⚠ WARNING

TO AVOID SERIOUS INJURY, DO NOT OPERATE MACHINE IF ANY CONTROL LEVERS OR TOGGLE SWITCHES CONTROLLING PLATFORM MOVEMENT DO NOT RETURN TO THE OFF OR NEUTRAL POSITION WHEN RELEASED.

7. Main Lift/Swing Controller.

   The dual axis joystick is provided for main lift and swing. Push forward to lift up, pull backward to lift down. Move right to swing right, move left to swing left. Moving the joystick activates switches to provide the functions selected. Proportional control of these functions can be attained by using the Function Speed knob.

NOTE: *Main lift and swing functions may be selected in combination. The handle features a round gate so that maximum speed is reduced when multiple functions are selected.*

To Order go to Discount-Equipment.com

https://truckmanualshub.com/

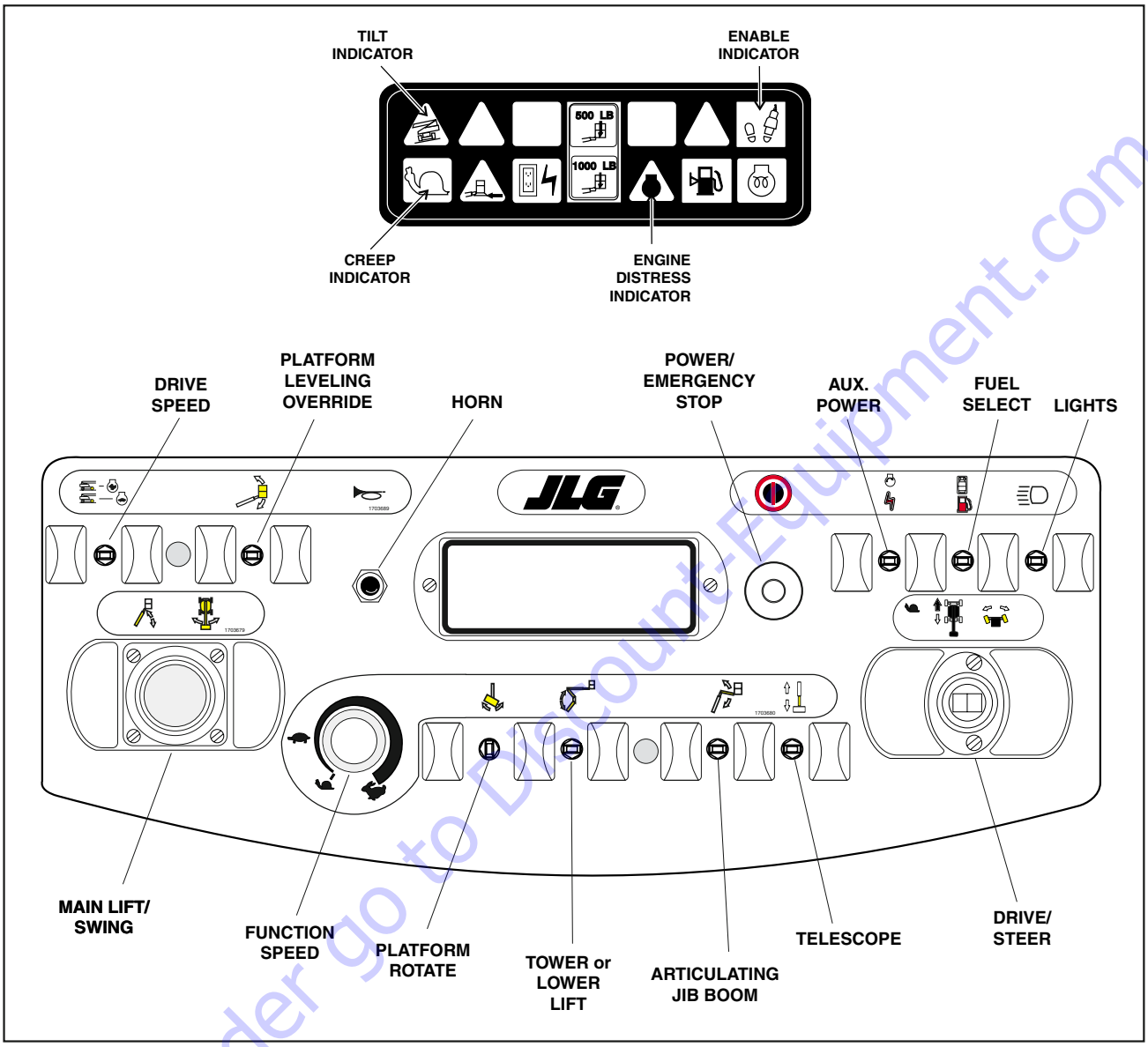

Figure 3-6. Platform Station - Proportional Controls

To order go to Discount-Equipment.com

8. Main Telescope Control.

   The Main Telescope control switch allows extension and retraction of the main boom when positioned to in or out.

9. Drive/Steer.

   Proportional single axis joystick is provided to control drive. Push forward to drive forward, pull back to drive in reverse. Steering is accomplished via a thumb-activated rocker switch on the end of the handle. Push on the left side of the switch to steer left, on right side to steer right.

NOTE: *Both drive and steer functions work in the opposite direction when the boom is positioned over front of the chassis.*

NOTE: *When boom is positioned above horizontal and any of the following switches, Drive Speed/torque Select or Function Speed, are positioned to High, high function speeds are automatically cut out and the machine continues to operate at a lower speed.*

https://truckmanualshub.com/

⚠ CAUTION

DO NOT OPERATE MACHINE IF DRIVE SPEED/TORQUE SELECT OR FUNCTION SPEED SWITCHES OPERATE WHEN BOOM IS ABOVE HORIZONTAL.

10. Function Speed.

    The knob provides variable speed control of all boom functions grouped to the right of the knob. For smoothest operation of these functions, use two hands: rotate the knob counterclockwise to the slowest position, select the function switch, and while holding the switch on, rotate the knob to the desired speed. To achieve a smooth stop, rotate the knob ccw to a slow speed prior to letting go of the function switch.

    Rotating the knob fully counterclockwise until a click is heard puts all controls, including drive, main lift, and swing into creep speed. This slow speed is used for fine positioning of the platform when close to obstacles. A snail symbol is used to indicate "creep" speed and is shown at the Function Speed knob as well as near the proportional controllers to act as a reminder.

11. Drive Speed Switch (4WD Equipped Machines).

    On machines equipped with 4WD, the drive speed switch also selects 2WD or 4WD modes. The forward position produces maximum speed by operating in 2WD at high engine rpm. The center position selects 4WD at mid engine rpm. The backward position selects 4WD at high engine rpm.

12. Drive Speed Switch (2WD Equipped Machines).

    The forward position produces maximum speed by operating at high engine rpm. The backward position selects mid engine rpm.

13. Creep Speed Indicator.

    Illuminated (Green) when the Function Speed Control is turned to the creep position, the indicator acts as a reminder that all functions are set to the slowest speed.

14. Platform Rotate.

    The Platform Rotate control switch allows the operator to rotate the basket to the left or right when positioned to the desired direction.

15. Platform Leveling Override.

    The Platform Level control switch allows the operator to adjust the level of the platform by positioning the switch to UP or DOWN.

16. Articulating Jib Boom. (If Equipped)

    Push level, toggle switch forward to lift up, pull back to lift down.

17. Fuel Select (Dual Fuel Engine Only). (If Equipped)

    Gasoline or liquid propane fuel may be selected by moving the switch to the appropriate position. It is unnecessary to purge the fuel system before switching fuels, so there is no waiting period when switching fuels while the engine is running.

18. Lights. (If Equipped)

    This switch operates control console panel lights and head lights if the machine is so equipped. The ignition switch does not have to be on to operate the lights, so care must be taken to avoid draining the battery if left unattended. The master switch and / or the ignition switch at the ground control will turn off power to all lights.

19. Engine Distress Indicator Light (Yellow).

    The light turns on and an alarm sounds when machine's power system requires immediate service. Any of the following conditions will turn on light and alarm: low engine oil pressure, high engine coolant temperature, clogged engine air filter, low alternator output, clogged hydraulic oil return filter, or clogged charge pump filter.

To order go to Discount-Equipment.com

https://truckmanualshub.com/

20. Soft Touch Indicator. (If Equipped)

    When illuminated (Yellow) the Soft Touch bumper is against an object. All controls are cut out until the override button is pushed, at which time controls are active in the Creep mode.

21. AC Generator. (Green)

    When illuminated (Green), the light indicates the generator is in operation.

22. Low Fuel Indicator. (Yellow)

    When illuminated (Yellow), the fuel tank is 1/8 full or less. When the light first turns on, there are approximately four usable gallons of fuel remaining.

23. Auxiliary Power.

    A toggle-type Auxiliary Power control switch energizes the electrically operated hydraulic pump, when actuated. (Switch must be held ON for duration of auxiliary pump use.)

    The auxiliary pump functions to provide sufficient oil flow to operate the basic machine functions should the main pump or engine fail. The auxiliary pump will operate tower boom lift, tower telescope, main boom lift, main telescope and swing.

    It should be noted that the functions will operate at a slower than normal rate because of the lower gpm delivered.

⚠ IMPORTANT

WHEN OPERATING ON AUXILIARY POWER, DO NOT OPERATE MORE THAN ONE FUNCTION AT THE SAME TIME. SIMULTANEOUS OPERATION CAN OVERLOAD THE AUXILIARY PUMP MOTOR.

NOTE: *The main function of auxiliary power is to lower the platform in the event of primary power failure. Determine the reason for primary power failure and have the problem corrected by a certified JLG service technician. Operate as follows:*

a. Position Platform/Ground switch to Platform.
b. Position Power/Emergency Stop switch to the on position.
c. Depress and hold footswitch.
d. Operate appropriate control switch or lever for desired function and hold.
e. Position Auxiliary Power switch to the on position and hold.
f. Release Auxiliary Power switch, selected control switch or lever, and footswitch.
g. Position Power/Emergency Stop switch to the off position.

3.5 PLACARDS AND DECALS

Read and understand all placards and decals. Do not operate any machine on which DANGER, WARNING, CAUTION OR INSTRUCTION PLACARDS OR DECALS ARE MISSING OR ILLEGIBLE. Replace placards and decals if damaged, missing or illegible.

Decals are made of Lexan Pressure Sensitive Adhesive with a protective film on the front. Remove the damaged decal and thoroughly clean surface before installing a new decal. Simply peel off the back, and press new decal onto surface.

NOTE: *Placards and Decals can be ordered by using part numbers located by each placard or decal. (See Figure 3-7. Danger and Warning Decal Location.)*

To order go to Discount-Equipment.com

https://truckmanualshub.com/

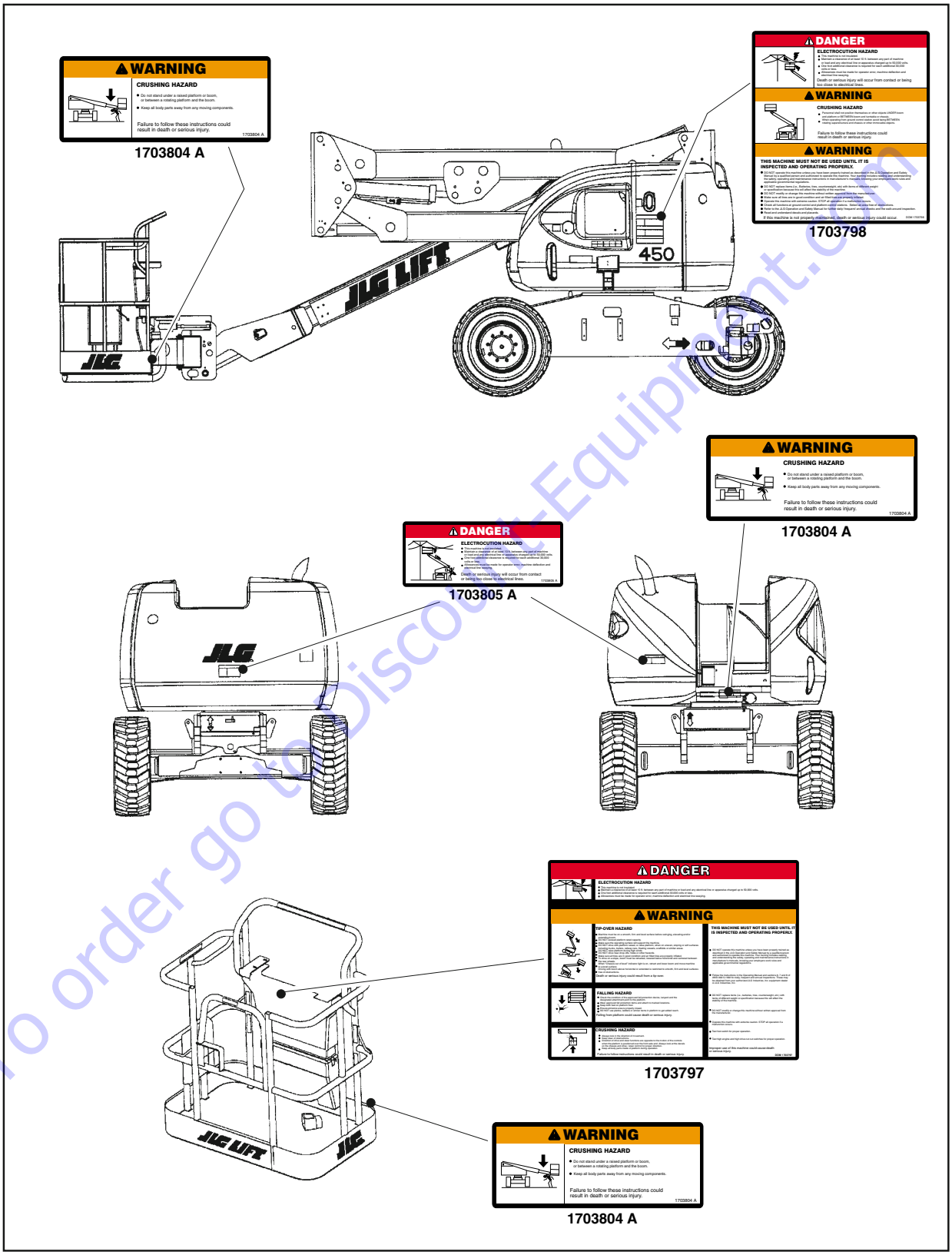

Figure 3-7. Danger and Warning Decal Location

To order go to Discount-Equipment.com

https://truckmanualshub.com/

⚠ DANGER

ELECTROCUTION HAZARD

- This machine is not insulated.
- Maintain a clearance of at least 10 ft. between any part of machine or load and any electrical line or apparatus charged up to 50,000 volts.
- One foot additional clearance is required for each additional 30,000 volts or less.
- Allowances must be made for operator error, machine deflection and electrical line swaying.

Death or serious injury will occur from contact or being too close to electrical lines.

⚠ WARNING

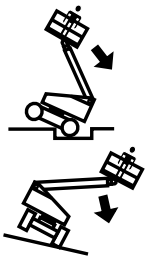

TIP-OVER HAZARD

- Machine must be on a smooth, firm and level surface before swinging, elevating and/or extending boom.
- DO NOT exceed platform rated capacity.
- Make sure the operating surface will support the machine.
- DO NOT drive with platform raised, or raise platform, when on uneven, sloping or soft surfaces including trucks, trailers, railway cars, floating vessels, scaffolds or similar areas.
- DO NOT raise platform during high winds.
- DO NOT drive near drop offs, holes or other hazards.
- Make sure all tires are in good condition and air filled tires are properly inflated.
- To drive on a slope, boom must be retracted, lowered below horizontal and centered between the rear wheels.
- When "Chassis out of level" indicator light is on, retract and lower boom and move machine to a level surface.
- Driving with boom above horizontal or extended is restricted to smooth, firm and level surfaces free of obstructions.

Death or serious injury could result from a tip-over.

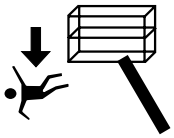

FALLING HAZARD

- Check the condition of the approved fall protection device, lanyard and the designated attachment point to the platform.
- Wear approved fall protection items and attach to marked locations.
- Keep both feet on platform floor.
- Ensure entrance area is properly closed.
- DO NOT use planks, ladders or similar items in platform to get added reach.

Falling from platform could cause death or serious injury.

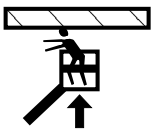

CRUSHING HAZARD

- Always look in the direction of movement.
- Keep clear of obstructions.
- Direction of drive and steer functions are opposite to the motion of the controls when the platform is positioned over the front axle end. Always look at the decals on the chassis and drive / steer control for proper direction.
- Keep all body parts inside of platform during operation.

Failure to follow instructions could result in death or serious injury.

THIS MACHINE MUST NOT BE USED UNTIL IT IS INSPECTED AND OPERATING PROPERLY.

- DO NOT operate this machine unless you have been properly trained as described in the JLG Operation and Safety Manual by a qualified person and authorized to operate this machine. Your training includes reading and understanding the safety, operating and maintenance instructions in manufacturer's manuals, knowing your employers work rules and applicable governmental regulations.
- Follow the instructions in the Operating Manual and sections 6, 7 and 8 of ANSI A92.5-1992 for daily, frequent and annual inspections. These may be obtained from your authorized JLG Industries, Inc. equipment dealer or JLG Industries, Inc.
- DO NOT replace items (i.e., batteries, tires, counterweight, etc.) with items of different weight or specification because this will affect the stability of the machine.
- DO NOT modify or change this machine without written approval from the manufacturer.
- Operate this machine with extreme caution. STOP all operation if a malfunction occurs.
- Test foot switch for proper operation.
- Test high engine and high drive cut out switches for proper operation.

Improper use of this machine could cause death or serious injury.

DOM 1703797

1703797 A

⚠ WARNING

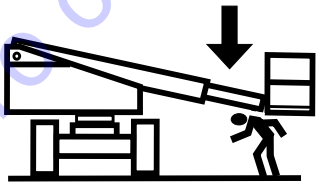

CRUSHING HAZARD

- Do not stand under a raised platform or boom, or between a rotating platform and the boom.
- Keep all body parts away from any moving components.

Failure to follow these instructions could result in death or serious injury.

1703804 A

1703804 A

To order go to DiscountEquipment.com

https://truckmanualshub.com/

DANGER

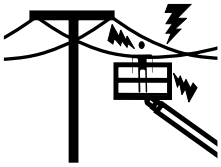

ELECTROCUTION HAZARD

- This machine is not insulated.
- Maintain a clearance of at least 10 ft. between any part of machine or load and any electrical line or apparatus charged up to 50,000 volts.
- One foot additional clearance is required for each additional 30,000 volts or less.
- Allowances must be made for operator error, machine deflection and electrical line swaying.

Death or serious injury will occur from contact or being too close to electrical lines.

WARNING

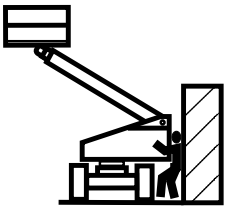

CRUSHING HAZARD

- Personnel shall not position themselves or other objects UNDER boom and platform or BETWEEN boom and turntable or chassis.
- When operating from ground control station avoid being BETWEEN rotating superstructure and chassis or other immovable objects.

Failure to follow these instructions could result in death or serious injury.

WARNING

THIS MACHINE MUST NOT BE USED UNTIL IT IS INSPECTED AND OPERATING PROPERLY.

- DO NOT operate this machine unless you have been properly trained as described in the JLG Operation and Safety Manual by a qualified person and authorized to operate this machine. Your training includes reading and understanding the safety, operating and maintenance instructions in manufacturer's manuals, knowing your employers work rules and applicable governmental regulations.
- DO NOT replace items (i.e., Batteries, tires, counterweight, etc) with items of different weight or specification because this will affect the stability of the machine.
- DO NOT modify or change this machine without written approval from the manufacturer.
- Make sure all tires are in good condition and air filled tires are properly inflated.
- Operate this machine with extreme caution. STOP all operation if a malfunction occurs.
- Check all functions at ground control and platform control stations. Select an area free of obstructions.
- Refer to the JLG Operation and Safety Manual for further daily/ frequent/ annual checks and the walk around inspection.
- Read and understand decals and placards.

If this machine is not properly maintained, death or serious injury could occur. DOM 1703798

1703798 B

DANGER

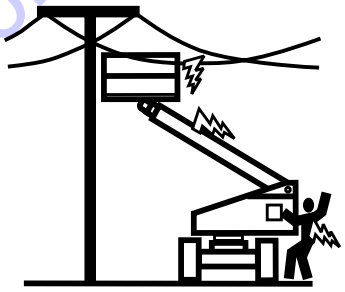

ELECTROCUTION HAZARD

- This machine is not insulated.
- Maintain a clearance of at least 10 ft. between any part of machine or load and any electrical line or apparatus charged up to 50,000 volts.
- One foot additional clearance is required for each additional 30,000 volts or less.
- Allowances must be made for operator error, machine deflection and electrical line swaying.

Death or serious injury will occur from contact or being too close to electrical lines. 1703805 A

1703805 B

To order go to Discount-Equipment.com

https://truckmanualshub.com/

FUNCTION	SYMBOL	FUNCTION	SYMBOL
DRIVE SELECT		MAIN LIFT	
STEER SELECT		SWING	
PLATFORM LEVEL		FUNCTION SPEED CONTROL	
CHASSIS OUT OF LEVEL		PLATFORM ROTATE	
CREEP		TOWER LIFT	
PLATFORM CAPACITY INDICATOR	500 LB 1000 LB	TOWER TELESCOPE	
ENGINE DISTRESS		ARTICULATING FLY BOOM	
LOW FUEL LEVEL		MAIN TELESCOPE	
AC GENERATOR ON		FUEL SELECT	

Figure 3-8. Control Panel Symbols - Sheet 1 of 2

To order go to Discount-Equipment.com

https://truckmanualshub.com/

FUNCTION	SYMBOL	FUNCTION	SYMBOL
GLOW PLUG INDICATOR		SOFT TOUCH OVERRIDE	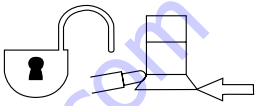
ENABLE INDICATOR		SOFT TOUCH INDICATOR	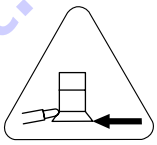
POWER EMERGENCY STOP		DRIVE	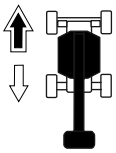
START AUXILIARY POWER		STEER	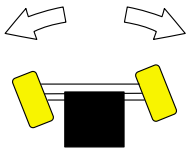

Figure 3-9. Control Panel Symbols - Sheet 2 of 2

To order go to Discount-Equipment.com

https://truckmanualshub.com/

This page left blank intentionally.

To order go to Discount-Equipment.com

https://truckmanualshub.com/

TO PURCHASE THIS PRODUCT PLEASE CONTACT US

Discount Equipment

Equipment Financing and
Extended Warranties Available

Discount-Equipment.com is your online resource for commercial and industrial quality parts and equipment sales.

561-964-4949

visit us on line @ www.discount-equipment.com

Select an option below to find your Equipment

Search by Manufacturer

Search by Product Type

Request a Quote

We sell worldwide for the brands: Genie, Terex, JLG, MultiQuip, Mikasa, Essick, Whiteman, Mayco, Toro Stone, Diamond Products, Generac Magnum, Airman, Haulotte, Barreto, Power Blanket, Nifty Lift, Atlas Copco, Chicago Pneumatic, Allmand, Miller Curber, Skyjack, Lull, Skytrak, Tsurumi, Husquvarna Target, Stow, Wacker, Sakai, Mi-T-M, Sullair, Basic, Dynapac, MBW, Weber, Bartell, Bennar Newman, Haulotte, Ditch Runner, Menegotti, Morrison, Contec, Buddy, Crown, Edco, Wyco, Bomag, Laymor, EZ Trench, Bil-Jax, F.S. Curtis, Gehl Pavers, Heli, Honda, ICS/PowerGrit, IHI, Partner, Imer, Clipper, MMD, Koshin, Rice, CH&E, General Equipment ,Amida, Coleman, NAC, Gradall, Square Shooter, Kent, Stanley, Tamco, Toku, Hatz, Kohler, Robin, Wisconsin, Northrock, Oztec, Toker TK, Rol-Air, APT, Wylie, Ingersoll Rand / Doosan, Innovatech, Con X, Ammann, Mecalac, Makinex, Smith Surface Prep,Small Line, Wanco, Yanmar

https://truckmanualshub.com/

SECTION 4. MACHINE OPERATION

4.1 DESCRIPTION

This machine is a self-propelled aerial work platform on the end of an elevating, telescoping and rotating boom. The JLG Lift is intended purpose is to position personnel with their tools and supplies at positions above ground level. The machine can be used to reach work areas located above and over machinery or equipment.

The JLG Lift has a primary operator Control Station in the platform. From this Control Station, the operator can drive and steer the machine in both forward and reverse directions. The operator can raise, lower, extend or retract the boom; swing the boom to the left or right; and when equipped with a platform rotator, can rotate the platform around the boom end. Standard boom swing is 357° non-continuous left and right of the stowed position. The machine has a Ground Control Station which will override the Platform Control Station. Ground Controls operate Tower Lift, Main Boom Lift, Main Boom Telescope and Swing and are to be used only in an emergency to lower the platform to the ground should the operator in the platform be unable to do so.

Instruction and hazard warnings are posted adjacent to both operator control stations and at other places on the machine. It is extremely important that operators know what instructions and warnings are placed on the machine, and review these periodically so that they are fresh in their minds.Vibrations emitted by these machines are not hazardous to an operator in the work platform.

The JLG Lift is designed to provide efficient and safe operation when maintained and operated in accordance with warnings on the machine, in the Operators and Safety Manual, and all jobsite and government rules and regulations. As with any type of machinery, the operator is very important to efficient and safe operation. Owner/user/operator must be familiar with Sections 6, 7, 8, 9, and 10 of ANSI A92.5-1992. These sections contain the responsibilities of the owner, users, operators, lessors and lessees concerning safety, training, inspection, maintenance, application and operation. It is absolutely necessary that the JLG Lift be regularly maintained in accordance with this manual and the machine Service and Maintenance manual, and that any evidence of lack of maintenance, malfunction, excessive wear, damage or modification to the machine be reported immediately to the machine owner or the jobsite supervisor or safety manager and that the machine be taken out of service until all discrepancies are corrected.

The JLG Lift is not intended to be used to lift material other than supplies which personnel in the platform require to do their job. Supplies or tools which extend outside the platform are prohibited. It must not be used as a forklift, crane, support for overhead structure, or to push or pull another object.

The machine is equipped with an auxiliary battery operated power unit which will provide hydraulic power in the event of a primary engine power loss. Auxiliary power can be controlled from either the Platform Control Station or the Ground Control Station. Follow the instructions placed at the control stations.

The JLG Lift is hydraulically powered using hydraulic motors and cylinders for various machine motions. The hydraulic components are controlled by electrically activated hydraulic valves using switches and control levers. The speeds of functions controlled by control levers are variable from zero to maximum speed depending upon the position of the control lever. Functions controlled by toggle switches are either on or off and higher or lower speed is possible when the Function Speed control switch is used in conjunction with the function toggle switch. A foot operated switch in the platform must be depressed before any controls will function and provides a means of emergency stop when the operator's foot is removed from the footswitch.

The JLG Lift is a two wheel drive (four wheel drive available) machine with drive power being supplied by a hydraulic motor for each drive wheel. Each drive wheel is supplied with a hydraulically released, spring-applied brake (4WD machines only have brakes on the rear). These brakes are automatically applied any time the Drive Control lever is returned to the neutral position.

The unrestricted capacity of the JLG Lift is 500 lbs. (230 kg.) This means that with a platform load of 500 lbs. (230 kg.) or less, the platform may be positioned anywhere the boom will reach.

4.2 GENERAL

This section provides the necessary information needed to operate the machine. Included in this section are the procedures for starting, stopping, traveling, steering, parking, platform loading and transporting. It is important that the user read and understand the proper procedures before operating the machine.

To order go to Discount-Equipment.com

https://truckmanualshub.com/

4.3 ENGINE OPERATION

NOTE: *Initial starting should always be performed from the Ground Control station.*

Starting Procedure

1. Check engine oil. If necessary, add oil in accordance with the Engine Manufacturer's manual.
2. Check fuel level. Add fuel if necessary.
3. Check that air cleaner components are in place and securely fastened.

⚠ CAUTION

IF ENGINE FAILS TO START PROMPTLY, DO NOT CRANK FOR AN EXTENDED PERIOD. SHOULD ENGINE FAIL TO START ONCE AGAIN, ALLOW STARTER TO "COOL OFF" FOR 2-3 MINUTES. IF ENGINE FAILS AFTER SEVERAL ATTEMPTS, REFER TO ENGINE MAINTENANCE MANUAL.

NOTE: *Machines with diesel engines. After turning on ignition, operator must wait until glow plug indicator light goes out before cranking engine.*

4. Turn key of SELECT switch to GROUND. Position POWER/EMERGENCY STOP switch to ON, then push the ENGINE START switch to the upward position until engine starts.

⚠ CAUTION

ALLOW ENGINE TO WARM-UP FOR A FEW MINUTES AT LOW SPEED BEFORE APPLYING ANY LOAD.

5. After engine has had sufficient time to warm up, shut engine off.
6. Turn key of SELECT switch to PLATFORM.
7. From Platform position POWER/EMERGENCY STOP switch to ON, then push the ENGINE START switch to the forward position until engine starts.

NOTE: *Footswitch must be in released (up) position before starter will operate. If starter operates with footswitch in the depressed position, DO NOT OPERATE MACHINE.*

Shutdown Procedure

⚠ CAUTION

IF AN ENGINE MALFUNCTION NECESSITATES UNSCHEDULED SHUTDOWN, DETERMINE AND CORRECT CAUSE BEFORE RESUMING ANY OPERATION.

1. Remove all load and allow engine to operate at low speed setting for 3-5 minutes; this allows for further reduction of internal engine temperature.
2. Position POWER/EMERGENCY STOP switch to OFF.
3. Turn key of MASTER switch to OFF position.

NOTE: *Refer to Engine Manufacturer's manual for detailed information.*

4.4 TRAVELING (DRIVING)

⚠ WARNING

DO NOT DRIVE WITH BOOM EXTENDED OR ABOVE HORIZONTAL EXCEPT ON A SMOOTH, FIRM AND LEVEL SURFACE.

TO AVOID LOSS OF TRAVEL CONTROL OR UPSET ON GRADES AND SIDESLOPES, DO NOT DRIVE MACHINE ON GRADES OR SIDESLOPES EXCEEDING THOSE SPECIFIED ON MACHINE INFORMATION PLACARD ON THE LEFT SIDE OF THE FRAME.

TRAVEL GRADES WITH DRIVE SPEED/TORQUE SELECT SWITCH IN THE FORWARD POSITION. USE EXTREME CAUTION WHEN DRIVING IN REVERSE AND AT ALL TIMES WHEN DRIVING WITH PLATFORM ELEVATED AND ESPECIALLY WHEN DRIVING WITH ANY PART OF MACHINE WITHIN 6 FEET (2 M) OF AN OBSTRUCTION. DO NOT USE DRIVE TO MANEUVER PLATFORM CLOSE TO AN OBSTRUCTION...USE ONE OF THE BOOM FUNCTIONS.

⚠ CAUTION

BEFORE DRIVING, MAKE SURE BOOM IS POSITIONED OVER REAR AXLE. IF BOOM IS OVER FRONT AXLE (STEER WHEELS), STEER AND DRIVE CONTROLS WILL MOVE IN OPPOSITE DIRECTIONS TO MACHINE CONTROLS.

Traveling Forward or Reverse

1. With engine running, depress footswitch and position DRIVE control to FORWARD and hold for the duration of forward travel desired.

NOTE: *When DRIVE or STEER functions are being operated there is an interlock which prevents operation of boom functions.*

2. Depress footswitch and position DRIVE control to REVERSE and hold for duration of reverse travel desired.
3. Depress footswitch and position STEER control to RIGHT for traveling right and LEFT for traveling left.

To order go to DiscountEquipment.com

https://truckmanualshub.com/

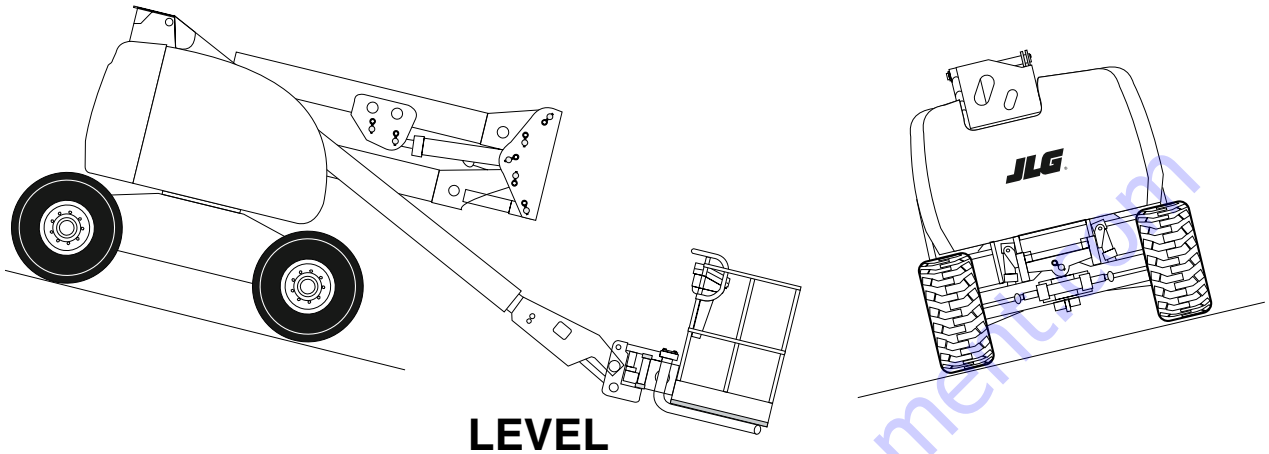

LEVEL

DO NOT DRIVE MACHINE ON GRADES AND SIDESLOPES EXCEEDING THOSE SPECIFIED ON THE SERIAL NUMBER PLACARD.

Figure 4-1. Grade and Sideslope

4. To obtain maximum travel speed, position the DRIVE controller to FAST and activate the following switches:

   Position DRIVE SPEED/TORQUE SELECT switch to FAST. (Forward Position)

5. Prior to stopping the machine, position switches as follows:

   Position DRIVE SPEED/TORQUE SELECT switch to LOW. (Backward Position)

6. For traveling up grades, position switches as follows:

   Position DRIVE SPEED/TORQUE SELECT switch to HIGH.

NOTE: *For smoother operation when driving with fully extended boom, place DRIVE control to SLOW before stopping.*

4.5 STEERING

Depress footswitch to steer machine, push on the left side of the switch to steer left, on the right side to steer right.

⚠ CAUTION

BEFORE OPERATING MACHINE, MAKE SURE BOOM IS POSITIONED OVER REAR AXLE. IF BOOM IS OVER FRONT AXLE (STEER WHEELS), STEER AND DRIVE CONTROLS WILL MOVE IN OPPOSITE DIRECTION THAN INDICATED ON MACHINE PLACARDS.

4.6 PARKING AND STOWING

Park and stow machine as follows:

1. Park machine in travel position; boom lowered over rear, all access panels and doors closed and secured, ignition off.
2. Check that brakes hold machine in position.
3. Chock wheels front and rear.
4. Turn off SELECT switch and remove key.

4.7 PLATFORM

Loading From Ground Level

1. Position chassis on a smooth, firm and level surface.
2. If total load (personnel, tools and supplies) is less then rated capacity, distribute load uniformly on platform floor and proceed to work position.

To order go to Discount-Equipment.com

https://truckmanualshub.com/

Loading From Positions Above Ground Level

Before loading weight to platform above ground level:

1. Determine what the total rated capacity weight will be after additional weight is loaded (personnel, tools and supplies).
2. If total weight in platform will be less then rated capacity, proceed with adding weight.

Platform Level Adjustment

1. Leveling UP. Depress footswitch To raise platform, position PLATFORM LEVEL control switch UP and hold until platform is level.
2. Leveling DOWN. Depress footswitch To lower platform, position PLATFORM LEVEL control switch to DOWN and hold until platform is level.

Platform Rotation

1. Depress footswitch to rotate platform to the left, PLATFORM ROTATE control is positioned to the LEFT and held until desired position is reached.
2. Depress footswitch to rotate platform to the right, PLATFORM ROTATE control is positioned to the RIGHT and held until desired position is reached.

4.8 BOOM

⚠ WARNING

AN ORANGE TILT WARNING LIGHT IS LOCATED ON THE CONTROL CONSOLE WHICH LIGHTS WHEN THE CHASSIS IS ON A 5 DEGREE OR GREATER SLOPE. DO NOT SWING OR RAISE BOOM ABOVE HORIZONTAL WHEN LIGHT IS LIT.

DO NOT DEPEND ON TILT ALARM AS A LEVEL INDICATOR FOR THE CHASSIS. THE TILT ALARM INDICATES THE CHASSIS IS ON A SEVERE SLOPE (5 DEGREE OR GREATER). CHASSIS MUST BE LEVEL BEFORE SWINGING, OR RAISING BOOM ABOVE HORIZONTAL.

TO AVOID MACHINE UPSET IF THE ORANGE TILT WARNING LIGHT ILLUMINATED WHEN THE BOOM IS RAISED ABOVE HORIZONTAL, LOWER THE PLATFORM TO GROUND LEVEL, THEN REPOSITION MACHINE SO THAT CHASSIS IS LEVEL BEFORE RAISING BOOM.

TRAVELING WITH BOOM BELOW HORIZONTAL IS PERMITTED ON GRADES AND SIDE SLOPES SPECIFIED ON SERIAL NUMBER PLACARD.

TO AVOID SERIOUS INJURY, DO NOT OPERATE MACHINERY IF ANY CONTROL LEVER OR TOGGLE SWITCH CONTROLLING PLATFORM MOVEMENT DOES NOT RETURN TO THE "OFF" POSITION WHEN RELEASED.

TO AVOID A COLLISION AND INJURY IF PLATFORM DOES NOT STOP WHEN A CONTROL SWITCH OR LEVER IS RELEASED, REMOVE FOOT FROM FOOTSWITCH OR USE EMERGENCY STOP SWITCH TO STOP MACHINE.

Swinging the Boom

Depress footswitch to swing boom, with footswitch activated, position SWING control switch to RIGHT or LEFT for direction desired.

⚠ IMPORTANT

WHEN SWINGING THE BOOM MAKE SURE THERE IS AMPLE ROOM FOR THE BOOM TO CLEAR SURROUNDING WALLS, PARTITIONS AND EQUIPMENT.

Raising and Lowering the Lower and Mid Boom.

To raise or lower the Lower and Mid Boom, with footswitch activated, position Lower Boom Lift switch to UP or DOWN as desired.

To order go to Discount-Equipment.com

https://truckmanualshub.com/

Raising and Lowering the Main (Upper) Boom

NOTE: *Lift up will not function when the boom is near full elevation and the platform is out of level.*

To raise or lower the Main (Upper) Boom, with footswitch activated, position Upper Boom Lift switch to UP or DOWN until desired height is reached.

Telescoping the Main Boom

To extend or retract the main boom, with the footswitch activated, position the Main Telescope Control Switch to the in or out position and hold until the platform reaches the desired position.

4.9 LIFT UP AND PLATFORM LEVEL DOWN DISABLE SWITCH FUNCTIONAL CHECK

The purpose of the disable switch is to prevent lift up when the boom is near full elevation and the platform is out of level.

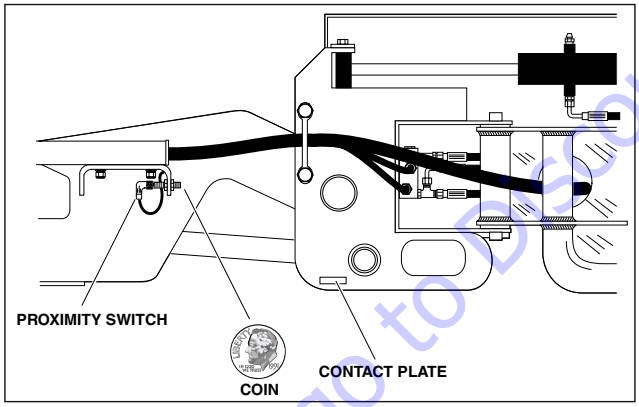

Figure 4-2. Functional Check

⚠ IMPORTANT

DISABLE SWITCH FUNCTIONAL CHECK MUST BE PERFORMED QUARTERLY, ANY TIME A SYSTEM COMPONENT IS REPLACED, OR WHEN IMPROPER SYSTEM OPERATION IS SUSPECTED.

1. Tape a small piece of metal to the end of the limit switch (e.g. a coin).
2. Using the controls in the platform basket, test the lift up and platform level down functions. Both operations should be locked out and not function.
3. Remove metal (coin) and return machine to service.

4.10 SHUT DOWN AND PARK

4. Drive machine to a protected area.
5. Assure main boom is fully retracted and lowered over rear (Drive) axle; all access panels and doors closed and secured.
6. Remove all load and allow engine to operate 3-5 minutes at LOW setting to permit reduction of engine internal temperatures.
7. At Ground Controls, turn KEY SELECT switch to (center) OFF. Position, POWER/EMERGENCY STOP switch (down) to OFF. Remove key.
8. Cover Platform Control console to protect instruction placards, warning decals and operating controls from hostile environment.

4.11 TIE DOWN AND LIFTING

When transporting machine, boom must be in the stowed mode and machine securely tied down to truck or trailer deck. Four tie down eyes are provided in the frame slab, one at each corner of the machine. (See Figure 4-3. and Figure 4-4.)

If it becomes necessary to lift the machine using an overhead or mobile crane, it is very important that the lifting devices are attached only to the designated lifting eyes. (See Figure 4-5. Lifting Chart)

NOTE: *Crane and lifting devices, chains, slings, etc., must be capable of handling at least:*

450A - 2WD (pneumatic tires) - 14,700 lbs. (6668 kg.)
450AJ - 2WD (pneumatic tires) - 15,500 lbs. (7030 kg.)
450A - 2WD (foam-filled tires) - 15,400 lbs. (6985 kg.)
450AJ - 2WD (foam-filled tires) - 15,700 lbs. (7122 kg.)

⚠ IMPORTANT

ABOVE ARE MINIMUM WEIGHTS. CHECK WEIGHT OF UNIT PRIOR TO LIFTING.

NOTE: *Lifting eyes are provided at the front and rear in the frame slab. Each of the four chains or slings used for lifting machine must be adjusted individually so machine remains level when elevated.*

To order go to DiscountEquipment.com

https://truckmanualshub.com/

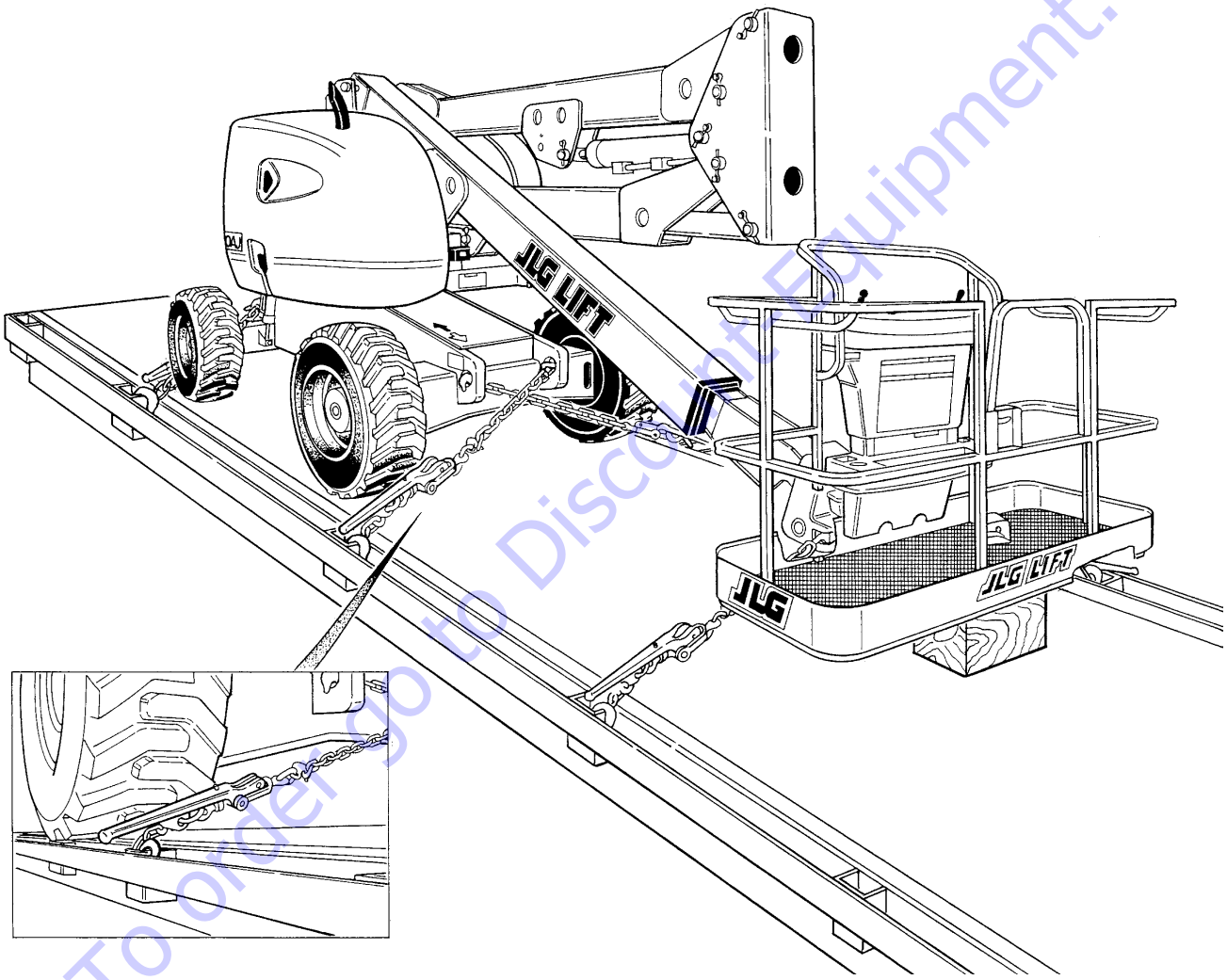

Note *When transporting machine over rough terrain or long distance, the boom needs to be chocked and strapped whenever the base boom is unable to rest on its pad. This prevents the boom from bouncing up and down and preventing possible damage while transporting.*

Figure 4-3. Machine Tie Down - A Models

To order go to Discount Equipment.com

https://truckmanualshub.com/

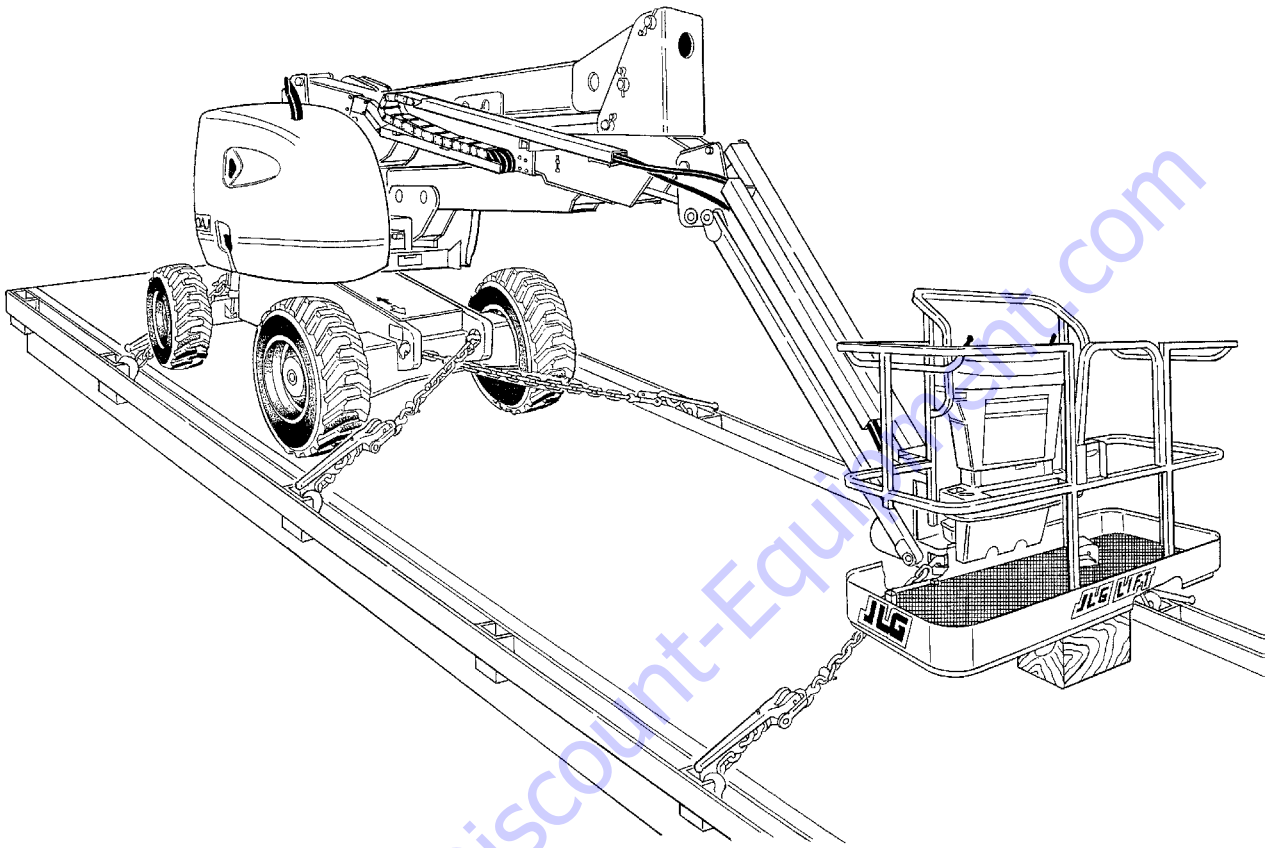

Note *When transporting machine over rough terrain or long distance, the boom needs to be chocked and strapped whenever the base boom is unable to rest on its pad. This prevents the boom from bouncing up and down and preventing possible damage while transporting.*

Figure 4-4. Machine Tie Down - AJ Models

To order go to Discount-Equipment.com

https://truckmanualshub.com/

LIFTING DIAGRAM

MODEL	Tire option	Minimum Gross Weight Standard Machine
450A	pneumatic	14,700 lbs. (6668 kg)
450AJ	pneumatic	15,500 lbs. (7030 kg)
450A	foam-filled	15,400 lbs. (6985 kg)
450AJ	foam-filled	15,700 lbs. (7122 kg)

LIFTING INSTRUCTIONS

-- Place boom in the stowed position
-- Remove all loose items from machine.
-- Properly adjust rigging to prevent damage to machine and so machine remains level.

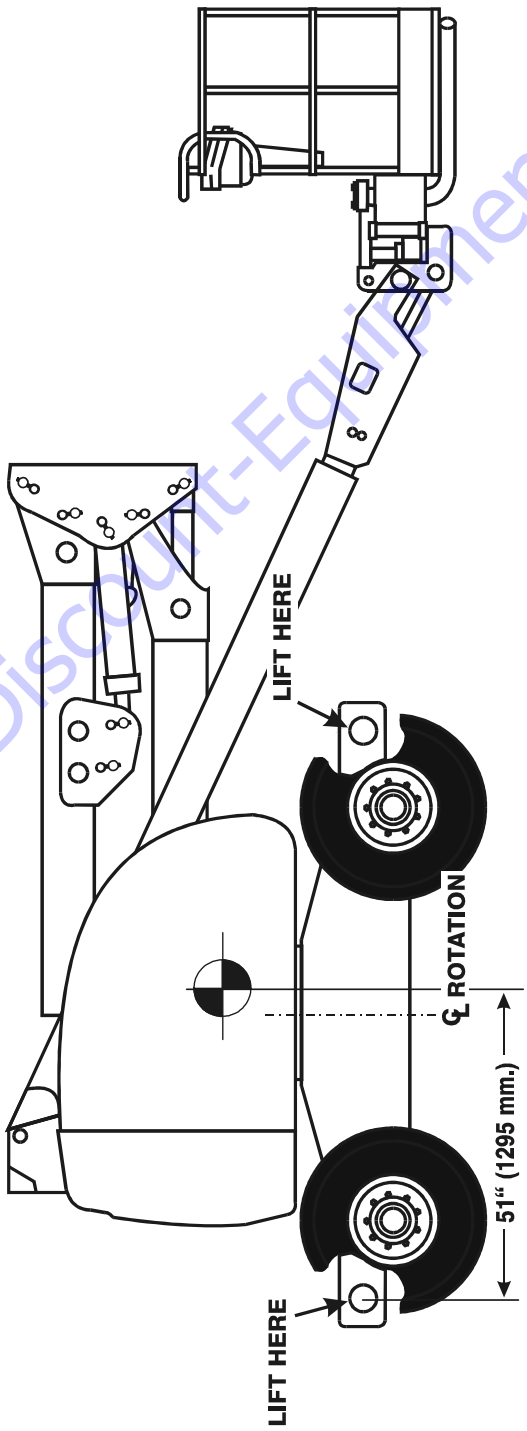

Figure 4-5. Lifting Chart

To order go to Discount-Equipment.com

https://truckmanualshub.com/

4.12 OSCILLATING AXLE LOCKOUT TEST (IF EQUIPPED)

IMPORTANT

LOCKOUT SYSTEM TEST MUST BE PERFORMED QUARTERLY, ANY TIME A SYSTEM COMPONENT IS REPLACED, OR WHEN IMPROPER SYSTEM OPERATION IS SUSPECTED.

NOTE: *Ensure boom is fully retracted, lowered, and centered between drive wheels prior to beginning lockout cylinder test.*

1. Place a 6 inches (15.2 cm) high block with ascension ramp in front of left front wheel.
2. From platform control station, start engine3.Place HIGH ENGINE, DRIVE SPEED and WHEEL MOTOR SPEED (if equipped) control switches to their respective LOW positions
3. Place DRIVE control lever to FORWARD position and carefully drive machine up ascension ramp until left front wheel is on top of block.
4. Carefully activate SWING control lever and position boom over right side of machine.
5. With boom over right side of machine, place DRIVE control lever to REVERSE and drive machine off of block and ramp.
6. Have an assistant check to see that left front wheel remains locked in position off of ground.
7. Carefully activate SWING control lever and return boom to stowed position (centered between drive wheels). When boom reaches center, stowed position, lockout cylinders should release and allow wheel to rest on ground, it may be necessary activate DRIVE to release cylinders.
8. Place the 6 inches (15.2 cm) high block with ascension ramp in front of right front wheel.
9. Place DRIVE control lever to FORWARD and carefully drive machine up ascension ramp until right front wheel is on top of block.
10. Carefully activate SWING control lever and position boom over left side of machine.
11. With boom over left side of machine, place DRIVE control lever to REVERSE and drive machine off of block and ramp.
12. Have an assistant check to see that right front wheel remains locked in position off of ground.
13. Carefully activate SWING control lever and return boom to stowed position (centered between drive wheels). When boom reaches center, stowed position, lockout cylinders should release and allow wheel to rest on ground, it may be necessary activate DRIVE to release cylinders.
14. If lockout cylinders do not function properly, have qualified personnel correct the malfunction prior to any further operation.

To order go to Discount-Equipment.com

https://truckmanualshub.com/

4.13 TOWING

WARNING

RUNAWAY VEHICLE/MACHINE HAZARD. MACHINE HAS NO TOWING BRAKES. TOWING VEHICLE MUST BE ABLE TO CONTROL MACHINE AT ALL TIMES. ON-HIGHWAY TOWING NOT PERMITTED. FAILURE TO FOLLOW INSTRUCTIONS COULD CAUSE SERIOUS INJURY OR DEATH.

MAXIMUM TOWING SPEED 5 M.P.H. (8 K.M.H.) FOR NO LONGER THAN 30-45 MINUTES.

MAXIMUM TOWING GRADE 25%.

Prior to towing the machine, complete the following:

CAUTION

DO NOT TOW MACHINE WITH ENGINE OPERATING OR DRIVE HUBS ENGAGED.

1. Retract, lower and position boom over rear drive wheels in line with direction of travel.
2. Disconnect drive hubs by inverting disconnect cap. (See Figure 4-6.) After towing the machine, complete the following:
3. Reconnect drive hubs by inverting disconnect cap. (See Figure 4-6.)

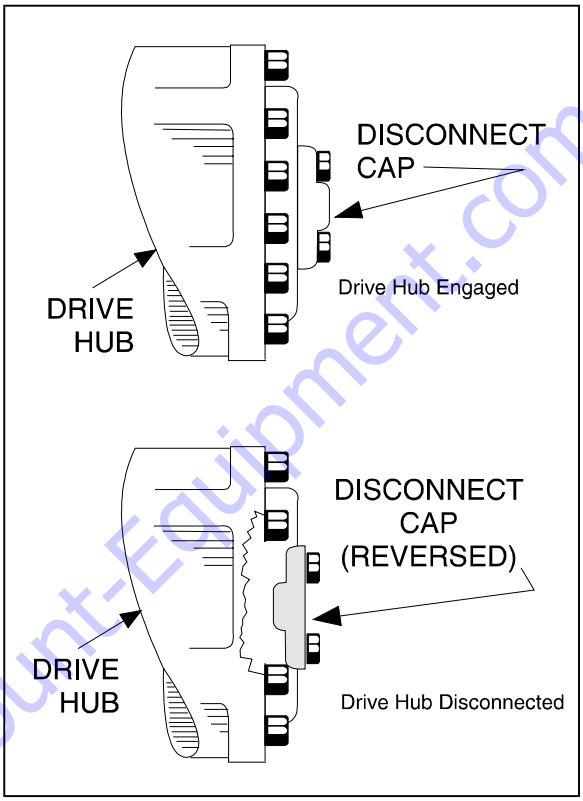

Figure 4-6. Drive Disconnect Hub

To order go to Discount-Equipment.com

https://truckmanualshub.com/

SECTION 5. OPTIONAL EQUIPMENT

5.1 DUAL FUEL SYSTEM (GAS ENGINE ONLY)

Description

The dual fuel system enables the standard gasoline engine to run on either gasoline or LP gas. The system includes pressurized cylinders mounted on the frame, and the valves and switches needed to switch the fuel supply from gasoline to LP gas or from LP gas to gasoline.

A two position, FUEL SELECT toggle switch at the platform control station supplies electrical power to open the gasoline shut-off solenoid and close the LP gas shut off solenoid when positioned to the GASOLINE position. This switch supplies electrical power to open the LP gas shut-off solenoid and close the gasoline shut-off solenoid when positioned to the LP position.

⚠ CAUTION

IT IS POSSIBLE TO SWITCH FROM ONE FUEL SOURCE TO THE OTHER WITHOUT ALLOWING THE ENGINE TO STOP. EXTREME CARE MUST BE TAKEN AND THE FOLLOWING INSTRUCTIONS MUST BE FOLLOWED.

Changing From Gasoline to LP Gas

1. Start engine from Ground Control Station.
2. Open hand valve on LP gas supply tank by turning counterclockwise.
3. While engine is operating on GASOLINE under a no-load condition, place FUEL SELECT switch at Platform Control to LP position.

Changing From LP Gas to Gasoline

1. With engine operating on LP under a no-load condition, position FUEL SELECT switch at Platform Control Station to GASOLINE position.
2. Close hand valve on LP gas supply tank by turning clockwise.

5.2 OSCILLATING AXLE

The oscillating front axle is attached to the frame by a pivot pin which allows all four wheels to remain on the ground when traveling on rough terrain. The oscillating axle also incorporates two lockout cylinders connected between the frame and each wheel end. The lockout cylinders permit axle oscillation when the boom is centered over the rear, and lock and hold the axle when the boom is moved off center.

5.3 PLATFORM W/SOFT TOUCH PROXIMITY SYSTEM BUMPER

This optional system incorporates a lower padded rail, slightly larger than the platform. Four Proximity switches are attached to each corner of the lower rail. The proximity switches are set so that when the antenna comes into contact with an object, electrical power is cut off from the platform controls, shutting down all functions.

5.4 FOUR WHEEL DRIVE

Provides drive motors, brakes (rear only) and torque hubs at each wheel to give extra traction. The system is available with either a fixed or oscillating front axle.

5.5 COLD WEATHER PACKAGE

Deutz Engine with Glow Plugs

The glow plugs are installed in the engine and automatically come on with the ignition circuit and remain on for a period of seven seconds.

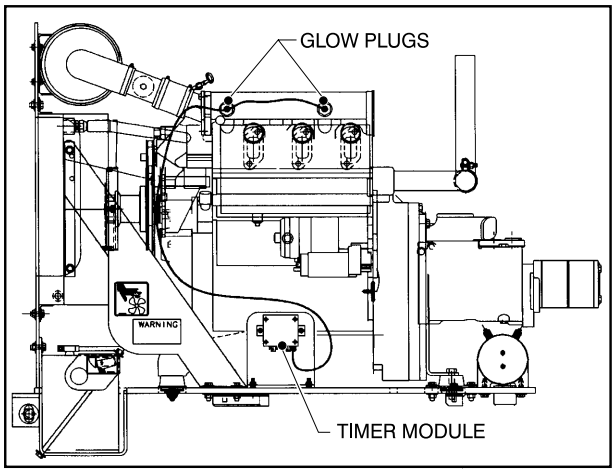

In addition to the glow plugs, the cold weather package also includes an electric immersion heater for the hydraulic oil tank, and an electric blanket type heater for the battery. These components can be plugged in together or singly to preheat their associated components for easier cold weather starting.

To order go to Discount-Equipment.com

https://truckmanualshub.com/

Deutz Engine with Ether Start

The ether start system in the diesel engine functions automatically to provide starting fluid, as necessary, to the engine. A sensor switch mounted on the engine will permit ether injection when the engine is cold. The sensor will not permit ether injection to a warm engine.

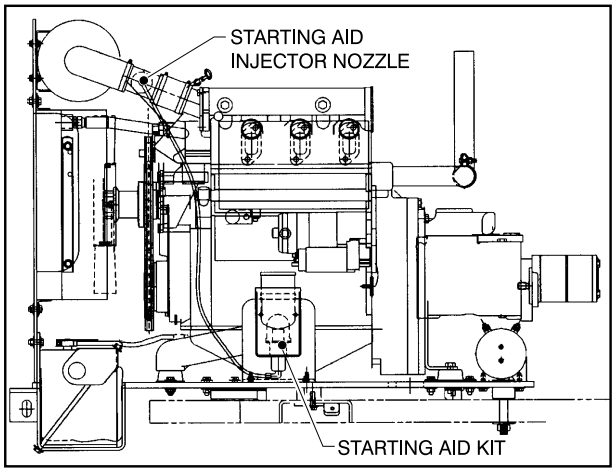

In addition to the ether start system, the cold weather package also includes an electric immersion heater for the hydraulic oil tank, and an electric blanket type heater for the battery. These components can be plugged in together or singly to preheat their associated components for easier cold weather starting.

Isuzu Engine

The cold weather package for the Isuzu engine consists of the engine block heater (an electrical heater installed in the left front core plug hole), an electric immersion heater for the hydraulic oil tank, and an electric blanket type heater for the battery. These components can be plugged in together or singly to preheat their associated components for easier cold weather starting.

Ford Engine

Two different options are available for cold weather with the Ford engine; an engine block heater and a cold weather package which also includes the engine block heater.

The engine block heater is an electrical heater installed in the left (intake side) core plug hole. When plugged in, it heats the engine coolant to warm the engine prior to starting.

The cold weather package consists of the engine block heater mentioned above, an immersion heater for the hydraulic oil tank, and an electric blanket type heater for the battery. These components can be plugged in together or singly to preheat their associated components for easier cold weather starting.

5.6 TRAVEL ALARM

A 12-volt alarm horn, mounted on the turntable, provides an audible warning when the machine is in the travel (DRIVE) mode. It will function in FORWARD or REVERSE to warn jobsite personnel the machine is traveling.

5.7 ELECTRIC GENERATOR

An electric generator mounted on the machine functions to supply electrical power to the platform. This device will provide enough power to run assorted power tools.

5.8 FOAM FILLED TIRES

Eliminates flats by filling tires with polyurethane foam. For use where sharp objects are frequently encountered on operating surface of jobsite.

5.9 ROTATING BEACON

An amber or red rotating beacon may be installed on the hood or platform, and can be controlled by a two position toggle switch mounted on the platform control console. When the switch is placed in the ON position, the light is activated and provides a visual warning to the machine's operation.

5.10 CYLINDER BELLOWS

A one piece accordion shaped rubber bellows may be attached to the rod end of the cylinder barrel and to the cylinder rod as close to the rod attach bushing as possible. The bellows affords protection to the cylinder rod in either the extended or retracted position. The bellows are installed on the lift cylinder, slave cylinder, master cylinder and steer cylinder.

5.11 BOOM WIPERS

A one piece U-shaped neoprene strip, be attached to the front of the base boom section, wipes the top and both sides of the fly section. The bottom side of the fly section is protected by a straight neoprene strip which also attaches to the base section.

To order go to Discount-Equipment.com

https://truckmanualshub.com/

5.12 HOSTILE ENVIRONMENT PACKAGE

The hostile environment package provides additional protection against the entry of dust, dirt, sand and other abrasive materials into the hydraulic system, control handles and switches, cylinders, boom wire ropes and wear pads, and the air inlet of the engine. The package is intended for machines that will be exposed to painting, sandblasting or other similar hostile conditions. The hostile environment package includes boom wipers, cylinder bellows, heavy duty reservoir breather, an engine air cleaner and control console cover, as required.

5.13 MOTION ALARM

A motion alarm horn provides an audible warning when the platform controls are selected at the PLATFORM/GROUND SELECT switch, the POWER/EMERGENCY STOP switch is ON, and the footswitch is depressed. The alarm warns personnel in the jobsite area to avoid the operating machine.

5.14 SEMI-TRACK

The semi-track option consists of steel tracks and idler wheels. The idler wheels are mounted to the chassis just forward of the drive wheels. The steel tracks are installed around the drive wheels and idler wheels. This option provides increased traction for operation in rough terrain.

To order go to Discount-Equipment.com

https://truckmanualshub.com/

This page left blank intentionally.

To order go to Discount-Equipment.com

https://truckmanualshub.com/

SECTION 6. EMERGENCY PROCEDURES

6.1 GENERAL

This section provides information on the procedures to be followed and on the systems and controls to be used in the event an emergency situation is encountered during machine operation. Prior to operation of the machine and periodically thereafter, the entire operating manual, including this section, should be reviewed by all personnel whose responsibilities include any work or contact with the machine.

6.2 EMERGENCY TOWING PROCEDURES

Towing this machine is prohibited, unless properly equipped. However, provisions for moving the machine, in case of a malfunction or power failure, have been incorporated. The following procedures are to be used ONLY for emergency movement to a suitable maintenance area.

1. Chock wheels securely.
2. Disengage drive hubs by reversing disconnect caps.
3. Connect suitable equipment, remove chocks, and move machine.

After moving machine, complete the following procedures:

1. Position machine on a firm and level surface.
2. Chock wheels securely.
3. Engage drive hubs by reversing disconnect caps on hubs.
4. Remove chocks from wheels as needed.

6.3 EMERGENCY CONTROLS AND THEIR LOCATIONS

Power/Emergency Stop Switches

1. There is one of these red mushroom shaped switches at both the Ground Controls and Platform Controls. When depressed it will immediately stop the machine.

⚠ WARNING

CHECK MACHINE DAILY TO MAKE SURE EMERGENCY STOP SWITCH GUARD IS IN PLACE AND THAT GROUND CONTROL INSTRUCTIONS ARE IN PLACE AND LEGIBLE.

2. Installed on the Platform Console, this round red switch is pulled up for normal machine functions. In an emergency, push the button to the down position with your palm and machine will immediately stop.

Ground Control Station

The Ground Control Station is located on the right front side of the turntable. The controls on this panel provide the means for overriding the platform controls, and for controlling the platform level, boom and swing functions from the ground. Place the KEY SELECT switch to GROUND position and operate the proper switch to lift, swing, or telescope the boom, or level the platform.

Auxiliary Power

A toggle type auxiliary power control switch is located on the platform control station and another is located on the ground control station. Operation of either switch turns on the electrically driven auxiliary hydraulic pump. This should be used in case of failure of the main power plant. The auxiliary pump will operate boom lift, telescope and swing. To activate auxiliary power:

1. Position PLATFORM/GROUND SELECT KEY SWITCH to PLATFORM.
2. Position POWER/EMERGENCY STOP switch to ON.
3. Depress and hold footswitch.
4. Operate appropriate control switch, lever or controller for desired function and hold.
5. Position AUXILIARY POWER switch to ON and hold.
6. Release AUXILIARY POWER switch, selected control switch, lever or controller, and footswitch.
7. Position POWER/EMERGENCY STOP switch to OFF.

To activate auxiliary power from the ground control station:

1. Position PLATFORM/GROUND SELECT KEY SWITCH to GROUND.
2. Position POWER/EMERGENCY STOP switch to ON.
3. Operate appropriate control switch or controller for desired function and hold.
4. Position AUXILIARY POWER switch to ON and hold.
5. Release AUXILIARY POWER switch, and appropriate control switch or controller.
6. Position POWER/EMERGENCY STOP switch to OFF.

To order go to Discount-Equipment.com

https://truckmanualshub.com/

6.4 EMERGENCY OPERATION

Use of Ground Controls

KNOW HOW TO USE THE GROUND CONTROLS IN AN EMERGENCY SITUATION.

Ground personnel must be thoroughly familiar with the machine operating characteristics and the ground control functions. Training should include operation of the machine, review and understanding of this section and hands-on operation of the controls in simulated emergencies.

Operator Unable to Control Machine

IF THE PLATFORM OPERATOR IS PINNED, TRAPPED OR UNABLE TO OPERATE OR CONTROL THE MACHINE:

⚠ WARNING

DO NOT OPERATE WITH PRIMARY POWER SOURCE (ENGINE OR ELECTRIC MOTOR) IF PERSONS ARE PINNED OR TRAPPED. USE AUXILIARY POWER INSTEAD.

1. Operate the machine from ground controls ONLY with the assistance of other personnel and equipment (cranes, overhead hoists, etc.) as may be be required to safely remove the danger or emergency condition.
2. Other qualified personnel on the platform may use the platform controls with regular or auxiliary power. DO NOT CONTINUE OPERATION IF CONTROLS DO NOT FUNCTION NORMALLY.
3. Cranes, forklift trucks or other equipment which may be available are to be used to remove platform occupants and stabilize motion of the machine in case machine controls are inadequate or malfunction when used.

Platform or Boom Caught Overhead

If the platform or boom becomes jammed or snagged in overhead structures or equipment, do not continue operation of the machine from either the platform or the ground until the operator and all personnel are safely moved to a secure location. Only then should an attempt be made to free the platform using any necessary equipment and personnel. Do not operate controls to cause one or more wheels to leave the ground.

Post Incident Inspection and Repair

Following any incident, thoroughly inspect the machine and test all functions first from the ground controls, then from the platform controls. Do not lift above 10 feet (3 m) until you are sure that all damage has been repaired, if required, and that all controls are operating correctly.A cold weather start system in the diesel engine functions automatically to provide starting fluid, as necessary, to the engine. A sensor switch mounted on the engine will permit ether injection when the engine is cold. The sensor will not permit ether injection to a warm engine.

6.5 INCIDENT NOTIFICATION

It is imperative that JLG Industries, Inc. be notified immediately of any incident involving a JLG product. Even if no injury or property damage is evident, the factory should be contacted by telephone and provided with all necessary details.

JLG Phone:877-JLG-SAFE (554-7233)
(8am till 4:45pm EST)

It should be noted that failure to notify the manufacturer of an incident involving a JLG Industries product within 48 hours of such an occurrence may void any warranty consideration on that particular machine.

To order go to Discount-Equipment.com

https://truckmanualshub.com/

SECTION 7. INSPECTION AND REPAIR LOG

Table 7-1.Inspection and Repair Log

Date	Comments

To order go to Discount-Equipment.com

https://truckmanualshub.com/

Table 7-1.Inspection and Repair Log

Date	Comments

To order go to Discount-Equipment.com

https://truckmanualshub.com/

JLG®

Discount Equipment

www.Discount-Equipment.com

To order go to Discount-Equipment.com

https://truckmanualshub.com/

TO PURCHASE THIS PRODUCT PLEASE CONTACT US

Discount Equipment

Equipment Financing and
Extended Warranties Available

Discount-Equipment.com is your online resource for commercial and industrial quality parts and equipment sales.

561-964-4949

visit us on line @ www.discount-equipment.com

Select an option below to find your Equipment

Search by Manufacturer

Search by Product Type

Request a Quote

We sell worldwide for the brands: Genie, Terex, JLG, MultiQuip, Mikasa, Essick, Whiteman, Mayco, Toro Stone, Diamond Products, Generac Magnum, Airman, Haulotte, Barreto, Power Blanket, Nifty Lift, Atlas Copco, Chicago Pneumatic, Allmand, Miller Curber, Skyjack, Lull, Skytrak, Tsurumi, Husquvarna Target, Stow, Wacker, Sakai, Mi-T-M, Sullair, Basic, Dynapac, MBW, Weber, Bartell, Bennar Newman, Haulotte, Ditch Runner, Menegotti, Morrison, Contec, Buddy, Crown, Edco, Wyco, Bomag, Laymor, EZ Trench, Bil-Jax, F.S. Curtis, Gehl Pavers, Heli, Honda, ICS/PowerGrit, IHI, Partner, Imer, Clipper, MMD, Koshin, Rice, CH&E, General Equipment ,Amida, Coleman, NAC, Gradall, Square Shooter, Kent, Stanley, Tamco, Toku, Hatz, Kohler, Robin, Wisconsin, Northrock, Oztec, Toker TK, Rol-Air, APT, Wylie, Ingersoll Rand / Doosan, Innovatech, Con X, Ammann, Mecalac, Makinex, Smith Surface Prep,Small Line, Wanco, Yanmar