https://truckmanualshub.com/

```
[Info]
PcNo=Y00K2492
PcName=B12/17(-2)(JP,AS,EX)
JpnUse=1
JpnSec1=Œš‹@
JpnSec2=ƒoƒbƒNƒz[
JpnSec3=B
JpnPreface=1
EngUse=1
EngSec1=CONSTRUCTION
EngSec2=EXCAVATOR (B)
EngSec3=B
EngPreface=1
```

https://truckmanualshub.com/

```
1,1,,772149-03100,,"LABEL ASSY",1,,,,,,,,,,,,,,,,
1-1,1,,772149-03101,,"LABEL SET, (B12-1)",1,,,,,,N,,,M10501,,,,,,,,
2,1,,772150-03100,,"LABEL ASSY",,,1,,,,,,,,,,,,,,
2-1,1,,772150-03101,,"LABEL SET, (B17-1)",,,1,,,,N,,,,,,,M10501,,,,
3,2,,172149-03110,,"LABEL, SPECIFICATION",1,,,,,,,,,,,,,,,,,
3-1,2,,172149-03111,,"LABEL, SPECIFICATION",1,,,,,,S,,,M10501,,,,,,,,
4,2,,172150-03110,,"LABEL, SPECIFICATION",,,1,,,,,,,,,,,,,,,
4-1,2,,172150-03111,,"LABEL, SPECIFICATION",,,1,,,,S,,,,,,,M10501,,,,
5,2,,172141-03130,,"LABEL, GREASING",1,,1,,,,,,,,,,,,,,,
6,2,,172149-03130,,"LABEL, OIL & WATER",1,,1,,,,,,,,,,,,,,,,
7,2,,172122-03141,,"LABEL, GREASE",1,,1,,,,,,,,,,,,,,,
8,2,,172149-03160,,LABEL,2,,,,,,,,,,,,,,,,,
9,2,,172150-03120,,LABEL,,,2,,,,,,,,,,,,,,,
10,2,,172141-03170,,"LABEL, RESTART",1,,1,,,,,,,,,,,,,,,
11,2,,172149-03170,,"LABEL, STRIPE(F)",1,,1,,,,,,,,,,,,,,,
12,2,,172141-03181,,"LABEL, RESERVER(C)",1,,1,,,,,,,,,,,,,,,,
13,2,,172149-03180,,LABEL,1,,1,,,,,,,,,,,,,,,
14,2,,172141-03190,,LABEL(D,1,,1,,,,,,,,,,,,,,,
14-1,2,,172131-03670,,"LABEL, DANGER",1,,1,,,,R,,,M00771,,,,M00661,,,,
15,2,,172149-03190,,LABEL,1,,1,,,,,,,,,,,,,,,
16,2,,172149-03200,,"LABEL, STRIPE(R)",1,,1,,,,,,,,,,,,,,,
17,2,,172149-03210,,LABEL,1,,1,,,,,,,,,,,,,,,
18,2,,172141-03220,,LABEL,1,,1,,,,,,,,,,,,,,,
18-1,2,,172141-03201,,"LABEL,ENGINE ROOM(C)",1,,1,,,,N,,,M00501,,,,M00501,,,,
19,2,,172149-03230,,LABEL,1,,1,,,,,,,,,,,,,,,
20,2,,172149-03240,,LABEL,1,,1,,,,,,,,,,,,,,,
21,2,,172141-03250,,"LABEL, OILING",1,,1,,,,,,,,,,,,,,,
21-1,2,,172155-03310,,"LABEL, OILING",1,,1,,,,N,,,MX,,,,M11330,,,,
22,2,,172149-03250,,LABEL,1,,1,,,,,,,,,,,,,,,
23,2,,172149-03260,,LABEL,2,,2,,,,,,,,,,,,,,,
23-1,2,,172149-03261,,LABEL,2,,2,,,,N,,,M00654,,,,M00645,,,,
24,2,,172149-03270,,LABEL,1,,1,,,,,,,,,,,,,,,
24-1,2,,172149-03271,,LABEL,1,,1,,,,N,,,M10501,,,,M10501,,,,
25,2,,172149-03280,,LABEL,1,,1,,,,,,,,,,,,,,,
26,2,,172519-03290,,"LABEL, ENG.COVER",1,,1,,,,,,,,,,,,,,,
27,2,,172137-03300,,"LABEL, TURNING LOCK",1,,1,,,,,,,,,,,,,,,
28,2,,172141-03350,,"LABEL, QUICK(C)",1,,1,,,,Z,,,M11861,,,,M11238,,,,
29,2,,172141-03370,,"LABEL, PROTECTOR",2,,2,,,,,,,,,,,,,,,
30,2,,172137-03780,,"LABEL, THROTTLE",1,,1,,,,,,,,,,,,,,,
31,2,,121470-44540,,"LABEL, SUB-TANK",1,,1,,,,,,,,,,,,,,,
32,2,,933112-20200,,"LABEL, KEY SWITCH",1,,1,,,,,,,,,,,,,,,
33,2,,933112-52400,,"LABEL, FUEL",1,,1,,,,,,,,,,,,,,,
34,2,,172149-03220,,LABEL,1,,1,,,,,,,,,,,,,,,
35,2,,172141-03150,,"LABEL, OPERATION",1,,1,,,,Z,,,M11861,,,,M11238,,,,
36,2,,172149-53400,,"TREE CLIP",2,,,,,,,,,,,,,,,,,
37,2,,172142-03300,,LABEL,1,,1,,,,W,,,M10501,,,,M10501,,,,
38,2,,172151-03540,,"LABEL,PATTERN A",1,,1,,,,W,,,M11861,,,,M11238,,,,
41,1,,172168-03400,,LABEL,1,,1,,,,,1,,,,,,,,,,
```

https://truckmanualshub.com/

Fig. 1 銘板（B12／17（−1））
LABEL (B12/17 (−1))

B12P (R)
B12-1P (R)
B17P (R)
B17-1P (R)

見出しNo. 1,1-1は、見出しNo. 3から38を含みます。
1,1-1 inc.3～38
見出しNo. 2，2-1は、見出しNo. 4から38を含みます。
2，2-1 inc.4～38

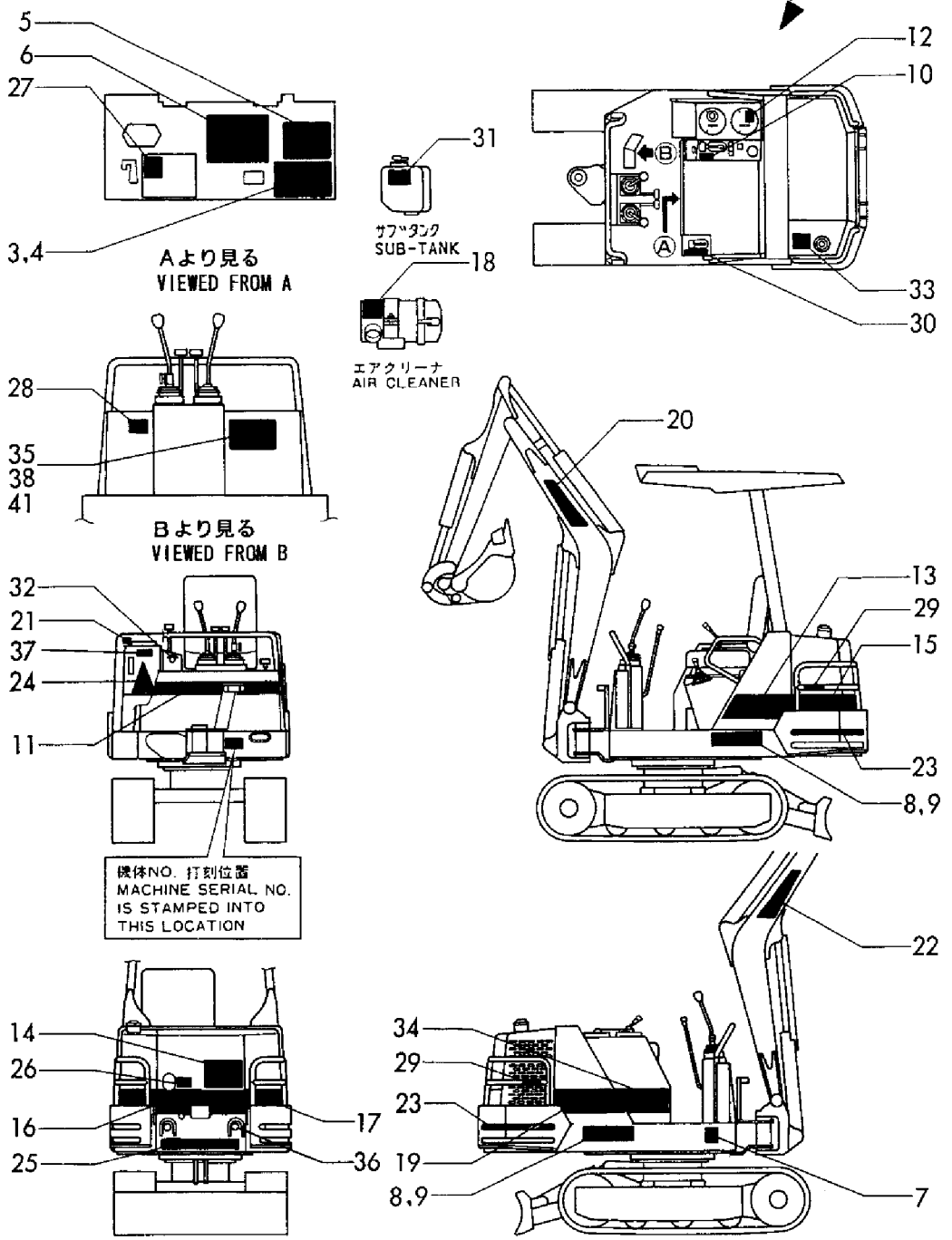

https://truckmanualshub.com/

```
1,1,,772149-03140,,"LABEL SET",,1,,,,,,,,,,,,,,,
1-1,1,,772149-03141,,"LABEL SET",,1,,,,,N,,,,,M21247,,,,,,
2,1,,772150-03140,,"LABEL ASSY",,,,1,,,,,,,,,,,,,
2-1,1,,772150-03141,,"LABEL ASSY",,,,1,,,N,,,,,,,,,M20673,,
3,2,,172149-03112,,"LABEL, SPECIFICATION",,1,,,,,,,,,,,,,,,
4,2,,172150-03112,,"LABEL, SPECIFICATION",,,,1,,,,,,,,,,,,,
5,2,,172165-03130,,"LABEL,GREASE FEED",,1,,1,,,,,,,,,,,,,
6,2,,172149-03131,,"LABEL, OIL & WATER",,1,,1,,,,,,,,,,,,,
7,2,,172122-03141,,"LABEL, GREASE",,1,,1,,,,,,,,,,,,,
8,2,,172149-03160,,LABEL,,2,,,,,,,,,,,,,,,
9,2,,172150-03120,,LABEL,,,,2,,,,,,,,,,,,,
10,2,,172141-03170,,"LABEL, RESTART",,1,,1,,,,,,,,,,,,,
11,2,,172149-03300,,"LABEL,FRONT",,1,,1,,,,,,,,,,,,,
12,2,,172141-03181,,"LABEL, RESERVER(C)",,1,,1,,,,,,,,,,,,,
12-1,2,,172141-03182,,LABEL,,1,,1,,,N,,,,,M21247,,,,M20673,,
13,2,,172149-03180,,LABEL,,1,,1,,,,,,,,,,,,,
14,2,,172131-03670,,"LABEL, DANGER",,1,,1,,,,,,,,,,,,,
14-1,1,,172156-03280,,LABEL,,1,,1,,,N,,,,,M21247,,,,M20673,,
15,2,,172149-03190,,LABEL,,1,,1,,,,,,,,,,,,,
16,2,,172149-03200,,"LABEL, STRIPE(R)",,1,,1,,,,,,,,,,,,,
17,2,,172149-03210,,LABEL,,1,,1,,,,,,,,,,,,,
18,2,,172141-03201,,"LABEL,ENGINE ROOM(C)",,1,,1,,,,,,,,,,,,,,
18-1,2,,172141-03202,,LABEL,,1,,1,,,N,,,,,M21247,,,,M20673,,
19,2,,172149-03230,,LABEL,,1,,1,,,,,,,,,,,,,
20,2,,172519-03680,,"LABEL,BRAND",,1,,1,,,,,,,,,,,,,
21,2,,172155-03310,,"LABEL, OILING",,1,,1,,,,,,,,,,,,,
22,2,,172149-03261,,LABEL,,2,,2,,,,,,,,,,,,,
23,2,,172149-03272,,LABEL,,1,,1,,,,,,,,,,,,,
24,2,,172519-03680,,"LABEL,BRAND",,1,,,,,,,,,,,,,,,
25,2,,172519-03290,,"LABEL, ENG.COVER",,1,,1,,,,,,,,,,,,,
25-1,2,,172519-04180,,LABEL,,1,,1,,,N,,,,,M21247,,,,M20673,,
26,2,,172137-03300,,"LABEL, TURNING LOCK",,1,,1,,,,,,,,,,,,,
27,2,,172141-03370,,"LABEL, PROTECTOR",,2,,2,,,,,,,,,,,,,
27-1,2,,172141-03372,,LABEL,,2,,2,,,N,,,,,M21247,,,,M20673,,
28,2,,172137-03780,,"LABEL, THROTTLE",,1,,1,,,,,,,,,,,,,
29,2,,121470-44540,,"LABEL, SUB-TANK",,1,,1,,,,,,,,,,,,,
30,2,,933112-20200,,"LABEL, KEY SWITCH",,1,,1,,,,,,,,,,,,,
31,2,,933112-52400,,"LABEL, FUEL",,1,,1,,,,,,,,,,,,,
31-1,2,,172183-03250,,LABEL,,1,,1,,,N,,,,,M21247,,,,M20673,,
32,2,,172149-03220,,LABEL,,1,,1,,,,,,,,,,,,,
33,2,,172149-53400,,"TREE CLIP",,2,,,,,,,,,,,,,,,
34,2,,172142-03300,,LABEL,,1,,1,,,,,,,,,,,,,
34-1,2,,172142-03302,,LABEL,,1,,1,,,N,,,,,M21247,,,,M20673,,
35,2,,172151-03540,,"LABEL,PATTERN A",,1,,1,,,,,,,,,,,,,
36,2,,172183-03280,,"LABEL, LOCK",,1,,1,,,W,,,,,M20768,,,,M20530,,
36-1,2,,172183-03280,,"LABEL, LOCK",,2,,2,,,K,,,,,M21277,,,,M20679,,
37,2,,172164-03500,,LABEL,,1,,1,,,W,,,,,M21247,,,,M20673,,
38,2,,172164-03510,,LABEL,,1,,1,,,W,,,,,M21247,,,,M20673,,
39,2,,172164-03520,,LABEL,,1,,1,,,W,,,,,M21247,,,,M20673,,
40,2,,172164-03540,,LABEL,,1,,1,,,W,,,,,M21247,,,,M20673,,
41,2,,172165-03661,,LABEL,,1,,1,,,W,,,,,M21247,,,,M20673,,
42,2,,172519-04300,,LABEL,,1,,1,,,W,,,,,M21247,,,,M20673,,
43,2,,172964-03390,,LABEL,,1,,1,,,W,,,,,M21247,,,,M20673,,
44,2,,172964-03480,,LABEL,,1,,1,,,W,,,,,M21247,,,,M20673,,
44-1,2,,172964-03481,,LABEL,,1,,1,,,N,,,,,M21273,,,,M50001,,
45,2,,172964-03610,,"LABEL A",,1,,1,,,W,,,,,M21247,,,,M20673,,
48,1,,172168-03400,,LABEL,,1,,1,,,,1,,,,,,,,,,
```

https://truckmanualshub.com/

Fig. 2 銘板 (B12/17−2) LABEL (B12/17−2)

B12-2P(R)
B17-2P(R)

見出しNo.1,1-1,2,2-1は、見出しNo.3から45を含みます。
1,1-1,2,2-1 inc. 3～45

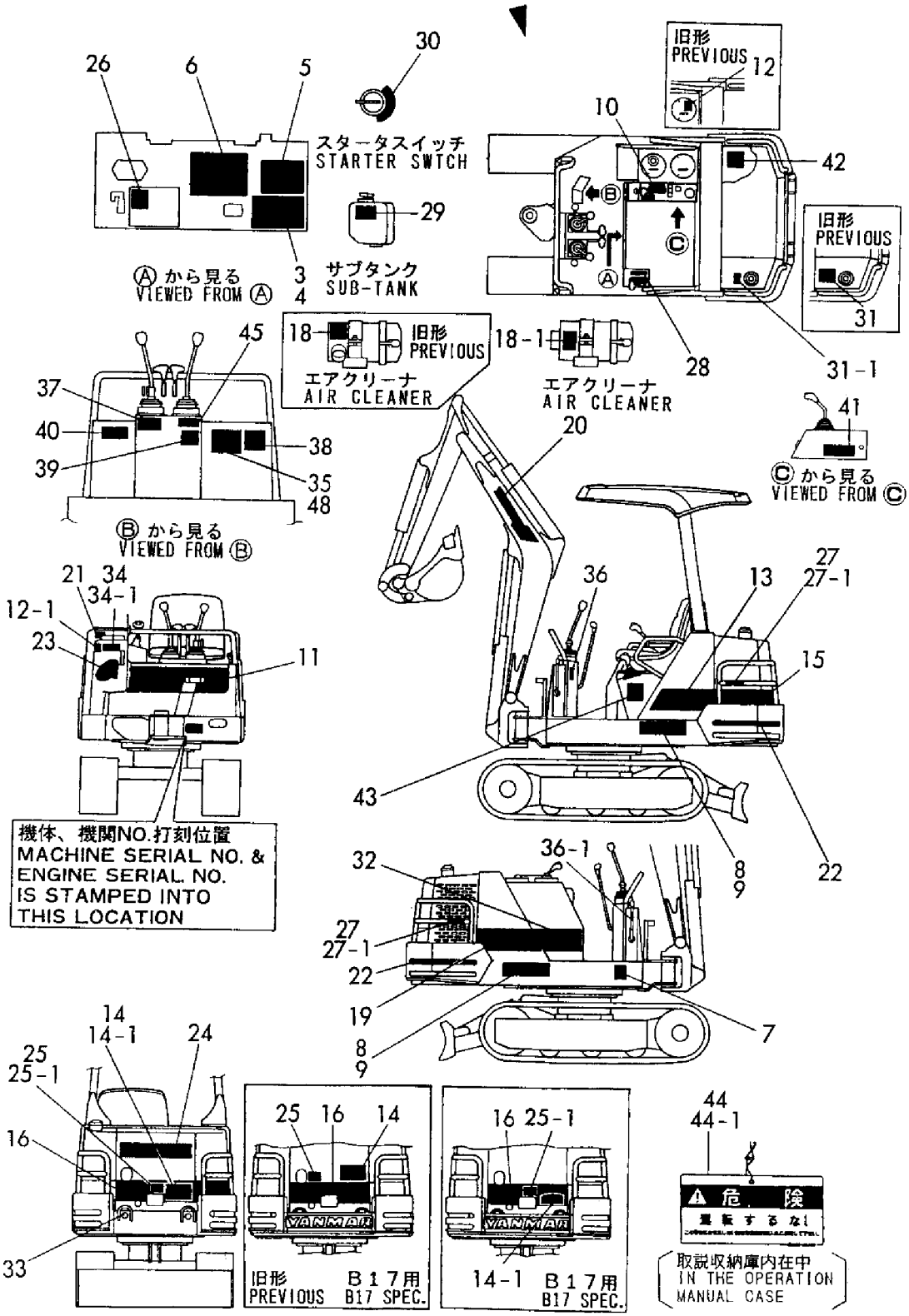

https://truckmanualshub.com/

```
1,1,,772150-03720,,"LABEL SET",,,,,1,,,,,,,,,,,,
2,2,,172150-03120,,LABEL,,,,,2,,,,,,,,,,,,
3,2,,172149-03180,,LABEL,,,,,1,,,,,,,,,,,,
4,2,,172149-03190,,LABEL,,,,,1,,,,,,,,,,,,
5,2,,172149-03200,,"LABEL, STRIPE(R)",,,,,1,,,,,,,,,,,,
6,2,,172149-03210,,LABEL,,,,,1,,,,,,,,,,,,
7,2,,172149-03220,,LABEL,,,,,1,,,,,,,,,,,,
8,2,,172149-03230,,LABEL,,,,,1,,,,,,,,,,,,
9,2,,172149-03261,,LABEL,,,,,1,,,,,,,,,,,,
10,2,,172149-03272,,LABEL,,,,,1,,,,,,,,,,,,
11,2,,172137-03301,,"LABEL, TURNING LOCK",,,,,1,,,,,,,,,,,,
12,2,,172149-03300,,"LABEL,FRONT",,,,,1,,,,,,,,,,,,
13,2,,172142-03310,,LABEL,,,,,1,,,,,,,,,,,,
14,2,,172141-03440,,LABEL,,,,,1,,,,,,,,,,,,
15,2,,172141-03450,,"LABEL, RESERVER(C)",,,,,1,,,,,,,,,,,,
16,2,,172141-03460,,"LABEL, (D)",,,,,1,,,,,,,,,,,,
17,2,,172141-03490,,"LABEL, PROTECTOR",,,,,2,,,,,,,,,,,,
18,2,,172165-03500,,"LABEL,GREASE FEED",,,,,1,,,,,,,,,,,,
19,2,,172149-03521,,LABEL,,,,,1,,,,,,,,,,,,
20,2,,172142-03530,,LABEL,,,,,1,,,,,,,,,,,,
21,2,,172150-03531,,"LABEL, SPECIFICATION",,,,,1,,,,,,,,,,,,
22,2,,172519-03680,,"LABEL,BRAND",,,,,2,,,,,,,,,,,,
23,2,,172122-03740,,"LABEL, GREASE",,,,,1,,,,,,,,,,,,
24,2,,172519-03770,,LABEL,,,,,1,,,,,,,,,,,,
25,2,,172137-03780,,"LABEL, THROTTLE",,,,,1,,,,,,,,,,,,
26,2,,172155-03790,,LABEL,,,,,1,,,,,,,,,,,,
27,2,,172122-03912,,LABEL,,,,,1,,,,,,,,,,,,
28,2,,172125-03950,,"LABEL, AIR CLEANER",,,,,1,,,,,,,,,,,,
29,2,,121120-44800,,"LABEL, RADIATOR",,,,,1,,,,,,,,,,,,
30,2,,124764-44810,,"LABEL, SUB-TANK",,,,,1,,,,,,,,,,,,
31,2,,124764-44920,,"LABEL, ANTI-FREEZING",,,,,1,,,,,,,,,,,,
32,2,,933112-52100,,"LABEL, FUEL",,,,,1,,,,,,,,,,,,
33,2,,933112-20200,,"LABEL, KEY SWITCH",,,,,1,,,,,,,,,,,,
34,2,,172183-03280,,"LABEL, LOCK",,,,,1,,,,,,,,,,,,
35,2,,172171-03400,,PLATE,,,,,1,,W,,,,,,,,,,,M20696
38,1,,933112-21400,,"LABEL(A2), OPERATION",,,,,1,,,1,,,,,,,,,
```

https://truckmanualshub.com/

Fig. 3 銘板（B17−2（AS, EX））
LABEL (B17−2 (AS, EX))

B17−2P(R) AS
B17−2P(R) EX

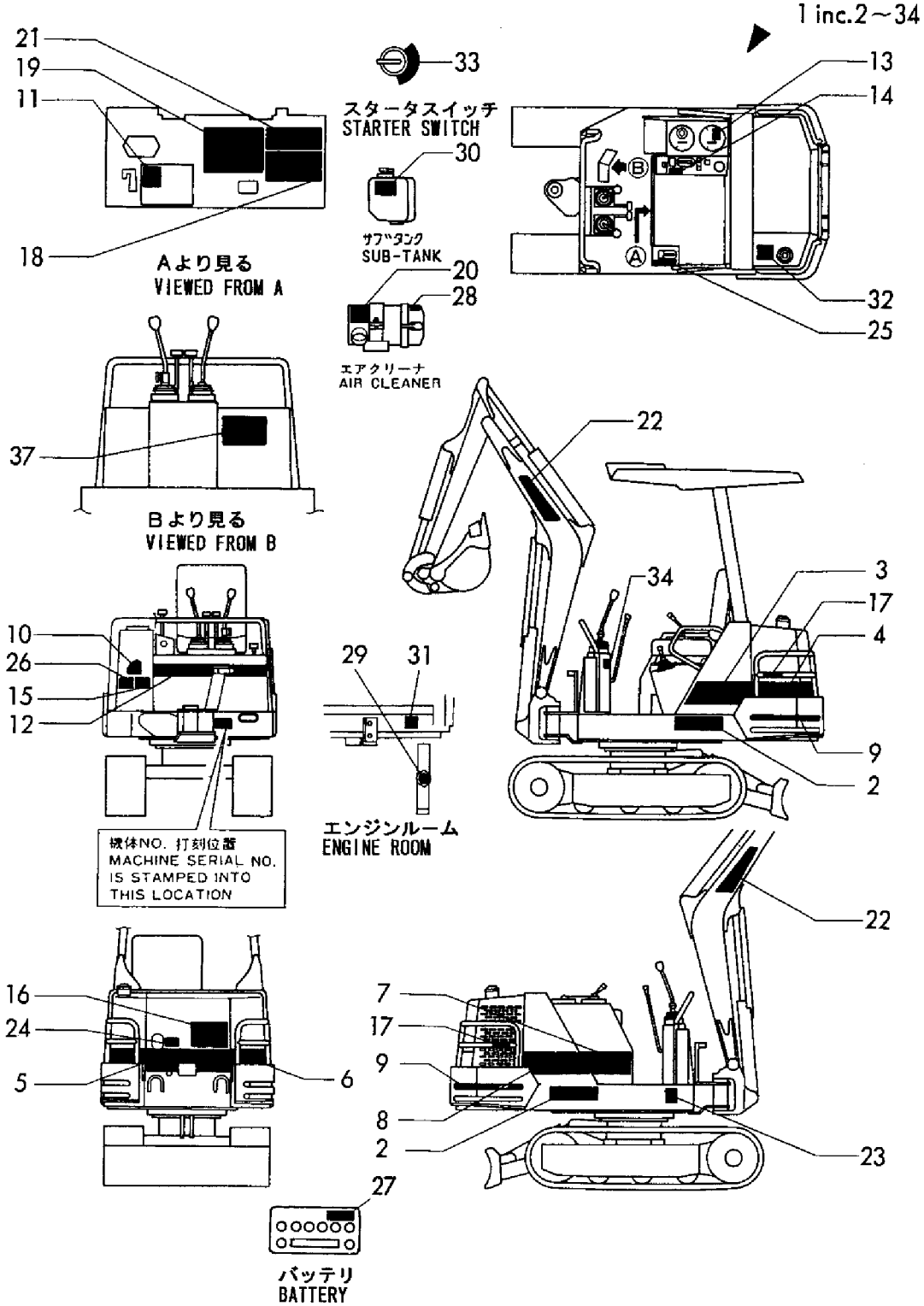

https://truckmanualshub.com/

```
1,1,,772149-05100,,"TOOL ASSY",1,,1,,,,,,,,,,,,,,
1-1,1,,772149-05101,,"TOOL ASSY",1,1,1,1,1,,N,,,*1994.02,,,,*1994.02,,,,
2,2,,172137-38131,,"COLLAR, LINK",4,4,4,4,4,,,,,,,,,,,,
3,2,,104200-92350,,"DRIVER, SCREW",1,1,1,1,1,,,,,,,,,,,,
4,2,,119640-92750,,"WRENCH, FILTER",1,1,1,1,1,,,,,,,,,,,,
5,2,,22351-060020,,"SPRING PIN 6X20",4,4,4,4,4,,,,,,,,,,,,
6,2,,22417-800450,,"COTTER PIN 8.0X45",4,,4,,,,Z,,,*1994.02,,,,*1994.02,,,,
7,2,,28110-080100,,"WRENCH  8X10",1,1,1,1,1,,,,,,,,,,,,
8,2,,28110-120140,,"WRENCH 12X14",1,,1,,,,,,,,,,,,,,
8-1,2,,28110-120140,,"WRENCH 12X14",2,2,2,2,2,,K,,,*1994.02,,,,*1994.02,,,,
9,2,,28110-170190,,"WRENCH 17X19",1,1,1,1,1,,,,,,,,,,,,
10,2,,28110-220240,,"WRENCH 22X24",1,1,1,1,1,,,,,,,,,,,,
11,2,,28110-270300,,"WRENCH 27X30",1,1,1,1,1,,,,,,,,,,,,
12,2,,28150-025000,,"BAR WRENCH  2.5",1,,1,,,,Z,,,M00501,,,,M00501,,,,
13,2,,28150-080000,,"BAR WRENCH  8",1,1,1,1,1,,,,,,,,,,,,
14,2,,28227-271400,,"BOX WRENCH 27X140",1,1,1,1,1,,,,,,,,,,,,
15,2,,28230-120250,,"TURNING HANDLE",1,1,1,1,1,,,,,,,,,,,,
16,2,,933110-09700,,"HOSE, GREASE",1,1,1,1,1,,,,,,,,,,,,
16-1,2,,933110-09701,,"HOSE, GREASE",,1,,1,1,,N,,,,,M21253,,,,M20673,,M20673
17,2,,933110-09800,,"GUN 800, GREASE",1,1,1,1,1,,,,,,,,,,,,
17-1,2,,933110-09801,,"GUN 800, GREASE",,1,,1,1,,N,,,,,M21253,,,,M20673,,M20673
18,2,,933110-90000,,"BAG, TOOL",1,1,1,1,1,,,,,,,,,,,,
19,2,,933171-00470,,"PLIERS 200",1,1,1,1,1,,,,,,,,,,,,
20,2,,172122-05100,,NOZZLE,1,1,1,1,1,,W,,,M00501,,,,M00501,,,,
20-1,2,,172122-05101,,NOZZLE,,1,,1,1,,N,,,,,M21253,,,,M20673,,M20673
22,1,,172176-07330,,"BAG, MANUAL",,1,,1,1,,W,,,,,M21238,,,,M20671,,M20671
```

https://truckmanualshub.com/

Fig. 4 工具 TOOL

見出しNo.1は、見出しNo.2から20を含みます。
1 inc. 2 ~ 20

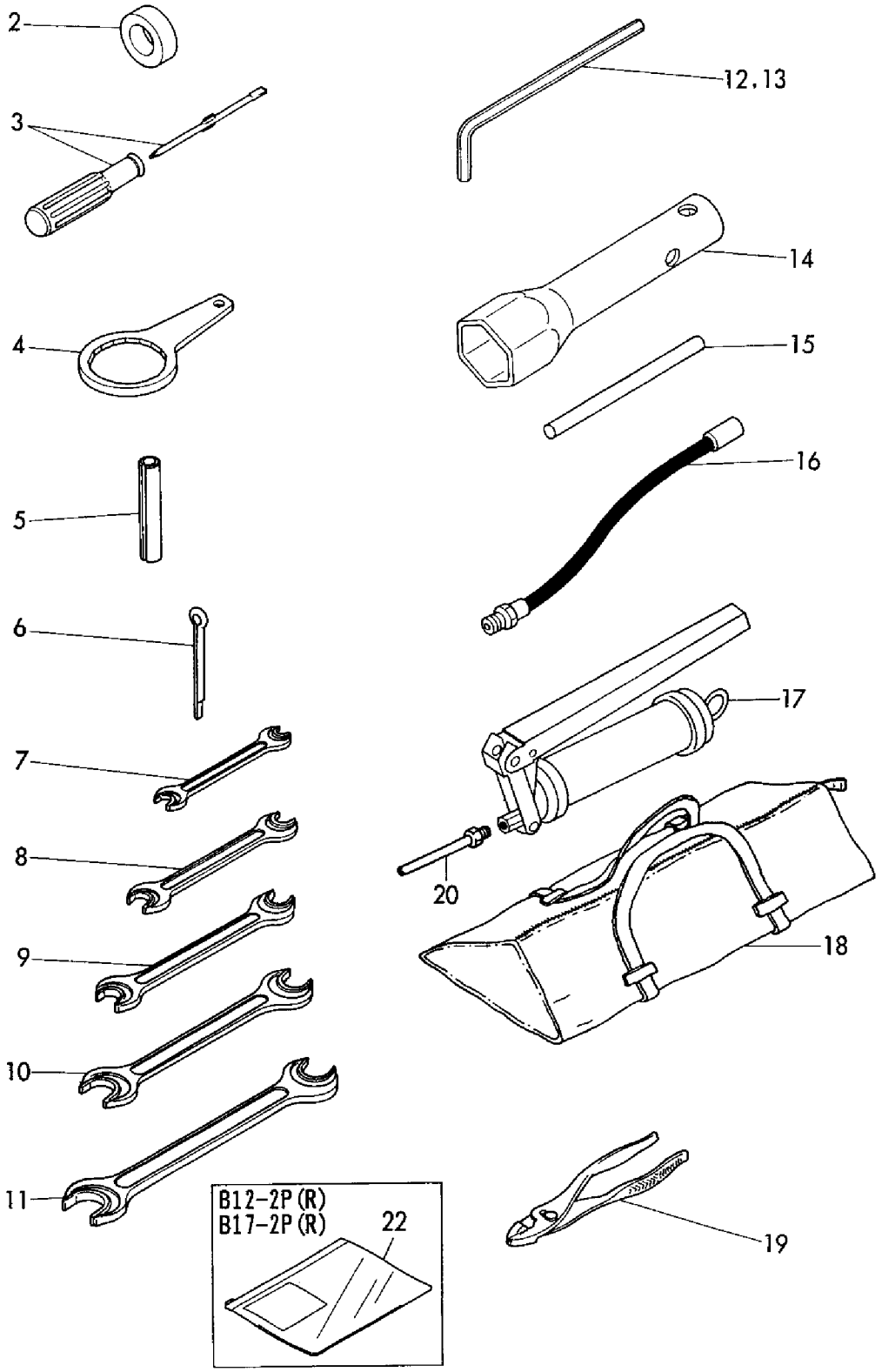

https://truckmanualshub.com/

```
1,1,,172149-11300,,"EXTENSION, SILENCER",1,1,1,1,1,,,,,,,,,,,,
1-1,1,,172149-11300,,"EXTENSION,
SILENCER",,1,,1,1,,Z,,,,,M21253,,,,M20673,,M20673
2,1,,121120-13580,,CLAMP,1,1,1,1,1,,,,,,,,,,,,
3,1,,26106-100652,,"BOLT M10X 65 PLATED",1,1,1,1,1,,,,,,,,,,,,
4,1,,26716-100002,,"NUT M10",1,1,1,1,1,,,,,,,,,,,,
5,1,,172149-11500,,"PIPE, AIR",1,1,1,1,1,,,,,,,,,,,,
6,1,,172149-11530,,HOSE,1,1,1,1,1,,,,,,,,,,,,
7,1,,172149-11540,,HOSE,1,,1,,,,Z,,,M00501,,,,M00501,,,,
8,1,,23000-060000,,"CLAMP 60",4,,4,,,,,,,,,,,,,,
8-1,1,,23000-060000,,"CLAMP 60",2,2,2,2,2,,K,,,M00501,,,,M00501,,,,
9,1,,172149-11290,,"PIPE ASSY, EXTERNAL",,1,,1,1,,W,,,,,M21253,,,,M20673,,M20673
10,2,,172149-11300,,"EXTENSION,
SILENCER",,1,,1,1,,W,,,,,M21253,,,,M20673,,M20673
11,2,,172149-11310,,MAT,,1,,1,1,,W,,,,,M21253,,,,M20673,,M20673
```

https://truckmanualshub.com/

Fig. 5 吸気管＆噴出口 INLET HOSE & EXHAUST PIPE

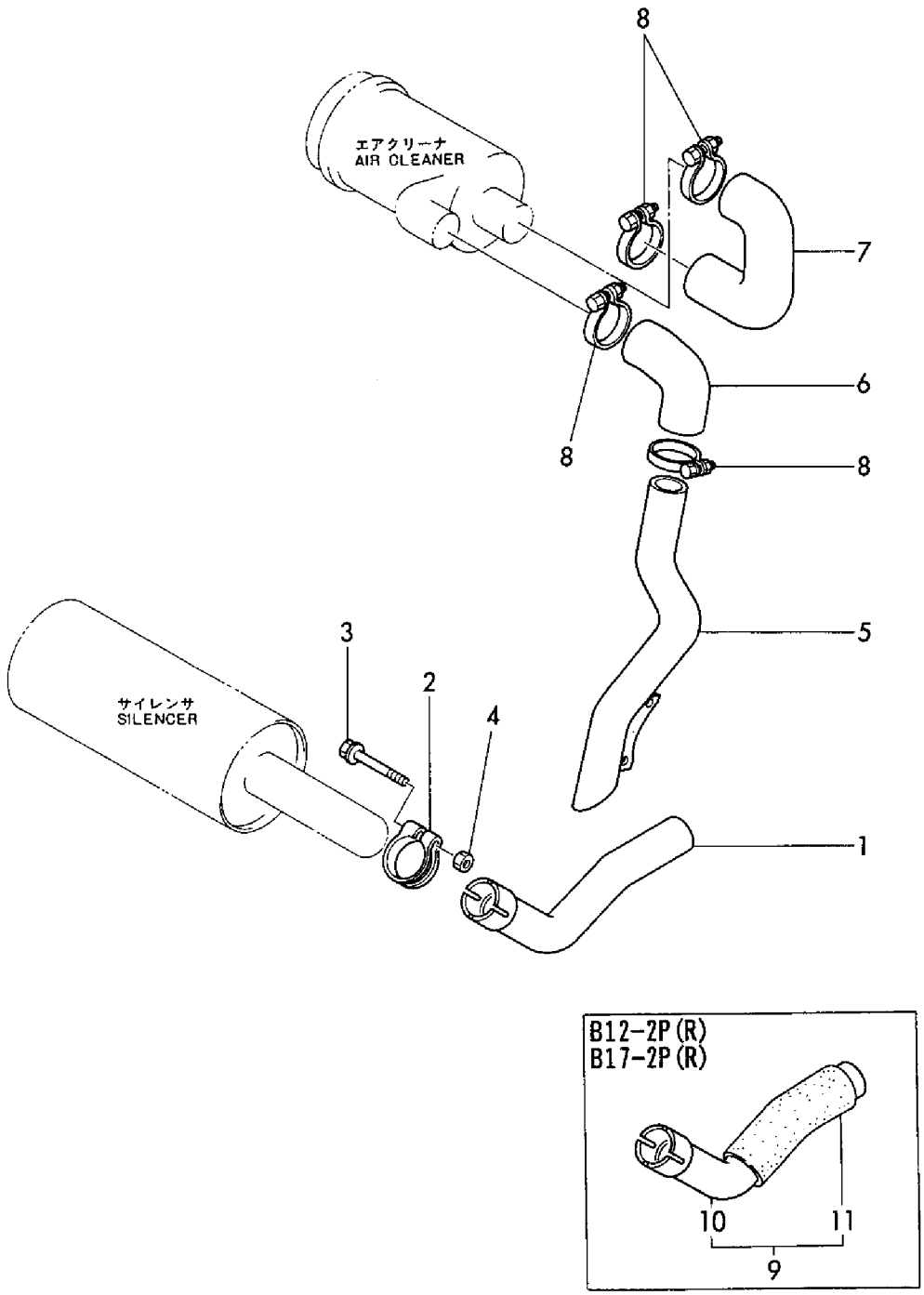

https://truckmanualshub.com/

```
1,1,,172141-12100,,"LEVER W/BUSH, ACCEL",1,,1,,,,,,,,,,,,,
1A,1,,172149-12150,,"LEVER W/BUSH, ACCEL",,1,,1,1,,,,,,,,,,,,
3,2,,172141-12220,,"BUSH 30X10",2,2,2,2,2,,,,,,,,,,,,
4,1,,172149-12100,,"SUPPORT, CABLE",1,1,1,1,1,,,,,,,,,,,,
5,1,,172149-12110,,"CABLE, THROTTLE",1,1,1,1,1,,,,,,,,,,,,
6,1,,172141-12160,,BRACKET,1,1,1,1,1,,,,,,,,,,,,
7,1,,172141-12232,,SPRING,1,1,1,1,1,,,,,,,,,,,,
8,1,,172141-12240,,SPRING,1,1,1,1,1,,,,,,,,,,,,
9,1,,172141-12250,,PLATE,1,1,1,1,1,,,,,,,,,,,,
10,1,,172141-12260,,PLATE,1,1,1,1,1,,,,,,,,,,,,
11,1,,172137-12270,,"JOINT, CABLE",1,1,1,1,1,,,,,,,,,,,,
12,1,,172113-12521,,"PIN, CABLE",1,1,1,1,1,,,,,,,,,,,,
13,1,,172141-41340,,BOOTS,1,1,1,1,1,,,,,,,,,,,,
14,1,,172122-46630,,"KNOB(D), LEVER",1,,1,,,,,,,,,,,,,,
14A,1,,172146-12150,,"GRIP,ACCELERATOR",,1,,1,1,,,,,,,,,,,,
15,1,,1C6281-52310,,"PIN 6,COME-OFF SNAP",2,2,2,2,2,,,,,,,,,,,,
16,1,,1A1040-56900,,"PIN  6X 17",1,1,1,1,1,,,,,,,,,,,,
17,1,,22137-060000,,"WASHER 6, POLISHED",1,1,1,1,1,,,,,,,,,,,,
18,1,,22217-100000,,"SPRING WASHER 10",3,3,3,3,3,,,,,,,,,,,,
19,1,,24190-160001,,"BALL 1/2",1,1,1,1,1,,,,,,,,,,,,
20,1,,26013-080162,,"BOLT W/WASHER M8X16",2,2,2,2,2,,,,,,,,,,,,
21,1,,26116-100202,,"BOLT M10X 20 PLATED",2,2,2,2,2,,,,,,,,,,,,
22,1,,26116-100302,,"BOLT M10X 30 PLATED",1,1,1,1,1,,,,,,,,,,,,
23,1,,933171-15680,,"GROMMET 40X13",1,1,1,1,1,,,,,,,,,,,,
```

https://truckmanualshub.com/

Fig. 6 アクセル ACCELERATOR

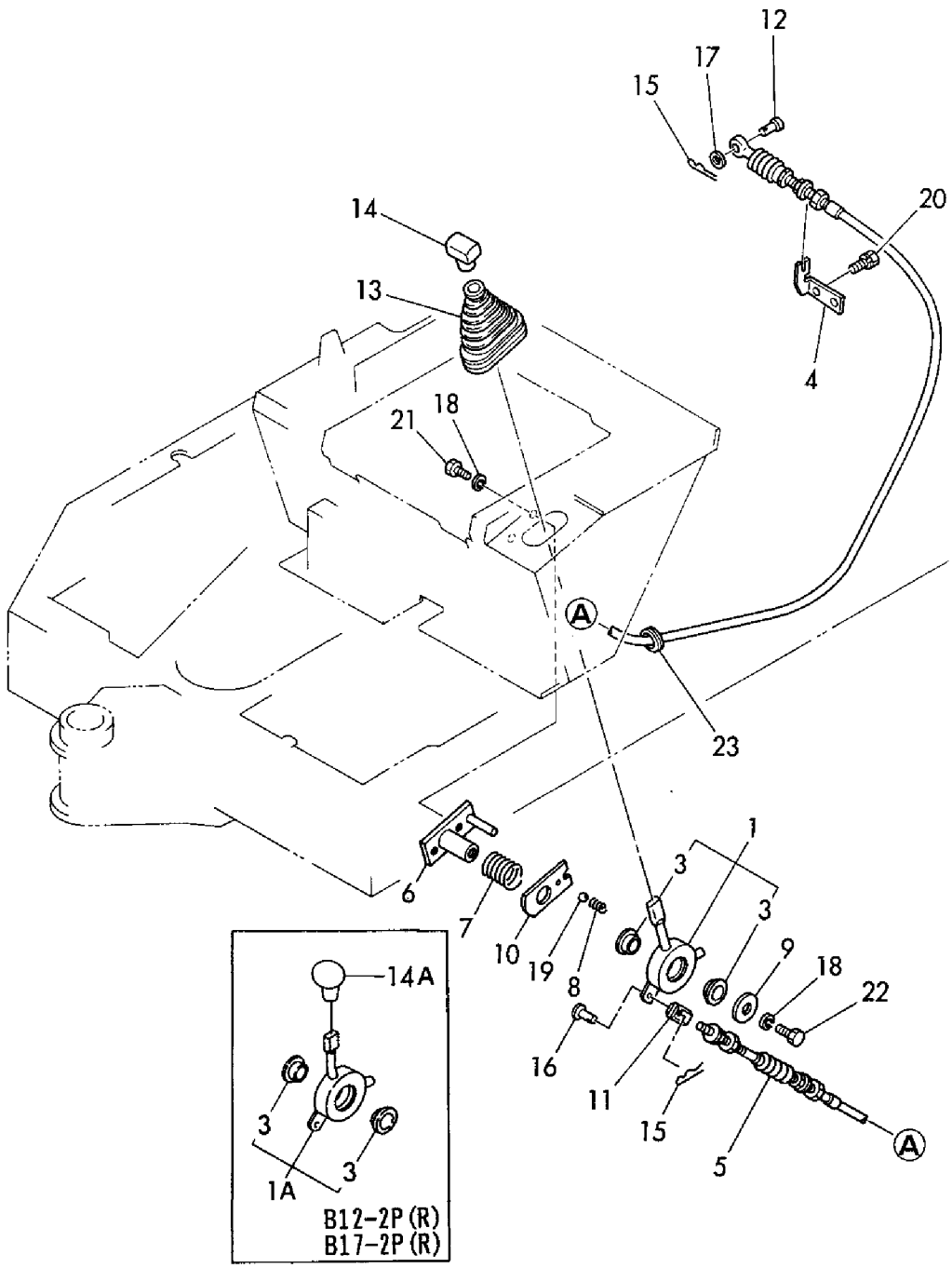

https://truckmanualshub.com/

```
1,1,,172137-13111,,"ENGINE BED(A), LEFT",1,1,1,1,1,,,,,,,,,,,,
2,1,,172137-13141,,"ENGINE BED(A), RIGHT",1,1,1,1,1,,,,,,,,,,,,
3,1,,172137-13161,,"ENGINE BED(B), LEFT",1,1,1,1,1,,,,,,,,,,,,
4,1,,172137-13171,,"ENGINE BED(B), RIGHT",1,1,1,1,1,,,,,,,,,,,,
5,1,,172137-13180,,"ABSORBER, SHOCK",4,4,4,4,4,,,,,,,,,,,,
6,1,,22217-100000,,"SPRING WASHER 10",8,8,8,8,8,,,,,,,,,,,,
7,1,,26013-100202,,"BOLT W/WASHER M10X20",16,16,16,16,16,,,,,,,,,,,,
8,1,,26716-100002,,"NUT M10",8,8,8,8,8,,,,,,,,,,,,
9,1,,172149-13290,,"MOUNT, RADIATOR",1,1,1,1,1,,,,,,,,,,,,
10,1,,172734-14620,,"PIPE L=300, FUEL",1,1,1,1,1,,,,,,,,,,,,
10-1,1,,172164-14630,,"HOSE  400",,1,,1,1,,N,,,,,M20844,,,,M20568,,M20568
11,1,,26013-060162,,"BOLT M 6X 16",2,2,2,2,2,,,,,,,,,,,,
12,1,,172149-13500,,HOSE,1,1,1,1,1,,,,,,,,,,,,
12-1,1,,172164-14630,,"HOSE  400",,1,,1,1,,N,,,,,M20844,,,,M20568,,M20568
13,1,,119631-44502,,RADIATOR,1,1,1,1,1,,,,,,,,,,,,
14,2,,121250-44590,,CLAMP,2,2,2,2,2,,,,,,,,,,,,
15,2,,124450-44590,,"CAP, RADIATOR",1,1,1,1,1,,,,,,,,,,,,
16,2,,119631-44610,,"SHROUD,RADIATOR",1,1,1,1,1,,,,,,,,,,,,
18,2,,119631-44800,,"LABEL, RADIATOR",1,1,1,1,1,,,,,,,,,,,,
19,2,,124738-49150,,"PIPE, WATER DRAIN",1,1,1,1,1,,,,,,,,,,,,
20,2,,26014-080162,,"BOLT M 8X 16",4,4,4,4,4,,,,,,,,,,,,
21,1,,121468-44510,,"SUB-TANK ASSY",1,1,1,1,1,,,,,,,,,,,,
23,2,,121450-44531,,CAP,1,1,1,1,1,,,,,,,,,,,,
24,2,,121468-44540,,"PLUG, SUB-TANK",1,1,1,1,1,,,,,,,,,,,,
25,2,,124450-44560,,CLAMP,1,1,1,1,1,,,,,,,,,,,,
26,2,,121470-44581,,GASKET,1,1,1,1,1,,,,,,,,,,,,
27,2,,23065-070130,,"PIPE  7X 130",1,1,1,1,1,,,,,,,,,,,,
28,1,,121470-44540,,"LABEL, SUB-TANK",1,1,1,1,1,,,,,,,,,,,,
29,1,,119645-49010,,"PIPE (A), C. WATER",1,1,1,1,1,,,,,,,,,,,,
30,1,,119631-49020,,"PIPE, COOLING WATER",1,1,1,1,1,,,,,,,,,,,,
31,1,,121450-49110,,"COCK ASSY, 3-WAY",1,1,1,1,1,,,,,,,,,,,,
33,2,,121250-49121,,PLUG,1,1,1,1,1,,,,,,,,,,,,
34,2,,24311-000160,,"O-RING 1A P-16.0",1,1,1,1,1,,,,,,,,,,,,
35,1,,23010-040000,,"CLAMP 40",4,,4,,,,,,,,,,,,,,
35-1,1,,23010-040000,,"CLAMP 40",2,2,2,2,2,,K,,,M00501,,,,M00501,,,,
36,1,,23080-011000,,"CLAMP 11",4,4,4,4,4,,,,,,,,,,,,
37,1,,26013-080162,,"BOLT W/WASHER M8X16",2,2,2,2,2,,,,,,,,,,,,
38,1,,26013-080162,,"BOLT W/WASHER M8X16",4,4,4,4,4,,,,,,,,,,,,
39,1,,26013-100252,,"BOLT W/WASHER M10X25",4,4,4,4,4,,,,,,,,,,,,
40,1,,22137-060000,,"WASHER 6, POLISHED",2,2,2,2,2,,,,,,,,,,,,
41,1,,172122-79890,,"CLAMP 350",1,1,1,1,1,,W,,,M00501,,,,M00501,,,,
42,1,,194202-56460,,BAND,1,1,1,1,1,,W,,,M00501,,,,M00501,,,,
43,1,,23010-038000,,"CLAMP 38",2,2,2,2,2,,W,,,M00501,,,,M00501,,,,
44,1,,172149-13400,,"NET, WIRE",,1,,1,1,,W,,,,,M21253,,,,M20673,,M20673
45,1,,22137-080000,,"WASHER 8, POLISHED",,4,,4,4,,W,,,,,M21253,,,,M20673,,M20673
46,1,,22217-080000,,"SPRING WASHER  8",,2,,2,2,,W,,,,,M21253,,,,M20673,,M20673
47,1,,26116-080202,,"BOLT M 8X 20
PLATED",,2,,2,2,,W,,,,,M21253,,,,M20673,,M20673
48,1,,26716-080002,,"NUT M 8",,2,,2,2,,W,,,,,M21253,,,,M20673,,M20673
```

https://truckmanualshub.com/

Fig. 7 エンジンマウント＆ラジエータ ENGINE MOUNT & RADIATOR

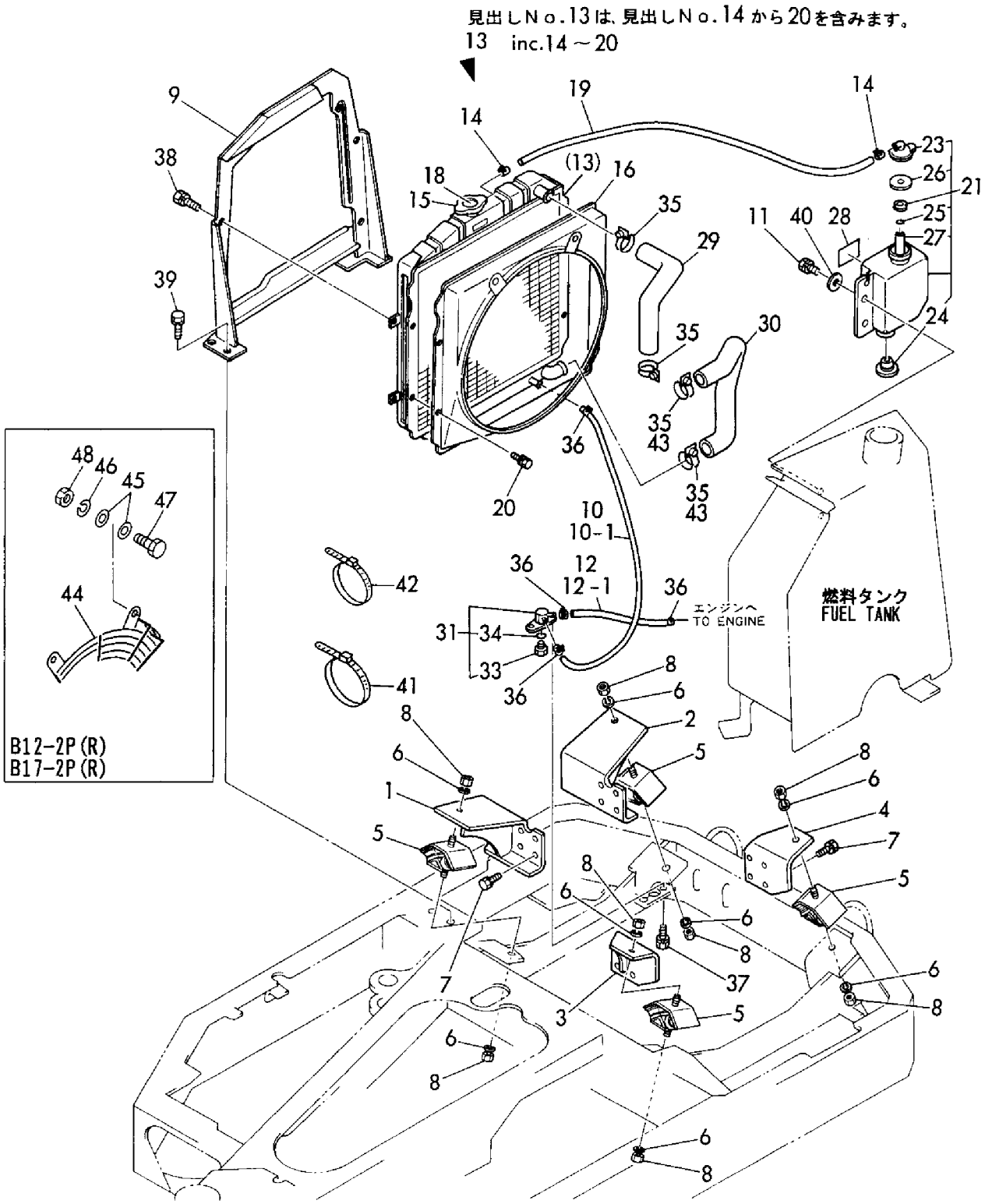

https://truckmanualshub.com/

```
1,1,,772149-14100,,"FUEL TANK ASSY",1,,1,,,,,,,,,,,,,,
1-1,1,,772149-14101,,"TANK ASSY, FUEL",1,,1,,,,N,,,M00501,,,,M00501,,,,
1A,1,,772149-14101-1,,"TANK ASSY, FUEL",,1,,1,1,,,,,,,,,,,
3,2,,172149-14250,,"GAUGE, FUEL",1,1,1,1,1,,,,,,,,,,,
3-1,2,,172149-14251,,HOSE,,1,,1,1,,N,,,,,M20876,,,,M20575,,M20575
4,2,,172141-14260,,FLOAT,1,1,1,1,1,,,,,,,,,,,
5,2,,172149-14260,,"SEAL,",1,,1,,,,Z,,,M00501,,,,M00501,,,,
6,2,,172122-14300,,"CAP, FUEL TANK",1,1,1,1,1,,,,,,,,,,,
6A,3,,105430-55070,,GASKET,1,1,1,1,1,,W,,,M00501,,,,M00501,,,,
7,2,,101504-55101,,"STRAINER,FUEL INLET",1,1,1,1,1,,,,,,,,,,,
8,2,,23010-014000,,"CLAMP 14",2,2,2,2,2,,,,,,,,,,,
9,2,,104200-11920,,COCK,1,1,1,1,1,,,,,,,,,,,
10,1,,22137-120000,,"WASHER 12,POLISHED",3,3,3,3,3,,,,,,,,,,,
11,1,,23080-013000,,"CLAMP 13,HOSE",1,1,1,1,1,,,,,,,,,,,
12,1,,26013-120302,,"BOLT W/WASHER M12X30",3,3,3,3,3,,,,,,,,,,,
13,1,,933169-22940,,"SPACER, RESERVOIR",1,1,1,1,1,,,,,,,,,,,
14,1,,172149-14600,,SUPPORT,1,,1,,,,,,,,,,,,,,
14-1,1,,172149-14601,,SUPPORT,1,1,1,1,1,,R,,,M00614,,,,M00611,,,,
15,1,,172149-14620,,HOSE,1,1,1,1,1,,,,,,,,,,,
16,1,,172149-14630,,HOSE,2,2,2,2,2,,,,,,,,,,,
17,1,,172126-16540,,"CLAMP 10X70",2,2,2,2,2,,,,,,,,,,,
18,1,,129335-55700,,"SEPARATOR, WATER",1,1,1,1,1,,,,,,,,,,,
19,2,,104200-55321,,"VALVE, TAPER",1,1,1,1,1,,,,,,,,,,,
20,2,,104200-55330,,"SPRING, TAPER VALVE",1,1,1,1,1,,,,,,,,,,,
21,2,,104200-55341,,"HANDLE, COCK",1,1,1,1,1,,,,,,,,,,,
22,2,,124064-55510,,"BOWL, FUEL STRAINER",1,1,1,1,1,,,,,,,,,,,
23,2,,102103-55520,,O-RING,1,1,1,1,1,,,,,,,,,,,
24,2,,110250-55610,,"RING, RETAINING",1,1,1,1,1,,,,,,,,,,,
25,2,,121257-55720,,"SPRING, SCREEN",1,1,1,1,1,,,,,,,,,,,
26,2,,121257-55731,,FLOAT,1,1,1,1,1,,,,,,,,,,,
28,2,,101720-55750,,"PLUG 6",2,2,2,2,2,,,,,,,,,,,
29,2,,104200-55750,,"SCREW M 4",1,1,1,1,1,,,,,,,,,,,
30,2,,171081-55910,,SCREEN,1,1,1,1,1,,,,,,,,,,,
31,2,,23418-060000,,"GASKET 6, NYLON",2,2,2,2,2,,,,,,,,,,,
32,2,,24311-240100,,"O-RING 1A P-10A",1,1,1,1,1,,,,,,,,,,,
33,1,,124766-59050,,"CLAMP 12",6,6,6,6,6,,,,,,,,,,,
34,1,,22217-080000,,"SPRING WASHER  8",1,1,1,1,1,,,,,,,,,,,
35,1,,26116-080802,,"BOLT M 8X 80 PLATED",1,,1,,,,,,,,,,,,,,
35-1,1,,26116-080652,,"BOLT M 8X 65 PLATED",1,1,1,1,1,,R,,,M00614,,,,M00611,,,,
36,1,,26013-080162,,"BOLT W/WASHER M8X16",1,,1,,,,,,,,,,,,,,
36-1,1,,26013-080162,,"BOLT W/WASHER M8X16",2,2,2,2,2,,K,,,M00614,,,,M00611,,,,
37,1,,172149-14190,,"PLATE, GAUGE",1,1,1,1,1,,,,,,,,,,,
38,1,,26557-060082,,"SCREW M 6X  8",2,2,2,2,2,,,,,,,,,,,
39,1,,22217-060000,,"SPRING WASHER  6",2,2,2,2,2,,,,,,,,,,,
40-1,1,,23061-100250,,"PIPE 10X 250",1,1,1,1,1,,,1,,,,,,,,,
41,1,,194202-56460,,BAND,1,1,1,1,1,,W,,,M00501,,,,M00501,,,,
```

https://truckmanualshub.com/

Fig. 8 燃料タンク＆燃料パイプ FUEL TANK & FUEL PIPE

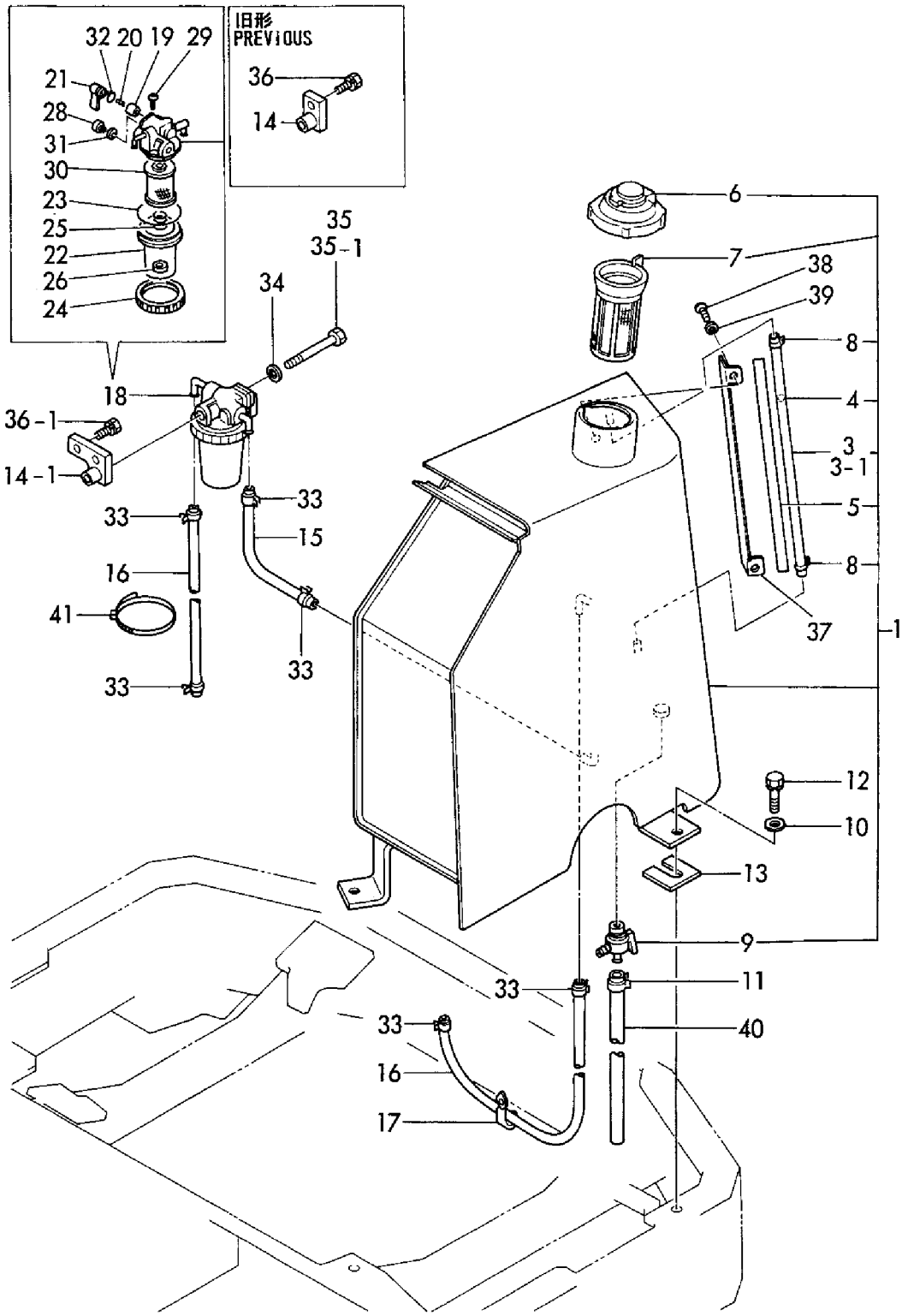

https://truckmanualshub.com/

```
1,1,,172149-16100,,"HARNESS, BATTERY",1,1,1,1,1,,,,,,,,,,,,
2,1,,172149-16110,,"HARNESS, BATTERY",1,1,1,1,1,,,,,,,,,,,,
3,1,,194300-51310,,"BATTERY NS60",1,1,1,1,1,,,,,,,,,,,,
4,1,,22217-080000,,"SPRING WASHER  8",2,,2,,,,,,,,,,,,,,,,
4-1,1,,22137-080000,,"WASHER 8, POLISHED",2,2,2,2,2,,N,,,M01358,,,,M00997,,,,
5,1,,22137-060000,,"WASHER 6, POLISHED",2,2,2,2,2,,,,,,,,,,,,
6,1,,26716-080002,,"NUT M 8",2,2,2,2,2,,,,,,,,,,,,
7,1,,172149-16300,,"SUPPORT, BATTERY",1,,1,,,,,,,,,,,,,,,,
7-1,1,,172149-16301,,"SUPPORT, BATTERY",1,1,1,1,1,,S,,,M00614,,,,M00611,,,,
8,1,,172149-16320,,"STAY, BATTERY",1,1,1,1,1,,,,,,,,,,,,
9,1,,194940-64750,,"CLAMP,BATTERY",1,1,1,1,1,,,,,,,,,,,,
10,1,,194515-64760,,"ROD, BATTERY CLAMP",2,2,2,2,2,,,,,,,,,,,,
11,1,,26013-100202,,"BOLT W/WASHER M10X20",7,7,7,7,7,,,,,,,,,,,,
12,1,,26716-060002,,"NUT M6",4,4,4,4,4,,,,,,,,,,,,
13,1,,172149-16380,,"STAY, BATTERY",1,,1,,,,,,,,,,,,,,,,
13-1,1,,172149-16381,,"STAY, BATTERY",1,,1,,,,S,,,M00614,,,,M00611,,,,
13-2,1,,172149-16382,,"STAY, BATTERY",1,1,1,1,1,,N,,,M01223,,,,M00927,,,,
14,1,,194440-51550,,"COVER, BATTERY",1,1,1,1,1,,,,,,,,,,,,
15,1,,172149-16120,,"HARNESS F, EARTH",1,1,1,1,1,,W,,,M01358,,,,M00997,,,,
```

https://truckmanualshub.com/

Fig. 9 バッテリ BATTERY

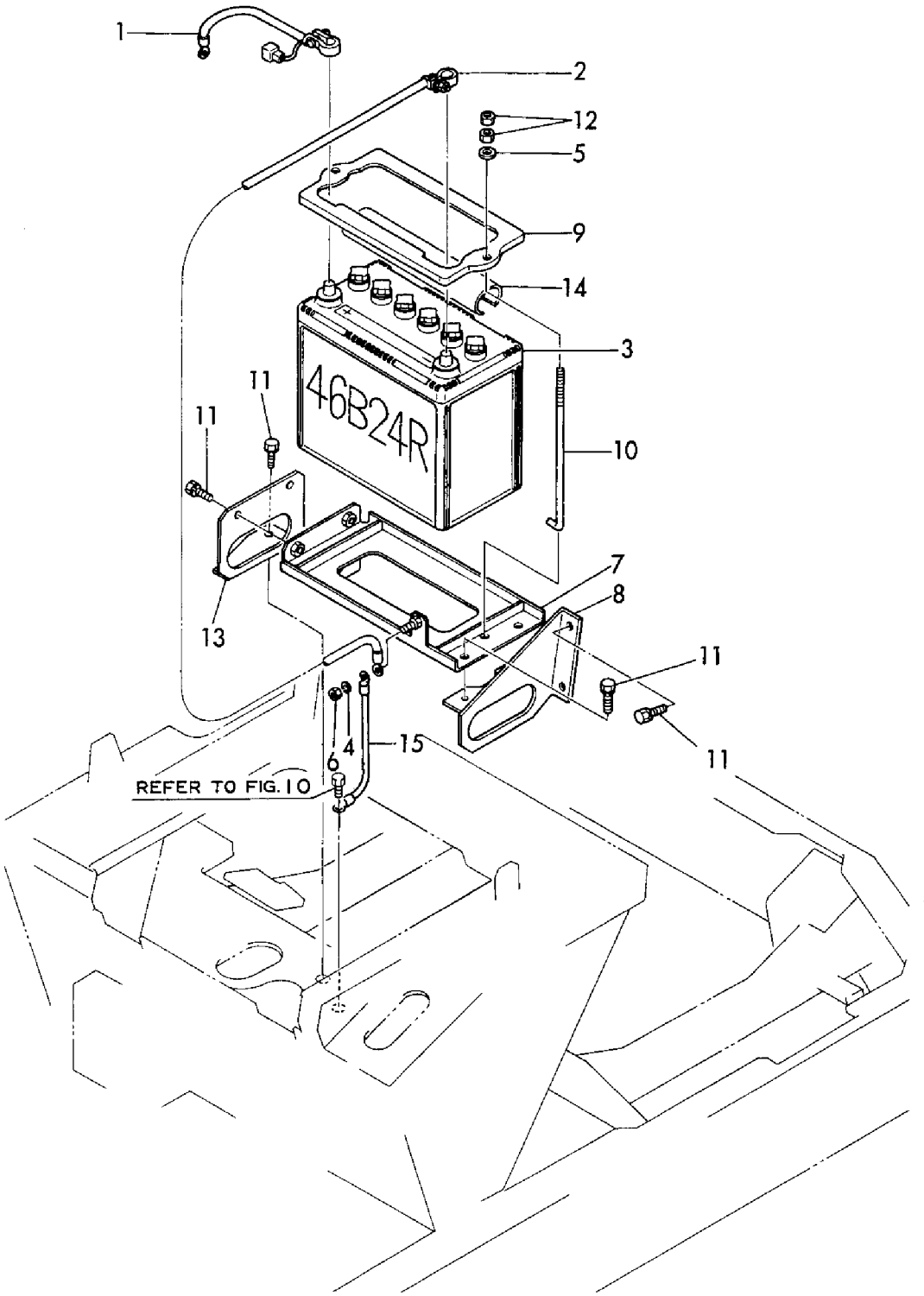

https://truckmanualshub.com/

```
1,1,,172149-16500,,"HARNESS A",1,1,1,1,1,,,,,,,,,,,,
2,1,,172149-16510,,HARNESS(B,1,,1,,,,,,,,,,,,,,,
2-1,1,,172149-16511,,HARNESS(B,1,1,1,1,1,,F,1,,*1993.05,,,,*1993.05,,,,
2-2,1,,172149-16512,,HARNESS(B,,1,,1,1,,F,2,,,,M20768,,,,M20530,,M20530
3,1,,172149-16520,,"HARNESS, STARTER",1,1,1,1,1,,,,,,,,,,,,
4,1,,172149-16530,,HARNESS(E,1,1,1,1,1,,,,,,,,,,,,
5,1,,172122-16570,,"LINK, FUSIBLE",1,1,1,1,1,,,,,,,,,,,,
6,1,,22137-100000,,"WASHER 10,POLISHED",1,1,1,1,1,,,,,,,,,,,,
7,1,,26117-100162,,"BOLT M10X 16 PLATED",1,1,1,1,1,,,,,,,,,,,,
8,1,,933171-15801,,"WIRE, EARTH",1,1,1,1,1,,,,,,,,,,,,
9,1,,172149-16540,,HARNESS(F,1,1,1,1,1,,,,,,,,,,,,
10,1,,933171-15680,,"GROMMET 40X13",1,,1,,,,,,,,,,,,,,,
10-1,1,,172149-16550,,"GROMMET 40X13",1,1,1,1,1,,N,,,*1986.06,,,,*1986.06,,,,
11,1,,22417-200250,,"COTTER PIN 2.0X25",1,1,1,1,1,,,,,,,,,,,,
12,1,,933110-58400,,"GROMMET 43",1,1,1,1,1,,,,,,,,,,,,
13,1,,172126-16540,,"CLAMP 10X70",5,,5,,,,,,,,,,,,,,,
13-1,1,,172126-16540,,"CLAMP 10X70",3,3,3,3,3,,K,,,M00501,,,,M00501,,,,
14,1,,194202-56460,,BAND,1,1,1,1,1,,,,,,,,,,,,
15,1,,26116-060122,,"BOLT M 6X 12",1,,1,,,,Z,,,M00501,,,,M00501,,,,
16,1,,22157-060000,,"WASHER  6",1,,1,,,,Z,,,M00501,,,,M00501,,,,
17,1,,22217-060000,,"SPRING WASHER  6",1,,1,,,,Z,,,M00501,,,,M00501,,,,
18,1,,26116-120162,,"BOLT M12X 16 PLATED",1,1,1,1,1,,,,,,,,,,,,
19,1,,22217-120000,,"WASHER 12,SPRING",1,1,1,1,1,,,,,,,,,,,,
20,1,,22217-100000,,"SPRING WASHER 10",1,1,1,1,1,,,,,,,,,,,,
21,1,,933168-56000,,"GROMMET 17X19",1,,1,,,,,,,,,,,,,,,
21-1,1,,933160-09220,,GROMMET,1,,1,,,,N,,,MXXX,,,,MXXX,,,,
21-2,1,,1A1140-58060,,GROMMET,2,2,2,2,2,,R,,,M00501,,,,M00501,,,,
22,1,,933168-55770,,"BAND 146",2,2,2,2,2,,,,,,,,,,,,
23,1,,172149-17100,,PLATE,1,1,1,1,1,,,,,,,,,,,,
24,1,,172149-17120,,LAMP,1,1,1,1,1,,,,,,,,,,,,
25,2,,172149-17140,,BULB(12V-3.4W,1,1,1,1,1,,,,,,,,,,,,
26,1,,172149-17130,,LAMP,1,1,1,1,1,,,,,,,,,,,,
27,2,,172149-17140,,BULB(12V-3.4W,1,1,1,1,1,,,,,,,,,,,,
28,1,,172141-17141,,"UNIT, CHECKER",1,1,1,1,1,,,,,,,,,,,,
29,1,,172141-17150,,BUZZER,1,1,1,1,1,,,,,,,,,,,,
30,1,,172141-17160,,"BOX, FUSE",1,,1,,,,,,,,,,,,,,,
30-1,1,,172141-17161,,"BOX, FUSE",1,1,1,1,1,,N,,,*1993.05,,,,*1993.05,,,,
31,2,,29411-050000,,"FUSE ( 5A),CARTRIDGE",1,,1,,,,Z,,,*1993.05,,,,*1993.05,,,,
32,2,,29411-100000,,"FUSE (10A),CARTRIDGE",2,,2,,,,Z,,,*1993.05,,,,*1993.05,,,,
33,2,,29411-150000,,"FUSE (15A),CARTRIDGE",2,,2,,,,,,,,,,,,,,
33-1,2,,29411-150000,,"FUSE
(15A),CARTRIDGE",5,5,5,5,5,,K,,,*1993.05,,,,*1993.05,,,,
34,1,,172141-17190,,"SWITCH, WORK LAMP",1,1,1,1,1,,,,,,,,,,,,
35,2,,933113-05120,,"BULB 12V 1.7W",1,,1,,,,,,,,,,,,,,,
35-1,2,,172141-17230,,"BULB 24V- 6W",1,1,1,1,1,,N,,,M01390,,,,M01020,,,,
36,1,,172147-17200,,"METER, HOUR",1,1,1,1,1,,,,,,,,,,,,
37,2,,172147-17210,,"CASE, HOUR METER",1,1,1,1,1,,,,,,,,,,,,
38,2,,172147-17220,,"CAP, HOUR METER",1,1,1,1,1,,,,,,,,,,,,
39,2,,172147-17230,,NUT,2,2,2,2,2,,,,,,,,,,,,
40,2,,172147-17240,,SLEEVE,2,2,2,2,2,,,,,,,,,,,,
41,2,,172147-17250,,"WIRE,LEAD",1,1,1,1,1,,,,,,,,,,,,
42,2,,22217-050000,,"SPRING WASHER  5",2,2,2,2,2,,,,,,,,,,,,
43,1,,121522-77101,,RELAY,1,,1,,,,,,,,,,,,,,,
43-1,1,,119247-77100,,"RELAY, SAFETY",1,1,1,1,1,,S,,,*1993.05,,,,*1993.05,,,,
44,1,,119640-77711,,"LIMITER,CURRENT",1,1,1,1,1,,,,,,,,,,,,
45,1,,121522-77721,,"INDICATOR, CHARGING",1,1,1,1,1,,,,,,,,,,,,
46,1,,129155-77810,,RESISTOR,1,1,1,1,1,,,,,,,,,,,,
47,1,,22217-060000,,"SPRING WASHER  6",7,,7,,,,,,,,,,,,,,,
47-1,1,,22217-060000,,"SPRING WASHER  6",6,6,6,6,6,,K,,,M01719,,,,M01208,,,,
48,1,,22217-100000,,"SPRING WASHER 10",2,2,2,2,2,,,,,,,,,,,,
49,1,,26022-050162,,"SCREW M 5X 16",2,2,2,2,2,,,,,,,,,,,,
50,1,,26116-100162,,"BOLT M10X 16 PLATED",2,2,2,2,2,,,,,,,,,,,,
51,1,,26716-060002,,"NUT M6",7,,7,,,,,,,,,,,,,,,
```

https://truckmanualshub.com/

```
51-1,1,,26716-060002,,"NUT M6",6,6,6,6,6,,K,,,M01719,,,,M01208,,,,
52,1,,933110-00100,,"SWITCH ASSY, STARTER",1,1,1,1,1,,,,,,,,,,,,
54,2,,933110-00301,,"KEY ASSY",1,1,1,1,1,,,,,,,,,,,,
55,1,,933110-05300,,HORN,1,1,1,1,1,,,,,,,,,,,,
56,1,,933113-05190,,"LAMP, OIL",1,1,1,1,1,,,,,,,,,,,,
57,2,,933113-05180,,"BULB 12V 3W",1,1,1,1,1,,,,,,,,,,,,
58,1,,933113-15900,,"COVER, SWITCH TERMI.",1,1,1,1,1,,,,,,,,,,,,
59,1,,172149-63100,,"PANEL ASSY",1,1,1,1,1,,,,,,,,,,,,
60,1,,172141-65970,,"RUBBER, PLATE",1,1,1,1,1,,,,,,,,,,,,
61,1,,26013-100202,,"BOLT W/WASHER M10X20",2,2,2,2,2,,,,,,,,,,,,
62,1,,26117-100162,,"BOLT M10X 16 PLATED",1,1,1,1,1,,,,,,,,,,,,
63,1,,22137-100000,,"WASHER 10,POLISHED",1,1,1,1,1,,,,,,,,,,,,
64,1,,26022-060122,,"SCREW M 6X 12",1,1,1,1,1,,,,,,,,,,,,
65,1,,26116-060122,,"BOLT M 6X 12",2,2,2,2,2,,,,,,,,,,,,
66,1,,22217-060000,,"SPRING WASHER  6",2,2,2,2,2,,,,,,,,,,,,
67,1,,26022-060122,,"SCREW M 6X 12",1,1,1,1,1,,W,,,M01719,,,,M01208,,,,
```

https://truckmanualshub.com/

Fig. 10 電装品 ELECTRIC PART

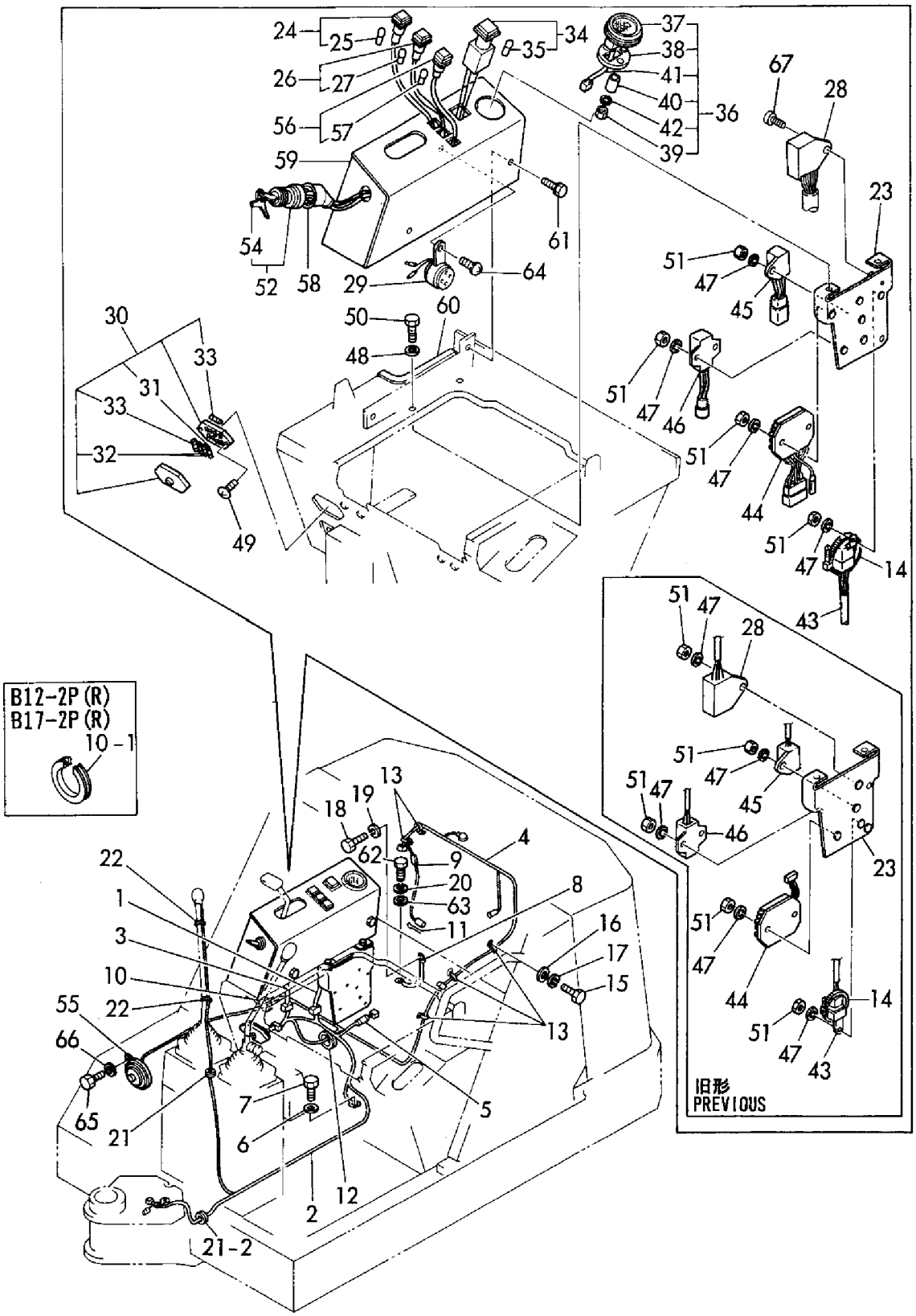

https://truckmanualshub.com/

```
1,1,,172137-16530,,"LEAD WIRE",1,1,1,1,1,,,,,,,,,,,,
1-1,1,,172137-16531,,"WIRE, LEAD",,1,,1,1,,S,,,,,M20768,,,,M20530,,M20530
2,1,,172137-16560,,BAND,4,4,4,4,4,,,,,,,,,,,,
3,1,,172137-17400,,"STAY, BOOM LIGHT",1,,1,,,,,,,,,,,,,,,
3-1,1,,172137-17401,,COVER,1,,1,,,,N,,,M10501,,,,M10501,,,,
3A,1,,172137-17401-1,,"COVER, LAMP (GREEN)",,1,,1,1,,,,,,,,,,,,
4,1,,26013-120252,,"BOLT M12X 25",1,,1,,,,,,,,,,,,,,,
4-1,1,,26013-120302,,"BOLT W/WASHER M12X30",1,1,1,1,1,,S,,,M10501,,,,M10501,,,,
4-2,1,,26013-120252,,"BOLT M12X
25",,1,,1,1,,S,,,,,*1995.10,,,,*1995.10,,*1995.10
5,1,,933113-05200,,"LAMP, WORK",1,1,1,1,1,,,,,,,,,,,,
6,2,,933113-05210,,"BULB 12V 27W",1,1,1,1,1,,,,,,,,,,,,
7,1,,933152-03700,,"WASHER, SIDE CLUTCH",1,1,1,1,1,,W,,,M10501,,,,M10501,,,,
8,1,,22137-130000,,"WASHER 13",2,2,2,2,2,,W,,,M00501,,,,M00501,,,,
```

https://truckmanualshub.com/

Fig. 11 ワークランプ WORK LAMP

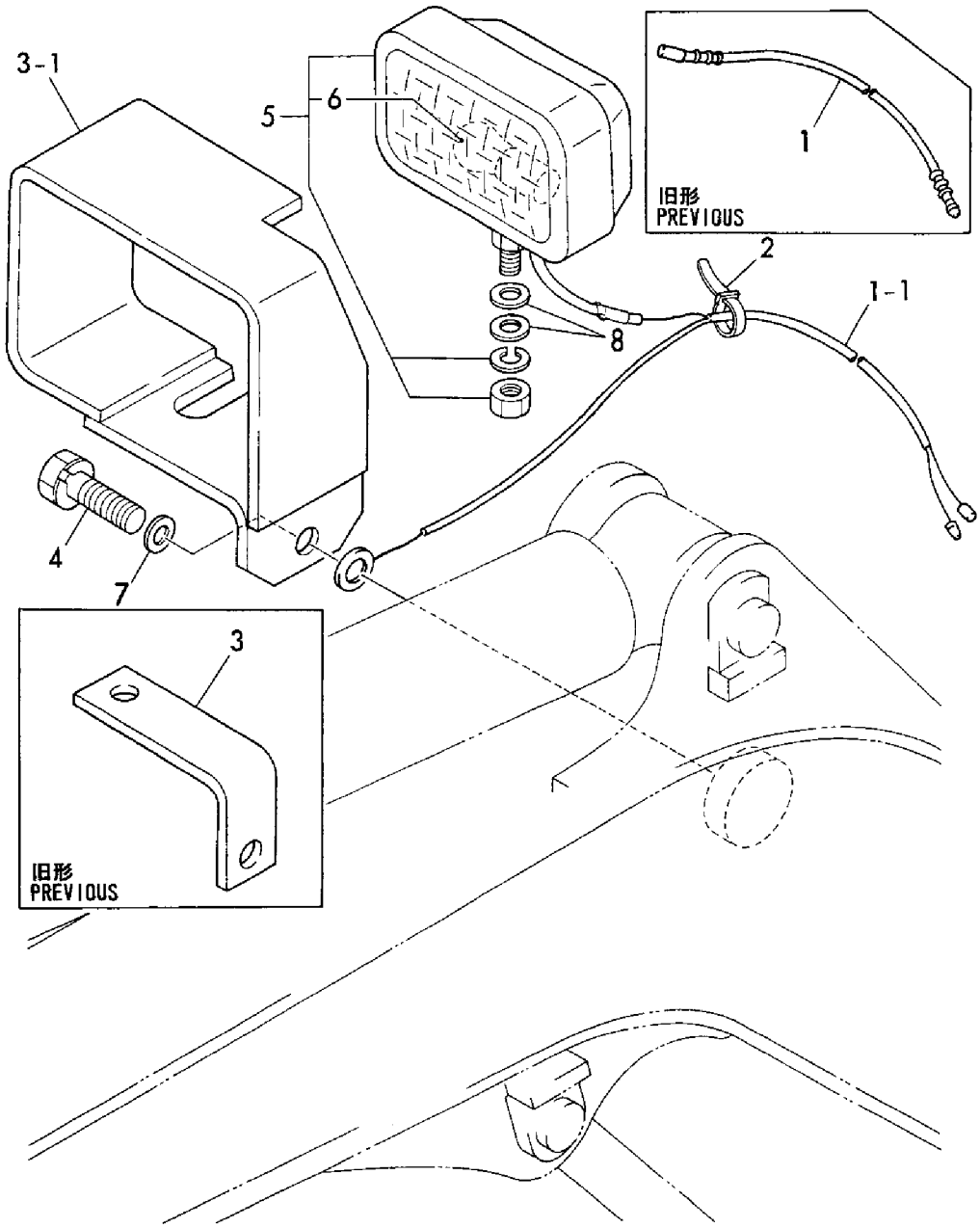

https://truckmanualshub.com/

```
1,1,,172137-29110,,"SPROCKET,RUBBER CRAW",2,2,2,2,2,,,1,,,,,,,,,
2,1,,172137-29120,,SPROCKET,2,2,2,2,2,,,,,,,,,,,,
3,1,,26013-100252,,"BOLT W/WASHER M10X25",18,18,18,18,18,,,,,,,,,,,,
4,1,,772137-37300,,"ROLLER ASSY, TRUCK",6,6,6,6,6,,,,,,,,,,,,
6,2,,172137-37330,,"SHAFT, TRACK ROLLER",6,6,6,6,6,,,,,,,,,,,,
7,2,,172137-37360,,SEAL,12,12,12,12,12,,,,,,,,,,,,
8,2,,22242-000250,,"CIRCLIP 25S",12,12,12,12,12,,,,,,,,,,,,
9,2,,22252-000470,,"CIRCLIP   47",12,12,12,12,12,,,,,,,,,,,,
10,2,,24101-060054,,"BALL BEARING",12,12,12,12,12,,,,,,,,,,,,
```

https://truckmanualshub.com/

Fig. 12 トラックローラ TRACK ROLLER

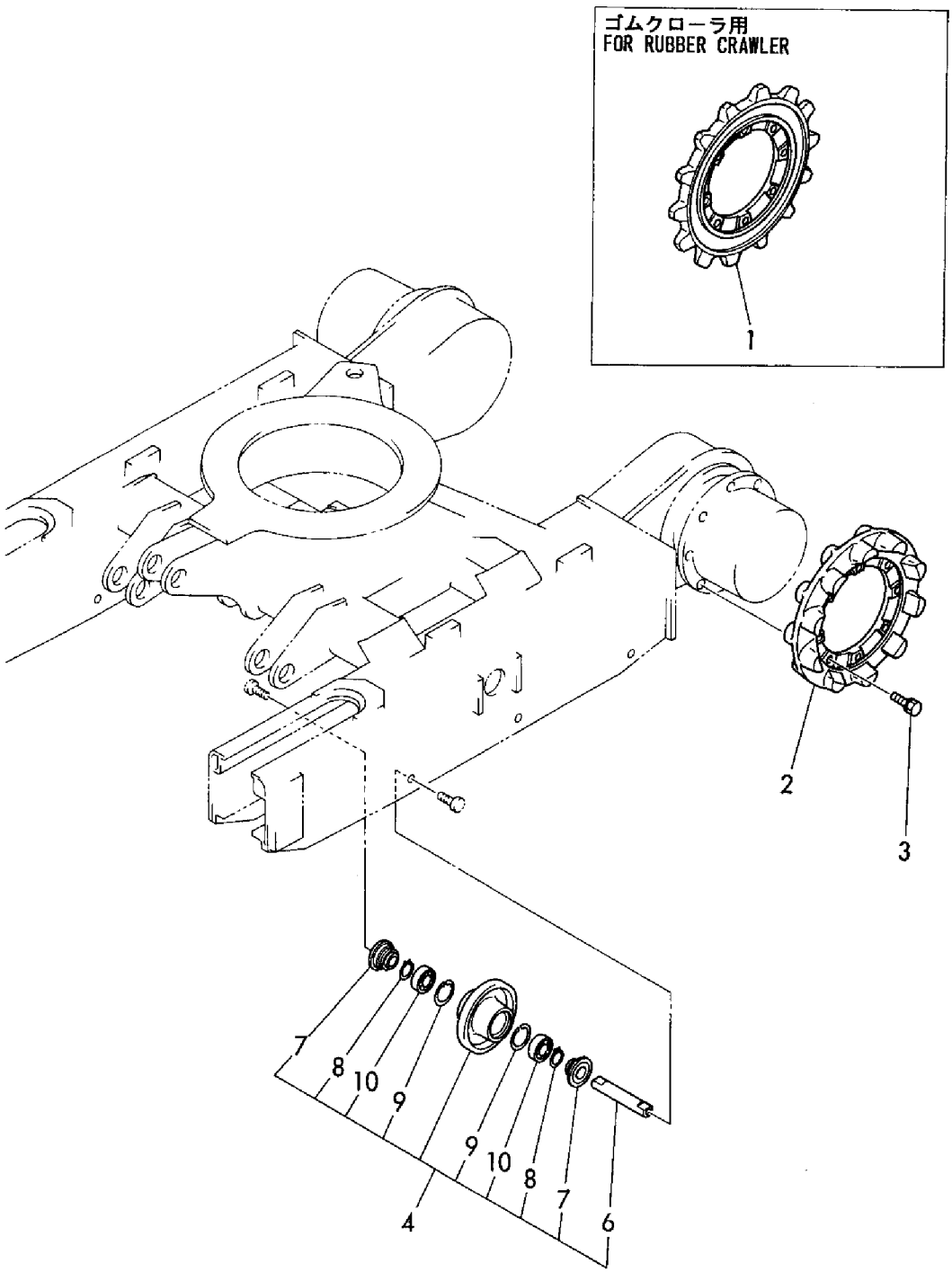

https://truckmanualshub.com/

```
1,1,,772137-37100,,"IDLER ASSY",2,2,2,2,2,,,,,,,,,,,,
1A,2,,172137-99490,,"IDLER KIT, FRONT",2,2,2,2,2,,,,,,,,,,,,
2,3,,172137-37110,,"SHAFT, IDLER",2,2,2,2,2,,,,,,,,,,,,
3,3,,1A1030-48250,,"SEAL QLF30621218,OIL",4,4,4,4,4,,,,,,,,,,,,
4,3,,22242-000300,,"CIRCLIP   30",2,2,2,2,2,,,,,,,,,,,,
5,3,,22252-000620,,"CIRCLIP 62(H)",4,4,4,4,4,,,,,,,,,,,,
6,3,,24101-062064,,"BALL BEARING",4,4,4,4,4,,,,,,,,,,,,
7,3,,933168-13990,,"COLLAR(B),IDLE.SHAFT",2,2,2,2,2,,,,,,,,,,,,
8,2,,172137-37100,,"IDLER ASSY",2,2,2,2,2,,,,,,,,,,,,
9,2,,172137-37130,,"COVER (L), SEAL",2,2,2,2,2,,,,,,,,,,,,
10,2,,172137-37140,,"COVER (R), SEAL",2,2,2,2,2,,,,,,,,,,,,
11,1,,172137-37710,,"SPRING, ADJUSTING",2,2,2,2,2,,,,,,,,,,,,
12,1,,172137-37800,,"TUBE, ADJUSTER",2,,2,,,,,,,,,,,,,,
12-1,1,,172137-37801,,"TUBE, ADJUSTER",2,2,2,2,2,,S,,,M00974,,,,M00784,,,,
13,1,,172122-37842,,"VALVE ASSY, NIPPLE",2,,2,,,,,,,,,,,,,,
13-1,1,,172122-37843,,"VALVE ASSY, NIPPLE",2,2,2,2,2,,S,,,M00974,,,,M00784,,,,
14,2,,24315-000140,,"O-RING 1B P-14.0",2,2,2,2,2,,,,,,,,,,,,
15,2,,24761-020000,,"NIPPLE PT1/8,GREASE",2,2,2,2,2,,,,,,,,,,,,
16,1,,172137-37850,,"RING, BACK UP",2,2,2,2,2,,,,,,,,,,,,
17,1,,24315-000300,,"O-RING 1B P-30.0",2,2,2,2,2,,,,,,,,,,,,
18,1,,26013-100302,,"BOLT M10X 30",8,8,8,8,8,,,,,,,,,,,,
19,1,,933126-38600,,"SEAL, DUST",2,2,2,2,2,,,,,,,,,,,,
20,1,,933171-13691,,"PLUG PT1/8",2,2,2,2,2,,,,,,,,,,,,
21,1,,172149-50100,,"FRAME, LOWER",1,,1,,,,,,,,,,,,,,
21A,1,,172149-50101,,"FRAME, LOWER",,1,,1,1,,,,,,,,,,,,
21A-1,1,,172149-50102,,FRAME,,1,,1,1,,N,,,,,M21238,,,,M20671,,M20671
22,1,,172131-50360,,"COVER,UNDER",1,1,1,1,1,,,,,,,,,,,,
23,1,,172141-50890,,GROMMET,2,2,2,2,2,,,,,,,,,,,,
24,1,,172137-51700,,"COVER, MOTOR",2,2,2,2,2,,,,,,,,,,,,
25,1,,172137-51900,,PLATE,4,4,4,4,4,,,,,,,,,,,,
26,1,,22217-100000,,"SPRING WASHER 10",8,8,8,8,8,,,,,,,,,,,,
27,1,,22217-100000,,"SPRING WASHER 10",4,4,4,4,4,,,,,,,,,,,,
28,1,,22217-120000,,"WASHER 12,SPRING",12,12,12,12,12,,,,,,,,,,,,
29,1,,26013-100302,,"BOLT M10X 30",8,8,8,8,8,,,,,,,,,,,,
30,1,,26116-100202,,"BOLT M10X 20 PLATED",8,8,8,8,8,,,,,,,,,,,,
31,1,,26116-100202,,"BOLT M10X 20 PLATED",4,4,4,4,4,,,,,,,,,,,,
32,1,,26116-120252,,"BOLT M12X 25 PLATED",12,12,12,12,12,,,,,,,,,,,,
33,1,,172131-78350,,"GROMMET 13.5",2,2,2,2,2,,,,,,,,,,,,
```

https://truckmanualshub.com/

Fig. 13 トラックフレーム＆アイドラ TRACK FRAME & IDLER

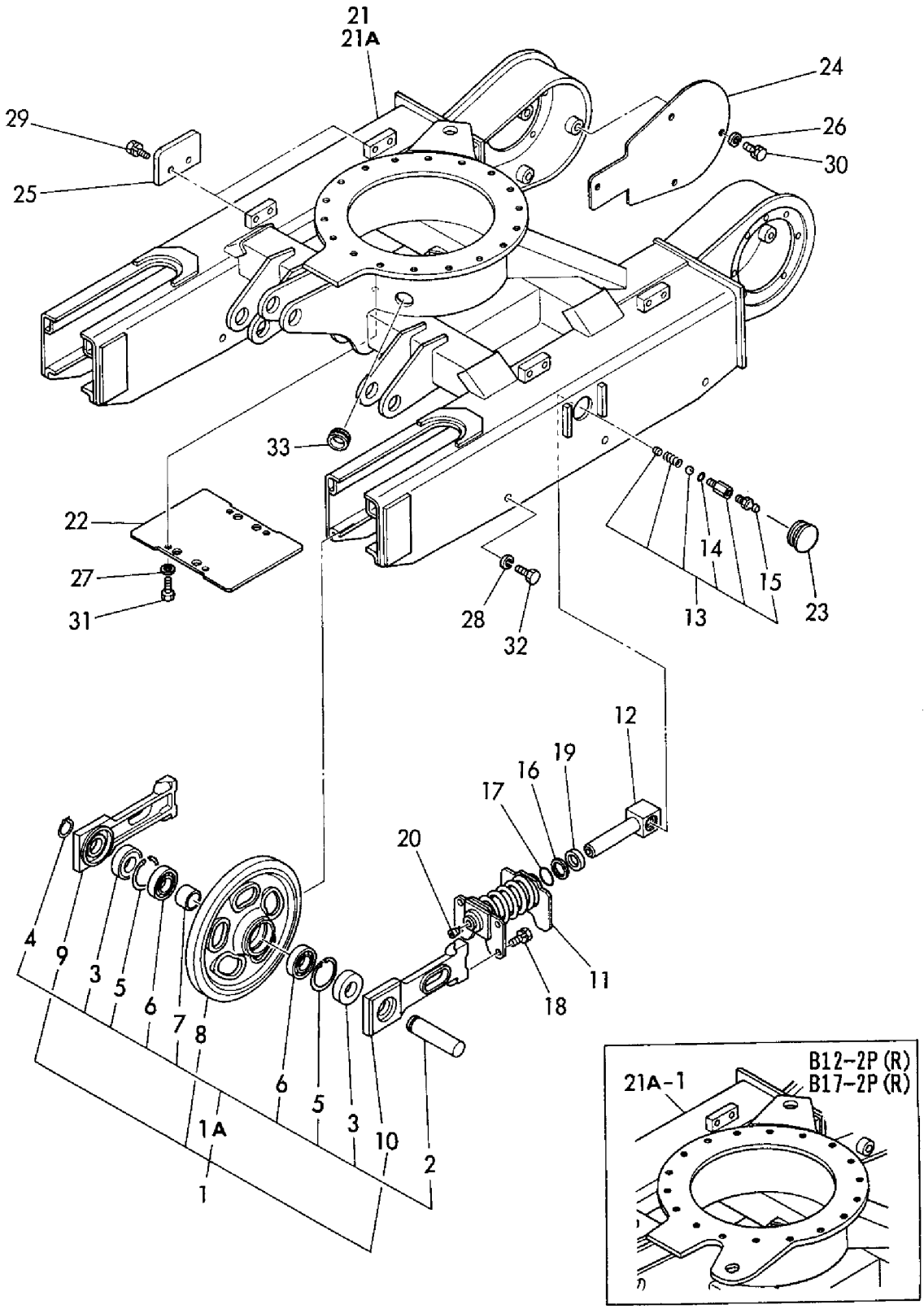

https://truckmanualshub.com/

```
1,1,,772137-38101,,"CRAWLER ASSY",2,2,2,2,2,,,,,,,,,,,
2,2,,172137-38101,,"LINK ASSY, TRACK",2,2,2,2,2,,,,,,,,,,,,
3,3,,172137-38131,,"COLLAR, LINK",58,58,58,58,58,,,,,,,,,,,,
4,3,,172137-38161,,"PIN, TRACK",58,58,58,58,58,,,,,,,,,,,,
5,3,,22351-060020,,"SPRING PIN 6X20",58,58,58,58,58,,,,,,,,,,,,,
6,3,,172137-38111,,"SHOW PLATE",60,60,60,60,60,,,,,,,,,,,,
7,2,,172137-38131,,"COLLAR, LINK",2,2,2,2,2,,,,,,,,,,,,
8,2,,172137-38161,,"PIN, TRACK",2,2,2,2,2,,,,,,,,,,,,
9,2,,22351-060020,,"SPRING PIN 6X20",2,2,2,2,2,,,,,,,,,,,,
10,1,,172137-38600,,"CRAWLER ASSY, RUBBER",2,2,2,2,2,,,,,,,,,,,,,
```

https://truckmanualshub.com/

Fig. 14 リタイ CRAWLER

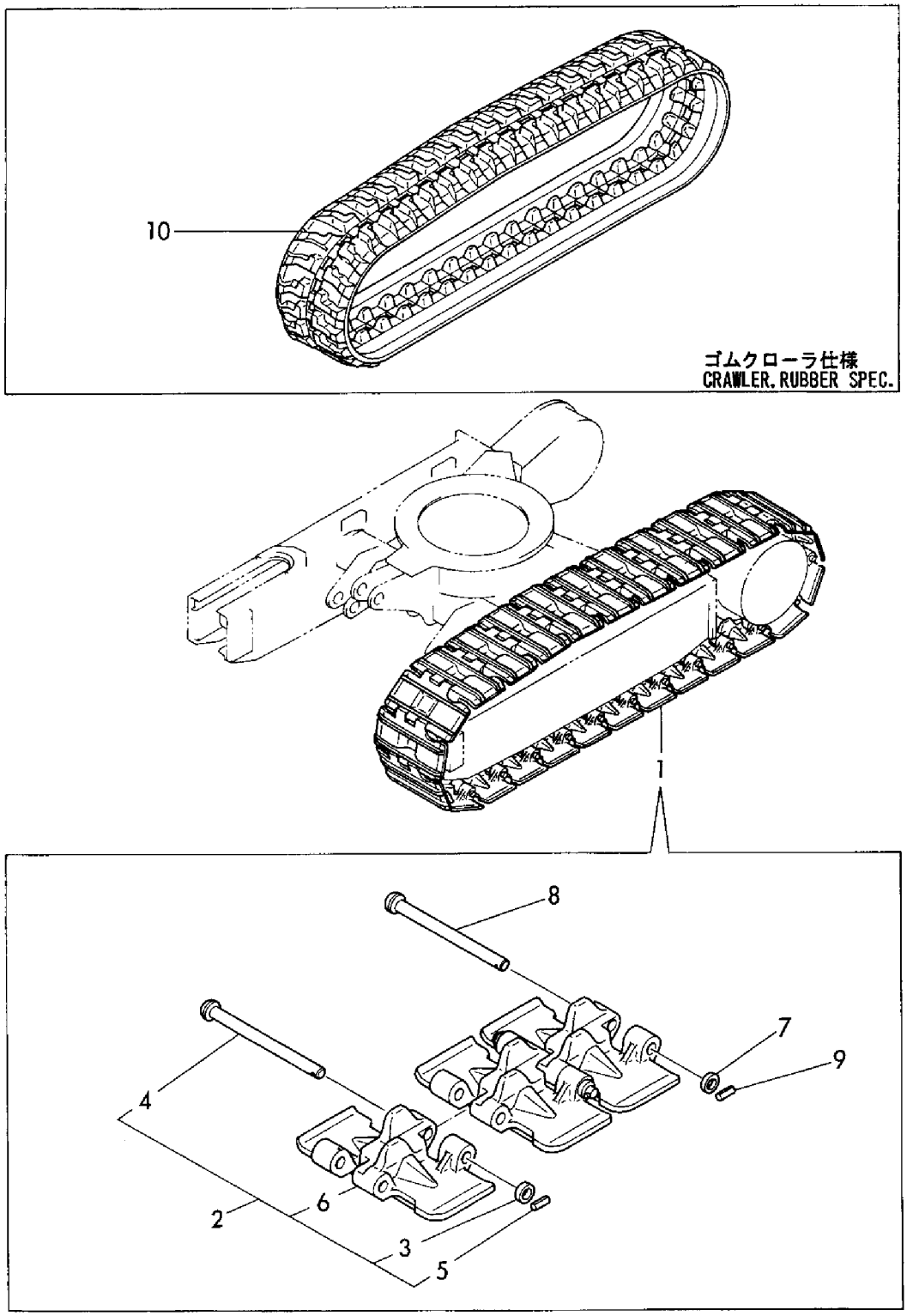

https://truckmanualshub.com/

```
1,1,,172141-41370,,"BUSH 2015",2,2,2,2,2,,,,,,,,,,,
2,1,,172149-41830,,"SHAFT(A), TRACK",1,1,1,1,1,,,,,,,,,,,
3,1,,172149-41860,,"PIN, BLADE",1,1,1,1,1,,,,,,,,,,,
4,1,,172149-41900,,"PLATE, LINK",1,1,1,1,1,,,,,,,,,,,
5,1,,172149-41950,,"PLATE, TRACK",1,1,1,1,1,,,,,,,,,,,
6,1,,172149-42010,,"BRACKET SET",1,,1,,,,,,,,,,,,,,
6-1,1,,172149-42011,,BRACKET,1,1,1,1,1,,S,,,MX,,,,MX,,,,
7,1,,172149-42100,,"SUPPORT, LINK",1,1,1,1,1,,,,,,,,,,,
7-1,1,,172149-42101,,"SUPPORT, LINK",,1,,1,,,S,,,,,M21277,,,,M20679,,
7-2,1,,172149-42101,,"SUPPORT, LINK",,,,,1,,S,,,,,,,,,,M20681
8,1,,172149-42250,,"COVER, SUPPORT",1,1,1,1,1,,,,,,,,,,,
9,1,,22217-080000,,"SPRING WASHER  8",4,4,4,4,4,,,,,,,,,,,
10,1,,24761-020000,,"NIPPLE PT1/8,GREASE",1,1,1,1,1,,,,,,,,,,,
11,1,,26013-100202,,"BOLT W/WASHER M10X20",5,5,5,5,5,,,,,,,,,,,
12,1,,26013-100202,,"BOLT W/WASHER M10X20",1,1,1,1,1,,,,,,,,,,,
13,1,,26013-100202,,"BOLT W/WASHER M10X20",1,1,1,1,1,,,,,,,,,,,
14,1,,26013-100202,,"BOLT W/WASHER M10X20",1,1,1,1,1,,,,,,,,,,,
15,1,,26013-100202,,"BOLT W/WASHER M10X20",3,3,3,3,3,,,,,,,,,,,
16,1,,26013-100252,,"BOLT W/WASHER M10X25",4,4,4,4,4,,,,,,,,,,,
17,1,,26116-080162,,"BOLT M 8X 16 PLATED",4,4,4,4,4,,,,,,,,,,,
18,1,,26756-100002,,"LOCK NUT M10 PLATED",2,2,2,2,2,,,,,,,,,,,
19,1,,26116-100252,,"BOLT M10X 25 PLATED",2,2,2,2,2,,,,,,,,,,,
20,1,,26116-080304,,"BOLT M 8X 30",1,1,1,1,1,,W,,,MX,,,,MX,,,,
21,1,,26716-080002,,"NUT M 8",1,1,1,1,1,,W,,,MX,,,,MX,,,,
22,1,,172312-12150,,"BUSH  10X10",,1,,1,,,W,,,,,M21277,,,,M20679,,
22-1,1,,172312-12150,,"BUSH  10X10",,,,,1,,W,,,,,,,,,,M20681
23,1,,933171-23670,,BUSH,,1,,1,,,W,,,,,M21277,,,,M20679,,
23-1,1,,933171-23670,,BUSH,,,,,1,,W,,,,,,,,,,M20681
```

https://truckmanualshub.com/

発行No. 000Y00K2492-1
更新年月：1996. 09
REVISED : Sep., 1996

Fig. 15 リンク台 LINK STAND

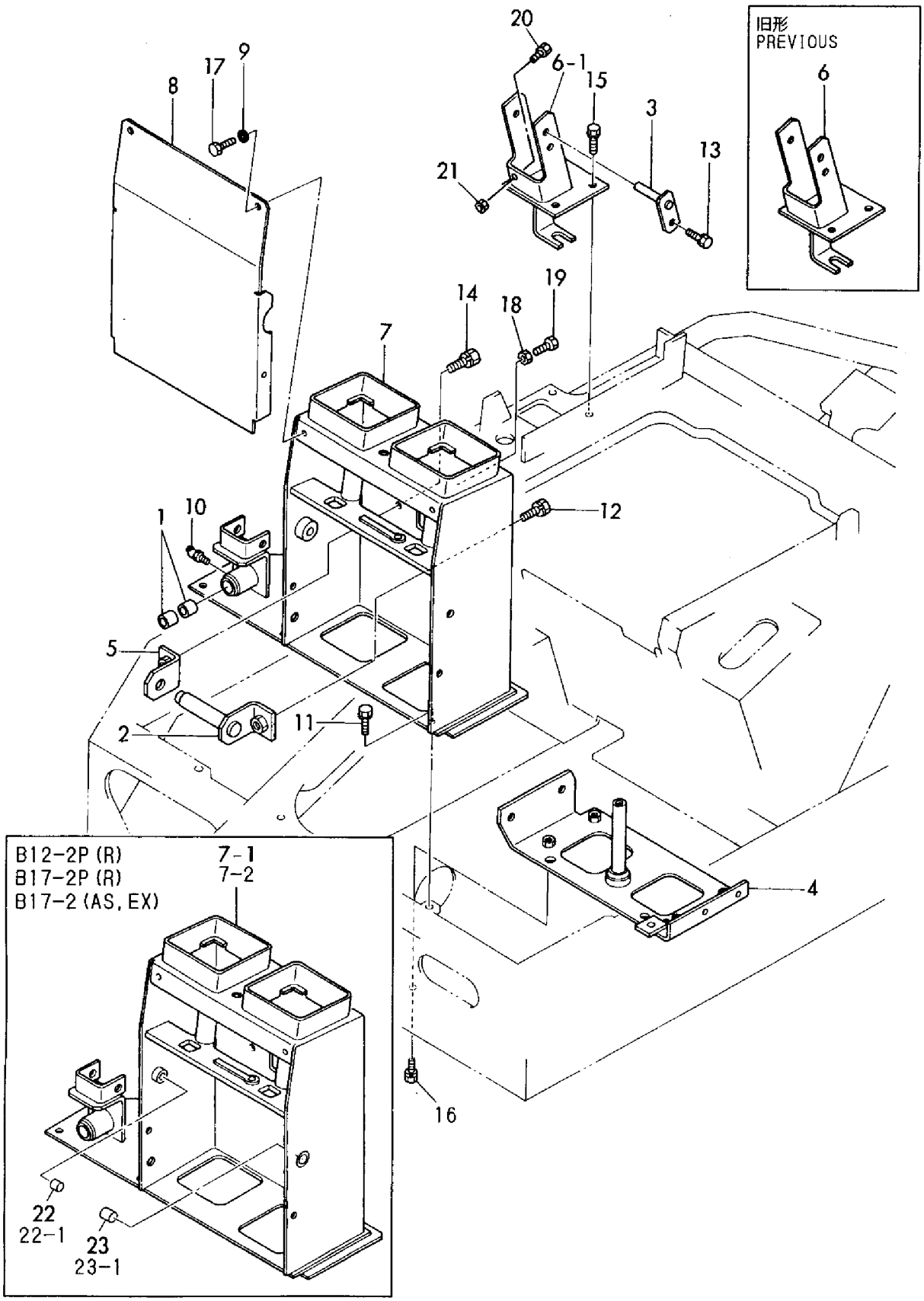

https://truckmanualshub.com/

```
1,1,,172149-41050,,"LEVER (R)",1,,1,,,,,,,,,,,,,,
1-1,1,,172149-41051,,LEVER(R),1,1,1,1,1,,S,,,M00614,,,,M00611,,,,
2,1,,172141-41160,,JOINT,1,1,1,1,1,,,,,,,,,,,,
3,1,,172141-41310,,GROMMET,1,,1,,,,,,,,,,,,,,,
3-1,1,,172141-41311,,GROMMET,1,1,1,1,1,,S,,,M10501,,,,M10501,,,,
4,1,,172141-41330,,"BOOTS, LEVER (BLACK)",1,,1,,,,,,,,,,,,,,,
4-1,1,,172141-41331,,"BOOTS, LEVER (GRAY)",1,1,1,1,1,,S,,,M10501,,,,M10501,,,,
5,1,,24761-040000,,"NIPPLE B,GREASE",1,1,1,1,1,,,,,,,,,,,,
6,1,,172312-46301,,KNOB(A),1,1,1,1,1,,,,,,,,,,,,
7,1,,26757-100002,,"LOCK NUT M10",1,1,1,1,1,,,,,,,,,,,,
8,1,,172149-41250,,"LINK(A), BOOM",1,1,1,1,1,,,,,,,,,,,,
9,1,,172149-41300,,"LINK(B), BOOM",1,1,1,1,1,,,,,,,,,,,,
10,1,,172149-41320,,"LINK, BUCKET",1,1,1,1,1,,,,,,,,,,,,
12,2,,172141-41370,,"BUSH 2015",2,2,2,2,2,,,,,,,,,,,,
13,1,,172149-41650,,"SHAFT, LINK",1,1,1,1,1,,,,,,,,,,,,
14,1,,172149-41790,,"STAY, LINK",1,1,1,1,1,,,,,,,,,,,,
15,1,,172122-45720,,"ROD-END 14",1,1,1,1,1,,,,,,,,,,,,
16,1,,172124-46200,,"O-RING 27X5.7",4,4,4,4,4,,,,,,,,,,,,
17,1,,22157-120000,,"WASHER 12",2,2,2,2,2,,,,,,,,,,,,
18,1,,22217-140000,,"SPRING WASHER 14",1,1,1,1,1,,,,,,,,,,,,
19,1,,26013-100202,,"BOLT W/WASHER M10X20",2,2,2,2,2,,,,,,,,,,,,
20,1,,26716-140002,,"NUT M14",1,1,1,1,1,,,,,,,,,,,,
21,1,,172730-11440,,"TURNBUCKLE 10",2,,2,,,,,,,,,,,,,,,
21-1,1,,172137-46400,,"TURNBUCKLE M10X40",2,2,2,2,2,,S,,,M00614,,,,M00611,,,,
22,1,,194150-22480,,"NUT M10",2,2,2,2,2,,,,,,,,,,,,
23,1,,172149-42540,,ROD(C),2,,2,,,,,,,,,,,,,,,
23-1,1,,172149-42710,,"ROD C COMP",2,2,2,2,2,,N,,,M10949,,,,M10719,,,,
24,1,,172149-42640,,ROD(RA),2,,2,,,,,,,,,,,,,,,
24-1,1,,172149-42641,,ROD(RA),2,2,2,2,2,,S,,,M00614,,,,M00611,,,,
25,1,,172149-42650,,ROD(RB),2,,2,,,,,,,,,,,,,,,
25-1,1,,172149-42651,,ROD(RB),2,2,2,2,2,,S,,,M00614,,,,M00611,,,,
26,1,,172122-46590,,"ELBALL 8",2,2,2,2,2,,,,,,,,,,,,
27,1,,172122-46590,,"ELBALL 8",2,2,2,2,2,,,,,,,,,,,,
28,1,,172122-46590,,"ELBALL 8",2,2,2,2,2,,,,,,,,,,,,
29,1,,1C6281-52810,,"PIN,SNAP  10",2,,2,,,,,,,,,,,,,,,
29-1,1,,1C6281-52310,,"PIN 6,COME-OFF SNAP",2,2,2,2,2,,N,,,M00582,,,,M00581,,,,
30,1,,22217-080000,,"SPRING WASHER  8",2,,2,,,,Z,,,M10949,,,,M10719,,,,
31,1,,22217-080000,,"SPRING WASHER  8",2,,2,,,,Z,,,M10949,,,,M10719,,,,
32,1,,22217-080000,,"SPRING WASHER  8",4,,4,,,,Z,,,M10949,,,,M10719,,,,
33,1,,26716-080002,,"NUT M 8",8,,8,,,,,,,,,,,,,,,
33-1,1,,26051-080002,,"NUT M 8",6,6,6,6,6,,N,,,M10949,,,,M10719,,,,
34,1,,26716-080002,,"NUT M 8",4,,4,,,,,,,,,,,,,,,
34-1,1,,26051-080002,,"NUT M 8",4,4,4,4,4,,N,,,M10949,,,,M10719,,,,
35,1,,26716-080002,,"NUT M 8",4,,4,,,,,,,,,,,,,,,
35-1,1,,26051-080002,,"NUT M 8",4,4,4,4,4,,N,,,M10949,,,,M10719,,,,
36,1,,26716-100002,,"NUT M10",2,2,2,2,2,,,,,,,,,,,,
37,1,,933110-54100,,"PIN 4.75X14",2,2,2,2,2,,,,,,,,,,,,
38,1,,172149-42450,,"ROD(G), SPOOL",2,2,2,2,2,,,,,,,,,,,,
39,1,,26013-100202,,"BOLT W/WASHER M10X20",2,2,2,2,2,,,,,,,,,,,,
40,1,,22137-080000,,"WASHER 8, POLISHED",2,2,2,2,2,,W,,,M10949,,,,M10719,,,,
41,1,,22137-080000,,"WASHER 8, POLISHED",2,2,2,2,2,,W,,,M10949,,,,M10719,,,,
42,1,,22137-080000,,"WASHER 8, POLISHED",2,2,2,2,2,,W,,,M10949,,,,M10719,,,,
```

https://truckmanualshub.com/

Fig. 16 操縦装置（ブーム＆バケット） CONTROL EQUIPMENT (BOOM & BUCKET)

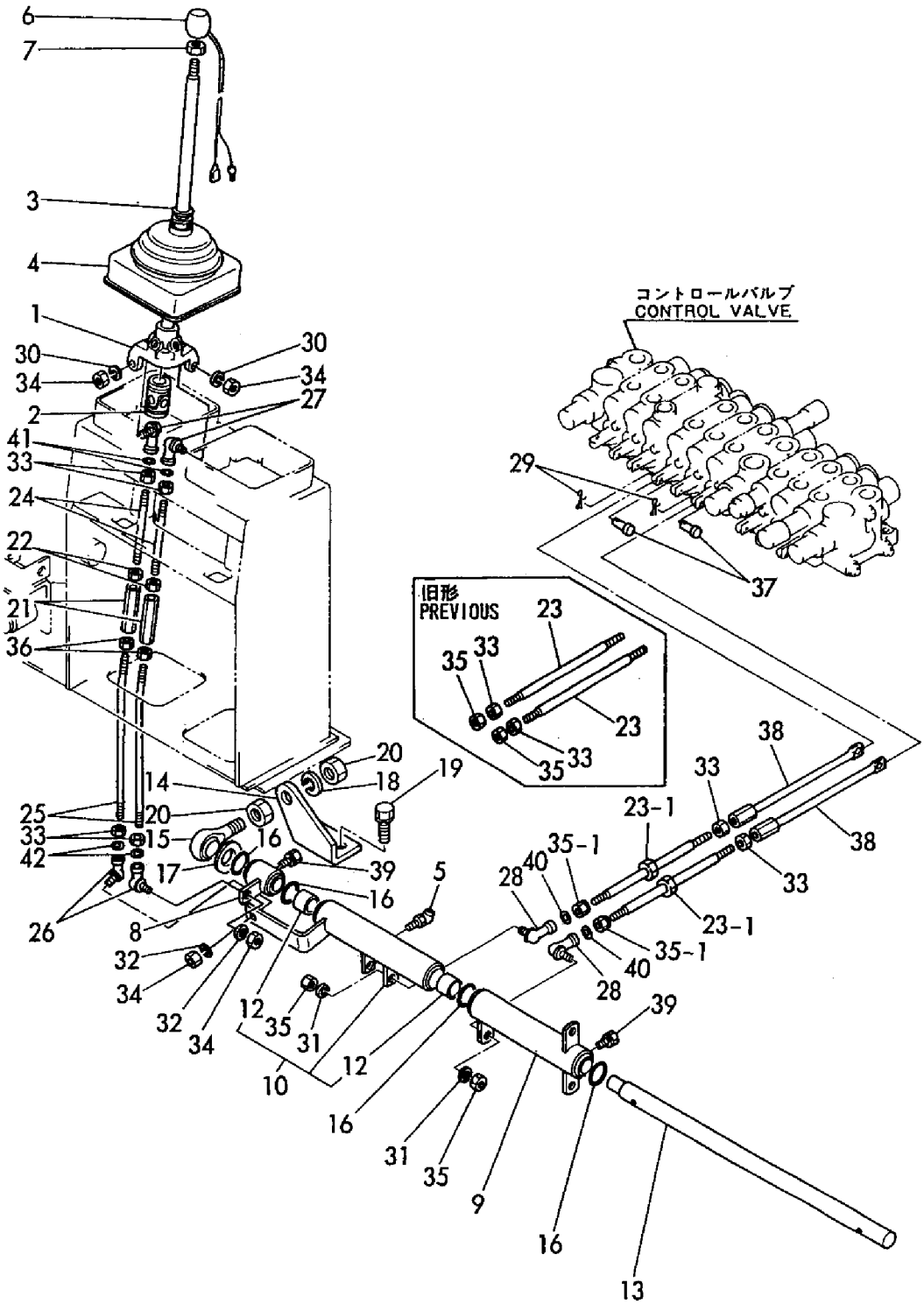

https://truckmanualshub.com/

```
1,1,,172149-41100,,"LEVER L",1,,1,,,,,,,,,,,,,,
1-1,1,,172149-41101,,"LEVER L",1,1,1,1,1,,S,,,M00614,,,,M00611,,,,
2,1,,172141-41150,,"LINK(L), LEVER",1,1,1,1,1,,,,,,,,,,,,
3,1,,172141-41160,,JOINT,1,1,1,1,1,,,,,,,,,,,,
4,1,,172141-41330,,"BOOTS, LEVER (BLACK)",1,,1,,,,,,,,,,,,,,
4-1,1,,172141-41331,,"BOOTS, LEVER (GRAY)",1,1,1,1,1,,S,,,M10501,,,,M10501,,,,
5,1,,172141-41380,,NUT,1,,1,,,,,,,,,,,,,,
5-1,1,,26756-080002,,"LOCK NUT M 8 PLATED",1,1,1,1,1,,S,,,M11861,,,,M11238,,,,
6,1,,172312-46321,,KNOB(B),1,1,1,1,1,,,,,,,,,,,,
7,1,,22351-030010,,"SPRING PIN 3X10",1,1,1,1,1,,,,,,,,,,,,
8,1,,24311-000140,,"O-RING 1A P-14.0",1,1,1,1,1,,,,,,,,,,,,
9,1,,26063-080201,,"BOLT M 8X 20",1,,1,,,,,,,,,,,,,,
9-1,1,,26979-080162,,"SCREW M 8X16",1,1,1,1,1,,S,,,M11861,,,,M11238,,,,
10,1,,26757-100002,,"LOCK NUT M10",1,1,1,1,1,,,,,,,,,,,,
11,1,,1C6281-52320,,"PIN 8,COME-OFF SNAP",2,2,2,2,2,,,,,,,,,,,,
12,1,,172149-41370,,"LINK, TURNING",1,1,1,1,1,,,,,,,,,,,,
13,2,,172141-41370,,"BUSH 2015",2,2,2,2,2,,,,,,,,,,,,
15,1,,172149-41420,,"LINK, ARM",1,1,1,1,1,,,,,,,,,,,,
16,2,,172141-41370,,"BUSH 2015",2,2,2,2,2,,,,,,,,,,,,
18,1,,172149-41660,,SHAFT(A),1,1,1,1,1,,,,,,,,,,,,
19,1,,172124-46200,,"O-RING 27X5.7",3,3,3,3,3,,,,,,,,,,,,
20,1,,172149-42450,,"ROD(G), SPOOL",2,2,2,2,2,,,,,,,,,,,,
21,1,,26013-100202,,"BOLT W/WASHER M10X20",2,2,2,2,2,,,,,,,,,,,,
22,1,,172149-42560,,"ROD (D)",1,,1,,,,,,,,,,,,,,
22-1,1,,172149-42690,,"ROD D COMPL.",1,1,1,1,1,,N,,,M10949,,,,M10719,,,,
23,1,,172149-42580,,ROD(Z),1,,1,,,,,,,,,,,,,,
23-1,1,,172149-42700,,"ROD E COMPL.",1,1,1,1,1,,N,,,M10949,,,,M10719,,,,
24,1,,172149-42620,,"ROD (L)",2,2,2,2,2,,,,,,,,,,,,
25,1,,172122-46590,,"ELBALL 8",2,2,2,2,2,,,,,,,,,,,,
26,1,,172122-47250,,"BALL 8, LINK",2,2,2,2,2,,,,,,,,,,,,
27,1,,1C6281-52810,,"PIN,SNAP  10",2,,2,,,,,,,,,,,,,,
27-1,1,,1C6281-52310,,"PIN 6,COME-OFF SNAP",2,2,2,2,2,,N,,,MX,,,,MX,,,,
28,1,,22217-080000,,"SPRING WASHER  8",2,,2,,,,Z,,,M10949,,,,M10719,,,,
29,1,,22217-080000,,"SPRING WASHER  8",2,,2,,,,Z,,,M10949,,,,M10719,,,,
30,1,,26716-080002,,"NUT M 8",8,,8,,,,,,,,,,,,,,
30-1,1,,26051-080002,,"NUT M 8",8,8,8,8,8,,N,,,M10949,,,,M10719,,,,
31,1,,26716-080002,,"NUT M 8",4,,4,,,,,,,,,,,,,,
31-1,1,,26051-080002,,"NUT M 8",4,4,4,4,4,,N,,,M10949,,,,M10719,,,,
32,1,,933110-54100,,"PIN 4.75X14",2,2,2,2,2,,,,,,,,,,,,
33,1,,172122-46570,,"ROD-END  8",2,,2,,,,,,,,,,,,,,
33-1,1,,172122-46571,,"ROD-END  8",2,2,2,2,2,,N,,,M02063,,,,M01366,,,,
34,1,,22137-080000,,"WASHER 8, POLISHED",2,2,2,2,2,,W,,,M10949,,,,M10719,,,,
35,1,,22137-080000,,"WASHER 8, POLISHED",4,4,4,4,4,,W,,,M10949,,,,M10719,,,,
```

https://truckmanualshub.com/

Fig. 17 操縦装置（アーム＆旋回） CONTROL EQUIPMENT (ARM & TURNING)

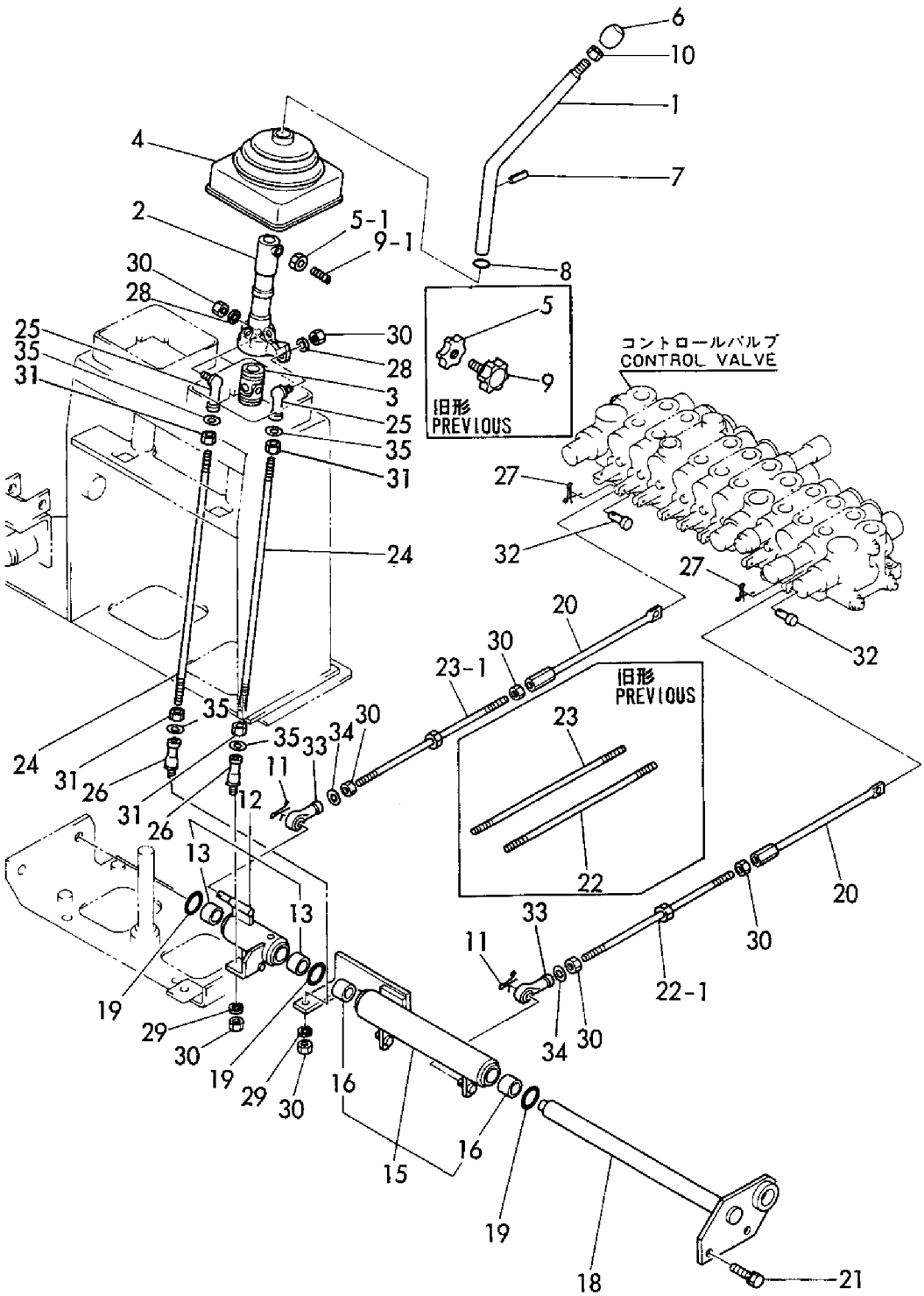

https://truckmanualshub.com/

```
1,1,,172149-41120,,"LEVER(R), TRACK",1,,1,,,,,,,,,,,,,
1A,1,,172149-41121,,"LEVER(R), TRACK",,1,,1,1,,,,,,,,,,,
3,2,,172141-41370,,"BUSH 2015",2,2,2,2,2,,,,,,,,,,,
4,1,,172149-41160,,"LEVER(L), TRACK",1,,1,,,,,,,,,,,,,,
4A,1,,172149-41161,,"LEVER(R), TRACK",,1,,1,1,,,,,,,,,,,
6,2,,172141-41370,,"BUSH 2015",2,2,2,2,2,,,,,,,,,,,
7,1,,172137-45080,,"KNOB, LEVER",2,,2,,,,,,,,,,,,,,
7A,1,,172164-45950,,"GRIP L, DRIV.",,1,,1,1,,,,,,,,,,,
7B,1,,172164-45960,,"GRIP R, DRIV.",,1,,1,1,,,,,,,,,,,
8,1,,24761-040000,,"NIPPLE B,GREASE",4,4,4,4,4,,,,,,,,,,,
9,1,,24761-050000,,"NIPPLE C,GREASE",1,1,1,1,1,,,,,,,,,,,
10,1,,172149-41480,,"LINK, TRACK(L)",1,1,1,1,1,,,,,,,,,,,
11,2,,172141-41370,,"BUSH 2015",2,2,2,2,2,,,,,,,,,,,
13,1,,172149-41530,,"LINK, TRACK(R)",1,1,1,1,1,,,,,,,,,,,
14,2,,172141-41370,,"BUSH 2015",2,2,2,2,2,,,,,,,,,,,
16,1,,172149-41600,,"LINK(B), SWING",1,1,1,1,1,,,,,,,,,,,
17,1,,172149-41710,,"SHAFT, TRACK",1,1,1,1,1,,,,,,,,,,,
18,1,,172149-41750,,"LINK(A), SWING",1,1,1,1,1,,,,,,,,,,,
19,2,,172141-41370,,"BUSH 2015",2,2,2,2,2,,,,,,,,,,,
21,1,,1A1040-45890,,"WASHER 10 36 4.5",1,1,1,1,1,,,,,,,,,,,
22,1,,172124-46200,,"O-RING 27X5.7",9,9,9,9,9,,,,,,,,,,,
23,1,,26013-100202,,"BOLT W/WASHER M10X20",2,2,2,2,2,,,,,,,,,,,,
24,1,,172111-16890,,"GROMMET  9",1,1,1,1,1,,,,,,,,,,,
25,1,,172149-41800,,"PEDAL, SWING",1,1,1,1,1,,,,,,,,,,,
26-1,1,,172141-41940,,"LOCK, SWING",1,1,1,1,1,,,1,,,,,,,,,
27,1,,172614-45170,,"SPRING 12",1,1,1,1,1,,,,,,,,,,,
28,1,,22217-100000,,"SPRING WASHER 10",2,2,2,2,2,,,,,,,,,,,
29,1,,22417-250200,,"COTTER PIN 2.5X20",1,1,1,1,1,,,,,,,,,,,,
30,1,,26716-100002,,"NUT M10",2,2,2,2,2,,,,,,,,,,,
31,1,,933171-18390,,"PIN, FOOT BAR",1,1,1,1,1,,,,,,,,,,,
32,1,,172149-42500,,"ROD(A), SPOOL",2,2,2,2,2,,,,,,,,,,,
33,1,,172149-42520,,"ROD(B), SPOOL",1,1,1,1,1,,,,,,,,,,,
34,1,,172149-42590,,ROD(F),1,1,1,1,1,,,,,,,,,,,
35,1,,172149-42630,,"ROD, DRIVING",2,,2,,,,,,,,,,,,,,
35-1A,1,,172149-42600,,"ROD, DRIVING",1,1,1,1,1,,S,,,M00582,,,,M00581,,,,
35-1B,1,,172149-42610,,"ROD(R) W/BUSH",1,1,1,1,1,,W,,,M00582,,,,M00581,,,,
36,1,,172122-46590,,"ELBALL 8",1,1,1,1,1,,,,,,,,,,,
37,1,,172122-46590,,"ELBALL 8",3,3,3,3,3,,,,,,,,,,,
38,1,,172122-47250,,"BALL 8, LINK",4,4,4,4,4,,,,,,,,,,,
39,1,,172122-47250,,"BALL 8, LINK",1,1,1,1,1,,,,,,,,,,,
40,1,,1C6281-52810,,"PIN,SNAP  10",3,,3,,,,,,,,,,,,,,
40-1,1,,1C6281-52310,,"PIN 6,COME-OFF SNAP",3,3,3,3,3,,N,,,M00582,,,,M00581,,,,
41,1,,22217-080000,,"SPRING WASHER  8",4,,4,,,,Z,,,M10949,,,,M10719,,,,
42,1,,22217-080000,,"SPRING WASHER  8",1,,1,,,,Z,,,M10949,,,,M10719,,,,
43,1,,22217-080000,,"SPRING WASHER  8",3,,3,,,,Z,,,M10949,,,,M10719,,,,
44,1,,22217-080000,,"SPRING WASHER  8",1,,1,,,,Z,,,M10949,,,,M10719,,,,
45,1,,26716-080002,,"NUT M 8",4,,4,,,,,,,,,,,,,,
45-1,1,,26051-080002,,"NUT M 8",4,4,4,4,4,,N,,,M10949,,,,M10719,,,,
46,1,,26716-080002,,"NUT M 8",9,,9,,,,,,,,,,,,,,
46-1,1,,26051-080002,,"NUT M 8",6,6,6,6,6,,N,,,M10949,,,,M10719,,,,
47,1,,26716-080002,,"NUT M 8",8,,8,,,,,,,,,,,,,,
47-1,1,,26051-080002,,"NUT M 8",8,8,8,8,8,,N,,,M10949,,,,M10719,,,,
48,1,,933110-54100,,"PIN 4.75X14",3,3,3,3,3,,,,,,,,,,,
49,1,,26013-100202,,"BOLT W/WASHER M10X20",1,1,1,1,1,,,,,,,,,,,
50,1,,26116-100602,,"BOLT M10X 60 PLATED",2,2,2,2,2,,,,,,,,,,,
51,1,,22137-080000,,"WASHER 8, POLISHED",2,2,2,2,2,,W,,,M10949,,,,M10719,,,,
52,1,,22137-080000,,"WASHER 8, POLISHED",3,3,3,3,3,,W,,,M10949,,,,M10719,,,,
53,1,,22137-080000,,"WASHER 8, POLISHED",4,4,4,4,4,,W,,,M10949,,,,M10719,,,,
54,1,,26716-100002,,"NUT M10",,2,,2,2,,,,,,,,,,,
```

https://truckmanualshub.com/

Fig. 18 操縦装置（走行＆スイング） CONTROL EQUIPMENT (TRAVEL & SWING)

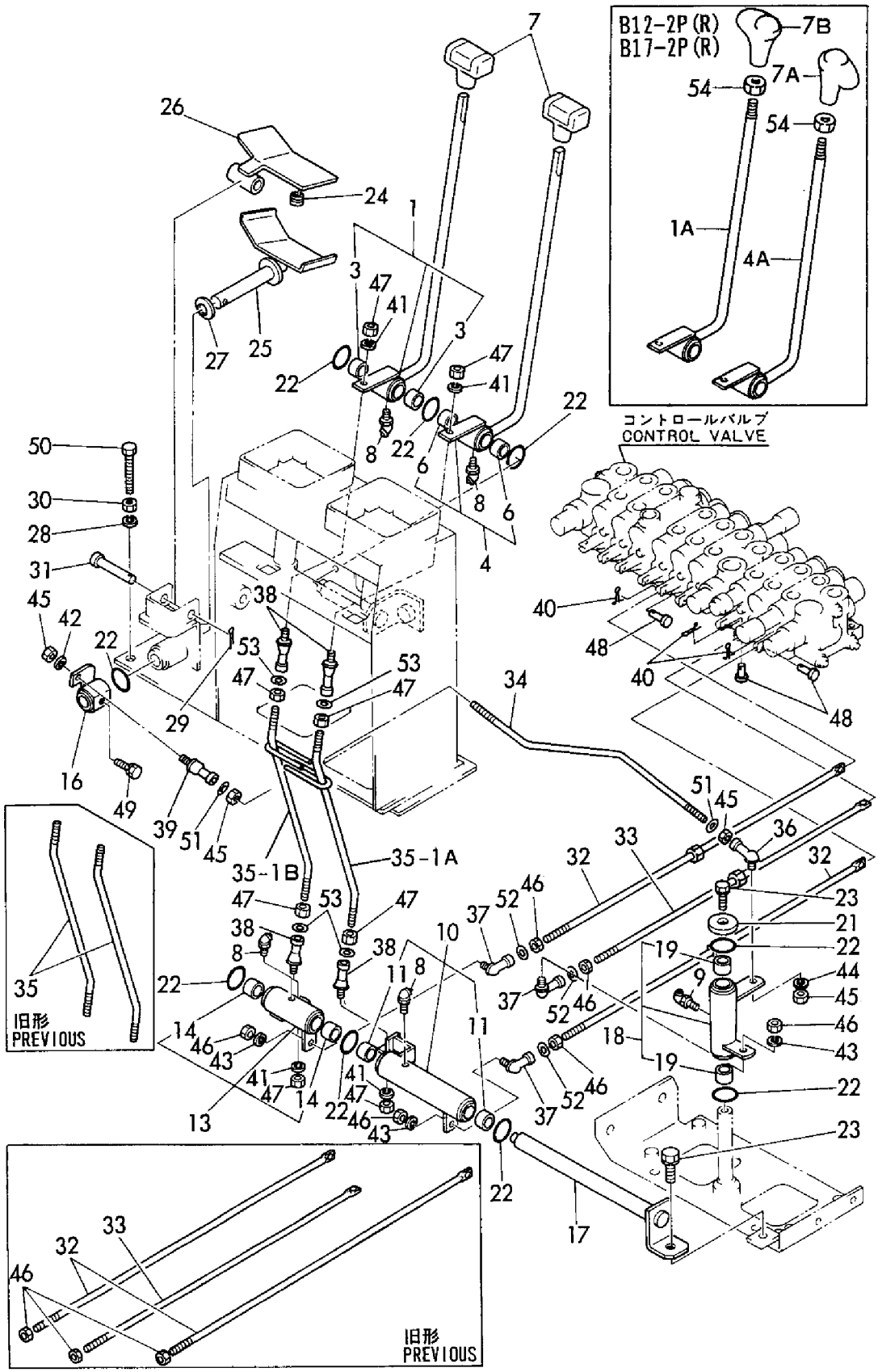

https://truckmanualshub.com/

```
1,1,,172149-41190,,"LEVER, BLADE",1,,1,,,,,,,,,,,,,,
1-1,1,,172149-41191,,"LEVER, BLADE",1,1,1,1,1,,S,,,MX,,,,MX,,,,
1-2,1,,172149-41192,,"LEVER, BLADE",,1,,1,1,,S,,,,,M20803,,,,M20546,,M20546
3,2,,172141-41360,,"BUSH 1415",2,2,2,2,2,,,,,,,,,,,,
4,1,,172141-41340,,BOOTS,1,1,1,1,1,,,,,,,,,,,,
5,1,,172116-45940,,"KNOB (C), LEVER",1,,1,,,,,,,,,,,,,,
5A,1,,172164-45970,,"GRIP, BLADE",,1,,1,1,,,,,,,,,,,,
6,1,,24311-000210,,"O-RING 1A P-21.0",2,2,2,2,2,,,,,,,,,,,,
7,1,,26013-100202,,"BOLT W/WASHER M10X20",2,2,2,2,2,,,,,,,,,,,,
8,1,,172149-42670,,"SUPPORT, CABLE",1,1,1,1,1,,,,,,,,,,,,
9,1,,172141-42960,,"JOINT, CABLE",1,1,1,1,1,,,,,,,,,,,,
10,1,,172122-46590,,"ELBALL 8",1,1,1,1,1,,,,,,,,,,,,
11,1,,172116-46910,,"JOINT, SPOOL",1,1,1,1,1,,,,,,,,,,,,
12,1,,172149-42680,,"CABLE, BLADE",1,1,1,1,1,,,,,,,,,,,,
13,1,,1C6281-52810,,"PIN,SNAP  10",1,,1,,,,,,,,,,,,,,
13-1,1,,1C6281-52310,,"PIN 6,COME-OFF SNAP",1,1,1,1,1,,N,,,MX,,,,MX,,,,
14,1,,22217-080000,,"SPRING WASHER  8",2,,2,,,,,,,,,,,,,,
14-1,1,,22217-080000,,"SPRING WASHER  8",1,1,1,1,1,,K,,,MX,,,,MX,,,,
15,1,,933110-54100,,"PIN 4.75X14",1,1,1,1,1,,,,,,,,,,,,
16,1,,26716-080002,,"NUT M 8",1,,1,,,,,,,,,,,,,,
16-1,1,,26051-080002,,"NUT M 8",1,1,1,1,1,,N,,,MX,,,,MX,,,,
```

https://truckmanualshub.com/

Fig. 19 操縦装置（ブレード） CONTROL EQUIPMENT (BLADE)

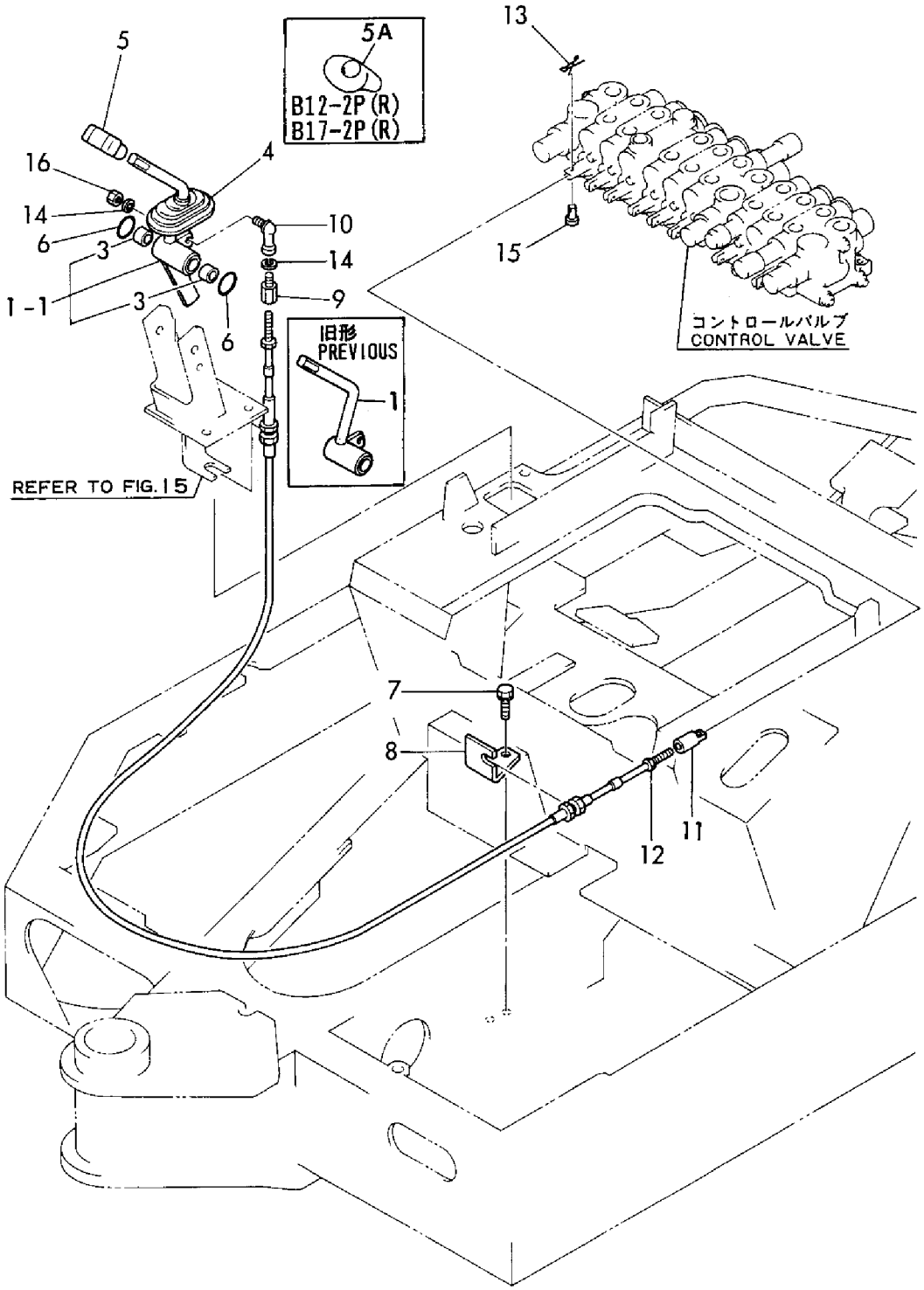

https://truckmanualshub.com/

```
1,1,,172149-42300,,"LEVER, LOCK",1,1,1,1,1,,,,,,,,,,,,
1-1,1,,172149-42301,,"LEVER, LOCK L",,1,,1,,,S,,,,,M21277,,,,M20679,,
1-2,1,,172149-42301,,"LEVER, LOCK L",,,,,1,,S,,,,,,,,,,,M20681
2,1,,172149-42350,,"ARM, LOCK",1,1,1,1,1,,,,,,,,,,,,
2-1,1,,172149-42351,,"ARM ASSY, LOCK",,1,,1,,,S,,,,,M21277,,,,M20679,,
2-2,1,,172149-42351,,"ARM ASSY, LOCK",,,,,1,,S,,,,,,,,,,,M20681
3,1,,172149-42390,,SPACER,1,1,1,1,1,,,,,,,,,,,,
3-1,1,,172149-42390,,SPACER,,1,,1,,,Z,,,,,M21277,,,,M20679,,
3-2,1,,172149-42390,,SPACER,,,,,1,,Z,,,,,,,,,,,M20681
4,1,,172141-42600,,"PIPE, LOCK",2,2,2,2,2,,,,,,,,,,,,
5,1,,172141-42700,,"LINK, LOCK",4,4,4,4,4,,,,,,,,,,,,
5-1,1,,172141-42701,,"LINK, LOCK",,4,,4,,,N,,,,,M21253,,,,M20673,,
5-2,1,,172141-42701,,"LINK, LOCK",,,,,4,,N,,,,,,,,,,,M20681
6,1,,172141-42750,,"BOLT, STOPPER",8,8,8,8,8,,,,,,,,,,,,
7,1,,1C6281-52310,,"PIN 6,COME-OFF SNAP",4,4,4,4,4,,,,,,,,,,,,
8,1,,22137-120000,,"WASHER 12,POLISHED",4,4,4,4,4,,,,,,,,,,,,
8-1,1,,22137-120000,,"WASHER 12,POLISHED",,2,,2,,,K,,,,,M21277,,,,M20679,,
8-2,1,,22137-120000,,"WASHER 12,POLISHED",,,,,2,,K,,,,,,,,,,,M20681
9,1,,26756-080002,,"LOCK NUT M 8 PLATED",8,8,8,8,8,,,,,,,,,,,,
10,1,,26756-120002,,"LOCK NUT M12 PLATED",4,4,4,4,4,,,,,,,,,,,,
10-1,1,,26756-120002,,"LOCK NUT M12 PLATED",,2,,2,,,K,,,,,M21277,,,,M20679,,
10-2,1,,26756-120002,,"LOCK NUT M12 PLATED",,,,,2,,K,,,,,,,,,,,M20681
11,1,,933110-54100,,"PIN 4.75X14",4,4,4,4,4,,,,,,,,,,,,
12,1,,933170-01490,,"SPRING 12",4,4,4,4,4,,,,,,,,,,,,
12-1,1,,933170-01490,,"SPRING 12",,2,,2,,,K,,,,,M21277,,,,M20679,,
12-2,1,,933170-01490,,"SPRING 12",,,,,2,,K,,,,,,,,,,,M20681
13,1,,172116-46630,,"KNOB, LOCK LEVER",1,1,1,1,1,,,,,,,,,,,,
13-1,1,,172116-46630,,"KNOB, LOCK LEVER",,2,,2,,,K,,,,,M21277,,,,M20679,,
13-2,1,,172116-46630,,"KNOB, LOCK LEVER",,,,,2,,K,,,,,,,,,,,M20681
14,1,,172149-42320,,"LEVER,LOCK R",,1,,1,,,W,,,,,M21277,,,,M20679,,
14-1,1,,172149-42320,,"LEVER,LOCK R",,,,,1,,W,,,,,,,,,,,M20681
15,1,,22351-040025,,"PIN 4X25,SPRING",,1,,1,,,W,,,,,M21277,,,,M20679,,
15-1,1,,26013-060202,,"BOLT M 6X 20",,1,,1,,,N,,,,,*1995.09,,,,*1995.09,,
15-2,1,,26013-060202,,"BOLT M 6X 20",,,,,1,,W,,,,,,,,,,,M20681
```

https://truckmanualshub.com/

発行No. 000Y00K2492-1
更新年月：1996. 09
REVISED : Sep., 1996

Fig. 20 作業レバーストッパ OPERATION LEVER STOPPER

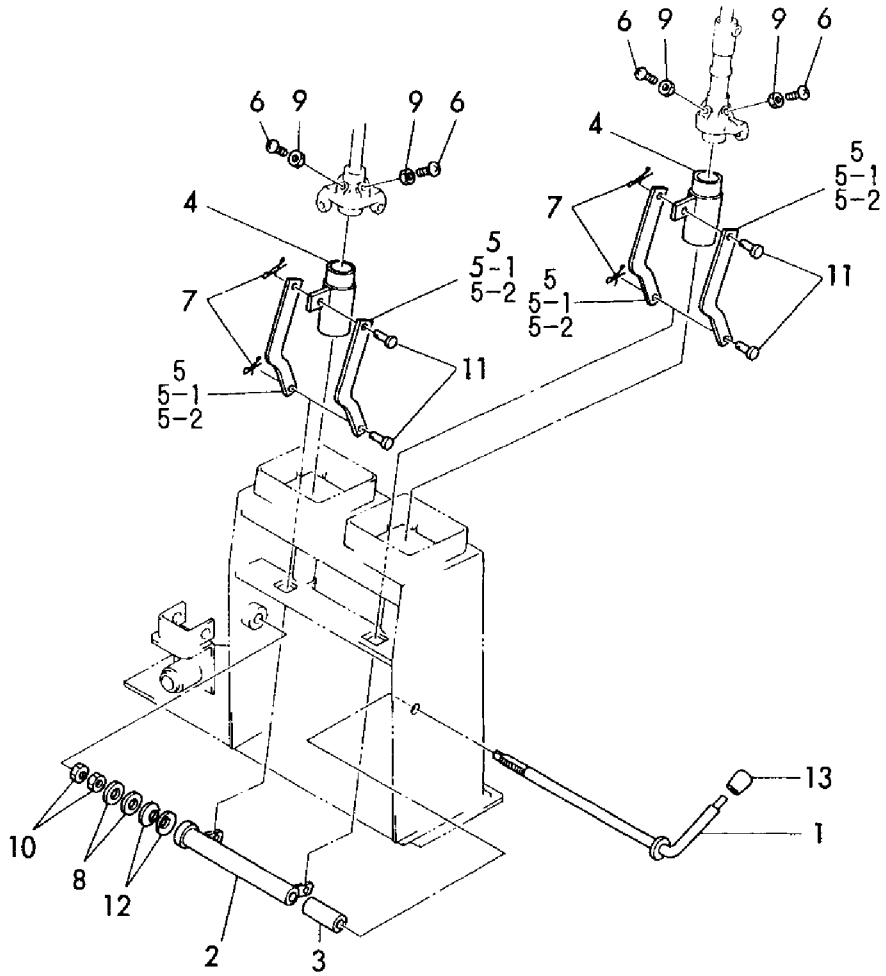

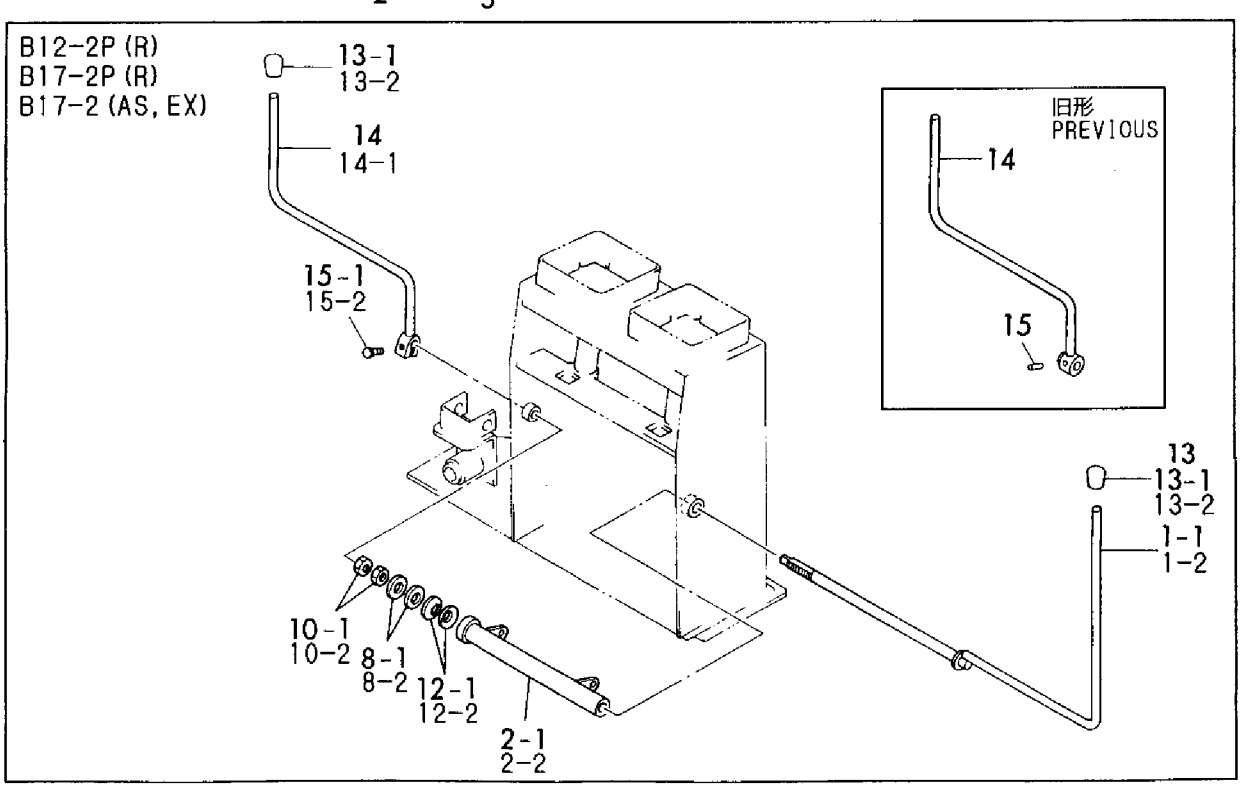

https://truckmanualshub.com/

```
1,1,,172149-53100,,PROTECTOR(L),1,1,1,1,1,,,,,,,,,,,,
2,1,,172149-53190,,PROTECTOR(R),1,1,1,1,1,,,,,,,,,,,,
3,1,,26013-120302,,"BOLT W/WASHER M12X30",8,8,8,8,8,,,,,,,,,,,,
4,1,,172111-16890,,"GROMMET  9",,,1,1,1,,,,,,,,,,,,
5,1,,172150-53350,,"WEIGHT, COUNTER",,,1,1,1,,,,,,,,,,,,
6,1,,22137-120000,,"WASHER 12,POLISHED",,,2,2,2,,,,,,,,,,,,
7,1,,22217-120000,,"WASHER 12,SPRING",,,2,2,2,,,,,,,,,,,,
8,1,,26116-120352,,"BOLT M12X 35 PLATED",,,2,2,2,,,,,,,,,,,,
9A,1,,172149-54100,,"FRAME, TURNING",1,,1,,,,,,,,,,,,,,
9B,1,,172149-54100-3,,"FLAME,TURNING,G:86",,1,,1,1,,,,,,,,,,,,
10,2,,172149-54050,,BUSH,2,2,2,2,2,,,,,,,,,,,,
11,1,,24761-040000,,"NIPPLE B,GREASE",1,1,1,1,1,,,,,,,,,,,,
12,1,,172730-05250,,"WASHER 12",8,8,8,8,8,,W,,,M00501,,,,M00501,,,,
```

https://truckmanualshub.com/

Fig. 21 旋回フレーム TURNING FRAME

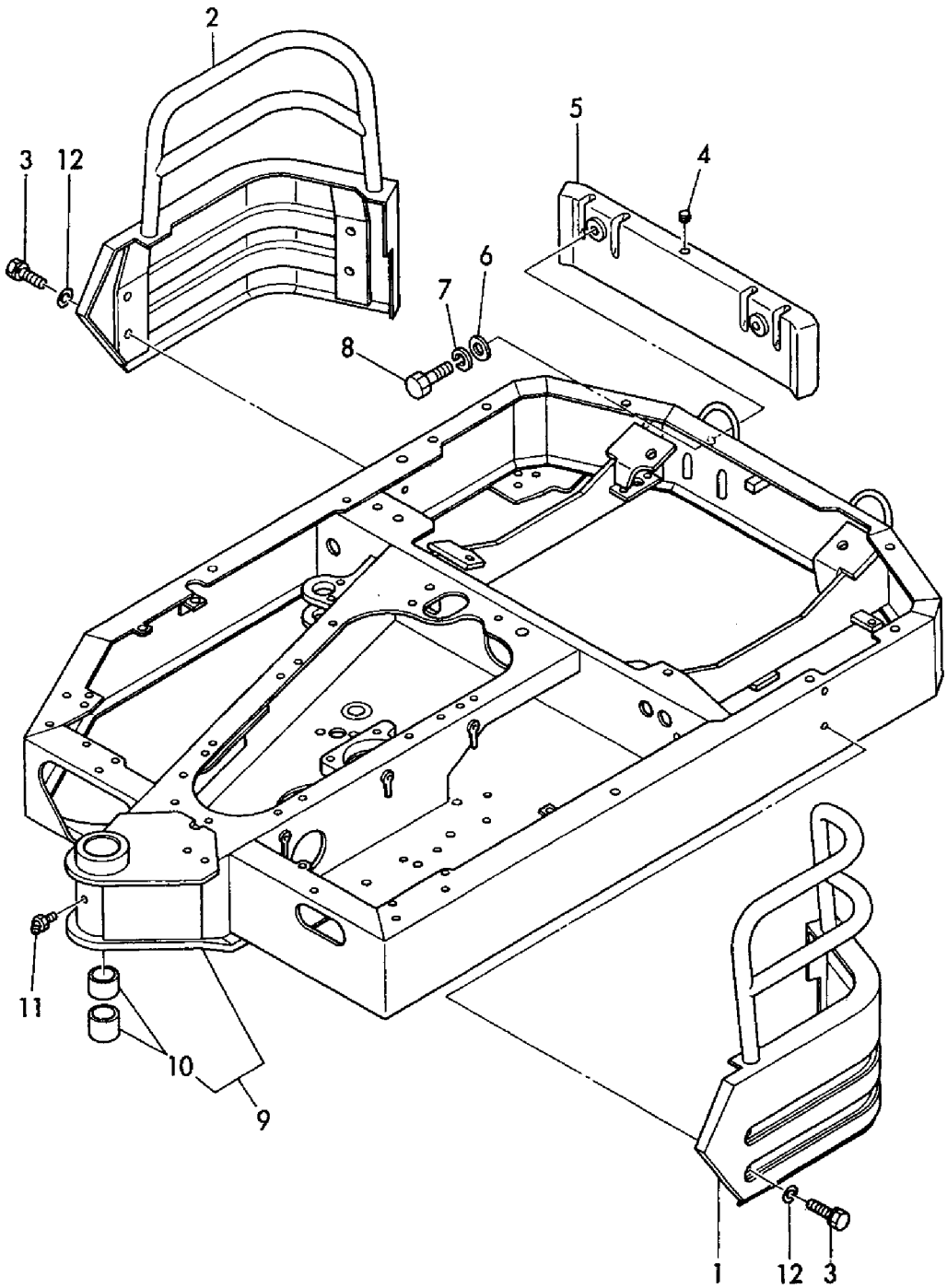

https://truckmanualshub.com/

```
1,1,,172149-57600,,"BEARING, TURNING",1,1,1,1,1,,,,,,,,,,,,
2,2,,172149-57610,,"SEAL SET",1,1,1,1,1,,,,,,,,,,,,
3,3,,172149-57620,,"SEAL, UPPER",1,1,1,1,1,,,,,,,,,,,,
4,3,,172149-57630,,"SEAL,LOWER",1,1,1,1,1,,,,,,,,,,,,
5,1,,22312-100200,,"PARALLEL PIN 10X20",4,,4,,,,,,,,,,,,,,,,
5-1,1,,194940-24350,,"PIN 10X28,STRAIGHT",4,4,4,4,4,,N,,,M00501,,,,M00501,,,,
6,1,,26116-120302,,"BOLT M12X 30 PLATED",18,18,18,18,18,,,,,,,,,,,,
7,1,,26116-120502,,"BOLT M12X 50",18,,18,,,,,,,,,,,,,,,,
7-1,1,,26116-120452,,"BOLT M12X 45 PLATED",18,18,18,18,18,,N,,,MXXX,,,,MXXX,,,,
```

https://truckmanualshub.com/

Fig. 22 旋回ベアリング TURNING BEARING

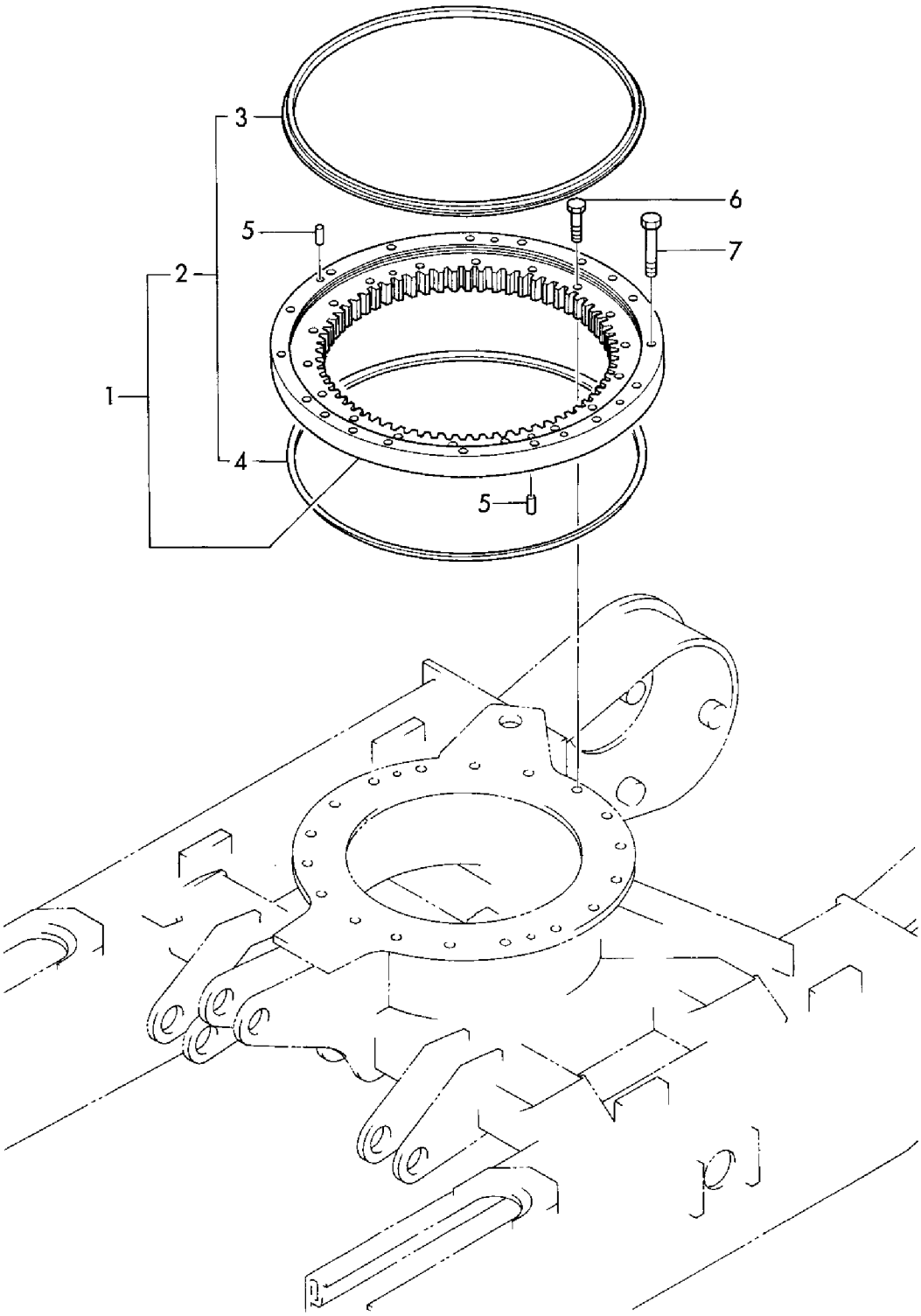

https://truckmanualshub.com/

```
1,1,,172149-05300,,"BOX, TOOL",1,1,1,1,1,,,,,,,,,,,,
2,1,,172122-55061,,"BRACKET, GREASE PUMP",2,2,2,2,2,,,,,,,,,,,,
3,1,,22217-060000,,"SPRING WASHER  6",2,2,2,2,2,,,,,,,,,,,,
4,1,,26013-100202,,"BOLT W/WASHER M10X20",2,2,2,2,2,,,,,,,,,,,,
5,1,,26557-060102,,"SCREW M 6X 10",2,2,2,2,2,,,,,,,,,,,,
6,1,,172116-46630,,"KNOB, LOCK LEVER",1,1,1,1,1,,,,,,,,,,,,
7,1,,172149-58800,,"PIN, LOCK",1,1,1,1,1,,,,,,,,,,,,
8,1,,172149-61100,,"COVER(L), UNDER",1,1,1,1,1,,,,,,,,,,,,
9,1,,172149-61110,,"COVER, UNDER(R)",1,1,1,1,1,,,,,,,,,,,,
10,1,,22217-100000,,"SPRING WASHER 10",8,8,8,8,8,,,,,,,,,,,,
11,1,,26116-100162,,"BOLT M10X 16 PLATED",8,8,8,8,8,,,,,,,,,,,,
12,1,,194145-04810,,"WASHER 10",2,2,2,2,2,,,,,,,,,,,,
13,1,,194145-04810,,"WASHER 10",4,4,4,4,4,,,,,,,,,,,,
14,1,,194145-04810,,"WASHER 10",3,3,3,3,3,,,,,,,,,,,,
15A,1,,172149-65100,,COVER(B),1,,1,,,,,,,,,,,,,,
15B,1,,172149-65100-3,,"COVER(B)     (GREEN)",,1,,1,1,,,,,,,,,,,,
16,1,,172734-65260,,"PIN, BONNET LEVER",1,1,1,1,1,,,,,,,,,,,,
17,1,,172734-65270,,"SPRING, CATCH",1,1,1,1,1,,,,,,,,,,,,
18,1,,172124-65450,,"LEVER, LOCK",1,1,1,1,1,,,,,,,,,,,,
19,1,,172149-65450,,PLATE(R),1,1,1,1,1,,,,,,,,,,,,
20,1,,172124-65480,,CATCHER,1,1,1,1,1,,,,,,,,,,,,
21,1,,172124-65490,,"PLATE,CATCH",1,1,1,1,1,,,,,,,,,,,,
22,1,,172126-65500,,KEY,1,1,1,1,1,,,,,,,,,,,,
23A,1,,172149-65500,,COVER(C),1,,1,,,,,,,,,,,,,,
23B,1,,172149-65500-1,,COVER,,1,,1,1,,,,,,,,,,,,
24,1,,172137-65700,,"RUBBER, CUSHION",2,2,2,2,2,,,,,,,,,,,,
25A,1,,172149-65740,,"COVER(R)    (YELLOW)",1,,1,,,,,,,,,,,,,,
25B,1,,172149-65740-1,,COVER(R),,1,,1,1,,,,,,,,,,,,
26,1,,172149-65840,,HOOK,1,1,1,1,1,,,,,,,,,,,,
27,1,,172149-65850,,"PLATE, ROD",1,1,1,1,1,,,,,,,,,,,,
28,1,,22137-080000,,"WASHER 8, POLISHED",2,2,2,2,2,,,,,,,,,,,,
29,1,,22157-080000,,"WASHER  8",2,2,2,2,2,,,,,,,,,,,,
30,1,,22417-200100,,"COTTER PIN 2.0X10",2,2,2,2,2,,,,,,,,,,,,
31,1,,22417-200200,,"COTTER PIN 2.0X20",2,2,2,2,2,,,,,,,,,,,,
32,1,,26013-080162,,"BOLT W/WASHER M8X16",2,2,2,2,2,,,,,,,,,,,,
33,1,,26013-100162,,"BOLT M10X 16",3,3,3,3,3,,,,,,,,,,,,
34,1,,26013-100162,,"BOLT M10X 16",8,8,8,8,8,,,,,,,,,,,,
35,1,,26013-100252,,"BOLT W/WASHER M10X25",4,4,4,4,4,,,,,,,,,,,,
36,1,,26013-120452,,"BOLT M12X 45",4,4,4,4,4,,,,,,,,,,,,
37,1,,26013-100202,,"BOLT W/WASHER M10X20",2,2,2,2,2,,,,,,,,,,,,
38,1,,172149-64370,,"PLATE, UNDER",1,1,1,1,1,,,,,,,,,,,,
39,1,,172149-64360,,"PLATE, FRAME(L)",1,1,1,1,1,,,,,,,,,,,,
40,1,,26116-100162,,"BOLT M10X 16 PLATED",4,4,4,4,4,,,,,,,,,,,,
41,1,,22217-100000,,"SPRING WASHER 10",4,4,4,4,4,,,,,,,,,,,,
42,1,,172137-69850,,SCREW,2,2,2,2,2,,,,,,,,,,,,
43,1,,172149-65430,,PLATE(L),1,1,1,1,1,,,,,,,,,,,,
44A,1,,172141-68200,,GRIP,1,,1,,,,,,,,,,,,,,
44B,1,,172141-68200-3,,"GRIP ASSY",,1,,1,1,,,,,,,,,,,,
45,1,,26013-100252,,"BOLT W/WASHER M10X25",2,2,2,2,2,,,,,,,,,,,,
46,1,,1A1380-48040,,"SEAL WASHER 8",1,1,1,1,1,,W,,,M01179,,,,M00906,,,,
46-1,1,,22190-080000,,"SEAL WASHER  8(BOLT)",1,1,1,1,1,,N,,,M10501,,,,M10501,,,,
```

https://truckmanualshub.com/

Fig. 23 ボンネット BONNET

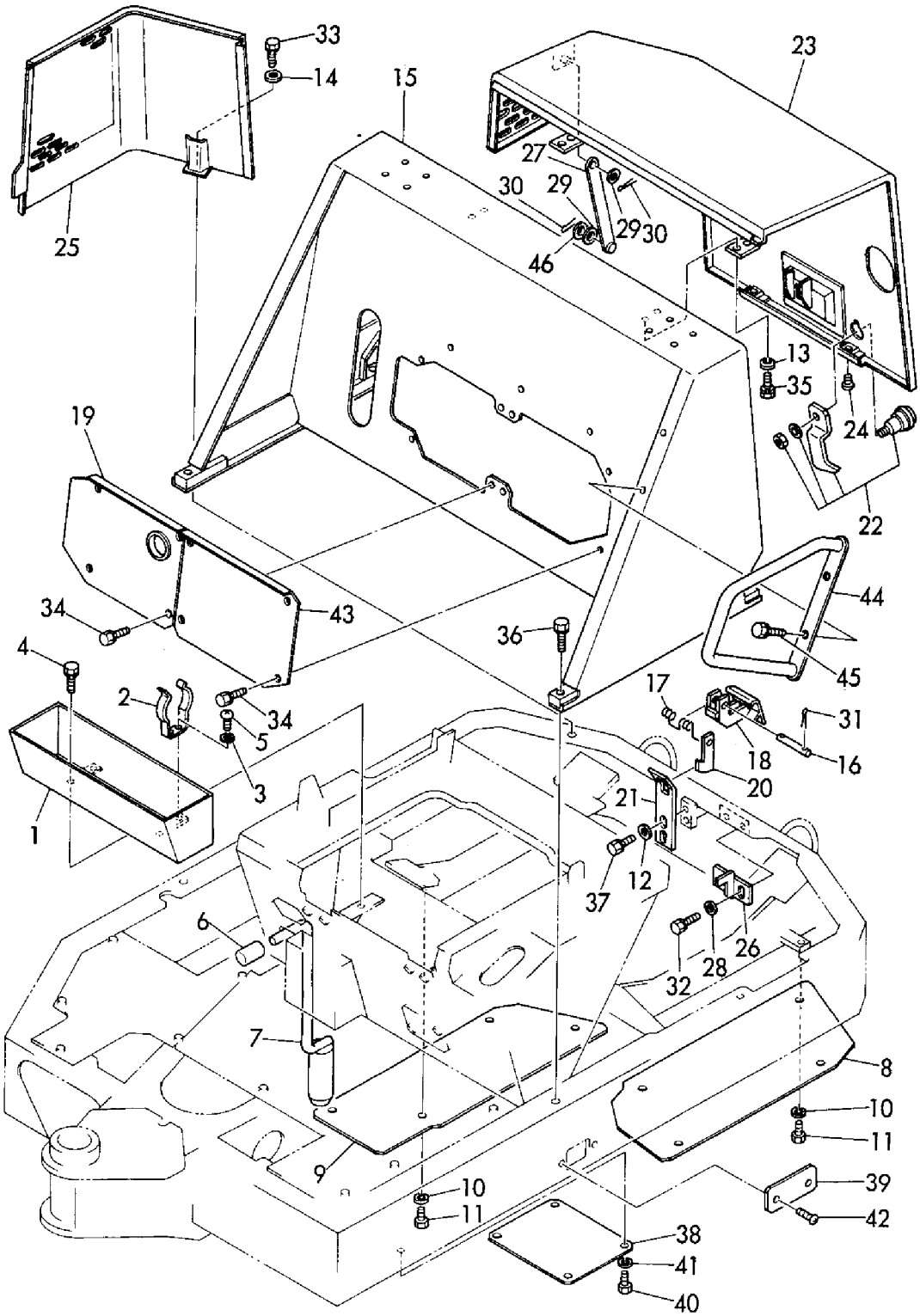

https://truckmanualshub.com/

```
1,1,,194145-04810,,"WASHER 10",2,,2,,,,,,,,,,,,,
2,1,,172149-62100,,"STEP, CENTER",1,,1,,,,,,,,,,,,,
3,1,,172149-62150,,"STEP, SIDE",1,,1,,,,,,,,,,,,,
4,1,,26013-100202,,"BOLT W/WASHER M10X20",10,,10,,,,,,,,,,,,,
5,1,,172149-64200,,MOUNT,1,,1,,,,,,,,,,,,,
6,1,,172149-64340,,"COVER, PEDAL",1,,1,,,,,,,,,,,,,
7,1,,172149-64400,,"PLATE, SEAT",1,,1,,,,,,,,,,,,,
8,1,,172149-64420,,"ADJUSTER, SEAT",1,,1,,,,,,,,,,,,,
8-1,1,,172149-64420,,"ADJUSTER, SEAT",2,,2,,,,K,,,M10501,,,,M10501,,,,
9,1,,172149-64450,,"LEVER, SEAT LOCK",1,,1,,,,,,,,,,,,,
10,1,,172149-64470,,"SEAL, MOUNT",1,,1,,,,,,,,,,,,,
11,1,,22217-080000,,"SPRING WASHER  8",4,,4,,,,,,,,,,,,,
12,1,,22217-100000,,"SPRING WASHER 10",2,,2,,,,,,,,,,,,,
13,1,,26013-080162,,"BOLT W/WASHER M8X16",4,,4,,,,,,,,,,,,,
14,1,,26013-100202,,"BOLT W/WASHER M10X20",6,,6,,,,,,,,,,,,,
15,1,,26716-080002,,"NUT M 8",4,,4,,,,,,,,,,,,,
16,1,,26716-100002,,"NUT M10",2,,2,,,,,,,,,,,,,
17,1,,172068-51740,,"SPRING SHOE",1,,1,,,,,,,,,,,,,
17-1,1,,172149-64480,,"COLLAR 11X21",1,,1,,,,N,,,M00501,,,,M00501,,,,
18,1,,194740-00160,,"WASHER 10, CONICAL",2,,2,,,,,,,,,,,,,
19,1,,26716-100002,,"NUT M10",2,,2,,,,,,,,,,,,,
20,1,,172116-46630,,"KNOB, LOCK LEVER",1,,1,,,,,,,,,,,,,
21,1,,22137-100000,,"WASHER 10,POLISHED",1,,1,,,,,,,,,,,,,
22,1,,172137-64201,,SEAT,1,,1,,,,,,,,,,,,,
23,1,,172141-64370,,"CUSHION, SEAT",2,,2,,,,,,,,,,,,,
24,1,,194201-61330,,"WASHER 11",6,,6,,,,,,,,,,,,,
25,1,,22137-080000,,"WASHER 8, POLISHED",4,,4,,,,,,,,,,,,,
26,1,,26013-080162,,"BOLT W/WASHER M8X16",4,,4,,,,,,,,,,,,,
```

https://truckmanualshub.com/

Fig. 24 シート＆ステップ（B12／17（−1））
SEAT&STEP (B12/17(-1))

B12P(R)
B12-1P(R)
B17P(R)
B17-1P(R)

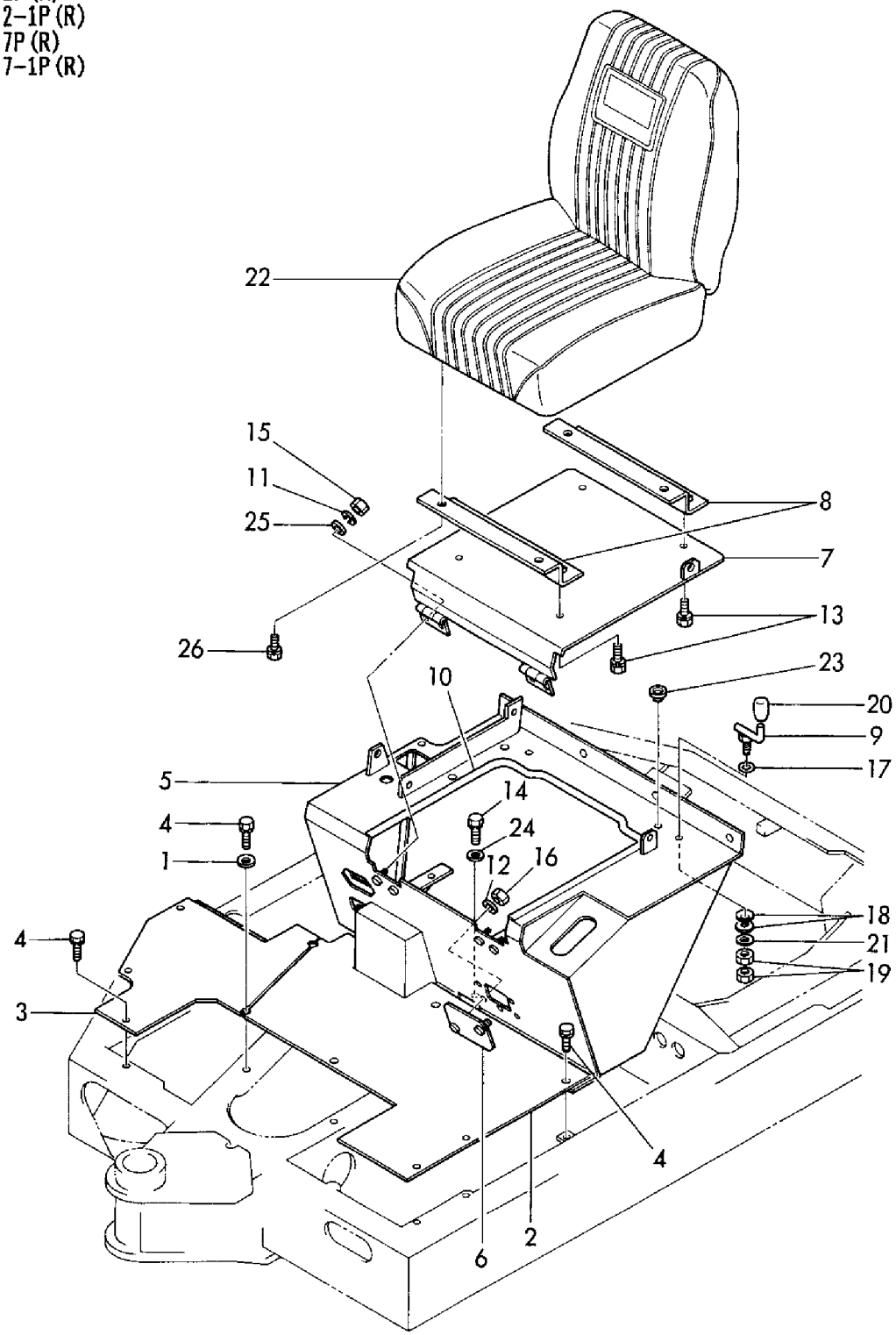

https://truckmanualshub.com/

```
1,1,,194145-04810,,"WASHER 10",,2,,2,2,,,,,,,,,,,,
2,1,,172149-62100,,"STEP, CENTER",,1,,1,1,,,,,,,,,,,,
3,1,,172149-62150,,"STEP, SIDE",,1,,1,1,,,,,,,,,,,,
4,1,,26013-100202,,"BOLT W/WASHER M10X20",,10,,10,10,,,,,,,,,,,,,
5,1,,194740-00160,,"WASHER 10, CONICAL",,2,,2,2,,,,,,,,,,,,
6,1,,172116-46630,,"KNOB, LOCK LEVER",,1,,1,1,,,,,,,,,,,,
7,1,,194201-61330,,"WASHER 11",,6,,6,6,,,,,,,,,,,,
8,1,,172149-64201,,"MOUNT CMP",,1,,1,1,,,,,,,,,,,,
9,1,,172156-64201,,SEAT,,1,,1,1,,,,,,,,,,,,
10,1,,172149-64340,,"COVER, PEDAL",,1,,1,1,,,,,,,,,,,,
11,1,,172141-64370,,"CUSHION, SEAT",,2,,2,2,,,,,,,,,,,,
12,1,,172141-64370,,"CUSHION, SEAT",,2,,2,2,,,,,,,,,,,,
13,1,,172149-64401,,"PLATE CMP ,SEAT",,1,,1,1,,,,,,,,,,,,
15,1,,172156-64420,,PIN,,1,,1,1,,,,,,,,,,,,
16,1,,172149-64450,,"LEVER, SEAT LOCK",,1,,1,1,,,,,,,,,,,,
17,1,,172149-64470,,"SEAL, MOUNT",,1,,1,1,,,,,,,,,,,,
18,1,,172149-64480,,"COLLAR 11X21",,1,,1,1,,,,,,,,,,,,
19,1,,22137-080000,,"WASHER 8, POLISHED",,4,,4,4,,,,,,,,,,,,
20,1,,22137-100000,,"WASHER 10,POLISHED",,1,,1,1,,,,,,,,,,,,
21,1,,22190-080003,,"SEAL WASER  8",,4,,4,4,,,,,,,,,,,,
22,1,,22217-080000,,"SPRING WASHER  8",,4,,4,4,,,,,,,,,,,,
23,1,,22217-100000,,"SPRING WASHER 10",,2,,2,2,,,,,,,,,,,,
24,1,,22372-080000,,"SNAP PIN (JASO 8)",,2,,2,2,,,,,,,,,,,,
25,1,,26013-100202,,"BOLT W/WASHER M10X20",,6,,6,6,,,,,,,,,,,,,
26,1,,26716-080002,,"NUT M 8",,4,,4,4,,,,,,,,,,,,
27,1,,26716-100002,,"NUT M10",,2,,2,2,,,,,,,,,,,,
28,1,,26716-100002,,"NUT M10",,2,,2,2,,,,,,,,,,,,
```

https://truckmanualshub.com/

Fig. 25 シート＆ステップ (B12/17-2) SEAT & STEP (B12/17-2)

B12-2P(R)
B17-2P(R)

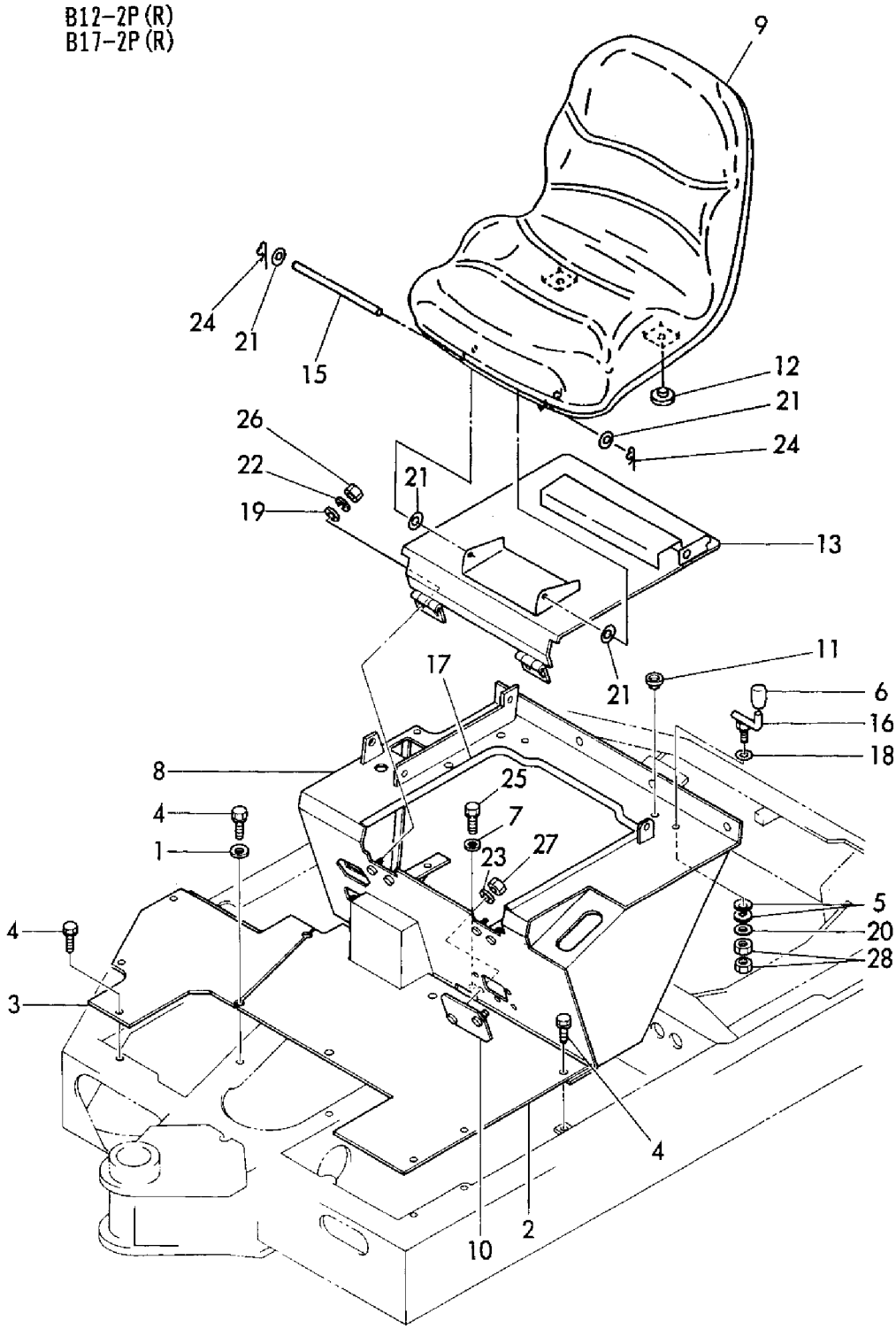

https://truckmanualshub.com/

```
1,1,,772149-68100,,"CANOPY ASSY",1,,1,,,,,,,,,,,,,,
1-1,1,,772149-68101,,"CANOPY ASSY",1,,1,,,,N,,,M10611,,,,M10540,,,,
1A,1,,772149-68110,,"CANOPY ASSY",,1,,1,1,,,,,,,,,,,,
2A,2,,172149-68110,,"POLE(L), CANOPY",1,,1,,,,,,,,,,,,,,,
2B,2,,172149-68110-3,,"POLE(L) CANOPY",,1,,1,1,,,,,,,,,,,,
3A,2,,172149-68120,,"POLE(R), CANOPY",1,,1,,,,,,,,,,,,,,,
3B,2,,172149-68120-3,,"POLE(R), CANOPY",,1,,1,1,,,,,,,,,,,,
4,2,,172134-68200,,"ROOF, CANOPY",1,,1,,,,,,,,,,,,,,,
4-1,2,,172141-68250,,"ROOF, CANOPY",1,,1,,,,N,,,M10611,,,,M10540,,,,
4A,2,,172165-68301,,"ROOF, CANOPY",,1,,1,1,,,,,,,,,,,,
5,2,,26013-120252,,"BOLT M12X 25",6,,6,,,,,,,,,,,,,,,
5A,2,,26013-120302,,"BOLT W/WASHER M12X30",,6,,6,6,,,,,,,,,,,,
6,2,,26013-120352,,"BOLT M12X 35",8,8,8,8,8,,,,,,,,,,,,
7,1,,22137-100000,,"WASHER 10,POLISHED",6,6,6,6,6,,,,,,,,,,,,
8,1,,22217-100000,,"SPRING WASHER 10",6,6,6,6,6,,,,,,,,,,,,
9,1,,26013-100252,,"BOLT W/WASHER M10X25",4,4,4,4,4,,,,,,,,,,,,
10A,1,,172149-68300,,"CANOPY'F(CREAM WHITE",1,,1,,,,,,,,,,,,,,,
10B,1,,172149-68300-3,,"CANOPY(F)    (GREEN)",,1,,1,1,,,,,,,,,,,,
11A,1,,172149-68350,,"COVER, FRONT",1,,1,,,,,,,,,,,,,,,
11B,1,,172149-68350-3,,"COVER,FRONT(GREEN:86",,1,,1,1,,,,,,,,,,,,
11B-1,1,,172149-68351,,COVER,,1,,1,,,N,,,,,M21277,,,,M20679,,
11B-2,1,,172149-68351,,COVER,,,,,1,,N,,,,,,,,,,,M20681
12,1,,26116-100162,,"BOLT M10X 16 PLATED",6,6,6,6,6,,,,,,,,,,,,
```

https://truckmanualshub.com/

発行No. 000Y00K2492-1
更新年月：1996. 09
REVISED : Sep., 1996

Fig. 26 キャノピ CANOPY

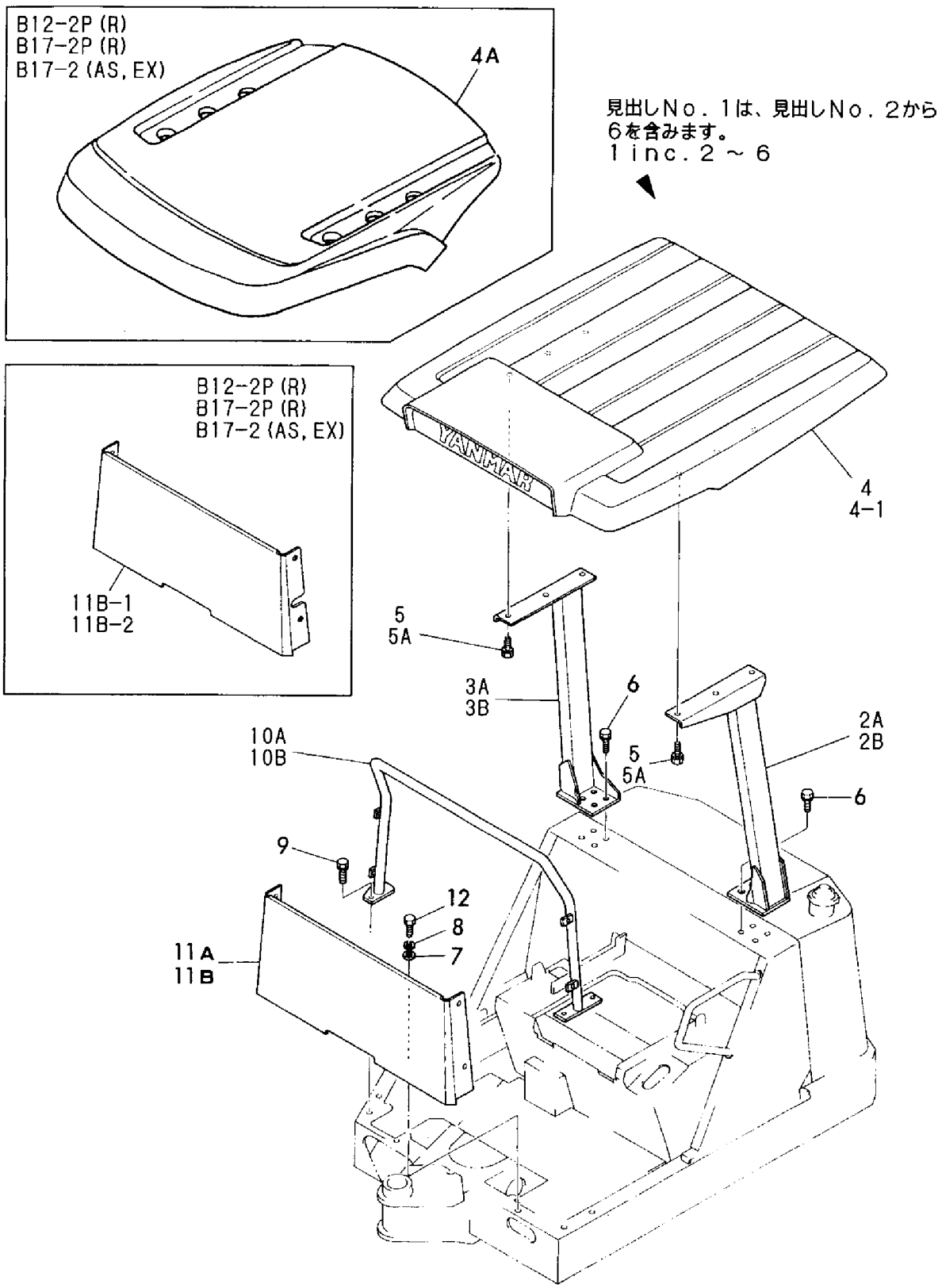

https://truckmanualshub.com/

```
1,1,,172149-72100,,"CYLINDER ASSY,BOOM",1,,1,,,,,,,,,,,,,
2,2,,772149-72110,,"TUBE W/BUSH, BOOM",1,,1,,,,,,,,,,,,,
4,3,,172141-72560,,"BUSH 35 40 A, PIN",1,,1,,,,,,,,,,,,,
5,2,,772149-72200,,"ROD W/BUSH, BOOM",1,,1,,,,,,,,,,,,,
7,3,,172141-72560,,"BUSH 35 40 A, PIN",1,,1,,,,,,,,,,,,,
8,2,,172149-72240,,"HEAD 6035",1,,1,,,,,,,,,,,,,
9,3,,933111-01600,,"BUSH 35 30, ROD",1,,1,,,,,,,,,,,,,
10,2,,172137-72250,,"COLLAR, CUSHION",1,,1,,,,,,,,,,,,,
11,2,,172137-72260,,"RING 41, CUSHION",1,,1,,,,,,,,,,,,,
12,2,,172137-72271,,"COLLAR 41B, CUSHION",1,,1,,,,,,,,,,,,,
13,2,,172137-72431,,"PISTON 60G",1,,1,,,,,,,,,,,,,
13A,2,,172149-99340,,"KIT, BOOM CYLINDER",1,,1,,,,W,,,MXXX,,,,MXXX,,,,
13A-1,2,,172149-99341,,"BOOMCYLINDER SET",1,,1,,,,N,,,M01568,,,,M01122,,,,
14,3,,172137-72462,,"SEAL SET 60B, PISTON",1,,1,,,,,,,,,,,,,
18,3,,172149-72010,,"SEAL SET, HEAD",1,,1,,,,,,,,,,,,,
18-1,3,,172149-72011,,"SEAL SET, HEAD",1,,1,,,,N,,,M01568,,,,M01122,,,,
24,3,,172141-73090,,"RING 50, SPRING",1,,1,,,,,,,,,,,,,
25,3,,933125-59600,,"WASHER 60 B, LOCK",1,,1,,,,,,,,,,,,,
26,2,,172141-72580,,"NUT M20",1,,1,,,,,,,,,,,,,
27,2,,24761-040000,,"NIPPLE B,GREASE",1,,1,,,,,,,,,,,,,
28,1,,172149-72280,,"COVER, BOOM",1,,1,,,,,,,,,,,,,
29,1,,22157-100000,,"WASHER 10",1,,1,,,,,,,,,,,,,
30,1,,22217-100000,,"SPRING WASHER 10",1,,1,,,,,,,,,,,,,
31,1,,26116-100162,,"BOLT M10X 16 PLATED",1,,1,,,,,,,,,,,,,
32,1,,933168-14170,,"SPRING 16",2,,2,,,,,,,,,,,,,
```

https://truckmanualshub.com/

Fig. 27 ブームシリンダ（B12/17（−1））
BOOM CYLINDER (B12/17 (−1))

B12P (R)
B12-1P (R)
B17P (R)
B17-1P (R)

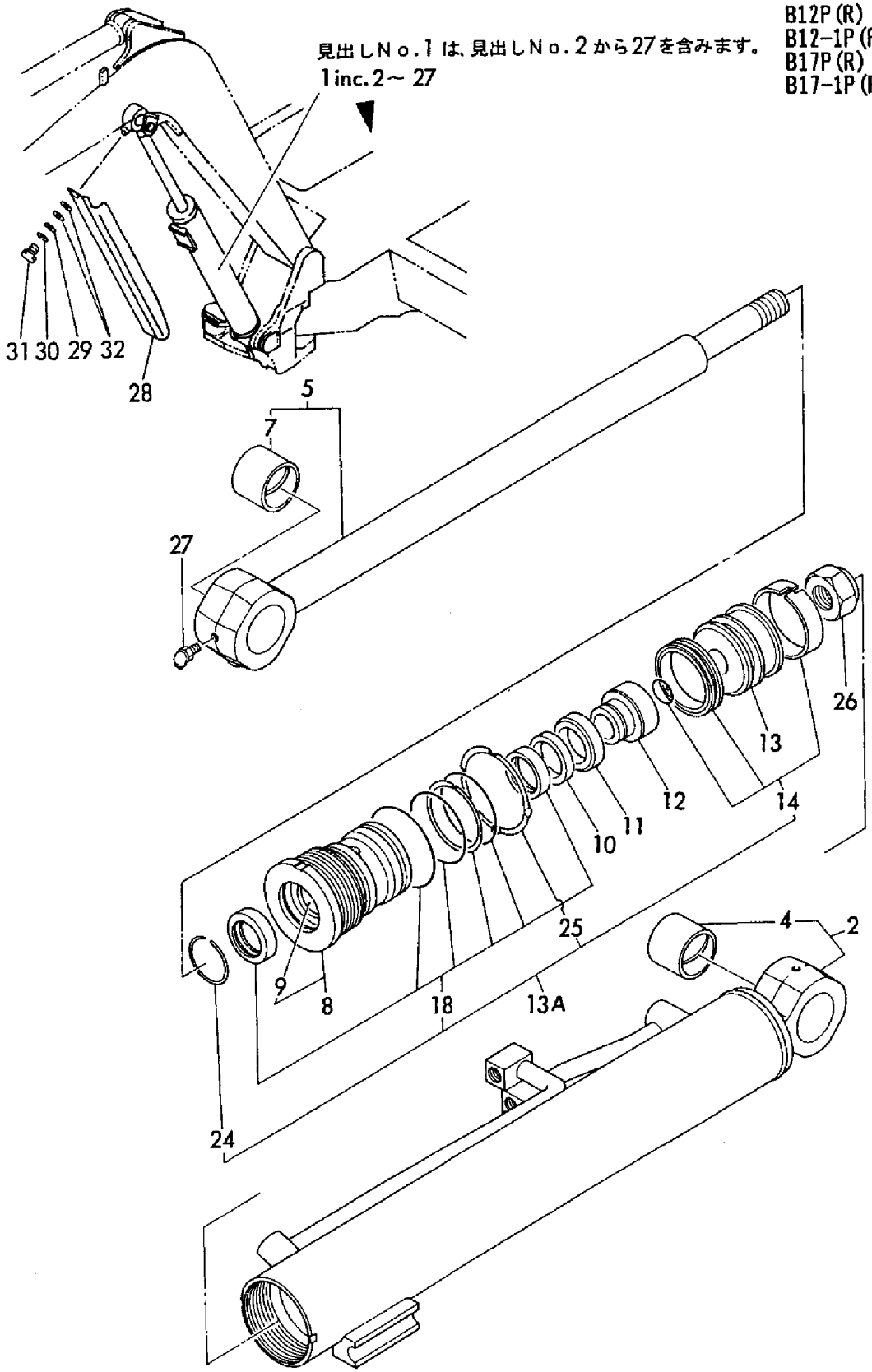

https://truckmanualshub.com/

```
1,1,,172149-72101,,"CYLINDER, BOOM",,1,,1,1,,,,,,,,,,,,
1-1,1,,172149-72102,,"CYLINDER,
BOOM",,1,,1,1,,N,,,,,M/#21095,,,,M/#20616,,M/#20616
2,2,,172149-72112,,"TUBE W/BUSH, BOOM",,1,,1,1,,,,,,,,,,,,
3,3,,172141-72561,,"BUSH 35 40 A, PIN",,1,,1,1,,,,,,,,,,,,
4,3,,172171-81280,,"SEAL 35X45X4",,2,,2,2,,,,,,,,,,,,
5,3,,23871-010000,,"PLUG PT1/8,SCREW",,1,,1,1,,,,,,,,,,,,
6,2,,172149-72201,,"ROD COMP.,BOOM",,1,,1,1,,,,,,,,,,,,
6-1,2,,172149-72202,,"ROD
COMP.,BOOM",,1,,1,1,,S,,,,,M/#21095,,,,M/#20616,,M/#20616
7,3,,172141-72561,,"BUSH 35 40 A, PIN",,1,,1,1,,,,,,,,,,,,
8,3,,172171-81280,,"SEAL 35X45X4",,2,,2,2,,,,,,,,,,,,
9,2,,172149-72241,,"HEAD 6035 COMPL.",,1,,1,1,,,,,,,,,,,,
10,3,,933111-01600,,"BUSH 35 30, ROD",,1,,1,1,,,,,,,,,,,,
11,2,,172137-72250,,"COLLAR, CUSHION",,1,,1,1,,,,,,,,,,,,
11-1,2,,172137-72251,,SUPPORT,,1,,1,1,,S,,,,,M/#21095,,,,M/#20616,,M/#20616
12,2,,172137-72260,,"RING 41, CUSHION",,1,,1,1,,,,,,,,,,,,
12-1,2,,172137-72261,,"RING 41,
CUSHION",,1,,1,1,,S,,,,,M/#21095,,,,M/#20616,,M/#20616
13,2,,172137-72271,,"COLLAR 41B, CUSHION",,1,,1,1,,,,,,,,,,,,
13-1,2,,172137-72272,,"COLLAR 41B,
CUSHION",,1,,1,1,,S,,,,,M/#21095,,,,M/#20616,,M/#20616
14,2,,172137-72431,,"PISTON 60G",,1,,1,1,,,,,,,,,,,,
14-1,2,,172171-72120,,PISTON,,1,,1,1,,S,,,,,M/#21095,,,,M/#20616,,M/#20616
15,2,,172149-99341,,"BOOMCYLINDER SET",,1,,1,1,,,,,,,,,,,,
16,3,,172137-72462,,"SEAL SET 60B, PISTON",,1,,1,1,,,,,,,,,,,,
16-1,3,,172137-72463,,"SEAL SET 60B,
PISTON",,1,,1,1,,S,,,,,M/#21095,,,,M/#20616,,M/#20616
20,3,,172149-72011,,"SEAL SET, HEAD",,1,,1,1,,,,,,,,,,,,
26,3,,172141-73090,,"RING 50, SPRING",,1,,1,1,,,,,,,,,,,,
27,3,,933125-59600,,"WASHER 60 B, LOCK",,1,,1,1,,,,,,,,,,,,
28,2,,172141-72580,,"NUT M20",,1,,1,1,,,,,,,,,,,,
28-1,2,,172171-72130,,"U-NUT M24",,1,,1,1,,S,,,,,M/#21095,,,,M/#20616,,M/#20616
29,2,,24761-040000,,"NIPPLE B,GREASE",,1,,1,1,,,,,,,,,,,,
30,1,,172149-72750,,SPACER,,1,,1,1,,,,,,,,,,,,
31,1,,172162-61770,,"GUIDE,SLIDE",,2,,2,2,,,,,,,,,,,,
32,1,,172149-72650,,"COVER, BOOM CYL.",,1,,1,1,,,,,,,,,,,,
33,1,,22157-100000,,"WASHER 10",,1,,1,1,,,,,,,,,,,,
34,1,,22217-100000,,"SPRING WASHER 10",,1,,1,1,,,,,,,,,,,,
35,1,,26116-100162,,"BOLT M10X 16 PLATED",,1,,1,1,,,,,,,,,,,,
36,1,,933168-14170,,"SPRING 16",,2,,2,2,,,,,,,,,,,,
```

https://truckmanualshub.com/

Fig. 28 ブームシリンダ (B12/17-2) BOOM CYLINDER (B12/17-2)

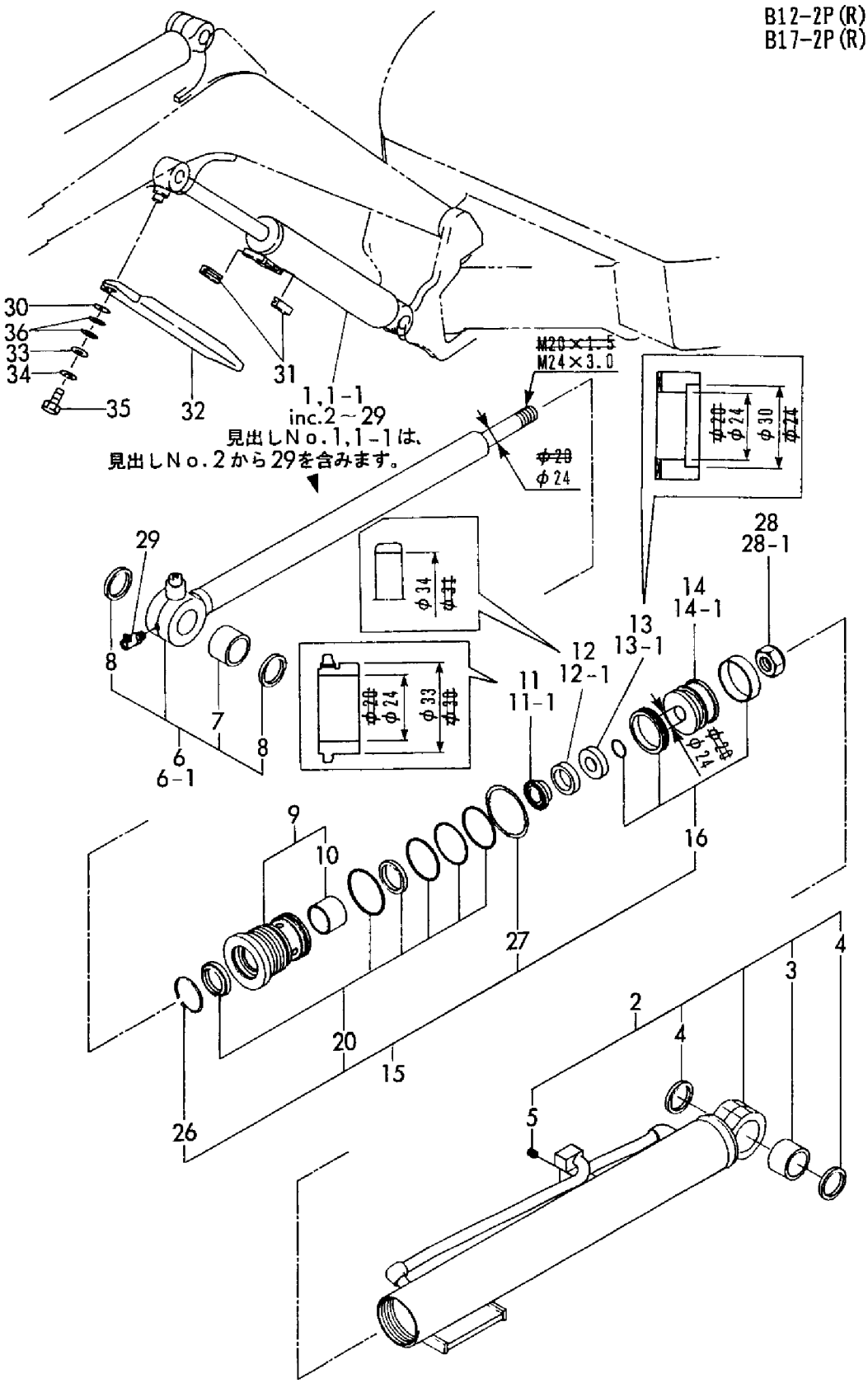

https://truckmanualshub.com/

```
1,1,,172149-72350,,"CYLINDER ASSY, ARM",1,,1,,,,,,,,,,,,,,
2,2,,772149-72360,,"TUBE W/BUSH, ARM",1,,1,,,,,,,,,,,,,,
4,3,,933125-05400,,"BUSH 30X40, PIN",1,,1,,,,,,,,,,,,,,
5,2,,772149-72380,,"ROD W/BUSH, ARM",1,,1,,,,,,,,,,,,,,
7,3,,933125-05400,,"BUSH 30X40, PIN",1,,1,,,,,,,,,,,,,,
8,2,,172137-72431,,"PISTON 60G",1,,1,,,,,,,,,,,,,,
9,2,,172141-72540,,"HEAD 6035, CYLINDER",1,,1,,,,,,,,,,,,,,
10,3,,933111-01600,,"BUSH 35 30, ROD",1,,1,,,,,,,,,,,,,,
10A,2,,172149-99380,,"CYLINDER KIT, BUCKET",1,,1,,,,W,,,MXXX,,,,MXXX,,,,
11,3,,172137-72452,,"SEAL SET 60A, PISTON",1,,1,,,,,,,,,,,,,,
14,3,,172141-71900,,"SEAL SET, HEAD",1,,1,,,,,,,,,,,,,,
19,3,,172141-73090,,"RING 50, SPRING",1,,1,,,,,,,,,,,,,,
20,3,,933125-59600,,"WASHER 60 B, LOCK",1,,1,,,,,,,,,,,,,,
21,2,,172141-72580,,"NUT M20",1,,1,,,,,,,,,,,,,,
22,2,,24761-040000,,"NIPPLE B,GREASE",2,,2,,,,,,,,,,,,,,
```

https://truckmanualshub.com/

Fig. 29 アームシリンダ（B12／17（−1））
ARM CYLINDER (B12/17(-1))

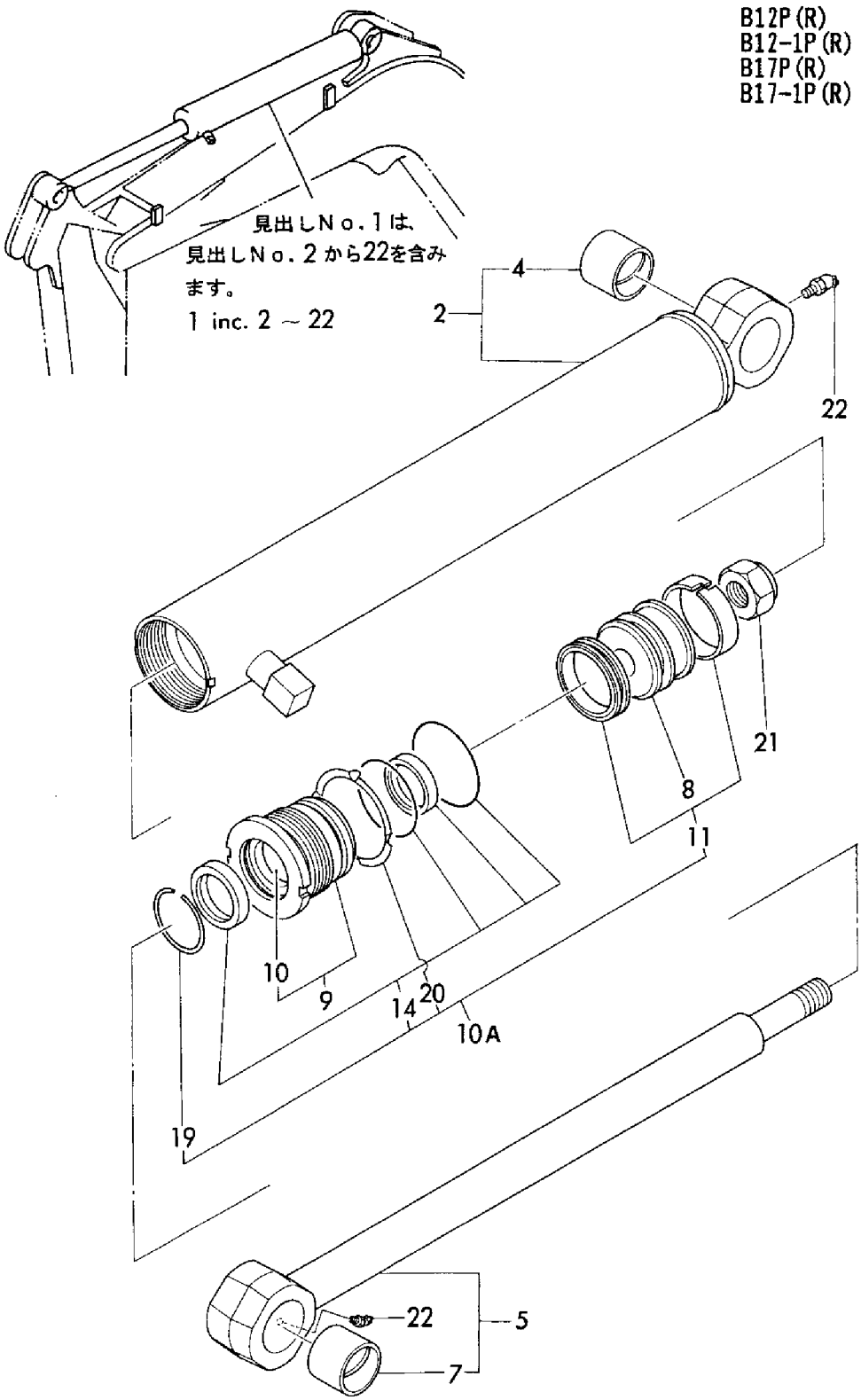

https://truckmanualshub.com/

```
1,1,,172149-72351,,"CYLINDER, ARM",,1,,1,1,,,,,,,,,,,,
1-1,1,,172149-72352,,"CYLINDER, ARM",,1,,1,1,,N,,,,,M20730,,,,M20521,,M20521
2,2,,172149-72361,,"TUBE ASSY, ARM",,1,,1,1,,,,,,,,,,,,
3,3,,172183-72290,,"SEAL 38X48X 4, DUST",,2,,2,2,,,,,,,,,,,,
4,3,,172149-72440,,"BUSH A 30X30,PIN",,1,,1,1,,,,,,,,,,,,
5,2,,172149-72381,,"ROD COMP.,ARM",,1,,1,1,,,,,,,,,,,,
5-1,2,,172149-72382,,"ROD COMP.,ARM",,1,,1,1,,S,,,,,M20730,,,,M20521,,M20521
6,3,,172183-72290,,"SEAL 38X48X 4, DUST",,2,,2,2,,,,,,,,,,,,
7,3,,172149-72440,,"BUSH A 30X30,PIN",,1,,1,1,,,,,,,,,,,,
8,2,,172137-72431,,"PISTON 60G",,1,,1,1,,,,,,,,,,,,
8-1,2,,172171-72120,,PISTON,,1,,1,1,,S,,,,,M20730,,,,M20521,,M20521
9,2,,172141-72540,,"HEAD 6035, CYLINDER",,1,,1,1,,,,,,,,,,,,
10,3,,933111-01600,,"BUSH 35 30, ROD",,1,,1,1,,,,,,,,,,,,
11,2,,172149-99380,,"CYLINDER KIT, BUCKET",,1,,1,1,,,,,,,,,,,,
12,3,,172137-72452,,"SEAL SET 60A, PISTON",,1,,1,1,,,,,,,,,,,,
15,3,,172141-71900,,"SEAL SET, HEAD",,1,,1,1,,,,,,,,,,,,
20,3,,172141-73090,,"RING 50, SPRING",,1,,1,1,,,,,,,,,,,,
21,3,,933125-59600,,"WASHER 60 B, LOCK",,1,,1,1,,,,,,,,,,,,
22,2,,172141-72580,,"NUT M20",,1,,1,1,,,,,,,,,,,,
22-1,2,,172171-72130,,"U-NUT M24",,1,,1,1,,S,,,,,M20730,,,,M20521,,M20521
23,2,,24761-040000,,"NIPPLE B,GREASE",,2,,2,2,,,,,,,,,,,,
```

https://truckmanualshub.com/

Fig. 30 アームシリンダ (B12/17-2) ARM CYLINDER (B12/17-2)

B12-2P(R)
B17-2P(R)

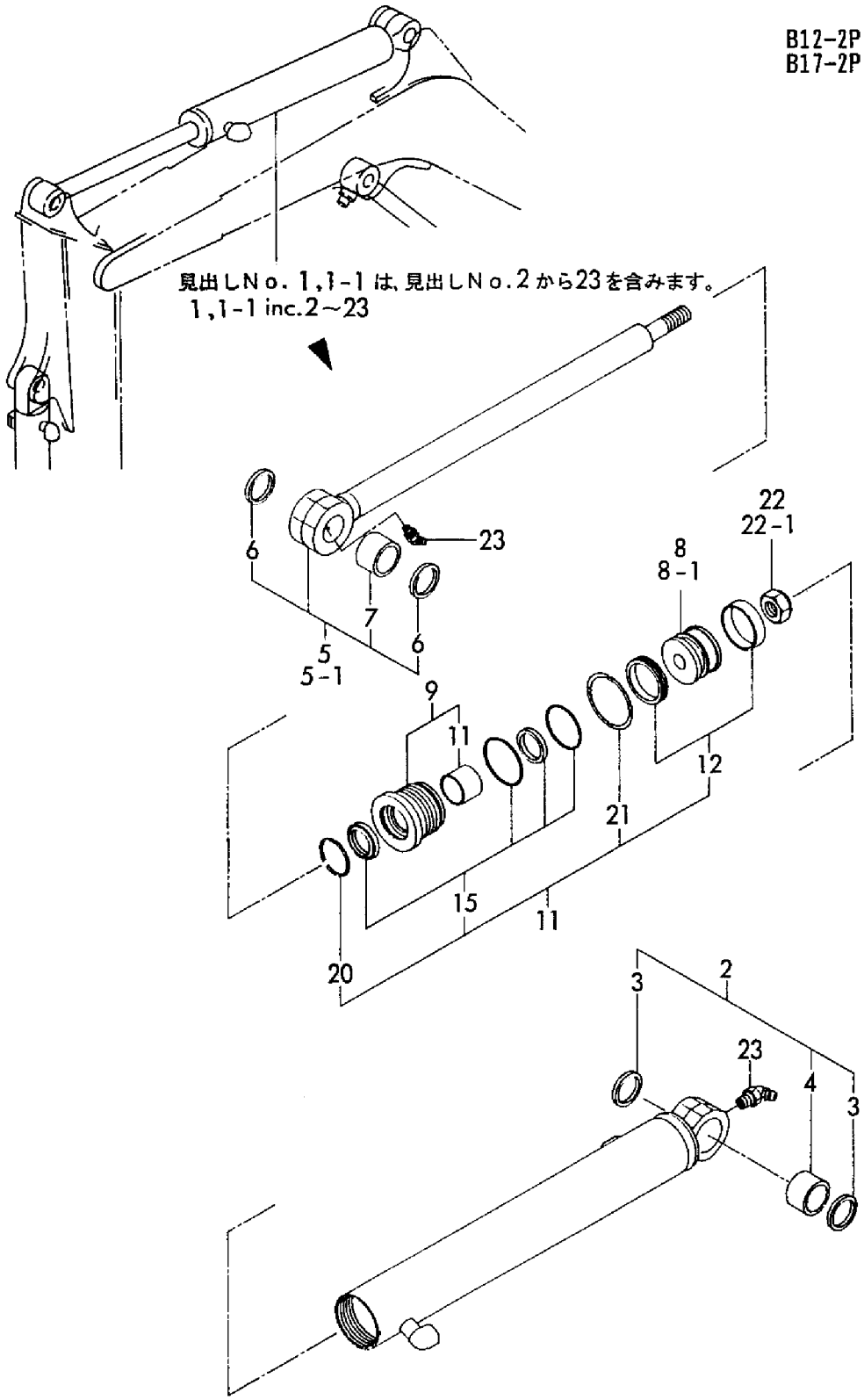

https://truckmanualshub.com/

```
1,1,,933120-28401,,"CYLINDER ASSY,BUCKET",1,,1,,,,,,,,,,,,,,
2,2,,172137-72431,,"PISTON 60G",1,,1,,,,,,,,,,,,,,
3,2,,24761-040000,,"NIPPLE B,GREASE",1,,1,,,,,,,,,,,,,,
4,2,,733121-28401,,"TUBE W/BUSH, BUCKET",1,,1,,,,,,,,,,,,,,
6,3,,933125-05400,,"BUSH 30X40, PIN",1,,1,,,,,,,,,,,,,,
6A,2,,172149-99380,,"CYLINDER KIT, BUCKET",1,,1,,,,W,,,MXXX,,,,MXXX,,,,
7,3,,172137-72452,,"SEAL SET 60A, PISTON",1,,1,,,,,,,,,,,,,,
10,3,,172141-71900,,"SEAL SET, HEAD",1,,1,,,,,,,,,,,,,,
15,3,,933125-59600,,"WASHER 60 B, LOCK",1,,1,,,,,,,,,,,,,,
16,3,,172141-73090,,"RING 50, SPRING",1,,1,,,,,,,,,,,,,,
17,2,,933722-28300,,"ROD ASSY",1,,1,,,,,,,,,,,,,,
19,3,,933125-05500,,"BUSH 30X40 B, PIN",1,,1,,,,,,,,,,,,,,
20,2,,172141-72580,,"NUT M20",1,,1,,,,,,,,,,,,,,
21,2,,172141-72540,,"HEAD 6035, CYLINDER",1,,1,,,,,,,,,,,,,,
22,3,,933111-01600,,"BUSH 35 30, ROD",1,,1,,,,,,,,,,,,,,
```

https://truckmanualshub.com/

Fig.31 バケットシリンダ（B12／17（−1））
BUCKET CYLINDER (B12/17 (-1))

B12P(R)
B12-1P(R)
B17P(R)
B17-1P(R)

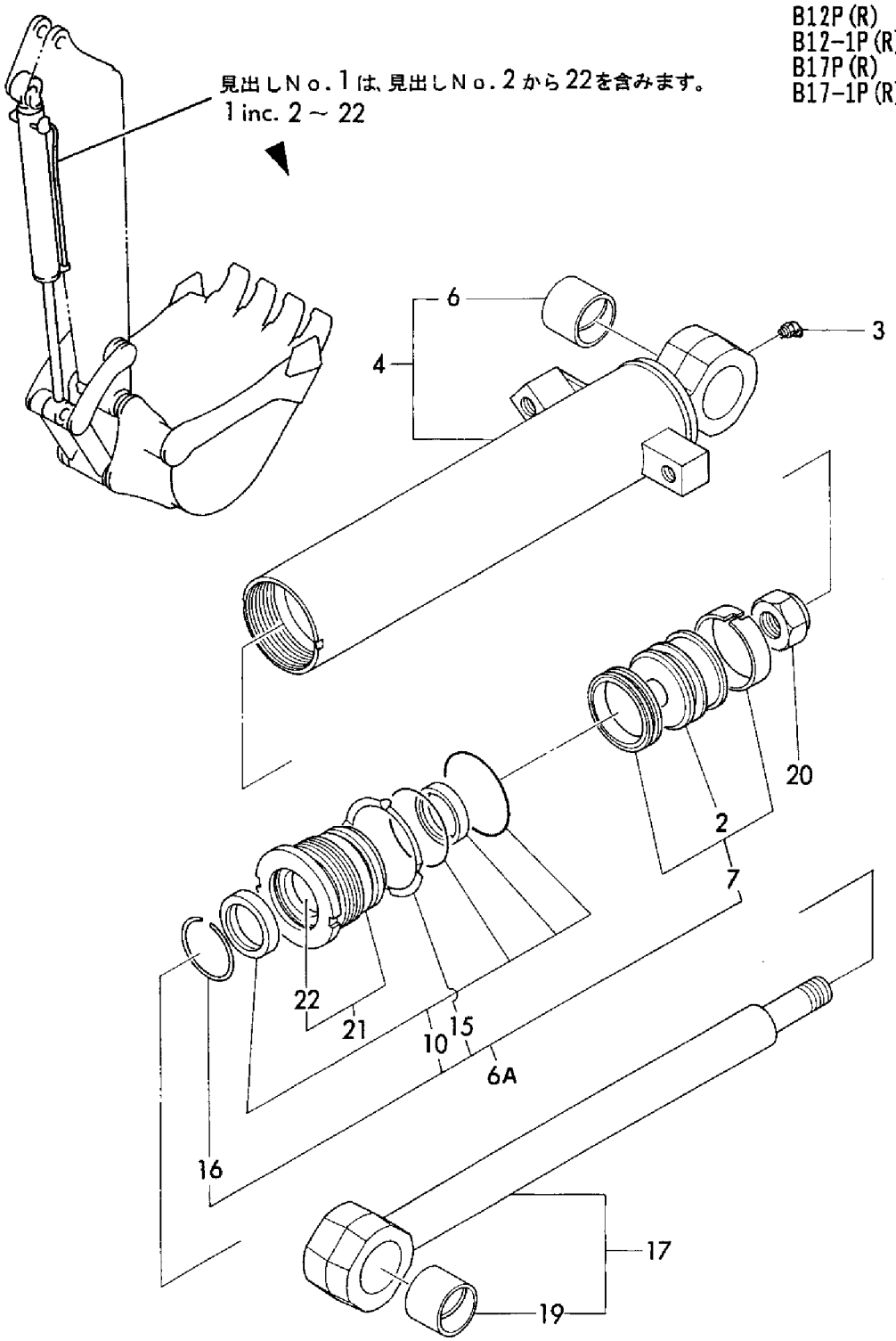

https://truckmanualshub.com/

```
1,1,,933120-28402,,"CYLINDER, BUCKET",,1,,1,1,,,,,,,,,,,,
1-1,1,,933120-28403,,"CYLINDER
ASSY,BUCKET",,1,,1,1,,N,,,,,M20730,,,,M20521,,M20521
2,2,,172137-72431,,"PISTON 60G",,1,,1,1,,,,,,,,,,,,
2-1,2,,172171-72120,,PISTON,,1,,1,1,,S,,,,,M20730,,,,M20521,,M20521
3,2,,172141-72540,,"HEAD 6035, CYLINDER",,1,,1,1,,,,,,,,,,,,
4,3,,933111-01600,,"BUSH 35 30, ROD",,1,,1,1,,,,,,,,,,,,
5,2,,172149-99380,,"CYLINDER KIT, BUCKET",,1,,1,1,,,,,,,,,,,,
6,3,,172137-72452,,"SEAL SET 60A, PISTON",,1,,1,1,,,,,,,,,,,,
9,3,,172141-71900,,"SEAL SET, HEAD",,1,,1,1,,,,,,,,,,,,
14,3,,172141-73090,,"RING 50, SPRING",,1,,1,1,,,,,,,,,,,,
15,3,,933125-59600,,"WASHER 60 B, LOCK",,1,,1,1,,,,,,,,,,,,
16,2,,172141-72580,,"NUT M20",,1,,1,1,,,,,,,,,,,,
16-1,2,,172171-72130,,"U-NUT M24",,1,,1,1,,S,,,,,M20730,,,,M20521,,M20521
17,2,,24761-040000,,"NIPPLE B,GREASE",,1,,1,1,,,,,,,,,,,,
18,2,,933121-28402,,"TUBE ASSY, BUCKET",,1,,1,1,,,,,,,,,,,,
19,3,,172183-72290,,"SEAL 38X48X 4, DUST",,2,,2,2,,,,,,,,,,,,
20,3,,172149-72440,,"BUSH A 30X30,PIN",,1,,1,1,,,,,,,,,,,,
21,2,,933122-28301,,"ROD COMP.,BUCKET",,1,,1,1,,,,,,,,,,,,
21-1,2,,933122-28302,,"ROD COMP.,BUCKET",,1,,1,1,,S,,,,,M20730,,,,M20521,,M20521
22,3,,172183-72290,,"SEAL 38X48X 4, DUST",,2,,2,2,,,,,,,,,,,,
23,3,,172149-72680,,"BUSH B 30X30,PIN",,1,,1,1,,,,,,,,,,,,
```

https://truckmanualshub.com/

Fig. 32 バケットシリンダ (B12/17-2) BUCKET CYLINDER (B12/17-2)

B12-2P(R)
B17-2P(R)

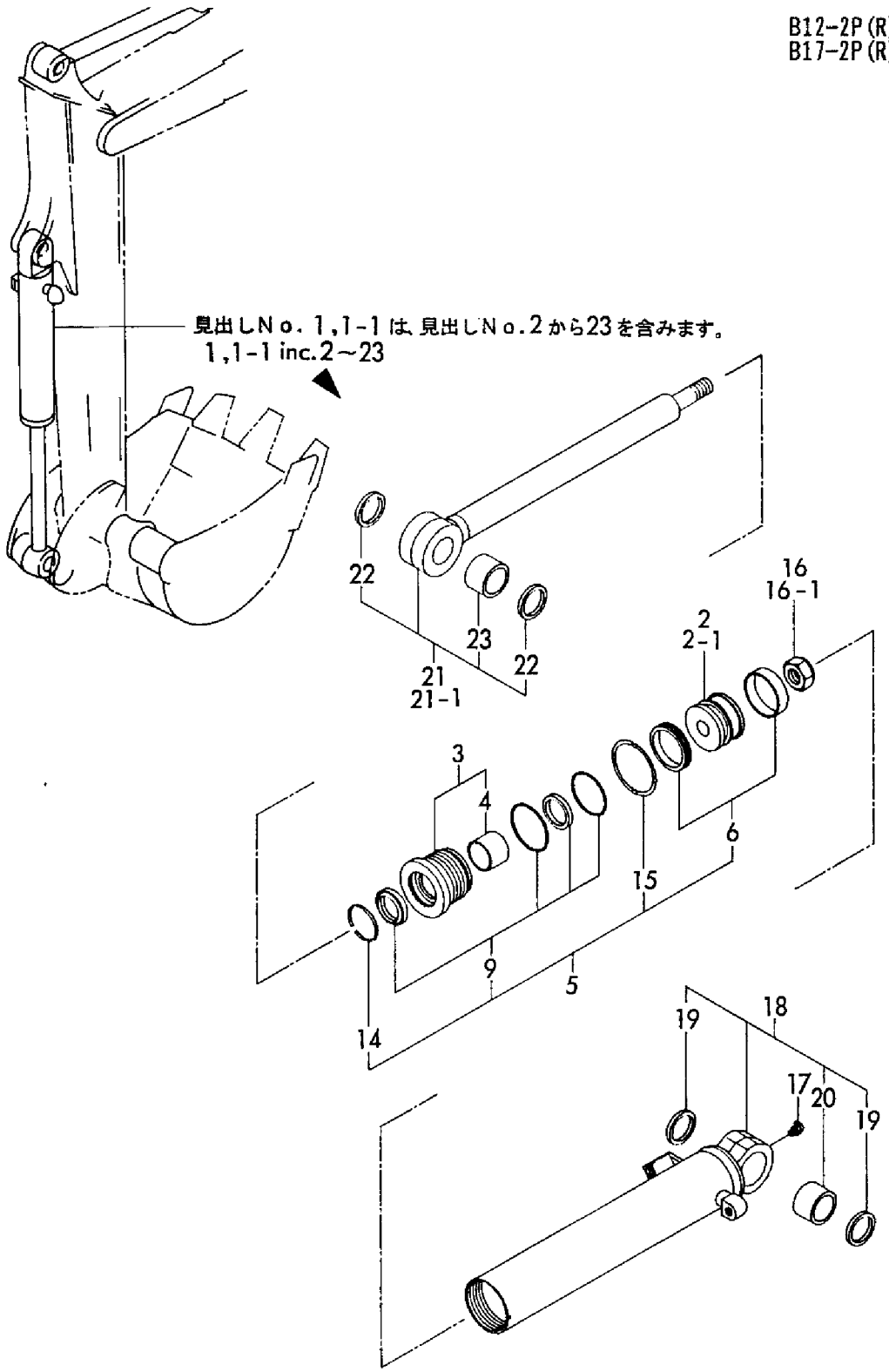

https://truckmanualshub.com/

```
1,1,,172149-72450,,"CYLINDER ASSY, SWING",1,,1,,,,,,,,,,,,,,
2,2,,172149-72020,,"SEAL SET, HEAD",1,,1,,,,,,,,,,,,,,
2-1,2,,172149-72021,,"SEAL SET, HEAD",1,,1,,,,N,,,M01568,,,,M01122,,,,
8,2,,172149-72000,,"SEAL SET, PISTON",1,,1,,,,,,,,,,,,,,
13,2,,172141-72420,,"WASHER 70, LOCK",1,,1,,,,,,,,,,,,,,
14,2,,172142-72810,,"CIRCLIP 22",1,,1,,,,,,,,,,,,,,
15,2,,22252-000561,,"CIRCLIP   56",1,,1,,,,,,,,,,,,,,
16,2,,933111-26600,,"RING 55, SPRING",1,,1,,,,,,,,,,,,,,
17,2,,172141-72250,,"U-NUT M27",1,,1,,,,,,,,,,,,,,
18,2,,772149-72460,,"TUBE W/BUSH, SWING",1,,1,,,,,,,,,,,,,,
20,3,,933125-12701,,"BUSH 38 50A",1,,1,,,,,,,,,,,,,,
21,2,,772149-72510,,"ROD W/BUSH, SWING",1,,1,,,,,,,,,,,,,,
23,3,,933125-12701,,"BUSH 38 50A",1,,1,,,,,,,,,,,,,,
24,2,,172149-72530,,GLAND,1,,1,,,,,,,,,,,,,,
25,3,,172137-72542,,"PISTON 70",1,,1,,,,,,,,,,,,,,
26,2,,172149-72540,,"HEAD 7040",1,,1,,,,,,,,,,,,,,
27,3,,933135-14600,,"BUSH 40 30, ROD",1,,1,,,,,,,,,,,,,,
28,2,,172137-72700,,"RING 40A, CUSHION",1,,1,,,,,,,,,,,,,,
29,2,,172137-72710,,"COLLAR 40B, CUSHION",1,,1,,,,,,,,,,,,,,
30,2,,172137-72720,,"COLLAR 40A, CUSHION",1,,1,,,,,,,,,,,,,,
31,2,,172137-72730,,"RING 44B, CUSHION",1,,1,,,,,,,,,,,,,,
32,2,,172137-72740,,"CUSHION PLUNGER 44 A",1,,1,,,,,,,,,,,,,,,
33,2,,24761-020000,,"NIPPLE PT1/8,GREASE",1,,1,,,,,,,,,,,,,,
34,1,,172149-72570,,"COVER, SWING",1,,1,,,,,,,,,,,,,,
35,1,,22157-100000,,"WASHER 10",1,,1,,,,,,,,,,,,,,
36,1,,22217-100000,,"SPRING WASHER 10",1,,1,,,,,,,,,,,,,,
37,1,,26116-100162,,"BOLT M10X 16 PLATED",1,,1,,,,,,,,,,,,,,
38,1,,933168-14170,,"SPRING 16",1,,1,,,,,,,,,,,,,,
```

https://truckmanualshub.com/

Fig. 33 スイングシリンダ（B12／17（−1））
SWING CYLINDER (B12/17(−1))

B12P(R)
B12-1P(R)
B17P(R)
B17-1P(R)

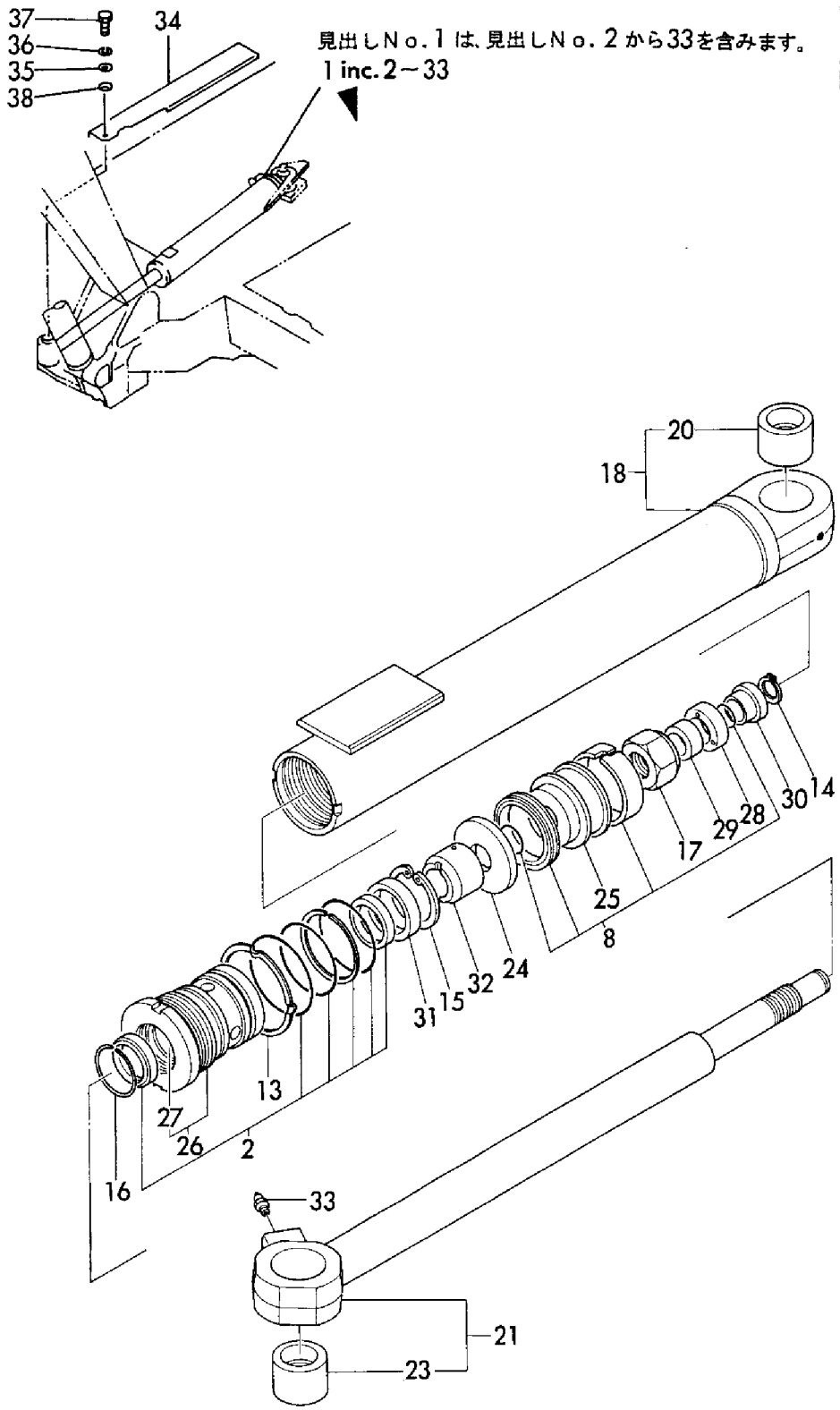

https://truckmanualshub.com/

```
1,1,,172149-72451,,"CYLINDER ASSY, SWING",,1,,1,1,,,,,,,,,,,,
2,2,,172149-72021,,"SEAL SET, HEAD",,1,,1,1,,,,,,,,,,,,
8,2,,172149-72000,,"SEAL SET, PISTON",,1,,1,1,,,,,,,,,,,,
13,2,,172141-72420,,"WASHER 70, LOCK",,1,,1,1,,,,,,,,,,,,
14,2,,172142-72810,,"CIRCLIP 22",,1,,1,1,,,,,,,,,,,,
15,2,,22252-000561,,"CIRCLIP   56",,1,,1,1,,,,,,,,,,,,
16,2,,933111-26600,,"RING 55, SPRING",,1,,1,1,,,,,,,,,,,,
17,2,,172141-72250,,"U-NUT M27",,1,,1,1,,,,,,,,,,,,
18,2,,172149-72461,,"TUBE ASSY, SWING",,1,,1,1,,,,,,,,,,,,
19,3,,172168-72240,,"BUSH 38X50X40",,1,,1,1,,,,,,,,,,,,
20,3,,172168-81270,,"SEAL,DUST 38X50X4",,2,,2,2,,,,,,,,,,,,
21,2,,172149-72511,,"ROD ASSY, SWING",,1,,1,1,,,,,,,,,,,,
22,3,,172168-72240,,"BUSH 38X50X40",,1,,1,1,,,,,,,,,,,,
23,3,,172168-81270,,"SEAL,DUST 38X50X4",,2,,2,2,,,,,,,,,,,,
24,2,,172149-72530,,GLAND,,1,,1,1,,,,,,,,,,,,
25,2,,172137-72542,,"PISTON 70",,1,,1,1,,,,,,,,,,,,
26,2,,172149-72540,,"HEAD 7040",,1,,1,1,,,,,,,,,,,,
27,3,,933135-14600,,"BUSH 40 30, ROD",,1,,1,1,,,,,,,,,,,,
28,2,,172137-72700,,"RING 40A, CUSHION",,1,,1,1,,,,,,,,,,,,
29,2,,172137-72710,,"COLLAR 40B, CUSHION",,1,,1,1,,,,,,,,,,,,
30,2,,172137-72720,,"COLLAR 40A, CUSHION",,1,,1,1,,,,,,,,,,,,
31,2,,172137-72730,,"RING 44B, CUSHION",,1,,1,1,,,,,,,,,,,,
32,2,,172137-72740,,"CUSHION PLUNGER 44 A",,1,,1,1,,,,,,,,,,,,
33,2,,24761-020000,,"NIPPLE PT1/8,GREASE",,1,,1,1,,,,,,,,,,,,
34,1,,172149-72570-3,,"COVER, SWING",,1,,1,1,,,,,,,,,,,,
35,1,,22157-100000,,"WASHER 10",,1,,1,1,,,,,,,,,,,,
36,1,,22217-100000,,"SPRING WASHER 10",,1,,1,1,,,,,,,,,,,,
37,1,,26116-100162,,"BOLT M10X 16 PLATED",,1,,1,1,,,,,,,,,,,,
38,1,,933168-14170,,"SPRING 16",,1,,1,1,,,,,,,,,,,,
```

https://truckmanualshub.com/

Fig. 34 スイングシリンダ（B12/17−2） SWING CYLINDER (B12/17-2)

B12-2P (R)
B17-2P (R)

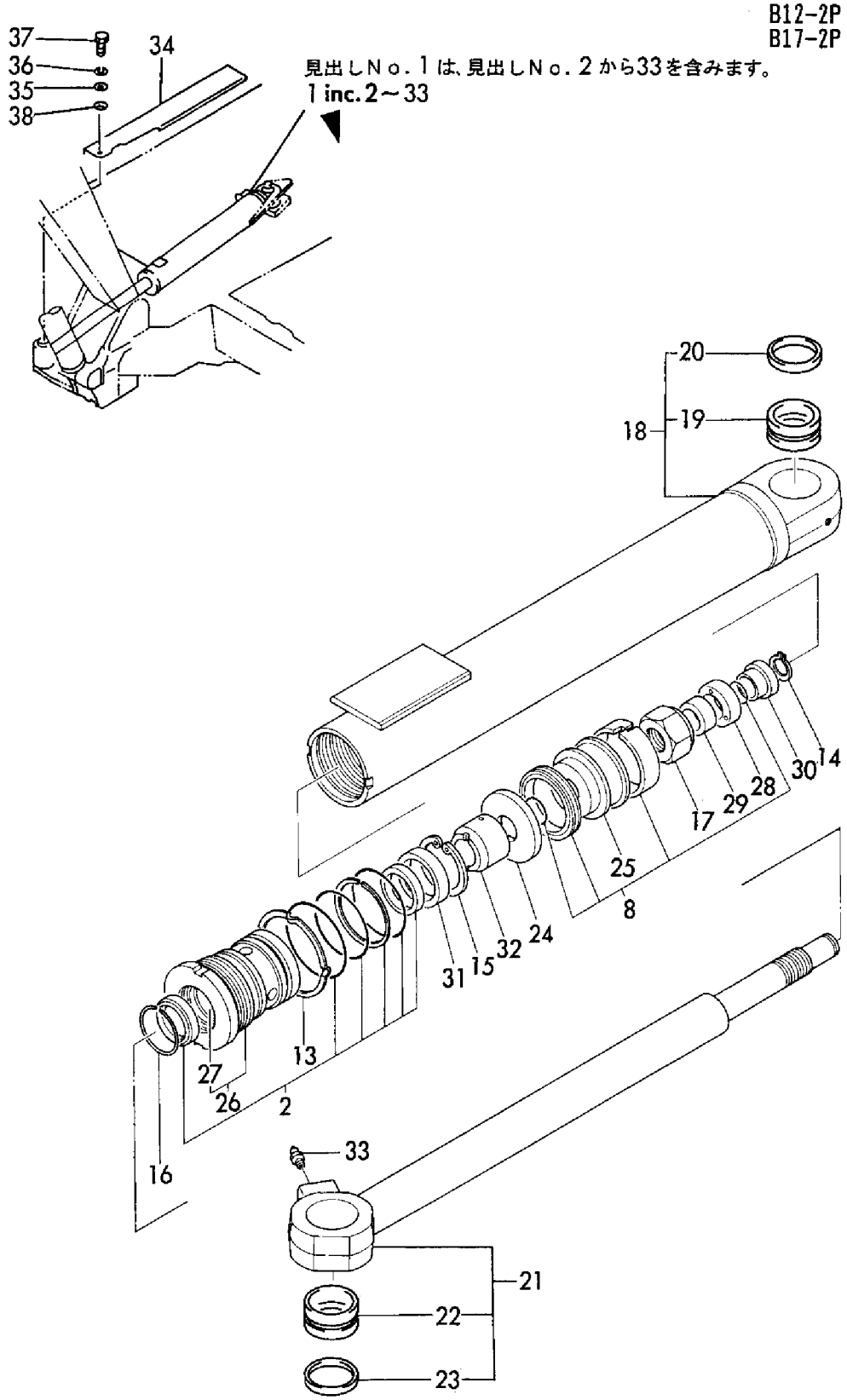

https://truckmanualshub.com/

```
1,1,,933120-28501,,"CYLINDER ASSY, BLADE",1,,1,,,,,,,,,,,,,,
2,2,,172137-72431,,"PISTON 60G",1,,1,,,,,,,,,,,,,,
2A,2,,172149-99380,,"CYLINDER KIT, BUCKET",1,,1,,,,W,,,MXXX,,,,MXXX,,,,
3,3,,172137-72452,,"SEAL SET 60A, PISTON",1,,1,,,,,,,,,,,,,,
6,3,,172141-71900,,"SEAL SET, HEAD",1,,1,,,,,,,,,,,,,,
11,3,,933125-59600,,"WASHER 60 B, LOCK",1,,1,,,,,,,,,,,,,,
12,3,,172141-73090,,"RING 50, SPRING",1,,1,,,,,,,,,,,,,,
13,2,,733121-28501,,"TUBE W/BUSH, BLADE",1,,1,,,,,,,,,,,,,,
15,3,,933125-05500,,"BUSH 30X40 B, PIN",1,,1,,,,,,,,,,,,,,
16,2,,733122-28400,,"ROD W/BUSH, BLADE",1,,1,,,,,,,,,,,,,,
18,3,,933125-05500,,"BUSH 30X40 B, PIN",1,,1,,,,,,,,,,,,,,
19,2,,172141-72580,,"NUT M20",1,,1,,,,,,,,,,,,,,
20,2,,172141-72540,,"HEAD 6035, CYLINDER",1,,1,,,,,,,,,,,,,,
21,3,,933111-01600,,"BUSH 35 30, ROD",1,,1,,,,,,,,,,,,,,
```

https://truckmanualshub.com/

Fig. 35 ブレードシリンダ (B12/17 (−1))
BLADE CYLINDER (B12/17 (−1))

B12P (R)
B12-1P (R)
B17P (R)
B17-1P (R)

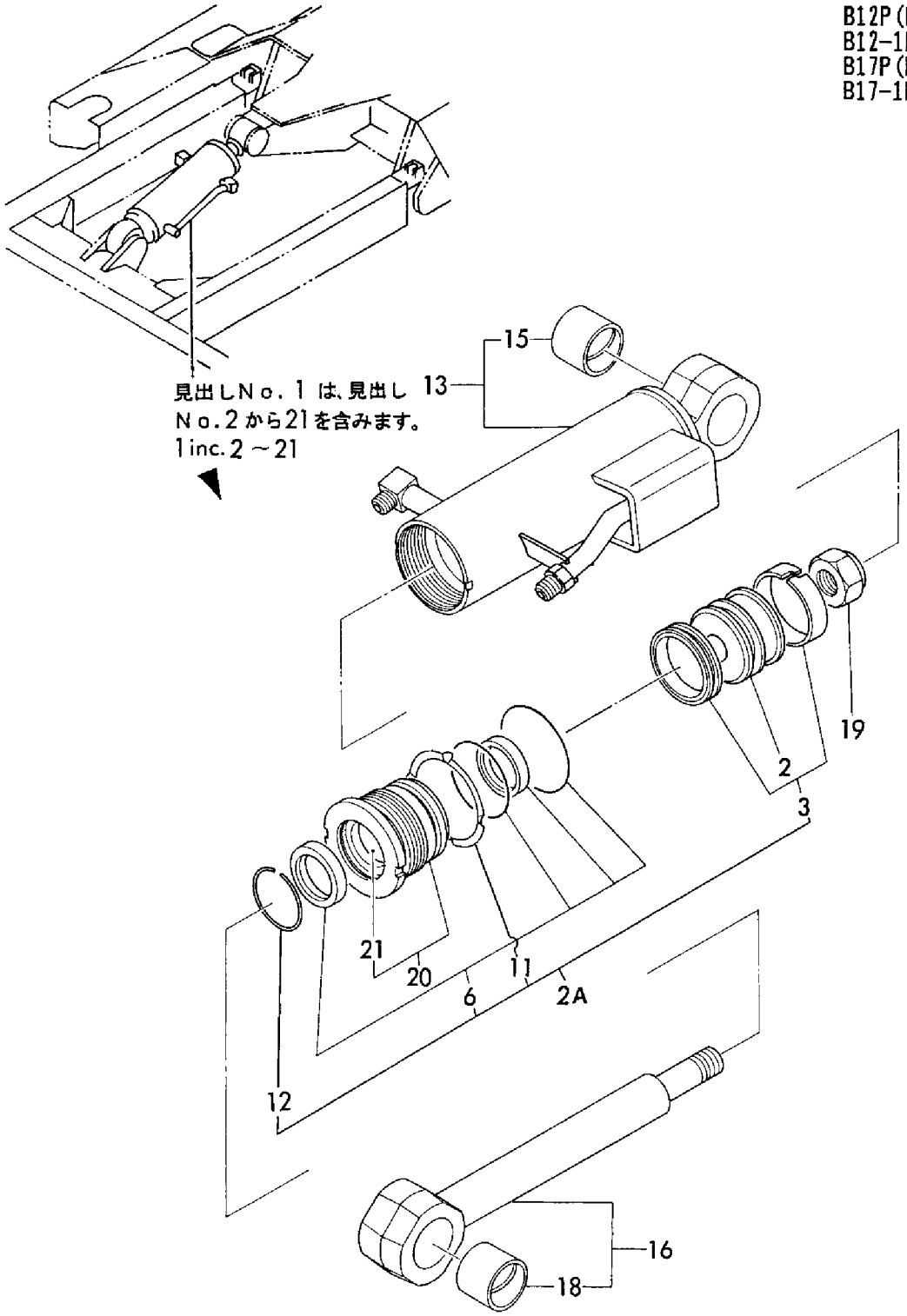

https://truckmanualshub.com/

```
1,1,,933120-28502,,"CYLINDER, BLADE",,1,,1,1,,,,,,,,,,,,
1-1,1,,933120-28503,,"CYLINDER, BLADE",,1,,1,1,,N,,,,,M20730,,,,M20521,,M20521
1-2,1,,933120-28504,,"CYLINDER ASSY,
BLADE",,1,,1,1,,N,,,,,M20803,,,,M20546,,M20546
2,2,,172137-72431,,"PISTON 60G",,1,,1,1,,,,,,,,,,,,
2-1,2,,172171-72120,,PISTON,,1,,1,1,,S,,,,,M20730,,,,M20521,,M20521
3,2,,172141-72540,,"HEAD 6035, CYLINDER",,1,,1,1,,,,,,,,,,,,
4,3,,933111-01600,,"BUSH 35 30, ROD",,1,,1,1,,,,,,,,,,,,
5,2,,172149-99380,,"CYLINDER KIT, BUCKET",,1,,1,1,,,,,,,,,,,,
6,3,,172137-72452,,"SEAL SET 60A, PISTON",,1,,1,1,,,,,,,,,,,,
9,3,,172141-71900,,"SEAL SET, HEAD",,1,,1,1,,,,,,,,,,,,
14,3,,172141-73090,,"RING 50, SPRING",,1,,1,1,,,,,,,,,,,,
15,3,,933125-59600,,"WASHER 60 B, LOCK",,1,,1,1,,,,,,,,,,,,
16,2,,172141-72580,,"NUT M20",,1,,1,1,,,,,,,,,,,,
16-1,2,,172171-72130,,"U-NUT M24",,1,,1,1,,S,,,,,M20730,,,,M20521,,M20521
17,2,,933121-28502,,"TUBE ASSY, BLADE",,1,,1,1,,,,,,,,,,,,
18,3,,172183-72290,,"SEAL 38X48X 4, DUST",,2,,2,2,,,,,,,,,,,,
19,3,,23871-010000,,"PLUG PT1/8,SCREW",,1,,1,1,,,,,,,,,,,,
20,3,,172149-72680,,"BUSH B 30X30,PIN",,1,,1,1,,,,,,,,,,,,
21,2,,933122-28401,,"ROD COMP.,BLADE",,1,,1,1,,,,,,,,,,,,
21-1,2,,933122-28402,,"ROD COMP.,BLADE",,1,,1,1,,S,,,,,M20730,,,,M20521,,M20521
21-2,2,,933122-28403,,"ROD COMP.,BLADE",,1,,1,1,,N,,,,,M20803,,,,M20546,,M20546
22,3,,172183-72290,,"SEAL 38X48X 4, DUST",,2,,2,2,,,,,,,,,,,,
23,3,,172149-72680,,"BUSH B 30X30,PIN",,1,,1,1,,,,,,,,,,,,
```

https://truckmanualshub.com/

Fig.36 ブレードシリンダ (B12/17-2)
BLADE CYLINDER (B12/17-2)

B12-2P(R)
B17-2P(R)

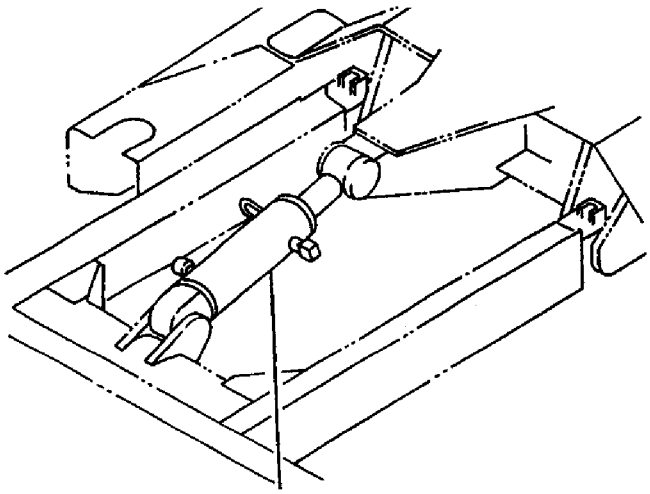

見出しNo.1,1-1,1-2は、見出しNo.2から23を含みます。
1,1-1,1-2 inc.2～23

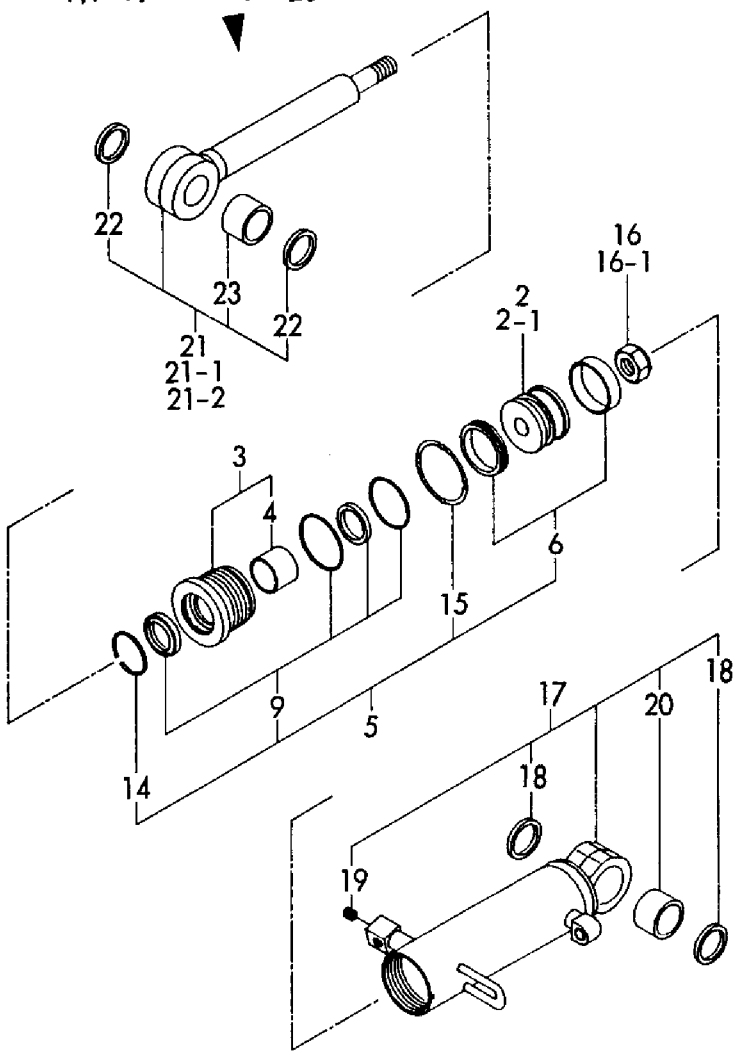

https://truckmanualshub.com/

```
1,1,,172149-71110,,"MOUNT, PUMP",1,1,1,1,1,,,,,,,,,,,,
2,1,,22137-100000,,"WASHER 10,POLISHED",2,2,2,2,2,,,,,,,,,,,,
3,1,,26013-100302,,"BOLT M10X 30",4,4,4,4,4,,,,,,,,,,,,
4,1,,26013-100352,,"BOLT M10X 35",2,2,2,2,2,,,,,,,,,,,,
5,1,,172137-71210,,"JOINT, PUMP",1,1,1,1,1,,,,,,,,,,,,
6,1,,172137-71220,,COUPLING,1,1,1,1,1,,,,,,,,,,,,
7,1,,22351-040008,,"SPRING PIN 4X 8",6,6,6,6,6,,,,,,,,,,,,
8,1,,26450-100352,,"BOLT M10X 35",6,6,6,6,6,,,,,,,,,,,,
9,1,,172122-71130,,"BOLT M10X 30",2,2,2,2,2,,,,,,,,,,,,
10,1,,172149-73110,,"PUMP ASSY, HYD. OIL",1,1,1,1,1,,,,,,,,,,,,,
11,2,,172149-73120,,"REAR KIT",1,1,1,1,1,,,,,,,,,,,,
12,2,,172137-73130,,"PUMP ASSY, CENTER",1,1,1,1,1,,,,,,,,,,,,,
13,2,,172149-73130,,"FRONT KIT",1,1,1,1,1,,,,,,,,,,,,
14,2,,172122-73140,,COVER,1,1,1,1,1,,,,,,,,,,,,
15,2,,172149-73140,,BOLT,4,4,4,4,4,,,,,,,,,,,,
16,2,,172122-73150,,"PLATE, CENTER",2,2,2,2,2,,,,,,,,,,,,
17,2,,172122-73170,,"COUPLING, SPLINE",2,2,2,2,2,,,,,,,,,,,,
18,2,,172137-73170,,"MOUNTING FLANGE",1,1,1,1,1,,,,,,,,,,,,
19,2,,172122-73200,,"SEAL SET",1,1,1,1,1,,,,,,,,,,,,
20,2,,22217-100000,,"SPRING WASHER 10",4,4,4,4,4,,,,,,,,,,,,
```

https://truckmanualshub.com/

Fig. 37 油圧ポンプ＆軸継手 HYD. OIL PUMP & JOINT

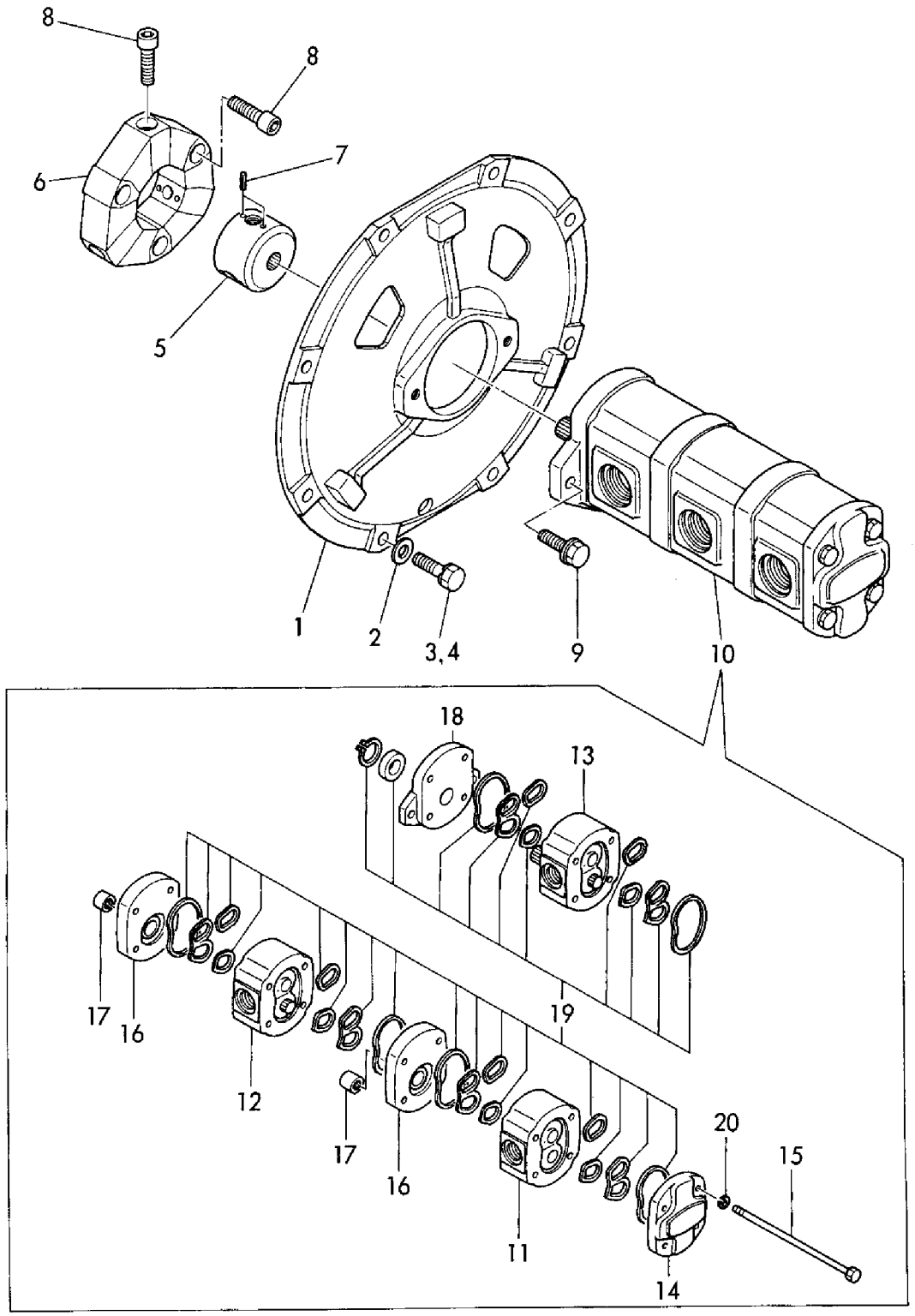

https://truckmanualshub.com/

```
1,1,,172149-73310,,"MOTOR ASSY, TURNING",1,1,1,1,1,,,,,,,,,,,,
2,2,,172149-73320,,"MOTOR ASSY, TURNING",1,1,1,1,1,,,,,,,,,,,,
3,3,,172149-73440,,"PINION(SUB) ASSY",1,1,1,1,1,,,,,,,,,,,,
4,4,,172149-73330,,"HOUSING, BEARING",1,1,1,1,1,,,,,,,,,,,,
5,4,,172149-73340,,"SHAFT ASSY, PINION",1,1,1,1,1,,,,,,,,,,,,
6,4,,172149-73350,,"SPACER, BEARING",1,1,1,1,1,,,,,,,,,,,,
7,4,,172149-73460,,"SEAL KIT, PINION(SUB",1,1,1,1,1,,,,,,,,,,,,
8,4,,172141-77030,,"BEARING, ROLLER",1,1,1,1,1,,,,,,,,,,,,
9,4,,172141-77040,,BEARING,1,1,1,1,1,,,,,,,,,,,,
10,4,,172141-77050,,"RING, RETAINING",1,1,1,1,1,,,,,,,,,,,,
11,4,,172141-77110,,BOLT,4,4,4,4,4,,,,,,,,,,,,
12,4,,22217-120000,,"WASHER 12,SPRING",4,4,4,4,4,,,,,,,,,,,,
13,4,,22252-000900,,"CIRCLIP   90",1,1,1,1,1,,,,,,,,,,,,
14,3,,172149-73450,,"MOTOR(SUB) ASSY",1,1,1,1,1,,,,,,,,,,,,
15,4,,172137-70520,,PLUG,2,2,2,2,2,,,,,,,,,,,,
16,4,,172137-70530,,BALL,2,2,2,2,2,,,,,,,,,,,,
17,4,,172137-70600,,VALVE,1,1,1,1,1,,,,,,,,,,,,
18,4,,172148-73360,,DRIVE,1,1,1,1,1,,,,,,,,,,,,
19,4,,172149-73360,,ROLLER,1,1,1,1,1,,,,,,,,,,,,
20,4,,172149-73380,,"HOUSING, VALVE",1,1,1,1,1,,,,,,,,,,,,
21,4,,172149-73390,,PLUG,1,1,1,1,1,,,,,,,,,,,,
22,4,,172149-73400,,BOLT,4,4,4,4,4,,,,,,,,,,,,
23,4,,172149-73410,,FLANGEMOUTING,1,1,1,1,1,,,,,,,,,,,,
24,4,,172149-73470,,"SEAL KIT, MOTOR(SUB",1,1,1,1,1,,,,,,,,,,,,
25,4,,172141-77160,,"PLATE, VALVE",1,1,1,1,1,,,,,,,,,,,,
26,4,,172137-77190,,PLATE,1,1,1,1,1,,,,,,,,,,,,
27,4,,172137-77200,,SPRING,2,2,2,2,2,,,,,,,,,,,,
28,4,,172137-77220,,"TUBE, 3RD",1,1,1,1,1,,,,,,,,,,,,
29,4,,172148-77260,,"DRIVE, VALVE",1,1,1,1,1,,,,,,,,,,,,
30,2,,172149-73500,,"VALVE, BRAKE",1,1,1,1,1,,,,,,,,,,,,
31,3,,172149-73620,,CONNECTOR,2,2,2,2,2,,,,,,,,,,,,
32,3,,172149-73630,,BUSHING,2,2,2,2,2,,,,,,,,,,,,
33,3,,172149-73650,,"SEAL KIT, BRAKE",1,1,1,1,1,,,,,,,,,,,,
34,1,,26013-120402,,"BOLT M12X 40",4,4,4,4,4,,,,,,,,,,,,
```

https://truckmanualshub.com/

Fig. 38 旋回モータ TURNING MOTOR

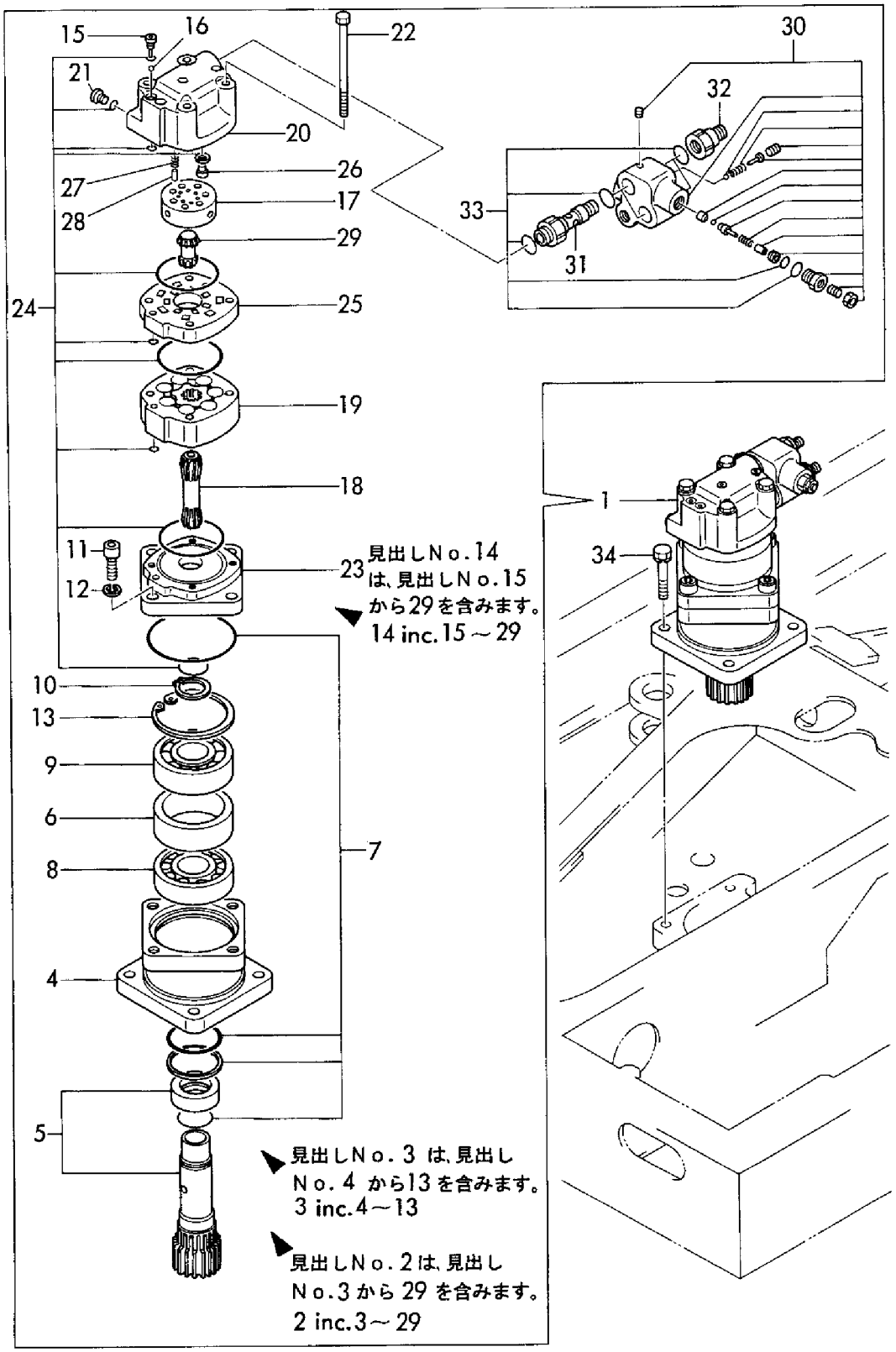

https://truckmanualshub.com/

```
1,1,,172137-73351,,"MOTOR ASSY, DRIVE",2,2,2,2,2,,,,,,,,,,,,
2,2,,172137-73361,,"MOTOR ASSY",2,2,2,2,2,,,,,,,,,,,,
3,3,,172137-70631,,"REDUCTION GEAR ASSY",2,2,2,2,2,,,,,,,,,,,,
4,4,,172137-70461,,"SEAL KIT, REDUCTION",2,2,2,2,2,,,,,,,,,,,,
5,4,,172137-70471,,SPACER,2,2,2,2,2,,,,,,,,,,,,
6,4,,172137-70651,,"GEAR, SUN",2,2,2,2,2,,,,,,,,,,,,
7,4,,172137-70661,,BUSH,2,2,2,2,2,,,,,,,,,,,,
8,4,,172137-70681,,COVER,2,2,2,2,2,,,,,,,,,,,,
9,4,,172137-70741,,HOUSING,2,2,2,2,2,,,,,,,,,,,,
10,4,,172137-70770,,"BEARING, DRIVE MOTOR",4,4,4,4,4,,,,,,,,,,,,
11,4,,172137-70781,,"SEAL W/PLATE KIT",2,2,2,2,2,,,,,,,,,,,,
12,4,,172137-70791,,PIN,2,2,2,2,2,,,,,,,,,,,,
13,4,,172137-70811,,FLANGE,2,2,2,2,2,,,,,,,,,,,,
14,4,,172137-70820,,WASHER,2,2,2,2,2,,,,,,,,,,,,
15,4,,172137-70830,,WASHER,2,2,2,2,2,,,,,,,,,,,,
16,4,,172137-70840,,"CARRIER KIT",2,2,2,2,2,,,,,,,,,,,,
17,4,,22242-001100,,"CIRCLIP  110",2,2,2,2,2,,,,,,,,,,,,
18,4,,23871-030000,,"PLUG PT3/8,SCREW",4,4,4,4,4,,,,,,,,,,,,
19,4,,26450-060162,,"BOLT M 6X 16",18,18,18,18,18,,,,,,,,,,,,
19A,4,,172137-70800,,"CIRCLIP  140",2,2,2,2,2,,W,,,"FROM 1ST",,"FROM 1ST",,"FROM
1ST",,"FROM 1ST",,"FROM 1ST"
20,3,,172137-70641,,"MOTOR SUB ASSY",2,2,2,2,2,,,,,,,,,,,,
21,4,,172137-70451,,"SEAL KIT, MOTOR",2,2,2,2,2,,,,,,,,,,,,
22,4,,172137-70480,,BOLT,8,8,8,8,8,,,,,,,,,,,,
23,4,,172137-70490,,PLUG,2,2,2,2,2,,,,,,,,,,,,
24,4,,172137-70500,,PLUG,2,2,2,2,2,,,,,,,,,,,,
25,4,,172137-70510,,"HOUSING, VALVE",2,2,2,2,2,,,,,,,,,,,,
26,4,,172137-70520,,PLUG,4,4,4,4,4,,,,,,,,,,,,
27,4,,172137-70530,,BALL,4,4,4,4,4,,,,,,,,,,,,
28,4,,172137-70540,,"DRIVE, VALVE",2,2,2,2,2,,,,,,,,,,,,
29,4,,172137-70551,,ROLLER,2,2,2,2,2,,,,,,,,,,,,
30,4,,172137-70561,,DRIVE,2,2,2,2,2,,,,,,,,,,,,
31,4,,172137-70570,,PIN,4,4,4,4,4,,,,,,,,,,,,
32,4,,172137-70580,,SPRING,4,4,4,4,4,,,,,,,,,,,,
33,4,,172137-70590,,PLATE,2,2,2,2,2,,,,,,,,,,,,
34,4,,172137-70600,,VALVE,2,2,2,2,2,,,,,,,,,,,,
35,4,,172137-70610,,"PLATE, VALVE",2,2,2,2,2,,,,,,,,,,,,
36,4,,172137-70620,,"PLATE, SPACER",2,2,2,2,2,,,,,,,,,,,,
37,2,,172137-73370,,"VALVE,COUNTER BALAN.",2,2,2,2,2,,,,,,,,,,,,
38,3,,172137-70850,,"SEAL SET",2,2,2,2,2,,,,,,,,,,,,
39,1,,26013-100252,,"BOLT W/WASHER M10X25",16,16,16,16,16,,,,,,,,,,,,
```

https://truckmanualshub.com/

発行No. 000Y00K2492-1
更新年月：1996. 09
REVISED : Sep., 1996

Fig. 39 走行モータ TRAVEL MOTOR

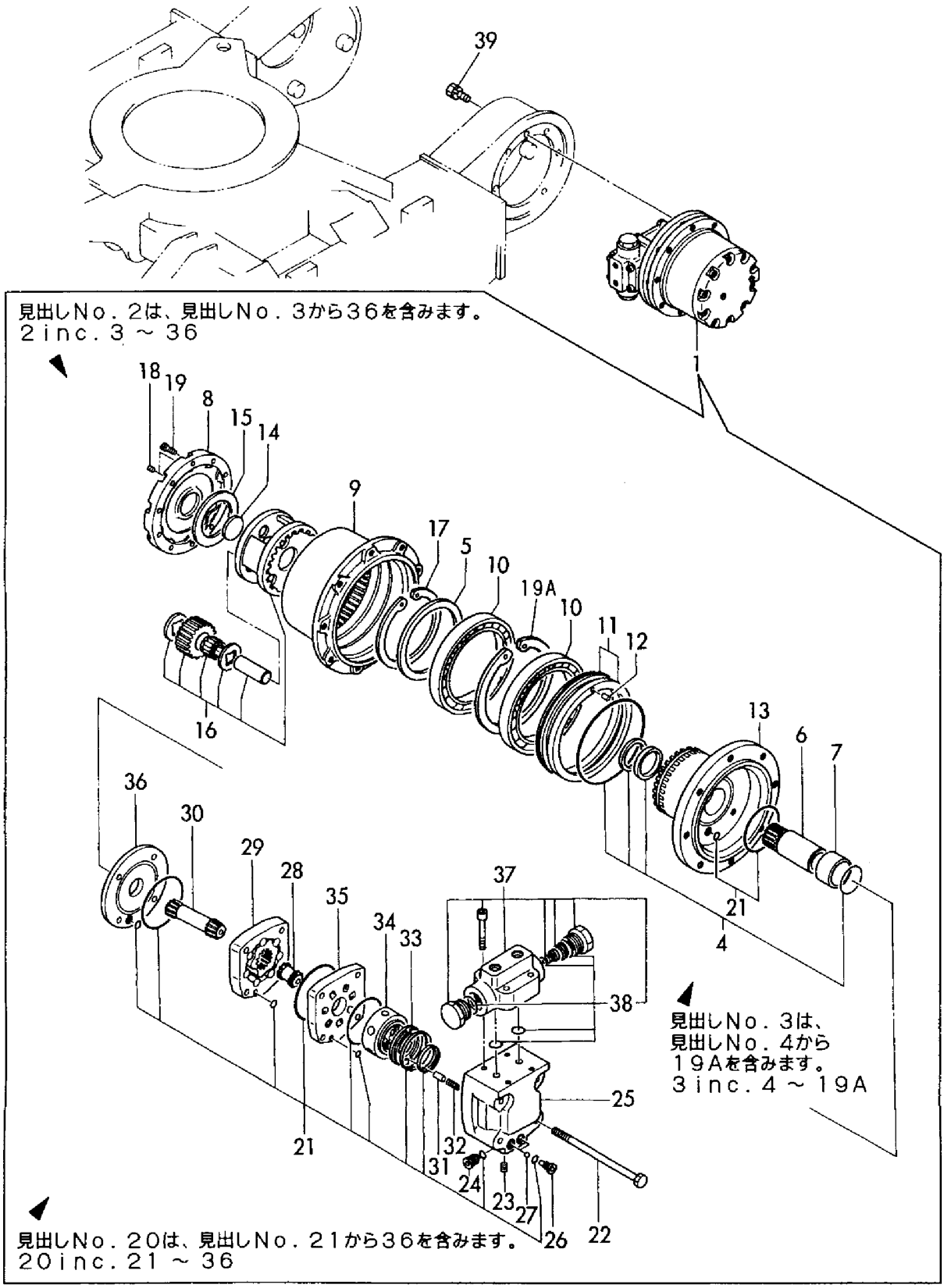

https://truckmanualshub.com/

```
1,1,,172131-73800,,"SWIVEL JOINT ASSY",1,1,1,1,1,,,,,,,,,,,,
2,2,,194630-31910,,"LINER 22.5X40X2",1,1,1,1,1,,,,,,,,,,,,
3,2,,172142-73800,,"O-RING 55.76X5.7",8,8,8,8,8,,,,,,,,,,,,
4,2,,172131-73810,,"SHAFT,SWIVEL",1,1,1,1,1,,,,,,,,,,,,
5,2,,172137-73810,,"HUB, SWIVEL JOINT",1,1,1,1,1,,,,,,,,,,,,
6,2,,172131-73830,,"FLANGE,SWIVEL",1,1,1,1,1,,,,,,,,,,,,
7,2,,172137-73860,,"SPACER, SWIVEL",1,1,1,1,1,,,,,,,,,,,,
8,2,,22242-000451,,"CIRCLIP   45",1,1,1,1,1,,,,,,,,,,,,
9,2,,23871-020000,,"PLUG PT1/4,SCREW",6,6,6,6,6,,,,,,,,,,,,
10,2,,24311-000750,,"O-RING 1A P-75.0",1,1,1,1,1,,,,,,,,,,,,
11,2,,24321-000700,,"O-RING 1A G-70.0",1,1,1,1,1,,,,,,,,,,,,
12,2,,26013-100252,,"BOLT W/WASHER M10X25",3,3,3,3,3,,,,,,,,,,,,
13,1,,172149-76100,,BUSH,1,,1,,,,,,,,,,,,,,
13-1,1,,172137-76230,,BUSING,1,1,1,1,1,,N,,,M10501,,,,M10501,,,,
14,1,,26013-100252,,"BOLT W/WASHER M10X25",4,4,4,4,4,,,,,,,,,,,,
```

https://truckmanualshub.com/

Fig. 40 スイベルジョイント SWIVEL JOINT

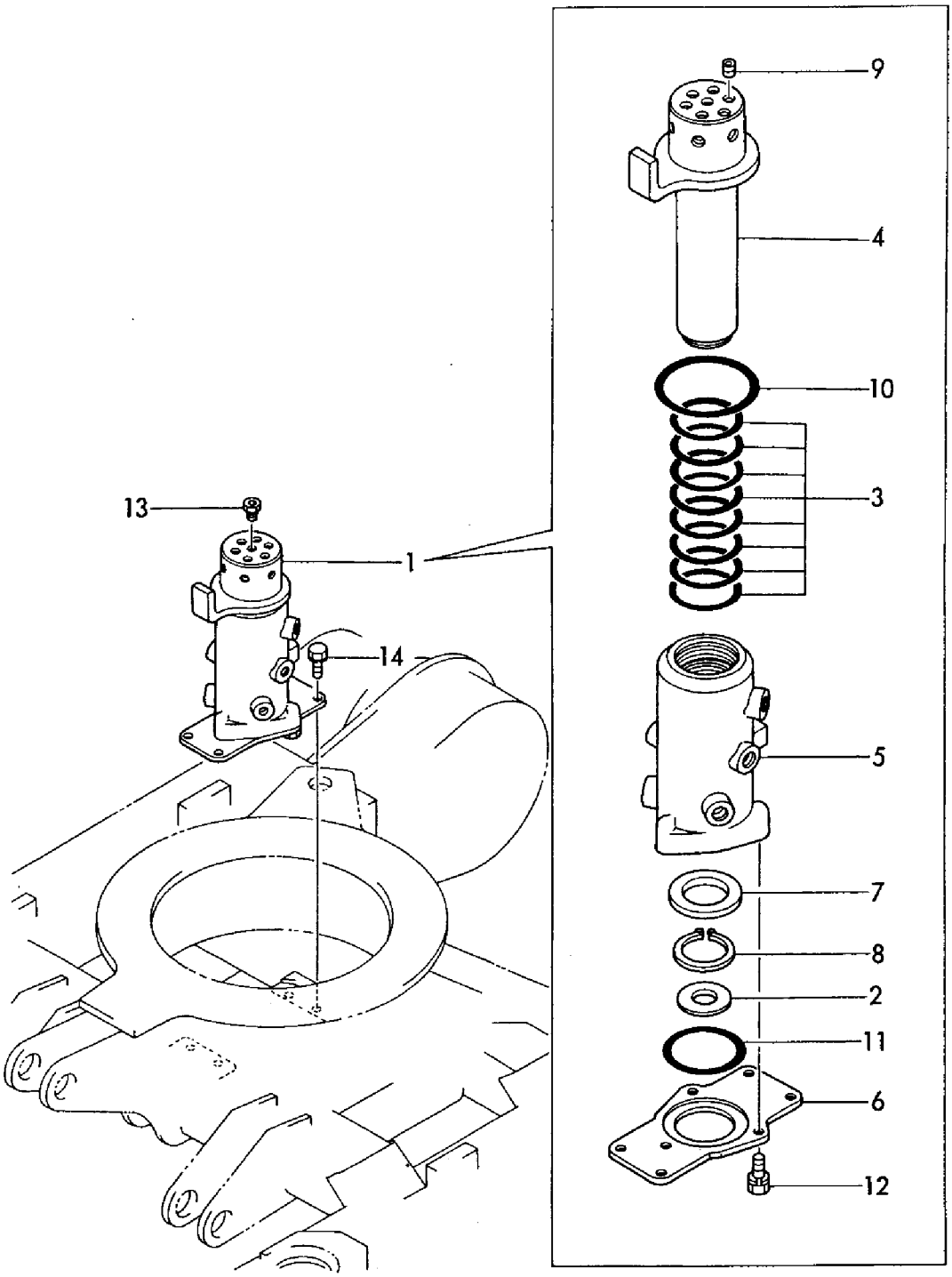

https://truckmanualshub.com/

```
1,1,,172149-74100,,"VALVE ASSY, CONTROL",1,1,1,1,1,,,1,,,,,,,,,
2,2,,172149-74150,,"SECTION ASSY, DRIVE",2,2,2,2,2,,,,,,,,,,,,
4,3,,24325-000550,,"O-RING 1B G-55.0",2,2,2,2,2,,,,,,,,,,,,
5,3,,172137-74440,,"SEAL, OIL",4,4,4,4,4,,,,,,,,,,,,
6,3,,172137-74450,,"PLATE,SEAL",4,4,4,4,4,,,,,,,,,,,,
7,3,,172137-74460,,"SEAT, SPRING",4,4,4,4,4,,,,,,,,,,,,
8,3,,172137-74420,,"SPRING (A), RETURN",2,2,2,2,2,,,,,,,,,,,,
9,3,,172137-74470,,SPACER,2,2,2,2,2,,,,,,,,,,,,
10,3,,172137-74480,,"BOLT, SPOOL",2,2,2,2,2,,,,,,,,,,,,
11,3,,172137-74490,,CAP,2,2,2,2,2,,,,,,,,,,,,
12,3,,172137-74500,,"BOLT, PLATE",4,4,4,4,4,,,,,,,,,,,,
13,3,,172137-74510,,"BOLT, CAP",4,4,4,4,4,,,,,,,,,,,,
14,2,,172149-74360,,"SECTION ASY, TURNING",1,1,1,1,1,,,,,,,,,,,,
16,3,,24325-000550,,"O-RING 1B G-55.0",1,1,1,1,1,,,,,,,,,,,,
17,3,,172137-74440,,"SEAL, OIL",2,2,2,2,2,,,,,,,,,,,,
18,3,,172137-74450,,"PLATE,SEAL",2,2,2,2,2,,,,,,,,,,,,
19,3,,172137-74460,,"SEAT, SPRING",2,2,2,2,2,,,,,,,,,,,,
20,3,,172137-74420,,"SPRING (A), RETURN",1,1,1,1,1,,,,,,,,,,,,
21,3,,172137-74470,,SPACER,1,1,1,1,1,,,,,,,,,,,,
22,3,,172137-74480,,"BOLT, SPOOL",1,1,1,1,1,,,,,,,,,,,,
23,3,,172137-74490,,CAP,1,1,1,1,1,,,,,,,,,,,,
24,3,,172137-74500,,"BOLT, PLATE",2,2,2,2,2,,,,,,,,,,,,
25,3,,172137-74510,,"BOLT, CAP",2,2,2,2,2,,,,,,,,,,,,
26,3,,172137-74520,,"VALVE, CHECK",1,1,1,1,1,,,,,,,,,,,,
27,3,,172137-74530,,"GUIDE, VALVE",1,1,1,1,1,,,,,,,,,,,,
28,3,,172137-74540,,"SPRING, VALVE",1,1,1,1,1,,,,,,,,,,,,
```

https://truckmanualshub.com/

Fig. 41 コントロールバルブ（走行，旋回） CONTROL VALVE (TRAVEL, TURNING)

コントロールバルブASSY
CONTROL VALLE ASSY
(172149-74100)
Fig.41 REF.NO.1
INC. Fig.41 REF.NO.2~28
Fig.42 REF.NO.1~36
Fig.43 REF.NO.1~39
Fig.44 REF.NO.1~35
Fig.45 REF.NO.1~39

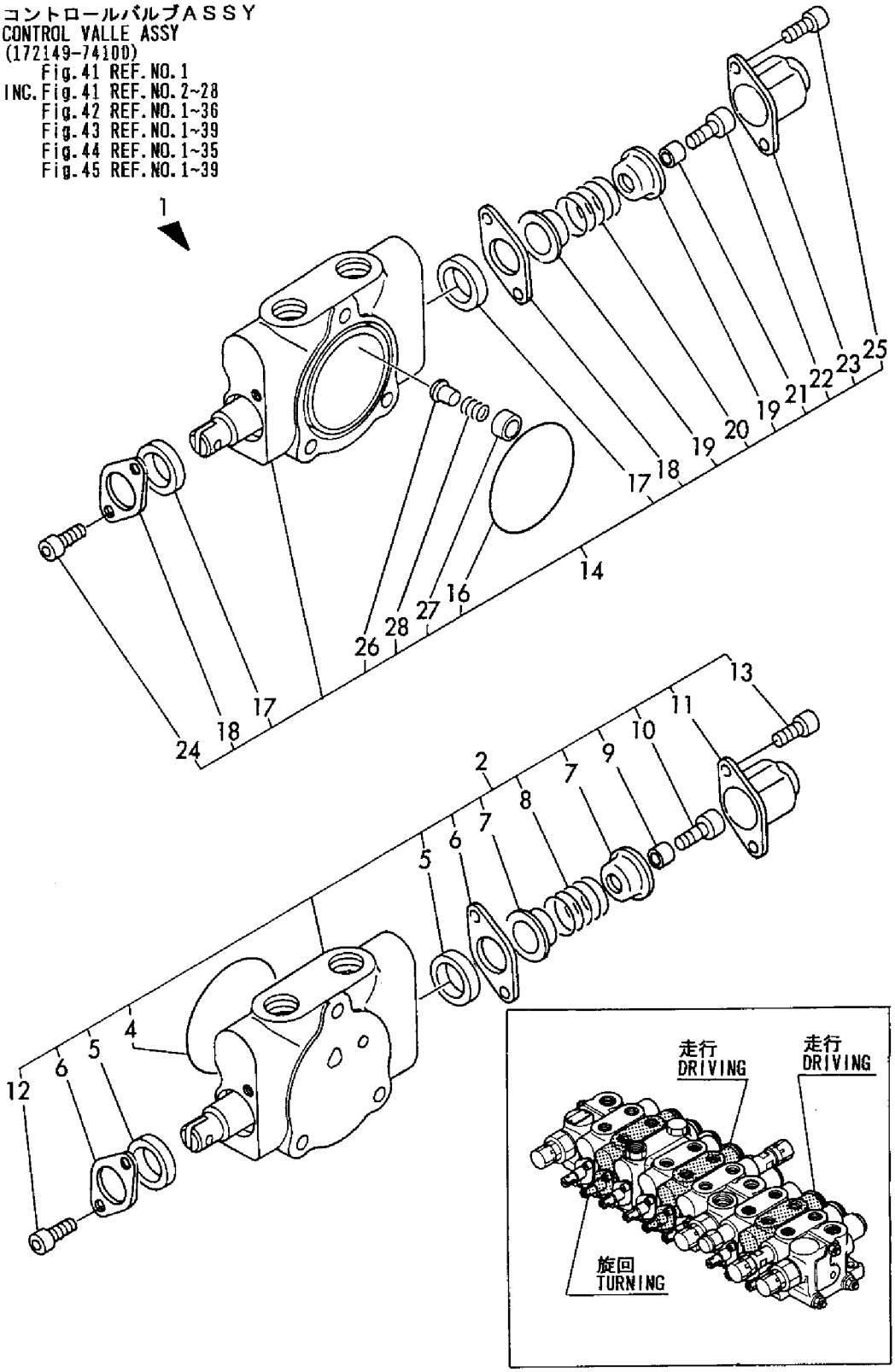

https://truckmanualshub.com/

```
1,2,,172149-74130,,"SECTION ASSY, ARM",1,1,1,1,1,,,,,,,,,,,,
3,3,,24325-000500,,"O-RING 1B G-50.0",1,,1,,,,,M,,,,,,,,,,
3-1,3,,24325-000550,,"O-RING 1B G-55.0",1,1,1,1,1,,,,,,,,,,,,,
4,3,,172137-74440,,"SEAL, OIL",2,2,2,2,2,,,,,,,,,,,,,
5,3,,172137-74450,,"PLATE,SEAL",2,2,2,2,2,,,,,,,,,,,,,
6,3,,172137-74460,,"SEAT, SPRING",2,2,2,2,2,,,,,,,,,,,,,
7,3,,172137-74420,,"SPRING (A), RETURN",1,1,1,1,1,,,,,,,,,,,,,
8,3,,172137-74470,,SPACER,1,1,1,1,1,,,,,,,,,,,,,
9,3,,172137-74480,,"BOLT, SPOOL",1,1,1,1,1,,,,,,,,,,,,,
10,3,,172137-74490,,CAP,1,1,1,1,1,,,,,,,,,,,,,
11,3,,172137-74500,,"BOLT, PLATE",2,2,2,2,2,,,,,,,,,,,,,
12,3,,172137-74510,,"BOLT, CAP",2,2,2,2,2,,,,,,,,,,,,,
13,3,,172137-74520,,"VALVE, CHECK",1,1,1,1,1,,,,,,,,,,,,,
14,3,,172137-74530,,"GUIDE, VALVE",1,1,1,1,1,,,,,,,,,,,,,
15,3,,172137-74540,,"SPRING, VALVE",1,1,1,1,1,,,,,,,,,,,,,
16,2,,172137-74600,,"VALVE ASSY,OVER ROAD",1,1,1,1,1,,,,,,,,,,,,,
19,3,,24315-000150,,"O-RING 1B P-15.0",1,1,1,1,1,,,,,,,,,,,,,
20,3,,172137-74640,,"O-RING 1B S 12.5",1,1,1,1,1,,,,,,,,,,,,,
21,3,,24341-000160,,"O-RING 1A S-16.0",2,,2,,,,,M,,,,,,,,,,
21-1,3,,24314-000160,,"O-RING 4C P-16.0",2,2,2,2,2,,,,,,,,,,,,,
22,2,,172149-74270,,"SECTION ASSY, BUCKET",1,1,1,1,1,,,,,,,,,,,,,
24,3,,24325-000500,,"O-RING 1B G-50.0",1,,1,,,,,M,,,,,,,,,,
24-1,3,,24325-000550,,"O-RING 1B G-55.0",1,1,1,1,1,,,,,,,,,,,,,
25,3,,172137-74440,,"SEAL, OIL",2,2,2,2,2,,,,,,,,,,,,,
26,3,,172137-74450,,"PLATE,SEAL",2,2,2,2,2,,,,,,,,,,,,,
27,3,,172137-74460,,"SEAT, SPRING",2,2,2,2,2,,,,,,,,,,,,,
28,3,,172137-74430,,"SPRING (B), RETURN",1,1,1,1,1,,,M,,,,,,,,,
28-1,3,,172137-74420,,"SPRING (A), RETURN",1,1,1,1,1,,,,,,,,,,,,,
29,3,,172137-74470,,SPACER,1,1,1,1,1,,,,,,,,,,,,,
30,3,,172137-74480,,"BOLT, SPOOL",1,1,1,1,1,,,,,,,,,,,,,
31,3,,172137-74490,,CAP,1,1,1,1,1,,,,,,,,,,,,,
32,3,,172137-74500,,"BOLT, PLATE",2,2,2,2,2,,,,,,,,,,,,,
33,3,,172137-74510,,"BOLT, CAP",2,2,2,2,2,,,,,,,,,,,,,
34,3,,172137-74520,,"VALVE, CHECK",1,1,1,1,1,,,,,,,,,,,,,
35,3,,172137-74530,,"GUIDE, VALVE",1,1,1,1,1,,,,,,,,,,,,,
36,3,,172137-74540,,"SPRING, VALVE",1,1,1,1,1,,,,,,,,,,,,,
```

https://truckmanualshub.com/

Fig. 42 コントロールバルブ（アーム，バケット） CONTROL VALVE (ARM, BUCKET)

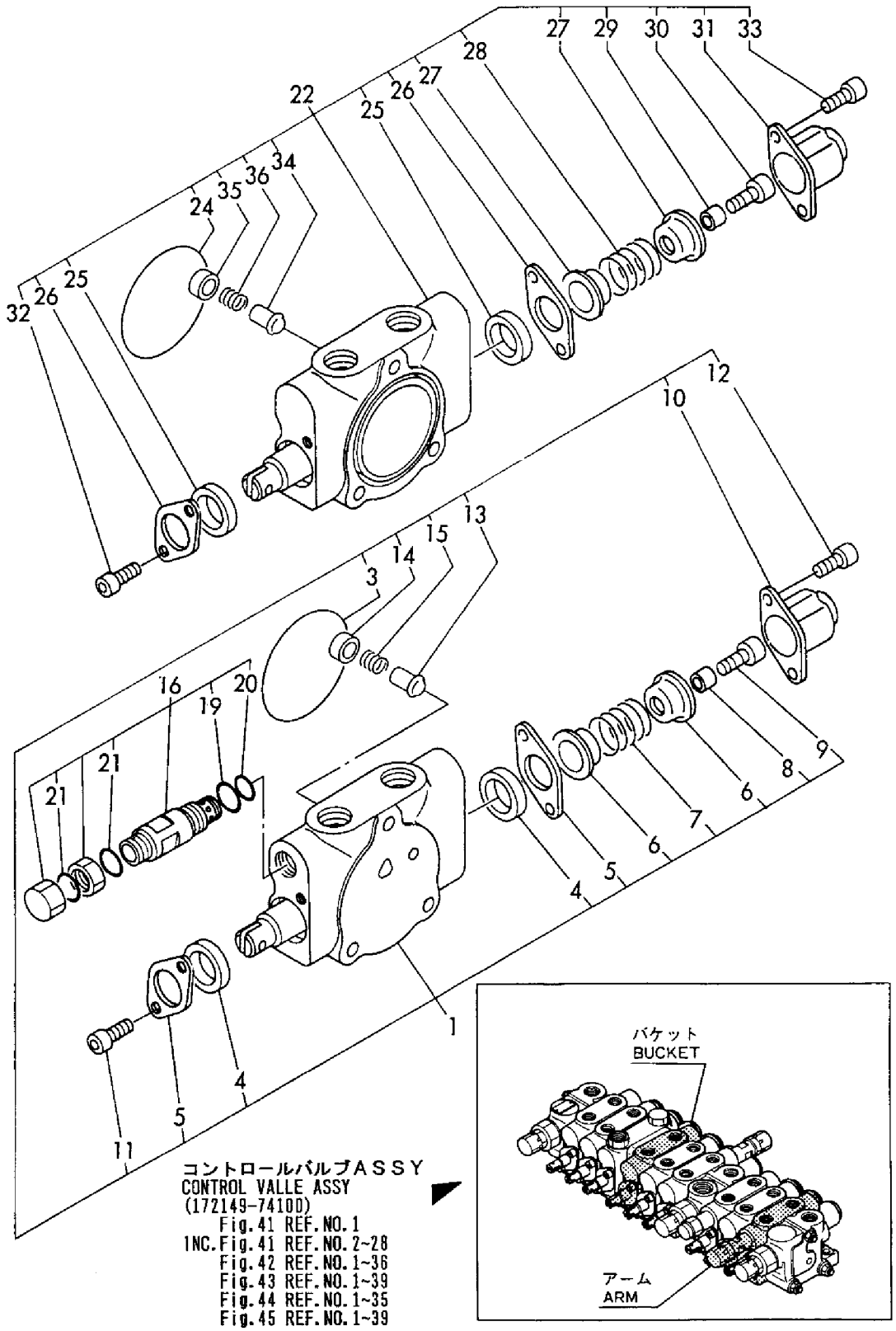

コントロールバルブASSY
CONTROL VALLE ASSY
(172149-74100)
Fig.41 REF.NO.1
INC.Fig.41 REF.NO.2~28
Fig.42 REF.NO.1~36
Fig.43 REF.NO.1~39
Fig.44 REF.NO.1~35
Fig.45 REF.NO.1~39

https://truckmanualshub.com/

```
1,2,,172149-74200,,"SECTION ASSY, SEING",1,1,1,1,1,,,,,,,,,,,,
3,3,,24325-000550,,"O-RING 1B G-55.0",1,1,1,1,1,,,,,,,,,,,,
4,3,,172137-74440,,"SEAL, OIL",2,2,2,2,2,,,,,,,,,,,,
5,3,,172137-74450,,"PLATE,SEAL",2,2,2,2,2,,,,,,,,,,,,
6,3,,172137-74460,,"SEAT, SPRING",2,2,2,2,2,,,,,,,,,,,,
7,3,,172137-74420,,"SPRING (A), RETURN",1,1,1,1,1,,,,,,,,,,,,
8,3,,172137-74470,,SPACER,1,1,1,1,1,,,,,,,,,,,,
9,3,,172137-74480,,"BOLT, SPOOL",1,1,1,1,1,,,,,,,,,,,,
10,3,,172137-74490,,CAP,1,1,1,1,1,,,,,,,,,,,,
11,3,,172137-74500,,"BOLT, PLATE",2,2,2,2,2,,,,,,,,,,,,
12,3,,172137-74510,,"BOLT, CAP",2,2,2,2,2,,,,,,,,,,,,
13,3,,172137-74520,,"VALVE, CHECK",1,1,1,1,1,,,,,,,,,,,,
14,3,,172137-74530,,"GUIDE, VALVE",1,1,1,1,1,,,,,,,,,,,,
15,3,,172137-74540,,"SPRING, VALVE",1,1,1,1,1,,,,,,,,,,,,
16,2,,172137-74630,,"VALVE ASSY, SUCTION",1,1,1,1,1,,,,,,,,,,,,
17,3,,24315-000150,,"O-RING 1B P-15.0",2,2,2,2,2,,,,,,,,,,,,
18,3,,172137-74640,,"O-RING 1B S 12.5",1,1,1,1,1,,,,,,,,,,,,
19,2,,172149-74250,,"SECTION ASSY, BOOM",1,1,1,1,1,,,,,,,,,,,,
21,3,,24325-000500,,"O-RING 1B G-50.0",1,,1,,,,,M,,,,,,,,,
21-1,3,,24325-000550,,"O-RING 1B G-55.0",1,1,1,1,1,,,,,,,,,,,,
22,3,,172137-74440,,"SEAL, OIL",2,2,2,2,2,,,,,,,,,,,,
23,3,,172137-74450,,"PLATE,SEAL",2,2,2,2,2,,,,,,,,,,,,
24,3,,172137-74460,,"SEAT, SPRING",2,2,2,2,2,,,,,,,,,,,,
25,3,,172137-74420,,"SPRING (A), RETURN",1,1,1,1,1,,,,,,,,,,,,
26,3,,172137-74470,,SPACER,1,1,1,1,1,,,,,,,,,,,,
27,3,,172137-74480,,"BOLT, SPOOL",1,1,1,1,1,,,,,,,,,,,,
28,3,,172137-74490,,CAP,1,1,1,1,1,,,,,,,,,,,,
29,3,,172137-74500,,"BOLT, PLATE",2,2,2,2,2,,,,,,,,,,,,
30,3,,172137-74510,,"BOLT, CAP",2,2,2,2,2,,,,,,,,,,,,
31,3,,172137-74520,,"VALVE, CHECK",1,1,1,1,1,,,,,,,,,,,,
32,3,,172137-74530,,"GUIDE, VALVE",1,1,1,1,1,,,,,,,,,,,,
33,3,,172137-74540,,"SPRING, VALVE",1,1,1,1,1,,,,,,,,,,,,
34,2,,172137-74600,,"VALVE ASSY,OVER ROAD",1,1,1,1,1,,,,,,,,,,,,
37,3,,24315-000150,,"O-RING 1B P-15.0",1,1,1,1,1,,,,,,,,,,,,
38,3,,172137-74640,,"O-RING 1B S 12.5",1,1,1,1,1,,,,,,,,,,,,
39,3,,24341-000160,,"O-RING 1A S-16.0",2,,2,,,,,M,,,,,,,,,
39-1,3,,24314-000160,,"O-RING 4C P-16.0",2,2,2,2,2,,,,,,,,,,,,
```

https://truckmanualshub.com/

Fig. 43 コントロールバルブ（スイング，ブーム） CONTROL VALVE (SWING, BOOM)

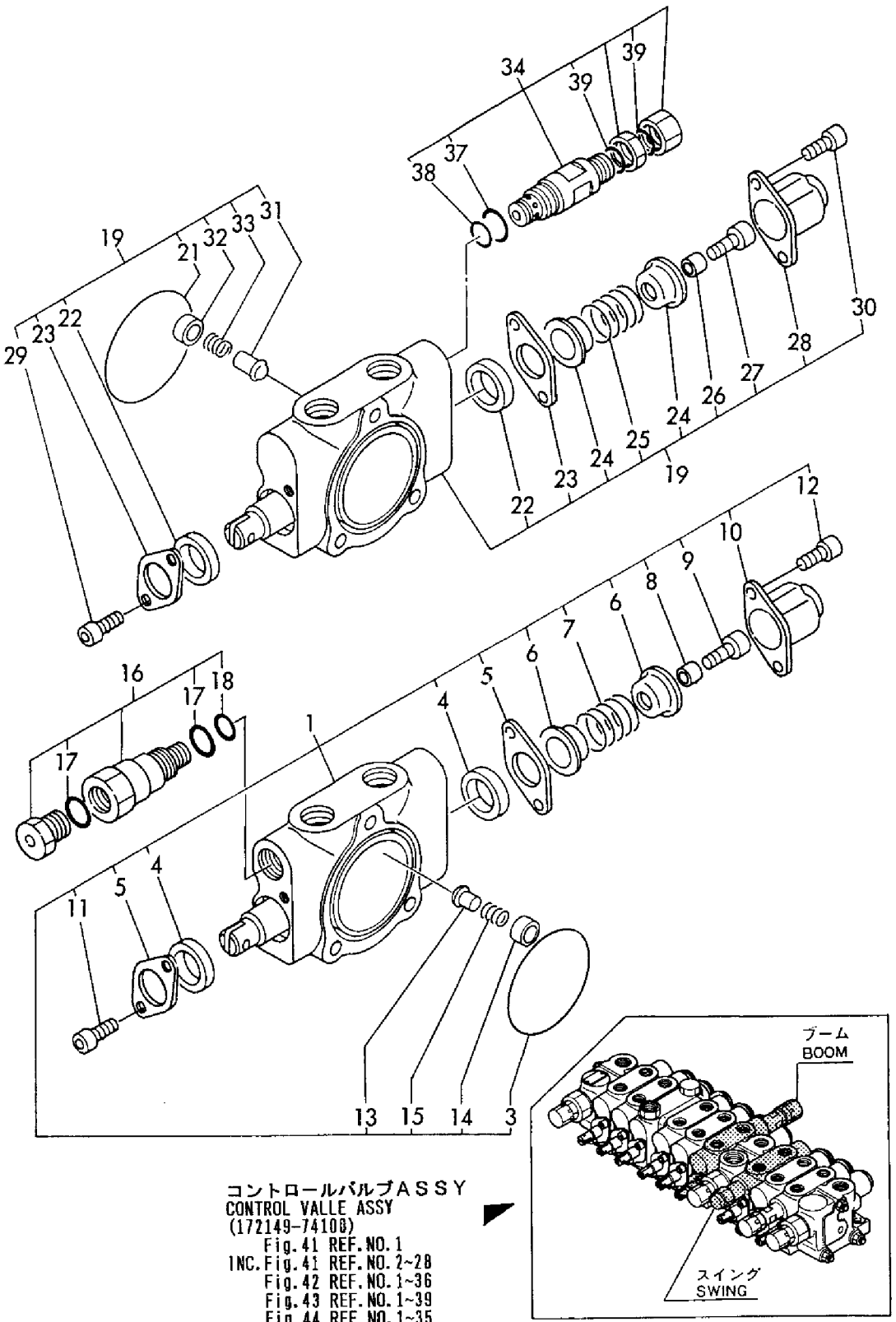

コントロールバルブＡＳＳＹ
CONTROL VALLE ASSY
(172149-74100)
Fig. 41 REF. NO. 1
INC. Fig. 41 REF. NO. 2~28
Fig. 42 REF. NO. 1~36
Fig. 43 REF. NO. 1~39
Fig. 44 REF. NO. 1~35
Fig. 45 REF. NO. 1~39

https://truckmanualshub.com/

```
1,2,,172149-74380,,"SECTION ASSY, BLADE",1,1,1,1,1,,,,,,,,,,,,
3,3,,24325-000550,,"O-RING 1B G-55.0",1,1,1,1,1,,,,,,,,,,,,
4,3,,172137-74440,,"SEAL, OIL",2,2,2,2,2,,,,,,,,,,,,
5,3,,172137-74450,,"PLATE,SEAL",2,2,2,2,2,,,,,,,,,,,,
6,3,,172137-74460,,"SEAT, SPRING",2,2,2,2,2,,,,,,,,,,,,
7,3,,172137-74420,,"SPRING (A), RETURN",1,1,1,1,1,,,,,,,,,,,,
8,3,,172137-74470,,SPACER,1,1,1,1,1,,,,,,,,,,,,
9,3,,172137-74480,,"BOLT, SPOOL",1,1,1,1,1,,,,,,,,,,,,
10,3,,172137-74490,,CAP,1,1,1,1,1,,,,,,,,,,,,
11,3,,172137-74500,,"BOLT, PLATE",2,2,2,2,2,,,,,,,,,,,,
12,3,,172137-74510,,"BOLT, CAP",2,2,2,2,2,,,,,,,,,,,,
13,3,,172137-74520,,"VALVE, CHECK",1,1,1,1,1,,,,,,,,,,,,
14,3,,172137-74530,,"GUIDE, VALVE",1,1,1,1,1,,,,,,,,,,,,
15,3,,172137-74540,,"SPRING, VALVE",1,1,1,1,1,,,,,,,,,,,,
16,2,,172149-74320,,"SECTION ASSY, P.T.O",1,1,1,1,1,,,,,,,,,,,,
18,3,,24325-000550,,"O-RING 1B G-55.0",1,1,1,1,1,,,,,,,,,,,,
19,3,,172137-74440,,"SEAL, OIL",2,2,2,2,2,,,,,,,,,,,,
20,3,,172137-74450,,"PLATE,SEAL",2,2,2,2,2,,,,,,,,,,,,
21,3,,172137-74460,,"SEAT, SPRING",2,2,2,2,2,,,,,,,,,,,,
22,3,,172137-74420,,"SPRING (A), RETURN",1,1,1,1,1,,,,,,,,,,,,
23,3,,172137-74470,,SPACER,1,1,1,1,1,,,,,,,,,,,,
24,3,,172137-74480,,"BOLT, SPOOL",1,1,1,1,1,,,,,,,,,,,,
25,3,,172137-74490,,CAP,1,1,1,1,1,,,,,,,,,,,,
26,3,,172137-74500,,"BOLT, PLATE",2,2,2,2,2,,,,,,,,,,,,
27,3,,172137-74510,,"BOLT, CAP",2,2,2,2,2,,,,,,,,,,,,
28,3,,172137-74520,,"VALVE, CHECK",1,1,1,1,1,,,,,,,,,,,,
29,3,,172131-74060,,"GUIDE,CHECK VALVE",1,1,1,1,1,,,,,,,,,,,,
30,3,,172137-74540,,"SPRING, VALVE",1,1,1,1,1,,,,,,,,,,,,
31,3,,172131-74080,,"O-RING 1B S9",1,1,1,1,1,,,,,,,,,,,,
32,3,,172149-74340,,PLUG,1,1,1,1,1,,,,,,,,,,,,
33,3,,24315-000070,,"O-RING 1B P-7.0",1,1,1,1,1,,,,,,,,,,,,
34,3,,172137-74270,,PLUG,2,2,2,2,2,,,,,,,,,,,,
35,3,,24315-000140,,"O-RING 1B P-14.0",2,2,2,2,2,,,,,,,,,,,,
```

https://truckmanualshub.com/

Fig. 44 コントロールバルブ（ブレード，P．T．O．）CONTROL VALVE (BLADE, P.T.O.)

コントロールバルブASSY
CONTROL VALLE ASSY
(172149-74100)
Fig.41 REF.NO.1
INC. Fig.41 REF.NO.2~28
Fig.42 REF.NO.1~36
Fig.43 REF.NO.1~39
Fig.44 REF.NO.1~35
Fig.45 REF.NO.1~39

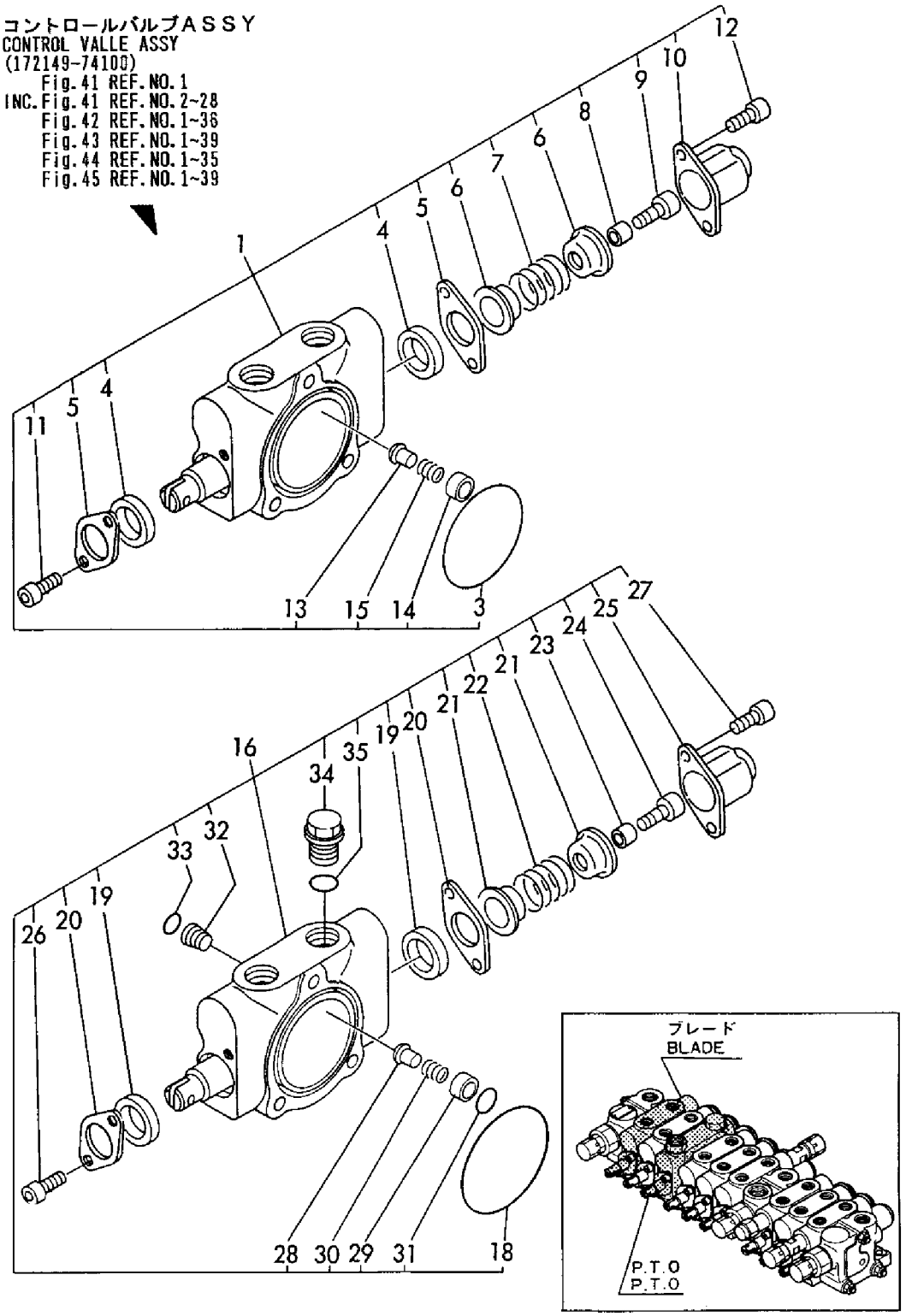

https://truckmanualshub.com/

```
1,2,,172149-74110,,"SECTION ASSY, P1",1,1,1,1,1,,,,,,,,,,,,
3,3,,24325-000500,,"O-RING 1B G-50.0",1,,1,,,,,M,,,,,,,,,,
3-1,3,,24325-000550,,"O-RING 1B G-55.0",1,1,1,1,1,,,,,,,,,,,,,
4,3,,23871-020000,,"PLUG PT1/4,SCREW",1,1,1,1,1,,,,,,,,,,,,,
5,2,,172137-74570,,"VALVE ASSY, RELIEF",1,,1,,,,,M,,,,,,,,,,
5-1,2,,172149-74440,,"VALVE, RELIEF",1,1,1,1,1,,,,,,,,,,,,,
6,3,,172131-74340,,"VALVE,RELIEF",1,1,1,1,1,,,,,,,,,,,,,
7,3,,172137-74580,,"O-RING 15",1,1,1,1,1,,,,,,,,,,,,,
8,3,,24315-000220,,"O-RING 1B P-22.0",1,1,1,1,1,,,,,,,,,,,,,
9,3,,24315-000100,,"O-RING 1B P-10.0",1,1,1,1,1,,,,,,,,,,,,,
10,3,,172137-74040,,"NUT M14",1,,1,,,,,M,,,,,,,,,,
10-1,3,,172131-74040,,"NUT M14X1",1,1,1,1,1,,,,,,,,,,,,,
11,3,,172131-74050,,"CAP NUT M16X1",1,1,1,1,1,,,,,,,,,,,,,
12,3,,24341-000160,,"O-RING 1A S-16.0",2,,2,,,,,M,,,,,,,,,,
12-1,3,,24314-000160,,"O-RING 4C P-16.0",2,2,2,2,2,,,,,,,,,,,,,
13,2,,172149-74220,,"SECTION ASSY, P2",1,1,1,1,1,,,,,,,,,,,,,
15,3,,24325-000550,,"O-RING 1B G-55.0",2,2,2,2,2,,,,,,,,,,,,,
16,3,,23871-020000,,"PLUG PT1/4,SCREW",1,1,1,1,1,,,,,,,,,,,,,
17,2,,172149-74440,,"VALVE, RELIEF",1,1,1,1,1,,,,,,,,,,,,,
18,3,,172131-74340,,"VALVE,RELIEF",1,1,1,1,1,,,,,,,,,,,,,
19,3,,172137-74580,,"O-RING 15",1,1,1,1,1,,,,,,,,,,,,,
20,3,,24315-000220,,"O-RING 1B P-22.0",1,1,1,1,1,,,,,,,,,,,,,
21,3,,24315-000100,,"O-RING 1B P-10.0",1,1,1,1,1,,,,,,,,,,,,,
22,3,,172137-74040,,"NUT M14",1,,1,,,,,M,,,,,,,,,,
22-1,3,,172131-74040,,"NUT M14X1",1,1,1,1,1,,,,,,,,,,,,,
23,3,,172131-74050,,"CAP NUT M16X1",1,1,1,1,1,,,,,,,,,,,,,
24,3,,24341-000160,,"O-RING 1A S-16.0",2,,2,,,,,M,,,,,,,,,,
24-1,3,,24314-000160,,"O-RING 4C P-16.0",2,2,2,2,2,,,,,,,,,,,,,
25,2,,172149-74410,,"SECTION ASSY, P3",1,1,1,1,1,,,,,,,,,,,,,
27,3,,24325-000550,,"O-RING 1B G-55.0",1,1,1,1,1,,,,,,,,,,,,,
28,2,,172149-74480,,"VALVE, RELIEF",1,1,1,1,1,,,,,,,,,,,,,
29,3,,172131-74340,,"VALVE,RELIEF",1,1,1,1,1,,,,,,,,,,,,,
30,3,,172137-74580,,"O-RING 15",1,1,1,1,1,,,,,,,,,,,,,
31,3,,24315-000220,,"O-RING 1B P-22.0",1,1,1,1,1,,,,,,,,,,,,,
32,3,,24315-000100,,"O-RING 1B P-10.0",1,1,1,1,1,,,,,,,,,,,,,
33,3,,172137-74040,,"NUT M14",1,,1,,,,,M,,,,,,,,,,
33-1,3,,172131-74040,,"NUT M14X1",1,1,1,1,1,,,,,,,,,,,,,
34,3,,172131-74050,,"CAP NUT M16X1",1,1,1,1,1,,,,,,,,,,,,,
35,3,,24314-000160,,"O-RING 4C P-16.0",2,2,2,2,2,,,,,,,,,,,,,
36,2,,172149-76170,,PLATE,1,,1,,,,,M,,,,,,,,,,
36-1,2,,172149-74170,,PLATE,1,1,1,1,1,,,,,,,,,,,,,
37,2,,172149-74300,,PLATE,1,1,1,1,1,,,,,,,,,,,,,
38,2,,172149-74460,,TIE-ROD,3,3,3,3,3,,,,,,,,,,,,,
39,2,,26716-080002,,"NUT M 8",6,6,6,6,6,,,,,,,,,,,,,
40,1,,26013-080202,,"BOLT W/WASHER M8X20",1,1,1,1,1,,,,,,,,,,,,,
41,1,,26013-080252,,"BOLT M 8X 25",2,2,2,2,2,,,,,,,,,,,,,
```

https://truckmanualshub.com/

Fig. 45 コントロールバルブ（P1，P2，P3） CONTROL VALVE (P1, P2, P3)

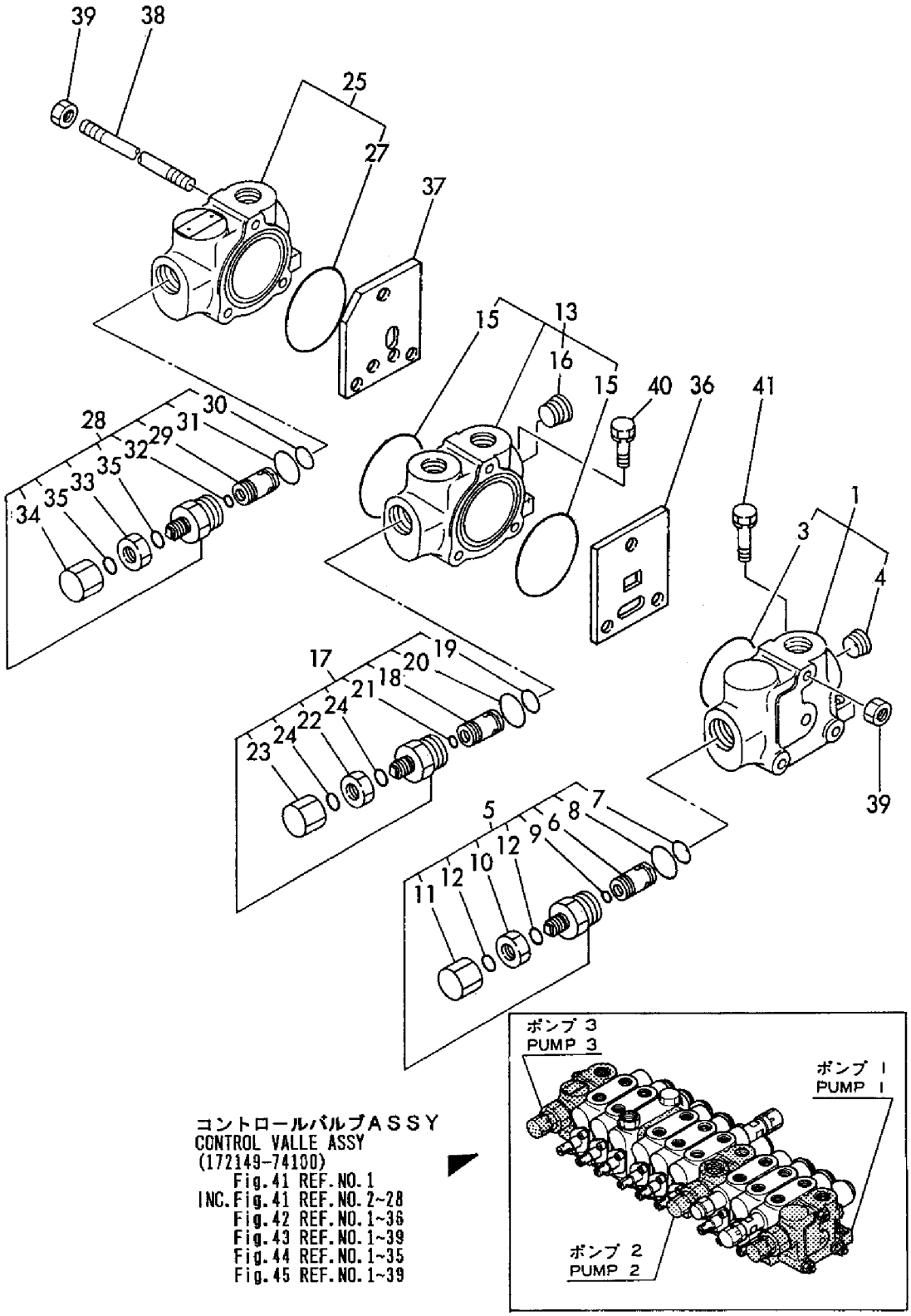

コントロールバルブASSY
CONTROL VALLE ASSY
(172149-74100)
Fig.41 REF.NO.1
INC.Fig.41 REF.NO.2~28
Fig.42 REF.NO.1~36
Fig.43 REF.NO.1~39
Fig.44 REF.NO.1~35
Fig.45 REF.NO.1~39

https://truckmanualshub.com/

```
1A,1,,772149-75100,,"RESERVOIR ASSY",1,,1,,,,,,,,,,,,,,
1B,1,,772149-75100-1,,"TANK ASSY,HYD.OIL",,1,,1,1,,,,,,,,,,,,
2,2,,172137-73700,,"FILTER, SUCTION",1,1,1,1,1,,,,,,,,,,,,
3,2,,172141-73710,,"ROD, STRAINER",1,1,1,1,1,,,,,,,,,,,,
4,2,,172141-73750,,"FILTER ASSY, RETURN",1,1,1,1,1,,,,,,,,,,,,
5,3,,172141-73760,,ELEMENT,1,1,1,1,1,,,,,,,,,,,,
6,3,,172141-73770,,"VALVE ASSY, BYPASS",1,1,1,1,1,,,,,,,,,,,,
7,2,,172112-75780,,"SPRING, STRAINER",1,1,1,1,1,,,,,,,,,,,,
8,2,,26716-100002,,"NUT M10",1,1,1,1,1,,,,,,,,,,,,
9,2,,933152-02710,,"SPRING, SIDE CLUTCH",1,1,1,1,1,,,,,,,,,,,,
11A,2,,172141-75400,,"COVER, EXIT",1,,1,,,,,,,,,,,,,,
11B,2,,172141-75400-1,,"COVER, EXIT",,1,,1,1,,,,,,,,,,,,
12A,2,,172141-75430,,"COVER, INTAKE",1,,1,,,,,,,,,,,,,,
12B,2,,172141-75430-1,,"COVER,INTAKE (GREEN)",,1,,1,1,,,,,,,,,,,,
13,2,,172122-75600,,"GAUGE, OIL LEVEL",1,1,1,1,1,,,,,,,,,,,,
14,3,,172122-75620,,BOLT,2,2,2,2,2,,,,,,,,,,,,
15,3,,172122-75630,,GASKET,4,4,4,4,4,,,,,,,,,,,,
16,2,,172116-75850,,"PLUG, OIL FEED",1,1,1,1,1,,,,,,,,,,,,
17,2,,22134-240000,,"WASHER 24",1,,1,,,,,,,,,,,,,,
17-1,2,,24341-000300,,"O-RING 1A S-
30.0",1,1,1,1,1,,F,1,,*1994.01,,,,*1994.01,,,,
18,2,,22417-200160,,"COTTER PIN 2.0X16",1,1,1,1,1,,,,,,,,,,,,
19,2,,24311-000380,,"O-RING 1A P-38.0",1,1,1,1,1,,,,,,,,,,,,
20,2,,24321-001050,,"O-RING 1A G-105.0",2,2,2,2,2,,,,,,,,,,,,
21,2,,26013-080202,,"BOLT W/WASHER M8X20",6,6,6,6,6,,,,,,,,,,,,
22,2,,933171-23042,,MAGNET,1,1,1,1,1,,,,,,,,,,,,
23,2,,933171-23050,,"PLUG 1/4",1,1,1,1,1,,,,,,,,,,,,
24,2,,933171-23062,,"PLUG 24, DRAIN",1,,1,,,,,,,,,,,,,,
24-1,2,,172183-75750,,"PLUG 24, DRAIN",1,1,1,1,1,,N,,,*1994.01,,,,*1994.01,,,,
25,1,,26013-120302,,"BOLT W/WASHER M12X30",3,3,3,3,3,,,,,,,,,,,,
26,1,,933152-03700,,"WASHER, SIDE CLUTCH",3,3,3,3,3,,,,,,,,,,,,
27,1,,933169-22940,,"SPACER, RESERVOIR",1,1,1,1,1,,,,,,,,,,,,
```

https://truckmanualshub.com/

Fig. 46 作動油タンク HYD. OIL TANK

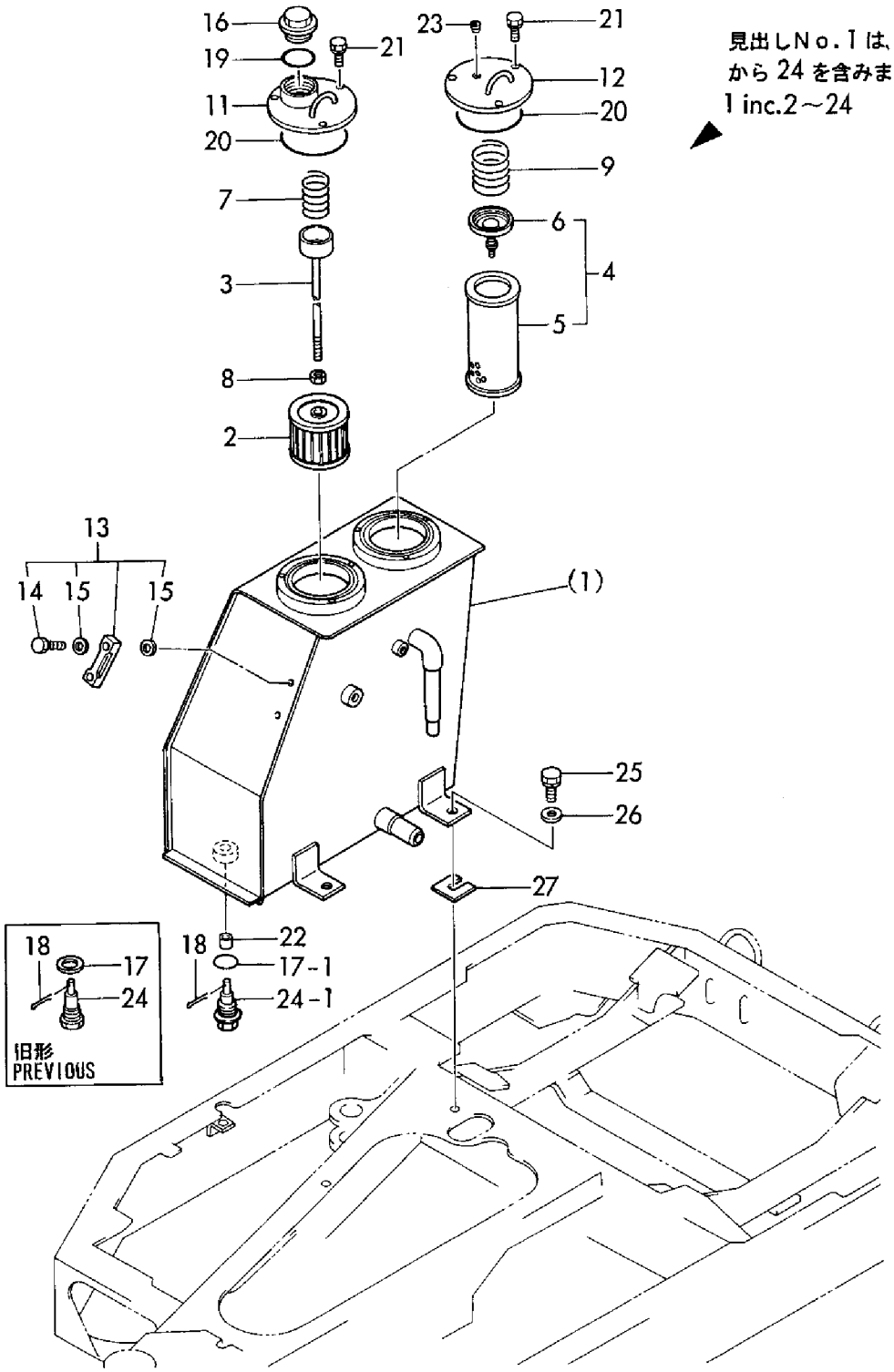

見出しNo.1は、見出しNo.2から24を含みます。
1 inc.2～24

https://truckmanualshub.com/

```
1,1,,172112-77660,,"L-JOINT 1/8",2,2,2,2,2,,,,,,,,,,,,
2,1,,172141-77800,,"JOINT, GREASE",4,4,4,4,4,,,,,,,,,,,,
3,1,,172137-78520,,"PIPE P202FF095",1,1,1,1,1,,,,,,,,,,,,
4,1,,172149-77810,,HOSE,2,,2,,,,,,,,,,,,,,,
4-1,1,,172149-77811,,HOSE,2,2,2,2,2,,N,,,M00778,,,,M00669,,,,
5,1,,172312-77820,,"FITTING, GREASE",1,1,1,1,1,,,,,,,,,,,,
6,1,,23871-010000,,"PLUG PT1/8,SCREW",1,1,1,1,1,,,,,,,,,,,,
7,1,,24761-020000,,"NIPPLE PT1/8,GREASE",3,3,3,3,3,,,,,,,,,,,,,,
```

https://truckmanualshub.com/

Fig. 47 グリーシング GREASING

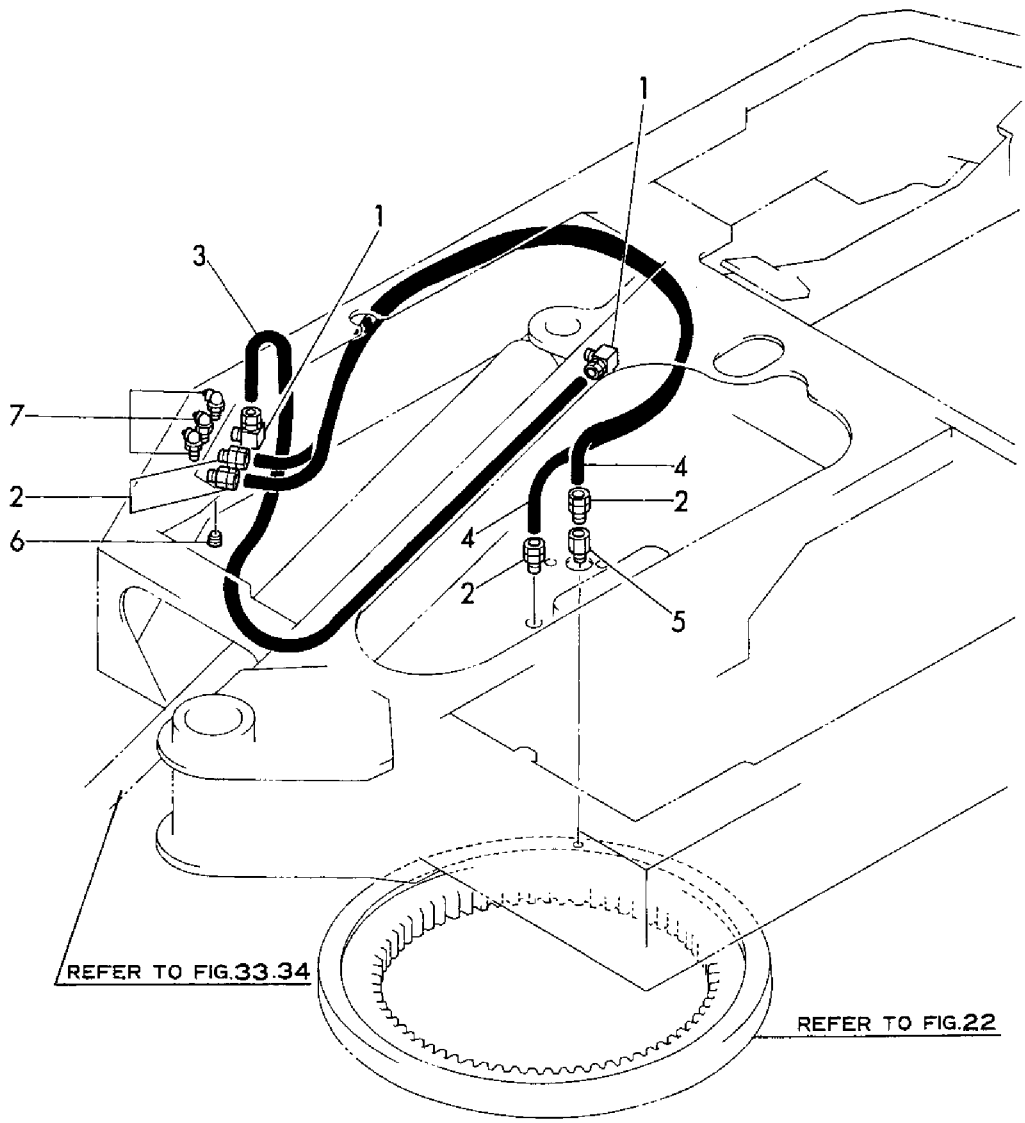

https://truckmanualshub.com/

```
1,1,,172149-76151,,JOINT,3,3,3,3,3,,,,,,,,,,,,
2,1,,172149-76300,,ELBOW,3,,3,,,,,,,,,,,,,,,,
2-1,1,,172149-76300,,ELBOW,2,2,2,2,2,,K,,,M00501,,,,M00501,,,,
3,1,,933152-07400,,"O-RING (A)",3,3,3,3,3,,,,,,,,,,,,
4,1,,933160-03530,,"PORT, PUMP EXH.",3,3,3,3,3,,,,,,,,,,,,
5,1,,933160-03570,,"O-RING (B)",3,3,3,3,3,,,,,,,,,,,,
6,1,,172149-76400,,"TUBE, SUCTION",1,1,1,1,1,,,,,,,,,,,,
7,1,,22137-100000,,"WASHER 10,POLISHED",2,2,2,2,2,,,,,,,,,,,,
8,1,,26013-100202,,"BOLT W/WASHER M10X20",2,2,2,2,2,,,,,,,,,,,,,
9,1,,172149-78100,,HOSE,1,1,1,1,1,,,,,,,,,,,,
10,1,,172149-78110,,HOSE,3,3,3,3,3,,,,,,,,,,,,
11,1,,23000-035000,,"CLAMP 35",12,12,12,12,12,,,,,,,,,,,,
12,1,,23000-048000,,"CLAMP 48",4,4,4,4,4,,,,,,,,,,,,
13,1,,933171-15680,,"GROMMET 40X13",3,3,3,3,3,,,,,,,,,,,,
14,1,,172149-78150,,HOSE,1,1,1,1,1,,,,,,,,,,,,
15,1,,172149-78160,,HOSE,1,1,1,1,1,,,,,,,,,,,,
16,1,,172149-78170,,HOSE,1,1,1,1,1,,,,,,,,,,,,
17,1,,172510-76310,,"ELBOW 3/8",1,,1,,,,W,,,M00501,,,,M00501,,,,
17-1,1,,172142-76180,,JOINT,1,1,1,1,1,,N,,,M00501,,,,M00501,,,,
18,2,,24315-000140,,"O-RING 1B P-14.0",1,1,1,1,1,,W,,,M00501,,,,M00501,,,,
```

https://truckmanualshub.com/

Fig. 48 油圧配管（タンク～バルブ） HYD. OIL PIPING (TANK~VALVE)

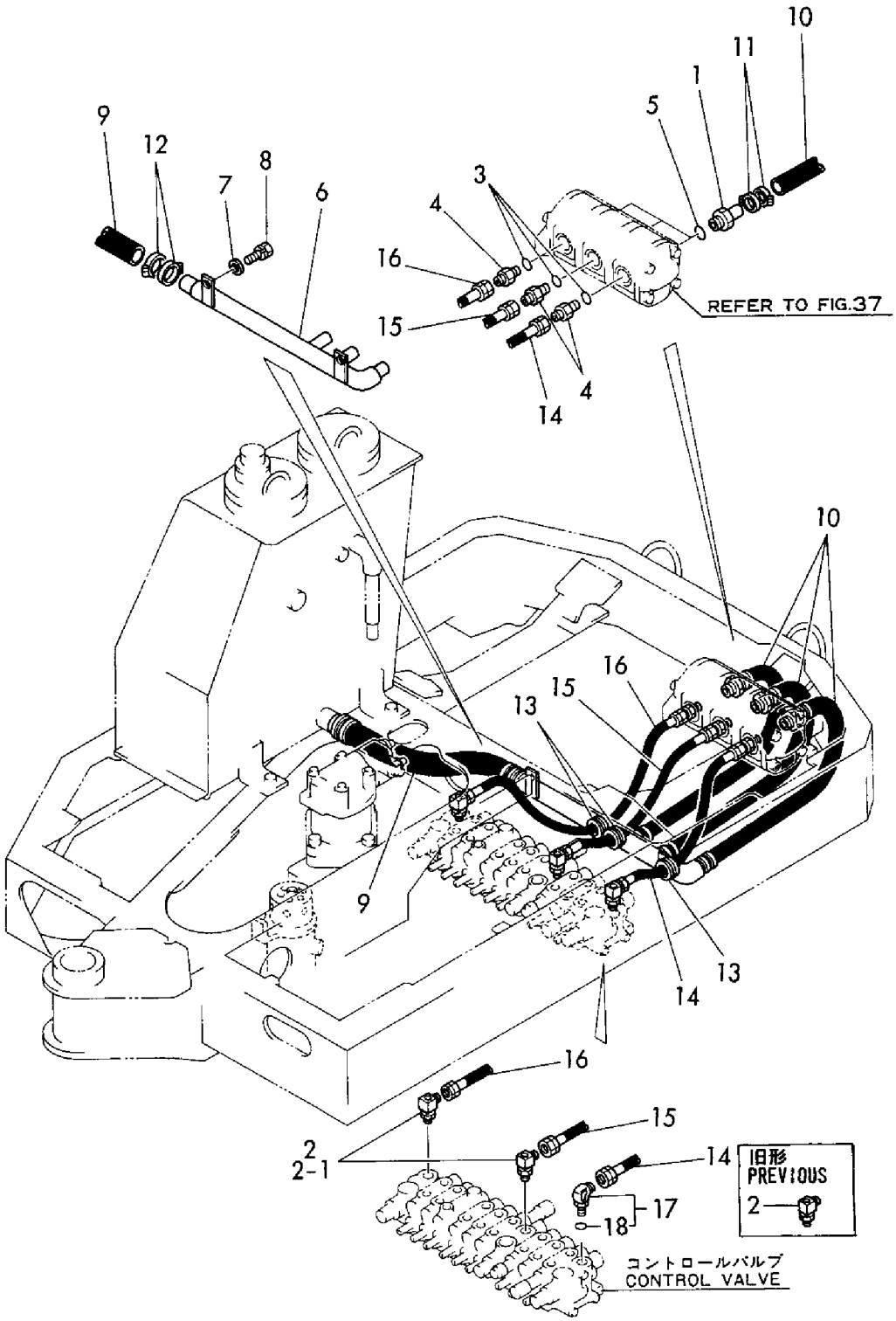

https://truckmanualshub.com/

```
1,1,,172110-76440,,ELBOW,7,,7,,,,,,,,,,,,,,
1-1,1,,23393-020000,,"JOINT 90RGI1/4",7,7,7,7,7,,N,,,M00501,,,,M00501,,,,
2,1,,172149-76250,,"CONNECTER, GAUGE",1,1,1,1,1,,,,,,,,,,,,
3,1,,172112-77660,,"L-JOINT 1/8",3,3,3,3,3,,,,,,,,,,,,
4,1,,26013-100202,,"BOLT W/WASHER M10X20",2,2,2,2,2,,,,,,,,,,,,
5,1,,172149-78020,,BUSH,1,1,1,1,1,,,,,,,,,,,,
6,1,,172149-78780,,BUSH,2,,2,,,,,,,,,,,,,,
6-1,1,,172149-78781,,GROMET,2,2,2,2,2,,S,,,M01223,,,,M00927,,,,
7,1,,172149-78790,,BUSH,1,1,1,1,1,,,,,,,,,,,,
8,1,,172149-78210,,HOSE,1,1,1,1,1,,,,,,,,,,,,
9,1,,172149-78220,,HOSE,1,1,1,1,1,,,,,,,,,,,,
10,1,,172149-78230,,HOSE,1,1,1,1,1,,,,,,,,,,,,
11,1,,172149-78240,,HOSE,1,1,1,1,1,,,,,,,,,,,,
12,1,,172149-78270,,HOSE,2,2,2,2,2,,,,,,,,,,,,
13,1,,172149-78290,,HOSE,2,2,2,2,2,,,,,,,,,,,,
14,1,,172149-78330,,HOSE,2,,2,,,,,1,,,,,,,,,
14-1,1,,172149-78300,,HOSE,2,2,2,2,2,,,,,,,,,,,,
15,1,,172149-78500,,HOSE,1,,1,,,,,,,,,,,,,,
15-1,1,,172149-78501,,HOSE,1,1,1,1,1,,N,,,M01931,,,,M01298,,,,
16,1,,172149-78510,,HOSE,1,,1,,,,,,,,,,,,,,
16-1,1,,172149-78511,,HOSE,1,1,1,1,1,,N,,,M01931,,,,M01298,,,,
17,1,,172149-78520,,HOSE,1,1,1,1,1,,,,,,,,,,,,
18,1,,23871-030000,,"PLUG PT3/8,SCREW",3,3,3,3,3,,,,,,,,,,,,
19,1,,24315-000110,,"O-RING 1B P-11.0",8,8,8,8,8,,,,,,,,,,,,
20,1,,172123-76120,,"CONNECTOR PF1/4",2,2,2,2,2,,,,,,,,,,,,
21,1,,24315-000110,,"O-RING 1B P-11.0",2,2,2,2,2,,,,,,,,,,,,
22,1,,172110-76450,,ELBOW,1,,1,,,,,,,,,,,,,,
22-1,1,,23393-020000,,"JOINT 90RGI1/4",1,1,1,1,1,,N,,,M00501,,,,M00501,,,,
23,1,,172149-78360,,"COVER, HOSE",1,,1,,,,W,,,M00868,,,,M00737,,,,
23-1,1,,172149-78361,,COVER,1,1,1,1,1,,N,,,M01931,,,,M01298,,,,
24,1,,933152-09280,,"BAND 170",1,,1,,,,W,,,M00868,,,,M00737,,,,
24-1,1,,933152-09280,,"BAND 170",2,2,2,2,2,,K,,,M01931,,,,M01298,,,,
25,1,,198511-04300,,W-CLAMP,1,1,1,1,1,,W,,,MXXX,,,,MXXX,,,,
26,1,,172149-78350,,"COVER, HOSE",2,2,2,2,2,,W,,,M00501,,,,M00501,,,,
```

https://truckmanualshub.com/

Fig. 49 油圧配管（バルブ～スイベル～モータ） HYD. OIL PIPING (VALVE~SWIVEL~MOTOR)

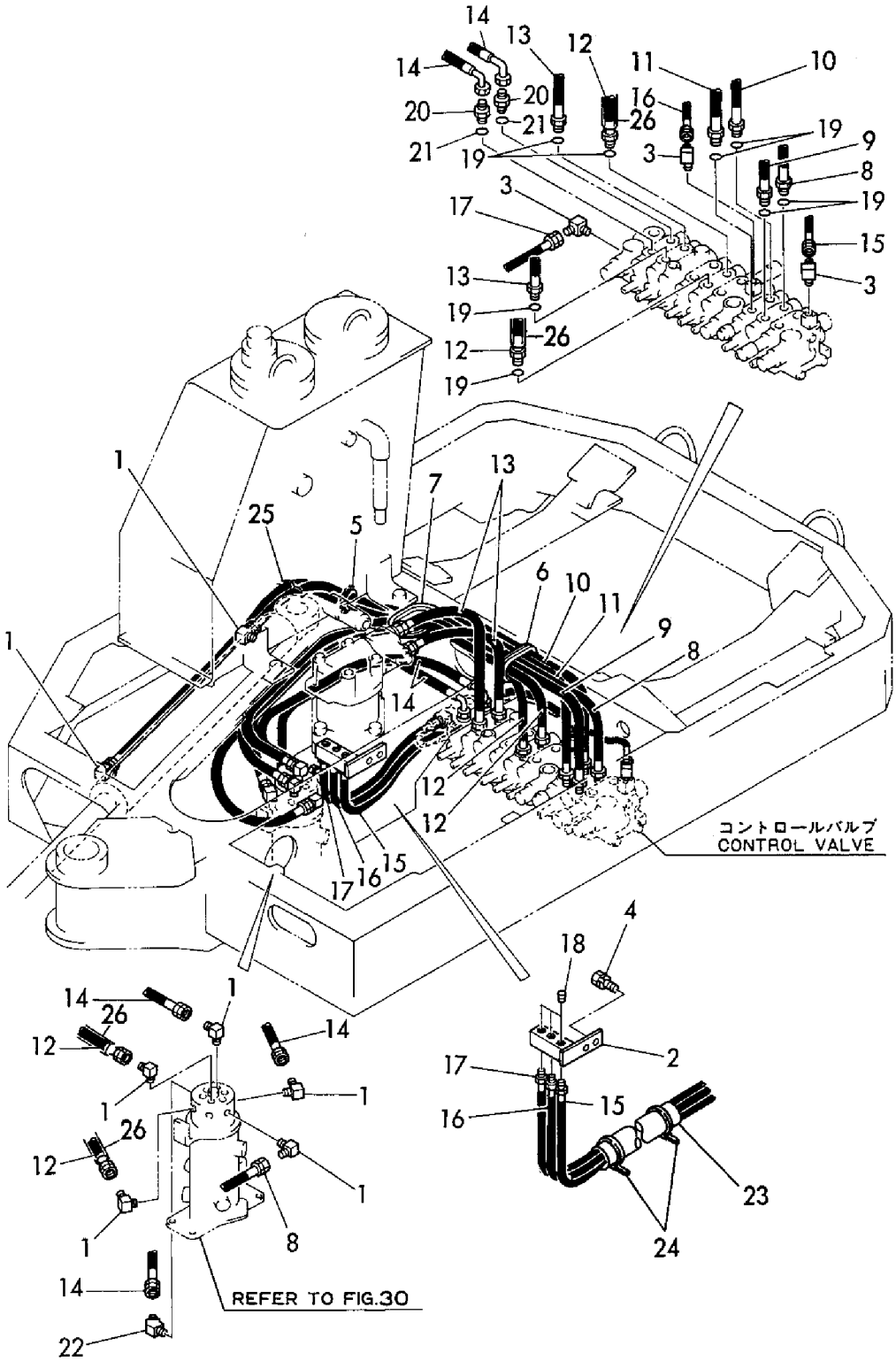

https://truckmanualshub.com/

```
1,1,,172149-76120,,ELBOW,1,1,1,1,1,,,,,,,,,,,,
2,2,,24311-000180,,"O-RING 1A P-18.0",1,1,1,1,1,,,,,,,,,,,,
3,1,,172141-76180,,CONNECTOR,1,1,1,1,1,,,,,,,,,,,,
4,2,,24315-000110,,"O-RING 1B P-11.0",1,1,1,1,1,,,,,,,,,,,,
5,1,,172141-76200,,CONNECTOR,1,1,1,1,1,,,,,,,,,,,,
6,2,,24315-000110,,"O-RING 1B P-11.0",1,1,1,1,1,,,,,,,,,,,,
7,1,,172141-77800,,"JOINT, GREASE",2,2,2,2,2,,,,,,,,,,,,
8,1,,172142-77810,,HOSE,1,1,1,1,1,,,,,,,,,,,,
9,1,,172149-78120,,HOSE,1,1,1,1,1,,,,,,,,,,,,
10,1,,172149-78130,,HOSE,1,1,1,1,1,,,,,,,,,,,,
11,1,,172141-78500,,HOSE,1,1,1,1,1,,,,,,,,,,,,
13,2,,172141-78900,,"TUBE, SPIRAL",1,1,1,1,1,,,,,,,,,,,,
14,1,,933166-25350,,"ELBOW 1/2 (90ß)",1,,1,,,,,,,,,,,,,,
14-1,1,,23393-030000,,"JOINT 90RGI 3/8",1,1,1,1,1,,N,,,M00501,,,,M00501,,,,
15,1,,23000-048000,,"CLAMP 48",1,1,1,1,1,,,,,,,,,,,,
16,1,,172149-78400,,"TUBE, COIL",1,1,1,1,1,,,,,,,,,,,,
17,1,,172112-77480,,"ELBOW 1/8, STREET",1,1,1,1,1,,W,,,M00935,,,,M01000,,,,
```

https://truckmanualshub.com/

Fig. 50 油圧配管（リターン） HYD. OIL PIPING (RETURN)

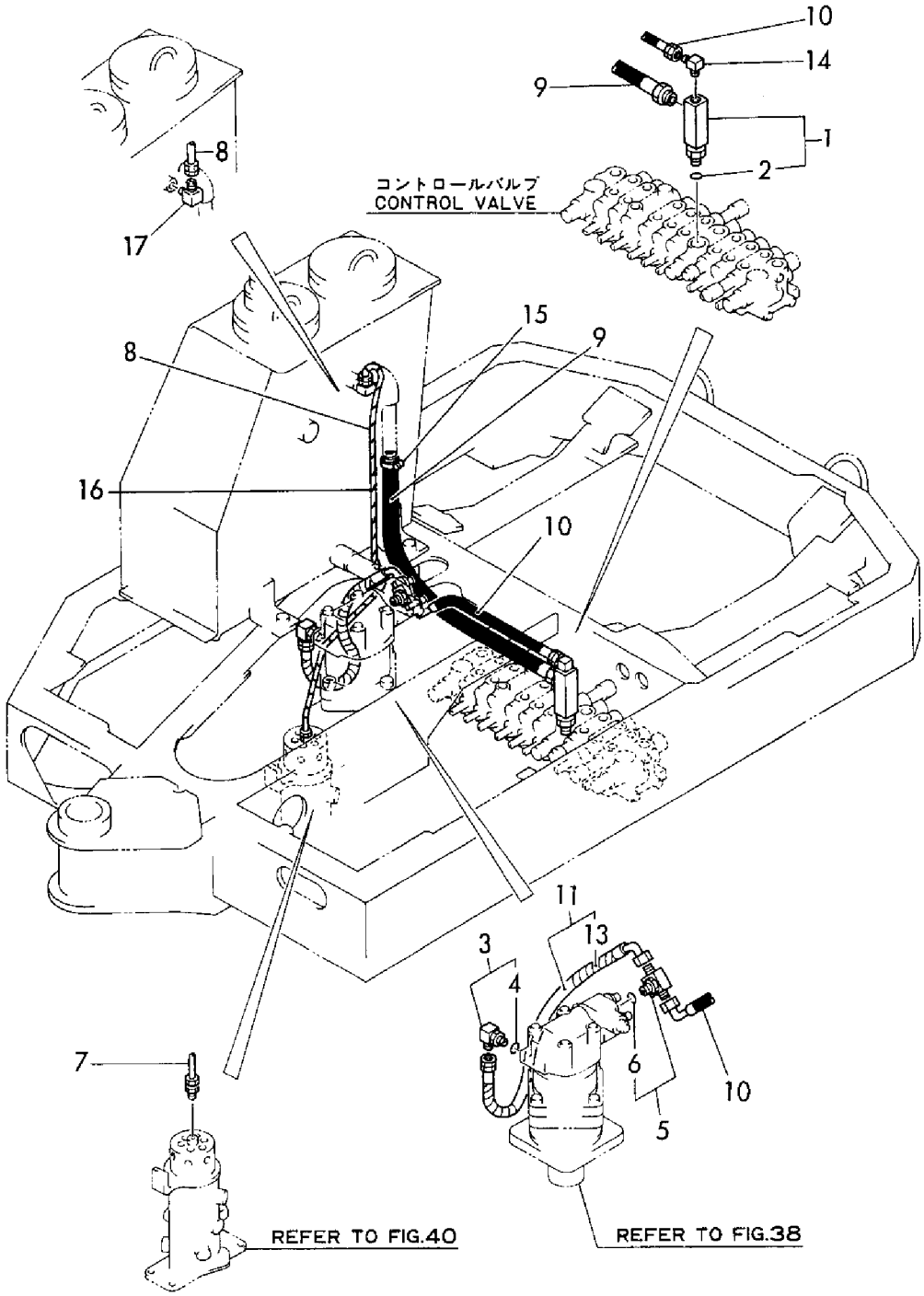

https://truckmanualshub.com/

```
1,1,,172123-76120,,"CONNECTOR PF1/4",4,4,4,4,4,,,,,,,,,,,,
2,1,,172110-76450,,ELBOW,2,,2,,,,,,,,,,,,,,,
2-1,1,,23394-020000,,"JOINT 45RGI1/4",2,2,2,2,2,,N,,,M00501,,,,M00501,,,,
3,1,,172110-76470,,NIPPLE,4,,4,,,,,,,,,,,,,,,
3-1,1,,23394-020000,,"JOINT 45RGI1/4",4,4,4,4,4,,N,,,M00501,,,,M00501,,,,
4,1,,24315-000110,,"O-RING 1B P-11.0",4,4,4,4,4,,,,,,,,,,,,
5,1,,172149-78300,,HOSE,2,,2,,,,,1,,,,,,,,,,
5-1,1,,172149-78330,,HOSE,2,,2,,,,,,,,,,,,,,,
5A,1,,172149-78331,,HOSE,,1,,1,1,,,,,,,,,,,,
5B,1,,172149-78340,,HOSE,,1,,1,1,,,,,,,,,,,,
6,1,,172149-78310,,HOSE,2,2,2,2,2,,,,,,,,,,,,
7,1,,172149-78320,,HOSE,2,2,2,2,2,,,,,,,,,,,,
8,1,,23391-020000,,"JOINT RGI1/4",,2,,2,2,,,,,,,,,,,,
```

https://truckmanualshub.com/

Fig. 51 油圧配管（走行） HYD. OIL PIPING (TRAVEL)

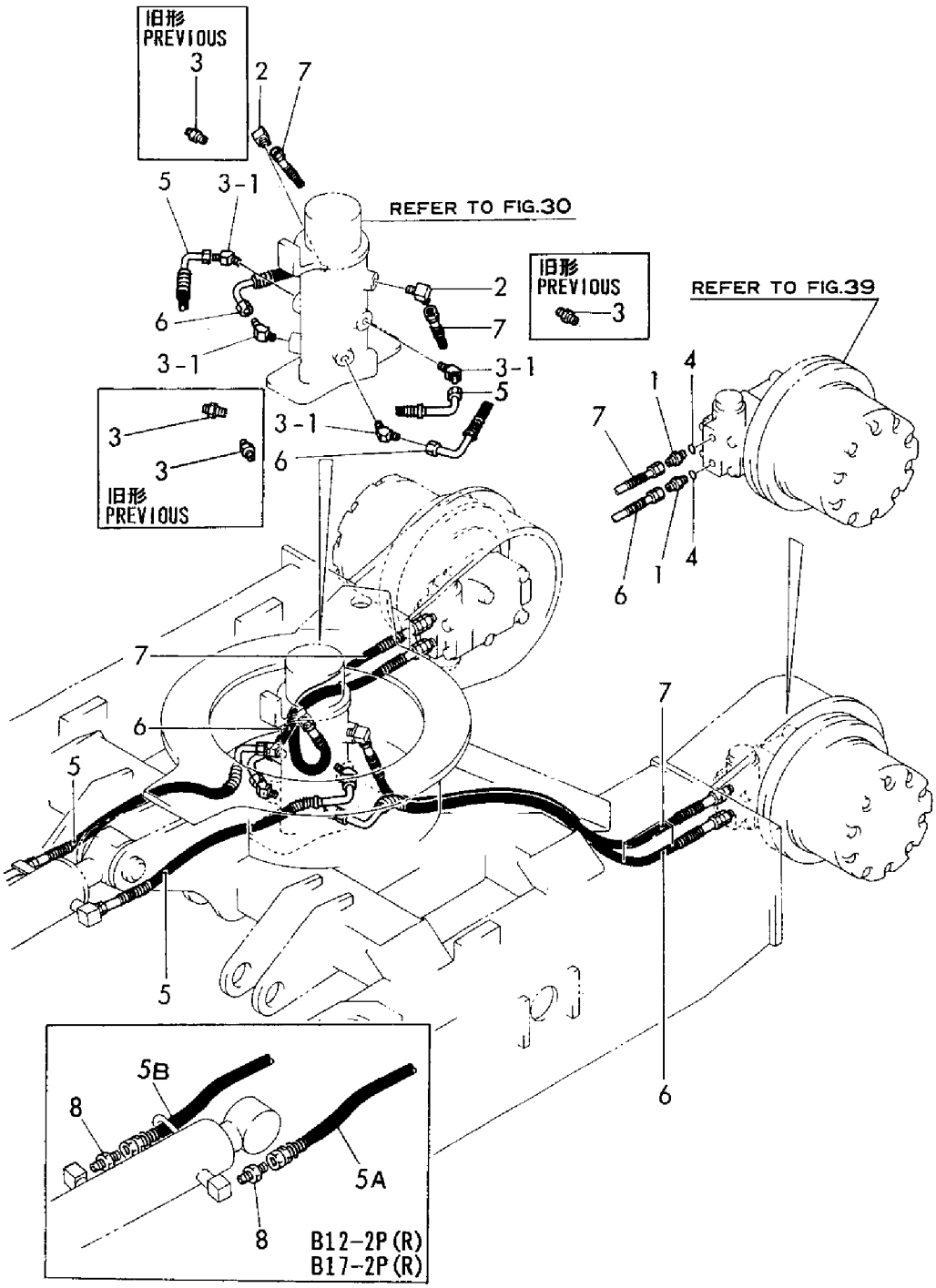

https://truckmanualshub.com/

```
1,1,,172123-76120,,"CONNECTOR PF1/4",2,2,2,2,2,,,,,,,,,,,,
2,1,,24315-000110,,"O-RING 1B P-11.0",2,2,2,2,2,,,,,,,,,,,,
3,1,,172110-76170,,PLATE,4,4,4,4,4,,,,,,,,,,,,
4,1,,172149-76450,,"TUBE(L), ARM",1,1,1,1,1,,,,,,,,,,,,
5,1,,172149-76470,,"TUBE(R), ARM",1,,1,,,,,,,,,,,,,,
5-1,1,,172149-76471,,"PIPE (R), ARM",1,1,1,1,1,,N,,,*1993.09,,,,*1993.09,,,,
6,1,,172149-76490,,"TUBE(L), BUCKET",1,1,1,1,1,,,,,,,,,,,,
7,1,,172149-76520,,"TUBE(R), BUCKET",1,1,1,1,1,,,,,,,,,,,,
8,1,,172137-76580,,"COLLER 9X11",4,4,4,4,4,,,,,,,,,,,,
9,1,,172149-76580,,"JOINT, BOOM",1,1,1,1,1,,,,,,,,,,,,
10,1,,26013-080162,,"BOLT W/WASHER M8X16",3,3,3,3,3,,,,,,,,,,,,
11,1,,26013-080252,,"BOLT M 8X 25",4,4,4,4,4,,,,,,,,,,,,
12,1,,26013-100202,,"BOLT W/WASHER M10X20",2,2,2,2,2,,,,,,,,,,,,
13,1,,172137-78340,,HOSE,2,2,2,2,2,,,,,,,,,,,,
14,1,,172137-78350,,HOSE,2,2,,,,,,,,,,,,,,,,
15,1,,172149-78600,,CLAMP,1,1,1,1,1,,,,,,,,,,,,
16,1,,172149-78620,,"PLATE, CLAMP",1,1,1,1,1,,,,,,,,,,,,
17,1,,172149-78650,,"SUPPORT, HOSE",1,1,1,1,1,,,,,,,,,,,,
18,1,,172149-78760,,GROMMET,1,1,1,1,1,,,,,,,,,,,,
19,1,,23271-020501,,HOSE,1,1,1,1,1,,,,,,,,,,,,
20,1,,23271-020571,,HOSE,1,1,1,1,1,,,,,,,,,,,,
21,1,,26013-100202,,"BOLT W/WASHER M10X20",4,4,4,4,4,,,,,,,,,,,,
22,1,,172149-78190,,HOSE,1,1,1,1,1,,,,,,,,,,,,
23,1,,172149-78200,,HOSE,1,1,1,1,1,,,,,,,,,,,,
24,1,,172149-78250,,HOSE,1,1,1,1,1,,,,,,,,,,,,
25,1,,172149-78260,,HOSE,1,1,1,1,1,,,,,,,,,,,,
26,1,,172149-78280,,HOSE,1,1,1,1,1,,,,,,,,,,,,
27,1,,172149-78820,,"CLAMP, HOSE",1,1,1,1,1,,,,,,,,,,,,
28,1,,172150-78150,,HOSE,,,2,2,2,,,,,,,,,,,,
29,1,,172149-78870,,CLAMP,2,,2,,,,,,,,,,,,,,
29-1,1,,172149-78871,,CLAMP,2,2,2,2,2,,N,,,M01855,,,,M01269,,,,
30,1,,26013-100202,,"BOLT W/WASHER M10X20",2,2,2,2,2,,,,,,,,,,,,
31,1,,172149-78180,,HOSE,1,1,1,1,1,,,,,,,,,,,,
32,1,,23871-010000,,"PLUG PT1/8,SCREW",1,1,1,1,1,,W,,,*1993.09,,,,*1993.09,,,,
33,1,,172149-78350,,"COVER, HOSE",2,2,2,2,2,,W,,,M00501,,,,M00501,,,,
```

https://truckmanualshub.com/

Fig. 52 油圧配管（ブーム） HYD. OIL PIPING (BOOM)

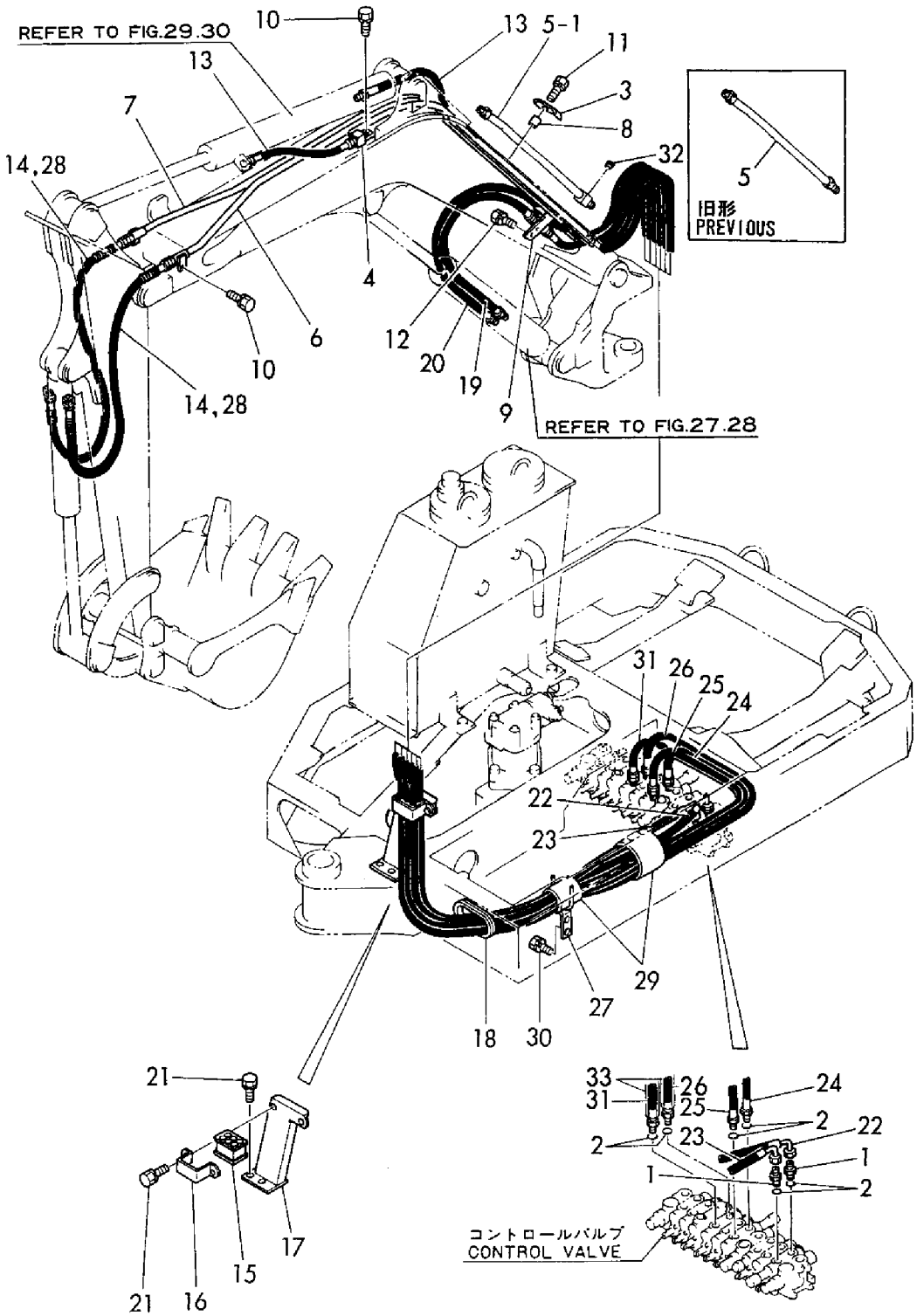

https://truckmanualshub.com/

```
1,1,,772149-46100,,"3RD VALVE ASSY",1,1,1,1,1,,,,,,,,,,,,
2,2,,172149-41860,,"PIN, BLADE",2,2,2,2,2,,,,,,,,,,,,
3,2,,172149-42750,,"SUPPORT, PEDAL",1,1,1,1,1,,,,,,,,,,,,
4,2,,172149-42800,,"PEDAL, 3RD",1,1,1,1,1,,,,,,,,,,,,
5,3,,172141-41360,,"BUSH 1415",2,2,2,2,2,,,,,,,,,,,,
7,2,,172149-42850,,"LINK, 3RD",1,1,1,1,1,,,,,,,,,,,,
8,3,,172141-41360,,"BUSH 1415",2,2,2,2,2,,,,,,,,,,,,
10,2,,172149-42890,,"LEVER, LOCK",1,1,1,1,1,,,,,,,,,,,,
11,2,,172149-42900,,COLLAR,1,1,1,1,1,,,,,,,,,,,,
12,2,,172149-42920,,"ROD, 3RD",1,,1,,,,,,,,,,,,,,,,
12-1,2,,172149-42720,,"ROD COMP.,3RD",1,1,1,1,1,,N,,,M10949,,,,M10719,,,,
13,2,,172146-45690,,"ROD(C), SPOOL",1,,1,,,,,,,,,,,,,,,,
13-1,2,,172146-45691,,"ROD(C), SPOOL",1,1,1,1,1,,N,,,*1993.09,,,,*1993.09,,,,
14,2,,172122-46570,,"ROD-END  8",1,,1,,,,,,,,,,,,,,,,
14-1,2,,172122-46571,,"ROD-END  8",1,1,1,1,1,,N,,,M02063,,,,M01366,,,,
15,2,,172122-46590,,"ELBALL 8",2,2,2,2,2,,,,,,,,,,,,
16,2,,1C6281-52310,,"PIN 6,COME-OFF SNAP",1,1,1,1,1,,,,,,,,,,,,
17,2,,22217-080000,,"SPRING WASHER  8",1,,1,,,,Z,,,M10949,,,,M10719,,,,
18,2,,22217-080000,,"SPRING WASHER  8",2,,2,,,,Z,,,M10949,,,,M10719,,,,
19,2,,22217-100000,,"SPRING WASHER 10",1,1,1,1,1,,,,,,,,,,,,
20,2,,26013-100202,,"BOLT W/WASHER M10X20",4,4,4,4,4,,,,,,,,,,,,
21,2,,26116-080302,,"BOLT M 8X 30 PLATED",1,1,1,1,1,,,,,,,,,,,,
22,2,,26116-100252,,"BOLT M10X 25 PLATED",1,1,1,1,1,,,,,,,,,,,,
23,2,,26116-100352,,"BOLT M10X 35 PLATED",1,1,1,1,1,,,,,,,,,,,,
24,2,,26716-080002,,"NUT M 8",2,,2,,,,,,,,,,,,,,,,
24-1,2,,26051-080002,,"NUT M 8",2,2,2,2,2,,N,,,M10949,,,,M10719,,,,
25,2,,26716-080002,,"NUT M 8",4,,4,,,,,,,,,,,,,,,,
25-1,2,,26051-080002,,"NUT M 8",4,4,4,4,4,,N,,,M10949,,,,M10719,,,,
26,2,,26716-100002,,"NUT M10",1,1,1,1,1,,,,,,,,,,,,
27,2,,933110-54100,,"PIN 4.75X14",1,1,1,1,1,,,,,,,,,,,,
28,2,,172131-03421,,"LABEL, 3RD VALVE",1,1,1,1,1,,,,,,,,,,,,
29,2,,26013-100202,,"BOLT W/WASHER M10X20",2,2,2,2,2,,,,,,,,,,,,
30,2,,24311-000210,,"O-RING 1A P-21.0",4,4,4,4,4,,,,,,,,,,,,
31,2,,23871-040000,,"PLUG PT1/2,SCREW",2,2,2,2,2,,,,,,,,,,,,
32,2,,23871-030000,,"PLUG PT3/8,SCREW",2,2,2,2,2,,,,,,,,,,,,
33,2,,172730-75140,,ADAPTOR,1,1,1,1,1,,,,,,,,,,,,
34,2,,24311-000140,,"O-RING 1A P-14.0",1,1,1,1,1,,,,,,,,,,,,
35,2,,172149-76200,,CONNECTER,1,1,1,1,1,,,,,,,,,,,,
36,2,,172149-76700,,CONNECTOR,1,1,1,1,1,,,,,,,,,,,,
36-1,2,,172149-76701,,CONNECTOR,,1,,1,1,,S,,,,,*1995.10,,,,*1995.10,,*1995.10
37,2,,933166-25420,,ADAPTER,1,,1,,,,,,,,,,,,,,,,
37-1,2,,23391-040000,,"JOINT RGI 1/2",1,1,1,1,1,,N,,,M00501,,,,M00501,,,,
38,2,,933152-24410,,"CONNECTOR (A)",1,1,1,1,1,,,,,,,,,,,,
39,2,,26013-100252,,"BOLT W/WASHER M10X25",2,2,2,2,2,,,,,,,,,,,,
40,2,,172149-78450,,HOSE,1,1,1,1,1,,,,,,,,,,,,
40-1,2,,172146-78380,,HOSE,,1,,1,1,,S,,,,,*1995.10,,,,*1995.10,,*1995.10
41,2,,172149-78460,,HOSE,1,1,1,1,1,,,,,,,,,,,,
41-1,2,,172149-78461,,HOSE,,1,,1,1,,S,,,,,*1995.10,,,,*1995.10,,*1995.10
42,2,,172149-78900,,"CLAMP, HOSE(3RD)",1,1,1,1,1,,,,,,,,,,,,
43,2,,172149-78920,,HOSE,1,1,1,1,1,,,,,,,,,,,,
44,2,,22137-080000,,"WASHER 8, POLISHED",1,1,1,1,1,,W,,,M10949,,,,M10719,,,,
45,2,,22137-080000,,"WASHER 8, POLISHED",2,2,2,2,2,,W,,,M10949,,,,M10719,,,,
46,2,,26716-100002,,"NUT M10",1,1,1,1,1,,W,,,MXXX,,,,MXXX,,,,
47,2,,172149-03451,,LABEL,1,1,1,1,1,,W,,,M00501,,,,M00501,,,,
```

https://truckmanualshub.com/

Fig.53 油圧配管（P．T．O．バルブ～ブームブラケット） HYD.OIL PIPING(P.T.O. VALVE~BOOM BUCKET)

見出しNo.1は、見出しNo.2から47を含みます。
1 inc.2～47

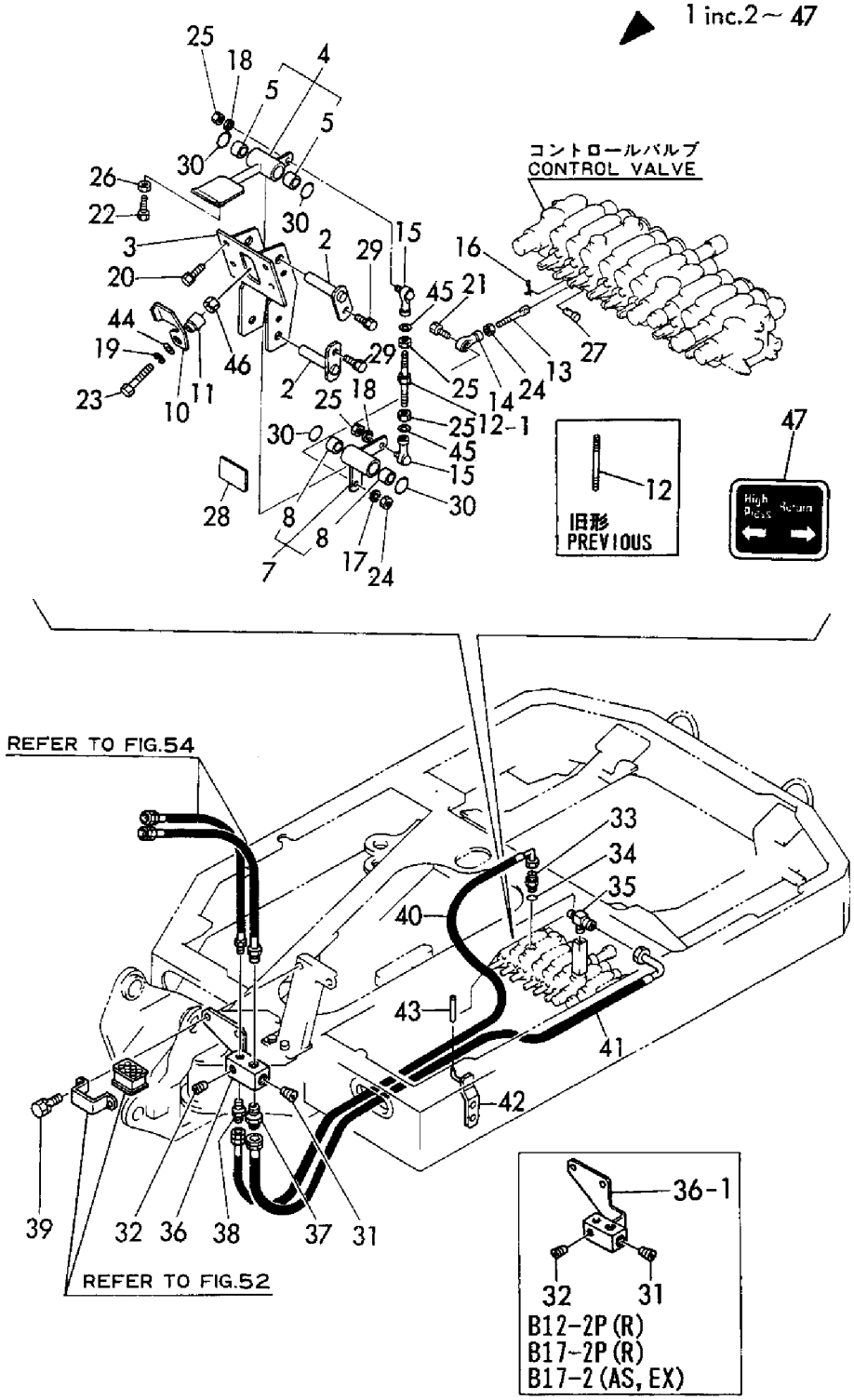

https://truckmanualshub.com/

```
1,1,,772149-76410,,"3RD VALVE PIPING",1,1,1,1,1,,,,,,,,,,,,
1-1,1,,772149-76411,,"3RD VALVE
PIPING",,1,,1,1,,S,,,,,*1995.10,,,,*1995.10,,*1995.10
2,2,,172112-76300,,"RETAINER A,BOOM PIPE",1,1,1,1,1,,,,,,,,,,,,
3,2,,172149-76540,,"TUBE, 3RD",1,1,1,1,1,,,,,,,,,,,,
3-1,2,,172149-76541,,"HOSE, 3RD P",,1,,1,1,,S,,,,,*1995.10,,,,*1995.10,,*1995.10
4,2,,172149-76560,,"TUBE, 3RD",1,1,1,1,1,,,,,,,,,,,,
4-1,2,,172149-76561,,"HOSE, 3RD T",,1,,1,1,,S,,,,,*1995.10,,,,*1995.10,,*1995.10
5,2,,23871-030000,,"PLUG PT3/8,SCREW",1,1,1,1,1,,,,,,,,,,,,
6,2,,23871-040000,,"PLUG PT1/2,SCREW",1,1,1,1,1,,,,,,,,,,,,
7,2,,26013-100402,,"BOLT M10X 40",3,3,3,3,3,,,,,,,,,,,,
7-1,2,,26116-100552,,"BOLT M10X 55
PLATED",,1,,1,1,,S,,,,,*1995.10,,,,*1995.10,,*1995.10
8,2,,933155-09670,,"CLAMP, PIPE",2,2,2,2,2,,,,,,,,,,,,
8-1,2,,172142-76950,,"CLAMP 1/2",,3,,3,3,,S,,,,,*1995.10,,,,*1995.10,,*1995.10
9,2,,172149-78470,,HOSE,1,1,1,1,1,,,,,,,,,,,,
10,2,,172149-78480,,HOSE,1,1,1,1,1,,,,,,,,,,,,
11,2,,172137-81410,,"BASE, CLAMP",1,1,1,1,1,,,,,,,,,,,,
11-1,2,,172137-81410,,"BASE,
CLAMP",,1,,1,1,,Z,,,,,*1995.10,,,,*1995.10,,*1995.10
12,2,,172711-81490,,"STAY (B)ASSY, PIPE",2,2,2,2,2,,,,,,,,,,,,
12-1,2,,172711-81490,,"STAY (B)ASSY,
PIPE",,2,,2,2,,Z,,,,,*1995.10,,,,*1995.10,,*1995.10
12A,2,,26013-120402,,"BOLT M12X
40",,1,,1,1,,W,,,,,*1995.10,,,,*1995.10,,*1995.10
12B,2,,22217-100000,,"SPRING WASHER
10",,1,,1,1,,W,,,,,*1995.10,,,,*1995.10,,*1995.10
12C,2,,172183-76260,,SPACER,,1,,1,1,,W,,,,,*1995.10,,,,*1995.10,,*1995.10
12D,2,,172183-76250,,PLATE,,2,,2,2,,W,,,,,*1995.10,,,,*1995.10,,*1995.10
12E,2,,26013-120502,,"BOLT M12X
50",,2,,2,2,,W,,,,,*1995.10,,,,*1995.10,,*1995.10
13,1,,172149-81400,,"BOOM, 3RD",1,,1,,,,,,,,,,,,,,,
14,2,,172141-82270,,"BUSH 35 45",2,,2,,,,,,,,,,,,,,,
15,1,,172149-81401,,"BOOM (3RD",,1,,1,1,,,,,,,,,,,,,
15-1,1,,172183-81100,,"BOOM
W/BUSH",,1,,1,1,,S,1,,,,*1995.10,,,,*1995.10,,*1995.10
16,2,,172171-81280,,"SEAL 35X45X4",,2,,2,2,,,,,,,,,,,,
17,2,,172141-82270,,"BUSH 35 45",,2,,2,2,,,,,,,,,,,,
```

https://truckmanualshub.com/

Fig.54 油圧配管（P．T．O．ブームエンド） HYD.OIL PIPING(P.T.O.BOOM END)

B12(-1)P(R)
B17(-1)P(R)

見出しNo.1は、見出しNo.2から12を含みます。
1 inc. 2～12

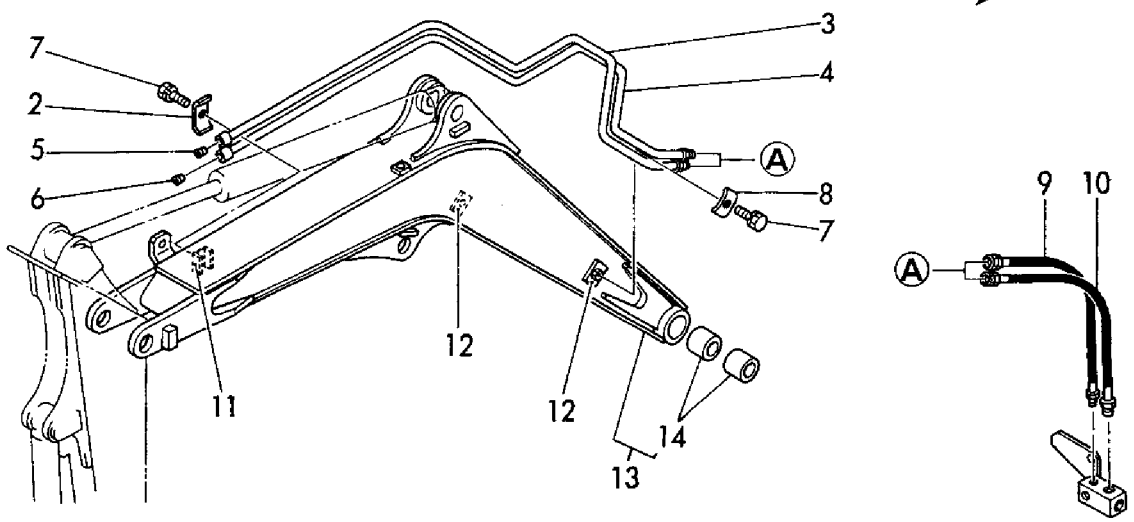

B12-2P(R)
B17-2P(R)

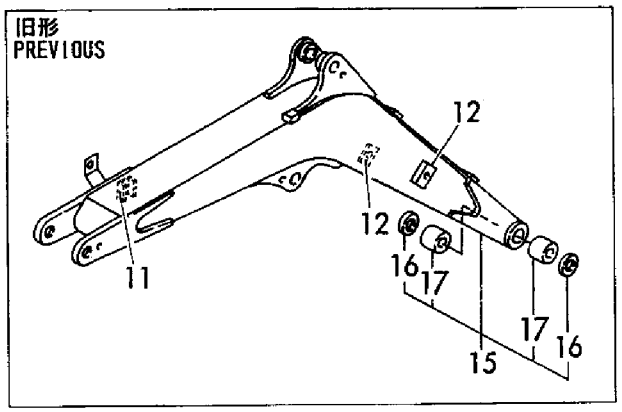

見出しNo.1-1は、見出しNo.2から12Eを含みます。
1-1 inc. 2～12E

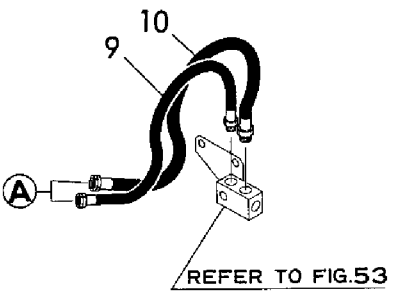

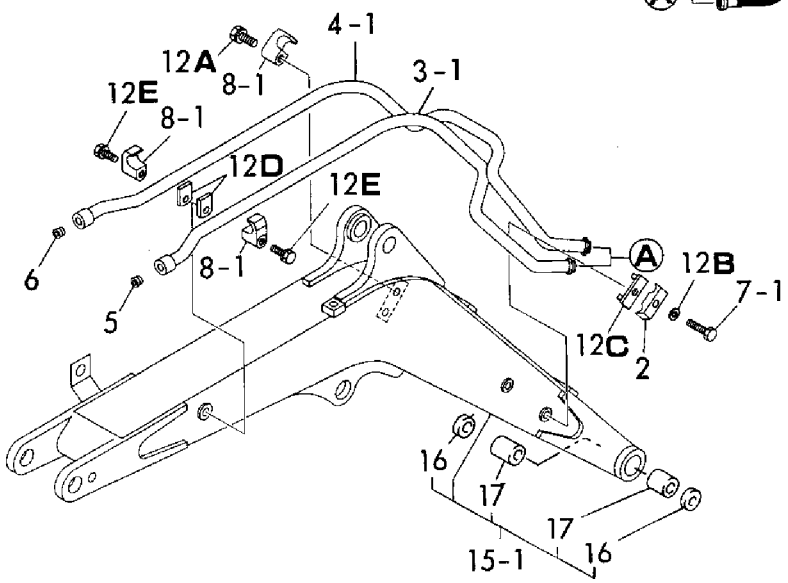

https://truckmanualshub.com/

```
1,1,,172149-81100,,"BOOM ASSY",1,,,,,,,,,,,,,,,
2,2,,172141-82270,,"BUSH 35 45",2,,,,,,,,,,,,,,,
3,1,,172149-81300,,PIN,1,,,,,,,,,,,,,,,
4,1,,172149-81320,,PIN,1,,,,,,,,,,,,,,,
5,1,,172137-81360,,"PIN 30-109, BOOM",1,,,,,,,,,,,,,,,
6,1,,172141-84600,,"SHIM 35",1,,,,,,,,,,,,,,,
6-1,1,,172141-84601,,"SHIM 35",1,,,,,,,N,,*1994.03,,,,,,,
7,1,,22417-800450,,"COTTER PIN 8.0X45",3,,,,,,,,,,,,,,,
8,1,,24761-020000,,"NIPPLE PT1/8,GREASE",1,,,,,,,,,,,,,,,
9,1,,933160-06710,,"SHIM 30, PIN ADJUST",2,,,,,,,,,,,,,,,
9-1,1,,933160-06711,,"SHIM 30, PIN ADJUST",2,,,,,,,N,,*1994.03,,,,,,,
10,1,,172138-82101,,"ARM 780 ASSY",1,,,,,,,,,,,,,,,
11,2,,172137-81300,,"BUSH 30X45, PIN",6,,,,,,,,,,,,,,,
12,1,,172137-94250,,"PIN 30- 71",2,,,,,,,,,,,,,,,
13,1,,22417-800450,,"COTTER PIN 8.0X45",2,,,,,,,,,,,,,,,
14,1,,24761-040000,,"NIPPLE B,GREASE",1,,,,,,,,,,,,,,,
15,1,,933160-06710,,"SHIM 30, PIN ADJUST",2,,,,,,,,,,,,,,,
16,1,,172137-84401,,"LINK, BUCKET",1,,,,,,,,,,,,,,,
17,2,,172137-81300,,"BUSH 30X45, PIN",2,,,,,,,,,,,,,,,
18,2,,172137-84450,,"BUSH 30X11, PIN",2,,,,,,,,,,,,,,,
19,1,,172137-84502,,"ARM (L), BUCKET",1,,,,,,,,,,,,,,,
20,1,,172137-84512,,"ARM (R), BUCKET",1,,,,,,,,,,,,,,,
20A,1,,172137-99450,,"KIT, BUCKET PIN",2,,,,,,,,,,,,,,,
21,2,,172137-86250,,"PIN, BUCKET",2,,,,,,,,,,,,,,,
22,2,,22417-800450,,"COTTER PIN 8.0X45",2,,,,,,,,,,,,,,,
23,2,,24761-020000,,"NIPPLE PT1/8,GREASE",2,,,,,,,,,,,,,,,
24,2,,933160-06710,,"SHIM 30, PIN ADJUST",4,,,,,,,,,,,,,,,
25,1,,24761-020000,,"NIPPLE PT1/8,GREASE",2,,,,,,,,,,,,,,,
25A,1,,172137-99450,,"KIT, BUCKET PIN",2,,,,,,,,,,,,,,,
26,2,,172137-86250,,"PIN, BUCKET",2,,,,,,,,,,,,,,,
27,2,,22417-800450,,"COTTER PIN 8.0X45",2,,,,,,,,,,,,,,,
28,2,,24761-020000,,"NIPPLE PT1/8,GREASE",2,,,,,,,,,,,,,,,
29,2,,933160-06710,,"SHIM 30, PIN ADJUST",2,,,,,,,,,,,,,,,
30,1,,772137-86100,,"BUCKET ASSY (400",1,,,,,,,,,,,,,,,
32,3,,172137-86240,,"TEETH, SIDE",2,,,,,,,,,,,,,,,
33,2,,772137-86751,,"TEETH ASSY",3,,,,,,,,,,,,,,,
34,3,,172137-86700,,"SHIM 2.3, TEETH",3,,,,,,,,,,,,,,,
35,3,,172137-86710,,"TEETH SHIM 17 SET",3,,,,,,,,,,,,,,,
36,3,,172137-86751,,"TEETH ASSY",3,,,,,,,,,,,,,,,
37,4,,172141-86231,,TEETH,3,,,,,,,,,,,,,,,
38,4,,172137-86770,,BOLT,6,,,,,,,,,,,,,,,
39,4,,172137-86780,,NUT,6,,,,,,,,,,,,,,,
40,1,,172149-83100,,"BRACKET, BOOM",1,,,,,,,,,,,,,,,
41,1,,172149-83110,,PIN,1,,,,,,,,,,,,,,,
42,1,,172149-83130,,PIN,1,,,,,,,,,,,,,,,
43,1,,172149-83150,,PIN,1,,,,,,,,,,,,,,,
44,1,,172149-83170,,PIN,1,,,,,,,,,,,,,,,
45,1,,172149-83180,,PIN,1,,,,,,,,,,,,,,,
46,1,,172149-83190,,"PLATE, LOCK",1,,,,,,,,,,,,,,,
47,1,,172117-83970,,"PLATE(C),LOCK(YELLOW",2,,,,,,,,,,,,,,,
48,1,,172141-84600,,"SHIM 35",2,,,,,,,,,,,,,,,
49,1,,22417-800450,,"COTTER PIN 8.0X45",2,,,,,,,,,,,,,,,
50,1,,22417-800630,,"COTTER PIN 8.0X63",1,,,,,,,,,,,,,,,
51,1,,26013-100252,,"BOLT W/WASHER M10X25",6,,,,,,,,,,,,,,,
52,1,,933171-29750,,"SHIM SET, PIN 38",2,,,,,,,,,,,,,,,
```

https://truckmanualshub.com/

Fig.55 ブーム&バケット((B12)(−1))
BOOM & BUCKET((B12)(-1))

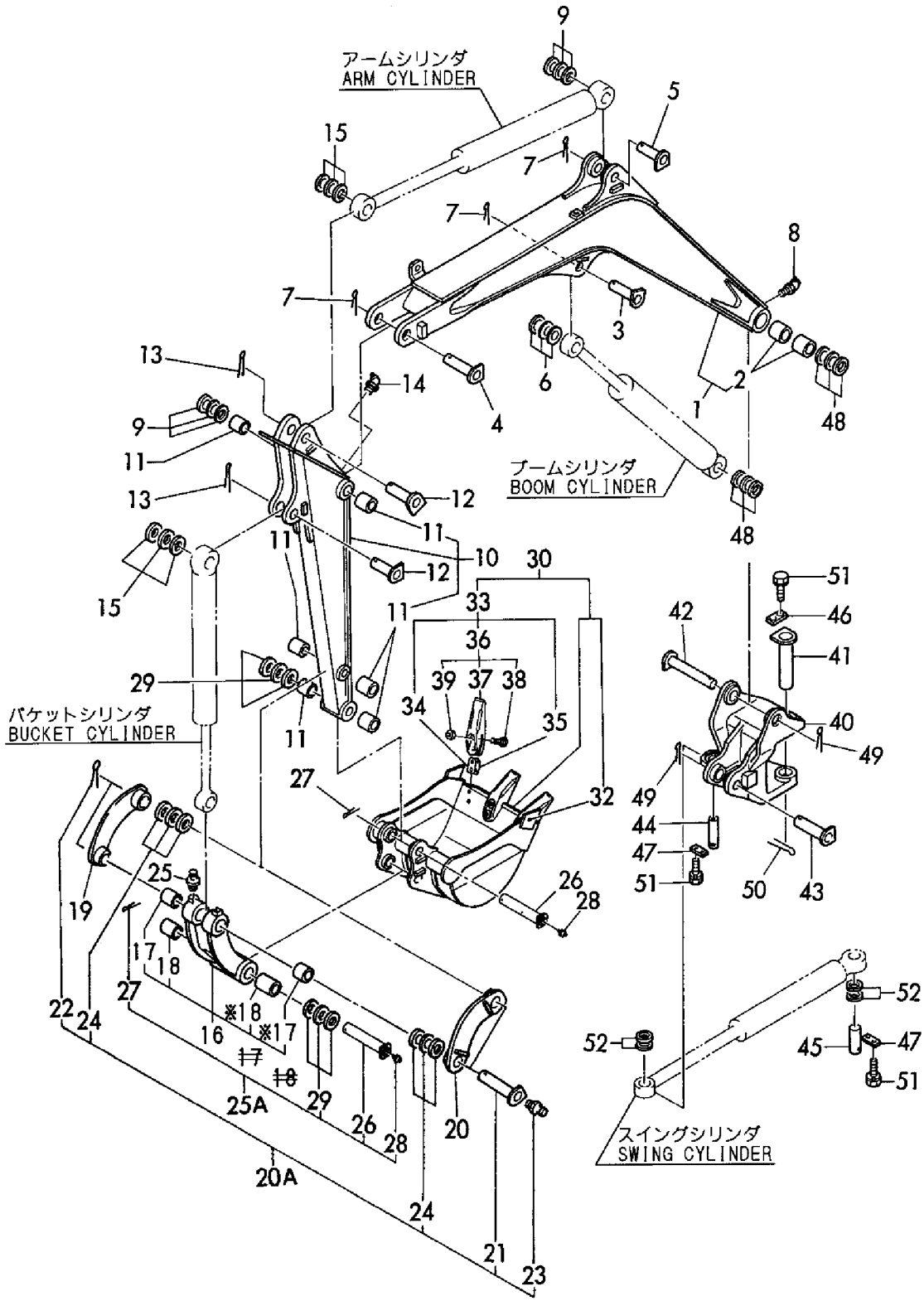

※印が今回変更した箇所です。
※ MARKED PART HAS BEEN CHANGED.

```
1,1,,172149-81100,,"BOOM ASSY",,,1,,,,,,,,,,,,,
2,2,,172141-82270,,"BUSH 35 45",,,2,,,,,,,,,,,,,
3,1,,172149-81300,,PIN,,,1,,,,,,,,,,,,,
4,1,,172149-81320,,PIN,,,1,,,,,,,,,,,,,
5,1,,172137-81360,,"PIN 30-109, BOOM",,,1,,,,,,,,,,,,,
6,1,,172141-84600,,"SHIM 35",,,1,,,,,,,,,,,,,
7,1,,22417-800450,,"COTTER PIN 8.0X45",,,3,,,,,,,,,,,,,
8,1,,24761-020000,,"NIPPLE PT1/8,GREASE",,,1,,,,,,,,,,,,,
9,1,,933160-06710,,"SHIM 30, PIN ADJUST",,,2,,,,,,,,,,,,,
10,1,,172137-82101,,"ARM 950 ASSY",,,1,,,,,,,,,,,,,
11,2,,172137-81300,,"BUSH 30X45, PIN",,,6,,,,,,,,,,,,,
12,1,,172137-94250,,"PIN 30- 71",,,2,,,,,,,,,,,,,
13,1,,22417-800450,,"COTTER PIN 8.0X45",,,2,,,,,,,,,,,,,
14,1,,24761-040000,,"NIPPLE B,GREASE",,,1,,,,,,,,,,,,,
15,1,,933160-06710,,"SHIM 30, PIN ADJUST",,,2,,,,,,,,,,,,,
16,1,,172137-84401,,"LINK, BUCKET",,,1,,,,,,,,,,,,,
17,2,,172137-81300,,"BUSH 30X45, PIN",,,2,,,,,,,,,,,,,
18,2,,172137-84450,,"BUSH 30X11, PIN",,,2,,,,,,,,,,,,,
19,1,,172137-84502,,"ARM (L), BUCKET",,,1,,,,,,,,,,,,,
20,1,,172137-84512,,"ARM (R), BUCKET",,,1,,,,,,,,,,,,,
20A,1,,172137-99450,,"KIT, BUCKET PIN",,,2,,,,,,,,,,,,,
21,2,,172137-86250,,"PIN, BUCKET",,,2,,,,,,,,,,,,,
22,2,,22417-800450,,"COTTER PIN 8.0X45",,,2,,,,,,,,,,,,,
23,2,,24761-020000,,"NIPPLE PT1/8,GREASE",,,2,,,,,,,,,,,,,
24,2,,933160-06710,,"SHIM 30, PIN ADJUST",,,4,,,,,,,,,,,,,
25,1,,24761-020000,,"NIPPLE PT1/8,GREASE",,,2,,,,,,,,,,,,,
25A,1,,172137-99450,,"KIT, BUCKET PIN",,,2,,,,,,,,,,,,,
26,2,,172137-86250,,"PIN, BUCKET",,,2,,,,,,,,,,,,,
27,2,,22417-800450,,"COTTER PIN 8.0X45",,,2,,,,,,,,,,,,,
28,2,,24761-020000,,"NIPPLE PT1/8,GREASE",,,2,,,,,,,,,,,,,
29,2,,933160-06710,,"SHIM 30, PIN ADJUST",,,2,,,,,,,,,,,,,
30,1,,772137-86300,,"BUCKET ASSY",,,1,,,,,,,,,,,,,
32,3,,172137-86240,,"TEETH, SIDE",,,2,,,,,,,,,,,,,
33,2,,772137-86751,,"TEETH ASSY",,,4,,,,,,,,,,,,,
34,3,,172137-86700,,"SHIM 2.3, TEETH",,,4,,,,,,,,,,,,,
35,3,,172137-86710,,"TEETH SHIM 17 SET",,,4,,,,,,,,,,,,,
36,3,,172137-86751,,"TEETH ASSY",,,4,,,,,,,,,,,,,
37,4,,172141-86231,,TEETH,,,4,,,,,,,,,,,,,
38,4,,172137-86770,,BOLT,,,8,,,,,,,,,,,,,
39,4,,172137-86780,,NUT,,,8,,,,,,,,,,,,,
40,1,,172149-83100,,"BRACKET, BOOM",,,1,,,,,,,,,,,,,
41,1,,172149-83110,,PIN,,,1,,,,,,,,,,,,,
42,1,,172149-83130,,PIN,,,1,,,,,,,,,,,,,
43,1,,172149-83150,,PIN,,,1,,,,,,,,,,,,,
44,1,,172149-83170,,PIN,,,1,,,,,,,,,,,,,
45,1,,172149-83180,,PIN,,,1,,,,,,,,,,,,,
46,1,,172149-83190,,"PLATE, LOCK",,,1,,,,,,,,,,,,,
47,1,,172117-83970,,"PLATE(C),LOCK(YELLOW",,,2,,,,,,,,,,,,,
48,1,,172141-84600,,"SHIM 35",,,2,,,,,,,,,,,,,
49,1,,22417-800450,,"COTTER PIN 8.0X45",,,2,,,,,,,,,,,,,
50,1,,22417-800630,,"COTTER PIN 8.0X63",,,1,,,,,,,,,,,,,
51,1,,26013-100252,,"BOLT W/WASHER M10X25",,,6,,,,,,,,,,,,,
52,1,,933171-29750,,"SHIM SET, PIN 38",,,2,,,,,,,,,,,,,
```

https://truckmanualshub.com/

Fig.56 ブーム&バケット((B17)(-1))
BOOM & BUCKET((B17)(-1))

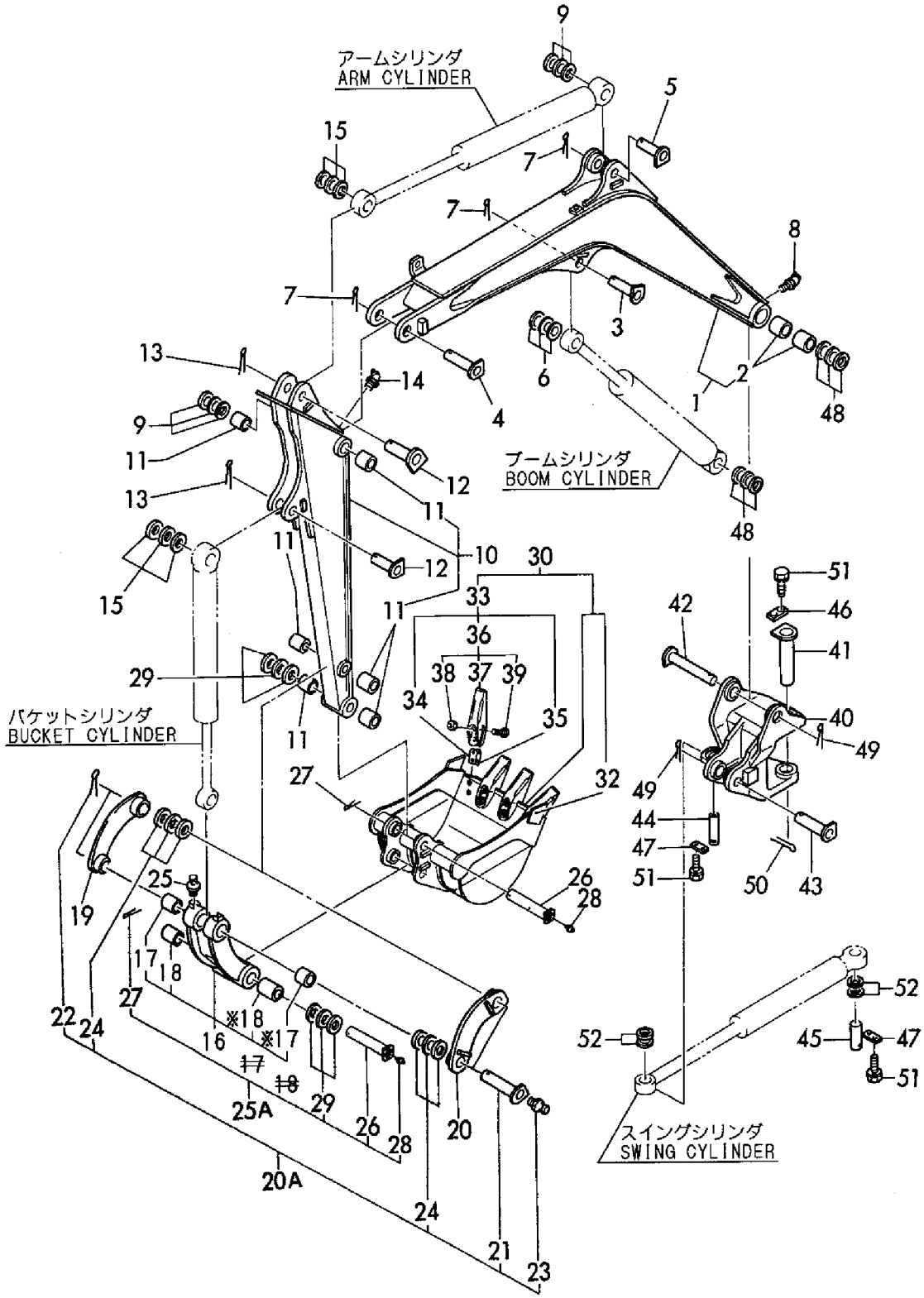

※印が今回変更した箇所です。
※ MARKED PART HAS BEEN CHANGED.

https://truckmanualshub.com/

```
1,1,,172010-01640,,SPACER,,1,,1,1,,,,,,,,,,,,
2,1,,172010-01640,,SPACER,,2,,2,2,,,,,,,,,,,,
3,1,,172149-81101,,"BOOM W/BUSH",,1,,1,1,,,,,,,,,,,,
3-1,1,,172183-81100,,"BOOM W/BUSH",,1,,1,1,,S,,,,,*1995.10,,,,*1995.10,,*1995.10
4,2,,172171-81280,,"SEAL 35X45X4",,2,,2,2,,,,,,,,,,,,
5,2,,172141-82270,,"BUSH 35 45",,2,,2,2,,,,,,,,,,,,
6,1,,172149-81301,,"PIN 35X114 COMPL.",,1,,1,1,,,,,,,,,,,,
7,1,,172149-81321,,"PIN 30X148 COMPL.",,1,,1,1,,,,,,,,,,,,
8,1,,172137-81361,,PIN,,1,,1,1,,,,,,,,,,,,
9,1,,172141-84600,,"SHIM 35",,1,,1,1,,,,,,,,,,,,
9-1,1,,172141-84601,,"SHIM 35",,1,,1,1,,N,,,,,M20768,,,,M20530,,M20530
10,1,,22157-100000,,"WASHER 10",,1,,1,1,,,,,,,,,,,,
11,1,,22157-100000,,"WASHER 10",,2,,2,2,,,,,,,,,,,,
12,1,,24761-020000,,"NIPPLE PT1/8,GREASE",,1,,1,1,,,,,,,,,,,,
13,1,,26013-100252,,"BOLT W/WASHER M10X25",,1,,1,1,,,,,,,,,,,,
14,1,,26013-100302,,"BOLT M10X 30",,2,,2,2,,,,,,,,,,,,
15,1,,933160-06710,,"SHIM 30, PIN ADJUST",,2,,2,2,,,,,,,,,,,,
15-1,1,,933160-06711,,"SHIM 30, PIN
ADJUST",,2,,2,2,,N,,,,,M20768,,,,M20530,,M20530
16,1,,172010-01640,,SPACER,,2,,2,2,,,,,,,,,,,,
17,1,,172149-83101,,"BRACKET, BOOM",,1,,1,1,,,,,,,,,,,,
18,1,,172149-83110,,PIN,,1,,1,1,,,,,,,,,,,,
19,1,,172149-83131,,"PIN 35X213 COMPL.",,1,,1,1,,,,,,,,,,,,
20,1,,172149-83151,,PIN,,1,,1,1,,,,,,,,,,,,
21,1,,172149-83170,,PIN,,1,,1,1,,,,,,,,,,,,
22,1,,172149-83180,,PIN,,1,,1,1,,,,,,,,,,,,
23,1,,172149-83190,,"PLATE, LOCK",,1,,1,1,,,,,,,,,,,,
24,1,,172117-83970,,"PLATE(C),LOCK(YELLOW",,2,,2,2,,,,,,,,,,,,
25,1,,172141-84600,,"SHIM 35",,2,,2,2,,,,,,,,,,,,
25-1,1,,172141-84601,,"SHIM 35",,2,,2,2,,N,,,,,M20768,,,,M20530,,M20530
26,1,,22157-100000,,"WASHER 10",,2,,2,2,,,,,,,,,,,,
27,1,,26013-100252,,"BOLT W/WASHER M10X25",,6,,6,6,,,,,,,,,,,,
28,1,,26013-100252,,"BOLT W/WASHER M10X25",,2,,2,2,,,,,,,,,,,,
29,1,,933171-29750,,"SHIM SET, PIN 38",,2,,2,2,,,,,,,,,,,,
29-1,1,,933171-29751,,"SHIM
SET,38X(0.8,1.2",,2,,2,2,,N,,,,,M20768,,,,M20530,,M20530
30,1,,24761-040000,,"NIPPLE B,GREASE",,1,,1,1,,,,,,,,,,,,
31,1,,172183-81160,,"TREE CLIP",,2,,2,2,,W,,,,,*1995.10,,,,*1995.10,,*1995.10
32,1,,172183-81170,,"TREE CLIP",,3,,3,3,,W,,,,,*1995.10,,,,*1995.10,,*1995.10
33,1,,172173-81720,,SHIM,,1,,1,1,,W,,,,,*1995.10,,,,*1995.10,,*1995.10
34,1,,172173-81730,,SHIM,,1,,1,1,,W,,,,,*1995.10,,,,*1995.10,,*1995.10
```

https://truckmanualshub.com/

Fig. 57 ブーム&ブームブラケット (B12/17-2)
BOOM & BOOM BRACKET (B12/17-2)

B12-2P(R)
B17-2P(R)

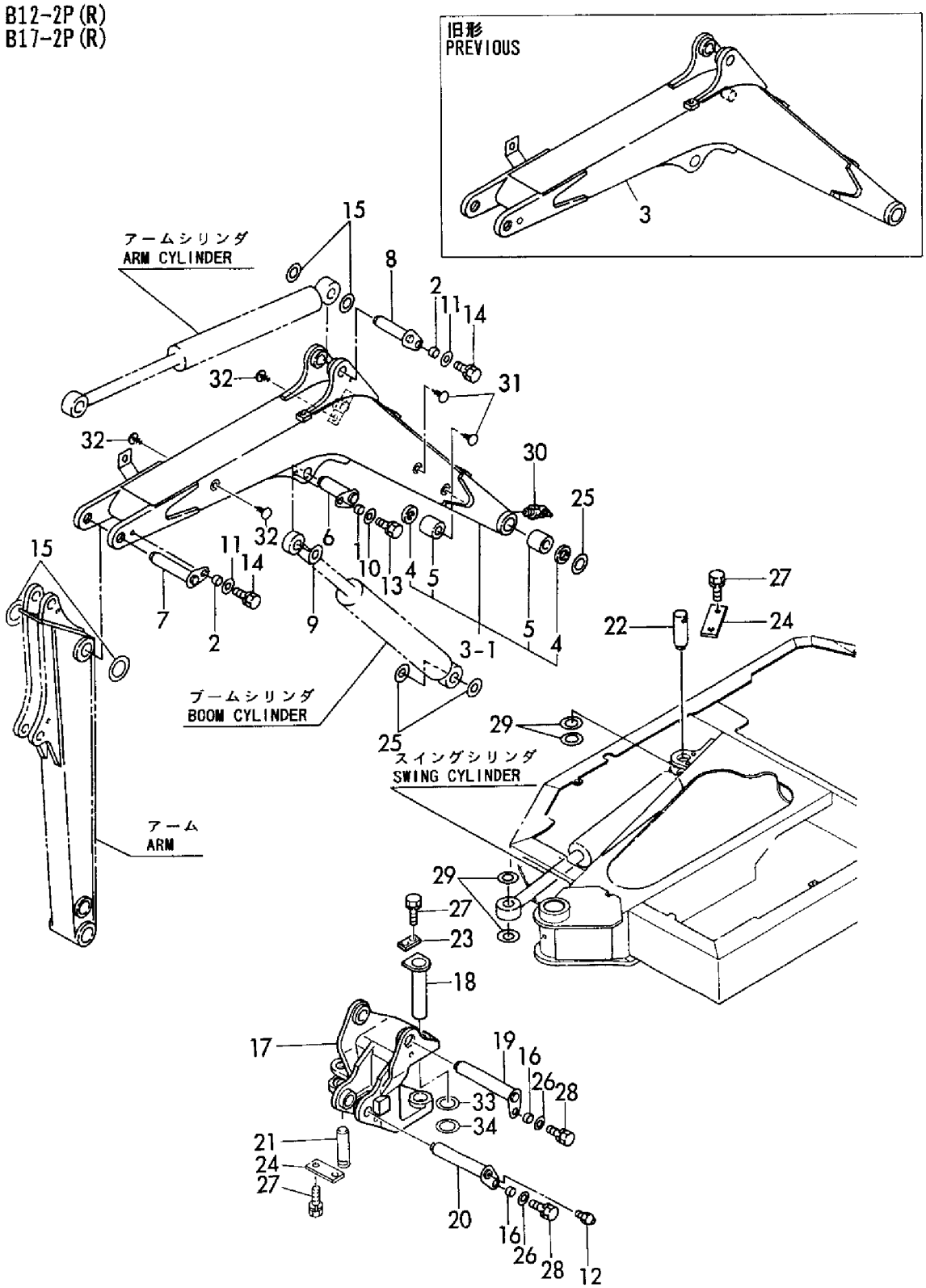

https://truckmanualshub.com/

```
1,1,,172010-01640,,SPACER,,2,,2,2,,,,,,,,,,,,
2,1,,172138-82102,,"ARM W/BUSH",,1,,,,,,,,,,,,,,,
3,2,,172183-72290,,"SEAL 38X48X 4, DUST",,6,,,,,,,,,,,,,,,
4,2,,172137-81300,,"BUSH 30X45, PIN",,6,,,,,,,,,,,,,,,
5,1,,172183-82100,,"ARM 950 ASSY",,,,1,1,,,,,,,,,,,,
5-1,1,,172183-82101,,"ARM 950 ASSY",,,,1,1,,S,,,,,,,,,*1995.10,,*1995.10
6,2,,172183-72290,,"SEAL 38X48X 4, DUST",,,,6,6,,,,,,,,,,,,
7,2,,172137-81300,,"BUSH 30X45, PIN",,,,6,6,,,,,,,,,,,,
8,1,,172137-94251,,"PIN 30X76",,2,,2,2,,,,,,,,,,,,
9,1,,22157-100000,,"WASHER 10",,2,,2,2,,,,,,,,,,,,
10,1,,24761-040000,,"NIPPLE B,GREASE",,1,,1,1,,,,,,,,,,,,
11,1,,26013-100252,,"BOLT W/WASHER M10X25",,,,2,2,,,,,,,,,,,,
12,1,,26013-100302,,"BOLT M10X 30",,2,,,,,,,,,,,,,,,
13,1,,933160-06710,,"SHIM 30, PIN ADJUST",,2,,2,2,,,,,,,,,,,,
13-1,1,,933160-06711,,"SHIM 30, PIN
ADJUST",,2,,2,2,,N,,,,,M20768,,,,M20530,,M20530
14,1,,172149-99470,,"KIT, ARM PIN",,2,,2,2,,,,,,,,,,,,
15,2,,172137-81380,,"NUT M16",,2,,2,2,,,,,,,,,,,,
16,2,,172149-83200,,"PIN 30X150 COMPL.",,2,,2,2,,,,,,,,,,,,
17,2,,24761-020000,,"NIPPLE PT1/8,GREASE",,2,,2,2,,,,,,,,,,,,
18,2,,933147-08501,,"WASHER 17X40X4.5",,2,,2,2,,,,,,,,,,,,
19,2,,933160-06710,,"SHIM 30, PIN ADJUST",,4,,4,4,,,,,,,,,,,,
19-1,2,,933160-06711,,"SHIM 30, PIN
ADJUST",,4,,4,4,,N,,,,,M20768,,,,M20530,,M20530
20,1,,172137-84403,,"LINK COMP.,BUCKET",,1,,1,1,,,,,,,,,,,,
21,2,,172183-72290,,"SEAL 38X48X 4, DUST",,6,,6,6,,,,,,,,,,,,
22,2,,172137-81300,,"BUSH 30X45, PIN",,2,,2,2,,,,,,,,,,,,
23,2,,172137-84451,,BUSH,,2,,2,2,,,,,,,,,,,,
24,1,,172137-84502,,"ARM (L), BUCKET",,1,,1,1,,,,,,,,,,,,
25,1,,172137-84512,,"ARM (R), BUCKET",,1,,1,1,,,,,,,,,,,,
26,1,,24761-020000,,"NIPPLE PT1/8,GREASE",,2,,2,2,,,,,,,,,,,,
27,1,,172183-81160,,"TREE CLIP",,,,4,4,,W,,,,,,,,,*1995.10,,*1995.10
```

https://truckmanualshub.com/

Fig. 58 アーム&バケットリンク (B12/17-2)
ARM & BUCKET LINK (B12/17-2)

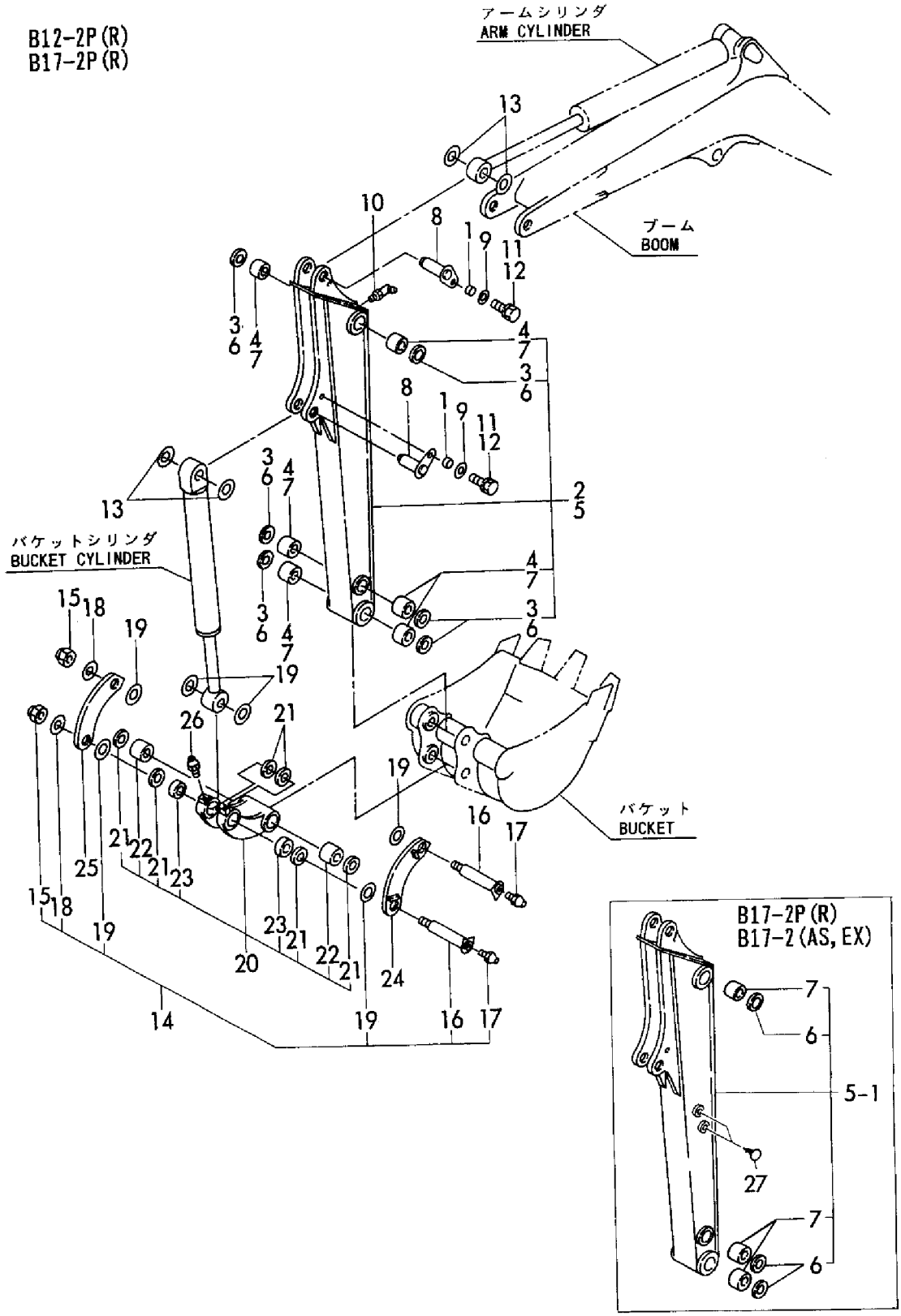

https://truckmanualshub.com/

```
1,1,,172137-99451,,"PIN KIT, BUCKET",2,2,2,2,2,,,,,,,,,,,,
2,2,,172149-83220,,"COLLAR,SHIFT",2,2,2,2,2,,,,,,,,,,,,
3,2,,172137-86251,,"PIN, BUCKET",2,2,2,2,2,,,,,,,,,,,,
4,2,,24761-020000,,"NIPPLE PT1/8,GREASE",2,2,2,2,2,,,,,,,,,,,,
5,2,,26116-100602,,"BOLT M10X 60 PLATED",2,2,2,2,2,,,,,,,,,,,,
6,2,,26716-100002,,"NUT M10",4,4,4,4,4,,,,,,,,,,,,
7,2,,933160-06710,,"SHIM 30, PIN ADJUST",2,2,2,2,2,,,,,,,,,,,,
7-1,2,,933160-06711,,"SHIM 30, PIN
ADJUST",2,2,2,2,2,,N,,,*1994.03,,M20768,,*1994.03,,M20530,,M20530
8,1,,772137-86101,,"BUCKET ASSY",,1,1,1,1,,,1,,,,,,,,,
10,2,,172137-86240,,"TEETH, SIDE",,2,2,2,2,,,,,,,,,,,,
11,2,,772137-86751,,"TEETH ASSY",,3,3,3,3,,,,,,,,,,,,
12,3,,172137-86700,,"SHIM 2.3, TEETH",,3,3,3,3,,,,,,,,,,,,
13,3,,172137-86710,,"TEETH SHIM 17 SET",,3,3,3,3,,,,,,,,,,,,
14,3,,172137-86751,,"TEETH ASSY",,3,3,3,3,,,,,,,,,,,,
15,4,,172141-86231,,TEETH,,3,3,3,3,,,,,,,,,,,,
16,4,,172137-86770,,BOLT,,6,6,6,6,,,,,,,,,,,,
17,4,,172137-86780,,NUT,,6,6,6,6,,,,,,,,,,,,
18,1,,772137-86301,,"BUCKET ASSY (450)",1,1,,1,1,,,2,,,,,,,,,
20,2,,172137-86240,,"TEETH, SIDE",2,2,,2,2,,,,,,,,,,,,
21,2,,772137-86751,,"TEETH ASSY",4,4,,4,4,,,,,,,,,,,,
22,3,,172137-86700,,"SHIM 2.3, TEETH",4,4,,4,4,,,,,,,,,,,,
23,3,,172137-86710,,"TEETH SHIM 17 SET",4,4,,4,4,,,,,,,,,,,,
24,3,,172137-86751,,"TEETH ASSY",4,4,,4,4,,,,,,,,,,,,
25,4,,172141-86231,,TEETH,4,4,,4,4,,,,,,,,,,,,
26,4,,172137-86770,,BOLT,8,8,,8,8,,,,,,,,,,,,
27,4,,172137-86780,,NUT,8,8,,8,8,,,,,,,,,,,,
```

https://truckmanualshub.com/

Fig. 59 バケット (400) (450) BUCKET (400) (450)

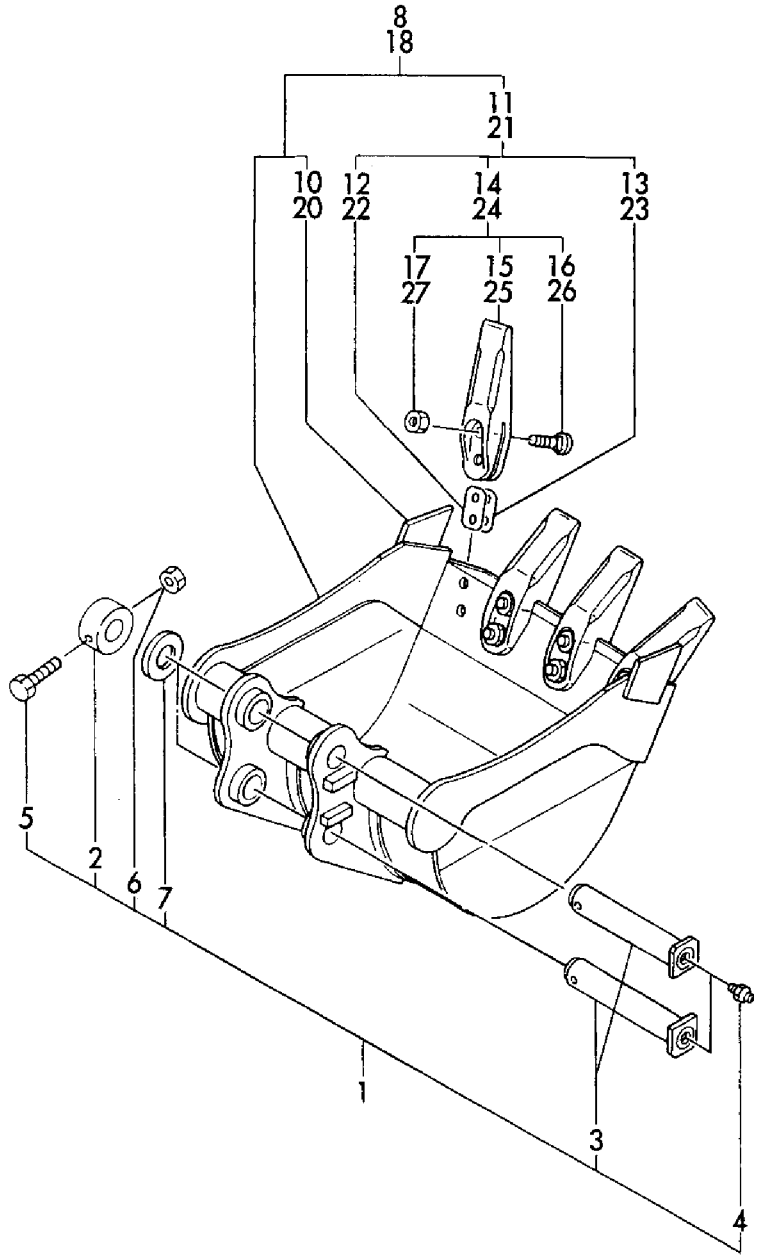

https://truckmanualshub.com/

```
1,1,,172137-99450,,"KIT, BUCKET PIN",2,,2,,,,,,,,,,,,,
2,2,,172137-86250,,"PIN, BUCKET",2,,2,,,,,,,,,,,,,
3,2,,22417-800450,,"COTTER PIN 8.0X45",2,,2,,,,,,,,,,,,,
4,2,,24761-020000,,"NIPPLE PT1/8,GREASE",2,,2,,,,,,,,,,,,,
5,2,,933160-06710,,"SHIM 30, PIN ADJUST",2,,2,,,,,,,,,,,,,
6,1,,772137-86400,,"BUCKET ASSY",1,,1,,,,,,,,,,,,,
8,3,,172137-86240,,"TEETH, SIDE",2,,2,,,,,,,,,,,,,
9,2,,772137-86750,,"TEETH ASSY",2,,2,,,,,,,,,,,,,
10,3,,172137-86700,,"SHIM 2.3, TEETH",2,,2,,,,,,,,,,,,,
11,3,,172137-86710,,"TEETH SHIM 17 SET",2,,2,,,,,,,,,,,,,
12,3,,172137-86750,,"THEETH W/BOLT & NUT",2,,2,,,,,,,,,,,,,
13,4,,172141-86231,,TEETH,2,,2,,,,,,,,,,,,,
14,4,,172137-86770,,BOLT,4,,4,,,,,,,,,,,,,
15,4,,172137-86780,,NUT,4,,4,,,,,,,,,,,,,
16,1,,772137-86500,,"BUCKET ASSY",1,,1,,,,,,,,,,,,,
18,3,,172137-86240,,"TEETH, SIDE",2,,2,,,,,,,,,,,,,
19,2,,772137-86750,,"TEETH ASSY",3,,3,,,,,,,,,,,,,
20,3,,172137-86700,,"SHIM 2.3, TEETH",3,,3,,,,,,,,,,,,,
21,3,,172137-86710,,"TEETH SHIM 17 SET",3,,3,,,,,,,,,,,,,
22,3,,172137-86750,,"THEETH W/BOLT & NUT",3,,3,,,,,,,,,,,,,
23,4,,172141-86231,,TEETH,3,,3,,,,,,,,,,,,,
24,4,,172137-86770,,BOLT,6,,6,,,,,,,,,,,,,
25,4,,172137-86780,,NUT,6,,6,,,,,,,,,,,,,
```

https://truckmanualshub.com/

Fig. 60 バケット250，300（アタッチメント）（旧形） BUCKET250, 300 (ATTACHMENT) (PREVIOUS)

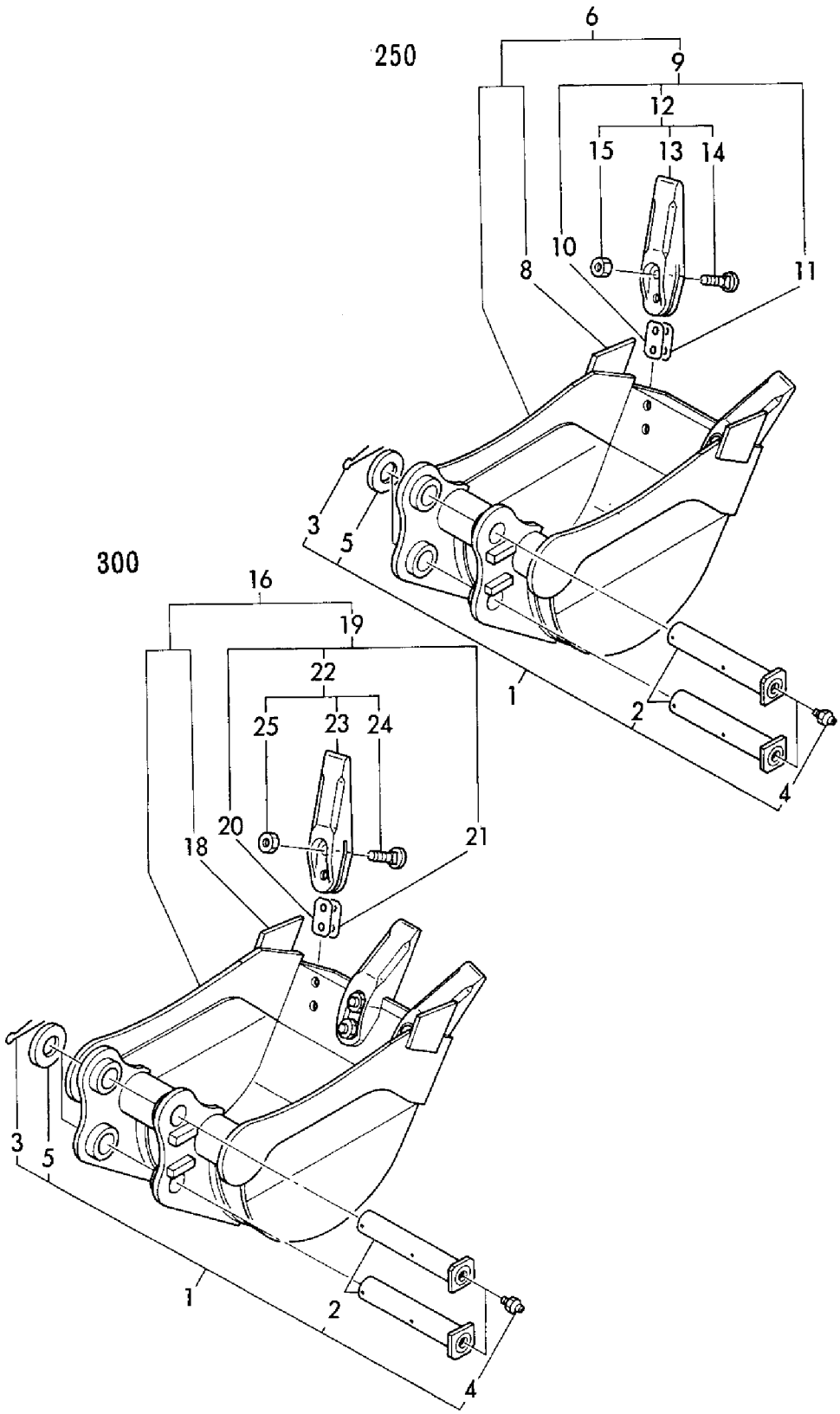

```
1,1,,172137-99450,,"KIT, BUCKET PIN",2,,2,,,,,,,,,,,,,
2,2,,172137-86250,,"PIN, BUCKET",2,,2,,,,,,,,,,,,,
3,2,,22417-800450,,"COTTER PIN 8.0X45",2,,2,,,,,,,,,,,,,
4,2,,24761-020000,,"NIPPLE PT1/8,GREASE",2,,2,,,,,,,,,,,,,
5,2,,933160-06710,,"SHIM 30, PIN ADJUST",2,,2,,,,,,,,,,,,,
6,1,,772137-86600,,"BUCKET ASSY",1,,1,,,,,,,,,,,,,
8,3,,172137-86240,,"TEETH, SIDE",2,,2,,,,,,,,,,,,,
9,2,,772137-86750,,"TEETH ASSY",3,,3,,,,,,,,,,,,,
10,3,,172137-86700,,"SHIM 2.3, TEETH",3,,3,,,,,,,,,,,,,
11,3,,172137-86710,,"TEETH SHIM 17 SET",3,,3,,,,,,,,,,,,,
12,3,,172137-86750,,"THEETH W/BOLT & NUT",3,,3,,,,,,,,,,,,,
13,4,,172141-86231,,TEETH,3,,3,,,,,,,,,,,,,
14,4,,172137-86770,,BOLT,6,,6,,,,,,,,,,,,,
15,4,,172137-86780,,NUT,6,,6,,,,,,,,,,,,,
16,1,,772137-86300,,"BUCKET ASSY",1,,,,,,,,,,,,,,,
18,3,,172137-86240,,"TEETH, SIDE",2,,,,,,,,,,,,,,,
19,2,,772137-86750,,"TEETH ASSY",4,,,,,,,,,,,,,,,
20,3,,172137-86700,,"SHIM 2.3, TEETH",4,,,,,,,,,,,,,,,
21,3,,172137-86710,,"TEETH SHIM 17 SET",4,,,,,,,,,,,,,,,
22,3,,172137-86750,,"THEETH W/BOLT & NUT",4,,,,,,,,,,,,,,,
23,4,,172141-86231,,TEETH,4,,,,,,,,,,,,,,,
24,4,,172137-86770,,BOLT,8,,,,,,,,,,,,,,,
25,4,,172137-86780,,NUT,8,,,,,,,,,,,,,,,
```

https://truckmanualshub.com/

Fig. 61 バケット350，450（アタッチメント）（旧形） BUCKET350, 450 (ATTACHMENT) (PREVIOUS)

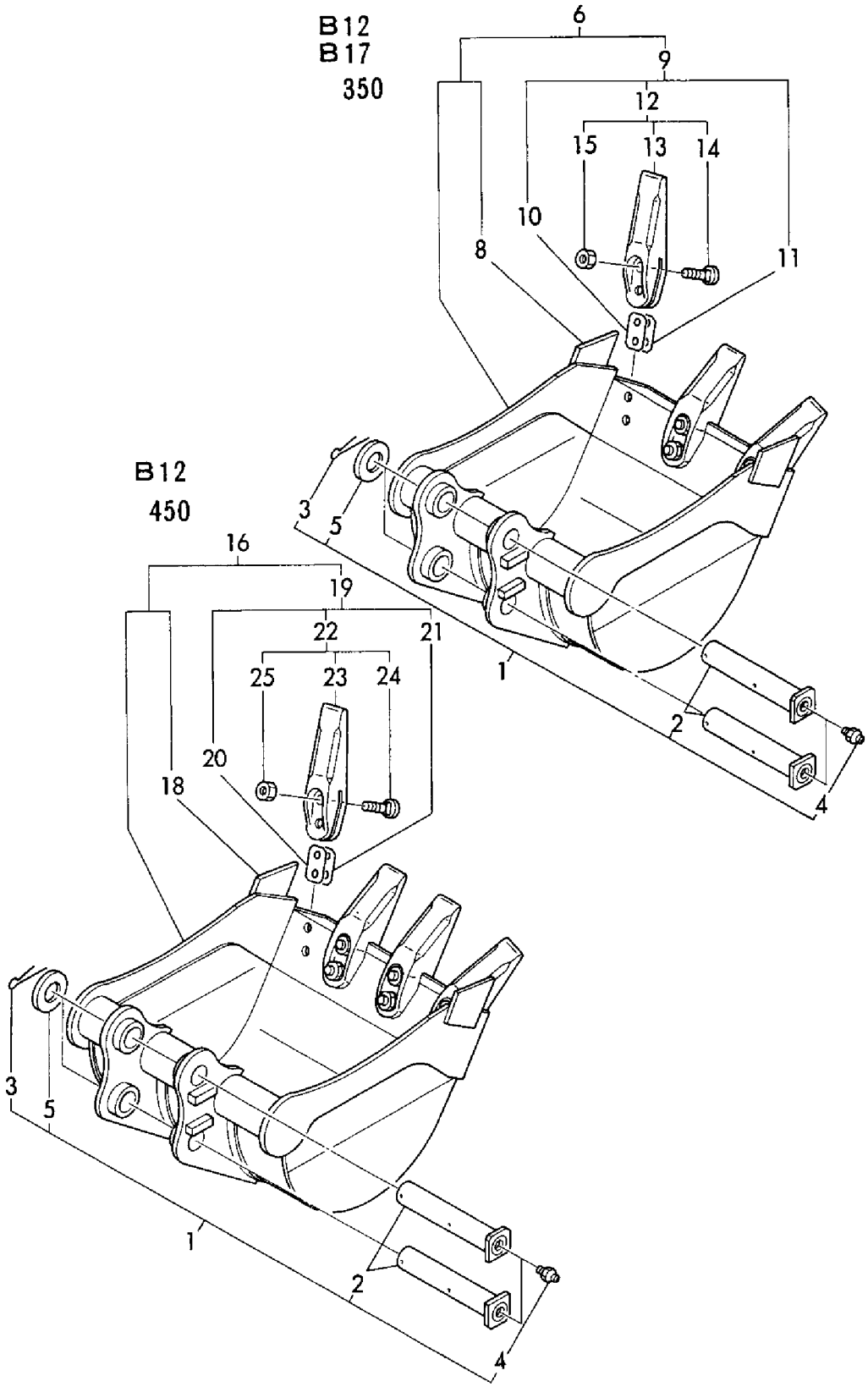

https://truckmanualshub.com/

```
1,1,,172137-99450,,"KIT, BUCKET PIN",,,2,,,,,,,,,,,,,,
2,2,,172137-86250,,"PIN, BUCKET",,,2,,,,,,,,,,,,,,
3,2,,22417-800450,,"COTTER PIN 8.0X45",,,2,,,,,,,,,,,,,,
4,2,,24761-020000,,"NIPPLE PT1/8,GREASE",,,2,,,,,,,,,,,,,,
5,2,,933160-06710,,"SHIM 30, PIN ADJUST",,,2,,,,,,,,,,,,,,
6,1,,772137-86100,,"BUCKET ASSY (400",,,1,,,,,,,,,,,,,,
8,3,,172137-86240,,"TEETH, SIDE",,,2,,,,,,,,,,,,,,
9,2,,772137-86750,,"TEETH ASSY",,,3,,,,,,,,,,,,,,
10,3,,172137-86700,,"SHIM 2.3, TEETH",,,3,,,,,,,,,,,,,,
11,3,,172137-86710,,"TEETH SHIM 17 SET",,,3,,,,,,,,,,,,,,
12,3,,172137-86750,,"THEETH W/BOLT & NUT",,,3,,,,,,,,,,,,,,,
13,4,,172141-86231,,TEETH,,,3,,,,,,,,,,,,,,
14,4,,172137-86770,,BOLT,,,6,,,,,,,,,,,,,,
15,4,,172137-86780,,NUT,,,6,,,,,,,,,,,,,,
```

https://truckmanualshub.com/

Fig. 62 バケット400（アタッチメント）（旧形） BUCKET400 (ATTACHMENT) (PREVIOUS)

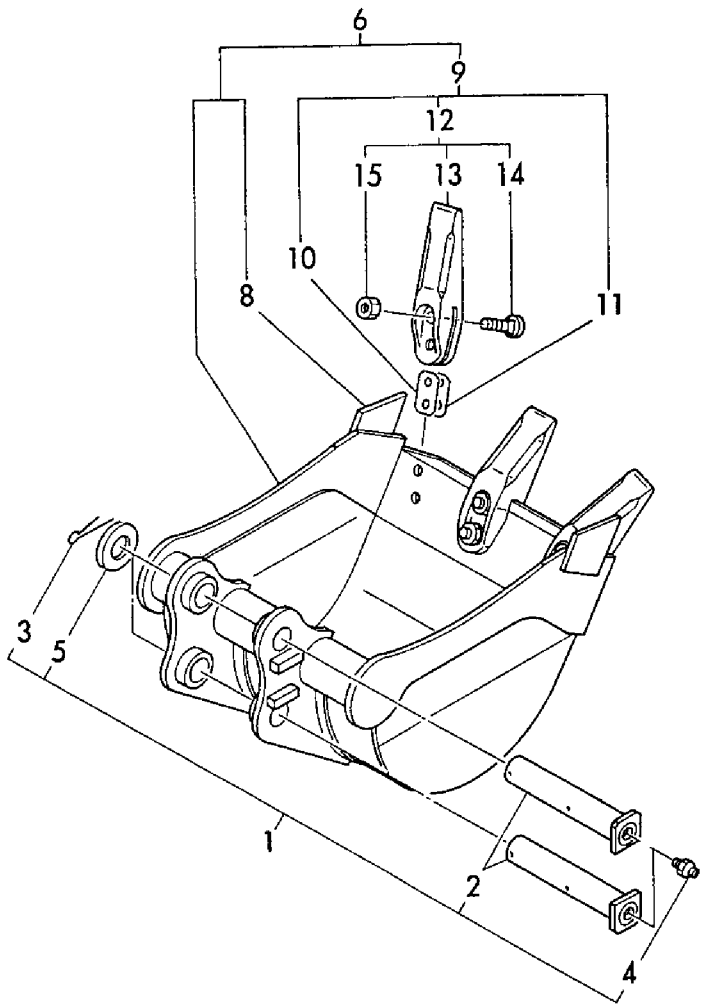

https://truckmanualshub.com/

```
1,1,,172137-99451,,"PIN KIT, BUCKET",2,2,2,2,2,,,,,,,,,,,,
2,2,,172149-83220,,"COLLAR,SHIFT",2,2,2,2,2,,,,,,,,,,,,
3,2,,172137-86251,,"PIN, BUCKET",2,2,2,2,2,,,,,,,,,,,,
4,2,,24761-020000,,"NIPPLE PT1/8,GREASE",2,2,2,2,2,,,,,,,,,,,,
5,2,,26116-100602,,"BOLT M10X 60 PLATED",2,2,2,2,2,,,,,,,,,,,,
6,2,,26716-100002,,"NUT M10",4,4,4,4,4,,,,,,,,,,,,
7,2,,933160-06710,,"SHIM 30, PIN ADJUST",2,2,2,2,2,,,,,,,,,,,,
8,1,,772137-86601,,"BUCKET ASSY",1,1,1,1,1,,,,,,,,,,,,
10,3,,172137-86240,,"TEETH, SIDE",2,2,2,2,2,,,,,,,,,,,,
11,2,,772137-86751,,"TEETH ASSY",3,3,3,3,3,,,,,,,,,,,,
12,3,,172137-86700,,"SHIM 2.3, TEETH",3,3,3,3,3,,,,,,,,,,,,
13,3,,172137-86710,,"TEETH SHIM 17 SET",3,3,3,3,3,,,,,,,,,,,,
14,3,,172137-86751,,"TEETH ASSY",3,3,3,3,3,,,,,,,,,,,,
15,4,,172141-86231,,TEETH,3,3,3,3,3,,,,,,,,,,,,
16,2,,172137-86770,,BOLT,6,6,6,6,6,,,,,,,,,,,,
17,2,,172137-86780,,NUT,6,6,6,6,6,,,,,,,,,,,,
18,1,,772137-86501,,"BUCKET ASSY 300",1,1,1,1,1,,,,,,,,,,,,
20,3,,172137-86240,,"TEETH, SIDE",2,2,2,2,2,,,,,,,,,,,,
21,2,,772137-86751,,"TEETH ASSY",3,3,3,3,3,,,,,,,,,,,,
22,3,,172137-86700,,"SHIM 2.3, TEETH",3,3,3,3,3,,,,,,,,,,,,
23,3,,172137-86710,,"TEETH SHIM 17 SET",3,3,3,3,3,,,,,,,,,,,,
24,3,,172137-86751,,"TEETH ASSY",3,3,3,3,3,,,,,,,,,,,,
25,4,,172141-86231,,TEETH,3,3,3,3,3,,,,,,,,,,,,
26,4,,172137-86770,,BOLT,6,6,6,6,6,,,,,,,,,,,,
27,4,,172137-86780,,NUT,6,6,6,6,6,,,,,,,,,,,,
28,1,,772137-86401,,"BUCKET ASSY 250",1,1,1,1,1,,,,,,,,,,,,
30,3,,172137-86240,,"TEETH, SIDE",2,2,2,2,2,,,,,,,,,,,,
31,2,,772137-86751,,"TEETH ASSY",2,2,2,2,2,,,,,,,,,,,,
32,3,,172137-86700,,"SHIM 2.3, TEETH",2,2,2,2,2,,,,,,,,,,,,
33,3,,172137-86710,,"TEETH SHIM 17 SET",2,2,2,2,2,,,,,,,,,,,,
34,3,,172137-86751,,"TEETH ASSY",2,2,2,2,2,,,,,,,,,,,,
35,4,,172141-86231,,TEETH,2,2,2,2,2,,,,,,,,,,,,
36,4,,172137-86770,,BOLT,4,4,4,4,4,,,,,,,,,,,,
37,4,,172137-86780,,NUT,4,4,4,4,4,,,,,,,,,,,,
```

https://truckmanualshub.com/

Fig. 63 バケット250，300，350（アタッチメント）（新形）
BUCKET250，300，350 (ATTACHMENT) (NEW)

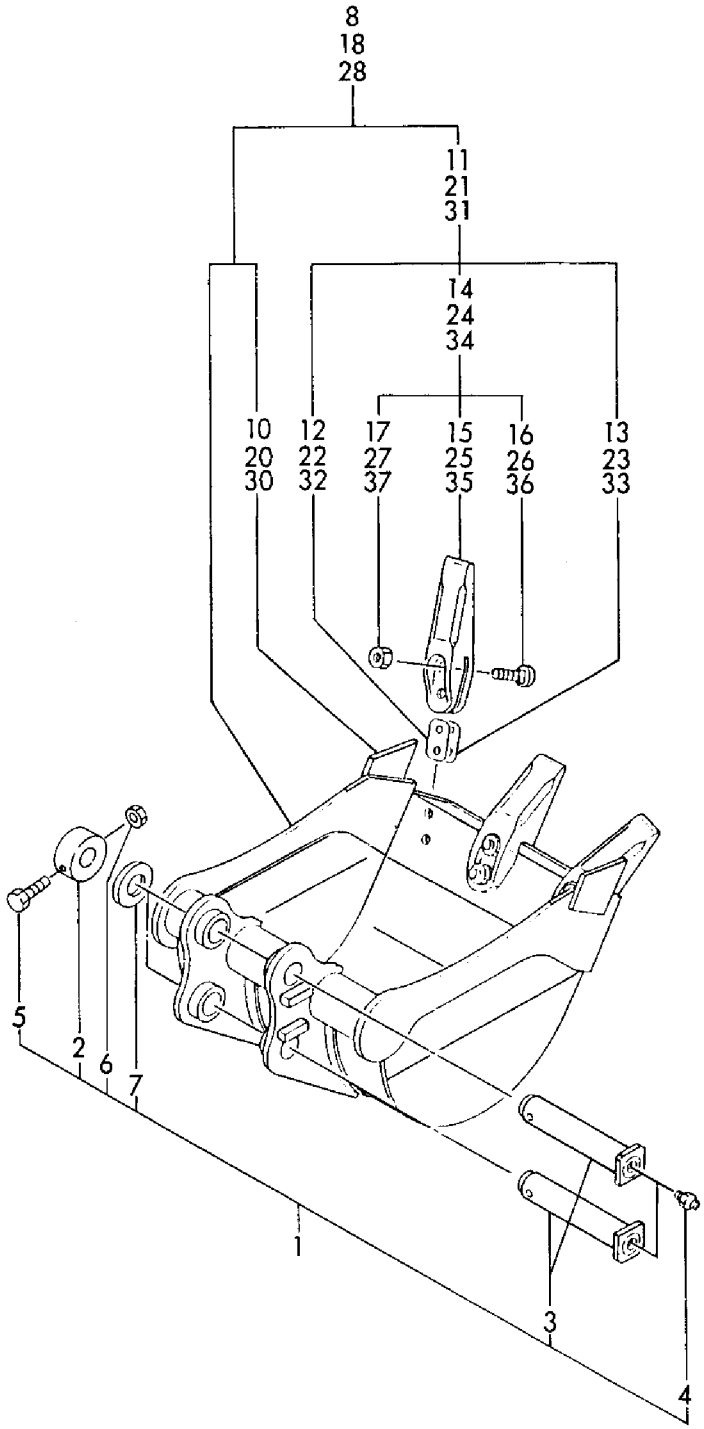

https://truckmanualshub.com/

```
1,1,,172137-94100,,"BLADE ASSY",1,,1,,,,,,,,,,,,,,
2,1,,172137-94250,,"PIN 30- 71",2,,2,,,,,,,,,,,,,,
3,1,,172137-94270,,"PIN 30-71B, BLADE",2,,2,,,,,,,,,,,,,,
4,1,,22417-800450,,"COTTER PIN 8.0X45",4,,4,,,,,,,,,,,,,,
5,1,,24761-020000,,"NIPPLE PT1/8,GREASE",2,,2,,,,,,,,,,,,,,
6,1,,24761-040000,,"NIPPLE B,GREASE",2,,2,,,,,,,,,,,,,,
7,1,,933160-06710,,"SHIM 30, PIN ADJUST",2,,2,,,,,,,,,,,,,,
```

https://truckmanualshub.com/

Fig. 64 ブレード (B12/17 (−1)) BLADE (B12/17 (-1))

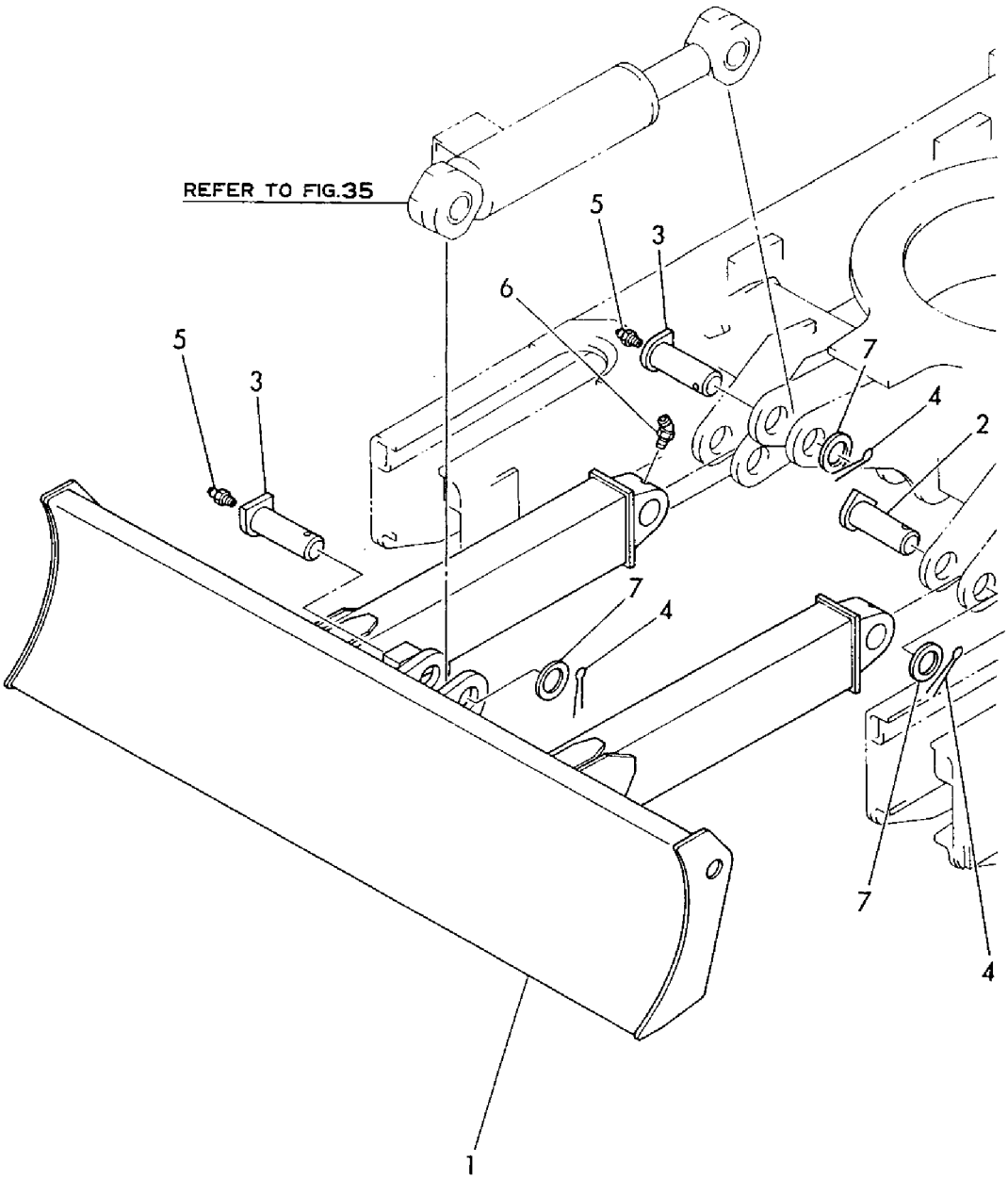

https://truckmanualshub.com/

```
1,1,,172010-01640,,SPACER,,4,,4,4,,,,,,,,,,,,
2,1,,172137-94101,,"BLADE ASSY",,1,,1,1,,,,,,,,,,,,
3,2,,172183-72290,,"SEAL 38X48X 4, DUST",,4,,4,4,,,,,,,,,,,,,
4,1,,172137-94251,,"PIN 30X76",,2,,2,2,,,,,,,,,,,,
5,1,,172137-94271,,PIN,,2,,2,2,,,,,,,,,,,,
6,1,,22157-100000,,"WASHER 10",,4,,4,4,,,,,,,,,,,,
7,1,,24761-020000,,"NIPPLE PT1/8,GREASE",,2,,2,2,,,,,,,,,,,,,
8,1,,24761-040000,,"NIPPLE B,GREASE",,2,,2,2,,,,,,,,,,,,
9,1,,26013-100302,,"BOLT M10X 30",,4,,4,4,,,,,,,,,,,,
10,1,,933160-06710,,"SHIM 30, PIN ADJUST",,2,,2,2,,,,,,,,,,,,,
10-1,1,,933160-06711,,"SHIM 30, PIN
ADJUST",,4,,4,4,,N,,,,,M20768,,,,M20530,,M20530
```

https://truckmanualshub.com/

Fig. 65 ブレード (B12/17-2) BLADE (B12/17-2)

B12-2P(R)
B17-2P(R)

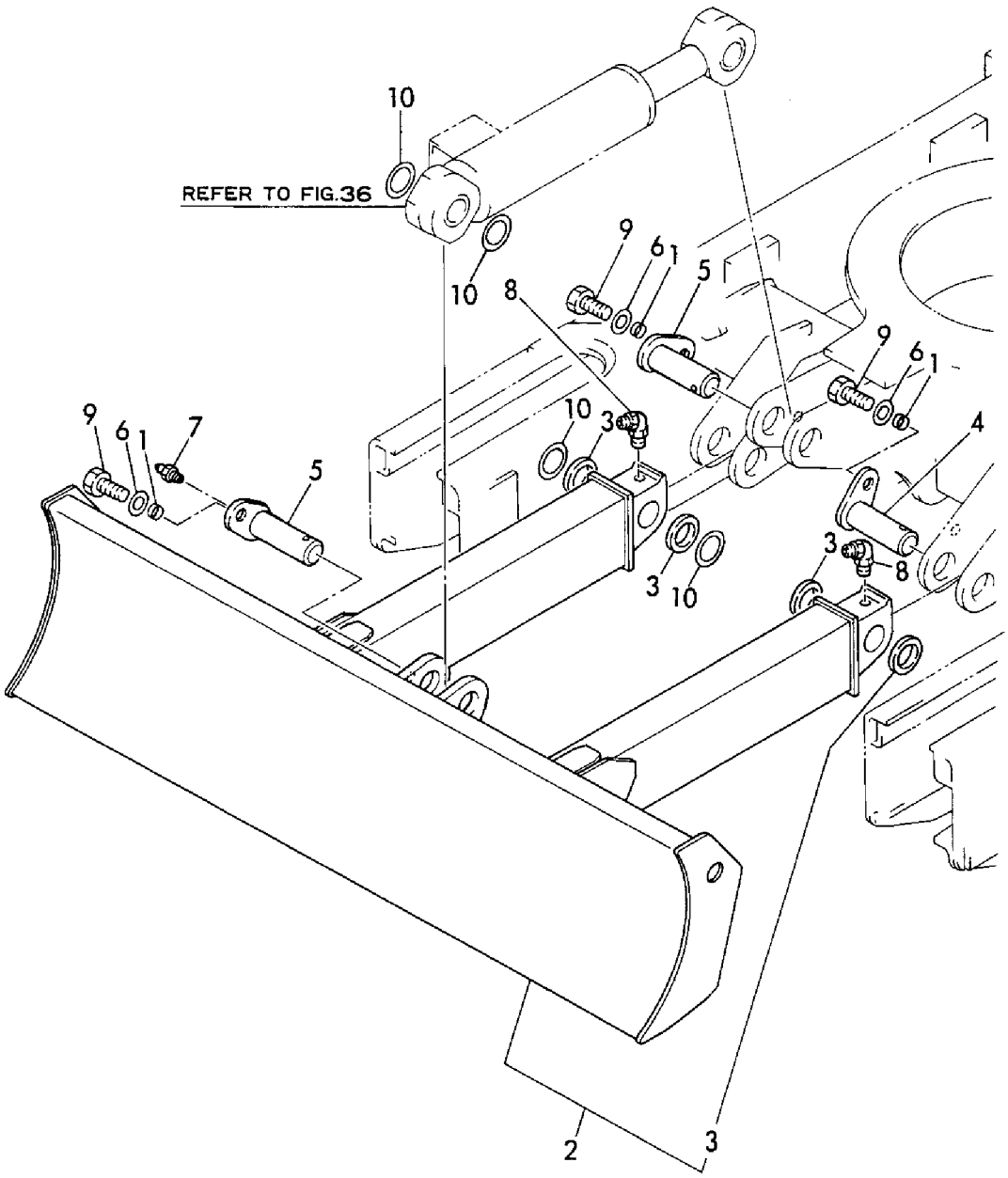

https://truckmanualshub.com/

```
1,1,,172964-03610,,"LABEL A",,1,,1,,,,,,,,,,,,,
2,1,,172164-03500,,LABEL,,1,,1,,,,,,,,,,,,,
3,1,,172164-03540,,LABEL,,1,,1,,,,,,,,,,,,,
4,1,,172141-03182,,LABEL,,1,,1,,,,,,,,,,,,,
5,1,,172164-03510,,LABEL,,1,,1,,,,,,,,,,,,,
6,1,,172164-03520,,LABEL,,1,,1,,,,,,,,,,,,,
7,1,,172964-03390,,LABEL,,1,,1,,,,,,,,,,,,,
8,1,,172519-04180,,LABEL,,1,,1,,,,,,,,,,,,,
9,1,,172141-03372,,LABEL,,2,,2,,,,,,,,,,,,,
10,1,,172519-04300,,LABEL,,1,,1,,,,,,,,,,,,,
11,1,,172156-03280,,LABEL,,1,,1,,,,,,,,,,,,,
12,1,,172165-03661,,LABEL,,1,,1,,,,,,,,,,,,,
13,1,,172142-03302,,LABEL,,1,,1,,,,,,,,,,,,,
14,1,,172141-03202,,LABEL,,1,,1,,,,,,,,,,,,,
15,1,,172964-03480,,LABEL,,1,,1,,,,,,,,,,,,,
15-1,1,,172964-03481,,LABEL,,1,,1,,,N,,,,,*1995.07,,,,*1995.07,,
```

https://truckmanualshub.com/

Fig. 66 安全銘板 SAFETY LABEL

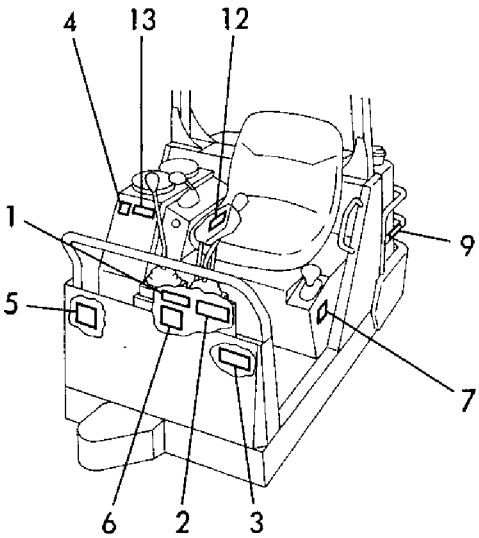

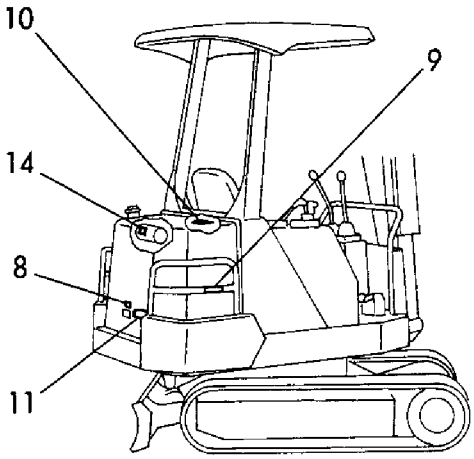

安全銘板の貼付け位置は、取扱説明書をご参照下さい。

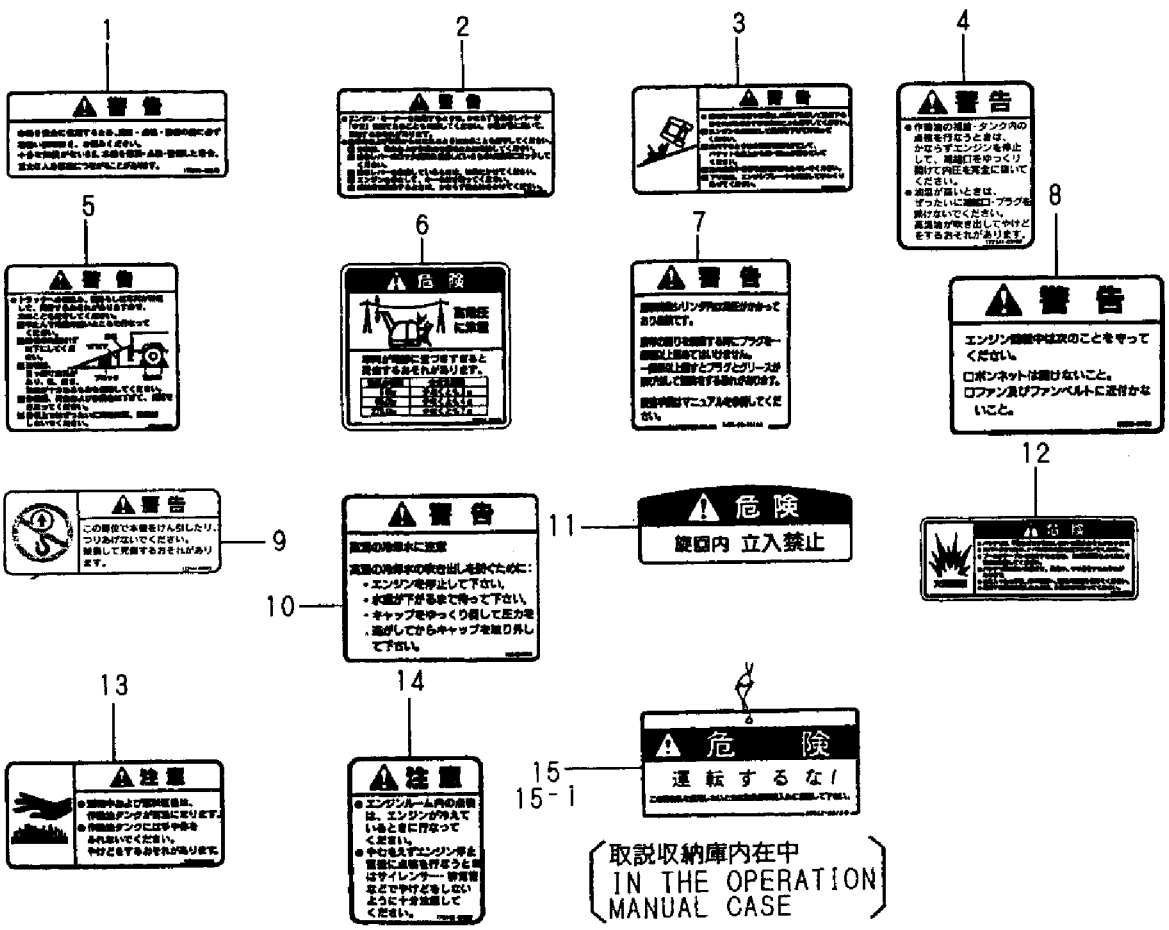

https://truckmanualshub.com/

```
0,Y00K2492
1,001,,"VEHICLE B12/17(-1)(-2)"
2,1,,LABEL(B12/17(-1)),B12(-1)P(R),B12-2P(R),B17(-1)P(R),B17-2P(R),"B17-
2(AS,EX)"
2,2,,LABEL(B12/17-2),B12(-1)P(R),B12-2P(R),B17(-1)P(R),B17-2P(R),"B17-2(AS,EX)"
2,3,,"LABEL(B17-2(AS,EX))",B12(-1)P(R),B12-2P(R),B17(-1)P(R),B17-2P(R),"B17-
2(AS,EX)"
2,4,,TOOL,B12(-1)P(R),B12-2P(R),B17(-1)P(R),B17-2P(R),"B17-2(AS,EX)"
2,5,,"INLETHOUSE & EXHAUST PIPE",B12(-1)P(R),B12-2P(R),B17(-1)P(R),B17-
2P(R),"B17-2(AS,EX)"
2,6,,ACCELERATOR,B12(-1)P(R),B12-2P(R),B17(-1)P(R),B17-2P(R),"B17-2(AS,EX)"
2,7,,"ENGINE MOUNT & RADIATOR",B12(-1)P(R),B12-2P(R),B17(-1)P(R),B17-2P(R),"B17-
2(AS,EX)"
2,8,,"FUEL TANK & FUEL LINE",B12(-1)P(R),B12-2P(R),B17(-1)P(R),B17-2P(R),"B17-
2(AS,EX)"
2,9,,BATTERY,B12(-1)P(R),B12-2P(R),B17(-1)P(R),B17-2P(R),"B17-2(AS,EX)"
2,10,,"ELECTRIC PART",B12(-1)P(R),B12-2P(R),B17(-1)P(R),B17-2P(R),"B17-2(AS,EX)"
2,11,,"WORK LAMP",B12(-1)P(R),B12-2P(R),B17(-1)P(R),B17-2P(R),"B17-2(AS,EX)"
2,12,,"TRACK ROLLER",B12(-1)P(R),B12-2P(R),B17(-1)P(R),B17-2P(R),"B17-2(AS,EX)"
2,13,,"TRACK FRAME & IDLER",B12(-1)P(R),B12-2P(R),B17(-1)P(R),B17-2P(R),"B17-
2(AS,EX)"
2,14,,CRAWLER,B12(-1)P(R),B12-2P(R),B17(-1)P(R),B17-2P(R),"B17-2(AS,EX)"
2,15,,"LINK STAND",B12(-1)P(R),B12-2P(R),B17(-1)P(R),B17-2P(R),"B17-2(AS,EX)"
2,16,,"CONTROL EQUIPMENT(BOOM&BUCKET)",B12(-1)P(R),B12-2P(R),B17(-1)P(R),B17-
2P(R),"B17-2(AS,EX)"
2,17,,"CONTROL EQUIPMENT(ARM&TURNING)",B12(-1)P(R),B12-2P(R),B17(-1)P(R),B17-
2P(R),"B17-2(AS,EX)"
2,18,,"CONTROL EQUIPMENT(TRAVEL&SWING",B12(-1)P(R),B12-2P(R),B17(-1)P(R),B17-
2P(R),"B17-2(AS,EX)"
2,19,,"CONTROL EQUIPMENT(BLADE)",B12(-1)P(R),B12-2P(R),B17(-1)P(R),B17-
2P(R),"B17-2(AS,EX)"
2,20,,"OPERATION LEVER STOPPER",B12(-1)P(R),B12-2P(R),B17(-1)P(R),B17-
2P(R),"B17-2(AS,EX)"
2,21,,"TURNING FRAME",B12(-1)P(R),B12-2P(R),B17(-1)P(R),B17-2P(R),"B17-2(AS,EX)"
2,22,,"TURNING BEARING",B12(-1)P(R),B12-2P(R),B17(-1)P(R),B17-2P(R),"B17-
2(AS,EX)"
2,23,,BONNET,B12(-1)P(R),B12-2P(R),B17(-1)P(R),B17-2P(R),"B17-2(AS,EX)"
2,24,,"SEAT & STEP(B12/17(-1))",B12(-1)P(R),B12-2P(R),B17(-1)P(R),B17-
2P(R),"B17-2(AS,EX)"
2,25,,"SEAT & STEP(B12/17-2)",B12(-1)P(R),B12-2P(R),B17(-1)P(R),B17-2P(R),"B17-
2(AS,EX)"
2,26,,CANOPY,B12(-1)P(R),B12-2P(R),B17(-1)P(R),B17-2P(R),"B17-2(AS,EX)"
2,27,,"BOOM CYLINDER(B12/17(-1))",B12(-1)P(R),B12-2P(R),B17(-1)P(R),B17-
2P(R),"B17-2(AS,EX)"
2,28,,"BOOM CYLINDER(B12/17-2)",B12(-1)P(R),B12-2P(R),B17(-1)P(R),B17-
2P(R),"B17-2(AS,EX)"
2,29,,"ARM CYLINDER(B12/17(-1))",B12(-1)P(R),B12-2P(R),B17(-1)P(R),B17-
2P(R),"B17-2(AS,EX)"
2,30,,"ARM CYLINDER(B12/17-2)",B12(-1)P(R),B12-2P(R),B17(-1)P(R),B17-2P(R),"B17-
2(AS,EX)"
2,31,,"BUCKET CYLINDER(B12/17(-1))",B12(-1)P(R),B12-2P(R),B17(-1)P(R),B17-
2P(R),"B17-2(AS,EX)"
2,32,,"BUCKET CYLINDER(B12/17-2)",B12(-1)P(R),B12-2P(R),B17(-1)P(R),B17-
2P(R),"B17-2(AS,EX)"
2,33,,"SWING CYLINDER(B12/17(-1))",B12(-1)P(R),B12-2P(R),B17(-1)P(R),B17-
2P(R),"B17-2(AS,EX)"
2,34,,"SWING CYLINDER(B12/17-2)",B12(-1)P(R),B12-2P(R),B17(-1)P(R),B17-
2P(R),"B17-2(AS,EX)"
2,35,,"BLADE CYLINDER(B12/17(-1))",B12(-1)P(R),B12-2P(R),B17(-1)P(R),B17-
2P(R),"B17-2(AS,EX)"
2,36,,"BLADE CYLINDER(B12/17-2)",B12(-1)P(R),B12-2P(R),B17(-1)P(R),B17-
2P(R),"B17-2(AS,EX)"
```

https://truckmanualshub.com/

```
2,37,,"HYD. OIL PUMP & JOINT",B12(-1)P(R),B12-2P(R),B17(-1)P(R),B17-2P(R),"B17-
2(AS,EX)"
2,38,,"TURNING MOTOR",B12(-1)P(R),B12-2P(R),B17(-1)P(R),B17-2P(R),"B17-2(AS,EX)"
2,39,,"TRAVEL MOTOR",B12(-1)P(R),B12-2P(R),B17(-1)P(R),B17-2P(R),"B17-2(AS,EX)"
2,40,,"SWIVEL JOINT",B12(-1)P(R),B12-2P(R),B17(-1)P(R),B17-2P(R),"B17-2(AS,EX)"
2,41,,"CONTROL VALVE(TRAVEL,TURNING)",B12(-1)P(R),B12-2P(R),B17(-1)P(R),B17-
2P(R),"B17-2(AS,EX)"
2,42,,"CONTROL VALVE(ARM,BUCKET)",B12(-1)P(R),B12-2P(R),B17(-1)P(R),B17-
2P(R),"B17-2(AS,EX)"
2,43,,"CONTROL VALVE(SWING,BOOM)",B12(-1)P(R),B12-2P(R),B17(-1)P(R),B17-
2P(R),"B17-2(AS,EX)"
2,44,,"CONTROL VALVE(BLADE,P.T.O.)",B12(-1)P(R),B12-2P(R),B17(-1)P(R),B17-
2P(R),"B17-2(AS,EX)"
2,45,,"CONTROL VALVE(P1,P2,P3)",B12(-1)P(R),B12-2P(R),B17(-1)P(R),B17-
2P(R),"B17-2(AS,EX)"
2,46,,"HYD. OIL TANK",B12(-1)P(R),B12-2P(R),B17(-1)P(R),B17-2P(R),"B17-2(AS,EX)"
2,47,,GREASING,B12(-1)P(R),B12-2P(R),B17(-1)P(R),B17-2P(R),"B17-2(AS,EX)"
2,48,,"HYD. OIL PIPING(TANK-VALVE)",B12(-1)P(R),B12-2P(R),B17(-1)P(R),B17-
2P(R),"B17-2(AS,EX)"
2,49,,"HYD. OIL PIPING(VALVE-SWIVEL-M",B12(-1)P(R),B12-2P(R),B17(-1)P(R),B17-
2P(R),"B17-2(AS,EX)"
2,50,,"HYD. OIL PIPING(RETURN)",B12(-1)P(R),B12-2P(R),B17(-1)P(R),B17-
2P(R),"B17-2(AS,EX)"
2,51,,"HYD. OIL PIPING(TRAVEL)",B12(-1)P(R),B12-2P(R),B17(-1)P(R),B17-
2P(R),"B17-2(AS,EX)"
2,52,,"HYD. OIL PIPING(BOOM)",B12(-1)P(R),B12-2P(R),B17(-1)P(R),B17-2P(R),"B17-
2(AS,EX)"
2,53,,"HYD.OIL PIPING(P.T.O.VALVE-BOO",B12(-1)P(R),B12-2P(R),B17(-1)P(R),B17-
2P(R),"B17-2(AS,EX)"
2,54,,"HYD.OIL PIPING(P.T.O.BOOM END)",B12(-1)P(R),B12-2P(R),B17(-1)P(R),B17-
2P(R),"B17-2(AS,EX)"
2,55,,"BOOM & BUCKET(B12(-1))",B12(-1)P(R),B12-2P(R),B17(-1)P(R),B17-2P(R),"B17-
2(AS,EX)"
2,56,,"BOOM & BUCKET(B17(-1))",B12(-1)P(R),B12-2P(R),B17(-1)P(R),B17-2P(R),"B17-
2(AS,EX)"
2,57,,"BOOM & BOOM BRACKET(B12/B17-2)",B12(-1)P(R),B12-2P(R),B17(-1)P(R),B17-
2P(R),"B17-2(AS,EX)"
2,58,,"ARM & BUCKET LINK(B12/B17-2)",B12(-1)P(R),B12-2P(R),B17(-1)P(R),B17-
2P(R),"B17-2(AS,EX)"
2,59,,BUCKET(400)(450),B12(-1)P(R),B12-2P(R),B17(-1)P(R),B17-2P(R),"B17-
2(AS,EX)"
2,60,,"BUCKET 250,300(ATTACH)(PRE)",B12(-1)P(R),B12-2P(R),B17(-1)P(R),B17-
2P(R),"B17-2(AS,EX)"
2,61,,"BUCKET 350,450(ATTACH)(PRE)",B12(-1)P(R),B12-2P(R),B17(-1)P(R),B17-
2P(R),"B17-2(AS,EX)"
2,62,,"BUCKET 400(ATTACH)(PREVIOUS)",B12(-1)P(R),B12-2P(R),B17(-1)P(R),B17-
2P(R),"B17-2(AS,EX)"
2,63,,"BUCKET 350,300,250(ATTACH)(NEW",B12(-1)P(R),B12-2P(R),B17(-1)P(R),B17-
2P(R),"B17-2(AS,EX)"
2,64,,BLADE(B12/17(-1)),B12(-1)P(R),B12-2P(R),B17(-1)P(R),B17-2P(R),"B17-
2(AS,EX)"
2,65,,"BLADE (B12/17-2)",B12(-1)P(R),B12-2P(R),B17(-1)P(R),B17-2P(R),"B17-
2(AS,EX)"
2,66,,"SAFETY LABEL",B12(-1)P(R),B12-2P(R),B17(-1)P(R),B17-2P(R),"B17-2(AS,EX)"
```