https://truckmanualshub.com/

6SE412 MARCH 2004

MBE 4000 Service Manual

DETROIT DIESEL CORPORATION

Detroit Diesel Corporation
13400 Outer Drive, West / Detroit, Michigan 48239-4001
Telephone: 313-592-5000
Fax: 313-592-8176
http://www.detroitdiesel.com

Detroit Diesel®, DDC®, DDEC®, and the spinning arrows design are registered trademarks of Detroit Diesel Corporation.
All information subject to change without notice.
6SE412 0403 Copyright ©2004 DETROIT DIESEL CORPORATION. All rights reserved. Printed in U.S.A.

https://truckmanualshub.com/

CALIFORNIA
Proposition 65 Warning

Diesel engine exhaust and some of its constituents are known to the State of California to cause cancer, birth defects, and other reproductive harm.

40727

REVISION NOTIFICATION

Modifications to this manual are announced in the form of Service Information Bulletins. The bulletins include attachment pages and are posted on the World Wide Web (www.detroitdiesel.com/svc/sibindex.htm).

Revisions to this manual will be sent marked with a revision bar (see Example 2). Sections containing revisions will have a third line in the page footer (compare Examples 1 and 2).

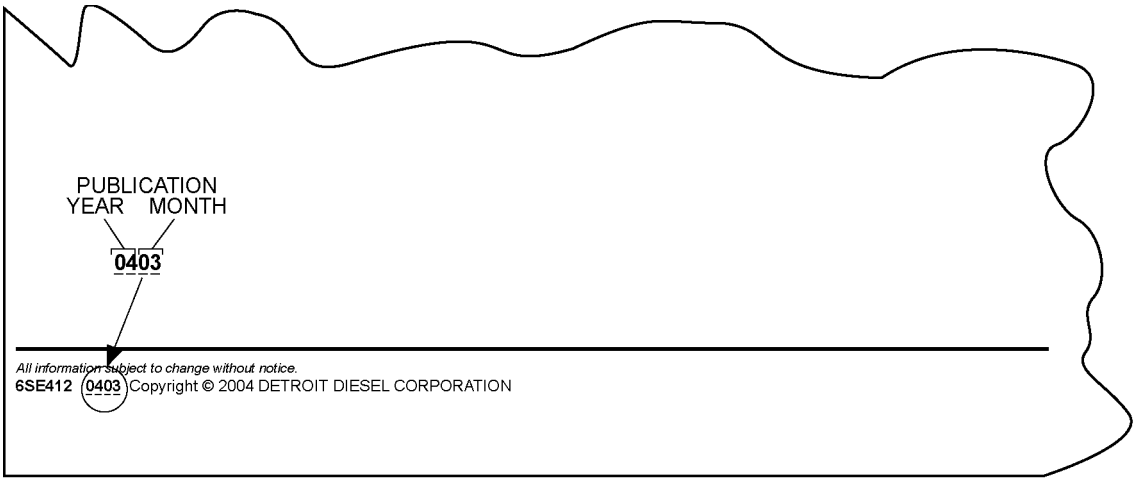

Example 1 - Unchanged Pages

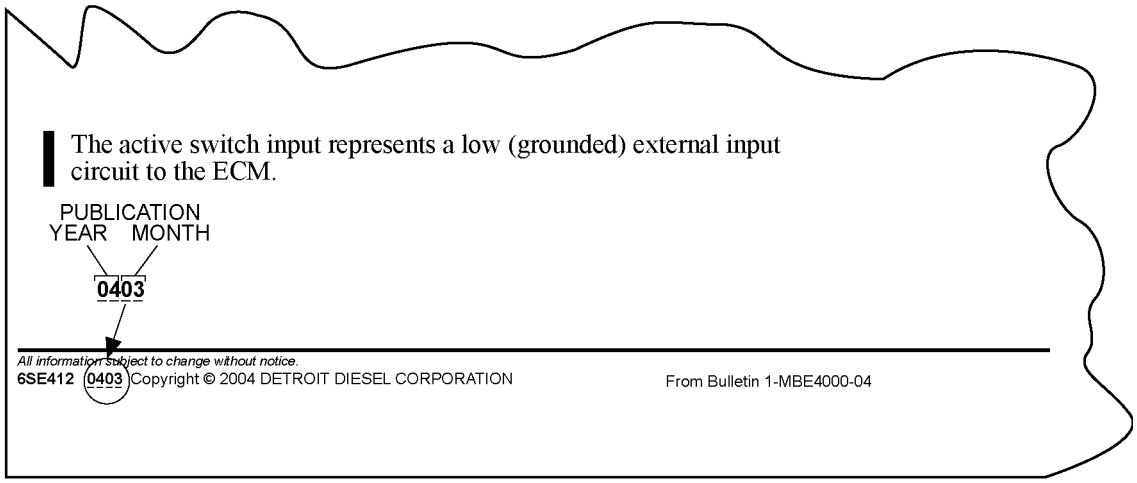

Example 2 - Changed Pages

42606

ENGINE EXHAUST

Consider the following before servicing engines:

https://truckmanualshub.com/

WARNING:

PERSONAL INJURY

Diesel engine exhaust and some of its constituents are known to the State of California to cause cancer, birth defects, and other reproductive harm.

- ☐ **Always start and operate an engine in a well ventilated area.**
- ☐ **If operating an engine in an enclosed area, vent the exhaust to the outside.**
- ☐ **Do not modify or tamper with the exhaust system or emission control system.**

All information subject to change without notice.
6SE412 0403 Copyright © 2004 DETROIT DIESEL CORPORATION

https://truckmanualshub.com/

TABLE OF CONTENTS

	GENERAL INFORMATION	**1**
	SCOPE AND USE OF THIS MANUAL	3
	GENERAL DESCRIPTION	3
	ELECTRONIC ENGINE CONTROL SYSTEM	4
	ENGINE BRAKING POWER	7
	GENERAL SPECIFICATIONS AND ENGINE VIEWS	7
	ENGINE MODEL AND SERIAL NUMBER	14
	EXHAUST GAS RECIRCULATION (EGR) SYSTEM	16
	SAFETY INSTRUCTIONS AND PRECAUTIONS	20
	ENGLISH TO METRIC CONVERSION	32
	DECIMAL AND METRIC EQUIVALENTS	33
	TORQUE SPECIFICATIONS	35
1	**ENGINE**	
1.1	CYLINDER HEAD COVER	1-3
1.2	CYLINDER HEAD	1-5
1.3	CYLINDER BLOCK	1-24
1.4	EGR CYLINDER HEAD AND BLOCK	1-40
1.5	EGR FRONT AND REAR LIFTER BRACKETS	1-43
1.6	ENGINE BRAKE	1-45
1.7	FRONT RADIAL SEAL	1-51
1.8	REAR RADIAL SEAL	1-54
1.9	CRANKSHAFT ASSEMBLY	1-57
1.10	FRONT COVER HOUSING	1-82
1.11	CRANKSHAFT VIBRATION DAMPER	1-84
1.12	FLYWHEEL	1-86
1.13	RING GEAR	1-96
1.14	PILOT BEARING	1-100
1.15	ENGINE CRANKING TOOL	1-102
1.16	FLYWHEEL HOUSING	1-104
1.17	PISTON, PISTON RING, AND CONNECTING ROD	1-106
1.18	EGR PISTON, PISTON RING, AND CONNECTING ROD	1-135
1.19	VALVES	1-138
1.20	EGR VALVES	1-161
1.21	ROCKER ARM	1-166
1.22	CAMSHAFT AND CAMSHAFT SENSOR	1-170
1.23	EGR CAMSHAFT	1-181
1.A	ADDITIONAL INFORMATION	1-183
2	**FUEL SYSTEM**	
2.1	INJECTOR UNIT PUMP	2-3
2.2	EGR INJECTOR UNIT PUMP	2-11
2.3	FUEL INJECTOR LINE	2-13

 Copyright © 2004 DETROIT DIESEL CORPORATION

https://truckmanualshub.com/

2.4 FUEL INJECTOR NOZZLE 2-18
2.5 EGR FUEL INJECTOR NOZZLE 2-24
2.6 PROTECTIVE SLEEVE 2-25
2.7 DDEC ELECTRONIC CONTROL UNIT 2-29
2.8 FUEL HEAT EXCHANGER 2-34
2.9 FUEL FILTER 2-37
2.10 EGR FUEL FILTER 2-41
2.11 FUEL PUMP 2-43
2.12 FUEL SYSTEM INSPECTION 2-47
2.A ADDITIONAL INFORMATION 2-57

3 LUBRICATION SYSTEM

3.1 OIL PAN 3-3
3.2 OIL SPRAY NOZZLE 3-9
3.3 EGR CAMSHAFT LUBRICATION SPRAYER 3-13
3.4 OIL PUMP 3-14
3.5 EGR OIL PUMP AND PICK UP TUBE 3-21
3.6 OIL FILTER 3-23
3.7 OIL HEAT EXCHANGER AND FILTER HOUSING 3-26
3.8 OIL PRESSURE AND TEMPERATURE SENSOR 3-32
3.A ADDITIONAL INFORMATION 3-35

4 COOLING SYSTEM

4.1 COOLING SYSTEM 4-3
4.2 COOLANT PUMP 4-8
4.3 EGR COOLANT PUMP 4-20
4.4 FRONT IDLER AND TENSIONER SUPPORT 4-22
4.5 THERMOSTAT 4-25
4.6 EGR THERMOSTAT HOUSING 4-30
4.7 COOLANT TEMPERATURE SENSOR 4-32
4.A ADDITIONAL INFORMATION 4-35

5 FUEL, LUBRICATING OIL, AND COOLANT

5.1 FUEL 5-3
5.2 LUBRICATING OIL 5-5
5.3 COOLANT 5-7
5.A ADDITIONAL INFORMATION 5-13

6 AIR INTAKE SYSTEM

6.1 INTAKE MANIFOLD 6-3
6.2 CHARGE PRESSURE/TEMPERATURE SENSOR 6-5
6.3 TURBOCHARGER 6-6
6.A ADDITIONAL INFORMATION 6-17

7 EXHAUST SYSTEM

7.1 EXHAUST MANIFOLD 7-3
7.2 EXHAUST BRAKE ASSEMBLY 7-6
7.3 EGR EXHAUST MANIFOLD 7-14
7.4 EGR COOLER AND COOLER SUPPORT BRACKET 7-26
7.5 EGR CONTROL VALVE, GAS OUTLET PIPE, AND GAS MIXER 7-43

All information subject to change without notice.
6SE412 0403 Copyright © 2004 DETROIT DIESEL CORPORATION

https://truckmanualshub.com/

7.6 EPV (ELECTRONIC PROPORTIONAL VALVE) AND WABCO® AIR SOLENOID VALVE 7-51
7.7 HENGST® BREATHER FILTER 7-55
7.A ADDITIONAL INFORMATION 7-59

8 ELECTRICAL EQUIPMENT

8.1 DRIVE BELTS 8-3
8.A ADDITIONAL INFORMATION 8-15

9 POWER TAKE-OFF

9.1 POWER TAKE-OFF 9-3

10 SPECIAL EQUIPMENT

10.1 AIR COMPRESSOR 10-3
10.A ADDITIONAL INFORMATION 10-11

11 OPERATION AND VERIFICATION

11.1 PREPARATION FOR A FIRST TIME START 11-3
11.2 STARTING THE ENGINE 11-7
11.3 RUNNING THE ENGINE 11-10
11.4 STOPPING THE ENGINE 11-12

12 ENGINE TUNE-UP

12.1 VALVE LASH CHECKING 12-3
12.2 ADJUSTING VALVE LASH 12-10

13 PREVENTIVE MAINTENANCE

13.1 SCHEDULED INTERVALS 13-3

14 ENGINE STORAGE

14.1 PREPARING ENGINE FOR STORAGE 14-3

15 MECHANICAL TROUBLESHOOTING

15.1 TROUBLESHOOTING THE ELECTRONIC ENGINE CONTROL SYSTEM 15-3
15.2 GENERAL TROUBLESHOOTING 15-4

INDEX Index-1

 Copyright © 2004 DETROIT DIESEL CORPORATION

https://truckmanualshub.com/

All information subject to change without notice.
6SE412 0403 Copyright © 2004 DETROIT DIESEL CORPORATION

https://truckmanualshub.com/

GENERAL INFORMATION

Section	Page
SCOPE AND USE OF THIS MANUAL	3
GENERAL DESCRIPTION	3
ELECTRONIC ENGINE CONTROL SYSTEM	4
ENGINE BRAKING POWER	7
GENERAL SPECIFICATIONS AND ENGINE VIEWS	7
ENGINE MODEL AND SERIAL NUMBER	14
EXHAUST GAS RECIRCULATION (EGR) SYSTEM	16
SAFETY INSTRUCTIONS AND PRECAUTIONS	20
ENGLISH TO METRIC CONVERSION	32
DECIMAL AND METRIC EQUIVALENTS	33
TORQUE SPECIFICATIONS	35

https://truckmanualshub.com/

All information subject to change without notice.
6SE412 0403 Copyright © 2004 DETROIT DIESEL CORPORATION

SCOPE AND USE OF THIS MANUAL

This manual contains complete instructions on operation, adjustment (tune-up), preventive maintenance, and repair (including complete overhaul) for the MBE 4000 engine. This manual was written primarily for persons servicing and overhauling the engine. In addition, this manual contains all of the instructions essential to the operators and users. Basic maintenance and overhaul procedures are common to all MBE 4000 engines, and apply to all engine models.

This manual is divided into numbered sections. Section one covers the engine (less major assemblies). The following sections cover a complete system such as the fuel system, lubrication system, or air system. Each section is divided into subsections which contain complete maintenance and operating instructions for a specific engine subassembly. Each section begins with a table of contents. Pages and illustrations are numbered consecutively within each section.

Information can be located by using the table of contents at the front of the manual or the table of contents at the beginning of each section. Information on specific subassemblies or accessories within the major section is listed immediately following the section title.

GENERAL DESCRIPTION

The MBE 4000 Engine described in this manual is a water-cooled, four-stroke, direct injection diesel engine. The cylinders are arranged in line. Each cylinder has a separate fuel injection pump (unit pump) with a short injection line to the injection nozzle, which is located in the center of the combustion chamber. The unit pumps are attached to the crankcase and are driven from the camshaft. Each cylinder has two intake valves and two exhaust valves.

Charge-air cooling and an exhaust gas turbocharger are standard equipment on all MBE 4000 engines.

The engine has a fully electronic control system, which regulates the injection quantity and timing using solenoid valves, allowing extremely low-emission operation. The control system consists of an engine-resident pump and nozzle control unit (the DDEC-ECU) and a vehicle control unit (the DDEC-VCU). The two are connected by a proprietary datalink.

Engine braking is controlled by a pneumatically-operated exhaust brake on the turbocharger and by a constant-throttle system. For greater braking power, an optional turbo brake is available.

The cylinder block has integrated oil and water channels. The upper section of the cylinder bore is induction-hardened. The six individual cylinder heads are made of cast iron. The cylinder head gasket is an adjustment-free seal with rubber sealing elements.

The pistons are made of aluminum alloy with ring carriers and a shallow combustion chamber recess. The pistons are cooled by oil spray nozzles.

The crankshaft is precision-forged with seven main bearings and eight custom-forged counter weights, and a vibration damper at the front end.

The camshaft is made of induction-hardened steel and has seven main bearings. Each cylinder has cams for intake and exhaust valves and a unit pump.

The valves are controlled by mushroom tappets, pushrods, and rocker arms. The intake and exhaust valves are opened and closed by a valve-guided bridge.

 Copyright © 2004 DETROIT DIESEL CORPORATION

https://truckmanualshub.com/

There is a force-feed lubricating oil circuit supplied by a gear-type oil pump. This pump is positioned at the rear of the oil pan and driven by gears from the crankshaft. The oil heat exchanger is located near the front of the crankcase on the right-hand side near the turbocharger.

The gear-type fuel pump is located near the front of the crankcase on the left hand side. The pump is driven from the forward end of the camshaft.

The air compressor, with a power-steering pump attached, is driven by a gear on the camshaft.

The engine is cooled by a closed system using recirculated coolant; temperature is regulated automatically by a thermostat.

There are three drive belts, each with its own automatic belt tensioner. The alternator and coolant pump (and any other accessories) are driven by a main drive belt. The fan and the air conditioner compressor are each driven by their own drive belt.

ELECTRONIC ENGINE CONTROL SYSTEM

The engine is equipped with a fully electronic control system. Besides the engine and its related sensors, this system is composed of the DDEC-ECU, or engine control unit, and the DDEC-VCU, or vehicle control unit. The two control units are connected by a proprietary datalink through which all necessary data and information can be exchanged. The DDEC-VCU then broadcasts all information on the J1587 and J1939 datalinks, where it can be read by minidiag2, Nexiq™ Diagnostic Data Reader (DDR), or Detroit Diesel Diagnostic Link® (DDDL) PC software.

The DDEC-ECU monitors both the engine and the datalink. When a malfunction or other problem is detected, the system selects an appropriate response; for example, the emergency running mode may be activated.

All information subject to change without notice.
6SE412 0403 Copyright © 2004 DETROIT DIESEL CORPORATION

DDEC-ECU — Engine-Resident Control Unit

The DDEC-ECU control unit is located on the left-hand side of the engine. See Figure 1. The DDEC-ECU processes the data received from the DDEC-VCU, for example the position of the accelerator pedal, engine brake, etc. These data are evaluated together with the data from the sensors on the engine, such as, charge and oil pressure and coolant and fuel temperature. The data is then compared to the characteristic maps or lines stored in the DDEC-ECU. From these data, quantity and timing of injection are calculated and the unit pumps are actuated accordingly through the solenoid valves.

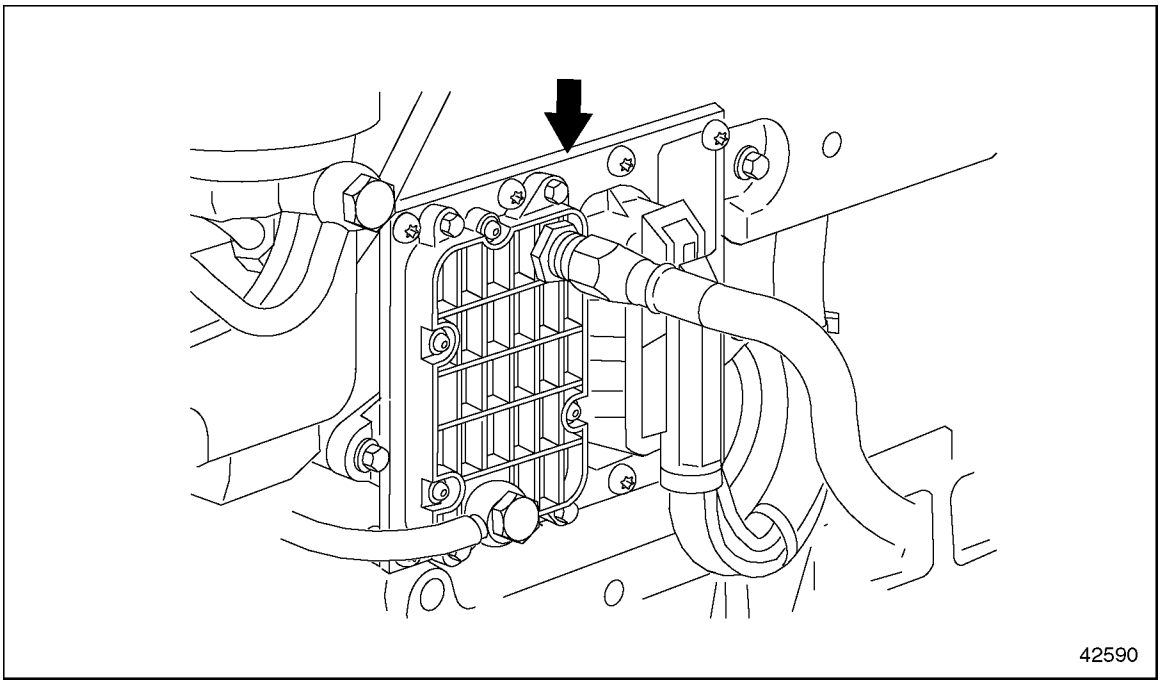

Figure 1 DDEC-ECU Control Unit Location

NOTE:
To obtain a replacement DDEC-ECU, all the data given on the DDEC-ECU label are required.

 Copyright © 2004 DETROIT DIESEL CORPORATION

https://truckmanualshub.com/

DDEC-VCU — Vehicle Control Unit

The vehicle control unit (DDEC-VCU) communicates with other electronic control units installed on the vehicle over the J1587 datalink. See Figure 2. Within the DDEC-VCU, sets of data for specific applications are stored. These include idle speed, maximum running speed, and speed limitation.

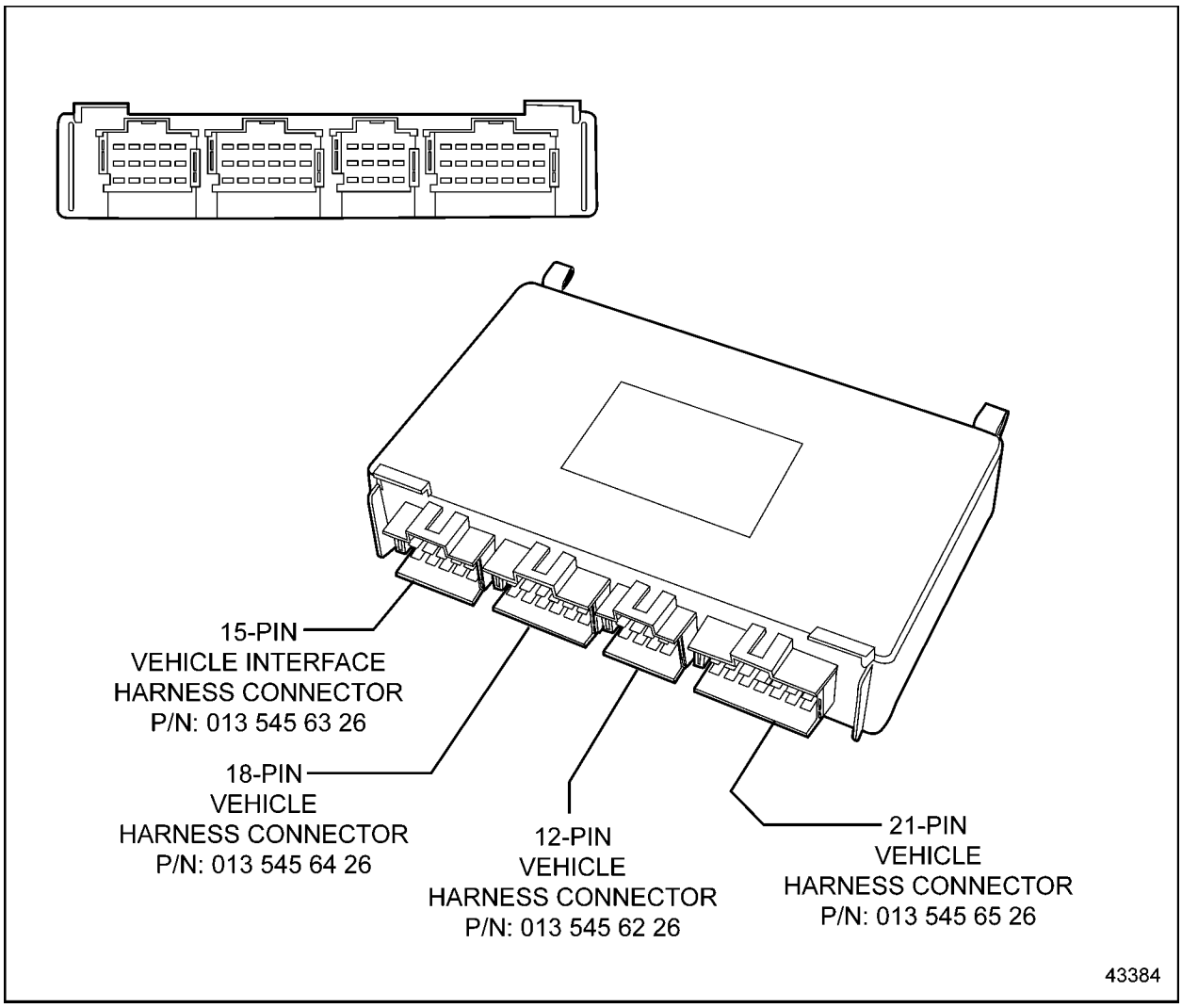

Figure 2 Vehicle Control Unit (DDEC-VCU)

The DDEC-VCU receives data from the following sources:

- ☐ The operator (accelerator pedal position, engine brake switch)
- ☐ Other electronic control units (for example, the antilock brake system)
- ☐ The DDEC-ECU control unit (data such as oil pressure and coolant temperature)

All information subject to change without notice.
6SE412 0403 Copyright © 2004 DETROIT DIESEL CORPORATION

From these data, instructions are computed for controlling the engine and transmitted to the DDEC-ECU via the proprietary datalink. The DDEC-VCU controls various systems, for example, communications with the datalink, the engine brake, and the constant-throttle valves. If the engine control system detects a fault, the appropriate fault code is broadcast on the datalink and can be read using minidiag2. When there is a fault, the code for the control unit reporting the fault can be read directly on the display.

ENGINE BRAKING POWER

Exhaust Brake/Constant-Throttle Valves

To increase braking performance, the engine is equipped with an exhaust brake on the turbocharger in conjunction with constant-throttle valves on the cylinder head.

NOTE:
The constant-throttle values are activated by engine oil pressure.

The exhaust back-pressure is used by the exhaust brake to increase braking performance.

Optional Turbo Brake

For high braking output, the MBE 4000 engine can be equipped with an optional turbo brake. The turbo brake increases the air mass flow through the engine to provide up to 600 brake horsepower. The turbo brake can be operated either manually or automatically, through the cruise control function.

Because the charge air pressure is maintained at a high level during braking, full throttle response is available immediately, if the operator desires it, without any turbo lag.

The turbo brake is maintenance-free, highly reliable, and adds virtually no weight to the engine.

GENERAL SPECIFICATIONS AND ENGINE VIEWS

For a general view of the MBE 4000 engine, showing major components, see Figure 3 for the left-hand side, and see Figure 4 for the right-hand side.

For a general view of the MBE 4000 engine, showing ports and fluid lines, see Figure 5 for the left-hand side and see Figure 6 for the right-hand side.

For a general view of the MBE 4000 engine, showing sensor locations, see Figure 7. Two sensors are not easily visible from the left-hand side of the engine: the charge pressure/temperature sensor, located on the right-hand side of the charge air manifold, and the oil pressure/temperature sensor located at the base of the oil filter.

 Copyright © 2004 DETROIT DIESEL CORPORATION

https://truckmanualshub.com/

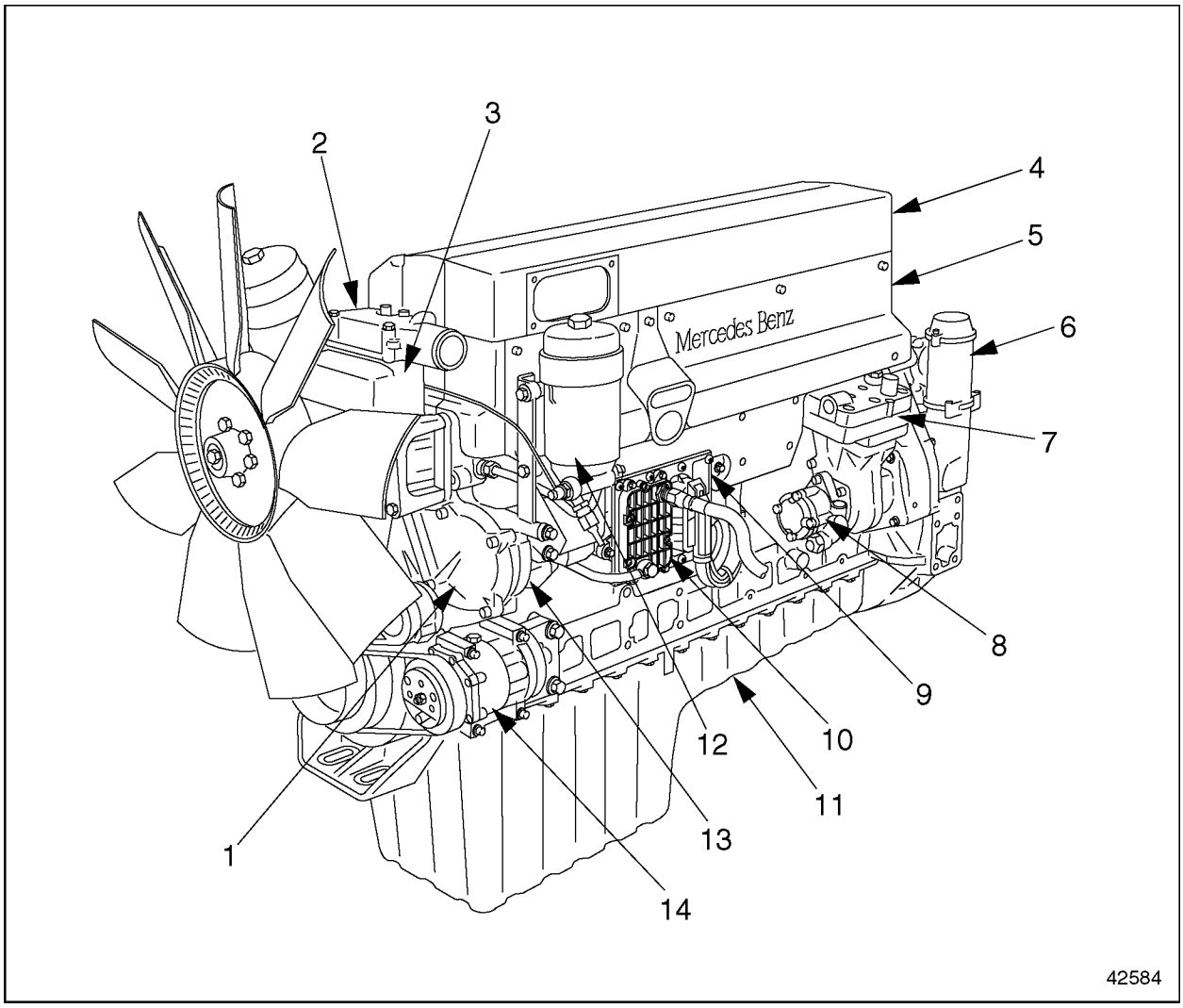

1. Front Camshaft Cover
2. Thermostat Housing
3. Coolant Pump
4. Charge-Air (Intake) Manifold
5. Engine Trim Cover
6. Crankcase Breather
7. Air Compressor
8. Power Steering Pump
9. DDEC-ECU Control Unit
10. Fuel Heat Exchanger
11. Oil Pan
12. Fuel Filter
13. Fuel Pump
14. Air Conditioner Compressor

Figure 3 Left Side, Major Engine Components

All information subject to change without notice.
6SE412 0403 Copyright © 2004 DETROIT DIESEL CORPORATION

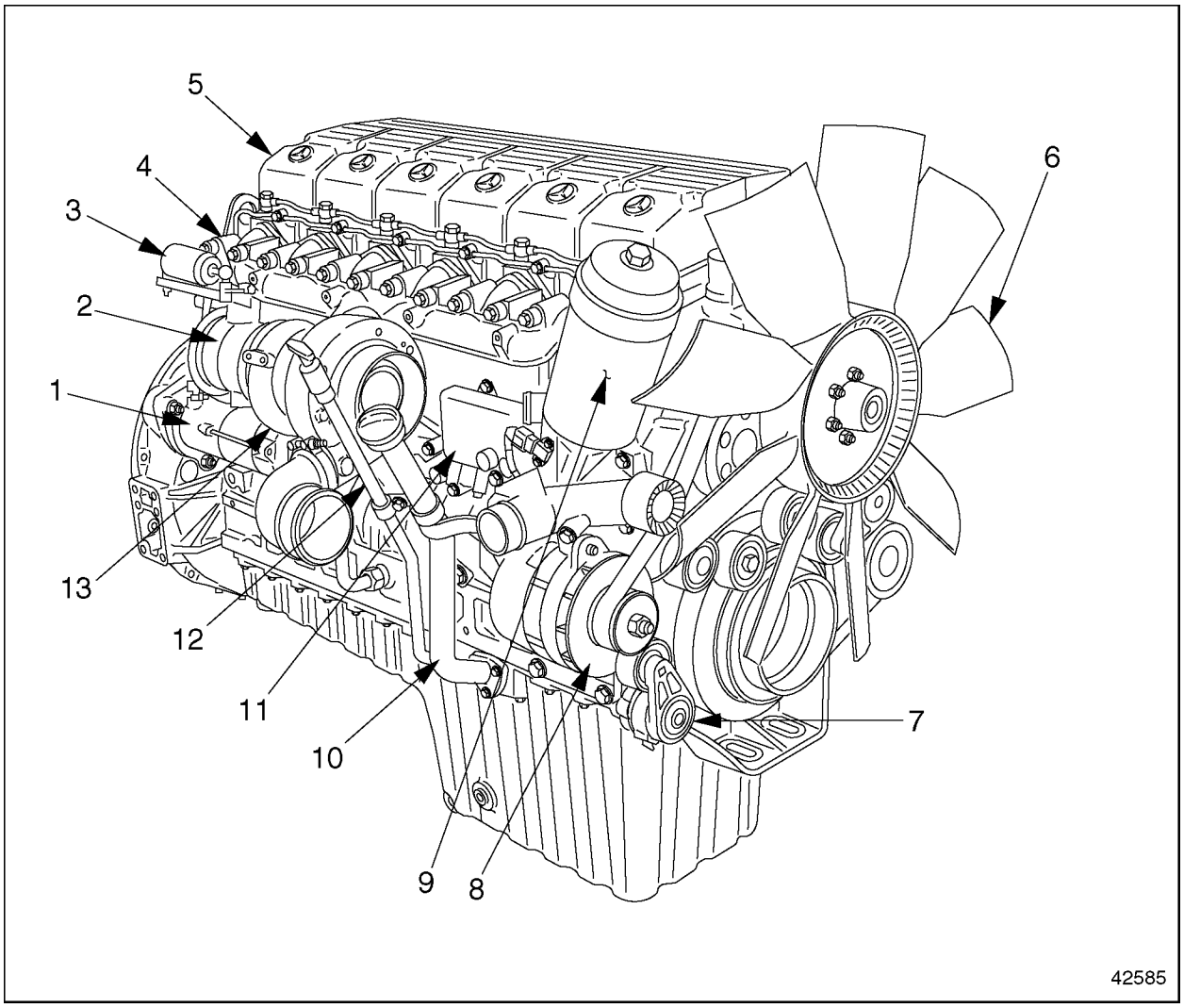

1. Starter
2. Exhaust Brake Valve
3. Exhaust Brake Cylinder
4. Exhaust Manifold
5. Cylinder Head Cover
6. Fan
7. Belt Tensioner
8. Alternator
9. Oil Filter
10. Oil Fill Tube
11. Oil Heat Exchanger
12. Oil Dipstick
13. Turbocharger

Figure 4 Right Side, Major Engine Components

 Copyright © 2004 DETROIT DIESEL CORPORATION

https://truckmanualshub.com/

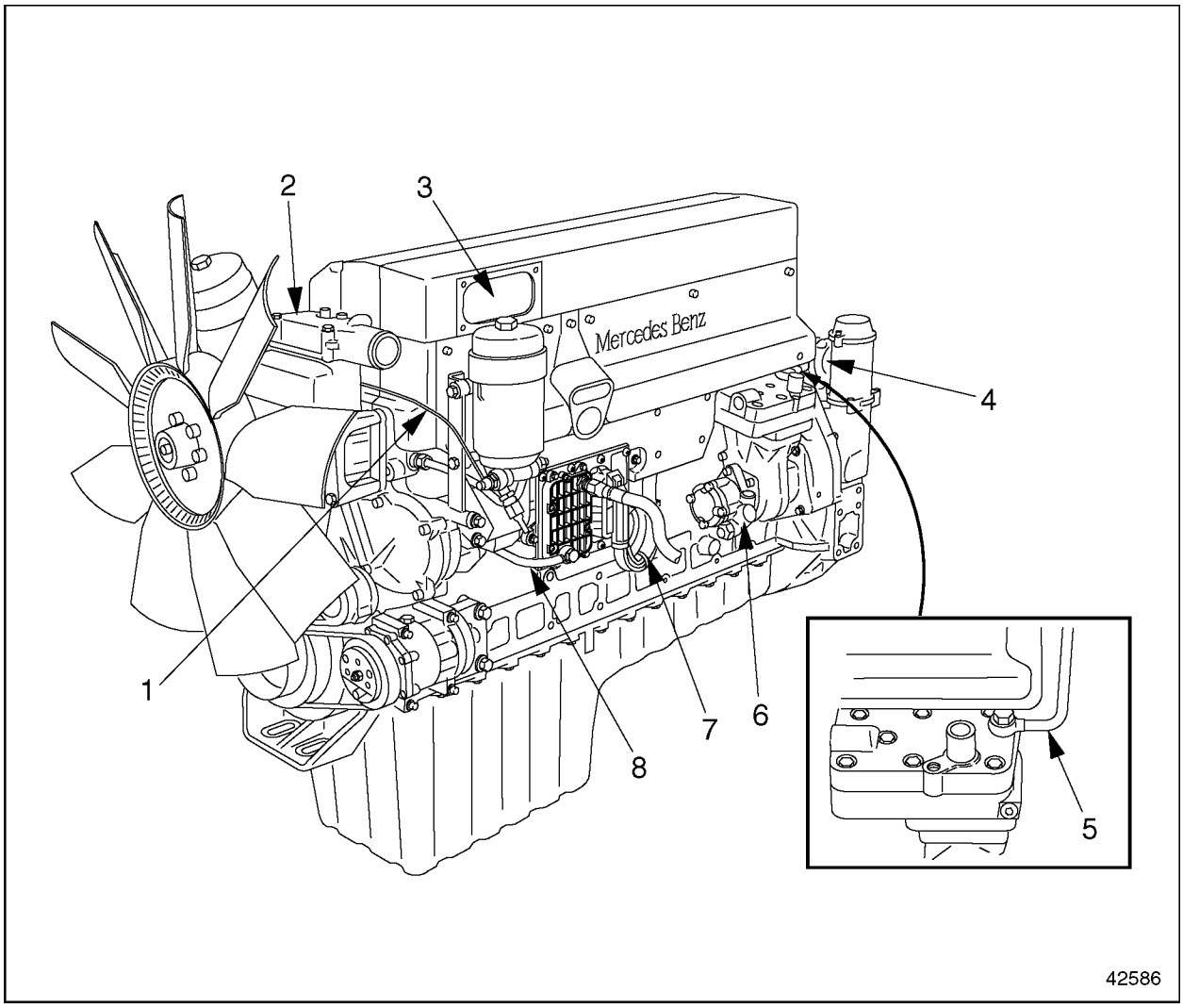

1. Fuel Spill Line
2. Thermostat Outlet
3. Charge Air Inlet
4. Open Breather Tube
5. Coolant Line (to air compressor)
6. Hydraulic Line (to power steering pump)
7. Electronic Engine Harness Connector
8. Fuel Feed Line

Figure 5 Left Side, Ports and Lines

All information subject to change without notice.
6SE412 0403 Copyright © 2004 DETROIT DIESEL CORPORATION

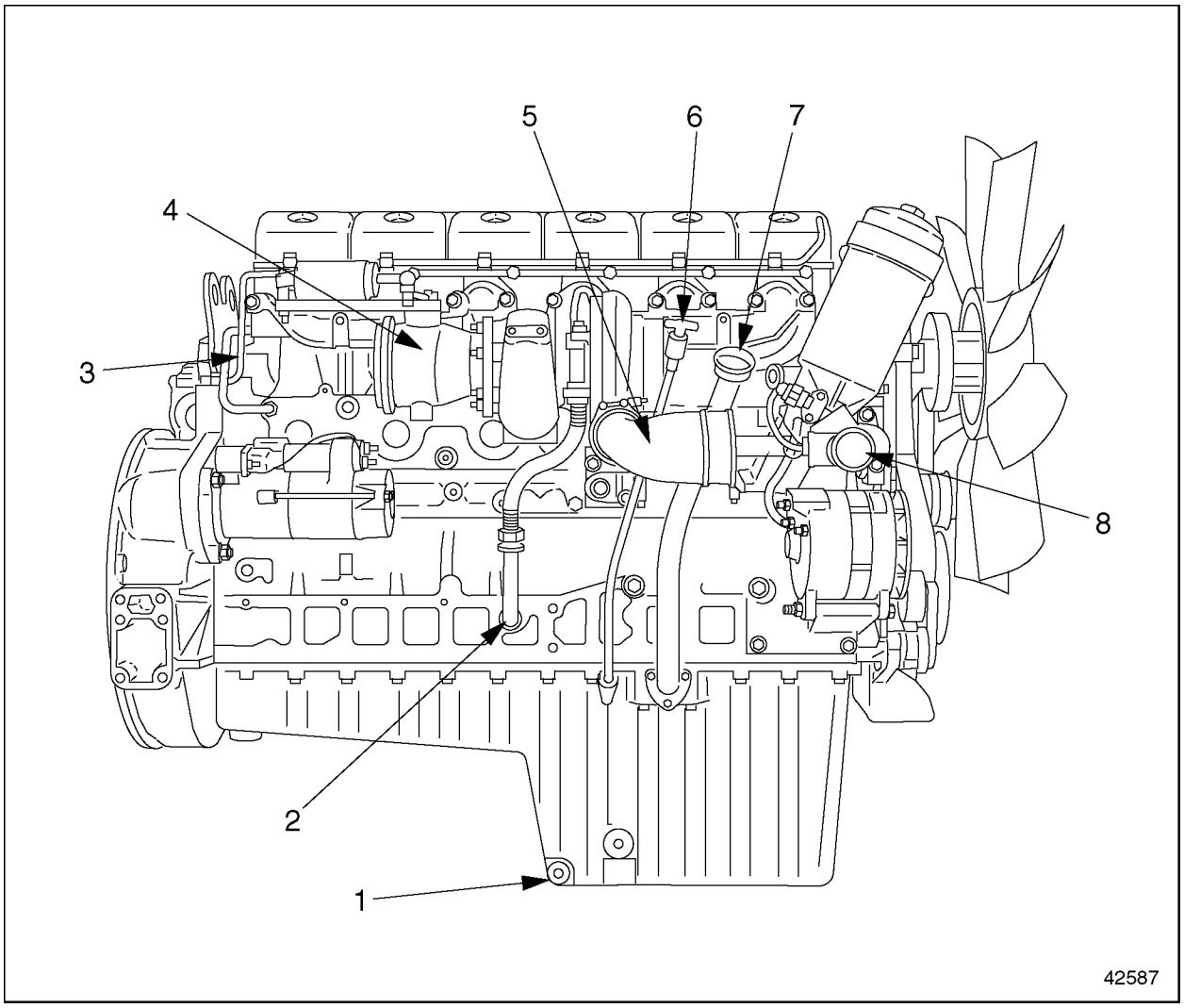

1. Oil Drain Plug
2. Turbo Oil Return Line
3. Constant-Throttle Inlet
4. Exhaust Brake Valve Outlet
5. Turbocharger Outlet Pipe
6. Dipstick
7. Oil Fill Cap
8. Coolant Pump Inlet Pipe

Figure 6 Right Side, Ports and Lines

 Copyright © 2004 DETROIT DIESEL CORPORATION

https://truckmanualshub.com/

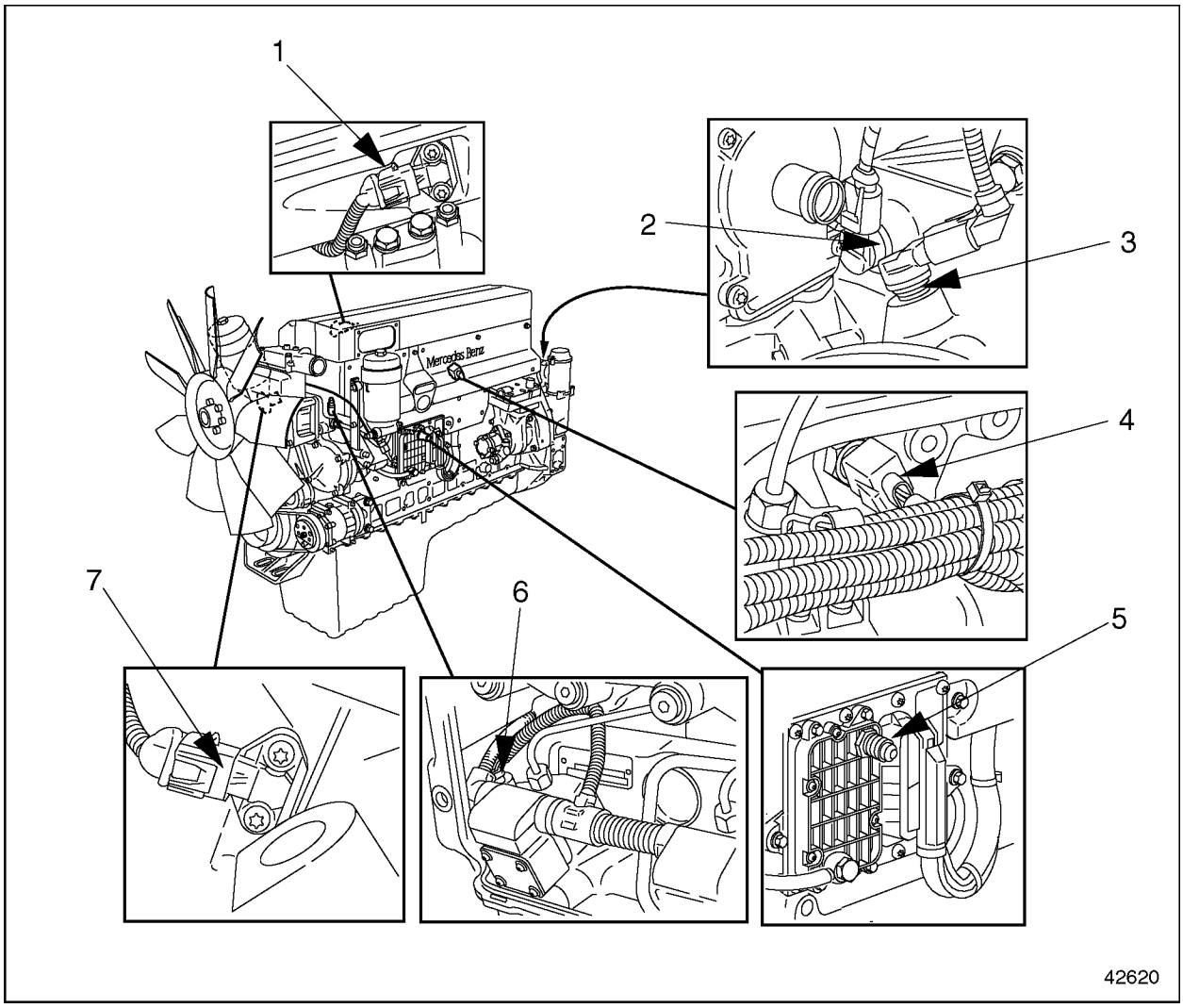

1. Intake Manifold Pressure/Temperature Sensor
2. TDC Sensor (on camshaft)
3. Crank Angle Position Sensor
4. Coolant Temperature Sensor
5. Barometric Pressure Sensor (integrated into DDEC-ECU)
6. Fuel Temperature Sensor
7. Oil Pressure/Temperature Sensor

Figure 7 Sensor Locations

All information subject to change without notice.
6SE412 0403 Copyright © 2004 DETROIT DIESEL CORPORATION

The general specifications for the MBE 4000 engine are listed in Table 1.

Description	6–Cylinder Engines
Engine Type	Vertical, inline cylinder block with turbocharger and charge-air cooler
Cooling System	Liquid Circuit
Combustion Principle	4–Stroke direct-injection diesel
Number of Cylinders	6
Bore	128 mm (5.03 in.)
Stroke	166 mm (6.53 in.)
Displacement	12.8 liters (781 in.^{3})
Compression Ratio	17.25:1
Starting Speed	Approximately 100 rpm
Direction of Engine Rotation (viewed from flywheel)	Counterclockwise
Starter	Electric Motor
Engine “Dry” Weight	930 kg (2050 lb)
Valve Lash (with engine cool)	Intake = 0.40 mm (0.016 in.)
	Exhaust = 0.60 mm (0.024 in.)
Valve Lift (at maximum valve clearance)	Intake = 11.546 mm (0.45 in.)
	Exhaust = 11.963 mm (0.47 in.)
Minimum Engine Oil Pressure	At Idle rpm = 50 kPa (7 psi)
	At Maximum rpm = 250 kPa (36 psi)
Fuel Injectors	Minimum Opening Pressure = 27,500 kPa (3989 psi)
	Maximum Opening Pressure = 30,000 kPa (4350 psi)
Coolant Thermostat	Opening Temperature = 81 to 85°C (177 to 185°F)
	Normal Operating Temperature = 95°C (203°F)

Table 1 General Technical Information

 Copyright © 2004 DETROIT DIESEL CORPORATION

https://truckmanualshub.com/

ENGINE MODEL AND SERIAL NUMBER

The engine model number and serial number are located on the engine type plate. It is located on the oil filter housing on the right-hand side of the engine. See Figure 8. The engine type reference and the complete engine serial number appear beside the name of the manufacturer. The engine type reference, OM 460 LA is the production code. The engine serial number contains the type reference followed by a sequential manufacturing number. See Figure 9.

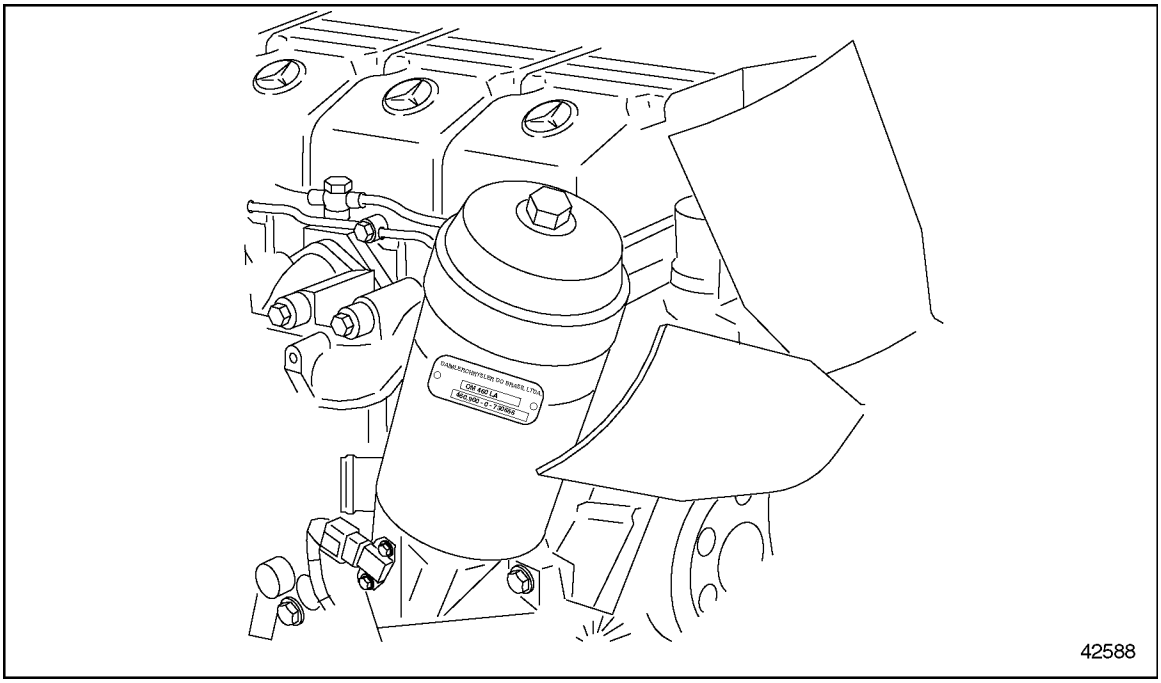

Figure 8 Location of Engine Type Plate

All information subject to change without notice.
6SE412 0403 Copyright © 2004 DETROIT DIESEL CORPORATION

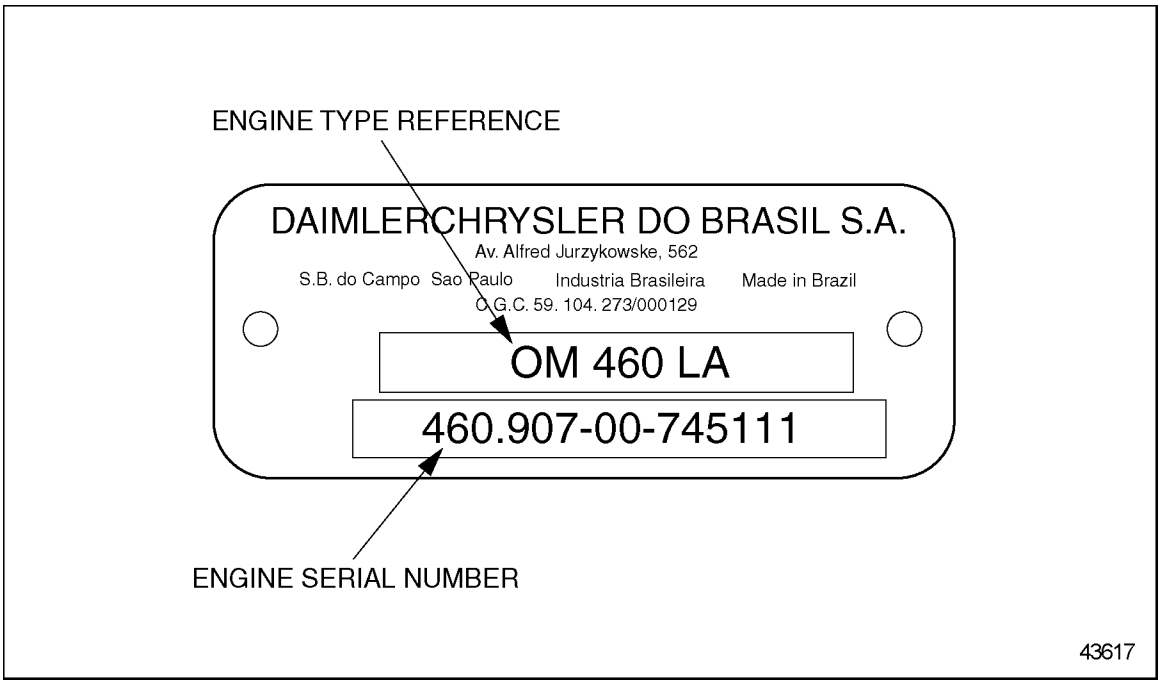

Figure 9 Engine Type Plate Detail

In addition to the fourteen-digit number on the engine type plate, there is a ten-digit number used for warranty and service that is found on the DDEC-ECU label. The ten-digit number is derived from the fourteen-digit number. See Figure 10.

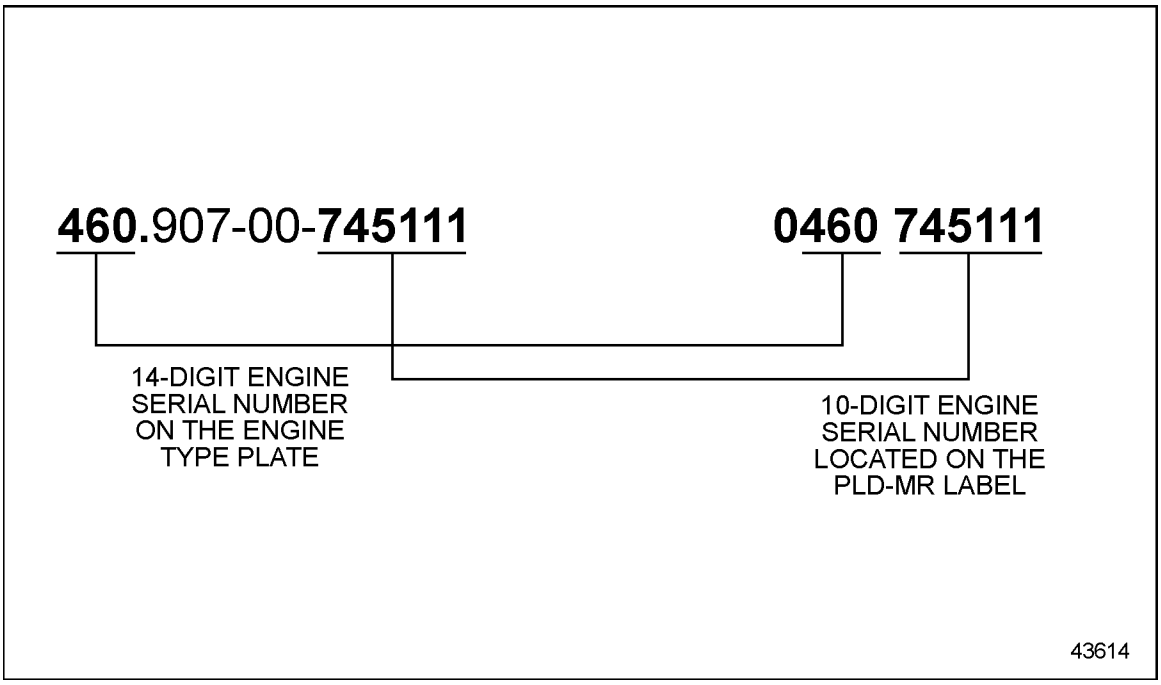

Figure 10 Engine Serial Number

 Copyright © 2004 DETROIT DIESEL CORPORATION

https://truckmanualshub.com/

EXHAUST GAS RECIRCULATION (EGR) SYSTEM

The purpose of the Exhaust Gas Recirulation (EGR) system is to reduce engine exhaust gas emissions in accordance with EPA regulations.

The EGR system consists of:

- ☐ EGR Cooler
- ☐ EGR Control Valves
- ☐ Reed Valves
- ☐ EGR Charge Air Mixer

The MBE 4000 engines for on-highway EPA 2004 regulation applications use a cooled EGR system. Part of the exhaust gasses from the front three cylinders are routed from the exhaust manifold through the EGR cooler, past control and reed valves, and are mixed with the intake manifold charge air. The addition of cooled exhaust gasses back into the combustion airflow reduces the peak in cylinder combustion temperature. Less oxides of nitrogen (NOx) are produced at lower combustion temperatures.

The recycled exhaust gasses are cooled before engine consumption in a tube and shell engine water cooler. See Figure 11.

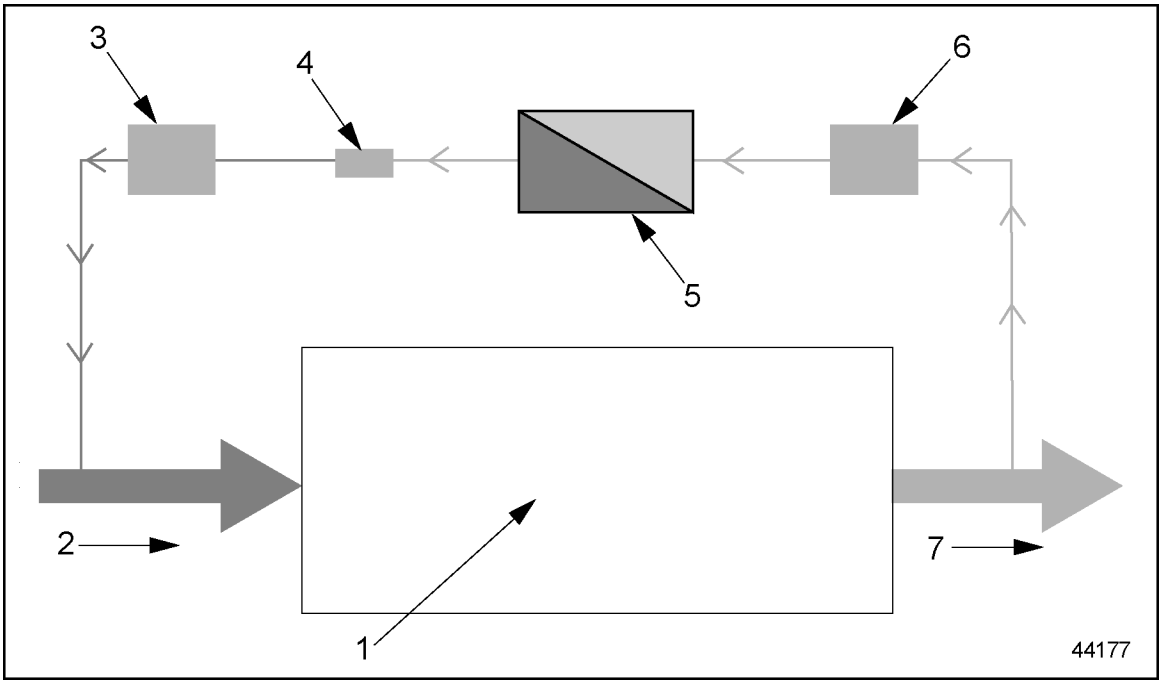

1. Engine
2. Intake Air
3. EGR Modulated Valve
4. Reed Valves
5. EGR Cooler
6. EGR Shutoff Valve
7. Exhaust Air

Figure 11 Air flow Diagram through Engine with EGR System

All information subject to change without notice.
6SE412 0403 Copyright © 2004 DETROIT DIESEL CORPORATION

For an general view of the MBE 4000 engine with an EGR system, See Figure 12 for a right side view and see Figure 13 for a left side view.

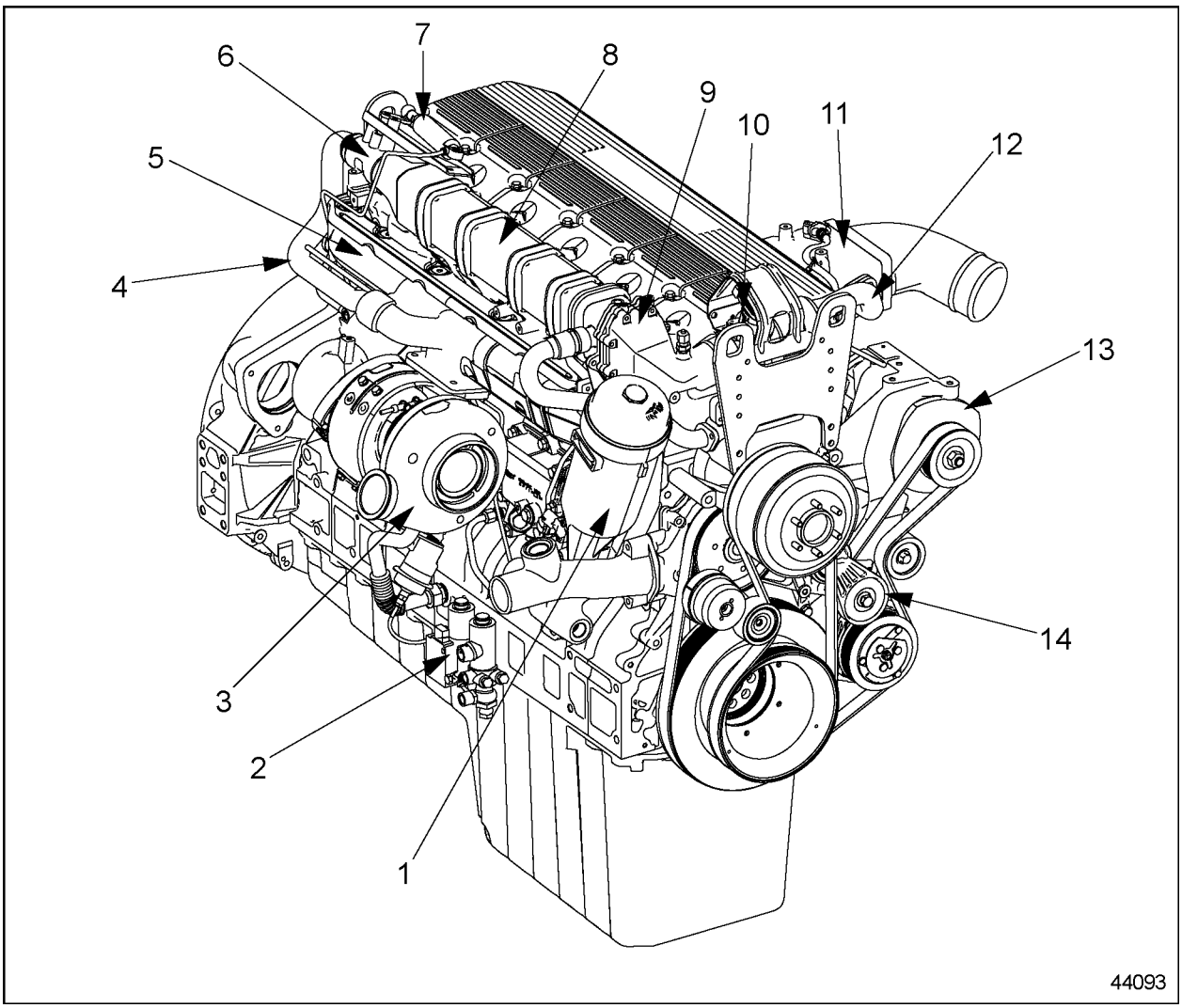

1. Oil Filter
2. Solenoid Valve (Wabco®)
3. Turbocharger
4. EGR Gas Inlet Pipe (Hot Pipe)
5. Exhaust Manifold
6. EGR Shutoff Valve
7. EGR Air Cylinder
8. EGR Cooler
9. Reed Valve Housing
10. EGR Modulated Control Valve
11. EGR Mixer
12. EGR Gas Outlet Pipe (Cold Pipe)
13. Alternator
14. Belt Tensioner

Figure 12 EGR Engine with EGR Components and Revised Parts (Right View)

 Copyright © 2004 DETROIT DIESEL CORPORATION

https://truckmanualshub.com/

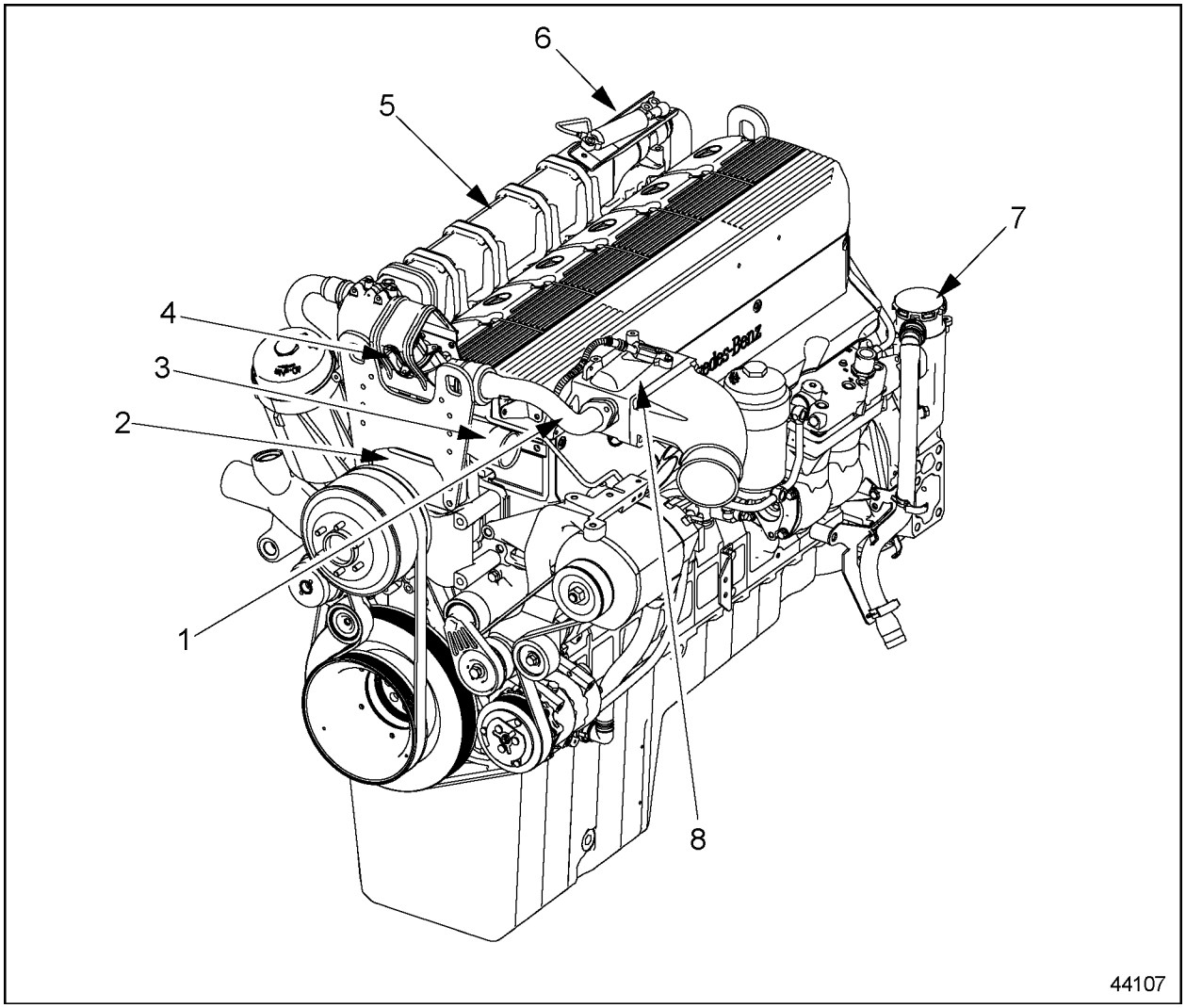

1. EGR Gas Outlet Pipe
2. Coolant Pump
3. Thermostat Housing
4. EGR Modulated Control Valve
5. EGR Cooler
6. EGR Shutoff Valve (hidden)
7. Crankcase Breather (Hengst filter)
8. EGR Mixer

Figure 13 EGR Engine with EGR Components and Revised Parts (Left View)

All information subject to change without notice.
6SE412 0403 Copyright © 2004 DETROIT DIESEL CORPORATION

https://truckmanualshub.com/

EGR Cooler

The EGR Cooler is equipped with a single-pass cooler. Part of the exhaust gasses from the first three cylinders are directed through the EGR shutoff valve and through the cooler and reed valves, past the EGR modulated control valve and the mixer and then back to the cylinder.

EGR Control Valves

There are two EGR valves on the MBE 4000 EGR engine — the EGR shutoff valve and the EGR modulated control valve. The EGR shutoff valve is a pneumatically driven butterfly valve, located at the inlet of the EGR cooler. It closes when the exhaust flap or turbo-brake actuates, avoiding exhaust gas flow and excessive pressure in the EGR cooler and reed valves. The EGR modulated control valve is an electronically actuated butterfly valve located after the EGR cooler and reed valves, controlled by the DDEC-ECU (formerly PLD-MR). This valve controls the exhaust gas flow for the intake manifold.

Reed Valves

The reed valves work like a check valve, allowing flow of gas only in one direction, avoiding gas back flow when the intake pressure is higher than exhaust gas pressure. As the average exhaust pressure is lower than the intake pressure, the gas flow through the reed valves is possible due to exhaust gas pressure peaks — peaks slightly higher than the intake air pressure, which occur as the engine exhaust valves open. During this peak of pressure, the reed valves open and allow gas flow to the EGR modulated valve and mixer.

EGR Mixer

The purpose of the mixer is to ensure good mixing of the cooled EGR gasses with filtered charge air. Once the exhaust gasses are cooled and have completed their cycle through the EGR system, they are released into the EGR mixer. The recycled exhaust gasses are combined with the charged air and directed to the cylinders.

All information subject to change without notice.
6SE412 0403 Copyright © 2004 DETROIT DIESEL CORPORATION

https://truckmanualshub.com/

SAFETY INSTRUCTIONS AND PRECAUTIONS

The following safety measures are essential when working on the MBE 4000 engine.

To reduce the chance of personal injury and/or property damage, the following instructions must be carefully observed:

- ☐ Proper service and repair are important to the service technician and the safe, reliable operation of the engine. If part replacement is necessary, the part must be replaced with one of the same part number or with an equivalent part number. Do not use a replacement part of lesser quality.
- ☐ The service procedures recommended and described in this manual are effective methods of performing repair. Some of these procedures require the use of specially designed tools.

Accordingly, anyone who intends to use a replacement part, procedure or tool that is not recommended, must first determine that neither personal safety nor the safe operation of the engine will be jeopardized by the replacement part, procedure or tool selected.

- ☐ It is important to note that this manual contains various “Cautions” and “Notices” that must be carefully observed in order to reduce the risk of personal injury during repair or the possibility that improper repair may damage the engine or render it unsafe. It is also important to understand that these “Cautions” and “Notices” are not exhaustive, because it is impossible to warn personnel of the possible hazardous consequences that might result from failure to follow these instructions.

All information subject to change without notice.
6SE412 0403 Copyright © 2004 DETROIT DIESEL CORPORATION

https://truckmanualshub.com/

Exhaust (Start/Run Engine)

Before starting and running an engine, adhere to the following safety precautions:

WARNING:

PERSONAL INJURY

To avoid injury before starting and running the engine, ensure the vehicle is parked on a level surface, parking brake is set, and the wheels are blocked.

WARNING:

PERSONAL INJURY

Diesel engine exhaust and some of its constituents are known to the State of California to cause cancer, birth defects, and other reproductive harm.

- ☐ **Always start and operate an engine in a well ventilated area.**
- ☐ **If operating an engine in an enclosed area, vent the exhaust to the outside.**
- ☐ **Do not modify or tamper with the exhaust system or emission control system.**

Stands

Safety stands are required in conjunction with hydraulic jacks or hoists. Do not rely on either the jack or the hoist to carry the load. When lifting an engine, ensure the lifting device is fastened securely. Ensure the item to be lifted does not exceed the capacity of the lifting device.

WARNING:

PERSONAL INJURY

To avoid injury when removing or installing a heavy engine component, ensure the component is properly supported and securely attached to an adequate lifting device to prevent the component from falling.

 Copyright © 2004 DETROIT DIESEL CORPORATION

https://truckmanualshub.com/

Glasses

Select appropriate safety glasses for the job. It is especially important to wear safety glasses when using tools such as hammers, chisels, pullers or punches.

WARNING:

PERSONAL INJURY

To avoid injury when working on or near an operating engine, wear protective clothing, eye protection, and hearing protection.

Work Place

Organize your work area and keep it clean. A fall could result in a serious injury. Eliminate the possibility of a fall by:

- ☐ Wiping up oil spills
- ☐ Keeping tools and parts off the floor

After servicing or adjusting the engine:

- ☐ Reinstall all safety devices, guards or shields
- ☐ Ensure that all tools and servicing equipment are removed from the engine

All information subject to change without notice.
6SE412 0403 Copyright © 2004 DETROIT DIESEL CORPORATION

https://truckmanualshub.com/

Welding

Wear welding goggles and gloves when welding or using an acetylene torch.

 Copyright © 2004 DETROIT DIESEL CORPORATION

https://truckmanualshub.com/

WARNING:

PERSONAL INJURY

To avoid injury from arc welding, gas welding, or cutting, wear required safety equipment such as an arc welder's face plate or gas welder's goggles, welding gloves, protective apron, long sleeve shirt, head protection, and safety shoes. Always perform welding or cutting operations in a well ventilated area. The gas in oxygen/acetylene cylinders used in gas welding and cutting is under high pressure. If a cylinder should fall due to careless handling, the gage end could strike an obstruction and fracture, resulting in a gas leak leading to fire or an explosion. If a cylinder should fall resulting in the gage end breaking off, the sudden release of cylinder pressure will turn the cylinder into a dangerous projectile. Observe the following precautions when using oxygen/acetylene gas cylinders:

- ☐ **Always wear required safety shoes.**
- ☐ **Do not handle tanks in a careless manner or with greasy gloves or slippery hands.**
- ☐ **Use a chain, bracket, or other restraining device at all times to prevent gas cylinders from falling.**
- ☐ **Do not place gas cylinders on their sides, but stand them upright when in use.**
- ☐ **Do not drop, drag, roll, or strike a cylinder forcefully.**
- ☐ **Always close valves completely when finished welding or cutting.**

WARNING:

FIRE

To avoid injury from fire, check for fuel or oil leaks before welding or carrying an open flame near the engine.

NOTICE:

Use proper shielding around hydraulic lines when welding to prevent hydraulic line damage.

Ensure that a metal shield separates the acetylene and oxygen that must be chained to a cart.

All information subject to change without notice.
6SE412 0403 Copyright © 2004 DETROIT DIESEL CORPORATION

Clothing

Safe work clothing fits and is in good repair. Work shoes are sturdy and rough-soled. Bare feet, sandals or sneakers are not acceptable foot wear when adjusting and/or servicing an engine. Do not wear the following when working on an engine:

WARNING:

PERSONAL INJURY

To avoid injury when working near or on an operating engine, remove loose items of clothing and jewelry. Tie back or contain long hair that could be caught in any moving part causing injury.

WARNING:

PERSONAL INJURY

To avoid injury when working on or near an operating engine, wear protective clothing, eye protection, and hearing protection.

- ☐ Rings
- ☐ Wrist watches
- ☐ Loose fitting clothing

Any of these items could catch on moving parts causing serious injury.

Power Tools

Do not use defective portable power tools.

WARNING:

ELECTRICAL SHOCK

To avoid injury from electrical shock, follow OEM furnished operating instructions prior to usage.

Check for frayed cords prior to using the tool. Be sure all electric tools are grounded. Defective electrical equipment can cause severe injury. Improper use of electrical equipment can cause severe injury.

 Copyright © 2004 DETROIT DIESEL CORPORATION

https://truckmanualshub.com/

Air

Recommendations regarding the use of compressed air are indicated throughout the manual.

WARNING:

EYE INJURY

To avoid injury from flying debris when using compressed air, wear adequate eye protection (face shield or safety goggles) and do not exceed 40 psi (276 kPa) air pressure.

Fuel Lines

Remove fuel lines as an assembly. Do not remove fuel lines individually. Avoid getting fuel injection lines mixed up.

Fluids and Pressure

Be extremely careful when dealing with fluids under pressure.

WARNING:

PERSONAL INJURY

To avoid injury from penetrating fluids, do not put your hands in front of fluid under pressure. Fluids under pressure can penetrate skin and clothing.

Fluids under pressure can have enough force to penetrate the skin. These fluids can infect a minor cut or opening in the skin. If injured by escaping fluid, see a doctor at once. Serious infection or reaction can result without immediate medical treatment.

All information subject to change without notice.
6SE412 0403 Copyright © 2004 DETROIT DIESEL CORPORATION

https://truckmanualshub.com/

Fuel

Keep the hose and nozzle or the funnel and container in contact with the metal of the fuel tank when refueling to avoid the possibility of an electric spark igniting the fuel.

WARNING:

FIRE

To avoid injury from fire caused by heated diesel-fuel vapors:

- ☐ **Keep those people who are not directly involved in servicing away from the engine.**
- ☐ **Stop the engine immediately if a fuel leak is detected.**
- ☐ **Do not smoke or allow open flames when working on an operating engine.**
- ☐ **Wear adequate protective clothing (face shield, insulated gloves and apron, etc.).**
- ☐ **To prevent a buildup of potentially volatile vapors, keep the engine area well ventilated during operation.**

WARNING:

GASOLINE VAPOR IGNITION

To avoid injury from possible gasoline vapor ignition when refueling, keep the hose, nozzle, funnel, or container in contact with the metal opening of the fuel tank. This will reduce the likelihood of a dangerous spark.

 Copyright © 2004 DETROIT DIESEL CORPORATION

https://truckmanualshub.com/

The following cautions should be followed when filling a fuel tank:

CAUTION:

PERSONAL INJURY

To avoid injury from fuel spills, do not overfill the fuel tank.

WARNING:

FIRE

To avoid injury from fire, keep all potential ignition sources away from diesel fuel, including open flames, sparks, and electrical resistance heating elements. Do not smoke when refueling.

Batteries

Electrical storage batteries emit highly flammable hydrogen gas when charging and continue to do so for some time after receiving a steady charge.

WARNING:

Battery Explosion and Acid Burn

To avoid injury from battery explosion or contact with battery acid, work in a well ventilated area, wear protective clothing, and avoid sparks or flames near the battery. If you come in contact with battery acid:

- ☐ **Flush your skin with water.**
- ☐ **Apply baking soda or lime to help neutralize the acid.**
- ☐ **Flush your eyes with water.**
- ☐ **Get medical attention immediately.**

Always disconnect the battery cable before working on the electrical system.

All information subject to change without notice.
6SE412 0403 Copyright © 2004 DETROIT DIESEL CORPORATION

https://truckmanualshub.com/

WARNING:

PERSONAL INJURY

To avoid injury from accidental engine startup while servicing the engine, disconnect/disable the starting system.

Disconnect the batteries or disable an air starter when working on the engine to prevent accidental starting.

 Copyright © 2004 DETROIT DIESEL CORPORATION

https://truckmanualshub.com/

Fire

Keep a charged fire extinguisher within reach. Be sure you have the correct type of extinguisher for the situation.

Cleaning Agent

Avoid the use of carbon tetrachloride as a cleaning agent because of the harmful vapors that it releases. Ensure the work area is adequately ventilated. Use protective gloves, goggles or face shield, and apron.

WARNING:

PERSONAL INJURY

To avoid injury from harmful vapors or skin contact, do not use carbon tetrachloride as a cleaning agent.

Exercise caution against burns when using oxalic acid to clean the cooling passages of the engine.

Working on a Running Engine

When working on an engine that is running, accidental contact with the hot exhaust manifold can cause severe burns.

CAUTION:

PERSONAL INJURY

To avoid injury from unguarded rotating and moving engine components, check that all protective devices have been reinstalled after working on the engine.

WARNING:

PERSONAL INJURY

To avoid injury, use care when working around moving belts and rotating parts on the engine.

All information subject to change without notice.
6SE412 0403 Copyright © 2004 DETROIT DIESEL CORPORATION

Start Attempts

Avoid excessive injection of ether into the engine during start attempts.

NOTICE:
Avoid excessive injection of ether into the engine during start attempts. Injection of excessive ether may result in an uncontrolled internal engine explosion that could cause engine damage. Follow the manufacturer's instructions on proper product use.

Follow the instructions on the container or by the manufacturer of the starting aid.

Fluoroelastomer (Viton) Use

Under normal design conditions, fluoroelastomer (VITON) parts, such as O-rings and seals, are perfectly safe to handle.

WARNING:
CHEMICAL BURNS
To avoid injury from chemical burns, wear a face shield and neoprene or PVC gloves when handling fluoroelastomer O-rings or seals that have been degraded by excessive heat. Discard gloves after handling degraded fluoroelastomer parts.

However, a potential hazard may occur if these components are raised to a temperature above 316°C (600°F), such as during a cylinder failure or engine fire. At temperatures above 316°C (600°F) fluoroelastomer will decompose (indicated by charring or the appearance of a black, sticky mass) and produce hydrofluoric acid. This is extremely corrosive and, if touched by bare skin, may cause severe burns, sometimes with symptoms delayed for several hours.

 Copyright © 2004 DETROIT DIESEL CORPORATION

https://truckmanualshub.com/

ENGLISH TO METRIC CONVERSION

Listed in Table 2 are the English to metric conversions.

Multiply Length	**By**	**To get equivalent number of:**
Inch (in.)	25.4	Millimeters (mm)
Foot (ft)	0.3048	Meters (m)
Yard (yd)	0.9144	Meters (m)
Mile (mile)	1.609	Kilometers (km)
Multiply Area	By	To get equivalent number of:
Inch^2(in.^{2})	645.2	Millimeters^2(mm^2)
Inch^2(in.^{2})	6.45	Centimeters^2(cm^2)
Foot^2(ft^2)	0.0929	Meters^2(m^2)
Yard^2(yd^2)	0.8361	Meters^2(m^2)
Multiply Volume	**By**	**To get equivalent number of:**
Inch^3(in.^{3})	16387	Millimeters^3(mm^3)
Inch^3(in.^{3})	16.387	Centimeters^3(cm^3)
Inch^3(in.^{3})	0.0164	Liters (L)
Quart (qt)	0.9464	Liters (L)
Gallon (gal)	3.785	Liters (L)
Yard^3(yd^3)	0.7646	Meters^3(m^3)
Multiply Mass	**By**	**To get equivalent number of:**
Pound (lb)	0.4536	Kilograms (kg)
Ton (ton)	907.18	Kilograms (kg)
Ton (ton)	0.907	Tonne (t)
Multiply Force	**By**	**To get equivalent number of:**
Kilogram (kg)	9.807	Newtons (N)
Ounce (oz)	0.2780	Newtons (N)
Pound (lb)	4.448	Newtons (N)
Multiply Temperature	**By**	**To get equivalent number of:**
Degree Fahrenheit ($^\circ$F)	($^\circ$F-32) ÷ 1.8	Degree Celsius ($^\circ$C)
Multiply Acceleration	**By**	**To get equivalent number of:**
Foot/second^2(ft/sec^2)	0.3048	Meter/second^2(m/sec^2)
Inch/second^2(in./sec^2)	0.0254	Meter/second^2(m/sec^2)
Multiply Torque	**By**	**To get equivalent number of:**
Pound-inch (lb·in.)	0.11298	Newton-meters (N·m)
Pound-foot (lb·ft)	1.3558	Newton-meters (N·m)
Multiply Power	**By**	**To get equivalent number of:**

All information subject to change without notice.
6SE412 0403 Copyright © 2004 DETROIT DIESEL CORPORATION

Multiply Length	By	To get equivalent number of:
Horsepower (hp)	0.746	Kilowatts (kW)
Multiply Power	**By**	**To get equivalent number of:**
Inches of water (in. H_20)	0.2491	Kilopascals (kPa)
Pounds/square in. (lb/in.^{2})	6.895	Kilopascals (kPa)
Multiply Energy or Work	**By**	**To get equivalent number of:**
British Thermal Unit (Btu)	1055	Joules (J)
Foot-pound (ft·lb)	1.3558	Joules (J)
kilowatt-hour (kW·hr)	3,600,000. or 3.6 x 10^6	Joules (J = one W/s)
Multiply Light	**By**	**To get equivalent number of:**
Foot candle (fc)	10.764	Lumens/meter^2(lm/m^2)
Multiply Fuel Performance	**By**	**To get equivalent number of:**
Miles/gal (mile/gal)	0.4251	Kilometers/liter (km/L)
Gallons/mile (gal/mile)	2.3527	Liter/kilometer (L/km)
Multiply Velocity	**By**	**To get equivalent number of:**
Miles/hour (mile/hr)	1.6093	Kilometers/hour (km/hr)

Table 2 English to Metric Conversion Table

DECIMAL AND METRIC EQUIVALENTS

Listed in Table 3 are the decimal and metric equivalents.

 Copyright © 2004 DETROIT DIESEL CORPORATION

https://truckmanualshub.com/

Fractions of an inch	Decimal (in.)	Metric (mm)	Fractions of an inch	Decimal (in.)	Metric (mm)
1/64	0.015625	0.39688	33/64	0.515625	13.09687
1/32	0.03125	0.79375	17/32	0.53125	13.49375
3/64	0.046875	1.19062	35/64	0.546875	13.89062
1/16	0.0625	1.58750	9/16	0.5625	14.28750
5/64	0.078125	1.98437	37/64	0.578125	14.68437
3/32	0.09375	2.38125	19/32	0.59375	15.08125
7/64	0.109375	2.77812	39/64	0.609375	15.47812
1/8	0.125	3.175	5/8	0.625	15.87500
9/64	0.140625	3.57187	41/64	0.640625	16.27187
5/32	0.15625	3.96875	21/32	0.65625	16.66875
11/64	0.171875	4.36562	43/64	0.671875	17.06562
3/16	0.1875	4.76250	11/16	0.6875	17.46250
13/64	0.203125	5.15937	45/64	0.703125	17.85937
7/32	0.21875	5.55625	23/32	0.71875	18.25625
15/64	0.234375	5.95312	47/64	0.734375	18.65312
1/4	0.250	6.35000	3/4	0.750	19.05000
17/64	0.265625	6.74687	49/64	0.765625	19.44687
9/32	0.28125	7.14375	25/32	0.78125	19.84375
19/64	0.296875	7.54062	51/64	0.796875	20.24062
5/16	0.3125	7.93750	13/16	0.8125	20.63750
21/64	0.328125	8.33437	53/64	0.828125	21.03437
11/32	0.34375	8.73125	27/32	0.84375	21.43125
23/64	0.359375	9.12812	55/64	0.859375	21.82812
3/8	0.375	9.52500	7/8	0.875	22.22500
25/64	0.390625	9.92187	57/64	0.890625	22.62187
13/32	0.40625	10.31875	29/32	0.90625	23.01875
27/64	0.421875	10.71562	59/64	0.921875	23.41562
7/16	0.4375	11.11250	15/16	0.9375	23.81250
29/64	0.453125	11.50937	61/64	0.953125	24.20937
15/32	0.46875	11.90625	31/32	0.96875	24.60625
31/64	0.484375	12.30312	63/64	0.984375	25.00312
1/2	0.500	12.70000	1	1.00	25.40000

Table 3 Conversion Chart-Customary and Metric Units

All information subject to change without notice.
6SE412 0403 Copyright © 2004 DETROIT DIESEL CORPORATION

TORQUE SPECIFICATIONS

Listed in Table 4, listed in Table 5, listed in Table 6, listed in Table 7, and listed in Table 8 are the torque specifications for the MBE 4000 engine.

Torque Values for U.S. Customary Thread Fasteners with Lubricated* or Plated Threads†				
Thread Diameter-Pitch	Regular Hex, Torque: lb·ft (N·m)			
	Grade 5 Bolt	Grade 5 or B Nut	Grade 8 or 8.2 Bolt	Grade 8 or C Nut
			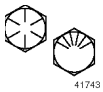	
1/4–20 1/4–28	7 (9) 8 (11)		8 (11) 9 (12)	
5/16–18 5/16–24	15 (20) 16 (22)		16 (22) 17 (23)	
3/8–16 3/8–24	26 (35) 30 (41)		28 (38) 32 (43)	
7/16–14 7/16–20	42 (57) 47 (64)		45 (61) 50 (68)	
1/2–13 1/2–20	64 (87) 72 (98)		68 (92) 77 (104)	
9/16–12 9/16–18	92 (125) 103 (140)		98 (133) 110 (149)	
5/8–11 5/8–18	128 (173) 145 (197)		136 (184) 154 (209)	
3/4–10 3/4–16	226 (306) 253 (343)		241 (327) 269 (365)	
7/8–9 7/8–14	365 (495) 402 (545)		388 (526) 427 (579)	
1–8 1–12 1–14	— — —		582 (789) 637 (863) 652 (884)	

* Coat all plated and unplated fasteners with oil before installation.

† Use these torque values if either the bolt or nut is lubricated or plated (zinc-phosphate conversion-coated, cadmium-plated, or waxed).

Table 4 Torque Specifications Table One

 Copyright © 2004 DETROIT DIESEL CORPORATION

https://truckmanualshub.com/

Torque Values for U.S. Customary Thread Fasteners with Lubricated* or Plated Threads†				
Thread Diameter-Pitch	Flanged, Torque: lb·ft (N·m)			
	Grade 5 Bolt	Grade B Nut	Grade 8 or C Nut	Grade G Nut
		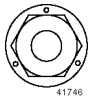	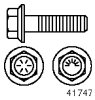	
1/4–20 1/4–28	6 (8) 7 (9)		10 (14) 12 (16)	
5/16–18 5/16–24	13 (18) 14 (19)		21 (28) 23 (31)	
3/8–16 3/8–24	23 (31) 25 (34)		37 (50) 42 (57)	
7/16–14 7/16–20	35 (47) 40 (54)		60 (81) 66 (89)	
1/2–13 1/2–20	55 (75) 65 (88)		91 (123) 102 (138)	
9/16–12 9/16–18	80 (108) 90 (122)		130 (176) 146 (198)	
5/8–11 5/8–18	110 (149) 130 (176)		180 (244) 204 (277)	
3/4–10 3/4–16	200 (271) 220 (298)		320 (434) 357 (484)	
7/8–9 7/8–14	320 (434) 350 (475)		515 (698) 568 (770)	
1–8 1–12 1–14	— — —		— — —	

* Coat all plated and unplated fasteners with oil before installation.

† Use these torque values if either the bolt or nut is lubricated or plated (zinc-phosphate conversion-coated, cadmium-plated, or waxed).

Table 5 Torque Specifications Table Two

All information subject to change without notice.
6SE412 0403 Copyright © 2004 DETROIT DIESEL CORPORATION

Torque Values for U.S. Customary Thread Fasteners with Dry (Unlubricated)* or Plain (Unplated) Threads†				
Thread Diameter-Pitch	Regular Hex, Torque: lb·ft (N·m)			
	Grade 5 Bolt	Grade 5 or B Nut	Grade 8 or 8.2 Bolt	Grade 8 or C Nut
	41741	41742	41743	41744
1/4–20 1/4–28	8 (11) 9 (12)		10 (14) 12 (16)	
5/16–18 5/16–24	15 (20) 17 (23)		22 (30) 25 (34)	
3/8–16 3/8–24	28 (38) 31 (42)		40 (54) 45 (61)	
7/16–14 7/16–20	45 (61) 50 (68)		65 (88) 70 (95)	
1/2–13 1/2–20	70 (95) 75 (102)		95 (129) 70 (95)	
9/16–12 9/16–18	100 (136) 110 (149)		140 (190) 155 (210)	
5/8–11 5/8–18	135 (183) 155 (210)		190 (258) 215 (292)	
3/4–10 3/4–16	240 (325) 270 (366)		340 (461) 380 (515)	
7/8–9 7/8–14	385 (522) 425 (576)		540 (732) 600 (813)	
1–8 1–12 1–14	580 (786) 635 (861) 650 (881)		820 (1112) 900 (1220) 915 (1241)	

* Threads may have residual oil, but will be dry to the touch.

† Use one of the previous tables if either the male or female threads (bolt and nut) are plated or lubricated. Coat all plated and unplated fasteners with oil before installation.

Table 6 Torque Specifications Table Three

 Copyright © 2004 DETROIT DIESEL CORPORATION

https://truckmanualshub.com/

Torque Values for U.S. Customary Thread Fasteners with Dry (Unlubricated)* or Plain (Inplated) Threads†		
Thread Diameter-Pitch	Flanged, Torque: lb·ft (N·m)	
	Grade 8 or C Nut	Grade G Nut
	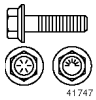	
1/4–20 1/4–28	— —	
5/16–18 5/16–24	22 (30) —	
3/8–16 3/8–24	40 (54) —	
7/16–14 7/16–20	65 (88) —	
1/2–13 1/2–20	95 (129) —	
9/16–12 9/16–18	140 (190) —	
5/8–11 5/8–18	190 (258) —	
3/4–10 3/4–16	340 (461) —	
7/8–9 7/8–14	— —	
1–8 1–12 1–14	— — —	

* Threads may have residual oil, but will be dry to the touch.

† Use one of the previous tables if either the male or female threads (bolt and nut) are plated or lubricated. Coat all plated and unplated fasteners with oil before installation.

Table 7 Torque Specifications Table Four

All information subject to change without notice.
6SE412 0403 Copyright © 2004 DETROIT DIESEL CORPORATION

Torque Values for Metric Thread Fasteners with Lubricated* or Plated Threads†				
Thread Diameter-Pitch	Grade 8.8 Bolt	Grade 8 Nut	Grade 10.9 Bolt	Grade 10 Nut
	Torque: lb·ft (N·m)			
M6	5 (7)		7 (9)	
M8 M8 x 1	12 (16) 13 (18)		17 (23) 18 (24)	
M10 M10 x 1.25	24 (33) 27 (37)		34 (46) 38 (52)	
M12 M12 x 1.5	42 (57) 43 (58)		60 (81) 62 (84)	
M14 M14 x 1.5	66 (89) 72 (98)		95 (129) 103 (140)	
M16 M16 x 1.5	103 (140) 110 (149)		148 (201) 157 (231)	
M18 M18 x 1.5	147 (199) 165 (224)		203 (275) 229 (310)	
M20 M20 x 1.5	240 (282) 213 (313)		288 (390) 320 (434)	
M22 M22 x 1.5	283 (384) 315 (427)		392 (531) 431 (584)	
1–8 1–12 1–14	580 (786) 635 (861) 650 (881)		820 (1112) 900 (1220) 915 (1241)	

* Threads may have residual oil, but will be dry to the touch.

† Use one of the previous tables if either the male or female threads (bolt and nut) are plated or lubricated. Coat all plated and unplated fasteners with oil before installation.

Table 8 Torque Specifications Table Five

 Copyright © 2004 DETROIT DIESEL CORPORATION

https://truckmanualshub.com/

All information subject to change without notice.
6SE412 0403 Copyright © 2004 DETROIT DIESEL CORPORATION

https://truckmanualshub.com/

1 ENGINE

Section		Page
1.1	CYLINDER HEAD COVER	1-3
1.2	CYLINDER HEAD	1-5
1.3	CYLINDER BLOCK	1-24
1.4	EGR CYLINDER HEAD AND BLOCK	1-40
1.5	EGR FRONT AND REAR LIFTER BRACKETS	1-43
1.6	ENGINE BRAKE	1-45
1.7	FRONT RADIAL SEAL	1-51
1.8	REAR RADIAL SEAL	1-54
1.9	CRANKSHAFT ASSEMBLY	1-57
1.10	FRONT COVER HOUSING	1-82
1.11	CRANKSHAFT VIBRATION DAMPER	1-84
1.12	FLYWHEEL	1-86
1.13	RING GEAR	1-96
1.14	PILOT BEARING	1-100
1.15	ENGINE CRANKING TOOL	1-102
1.16	FLYWHEEL HOUSING	1-104
1.17	PISTON, PISTON RING, AND CONNECTING ROD	1-106
1.18	EGR PISTON, PISTON RING, AND CONNECTING ROD	1-135
1.19	VALVES	1-138
1.20	EGR VALVES	1-161
1.21	ROCKER ARM	1-166
1.22	CAMSHAFT AND CAMSHAFT SENSOR	1-170

https://truckmanualshub.com/

1.23 EGR CAMSHAFT 1-181
1.A ADDITIONAL INFORMATION 1-183

All information subject to change without notice.
6SE412 0403 Copyright © 2004 DETROIT DIESEL CORPORATION

https://truckmanualshub.com/

1.1 CYLINDER HEAD COVER

The cylinder head cover completely encloses the valve mechanism on top of the cylinder head. See Figure 1-1for a general view of the cylinder head cover.

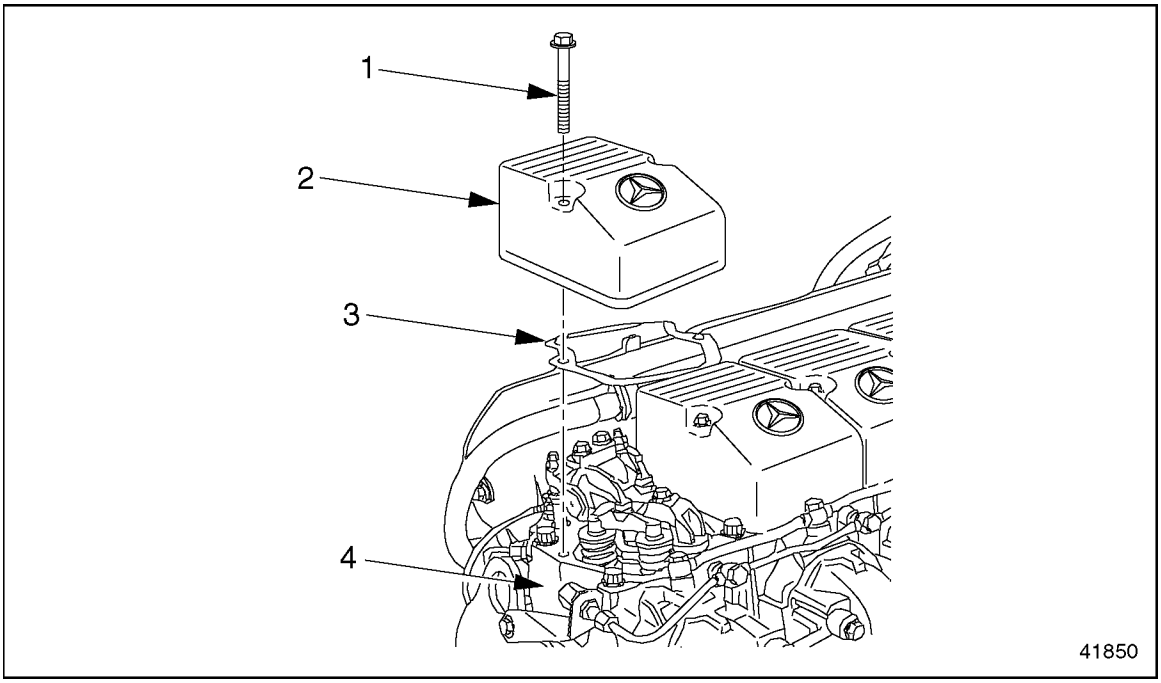

1. Cylinder Head Cover Bolt
2. Cylinder Head Cover
3. Cylinder Head Cover Gasket
4. Cylinder Head

Figure 1-1 Cylinder Head Cover

1.1.1 Removal of Cylinder Head Cover

Perform the following steps to remove the cylinder head cover:

 Copyright © 2004 DETROIT DIESEL CORPORATION

https://truckmanualshub.com/

1. Remove the cylinder head cover bolts. See Figure 1-2.

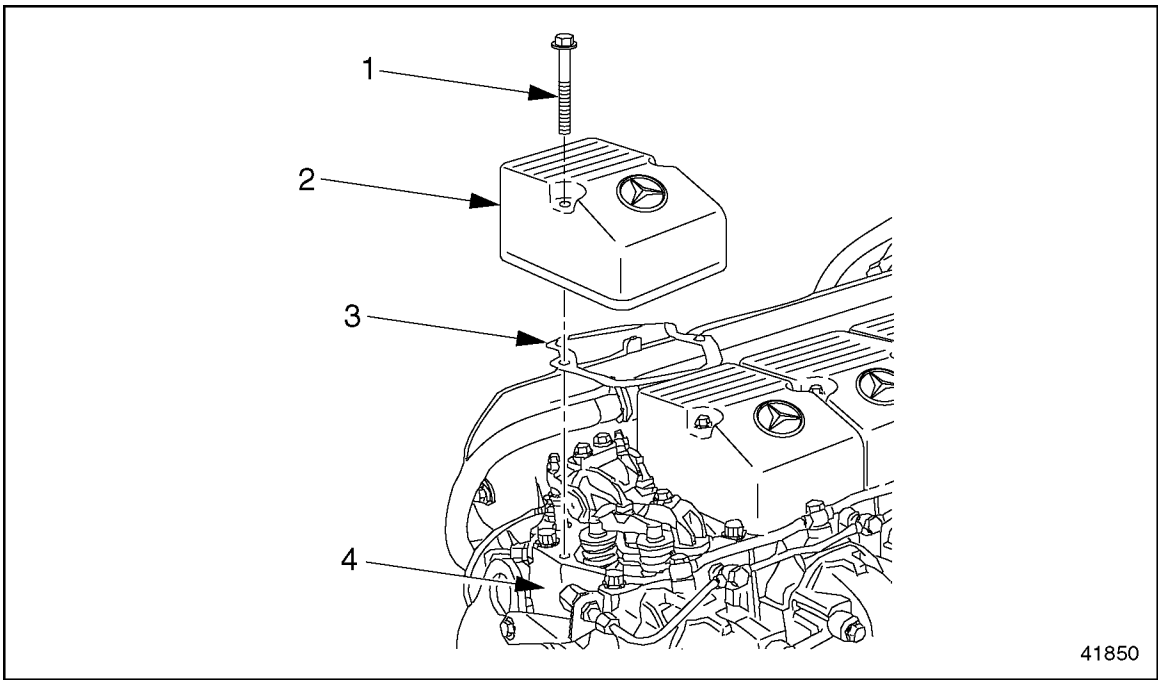

1. Cylinder Head Cover Bolt
2. Cylinder Head Cover
3. Cylinder Head Cover Gasket
4. Cylinder Head

Figure 1-2 Cylinder Head Cover Removal

2. Remove the cylinder head cover and gasket. Discard the gasket.
3. Clean the sealing surfaces of the cylinder head cover and the cylinder head.

1.1.2 Installation of Cylinder Head Cover

Perform the following steps to install the cylinder head cover.

1. Install a new cylinder head cover gasket.
2. Place the cylinder head cover in position on the cylinder head.
3. Install the cylinder head cover bolts. Tighten the bolts 20 N·m (15 lb·ft).

All information subject to change without notice.
6SE412 0403 Copyright © 2004 DETROIT DIESEL CORPORATION

https://truckmanualshub.com/

1.2 CYLINDER HEAD

The MBE 4000 engine has individual heads for each cylinder. To remove one head, follow these instructions, step by step. To remove all the heads, repeat each step in these instructions, as applicable, for all six cylinders.

 Copyright © 2004 DETROIT DIESEL CORPORATION

https://truckmanualshub.com/

1.2.1 Cylinder Head Removal

Remove the cylinder head as follows: See Figure 1-3 for an exploded view of a cylinder head.

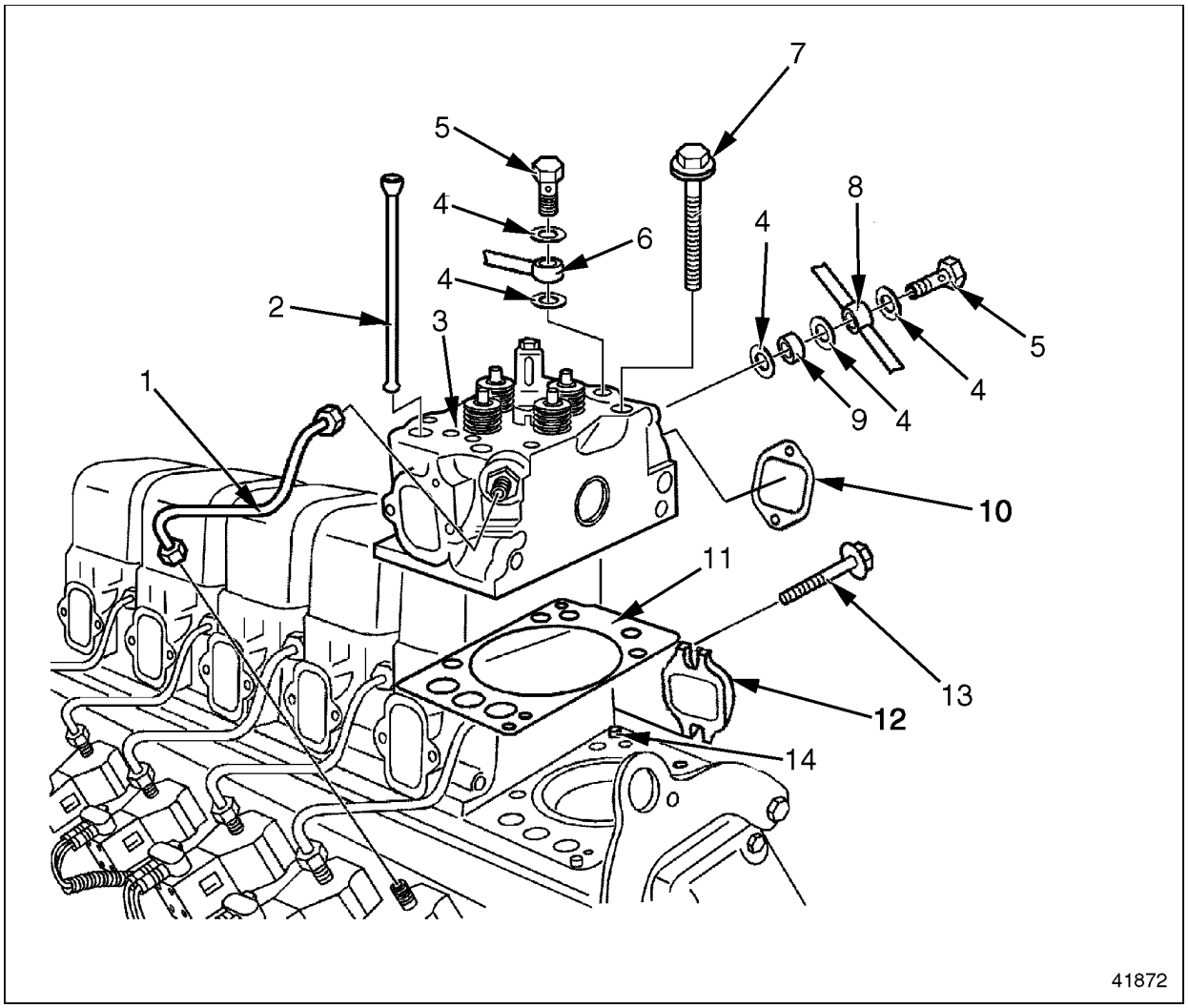

1. High Pressure Fuel Injector Line
2. Pushrod
3. Cylinder Head
4. Seal Ring
5. Hollow Core (Banjo) Bolt
6. Fuel Return Line
7. Cylinder Head Bolt
8. Constant-Throttle Line
9. Spacer
10. Exhaust Port Gasket
11. Cylinder Head Gasket
12. Exhaust Manifold
13. Exhaust Manifold Mounting Bolt
14. Guide Pin

Figure 1-3 Exploded View of Cylinder Head

All information subject to change without notice.
6SE412 0403 Copyright © 2004 DETROIT DIESEL CORPORATION

https://truckmanualshub.com/

WARNING:

HOT COOLANT

To avoid scalding from the expulsion of hot coolant, never remove the cooling system pressure cap while the engine is at operating temperature. Wear adequate protective clothing (face shield, rubber gloves, apron, and boots). Remove the cap slowly to relieve pressure.

1. Drain the coolant from the radiator. Refer to section 4.1.1.

NOTE:
Clean the cylinder head cover before removing it.

2. Remove the cylinder head cover. Refer to section 1.1.1.
3. Remove the rocker arm assembly. Mark the valve bridges and pushrods in order of removal. Refer to section 1.21.1.
4. Remove the engine trim cover to gain access to the fuel injector lines.
5. Remove the charge-air intake manifold. Refer to section 6.1.1.

All information subject to change without notice.
6SE412 0403 Copyright © 2004 DETROIT DIESEL CORPORATION

https://truckmanualshub.com/

NOTICE:

Do not move the thrust bolt, because there is danger of causing a change in the position of the transfer tube. If the position of the transfer tube is changed, engine damage could result.

6. Using two wrenches, loosen the high-pressure injector line fittings. See Figure 1-4.

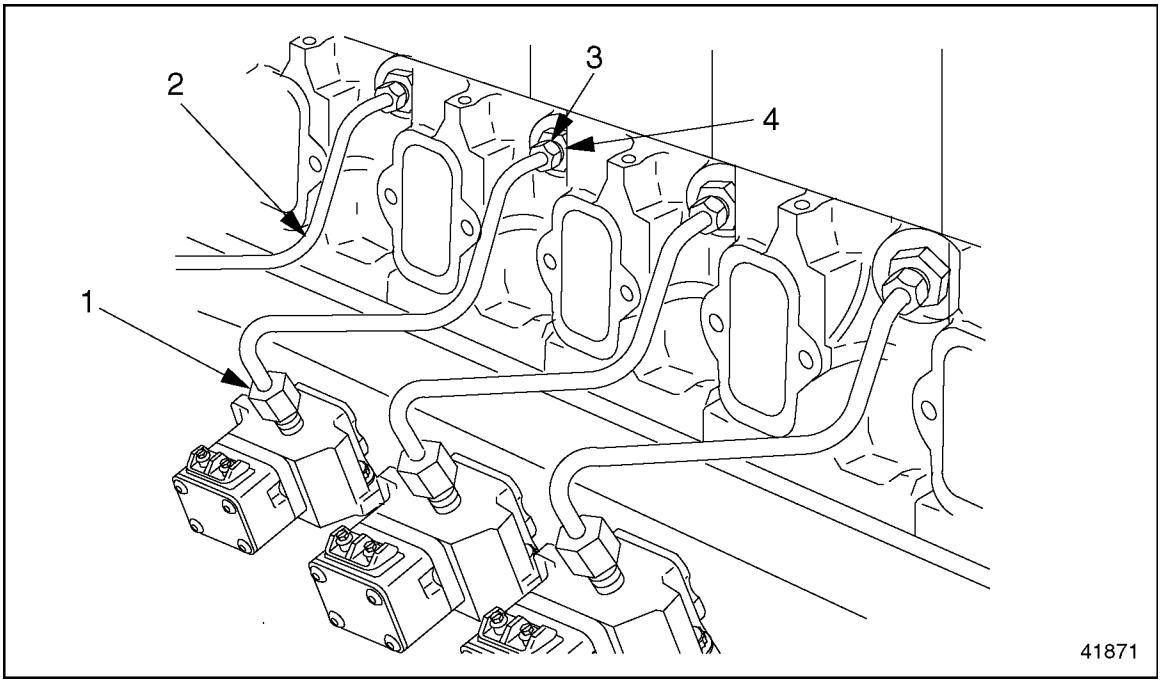

1. Pump-End Fitting
2. High-Pressure Injector Line
3. Transfer-Tube Fitting
4. Thrust Bolt

Figure 1-4 High-Pressure Line Fittings

[a] Using a paint pen, mark the location of the thrust bolt.

[b] Place one wrench on the thrust bolt to secure the transfer tube. Place the other wrench on the high-pressure line fitting.

[c] Turn the wrench on the high-pressure line fitting while holding the other wrench on the thrust bolt.

7. Remove the high-pressure injector line from the head and unit pump.
8. To prevent any dirt from entering, cover the openings in the unit pump and the transfer tube.

All information subject to change without notice.
6SE412 0403 Copyright © 2004 DETROIT DIESEL CORPORATION

9. Remove the exhaust manifold bolts.

NOTE:
If removing one or two cylinder heads, loosen the bolts on the rest of the exhaust manifold.

10. Pull the exhaust manifold away from the engine, towards the frame rail. Remove all the gaskets.

NOTE:
If removing all cylinder heads, remove the exhaust manifold from the engine.

11. Remove the fuel return line from the cylinder head. Discard the seal rings.
12. Disconnect the constant-throttle line from the cylinder head. Discard the seal rings.
13. Disconnect the coolant line from the cylinder head.
14. Using the head bolt impact socket (J 45389 or 422 589 00 09 00), loosen the cylinder head bolts. When all the bolts are loose, remove the bolts from the cylinder head. See Figure 1-5.

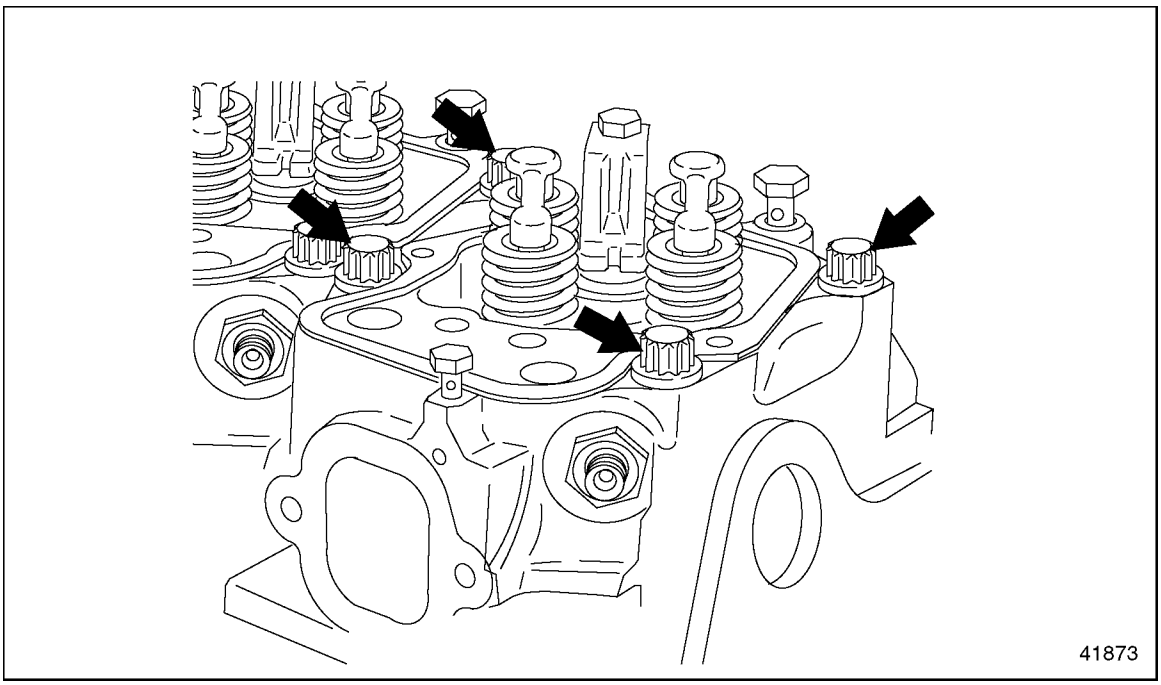

Figure 1-5 Loosening the Head Bolts

 Copyright © 2004 DETROIT DIESEL CORPORATION

https://truckmanualshub.com/

NOTICE:
Do not place the head mating surface down on a flat surface. This would damage the injector nozzles, which protrude slightly.

15. Remove the cylinder head and set it on wooden blocks or on its side.
16. Remove the head gasket.
17. Thoroughly clean the cylinder head, both contact surfaces (head and block), and surfaces inside the cylinder of excess oil, grime, and paint chips.
18. With a straightedge, check the cylinder head surface for warpage. Refer to section 1.2.2.1. Listed in Table 1-1 are warpage limits.

Description	Limit
Over a length of 150 mm (6 in.)	0.015 mm (0.0006 in.)

Table 1-1 Head Warpage Limits

19. Check the cylinder liner protrusion from the cylinder block. Listed in Table 1-2are the specifications. Refer to section 1.3.2.2.

Description	Value: mm (in.)
Cylinder Liner Protrusion from block	0.230-0.330 mm (0.0090-0.0130 in.)
Difference between the four measuring points	Max.: 0.02 mm (0.0007 in.)

Table 1-2 Specifications for Measuring Cylinder Liner Protrusion

20. Inspect the cylinder head for cracks or signs of damage. Replace if necessary.

1.2.2 Cylinder Head Installation

Install the cylinder head as follows:

1. Install a new head gasket. Match up the holes in gasket with those in the cylinder block and place the head gasket over the guide pins in the block.
2. Position the cylinder head on the head gasket. Make sure the head is seated onto the guide pins.

All information subject to change without notice.
6SE412 0403 Copyright © 2004 DETROIT DIESEL CORPORATION

NOTICE:
Head and gasket must be seated properly, or engine damage could result.

3. Using a dial caliper, measure the length of the cylinder head bolts from the end of the bolt to the bottom of the flange. See Figure 1-6. Listed in Table 1-3 are the acceptable lengths. Replace any bolts which do not meet these specifications.

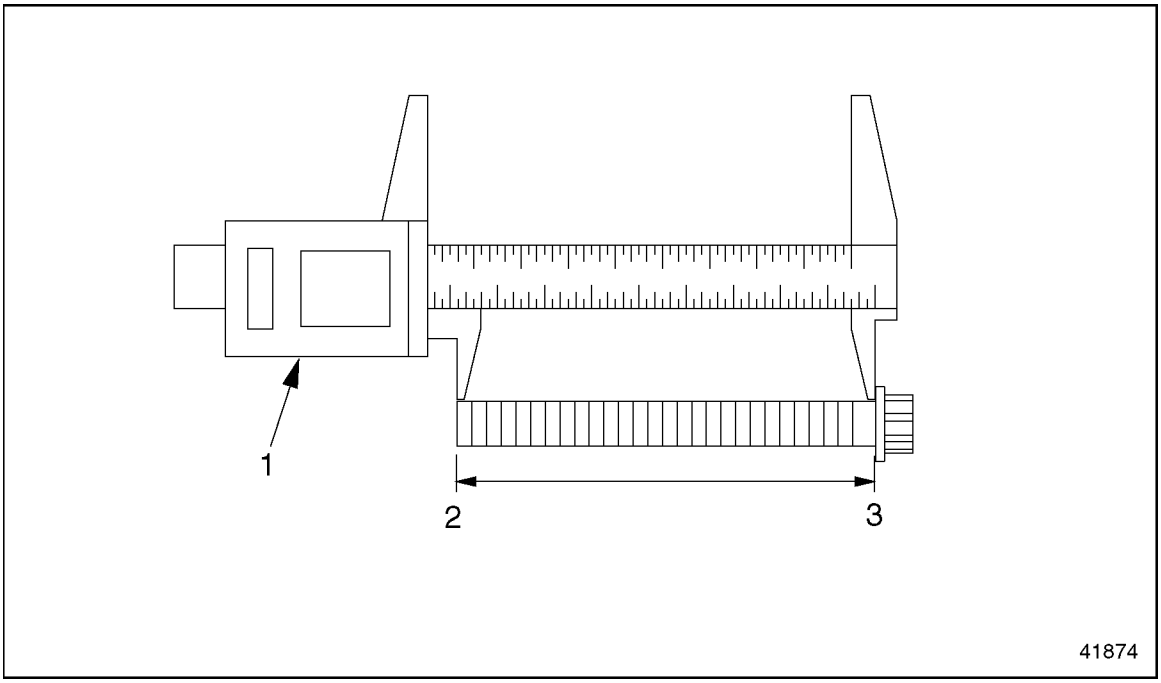

1. Dial Caliper
2. End of Cylinder Head Bolt
3. Bottom of Flange

Figure 1-6 Measuring Head Bolts

Description	Length
Shaft length when new	210.0 mm (8.27 inches)
Maximum shaft length	212.0 mm (8.35 inches)

Table 1-3 Cylinder Head Bolt Lengths

4. Lubricate the cylinder head bolts with engine oil.

 Copyright © 2004 DETROIT DIESEL CORPORATION

https://truckmanualshub.com/

5. Using the head bolt impact socket (J 45389 or 422 589 00 09 00), install the cylinder head bolts.

NOTE:
For the correct tightening sequence, see Figure 1-7. Listed in Table 1-4 are the specific stages in the tightening sequence.

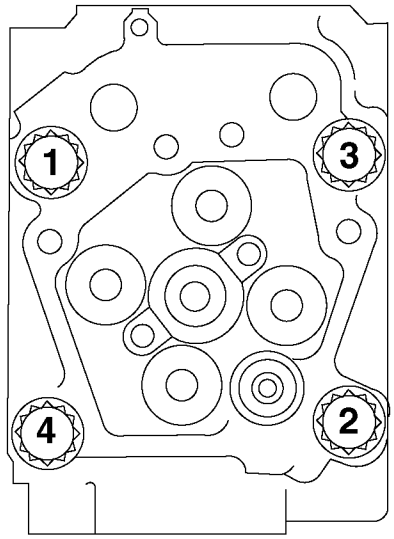

Figure 1-7 Tightening Sequence, Cylinder Head Bolts

Size	Max. Shaft Length	Tightening Stage	Torque Value (Repair work in the field)
M15 x 2	212.0 mm (8.35 in.)	Stage 1	10 N·m (7 lb·ft)
		Stage 2	50 N·m (37 lb·ft)
		Stage 3	100 N·m (74 lb·ft)
		Stage 4	200 N·m (148 lb·ft)
		Stage 5	90° more
		Stage 6	90° more

Table 1-4 Tightening Stages, Cylinder Head Bolts

NOTE:
If the stretch bolt tightening torque is exceeded, remove it, check its maximum permissible shaft length (replace if necessary), and tighten it from Stage 1. Unconditionally replace all bolts whose shaft length exceeds the maximum permissible value.

6. Replace the seal rings and connect the fuel return line to the cylinder head.
7. Replace the seal rings and install the constant-throttle line on the cylinder head.

All information subject to change without notice.
6SE412 0403 Copyright © 2004 DETROIT DIESEL CORPORATION

8. Connect the coolant line to the cylinder head.

NOTICE:
Correct torque on the high-pressure lines is critical. Incorrect torques could result in leaks or lack of power due to restricted fuel flow.

9. Without moving the transfer tube thrust bolt, install the high-pressure injector line as removed.
   [a] When installing the transfer-tube fitting, use one wrench to hold the thrust bolt, and another to tighten the fitting.
   [b] Tighten the fitting 30 N·m (22 lb·ft).
   [c] Remove the wrench used to hold the location of the thrust bolt.
10. Install new exhaust manifold gaskets on all exhaust ports. Make sure the gaskets are all positioned correctly.

NOTE:
Install new manifold gaskets on all exhaust ports, regardless of how many heads were removed.

11. Install the exhaust manifold and tighten the bolts 50 N·m (37 lb·ft).
12. Install the charge-air intake manifold. Refer to section 6.1.2.
13. Lubricate the pushrods with a light coating of engine oil and install the pushrods, in order, as removed.

NOTE:
Make sure the pushrods are correctly seated in the valve tappets.

14. Install the valve bridges, in order, as removed.
15. Install the rocker arm assembly, in order, as removed. Tighten each rocker arm mounting bolt first 60 N·m (44 lb·ft); then an additional 90°. Refer to section 1.21.4.
16. Install the cranking tool and adjust the valves. For valve lash adjustment procedures, refer to section 1.19.3.
17. Remove the cranking tool. Refer to section 1.15.1.
18. Install the inspection hole end cover on the flywheel housing. Tighten the fasteners 25 N·m (18 lb·ft).
19. Check that the coolant drain plug is tight and not leaking.
20. Fill the radiator with coolant. Refer to section 4.1.1.
21. Install the cylinder head cover. Refer to section 1.1.2.

 Copyright © 2004 DETROIT DIESEL CORPORATION

https://truckmanualshub.com/

22. Install the engine trim cover.

NOTE:
Prime the fuel system. Refer to section 2.9.2.

WARNING:

PERSONAL INJURY

Diesel engine exhaust and some of its constituents are known to the State of California to cause cancer, birth defects, and other reproductive harm.

- ☐ **Always start and operate an engine in a well ventilated area.**
- ☐ **If operating an engine in an enclosed area, vent the exhaust to the outside.**
- ☐ **Do not modify or tamper with the exhaust system or emission control system.**

23. Turn on the ignition switch and test the engine. Observe the oil pressure gauge to verify the correct oil pressure. The maximum oil pressure readings at idle speed are listed in Table 1-5. Pay attention to the coolant temperature gauge, warning lights, fluid leaks, and any other signs of a problem.

Description	Minimum Oil Pressure Reading
Engine at Idle Speed	50 kPa (7 psi)
Engine at Max. rpm	250 kPa (36 psi)

Table 1-5 Oil Pressure Readings

24. Stop the engine, check the coolant level, and top off if necessary.

1.2.2.1 Cylinder Head Inspection and Machining

Inspection

1. Remove the cylinder head. Refer to section 1.2.1.
2. Remove the nozzle holder. Refer to section 2.4.1.
3. Remove the intake and exhaust valves. Refer to section 1.19.5.
4. Remove the constant-throttle valve. Refer to section 1.6.1.

All information subject to change without notice.
6SE412 0403 Copyright © 2004 DETROIT DIESEL CORPORATION

https://truckmanualshub.com/

5. Inspect the contact surface (bottom face) of the cylinder head for warpage, both lengthwise and diagonally. See Figure 1-8. If the gap is larger than 0.015 mm (0.0006 inch), machine the cylinder head.

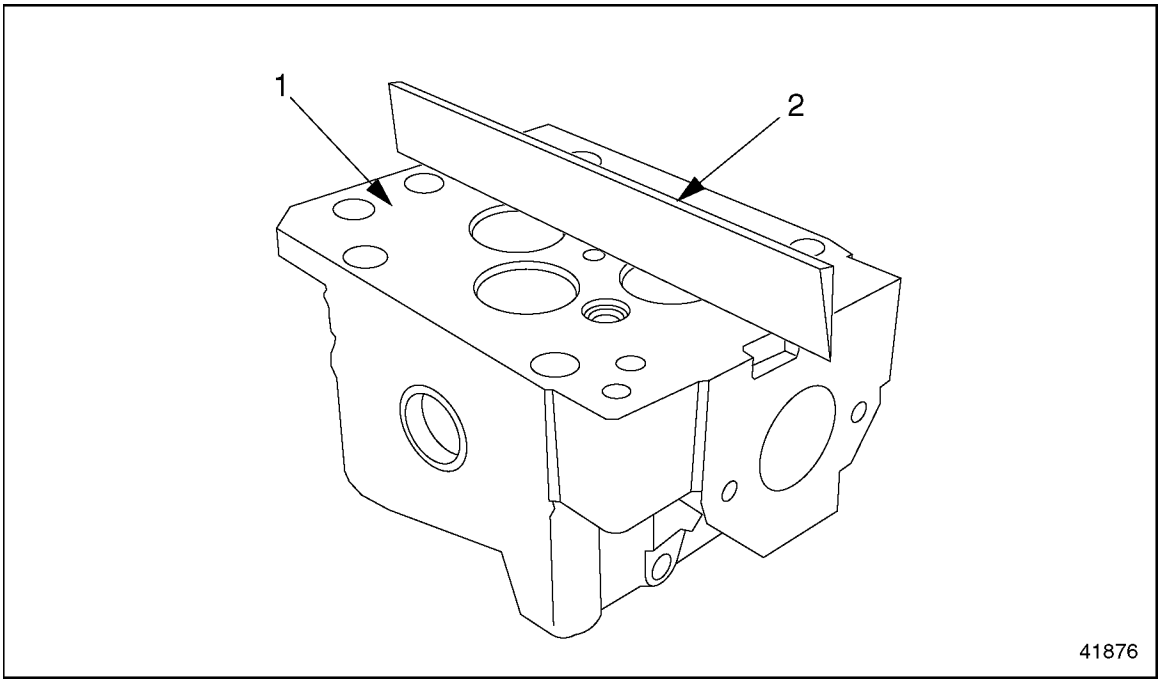

1. Contact Surface
2. Straightedge

Figure 1-8 Measuring Cylinder Head Warpage

[a] Place a straightedge lengthwise across the cylinder head contact surface (bottom face).

[b] If there is a gap between the lower edge of the straightedge and the contact surface of the cylinder head that is large enough to let light through, insert a feeler gauge into the gap.

[c] Measure the amount of warpage with the feeler gauge and compare it to the value listed in Table 1-6. If the gap is larger than 0.015 mm (0.0006 in.), machine the cylinder head.

What To Measure	How To Measure	mm (inch)
Maximum Permissible Warpage of Head Mating Surface	Lengthwise and Diagonally	0.015 (0.0006)
Maximum Permissible Parallelism Deviation of Head Mating Surface	At Each of the Four Corners	0.1 (0.004)
Overall Height of Cylinder Head	When New	113.85-114.15 (4.482-4.494)
	After Machining	113.5 (4.46)

Table 1-6 Cylinder Head Specifications

 Copyright © 2004 DETROIT DIESEL CORPORATION

https://truckmanualshub.com/

[d] Place the straightedge diagonally across the cylinder head. Repeat the procedure above.

6. Check the cylinder head contact surface for parallelism, at each corner. See Figure 1-9. If the four measurements deviate by more than 0.1 mm (0.004 inch), machine the cylinder head.

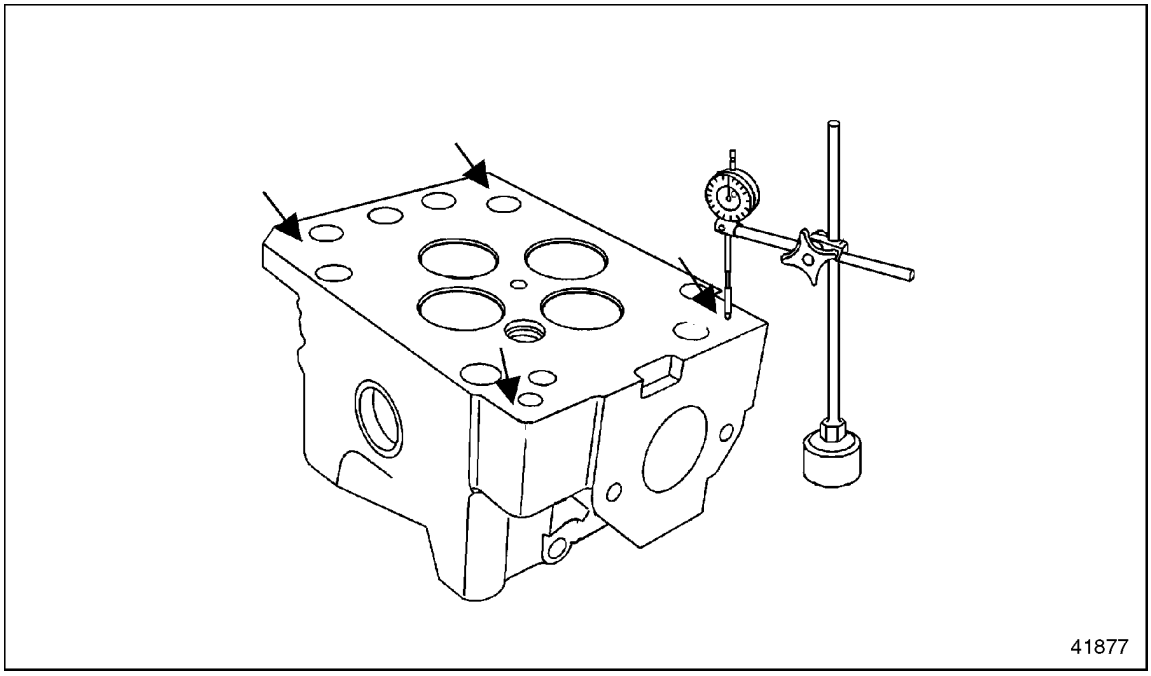

Figure 1-9 Measuring Cylinder Head Parallelism

[a] Rest the cylinder head on a flat surface, with the contact surface exposed (bottom face up).

NOTE:
Make sure the head is level before going on with this check.

[b] Install a dial gauge so that the feeler touches the contact surface with some preload.

[c] Fasten the dial gauge and adjust the scale to "0" (zero).

[d] Check the reading on the dial gauge. If the reading is larger than 0.1 mm (0.004 inch), machine the cylinder head.

[e] Repeat this procedure at each spot marked by an arrow (each corner of the cylinder head).

All information subject to change without notice.
6SE412 0403 Copyright © 2004 DETROIT DIESEL CORPORATION

7. Measure the overall height of the cylinder head. See Figure 1-10. Replace the head if below the minimum height. If above the maximum height, machine the head down to the maximum height listed in Table 1-6.

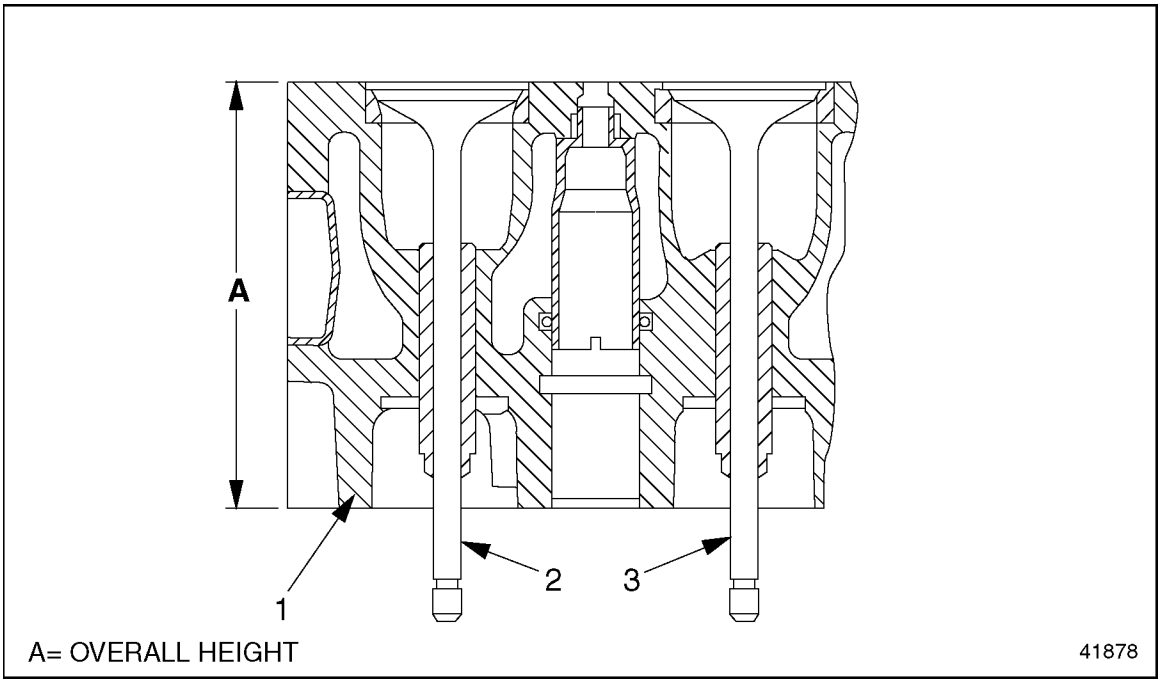

1. Cylinder Head
2. Exhaust Valve
3. Intake Valve

Figure 1-10 Measuring Cylinder Head Height

Machining

1. Machine the contact surface of the cylinder head, to correct any problems found during inspection.
   [a] If rejected for warpage, check warpage again until it is within specifications.
   [b] If rejected for lack of parallelism, check parallelism again until it is within specifications.
2. After machining, check again the overall height of the cylinder head.
3. Install the constant-throttle valve. Refer to section 1.6.2.
4. Install the intake and exhaust valves. Refer to section 1.19.6.
5. Install the nozzle holder. Refer to section 2.4.2.
6. Install the cylinder head. Refer to section 1.2.2.

 Copyright © 2004 DETROIT DIESEL CORPORATION

https://truckmanualshub.com/

1.2.2.2 Engine Compression Testing

Perform the following steps to compression test the engine:

Removal

NOTE:
Start this procedure only when the engine is cold. Wait at least 30 minutes after switching off the engine.

1. Set the parking brake and chock the tires.

WARNING:
PERSONAL INJURY
To avoid injury before starting and running the engine, ensure the vehicle is parked on a level surface, parking brake is set, and the wheels are blocked.

2. Remove the cylinder head cover. Refer to section 1.1.1.
3. Adjust the valve lash. Refer to section 1.19.3.

NOTE:
To do this procedure, coolant temperature must be between 155 and 205°F (70 to 95°C).

All information subject to change without notice.
6SE412 0403 Copyright © 2004 DETROIT DIESEL CORPORATION

WARNING:

PERSONAL INJURY

To avoid injury when working near or on an operating engine, remove loose items of clothing and jewelry. Tie back or contain long hair that could be caught in any moving part causing injury.

WARNING:

PERSONAL INJURY

Diesel engine exhaust and some of its constituents are known to the State of California to cause cancer, birth defects, and other reproductive harm.

- ☐ **Always start and operate an engine in a well ventilated area.**
- ☐ **If operating an engine in an enclosed area, vent the exhaust to the outside.**
- ☐ **Do not modify or tamper with the exhaust system or emission control system.**

4. Turn on the ignition keyswitch and run the engine until it reaches operating temperature.
5. Shut down the engine.

 Copyright © 2004 DETROIT DIESEL CORPORATION

https://truckmanualshub.com/

6. Remove the injector nozzle. See Figure 1-11. Refer to section 2.4.1.

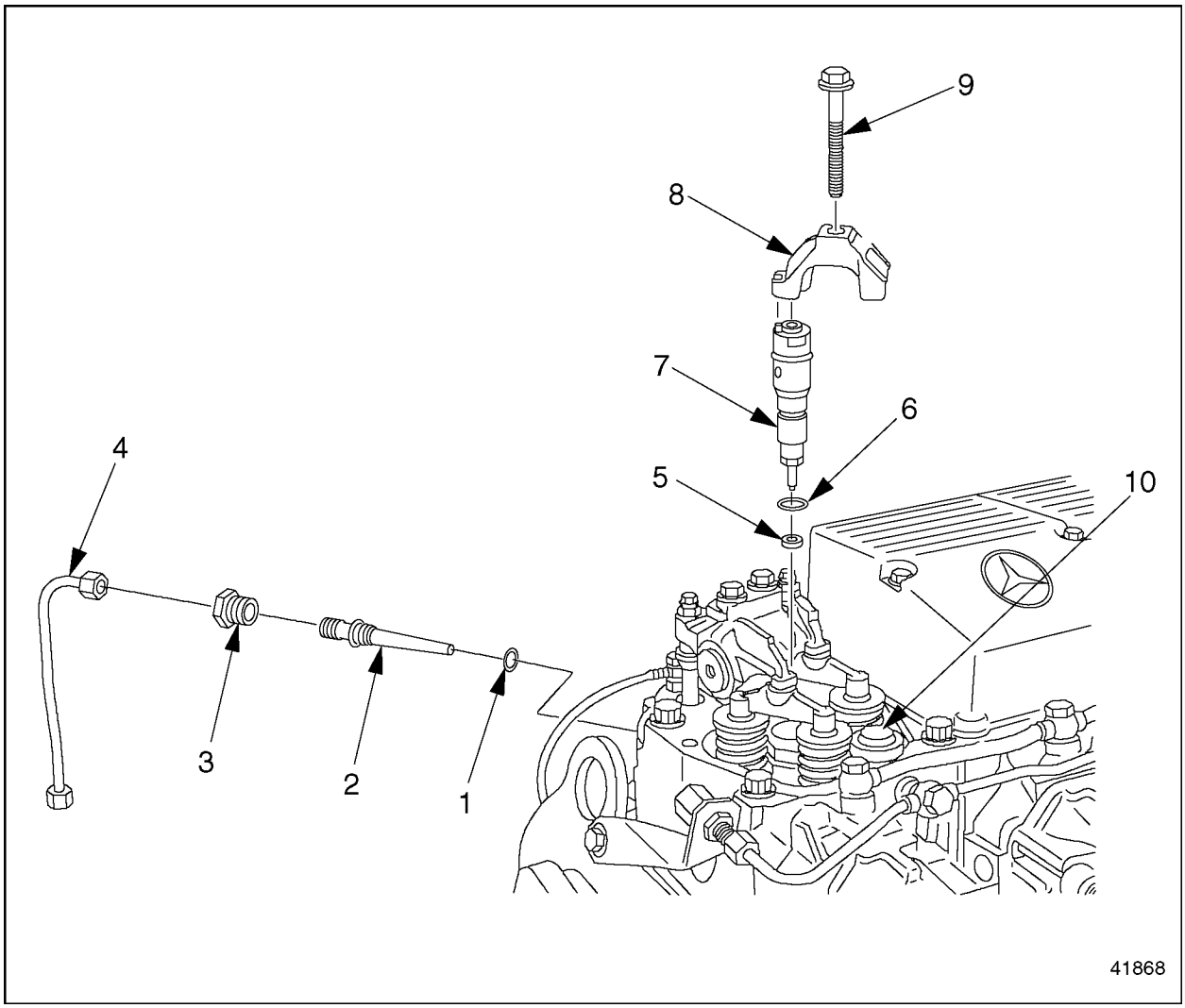

1. O-ring (transfer tube)
2. Transfer Tube
3. Thrust Bolt
4. High-Pressure Fuel Line
5. Seal Ring
6. O-ring (nozzle)
7. Injector Nozzle
8. Tensioning Arm
9. Retaining Bolt
10. Constant Throttle Valve Cover

Figure 1-11 Removing the Injector Nozzle

All information subject to change without notice.
6SE412 0403 Copyright © 2004 DETROIT DIESEL CORPORATION

7. Insert the compression test adaptor (J 45392 or 904 589 01 21 00) into the cylinder head. See Figure 1-12. Use the hold-down and bolt included in the kit.

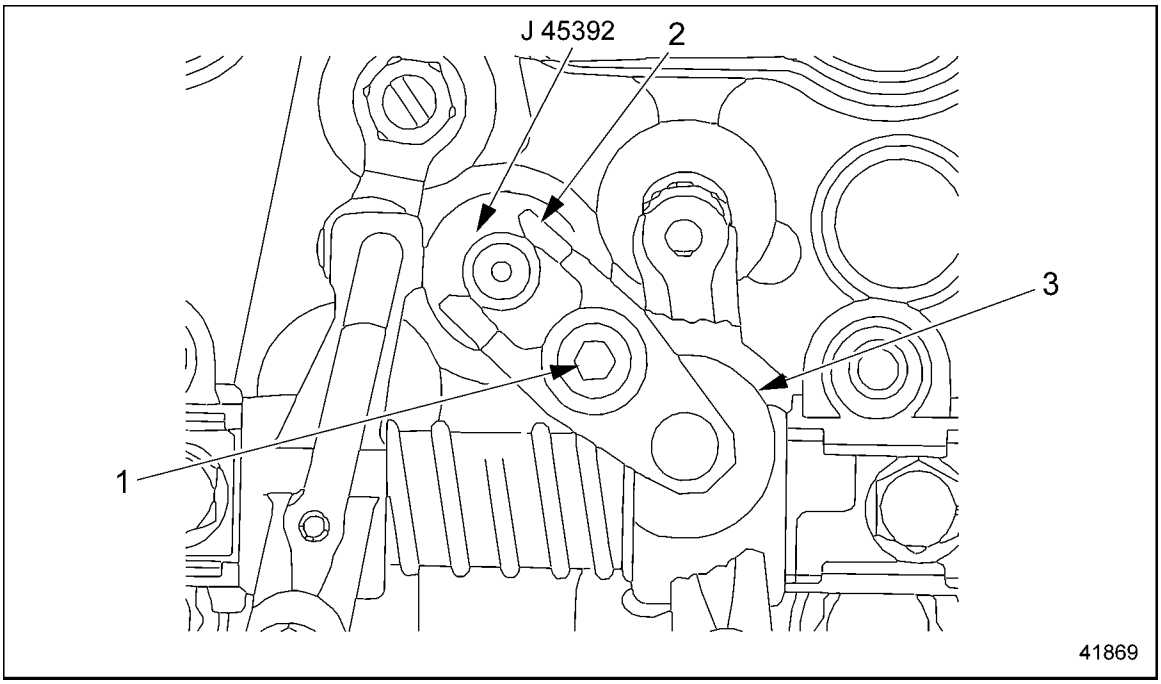

1. Button (on hold-down)
2. Bolt
3. Fitting
4. Constant Throttle Valve Cover

Figure 1-12 Installing the Test Adaptor

[a] Make sure the smooth surface on the O-ring is pointing toward the test adaptor.

[b] Install the hold-down with the two prongs around the test adaptor. Turn the hold-down (at the cylinder head) until the button in the base of the hold-down is aligned with the locating element in the end cover of the constant throttle.

[c] Tighten the bolt attaching the hold-down to the cylinder head.

NOTE:
Follow the equipment manufacturer's operating instructions to connect the compression tester.

 Copyright © 2004 DETROIT DIESEL CORPORATION

https://truckmanualshub.com/

8. Attach the compression tester (J 6692–B or 000 589 17 21 00) to the test adaptor (J 45392 or 904 589 01 21 00). Snap the fitting at the end of the tester onto the top of the test adaptor. See Figure 1-13.

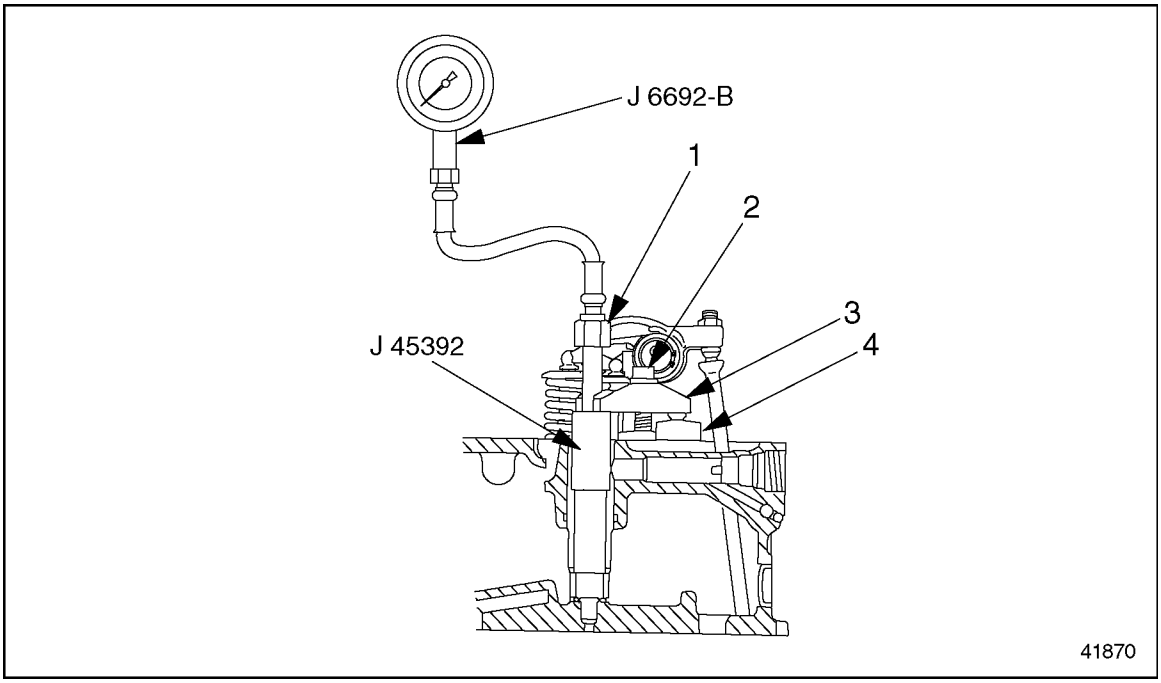

1. Fitting
2. Bolt
3. Hold-Down
4. Constant Throttle Valve Cover

Figure 1-13 Testing Compression Pressure

Testing

1. Remove the electrical connectors from all unit pumps. When this is done, the engine will not start.
2. For each cylinder, use the starter to crank the engine at least 8 engine revolutions. The results will be recorded on the gauge of the tester.
3. Compare measurements on the chart with the values listed in Table 1-7. If the pressure measured is below the minimum compression pressure or above the permissible difference, determine the cause and correct the problem. To remove the cylinder head, Refer to section 1.2.1.

Description	Pressure in kPa (psi)
Minimum Compression Pressure Valve	2800 (406)
Permissible Difference Between Individual Cylinders	400 (58)

Table 1-7 Compression Testing

All information subject to change without notice.
6SE412 0403 Copyright © 2004 DETROIT DIESEL CORPORATION

Installation

1. Connect all unit pumps, as removed.
2. Connect minidiag2 to the vehicle and clear all inactive faults.

NOTE:
Follow the equipment manufacturer's operating instructions.

3. Disconnect the compression tester gauge, (J 6692–B or 000 589 17 21 00) from the test adaptor (J 45392 or 904 589 01 21 00).
4. Remove the compression test adaptor.
5. Install the injector nozzle. Refer to section 2.4.2
6. Install and tighten the tensioning arm.
   [a] Position the tensioning arm on the nozzle and install the retaining bolt.
   [b] Tighten the retaining bolt 50 N·m (37 lb·ft).
7. Install the cylinder head cover. Refer to section 1.1.2.
8. Repeat this procedure for each cylinder.
9. Remove the chocks from the tires.

 Copyright © 2004 DETROIT DIESEL CORPORATION

https://truckmanualshub.com/

1.3 CYLINDER BLOCK

The cylinder block has integrated oil and water channels. The upper section of the cylinder bore is induction-hardened.

1.3.1 Cylinder Liner Removal

Remove the cylinder liner as follows:

1. Remove the piston. Refer to section 1.17.1.
2. Using a paint pen, mark the position of the liner in the cylinder block. Mark both the liner and the block. Then make another set of marks 90 degrees from the first set, in a clockwise direction. See Figure 1-14.

NOTE:
If the same liner is used again, it must be installed at an offset of 90 degrees from its last position.

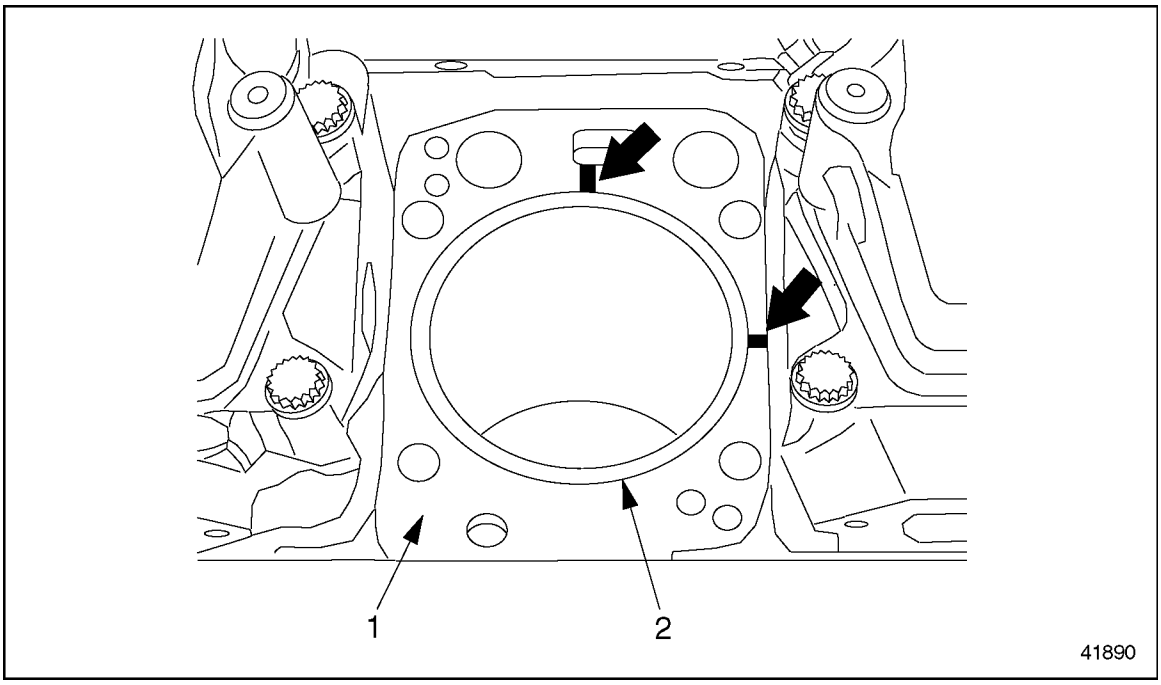

1. Cylinder Block
2. Cylinder Liner

Figure 1-14 Mark the Cylinder Liner

All information subject to change without notice.
6SE412 0403 Copyright © 2004 DETROIT DIESEL CORPORATION

NOTICE:
To prevent damage, never use a hammer or other unsuitable device to remove the cylinder liner.

3. Remove the cylinder liner, using the cylinder liner removal tool, (J 41543). See Figure 1-15.

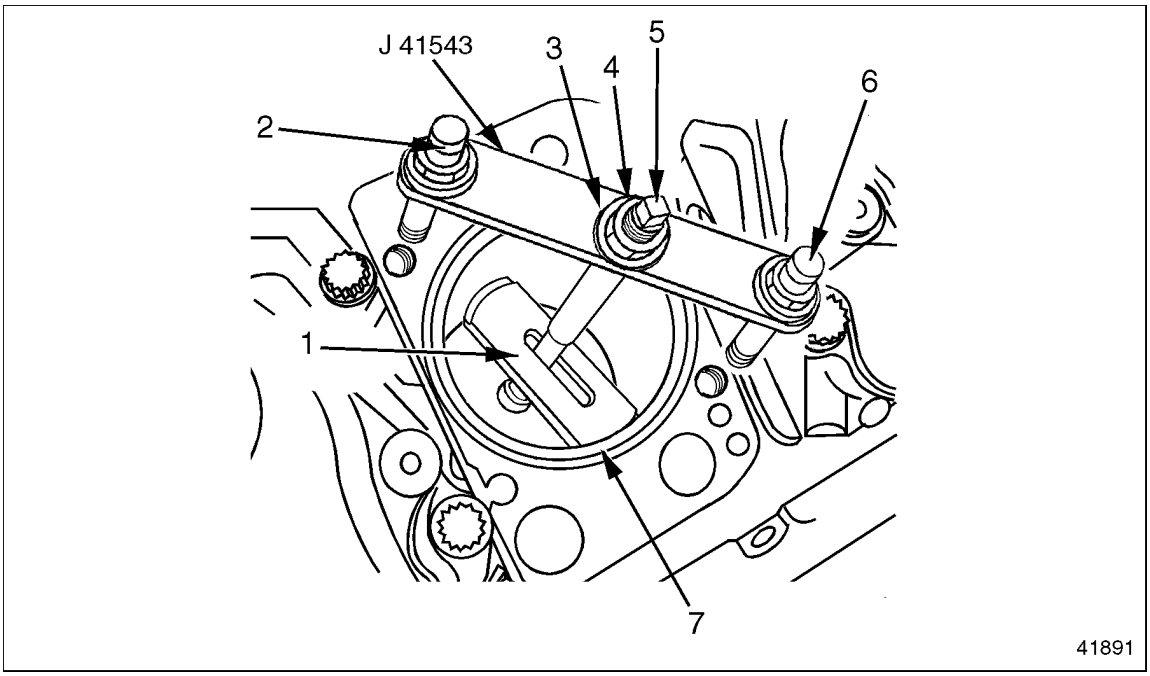

1. Removal Plate
2. Hold-down bolt
3. Washer
4. Spindle Nut
5. Threaded end of Spindle
6. Hold-down bolt
7. Cylinder Liner

Figure 1-15 Cylinder Liner Removal

 Copyright © 2004 DETROIT DIESEL CORPORATION

https://truckmanualshub.com/

NOTICE:
If the removal plate is not correctly seated, the liner will be damaged.

4. Remove the metal insert from the collar seat (the counterbore in the block). See Figure 1-16.

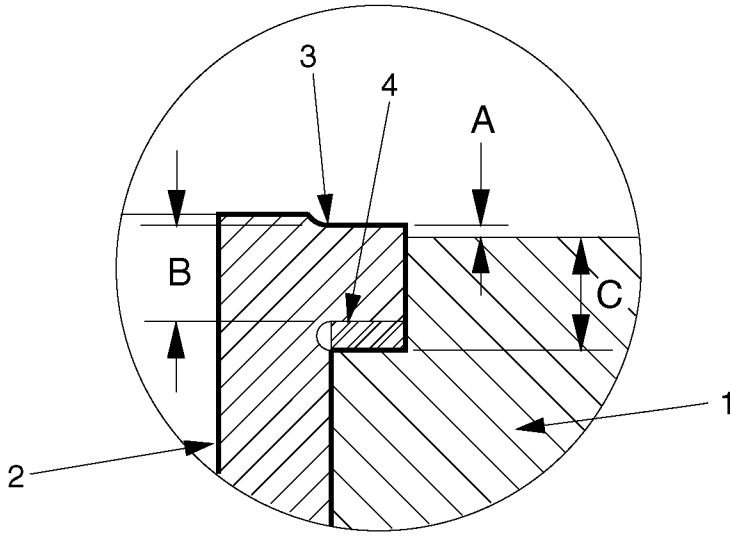

1. Block
2. Cylinder Liner
3. Cylinder Liner Collar
4. Collar Seat Insert

Figure 1-16 Cylinder Liner Collar Seat

All information subject to change without notice.
6SE412 0403 Copyright © 2004 DETROIT DIESEL CORPORATION

5. Remove and discard the two O-rings from the block. See Figure 1-17.

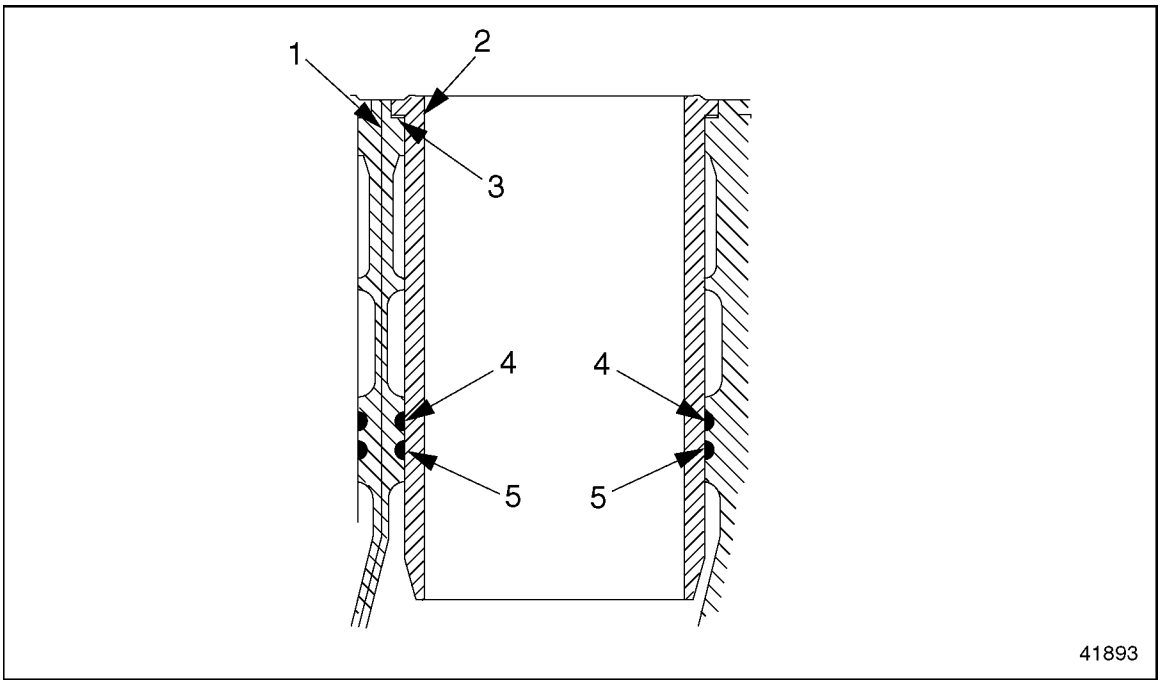

1. Block
2. Cylinder Liner
3. Collar Seat Insert
4. Upper O-ring
5. Lower O-ring

Figure 1-17 Cylinder Liner O-rings

6. Thoroughly clean the cylinder liner and the collar seat.

NOTE:
Take special care to clean the liner collar and the seating surfaces for the collar seat insert and the two O-rings.

7. Check the condition of the cylinder liner collar. Make sure that the height of the collar is within the specifications given. Discard the liner if the collar is not within specifications listed in Table 1-8.

 Copyright © 2004 DETROIT DIESEL CORPORATION

https://truckmanualshub.com/

8. Check the condition of the liner collar seat. Make sure that the depth of the collar seat is within the specifications given, listed in Table 1-8.

Description	Value: mm (in.)
Cylinder Liner Protrusion, From Block, 1-16, Ref. A.	0.230–0.330 (0.0090–0.0130)
Height of the Cylinder Liner Collar, 1-16, Ref. B.	10.10–10.12 (0.3976–0.3984)
Depth of the Collar Seat, 1-16, Ref. C.	9.950–10.010 (0.392–0.3941)
Thickness of the Seat Insert	0.14–0.16 (0.0055–0.0063)

Table 1-8 Cylinder Liner Installation Tolerances

9. Check the deformation of the cylinder liner collar at the contact surface with the seat insert. Make sure that the deformation of the collar does not exceed the admissible maximum given, listed in Table 1-8. Discard the liner if the collar is not within tolerance.

NOTE:
Do not attempt to machine the liner collar in order to correct inadmissible deformation. Instead, replace the cylinder liner.

10. Check the deformation of the liner collar seat at the contact surface with the seat insert. Make sure that the deformation of the collar seat does not exceed the admissible maximum given, listed in Table 1-9.

Description	Value: mm (in.)
Admissible Out-of-Round of the Cylinder Liner, where it contacts the O-rings	Max.: 0.02 (0.0007)
Admissible Deformation of the Cylinder Liner Collar, at the Contact Surface with the Seat Insert	Max.: 0.02 (0.0007)
Admissible Deformation of the Liner Collar Seat, at the Contact Surface with the Seat Insert	Max.: 0.03 (0.0011)

Table 1-9 Cylinder Liner Inspection Tolerances

1.3.2 Cylinder Liner Installation

Install the cylinder liner as follows:

1. Install new O-rings, clean and dry, in the cylinder block.
2. Install a new seat insert, clean and dry, into the liner collar seat. See Figure 1-16. Check the thickness of the seat insert according to the specifications, listed in Table 1-9.

NOTE:
The cylinder liner collar and collar seat must remain completely free of oil.

All information subject to change without notice.
6SE412 0403 Copyright © 2004 DETROIT DIESEL CORPORATION

https://truckmanualshub.com/

3. Apply a light coating of engine oil to the lower part of the liner, from where it contacts the O-rings up to the bevelled area.
4. When installing a new liner, make sure that the diameter tolerance code corresponds to the one marked on the piston. See Figure 1-18 for the location of tolerance codes.

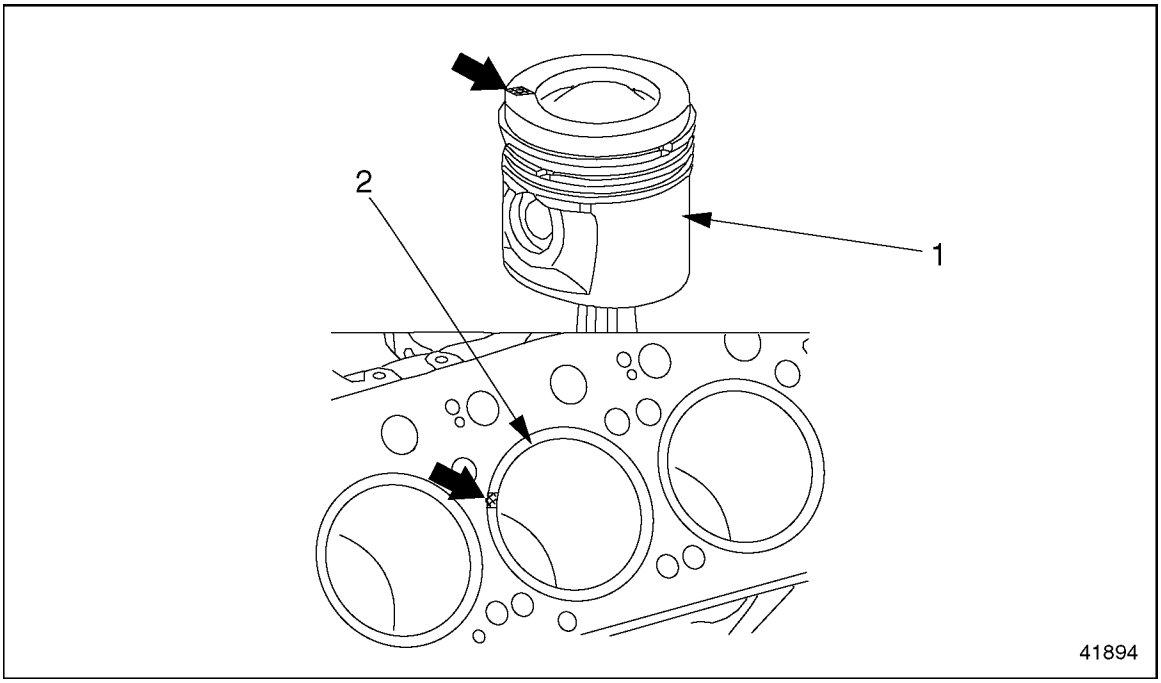

1. Piston
2. Cylinder Liner

Figure 1-18 Tolerance Codes

[a] Cylinder liners with tolerance code A require a piston of code BA.

[b] Cylinder liners with tolerance code B require a piston of either code BA or BC.

[c] Cylinder liners with tolerance code C require a piston of code BC.

 Copyright © 2004 DETROIT DIESEL CORPORATION

https://truckmanualshub.com/

5. Install the cylinder liner, using the cylinder liner installation tool (J 46168 or 449 589 01 33 00). See Figure 1-19.

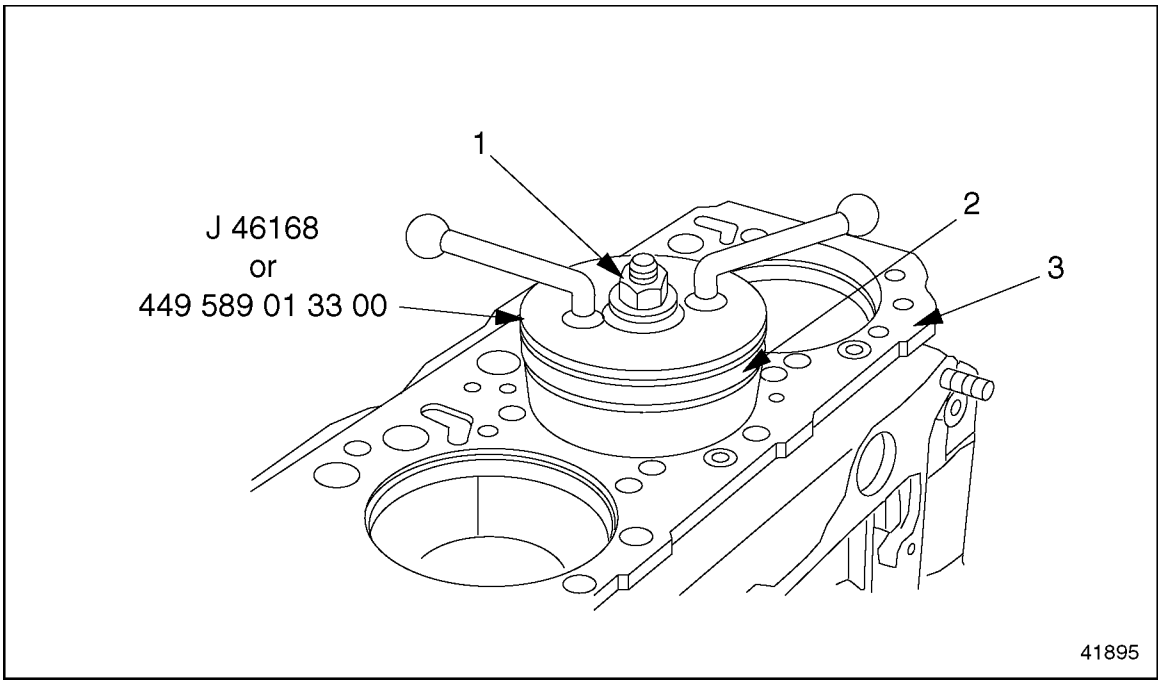

1. Installation Nut
2. Cylinder Liner
3. Cylinder Block

Figure 1-19 Cylinder Liner Installation

[a] If installing a new liner, be sure to make a reference mark on the liner to match up with the one made on the cylinder block upon removal.

NOTICE:
Do not overtighten the installation tool. This may deform the liner and make the installation tool more difficult to remove.

[b] Tighten the installation tool just enough to hold the installation tool inside the liner without turning.

NOTICE:
To prevent damage to the O-rings, the liner must be rotated during installation.

NOTE:
If installing a new liner, use the first reference mark. If installing the old liner, use the second reference mark, offset 90 degrees from the first one.

All information subject to change without notice.
6SE412 0403 Copyright © 2004 DETROIT DIESEL CORPORATION

[c] Insert the cylinder liner into the cylinder block until it contacts the O-rings. Continue to insert the liner past the O-rings, being careful to keep turning the installation tool until the liner is properly seated.

[d] Remove the installation tool from the cylinder liner.

6. Measure the cylinder liner protrusion from the block. See Figure 1-16. The specifications are listed in Table 1-8. Refer to section 1.3.2.2.
7. Measure the inside diameter of the cylinder liner and check for out-of-round. See Figure 1-20.

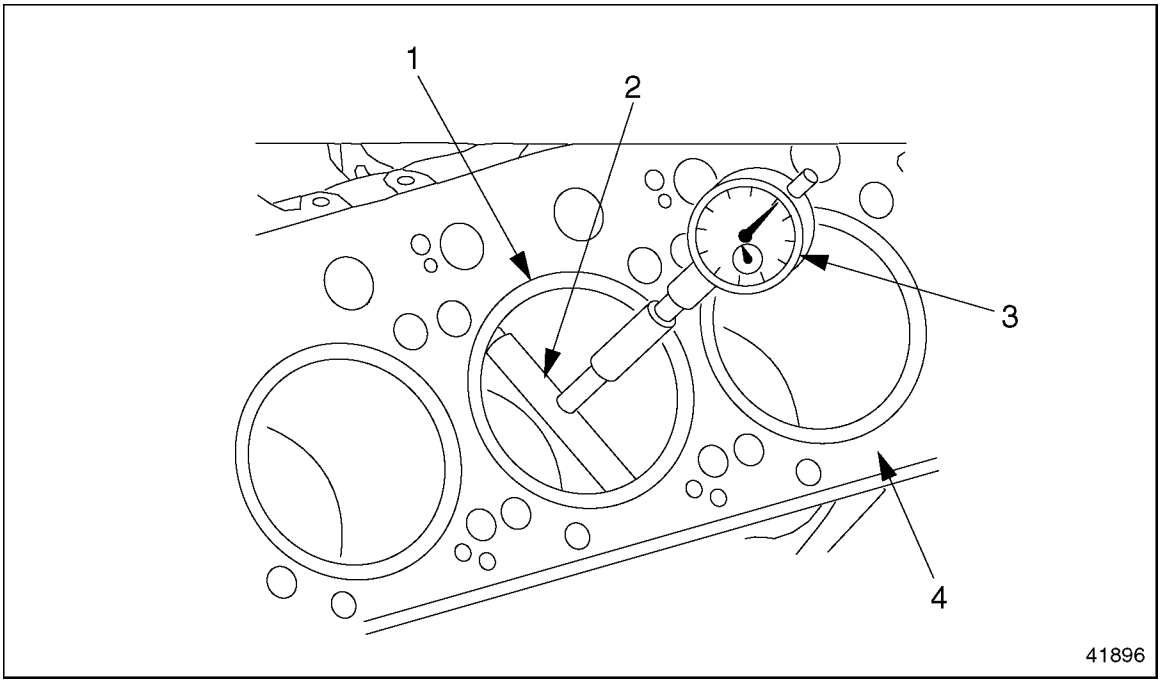

1. Cylinder Liner
2. Quick Calipers
3. Dial Gauge
4. Cylinder Block

Figure 1-20 Measuring the Cylinder Liner Inside Diameter

[a] Measure at three different locations 60 degrees apart in the area of the two O-rings.

[b] Compare the three measurements. If they differ by more than the maximum admissible out-of-round listed in Table 1-9, remove the liner and inspect the two O-rings and their seating area in the cylinder block.

[c] If the O-rings are damaged, replace them.

[d] Check the out-of-round again until it meets specifications.

8. Install the piston. Refer to section 1.17.2.

 Copyright © 2004 DETROIT DIESEL CORPORATION

https://truckmanualshub.com/

1.3.2.1 Cylinder Liner Bore Inspection and Measurement

Inspection

Inspect the cylinder liner bore as follows:

1. Check the wall of the cylinder liner for signs of excessive wear or deformation.
2. Check the honing pattern on the cylinder liner for damage caused by penetration of dirt into the cylinder. If the honing pattern is faded or no longer visible, discard the cylinder liner. See Figure 1-21 for an intact honing pattern and see Figure 1-22 for a faded honing pattern.

NOTE:
Minor fading of the honing pattern at the top ring inversion area is not sufficient cause to reject the liner.

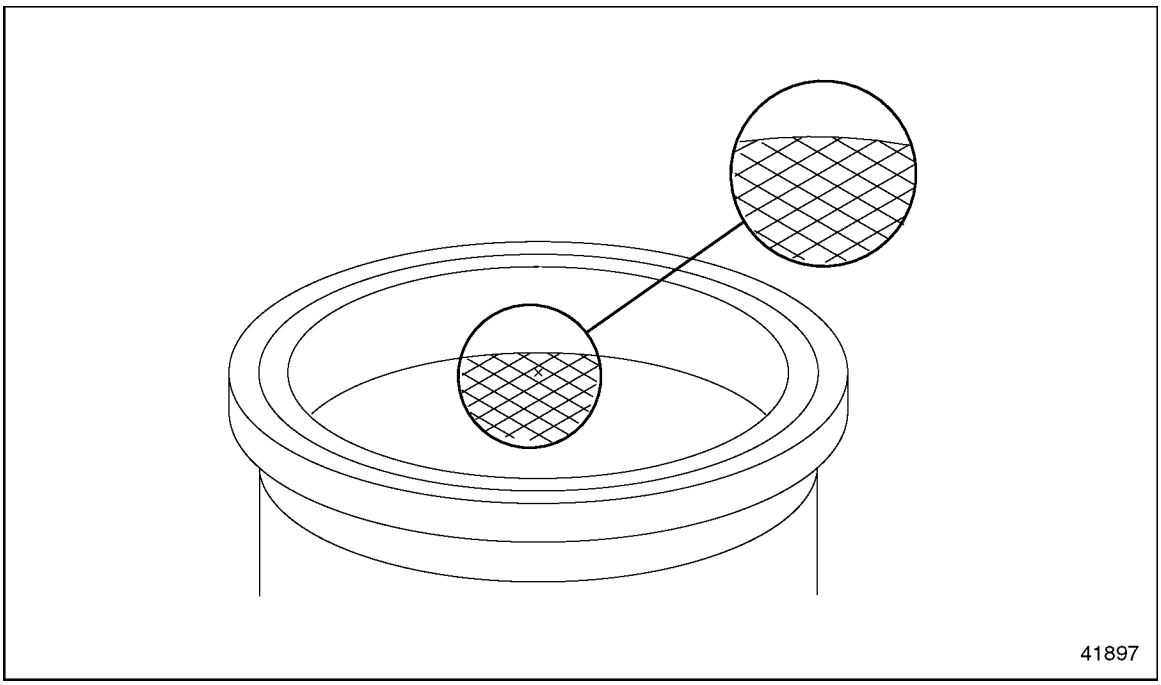

Figure 1-21 Intact Honing Pattern

All information subject to change without notice.
6SE412 0403 Copyright © 2004 DETROIT DIESEL CORPORATION

https://truckmanualshub.com/

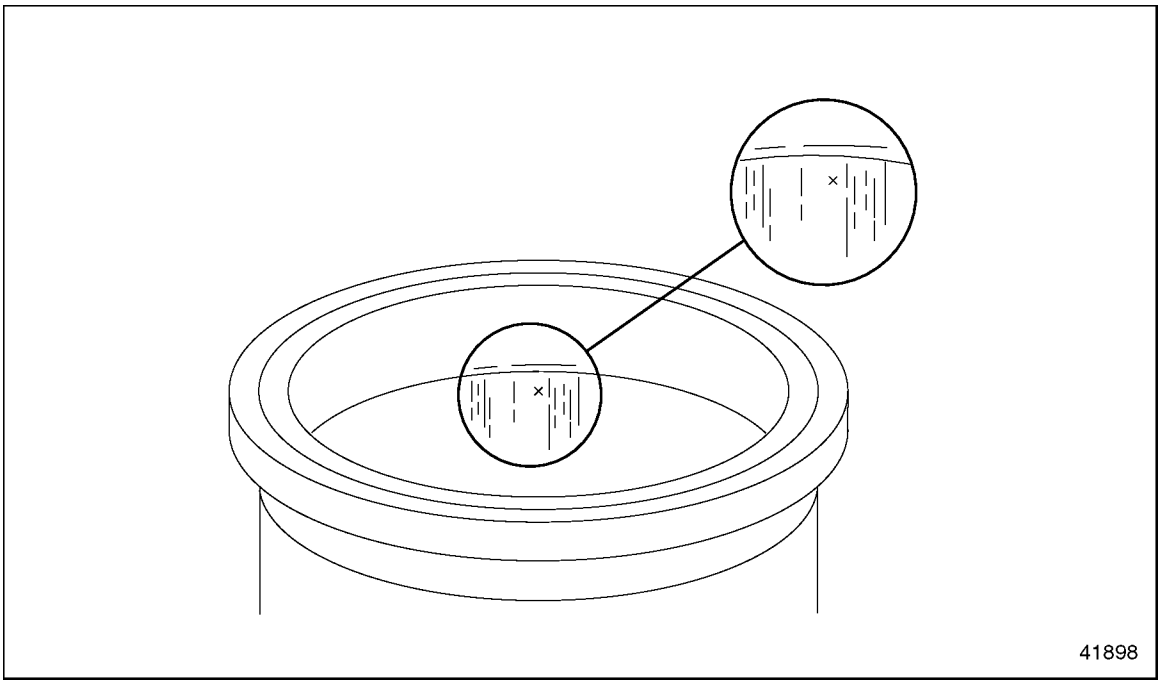

Figure 1-22 Faded Honing Pattern

3. Do an external visual check of the cylinder liner for signs of cavitation and corrosion. Discard the liner if any damage is noted.

 Copyright © 2004 DETROIT DIESEL CORPORATION

https://truckmanualshub.com/

Measurement

1. Set the dial gauge and quick calipers with a dial caliper to the inside diameter of the cylinder liner. Preload the dial gauge to 5 mm (0.20 inch). See Figure 1-23 for set-up and listed in Table 1-10 are specifications.

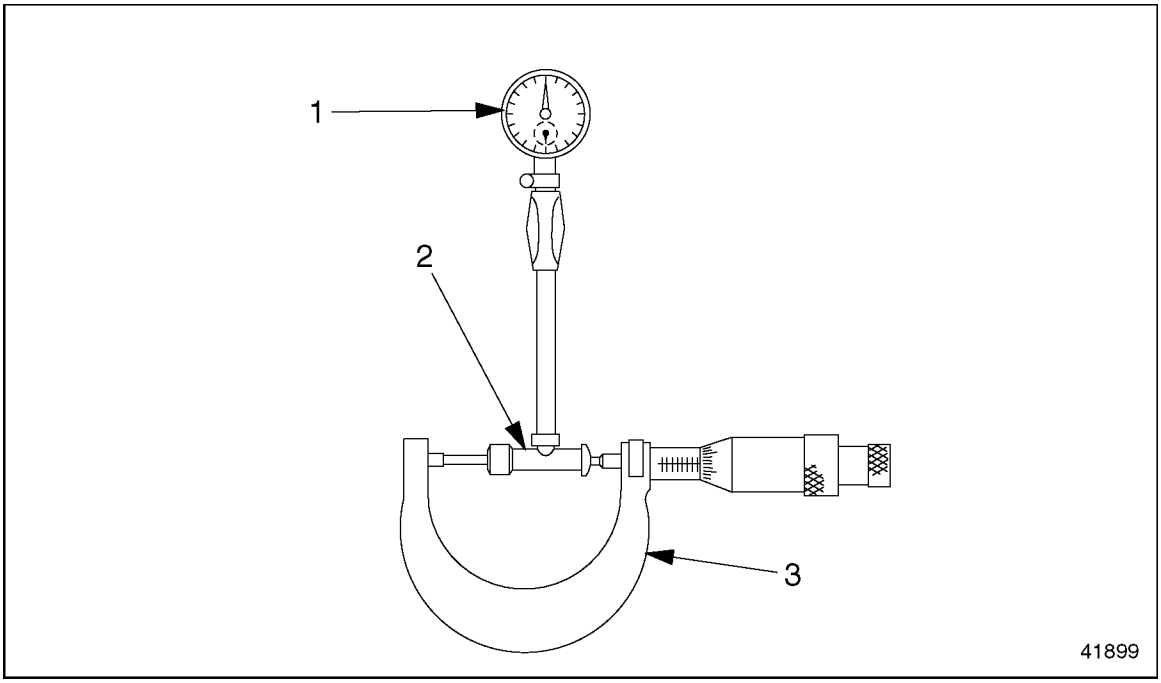

1. Dial Gauge
2. Quick Calipers (for internal measurements)
3. Dial Caliper

Figure 1-23 Setting the Dial Gauge

Where To Measure	What To Measure	Value: mm (in.)
Measuring Point 1: At the area of the O-rings	Inside Diameter of the Cylinder Liner, A Class	127.990–127.995 (5.0390–5.0392)
Measuring Point 1: At the area of the O-rings	Inside Diameter of the Cylinder Liner, B Class	127.995–128.005 (5.0392–5.0396)
Measuring Point 1: At the area of the O-rings	Inside Diameter of the Cylinder Liner, C Class	128.005–128.010 (5.0396–5.0398)
Measuring Point 2: Upper Reversal Point of the First Piston Ring	Max. Wear to Cylinder Liner, Measured Along Axis A and Axis B	0.08 (0.003)
At Measuring Point 2, Compare Axis A to Axis B	Admissible Wear Out	Max.: 0.08 (0.003)

Table 1-10 Cylinder Liner Measurements

NOTE:
This measurement serves as a baseline against which to measure the actual wear.

All information subject to change without notice.
6SE412 0403 Copyright © 2004 DETROIT DIESEL CORPORATION

2. Measure the inside diameter of the cylinder liner at measuring point 1: near the O-ring area. See Figure 1-24.

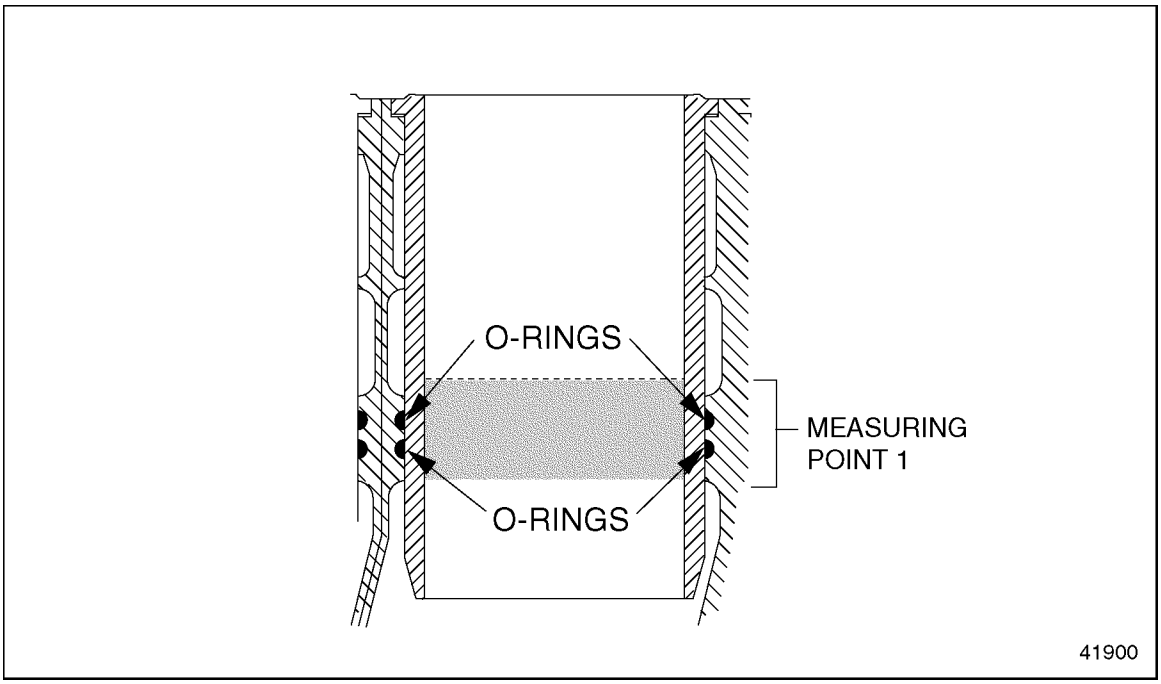

Figure 1-24 Measuring the Inside Diameter

[a] Make the first measurement along the fore-to-aft axis.

[b] Make the second measurement 90 degrees away, along the side-to-side axis.

[c] When finished, set the dial gauge to zero.

 Copyright © 2004 DETROIT DIESEL CORPORATION

https://truckmanualshub.com/

3. Measure the wear on the inside diameter of the liner at measuring point 2: the upper reversal point of the first piston ring. Measure the cylinder liner in both directions: fore-to-aft and side-to-side. See Figure 1-25. The specifications are listed in Table 1-10.

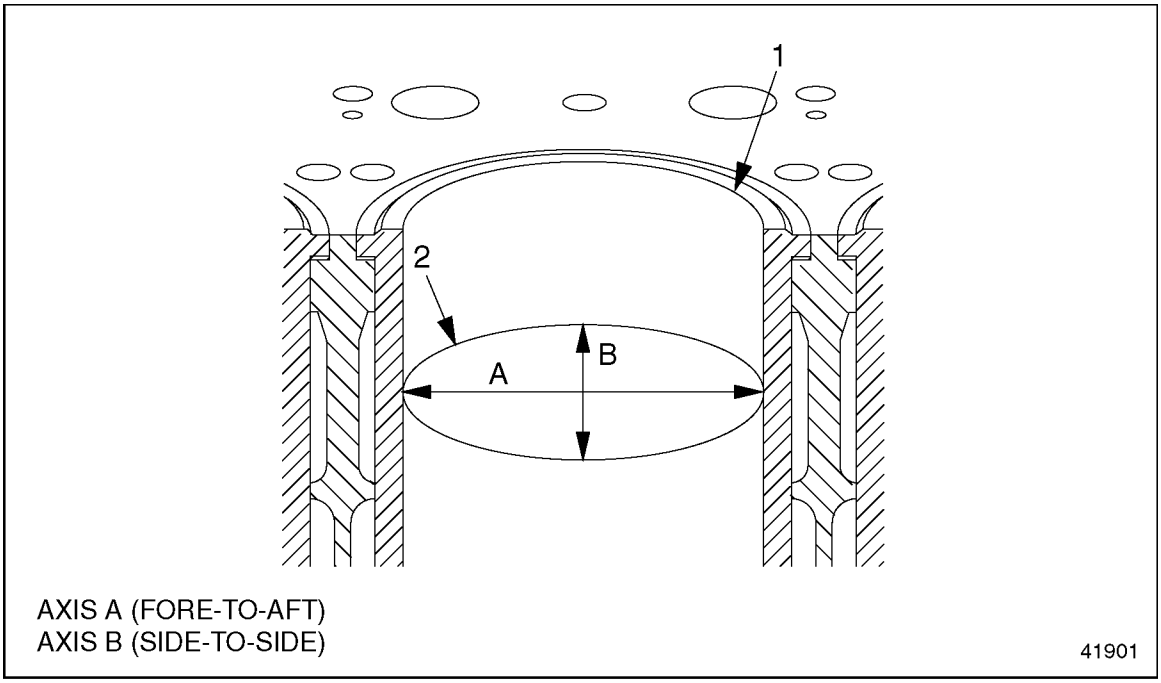

1. Cylinder Liner
2. Measuring Point 2 (upper reversal point of the first piston ring)

Figure 1-25 Measuring Points

[a] Make the first measurement along the fore-to-aft axis (axis A).

[b] Make the second measurement 90 degrees away, along the side-to-side axis (axis B).

[c] If there is more than 0.08 mm (0.003 inch) of wear, replace the cylinder liner.

4. Check the cylinder liner for out-of-round. If the two measurements vary by more than 0.010 mm (0.0004 in.), replace the cylinder liner.
5. Replace the cylinder liner, if required. Refer to section 1.3.1.

1.3.2.2 Cylinder Liner Protrusion Measurement

Measure the cylinder liner protrusion as follows:

1. Remove the cylinder head. Refer to section 1.2.1.

NOTE:
Correct liner protrusion is necessary to obtain a perfect seal when the head gasket is compressed by the cylinder head.

2. Clean the contact surfaces of the cylinder block, the cylinder liner, and the measuring plate.

All information subject to change without notice.
6SE412 0403 Copyright © 2004 DETROIT DIESEL CORPORATION

3. Install the measuring plate (J 46071 or 402 589 00 21 00) on the cylinder block and cylinder liner. Fasten the measuring plate to the block by inserting the cylinder head bolts into the spacers and then threading them into the holes in the cylinder block. See Figure 1-26.

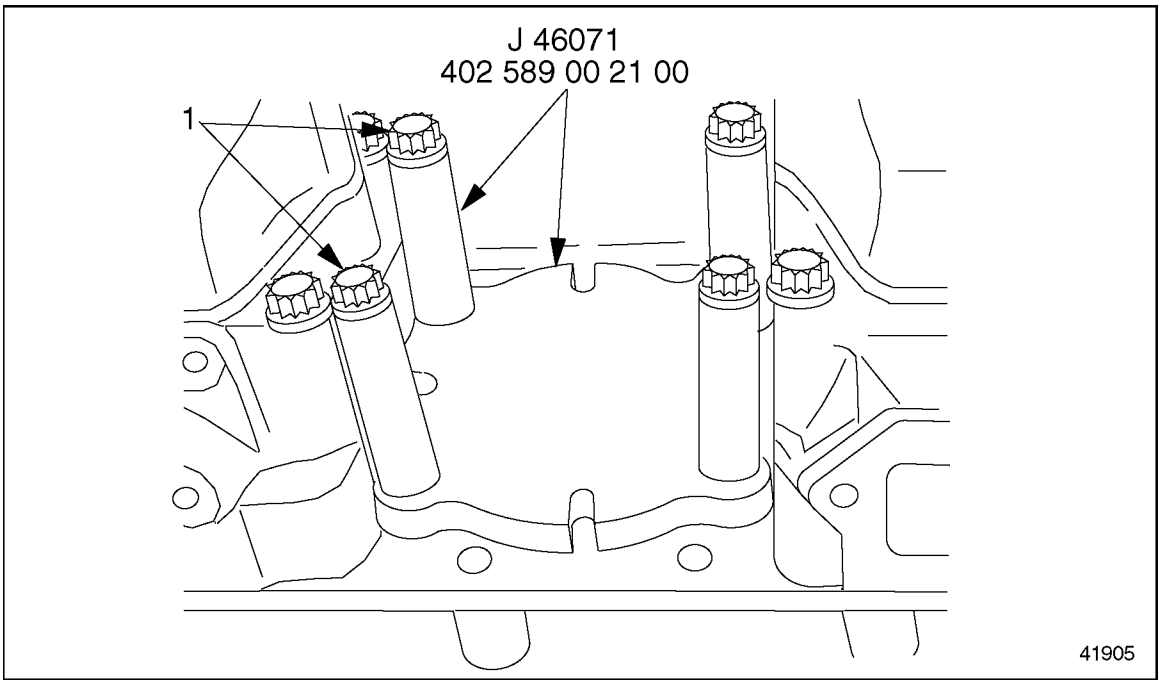

1. Cylinder Head Bolts

Figure 1-26 Measuring Plate Installation

4. Tighten the cylinder head bolts 50 N·m (37 lb·ft).

https://truckmanualshub.com/

5. Install the dial gauge so that the feeler on the dial gauge extends into the slot in the measuring plate. The feeler must touch the contact surface of the cylinder block with some preload. Support the dial gauge. See Figure 1-27.

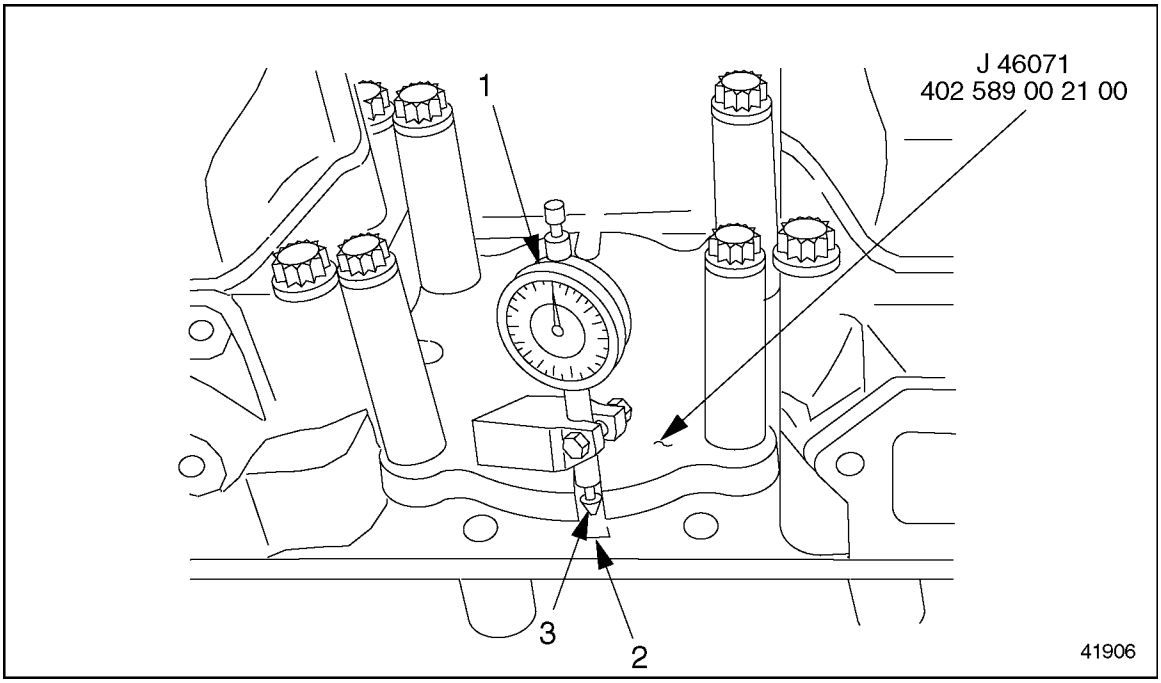

1. Dial Gauge
2. Slot (4 qty.)
3. Feeler

Figure 1-27 Dial Gauge Installation

All information subject to change without notice.
6SE412 0403 Copyright © 2004 DETROIT DIESEL CORPORATION

6. Measure the cylinder liner protrusion from the block in four places, once at each slot in the measuring plate. See Figure 1-28. The acceptance/rejection criteria is listed in Table 1-11.

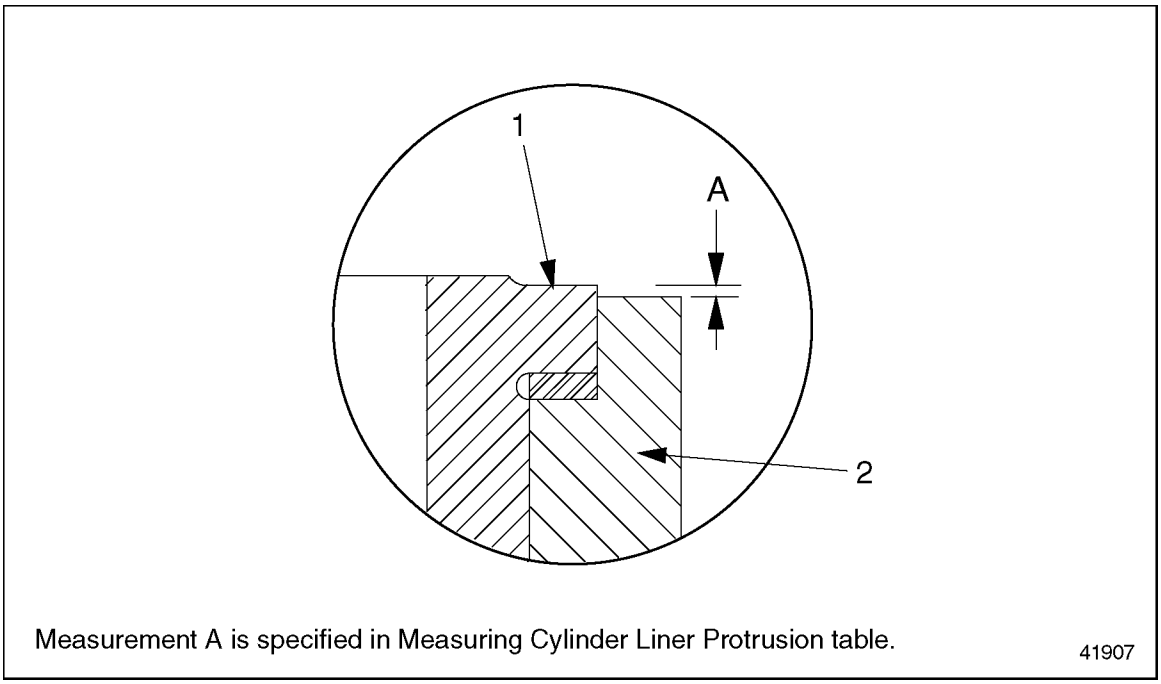

1. Cylinder Block
2. Cylinder Liner

Figure 1-28 Measuring Protrusion

Description	Value: mm (in.)
Cylinder Liner Protrusion From Block	0.230–0.330 (0.0090–0.0130)
Difference Between the Four Measuring Points	Max.: 0.02 (0.0007)

Table 1-11 Specifications for Measuring Cylinder Liner Protrusion

[a] Set the scale on the dial gauge to zero.

[b] Move the dial gauge until the feeler touches the cylinder liner collar. Record the reading on the dial gauge.

[c] Move the dial gauge and support to the next slot, and repeat the measurement process, until four measurements have been made, one at each slot. Record each measurement.

[d] Check each measurement. If any one measurement records protrusion of less than 0.230 mm (0.0090 inch), or more than 0.330 mm (0.0130 inch), remove the cylinder liner and check it according to the procedures that refer to section 1.3.1.

[e] Compare the four measurements. If any measurement differs from any one of the others by more than 0.02 mm (0.0007 inch), replace the cylinder liner.

7. Remove the bolts, spacers and measuring plate (J 46071 or 402 589 00 21 00), as installed.
8. Install the cylinder head. Refer to section 1.2.2.

https://truckmanualshub.com/

1.4 EGR CYLINDER HEAD AND BLOCK

There are several minor changes in the cylinder liner, block and engine lifter brackets between the MBE 4000 EGR engine and the non-EGR engine.

1.4.1 EGR Cylinder Head Installation

Be aware of the following notice when installing the cylinder head on an EGR engine:

NOTICE:
Be sure the carbon scraper ring is seated in the groove on the top part of the cylinder liner before installing a new cylinder head gasket and the cylinder head, otherwise component damage can result. See Figure 1-29.

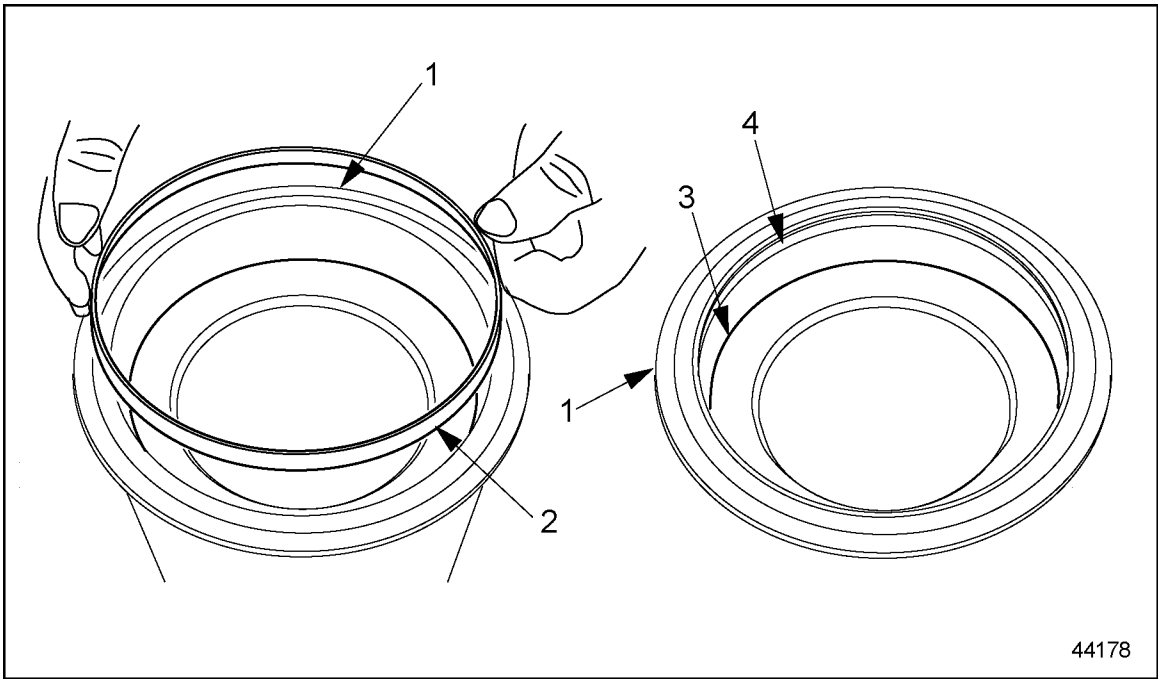

1. Cylinder Liner
2. Carbon Scraper Ring
3. Installed Piston
4. Carbon Scraper Ring located in groove in cylinder liner

Figure 1-29 Installed Carbon Scraper Ring

NOTE:
All remaining installation procedures for the cylinder head are identical to a non-EGR engine.

All information subject to change without notice.
6SE412 0403 Copyright © 2004 DETROIT DIESEL CORPORATION

1.4.2 Cylinder Head Changes

There is also drilling in the head to attach the new EGR cooler support bracket. There is hardening at block division face of cylinder head also. See Figure 1-30.

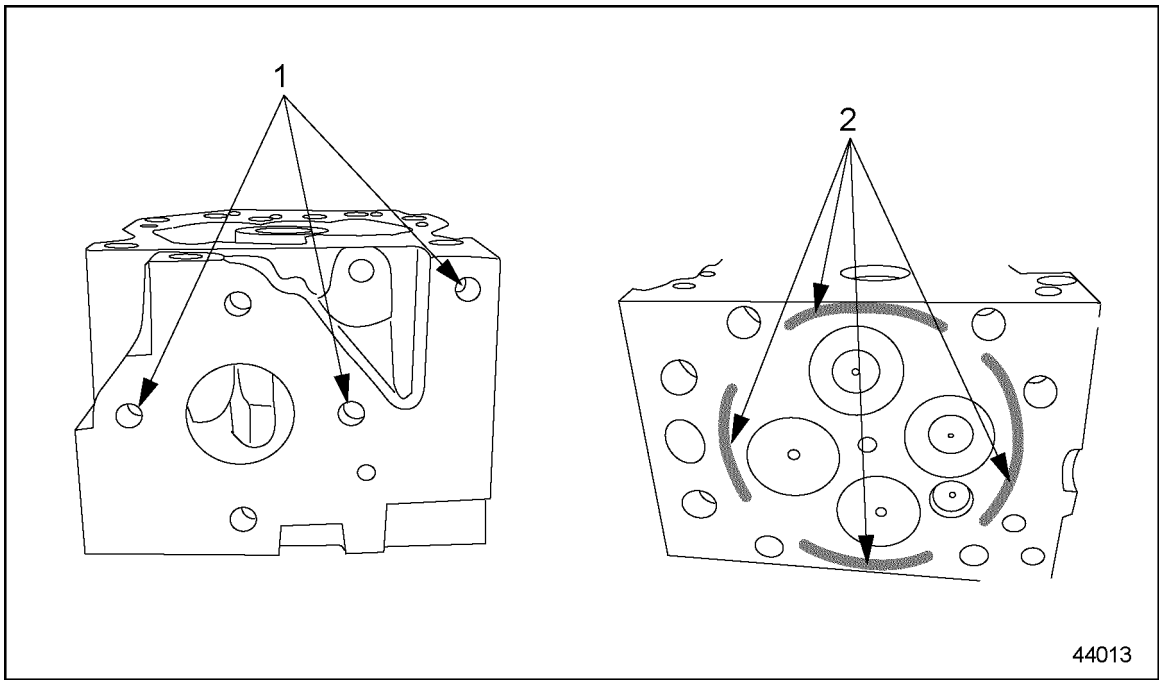

1. Drilling to attach the EGR Cooler Support Bracket
2. Hardening at Block Division Face

Figure 1-30 EGR Cylinder Head Changes

1.4.3 Cylinder Liner Changes

One difference between the non-EGR cylinder liner to the EGR model is a groove on the top part of the cylinder liner, which houses the carbon scraper ring. See Figure 1-29. The carbon scraper ring for the EGR engine is in the area previously hardened in the non-EGR cylinder liner. Its purpose is to inhibit coke formation.

 Copyright © 2004 DETROIT DIESEL CORPORATION

https://truckmanualshub.com/

1.4.4 Cylinder Block Changes

The cylinder block has two additional openings machined in the block. There is now an opening near the air compressor housing and an opening flange for attaching the coolant inlet pipe going to the EGR cooler.See Figure 1-31.

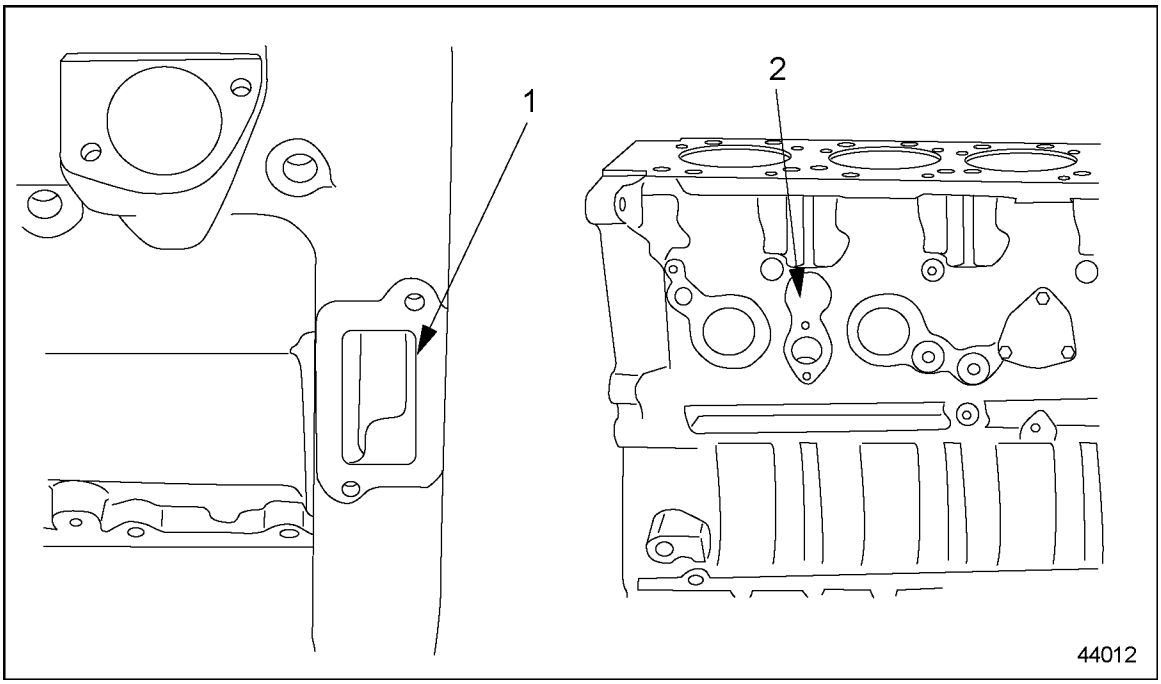

1. Opening near the air compressor housing
2. Flange for attaching coolant inlet pipe

Figure 1-31 EGR Cylinder Block Changes

All information subject to change without notice.
6SE412 0403 Copyright © 2004 DETROIT DIESEL CORPORATION

https://truckmanualshub.com/

1.5 EGR FRONT AND REAR LIFTER BRACKETS

The front lifter bracket on the non-EGR engine was moulded into the coolant pump. The EGR engine has separate front and rear lifter brackets.

NOTICE:
A spreader bar *must* be used at all times in conjunction with the front and rear lifter brackets to lift the EGR engine to ensure that no engine damage will result. The brackets are designed to lift vertically.

1.5.1 Removal of Front and Rear Lifter Brackets

Perform the following steps to remove the front and rear lifter brackets:

1. Remove the four M10 x 25 mm mounting bolts from the front lifter bracket and remove the bracket. See Figure 1-32.

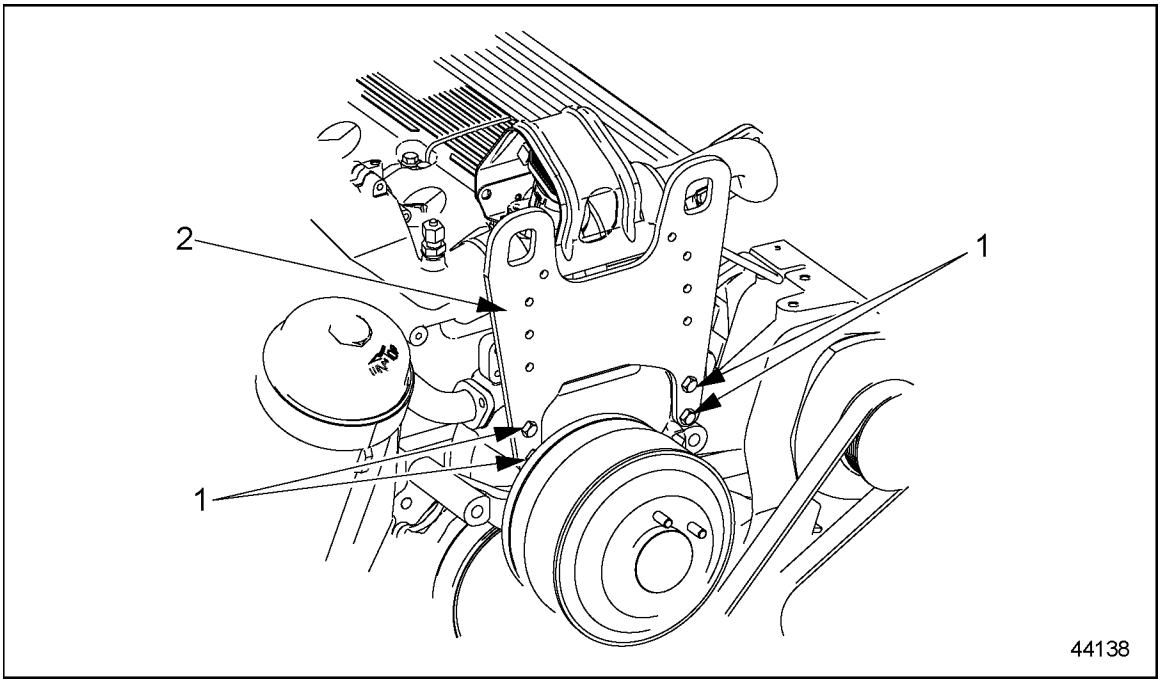

1. Front Lifter Bracket Mounting Bolts
2. Front Lifter Bracket

Figure 1-32 Removal / Installation of Front Lifter Bracket

 Copyright © 2004 DETROIT DIESEL CORPORATION

https://truckmanualshub.com/

2. Remove the two bolts from the rear lifter bracket. See Figure 1-33.

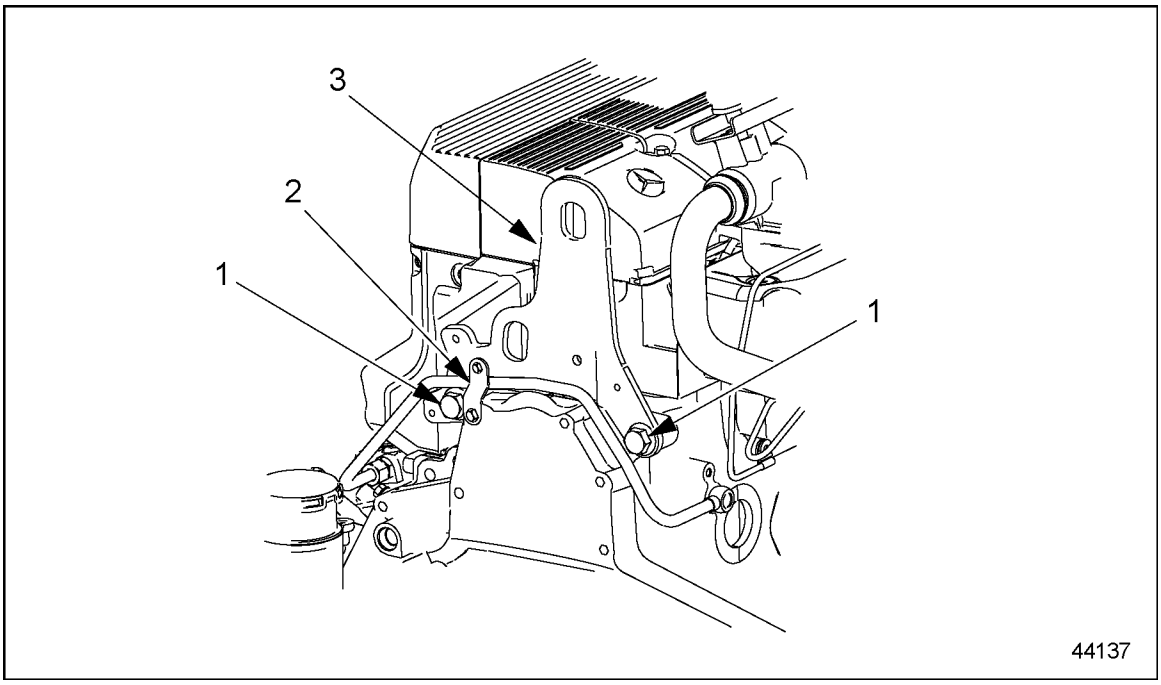

1. Rear Lifter Bracket Mounting Bolts
2. Vent Line Bracket
3. Rear Lifter Bracket

Figure 1-33 Removal / Installation of Rear Lifter Bracket

3. Remove the vent line bracket.
4. Remove the rear lifter bracket.

1.5.2 Installation of Front and Rear Lifter Brackets

Perform the following steps to install the front and rear lifter brackets:

1. Install the front lifter bracket using the four M10 x 25 mm mounting bolts. See Figure 1-32.
2. Torque the four bolts to 60 N·m (44 lb·ft).
3. Install the rear lifter bracket using two mounting bolts. See Figure 1-33.
4. Torque the two bolts to 200 N·m (147.5 lb·ft).

All information subject to change without notice.
6SE412 0403 Copyright © 2004 DETROIT DIESEL CORPORATION

https://truckmanualshub.com/

1.6 ENGINE BRAKE

Engine braking is controlled by a pneumatically-operated exhaust brake on the turbocharger in conjunction with constant-throttle valves on the cylinder head. The exhaust back-pressure is used by the exhaust brake to increase braking performance. The constant-throttle valves use the air that escapes through them on the compression stroke to provide braking force.

The constant throttles are small valves which are built into the cylinder heads and positioned opposite the exhaust valves. When open, a link is created between the combustion chamber and the exhaust port. When the engine brake is switched on, the constant-throttle valves are opened by pneumatic pressure.

NOTE:
When in emergency running mode (constant rpm), the engine brake can be activated only when the engine is in overrun. When constant rpm has been attained, the engine brake is automatically turned off.

For greater braking power, an optional turbo brake is available.

1.6.1 Constant-Throttle Valve Removal

Remove the constant-throttle valve as follows:

1. Remove the cylinder head. Refer to section 1.2.1.
2. Remove the injector nozzle. Refer to section 2.4.1.

 Copyright © 2004 DETROIT DIESEL CORPORATION

https://truckmanualshub.com/

3. From the top of the cylinder head, remove the end cover on the constant-throttle valve. See Figure 1-34.

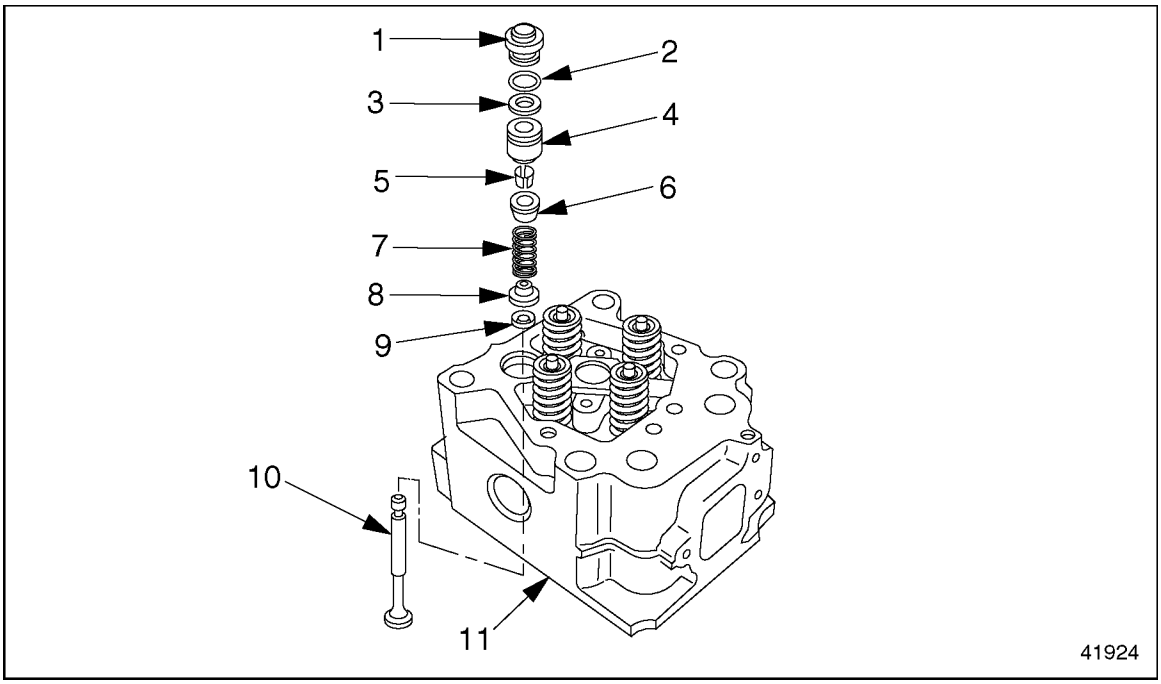

1. End Cover
2. O-ring
3. Piston Seal
4. Piston
5. Collets
6. Spring Retainer
7. Spring
8. Spring Guide
9. Valve Stem Seal
10. Valve
11. Cylinder Head

Figure 1-34 Constant-Throttle Valve (exploded view)

NOTE:
Insert a spacer beneath the valve head to prevent the valve from opening while doing the rest of the removal procedures. See Figure 1-35.

All information subject to change without notice.
6SE412 0403 Copyright © 2004 DETROIT DIESEL CORPORATION

4. From the bottom of the cylinder head, insert a suitable spacer about 6.0 mm (1/4 inch) in height. See Figure 1-35.

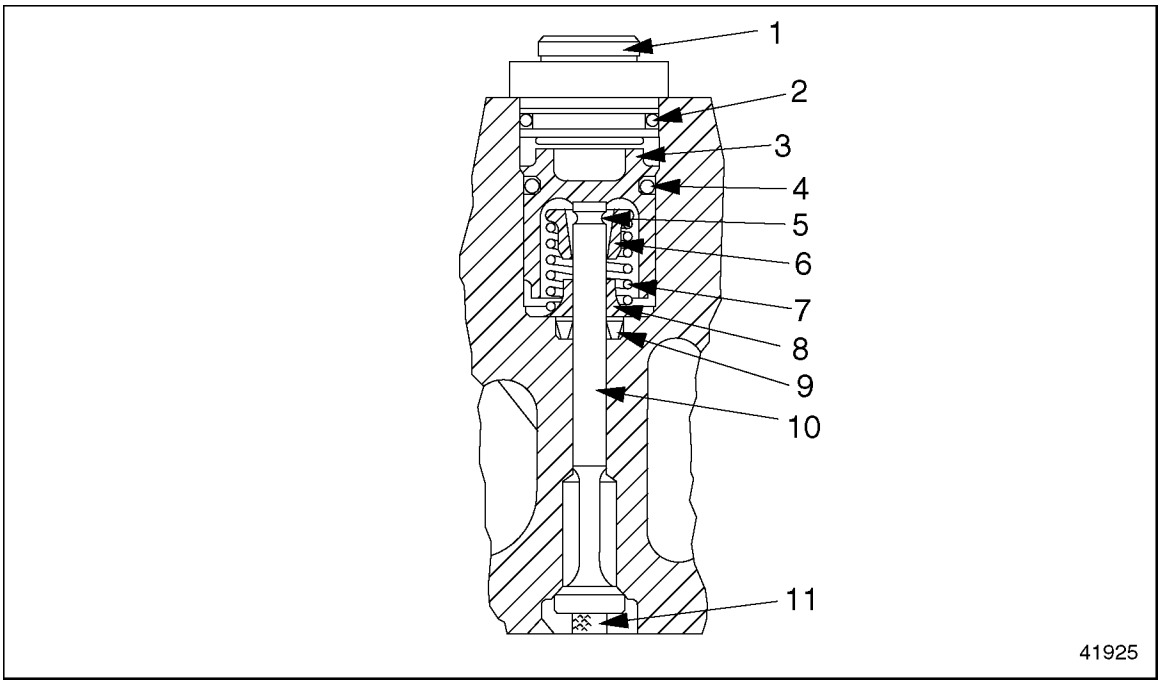

1. End Cover
2. O-ring
3. Piston
4. Piston Seal
5. Collets
6. Spring Retainer
7. Spring
8. Spring Guide
9. Valve Stem Seal
10. Valve
11. Spacer

Figure 1-35 Constant-Throttle Valve (cutaway view, with spacer installed)

 Copyright © 2004 DETROIT DIESEL CORPORATION

https://truckmanualshub.com/

5. Using needle-nose pliers, remove the piston. Pull the piston and piston seal out of the valve bore. See Figure 1-36.

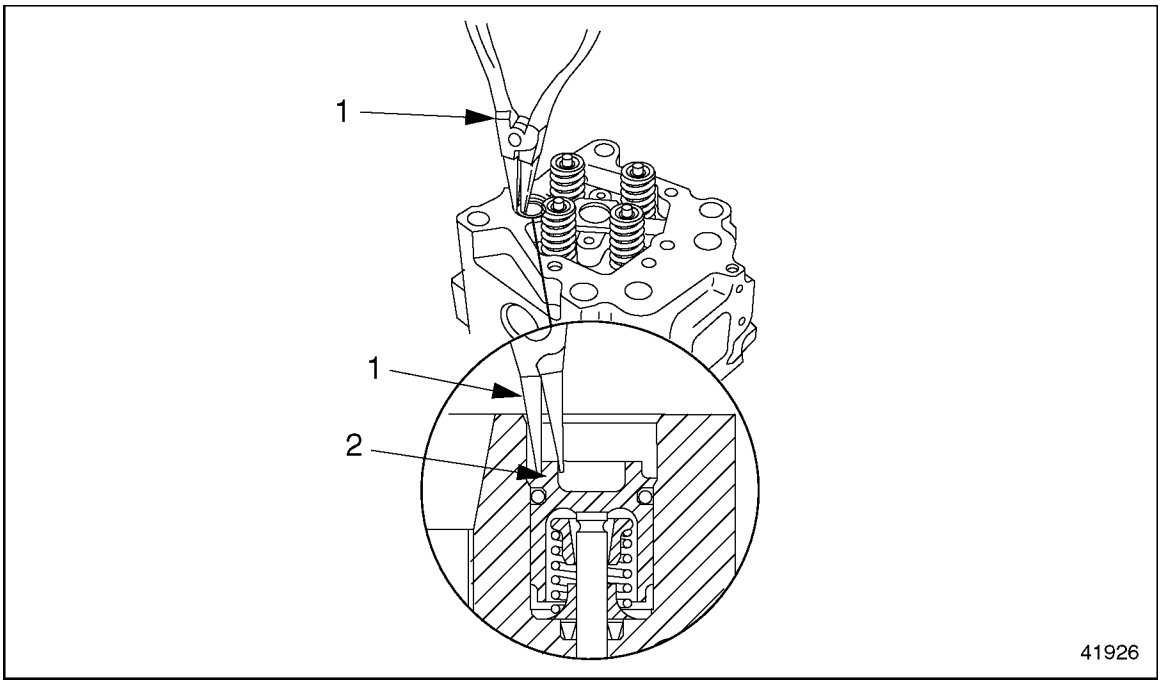

1. Needle-Nose Pliers
2. Piston

Figure 1-36 Removing the Piston

6. Inspect the piston and piston seal for damage and signs of wear. If necessary, replace the piston and piston seal.

All information subject to change without notice.
6SE412 0403 Copyright © 2004 DETROIT DIESEL CORPORATION

7. Insert the constant-throttle valve (CTV) spring remover (442 589 05 63 00)down onto the spring retainer. Remove the collets with a magnetic pin. See Figure 1-37.

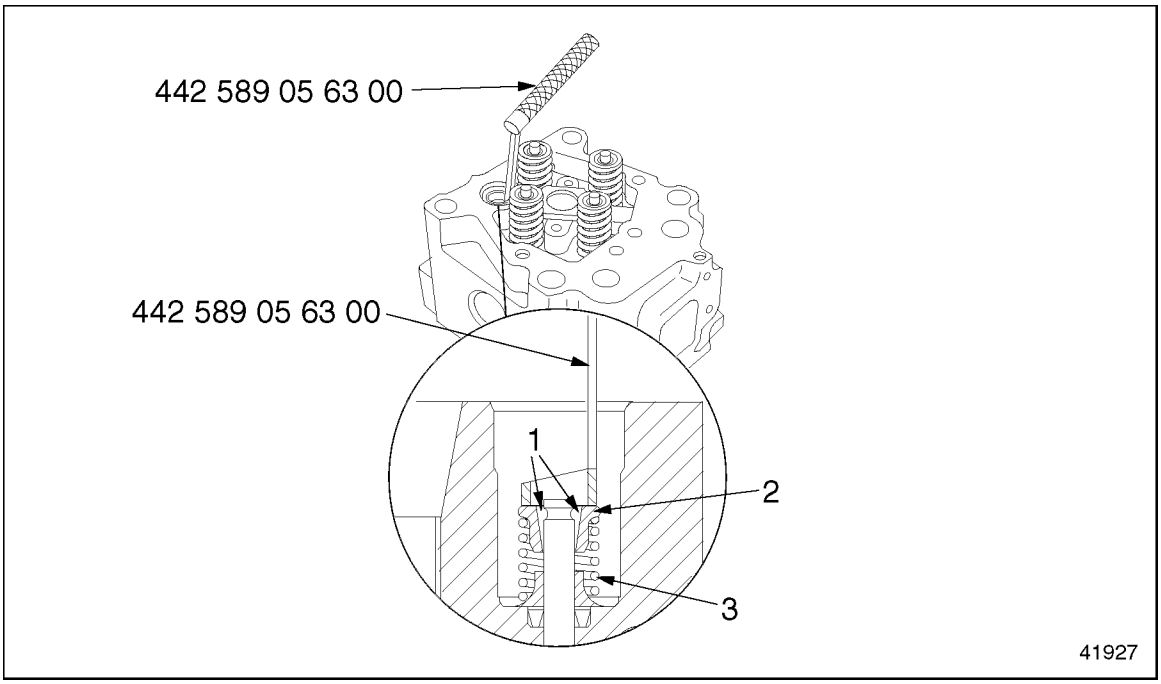

1. Collets
2. Spring Retainer
3. Spring

Figure 1-37 Compressing the Spring

8. Relieve the pressure on the spring. Remove the spring retainer, spring and spring guide. For ease of installation, mark the spring retainer and spring guide with a paint pen.
9. Turn over the cylinder head. From the bottom of the cylinder head, draw out the valve and spacer. For ease of installation, mark the valve with a paint pen.
10. Using a small hook, remove and discard the valve stem seal.

NOTE:
Always replace the valve stem seal whenever the constant-throttle valve is removed.

11. Repeat this procedure for each constant-throttle valve.

 Copyright © 2004 DETROIT DIESEL CORPORATION

https://truckmanualshub.com/

1.6.2 Constant-Throttle Valve Installation

Install the constant-throttle valve as follows:

1. Lubricate the valve stem with a light coating of clean engine oil. From the bottom of the cylinder head, push the valve, as marked on removal, into the valve bore. See Figure 1-34.

NOTE:
Insert a spacer beneath the valve head to prevent the valve from opening while installing the valve spring and piston.

2. Insert a suitable spacer about 6.0 mm (1/4 inch) in height. See Figure 1-35.
3. Install a new seal on the valve stem.
   [a] With the fingers, press the seal onto the valve stem past the indentation that houses the collets when the valve is installed.
   [b] Insert the spring guide over the end of the valve stem and push down until the spring guide bottoms out.
4. From the top of the cylinder head, fit the spring and spring retainer, as marked on removal, onto the valve stem.
5. Push the spring down with the CTV spring remover and insert the collets into the spring retainer. Push until they lock into place.
6. Install the piston and seal, as removed. Be careful not to damage the seal on installation. See Figure 1-36.
7. From the bottom of the cylinder head, remove the spacer.
8. From the top of the cylinder head, install a new O-ring on the end cover.
9. Install the end cover.
10. Install the injector nozzle. Refer to section 2.4.2.
11. Install the cylinder head. Refer to section 1.2.1.
12. Repeat this procedure for each constant-throttle valve.

All information subject to change without notice.
6SE412 0403 Copyright © 2004 DETROIT DIESEL CORPORATION

https://truckmanualshub.com/

1.7 FRONT RADIAL SEAL

Two Kent-Moore tools are required for this procedure:

- ☐ Front Seal Puller (904 589 00 33 00)
- ☐ Front Seal Installer (J 45391 or 457 589 01 15 00)

1.7.1 Front Radial Seal Removal

Remove the front radial seal as follows:

1. Park the vehicle on a level spot, set the parking brakes, and chock the tires.

⚠ WARNING:
PERSONAL INJURY
To avoid injury before starting and running the engine, ensure the vehicle is parked on a level surface, parking brake is set, and the wheels are blocked.

2. Tilt the hood.
3. From underneath the front of the engine, remove the bumper beam. Push the support angle bracket fairing down to create an opening in the bumper.
4. Remove the three drive belts. Refer to section 8.1.1.
5. Remove the vibration damper from the engine through the opening in the bumper. Refer to section 1.11.1.
6. Check the seal for wear at the places where it contacts the crankshaft.

NOTE:
When drilling holes for screws, make sure to coat the drill bit with grease to catch the shavings.

 Copyright © 2004 DETROIT DIESEL CORPORATION

https://truckmanualshub.com/

7. Using sheet metal screws and the front seal puller, remove the front radial seal from the front cover housing. See Figure 1-38.

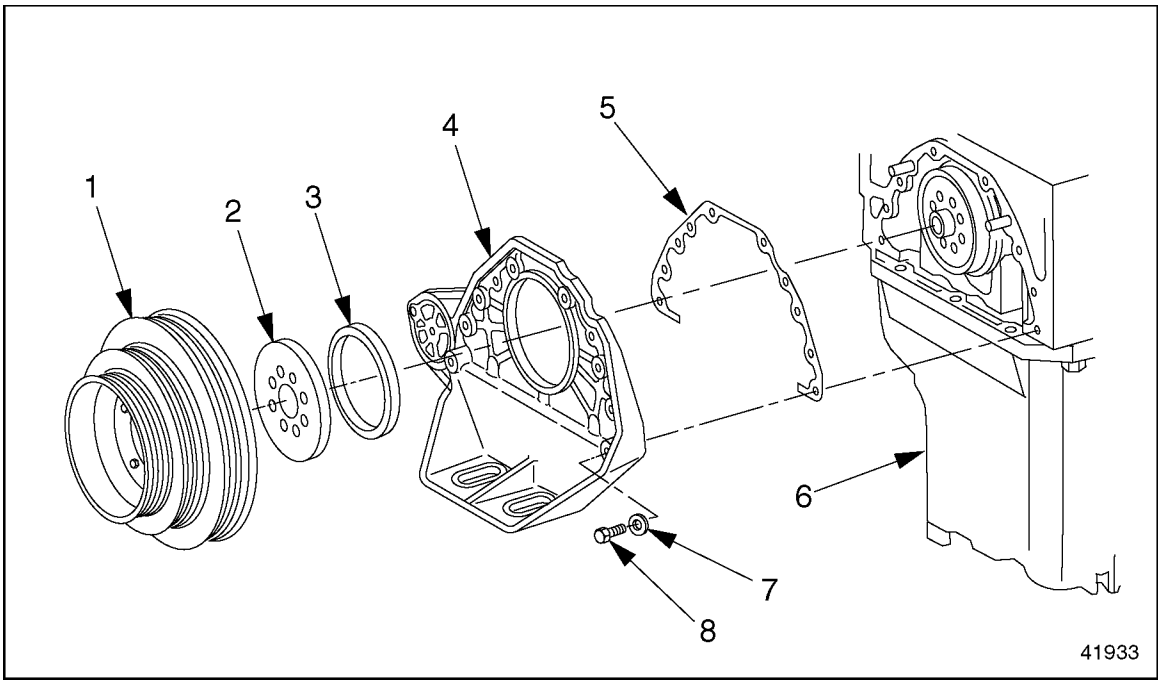

1. Vibration Damper
2. Oil Deflector
3. Front Radial Seal
4. Front Cover Housing
5. Cover Housing Gasket
6. Oil Pan
7. Washer
8. Housing Mounting Bolt

Figure 1-38 Front Radial Seal Location

1.7.2 Front Radial Seal Installation

Install the front radial seal as follows:

1. Clean the sealing surfaces on the cover and the cylinder block.
2. Slide the seal over the center guide. Place the guide on the front of the crankshaft. Fit the front seal installer (J 45391 or 457 589 01 15 00) over the seal and tap it into the front cover housing until it bottoms. Make sure the inside edge of the radial seal is flush with the machined surface of the cover.
3. Install the oil deflector on the front cover housing.
4. Install the vibration damper on the crankshaft. Tighten the vibration damper mounting bolts 200 N·m (148 lb·ft). Refer to section 1.11.2.
5. Install the three drive belts. Refer to section 8.1.1.
6. Install the support angle bracket fairing. Install the bumper beam.

All information subject to change without notice.
6SE412 0403 Copyright © 2004 DETROIT DIESEL CORPORATION

WARNING:

PERSONAL INJURY

Diesel engine exhaust and some of its constituents are known to the State of California to cause cancer, birth defects, and other reproductive harm.

- ☐ **Always start and operate an engine in a well ventilated area.**
- ☐ **If operating an engine in an enclosed area, vent the exhaust to the outside.**
- ☐ **Do not modify or tamper with the exhaust system or emission control system.**

7. Check the engine oil pressure at idle. Engine oil pressure at idle should be at least 50 kPa (7 psi).
8. Close the hood, and remove the chocks from the tires.

 Copyright © 2004 DETROIT DIESEL CORPORATION

https://truckmanualshub.com/

1.8 REAR RADIAL SEAL

A Kent-Moore tool, the Rear Seal Installer and Receptacle (J 45393 or 457 589 02 15 00) is required for this procedure.

1.8.1 Rear Radial Seal Removal

Remove the rear radial seal as follows:

1. Remove the flywheel. Refer to section 1.12.1. See Figure 1-39.

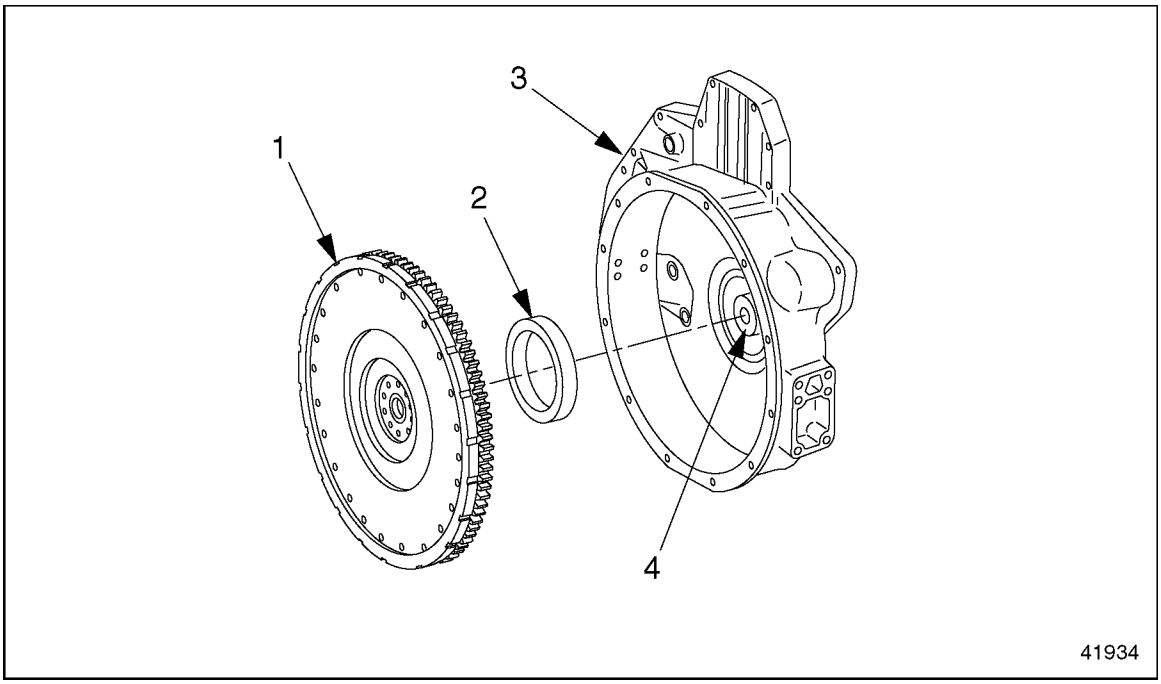

1. Flywheel
2. Rear Radial Seal
3. Flywheel Housing
4. End of Crankshaft

Figure 1-39 Rear Radial Seal Location

All information subject to change without notice.
6SE412 0403 Copyright © 2004 DETROIT DIESEL CORPORATION

2. Protect the crankshaft with a rag, then using a screwdriver, press out the radial seal. See Figure 1-40.

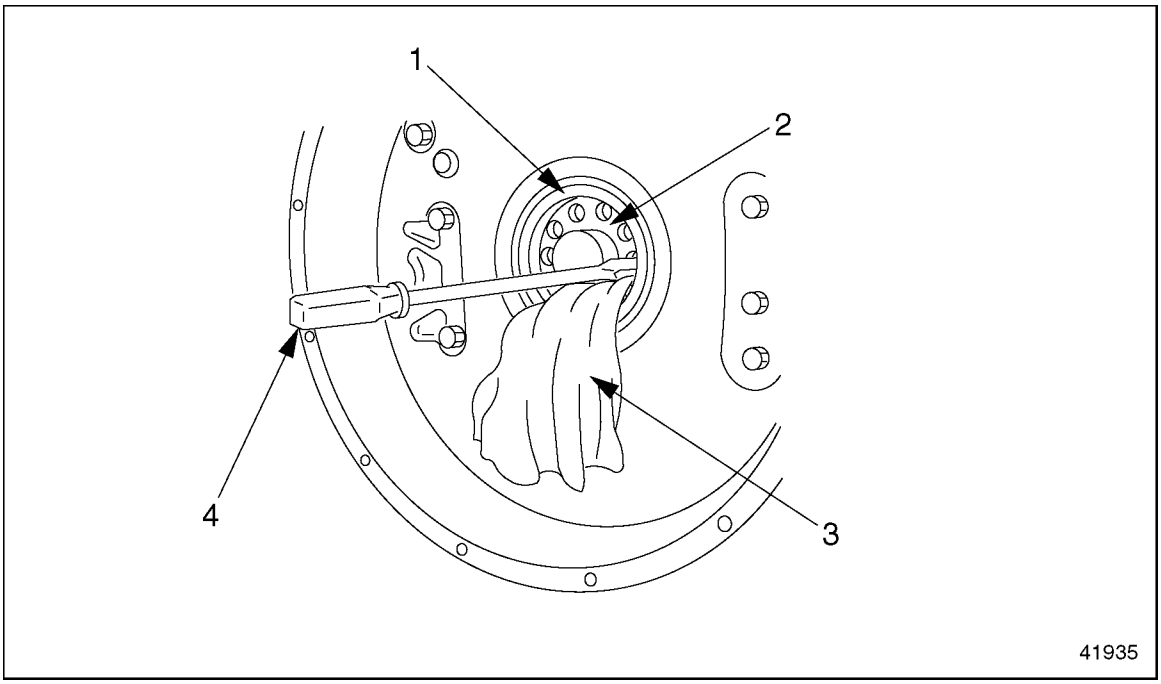

1. Rear Radial Seal
2. End of Crankshaft
3. Heavy Cloth
4. Screwdriver

Figure 1-40 Removing the Rear Radial Seal

1.8.2 Rear Radial Seal Installation

Install the rear radial seal as follows:

NOTE:
The radial seal does not need to be lubricated.

1. Inspect the contact surface of the flywheel for damage and wear. If it is scored or worn, replace it.
2. Place the receptacle,(J 45393 or 457 589 02 15 00), on the end of the crankshaft. Put the new radial seal in place on the rear seal installer, (J 45393 or 457 589 02 15 00).

 Copyright © 2004 DETROIT DIESEL CORPORATION

https://truckmanualshub.com/

Position the rear seal installer on the receptacle, and press the seal in until it bottoms out. See Figure 1-41.

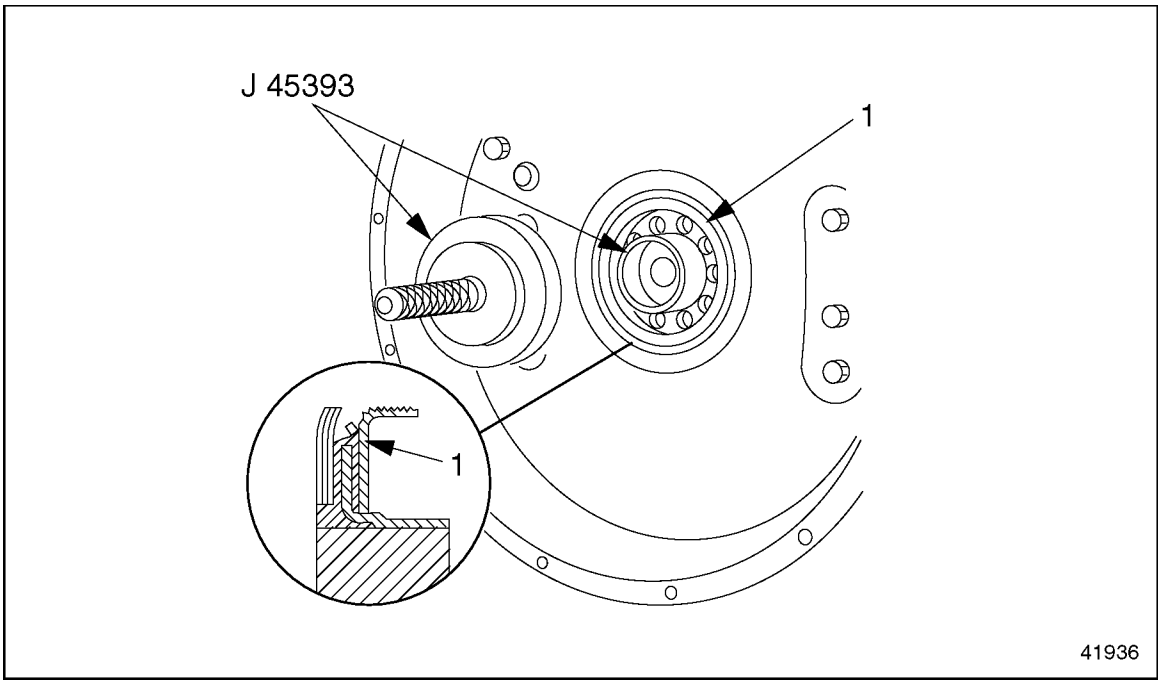

1. Rear Radial Seal

Figure 1-41 Installing the Rear Radial Seal

3. Check the sealing lip on the radial seal to make sure it is positioned correctly.
4. Install the flywheel. Refer to section 1.12.2.

All information subject to change without notice.
6SE412 0403 Copyright © 2004 DETROIT DIESEL CORPORATION

1.9 CRANKSHAFT ASSEMBLY

The crankshaft is precision-forged with seven main bearings and eight custom-forged counter weights, and a vibration damper at the front end. For an exploded view of the crankshaft, main bearings, and main bearing caps, see Figure 1-42.

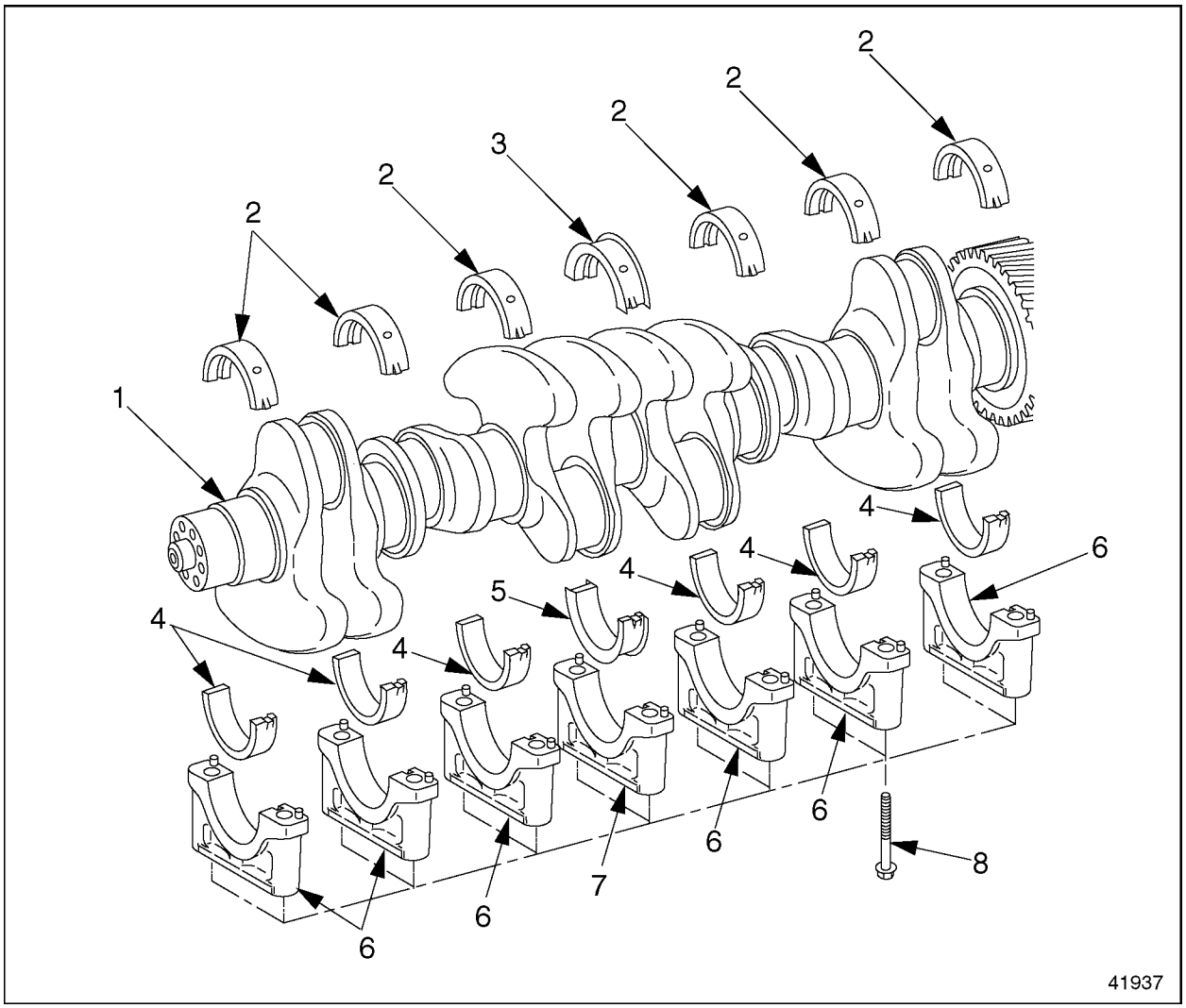

1. Crankshaft
2. Upper Bearing Shell(s)
3. Upper Bearing Shell (center)
4. Lower Bearing Shell(s)
5. Lower Bearing Shell (center)
6. Main Bearing Cap(s)
7. Main Bearing Cap (center)
8. Main Bearing Cap Bolt

Figure 1-42 Crankshaft, Main Bearings, and Main Bearing Caps

 Copyright © 2004 DETROIT DIESEL CORPORATION

https://truckmanualshub.com/

1.9.1 Crankshaft Removal

Remove the crankshaft as follows:

1. Remove the engine.

DANGER:

FALLING ENGINE

To avoid injury from a falling engine, an adequate lifting device with a spreader bar and sling should be used to lift the engine. The sling and spreader bar should be adjusted so the lifting hooks are vertical to prevent bending the lifter brackets. To ensure proper weight distribution, all provided lifter brackets must be used.

WARNING:

FALLING ENGINE

To avoid injury from a falling engine, ensure the engine is securely attached to the engine overhaul stand before releasing the lifting sling.

2. Mount the engine on an engine stand.
3. Remove the cylinder heads. Refer to section 1.2.1.
4. Remove the oil pan and oil pump. Refer to section 3.1.1. Refer to section 3.4.1.
5. Remove the flywheel and flywheel housing. Refer to section 1.12.1.
6. Remove the front cover housing. Refer to section 1.10.1.
7. Remove the pistons. Refer to section 1.17.1.

All information subject to change without notice.
6SE412 0403 Copyright © 2004 DETROIT DIESEL CORPORATION

8. Turn the crankshaft until the marked gear teeth on the camshaft gear line up with the marked tooth on the crankshaft gear. See Figure 1-43.

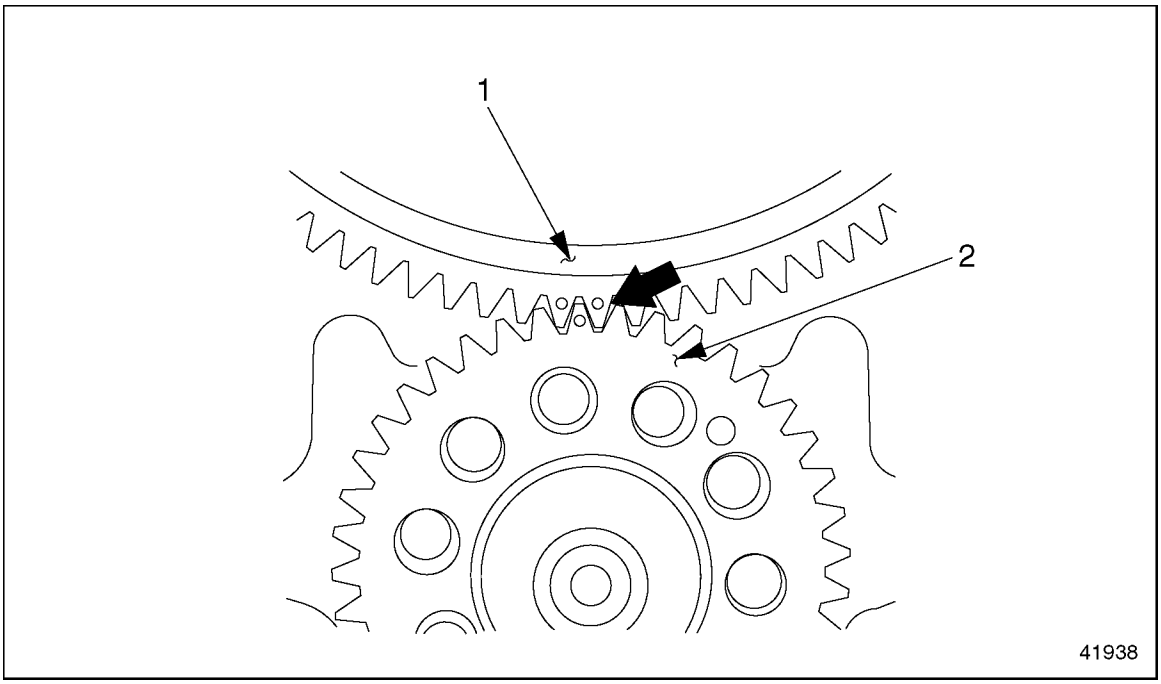

1. Camshaft Gear
2. Crankshaft Gear

Figure 1-43 Aligning the Marked Gear Teeth

9. Remove the crankshaft gear from the crankshaft. Refer to section 1.9.3.

https://truckmanualshub.com/

10. Mark the order of the main bearing caps, then remove the main bearing-cap bolts. See Figure 1-44.

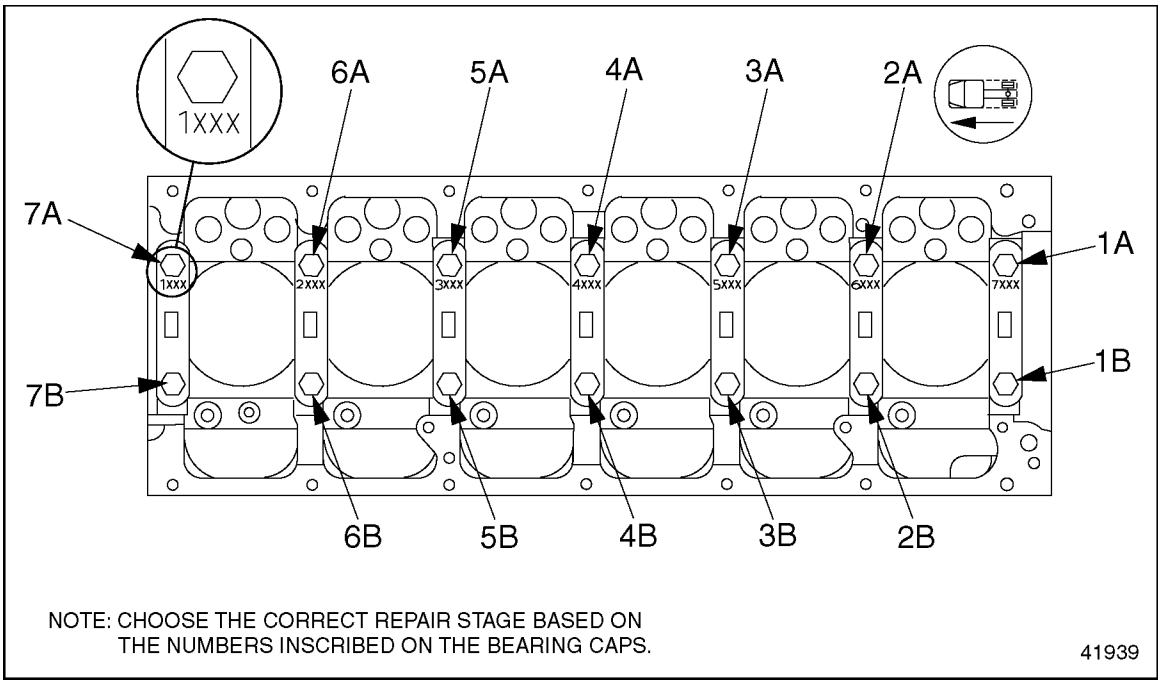

Figure 1-44 Removal Order, Main Bearing Cap Bolts

11. Loosen the main bearing caps with a plastic hammer, if necessary. Remove the main bearing caps.

All information subject to change without notice.
6SE412 0403 Copyright © 2004 DETROIT DIESEL CORPORATION

DANGER:

FALLING COMPONENT

To avoid injury from a falling component, ensure a proper lifting device is used.

12. Attach a suitable hoist to the crankshaft, using flexible straps to hold the crankshaft without bending or scratching it. Then lift the crankshaft out of the block. See Figure 1-45.

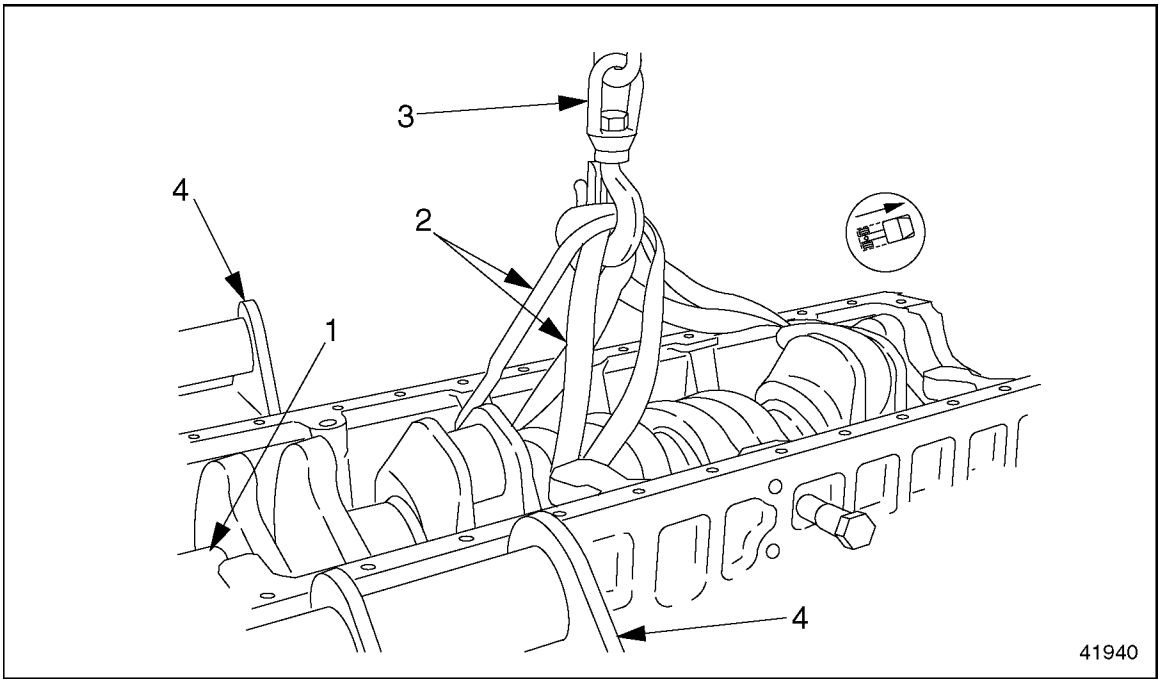

1. Crankshaft
2. Flexible Straps
3. Hoisting Chain
4. Engine Stand

Figure 1-45 Attaching the Hoist

 Copyright © 2004 DETROIT DIESEL CORPORATION

https://truckmanualshub.com/

13. Lift the crankshaft out of the cylinder block. Make sure the crankshaft doesn't twist from side to side. See Figure 1-46.

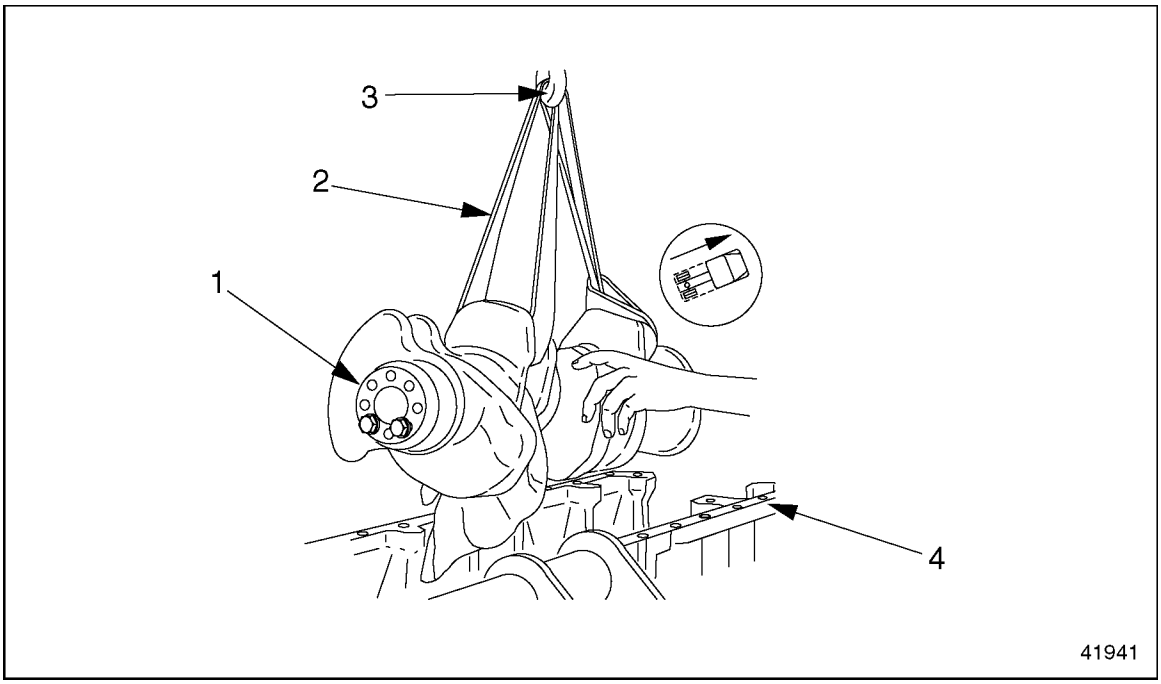

1. Crankshaft
2. Flexible Straps
3. Hook of Hoisting Chain
4. Cylinder Block

Figure 1-46 Lifting the Crankshaft

[a] Lower the crankshaft gently onto a flat surface covered with clean cardboard.

[b] Remove the hoist.

14. Mark each upper bearing shell and its corresponding race before removing the bearing shells from the crankcase.
15. Check all parts for wear or damage. Measure the various crankshaft specifications. Refer to section 1.9.2.3.

1.9.2 Crankshaft Installation

Install the crankshaft as follows:

1. Clean the crankshaft oil passages with a wire brush and blow compressed air through the passages. Clean the crankshaft, bearings, and bearing seats with a chamois.
2. Lubricate the bearing surfaces with a light coating of clean engine oil.

All information subject to change without notice.
6SE412 0403 Copyright © 2004 DETROIT DIESEL CORPORATION

3. Install the upper bearing shells into the block, in the same order as they were removed. Make sure the locking lugs of the bearing shells fit into the slots of the block bores. Refer to section 1.9.2.2.

NOTE:
The center bearing shell halves must be mounted in the center crankcase race and bearing cap (fourth from either end).

4. Install the lower bearing shells into the main bearing caps, in the same order as they were removed. Make sure the locking lugs are fully seated in the grooves of the bearing caps. Refer to section 1.9.2.2.
5. Screw a crankshaft and flywheel guide stud into each end of the crankshaft.

DANGER:

FALLING COMPONENT

To avoid injury from a falling component, ensure a proper lifting device is used.

6. Using a suitable hoist, lower the crankshaft into the block.
7. As you set the crankshaft into the block, use the guide studs to maneuver the crankshaft into position to align the crankshaft gear with the camshaft gear. Fit the marked gear tooth on the crankshaft gear between the two marked teeth on the camshaft gear. See Figure 1-43.
8. Install all the main bearing caps (including the center bearing cap), with their bearing shells, on the crankcase journals, as removed. See Figure 1-44.

NOTE:
Make sure the numbers on the bearing caps are in ascending order, starting from the front of the engine.

 Copyright © 2004 DETROIT DIESEL CORPORATION

https://truckmanualshub.com/

9. Measure the shaft length of the main bearing-cap bolts. Replace any bolts that exceed the maximum shaft length of 156.0 mm (6.14 inches). See Figure 1-47.

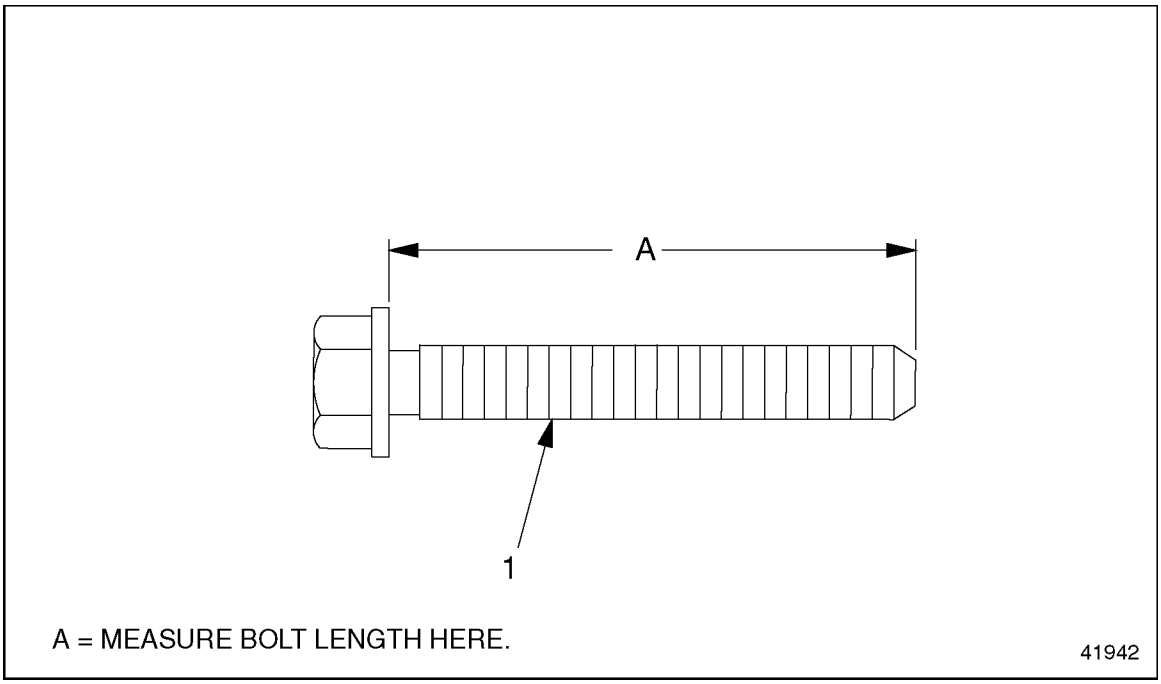

1. Main Bearing-Cap Bolt

Figure 1-47 Measuring a Main Bearing-Cap Bolt

10. Lubricate the main bearing-cap bolts with a light coating of clean engine oil. Install all the M18 x 2 main bearing-cap bolts, in the correct order, as removed. Tighten each one in four stages, listed in Table 1-12, stage by stage.

Max. Shaft Length: mm (in.)	Tightening Stage	Torque Value: N·m (lb·ft)
156.0 mm (6.14 in.)	Stage 1	100 (74)
156.0 mm (6.14 in.)	Stage 2	200 (148)
156.0 mm (6.14 in.)	Stage 3	300-330 (221-243)
156.0 mm (6.14 in.)	Stage 4	90 degrees

Table 1-12 Tightening Stages, Main Bearing-Cap Bolts

11. Measure the crankshaft end play (fore-to-aft motion) at the center bearing journal. Refer to section 1.9.2.1.
12. Install the pistons. Refer to section 1.17.2.
13. Install the oil pump and oil pan. Refer to section 3.4.3. Refer to section 3.1.2.
14. Install the flywheel and flywheel housing. Refer to section 1.12.2.
15. Install the front cover housing. Refer to section 1.10.2.

All information subject to change without notice.
6SE412 0403 Copyright © 2004 DETROIT DIESEL CORPORATION

16. Install the cylinder heads. Refer to section 1.2.2.

DANGER:

FALLING ENGINE

To avoid injury from a falling engine, an adequate lifting device with a spreader bar and sling should be used to lift the engine. The sling and spreader bar should be adjusted so the lifting hooks are vertical to prevent bending the lifter brackets. To ensure proper weight distribution, all provided lifter brackets must be used.

17. Remove the engine from the stand.
18. Install the engine.

1.9.2.1 Crankshaft Measuring and Inspection

Inspect the crankshaft as follows:

1. Remove the crankshaft. Refer to section 1.9.1.
2. Clean the crankshaft with a chamois.
3. Check the crankshaft for condition. If cracks or fissures are found, replace the crankshaft.
4. Using the hardness tester (000 589 53 21 00), test the hardness of the journals. Each journal must pass the hardness test at two thirds of its circumference. If it doesn't, either replace the crankshaft, or have it re-hardened.
   [a] Place a hard base underneath the bearing journal to be tested.

 Copyright © 2004 DETROIT DIESEL CORPORATION

https://truckmanualshub.com/

[b] Test hardness all the way around the journal circumference. Hardness must be 53 to 59 HRC as listed in Table 1-13.

Description	Specification in mm (inches)*
Main Bearing and Connecting Rod Journal Hardness (Rockwell hardness)	53 to 59 HRC
Permissible Deviation From True of Crankshaft†	0.09 (0.004)
Permissible Out-Of-Round for Main and Connecting-Rod Bearing Journals - When New reground	0.01 (0.0004)
Permissible Out-Of-Round for Main and Connecting-Rod Bearing Journals - Wear Limit	0.02 (0.0008)
Fillet Radii of Main Bearing Journals	4.2-4.5 (0.165-0.177)
Fillet Radii of Connecting Rod Bearing Journals	3.7 - 4.0 (0.146 - 0.157)
Crown of Main Bearing Journals and Connecting-Rod Journals	0.000-0.004 (0.0000-0.0002)
Main Bearing Outside Diameter (diameter of bearing shell housing	111.000-111.022 (4.3701-4.3709)
Permissible Imbalance of Crankshaft‡ -at 400 rpm	0.6 N·cm (0.05 lb·in)

* Except as otherwise noted.

†Measure with the crankshaft mounted on the outer main bearing journals.

‡With the pin for the flywheel installed, but without the flywheel, and with the crankshaft mounted on the outer bearings.

Table 1-13 Crankshaft Specifications

5. Measure the deviation from true of the crankshaft. If the deviation from true is greater than 0.09 mm (0.004 inch), regrind the crankshaft.
   [a] Support the crankshaft on a stand, held by the two external journals.
   [b] Set up a dial gauge and holder on the center journal, with some preload on the gauge.
   [c] Set the dial gauge to "0" (zero).
   [d] Turn the crankshaft through one full revolution, and check the dial gauge. If the dial gauge deviates by more than 0.09 mm (0.004 inch), regrind the crankshaft.
6. Check the crankshaft for dynamic balance. Permissible imbalance is listed in Table 1-13.
7. Using a micrometer, measure the diameters of the main journals and the connecting-rod journals. Measure in both the vertical and horizontal directions on each journal. Refer to section 1.9.2.2 for detailed procedures.
8. Comparing the two measurements taken above, check each crankshaft main and connecting-rod journal for out-of-round.

If, for any one journal, the two measurements differ by more than 0.01 mm (0.0004 inch), regrind the crankshaft.

If, for any one journal, the two measurements differ by more than 0.02 mm (0.0008 inch), replace the crankshaft. Refer to section 1.9.1.

All information subject to change without notice.
6SE412 0403 Copyright © 2004 DETROIT DIESEL CORPORATION

Listed in Table 1-14 are the permissible ranges at the various repair stages.

Size: mm (in.)	Main Bearing Journal Diameter: mm (in.)	Connecting-Rod Bearing Journal Diameter: mm (in.)
Standard	103.980-104.000 (4.0937-4.0945)	93.980-94.000 (3.7000-3.7007)
Undersize - 0.10 (0.004)	103.880-103.900 (4.0898-4.0905)	93.880-93.900 (3.6960-3.6968)
Undersize - 0.25 (0.010)	103.730-103.750 (4.0839-4.0846)	93.730-93.750 (3.6901-3.6909)
Undersize - 0.50 (0.020)	103.480-103.500 (4.0740-4.0748)	93.480-93.500 (3.6803-3.6811)
Undersize - 0.75 (0.030)	103.230-103.250 (4.0642-4.0650)	93.230-93.250 (3.6705-3.6712)
Undersize - 1.00 (0.040)	102.980-103.000 (4.0543-4.0551)	92.980-93.000 (3.6606-3.6614)

Table 1-14 Crankshaft Journal Diameters

 Copyright © 2004 DETROIT DIESEL CORPORATION

https://truckmanualshub.com/

9. Measure the width of all the main and connecting-rod journals. See Figure 1-48. Listed in Table 1-15 are the permissible ranges.

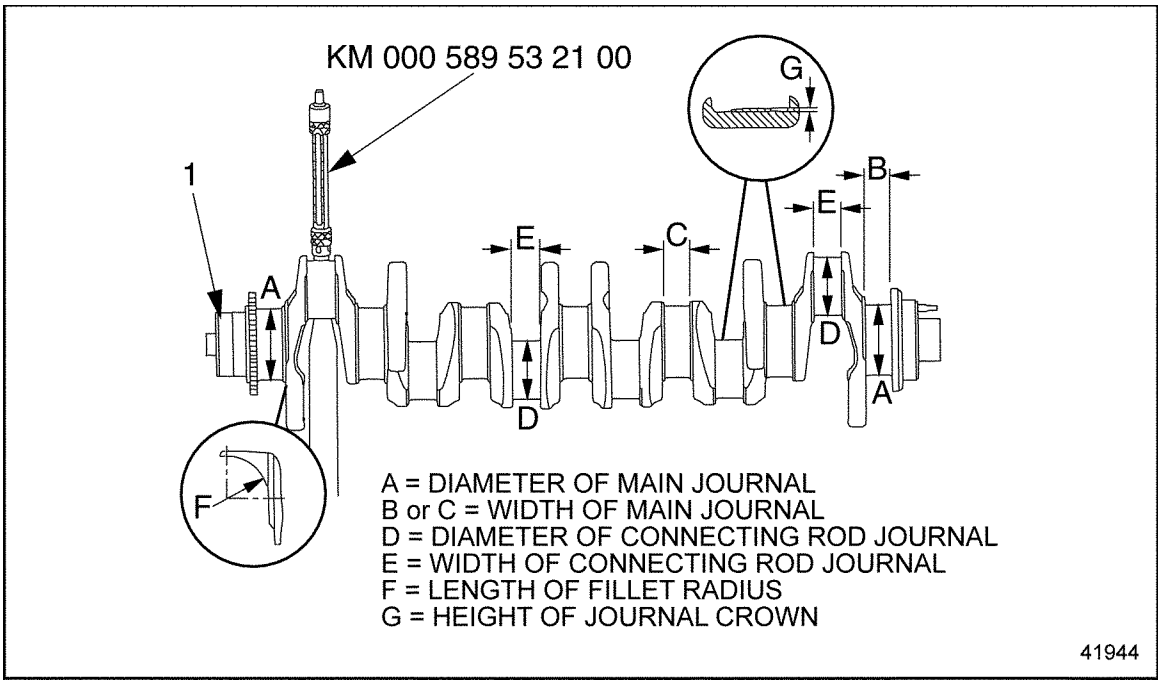

1. Crankshaft
2. Hardness Tester

Figure 1-48 Journal Measurements

Type of Journal: mm (in.)	Width in mm (in.)
Main Journal	46.000-46.250 (1.8110-1.8209)
Connecting-Rod Journal	44.5-44.6 (1.752-1.756)

Table 1-15 Bearing Journal Width

10. Check the width of the center bearing shell and journal. See Figure 1-48. Listed in Table 1-16 are the permissible ranges at the various repair stages.

Size: mm (in.)	Thrust Bearing Shell Width	Thrust Bearing Journal Width
Standard	45.74-45.81 (1.801-1.804)	46.000-46.062 (1.8110-1.8135)
Undersize - 0.50 (0.020)	46.24-46.31 (1.820-1.823)	46.500-46.562 (1.8307-1.8331)
Undersize - 1.00 (0.040)	46.74-46.81 (1.840-1.843)	47.000-47.062 (1.8504-1.8528)

Table 1-16 Bearing Shell and Bearing Journal Width

All information subject to change without notice.
6SE412 0403 Copyright © 2004 DETROIT DIESEL CORPORATION

11. Measure the fillet radius of the main journals and the connecting-rod journals as listed in Table 1-13. See Figure 1-49.

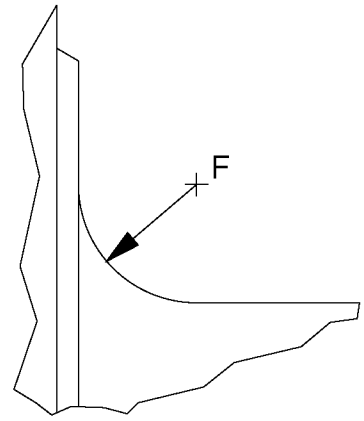

F = LENGTH OF FILLET RADIUS (ON BOTH MAIN AND CONNECTING ROD JOURNALS)

41945

Figure 1-49 Measuring the Fillet Radius

 Copyright © 2004 DETROIT DIESEL CORPORATION

https://truckmanualshub.com/

12. Measure the crown of the main journals and the connecting-rod journals as listed in Table 1-13. See Figure 1-50.

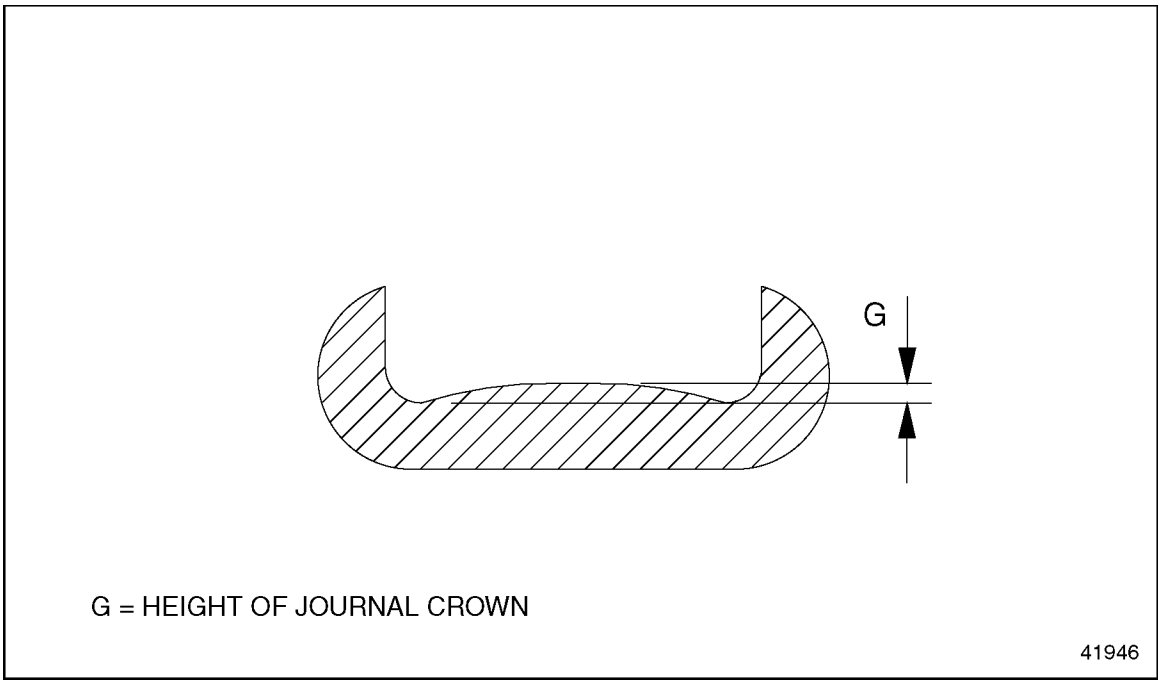

Figure 1-50 Measuring the Crown of the Journal

13. Regrind the main journals. After grinding, see Figure 1-48 for dimensions.
    [a] Check the outside diameter of each main journal.
    [b] Check the width of the center main journal.
    [c] Check the width of the remaining main journals.
    [d] Check the fillet radius of each main journal.
    [e] Check the crown of each main journal.
    [f] Check each main journal for out-of-round.
14. Regrind the connecting-rod journals. After grinding, check the following dimensions.
    [a] Check the outside diameter of each connecting-rod journal.
    [b] Check the width of the each connecting-rod journal.
    [c] Check the fillet radius of each connecting-rod journal.
    [d] Check the crown of each connecting-rod journal.
    [e] Check each connecting-rod journal for out-of-round.
15. Install the crankshaft. Refer to section 1.9.2.
    [a] When the main bearing caps have been installed, measure the radial play (radial runout) of the crankshaft. Refer to section 1.9.2.2.

All information subject to change without notice.
6SE412 0403 Copyright © 2004 DETROIT DIESEL CORPORATION

[b] With the crankshaft fully installed, measure the end play (lateral runout) of the crankshaft. Refer to section 1.9.2.3.

1.9.2.2 Crankshaft Radial Play Checking

Check the crankshaft radial play as follows:

1. Clean the bearing races in the crankcase (cylinder block) and the bearing seats in the bearing caps with a chamois.

NOTE:
The center bearing shell halves must be mounted in the center crankcase race and bearing cap (fourth from either end).

2. Install the upper bearing shell on the bearing race in the crankcase. The locking lugs of the bearing shells must fit into the slots in the crankcase races. See Figure 1-51.

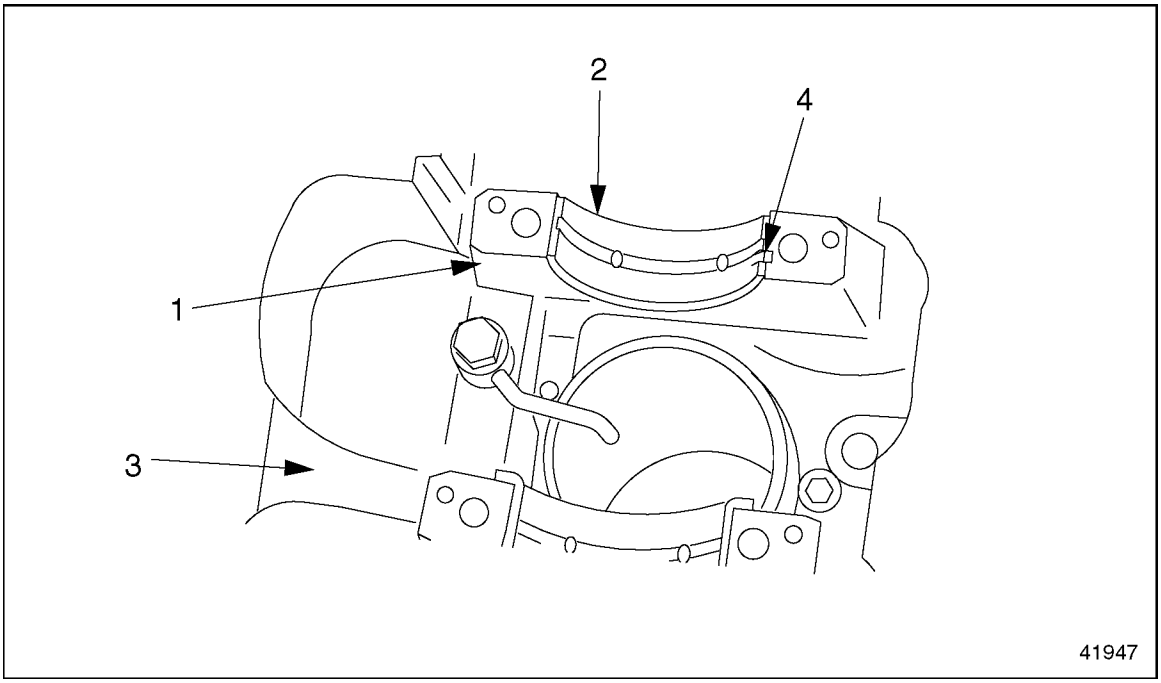

1. Crankcase Race
2. Upper Bearing Shell
3. Cylinder Block
4. Bearing Shells Locking Lug

Figure 1-51 Installing the Upper Bearing Shell

 Copyright © 2004 DETROIT DIESEL CORPORATION

https://truckmanualshub.com/

3. Install the lower bearing shell on the bearing seat in the bearing cap. The locking lugs in the bearing shells must fit into the grooves in the bearing cap. See Figure 1-52.

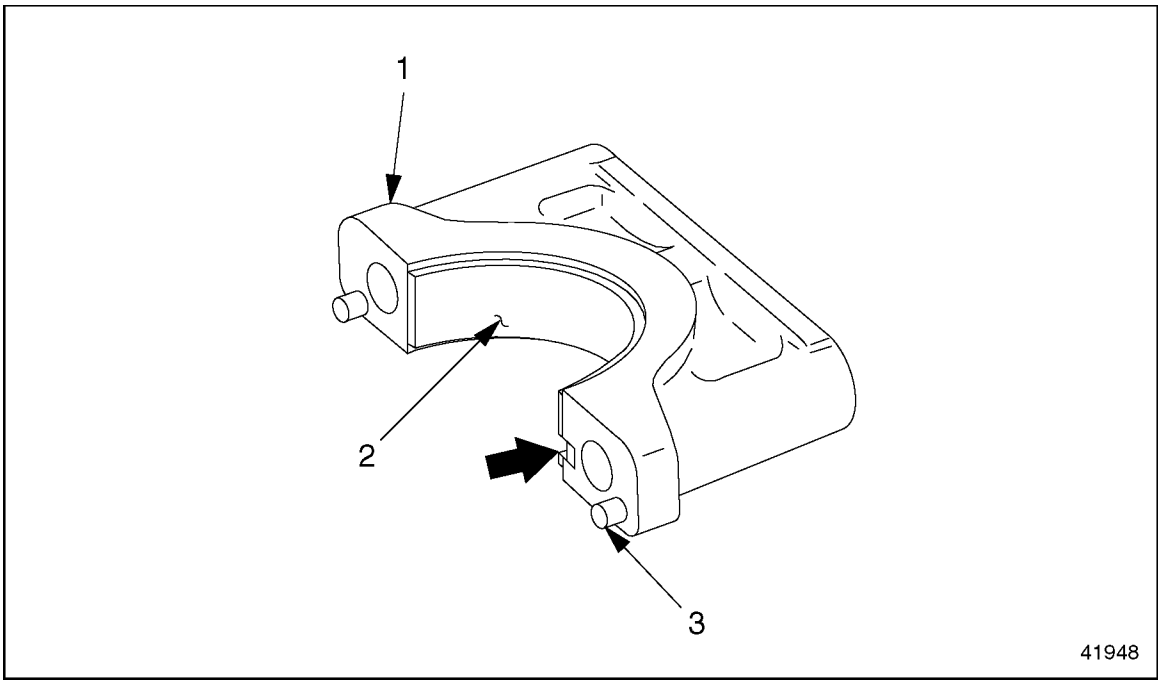

1. Main Bearing Cap
2. Lower Bearing Shell
3. Guide Pin

Figure 1-52 Installing the Lower Bearing Shell

NOTE:
The guide pins on the bearing cap ensure correct seating of the cap on the crankcase race.

All information subject to change without notice.
6SE412 0403 Copyright © 2004 DETROIT DIESEL CORPORATION

4. Install all the main bearing caps (including the center bearing cap) with their bearing shells, on the crankcase journals, pressing them in with the fingers and making sure the guide pins are correctly aligned. See Figure 1-53.

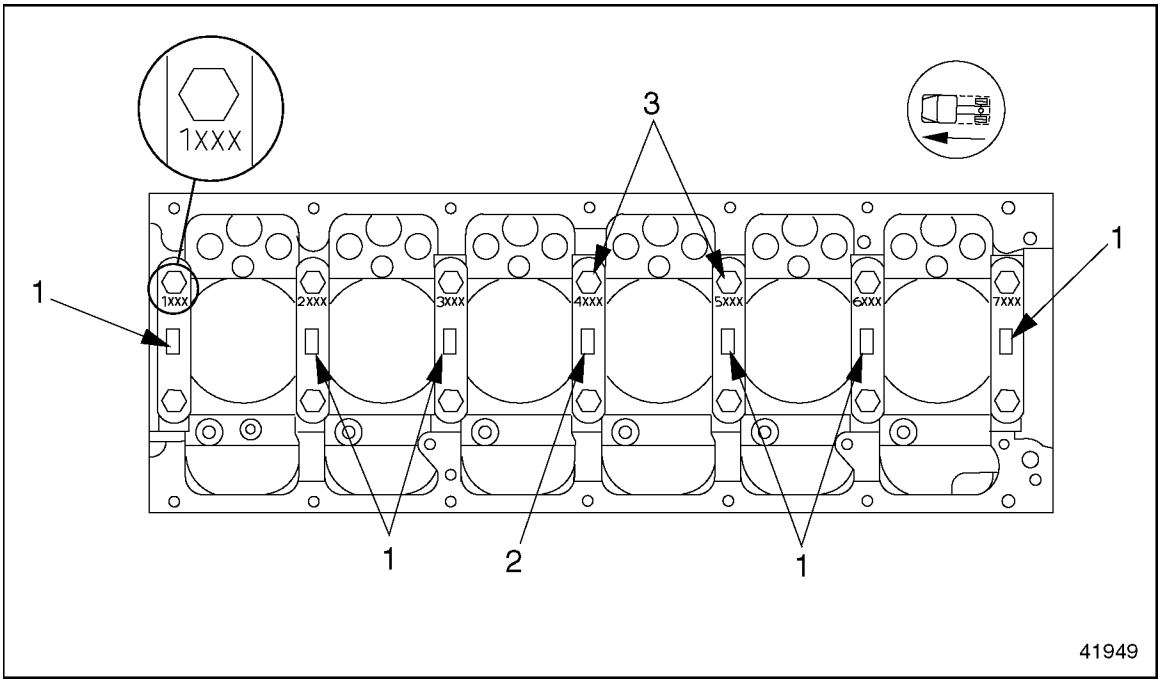

1. Main Bearing Cap(s)
2. Main Bearing Cap (center)
3. Bearing Cap Bolts (14 qty.)

Figure 1-53 Installing the Bearing Caps

NOTE:
Make sure the numbers on the bearing caps are in ascending order, starting from the front of the engine.

 Copyright © 2004 DETROIT DIESEL CORPORATION

https://truckmanualshub.com/

5. Lubricate the main bearing cap bolts with a light coating of clean engine oil. Install them on the main bearing caps. See Figure 1-54. Refer to section 1.9.2 for instructions and tightening torques.

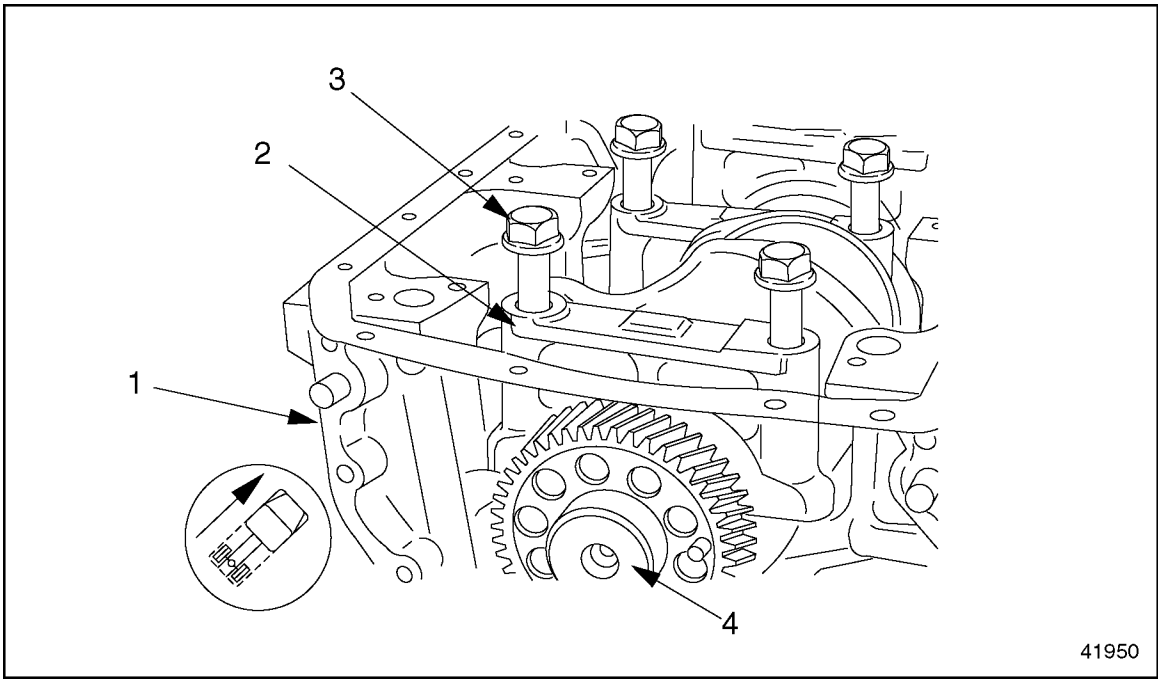

1. Cylinder Block
2. Main Bearing Cap
3. Bearing-Cap Bolt
4. Crankshaft Gear

Figure 1-54 Installing the Main Bearing Caps

6. Using a dial gauge and quick-release calipers, measure the inside diameter of each of the main bearings. See Figure 1-55.
   [a] Measure vertically from the top to the bottom of the bore. (see Figure 1-55, A.)
   [b] Measure 30 degrees counterclockwise from the separation point of the bearing shells. (see Figure 1-55, B.)

All information subject to change without notice.
6SE412 0403 Copyright © 2004 DETROIT DIESEL CORPORATION

[c] Measure 30 degrees clockwise from the separation point of the bearing shells. (see Figure 1-55, C.)

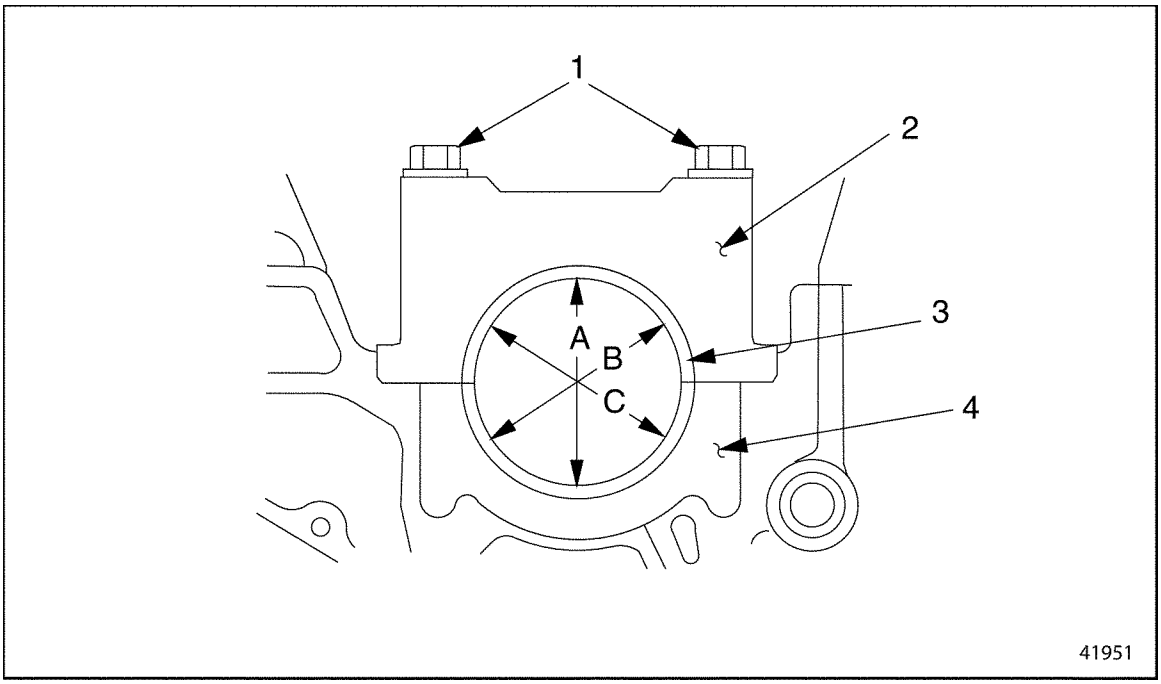

1. Bearing Cap Bolts
2. Main Bearing Cap
3. Main Bearing Shell
4. Crankcase Race

Figure 1-55 Measuring the Inside Diameter of the Main Bearing Shells

7. If any one of the readings is not within tolerances listed in Table 1-17, then replace the main bearing shells as applicable.

Size: mm (in.)	Main Bearing Inside Diameter	Main Journal Outside Diameter
Standard	104.060-104.106 (4.0968-4.0987)	103.980-104.000 (4.0937-4.0945)
Undersize - 0.10 (0.004)	103.960-104.006 (4.0929-4.0947)	103.880-103.900 (4.0898-4.0905)
Undersize - 0.25 (0.010)	103.810-103.856 (4.0870-4.0888)	103.730-103.750 (4.0839-4.0846)
Undersize - 0.50 (0.020)	103.560-103.606 (4.0772-4.0790)	103.480-103.500 (4.0740-4.0748)
Undersize - 0.75 (0.030)	103.310-103.356 (4.0673-4.0691)	103.230-103.250 (4.0642-4.0650)
Undersize - 1.00 (0.040)	103.060-103.106 (4.0575-4.0593)	102.980-103.000 (4.0543-4.0551)

Table 1-17 Bearing Shell and Bearing Journal Diameter

NOTE:
New bearing shells are supplied ready for installation. Do not machine them or remove any material from them. Refer to section 1.9.2.

 Copyright © 2004 DETROIT DIESEL CORPORATION

https://truckmanualshub.com/

8. Remove the bearing caps.

NOTE:
If the bolts are going to be used again, check their length.

9. Using a micrometer, measure the outside diameter of the main journals. See Figure 1-56.

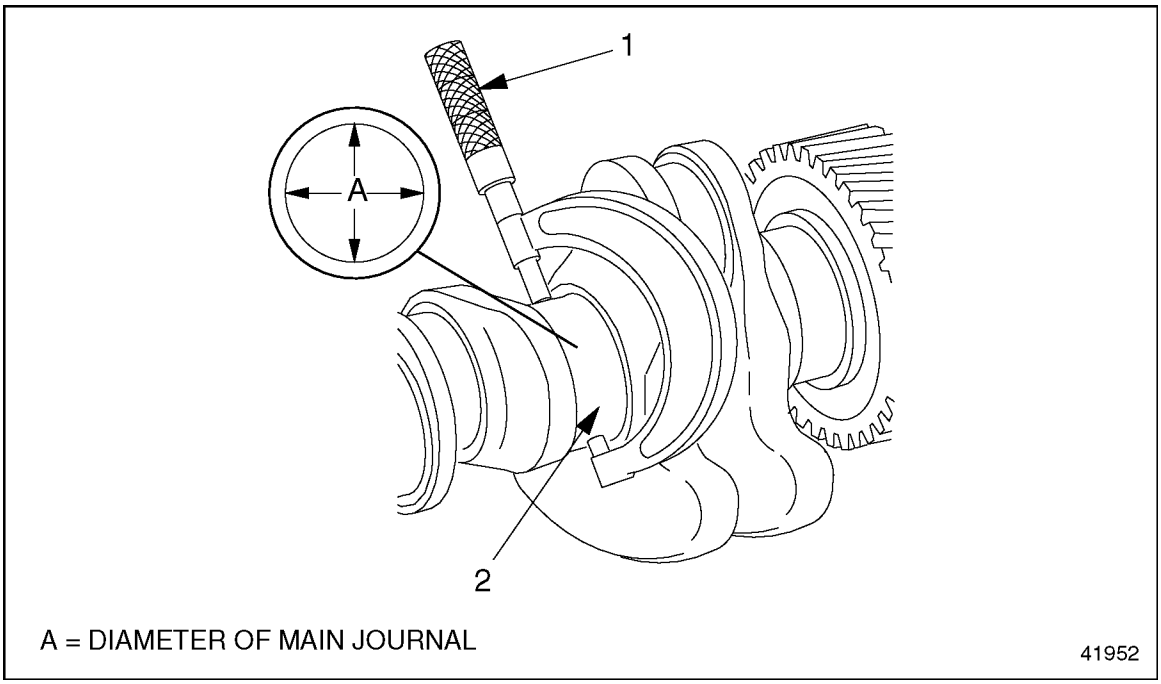

1. Micrometer
2. Main Journal

Figure 1-56 Measuring the Outside Diameter of the Main Journals

NOTE:
To obtain a correct value for crankshaft radial play, the diameters of each bearing bore and its corresponding journal must belong to the same repair stage (both must be "Standard," "Undersize - 0.004 inch," etc.).

10. Calculate the radial play (up-and-down movement) of the main bearings on the crankshaft journals.If the radial play is less than 0.060 mm (0.0024 inch), or more than 0.126 mm (0.0050 inch) as listed in Table 1-18, then replace the crankshaft.

Description	mm (inch)
Main Journal Radial Play	0.060-0.126 (0.0024-0.0050)

Table 1-18 Crankshaft Radial Play

[a] For the main bearing shell, note the inside diameter of the bearing shell. *Example:* D_s= 4.0875 inches.

All information subject to change without notice.
6SE412 0403 Copyright © 2004 DETROIT DIESEL CORPORATION

[b] For the main bearing journal, note the outside diameter of the journal. *Example:* D_j= 4.0850 inches.

[c] From the value for the bearing shell diameter, subtract the value for the journal diameter. This result is the radial play. *Example:* D_s— D_j = 0.0025 inch.

NOTE:
In the above example, both measurements belonged to repair stage "Undersize - 0.010 inch." Listed in Table 1-17is the correct repair stage for each measurement.

11. Install the crankshaft into the crankcase. Refer to section 1.9.2.
12. Install the engine.

1.9.2.3 Crankshaft End Play Checking

Check the crankshaft end play as follows:

1. Remove the crankshaft. Refer to section 1.9.1.
2. Check the width of the center main bearing journal. If damage or cracks are present, replace the crankshaft. See Figure 1-57.

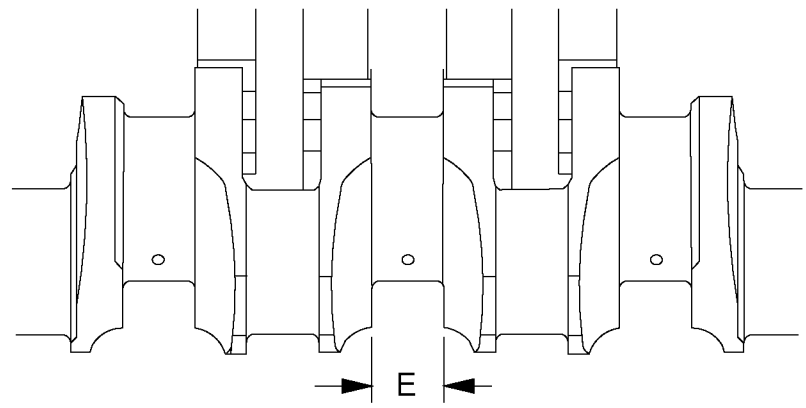

E = WIDTH OF MAIN CENTER JOURNAL

41953

Figure 1-57 Measuring the Width of the Center Journal

 Copyright © 2004 DETROIT DIESEL CORPORATION

https://truckmanualshub.com/

3. Check the width of the center main bearing shell. If damage or cracks are present, replace the crankshaft. See Figure 1-58.

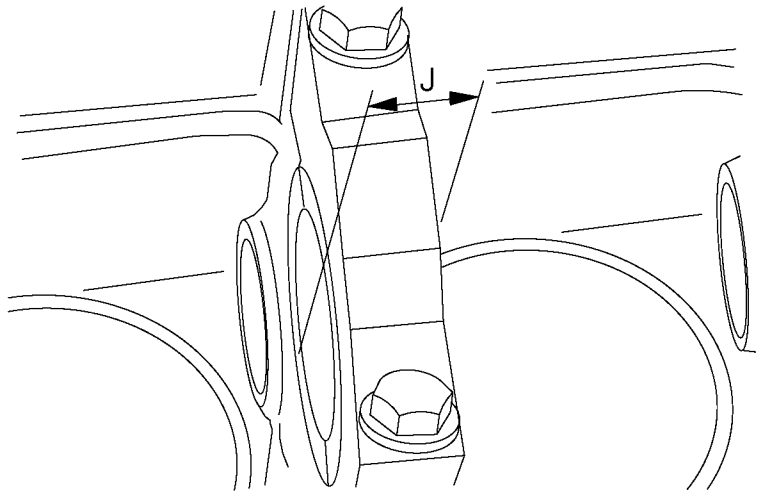

Figure 1-58 Measuring the Width of the Center Main Bearing Shell

NOTE:
To obtain a correct value for crankshaft end play, the width of each bearing shell and its corresponding journal must belong to the same repair stage (both must be "Standard," "Undersize - 0.020 inch," etc.).

4. Calculate the end play, or axial play, (fore-to-aft movement) of the crankshaft. If the end play is less than 0.190 mm (0.0074 inch), or more than 0.322 mm (0.0127 inch) as listed in Table 1-19, then replace the crankshaft.

Description	mm (inch)
End Play (Axial Play) Measured at Center Bearing Journal	0.190-0.322 (0.0074-0.0127)

Table 1-19 Crankshaft End Play

[a] For the center main bearing journal, note the width (thickness) of the bearing journal. *Example:* W_m = 1.8120 inches.

[b] For the center main bearing shell, note the width (thickness) of the bearing shell. *Example:* W_s =1.8030 inches.

All information subject to change without notice.
6SE412 0403 Copyright © 2004 DETROIT DIESEL CORPORATION

[c] From the value for the journal width, subtract the value for the bearing shell width. This result is the end play. *Example:* $W_m — W_s = 0.0090$ inch.

NOTE:
In the above example, both measurements belonged to repair stage "Standard." If necessary, listed in Table 1-20are the correct repair stages for each measurement.

Size: mm (in.)	Center Bearing Shell Width	Center Bearing Journal Width
Standard	45.74-45.81 (1.801-1.804)	46.000-46.062 (1.8110-1.8135)
Undersize - 0.020 (0.50)	46.24-46.31 (1.820-1.823)	46.500-46.562 (1.8307-1.8331)
Undersize - 1.00 (0.040)	46.74-46.81 (1.840-1.843)	47.000-47.062 (1.8504-1.8528)

Table 1-20 Bearing Shell and Bearing Journal Width

5. Install the crankshaft. Refer to section 1.9.2.
6. Using a dial gauge and holder, measure the end play of the crankshaft. Measure at the front end of the crankshaft, with the crankshaft fully installed and all the bearing caps tightened to the correct torque. See Figure 1-59.

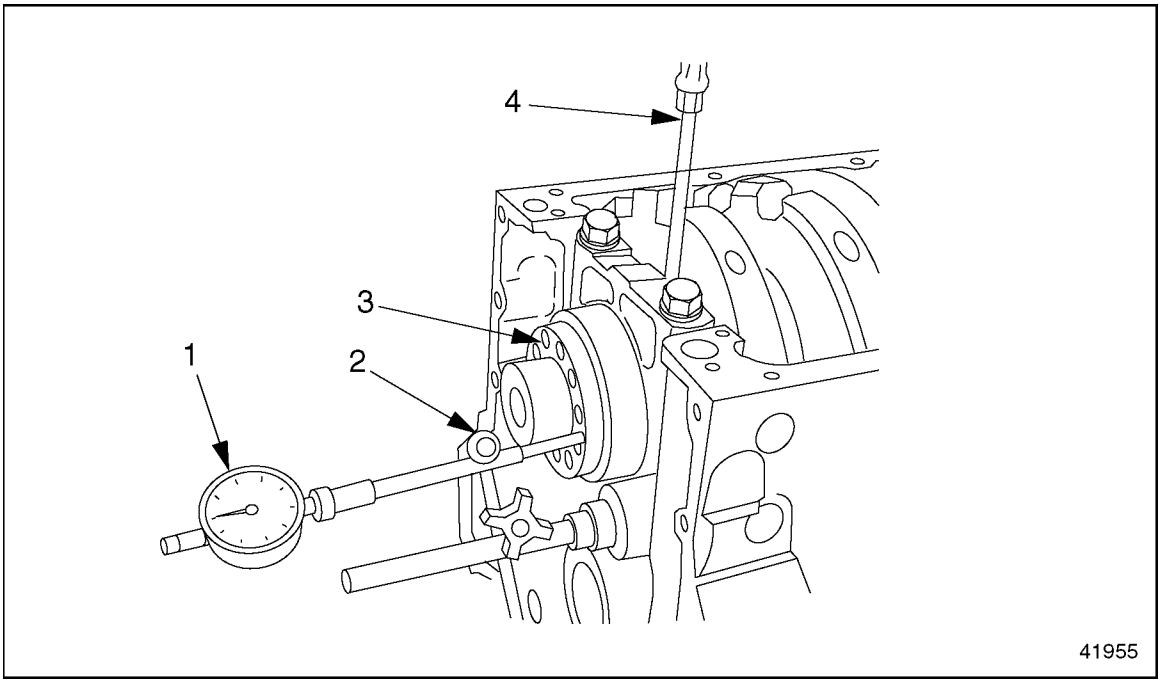

1. Dial Gauge
2. Dial Gauge Holder
3. Crankshaft
4. Screwdriver

Figure 1-59 Measuring the End Play of the Crankshaft

[a] Set up a dial gauge and a dial gauge holder on the front end of the crankshaft. Set the dial gauge to 5 mm (0.2 inch) preload.

 Copyright © 2004 DETROIT DIESEL CORPORATION

https://truckmanualshub.com/

[b] Move the crankshaft all the way forward by prying on one of the bearing caps, then reset the dial gauge to "0" (zero).

[c] Move the crankshaft all the way aft. Note the end play on the dial gauge.

[d] If the end play does not correspond to the calculated amount (in the example above: 0.0090 inch), replace the crankshaft.

7. Install the engine.

1.9.3 Crankshaft Gear Replacement

Replace the crankshaft gear as follows:

1. Remove the engine from the vehicle.
2. Remove the flywheel housing. Refer to section 1.16.1.
3. Rotate the crankshaft until the marked gear tooth on the crankshaft gear is aligned between the two similarly marked teeth on the camshaft gear.
4. Pull the crankshaft gear off the end of the crankshaft. If necessary, use a plastic hammer to loosen the gear. See Figure 1-60.

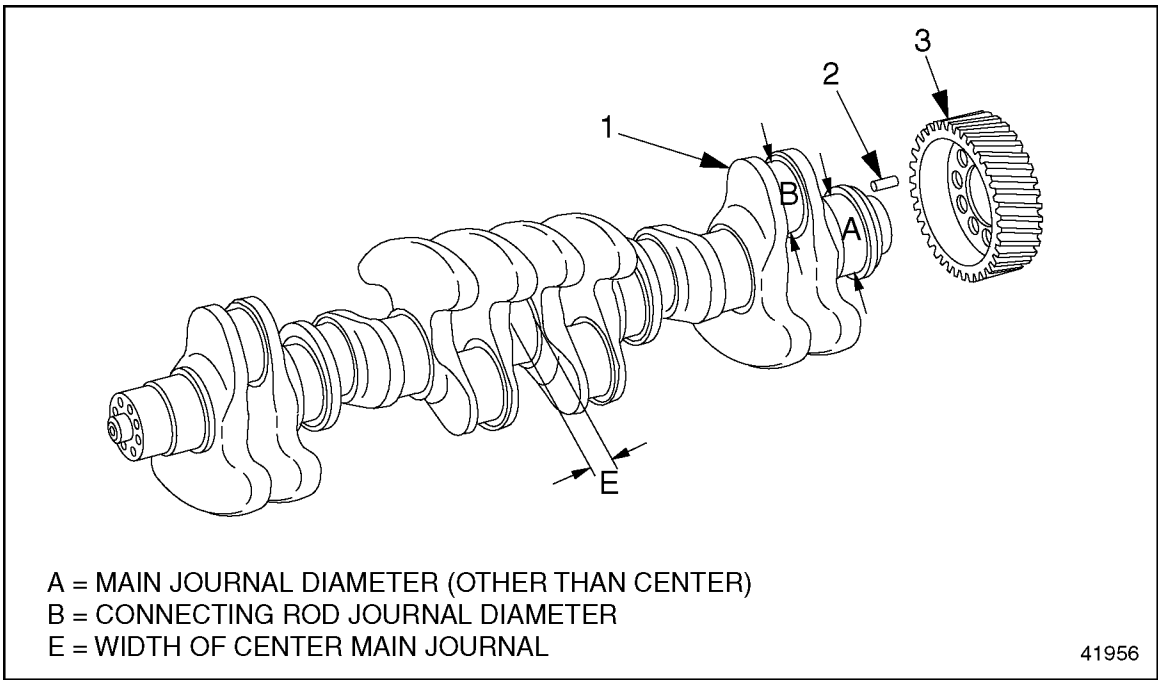

1. Crankshaft
2. Guide Pin
3. Crankshaft Gear

Figure 1-60 Removing the Crankshaft Gear

5. Remove the crankshaft from the engine. Refer to section 1.9.1.

All information subject to change without notice.
6SE412 0403 Copyright © 2004 DETROIT DIESEL CORPORATION

https://truckmanualshub.com/

6. Clean the crankcase (cylinder block and oil pan). Remove all burrs and sharp edges from the oil passage holes.
7. Press the gear onto the end of the crankshaft. Make sure the chamfer on the gear is facing outward. See Figure 1-60.
8. Install the crankshaft. Refer to section 1.9.2.
9. Install the engine.

All information subject to change without notice.
6SE412 0403 Copyright © 2004 DETROIT DIESEL CORPORATION

https://truckmanualshub.com/

1.10 FRONT COVER HOUSING

For an exploded view of the front cover housing, see Figure 1-61.

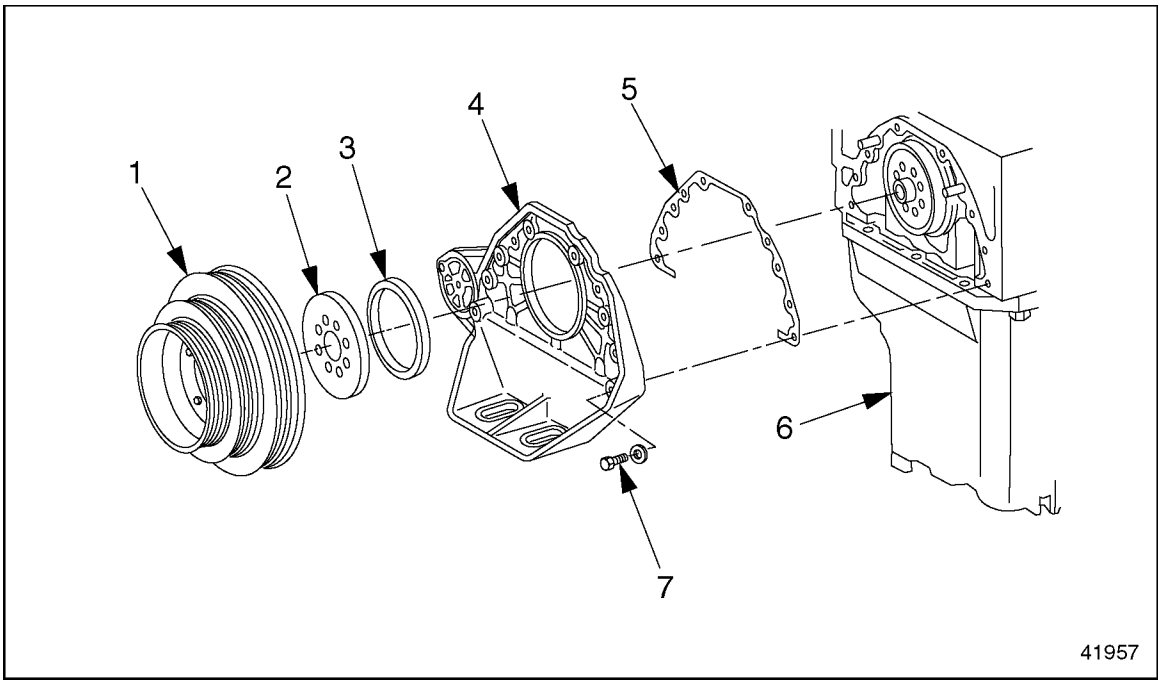

1. Vibration Damper
2. Oil Deflector
3. Front Radial Seal
4. Front Cover Housing
5. Cover Housing Gasket
6. Oil Pan
7. Housing Mounting Bolt

Figure 1-61 Front Cover Housing

1.10.1 Front Cover Housing Removal

Remove the front cover housing as follows:

1. Park the vehicle on a level spot, set the parking brakes, and chock the tires.

CAUTION:

To avoid injury before starting and running the engine, ensure the vehicle is parked on a level surface, parking brake is set, and the wheels are blocked.

2. Tilt the hood.
3. Remove the front engine mounting bolts attaching the front cover housing to the front crossmember.

All information subject to change without notice.
6SE412 0403 Copyright © 2004 DETROIT DIESEL CORPORATION

NOTICE:
To prevent damage to the oil pan, protect the pan by placing a board on the jack lifting surface.

4. Using a floor jack, lift up the oil pan.
5. Remove the three drive belts. Refer to section 8.1.1.
6. Remove the vibration damper from the engine through the opening in the bumper.
7. Remove the oil deflector from the front cover housing.
8. Remove the mounting bolts attaching the front cover housing to the block. Remove the front cover housing from the cylinder block. Remove and discard the cover housing gasket.
9. Remove the front radial seal from the front cover housing. Refer to section 1.7.1.

1.10.2 Front Cover Housing Installation

Install the front cover housing as follows:

1. Install a new gasket on the cylinder block.
2. Lubricate the seal race on the crankshaft with a light coating of engine oil.
3. Install the front cover on the cylinder block. Tighten the front cover mounting bolts 60 N·m (44 lb·ft).
4. Install the front radial seal. Refer to section 1.7.2.
5. Install the oil deflector on the front cover housing.
6. Install the vibration damper on the crankshaft. Tighten the vibration damper mounting bolts 200 N·m (148 lb·ft). Refer to section 1.11.2.
7. Install the three drive belts. Refer to section 8.1.2.
8. Lower the oil pan and remove the floor jack.
9. Install the front engine mounting bolts attaching the front cover housing to the front crossmember. Tighten the front engine mounting bolts 325 N·m (240 lb·ft).
10. Close the hood, and remove the chocks from the tires.

 Copyright © 2004 DETROIT DIESEL CORPORATION

https://truckmanualshub.com/

1.11 CRANKSHAFT VIBRATION DAMPER

A special tool, Engine Cranking Tool (J 46167 or 407 589 00 63 00) is required for this procedure.

1.11.1 Crankshaft Vibration Damper Removal

Remove the crankshaft vibration damper as follows:

1. Remove the drive belts from the alternator, coolant-pump, idler, and air-conditioner compressor pulleys, as installed. Refer to section 8.1.
2. Remove the inspection cover from the flywheel housing and install the engine cranking tool (J 46167 or 407 589 00 63 00), with the locking pin in place. Refer to section 1.15.2.
3. To gain access to the vibration damper, remove the lower mounting bolts from the bottom of the front fairing/bumper.
4. Remove the mounting bolts from the vibration damper. Drop the vibration damper down below the radiator and remove it from the engine. See Figure 1-62.

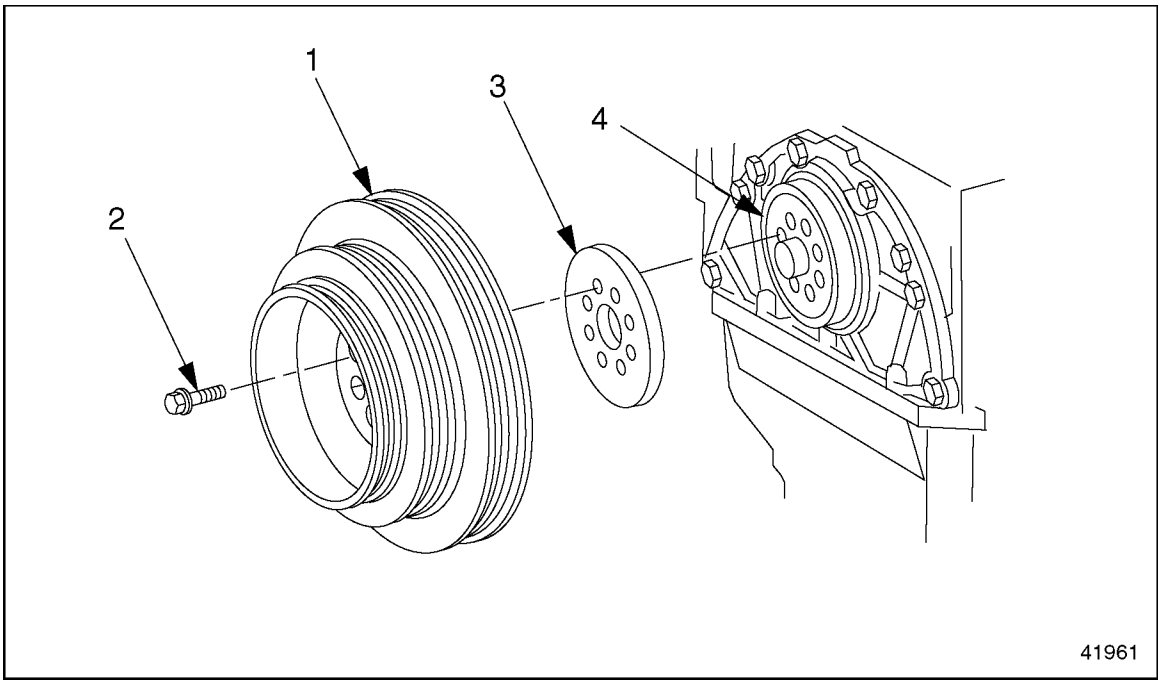

1. Vibration Damper
2. Mounting Bolt
3. Oil Deflector
4. End of Crankshaft

Figure 1-62 Vibration Damper Removal

5. Remove the oil deflector from the crankshaft.

All information subject to change without notice.
6SE412 0403 Copyright © 2004 DETROIT DIESEL CORPORATION

6. Inspect the vibration damper for signs of wear, dents, deformation, or other signs of damage. Replace the damper if the belt contact surface is worn or damaged.

NOTE:
The vibration damper has a crankshaft pulley bolted to it to accommodate two additional drive belts. It is not necessary to disassemble the vibration damper unless the crankshaft pulley is damaged and needs to be replaced.

1.11.2 Crankshaft Vibration Damper Installation

Install the crankshaft vibration damper as follows:

NOTE:
Check the crankshaft front seal for oil leaks. If leakage is found, replace the front seal. Refer to section 1.7.

1. Install the oil deflector. Make sure the rim is facing the engine.
2. Install the vibration damper on the crankshaft, as removed. Tighten the bolts 200 N·m (148 lb·ft). Use an alternating sequence until all six bolts are tight.
3. Install the lower mounting bolts on the bottom of the front fairing/bumper, as removed.
4. Remove the engine cranking tool from the flywheel housing and install the inspection cover. Tighten the inspection cover bolts 25 N·m (18 lb·ft).
5. Install the drive belts on their pulleys, as removed. Refer to section 8.1.

 Copyright © 2004 DETROIT DIESEL CORPORATION

https://truckmanualshub.com/

1.12 FLYWHEEL

Three special tools are required for this procedure. They are:

- ☐ Engine Cranking Tool (J 46167 or 407 589 00 63 00)
- ☐ 19-mm Flywheel and Main Pulley Socket (J 45390 or 422 589 02 09 00)
- ☐ Flywheel Guide Studs (set of 2) (904 589 02 63 00)

1.12.1 Flywheel Removal

Remove the flywheel as follows:

1. Remove the transmission.
2. Remove the clutch from the flywheel.
3. Remove the crank angle position sensor from the flywheel housing. See Figure 1-63. Refer to section 2.6.3.

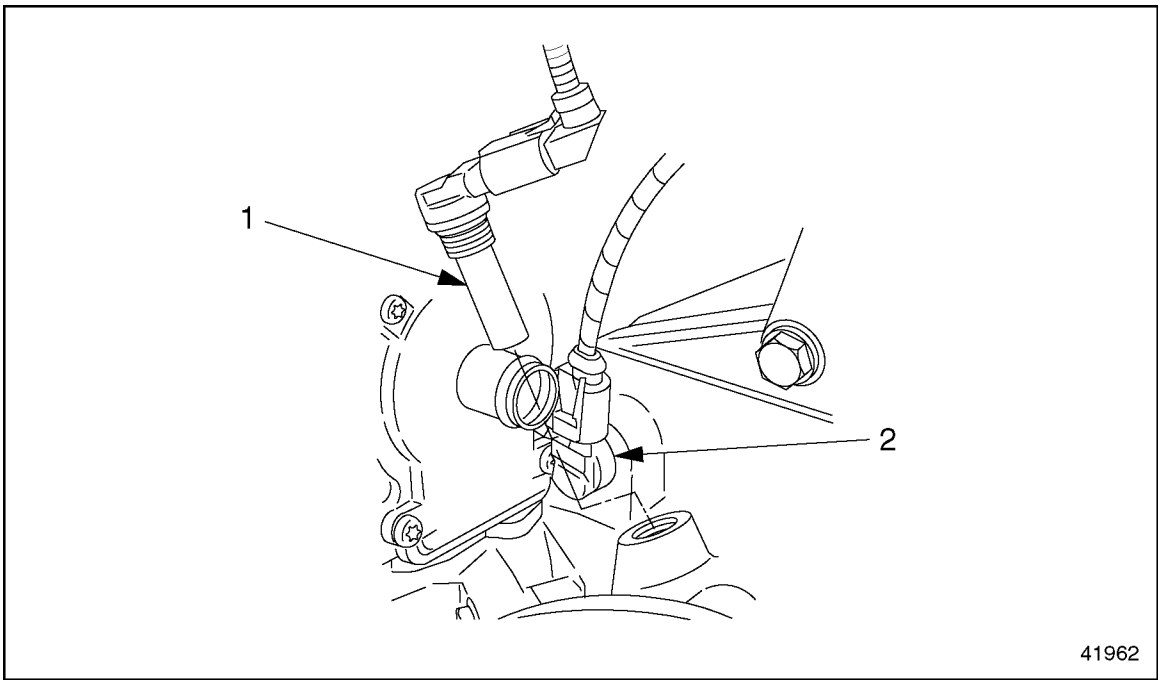

1. Crank Angle Position Sensor
2. Camshaft (TDC) Sensor

Figure 1-63 Crank Angle Position Sensor Removal

4. Remove the inspection cover from the flywheel housing and install the engine cranking tool (J 46167 or 407 589 00 63 00). Insert the pin and make sure the tool is blocked. Refer to section 1.15.2.

All information subject to change without notice.
6SE412 0403 Copyright © 2004 DETROIT DIESEL CORPORATION

5. Using the 19-mm socket (J 45390 or 422 589 02 09 00), remove two flywheel socket-head bolts from the flywheel, one from each side of the bolt circle. See Figure 1-64.

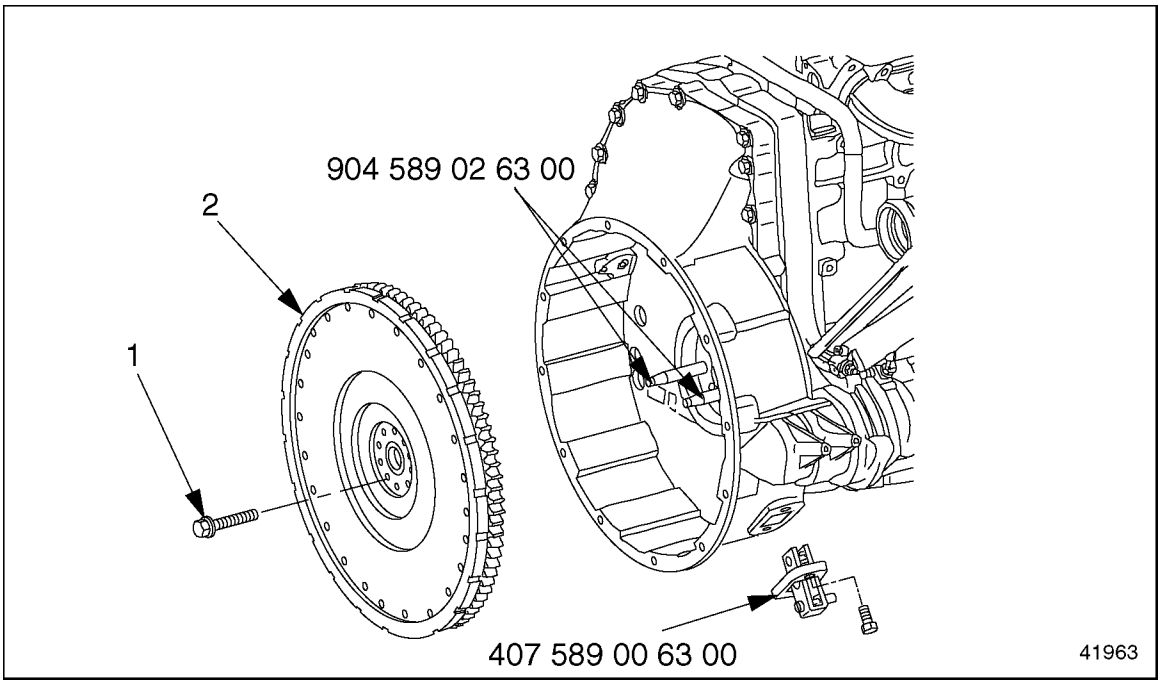

1. Flywheel Mounting Bolt (10 qty.)
2. Flywheel

Figure 1-64 Flywheel (exploded view)

 Copyright © 2004 DETROIT DIESEL CORPORATION

https://truckmanualshub.com/

6. Screw the two flywheel guide studs (904 589 02 63 00) into the empty bolt holes in the center of the flywheel. See Figure 1-65.

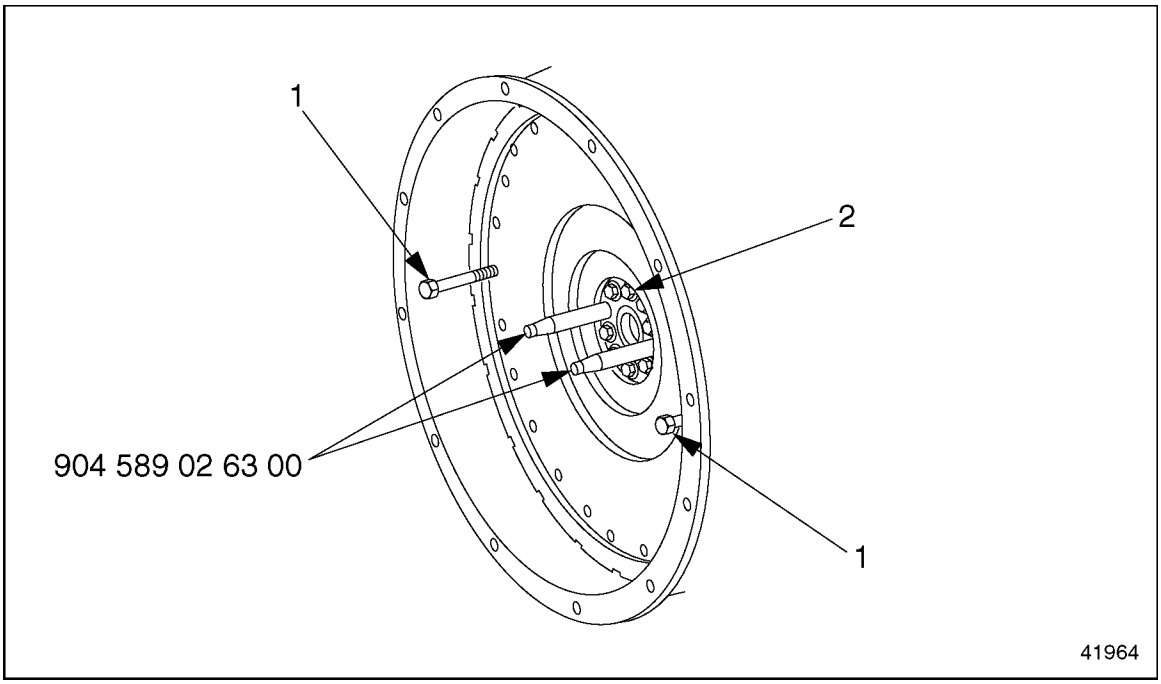

1. Bolt used as a handle
2. Flywheel Mounting Bolt

Figure 1-65 Flywheel Removal

All information subject to change without notice.
6SE412 0403 Copyright © 2004 DETROIT DIESEL CORPORATION

https://truckmanualshub.com/

CAUTION:

FALLING FLYWHEEL

To avoid injury from a falling flywheel when removing the last bolt, hold the flywheel against the crankshaft by hand to prevent it from slipping off the crankshaft. The flywheel is not doweled to the crankshaft.

DANGER:

FALLING COMPONENT

To avoid injury from a falling component, ensure a proper lifting device is used.

7. Remove the remaining eight flywheel bolts.
8. Remove the engine cranking tool (J 46167 or 407 589 00 63 00). Refer to section 1.15.1.
9. Remove the flywheel, leaving the guide studs (904 589 02 63 00)in place. See Figure 1-65.
   [a] On opposite sides of the bolt circle, screw a bolt into each of two threaded clutch bolt holes.
   [b] Using the two bolts as handles, dislodge the flywheel from the crankshaft flange and remove it from the flywheel housing.
   [c] After removing the flywheel, remove the bolts from the clutch bolt holes.

 Copyright © 2004 DETROIT DIESEL CORPORATION

https://truckmanualshub.com/

10. Inspect the flywheel bolts. Replace the bolts if any of the shanks are stretched beyond the maximum length of 77.0 mm (3.03 in.). See Figure 1-66.

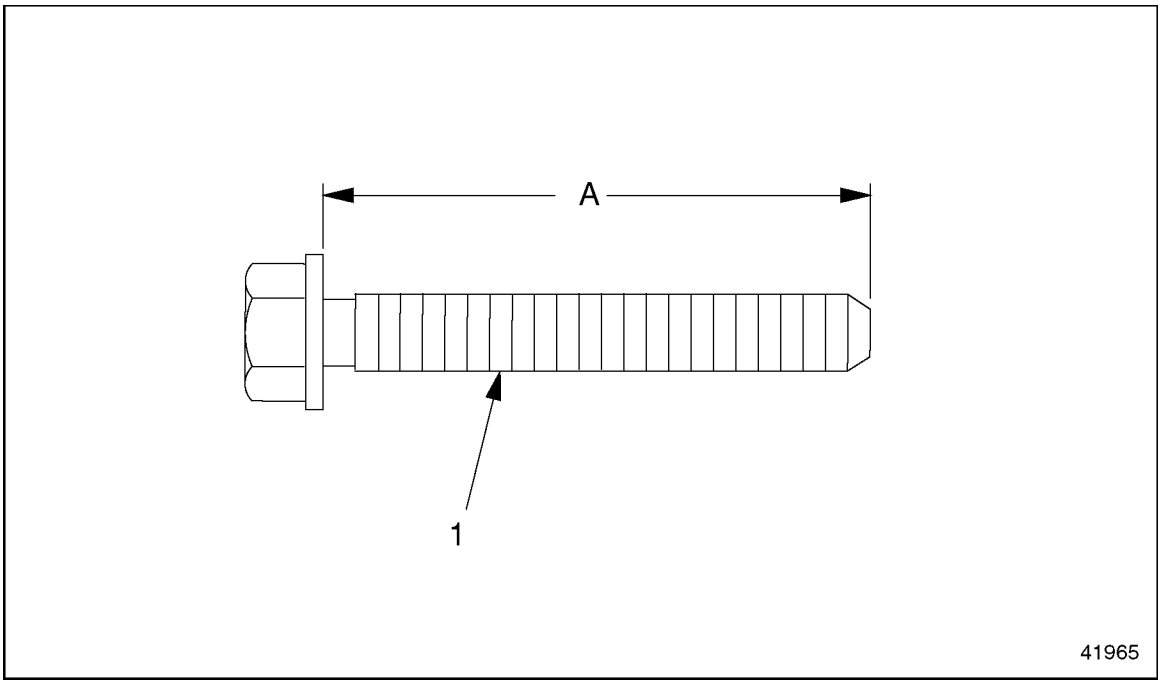

1. Shank

Figure 1-66 Measuring the Flywheel Bolts

11. Thoroughly clean the flywheel and check the clutch surface for cracks, burned spots, or scoring. If the damage exceeds the maximum depth of stock, replace the flywheel. Refer to section 1.12.3.2.
12. Inspect the flywheel flange for signs of wear or traces of hollowing caused by the radial seal.
13. Inspect the flywheel ring gear for damaged teeth or signs of wear. Replace the ring gear if necessary. Refer to section 1.13.1.

1.12.2 Flywheel Installation

Install the flywheel as follows:

1. Grease the ring gear with a suitable heavy-duty grease.

All information subject to change without notice.
6SE412 0403 Copyright © 2004 DETROIT DIESEL CORPORATION

DANGER:

FALLING COMPONENT

To avoid injury from a falling component, ensure a proper lifting device is used.

2. Install the flywheel over the guide studs (904 589 02 63 00). Align the dowel on the crankshaft with the guide hole in the flywheel. Align the dowel on the crankshaft with the guide hole in the flywheel (arrow). See Figure 1-67.
3. Install the engine cranking tool (J 46167 or 407 589 00 63 00) in the flywheel housing and secure with two bolts. Insert the pin and make sure the tool is blocked. Refer to section 1.15.2.

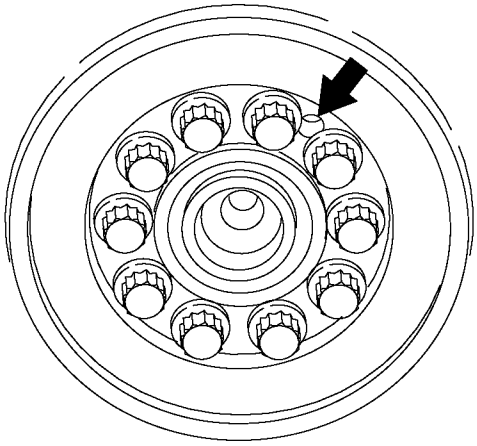

Figure 1-67 Flywheel Alignment Mark

NOTE:
Verify the alignment of the crankshaft dowel with the guide hole in the flywheel.

4. With a light coating of engine oil, lubricate the threads of the ten multipoint socket-head flywheel bolts.

 Copyright © 2004 DETROIT DIESEL CORPORATION

https://truckmanualshub.com/

5. Tighten the eight bolts in two stages. In each stage, use an alternate sequence to tighten the bolts, as listed in Table 1-21.

Max. Shaft Length, mm (in.)	Tightening Stage	Torque Value, N·m (lb·ft)
77.0 mm (3.03 in)	Stage 1	200 N·m (147.5 lb·ft)
77.0 mm (3.03 in)	Stage 2	90 degrees

Table 1-21 Tightening Stages, Flywheel Mounting Bolts

[a] Install eight bolts to hold the flywheel in position.

[b] Remove the two guide studs (904 589 02 63 00) and install the two remaining bolts in their place.

[c] Tighten the bolts, in an alternate tightening sequence, 200 N·m (147.5 lb·ft).

[d] Using the same tightening sequence, turn the flywheel bolts 90 degrees.

6. Remove the engine cranking tool (J 46167 or 407 589 00 63 00). Install the inspection cover on the flywheel housing with two bolts. Tighten the bolts 25 N·m (18 lb·ft).
7. Install the crank angle position sensor into the flywheel housing. Refer to section 2.6.3.
8. Install the clutch on the flywheel.
9. Install the transmission.

1.12.3 Flywheel Inspection

Perform the following procedures for inspecting the flywheel.

1.12.3.1 Flywheel Inspection

Inspect the flywheel as follows:

1. Remove the flywheel. Refer to section 1.12.1.
2. Thoroughly clean the flywheel and check it for cracks, scoring, burned areas, or rough spots.

All information subject to change without notice.
6SE412 0403 Copyright © 2004 DETROIT DIESEL CORPORATION

3. Using an accurate straightedge and a feeler gauge, check the friction (clutch) surface for evenness. See Figure 1-68. If the surface has areas that are too high or too low, replace the flywheel.

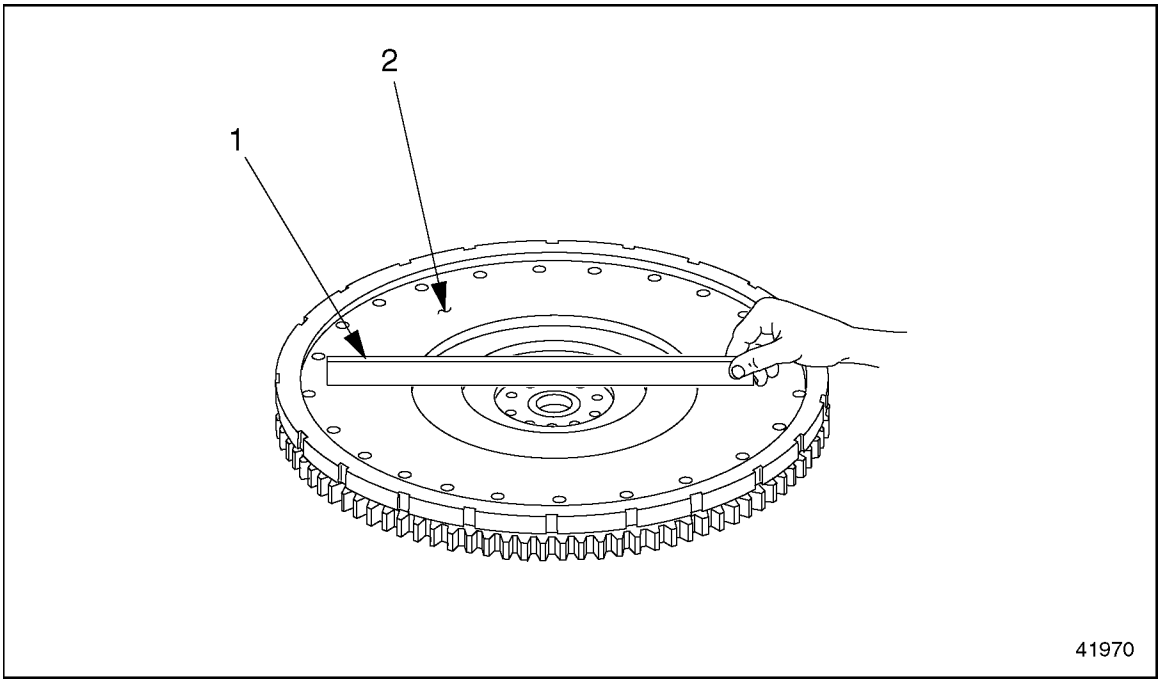

1. Straightedge
2. Friction Surface

Figure 1-68 Checking the Friction Surface for Evenness

4. Check the bearing surface and the threaded holes for wear and damage.

1.12.3.2 Flywheel Machining

Machine the flywheel as follows:

NOTE:
Before beginning any machining work on the flywheel, check it to see if machining is possible. If the scores or cracks are deeper than 1 mm (0.04 inch), replace the flywheel. If the width of the flywheel between the friction surface and the mounting flange is less than 60 mm (2.4 inches), replace the flywheel.

 Copyright © 2004 DETROIT DIESEL CORPORATION

https://truckmanualshub.com/

WARNING:

PERSONAL INJURY

To avoid injury while performing the test or procedure, wear adequate eye, face protection, and heat-resistant gloves.

1. Machine the flywheel friction surface, if required, to the specifications listed in Table 1-22. See Figure 1-69. The surface finish (peak-to-valley height) after machining should be 0.016 mm (0.0006 inch). A rougher surface finish will cause rapid clutch lining wear, while a smoother finish could cause difficulties in clutch disengagement. See Figure 1-70for the locations on the flywheel to coordinate with the specifications in the table.

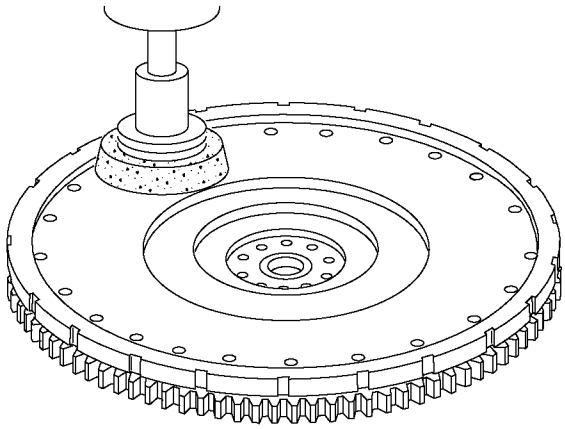

Figure 1-69 Machining the Flywheel Friction Surface

All information subject to change without notice.
6SE412 0403 Copyright © 2004 DETROIT DIESEL CORPORATION

Description	Specification in mm (inches)
Flywheel Outside Diameter	486.60-487.40 (19.157-19.189)
Flywheel Shoulder Diameter (for ring gear mounting)	432.450-432.645 (17.0256-17.0332)
Flywheel Diameter at Crankshaft Flange	114.980-115.015 (4.5268-4.5281)
Flywheel Diameter for Mounting Clutch	475.000-475.063 (18.7008-18.7032)
Flywheel Minimum Width Between Friction Surface and Mounting Flange After Machining	60 (2.4)
Flywheel Maximum Overall Width	70 (2.8)
Peak-to-Valley Height (R_z) of Clutch Friction Surface	0.016 (0.0006)
Flywheel Permissible Deviation From True (radial and lateral)	0.2 (0.008)

Table 1-22 Flywheel Specifications

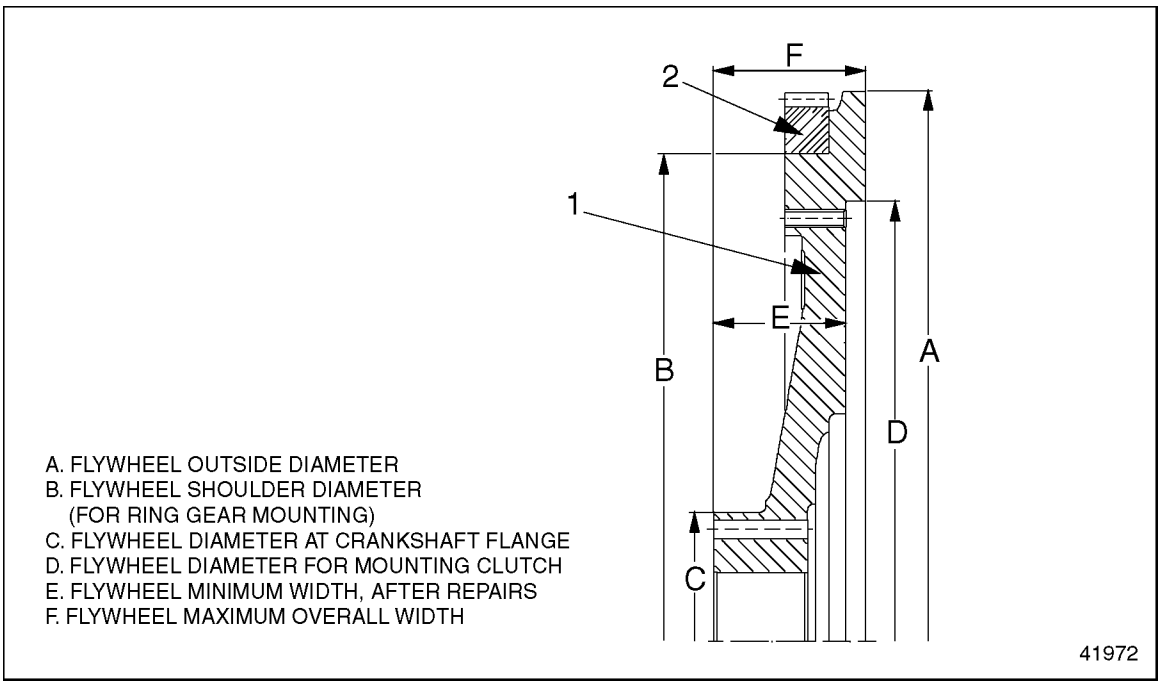

1. Flywheel
2. Ring Gear

Figure 1-70 Flywheel Cross Section

After machining, the friction surface must not have any cavities or chatter marks.

2. Check the radial and lateral deviation from true of the flywheel. The deviation from true must not exceed 0.2 mm (0.008 inch).
3. Install the flywheel. Refer to section 1.12.2.

 Copyright © 2004 DETROIT DIESEL CORPORATION

https://truckmanualshub.com/

1.13 RING GEAR

See Figure 1-71 for an exploded view of the flywheel ring gear.

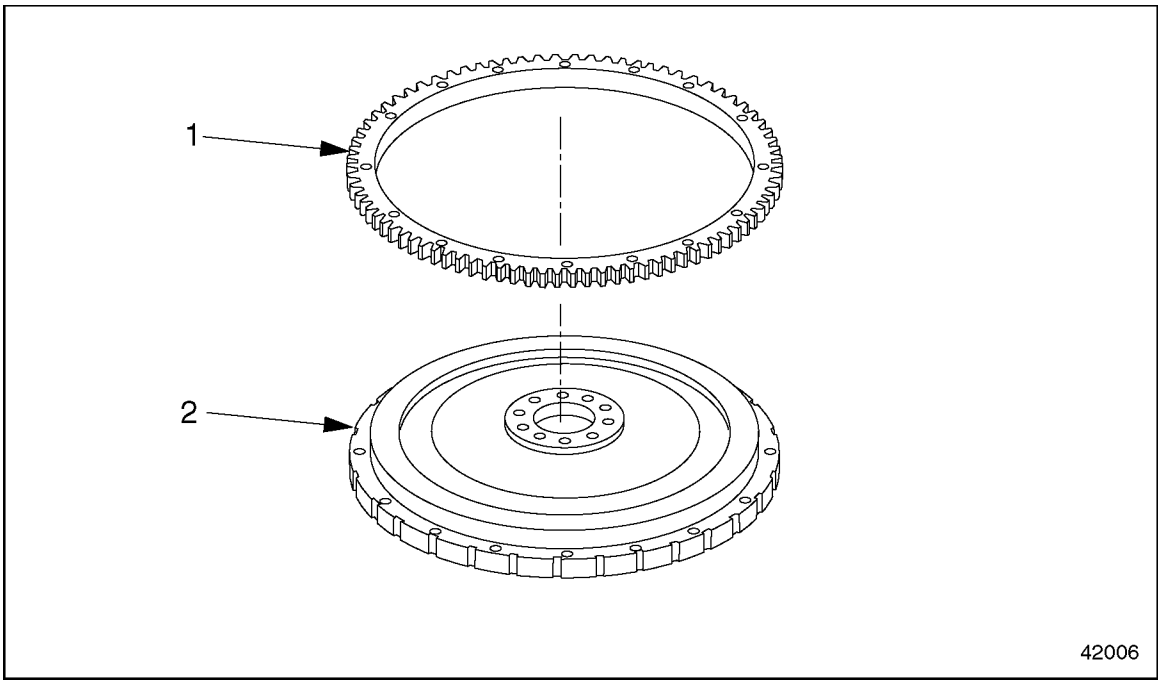

1. Ring Gear
2. Flywheel

Figure 1-71 Location of Flywheel Ring Gear

1.13.1 Ring Gear Replacement

Replace the flywheel ring gear as follows:

1. Remove the flywheel from the crankshaft flange. Refer to section 1.12.1.

All information subject to change without notice.
6SE412 0403 Copyright © 2004 DETROIT DIESEL CORPORATION

WARNING:

BURNS

To avoid injury from burning, use lifting tools and heat-resistant gloves when handling heated components.

2. Heat the ring gear on the flywheel with a torch and press the gear off. See Figure 1-72.

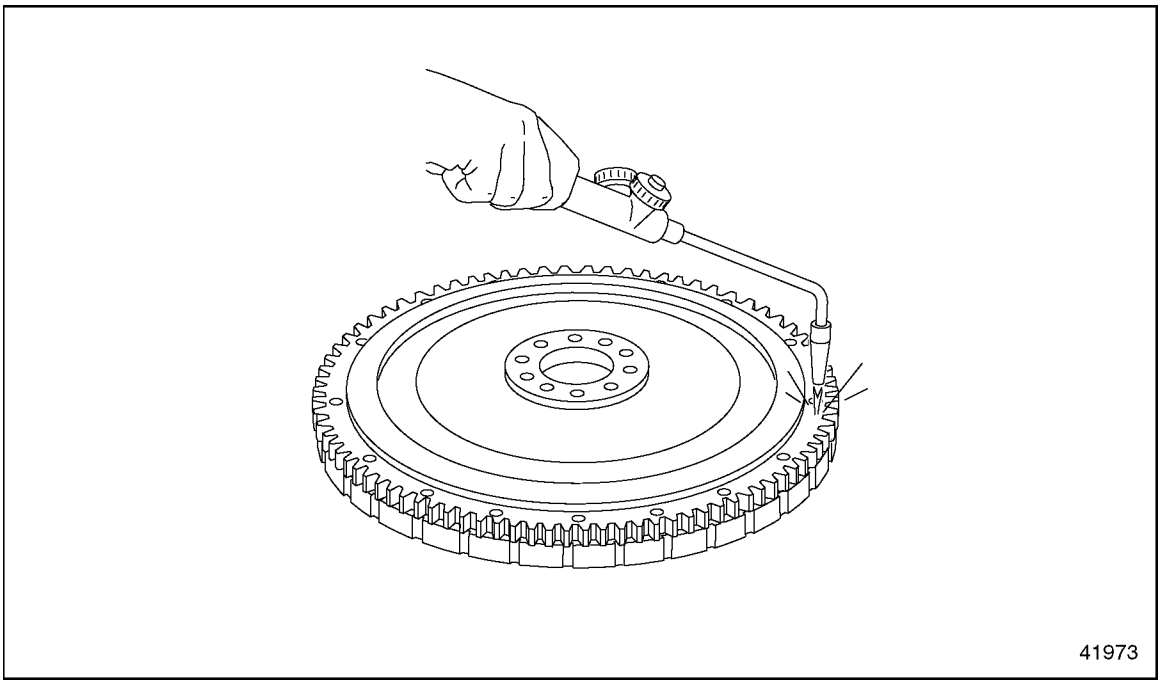

Figure 1-72 Heating the Ring Gear

 Copyright © 2004 DETROIT DIESEL CORPORATION

https://truckmanualshub.com/

3. Check the amount of interference fit between the flywheel mounting shoulder and the ring gear. See Figure 1-73. The interference fit must be within the permissible values listed in Table 1-23.

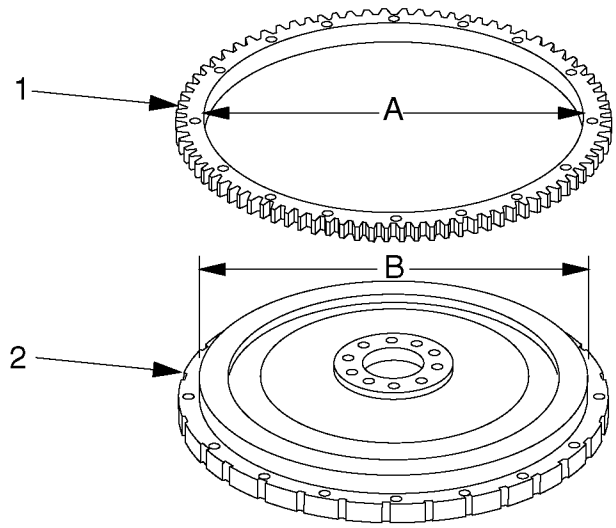

1. Ring Gear
2. Flywheel

Figure 1-73 Flywheel/Ring Gear Interference Fit

Description	Specification, mm (in.)
Flywheel Shoulder Diameter (for ring gear mounting)	432.450-432.645 mm (17.0256-17.0332 inches)
Hole for Mounting Clutch Pressure Plate	M10 x 1.5
Ring Gear Inside Diameter	432.000-432.155 mm (17.0078-17.0139 inches)
Ring Gear/Flywheel Interference Fit	0.295-0.645 mm (0.0116-0.0254 inch)
Ring Gear/Flywheel Permissible Radial Runout	0.5 mm (0.02 inch)
Ring Gear Width	18.4-18.6 mm (0.72-0.73 inch)
Ring Gear Fitting Temperature	200-230°C (390-450°F)

Table 1-23 Flywheel Ring Gear Specifications

[a] Measure the flywheel shoulder diameter (B).

[b] Measure the inside diameter of the new ring gear (A).

[c] Determine the amount of interference fit by subtracting the ring gear inside diameter (A) from the flywheel shoulder diameter (B).

[d] Make sure that the amount of interference fit lies between 0.295 and 0.645 mm (0.0116 and 0.0254 inch).

All information subject to change without notice.
6SE412 0403 Copyright © 2004 DETROIT DIESEL CORPORATION

NOTICE:
Be careful to heat the new ring gear as evenly as possible. If available, an oven can be used. Uneven heating of the ring gear can weaken the ring gear and reduce service life.

4. Heat the new ring gear to 200 to 230°C (390 to 450°F).
5. Press the heated ring gear completely onto the mounting shoulder of the flywheel.
6. Bore and tap the holes for the clutch mounting bolts. See Figure 1-74. The specifications are listed in Table 1-23.

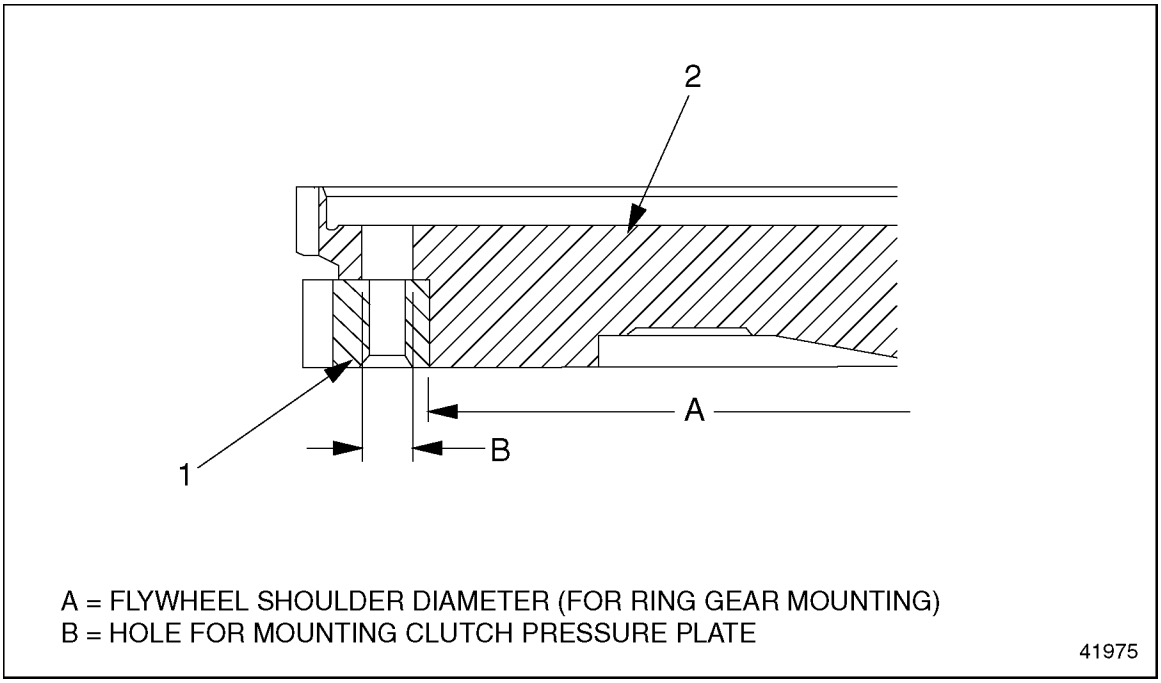

1. Ring Gear
Flywheel

Figure 1-74 Flywheel/Ring Gear Cross Section

[a] With the flywheel friction surface facing up (ring gear down), bore holes for the clutch mounting bolts.

[b] Tap the bore holes with M10 x 1.5 metric threads.

7. Check the ring gear/flywheel radial runout.

NOTE:
With the ring gear pressed onto the flywheel, make sure the radial run-out of the ring gear does not exceed 0.5 mm (0.02 inch).

8. Install the flywheel on the crankshaft flange. Refer to section 1.12.2.

 Copyright © 2004 DETROIT DIESEL CORPORATION

https://truckmanualshub.com/

1.14 PILOT BEARING

Perform the following procedures for removal and installation of the pilot bearing.

1.14.1 Pilot Bearing Removal

Remove the pilot bearing as follows:

1. Remove the transmission.
2. Remove the clutch from the flywheel.
3. Install a suitable pilot bearing extractor on the bearing.
4. Install a suitable puller on the extractor.
5. Remove the bearing. See Figure 1-75.

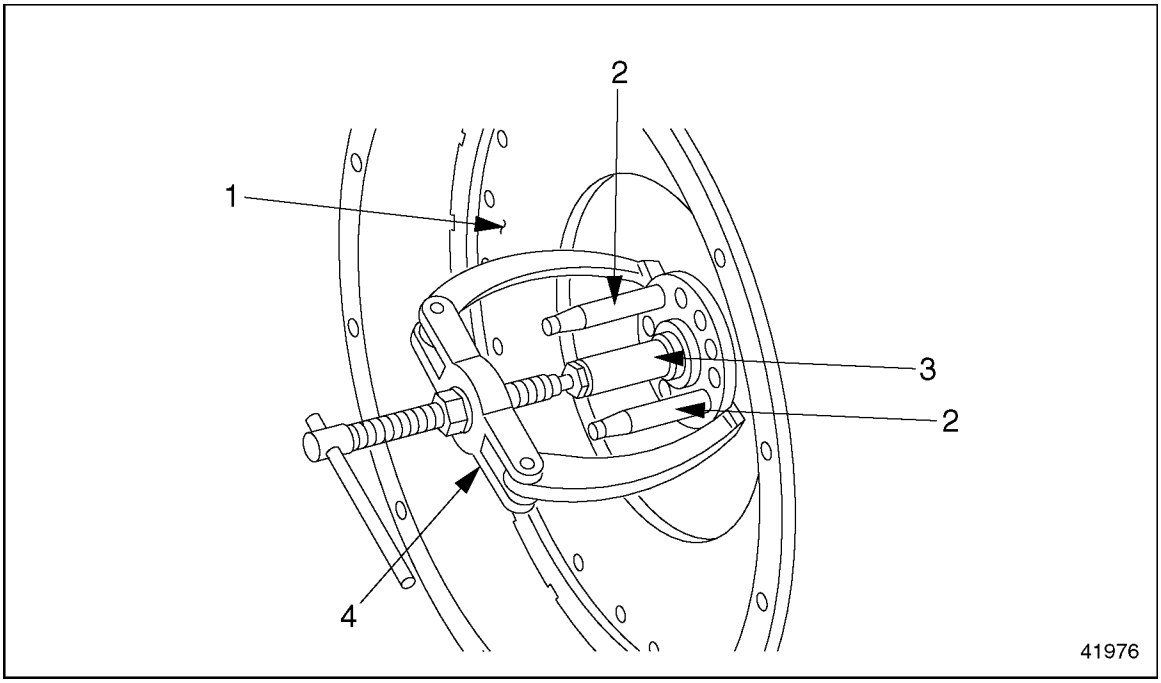

1. Flywheel
2. Guide Stud
3. Bearing Extractor
4. Puller

Figure 1-75 Pilot Bearing Removal

1.14.2 Pilot Bearing Installation

Install the pilot bearing as follows:

1. Lubricate the new bearing with longlife grease.

All information subject to change without notice.
6SE412 0403 Copyright © 2004 DETROIT DIESEL CORPORATION

2. Using a pilot bearing installer, position the bearing on the crankshaft and press it into the flywheel. See Figure 1-76.

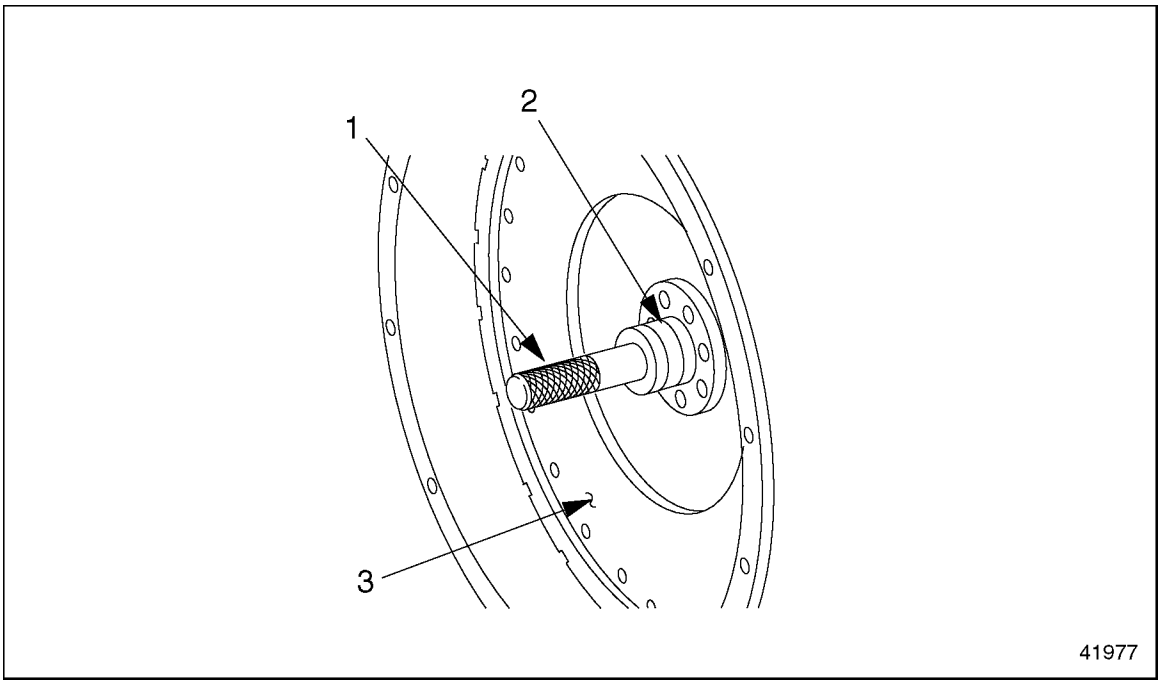

1. Bearing Installer
2. Pilot Bearing
3. Flywheel

Figure 1-76 Pilot Bearing Installation

3. Install the clutch on the flywheel.
4. Install the transmission.

 Copyright © 2004 DETROIT DIESEL CORPORATION

https://truckmanualshub.com/

1.15 ENGINE CRANKING TOOL

A special tool is required for this procedure: Engine Cranking Tool (J 46167 or 407 589 00 63 00).

The engine cranking tool (J 46167 or 407 589 00 63 00) is used for two separate functions: blocking and cranking.

- ☐ With the pin inserted, the tool blocks the flywheel ring gear to prevent rotation during removal and installation of the flywheel.
- ☐ Without the pin, the tool can be used with a wrench to turn the flywheel and crankshaft manually.

NOTE:
The first time an engine cranking tool is installed on the engine to turn the flywheel, the teeth on the rotating gear may rub on the flywheel housing. This does not cause a problem and should not occur the next time the tool is used.

1.15.1 Engine Cranking Tool Installation

Install the engine cranking tool (J 46167 or 407 589 00 63 00) as follows:

1. Remove the two bolts holding the inspection cover to the flywheel housing. See Figure 1-77.

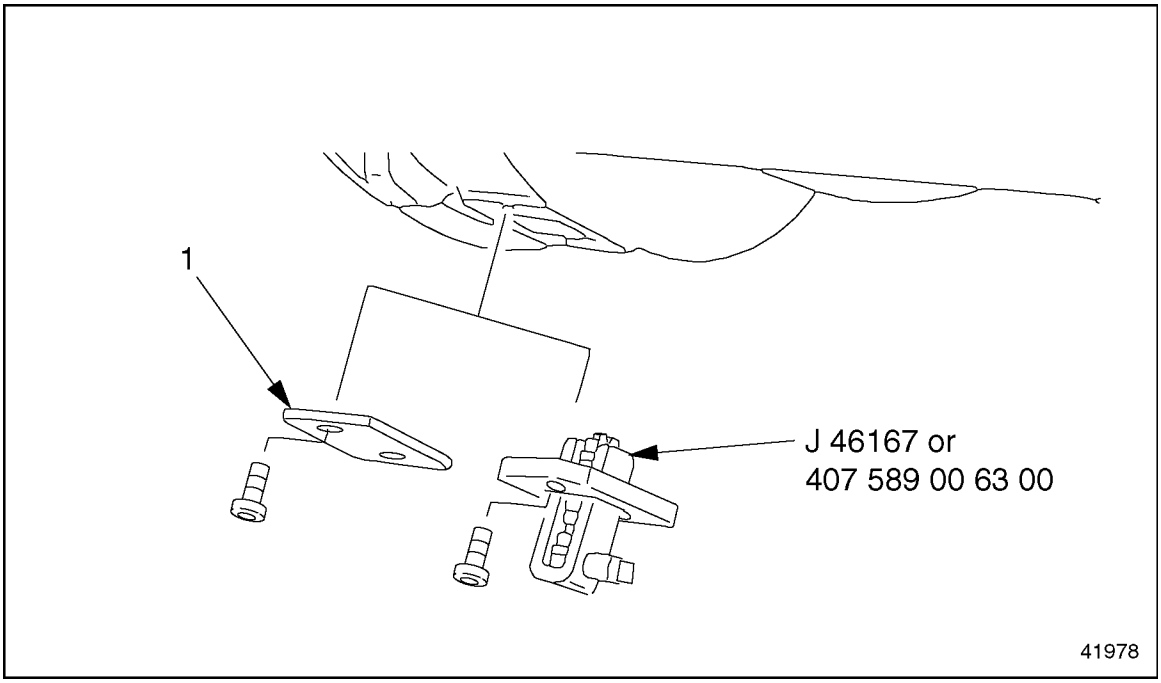

1. Inspection Cover

Figure 1-77 Engine Cranking Tool Installation

2. Remove the pin from the engine cranking tool (J 46167 or 407 589 00 63 00).

All information subject to change without notice.
6SE412 0403 Copyright © 2004 DETROIT DIESEL CORPORATION

3. Install the tool in the flywheel housing and secure with two bolts of sufficient length.

NOTE:
The inspection cover bolts are not long enough to install the engine cranking tool. Longer ones will be needed.

4. As needed, insert the pin to lock the tool and block movement of the flywheel ring gear.

1.15.2 Engine Cranking Tool Removal

Remove the engine cranking tool (J 46167 or 407 589 00 63 00) as follows:

1. Remove the two bolts and the cranking tool from the flywheel housing. It is not necessary to remove the pin.
2. Install the inspection cover on the flywheel housing with the two bolts. Tighten the bolts 25 N·m (18 lb·ft).

NOTICE:
The engine cranking tool must be removed from the timing case before starting the engine. Failure to do so could damage the flywheel ring gear.

 Copyright © 2004 DETROIT DIESEL CORPORATION

https://truckmanualshub.com/

1.16 FLYWHEEL HOUSING

See Figure 1-78 for an exploded view of the flywheel housing assembly.

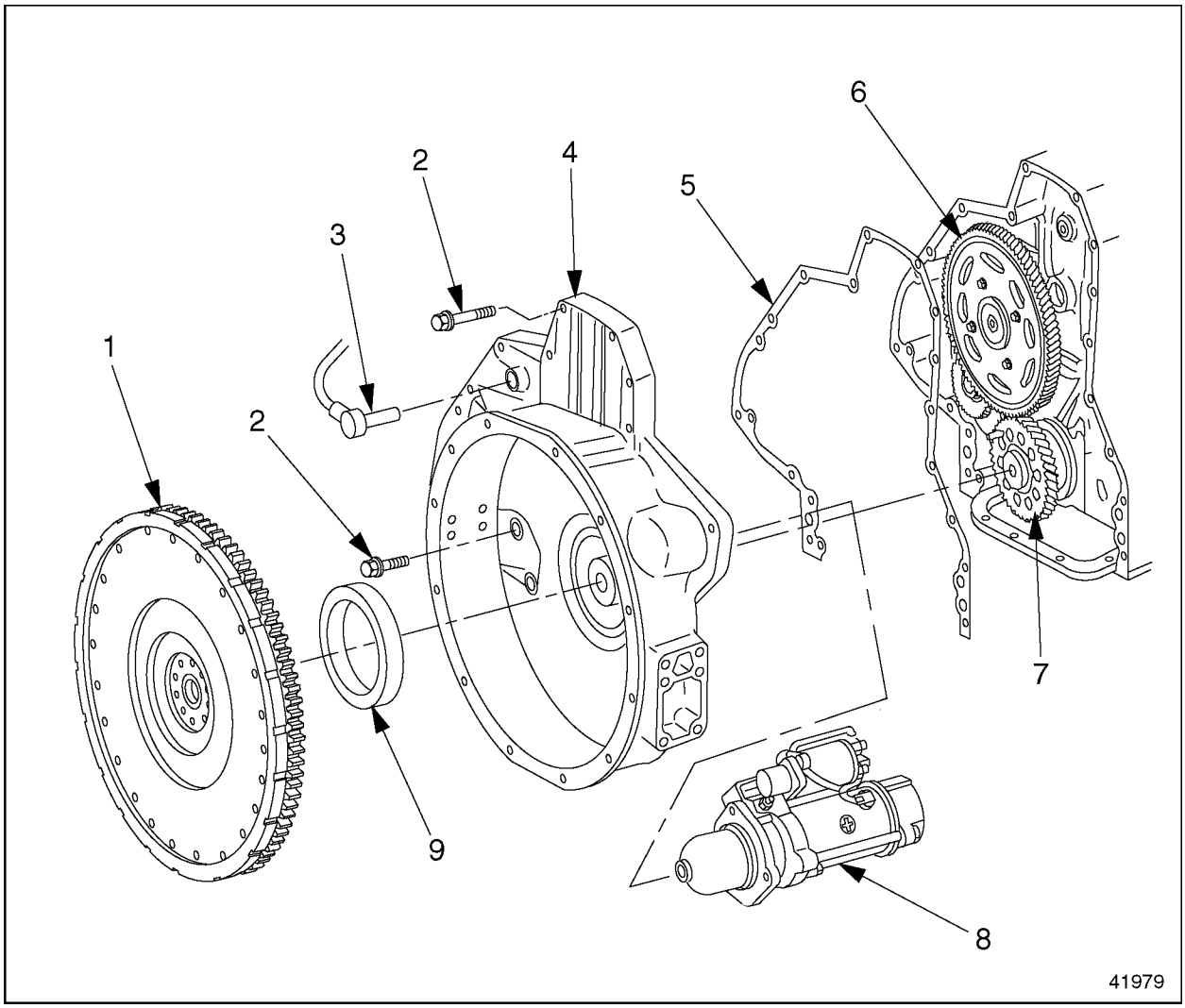

1. Flywheel
2. Flywheel Housing Mounting Bolt
3. Camshaft (TDC) Sensor
4. Flywheel Housing
5. Gasket
6. Camshaft Gear
7. Crankshaft Gear
8. Starter
9. Rear Radial Seal

Figure 1-78 Flywheel Housing Assembly (exploded view)

All information subject to change without notice.
6SE412 0403 Copyright © 2004 DETROIT DIESEL CORPORATION

1.16.1 Flywheel Housing Removal

Remove the flywheel housing as follows:

1. With the engine removed from the vehicle, remove the flywheel. Refer to section 1.12.1.
2. Remove the crank angle position sensor. Refer to section 2.6.3.
3. Remove the camshaft (TDC) sensor. Refer to section 1.22.3.
4. Remove the starter from the block.
5. Remove the crankcase breather from the flywheel housing.
6. Remove the flywheel housing mounting bolts. Then remove the flywheel housing from the cylinder block. See Figure 1-78.
7. Remove and discard the flywheel housing gasket.

1.16.2 Flywheel Housing Installation

Install the flywheel housing as follows:

1. Check the flywheel housing for damage.
2. Install a new rear radial seal. Refer to section 1.8.2.
3. Using a suitable scraper, such as a putty knife, clean the mating surfaces of the cylinder block and the flywheel housing. Remove any dirt or grease, and all traces of old sealant.
4. Coat the mating surfaces of the flywheel housing and the cylinder block with Loctite® 574 sealant.
5. Install a new flywheel housing gasket.
6. Put the flywheel housing onto the cylinder block, making sure that it clears the oil pan and that the bolt holes line up.
7. Install the flywheel housing mounting bolts and tighten them 70 N·m (52 lb·ft).
8. Install the starter.
9. Install the crankcase breather on the flywheel housing.
10. Install the flywheel. Refer to section 1.12.2.
11. Install the camshaft (TDC) sensor. Refer to section 1.22.3.
12. Install the crank angle position sensor. Refer to section 2.6.3.
13. Install the engine.

 Copyright © 2004 DETROIT DIESEL CORPORATION

https://truckmanualshub.com/

1.17 PISTON, PISTON RING, AND CONNECTING ROD

The pistons are made of aluminum alloy with ring carriers and a shallow combustion chamber recess. The pistons are cooled by oil spray nozzles. See Figure 1-79 for an exploded view of the piston and connecting rod assembly.

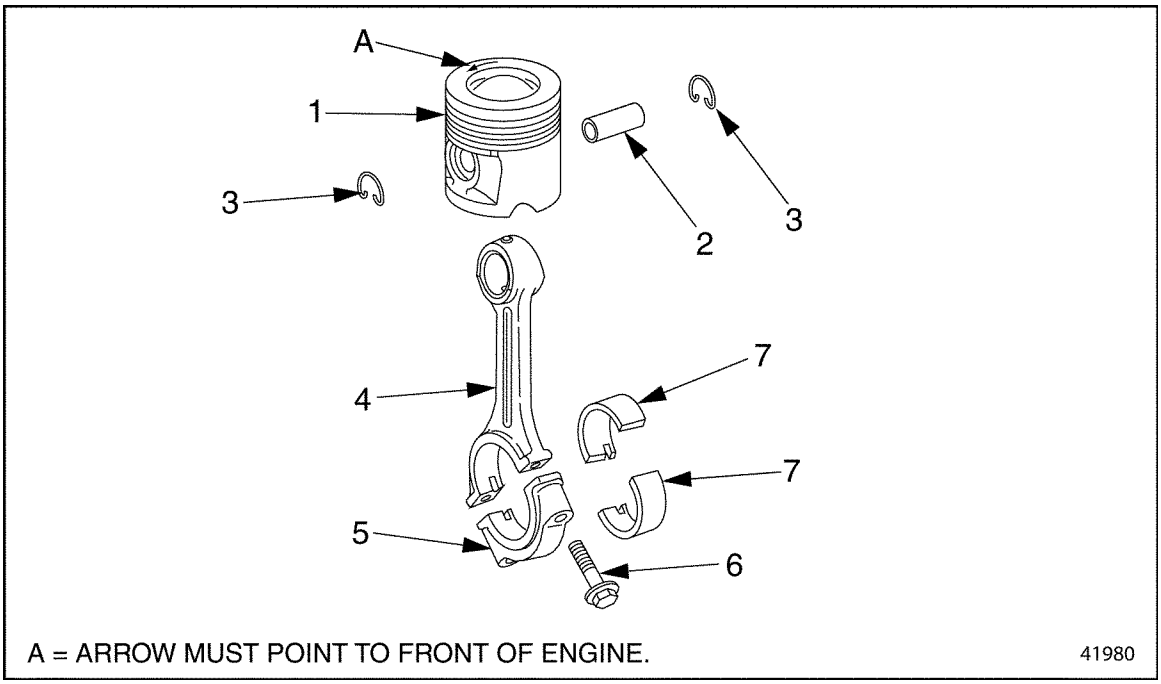

1. Piston and Rings
2. Wrist Pin
3. Snap Ring
4. Connecting Rod
5. Bearing Cap
6. Connecting Rod Stretch Bolt
7. Bearing Shell

Figure 1-79 Piston Assembly (exploded view)

1.17.1 Piston Removal

Remove the piston assembly as follows:

1. Remove the engine from the vehicle.

NOTE:
The MBE 4000 engine has individual heads for each cylinder. To remove one piston, do these procedures step by step. To remove all the pistons, repeat each step in these instructions, as applicable, for all six pistons.

2. Remove each cylinder head, as required. Refer to section 1.2.1.
3. Remove the oil pan. Refer to section 3.1.1.

All information subject to change without notice.
6SE412 0403 Copyright © 2004 DETROIT DIESEL CORPORATION

NOTICE:
Do not damage the piston travel surface of the cylinder.

4. Using a plastic scraping tool, carefully scrape off any combustion residues from the combustion area in the cylinder in order to avoid damage to the piston rings when the piston is removed.
5. Install the engine cranking tool (J 46167 or 407 589 00 63 00). Refer to section 1.15.1.
6. Be sure the connecting rods and the bearing caps are marked so that they can be matched for installation. See Figure 1-80.

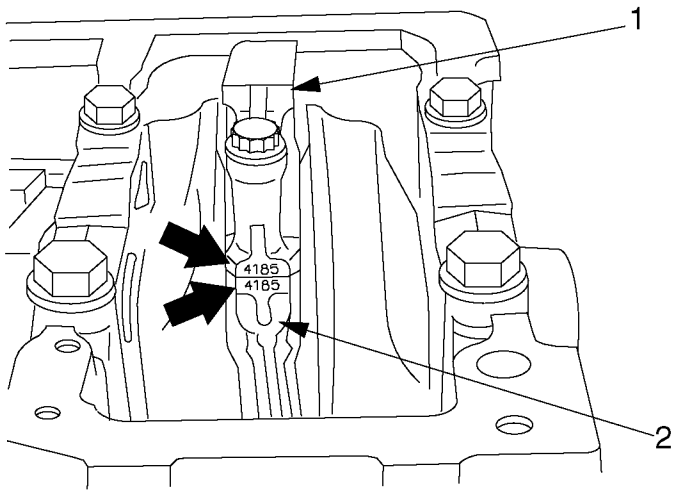

1. Bearing Cap
2. Connecting Rod

Figure 1-80 Checking Rod and Bearing Cap Markings

 Copyright © 2004 DETROIT DIESEL CORPORATION

https://truckmanualshub.com/

7. Remove and inspect the oil spray nozzles. See Figure 1-81. Refer to section 3.2.1. Replace them if damaged.

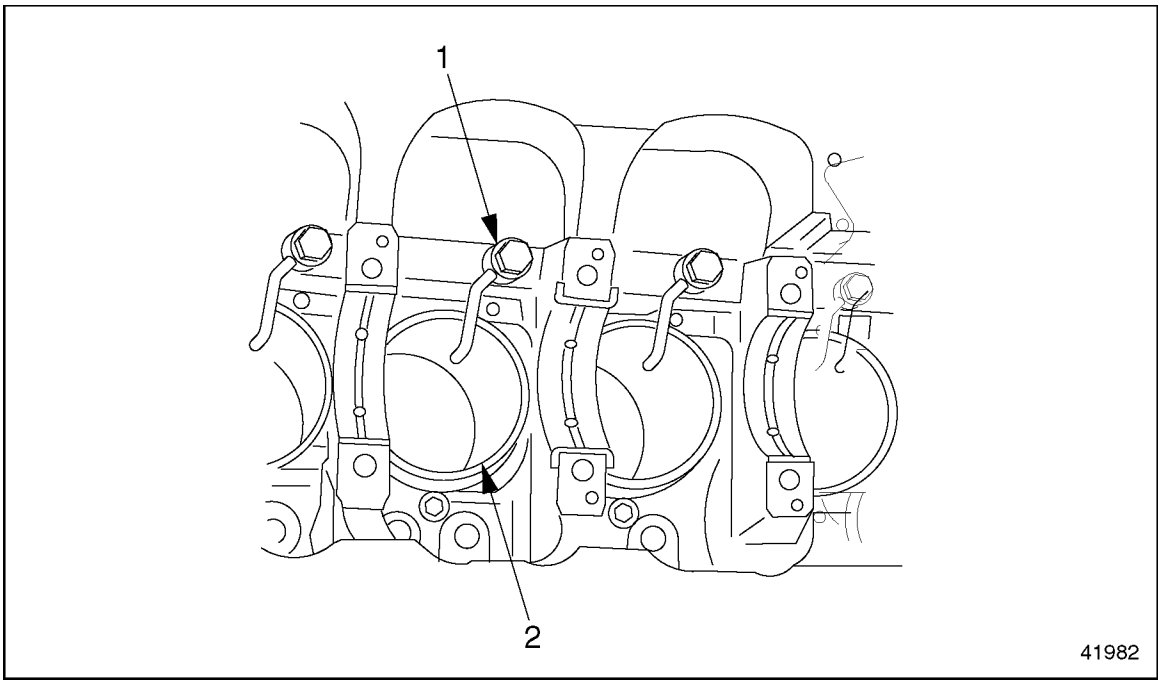

1. Oil Spray Nozzle
2. Cylinder Liner

Figure 1-81 Location of Oil Spray Nozzle

All information subject to change without notice.
6SE412 0403 Copyright © 2004 DETROIT DIESEL CORPORATION

8. Remove the connecting rod stretch bolts and bearing cap. See Figure 1-82.

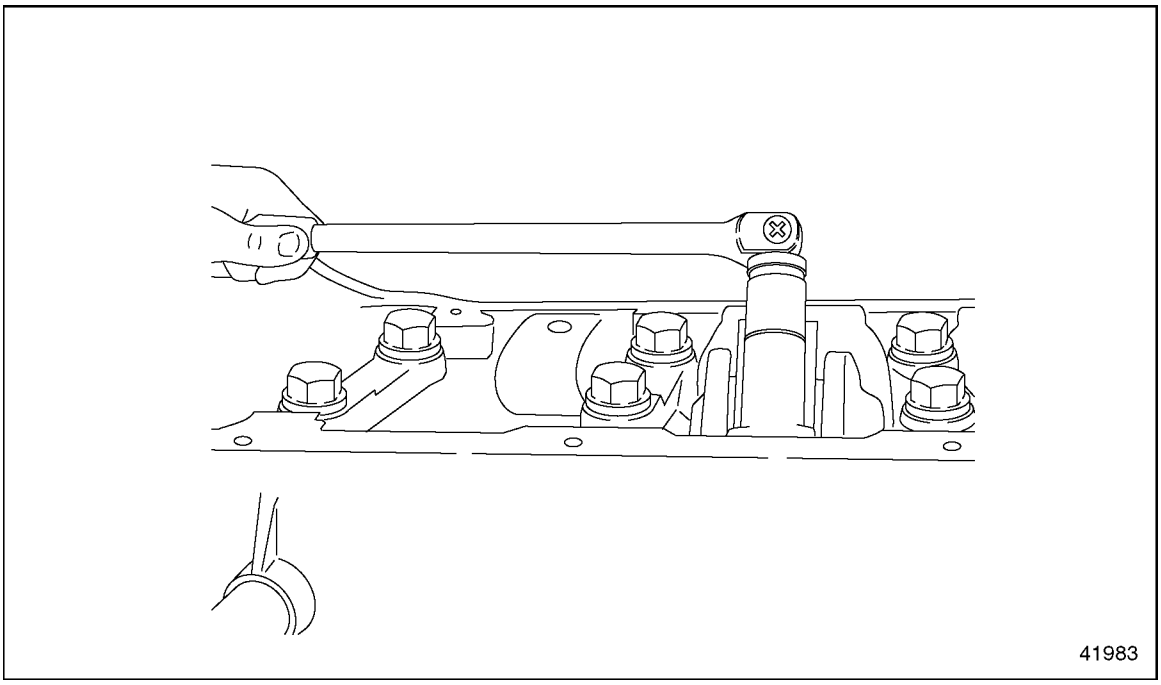

Figure 1-82 Removing the Bearing Caps

NOTE:
If the bearing shell halves are removed from the rods and caps, be sure to mark them so they can be matched for installation.

9. Remove the bearing shell halves from the bearing cap and connecting rod.
10. Push the piston and connecting rod out of the cylinder, and remove them both from the cylinder block.
11. Secure the connecting rod in a vise with protective jaws.

NOTICE:
Be sure the vise jaws are adequately lined to prevent the rod surface from being nicked or marred in any way. Such surface damage could lead to later rod cracking or breaking.

12. Remove the piston rings from the piston. Refer to section 1.17.3.
13. Remove the wrist-pin snap rings. Push the wrist pin out and remove the piston from the connecting rod.

1.17.2 Piston Installation

Install the piston assembly as follows:

 Copyright © 2004 DETROIT DIESEL CORPORATION

https://truckmanualshub.com/

1. Position the connecting rod in the piston so that the longer end side is on the unit pump side (left side), and the arrow on the crown of the piston points toward the front of the engine.
2. Install the wrist pin in the piston. See Figure 1-83.

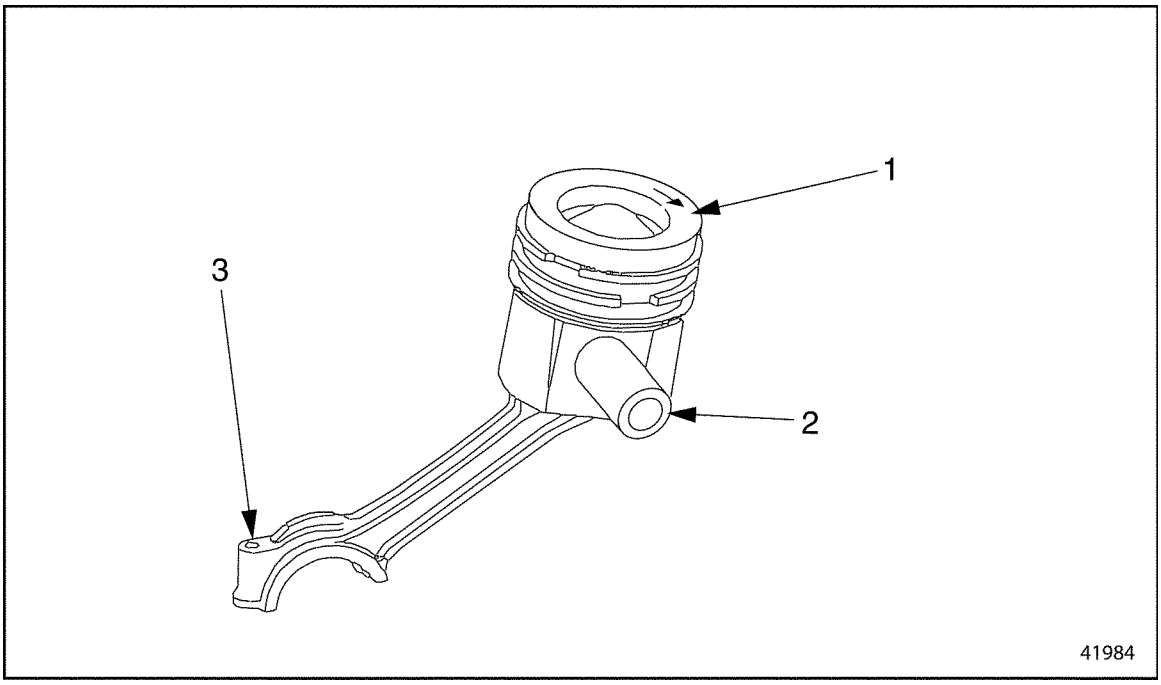

1. Piston
2. Wrist Pin

Figure 1-83 Installing the Wrist Pin

[a] Lubricate the wrist pin with a light coating of clean engine oil.

[b] Insert the wrist pin into the wrist pin bore.

[c] Secure the wrist pin with the two snap rings.

All information subject to change without notice.
6SE412 0403 Copyright © 2004 DETROIT DIESEL CORPORATION

3. Install the piston rings on the piston. See Figure 1-84. Refer to section 1.17.3.

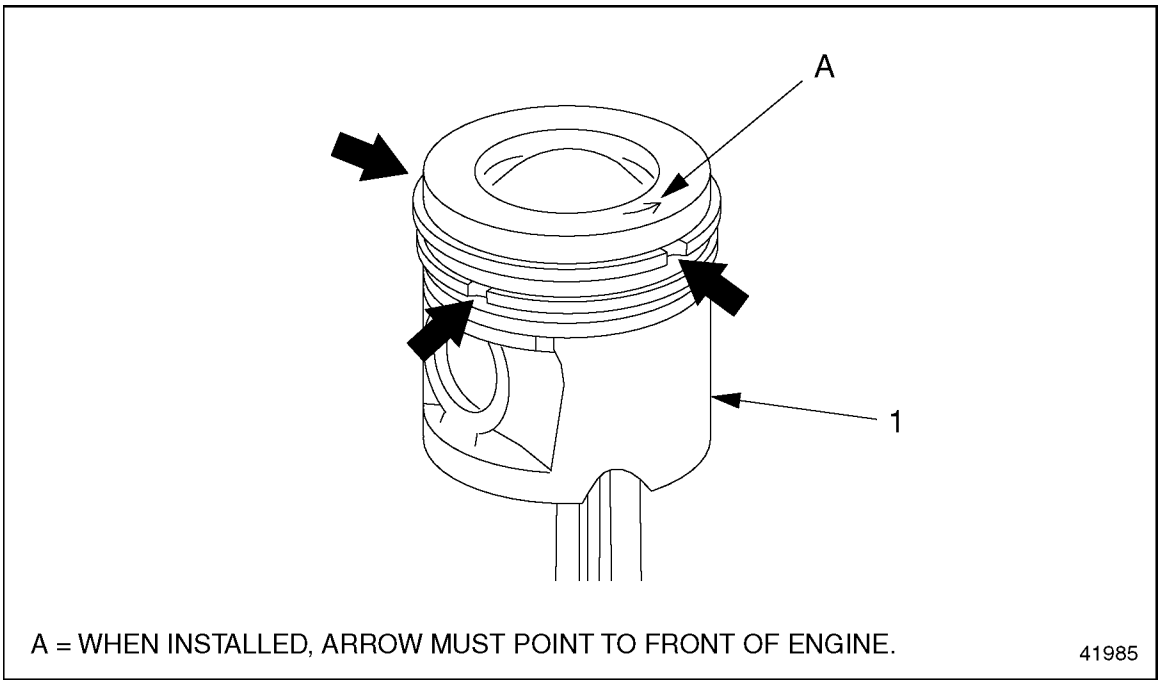

1. Piston

Figure 1-84 Ring Gaps Offset 120 Degrees

[a] Lubricate the piston with a light coating of clean engine oil.

[b] Install each piston ring in the appropriate groove on the piston.

4. Offset the ring gaps alternately by 120 degrees.
5. Position a ring compressor loosely over the piston. Tighten the ring compressor on the piston.

 Copyright © 2004 DETROIT DIESEL CORPORATION

https://truckmanualshub.com/

NOTICE:

The half of the bearing shell installed in the connecting rod (rod half) has a specially-treated friction surface that allows it to bear higher loads. It *cannot* be interchanged (swapped) with the other half of the bearing shell installed in the bearing cap (cap half).

6. Install the rod half of the bearing shell in the connecting rod, as marked on removal. See Figure 1-85.

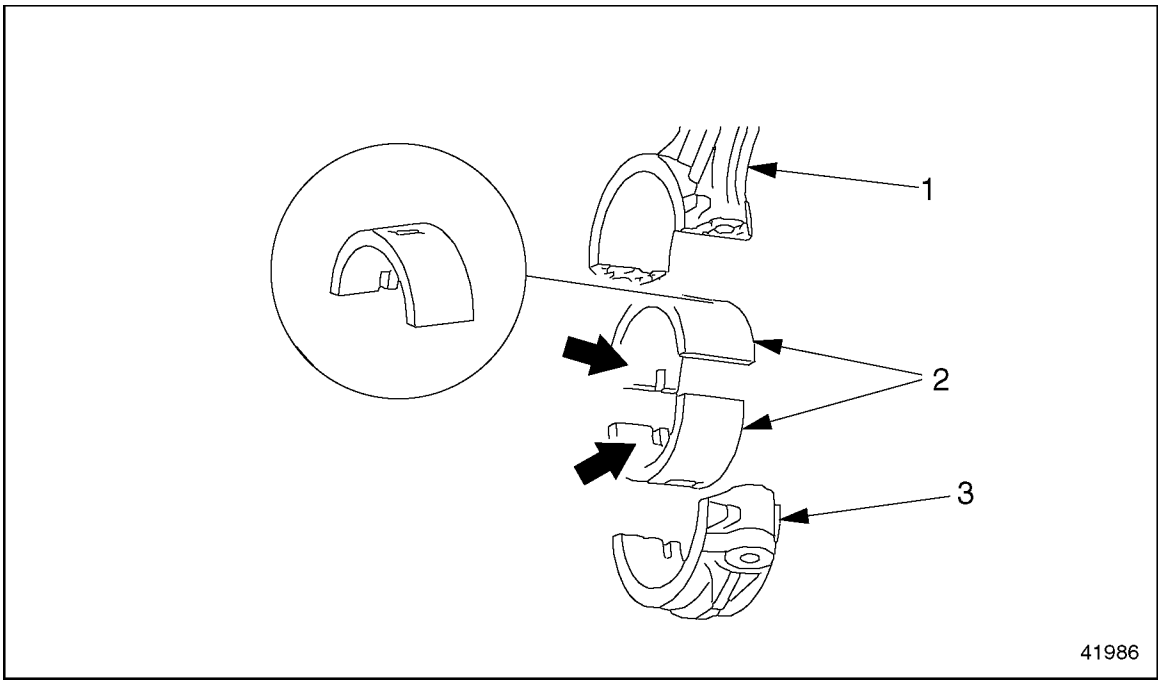

1. Connecting Rod
2. Bearing Shells
3. Bearing Cap

Figure 1-85 Installing the Bearing Shells

[a] Be sure that the locking lug in the bearing shell is fully seated in the groove of the rod.

[b] Lubricate the bearing surface with a light coating of clean engine oil.

7. Lubricate the cylinder liners with a light coating of clean engine oil.

All information subject to change without notice.
6SE412 0403 Copyright © 2004 DETROIT DIESEL CORPORATION

NOTICE:
Be careful not to scratch the crankshaft journals with the connecting rod. This can lead to premature wear of the crankshaft.

8. With the piston arrow pointing toward the front of the engine, push the piston into the cylinder until the rod bearing rests on the crankshaft journal. See Figure 1-86.

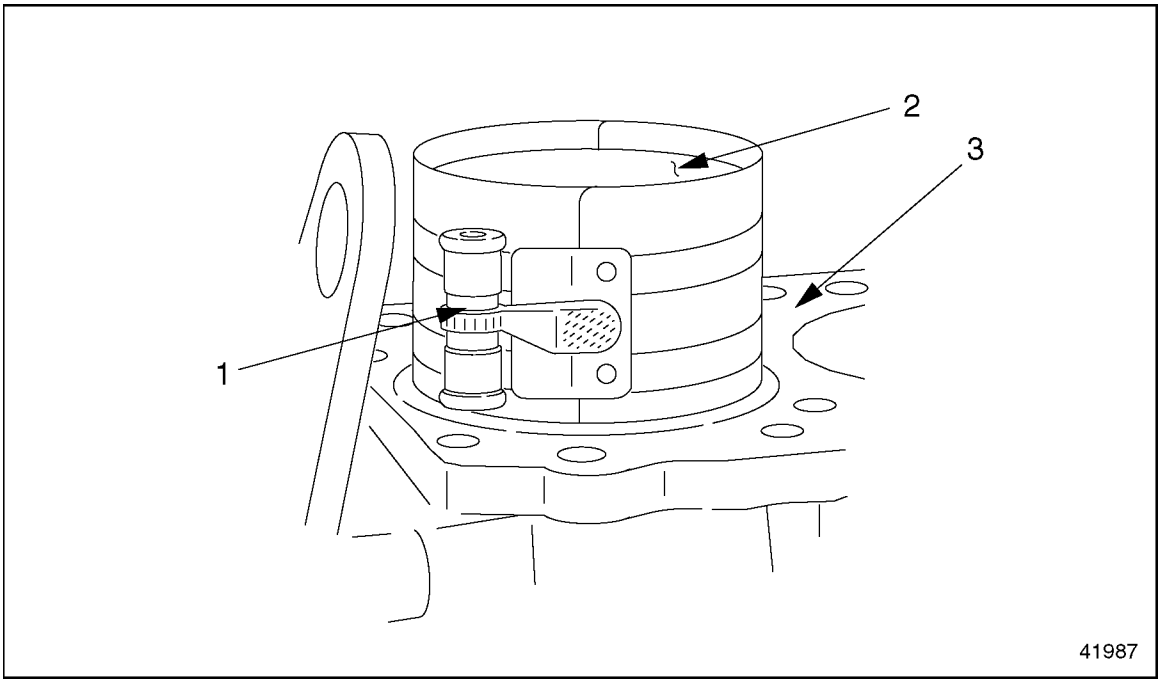

1. Ring Compressor
2. Piston
3. Cylinder Block

Figure 1-86 Installing a Piston

9. Install the cap half of the bearing shell in the bearing cap, as marked on removal. See Figure 1-85.
   [a] Be sure that the locking lug in the bearing shell is fully seated in the groove of the cap.
   [b] Lubricate the bearing surface with a light coating of clean engine oil.

 Copyright © 2004 DETROIT DIESEL CORPORATION

https://truckmanualshub.com/

10. Measure the connecting rod stretch bolts. Replace any bolts that exceed the maximum length of 68.5 mm (2.70 inches). See Figure 1-87. Lubricate the stretch bolt threads with a light coating of engine oil.

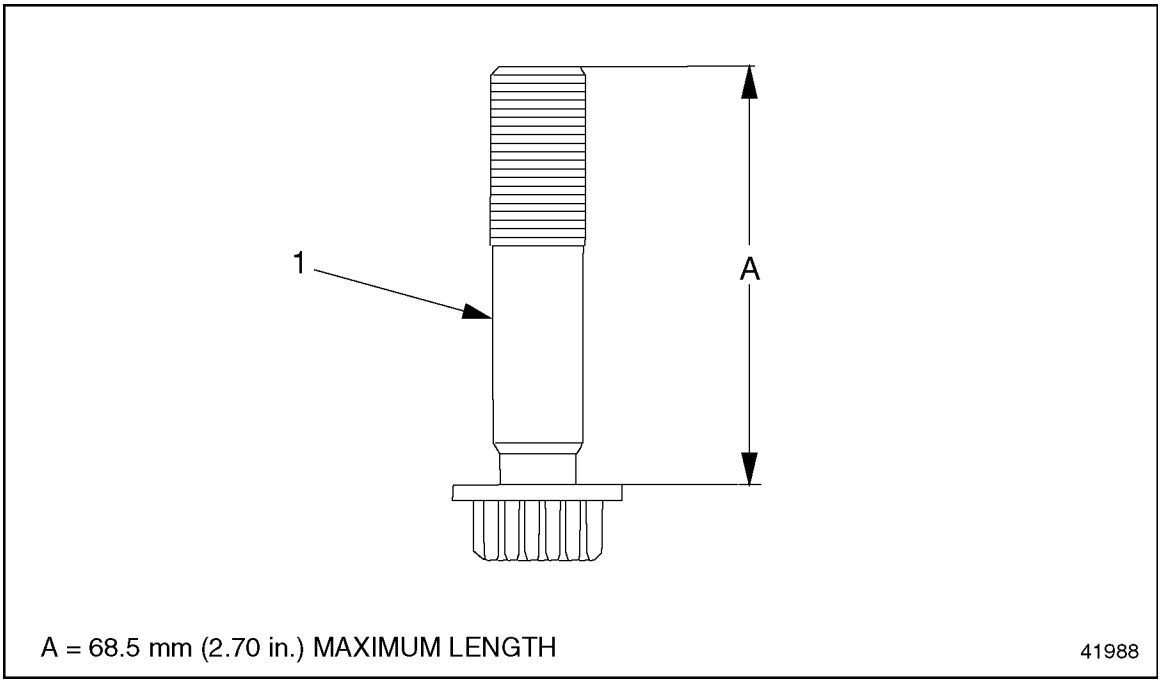

1. Shank

Figure 1-87 Measuring a Stretch Bolt

11. Install the bearing cap on the connecting rod and hand-tighten the stretch bolts. Be sure that the marks on the cap and the rod match. See Figure 1-80.
12. Tighten the M16 x 1.5 connecting rod stretch bolts alternately. Tighten each one in turn to the first stage and then go on to the next stage. Listed in Table 1-24.

Max. Shaft Length	Tightening Stage	Torque Value
68.5 mm (2.70 in.)	Stage 1	100-115 N·m (74-85 lb·ft)
	Stage 2	additional 90-100°

Table 1-24 Tightening Stages, Connecting Rod Stretch Bolts

13. Check the connecting rod end play (axial play). Refer to section 1.17.3.2.
14. Rotate the crankshaft to make sure it turns freely.

NOTE:
If it is necessary to turn the crankshaft and the flywheel has been removed, install the flywheel guide studs in the crankshaft gear.

All information subject to change without notice.
6SE412 0403 Copyright © 2004 DETROIT DIESEL CORPORATION

15. Using a dial gauge and holder, measure the piston projection relative to crankcase top dead center at all the pistons. See Figure 1-88.

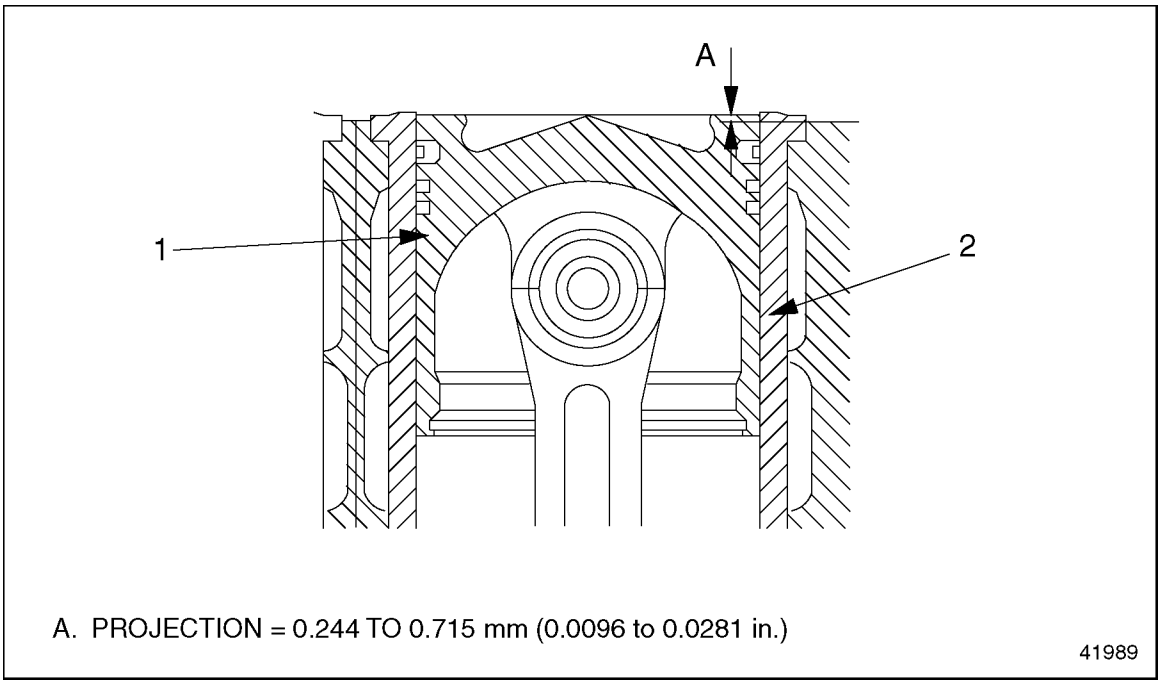

1. Piston
2. Cylinder Liner

Figure 1-88 Piston Projection at Top Dead Center (TDC)

16. If the piston projection dimensions are not between 0.244 and 0.715 mm (0.0096 and 0.0281 inch), replace the piston. Listed in Table 1-25.

Description	mm (in.)
Piston Projection (from TDC)	0.244 to 0.715 (0.0096 to 0.0281)

Table 1-25 Piston Projection Specifications

17. Remove the engine cranking tool (J 46167 or 407 589 00 63 00).

NOTICE:
Be careful not to damage the oil spray nozzles. Damaged oil spray nozzles could result in a loss of oil pressure and cause engine damage.

18. Install the oil spray nozzles, as removed. Be sure they are seated and aligned correctly. Refer to section 3.1.2.
19. Install the oil pan. Refer to section 3.1.2.
20. Install each cylinder head, as removed. Refer to section 1.2.2.

 Copyright © 2004 DETROIT DIESEL CORPORATION

https://truckmanualshub.com/

21. Install the engine in the vehicle.

1.17.3 Piston Ring Replacement

Replace the piston ring as follows:

1. Remove the piston. Refer to section 1.17.1.
2. Remove the rings, using suitable ring pliers. Remove the rings in order, starting from the top of the piston down. See Figure 1-89. See Figure 1-90.

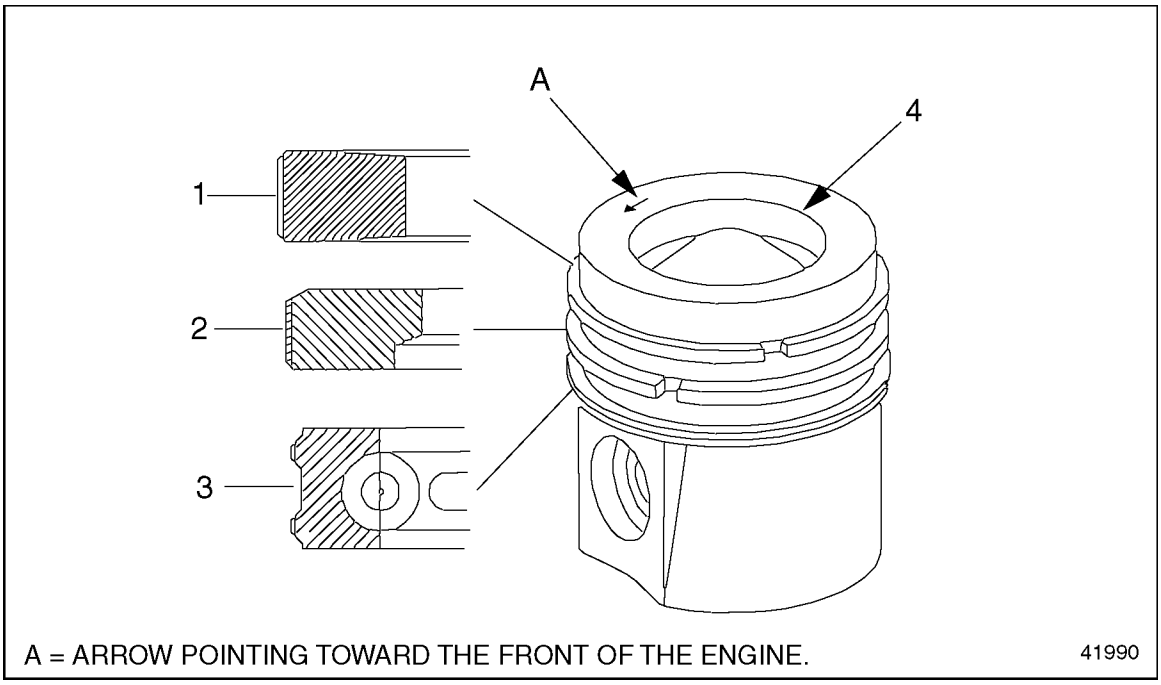

1. Keystone Piston Ring (Groove I)
2. Taper Face Ring with Internal Angle (Groove II)
3. Double Chamfered Oil Control Ring with Garter Spring (Groove III)
4. Piston

Figure 1-89 Piston Rings

All information subject to change without notice.
6SE412 0403 Copyright © 2004 DETROIT DIESEL CORPORATION

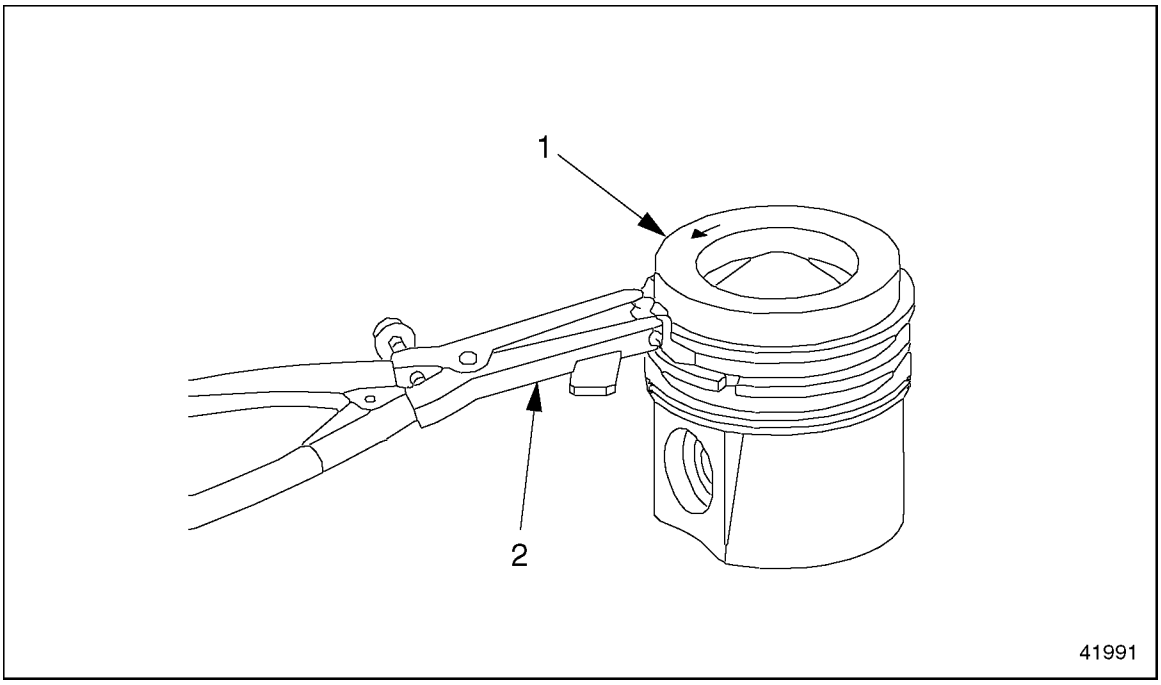

1. Piston
2. Ring Pliers

Figure 1-90 Removing the Piston Rings

3. Clean all the carbon from the ring grooves. Be sure the grooves are not damaged, and that there are no burrs or combustion residue in the grooves.
4. Before installing the new rings, check the end gap. The correct end-gap measurements are listed in Table 1-26.

Ring Designation	Groove	Gap When New, mm (inch)	Maximum End Gap, mm (inch)
Keystone	I	0.45 to 0.60 (0.018 to 0.024)	1.0 (.039)
Taper-Faced with Internal Angle	II	0.40 to 0.55 (0.016 to 0.022)	1.0 (.039)
Double-Chamfered Oil Control with Garter Spring	III	0.40 to 0.55 (0.016 to 0.022)	1.0 (.039)

Table 1-26 Piston Ring End-Gap Dimensions

NOTE:
Check the end gap of the upper two piston rings first. The garter spring must be removed from the third (lowest) piston ring before you can measure its end gap.

 Copyright © 2004 DETROIT DIESEL CORPORATION

https://truckmanualshub.com/

[a] Place each ring squarely into the combustion area of a cylinder liner or cylinder, then measure the end gap, using a feeler gauge. See Figure 1-91.

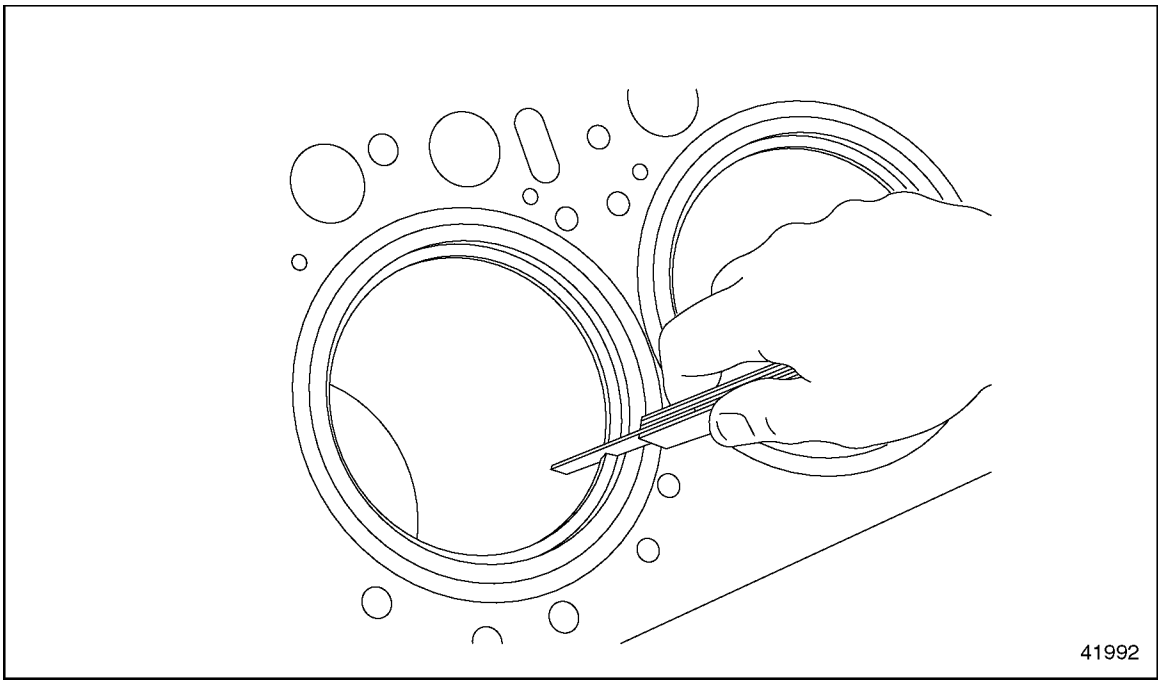

Figure 1-91 Checking the Ring End Gap

[b] Remove the spring garter from the third (lowest) ring, then measure its gap in the same way as the other two rings.

All information subject to change without notice.
6SE412 0403 Copyright © 2004 DETROIT DIESEL CORPORATION

[c] Install the spring garter into the ring. The garter spring joint should be positioned 180 degrees from the gap in the piston ring. See Figure 1-92.

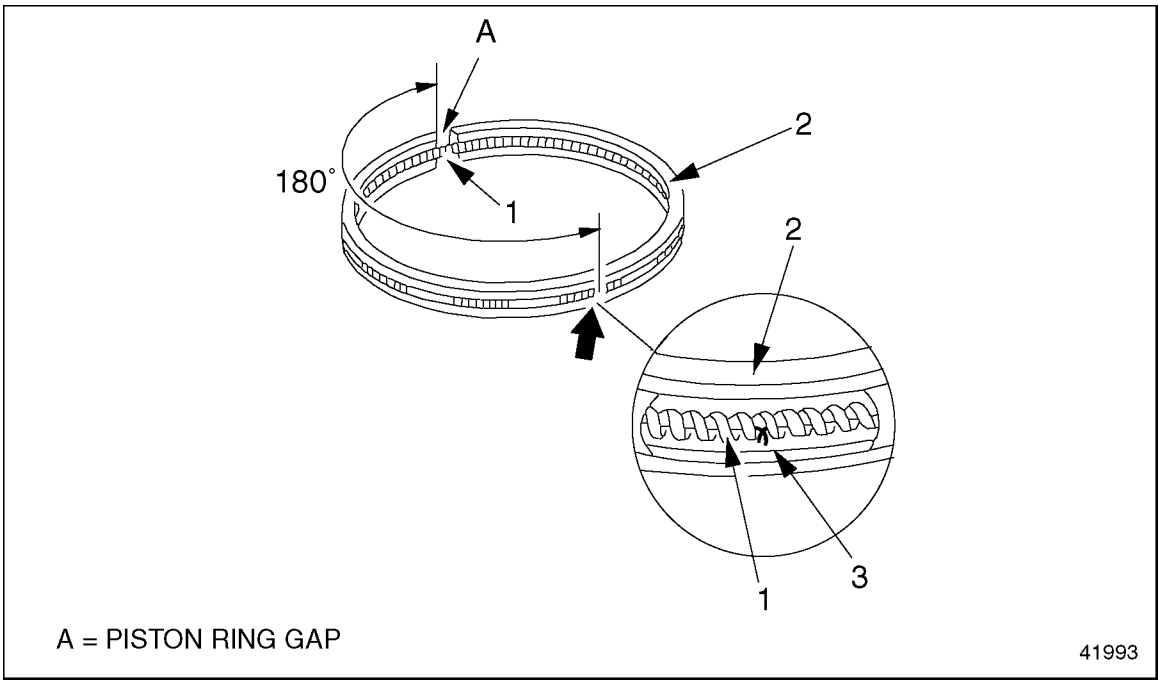

1. Garter Spring
2. Piston Ring
3. Garter Spring Joint

Figure 1-92 Installing the Garter Spring

5. Using ring pliers, install the rings.Make sure the word "TOP" on each ring is facing toward the crown of the piston. Install the rings in the reverse order of their removal; from the bottom to the top of the piston.

 Copyright © 2004 DETROIT DIESEL CORPORATION

https://truckmanualshub.com/

6. Offset the ring gaps alternately by 120 degrees. See Figure 1-93.

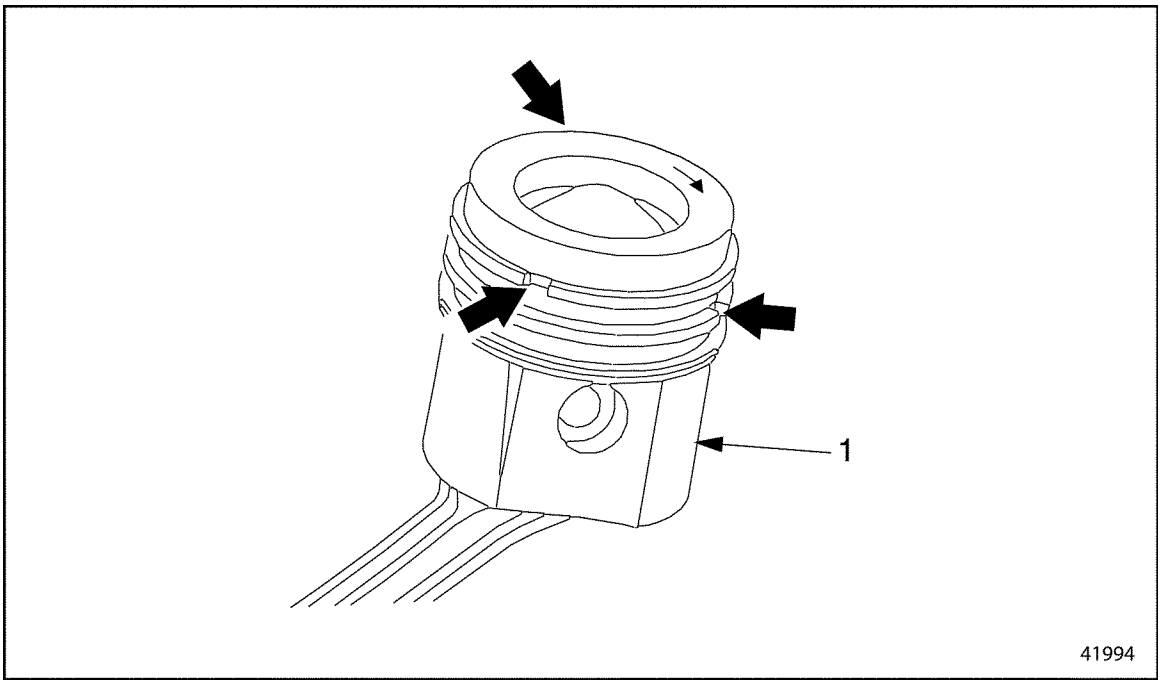

Piston

Figure 1-93 Piston Rings Offset 120 Degrees

7. Install the piston. Refer to section 1.17.2.

1.17.3.1 Piston Inspection

Inspect the piston as follows:

1. Remove the piston. Refer to section 1.17.1.

All information subject to change without notice.
6SE412 0403 Copyright © 2004 DETROIT DIESEL CORPORATION

2. Check the diameter of the wrist pin and the wrist pin bore. See Figure 1-94. Specifications are listed in Table 1-27.

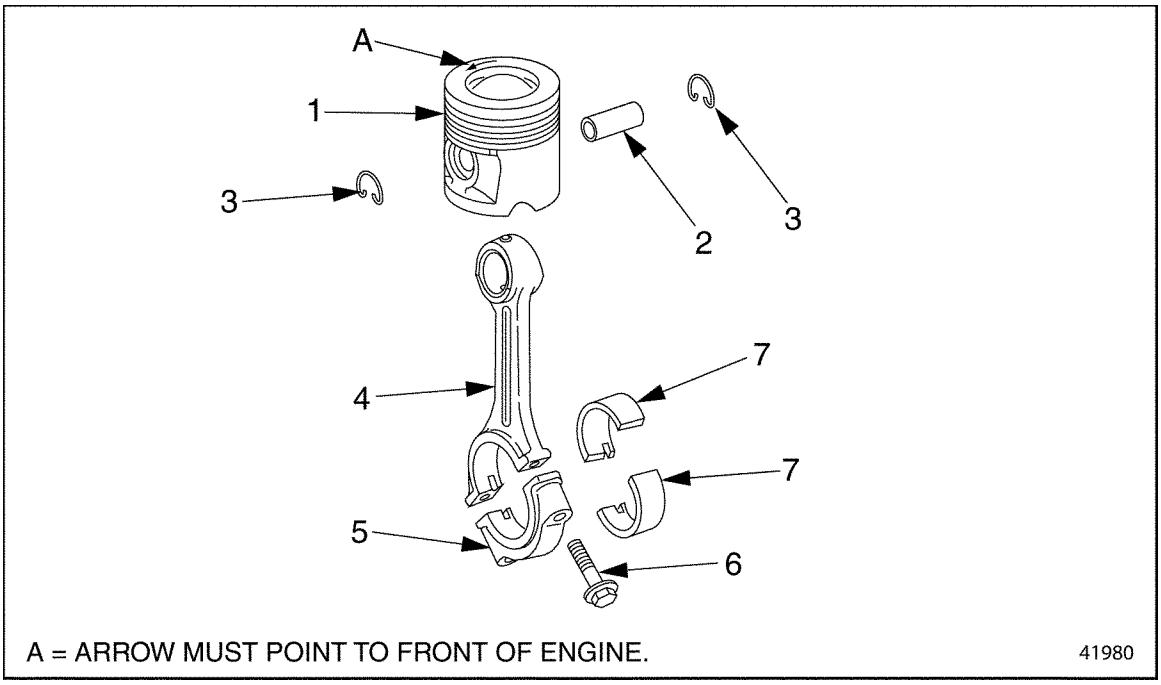

1. Piston and Rings
2. Wrist Pin
3. Snap Ring
4. Connecting Rod
5. Bearing Cap
6. Connecting Rod Stretch Bolt
7. Bearing Shell

Figure 1-94 Piston Assembly (exploded view)

Description	Dimensions: mm (inch)
Piston Compression Height	79.50-79.55 (3.130-3.132)
Wrist Pin Bore Diameter	52.03-52.04 (2.0484-2.0488)
Wrist Pin Diameter	51.992-51.998 (2.0469-2.0472)

Table 1-27 Piston Inspection Specifications

3. Inspect the cylinder liner and piston for damage and signs of wear. Replace any piston with damage to the snap ring grooves, cracks in the piston wall, or signs of seizing and/or erosion.

 Copyright © 2004 DETROIT DIESEL CORPORATION

https://truckmanualshub.com/

4. Check the tolerance code on the piston and compare it to the tolerance code on the cylinder liner. See Figure 1-95.

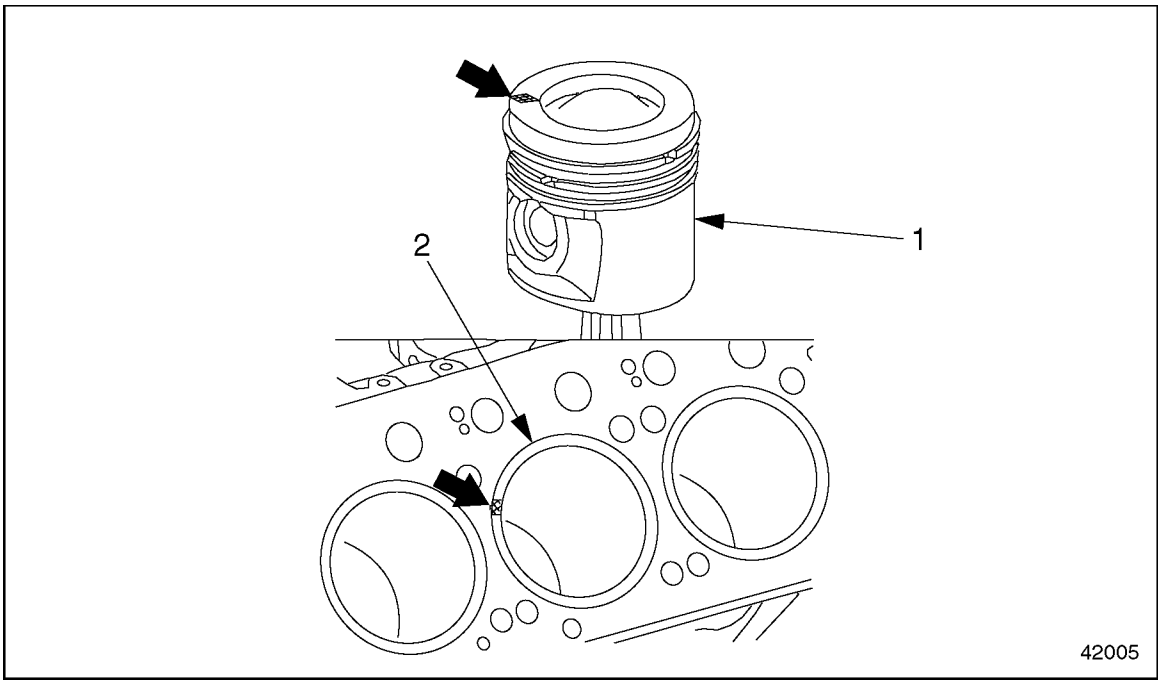

1. Piston
2. Cylinder Liner

Figure 1-95 Tolerance Codes

5. Check the condition of the piston rings. Replace any worn, damaged, or chipped rings. Refer to section 1.17.3.
6. Check the connecting rod for any unusual condition. Refer to section 1.17.3.2.
7. Measure the diameters of the bearing shell bore and crankshaft journals. Refer to section 1.17.3.3 for instructions.

All information subject to change without notice.
6SE412 0403 Copyright © 2004 DETROIT DIESEL CORPORATION

8. Check the length of the connecting rod stretch bolts. See Figure 1-96. Replace any bolts that exceed the maximum length of 68.5 mm (2.70 inches).

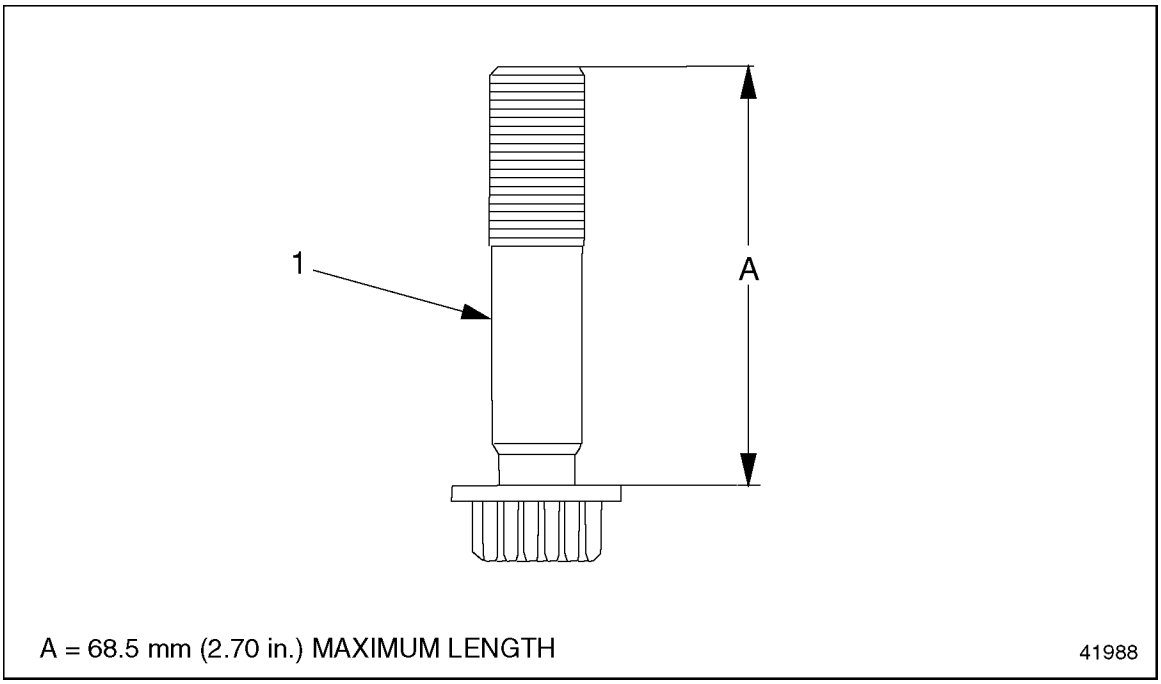

1. Shank

Figure 1-96 Measuring a Stretch Bolt

1.17.3.2 Connecting Rod End Play Measurement

Measure the connecting rod end play as follows:

1. Remove the piston. Refer to section 1.17.1.
2. Inspect the connecting rod for blue discoloration (indicates bearing damage), scoring, notches, and cracks. If any of these conditions are found, replace the connecting rod.

 Copyright © 2004 DETROIT DIESEL CORPORATION

https://truckmanualshub.com/

3. Measure the inside diameter of the bushing in the small bore of the connecting rod. Use a quick-release caliper (internal measurement, 40 to 60 mm), with a dial gauge and holder. If the value exceeds 52.07 mm (2.050 inches), replace the connecting rod.

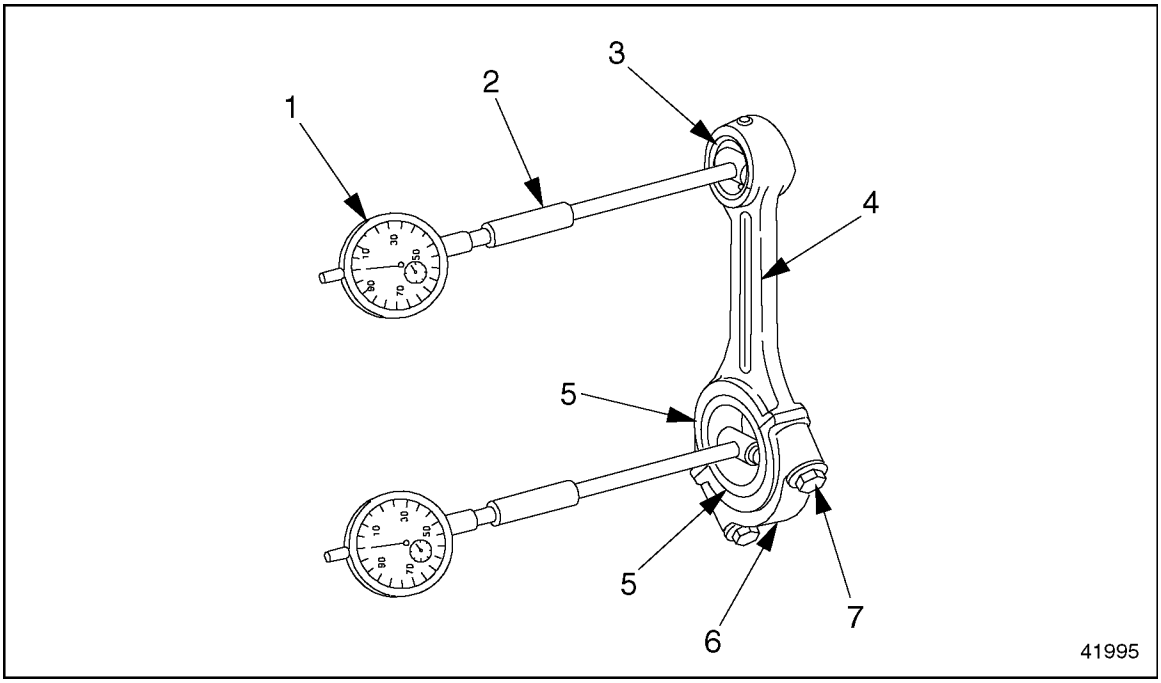

1. Dial Gauge
2. Dial Gauge Holder
3. Bushing
4. Connecting Rod
5. Bearing Shell (2 halves)
6. Bearing Cap
7. Stretch Bolt (2 qty.)

Figure 1-97 Measuring Inside Diameters in the Connecting Rod

NOTE:
Checking the connecting rod for a twisted or bent condition in the next step requires machine shop equipment such as a caliper gauge with a round scale.

All information subject to change without notice.
6SE412 0403 Copyright © 2004 DETROIT DIESEL CORPORATION

NOTICE:
Do not attempt to straighten the connecting rod. This could result in severe engine damage.

4. Inspect the connecting rod for twisting and dimensional tolerance. see Figure 1-98. If any value exceeds those listed in Table 1-28, , replace the connecting rod.

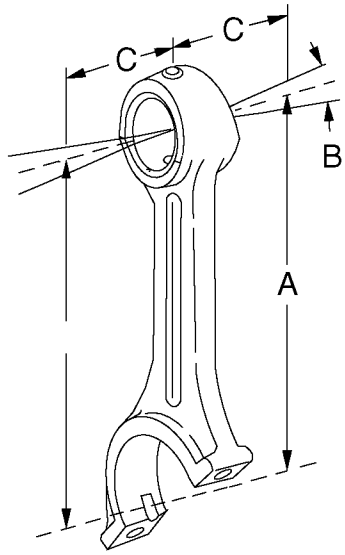

Figure 1-98 Connecting Rod Measurements

Description	Dimensions: mm (inch)
Length of Connecting Rod	255.970-256.030 (10.0775-10.0799)
Basic Bore Diameter for Connecting Rod Bearings	99.000-99.022 (3.8976-3.8985)
Maximum Permissible Out-of-Round in Bearing Bore	0.01 (0.0004)
Maximum Permissible Out-of-Round in Bushing Bore	0.01 (0.0004)
Maximum Difference in Axial Parallelism Between Bearing Bore and Bushing Inner Surface	0.030 (0.0012)
Width of Connecting Rod (at big end)	44.308-44.370 (1.744-1.7468)
Width of Connecting Rod Journal	44.5-44.6 (1.75-1.76)
Distance from Connecting Rod Center Line for Measuring Parallelism	50 (2)

Table 1-28 Connecting Rod Dimensional Tolerances

[a] On each side of the connecting rod, measure the length of the connecting rod (Dimension A in see Figure 1-98) : the distance from the center bearing bore (big-end

 Copyright © 2004 DETROIT DIESEL CORPORATION

https://truckmanualshub.com/

bore) to the center of the bushing (small-end bore). The measurement must be within 255.970 to 256.030 mm (10.0775 to 10.0799 in.).

[b] Measure the difference in axial parallelism (Dimension B in see Figure 1-98) between the bearing bore and the inner surface of the bushing, at 50 mm (2 inches) from the connecting-rod centerline (Dimension C in see Figure 1-98). The maximum allowed difference is 0.030 mm (0.0012 inch).

[c] Measure the diameter of the connecting rod basic bore, with the bearing shells removed. The diameter of the basic bore must be between 99.000 to 99.022 mm (3.8976 to 3.8985 in.).

[d] Measure the maximum permissible out-of-round in the bearing bore, with the bearing shells removed. The maximum permissible is 0.01 mm (0.0004 in.).

5. Calculate the connecting rod end play, or axial play, (fore-to-aft movement) on the crankshaft.If the end play is less than 0.130 mm (0.0051 inch), or more than 0.292 mm (0.0115 inch), replace the connecting rod. Listed in Table 1-28.

   [a] For each bearing journal, note the width (thickness) of the bearing journal. Example: W_j = 1.8120 inches.

   [b] For each connecting rod, note the width (thickness) of the rod. Example: W_r = 1.8050 inches.

   [c] From the value for the journal width, subtract the value for the connecting rod width. This result is the end play. Example: W_j—W_r = 0.0070 inch.

6. Remove the bolts and bearing cap when ready to install the piston.
7. Install the piston. Refer to section 1.17.2.

1.17.3.3 Connecting Rod Radial Play Measurement

Measure the connecting rod radial play as follows:

1. Remove the piston. Refer to section 1.17.1.
2. Using a chamois cloth, clean the bearing bores in both the connecting rod and the bearing cap.

All information subject to change without notice.
6SE412 0403 Copyright © 2004 DETROIT DIESEL CORPORATION

3. Install the two matched halves of the bearing shell, as marked on removal, into the connecting rod and into the bearing cap. Be sure the locking lugs on the bearing shells fit into the grooves in the rod and cap. See Figure 1-99.

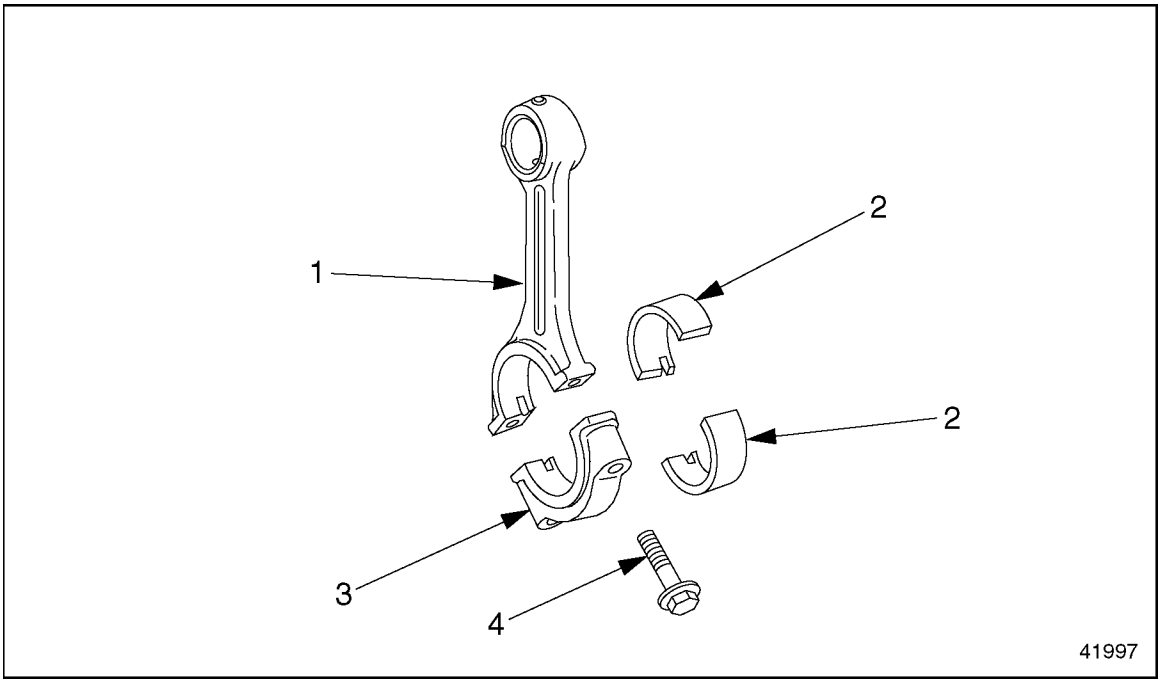

1. Connecting Rod
2. Bearing Shell (2 halves)
3. Bearing Cap
4. Connecting Rod Bolt

Figure 1-99 Bearing Shell Replacement

4. Install the bearing cap on the connecting rod, pressing it on by hand. Be sure that the marks on the cap and rod match.
5. Lubricate the threads and the contact surface of the head of each stretch bolt with a light coating of engine oil.
6. Install the stretch bolts in the connecting rod, and tighten them alternately. Tighten each one in turn to the first stage and then go on to the next stage, listed in Table 1-29.

Max. Shaft Length	Tightening Stage	Torque Value
68.5 mm (2.70 in)	Stage 1	108 N·m (80 lb·ft)
68.5 mm (2.70 in)	Stage 2	additional 90 degrees

Table 1-29 Tightening Stages, Connecting Rod Stretch Bolts

 Copyright © 2004 DETROIT DIESEL CORPORATION

https://truckmanualshub.com/

7. Using a micrometer, measure the bearing journal on the crankshaft in both the vertical and horizontal plane and note the measurements. See Figure 1-100to locate the measuring points and listed in Table 1-30 are the current repair stage specifications.

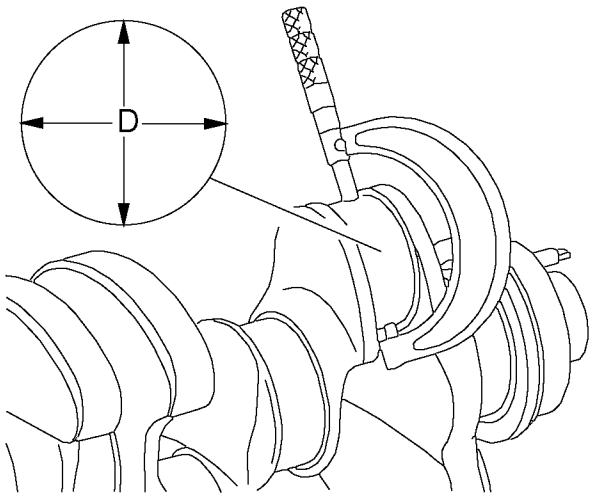

D = MEASURE IN BOTH THE VERTICAL AND HORIZONTAL PLANE.

41998

Figure 1-100 Measuring the Bearing Journal

Repair Stage: mm (in.)	Diameter: mm (in.)
Standard	93.980-94.000 (3.7000-3.7007)
Undersize - 0.1 (0.004)	93.880-93.900 (3.6960-3.6968)
Undersize - 0.25 (0.010)	93.730-93.750 (3.6901-3.6909)
Undersize - 0.50 (0.020)	93.480-93.500 (3.6803-3.6811)
Undersize - 0.75 (0.030)	93.230-93.250 (3.6705-3.6712)
Undersize - 1.00 (0.040)	92.980-93.000 (3.6606-3.6614)

Table 1-30 Bearing Journal Specifications

[a] Measure the bearing journal in the vertical plane and note the reading.

[b] Measure the bearing journal in the horizontal plane and note the reading.

All information subject to change without notice.
6SE412 0403 Copyright © 2004 DETROIT DIESEL CORPORATION

[c] Calculate the average (nominal) bearing-journal diameter from these two measurements, and determine the current repair stage listed in Table 1-31.

Repair Stage: mm (in.)	Diameter: mm (in.)
Standard	94.054-94.096 (3.7029-3.7046)
Undersize - 0.10 (0.004)	93.954-93.996 (3.6990-3.7006)
Undersize - 0.25 (0.010)	93.804-93.846 (3.6931-3.6947)
Undersize - 0.50 (0.020)	93.554-93.596 (3.6832-3.6848)
Undersize - 0.75 (0.030)	93.304-93.346 (3.6734-3.6750)
Undersize - 1.00 (0.040)	93.054-93.096 (3.6635-3.6652)

Table 1-31 Bearing Bore Inside Diameter with Bearing Shells Installed

NOTICE:

Be sure the vise jaws in the next step are adequately lined to prevent the connecting rod surface from being nicked or marred in any way. Such surface damage could lead to later cracking or breaking of the rod.

8. Place the connecting rod in a vise with protective jaws. To prevent the rod from twisting excessively, position the rod in the vise as close as possible to the big-end bore.

 Copyright © 2004 DETROIT DIESEL CORPORATION

https://truckmanualshub.com/

9. Set the caliper (internal measurement 80 to 100 mm) to the nominal bearing-journal diameter calculated above. Use a 75 to 100 mm micrometer for the setting. Preload the setting 5 mm (0.2 inch). See Figure 1-101.

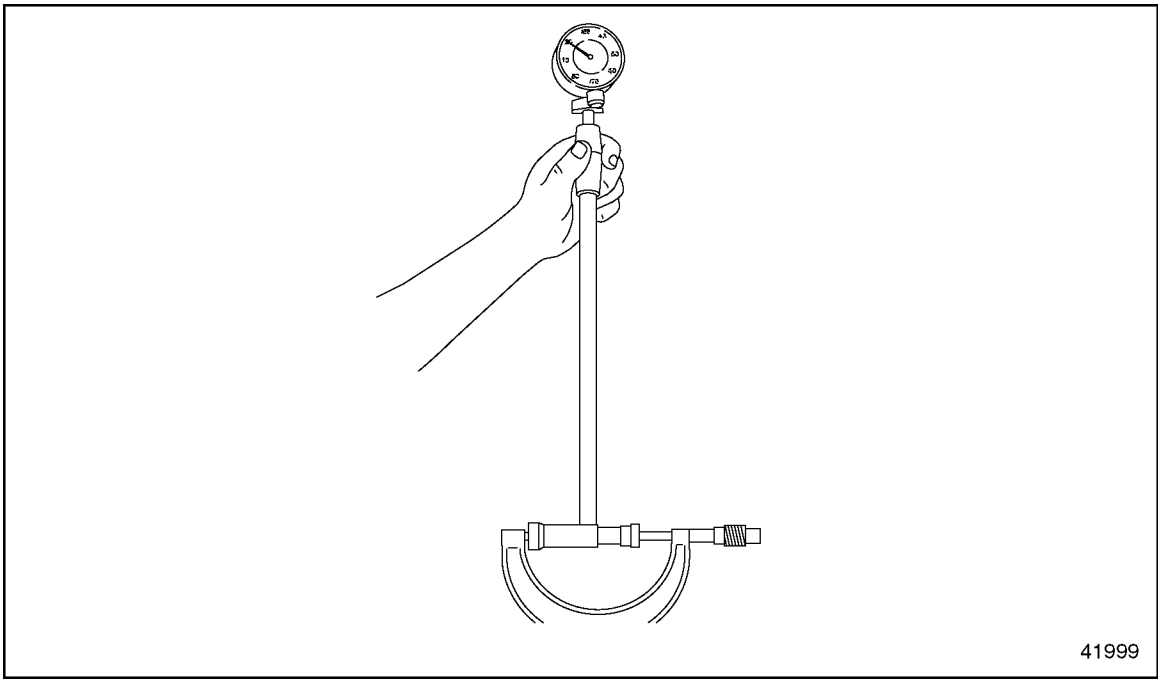

Figure 1-101 Setting the Caliper

10. Using a quick-release caliper (internal measurement 80-120 mm), dial gauge, and holder, measure the inside diameter of the bearing bore (with the shells installed) at three points.

All information subject to change without notice.
6SE412 0403 Copyright © 2004 DETROIT DIESEL CORPORATION

Measure vertically and about 60 degrees each side of vertical. See Figure 1-102 to locate the measuring points, and find the current specifications listed in Table 1-31.

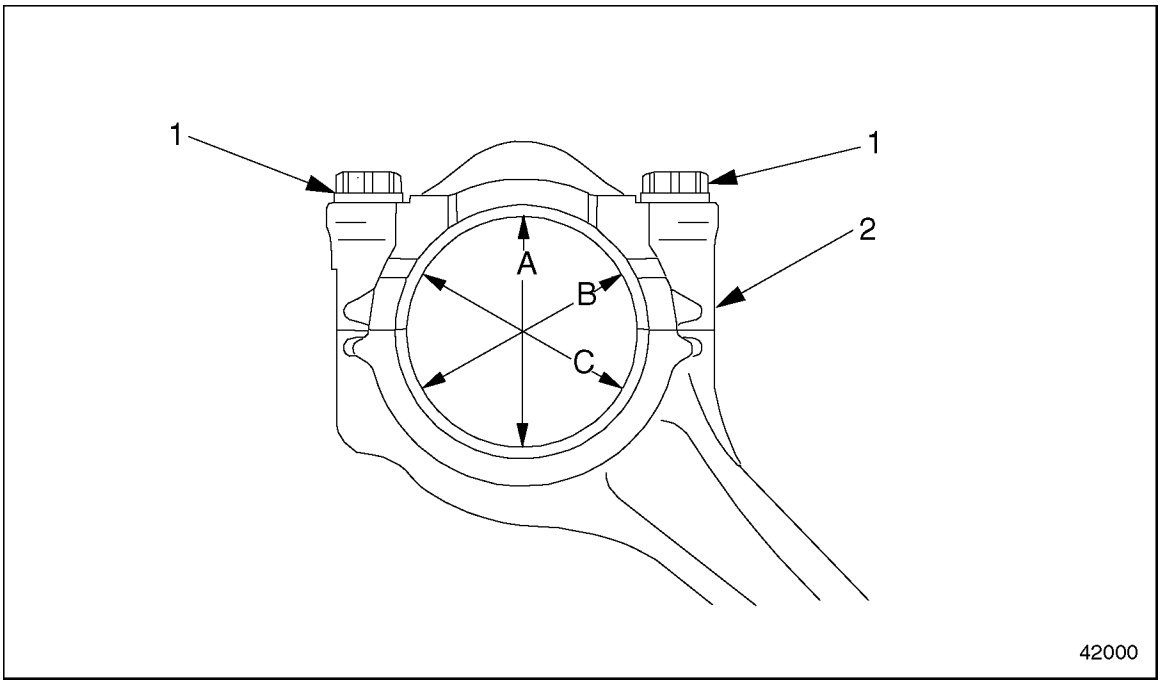

1. Bolt
2. Bearing Cap

Figure 1-102 Measuring the Inside Diameter of the Bearing Shell

[a] Measure the bearing bore in the vertical dimension and note the reading.

[b] Mark off a point 60 degrees counterclockwise from vertical. Measure the bearing bore in this dimension and note the reading.

[c] Mark off a point 60 degrees clockwise from vertical. Measure the bearing bore in this dimension and note the reading.

[d] Calculate the average (nominal) bearing-journal diameter from these three measurements, and determine the current repair stage listed in Table 1-31. If any of the measurements are out of tolerance, replace the bearing shells.

NOTE:
Connecting-rod bearings for all repair stages are delivered from the factory ready to install. Do not refinish them in any way.

NOTE:
To obtain a correct value for connecting-rod radial play, the diameters of each bearing bore and its corresponding journal must belong to the same repair stage (both must be "standard," "undersize 0.1 mm," etc.).

 Copyright © 2004 DETROIT DIESEL CORPORATION

https://truckmanualshub.com/

11. Calculate the connecting rod radial play (up-and-down movement) at the bearing journal. If the radial play is less than 0.054 mm (0.0021 in.), or more than 0.116 mm (0.0046 in.), replace the connecting rod. Listed in Table 1-32is the radial play.

Description	Dimensions: mm (inch)
Radial Play	0.054 - 0.116 (0.0021 - 0.0046)

Table 1-32 Connecting Rod Radial Play

[a] For each connecting rod, note the average value for the bearing bore diameter, as calculated. Example: D_s = 3.5421 inches.

[b] For each bearing journal, note the average value for the bearing journal diameter, as calculated. Example: D_j= 3.5391 inches.

[c] From the value for the bearing bore diameter, subtract the value for the bearing journal diameter. This result is the radial play. Example: D_s—D_j = 0.0030 inch.

NOTE:
In the above example, both measurements belonged to repair stage "undersize 0.1 mm."

12. Remove the bearing cap from the connecting rod.
13. Install the piston. Refer to section 1.17.2.

All information subject to change without notice.
6SE412 0403 Copyright © 2004 DETROIT DIESEL CORPORATION

1.17.4 Connecting Rod Bushing Replacement

Replace the connecting rod bushing as follows:

NOTICE:
Be careful to avoid damaging the bushing bore when removing the bushing. A damaged connecting rod can seize up suddenly, causing major engine repairs.

1. Rest the connecting rod on a flat surface. Using an appropriate drift, press the bushing out of the connecting rod. See Figure 1-103.

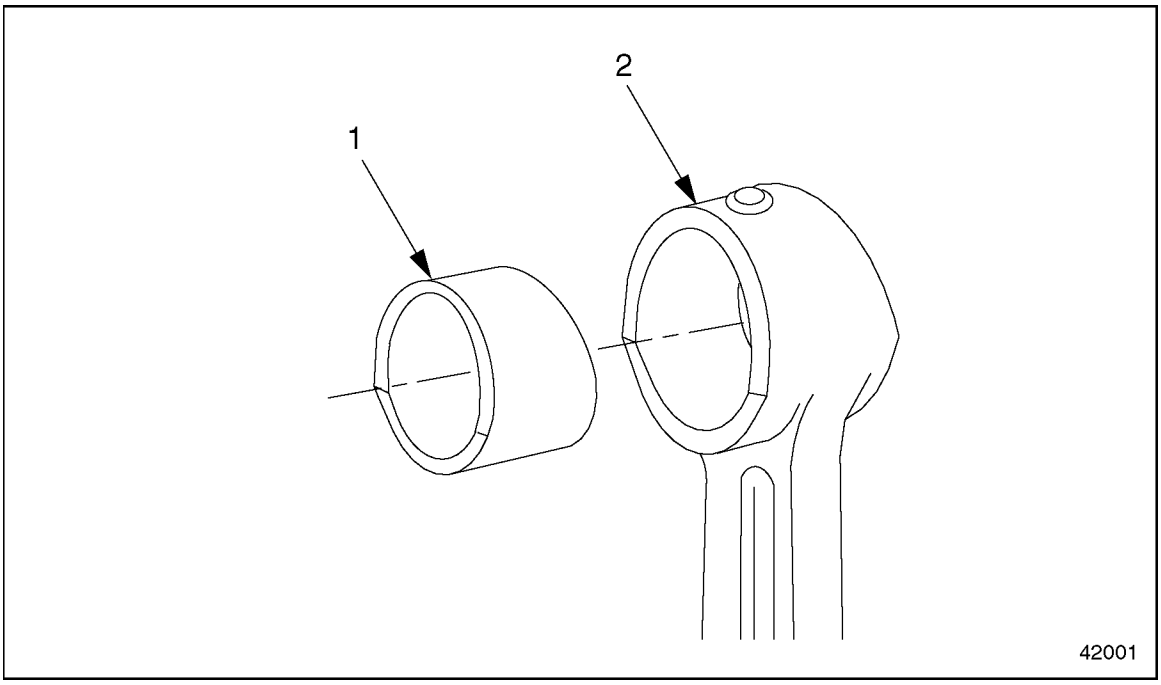

1. Bushing
2. Connecting Rod

Figure 1-103 Remove the Bushing

2. Check the bushing bore in the connecting rod. If surface material is missing from the bushing bore, replace the connecting rod.

 Copyright © 2004 DETROIT DIESEL CORPORATION

https://truckmanualshub.com/

3. Measure the inside diameter of the bushing bore in the small bore of the connecting rod. If the measurement exceeds 57.019 mm (2.2448 in.), replace the connecting rod. Refer to section 1.17.3.2.

NOTE:
The inside diameter of the bushing bore and the outside diameter of the bushing must conform to the specifications listed in Table 1-33. This is necessary to obtain the required interference fit.

Description	Dimensions: mm (in.)
Inside Diameter of Bushing	52.05-52.07 (2.049-2.050)
Outside Diameter of Bushing	57.080-57.100 (2.2472-2.2480)
Inside Diameter of Bushing Bore	57.000-57.019 (2.2441-2.2448)
Bushing Interference Fit	0.061-0.100 (0.0024-0.0039)
Maximum Permissible Out-of-Round in Bushing Bore	0.01 (0.0004)

Table 1-33 Bushing Specifications

4. Measure the outside diameter of the bushing. If the measurement exceeds 57.100 mm (2.2480 in.), replace the bushing.
5. Measure the bushing bore in the connecting rod for deformation. If the bushing bore is out-or-round by more than 0.01 mm (0.0004 in.), replace the connecting rod.
6. Rest the connecting rod on a flat surface. Using an appropriate drift, install the bushing in the connecting rod.
7. Measure the inside diameter of the bushing. If the measurement is shorter than 52.05 mm (2.049 in.), machine the inside contact surface of the bushing until the measurement is correct.

All information subject to change without notice.
6SE412 0403 Copyright © 2004 DETROIT DIESEL CORPORATION

1.18 EGR PISTON, PISTON RING, AND CONNECTING ROD

The difference from the non-EGR engine cylinder liner to the EGR engine, is a groove on the top part of the cylinder liner, which houses the carbon scraper ring. The EGR engine uses a new tool for piston installation; however, all other procedures are the same for the EGR and non-EGR engine.

1.18.1 Piston Removal for EGR Engine

Perform the following steps to remove the piston from an EGR engine:

NOTICE:
The carbon scraper ring has a smaller internal diameter than the piston skirt diameter; therefore, the piston installation and removal must be carried out with the carbon scraper ring *removed.*

NOTE:
Piston removal in the EGR engine is performed with the engine facing upright – not turned on it's side.

1. Remove the carbon scraper ring from the cylinder liner groove.

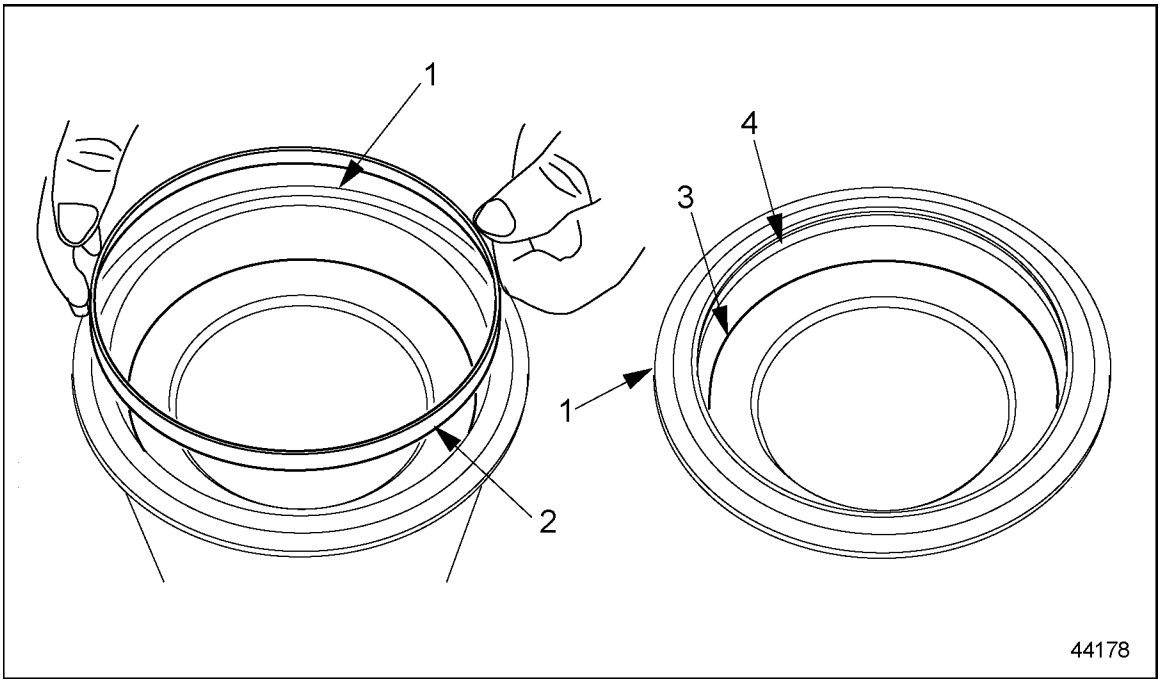

1. Cylinder Liner
2. Carbon Scraper Ring
3. Installed Piston
4. Installed Carbon Scraper Ring

Figure 1-104 Removing Carbon Scraper Ring

 Copyright © 2004 DETROIT DIESEL CORPORATION

https://truckmanualshub.com/

2. Push the piston and connecting rod assembly out of the cylinder liner.
3. Follow remaining steps for non-EGR engine piston removal. Refer to section 1.17.1.

1.18.2 Piston Installation for EGR Engine

Perform the following steps to install the piston in an EGR engine:

NOTICE:
The carbon scraper ring has a smaller internal diameter than the piston skirt diameter; therefore, the piston installation and removal must be carried out with the carbon scraper ring *uninstalled or removed.*

NOTE:
Piston installation in the EGR engine is performed with the engine facing upright – not turned on it's side.

1. Install J tool (J 47110) to the cylinder block. See Figure 1-105.

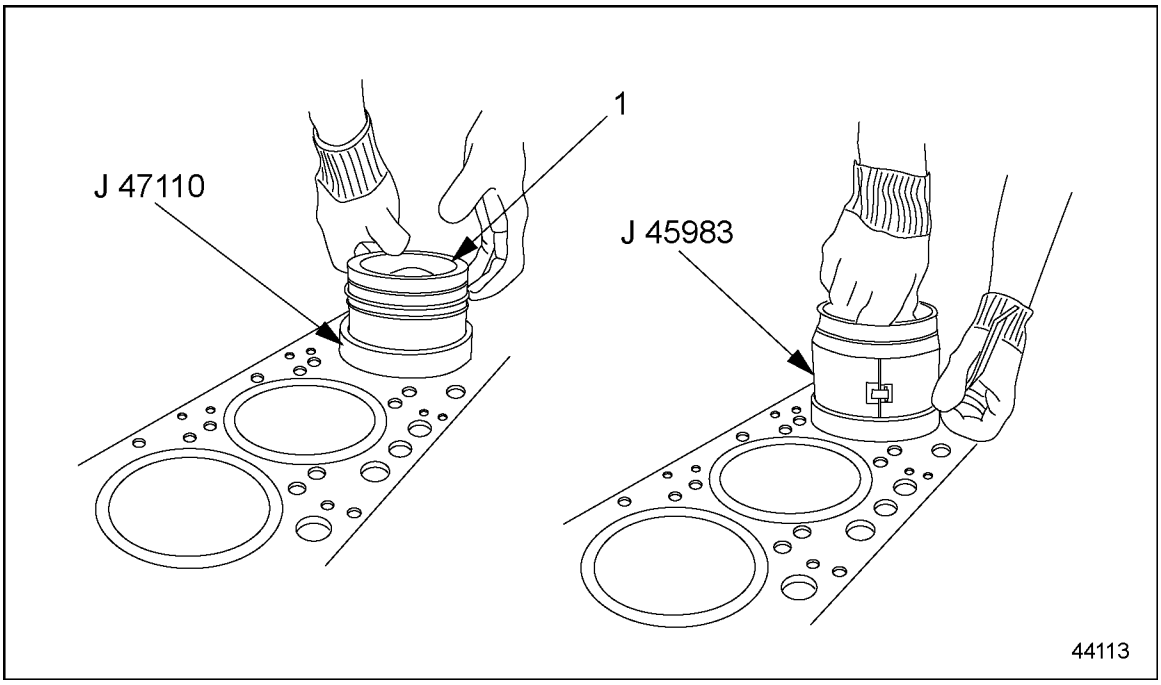

1. Piston

Figure 1-105 Installation of Piston

NOTE:
There are NO arrows on the top of the EGR piston to direct the installation. The piston can be installed in any direction and it will be correct.

All information subject to change without notice.
6SE412 0403 Copyright © 2004 DETROIT DIESEL CORPORATION

2. Push the piston into cylinder liner, using ring compressor J tool (J 45983) to compress the piston rings.
3. Clean the carbon scraper ring seat in the cylinder liner.
4. After piston is installed, install carbon scraper ring in the cylinder liner groove. See Figure 1-104.
5. Check carbon scraper ring for correct fit after installation.
6. Follow remaining steps for piston installation in a non-EGR engine . Refer to section 1.17.2.

 Copyright © 2004 DETROIT DIESEL CORPORATION

https://truckmanualshub.com/

1.19 VALVES

The valves are controlled by mushroom tappets, pushrods, and rocker arms. The intake and exhaust valves are opened and closed by a valve-guided bridge.

1.19.1 Valve Lift Checking

Check the valve lift as follows:

NOTE:
Do this procedure to determine, without removing the camshaft, if the camshaft, or parts of the valve train, have suffered excessive wear. If the camshaft itself is suspect, check the lift on every valve.

1. Remove the cylinder head cover. Refer to section 1.1.1.
2. Remove the inspection cover on the flywheel housing and install the engine cranking tool (J 46167 or 407 589 00 63 00). Tighten the bolts on the cranking device 25 N·m (18 lb·ft).

NOTE:
Check cylinders one at a time.

3. Select the first cylinder. Using the engine cranking tool (J 46167 or 407 589 00 63 00), turn the flywheel until the piston in that cylinder is at ignition TDC (top dead center).

All information subject to change without notice.
6SE412 0403 Copyright © 2004 DETROIT DIESEL CORPORATION

4. Adjust the valve lash. See Figure 1-106. Refer to section 1.19.3.

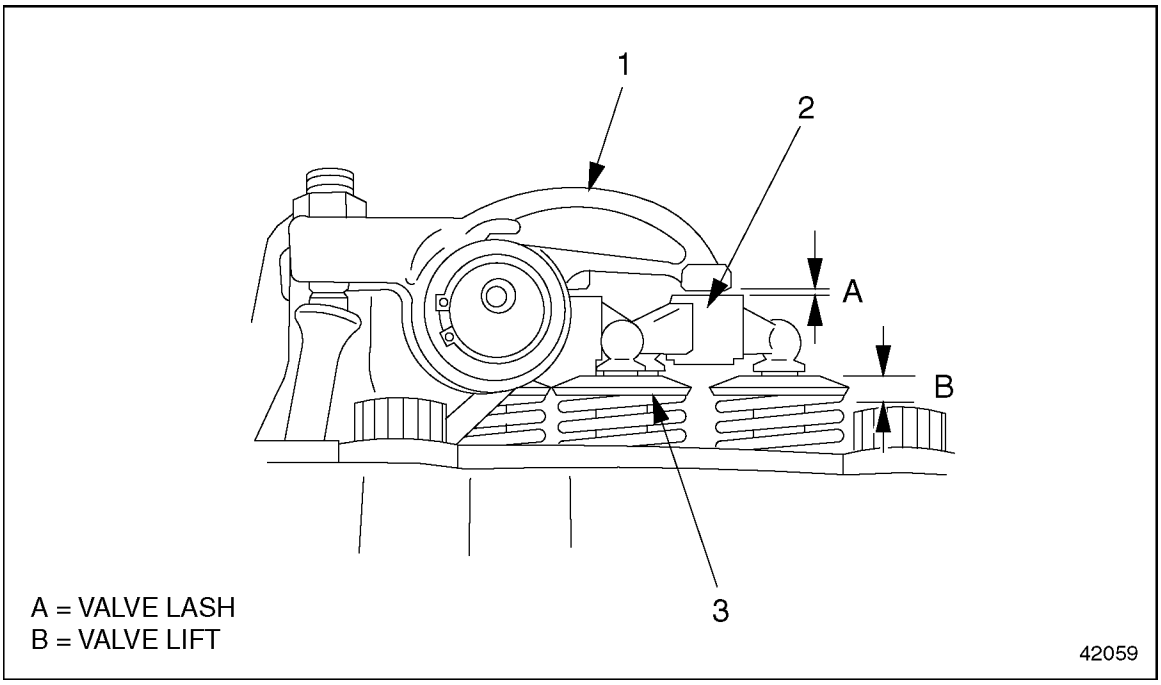

1. Rocker Arm
2. Valve Bridge
3. Valve Spring Retainer

Figure 1-106 Valve Lash and Valve Lift

https://truckmanualshub.com/

5. Check the valve lift on the intake valves. See Figure 1-107. Listed in Table 1-34 are the specifications.

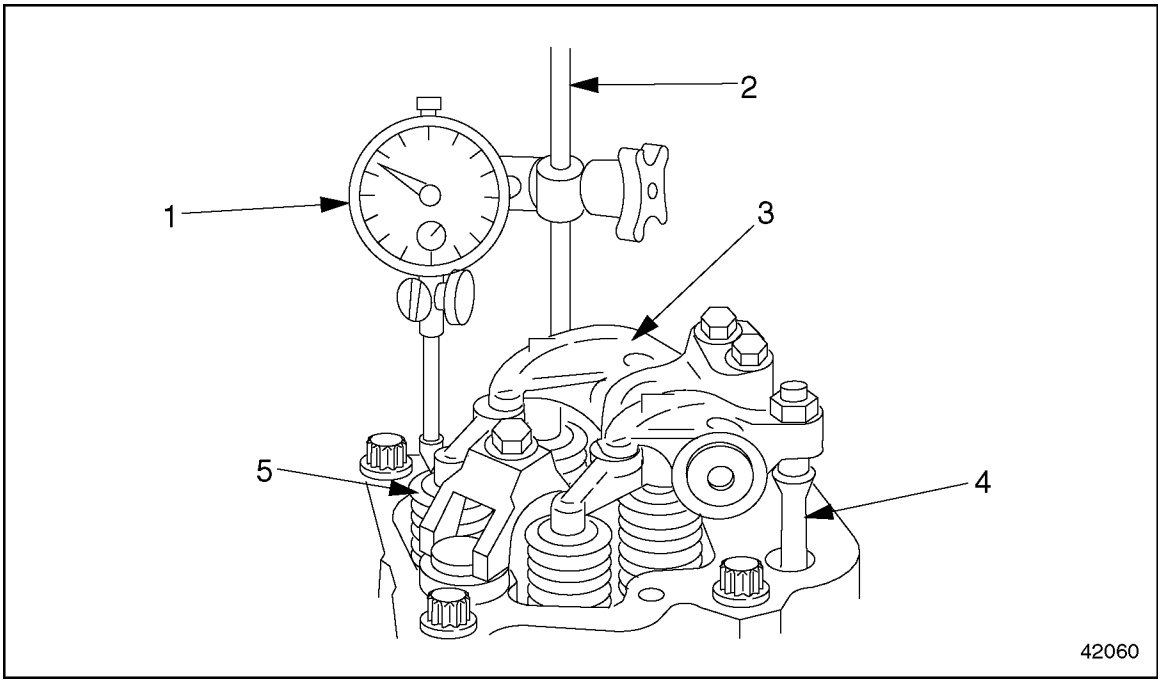

1. Dial Gauge
2. Gauge Holder
3. Intake Rocker Arm
4. Pushrod
5. Intake Valve

Figure 1-107 Checking Valve Lift, Intake Valves

Description	Specification
Specified Dial Gauge Preload for Checking Valve Lift	15 mm (0.60 in)
Valve Lift with Intake Valves Completely Open	11.546 mm (at least 0.4546 in)
Valve Lift with Exhaust Valves Completely Open	11.963 mm (at least 0.4710 in)
Inspection Cover Bolt Torque	25 N·m (18 lb·ft)

Table 1-34 Valve Lift Specifications

[a] Mount a dial gauge and a gauge holder on the valve bridge. Mount the dial gauge with a preload of approximately 15 mm (0.60 inch) to provide adequate travel for checking the intake valve lift.

[b] Set the scale on the dial gauge to "0" (zero).

All information subject to change without notice.
6SE412 0403 Copyright © 2004 DETROIT DIESEL CORPORATION

[c] Using the engine cranking tool (J 46167 or 407 589 00 63 00), turn the flywheel in a counterclockwise direction (as viewed from the flywheel end).

NOTE:
The dial gauge will show the highest reading when the valve is completely open.

[d] When the valves are completely open, read off the value on the dial gauge. If the intake valve lift reaches at least 11.546 mm (0.4546 inch) at its highest point, the intake valves are lifting OK. Check the exhaust valves.If the intake valve lift fails to reach 11.546 mm (0.4546 inch) at its highest point, remove the camshaft and inspect the cams for wear. Refer to section 1.22.1.

NOTE:
If the gauge reading fails to reach 11.546 mm (0.4546 inch), be sure the valves were completely open. The dial gauge will show the highest reading when the valve is completely open.

6. Check the lift on the exhaust valves. See Figure 1-108.

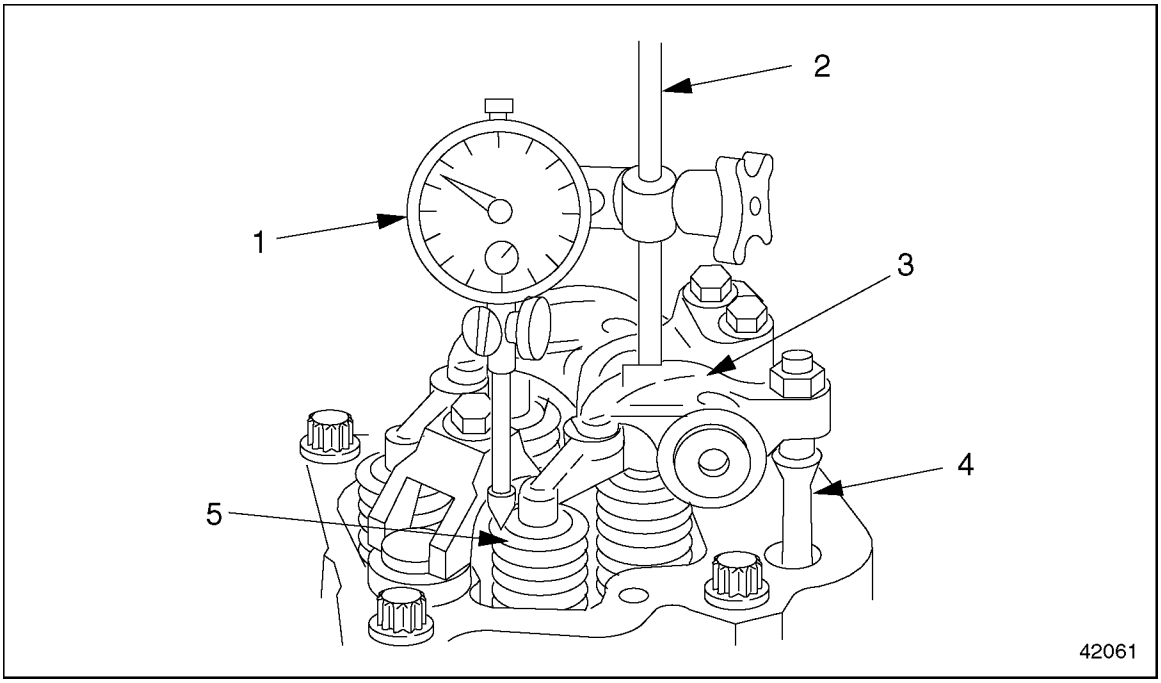

1. Dial Gauge
2. Gauge Holder
3. Exhaust Rocker Arm
4. Pushrod
5. Exhaust Valve

Figure 1-108 Checking Valve Lift, Exhaust Valves

[a] Turn the flywheel in a counterclockwise direction until both valves are closed.

 Copyright © 2004 DETROIT DIESEL CORPORATION

https://truckmanualshub.com/

[b] Move the dial gauge and gauge holder to the spring retainer on the exhaust valve. Make sure the dial gauge still has a preload of approximately 15 mm (0.60 inch) to provide adequate travel for checking the exhaust valve lift.

[c] Set the scale on the dial gauge to "0" (zero).

[d] Using the engine cranking tool, (J 46167 or 407 589 00 63 00) turn the flywheel in a counterclockwise direction (as viewed from the flywheel end).

NOTE:
The dial gauge will show the highest reading when the valve is completely open.

[e] When the valve is completely open, read off the value on the dial gauge. If the exhaust valve lift reaches at least 11.963 mm (0.4710 inch) at its highest point, the exhaust valve is lifting OK. Check the next cylinder.If the exhaust valve lift fails to reach 11.963 mm (0.4710 inch) at its highest point, remove the camshaft and inspect the cams for wear. Refer to section 1.22.1.

NOTE:
If the gauge reading fails to reach 11.963 mm (0.4710 inch), be sure the valves were completely open. The dial gauge will show the highest reading when the valve is completely open.

7. Check the valve lift, both intake and exhaust, on the remaining cylinders, one at a time, until all have been checked.
8. Remove the dial gauge and holder from the cylinder head.
9. Remove the engine cranking tool (J 46167 or 407 589 00 63 00) from the flywheel housing and install the inspection cover. Tighten the inspection cover bolts 25 N·m (18 lb·ft).
10. Install the cylinder head cover. Refer to section 1.1.2.

1.19.2 Valve Lash Checking

Check and adjust the valve lash as follows:

NOTE:
Adjust the valve lash when the engine is cold. Wait at least 30 minutes after shutdown, even if the engine ran only a short time.

Select a method for adjusting the valves. There are two acceptable methods for adjusting the valves, prior to checking the valve lash:

- ☐ In order, according to the timing sequence used for fuel injection (see Method One—Adjust Each Cylinder in Firing Order);
- ☐ By type of valve, depending on crankshaft position (see Method Two—Adjust All Valves Using Two Crankshaft Positions).

All information subject to change without notice.
6SE412 0403 Copyright © 2004 DETROIT DIESEL CORPORATION

See Figure 1-109 for the cylinder and valve layout on MBE 4000 engines.

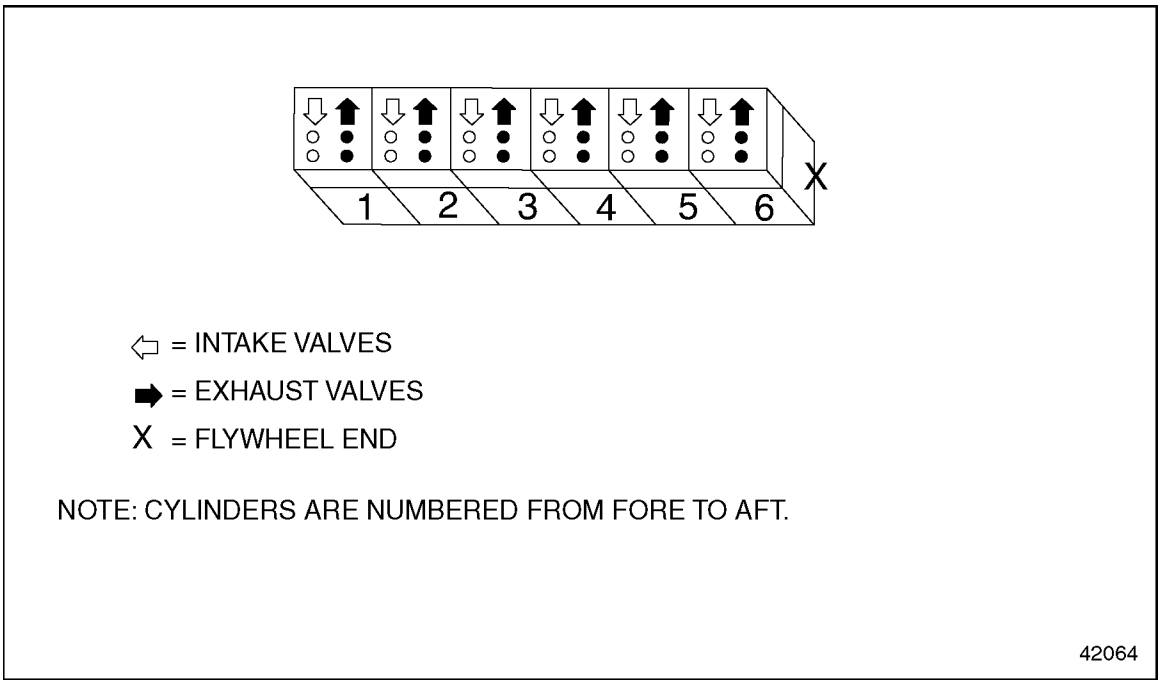

Figure 1-109 Cylinder and Valve Layout

1.19.2.1 Method One — Adjust Each Cylinder in Firing Order

Method one allows you to adjust each cylinder in the order in which fuel is injected. The crankshaft must be repositioned after each cylinder is adjusted as listed in Table 1-35.

Engine	Crankshaft Position	Cylinders	Cylinders	Cylinders	Cylinders	Cylinders	Cylinders
MBE 4000	Ignition TDC	1	5	3	6	2	4
MBE 4000	Valve Overlap	6	2	4	1	5	3

Table 1-35 Valve Adjustment (Method One)

NOTE:
Clean each cylinder head cover before removing it.

 Copyright © 2004 DETROIT DIESEL CORPORATION

https://truckmanualshub.com/

1. Remove the cylinder head covers. See Figure 1-110 . Refer to section 1.1.1.

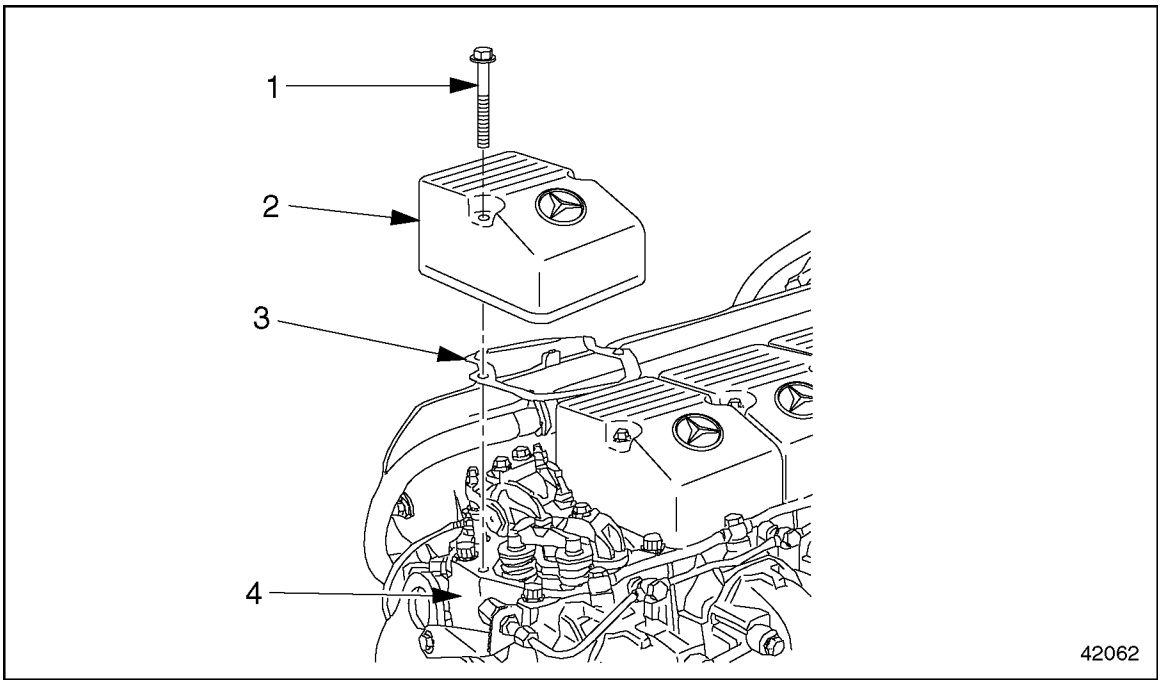

1. Socket-Head Bolt
2. Cylinder Head Cover
3. Gasket
4. Cylinder Head

Figure 1-110 Cylinder Head Cover, (exploded view)

2. Remove the inspection cover on the flywheel housing.

All information subject to change without notice.
6SE412 0403 Copyright © 2004 DETROIT DIESEL CORPORATION

3. Fit the engine cranking tool (J 46167 or 407 589 00 63 00) into the inspection hole on the flywheel housing. See Figure 1-111.

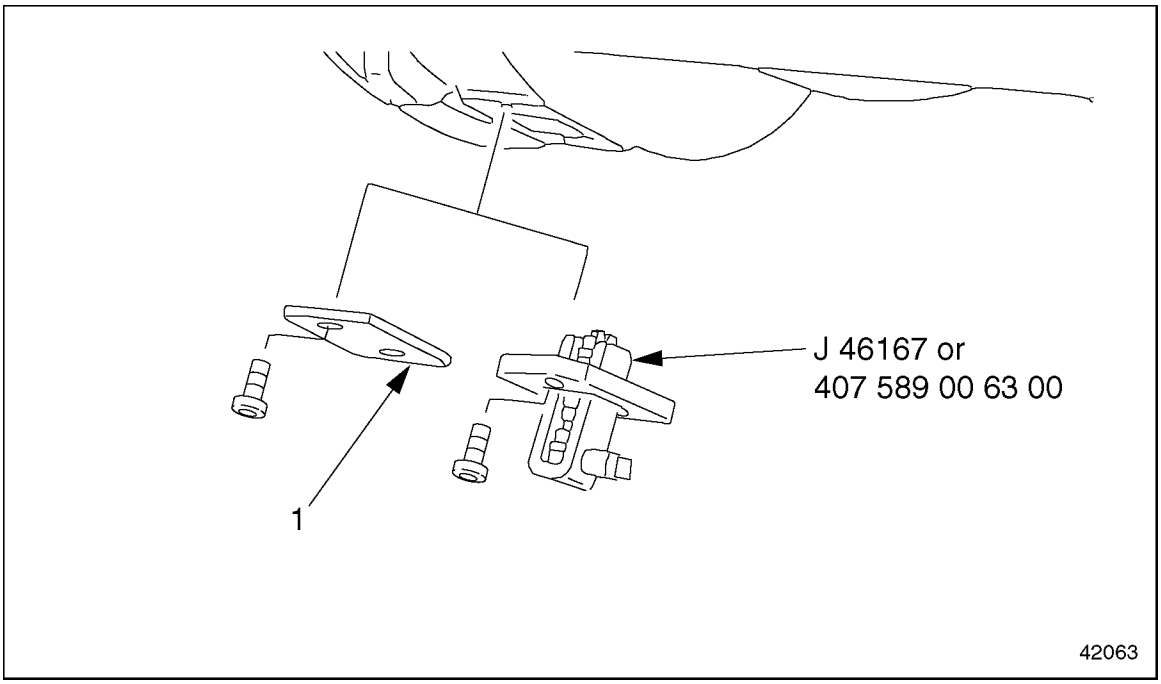

1. Inspection Cover
2. Cranking Device

Figure 1-111 Placement of the Cranking Tool

4. For each cylinder, use the cranking tool to turn over the crankshaft until the piston is exactly at top dead center (TDC) in the compression stroke. The valves must be closed and it must be possible to turn the pushrods without effort.

NOTE:
When the piston in cylinder #1 is at ignition TDC, the valves of cylinder #6 will overlap, meaning that both intake and exhaust valves are partially open, and show no measurable play when tested with a feeler gauge.

5. Check each valve and adjust it (if necessary), using the procedures under the headings "Checking Valve Lash" and "Adjusting Valve Lash."
6. For each valve, measure the valve lash with a feeler gauge between the rocker arm and valve bridge. It should be possible to pull the feeler gauge through with no more than light resistance.

https://truckmanualshub.com/

7. If the value measured is within the range given in the "Check For" column listed in Table 1-36, check the next valve.

Valve Type	Check For: mm (inches)	Adjust to: mm (inches)
Intake	0.30 to 0.60 (0.012 to 0.024)	0.40 (0.016)
Exhaust	0.50 to 0.80 (0.020 to 0.032)	0.60 (0.024)

Table 1-36 Valve Lash Checking and Adjustment

If the value measured is outside the range given in the "Check For" column listed in Table 1-36, adjust the valve lash.

1.19.2.2 Method Two — Adjust All Valves Using Two Crankshaft Positions

Method two allows you to adjust all the valves using just two crankshaft positions.

NOTE:
Clean each cylinder head cover before removing it.

1. Remove the cylinder head covers. See Figure 1-112. Refer to section 1.1.1.

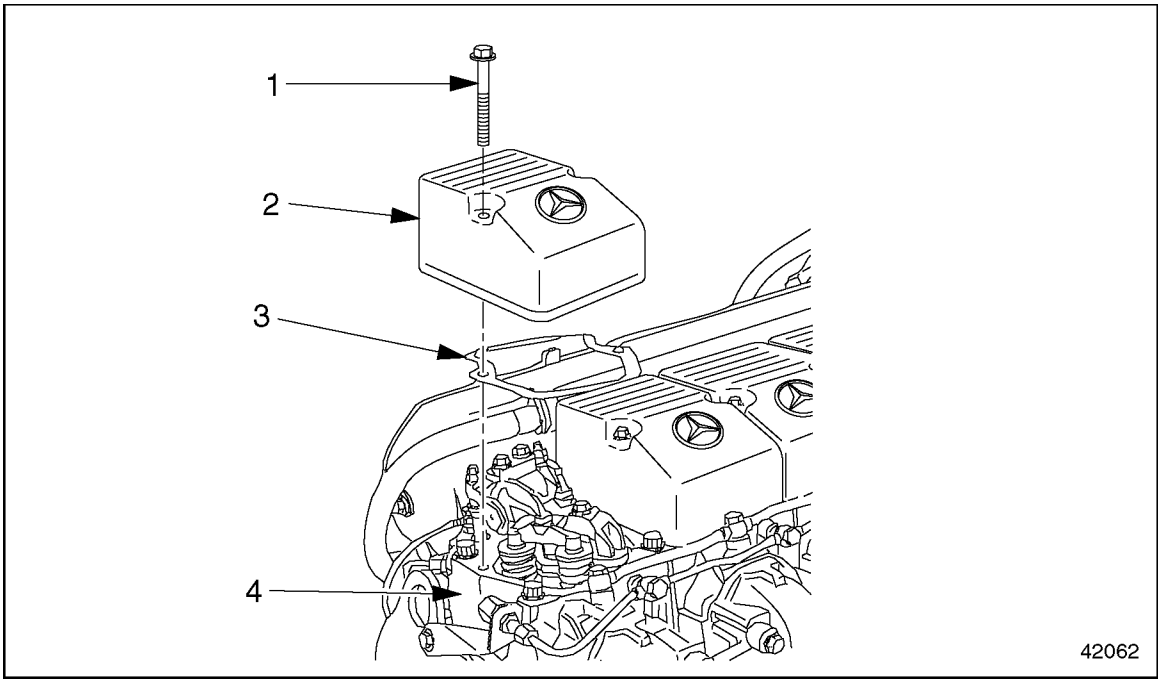

1. Socket-Head Bolt
2. Cylinder Head Cover
3. Gasket
4. Cylinder Head

Figure 1-112 Cylinder Head Cover, (exploded view)

2. Remove the inspection cover on the flywheel housing.

All information subject to change without notice.
6SE412 0403 Copyright © 2004 DETROIT DIESEL CORPORATION

3. Fit the engine cranking tool (J 46167 or 407 589 00 63 00) into the inspection hole on the flywheel housing. See Figure 1-113 .

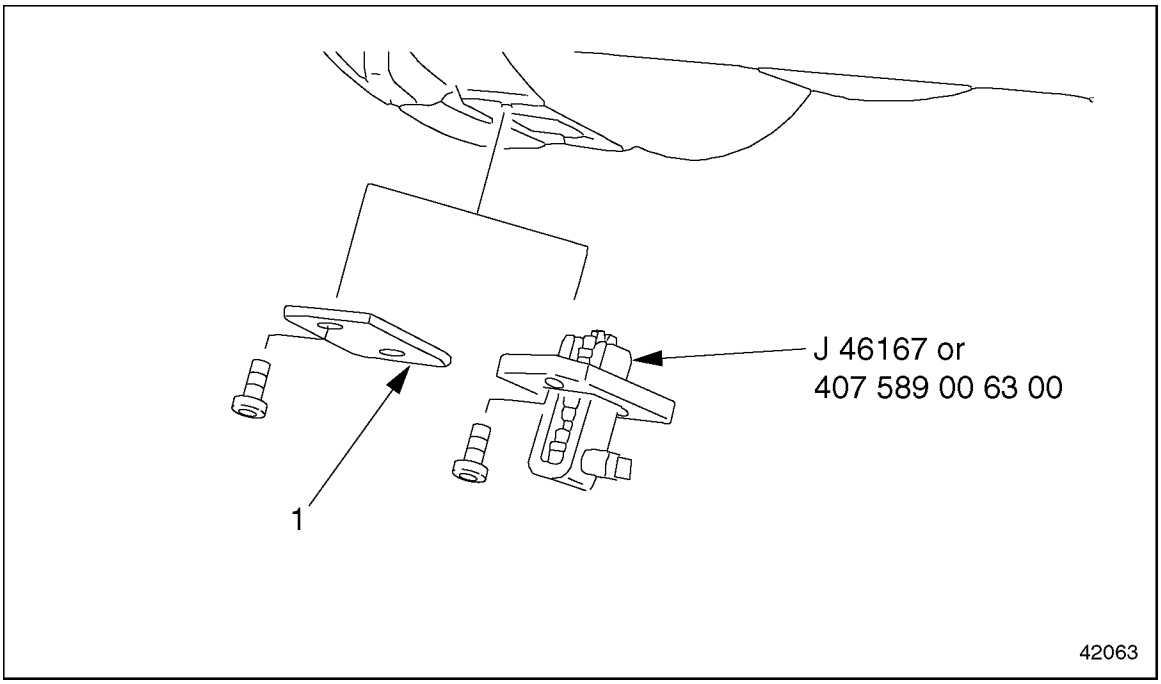

1. Inspection Cover
2. Cranking Device

Figure 1-113 Placement of the Cranking Tool

https://truckmanualshub.com/

4. Using the cranking tool, turn the crankshaft until cylinder #1 is at the ignition TDC position (all valves are closed) and cylinder #6 is at the valve overlap position (all valves are open).

NOTE:
When the piston in cylinder #1 or #6 is at ignition TDC, there will be a small bevelled alignment mark visible through the inspection hole. See Figure 1-114.

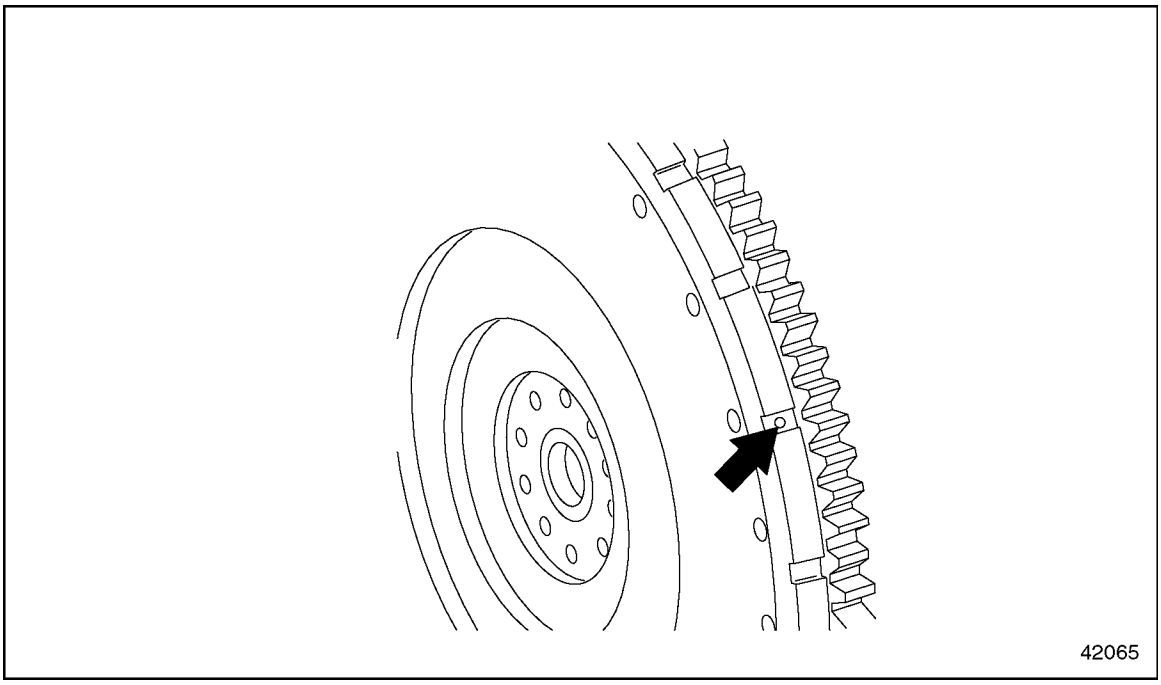

Figure 1-114 Flywheel Alignment Mark

5. Check the valves in the "Ignition TDC" row listed in Table 1-37, and adjust them (if necessary), using the procedures under the headings "Checking Valve Lash" and "Adjusting Valve Lash."

Engine	Cylinder #1 Crankshaft Position	Cylinder Valves/Types*	Cylinder Valves/Types*	Cylinder Valves/Types*	Cylinder Valves/Types*	Cylinder Valves/Types*	Cylinder Valves/Types*
		1	2	3	4	5	6
MBE 4000	Ignition TDC	I/E	I	E	I	E	—
MBE 4000	Valve Overlap	—	E	I	E	I	I/E

* I= Intake Valve and E= Exhaust Valve

Table 1-37 Valve Adjustment (Method Two)

6. Using the cranking tool, turn the crankshaft until cylinder #6 is at the ignition TDC position (all valves are closed) and cylinder #1 is at the valve overlap position (all valves are open).

All information subject to change without notice.
6SE412 0403 Copyright © 2004 DETROIT DIESEL CORPORATION

7. Using the same procedure, check the valves in the "Valve Overlap" row listed in Table 1-37 and adjust them (if necessary), using the procedures under the headings "Checking Valve Lash" and "Adjusting Valve Lash."
8. For each valve, measure the valve lash with a feeler gauge between the rocker arm and valve bridge. It should be possible to pull the feeler gauge through with no more than light resistance.
9. If the value measured is within the range listed in Table 1-38 in the "Check For" column, check the next valve.

Valve Type	Check For: mm (inches)	Adjust to: mm (inches)
Intake	0.30 to 0.60 (0.012 to 0.024)	0.40 (0.016)
Exhaust	0.50 to 0.80 (0.020 to 0.032)	0.60 (0.024)

Table 1-38 Valve Lash Checking and Adjustment

If the value measured is outside the range given in the "Check For" column listed in Table 1-36, adjust the valve lash.

1.19.3 Valve Lash Adjusting

Adjust the valve lash as follows:

 Copyright © 2004 DETROIT DIESEL CORPORATION

https://truckmanualshub.com/

1. If adjustment is needed, unscrew the locknut. See Figure 1-115. Turn the adjusting screw until the valve lash is correct. Use the exact settings given in the "Adjust To" column listed in Table 1-36.

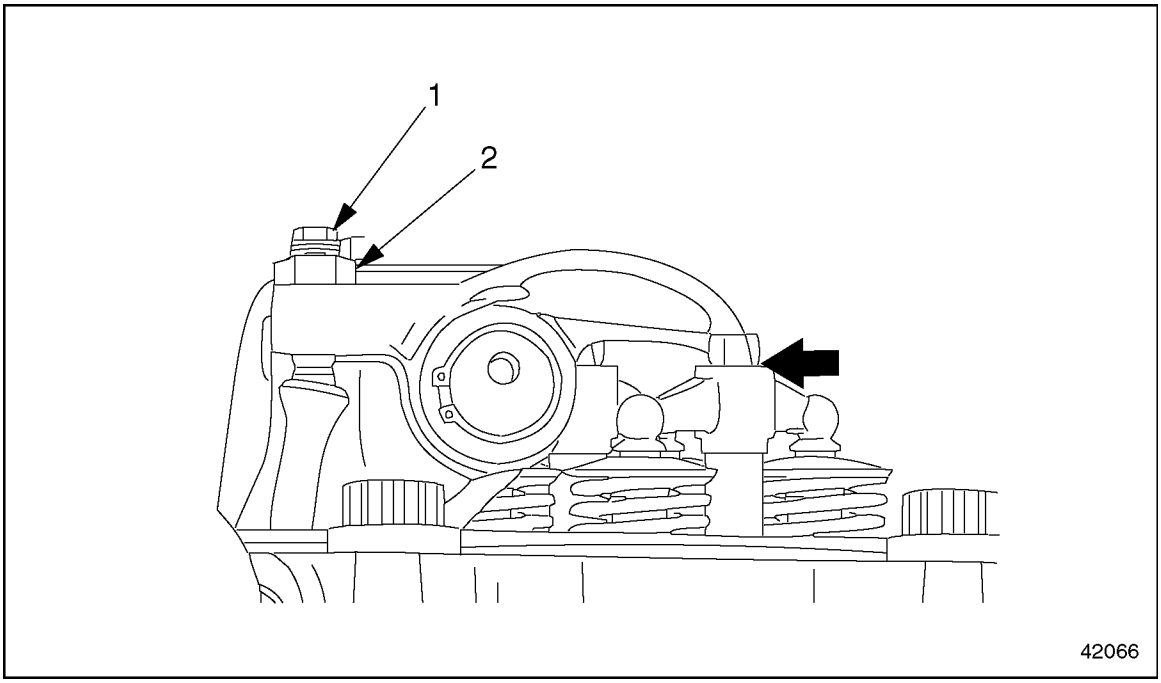

1. Adjusting Screw
2. Locknut

Figure 1-115 Valve Lash Adjustment

NOTE:
When adjusting the valves, adjust to the exact setting. Use the range only for checking adjustment.

2. Tighten the locknut 50 N·m (37 lb·ft).
3. Check the valve lash again. Adjust again if necessary.
4. Install the cylinder head covers. Refer to section 1.1.2.
5. Remove the cranking tool from the inspection hole in the flywheel housing.
6. Replace the end cover on the inspection hole and tighten the bolts 25 N·m (18 lb·ft).

1.19.4 Measuring Valve Standback

Measure the valve standback as follows:

1. Remove the cylinder head from the engine. Refer to section 1.2.1.

All information subject to change without notice.
6SE412 0403 Copyright © 2004 DETROIT DIESEL CORPORATION

2. Set up a dial gauge and dial gauge holder with a preload on the lower contact surface of the cylinder head. See Figure 1-116.

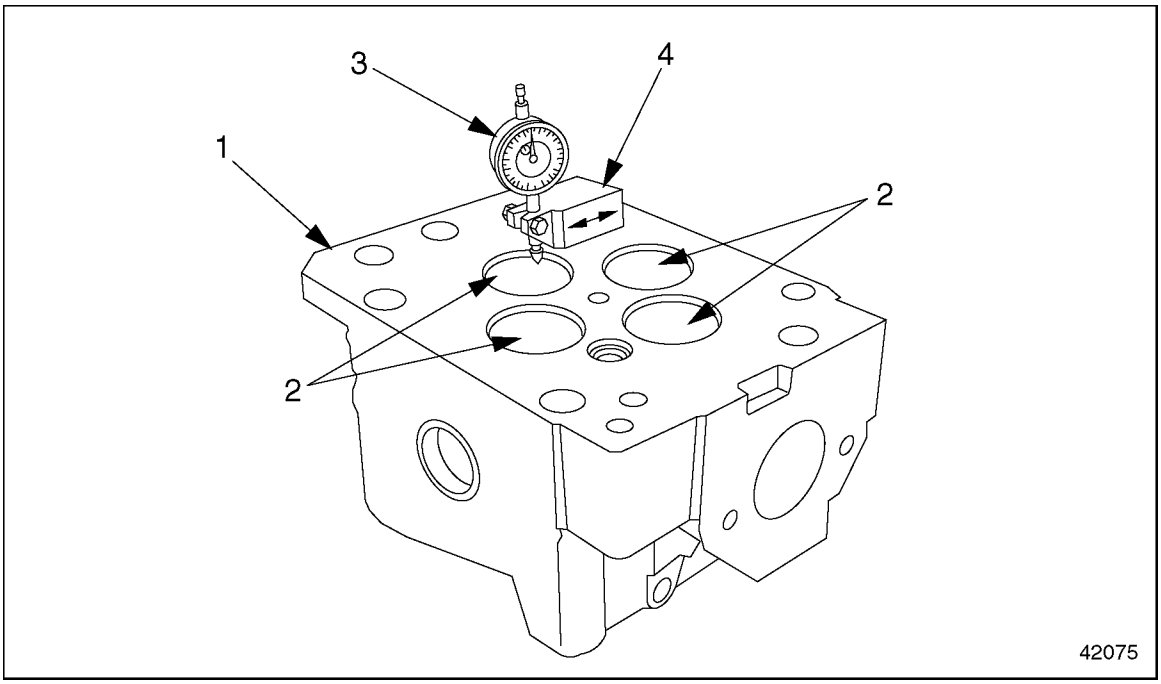

1. Lower Contact Surface of Cylinder Head
2. Valve Head
3. Dial Gauge
4. Dial Gauge Holder

Figure 1-116 Setting the Dial Gauge Preload

NOTE:
Before doing this procedure, make sure the valve head is making contact with the valve seat.

 Copyright © 2004 DETROIT DIESEL CORPORATION

https://truckmanualshub.com/

3. Measure the valve standback listed in Table 1-39, from the cylinder head. See Figure 1-117.

NOTE:
The valve standback is the difference in height between the lower contact surface of the cylinder head and the valve head, when it is touching the valve seat.

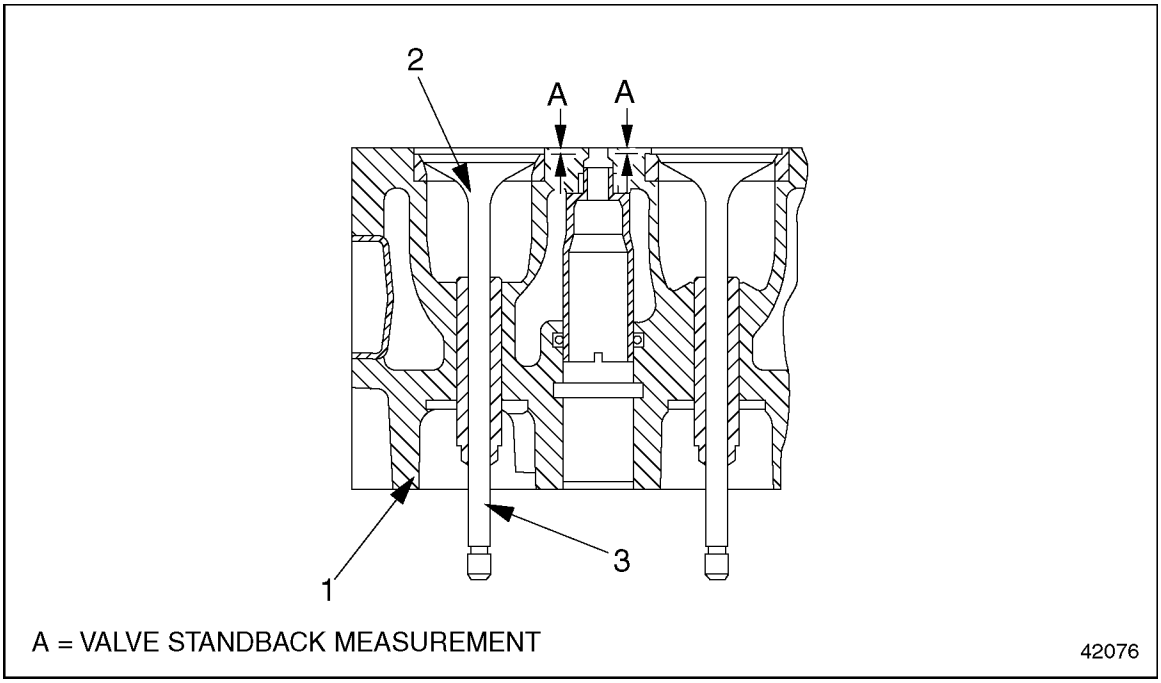

1. Cylinder Head
2. Valve Head
3. Valve Stem

Figure 1-117 Measuring Valve Standback

Valve Type	Description	mm (inch)
Intake	Normal	0.7-1.1 (0.03-0.04)
Intake	Wear Limit	1.6 (0.06)
Exhaust	Normal	0.7-1.1 (0.03-0.04)
Exhaust	Wear Limit	1.6 (0.06)

Table 1-39 Valve Standback

[a] Set the scale of the dial gauge to "0" (zero).

[b] Move the dial gauge enough so that its probe is touching the valve head.

[c] If the gauge reads between 0.7 and 1.1 mm (0.03 and 0.04 inch), the valve standback is within specifications for new cylinder heads. Skip down to "Install the cylinder head..."If the gauge reads less than 0.7 mm (0.03 inch), or more than 1.1 mm (0.04 inch), the valve standback is not within specifications.

All information subject to change without notice.
6SE412 0403 Copyright © 2004 DETROIT DIESEL CORPORATION

[d] For used heads, if the gauge reads more than 1.6 mm (0.06 in.), inspect valve and valve seats.Listed in Table 1-42 are the specifications.

4. Install the cylinder head. Refer to section 1.2.2.

1.19.5 Valve Removal

Remove the intake and exhaust valves as follows:

NOTE:
The MBE 4000 engine has individual heads for each cylinder. To replace the valves on one head, follow these instructions, step by step. To replace all the valves, repeat these instructions for all six cylinder heads.

1. Remove the cylinder head from the engine. Refer to section 1.2.1.
2. Using a dial gauge and holder, measure the valve standback from the cylinder head. Refer to section 1.19.4. Listed in Table 1-40 are the normal tolerances and wear limits.

Valve Type	Description	mm (inch)
Intake	Normal	0.7-1.1 (0.03-0.04)
Intake	Wear Limit	1.6 (0.06)
Exhaust	Normal	0.7-1.1 (0.03-0.04)
Exhaust	Wear Limit	1.6 (0.06)

Table 1-40 Valve Standback

NOTE:
If the measurement is not within tolerance, machine the valve seat insert, using the procedures . If the measurement is beyond the wear limit, replace the valve seat insert.

3. Place the cylinder head on wooden blocks.

 Copyright © 2004 DETROIT DIESEL CORPORATION

https://truckmanualshub.com/

4. Attach the valve spring adaptor and remover, (J 46173), to the cylinder head. See Figure1-118.

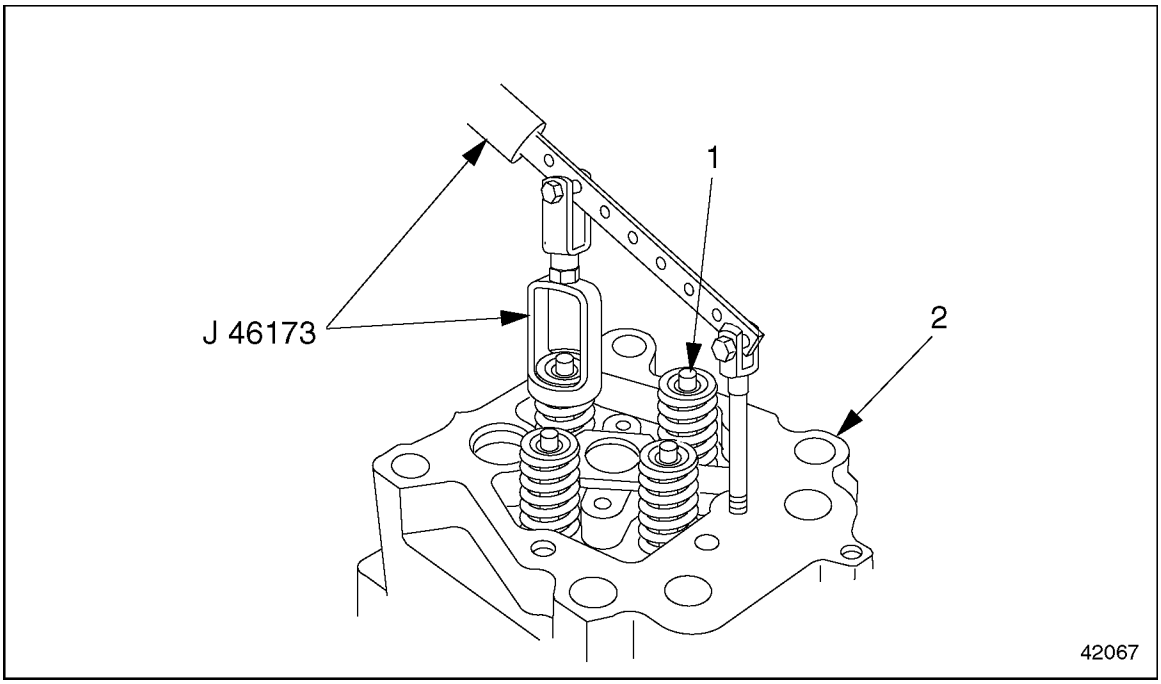

1. Valve
2. Cylinder Head

Figure 1-118 Valve Removal

All information subject to change without notice.
6SE412 0403 Copyright © 2004 DETROIT DIESEL CORPORATION

5. Using the adaptor/remover tool (J 46173), press down on the valve spring retainer. Remove the collets with a magnetic pin. See Figure 1-119.

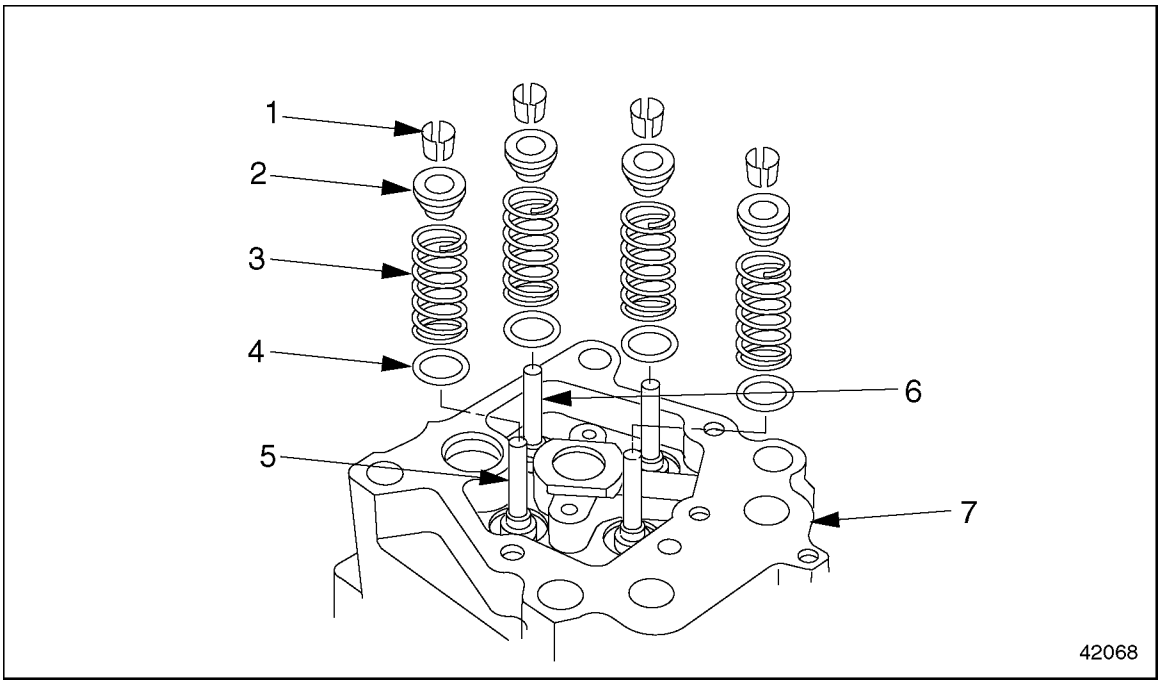

1. Collet
2. Spring Retainer
3. Valve Spring
4. Spacer Washer
5. Exhaust Valve
6. Intake Valve
7. Cylinder Head

Figure 1-119 Valves (exploded view)

6. Relieve the pressure on the adaptor/remover. Remove the valve spring retainers, valve springs, and spacer washers.
7. Turn over the cylinder head and remove the valves.

NOTE:
Mark the valves in order for ease of installation.

 Copyright © 2004 DETROIT DIESEL CORPORATION

https://truckmanualshub.com/

8. With the cylinder head again in the upright position, remove and discard the valve stem seals. See Figure 1-120.

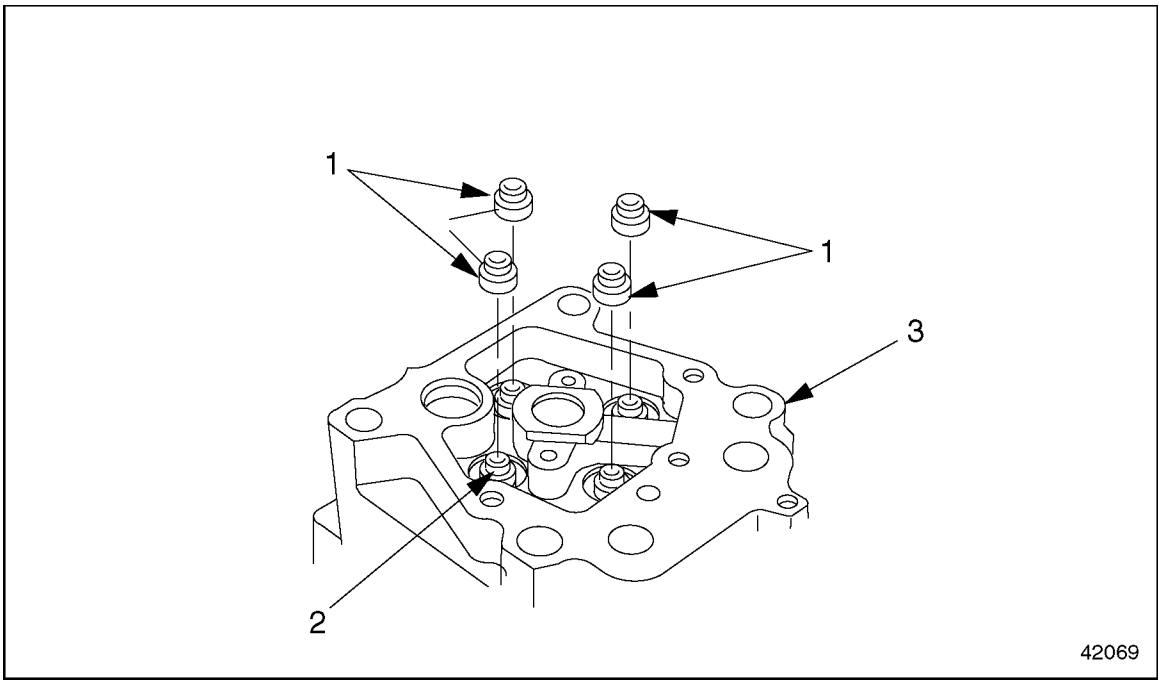

1. Valve Stem Seal
2. Valve Guide
3. Cylinder Head

Figure 1-120 Valve Stem Seals

All information subject to change without notice.
6SE412 0403 Copyright © 2004 DETROIT DIESEL CORPORATION

9. Inspect the valve guides for wear. See Figure 1-121. Listed in Table 1-41 are the specifications.

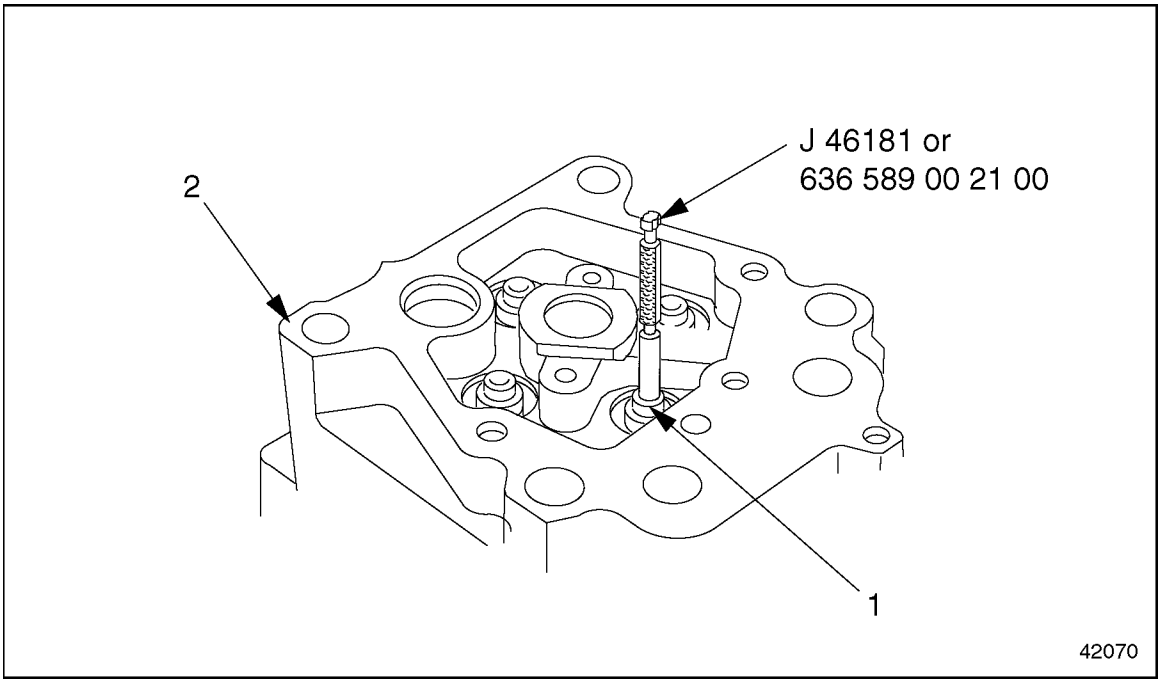

1. Valve Guide
2. Cylinder Head

Figure 1-121 Measuring the Inside Diameter of the Valve Guide

Description	mm (inch)
Normal	9.000-9.022 (0.3543-0.3552)
Wear Limit	9.050 (0.3563)

Table 1-41 Inside Diameter of Valve Guide

[a] Measure the inside diameter of the valve guide by inserting the go/no go gauge (J 46181 or 636 589 00 21 00) into the valve guide.

[b] Replace the valve guide if the larger diameter end of the go/no go gauge tool (J 46181 or 636 589 00 21 00)fits into either end of the guide.

10. Clean the valves thoroughly. Remove any traces of combustion residue.
11. Check the valves to see if they can be re-used. Replace the valves if the stem ends are damaged or bent, if the valve grooves are deformed, if the seat is burned, or if the chrome surface of the shaft is not entirely intact.
12. Check the following critical valve dimensions, and repair as necessary. See Figure 1-122 to determine the dimensions given in the table. Listed in Table 1-42 are the dimensions.
    - ☐ Valve stem diameter (A)

 Copyright © 2004 DETROIT DIESEL CORPORATION

https://truckmanualshub.com/

- ☐ Valve seat diameter at the contact surface of the cylinder head (B)
- ☐ Valve head diameter (C)
- ☐ Valve seat height (D)
- ☐ Valve seat width at the valve head (E)
- ☐ Valve seat angle (F)
- ☐ Valve length (G)

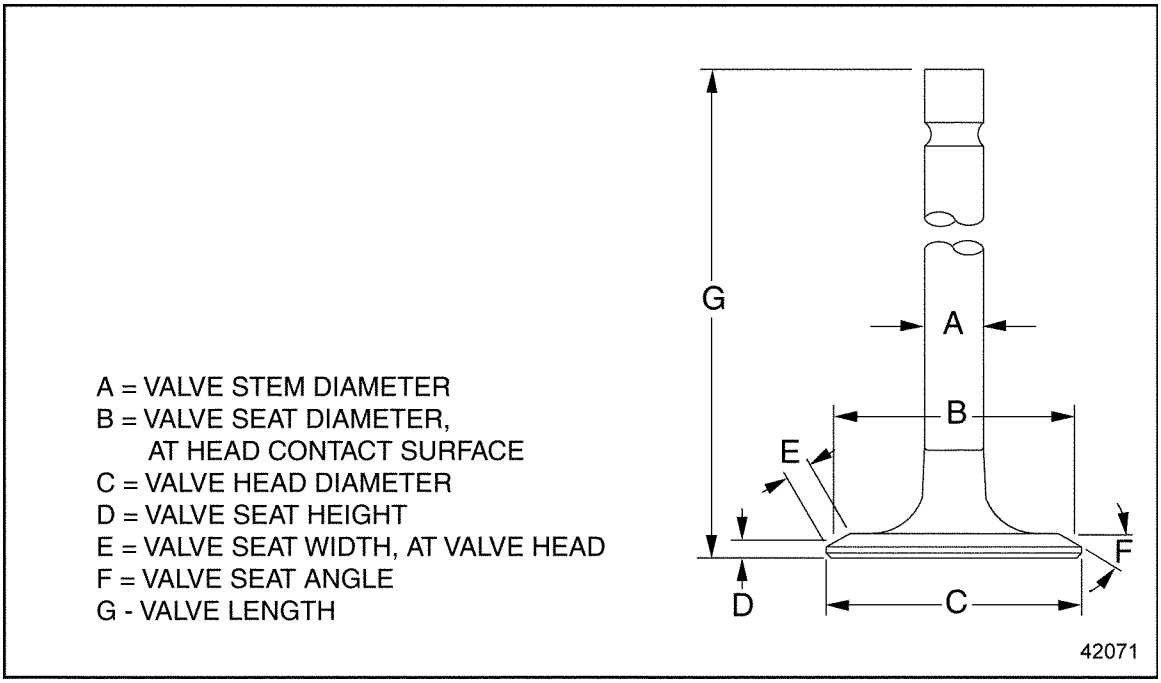

Figure 1-122 Critical Dimensions, Valve Stem and Head

Description	Intake	Exhaust
Valve Stem Diameter (A)	8.935-8.950 (0.3518-0.3524)	8.925-8.940 (0.3514-0.3520)
Valve Seat Diameter, at Head Contact Surface (B)	42.0 (1.65)	39.0 (1.54)
Valve Head Diameter (C)	45.4-45.6 (1.79-1.80)	40.9-41.3 (1.61-1.63)
Valve Seat Height-New (D)	3.1-3.3 (0.12-0.13)	2.8-3.1 (0.11-0.12)
Minimum Valve Seat Height-After Grinding (D)	2.9 (0.11)	2.3 (0.09)
Valve Seat Width, at Valve Head (E)	3.5-4.5 (0.14-0.18)	3.5-4.5 (0.14-0.18)
Valve Seat Angle (F)	30 degrees	45 degrees
Valve Length (G)	145.0 (5.71)	145.0 (5.71)

Table 1-42 Valve Removal/Installation Specifications in mm (inches)

13. Check the condition of the valve seat insert. Repair the valves if necessary.

All information subject to change without notice.
6SE412 0403 Copyright © 2004 DETROIT DIESEL CORPORATION

14. Inspect the valve springs. Check the springs for correct pressure, using the values listed in Table 1-43. If damaged, replace the springs.

Description	mm (inches)
Length, Without Load	69.7 (2.74)
Length, Under Load of 382-418 N (86-94 lbf)	49 (1.9)
Length, Under Load of 644-706 N (145-159 lbf)	37 (1.5)
Diameter of Spring Wire	4.2 (0.17)
Outside Diameter of Spring Coil	28.9 (1.14)
Inside Diameter of Spring Coil	24.5-24.9 (0.96-0.98)

Table 1-43 Spring Specifications, Intake and Exhaust Valves

1.19.6 Valve Installation

Install the intake and exhaust valves as follows:

1. Lubricate each valve with a light coating of engine oil.
2. Install the valves in order, as marked on removal.

NOTE:
Always replace the valve stem seal if the valve has been removed. Check the seal to make sure it is correctly seated on the valve guide. Refer to section 1.19.7.

3. Install new valve stem seals. Refer to section 1.19.7.
4. Using the adaptor/remover, (J 46173), install the spring bases, springs, spring retainers, and collets. Check the collets to be sure they are locked in place.
5. Remove the adaptor/remover, (J 46173), from the cylinder head.
6. Install the cylinder head. Refer to section 1.2.2.

1.19.7 Valve Stem Seal Replacement

Replace the valve stem seal as follows:

NOTE:
Always replace the valve stem seal if the valve has been removed.

1. Remove the cylinder head from the engine. Refer to section 1.2.1.

NOTE:
Use care during removal to not damage the valve guides and valve stems.

 Copyright © 2004 DETROIT DIESEL CORPORATION

https://truckmanualshub.com/

2. Remove the collets, spring retainer, valve spring, and spring base. See Figure 1-123.

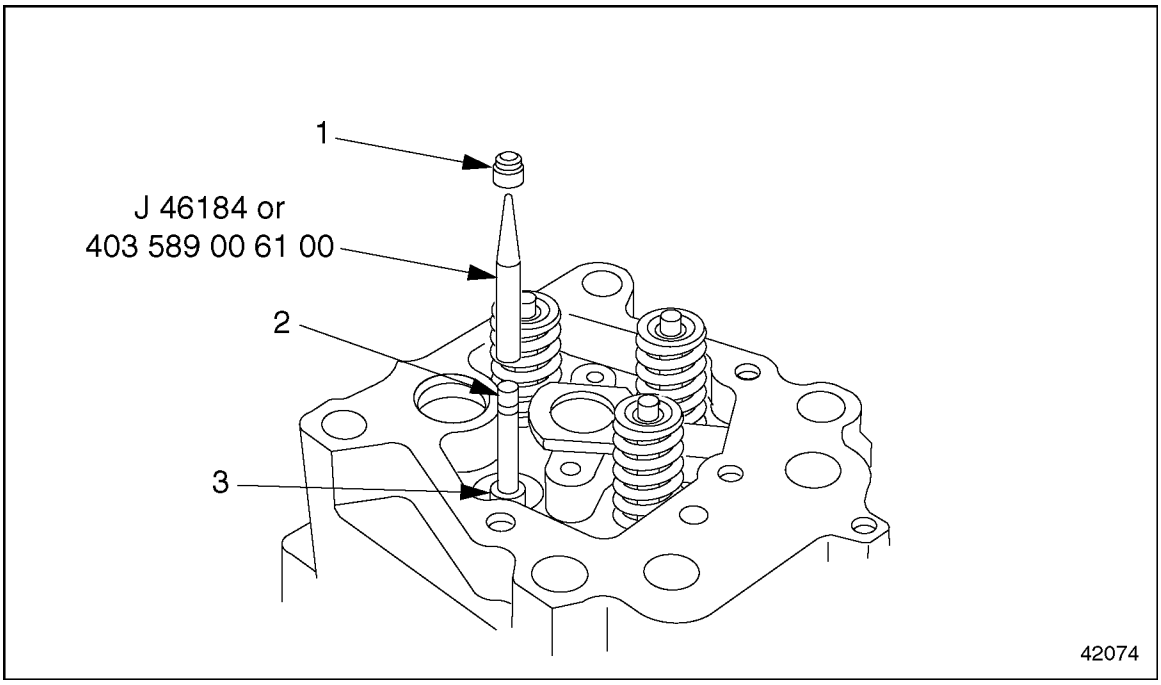

1. Valve Stem Seal
2. Valve Stem
3. Valve Guide

Figure 1-123 Valve Stem Seal Replacement

3. Remove the valve stem seal. Do not remove the valve.
4. Lubricate the valve stem and valve stem seal installer (J 46184 or 403 589 00 61 00) with a light coating of clean engine oil.

NOTE:
The installer prevents the groove on the valve stem from damaging the seal.

5. Push the valve stem seal installer (J 46184 or 403 589 00 61 00) over the valve stem until it makes contact with the valve.
6. Slide the seal over the installer and the valve stem. Using fingers, press the seal into place until the seal seats on the valve guide.

NOTE:
Check the seal to make sure it is correctly seated on the valve guide.

7. Remove the installer from the valve stem seal and the valve.
8. Install the collets, spring retainer, valve spring and spring base, as removed.
9. Repeat the procedure for the other valves.
10. Install the cylinder head. Refer to section 1.2.2.

All information subject to change without notice.
6SE412 0403 Copyright © 2004 DETROIT DIESEL CORPORATION

1.20 EGR VALVES

The exhaust valves and valve specifications in the EGR engine have changed due to the addition of valve stem sealing rings under the valve stem seals in the engine.

1.20.1 Valve Removal in the EGR Engine

Perform the following steps in removing the valves from the EGR engine:

1. Follow the procedures for valve removal in a non-EGR engine until reaching the valve stem seals removal step.Refer to section 1.19.5.
2. With the cylinder head in an upright position, remove and discard the valve stem seals and valve stem sealing rings.See Figure 1-124.

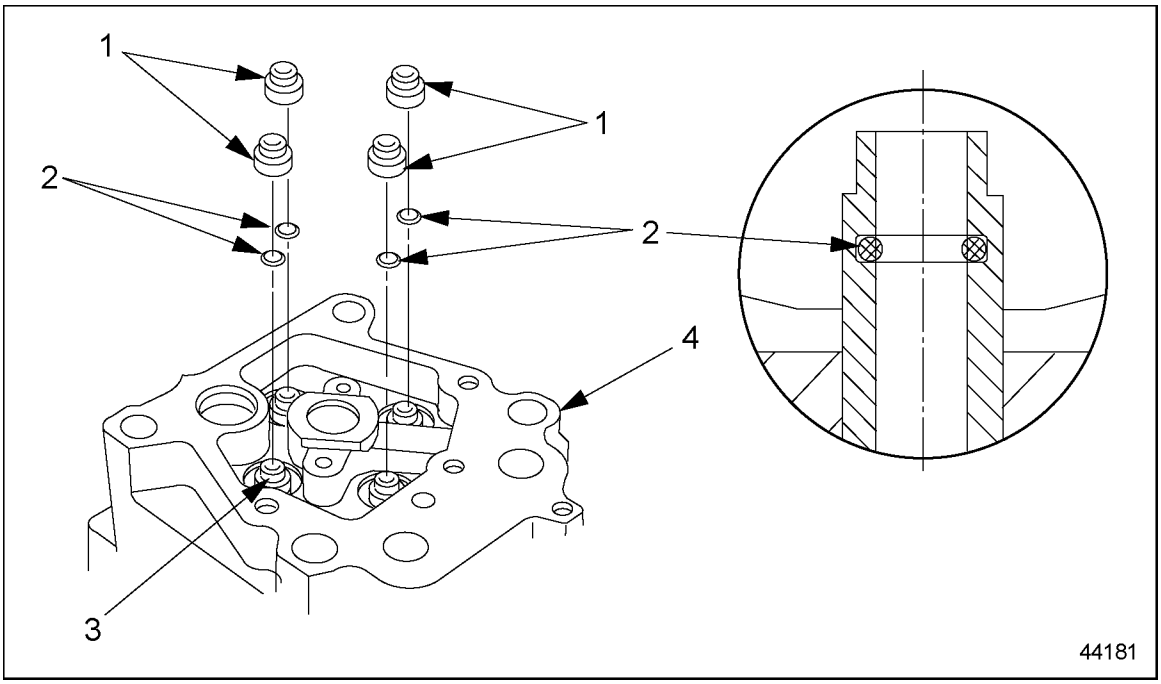

1. Valve Stem Seal
2. Valve Stem Sealing Ring
3. Valve Guide
4. Cylinder Head

Figure 1-124 Removing Valve Stem Seals and Valve Stem Sealing Rings

NOTE:
The valve guide with valve stem sealing ring are used *only* in the EGR engines.

3. Check the following critical valve dimensions, and repair as necessary. See Figure 1-125 to determine the dimensions. Listed in Table 1-44 are the dimensions for the intake valve and the differences between the exhaust non-EGR and exhaust EGR valves.
   - ☐ Valve stem diameter (A)
   - ☐ Valve seat diameter at the contact surface of the cylinder head (B)
   - ☐ Valve head diameter (C)

 Copyright © 2004 DETROIT DIESEL CORPORATION

https://truckmanualshub.com/

- ☐ Valve seat height (D)
- ☐ Valve seat width at the valve head (E)
- ☐ Valve seat angle (F)
- ☐ Valve length (G)

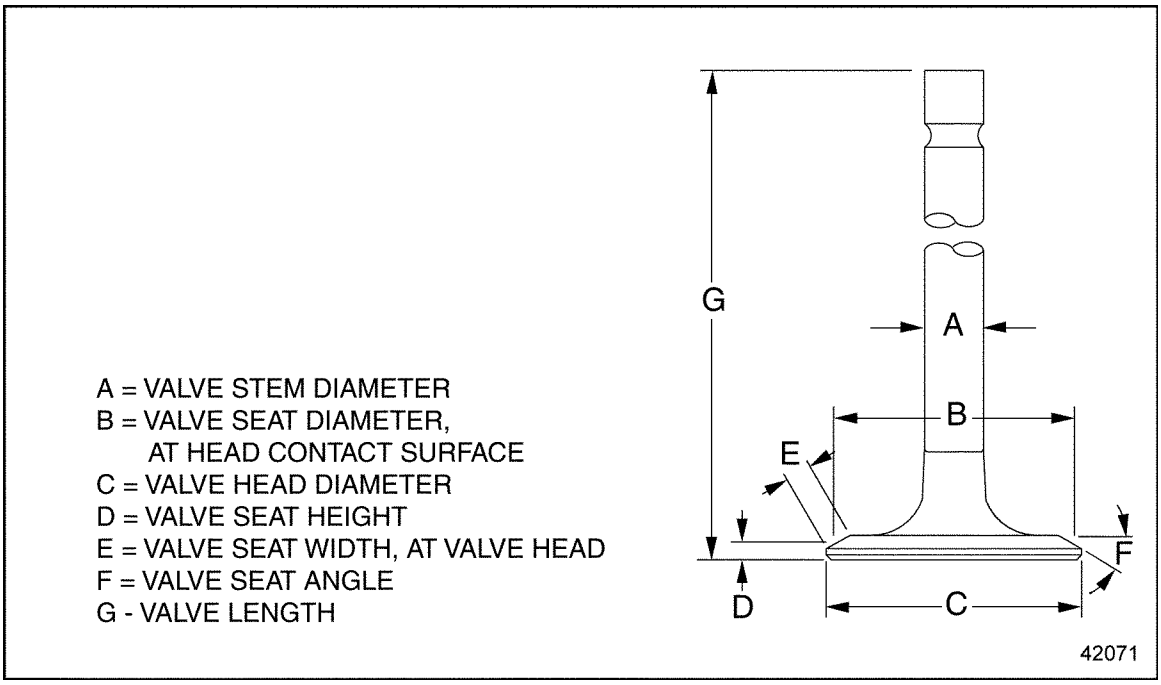

Figure 1-125 Critical Dimensions, Valve Stem and Head for EGR Engines

Description	Intake, mm (in.)	Exhaust-EPA 98, mm (in.)	Exhaust-EPA 04, mm (in.)
Valve stem diameter (A)	8.935-8.950 (0.3518-0.3524)	8.925-8.940 (0.3514-0.3520)	8.925-8.940 (0.3514-0.3520)
Valve seat diameter at head contact surface (B)	42.0 (1.65)	39.0 (1.54)	39.0 (1.54)
Valve head diameter (C)	45.4-45.6 (1.79-1.80)	40.9-41.3 (1.61-1.63)	41.9-42.3 (1.65-1.67)
Valve seat height-new (D)	3.1-3.3 (0.12-0.13)	2.8-3.1 (0.11-0.12)	3.0-3.3 (0.12-0.13)
Minimum valve seat height-after grinding (D)	2.9 (0.11)	2.3 (0.09)	2.9 (0.11)
Valve seat width at valve head (E)	3.5-4.5 (0.14-0.18)	3.5-4.5 (0.14-0.18)	min. 3.5 (0.14)
Valve seat angle (F)	30 degrees	45 degrees	36 degrees
Valve length (G)	145.0 (5.71)	145.0 (5.71)	145.0 (5.71)

Table 1-44 Valve Removal/Installation Specifications in mm (in.) for non-EGR and EGR engines

All information subject to change without notice.
6SE412 0403 Copyright © 2004 DETROIT DIESEL CORPORATION

1.20.2 Valve Installation in the EGR Engine

Perform the following steps in installing the valves in the EGR engine:

1. Install the valve stem sealing ring in the valve guide in the cylinder head.
2. Lubricate each valve with a light coating of engine oil.
3. Install the valves in order, as marked on removal.

NOTE:
In the EGR engine, always replace the valve stem seal and valve stem sealing ring if the valve has been removed. Check the valve stem seal to make sure it is correctly seated on the valve guide.

4. Using tool J 46174, install new valve stem seals and seat the valve stem seal with J tool, J 46184. Refer to section 1.20.3.
5. Using the adaptor (J 46173), install the spring seats, springs, spring retainers, and collets (keepers). Check the keepers to be sure they are locked in place.
6. Remove the adaptor (J 46173), from the cylinder head.
7. Install the cylinder head.

1.20.3 Valve Stem Seal and Valve Stem Sealing Ring Replacement in the EGR Engine

Replace the valve stem seal and valve stem sealing ring as follows:

NOTE:
In the EGR engine, always replace the valve stem seal and valve stem sealing ring if the valve has been removed.

1. Remove the cylinder head from the engine.

NOTE:
Use care during removal to not damage the valve guides and valve stems.

2. Remove the keeper, spring retainer, valve spring, and spring seat.
3. Remove the valve stem seal and discard.
4. Remove the valve.
5. Remove the valve stem sealing ring and discard. Repeat procedure for all remaining valves.
6. Clean all parts before reinstalling components.
7. Install the valve stem sealing ring in the valve guide and then install the valve in the head. Repeat procedure for all remaining valves.

 Copyright © 2004 DETROIT DIESEL CORPORATION

https://truckmanualshub.com/

8. Lubricate the valve stem and valve stem seal installer/protector (J 46174) with a light coating of clean engine oil.

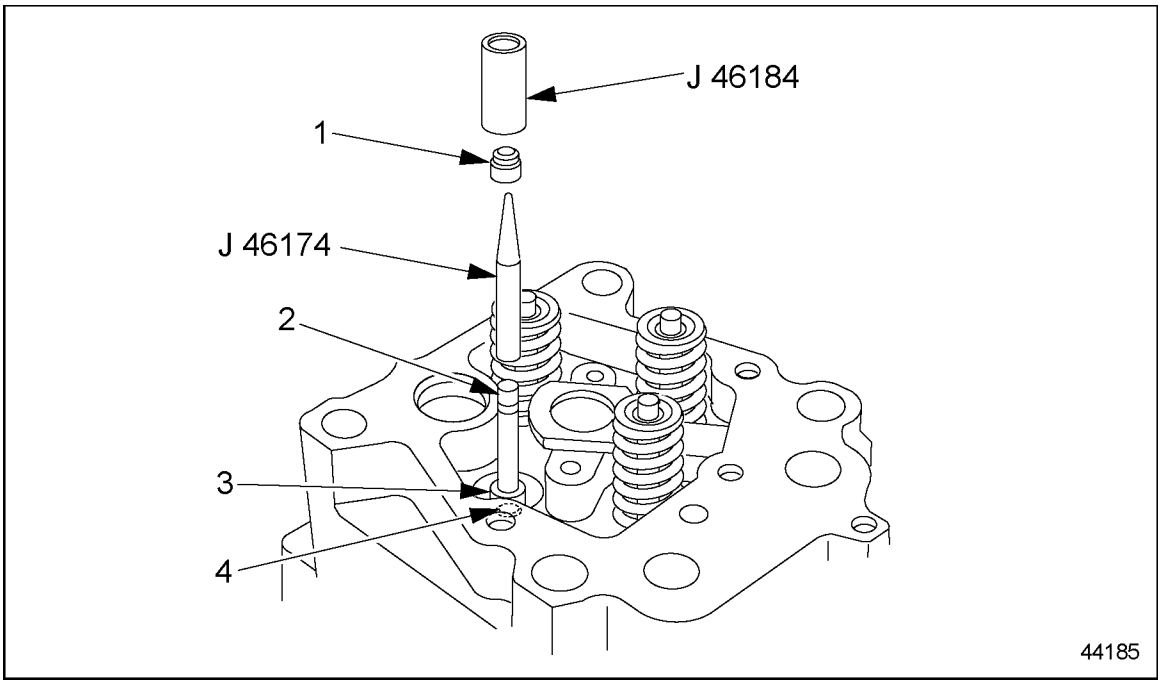

1. Valve Stem Seal
2. Valve Stem
3. Valve Guide
4. Valve Stem Sealing Ring (installed)

Figure 1-126 Valve Stem Seal and Sealing Ring Replacement

NOTE:
The installer/protector prevents the groove on the valve stem from damaging the valve stem seal.

9. Push the valve stem seal installer/protector (J 46174) over the valve stem until it makes contact with the valve.
10. Slide the valve stem seal over the installer/protector and the valve stem. Using fingers, press valve stem seal into place until the seal seats on the valve guide.
11. Remove J tool, J 46174.
12. Using valve guide seal installer (J 46184) and the appropriate hammer, drive the valve stem seal on the guide.

NOTE:
Check the seal to make sure it is correctly seated on the valve guide.

13. Remove the installer from the valve stem seal and the valve.
14. Install the keeper, spring retainer, valve spring and spring seat, as removed.
15. Repeat the procedure for the other valves.

All information subject to change without notice.
6SE412 0403 Copyright © 2004 DETROIT DIESEL CORPORATION

16. Install the cylinder head on the EGR engine. Refer to section 1.4.1.

1.20.4 Valve Seats

See Figure 1-127 and listed in Table 1-45 are the specifications for valve seats.

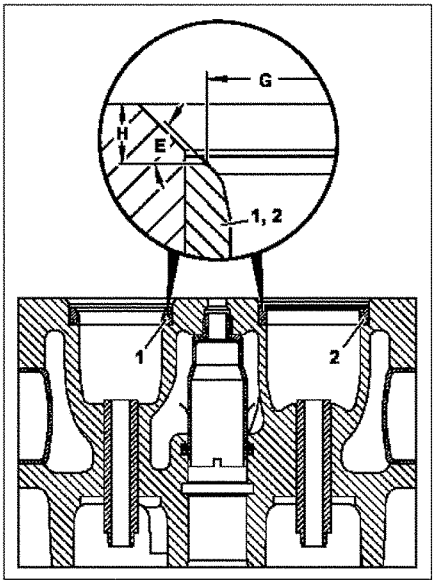

1. Exhaust Valve Seat
2. Intake Valve Seat

Figure 1-127 Valve Seats on EGR Engine

Description	Intake Valve, mm (in.)	Exhaust Valve-non-EGR, mm (in.)	Exhaust Valve-EGR, mm (in.)
Valve seat angle (E)	30 Degree	45 Degree	36 Degree
Valve seat surface diameter (G)	41.99-42.01(1.65-1.654	38.99-39.0 (1.535-1.535)	38.99-39.01(1.535-1.536)
Relative position (H) to diameter G	4.00-4.15 (0.157-0.163)	3.80-3.95 (0.15-0.16)	4.00-4.15 (0.157-0.163)

Table 1-45 Valve Seat Specifications for EGR Engine

 Copyright © 2004 DETROIT DIESEL CORPORATION

https://truckmanualshub.com/

1.21 ROCKER ARM

Perform the following procedures for removal and installation of the rocker arm:

1.21.1 Rocker Arm Removal

Remove the rocker arm assembly as follows:

1. Remove the cylinder head cover on each cylinder head. Refer to section 1.1.1.
2. Remove the rocker arm assembly. See Figure 1-128.

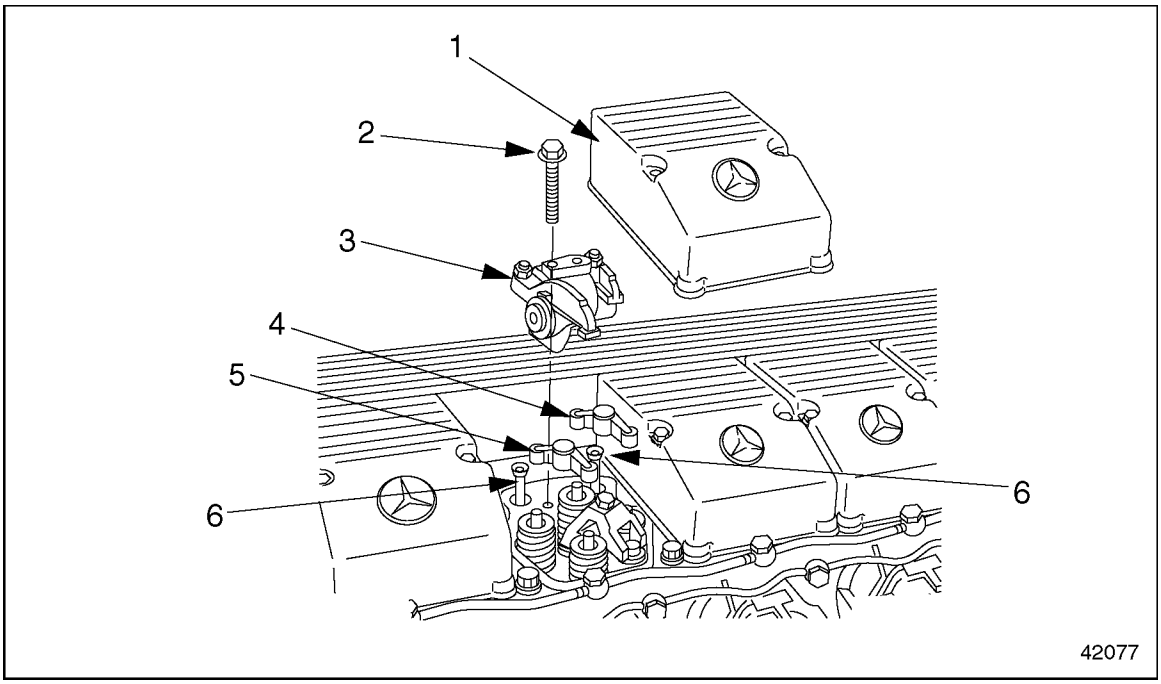

1. Cylinder Head Cover
2. Rocker Arm Mounting Bolt
3. Rocker Arm Assembly
4. Intake Valve Bridge
5. Exhaust Valve Bridge
6. Pushrod

Figure 1-128 Rocker Assembly

[a] Loosen the each valve lash adjusting screw.

[b] Remove each rocker arm mounting bolt.

[c] If removing more than one rocker arm assembly, mark the assembly with a paint pen to identify it on installation.

[d] Remove the rocker arm assembly from the cylinder head.

3. Inspect the rocker arm assembly for wear. If necessary, disassemble the rocker arm assembly and replace any worn parts. Refer to section 1.21.2.

All information subject to change without notice.
6SE412 0403 Copyright © 2004 DETROIT DIESEL CORPORATION

4. Measure each rocker arm mounting bolt. Replace each bolt longer than 91 mm (3.6 inches), as listed in Table 1-46.

Size	Max. Shaft Length	Torque Value
M12	91 mm (3.6 in)	60 N·m (44 lb·ft)
M12	91 mm (3.6 in)	additional 90°

Table 1-46 Specifications, Rocker Arm Mounting Bolts

5. Remove the valve bridge from each set of valves, intake and exhaust.
6. Inspect the valve bridges for wear. If necessary, replace any worn valve bridge(s).

1.21.2 Rocker Arm Disassembly

Disassemble the rocker arm unit as follows:

1. Remove the rocker arm assembly from the cylinder head. Refer to section 1.21.1.
2. Remove the snap rings from each end of the rocker arm shaft. See Figure 1-129.

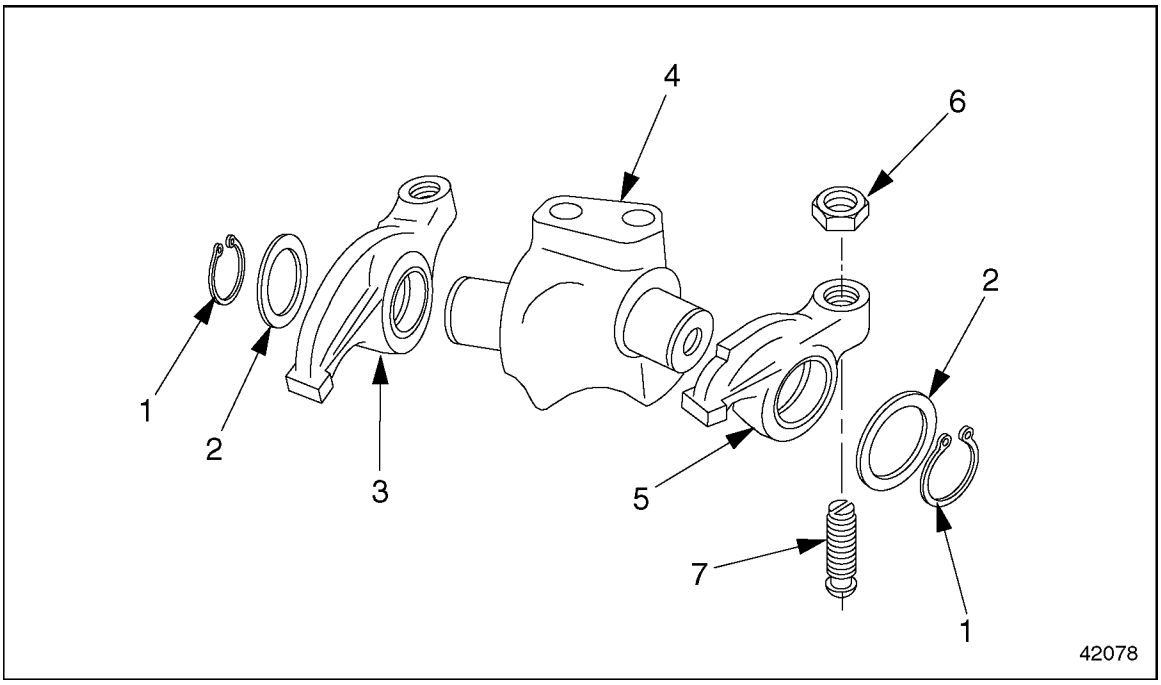

1. Snap Ring
2. Washer
3. Exhaust Rocker Arm
4. Rocker Support
5. Intake Rocker Arm
6. Locknut
7. Adjusting Screw

Figure 1-129 Rocker Arm Components

 Copyright © 2004 DETROIT DIESEL CORPORATION

https://truckmanualshub.com/

3. Remove the rocker arms and washers from the shafts on each end of the rocker arm support. Keep all parts in order, as removed, for ease of assembly.
   [a] Remove the intake rocker arm and washer.
   [b] Remove the exhaust rocker arm and washer.
   [c] Remove the adjusting screw and locknut from both intake and exhaust rocker arms.
   [d] Mark each rocker arm and shaft with paint pens, for ease of installation.
4. Inspect the parts of the rocker arm assembly for wear, and replace if necessary.

1.21.3 Rocker Arm Assembly

Assemble the rocker arm unit as follows:

1. Install the adjusting screw and locknut on both intake and exhaust rocker arms. Tighten the locknut 50 N·m (37 lb·ft).
2. Inspect the inside diameter of the rocker arm bushing. Replace the rocker arm bushing if the inside diameter is smaller than 25.005 mm (0.9844 in.) or larger than 25.021 mm (0.9851 in.) as listed in Table 1-47.

Description	Specification, mm (inch)
Bushing Inside Diameter (when installed)	25.005-25.021 mm (0.9844-0.9851 in)
Shaft Diameter	24.967-24.980 mm (0.9830-0.9835 in)

Table 1-47 Rocker Arm Bushing Specifications

3. Inspect the diameter of the rocker arm shaft. Replace the rocker arm shaft if the diameter is smaller than 24.967 mm (0.9830 in.) or larger than 24.980 mm (0.9835 in.).
4. Lubricate the washers, rocker arm bushings, and the shafts of the support with a light coating of engine oil.
5. Install the rocker arms and washers on the correct rocker arm shaft, as marked on removal. Make sure both intake and exhaust rocker arms are installed correctly.
6. When the assembly is complete, secure the assembly by installing a snap ring on the end of each rocker arm shaft.

1.21.4 Rocker Arm Installation

Install the rocker arm unit as follows:

1. Install a valve bridge on each set of valves, both intake and exhaust.
2. Lubricate each pushrod with a light coating of engine oil.

All information subject to change without notice.
6SE412 0403 Copyright © 2004 DETROIT DIESEL CORPORATION

3. Inspect each pushrod to be sure it is correctly seated in its tappet. Replace any pushrods that are warped, are not correctly seated, or are not the correct length as listed in Table 1-48.

Description	Stage	Specification
Outside Diameter of Valve Tappets	Normal	29.931-29.952 mm (1.1784-1.1792 in)
Outside Diameter of Valve Tappets	Repair Stage I	30.444-30.465 mm (1.1986-1.1994 in)
Diameter of Tappet Seats (in cylinder block)	Normal	30.000-30.021 mm (1.1811-1.1819 in)
Diameter of Tappet Seats (in cylinder block)	Repair Stage I	30.500-30.525 mm (1.2008-1.2018 in)
Total Length of Pushrods		345.0-346.5 mm (13.58-13.64 in)
Maximum Pushrod Warpage		0.5 mm (0.02 in)
Maximum Length of Rocker Arm Mounting Bolts		91 mm (3.6 in)

Table 1-48 Rocker Arm Specifications

4. Install the rocker arm assembly.
   [a] Position the rocker arm assembly on the cylinder head, as removed.
   [b] Install the mounting bolts in the holes in the cylinder head.
   [c] Tighten each mounting bolt 60 N·m (44 lb·ft). Final angular tightening: 90 degrees.
5. Adjust the valve lash.
6. Install the cylinder head cover on each cylinder head. Refer to section 1.1.2.

 Copyright © 2004 DETROIT DIESEL CORPORATION

https://truckmanualshub.com/

1.22 CAMSHAFT AND CAMSHAFT SENSOR

The camshaft is made of induction-hardened steel and has seven main bearings. Each cylinder has cams for intake and exhaust valves and a unit pump.

1.22.1 Camshaft Removal

Remove the camshaft as follows:

NOTE:
Before removing the camshaft, clean the engine to prevent road dirt, grease, or other foreign matter from contaminating the exposed gears and other engine parts.

1. Drain the engine oil.

WARNING:

PERSONAL INJURY

To avoid injury when removing or installing a heavy engine component, ensure the component is properly supported and securely attached to an adequate lifting device to prevent the component from falling.

WARNING:

FALLING ENGINE

To avoid injury from a falling engine, ensure the engine is securely attached to the engine overhaul stand before releasing the lifting sling.

2. Remove the engine from the vehicle and support it on a stand.
3. Remove the unit pumps. Refer to section 2.1.1.
4. Remove the vibration damper. Refer to section 1.11.1.
5. Remove the fan support.

All information subject to change without notice.
6SE412 0403 Copyright © 2004 DETROIT DIESEL CORPORATION

https://truckmanualshub.com/

6. Remove the eight mounting bolts attaching the camshaft front cover to the cylinder block. See Figure 1-130.

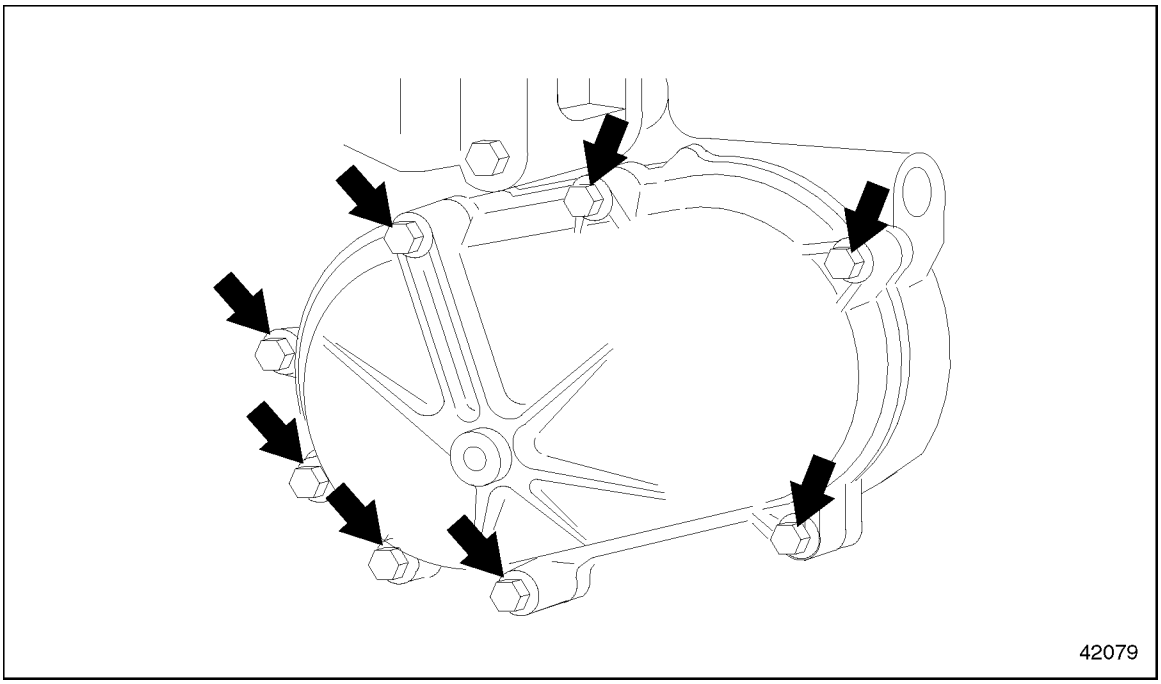

Figure 1-130 Removing the Camshaft Front Cover

https://truckmanualshub.com/

7. Remove the fuel pump drive gear from the front of the camshaft. See Figure 1-131.

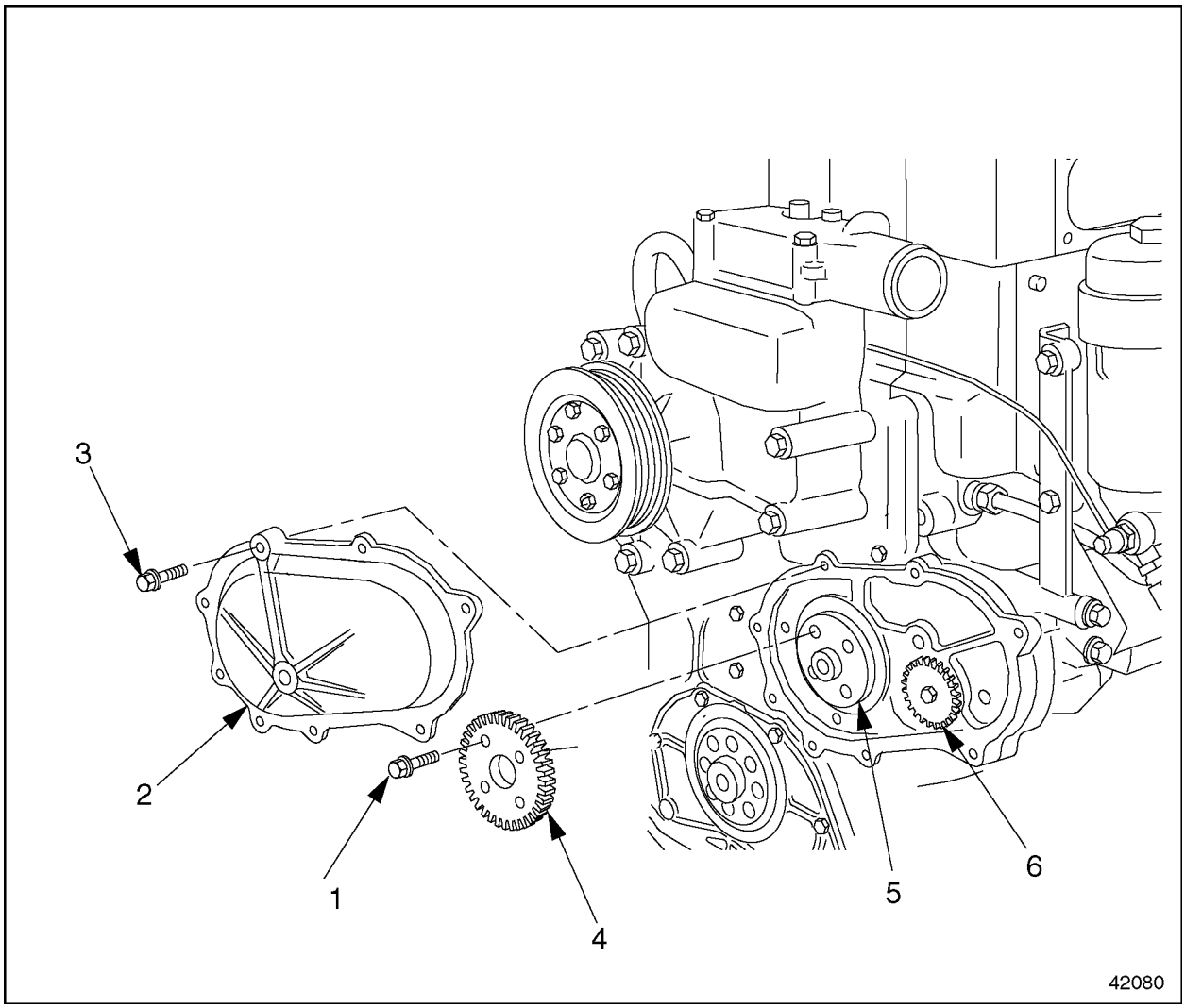

1. Drive Gear Mounting Bolt
2. Front Camshaft Cover
3. Cover Mounting Bolt
4. Fuel Pump Drive Gear
5. Front of Camshaft
6. Fuel Pump Driven Gear

Figure 1-131 Camshaft Assembly

8. Remove the rocker arm assembly and pushrods. Refer to section 1.21.1.
9. Turn the engine on the stand until it is upside down.
10. Remove the oil pan. Refer to section 3.1.1.
11. Remove the flywheel housing. Refer to section 1.16.1.

All information subject to change without notice.
6SE412 0403 Copyright © 2004 DETROIT DIESEL CORPORATION

NOTICE:
Do not damage the camshaft bearings in the crankcase. If the camshaft bearings are damaged, the crankcase will have to be replaced.

12. Attach the camshaft guide tool (J 46183 or 457 589 00 14 00) to the front of the camshaft. See Figure 1-132.

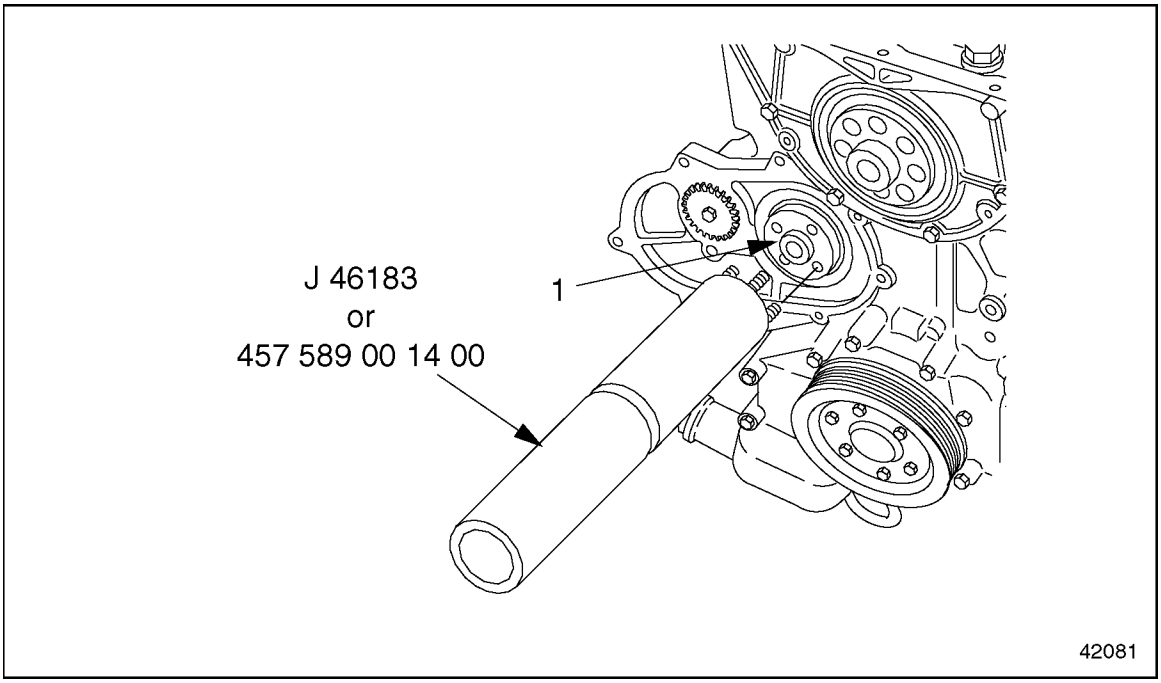

1. Front of Camshaft

Figure 1-132 Attaching the Camshaft Guide Tool

13. From the gear end (rear of the engine), carefully remove the camshaft from the block. See Figure 1-132.

 Copyright © 2004 DETROIT DIESEL CORPORATION

https://truckmanualshub.com/

14. Pull the tappets (valve lifters) out of the block. Mark the tappets, in order, as removed. See Figure 1-133.

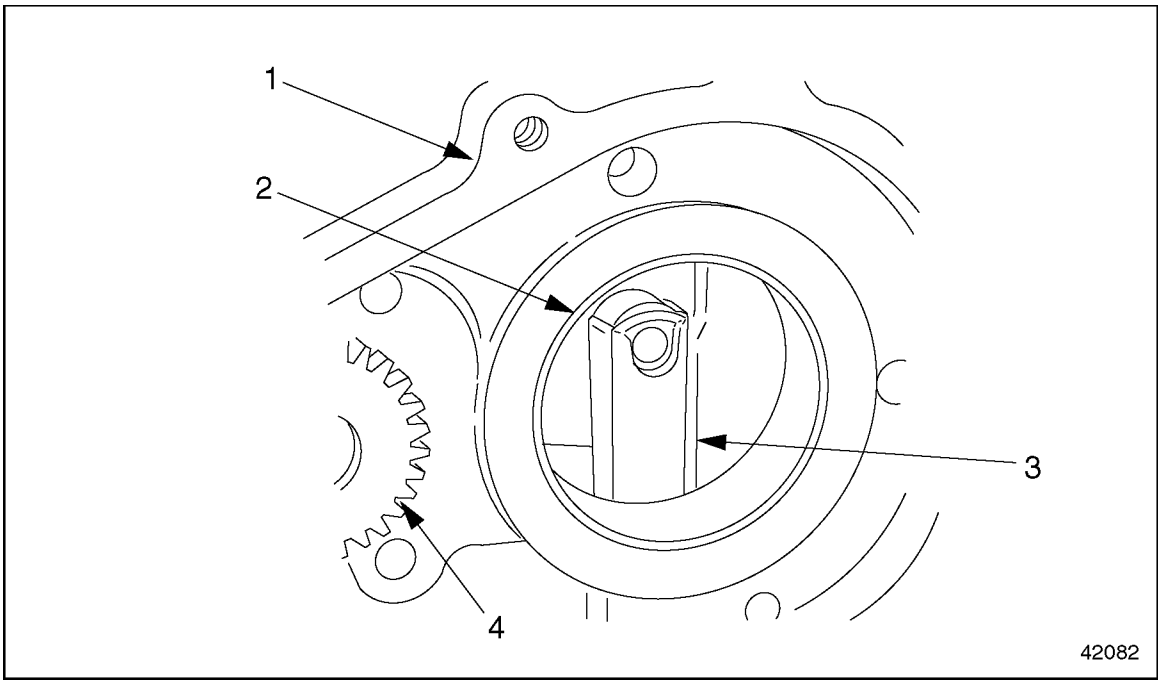

1. Cylinder Block
2. Camshaft Entry Hole
3. Tappet (valve lifter)
4. Fuel Pump Driven Gear

Figure 1-133 Removing the Tappets

15. Clean and inspect the tappets. Replace the tappets if there are signs of damage or wear, or if any of the measurements do not meet the specifications listed in Table 1-49.

Description	Repair Stage	Specifications, mm (inch)
Tappet Outside Diameter	Standard	29.931-29.952 (1.1784-1.1792)
Tappet Outside Diameter	Repair Stage I	30.444-30.465 (1.1986-1.1994)
Tappet Housing Diameter (in cylinder block)	Standard	30.000-30.021 (1.1811-1.1819)
Tappet Housing Diameter (in cylinder block)	Repair Stage I	30.500-30.525 (1.2008-1.2018)

Table 1-49 Valve Tappet Specifications

[a] Measure the outside diameter of each tappet.

[b] Measure the diameter of the tappet housing in the cylinder block.

16. Inspect the camshaft. Refer to section 1.22.2.1.

All information subject to change without notice.
6SE412 0403 Copyright © 2004 DETROIT DIESEL CORPORATION

https://truckmanualshub.com/

1.22.2 Camshaft Installation

Install the camshaft as follows:

1. Lubricate the tappets with a light coating of clean engine oil.
2. Install the tappets in the block, in order, as removed.

NOTICE:
Do not damage the camshaft bearings in the crankcase. If the camshaft bearings are damaged, the crankcase will have to be replaced.

3. Install the camshaft.
   [a] Lubricate the cams and camshaft journals with a light coating of clean engine oil.
   [b] Attach the camshaft guide tool (J 46183 or 457 589 00 14 00) to the camshaft.
   [c] Rotate the camshaft until the marked gear teeth on the camshaft gear are aligned with the marked tooth on the crankshaft gear. See Figure 1-134.

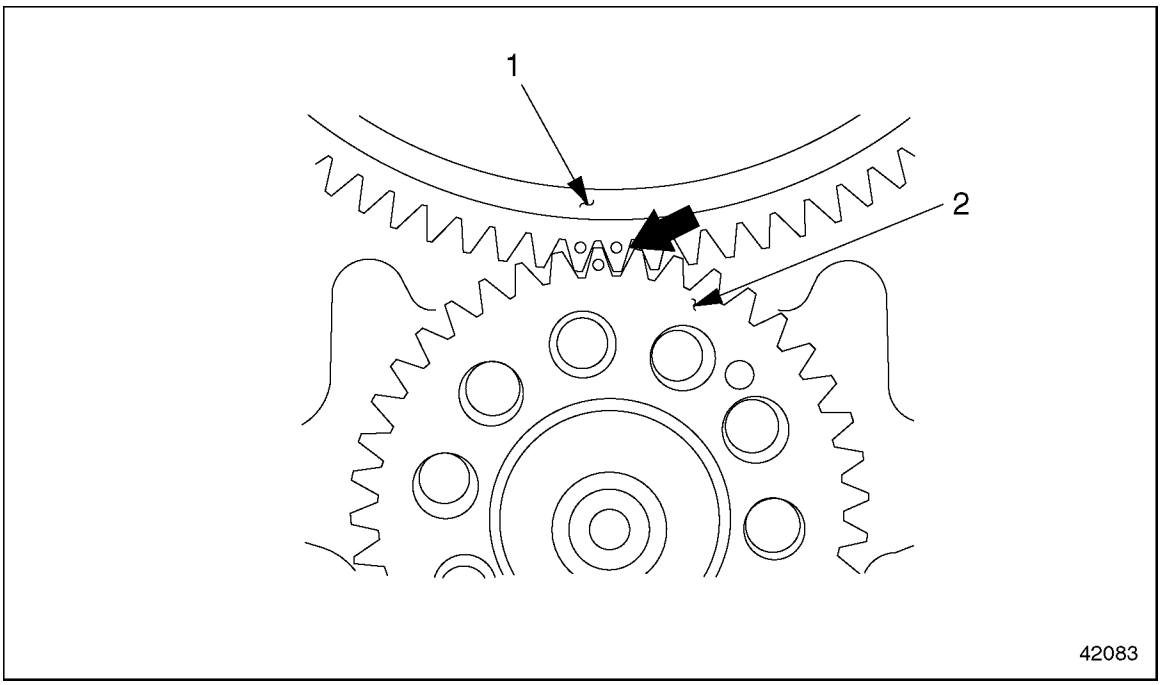

1. Camshaft Gear
2. Crankshaft Gear

Figure 1-134 Aligning the Marked Gear Teeth

   [d] Carefully insert the camshaft into the block.
4. Install the flywheel housing. Refer to section 1.16.2.
5. Install the oil pan. Refer to section 3.1.2.

 Copyright © 2004 DETROIT DIESEL CORPORATION

https://truckmanualshub.com/

6. Install the fuel pump drive gear on the front of the camshaft, as removed. Torque the bolts to 60 N·m (44 lb·ft.)
7. Turn the engine on the stand until it is right side up.
8. Install the unit pumps. Refer to section 2.1.2.
9. Install the camshaft front cover on the cylinder block, as removed. Torque the mounting bolts to 50 N·m (37 lb·ft.)
10. Install the fan support.
11. Install the vibration damper. Refer to section 1.11.2.
12. Lubricate the pushrods with a light coating of clean engine oil. Install the pushrods and the rocker arm assembly. Refer to section 1.21.4.

DANGER:

FALLING COMPONENT

To avoid injury from a falling component, ensure a proper lifting device is used.

13. Remove the engine from the stand and install it on the vehicle.
14. Fill the engine with oil.

1.22.2.1 Camshaft Inspection

Inspect the camshaft as follows:

NOTE:
To get a correct hardness reading, it is critical to place a hard base below the cam or bearing journal.

All information subject to change without notice.
6SE412 0403 Copyright © 2004 DETROIT DIESEL CORPORATION

1. Using the hardness tester (000 589 20 21 00), inspect the hardness of the cams and bearing journals at the camshaft. A hard base should be placed below the cam or bearing journal to be inspected. See Figure 1-135.

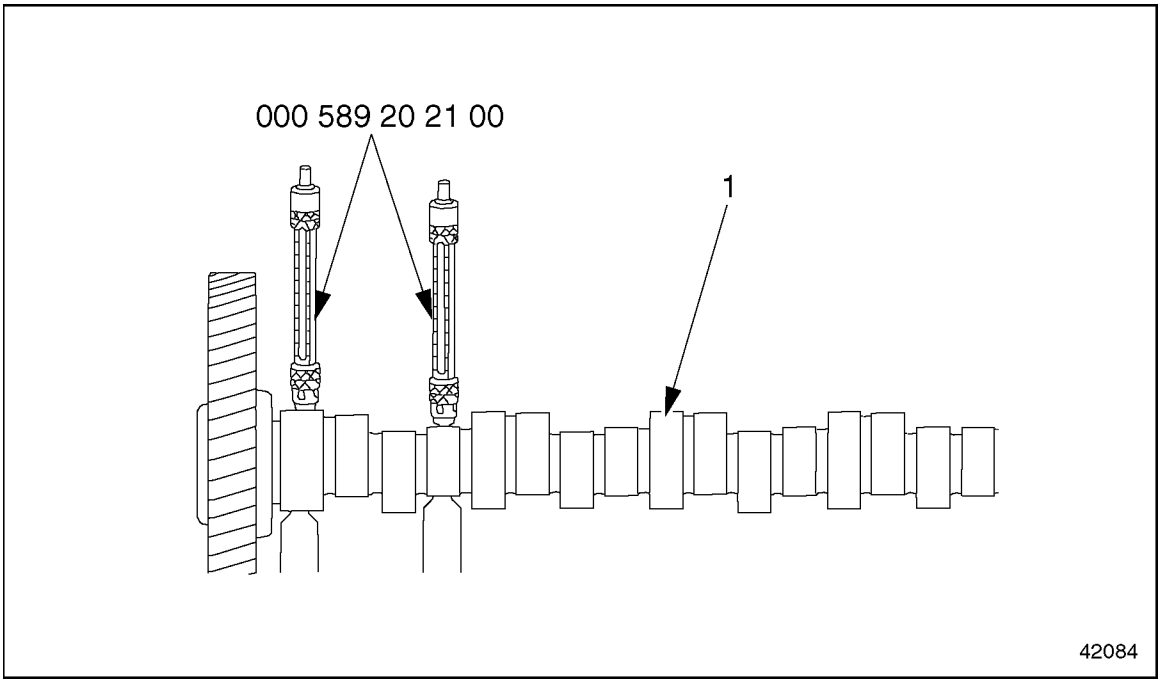

1. Camshaft

Figure 1-135 Inspecting Cam Hardness

 Copyright © 2004 DETROIT DIESEL CORPORATION

https://truckmanualshub.com/

2. Measure the diameter of each bearing journal. Measure the diameter of the bushing at each journal. See Figure 1-136.

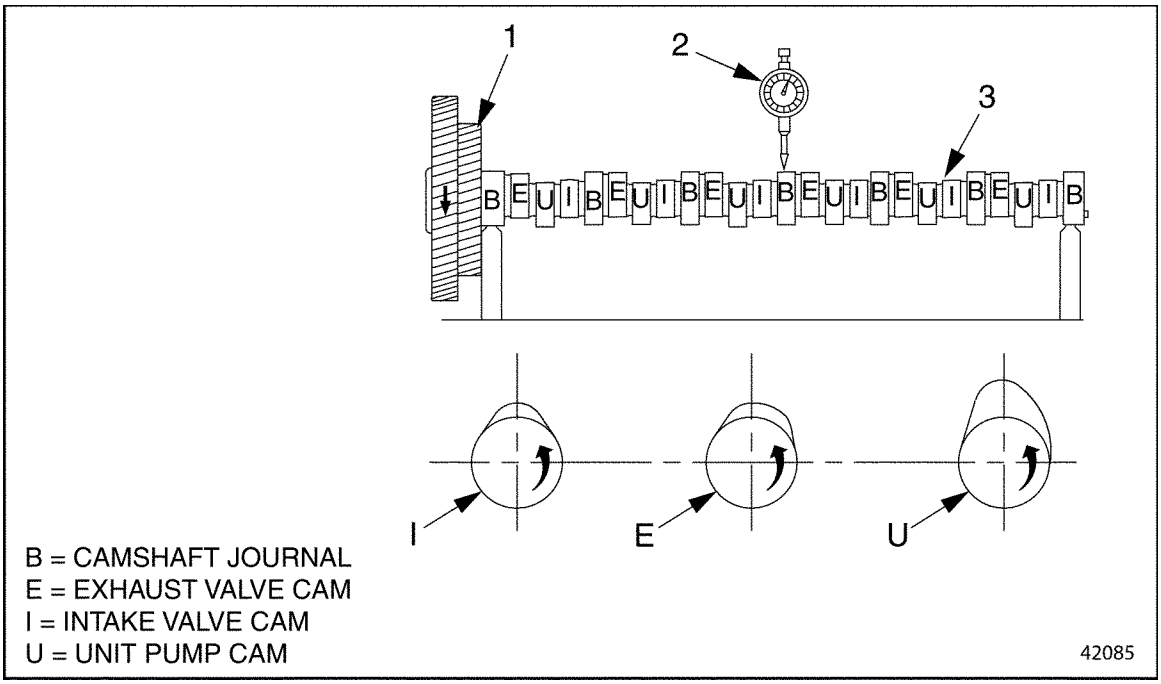

1. Camshaft Gear
2. Dial Gauge

Figure 1-136 Measuring the Cam Rise

3. Mount the camshaft at the outer journals.

NOTE:
For all of the following steps, use a dial gauge.

4. Measure the radial runout of the cam basic circle.
5. Measure the cam rise of the intake valve cams. See Figure 1-136, Ref. I.
6. Measure the cam rise of the exhaust valve cams. See Figure 1-136, Ref. E.
7. Measure the cam rise of the unit pump valve cams. See Figure 1-136, Ref. U.

All information subject to change without notice.
6SE412 0403 Copyright © 2004 DETROIT DIESEL CORPORATION

8. Replace the camshaft if any of the measurements do not meet the specifications listed in Table 1-50.

What To Measure	Where To Measure	Value: mm (inch) Unless otherwise noted
Hardness of Surface	At Cams and Journals	57–63 HRC
Camshaft Radial Runout When Mounted on Outer Bearing Journals	At Gear Seat	0.020 (0.0008)
Camshaft Radial Runout When Mounted on Outer Bearing Journals	At Cam Circle	0.025 (0.0010)
Camshaft Radial Runout When Mounted on Outer Bearing Journals	At Camshaft Journals	0.030 (0.0012)
Minimum Valve Cam Rise–Above Basic Circle	Intake Valve	7.3 (0.29)
Minimum Valve Cam Rise–Above Basic Circle	Exhaust Valve	8.2 (0.32)
Camshaft Journal Diameter	For New Camshaft	81.893–81.928 (3.2241–3.2255)
Bushing Diameter	At Camshaft Journals	82.000–82.035 (3.2283–3.2297)
Gear Back Lash	Cam Gear to Crank Gear	0.074–0.176 (0.0029–0.0069)
Gear Back Lash	Cam Gear to Air Compressor Gear	0.082–0.168 (0.0032–0.0066)

Table 1-50 Camshaft Specifications

 Copyright © 2004 DETROIT DIESEL CORPORATION

https://truckmanualshub.com/

1.22.3 Camshaft Sensor Replacement

Replace the camshaft sensor as follows:

1. Disconnect the electrical connector. See Figure 1-137.

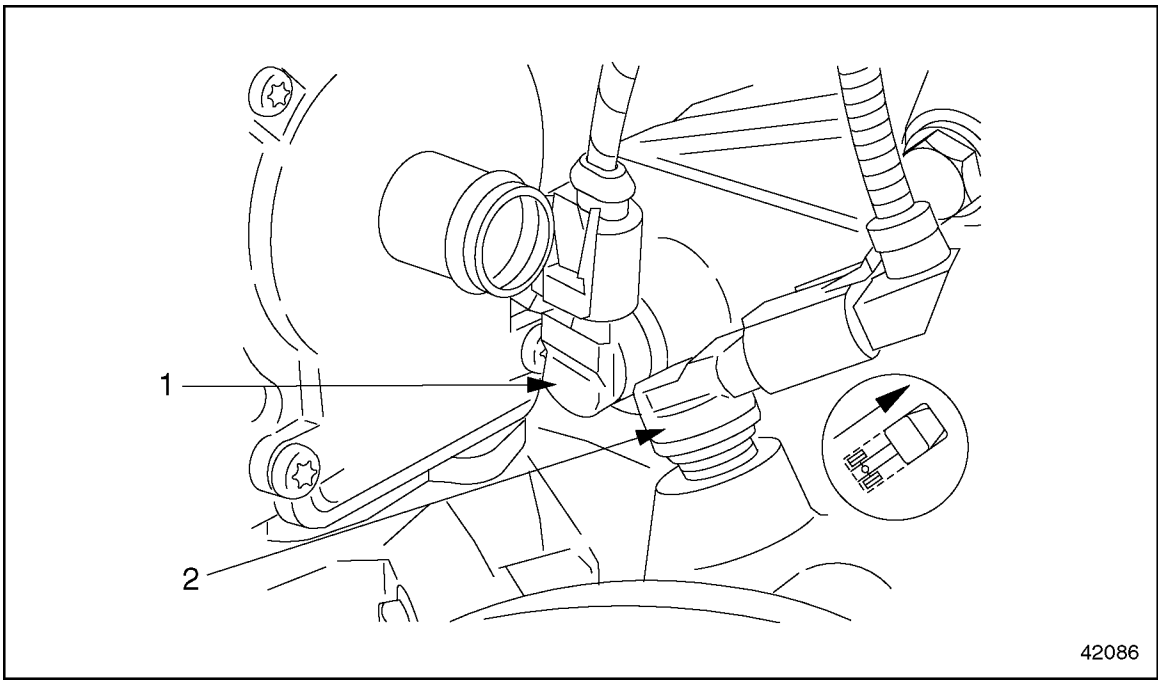

1. Camshaft Sensor
2. Crank Angle Position Sensor

Figure 1-137 Camshaft Sensor Installation

2. Remove the sensor from the access hole in the flywheel housing.
3. Install a new sensor in the flywheel housing.
4. Connect the electrical connector.

NOTE:
Be sure that the correct electrical connector is connected to the sensor.

All information subject to change without notice.
6SE412 0403 Copyright © 2004 DETROIT DIESEL CORPORATION

https://truckmanualshub.com/

1.23 EGR CAMSHAFT

The removal, installation, and inspection of the EGR camshaft is the same as in the non-EGR engine, except for the following minor changes.

1.23.1 EGR Camshaft Changes

In the EGR engine, there is a possibility of installing the camshaft bushings in an inverted (wrong) position.

NOTICE:
If the EGR camshaft bushings are installed in an inverted (wrong) channel position, there is potential for engine damage due to lack of lubrication. The holes in the camshaft journal *must* be lined up with the holes in the camshaft bushing.

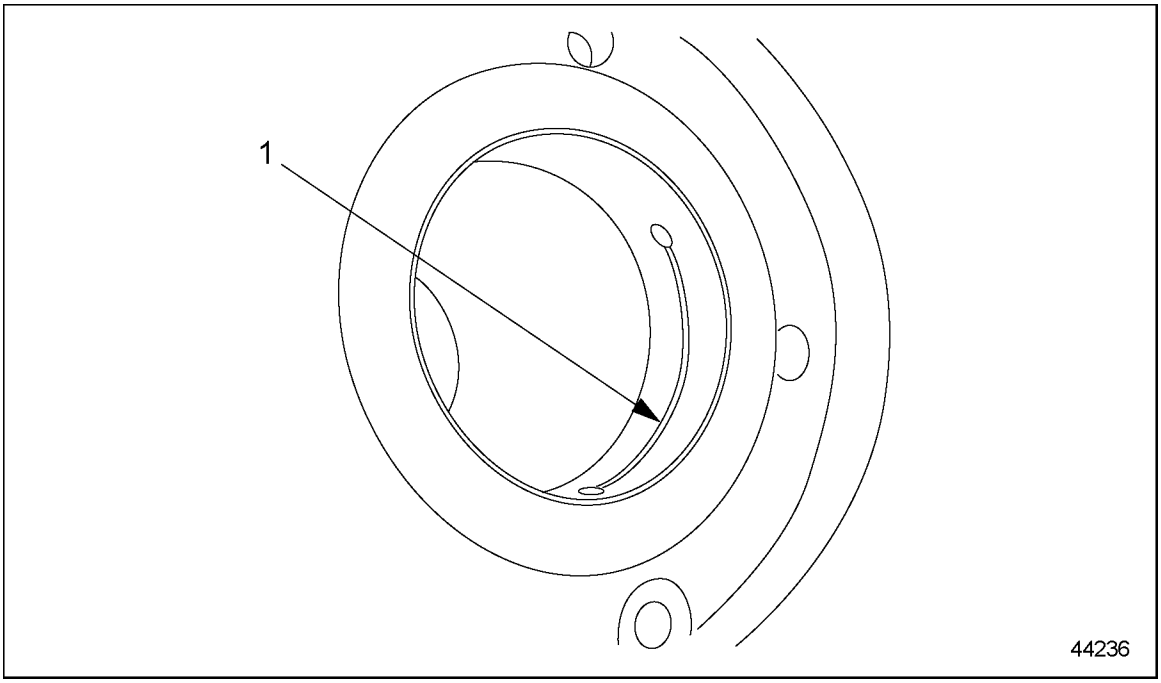

1. Bushing Groove

Figure 1-138 Camshaft Bushing Installation

 Copyright © 2004 DETROIT DIESEL CORPORATION

https://truckmanualshub.com/

All information subject to change without notice.
6SE412 0403 Copyright © 2004 DETROIT DIESEL CORPORATION

https://truckmanualshub.com/

1.A ADDITIONAL INFORMATION

Description **Page**

SPECIFICATIONS 1-184
Cylinder Head Cover 1-184
Cylinder Head 1-185
Cylinder Block 1-187
Crankshaft Assembly 1-188
Flywheel and Flywheel Housing 1-190
Piston, Piston Ring and Connecting Rod 1-191
Valves 1-193
Rocker Arm 1-196
Camshaft and Camshaft Sensor 1-197
Sensor and Fittings 1-198

 Copyright © 2004 DETROIT DIESEL CORPORATION

https://truckmanualshub.com/

SPECIFICATIONS

This section contains the specifications for servicing the engine.

Cylinder Head Cover

The torque specifications for the cylinder head cover are listed in Table 1-51.

Description	Torque Value
Cylinder Head Cover Bolts	20 N·m (15 lb·ft)

Table 1-51 Cylinder Head Cover Torque Values

All information subject to change without notice.
6SE412 0403 Copyright © 2004 DETROIT DIESEL CORPORATION

Cylinder Head

The cylinder head warpage limits are listed in Table 1-52. The specifications for measuring cylinder liner protrusion are listed in Table 1-53. Cylinder head bolt length is listed in Table 1-54. The tightening stages for cylinder head bolts are listed in Table 1-55. Oil pressure readings are listed in Table 1-56. Cylinder head torque values are listed in Table 1-57. Cylinder head specifications are listed in Table 1-58. The specifications for compression testing are listed in Table 1-59 and listed in Table 1-60.

Description	Limit
Over a length of 150 mm (6 in.)	0.015 mm (0.0006 in.)

Table 1-52 Head Warpage Limits

Description	Value: mm (inch)
Cylinder Liner Protrusion from block	0.2305-0.330 mm (0.0090-0.0130 in.)
Difference between the four measuring points	Max.: 0.02 mm (0.0007 in.)

Table 1-53 Specifications for Measuring Cylinder Liner Protrusion

Description	Length
Shaft length when new	210.0 mm (8.27 inches)
Maximum shaft length	212.0 mm (8.35 inches)

Table 1-54 Cylinder Head Bolt Lengths

Size	Max. Shaft Length	Tightening Stage	Torque Value (Repair work in the field)
M15 x 2	212.0 mm (8.35 in.)	Stage 1	10 N·m (7 lb·ft)
		Stage 2	50 N·m (37 lb·ft)
		Stage 3	100 N·m (74 lb·ft)
		Stage 4	200 N·m (148 lb·ft)
		Stage 5	90° more
		Stage 6	90° more

Table 1-55 Tightening Stages, Cylinder Head Bolts

Description	Minimum Oil Pressure Reading
Engine at Idle Speed	50 kPa (7 psi)
Engine at Max. rpm	250 kPa (36 psi)

Table 1-56 Oil Pressure Readings

 Copyright © 2004 DETROIT DIESEL CORPORATION

https://truckmanualshub.com/

Description	Torque Value
Exhaust Manifold Bolts	50 N·m (37 lb·ft)
High-Pressure Fuel Injector Lines	25 N·m (18 lb·ft)
Inspection Cover on Flywheel Housing	25 N·m (18 lb·ft)
Rocker Arm Mounting Bolts	60 N·m (44 lb·ft); then another 90°

Table 1-57 Cylinder Head Torque Values

What To Measure	How To Measure	mm (inch)
Maximum Permissible Warpage of Head Mating Surface	Lengthwise and Diagonally	0.015 (0.0006)
Maximum Permissible Parallelism Deviation of Head Mating Surface	At Each of the Four Corners	0.1 (0.004)
Overall Height of Cylinder Head	When New	113.85-114.15 (4.482-4.494)
	After Machining	113.5 (4.46)

Table 1-58 Cylinder Head Specifications

Description	Pressure in kPa (psi)
Minimum Compression Pressure Valve	2800 (406)
Permissible Difference Between Individual Cylinders	400 (58)

Table 1-59 Compression Pressure Test Data

Description	N·m (lb·ft)
Tensioning Arm Bolts	50 (37)

Table 1-60 Tensioning Arm Bolt Torque Values

All information subject to change without notice.
6SE412 0403 Copyright © 2004 DETROIT DIESEL CORPORATION

Cylinder Block

The cylinder liner installation tolerances are listed in Table 1-61. The cylinder liner inspection tolerances are listed in Table 1-62. Cylinder Liner measurements are listed in Table 1-63. The specifications for measuring cylinder liner protrusion are listed in Table 1-64.

Description	Value: mm (in.)
Cylinder Liner Protrusion, From Block, 1-16, Ref. A.	0.230–0.330 (0.0090–0.0130)
Height of the Cylinder Liner Collar, 1-16, Ref. B.	10.10–10.12 (0.3976–0.3984)
Depth of the Collar Seat, 1-16, Ref. C.	9.950–10.010 (0.392–0.3941)
Thickness of the Seat Insert	0.14–0.16 (0.0055–0.0063)

Table 1-61 Cylinder Liner Installation Tolerances

Description	Value: mm (in.)
Admissible Out-of-Round of the Cylinder Liner, where it contacts the O-rings	Max.: 0.02 (0.0007)
Admissible Deformation of the Cylinder Liner Collar, at the Contact Surface with the Seat Insert	Max.: 0.02 (0.0007)
Admissible Deformation of the Liner Collar Seat, at the Contact Surface with the Seat Insert	Max.: 0.03 (0.0011)

Table 1-62 Cylinder Liner Inspection Tolerances

Where To Measure	What To Measure	Value: mm (in.)
Measuring Point 1: at the O-ring area	Inside Diameter of the Cylinder Liner, A class	127.990–127.995 (5.0390–5.0392)
Measuring Point 1: at the O-ring area	Inside Diameter of the Cylinder Liner, B class	127.995–128.005 (5.0392–5.0396)
Measuring Point 1: at the O-ring area	Inside Diameter of the Cylinder Liner, C class	128.005–128.010 (5.0396–5.0398)
Measuring Point 2: Upper Reversal Point of the First Piston Ring	Max. Wear to Cylinder Liner, Measured Along Axis A and Axis B	0.08 (0.003)
At Measuring Point 2, Compare Axis A to Axis B	Admissible Wear-Out	Max.: 0.08 (0.003)

Table 1-63 Cylinder Liner Measurements

Description	Value: mm (in.)
Cylinder Liner Protrusion From Block	0.245–0.315 (0.0096–0.0124)
Difference Between the Four Measuring Points	Max.: 0.02 (0.0007)

Table 1-64 Specifications for Measuring Cylinder Liner Protrusion

 Copyright © 2004 DETROIT DIESEL CORPORATION

https://truckmanualshub.com/

Crankshaft Assembly

The specifications for the torque of the main bearing-cap bolts is listed in Table 1-65. Crankshaft specifications are listed in Table 1-66. The dimensions for the center bearing shell and bearing journal are listed in Table 1-67. The crankshaft bearing journal dimensions are listed in Table 1-68. The main and connecting-rod bearing as well as the main bearing shell dimensions are listed in Table 1-69 and listed in Table 1-70. The torque values for the crankshaft counterweight bolts are listed in Table 1-71.

Max. Shaft Length: mm (in.)	Tightening Stage	Torque Value: N·m (lb·ft)
156.0 mm (6.14 in.)	Stage 1	100 (74)
156.0 mm (6.14 in.)	Stage 2	200 (148)
156.0 mm (6.14 in.)	Stage 3	300-330 (221-243)
156.0 mm (6.14 in.)	Stage 4	additional 90-100 degrees

Table 1-65 Tightening Stages, Main Bearing-Cap Bolts

Description	Specification in mm (inches)*
Main Bearing and Connecting Rod Journal Hardness (Rockwell hardness)	53 to 59 HRC
Permissible Deviation From True of Crankshaft†	0.09 (0.004)
Permissible Out-Of-Round for Main and Connecting-Rod Bearing Journals - When New or Reground	0.01 (0.0004)
Permissible Out-Of-Round for Main and Connecting-Rod Bearing Journals - Wear Limit	0.02 (0.0008)
Fillet Radii of Main Bearing and Connecting-Rod Bearing Journals	4.2-4.5 (0.165-0.177)
Crown of Main Bearing Journals and Connecting-Rod Journals	0.000-0.004 (0.0000-0.0002)
Main Bearing Outside Diameter (diameter of bearing shell housing	111.000-111.022 (4.3701-4.3709)
Permissible Imbalance of Crankshaft‡ -at 400 rpm	0.6 N·cm (0.05 lb·in)

* Except as otherwise noted.

†Measure with the crankshaft mounted on the outer main bearing journals.

‡With the pin for the flywheel installed, but without the flywheel, and with the crankshaft mounted on the outer bearings.

Table 1-66 Crankshaft Specifications

Size: mm (in.)	Center Bearing Shell Width	Center Bearing Journal Width
Standard	45.74-45.81 (1.801-1.804)	46.000-46.062 (1.8110-1.8135)
Undersize - 0.50 (0.020)	46.24-46.31 (1.820-1.823)	46.500-46.562 (1.8307-1.8331)
Undersize - 1.00 (0.040)	46.74-46.81 (1.840-1.843)	47.000-47.062 (1.8504-1.8528)

Table 1-67 Bearing Shell and Bearing Journal Width

All information subject to change without notice.
6SE412 0403 Copyright © 2004 DETROIT DIESEL CORPORATION

Size: mm (in.)	Main Bearing Journal Diameter: mm (in.)	Connecting-Rod Bearing Journal Diameter: mm (in.)
Standard	103.980-104.000 (4.0937-4.0945)	89.980-90.000 (3.5425-3.5433)
Undersize - 0.10 (0.004)	103.880-103.900 (4.0898-4.0905)	89.880-89.900 (3.5386-3.5394)
Undersize - 0.25 (0.010)	103.730-103.750 (4.0839-4.0846)	89.730-89.750 (3.5327-3.5335)
Undersize - 0.50 (0.020)	103.480-103.500 (4.0740-4.0748)	89.480-89.500 (3.5228-3.5236)
Undersize - 0.75 (0.030)	103.230-103.250 (4.0642-4.0650)	89.230-89.250 (3.5130-3.5138)
Undersize - 1.00 (0.040)	102.980-103.000 (4.0543-4.0551)	88.980-89.000 (3.5031-3.5039)

Table 1-68 Crankshaft Journal Diameters

Type of Journal: mm (in.)	Width in mm (in.)
Main Journal	46.000-46.250 (1.8110-1.8209)
Connecting-Rod Journal	46.0-46.1 (1.811-1.815)

Table 1-69 Bearing Journal Width

Size: mm (in.)	Main Bearing Inside Diameter	Main Journal Outside Diameter
Standard	104.060-104.106 (4.0968-4.0987)	103.980-104.000 (4.0937-4.0945)
Undersize - 0.10 (0.004)	103.960-104.006 (4.0929-4.0947)	103.880-103.900 (4.0898-4.0905)
Undersize - 0.25 (0.010)	103.810-103.856 (4.0870-4.0888)	103.730-103.750 (4.0839-4.0846)
Undersize - 0.50 (0.020)	103.560-103.606 (4.0772-4.0790)	103.480-103.500 (4.0740-4.0748)
Undersize - 0.75 (0.030)	103.310-103.356 (4.0673-4.0691)	103.230-103.250 (4.0642-4.0650)
Undersize - 1.00 (0.040)	103.060-103.106 (4.0575-4.0593)	102.980-103.000 (4.0543-4.0551)

Table 1-70 Bearing Shell and Bearing Journal Diameter

Size	Shaft Length when New	Max. Bolt Length	Tightening Stage	Torque Value: N·m (lb·ft)
-	69.95 - 70.00 mm (2.754 - 2.756 in.)	71.20 mm (2.803 in.)	Stage 1	150 (111)
			Stage 2	Additional 90°

Table 1-71 Torque Values for Crankshaft Counterweight Bolts

 Copyright © 2004 DETROIT DIESEL CORPORATION

https://truckmanualshub.com/

Flywheel and Flywheel Housing

The flywheel specifications are listed in Table 1-72. The ring gear specifications are listed in Table 1-73. Listed in Table 1-74 are the torque values for the flywheel and the flywheel housing. The tightening stages for the flywheel mounting bolts are listed in Table 1-75.

Description	Specification in mm (inches)
Flywheel Outside Diameter	486.60-487.40 (19.157-19.189)
Flywheel Shoulder Diameter (for ring gear mounting)	432.450-432.645 (17.0256-17.0332)
Flywheel Diameter at Crankshaft Flange	114.980-115.015 (4.5268-4.5281)
Flywheel Diameter for Mounting Clutch	475.000-475.063 (18.7008-18.7032)
Flywheel Minimum Width Between Friction Surface and Mounting Flange After Machining	60 (2.4)
Flywheel Maximum Overall Width	70 (2.8)
Peak-to-Valley Height (R_z) of Clutch Friction Surface	0.016 (0.0006)
Flywheel Permissible Deviation From True (radial and lateral)	0.2 (0.008)

Table 1-72 Flywheel Specifications

Description	Specification, mm (in.)
Flywheel Shoulder Diameter (for ring gear mounting)	432.450-432.645 mm (17.0256-17.0332 inches)
Hole for Mounting Clutch Pressure Plate	M10 x 1.5
Ring Gear Inside Diameter	432.000-432.155 mm (17.0078-17.0139 inches)
Ring Gear/Flywheel Interference Fit	0.295-0.645 mm (0.0116-0.0254 inch)
Ring Gear/Flywheel Permissible Radial Runout	0.5 mm (0.02 inch)
Ring Gear Width	18.4-18.6 mm (0.72-0.73 inch)
Ring Gear Fitting Temperature	200-230°C (390-450°F)

Table 1-73 Flywheel Ring Gear Specifications

Item	Torque, N·m (lb·ft)
Inspection Cover on Flywheel Housing	25 (18)
Flywheel Housing Mounting Bolts (to cylinder block)	70 (52)
Vibration Damper Mounting Bolts (to crankshaft)	200 (148)

Table 1-74 Torque Values for Flywheel and Flywheel Housing

All information subject to change without notice.
6SE412 0403 Copyright © 2004 DETROIT DIESEL CORPORATION

Max. Shaft Length, mm (in.)	Tightening Stage	Torque Value, N·m (lb·ft)
77.0 mm (3.03 in)	Stage 1	200 N·m (147.5 lb·ft)
77.0 mm (3.03 in)	Stage 2	90 degrees

Table 1-75 Tightening Stages, Flywheel Mounting Bolts

Piston, Piston Ring and Connecting Rod

The piston projection specifications are listed in Table 1-76. The piston ring end-gap dimensions are listed in Table 1-77. Listed in Table 1-78 are the pistons inspection specifications. The tightening stages for the connecting rod stretch bolts are listed in Table 1-79. The connecting rod dimensional tolerances are listed in Table 1-80. Listed in Table 1-81 are the connecting rod bearing play specifications. The specifications for the diameter of the bearing bore are listed in Table 1-82. Listed in Table 1-83 are the bearing journal specifications. The connecting rod bushing specifications are listed in Table 1-84.

Description	mm (in.)
Piston Projection (from TDC)	0.244 to 0.715 (0.0096 to 0.0281)

Table 1-76 Piston Projection Specifications

Ring Designation	Groove	Gap When New, mm (in.)	Maximum End Gap, mm (in.)
Keystone	I	0.45 to 0.60 (0.018 to 0.024)	1.0 (.039)
Taper-Faced with Internal Angle	II	0.40 to 0.55 (0.016 to 0.022)	1.0 (.039)
Double-Chamfered Oil Control with Garter Spring	III	0.40 to 0.55 (0.016 to 0.022)	1.0 (.039)

Table 1-77 Piston Ring End-Gap Dimensions

Description	Dimensions: mm (inch)
Piston Compression Height	79.50-79.55 (3.130-3.132)
Wrist Pin Bore Diameter	52.03-52.04 (2.0484-2.0488)
Wrist Pin Diameter	51.992-51.998 (2.0469-2.0472)

Table 1-78 Piston Inspection Specifications

 Copyright © 2004 DETROIT DIESEL CORPORATION

https://truckmanualshub.com/

Max. Shaft Length	Tightening Stage	Torque Value
68.5 mm (2.70 in.)	Stage 1	100-115 N·m (74-85 lb·ft)
	Stage 2	additional 90-100°

Table 1-79 Tightening Stages, Connecting Rod Stretch Bolts

Description	Dimensions: mm (inch)
Length of Connecting Rod	255.970-256.030 (10.0775-10.0799)
Basic Bore Diameter for Connecting Rod Bearings	99.000-99.022 (3.8976-3.8985)
Maximum Permissible Out-of-Round in Bearing Bore	0.01 (0.0004)
Maximum Permissible Out-of-Round in Bushing Bore	0.01 (0.0004)
Maximum Difference in Axial Parallelism Between Bearing Bore and Bushing Inner Surface	0.030 (0.0012)
Width of Connecting Rod (at big end)	44.308-44.370 (1.7444-1.7468)
Width of Connecting Rod Journal	44.5-44.6 (1.75-1.76)
Distance from Connecting Rod Center Line for Measuring Parallelism	50 (2)

Table 1-80 Connecting Rod Dimensional Tolerances

Description	Dimensions: mm (inch)
Radial Play	0.054 - 0.116 (0.0021 - 0.0046)
End Play (axial play)	0.130 - 0.292 (0.0051 - 0.0115

Table 1-81 Connecting Rod Bearing Play Specifications

Repair Stage: mm (in.)	Diameter: mm (in.)
Standard	94.054-94.096 (3.7029-3.7046)
Undersize - 0.1 (0.004)	93.954-93.996 (3.6990-3.7006)
Undersize - 0.25 (0.010)	93.804-93.846 (3.6931-3.6947)
Undersize - 0.50 (0.020)	93.554-93.596 (3.6832-3.6848)
Undersize - 0.75 (0.030)	93.304-93.346 (3.6764-6.6750)
Undersize - 1.00 (0.040)	93.054-93.096 (3.6635-3.6652)

Table 1-82 Bearing Bore Inside Diameter with Bearing Shells Installed

All information subject to change without notice.
6SE412 0403 Copyright © 2004 DETROIT DIESEL CORPORATION

Repair Stage: mm (in.)	Diameter: mm (in.)
Standard	93.980-94.000 (3.7000-3.7007)
Undersize - 0.10 (0.004)	93.880-93.900 (3.6960-3.6968)
Undersize 0.25 (0.010)	93.730-93.750 (3.6901-3.6909)
Undersize 0.50 (0.020)	93.480-93.500 (3.6803-3.6811)
Undersize 0.75 (0.030)	93.230-93.250 (3.6705-3.6712)
Undersize 1.00 (0.040)	92.980-93.000 (3.6606-3.6614)

Table 1-83 Bearing Journal Specifications

Description	Dimensions: mm (in.)
Inside Diameter of Bushing	52.05-52.07 (2.049-2.050)
Outside Diameter of Bushing	57.080-57.100 (2.2472-2.2480)
Inside Diameter of Bushing Bore	57.000-57.019 (2.2441-2.2448)
Bushing Interference Fit	0.061-0.100 (0.0024-0.0039)
Maximum Permissible Out-of-Round in Bushing Bore	0.01 (0.0004)

Table 1-84 Bushing Specifications

Valves

The valve removal/installation specifications are listed in Table 1-85. The valve standback specifications are listed in Table 1-86. The valve guide inside diameter measurements are listed in Table 1-87. The spring specifications for the intake and exhaust valves are listed in Table 1-88. The valve lift specifications are listed in Table 1-89. The measurements for valve lash checking are listed in Table 1-90. The measurements for valve seat specifications for an EGR engine are listed in Table 1-91.

 Copyright © 2004 DETROIT DIESEL CORPORATION

https://truckmanualshub.com/

Description	Intake, mm (in.)	Exhaust-EPA 98, mm (in.)	Exhaust-EPA 04, mm (in.)
Valve stem diameter (A)	8.935-8.950 (0.3518-0.3524)	8.925-8.940 (0.3514-0.3520)	8.925-8.940 (0.3514-0.3520)
Valve seat diameter at head contact surface (B)	42.0 (1.65)	39.0 (1.54)	39.0 (1.54)
Valve head diameter (C)	45.4-45.6 (1.79-1.80)	40.9-41.3 (1.61-1.63)	41.9-42.3 (1.65-1.67)
Valve seat height-new (D)	3.1-3.3 (0.12-0.13)	2.8-3.1 (0.11-0.12)	3.0-3.3 (0.12-0.13)
Minimum valve seat height-after grinding (D)	2.9 (0.11)	2.3 (0.09)	2.9 (0.11)
Valve seat width at valve head (E)	3.5-4.5 (0.14-0.18)	3.5-4.5 (0.14-0.18)	min. 3.5 (0.14)
Valve seat angle (F)	30 degrees	45 degrees	36 degrees
Valve length (G)	145.0 (5.71)	145.0 (5.71)	145.0 (5.71)

Table 1-85 Valve Removal/Installation Specifications in mm (in.) for non-EGR and EGR engines

Valve Type	Description	mm (inch)
Intake	Normal	0.7-1.1 (0.03-0.04)
Intake	Wear Limit	1.6 (0.06)
Exhaust	Normal	0.7-1.1 (0.03-0.04)
Exhaust	Wear Limit	1.6 (0.06)

Table 1-86 Valve Standback

Description	mm (inch)
Normal	9.000-9.022 (0.3543-0.3552)
Wear Limit	9.050 (0.3563)

Table 1-87 Inside Diameter of Valve Guide

Description	mm (inches)
Length, Without Load	69.7 (2.74)
Length, Under Load of 382-418 N·m (86-94 lb·ft)	49 (1.9)
Length, Under Load of 644-706 N·m (145-159 lb·ft)	37 (1.5)
Diameter of Spring Wire	4.2 (0.17)
Outside Diameter of Spring Coil	28.9 (1.14)
Inside Diameter of Spring Coil	24.5-24.9 (0.96-0.98)

Table 1-88 Spring Specifications, Intake and Exhaust Valves

All information subject to change without notice.
6SE412 0403 Copyright © 2004 DETROIT DIESEL CORPORATION

Description	Specification
Specified Dial Gauge Preload for Checking Valve Lift	15 mm (0.60 in)
Valve Lift with Intake Valves Completely Open	11.546 mm (at least 0.4546 in)
Valve Lift with Exhaust Valves Completely Open	11.963 mm (at least 0.4710 in)
Inspection Cover Bolt Torque	25 N·m (18 lb·ft)

Table 1-89 Valve Lift Specifications

Valve Type	Check For: mm (inches)	Adjust to: mm (inches)
Intake	0.30 to 0.60 (0.012 to 0.024)	0.40 (0.016)
Exhaust	0.50 to 0.80 (0.020 to 0.032)	0.60 (0.024)

Table 1-90 Valve Lash Checking and Adjustment

Description	Intake Valve, mm (in.)	Exhaust Valve-non-EGR, mm (in.)	Exhaust Valve-EGR, mm (in.)
Valve seat angle (E)	30 Degree	45 Degree	36 Degree
Valve seat surface diameter (G)	41.99-42.01(1.65-1.654	38.99-39.0 (1.535-1.535)	38.99-39.01(1.535-1.536)
Relative position (H) to diameter G	4.00-4.15 (0.157-0.163)	3.80-3.95 (0.15-0.16)	4.00-4.15 (0.157-0.163)

Table 1-91 Valve Seat Specifications for EGR Engine

 Copyright © 2004 DETROIT DIESEL CORPORATION

https://truckmanualshub.com/

Rocker Arm

The rocker arm mounting bolt specifications are listed in Table 1-92. Listed in Table 1-93 are the rocker arm specifications. Listed in Table 1-94 are the rocker arm bushing specifications.

Size	Max. Shaft Length	Torque Value
M12	91 mm (3.6 in)	60 N·m (44 lb·ft)
		additional 90°

Table 1-92 Specifications, Rocker Arm Mounting Bolts

Description	Stage	Specification
Outside Diameter of Valve Tappets	Normal	29.931-29.952 mm (1.1784-1.1792 in)
Outside Diameter of Valve Tappets	Repair Stage I	30.444-30.465 mm (1.1986-1.1994 in)
Diameter of Tappet Seats (in cylinder block)	Normal	30.000-30.021 mm (1.1811-1.1819 in)
Diameter of Tappet Seats (in cylinder block)	Repair Stage I	30.500-30.525 mm (1.2008-1.2018 in)
Total Length of Pushrods		345.0-346.5 mm (13.58-13.64 in)
Maximum Pushrod Warpage		0.5 mm (0.02 in)
Maximum Length of Rocker Arm Mounting Bolts		91 mm (3.6 in)

Table 1-93 Rocker Arm Specifications

Description	Specification, mm (inch)
Bushing Inside Diameter (when installed)	25.005-25.021 mm (0.9844-0.9851 in)
Shaft Diameter	24.967-24.980 mm (0.9830-0.9835 in)

Table 1-94 Rocker Arm Bushing Specifications

All information subject to change without notice.
6SE412 0403 Copyright © 2004 DETROIT DIESEL CORPORATION

Camshaft and Camshaft Sensor

The camshaft specifications arelisted in Table 1-95. The valve tappet specifications are listed in Table 1-96. Listed in Table 1-97 are the torque values for the camshaft.

What To Measure	Where To Measure	Value: mm (inch) Unless otherwise noted
Hardness of Surface	At Cams and Journals	57–63 HRC
Camshaft Radial Runout When Mounted on Outer Bearing Journals	At Gear Seat	0.020 (0.0008)
Camshaft Radial Runout When Mounted on Outer Bearing Journals	At Cam Circle	0.025 (0.0010)
Camshaft Radial Runout When Mounted on Outer Bearing Journals	At Camshaft Journals	0.030 (0.0012)
Minimum Valve Cam Rise–Above Basic Circle	Intake Valve	7.3 (0.29)
Minimum Valve Cam Rise–Above Basic Circle	Exhaust Valve	8.2 (0.32)
Camshaft Journal Diameter	For New Camshaft	81.893–81.928 (3.2241–3.2255)
Bushing Diameter	At Camshaft Journals	82.000–82.035 (3.2283–3.2297)
Gear Back Lash	Cam Gear to Crank Gear	0.074–0.176 (0.0029–0.0069)
Gear Back Lash	Cam Gear to Air Compressor Gear	0.082–0.168 (0.0032–0.0066)

Table 1-95 Camshaft Specifications

Description	Repair Stage	Specifications, mm (inch)
Tappet Outside Diameter	Standard	29.931-29.952 (1.1784-1.1792)
Tappet Outside Diameter	Repair Stage I	30.444-30.465 (1.1986-1.1994)
Tappet Housing Diameter (in cylinder block)	Standard	30.000-30.021 (1.1811-1.1819)
Tappet Housing Diameter (in cylinder block)	Repair Stage I	30.500-30.525 (1.2008-1.2018)

Table 1-96 Valve Tappet Specifications

Fastener Type	N·m (lb·ft)
Camshaft Front Cover	50 (37)
Fuel Pump Drive Gear	60 (44)

Table 1-97 Camshaft Torque Values

 Copyright © 2004 DETROIT DIESEL CORPORATION

https://truckmanualshub.com/

Sensor and Fittings

The torque specifications for the fuel and coolant temperature sensors as well as some fittings are listed in Table 1-98.

Description	Torque N·m (lb·ft)
Deaeration Line Banjo Bolt	35 (25)
Constant Throttle Valve (CTV) Air Supply Line Banjo Bolt	45 (33)
Fuel Temperature Sensor to Engine Block	30 (22)
Coolant Temperature Sensor to the Engine Block	30 (22)
Trim Cover Bolts	12 (9)

Table 1-98 Sensor and Fittings Torque Values

All information subject to change without notice.
6SE412 0403 Copyright © 2004 DETROIT DIESEL CORPORATION

https://truckmanualshub.com/

2 FUEL SYSTEM

Section		Page
2.1	INJECTOR UNIT PUMP	2-3
2.2	EGR INJECTOR UNIT PUMP	2-11
2.3	FUEL INJECTOR LINE	2-13
2.4	FUEL INJECTOR NOZZLE	2-18
2.5	EGR FUEL INJECTOR NOZZLE	2-24
2.6	PROTECTIVE SLEEVE	2-25
2.7	DDEC ELECTRONIC CONTROL UNIT	2-29
2.8	FUEL HEAT EXCHANGER	2-34
2.9	FUEL FILTER	2-37
2.10	EGR FUEL FILTER	2-41
2.11	FUEL PUMP	2-43
2.12	FUEL SYSTEM INSPECTION	2-47
2.A	ADDITIONAL INFORMATION	2-57

https://truckmanualshub.com/

All information subject to change without notice.
6SE412 0403 Copyright © 2004 DETROIT DIESEL CORPORATION

2.1 INJECTOR UNIT PUMP

A special tool is required for this procedure.

2.1.1 Injector Unit Pump Removal

Remove the injector unit pump as follows:

1. Remove the engine trim cover.
2. Unscrew the fuel filter cap. See Figure 2-1.

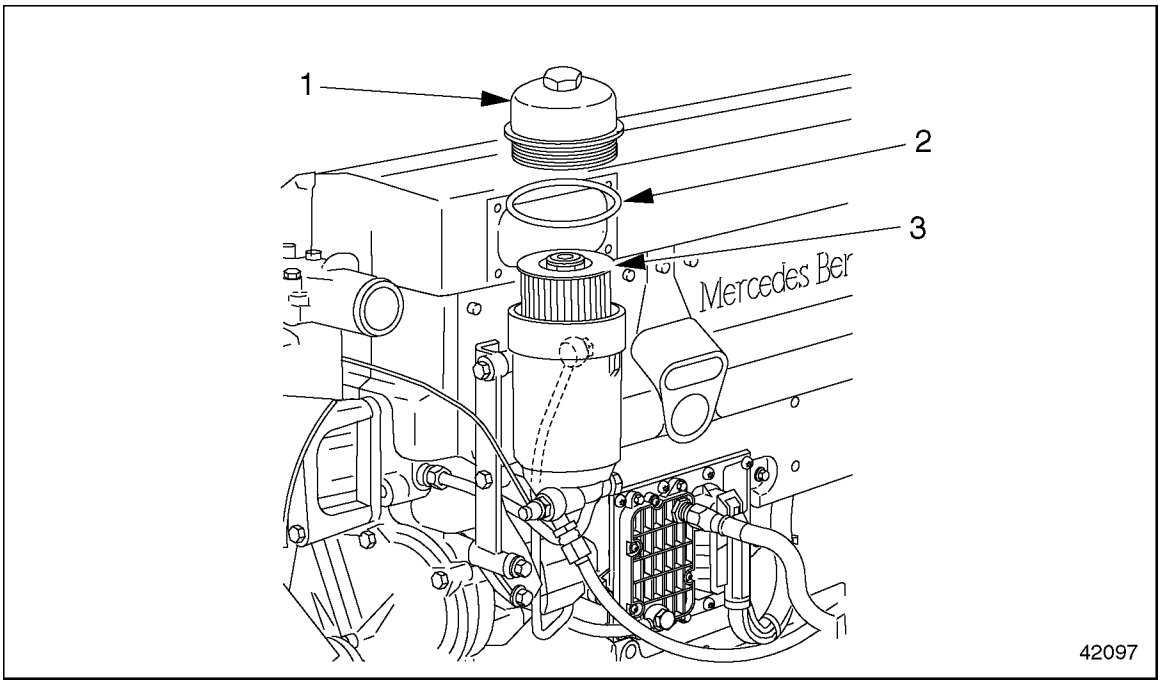

1. Fuel Filter Cap
2. O-ring
3. Filter Element

Figure 2-1 Main Fuel Filter (exploded view)

NOTE:
Unscrewing the fuel filter cap releases pressure in the fuel system, causing fuel to flow through the return lines and back into the tank.

 Copyright © 2004 DETROIT DIESEL CORPORATION

https://truckmanualshub.com/

3. Disconnect the engine wiring harness from the injector unit pump. See Figure 2-2.

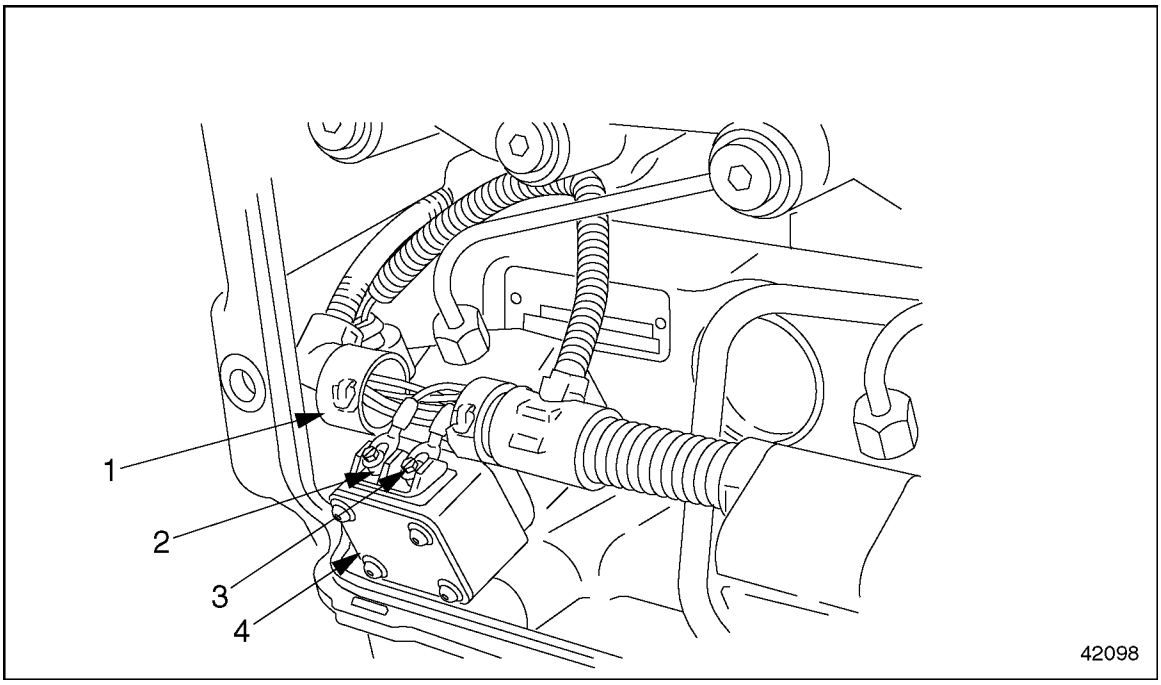

1. Engine Wiring Harness
2. Terminal
3. Terminal Screw
4. Injector Unit Pump

Figure 2-2 Unit Pump Electrical Wires

WARNING:

PERSONAL INJURY

To avoid injury from the sudden release of a high-pressure hose connection, wear a face shield or goggles.

4. Remove the high-pressure fuel injector line. Refer to section 2.3.1.
5. Disconnect the fuel line at the fuel gallery inlet. Have a suitable container ready to catch any fuel that comes out of the cylinder block or fuel line.

All information subject to change without notice.
6SE412 0403 Copyright © 2004 DETROIT DIESEL CORPORATION

6. Drain fuel from the engine through the fuel gallery outlet on the return lines. See Figure 2-3.

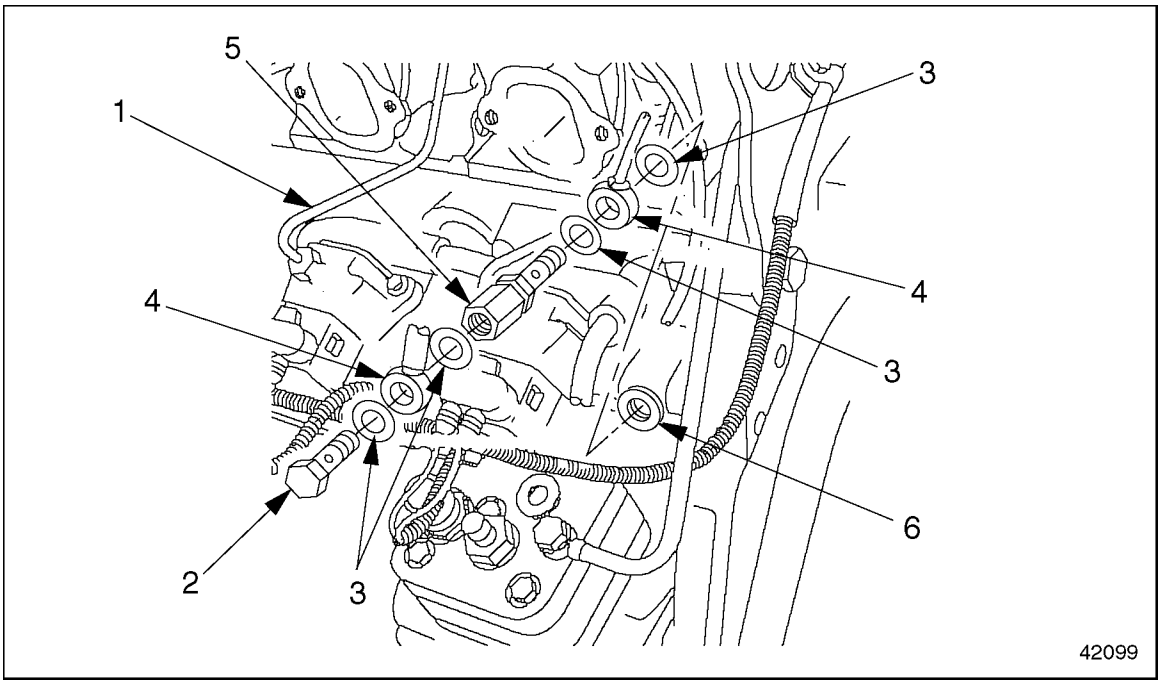

1. High-Pressure Fuel Injector Line
2. Hollow-Core Banjo Bolt
3. Seal Rings
4. Banjo Fitting
5. Pressure Limiting Valve
6. Fuel Gallery Outlet

Figure 2-3 Drain Fuel from the Return Lines

[a] Remove the outer banjo bolt and fitting from the pressure limiting valve. Discard the seal rings.

[b] Have a suitable container ready to catch any fuel that runs out of the cylinder block or return lines.

[c] Unscrew the threaded end of the pressure limiting valve from the fuel gallery outlet.

[d] Remove the inner banjo fitting from the pressure limiting valve. Discard the seal rings.

[e] Mark the fasteners with a paint pen for ease of installation.

[f] Clean out the fuel gallery outlet with compressed air.

NOTE:
This step is necessary to prevent fuel from contaminating the engine oil in the block.

7. Remove the end cover from the lower right side of the flywheel housing, then attach the engine cranking tool (J 46167 or 407 589 00 63 00).

 Copyright © 2004 DETROIT DIESEL CORPORATION

https://truckmanualshub.com/

WARNING:

EYE INJURY

To avoid injury from flying parts when working with components under spring tension, wear adequate eye protection (face shield or safety goggles).

8. Carefully loosen the injector unit pump mounting bolts about 6 mm (1/4 inch), but do not remove them yet. See Figure 2-4.

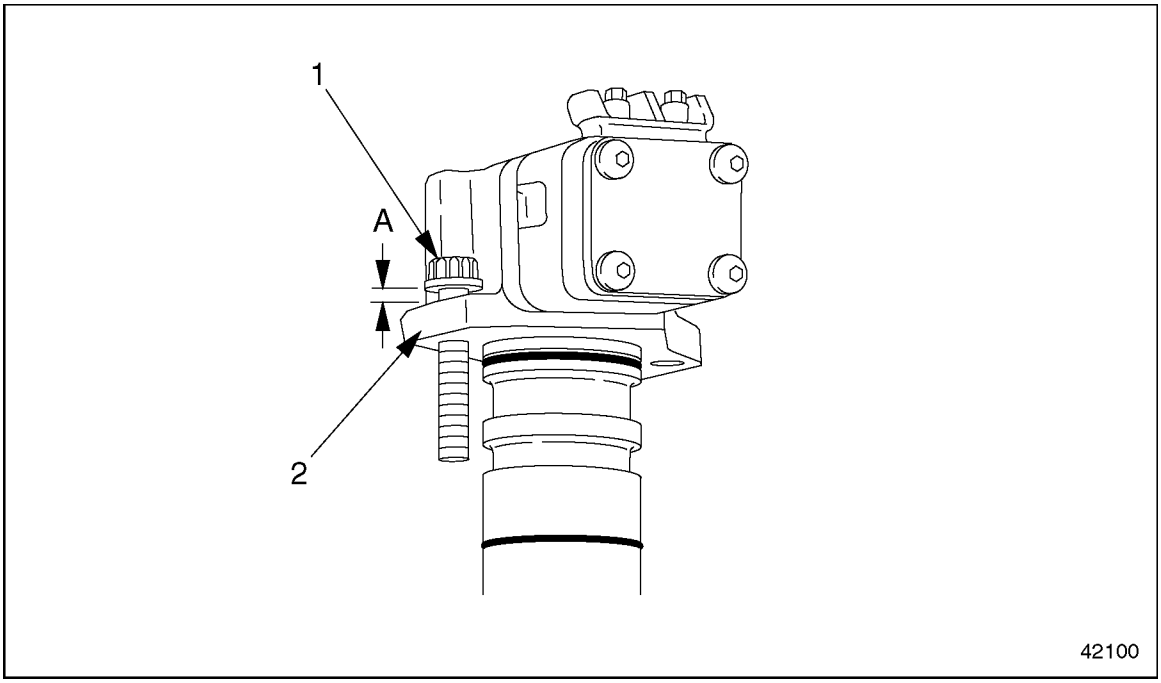

1. Mounting Bolt
2. Head of Unit Pump

Figure 2-4 Loosen the Mounting Bolts

9. Using the cranking tool (J 46167 or 407 589 00 63 00), rotate the crankshaft until the cam pushes the unit pump upwards.

All information subject to change without notice.
6SE412 0403 Copyright © 2004 DETROIT DIESEL CORPORATION

NOTICE:
If the injector unit pump doesn't come out easily, do not try to pry up on the body of the pump. This will damage it.

10. If the injector unit pump is locked up, or frozen, in its seat, release it using the blade of a small screwdriver on the flange where the mounting bolt attaches. See arrow in see Figure 2-5.

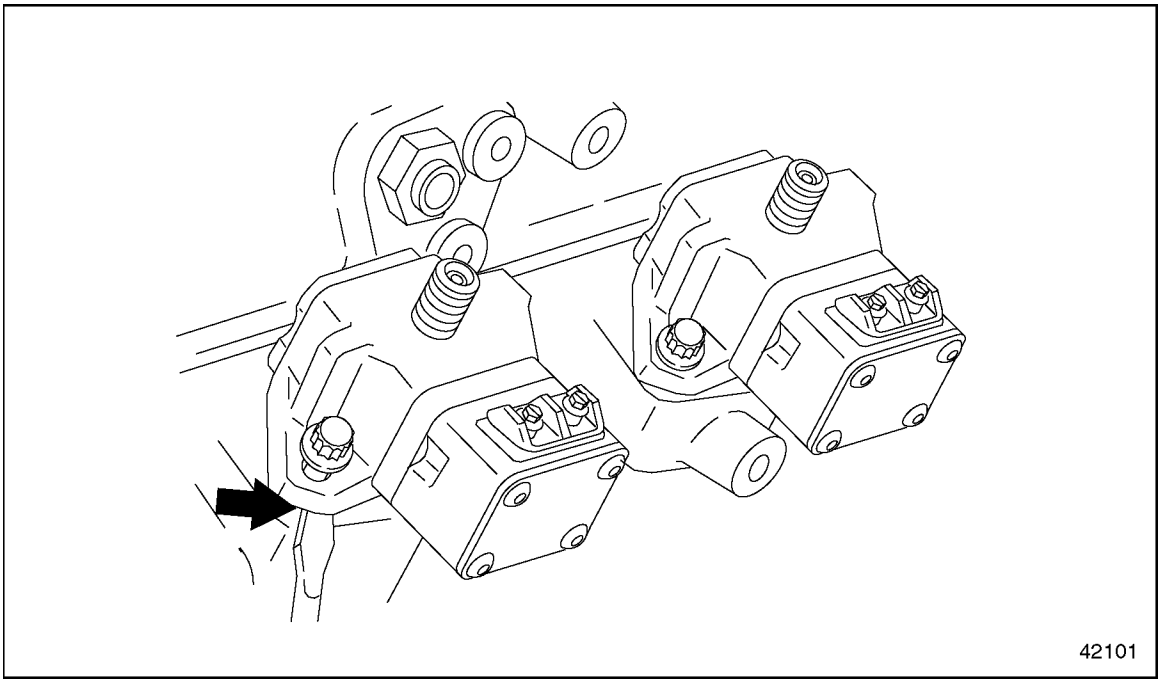

Figure 2-5 Releasing a Locked-up Pump

https://truckmanualshub.com/

11. Remove both mounting bolts completely. Carefully pull the unit pump out of the cylinder block. See Figure 2-6.

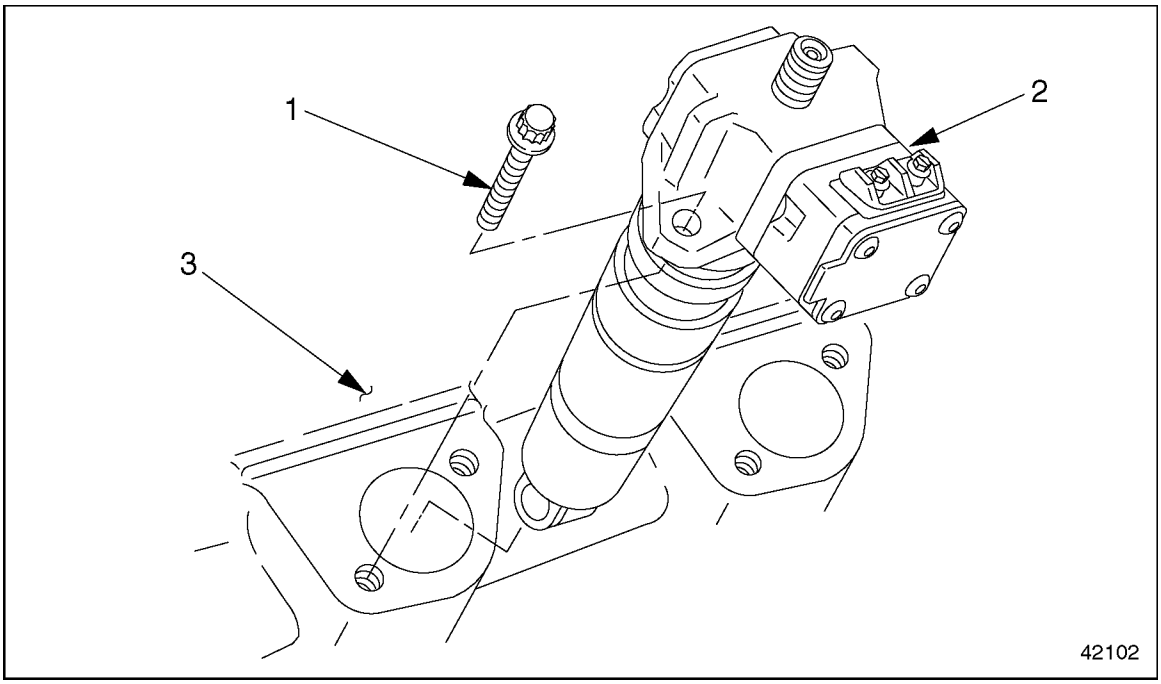

1. Mounting Bolt
2. Unit Pump
3. Cylinder Block

Figure 2-6 Removing the Unit Pump

12. Check the injector unit pump for wear or damage. If any is found, replace the entire component. It is not repairable.
13. Remove and discard the two O-rings on the unit pump shaft.

2.1.2 Injector Unit Pump Installation

Install the injector unit pump as follows:

1. Lubricate two new O-rings with a light coating of engine oil.

All information subject to change without notice.
6SE412 0403 Copyright © 2004 DETROIT DIESEL CORPORATION

2. Install the two new O-rings on the unit pump shaft. See Figure 2-7.

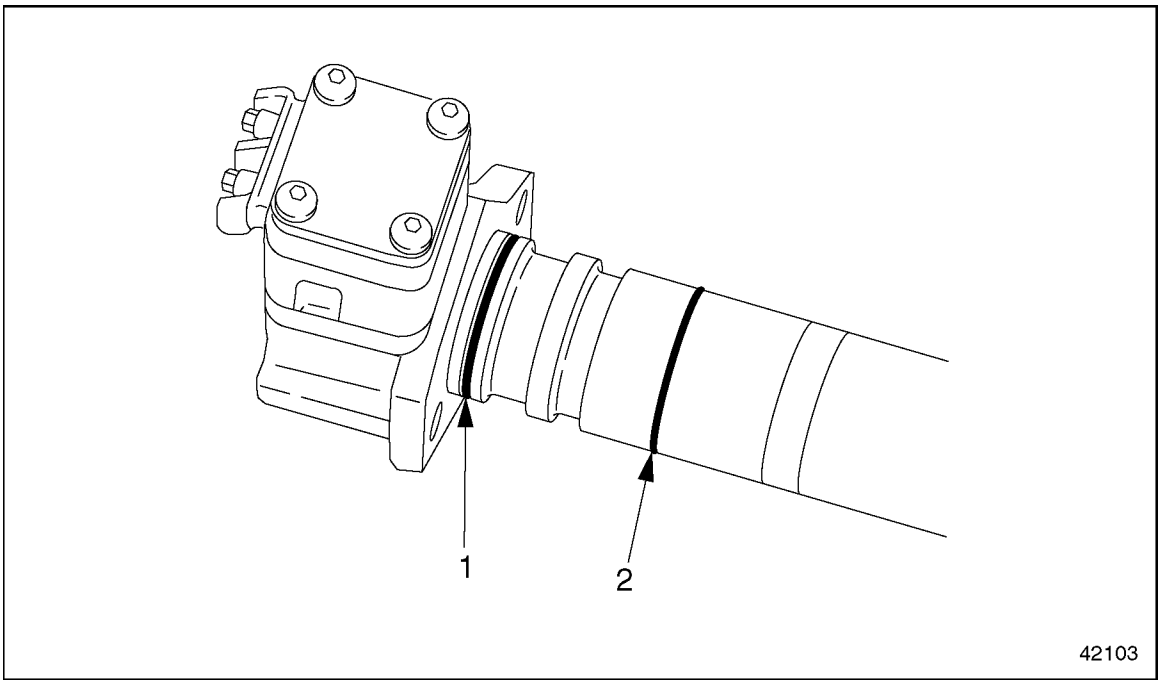

1. Inner (larger) O-ring
2. Outer (smaller) O-ring

Figure 2-7 O-ring Installation

3. Install the injector unit pump into the cylinder block.
   [a] Insert the injector unit pump into the mounting hole in the cylinder block.
   [b] Use light hand pressure to push in the unit pump until it seats, about 4 mm (0.16 inch). If it won't seat easily, rotate the crankshaft until the unit pump seats.

NOTE:
Use the bolt mounting holes on the engine as a guide for positioning the injector pump.

4. Install the mounting bolts, and tighten 65 N·m (48 lb·ft).
5. Connect the engine wiring harness to the injector unit pump.
6. Remove the engine cranking tool and replace the inspection cover on the flywheel housing. Tighten the inspection cover mounting bolts 25 N·m (18 lb·ft).

 Copyright © 2004 DETROIT DIESEL CORPORATION

https://truckmanualshub.com/

WARNING:

PERSONAL INJURY

To avoid injury from the sudden release of a high-pressure hose connection, wear a face shield or goggles.

7. Connect the fuel line at the fuel gallery inlet. Tighten the fitting 50 N·m (37 lb·ft).
8. Install the fuel lines and pressure limiting valve on the fuel gallery outlet. Tighten all fasteners 50 N·m (37 lb·ft).
   [a] Install the inner banjo fitting, and two new seal rings, on the pressure limiting valve, as marked on removal.
   [b] Install the threaded end of the pressure limiting valve in the fuel gallery outlet. When the valve is firmly seated, tighten it 50 N·m (37 lb·ft).
   [c] Install the outer banjo fitting, again with two new seal rings, on the banjo bolt, as marked on removal.
   [d] Install the banjo bolt on the pressure limiting valve and tighten it 50 N·m (37 lb·ft).
9. Install the fuel filter cap. Inspect the O-ring in the fuel filter and replace it if worn. Tighten the cap nut 25 N·m (18 lb·ft).
10. Install the high-pressure fuel injector line. Refer to section 2.3.2.
11. Prime the fuel system. Refer to section 2.9.2.

WARNING:

PERSONAL INJURY

Diesel engine exhaust and some of its constituents are known to the State of California to cause cancer, birth defects, and other reproductive harm.

- ☐ **Always start and operate an engine in a well ventilated area.**
- ☐ **If operating an engine in an enclosed area, vent the exhaust to the outside.**
- ☐ **Do not modify or tamper with the exhaust system or emission control system.**

12. Start the engine and check for leaks. Tighten connections as needed.
13. Install the engine trim cover.

All information subject to change without notice.
6SE412 0403 Copyright © 2004 DETROIT DIESEL CORPORATION

https://truckmanualshub.com/

2.2 EGR INJECTOR UNIT PUMP

The removal and installation of the EGR injector unit pump is the same as the non-EGR engine; however, the EGR injector unit pump must be programmed to coordinate with the DDEC-ECU (formerly PLD-MR).

2.2.1 EGR Injector Unit Pump Programming

When replacing and before installing a new EPA 04 EGR unit pump, the unit pump identification code number must be programmed into the DDEC-ECU (PLD-MR). Perform the following procedures to insert this code into the unit pump:

NOTE:
On the top surface of each EGR unit pump, there is a unit pump identification code number. This is the number that is programmed into the DDEC-ECU (formerly PLD-MR) to coordinate the operation of the unit pumps. See Figure 2-8.

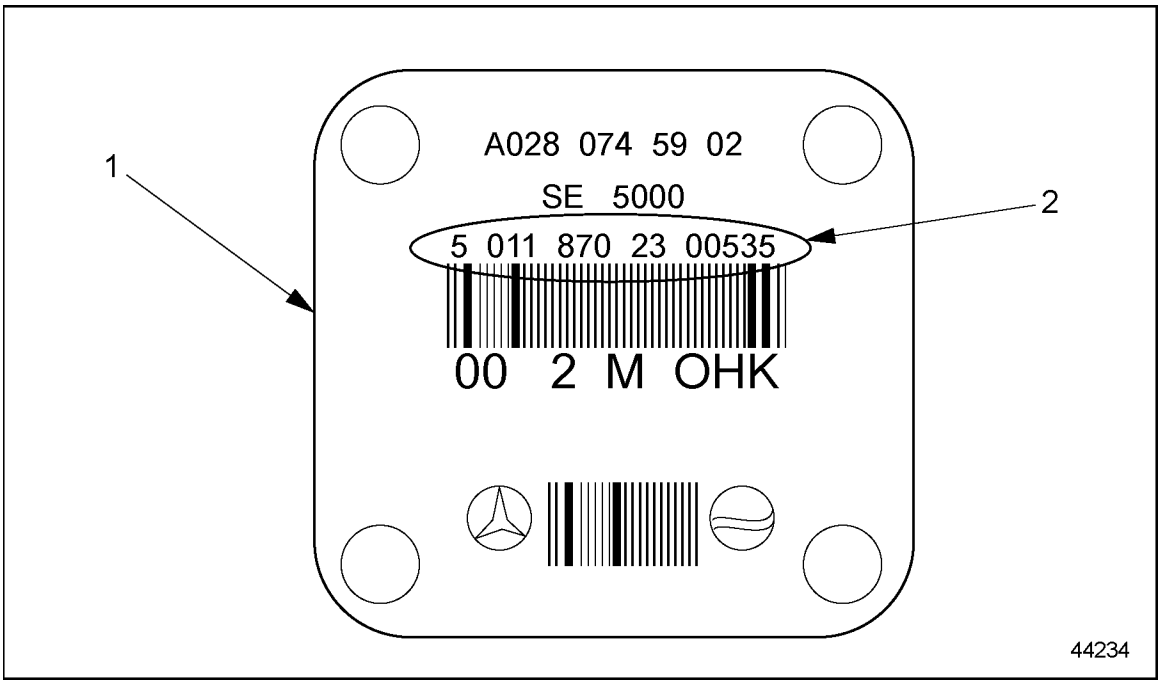

1. Injector Unit Pump
2. Injector Unit Pump Identification Number

Figure 2-8 Injector Unit Pump Identification Number

1. Consult the Minidiag2 Manual for service routines.
2. Select routine number 006 – Pump Line Nozzle Change.
3. Enter the unit pump identification Number found on the top of the unit pump.
4. Press enter.
5. Press double-arrow back key.

 Copyright © 2004 DETROIT DIESEL CORPORATION

https://truckmanualshub.com/

6. Turn off key and unplug minidiag2.
7. Install the unit pump. Refer to section 2.1.2.

All information subject to change without notice.
6SE412 0403 Copyright © 2004 DETROIT DIESEL CORPORATION

2.3 FUEL INJECTOR LINE

Perform the following procedures for removal and installation of the fuel injector line.

2.3.1 Fuel Injector Line Removal

Remove the fuel injector line as follows:

 Copyright © 2004 DETROIT DIESEL CORPORATION

https://truckmanualshub.com/

WARNING:

FIRE

To avoid injury from fire, keep all potential ignition sources away from diesel fuel, including open flames, sparks, and electrical resistance heating elements. Do not smoke when refueling.

WARNING:

FIRE

To avoid injury from fire caused by heated diesel-fuel vapors:

- ☐ **Keep those people who are not directly involved in servicing away from the engine.**
- ☐ **Stop the engine immediately if a fuel leak is detected.**
- ☐ **Do not smoke or allow open flames when working on an operating engine.**
- ☐ **Wear adequate protective clothing (face shield, insulated gloves and apron, etc.).**
- ☐ **To prevent a buildup of potentially volatile vapors, keep the engine area well ventilated during operation.**

1. Remove the engine trim cover.

NOTE:
The MBE 4000 engine has individual heads for each cylinder. To remove the injector line for one cylinder, do these procedures step by step. To remove all the injector lines, repeat each step in these instructions, as applicable, for all six cylinders.

2. Remove the cylinder head cover for each cylinder head, as required. Refer to section 1.1.1.

All information subject to change without notice.
6SE412 0403 Copyright © 2004 DETROIT DIESEL CORPORATION

3. Before loosening the injector line nuts, check the thrust bolt for tightness, using the thrust bolt torque wrench adaptor, (J 45063).

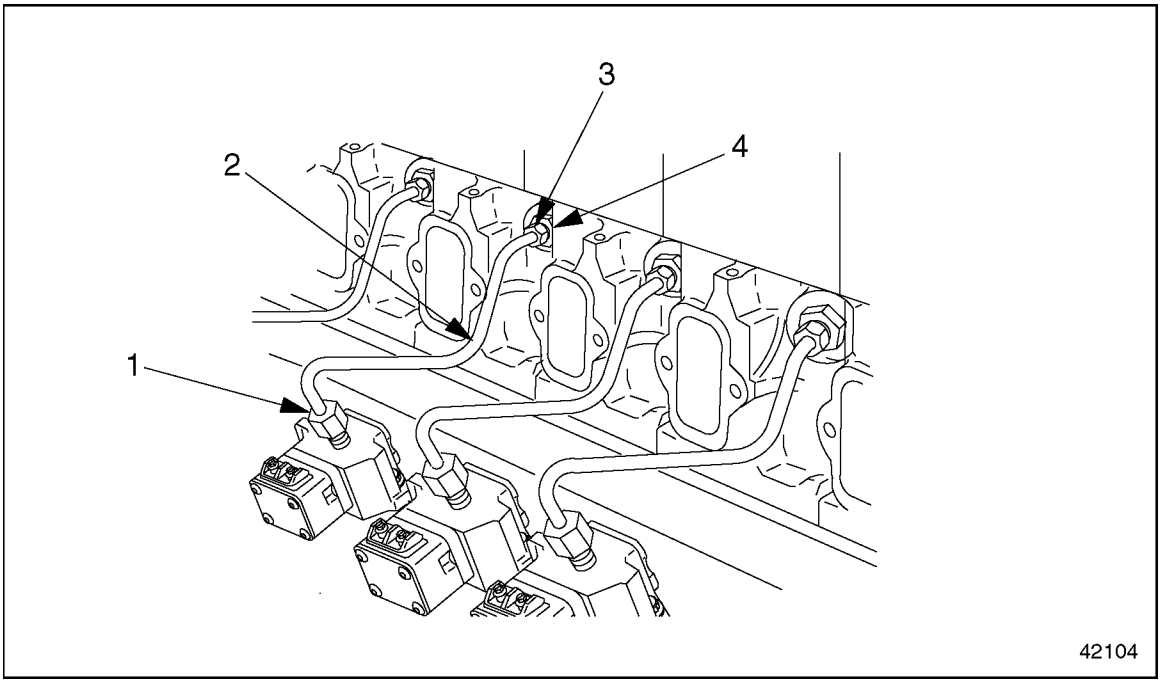

1. Injector Line Nut, Unit Pump Fitting
2. Injector Line
3. Injector Line Nut, Transfer Tube Fitting
4. Thrust Bolt

Figure 2-9 High-Pressure Injector Line Removal / Installation

4. Using the injector line torque wrench adaptor (J 45062), loosen the injector line nuts at the transfer tube and at the injector unit pump.

 Copyright © 2004 DETROIT DIESEL CORPORATION

https://truckmanualshub.com/

NOTICE:

Do not crimp or nick the injector line tubing. Overbending the tubing can close the passage or restrict the flow of fuel. Nicks can cause weak spots that could lead to injector line failure.

WARNING:

PERSONAL INJURY

To avoid injury from the sudden release of a high-pressure hose connection, wear a face shield or goggles.

5. Carefully remove the injector line from the engine.

2.3.2 Fuel Injector Line Installation

Install the fuel injector line as follows:

NOTICE:

New injector lines are supplied ready for installation. If the flared cone ends of the line do not line up with the transfer-tube and unit-pump fittings, carefully bend the line by hand for a proper fit. Never use pliers or sharp-edged tools to bend injector lines. Doing so could damage them. Injector lines should fit without tension over the transfer-tube and unit-pump fittings.

NOTE:
A torque wrench is designed to a apply a specified torque directly on the fastener. When using a torque wrench with an adaptor, the final torque on the fastener will be greater than the number you set on the wrench itself.

1. Before installing the injector line, tighten the thrust bolt, using the thrust bolt torque wrench adaptor, (J 45063). The final torque on the bolt must be 45 N·m (33 lb·ft).
   [a] Attach the adaptor to the torque wrench drive.
   [b] The amount of torque you need to apply depends on the length of your torque wrench. Examples: For a 12-inch torque wrench, tighten 40 N·m (30 lb·ft).

   For a 24-inch torque wrench, tighten 36 N·m (27 lb·ft).
2. Install the injector line nuts finger-tight at both ends.
3. Using the injector line torque wrench adaptor, (J 45062), tighten the injector line nuts at the transfer tube and at the unit pump. The final torque on the bolt must be 30 N·m (22 lb·ft).

All information subject to change without notice.
6SE412 0403 Copyright © 2004 DETROIT DIESEL CORPORATION

[a] Attach the adaptor to the torque wrench drive.

[b] The amount of torque you need to apply depends on the length of your torque wrench.Examples: For a 12-inch torque wrench, tighten 27 N·m (20 lb·ft).

For a 24-inch torque wrench, tighten 25 N·m (18 lb·ft).

4. Install the cylinder head cover(s), as removed. Refer to section 1.1.2.
5. Prime the fuel system. Refer to section 2.1.2.

WARNING:

PERSONAL INJURY

Diesel engine exhaust and some of its constituents are known to the State of California to cause cancer, birth defects, and other reproductive harm.

- ☐ **Always start and operate an engine in a well ventilated area.**
- ☐ **If operating an engine in an enclosed area, vent the exhaust to the outside.**
- ☐ **Do not modify or tamper with the exhaust system or emission control system.**

6. Run the engine and check for leaks. Tighten the connections as needed.
7. Shut down the engine and install the engine trim cover.

 Copyright © 2004 DETROIT DIESEL CORPORATION

https://truckmanualshub.com/

2.4 FUEL INJECTOR NOZZLE

Perform the following procedures for removal and installation of the fuel injector nozzle.

2.4.1 Fuel Injector Nozzle Removal

Remove the fuel injector nozzle as follows:

1. Remove the engine trim cover.

NOTE:
The MBE 4000 engine has individual heads for each cylinder. To remove the injector nozzle for one cylinder, do these procedures step by step. To remove all the injector nozzles, repeat each step in these instructions, as applicable, for all six cylinders.

2. Remove the cylinder head cover for each cylinder head, as required. Refer to section 1.1.1.
3. Remove the charge-air manifold. Refer to section 6.1.1.

WARNING:

FIRE

To avoid injury from fire, keep all potential ignition sources away from diesel fuel, including open flames, sparks, and electrical resistance heating elements. Do not smoke when refueling.

WARNING:

FIRE

To avoid injury from fire caused by heated diesel-fuel vapors:

- ☐ **Keep those people who are not directly involved in servicing away from the engine.**
- ☐ **Stop the engine immediately if a fuel leak is detected.**
- ☐ **Do not smoke or allow open flames when working on an operating engine.**
- ☐ **Wear adequate protective clothing (face shield, insulated gloves and apron, etc.).**
- ☐ **To prevent a buildup of potentially volatile vapors, keep the engine area well ventilated during operation.**

All information subject to change without notice.
6SE412 0403 Copyright © 2004 DETROIT DIESEL CORPORATION

4. Remove the injector line. See Figure 2-10. Refer to section 2.3.1.

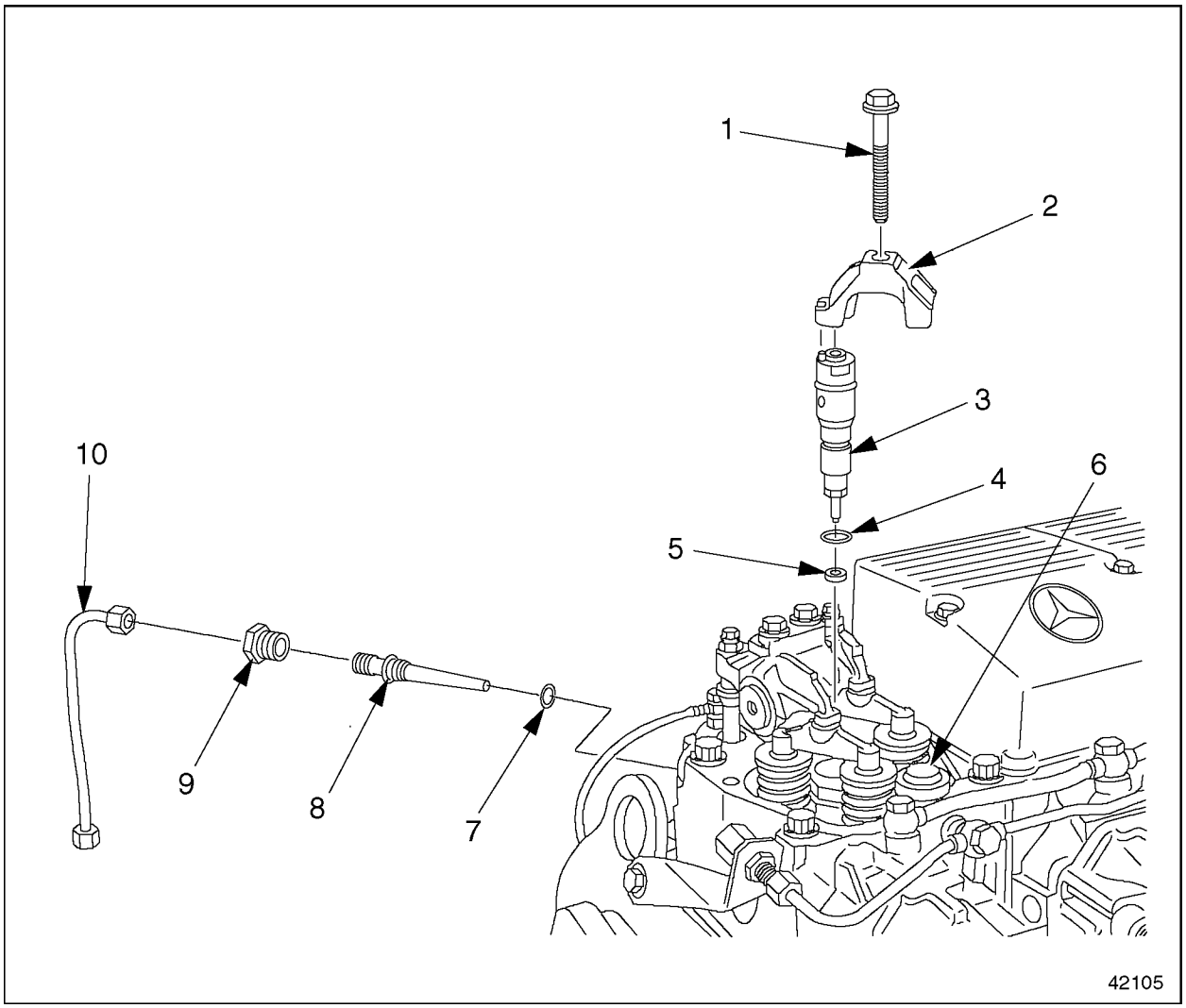

1. Retaining Bolt
2. Tensioning Arm
3. Nozzle
4. O-ring
5. Seal Ring
6. Constant-Throttle End Cover
7. O-ring (transfer tube)
8. Transfer Tube
9. Thrust Bolt
10. Injector Line

Figure 2-10 Fuel Injection System (exploded view)

5. Remove the thrust bolt and the transfer tube. Discard the old O-ring.
6. Remove the tensioning arm.

 Copyright © 2004 DETROIT DIESEL CORPORATION

https://truckmanualshub.com/

7. Attach the impact extractor (355 589 01 63 00) and adaptor (904 589 00 63 00). Thread the narrow end of the adaptor onto the internal M8 threading in the head of the nozzle. Thread the impact extractor onto the wide end of the adaptor. See Figure 2-11.

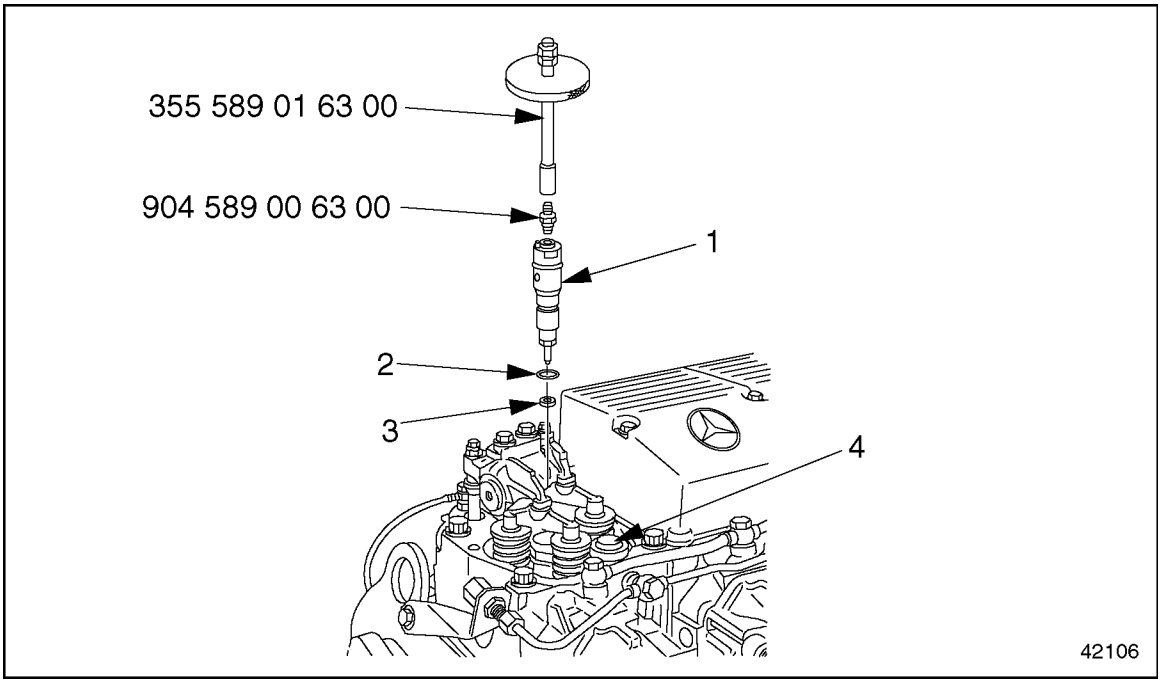

1. Nozzle
2. O-ring
3. Seal Ring
4. End Cover

Figure 2-11 Pulling the Nozzle

NOTE:
Do not attempt to take apart the nozzle. If there is a problem, replace the nozzle.

8. Using the impact extractor (355 589 01 63 00), remove the nozzle from the cylinder head. Discard the O-ring and the seal ring.

NOTICE:
Pull the nozzle straight out of the cylinder head. Do not twist it, turn it, or use pliers. This could damage the nozzle.

9. Remove the impact extractor (355 589 01 63 00) and adaptor (904 589 00 63 00) from the nozzle.
10. Cap off or cover the openings in the fuel lines to prevent contamination of the fuel.

2.4.2 Fuel Injector Nozzle Installation

Install the fuel injector nozzle as follows:

All information subject to change without notice.
6SE412 0403 Copyright © 2004 DETROIT DIESEL CORPORATION

https://truckmanualshub.com/

1. Using a dial caliper, measure the length of the M10 retaining bolt from the end of the bolt to the bottom of the flange. See Figure 2-12. The acceptable lengths are listed in Table 2-1. Replace any bolt which does not meet these specifications.

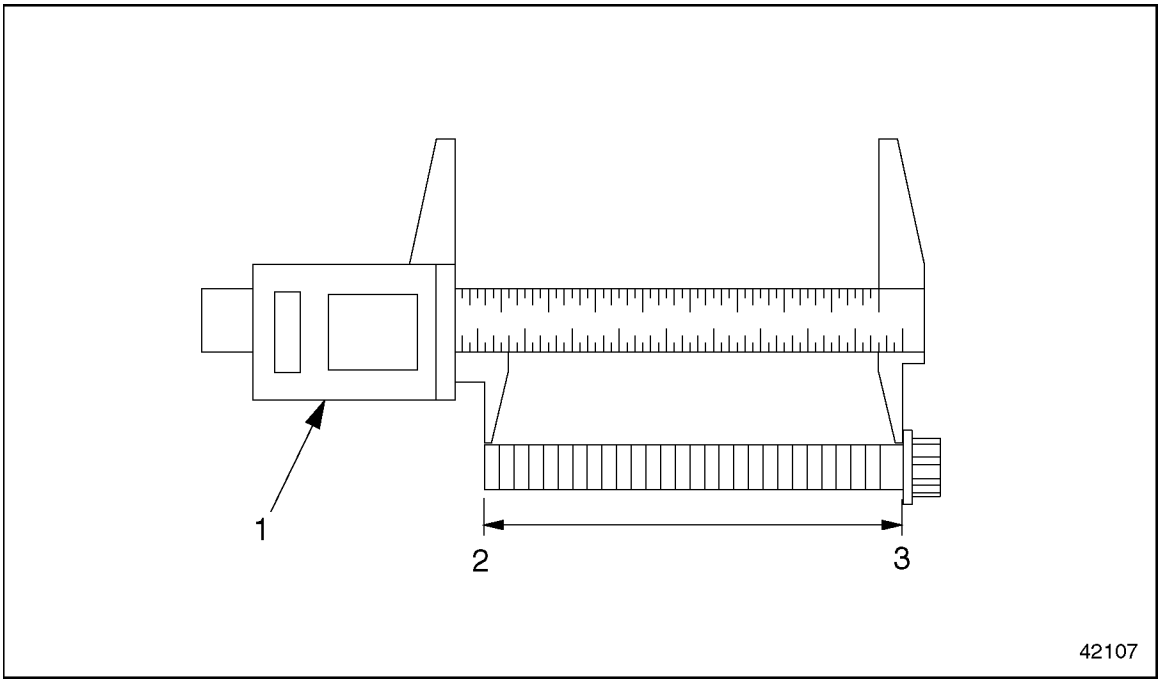

1. Dial Caliper
2. End of Retaining Bolt
3. Bottom of Flange

Figure 2-12 Measuring the Retaining Bolt

Description	Length, mm (in.)
Shaft length when new	90.0 mm (3.54 inches)
Maximum shaft length	91.0 mm (3.58 inches)

Table 2-1 M10 Retaining Bolt, Length

2. Lubricate a new nozzle O-ring with a light coating of engine oil and install it on the nozzle.
3. Install a new seal ring on the nozzle.

NOTE:
Take care that the nozzle is installed correctly and is aligned properly with respect to the transfer tube.

 Copyright © 2004 DETROIT DIESEL CORPORATION

https://truckmanualshub.com/

4. Install the nozzle in the cylinder head. See Figure 2-13.

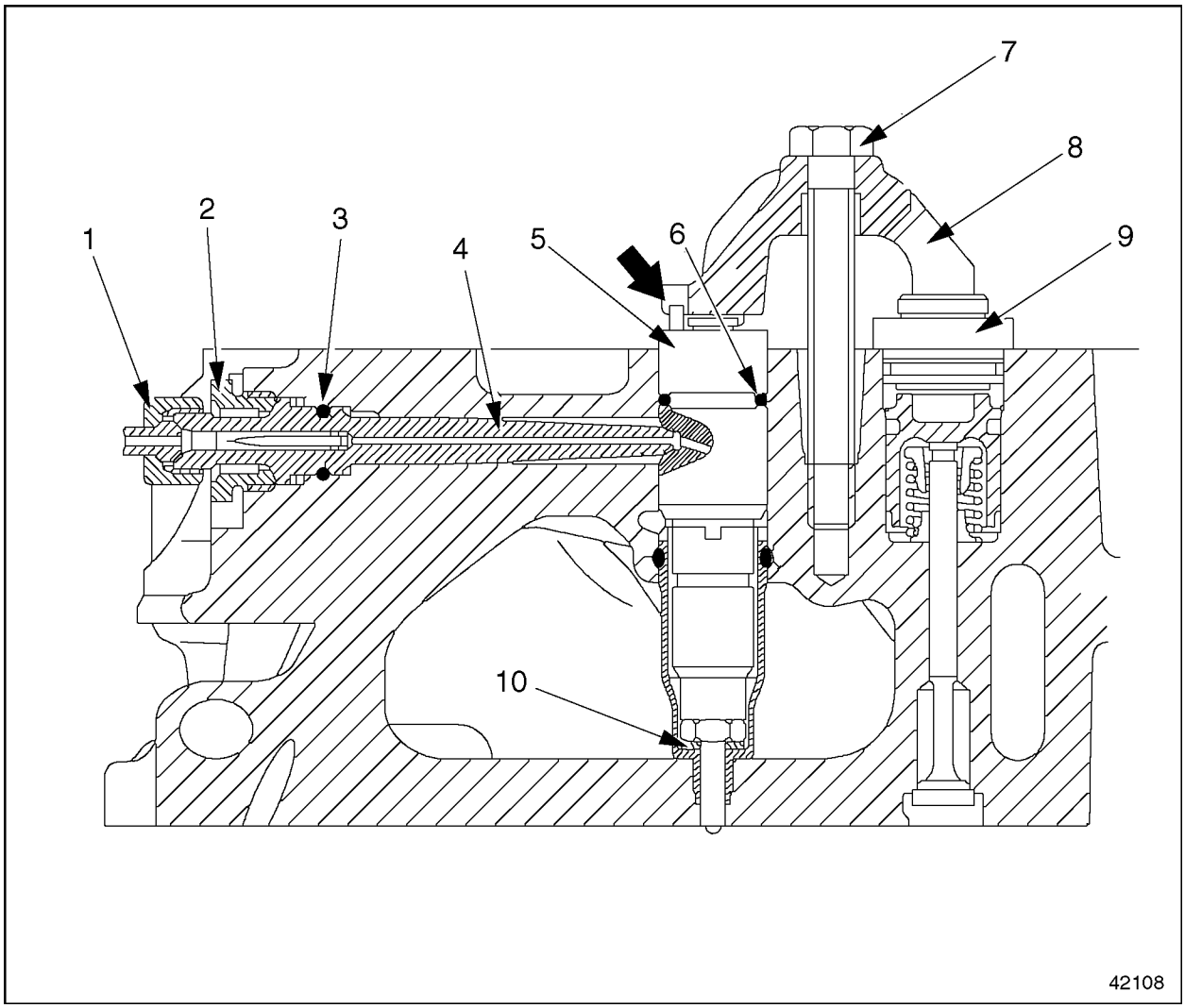

1. Injector Line Fitting
2. Thrust Bolt
3. O-ring (transfer tube)
4. Transfer Tube
5. Nozzle
6. O-ring (nozzle)
7. Retaining Bolt
8. Tensioning Arm
9. End Cover (Constant-Throttle)
10. Seal Ring

Figure 2-13 Positioning the Nozzle

5. Install the retaining bolt in the tensioning arm. Tighten the bolt 50 N·m (37 lb·ft).

NOTE:
The tensioning arm insures the correct positioning of the nozzle.

All information subject to change without notice.
6SE412 0403 Copyright © 2004 DETROIT DIESEL CORPORATION

6. Lubricate a new transfer-tube O-ring with a light coating of engine oil and install it on the transfer tube.

NOTE:
Do not tighten the thrust bolt until after the tensioning arm has been fully tightened to the correct torque value.

7. Install the transfer tube in the cylinder head. Tighten the thrust bolt 45 N·m (33 lb·ft).
8. Install the injector line. Refer to section 2.3.2.
9. Install the charge-air manifold. Refer to section 6.1.2.
10. Install the cylinder head cover(s), as removed. Refer to section 1.1.2.
11. Install the engine trim cover.

 Copyright © 2004 DETROIT DIESEL CORPORATION

https://truckmanualshub.com/

2.5 EGR FUEL INJECTOR NOZZLE

The removal and installation procedures remain the same for the non-EGR and EGR fuel injector nozzle. There are minor differences in the injector nozzles for the two engines. The EPA 98 engine uses injector nozzle #1070 until engine series number 744382 and from engine series number 744383 on, the 98 engine uses injector nozzle #1281. The EPA 04 EGR engine now has two injector nozzles – one for low HP and the other for high HP. Each injector nozzle is stamped with a production number for the EPA 98 and EPA 04 engines. See Figure 2-14.

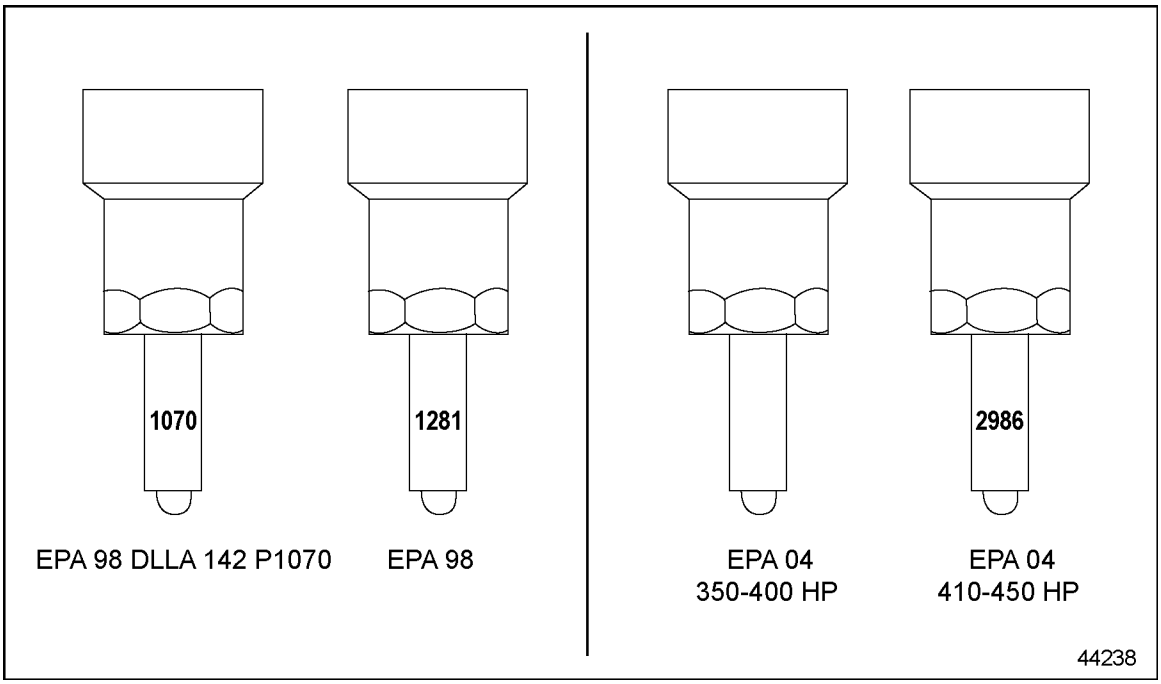

Figure 2-14 Injector Nozzle Identification

NOTICE:
EPA 98 injector nozzles may not be used in an EPA 04 EGR engine. Verify correct nozzle before insertion into engine.

NOTE:
There is no fuel return hole on EPA 04 EGR fuel nozzles.

All information subject to change without notice.
6SE412 0403 Copyright © 2004 DETROIT DIESEL CORPORATION

https://truckmanualshub.com/

2.6 PROTECTIVE SLEEVE

Perform the following procedures for removal and installation of the protective sleeve.

2.6.1 Protective Sleeve Removal

Remove the protective sleeve as follows:

WARNING:

HOT COOLANT

To avoid scalding from the expulsion of hot coolant, never remove the cooling system pressure cap while the engine is at operating temperature. Wear adequate protective clothing (face shield, rubber gloves, apron, and boots). Remove the cap slowly to relieve pressure.

1. Drain the engine coolant into a clean container. If the coolant is clean, save it for later use.
2. Remove the injector nozzle.

 Copyright © 2004 DETROIT DIESEL CORPORATION

https://truckmanualshub.com/

3. Using the claw-foot wrench (904 589 00 07 00), remove the protective sleeve from the cylinder head. See Figure 2-15.

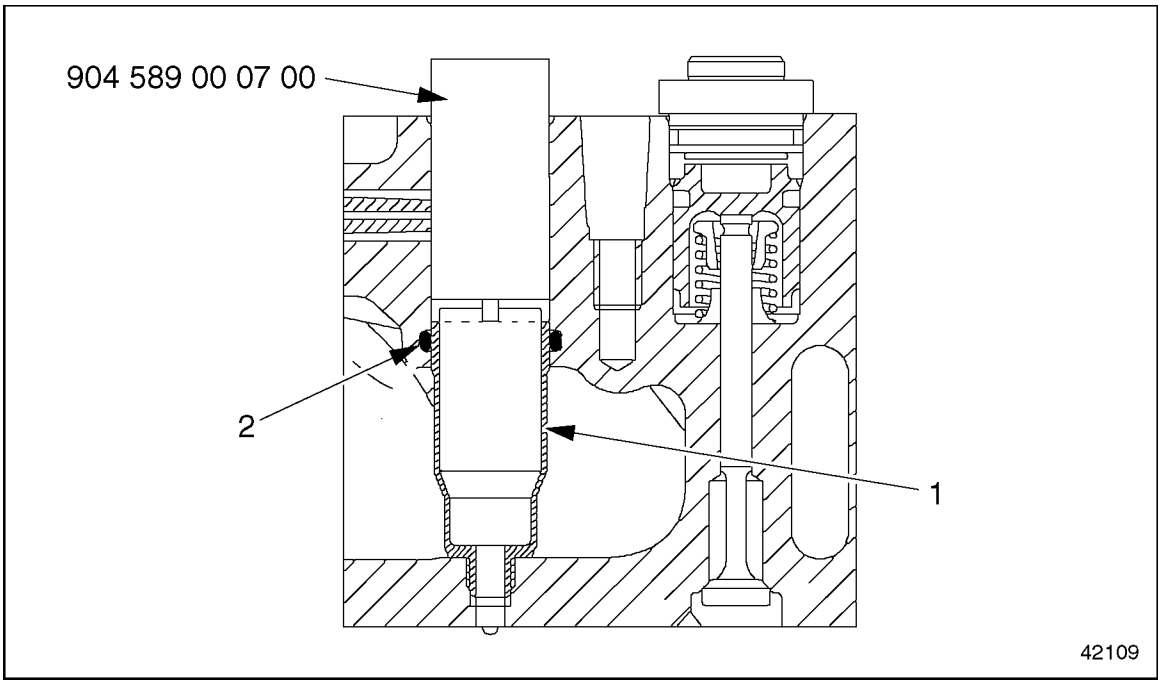

1. Protective Sleeve
2. O-ring

Figure 2-15 Pulling the Protective Sleeve

All information subject to change without notice.
6SE412 0403 Copyright © 2004 DETROIT DIESEL CORPORATION

4. Remove the O-ring from the cylinder head. See Figure 2-16.

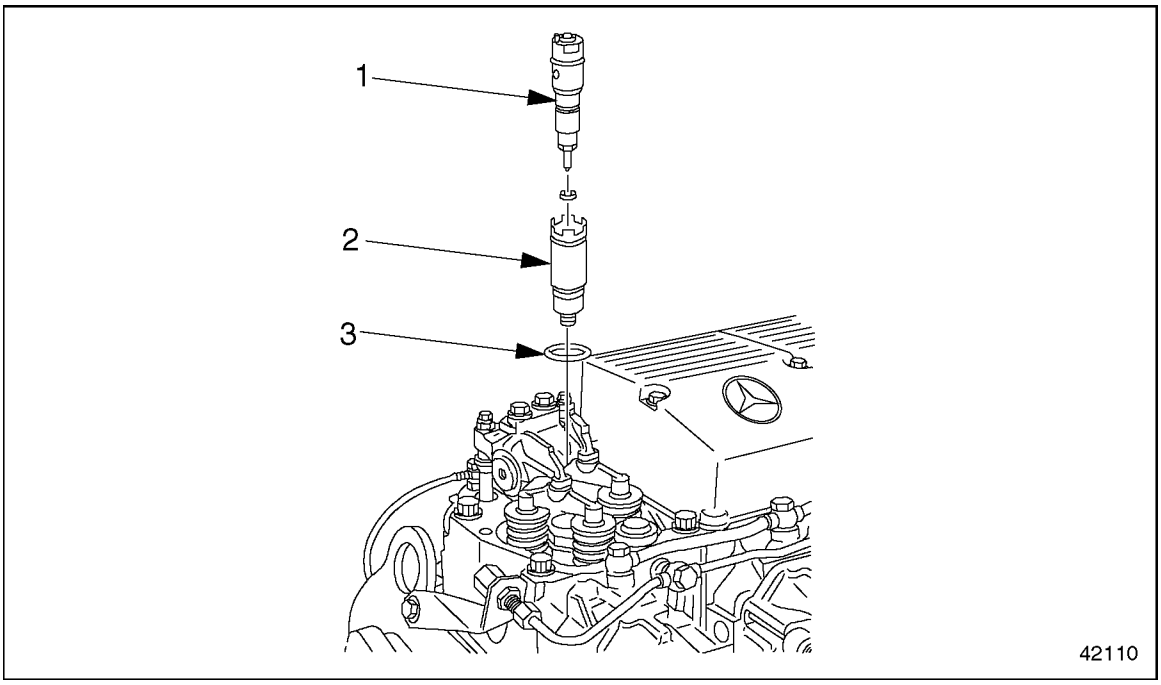

1. Nozzle
2. Protective Sleeve
3. O-ring

Figure 2-16 Removing the O-ring

NOTE:
Replace the O-ring whenever the protective sleeve is removed.

2.6.2 Protective Sleeve Installation

Install the protective sleeve as follows:

1. Clean the sealing surfaces of the protective sleeve and the cylinder head.
2. Lubricate the new O-ring with a light coating of engine oil. Install the O-ring in the cylinder head.
3. Install the protective sleeve into the cylinder head. Tighten the protective sleeve 45 N·m (33 lb·ft).
4. Install the nozzle. Refer to section 2.4.2.
5. Fill the cooling system with clean coolant.

2.6.3 Crank Angle Position Sensor Replacement

Replace the crank angle position sensor as follows:

 Copyright © 2004 DETROIT DIESEL CORPORATION

https://truckmanualshub.com/

1. Disconnect the electrical connector. See Figure 2-17.

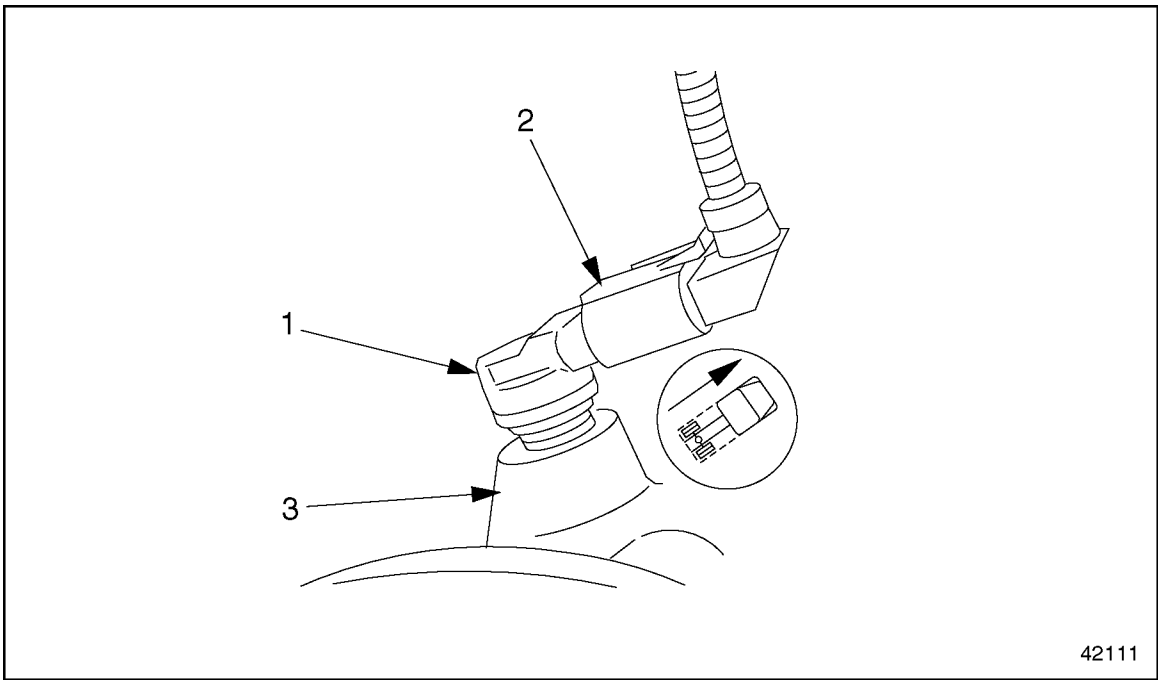

1. Crank Angle Position Sensor
2. Electrical Connector
3. Flywheel Housing (Timing Case)

Figure 2-17 Crank Angle Position Sensor Installation

2. Remove the sensor from the access hole in the flywheel housing.
3. Install a new sensor in the flywheel housing.
4. Connect the electrical connector.

NOTE:
Be sure that the correct electrical connector is connected to the sensor.

All information subject to change without notice.
6SE412 0403 Copyright © 2004 DETROIT DIESEL CORPORATION

https://truckmanualshub.com/

2.7 DDEC ELECTRONIC CONTROL UNIT

Perform the following procedures for removal and installation of the DDEC-ECU control unit.

2.7.1 DDEC Electronic Control Unit Removal

Remove the DDEC-ECU Control Unit as follows:

1. Disconnect the batteries.
2. Open the hood.

 Copyright © 2004 DETROIT DIESEL CORPORATION

https://truckmanualshub.com/

3. Remove the heat exchanger mounting bolts, but do not disconnect the fuel lines to the heat exchanger. See Figure 2-18.

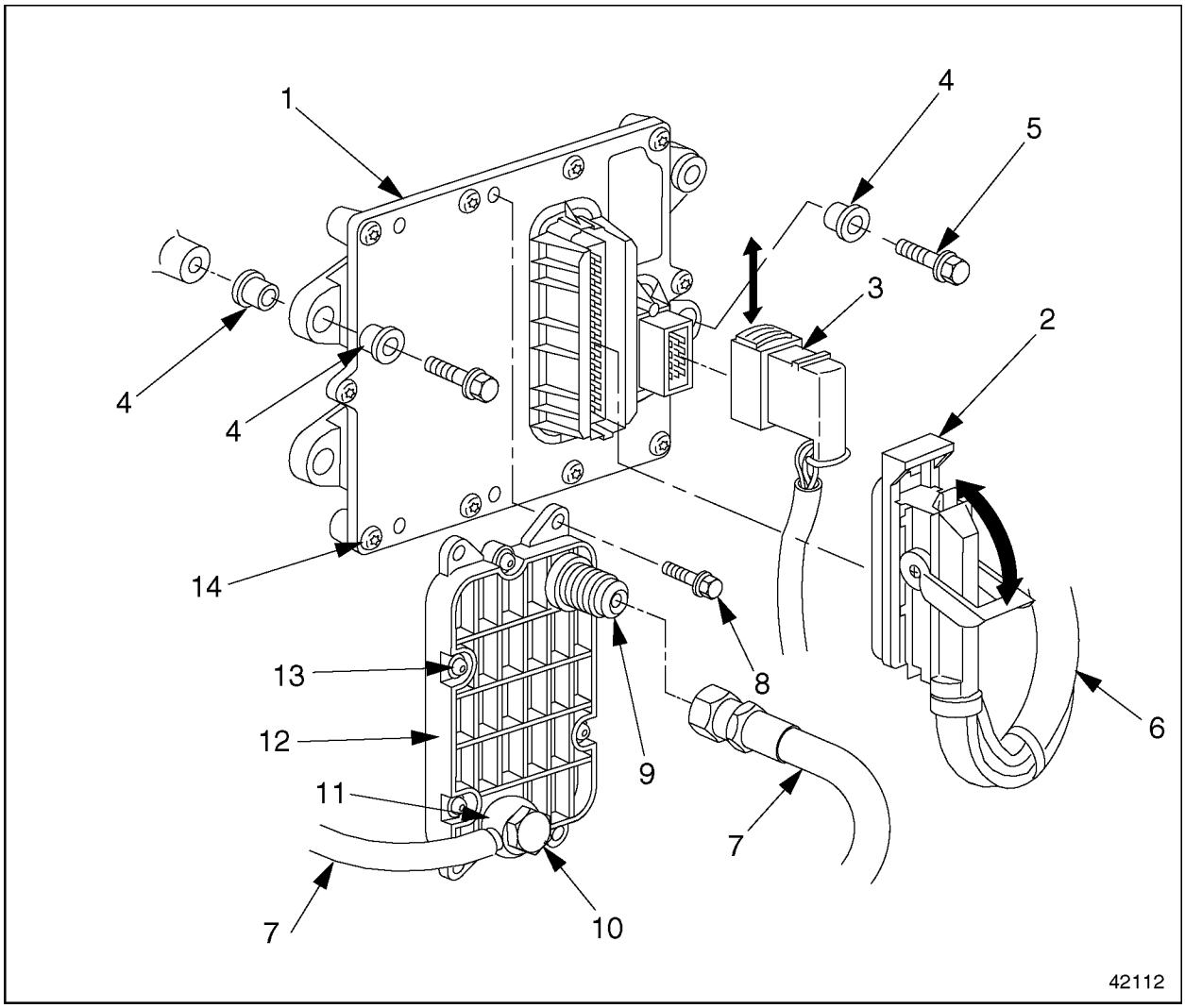

1. DDEC-ECU Control Unit
2. Engine Electrical Connector
3. Vehicle Electrical Connector
4. Spacer
5. DDEC-ECU Mounting Bolt
6. Engine Wiring Harness
7. Fuel Feed Line
8. Fuel Heat Exchanger Mounting Bolt
9. Fuel Heat Exchanger Inlet
10. Banjo (Hollow-Core) Bolt
11. Banjo Fitting
12. Fuel Heat Exchanger
13. Heat Exchanger Case Bolt
14. DDEC-ECU Case Bolt

Figure 2-18 DDEC-ECU Control Unit

All information subject to change without notice.
6SE412 0403 Copyright © 2004 DETROIT DIESEL CORPORATION

4. Lift up the slide on the locking unit to release the vehicle wiring harness connector and disconnect it from the DDEC-ECU unit. See Figure 2-19.

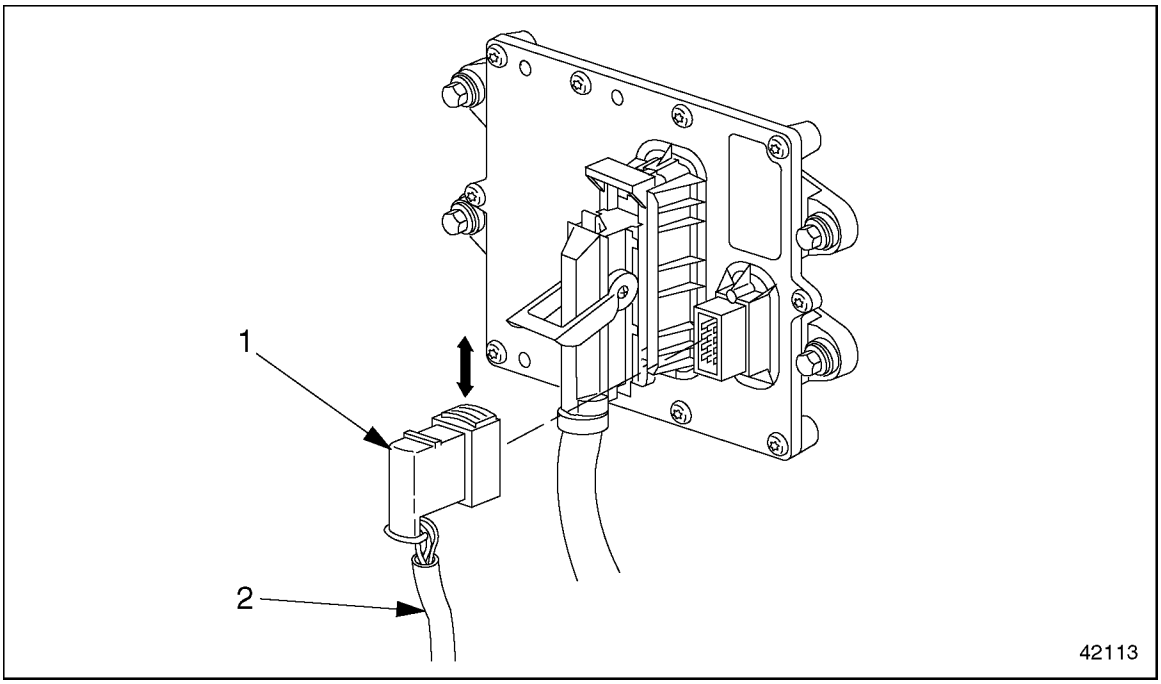

1. Vehicle Electrical Connector
2. Vehicle Wiring Harness

Figure 2-19 Vehicle Electrical Connector

https://truckmanualshub.com/

5. Rotate the safety latch down to release the engine wiring harness connector and disconnect it from the DDEC-ECU unit. See Figure 2-20.

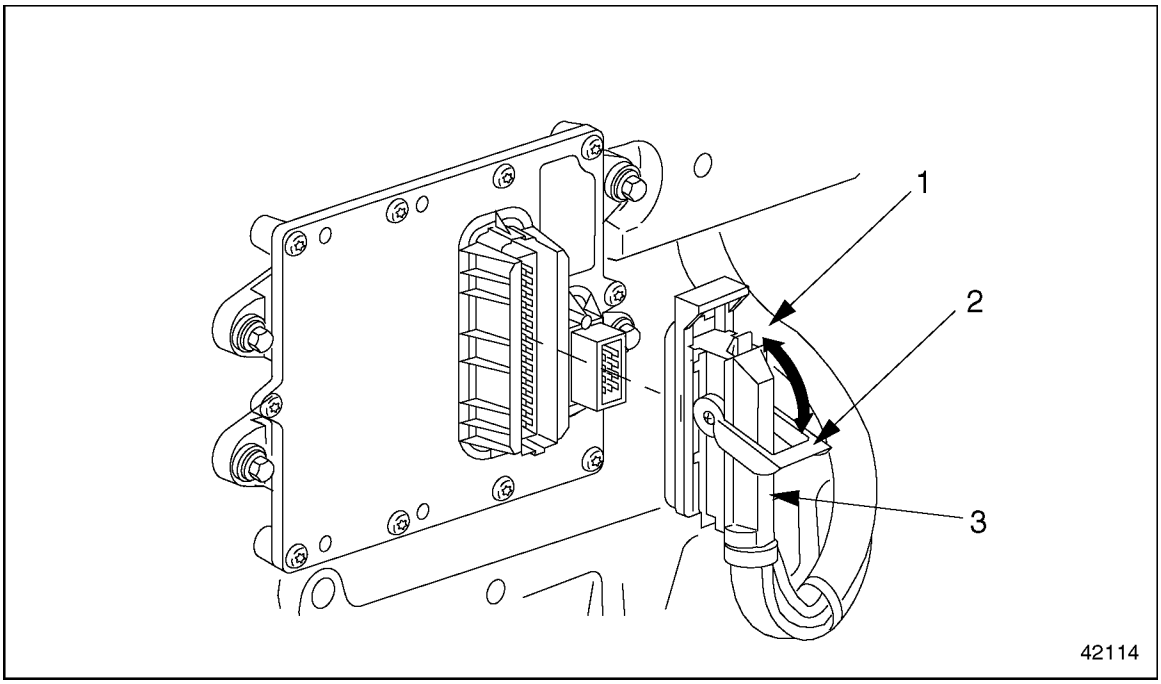

1. Engine Wiring Harness
2. Safety latch
3. Engine Electrical Connector

Figure 2-20 Engine Electrical Connector

6. Remove the mounting bolts and rubber spacers holding the DDEC-ECU control unit to the engine. Then remove the unit.

NOTE:
Do not disassemble the DDEC-ECU control unit. It cannot be serviced.

2.7.2 DDEC Electronic Control Unit Installation

Install the DDEC-ECU Control Unit as follows:

1. Position the spacers, DDEC-ECU control unit, and mounting bolts on the cylinder block, as removed.
2. Install the DDEC-ECU control unit on the cylinder block. Tighten the mounting bolts 15 N·m (11 lb·ft).
3. Install the fuel heat exchanger on the DDEC-ECU and tighten the mounting bolts 8 N·m (6 lb·ft).
4. Connect the vehicle wiring harness to the DDEC-ECU. Pull down on the locking unit to lock it in place.

All information subject to change without notice.
6SE412 0403 Copyright © 2004 DETROIT DIESEL CORPORATION

https://truckmanualshub.com/

5. Connect the engine wiring harness to the DDEC-ECU. Rotate the safety latch upward to lock it in place.
6. If a new DDEC-ECU control unit was installed, transfer the customer parameter list to it, using minidiag2.
7. Connect the batteries.

WARNING:

PERSONAL INJURY

Diesel engine exhaust and some of its constituents are known to the State of California to cause cancer, birth defects, and other reproductive harm.

- ☐ **Always start and operate an engine in a well ventilated area.**
- ☐ **If operating an engine in an enclosed area, vent the exhaust to the outside.**
- ☐ **Do not modify or tamper with the exhaust system or emission control system.**

8. Close the hood. Then check for normal operation.

 Copyright © 2004 DETROIT DIESEL CORPORATION

https://truckmanualshub.com/

2.8 FUEL HEAT EXCHANGER

Perform the following procedures for removal and installation of the fuel heat exchanger.

2.8.1 Fuel Heat Exchanger Removal

Remove the fuel heat exchanger as follows:

WARNING:
FIRE
To avoid injury from fire, keep all potential ignition sources away from diesel fuel, including open flames, sparks, and electrical resistance heating elements. Do not smoke when refueling.

1. Disconnect the batteries.
2. Open the hood.

All information subject to change without notice.
6SE412 0403 Copyright © 2004 DETROIT DIESEL CORPORATION

WARNING:

PERSONAL INJURY

To avoid injury from the sudden release of a high-pressure hose connection, wear a face shield or goggles.

3. Disconnect the fuel lines on the heat exchanger. Discard the seal rings. See Figure 2-21.

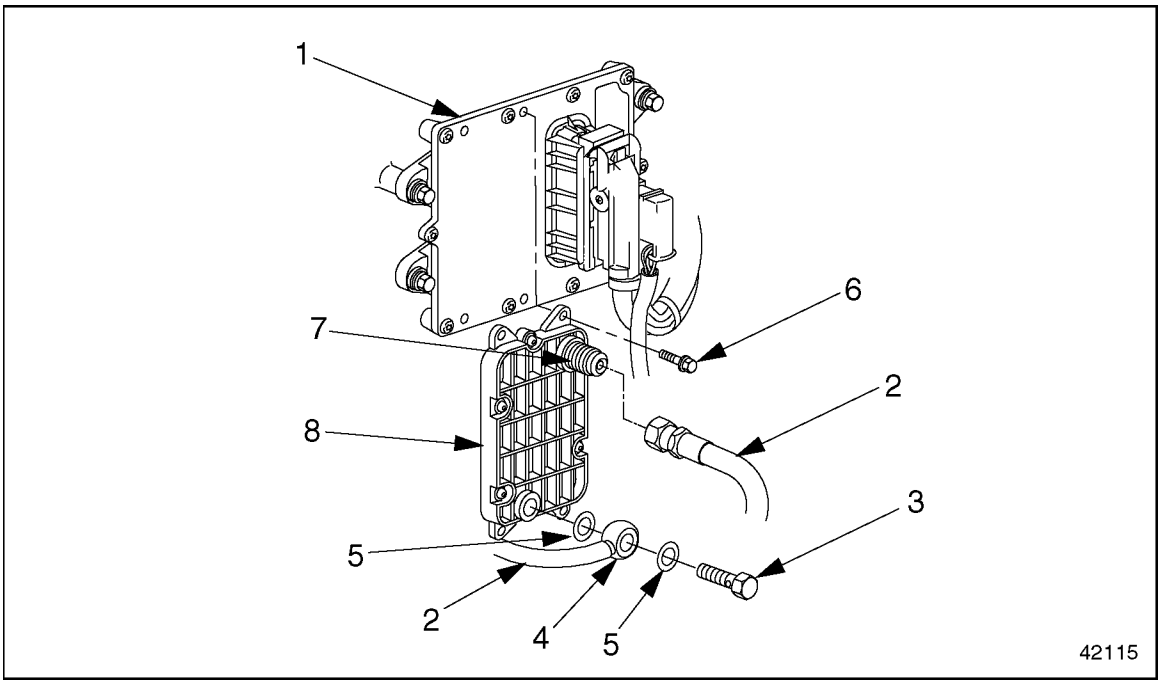

1. DDEC-ECU Control Unit
2. Fuel Feed Line
3. Banjo (Hollow-core) Bolt
4. Banjo Fitting
5. Seal Ring
6. Fuel Heat Exchanger Mounting Bolt
7. Fuel Heat Exchanger Inlet
8. Fuel Heat Exchanger

Figure 2-21 Fuel Heat Exchanger

NOTE:
Catch any fuel in a clean container.

4. Remove the mounting bolts attaching the fuel heat exchanger to the DDEC-ECU control unit. Then remove the fuel heat exchanger.

NOTE:
Do not disassemble the fuel heat exchanger. It cannot be serviced.

 Copyright © 2004 DETROIT DIESEL CORPORATION

https://truckmanualshub.com/

2.8.2 Fuel Heat Exchanger Installation

Install the fuel heat exchanger as follows:

1. Attach the fuel heat exchanger to the DDEC-ECU control unit with the mounting bolts. Tighten the bolts 8 N·m (6 lb·ft).
2. Connect the fuel lines to the fuel heat exchanger. Use new seal rings. Tighten the fuel lines 50 N·m (37 lb·ft).
3. Close the hood.
4. Connect the batteries.
5. Prime the fuel system. Refer to section 2.9.2.

All information subject to change without notice.
6SE412 0403 Copyright © 2004 DETROIT DIESEL CORPORATION

https://truckmanualshub.com/

2.9 FUEL FILTER

Perform the following procedures for removal and installation of the fuel filter.

2.9.1 Fuel Filter Removal

Remove the fuel filter as follows:

WARNING:

FIRE

To avoid injury from fire, keep all potential ignition sources away from diesel fuel, including open flames, sparks, and electrical resistance heating elements. Do not smoke when refueling.

1. Disconnect the batteries.
2. Open the fuel fill cap to release pressure in the fuel system. Replace and tighten the cap.

 Copyright © 2004 DETROIT DIESEL CORPORATION

https://truckmanualshub.com/

3. Using a 36-mm socket wrench, unscrew the cap on the fuel filter. Pull both the cap and the filter element a short distance out of the filter housing. See Figure 2-22. Allow the fuel to drain off the filter into the housing.

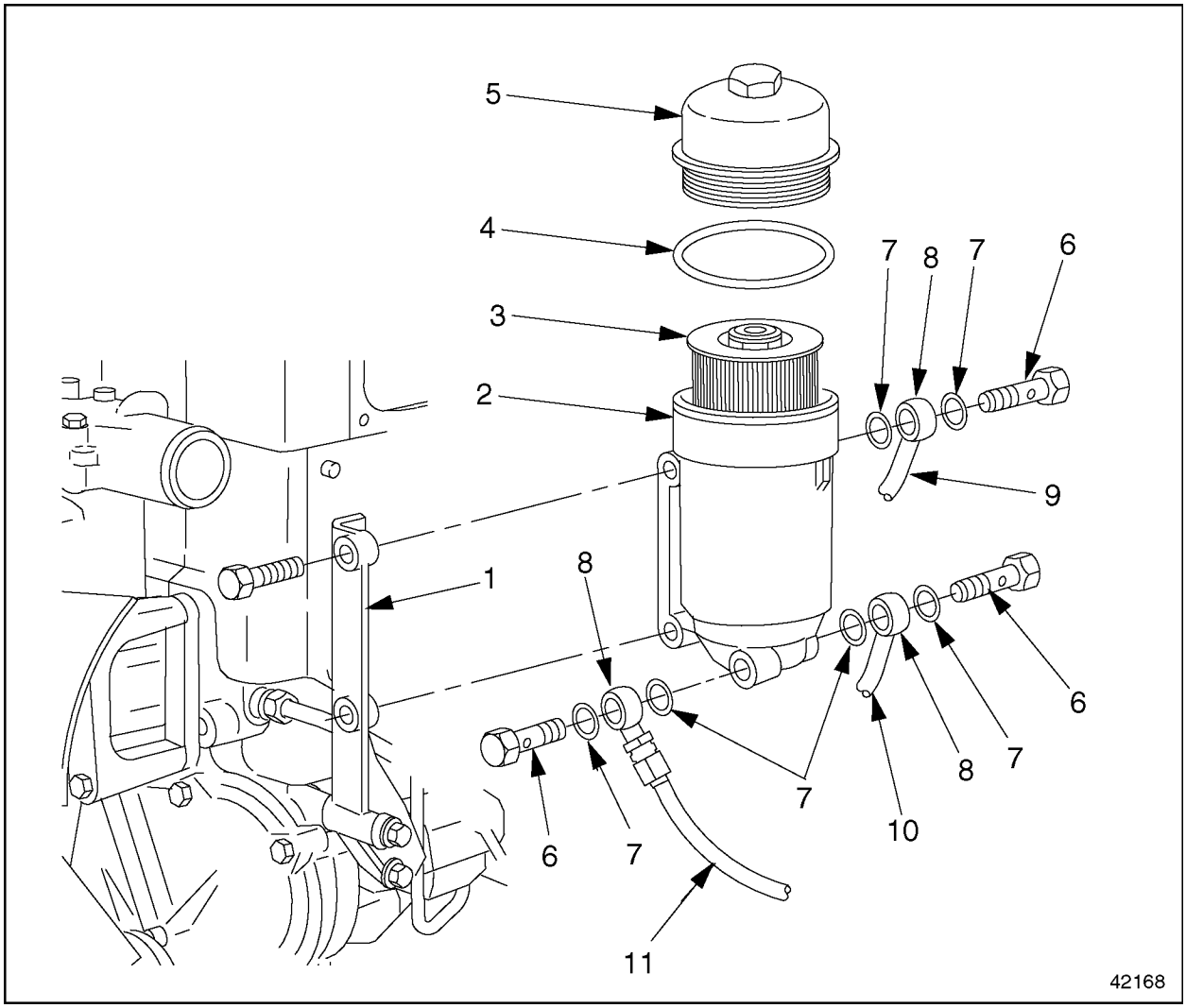

1. Mounting Bracket
2. Fuel Filter Housing
3. Filter Element
4. O-ring
5. Fuel Filter Cap
6. Banjo Bolt
7. Seal Ring
8. Banjo Fitting
9. Fuel Delivery Line
10. Fuel Return Line
11. Fuel Drain Line

Figure 2-22 Removing the Filter Housing

All information subject to change without notice.
6SE412 0403 Copyright © 2004 DETROIT DIESEL CORPORATION

WARNING:

PERSONAL INJURY

To avoid injury from the sudden release of a high-pressure hose connection, wear a face shield or goggles.

4. Disconnect the fuel return line from the filter housing. Mark both sides of the connection with a paint pen. Discard the seal rings.

NOTE:
Catch any fuel that runs out of the filter housing or fuel return line.

5. Remove the fuel delivery and drain lines from the filter housing. Mark both sides of each connection with paint pens. Discard the seal rings.

NOTE:
In a suitable container, catch any fuel that runs out of the filter housing or fuel lines.

6. Remove the bolts attaching the filter housing to the mounting bracket.
7. Remove the filter housing from the engine.
8. Clean the fuel filter cap. Discard the filter element.

2.9.2 Fuel Filter Installation

Install the fuel filter as follows:

1. Install the filter housing on the mounting bracket. Tighten the mounting bolts 25 N·m (18 lb·ft).
2. Install the drain and delivery lines, as removed. Install new seal rings on the banjo fittings. Tighten the banjo bolts 50 N·m (37 lb·ft).
3. Install the return line, as removed. Install new seal rings on the banjo fitting. Tighten the banjo bolt 50 N·m (37 lb·ft).
4. Install a new filter element in the main filter cap. Inspect the O-ring and replace it if necessary. Screw the cap onto the filter housing. Tighten the cap 25 N·m (18 lb·ft).
5. Connect the batteries.
6. Prime the fuel system.
   [a] Make sure that all high-pressure lines have been tightened to 30 N·m (22 lb·ft) and all banjo bolts to 50 N·m (37 lb·ft).

 Copyright © 2004 DETROIT DIESEL CORPORATION

https://truckmanualshub.com/

NOTICE:

Correct torque on the high-pressure lines is critical. Incorrect torques could result in leaks or lack of power due to restricted fuel flow.

WARNING:

PERSONAL INJURY

Diesel engine exhaust and some of its constituents are known to the State of California to cause cancer, birth defects, and other reproductive harm.

- ☐ **Always start and operate an engine in a well ventilated area.**
- ☐ **If operating an engine in an enclosed area, vent the exhaust to the outside.**
- ☐ **Do not modify or tamper with the exhaust system or emission control system.**

[b] If equipped with a hand pump on the fuel/water separator, work the hand pump 50 times or until increased resistance in the hand pump.

[c] Crank the engine for 30 seconds at a time, but no longer. Before cranking the engine again, wait at least two minutes. The engine should start within four 30-second attempts.

[d] If the engine still does not start, open the high-pressure lines and bleed the air from the fuel system while cranking. Tighten the high-pressure lines and repeat the priming procedure.

7. With the engine running, check the fuel filter for leaks. Shut down the engine.

All information subject to change without notice.
6SE412 0403 Copyright © 2004 DETROIT DIESEL CORPORATION

https://truckmanualshub.com/

2.10 EGR FUEL FILTER

The removal and installation procedures remain the same for the non-EGR and EGR fuel filter assembly; however, because of the fuel filter's new location on an EGR engine, there are modified mounting bracket changes.

2.10.1 EGR Fuel Filter Bracket Removal

Remove the EGR fuel filter bracket as follows:

WARNING:

PERSONAL INJURY

To avoid injury from the sudden release of a high-pressure hose connection, wear a face shield or goggles.

1. Disconnect fuel outlet, fuel inlet, and fuel drain connection hoses from the fuel filter on the EGR engine.
2. Remove the two filter-to-bracket threaded mounting bolts and carefully remove the filter.See Figure 2-23.

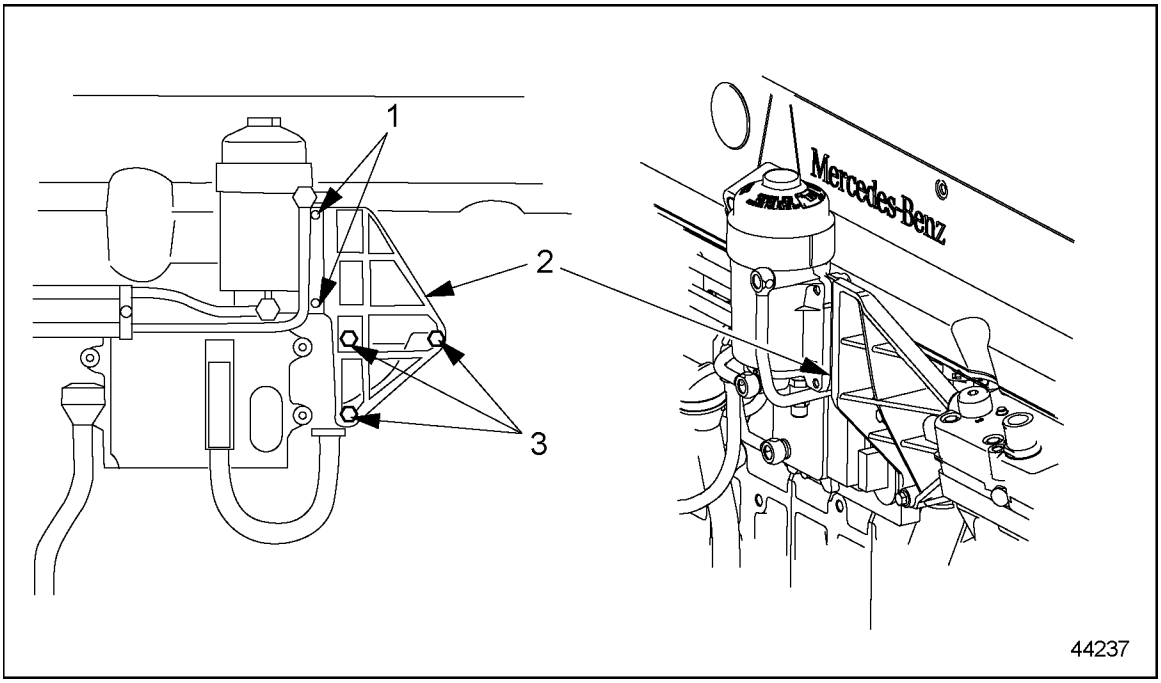

1. Fuel Filter-to-Bracket Threaded Mounting Bolts
2. Fuel Filter Mounting Bracket
3. Bracket Mounting Bolts

Figure 2-23 Removal or Installation of EGR Fuel Filter Bracket

 Copyright © 2004 DETROIT DIESEL CORPORATION

https://truckmanualshub.com/

3. Remove the three filter bracket mounting bolts from bracket and block.
4. Remove the filter bracket.

2.10.2 EGR Fuel Filter Bracket Installation

Install the EGR fuel filter bracket as follows:

1. Install the fuel filter bracket to the block using the three 8 mm x 90 mm fuel filter bracket mounting bolts. Torque bolts to 25 N·m (19 lb·ft). See Figure 2-23.
2. Install the fuel filter to the mounting bracket using the two 10 mm x 40 mm threaded bolts. Torque bolts to 60 N·m (44 lb·ft).

WARNING:

PERSONAL INJURY

To avoid injury from the sudden release of a high-pressure hose connection, wear a face shield or goggles.

3. Attach fuel inlet, fuel outlet, and fuel drain connection hoses to the fuel filter.

All information subject to change without notice.
6SE412 0403 Copyright © 2004 DETROIT DIESEL CORPORATION

https://truckmanualshub.com/

2.11 FUEL PUMP

Perform the following procedures for removal and installation of the fuel pump.

2.11.1 Fuel Pump Removal

Remove the fuel pump as follows:

WARNING:

FIRE

To avoid injury from fire, keep all potential ignition sources away from diesel fuel, including open flames, sparks, and electrical resistance heating elements. Do not smoke when refueling.

1. Disconnect the batteries.

 Copyright © 2004 DETROIT DIESEL CORPORATION

https://truckmanualshub.com/

WARNING:

PERSONAL INJURY

To avoid injury from the sudden release of a high-pressure hose connection, wear a face shield or goggles.

2. Remove the fuel lines from the fuel pump. Discard the seal rings on the banjo fitting. See Figure 2-24.

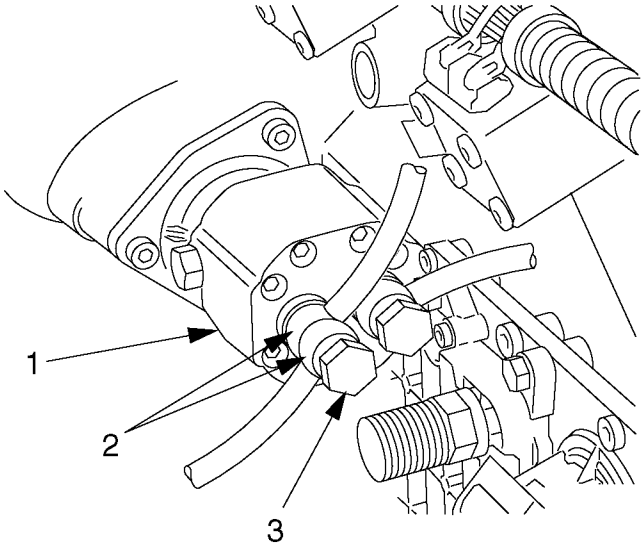

1. Fuel Pump
2. Banjo Fittings
3. Banjo (Hollow-Core) Bolt

Figure 2-24 Fuel Lines at the Fuel Pump

NOTE:
Catch any fuel that runs out of the fuel pump or the fuel lines.

3. Remove the socket-head bolts attaching the fuel pump to the cylinder block. Discard the gasket.
4. Slowly remove the fuel pump from the engine, taking care not to damage the splined shaft on the fuel pump.
5. Discharge the fuel pump gasket.

All information subject to change without notice.
6SE412 0403 Copyright © 2004 DETROIT DIESEL CORPORATION

2.11.2 Fuel Pump Installation

Install the fuel pump as follows:

NOTICE:
When inserting the fuel pump into the opening in the cylinder block directly behind the front camshaft cover, be careful not to damage the splined shaft of the pump.

1. Install the fuel pump on the cylinder block. See Figure 2-25.

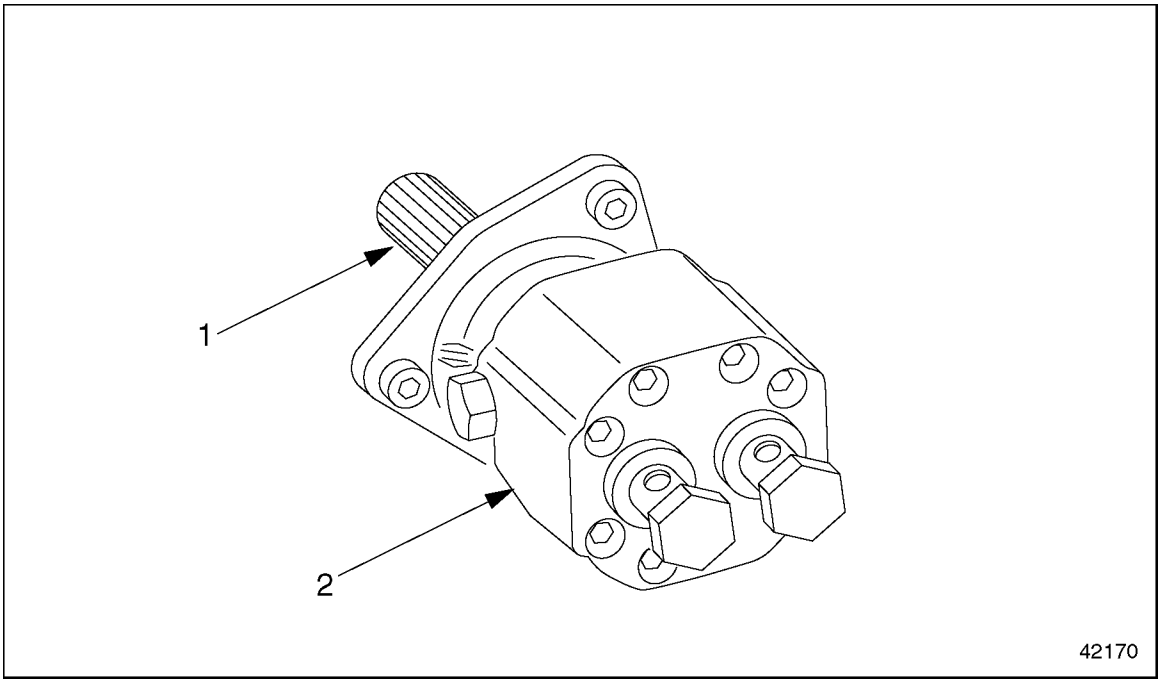

1. Splined Shaft
2. Fuel Pump

Figure 2-25 Fuel Pump Shaft

[a] Install a new gasket on the connection to the cylinder block.

[b] Work the splined shaft slowly and carefully into the opening in the cylinder block until it meshes with the camshaft drive gear.

[c] Install and tighten the three socket-head bolts that attach the fuel pump to the cylinder block. Tighten the socket-head bolts 25 N·m (18 lb·ft).

 Copyright © 2004 DETROIT DIESEL CORPORATION

https://truckmanualshub.com/

WARNING:

PERSONAL INJURY

To avoid injury from the sudden release of a high-pressure hose connection, wear a face shield or goggles.

2. Install the fuel lines, as removed. Install new seal rings on the banjo fittings. Tighten the banjo bolts 50 N·m (37 lb·ft).
3. Connect the batteries.

WARNING:

PERSONAL INJURY

Diesel engine exhaust and some of its constituents are known to the State of California to cause cancer, birth defects, and other reproductive harm.

- ☐ **Always start and operate an engine in a well ventilated area.**
- ☐ **If operating an engine in an enclosed area, vent the exhaust to the outside.**
- ☐ **Do not modify or tamper with the exhaust system or emission control system.**

4. Prime the fuel system. Refer to section 2.9.2.
5. With the engine running, check the fuel pump and the rest of the fuel system for leaks. Shut down the engine.

All information subject to change without notice.
6SE412 0403 Copyright © 2004 DETROIT DIESEL CORPORATION

https://truckmanualshub.com/

2.12 FUEL SYSTEM INSPECTION

Perform the following steps to inspect the fuel system for damage:

WARNING:

PERSONAL INJURY

To avoid injury from penetrating fluids, do not put your hands in front of fluid under pressure. Fluids under pressure can penetrate skin and clothing.

WARNING:

FIRE

To avoid injury from fire, keep all potential ignition sources away from diesel fuel, including open flames, sparks, and electrical resistance heating elements. Do not smoke when refueling.

NOTE:
For additional safety precautions, refer to the General Information section of the MBE 4000 Service Manual (6SE412).

1. Check fuel delivery lines looking for deformation or bent lines, creating restriction and/or obstruction of the flow.
2. Check suction lines and connections looking for damage or under torque, allowing air to enter the fuel system.
3. Check the fuel tank installation. Look for bent/blocked lines, and leaks.
4. Check high-pressure lines for leaks. Look for connector nut leaks at the unit pump and at the transfer tube on the cylinder head. In the event of leaks, disassemble and inspect the high-pressure lines/transfer tube. For proper torque specifications, see those listed in Table 2-2.

Component	Torque
Transfer Tube Nut	45 N·m (33 lb·ft)
High Pressure Line Nuts	30 N·m (22 lb·ft)

Table 2-2 Torque Specifications for Fuel Line Nuts

5. Perform a fuel pressure test. Refer to section 2.12.1.

 Copyright © 2004 DETROIT DIESEL CORPORATION

https://truckmanualshub.com/

2.12.1 Performing a Fuel Pressure Test

Perform the following steps to conduct a fuel pressure test:

1. Install the pressure gauge on the fuel system. There are two possible setups for this installation. Setup 1 has the gauge installed *after* the fuel filter. See Figure 2-26. Setup 2 has the gauge installed *before* the fuel filter. See Figure 2-27.

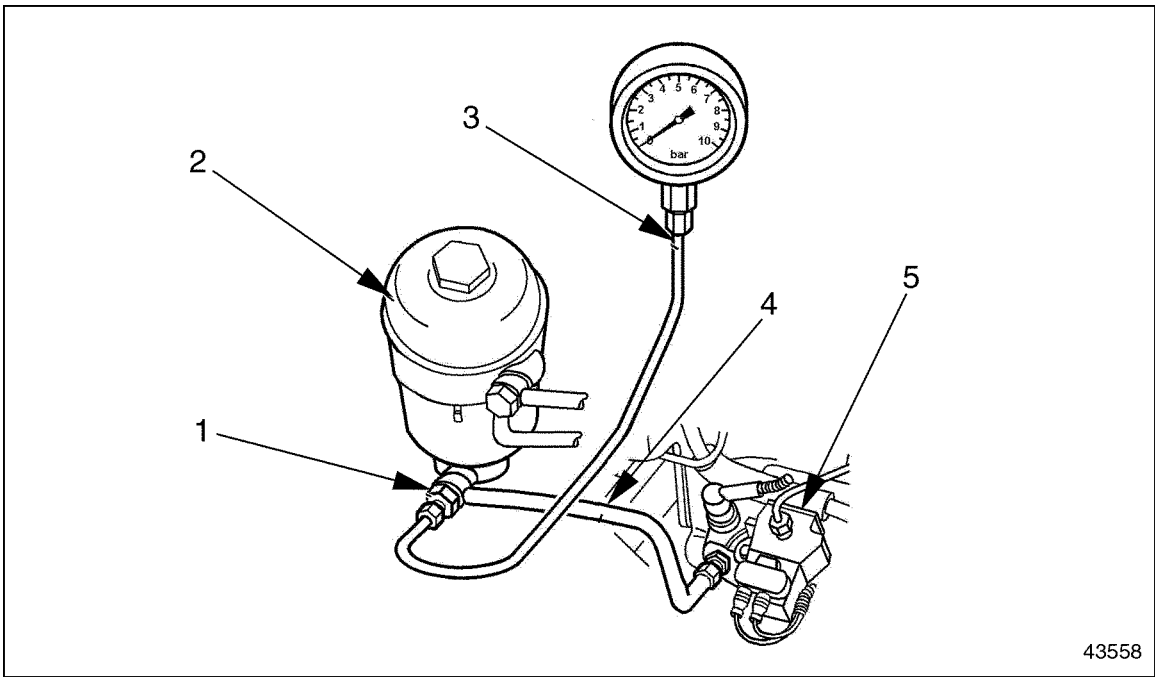

1. Fitting
2. Fuel Filter Housing
3. Mechanical Gauge
4. Fuel Outlet Line
5. Unit Pump

Figure 2-26 Gauge Installation – After the Fuel Filter

All information subject to change without notice.
6SE412 0403 Copyright © 2004 DETROIT DIESEL CORPORATION

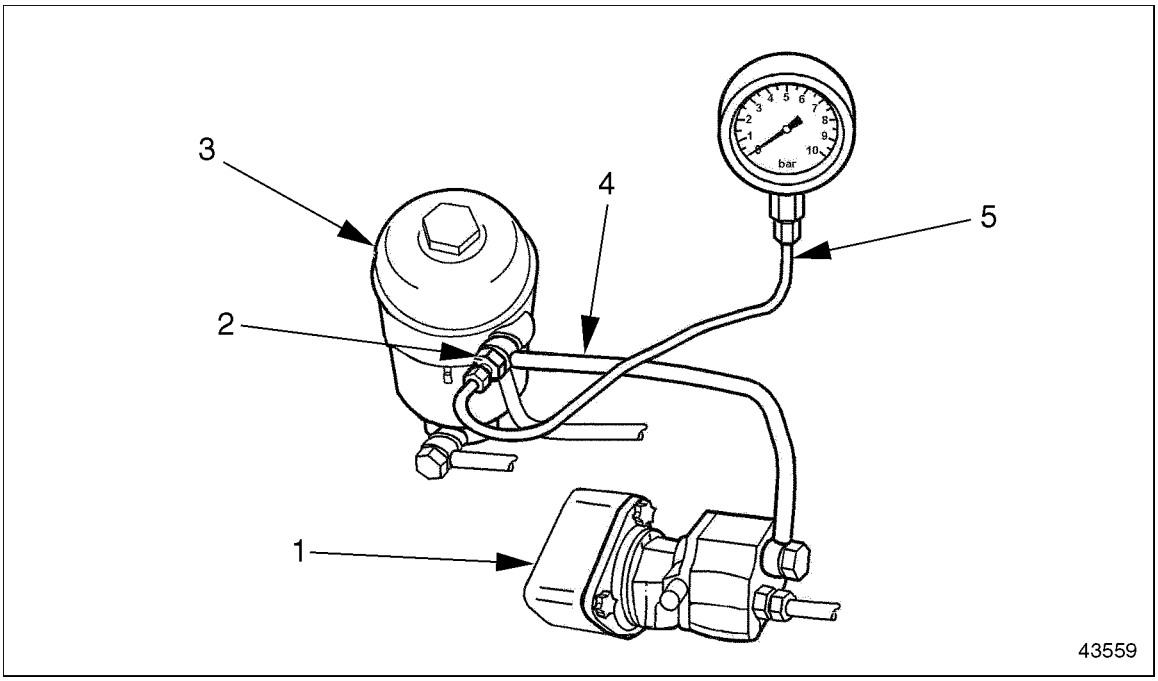

1. Fuel Pump
2. Fitting
3. Fuel Filter Housing
4. Fuel Outlet Line
5. Mechanical Gauge

Figure 2-27 Gauge Installation – Before the Fuel Filter

NOTE:
The fitting applied in both setups is **not** a special tool and it is not included in the Mercedes-Benz kit or SPX kit. This fitting is a component and it can be ordered from Canton PDC under part number 915039012205.

 Copyright © 2004 DETROIT DIESEL CORPORATION

https://truckmanualshub.com/

WARNING:

PERSONAL INJURY

To avoid injury before starting and running the engine, ensure the vehicle is parked on a level surface, parking brake is set, and the wheels are blocked.

WARNING:

PERSONAL INJURY

Diesel engine exhaust and some of its constituents are known to the State of California to cause cancer, birth defects, and other reproductive harm.

- ☐ **Always start and operate an engine in a well ventilated area.**
- ☐ **If operating an engine in an enclosed area, vent the exhaust to the outside.**
- ☐ **Do not modify or tamper with the exhaust system or emission control system.**

2. Start the engine and warm it up to working temperatures: 80°- 95°C (176° - 203°F).
3. Check the fuel pressure at two points: idle speed and rated speed.
4. Compare the test results with the fuel systems specifications for pressure listed in Table 2-3. If any of the readings are out of spec, follow the proper troubleshooting steps.

Speed	Pressure
Fuel Pressure Test at idle rpm	2 bar (29 psi) –minimum
Fuel Pressure Test at rated rpm	5.5 – 6.5 bar (80 – 95 psi)
Maximum difference between fuel filter housing inlet and outlet pressure	0.3 bar (4 psi)

Table 2-3 Fuel System Specifications for Pressure

2.12.1.1 Fuel Pressure Test Troubleshooting Procedures

For results out of specs on the fuel pressure test, check the following appropriate steps:

1. At idle rpm, with fuel pressure lower than 2 bar (29 psi), check the following:
   - ☐ Check the pressure valve at the end of the fuel gallery. Look for opening pressure 2 bar (29 psi).
   - ☐ Check the fuel pump assembly (bearing and/or driven gear).
   - ☐ Check to see if the fuel system is drawing air.

All information subject to change without notice.
6SE412 0403 Copyright © 2004 DETROIT DIESEL CORPORATION

2. At rated rpm, for fuel pressure lower than 5.5 bar (80 psi), check the following:
   - ☐ Check the water separator filter condition.
   - ☐ Check for restriction at the check valve on the DDEC-ECU heat exchange plate.
   - ☐ Check the main fuel filter condition, looking for saturation or any damaged seal allowing flow of fuel from the pressure side to the return side.
   - ☐ Check for leaks at the suction lines from the tank.
   - ☐ Check the fuel pump assembly (bearing and/or driven gear).
   - ☐ Look for leaks and/or a damaged fuel pump.
   - ☐ Check for restriction at the check valve on the fuel filter return line to tank.
3. At rated rpm, for fuel pressure higher than 6.5 bar (95 psi), check the following:
   - ☐ Check the return line and injector spill line, looking for restrictions or bent lines.
   - ☐ Check the fuel pressure valve for a blocked or restricted regulator orifice.

2.12.2 Performing a Fuel System Test using minidiag2

To perform a fuel system test using minidiag2, perform the following steps:

 Copyright © 2004 DETROIT DIESEL CORPORATION

https://truckmanualshub.com/

WARNING:

PERSONAL INJURY

To avoid injury when working near or on an operating engine, remove loose items of clothing and jewelry. Tie back or contain long hair that could be caught in any moving part causing injury.

WARNING:

PERSONAL INJURY

Diesel engine exhaust and some of its constituents are known to the State of California to cause cancer, birth defects, and other reproductive harm.

- ☐ **Always start and operate an engine in a well ventilated area.**
- ☐ **If operating an engine in an enclosed area, vent the exhaust to the outside.**
- ☐ **Do not modify or tamper with the exhaust system or emission control system.**

NOTE:
Before running the test, warm the engine to normal operating temperatures: 80°-95°C (176°-203°F).

1. Plug your minidiag2 into the truck diagnostic connector and follow the instructions in the minidiag2 Supplement Manual to connect to the VCU/DDEC-ECU system.
2. After establishing the connection with the truck, choose option 4 – Routines.
3. Under Routines section, select option 4 – Idle Smoothly Balance.
4. Check each cylinder value for this routine and compare your results with the troubleshooting and proceed as described for any results out of spec. Refer to section 2.12.2.1.
5. Still connected to truck, look for option 5 – Impact Time Delay, under the Routines section.
6. Select it and check each cylinder value for this routine and compare your results with the troubleshooting and proceed as described for results out of spec.

2.12.2.1 Idle Smoothly Balance Troubleshooting

This test measures the percentage of fuel delivery for each cylinder in order to maintain a smooth operation at idle. Operational range for this test: from -3% (negative) to 3% (positive).

All information subject to change without notice.
6SE412 0403 Copyright © 2004 DETROIT DIESEL CORPORATION

Identify the cylinder with the biggest absolute value – highest positive or lowest negative. The troubleshooting steps for both conditions are:

For Highest Positive:

1. Check torque at all the transfer tubes nuts (45 N·m [33 lb·ft]). Run the test again. If the results are out of operational range, proceed to next step.
2. Find the cylinder with the result closest to zero. Swap the injector nozzle holder and the transfer tube between this cylinder and the cylinder with the highest result. Run the test again. If the highest result follows the injector nozzle holder, replace the nozzle holder. If not, proceed to the next step.

NOTE:
After removing the injector nozzle holders and transfer tubes, check the coupling area between both components and the seal rings. If any defect or damage is found, replace the damaged parts.

3. Return both injector nozzle holders and transfer tubes to their original positions and run the impact delay time and compression test routines.

For Lowest Negative:

1. Check torque at all the transfer tubes nuts (45 N·m [33 lb·ft]). Run the test again. If the results are out of the operational range, proceed to the next step.
2. Find the cylinder with the lowest result, remove the injector nozzle holder and check the opening pressure. If the pressure is lower than the minimum spec (275 bar [3989 psi]), replace the injector nozzle holder. If the pressure is within the spec, proceed to the next step.
3. Run a compression test using minidiag2, ProLink reader, or DDDL 5.0 (refer to the Diagnostic Tool Manual for instructions to run this test). The readings must be 75% or higher. For readings lower than 75%, remove the oil pan and cylinder head and check for damaged components.

2.12.2.2 Impact Delay Time Troubleshooting

This test measures the reaction time of the unit pumps. The operation range is from 1.2 to 2.1 milliseconds. Perform the following troubleshooting procedure for values out of the operating range:

1. Check the engine harness from the DDEC-ECU to the suspected unit pump – connectors and wire. Look for bad or loose connections and broken wires. If there are none, proceed to the next step.
2. Swap the suspect unit pump with one operating properly and run the test again. Refer to section 2.1.1 for unit pump removal and refer to section 2.1.2 for unit pump installation. If the condition follows the unit pump, replace the unit pump.

 Copyright © 2004 DETROIT DIESEL CORPORATION

https://truckmanualshub.com/

2.12.2.3 Checking the Fuel Pump Driven Gear Bolt Torque

This procedure describes how to check the fuel pump assembly for any play or wear on the fuel pump shaft drive gear mounting bolt. Any play in this component has a big impact on engine performance.

1. Remove the fuel pump.
2. Set the torque wrench to 30 N·m (22 lb·ft).

NOTICE:
Do not apply a torque over 30 N·m (22 lb·ft). Excessive torque can cause the bolt/gear failure.

3. Turn the torque wrench as shown by the arrow in until the torque wrench "clicks." This resistance ensures that the fuel pump drive gear is in good condition. In the event of NO resistance found with shaft turning freely, proceed to the next step. See Figure 2-28.

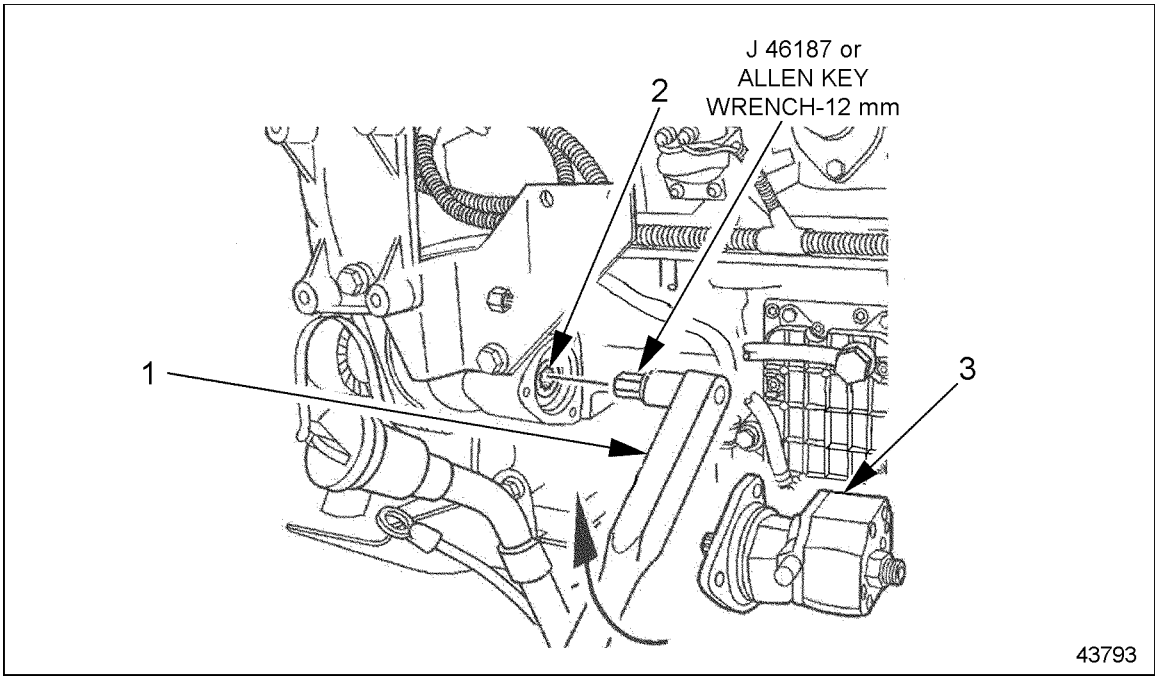

1. Torque wrench
2. Fuel Pump Drive Gear Splines
3. Fuel Pump

Figure 2-28 Checking Fuel Pump Drive Gear

4. Remove the fuel pump drive gear cover.

All information subject to change without notice.
6SE412 0403 Copyright © 2004 DETROIT DIESEL CORPORATION

5. Remove the bolt and gear. See Figure 2-29.

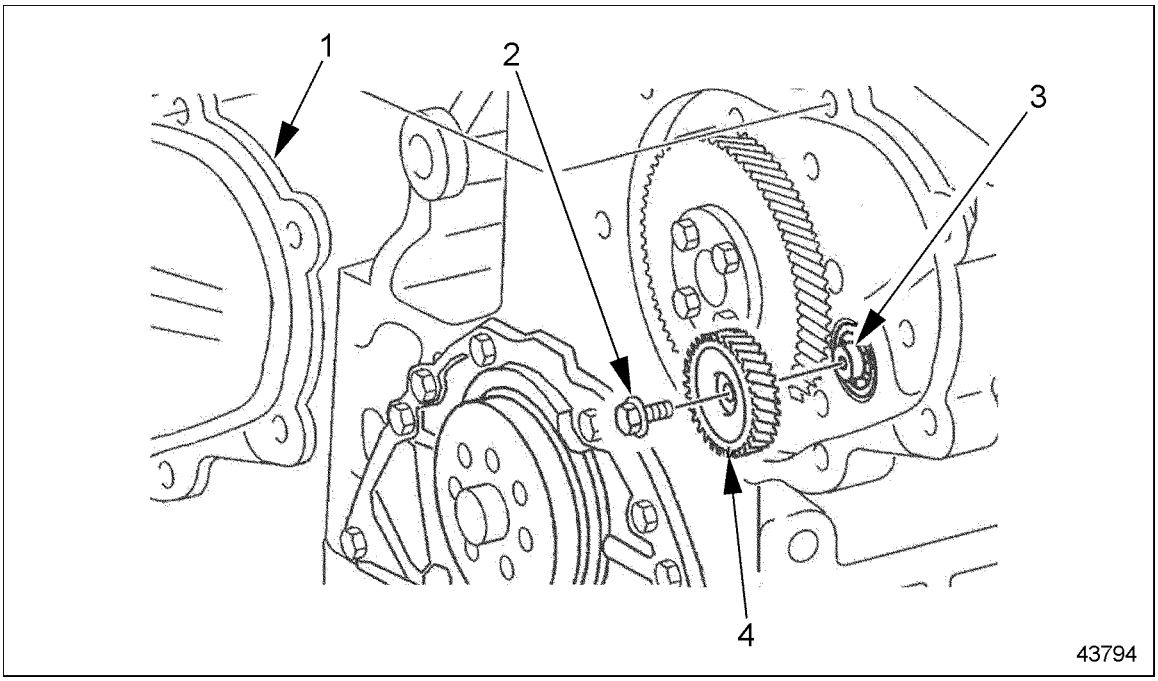

1. Cover
2. Drive Gear Mounting Bolt
3. Fuel Pump Shaft
4. Fuel Pump Drive Gear

Figure 2-29 Removing/Installing Fuel Pump Drive Gear and Bolt

6. Check the mounting between bolt, gear, and shaft. Look for damaged parts. Replace any damaged part in order to avoid it coming loose again.
7. Install gear and bolt. Apply Loctite® 271 sealant to the bolt. For the correct tightening of the bolt, install the special tool J 36187 to the fuel pump spline and block the shaft movement. See Figure 2-28.
8. Torque bolt to 30 N·m (22 lb·ft).
9. Apply Loctite 574 sealant and install the cover. Torque 50 N·m (37 lb·ft).
10. Install new gasket and the fuel pump. Torque to the fuel pump bolts will be 25 N·m (18 lb·ft).

 Copyright © 2004 DETROIT DIESEL CORPORATION

https://truckmanualshub.com/

All information subject to change without notice.
6SE412 0403 Copyright © 2004 DETROIT DIESEL CORPORATION

https://truckmanualshub.com/

2.A ADDITIONAL INFORMATION

Description **Page**

SPECIFICATIONS 2-57
Fuel Injectors 2-57
Engine Brake Harness 2-58
Fuel and Fuel Control 2-59
Fuel System Inspection 2-64

SPECIFICATIONS

This section contains the specifications for servicing the engine.

Fuel Injectors

The fuel injection system torque values are listed in Table 2-4. The torque values for the injector lines are listed in Table 2-5.

Fastener Type	N·m (lb·ft)
Fuel Filter Cap Nut	25 (18)
Fuel Return Line Fittings (at fuel gallery inlet)	50 (37)
Hollow-Core Banjo Bolts	50 (37)
Pressure Limiting Valve (at fuel gallery outlet)	50 (37)
Protective Sleeve	45 (33)
Tensioning Arm Retaining Bolt	50 (37)
Unit Pump Mounting Bolts	65 (48)

Table 2-4 Fuel Injection System Torque Values

Fastener Type	N·m (lb·ft)		
	Using a 12-in. torque wrench	Using a 24-in. torque wrench	Required Torque on Fastener
Injector Line Nuts	27 (20)	25 (18)	30 (22)
Transfer Tube Thrust Bolt	40 (30)	36 (27)	45 (33)

Table 2-5 Injector Lines Torque Values

 Copyright © 2004 DETROIT DIESEL CORPORATION

https://truckmanualshub.com/

Engine Brake Harness

The former 8-pin Engine Harness Connector is identified with part number A460 150 00 33, and it is used in the engines that have one solenoid air valve for the engine brakes. Beginning with the engine serial number 739080, these current engines will have an 8-pin Engine Harness Connector with part number A460 150 01 33. The changes in the harness connections between the former and current 8-pin harness connector are Listed in Table 2-6and listed in Table 2-7.

Description	8-Pin Engine Harness Connector	DDEC-ECU 55-Pin Connector
Fan Control 1, switch to Bat- (PV3)	A	41
Fan Control 2, switch to Bat- (PV4)	B	43
Output Ground (PV)	C	11
Fan and Wastegate/E-Flap Voltage Supply (PV1, 3, 4)	D	12
Exhaust Flap/Wastegate Control, switch to Bat- (PV1)	E	51
Fan and Wastegate/E-Flap Voltage Supply (PV1, 3, 4)	F	12
Turbo Brake Control, switch to Bat- (PV6)	G	40
Turbo Brake Voltage Supply (PV6)	H	42

Table 2-6 Former Harness Connector A460 150 00 33

Description	8-Pin Engine Harness Connector	DDEC-ECU 55-Pin Connector
Fan Control #1, switch to Bat- (PV3)	A	41
Fan Control #2, switch to Bat- (PV4)	B	43
Compression Brake Control, switch to Bat- (PV2)	C	50
Fan and Wastegate/E-Flap Voltage Supply (PV1, 3, 4)	D	12
Exhaust Flap/Wastegate Control, switch to Bat- (PV1)	E	51
Compression Brake Voltage Supply (PV2)	F	52
Turbo Brake Control, switch to Bat- (PV6)	G	40
Turbo Brake Voltage Supply (PV6)	H	42

Table 2-7 Current Harness Connector A460 150 01 33

All information subject to change without notice.
6SE412 0403 Copyright © 2004 DETROIT DIESEL CORPORATION

Fuel and Fuel Control

The fuel control torque values are listed in Table 2-8. Listed in Table 2-9 and listed in Table 2-10 are the fuel system torque values. See Figure 2-30 for a harness drawing of the wiring from the DDEC-ECU (pump and nozzle) control unit. For a detailed (partial) harness drawing showing the interface between the DDEC-ECU and the vehicle control unit (VCU) through the electronic engine frontwall connector, see Figure 2-31. For a detailed (partial) harness drawing showing the DDEC-ECU wiring to the proportioning valves and the oil system sensors, see Figure 2-32. For a detailed (partial) harness drawing showing the DDEC-ECU wiring to the other system sensors, including charge air, coolant, fuel, crank angle position, and TDC (top dead center), see Figure 2-33.

Fastener Type	N·m (lb·ft)
Fuel Heat Exchanger Mounting Bolts	8 (6)
Fuel Lines	50 (37)
DDEC-ECU Control Unit Mounting Bolts	15 (11)

Table 2-8 Fuel Control Torque Values

Fastener	Torque Value, mm (in.)
Fuel Filter Cap	25 (18)
Fuel Line Banjo Bolts	50 (37)
Fuel Line Pipe Fittings	50 (37)
High-Pressure Fuel Lines	30 (22)
Fuel/Water Separator Mounting Nuts	50 (37)
Fuel Filter Housing Mounting Bolts	25 (18)
Fuel Pump Mounting Bolts	25 (18)

Table 2-9 Fuel System Torque Values

Fastener	Torque, mm (in.)
Fuel Spill Line Banjo Bolt	15 (11)
Fuel Pump Driven Gear Bolt	30 (22)
Fuel Temperature Sensor to Engine Block	30 (22)

Table 2-10 Fuel System Torque Values

 Copyright © 2004 DETROIT DIESEL CORPORATION

https://truckmanualshub.com/

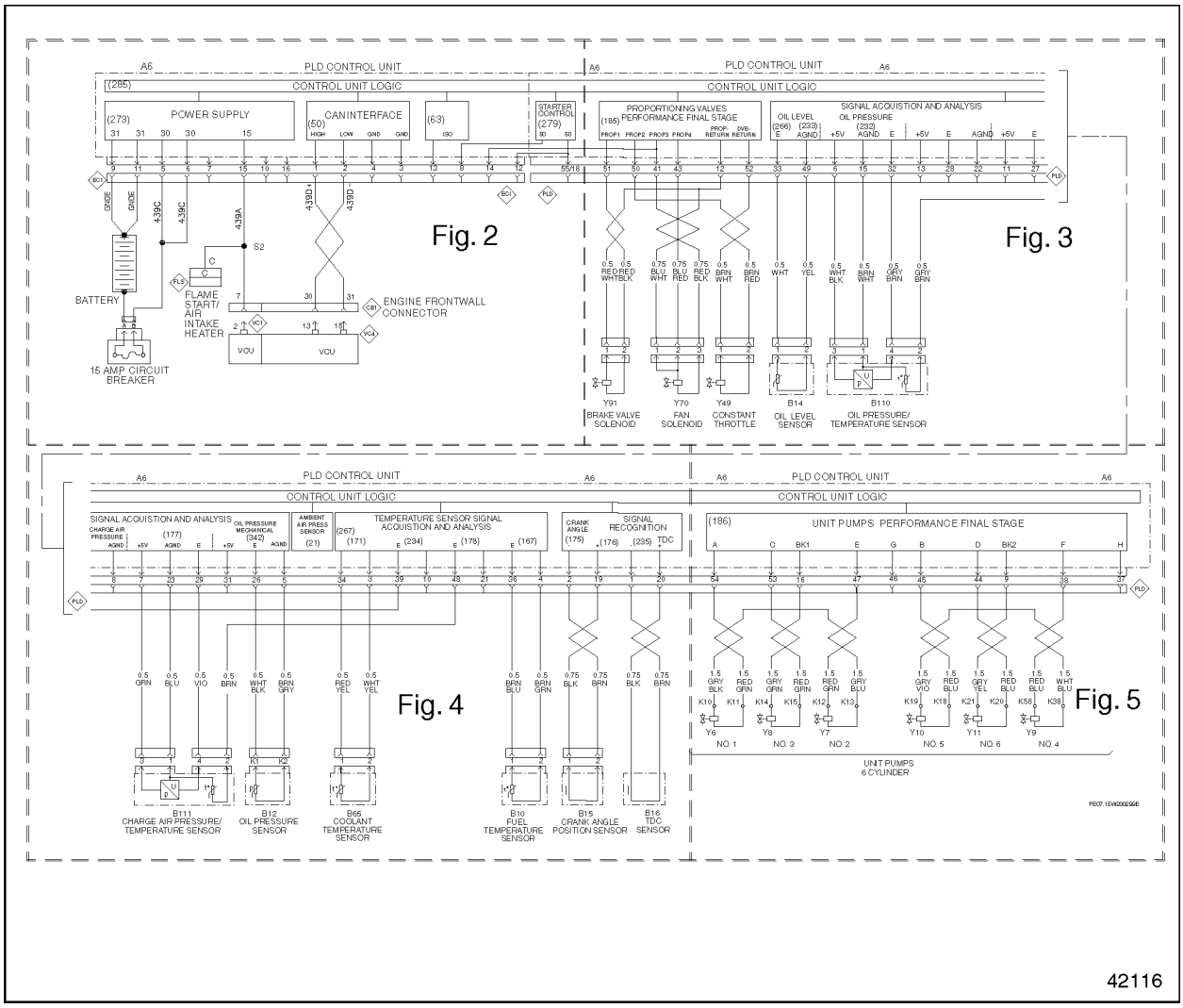

Figure 2-30 DDEC-ECU Control Unit Wiring

All information subject to change without notice.
6SE412 0403 Copyright © 2004 DETROIT DIESEL CORPORATION

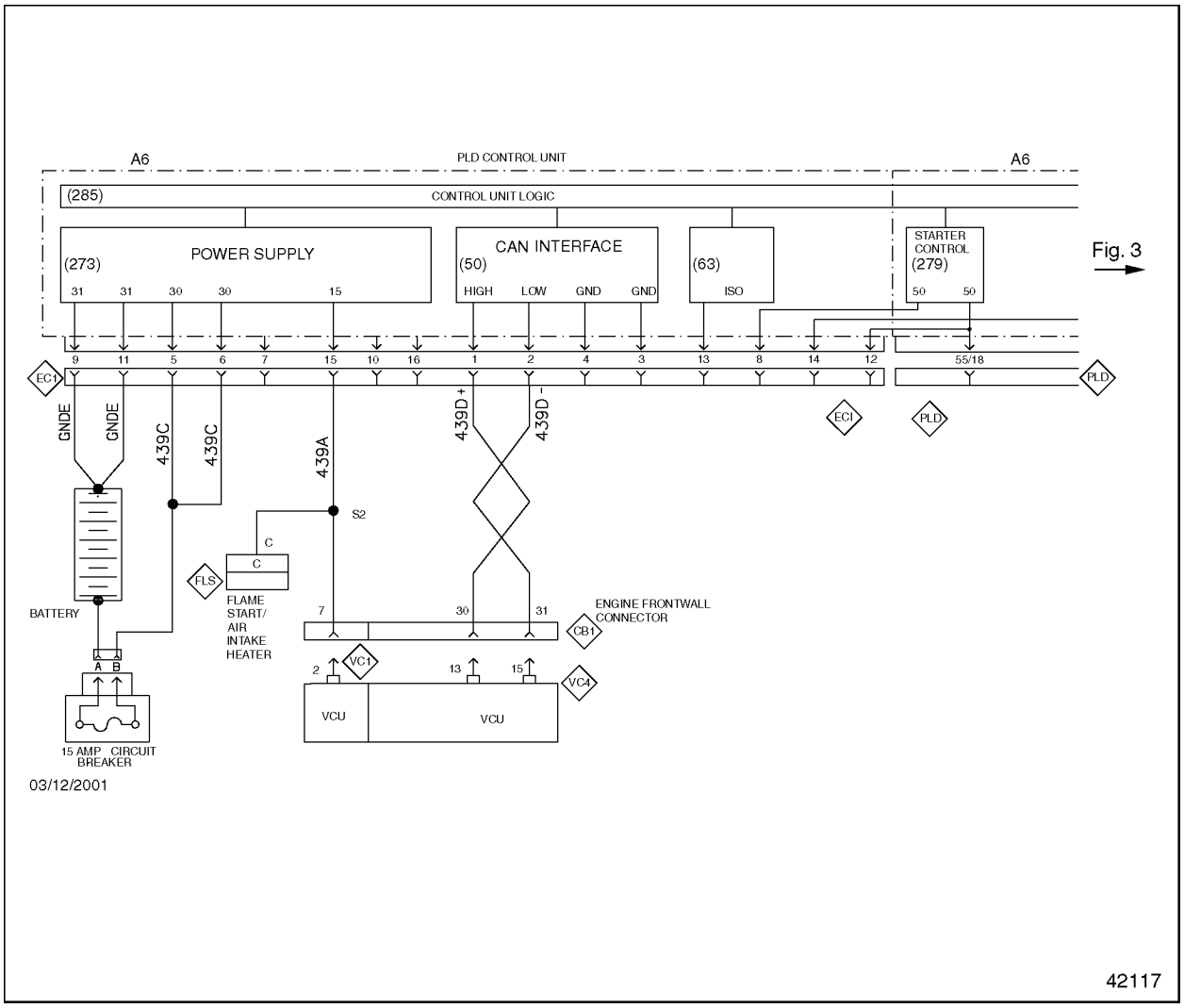

Figure 2-31 DDEC-ECU Control Unit Wiring, VCU Interface

 Copyright © 2004 DETROIT DIESEL CORPORATION

https://truckmanualshub.com/

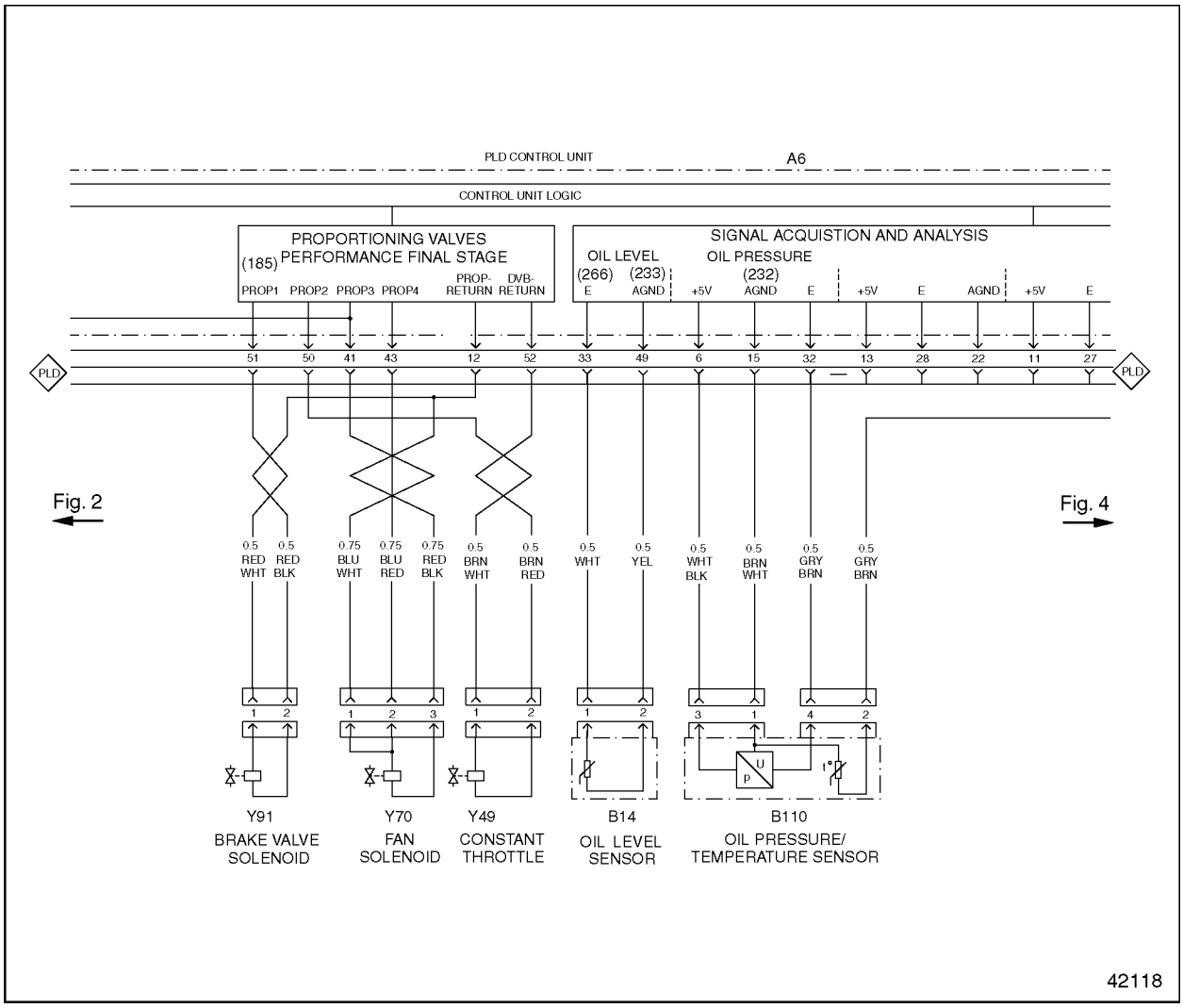

Figure 2-32 DDEC-ECU Control Unit Wiring, Proportioning Valves and Oil System Sensors

All information subject to change without notice.
6SE412 0403 Copyright © 2004 DETROIT DIESEL CORPORATION

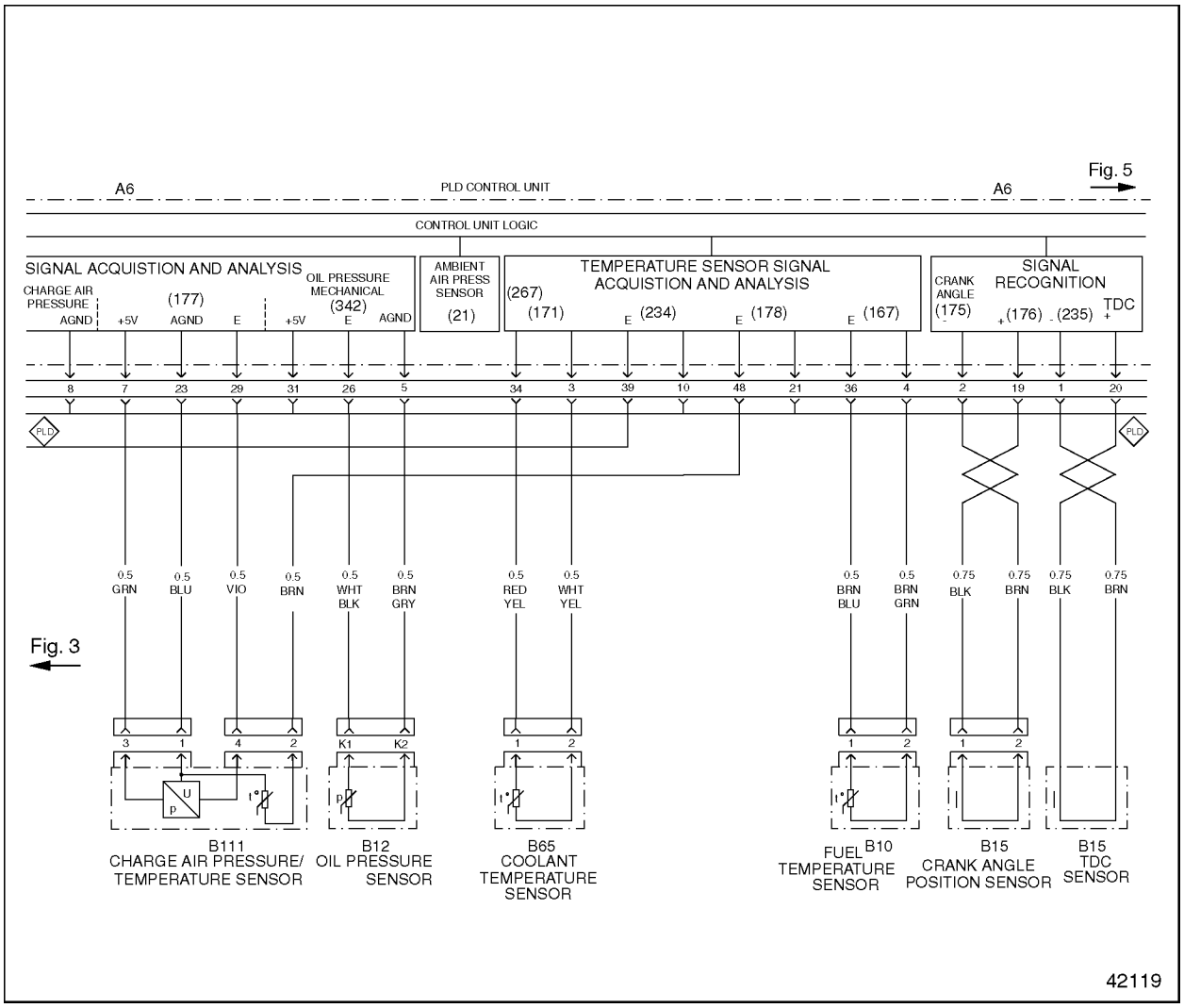

Figure 2-33 DDEC-ECU Control Unit Wiring, Miscellaneous Sensors

 Copyright © 2004 DETROIT DIESEL CORPORATION

https://truckmanualshub.com/

Fuel System Inspection

The torque specifications for fuel line nuts are listed in Table 2-11. The fuel system specifications for pressure are listed in Table 2-12.

Component	Torque
Transfer Tube Nut	45 N·m (33 lb·ft)
High Pressure Line Nuts	30 N·m (22 lb·ft)

Table 2-11 Torque Specifications for Fuel Line Nuts

Speed	Pressure
Fuel Pressure Test at idle rpm	2 bar (29 psi) – minimum
Fuel Pressure Test at rated rpm	5.5 – 6.5 bar (80 – 95 psi)
Maximum difference between fuel filter housing inlet and outlet pressure	0.3 bar (4 psi)

Table 2-12 Fuel System Specifications for Pressure

All information subject to change without notice.
6SE412 0403 Copyright © 2004 DETROIT DIESEL CORPORATION

https://truckmanualshub.com/

3 LUBRICATION SYSTEM

Section **Page**

3.1	OIL PAN	3-3
3.2	OIL SPRAY NOZZLE	3-9
3.3	EGR CAMSHAFT LUBRICATION SPRAYER	3-13
3.4	OIL PUMP	3-14
3.5	EGR OIL PUMP AND PICK UP TUBE	3-21
3.6	OIL FILTER	3-23
3.7	OIL HEAT EXCHANGER AND FILTER HOUSING	3-26
3.8	OIL PRESSURE AND TEMPERATURE SENSOR	3-32
3.A	ADDITIONAL INFORMATION	3-35

https://truckmanualshub.com/

All information subject to change without notice.
6SE412 0403 Copyright © 2004 DETROIT DIESEL CORPORATION

https://truckmanualshub.com/

3.1 OIL PAN

Perform the following procedures for removal and installation of the oil pan.

3.1.1 Oil Pan Removal

Remove the oil pan as follows:

1. Drain the engine oil. See Figure 3-1 for location of the drain plug. Discard the drain plug seal.

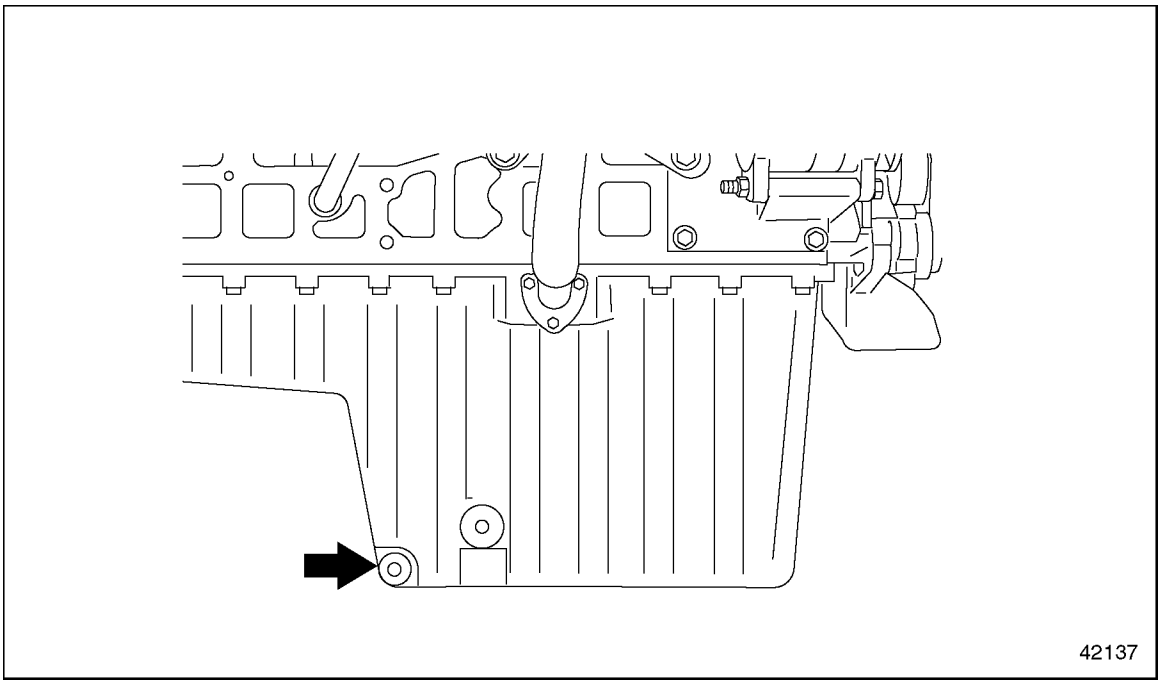

Figure 3-1 Engine Oil Drain Plug

WARNING:

PERSONAL INJURY

To avoid injury when removing or installing a heavy engine component, ensure the component is properly supported and securely attached to an adequate lifting device to prevent the component from falling.

2. Using a floor jack, jack up the vehicle and place it on stands located behind the front suspension.
3. Loosen all front suspension shackle bolts.
4. Remove the front spring bolts and shock absorber bolts. Using the floor jack, lower the axle to the ground.

 Copyright © 2004 DETROIT DIESEL CORPORATION

https://truckmanualshub.com/

5. Remove the dipstick and dipstick O-ring. Discard the O-ring. See Figure 3-2.

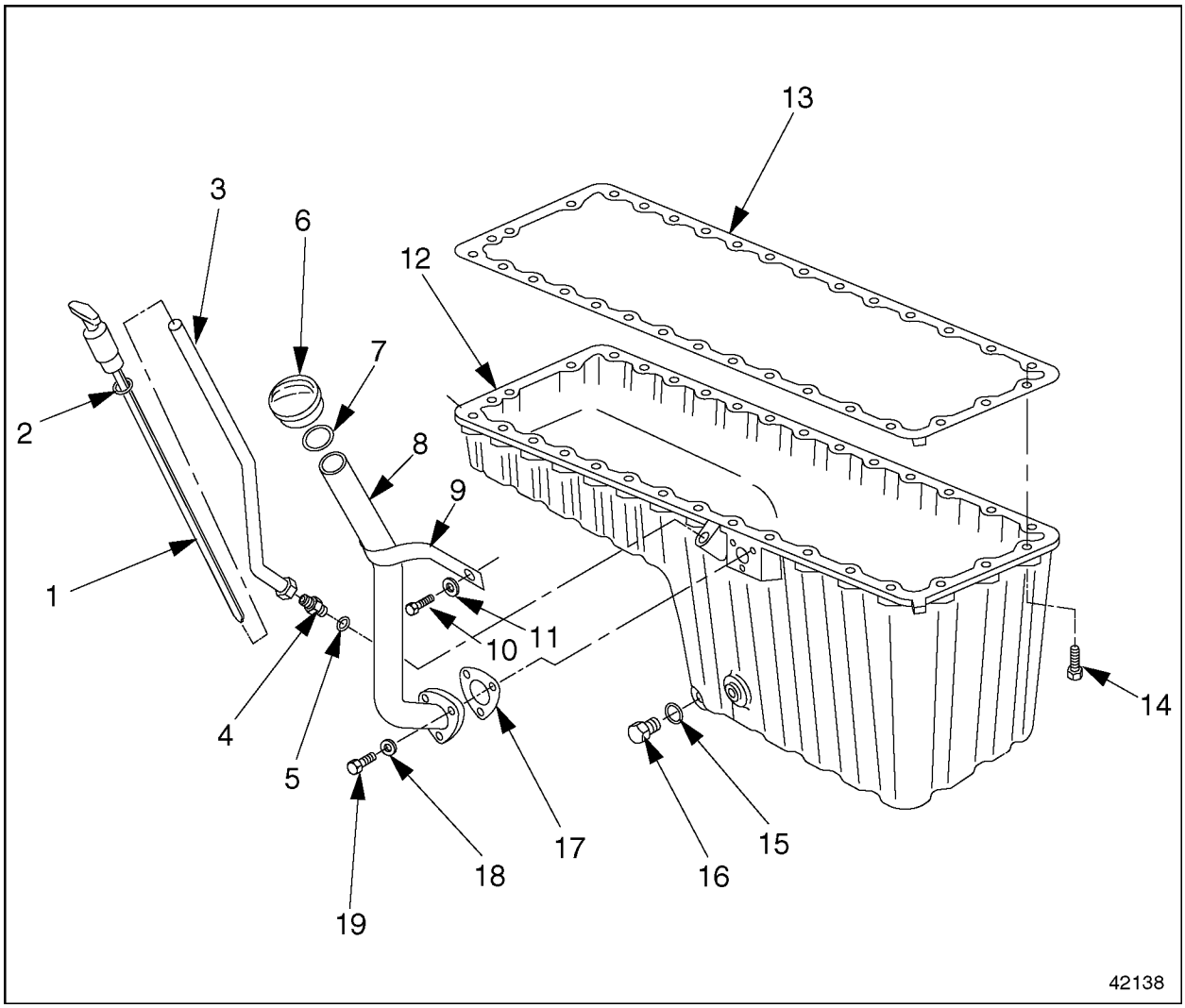

1. Dipstick
2. Dipstick O-ring
3. Dipstick Guide Tube
4. Adaptor
5. Dipstick Seal
6. Oil Fill Cap
7. Oil Fill O-ring
8. Oil Fill Tube
9. Oil Fill Tube Retainer
10. Oil Fill Retainer Bolt
11. Fill Tube Retainer Washer
12. Oil Pan
13. Oil Pan Gasket
14. Oil Pan Bolt
15. Drain Plug Seal
16. Oil Pan Drain Plug
17. Fill Tube Gasket
18. Fill Tube Flatwasher
19. Fill Tube Bolt

Figure 3-2 Oil Pan Removal and Installation

All information subject to change without notice.
6SE412 0403 Copyright © 2004 DETROIT DIESEL CORPORATION

6. Remove the standoff bracket attaching the dipstick guide tube to the oil fill tube. See Figure 3-3.

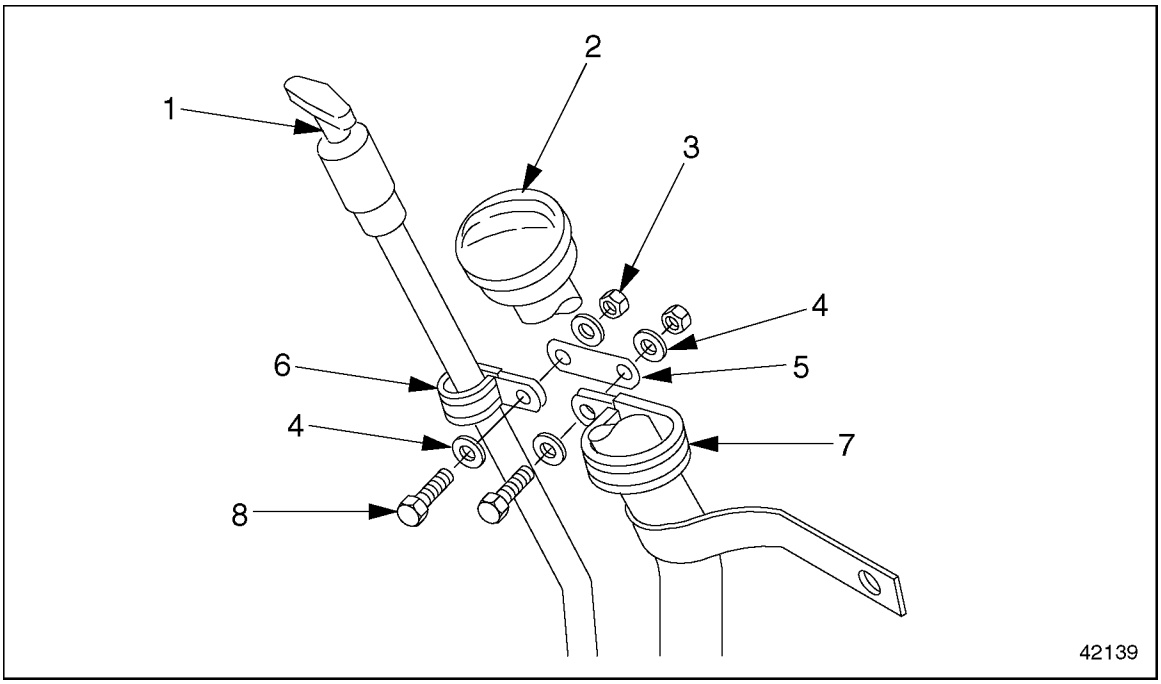

1. Dipstick
2. Oil Fill Cap
3. Locknut
4. Flatwasher
5. Connector
6. Dipstick Clamp
7. Oil Fill Tube Clamp
8. Bolt

Figure 3-3 Standoff Bracket (exploded view)

7. Remove the dipstick guide tube, adaptor, and seal. Clean the guide tube and discard the seal.
8. Remove the oil fill tube.
   [a] Remove the bolt that fastens the oil fill tube retainer to the cylinder block.
   [b] Remove the oil fill bolts and washers that fasten the oil fill tube to the oil pan. Save the bolts and washers.
   [c] Remove and discard the gasket on the oil fill tube. Clean the contact surfaces of the fill tube and the oil pan, removing all traces of gasket material.
   [d] Clean the oil fill tube.
9. Remove the oil pan from the cylinder block.
10. Remove and discard the oil pan gasket. Save the bolts.
11. Thoroughly clean the pan. Remove all traces of gasket material from the pan and from the block.

 Copyright © 2004 DETROIT DIESEL CORPORATION

https://truckmanualshub.com/

3.1.2 Oil Pan Installation

Install the oil pan as follows:

1. Position a new gasket on the cylinder block.
2. Install the pan on the block and tighten each oil pan bolt 35 N·m (26 lb·ft). See Figure 3-4 for the tightening pattern. When all the bolts have been tightened, go back and re-tighten the four corner bolts (positions #1 through #4).

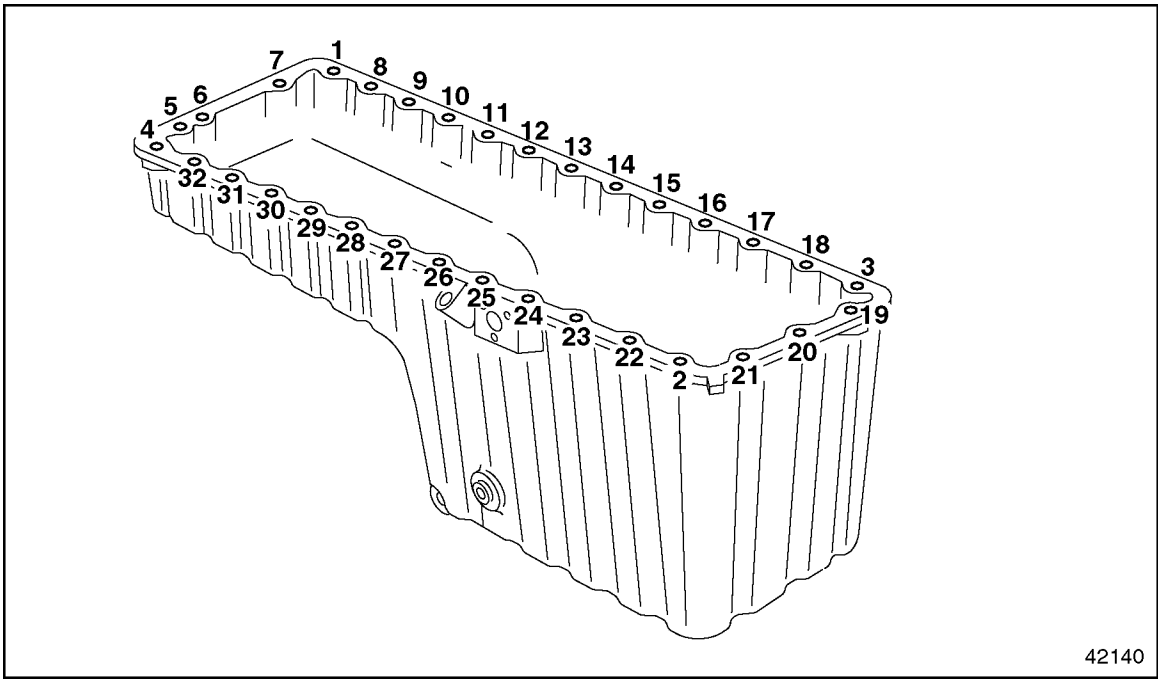

Figure 3-4 Oil Pan Bolt Tightening Pattern

3. Install the oil fill tube. Tighten all bolts 25 N·m (18 lb·ft).
   [a] Position a new oil fill gasket on the oil pan.
   [b] Install the oil fill tube bolts. Tighten each bolt 25 N·m (18 lb·ft).
   [c] Install the fill tube retainer bolt. Tighten the bolt 25 N·m (18 lb·ft).
   [d] Replace the O-ring in the oil fill cap.
4. Replace the dipstick seal on the adaptor. Install the adaptor, with the new dipstick seal, on the oil pan. Tighten the nut on the adaptor 50 N·m (37 lb·ft).
5. Install the dipstick guide tube on the adaptor and tighten it 20 N·m (15 lb·ft).
6. Install the dipstick in the dipstick guide tube. Replace the O-ring on the dipstick.
7. Replace the seal on the oil drain plug. Install the oil drain plug, with the new seal, on the oil pan. Tighten the drain plug 80 N·m (59 lb·ft).
8. Install the standoff bracket, as removed. Tighten the locknuts until firm.

All information subject to change without notice.
6SE412 0403 Copyright © 2004 DETROIT DIESEL CORPORATION

9. Fill the engine oil circuit.
10. Using the floor jack, raise the axle until it is in position to install the spring bolts and shock absorber bolts. Install the front suspension.
11. Tighten the shackle bolts and adjust the suspension.
12. Remove the stands and lower the vehicle to the ground.

WARNING:

PERSONAL INJURY

Diesel engine exhaust and some of its constituents are known to the State of California to cause cancer, birth defects, and other reproductive harm.

- ☐ **Always start and operate an engine in a well ventilated area.**
- ☐ **If operating an engine in an enclosed area, vent the exhaust to the outside.**
- ☐ **Do not modify or tamper with the exhaust system or emission control system.**

13. Start the engine and check for leaks.

 Copyright © 2004 DETROIT DIESEL CORPORATION

https://truckmanualshub.com/

14. Shut down the engine. Check the oil level and add oil if necessary. See Figure 3-5.

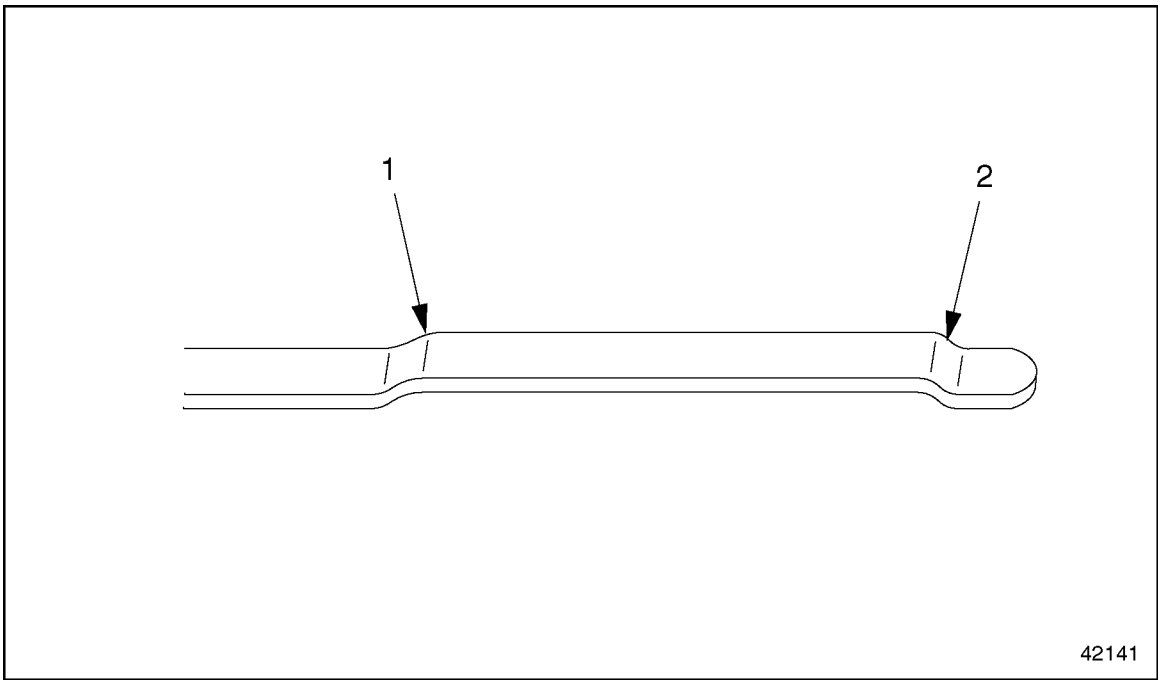

1. Maximum Fill Level
2. Minimum Fill Level

Figure 3-5 Oil Dipstick

NOTE:
Do not fill beyond the maximum fill level on the dipstick, since overfilling may result in high oil consumption.

All information subject to change without notice.
6SE412 0403 Copyright © 2004 DETROIT DIESEL CORPORATION

3.2 OIL SPRAY NOZZLE

Perform the following procedures for removal and installation of the oil spray nozzle.

3.2.1 Oil Spray Nozzle Removal

Remove the oil spray nozzle as follows:

NOTE:
These procedures refer to bolt-on oil spray nozzles only.

1. Remove the oil pan. Refer to section 3.1.1.
2. Open the inspection cover on the flywheel housing and install the engine cranking tool (J 46167 or 407 589 00 63 00). See Figure 3-6. Rotate the crankshaft to gain access to the nozzles.

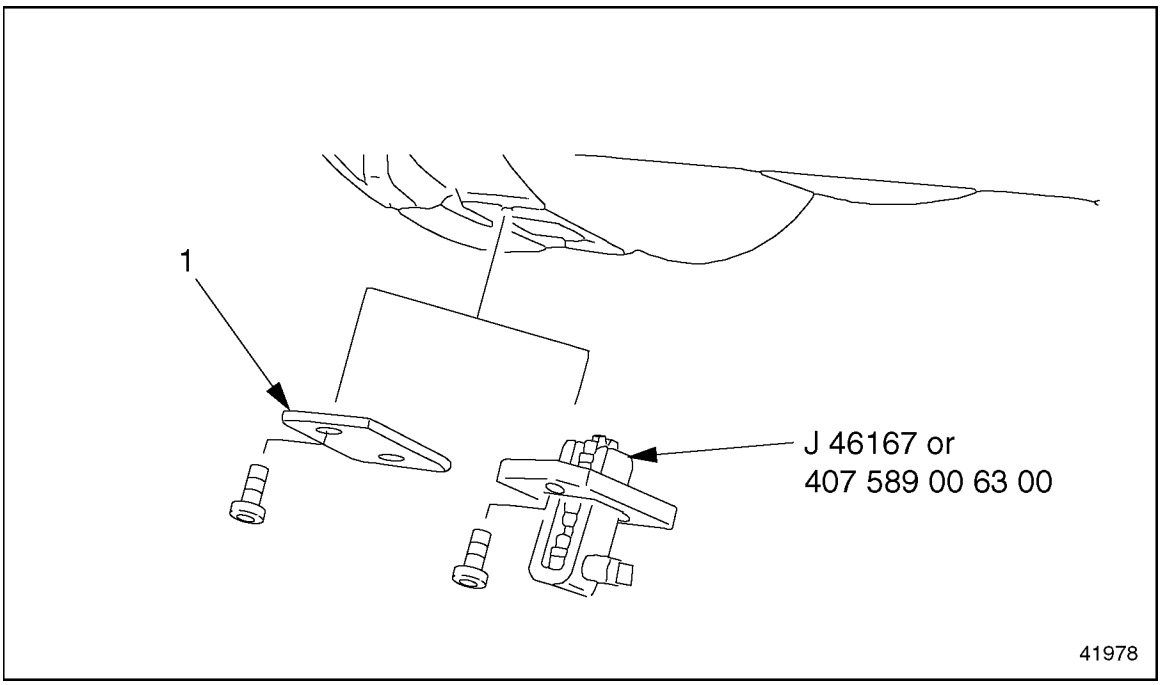

1. Inspection Cover

Figure 3-6 Installing the Engine Cranking Tool

 Copyright © 2004 DETROIT DIESEL CORPORATION

https://truckmanualshub.com/

3. Remove the hollow-core bolt that attaches each oil spray nozzle to the cylinder block. Remove the oil spray nozzle from the engine. See Figure 3-7.

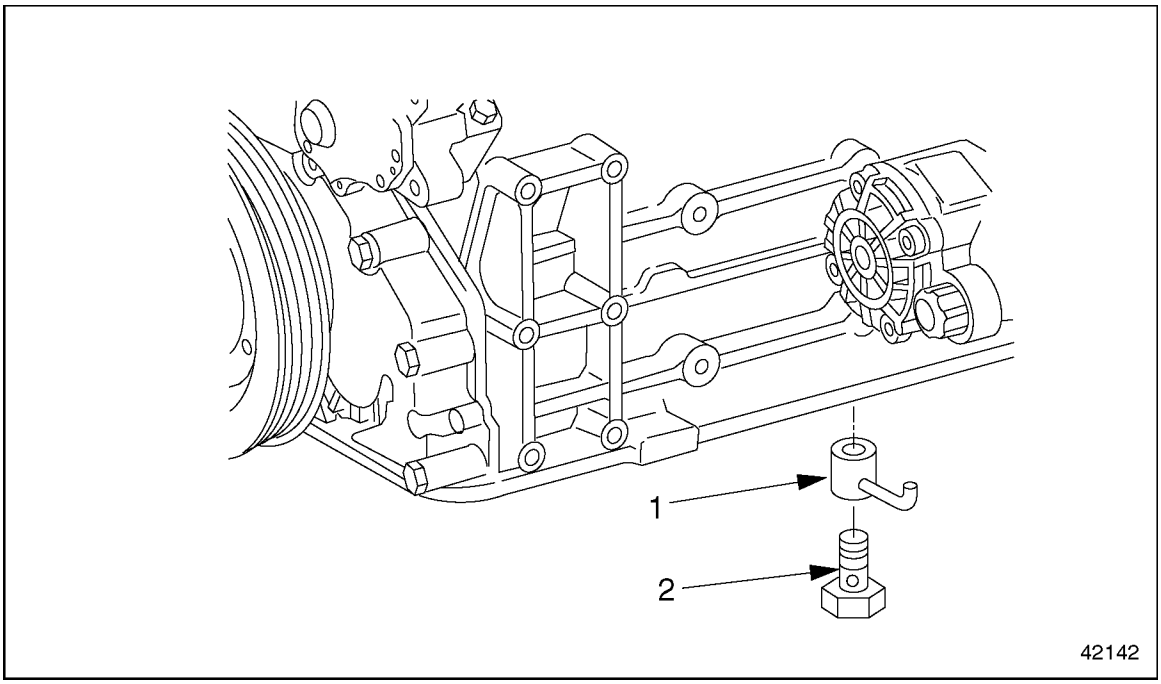

1. Oil Spray Nozzle
2. Hollow-Core Bolt

Figure 3-7 Removing the Oil Spray Nozzle

All information subject to change without notice.
6SE412 0403 Copyright © 2004 DETROIT DIESEL CORPORATION

4. Inspect the oil spray nozzle. If damaged or bent, replace it or repair it using the oil spray nozzle setting device (J 46182 or 460 589 00 23 00). See Figure 3-8.

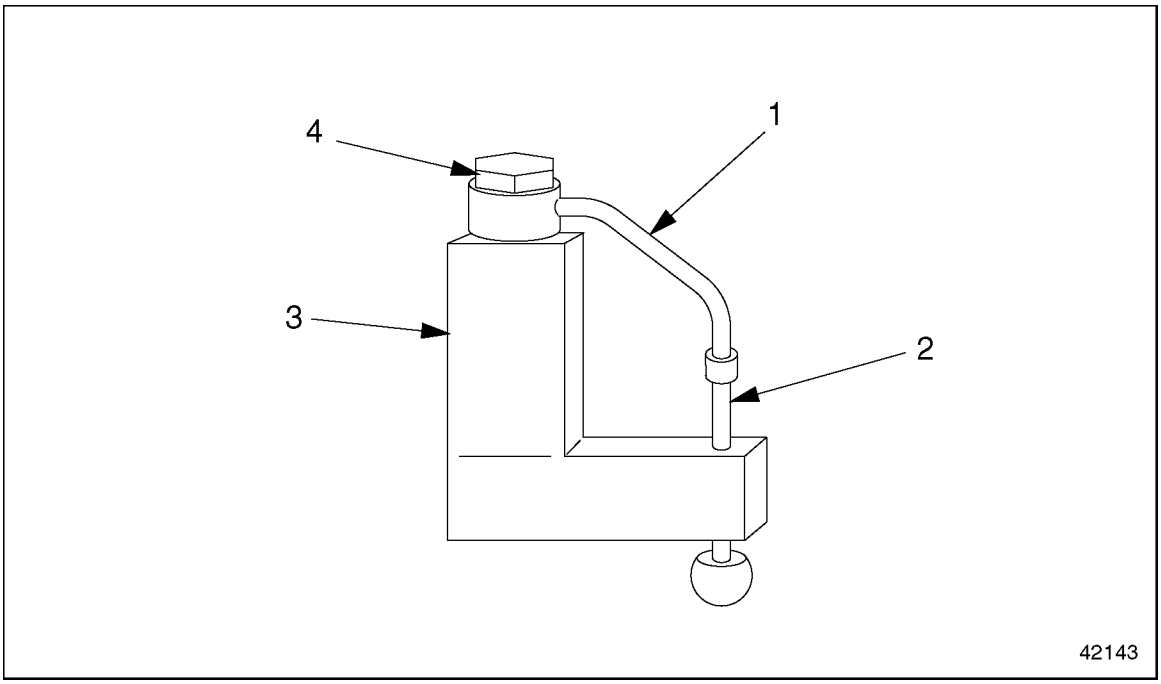

1. Oil Spray Nozzle
2. Setting Rod
3. Setting Device
4. Retaining Bolt

Figure 3-8 Setting the Oil Spray Nozzle

[a] Secure the setting device (J 46182 or 460 589 00 23 00)in a vise with protective jaws.

[b] Install the oil spray nozzle on the setting device and tighten the retaining bolt enough to hold the nozzle firmly.

[c] Set the nozzle so that the tip of the nozzle fits, without tension, into the cup of the setting rod. If necessary, bend the nozzle gently until it fits easily.

 Copyright © 2004 DETROIT DIESEL CORPORATION

https://truckmanualshub.com/

3.2.2 Oil Spray Nozzle Installation

Install the oil spray nozzle as follows:

1. Install each nozzle in the block with the locator pin correctly installed. See Figure 3-9. Tighten the hollow-core bolt 40 N·m (30 lb·ft).

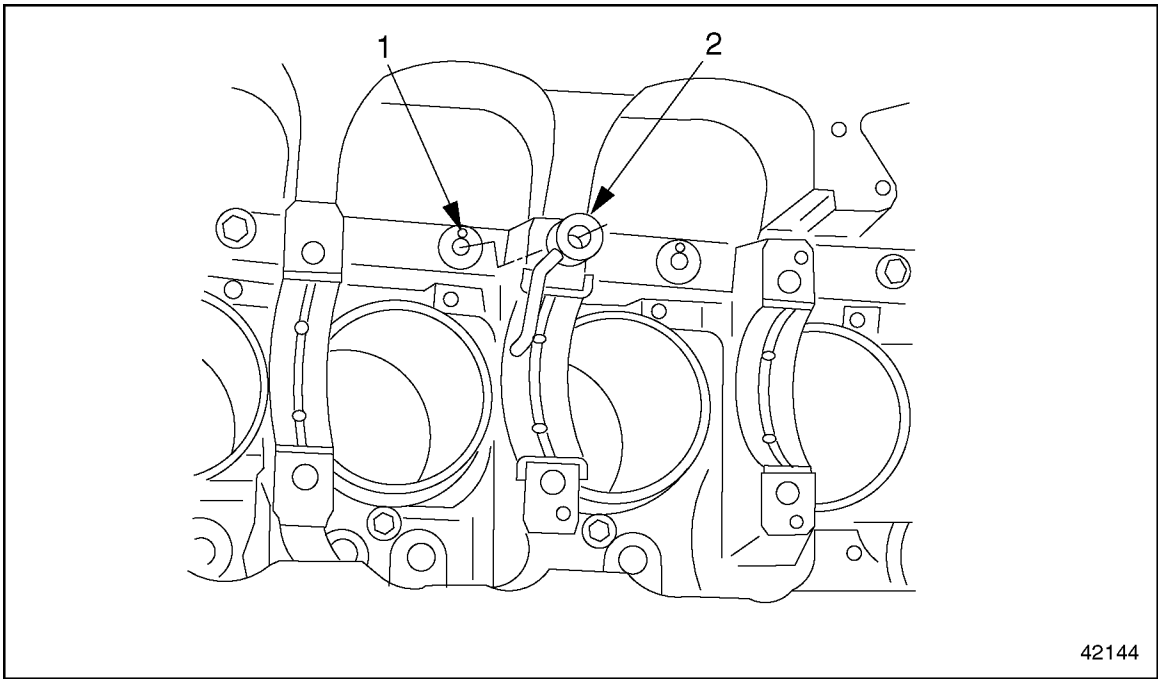

1. Pin Seat
2. Locator Pin

Figure 3-9 Installing the Oil Spray Nozzle

NOTE:
The locator pin on the base of the oil spray nozzle must be inserted into the pin seat in the cylinder block until it engages.

2. Install the oil pan. Refer to section 3.1.2.
3. Fill the crankcase to the specified oil level. Do not overfill the crankcase.

All information subject to change without notice.
6SE412 0403 Copyright © 2004 DETROIT DIESEL CORPORATION

https://truckmanualshub.com/

3.3 EGR CAMSHAFT LUBRICATION SPRAYER

The EPA 98 (non-EGR) engine has one oil passage drilling hole on a lube sprayer – it is used on the injector unit pump. The lube sprayer for the EPA 04 (EGR) engine has three oil passage drilling holes – they are used on the injector unit pump, intake cam follower and exhaust cam follower. See Figure 3-10.

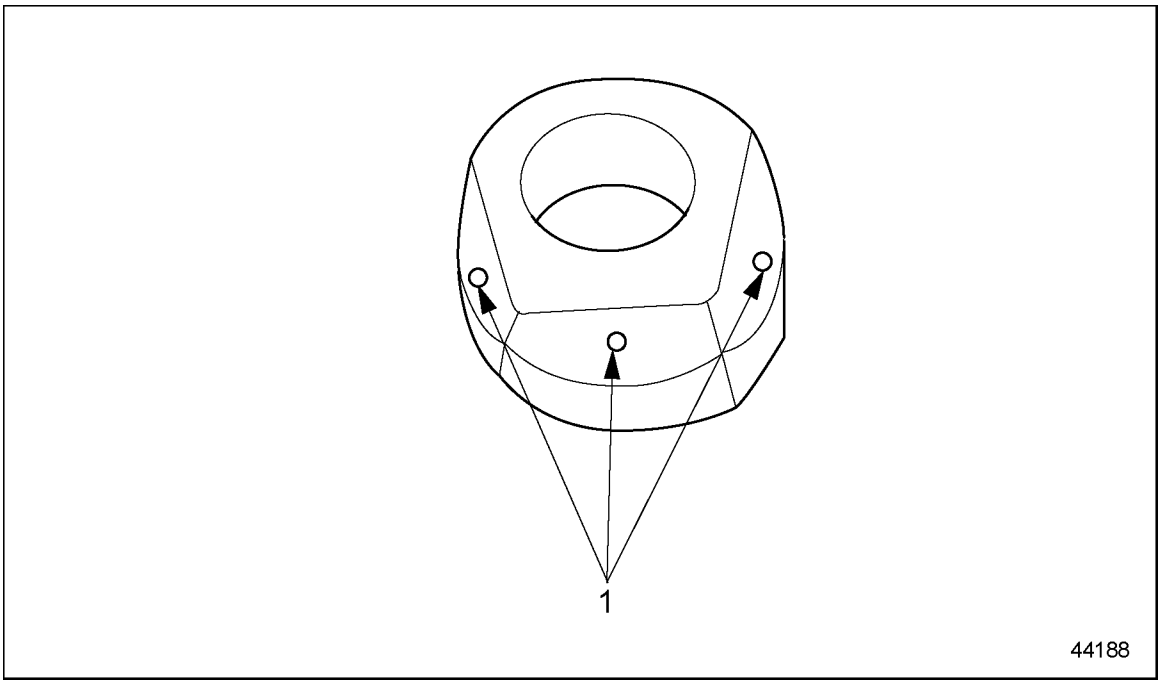

1. Oil Passages

Figure 3-10 EGR Camshaft Lubrication Sprayer

3.3.1 EGR Camshaft Lubrication Sprayer Removal

Remove the EGR camshaft lubrication sprayer as follows:

1. Remove the injector unit pump lubricator bolt holding the sprayer in place.
2. Remove the sprayer.
3. Clean any clogged holes with solvent.

3.3.2 EGR Camshaft Lubrication Sprayer Installation

Install the EGR camshaft lubrication sprayer as follows:

1. Install the lubrication sprayer to block with injector unit pump lubricator bolt.
2. Torque bolt to 20 N·m (15 lb·ft).

 Copyright © 2004 DETROIT DIESEL CORPORATION

https://truckmanualshub.com/

3.4 OIL PUMP

Perform the following procedures for removal and installation of the oil pump.

3.4.1 Oil Pump Removal

Remove the oil pump assembly as follows:

1. Remove the oil pan from the cylinder block. Refer to section 3.1.1.
2. Remove the sump pipe from the oil pump. See Figure 3-11. Discard the gasket.

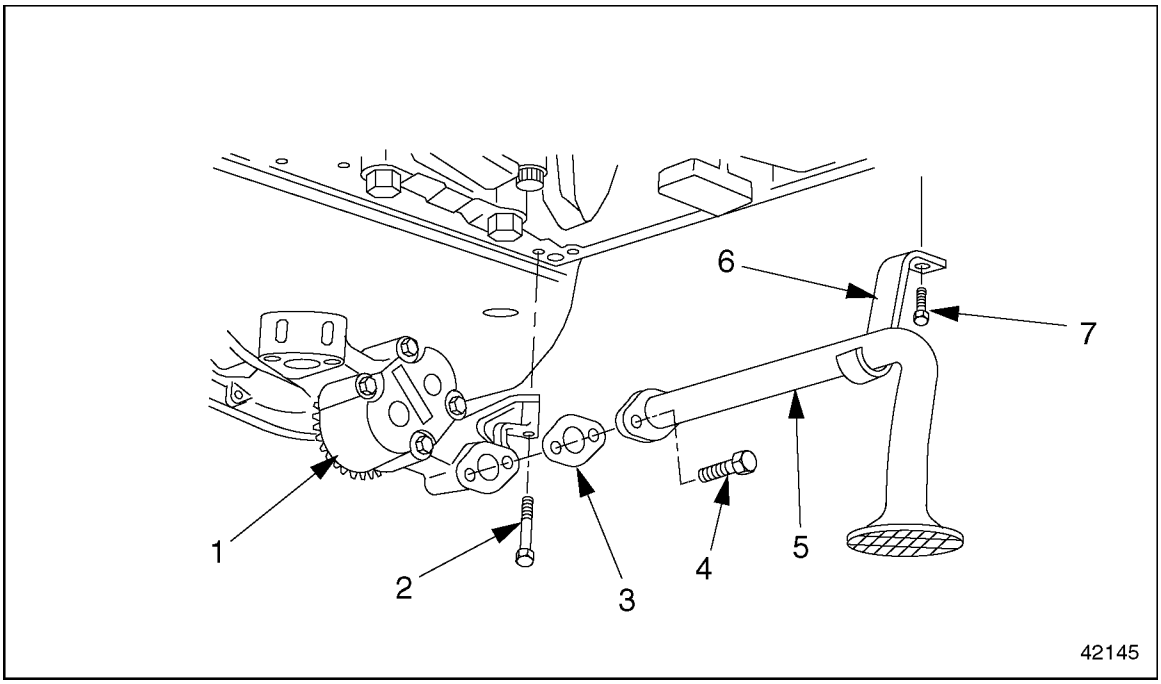

1. Oil Pump
2. Oil Pump Mounting Bolt
3. Gasket
4. Sump Pipe Mounting Bolt
5. Sump Pipe
6. Bracket
7. Bracket Mounting Bolt

Figure 3-11 Oil Pump and Sump Pipe Removal

[a] Remove the bolt attaching the sump pipe bracket to the cylinder block.

[b] Remove the two bolts attaching the sump pipe to the oil pump. Discard the gasket.

[c] Remove the sump pipe and bracket from the oil pan.

All information subject to change without notice.
6SE412 0403 Copyright © 2004 DETROIT DIESEL CORPORATION

3. Remove the bolts attaching the pressure limiting valve to the oil pump and lower edge of the cylinder block. Remove the pressure limiting valve from the oil pump. See Figure 3-12.

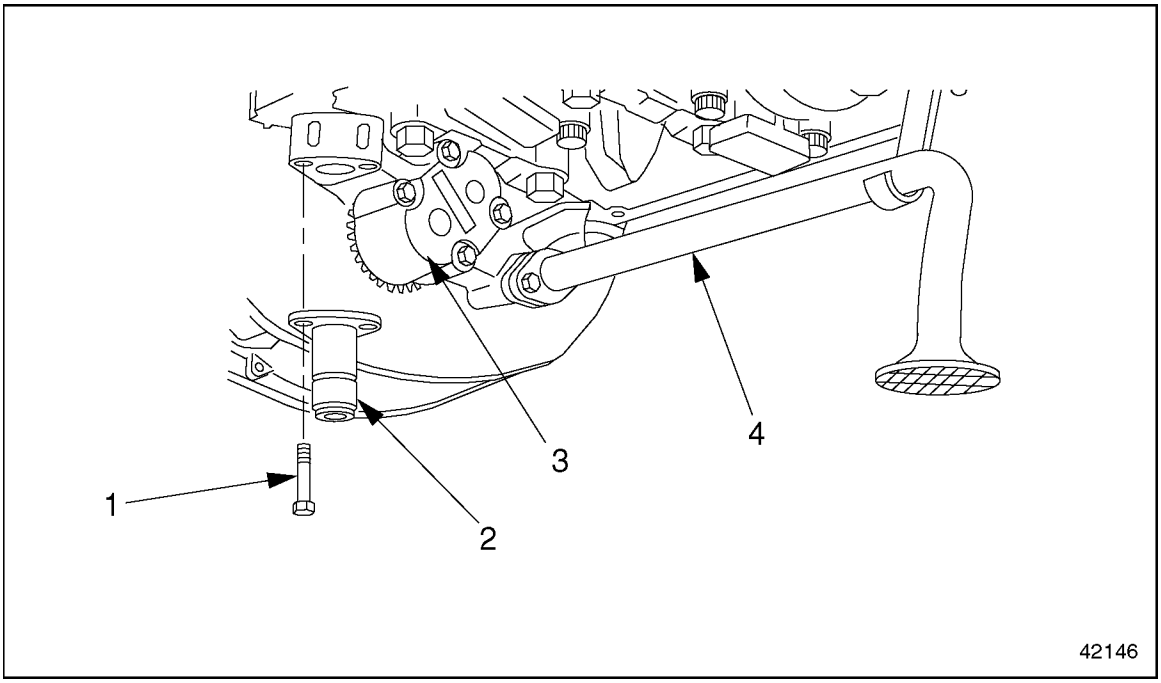

1. Valve Mounting Bolt
2. Pressure Limiting Valve
3. Oil Pump
4. Sump Pipe

Figure 3-12 Pressure Limiting Valve Removal

4. Remove the bolt attaching the oil pump to the cylinder block. Remove the oil pump from the oil pan.
5. Thoroughly clean the contact surfaces of the oil pump and cylinder block.

 Copyright © 2004 DETROIT DIESEL CORPORATION

https://truckmanualshub.com/

3.4.2 Oil Pump Disassembly

Disassemble the oil pump unit as follows:

1. Remove the oil pump from the cylinder block. Refer to section 3.4.1.
2. Remove the face plate mounting bolts and remove the face plate from the oil pump housing. See Figure 3-13.

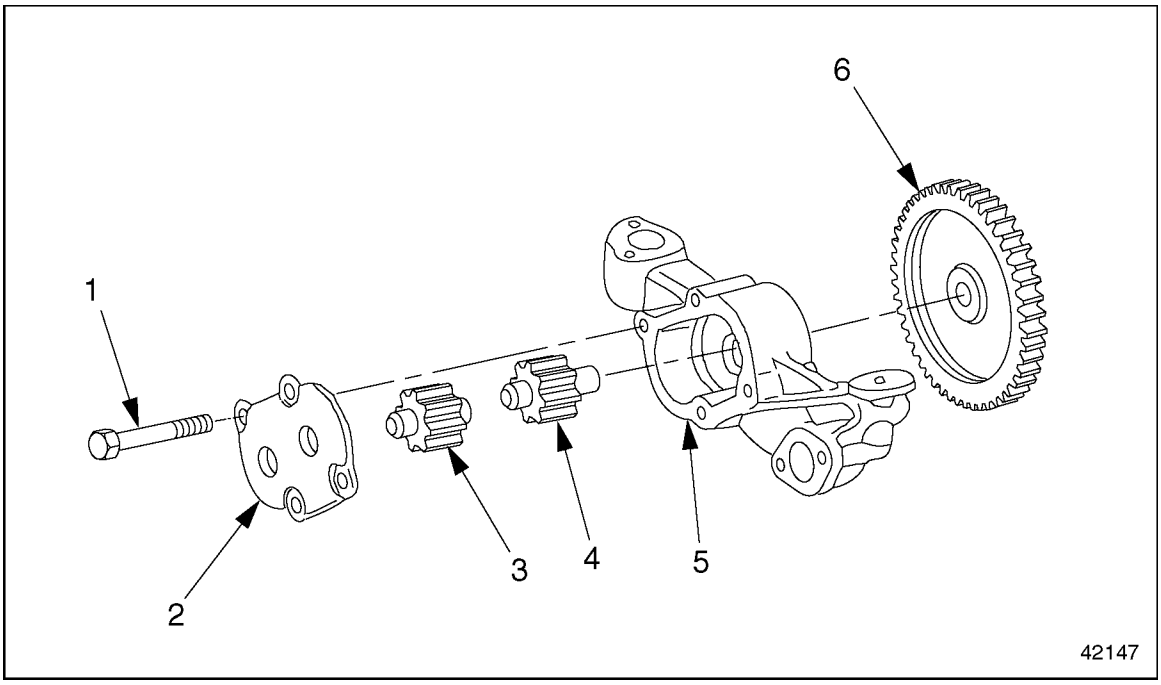

1. Face Plate Mounting Bolt
2. Face Plate
3. Idler Gear
4. Pump Drive Gear
5. Pump Housing
6. Drive Wheel

Figure 3-13 Oil Pump (exploded view)

3. Remove the idler gear from the pump housing.
4. Using an appropriate drift, press the drive wheel off the pump drive gear.
5. Remove the pump drive gear from the pump housing.
6. Inspect the idler gear, pump drive gear, face plate, and pump housing for damage and excessive wear. Replace any worn or damaged parts.

NOTE:
If either the idler gear or pump drive gear needs replacing, replace both gears as a set.

All information subject to change without notice.
6SE412 0403 Copyright © 2004 DETROIT DIESEL CORPORATION

7. Check the idler and pump drive gears. Check their seats in the pump housing and face plate. Listed in Table 3-1 are the acceptable limits.

Description	mm (inch)
Diameter of Shaft Seat (in pump housing and face plate)	22.000-22.021 (0.8661-0.8670)
Diameter of Idler Gear and Pump Drive Gear Shaft	21.93-21.94 (0.8634-0.8638)
Clearance of Pump/Idler Gear to Walls of Pump Housing	0.030-0.122 (0.0012-0.0048)
Gear Backlash (clearance between gear cogs)	0.312-0.476 (0.0123-0.0187)

Table 3-1 Oil Pump Inspection Limits

[a] In the pump housing, measure the diameter of both gear seats, the idler gear seat and the pump drive gear seat. If the measurements are not within acceptable limits, replace the pump housing.

[b] Measure the diameter of both shaft seats in the face plate. If the measurements are not within acceptable limits, replace the face plate.

[c] Measure the diameter of the pump drive gear shaft and the idler gear shaft. If the measurements are not within acceptable limits, replace both gears as a set.

[d] Using a feeler gauge, measure the clearance between the gears and the pump housing wall. If the measurements are not within acceptable limits, replace both gears as a set.

[e] Using a feeler gauge, measure gear backlash (the clearance between two adjacent cogs on different gears). If the measurements are not within acceptable limits, replace both gears as a set.

3.4.3 Oil Pump Assembly

Assemble the oil pump unit as follows:

WARNING:

BURNS

To avoid injury from burning, use lifting tools and heat-resistant gloves when handling heated components.

1. Heat the drive wheel to approximately 176°F (80°C) in a hot water tank.

 Copyright © 2004 DETROIT DIESEL CORPORATION

https://truckmanualshub.com/

2. Seat the pump drive gear in the pump housing. Using an appropriate drift, press in the heated drive wheel until the pump drive gear projects slightly past the top of the drive wheel. See Figure 3-14.

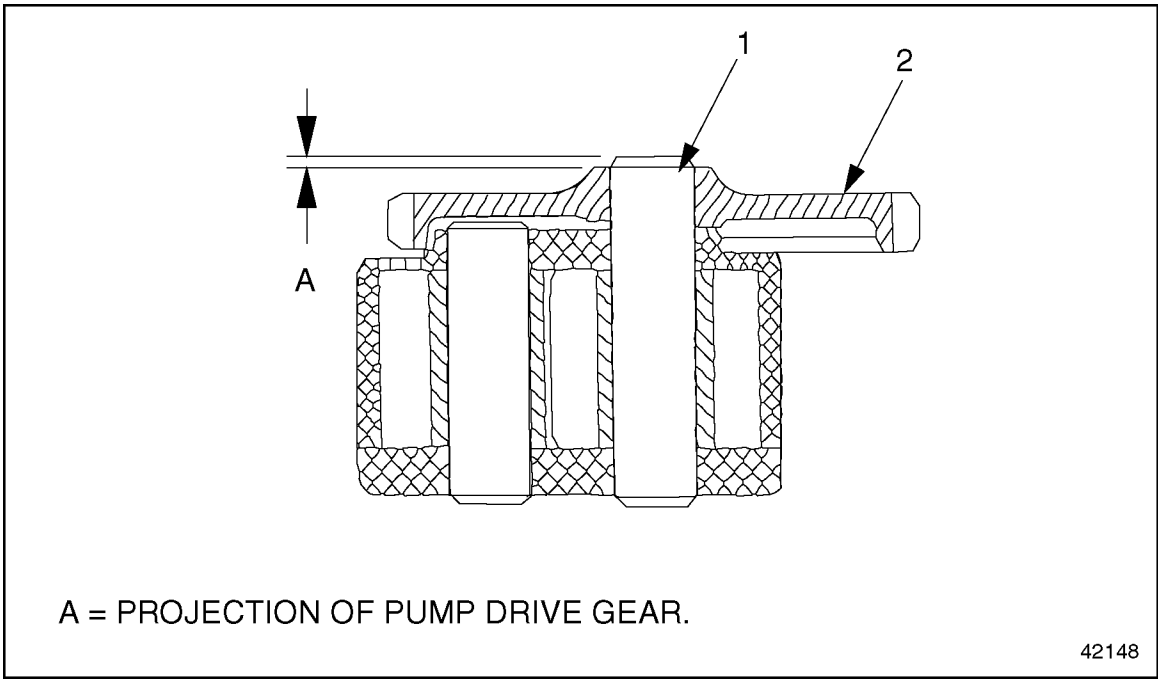

1. Pump Drive Gear
2. Drive Wheel

Figure 3-14 Positioning the Drive Wheel on the Pump Drive Gear

3. Using a feeler gauge, measure the projection of the pump drive gear. Adjust the position of the pump drive gear until the projection equals 0.5 mm (0.02 inch), as listed in Table 3-2.

Description	mm (inch)
Projection of Pump Drive Gear	0.5 (0.02)
Pump/Idler Gear End Play	0.050-0.128 (0.0020-0.005)

Table 3-2 Oil Pump Installation Specifications

4. Seat the idler gear in the pump housing.
5. Install the face plate on the pump housing. Tighten the mounting bolts 25 N·m (18 lb·ft).

All information subject to change without notice.
6SE412 0403 Copyright © 2004 DETROIT DIESEL CORPORATION

6. Using a dial gauge, measure the end play of the pump drive gear and idler gear against the walls of the pump housing. See Figure 3-15 for set-up and listed in Table 3-2 are the specifications.

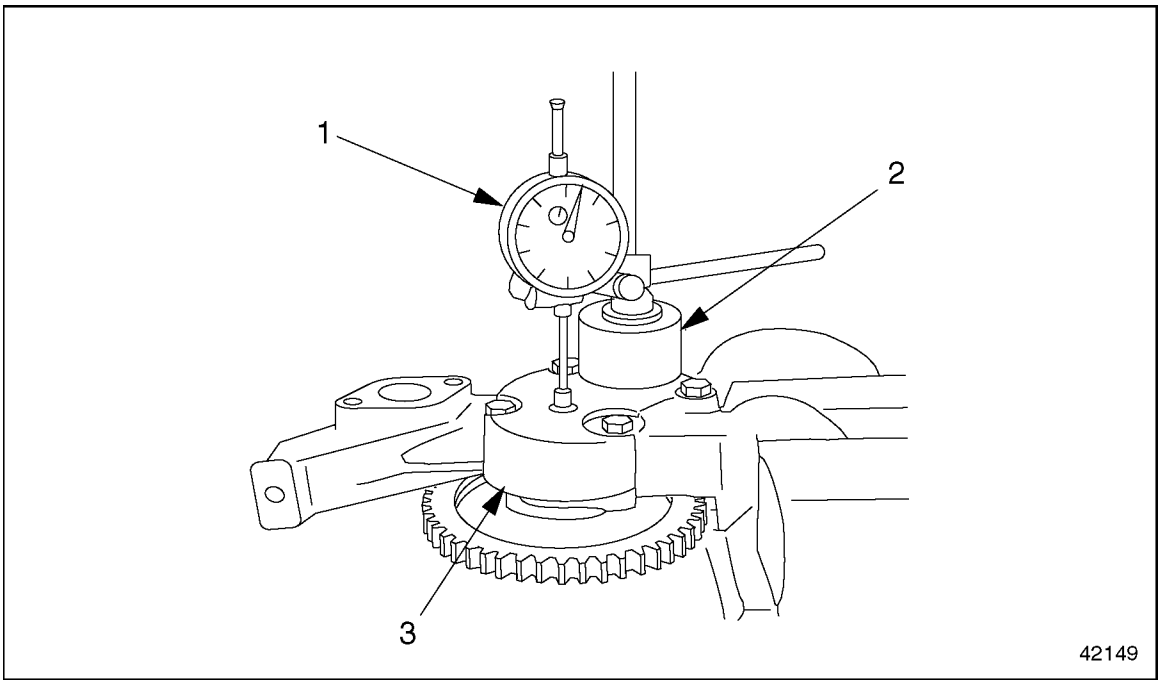

1. Dial Gauge
2. Support
3. Oil Pump

Figure 3-15 Measuring the Clearance of the Pump Drive Gears

[a] Secure the assembled oil pump in a vise, with the face plate pointing up.

[b] Rest the dial gauge support on the face plate.

[c] Set up the dial gauge so that the feeler on the end of the gauge touches the exposed end of the pump drive gear with some preload.

[d] Force the pump drive gear downward as far as it will go.

[e] At this position, adjust the scale of the dial gauge to "0" (zero).

[f] Now force the pump drive gear upward as far as it will go. Read the measurement on the dial gauge and make sure it conforms to the range listed in Table 3-2. Replace the pump, if necessary.

[g] Repeat this procedure for the idler gear.

7. Install the oil pump in the cylinder block. Refer to section 3.4.4.

 Copyright © 2004 DETROIT DIESEL CORPORATION

https://truckmanualshub.com/

3.4.4 Oil Pump Installation

Install the oil pump assembly as follows:

1. Coat the contact surface between the block and the oil pump with Loctite 574.
2. Position the oil pump on the cylinder block. Make sure the teeth on the drive wheel of the oil pump mesh with the teeth of the crankshaft drive gear. Tighten the oil pump mounting bolt 35 N·m (26 lb·ft).

NOTE:
It may be necessary to rock the pump counterclockwise so the teeth of the drive wheel can properly align with the crankshaft drive gear.

3. Install the pressure limiting valve on the oil pump. Tighten the valve mounting bolt 35 N·m (26 lb·ft).
4. Install the sump pipe. Tighten all mounting bolts 25 N·m (18 lb·ft).
   [a] Install the sump pipe bracket on the cylinder block.
   [b] Install the sump pipe, with a new gasket, on the oil pump.
5. Install the oil pan with a new gasket. Refer to section 3.1.2.
6. Fill the engine oil circuit.

WARNING:

PERSONAL INJURY

Diesel engine exhaust and some of its constituents are known to the State of California to cause cancer, birth defects, and other reproductive harm.

- ☐ **Always start and operate an engine in a well ventilated area.**
- ☐ **If operating an engine in an enclosed area, vent the exhaust to the outside.**
- ☐ **Do not modify or tamper with the exhaust system or emission control system.**

7. Start the engine and check for leaks.
8. Check the engine oil level and add oil if necessary.

All information subject to change without notice.
6SE412 0403 Copyright © 2004 DETROIT DIESEL CORPORATION

3.5 EGR OIL PUMP AND PICK UP TUBE

In the EPA 04 EGR engine, there are minor changes to the oil pump. The EGR engine has a higher oil output now. There are larger internal gears compared to the EPA 98 non-EGR version which has smaller internal gears. See Figure 3-16.

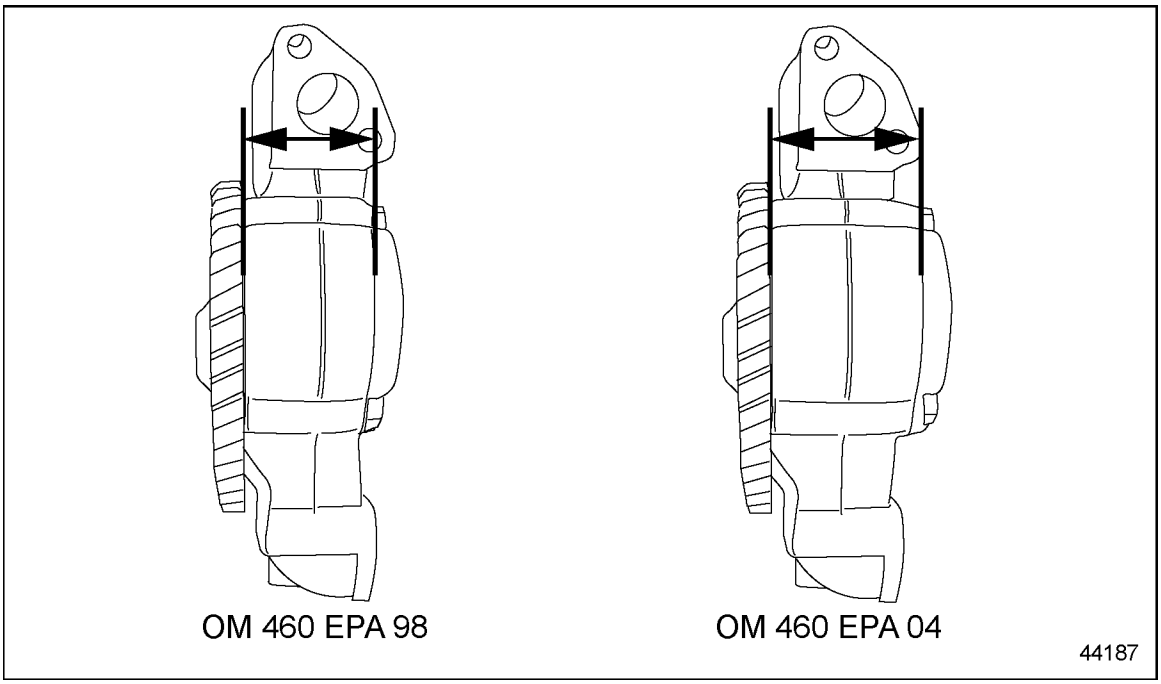

Figure 3-16 Comparison on Oil Pump Internal Gears

 Copyright © 2004 DETROIT DIESEL CORPORATION

https://truckmanualshub.com/

The oil pick up tube in 3mm longer in length. The removal and installation procedures are the same for the non-EGR and EGR engine. See Figure 3-17.

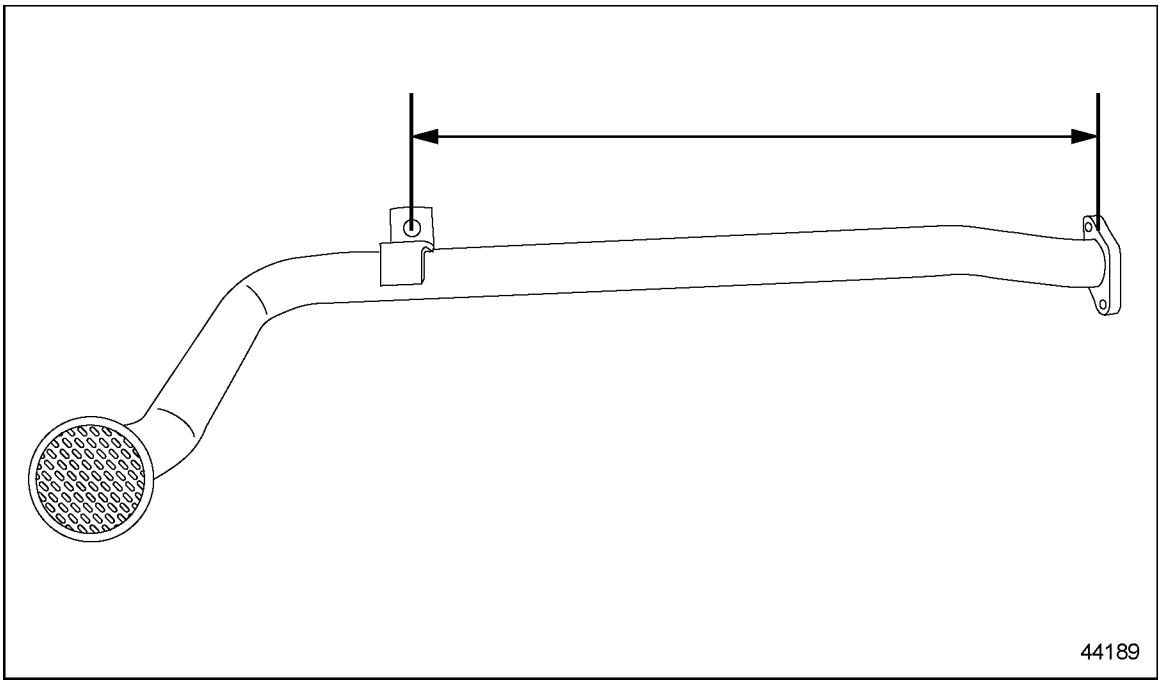

Figure 3-17 Oil Pick Up Tube in the EPA 04 EGR Engine

All information subject to change without notice.
6SE412 0403 Copyright © 2004 DETROIT DIESEL CORPORATION

https://truckmanualshub.com/

3.6 OIL FILTER

Perform the following procedures for removal and installation of the oil pump.

3.6.1 Oil Filter Element Replacement

Replace the oil filter element as follows:

1. Clean the outside of the oil filter housing, then unscrew the oil filter cap from the housing. See Figure 3-18.

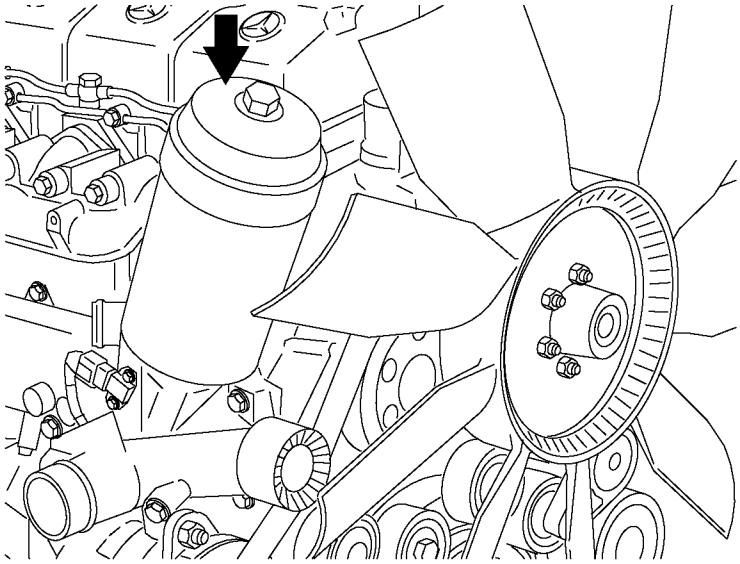

Figure 3-18 Oil Filter Cap

NOTE:
Use care to prevent foreign objects from entering the filter housing.

 Copyright © 2004 DETROIT DIESEL CORPORATION

https://truckmanualshub.com/

2. Unscrew the cap and filter and allow the oil to drain into the housing. After draining, remove the assembly from the housing. See Figure 3-19.

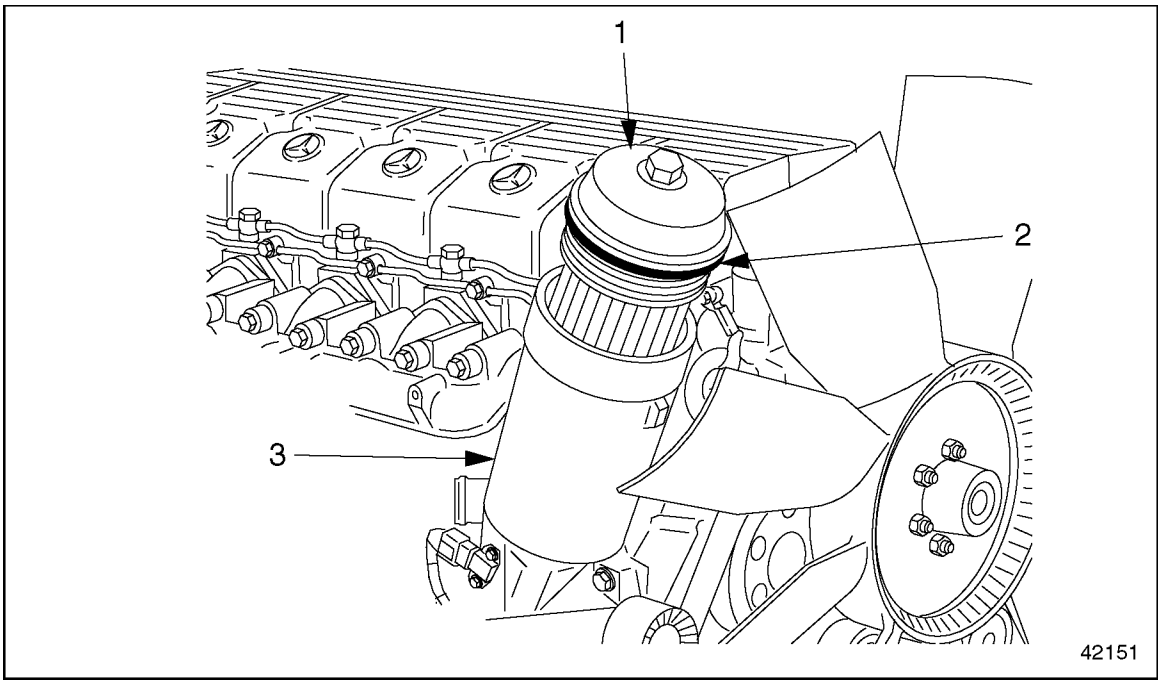

1. Oil Filter Cap
2. O-ring
3. Oil Filter Housing

Figure 3-19 Oil Filter Element Replacement

3. Remove the element by pressing and twisting the side and detaching it from the cap.
4. Remove the oil filter O-ring and discard it. Lightly grease a new O-ring with engine oil and install it.
5. Insert a new filter element into the housing.
6. Install the cap on the filter and tighten the cap nut 25 N·m (18 lb·ft).

All information subject to change without notice.
6SE412 0403 Copyright © 2004 DETROIT DIESEL CORPORATION

WARNING:

PERSONAL INJURY

Diesel engine exhaust and some of its constituents are known to the State of California to cause cancer, birth defects, and other reproductive harm.

- ☐ **Always start and operate an engine in a well ventilated area.**
- ☐ **If operating an engine in an enclosed area, vent the exhaust to the outside.**
- ☐ **Do not modify or tamper with the exhaust system or emission control system.**

7. Start the engine and check for leaks.
8. Check the engine oil level and add oil if necessary.

 Copyright © 2004 DETROIT DIESEL CORPORATION

https://truckmanualshub.com/

3.7 OIL HEAT EXCHANGER AND FILTER HOUSING

Perform the following procedures for removal and installation of the oil heat exchanger and filter housing.

3.7.1 Oil Heat Exchanger and Filter Housing Removal

Remove the oil heat exchanger and filter housing as follows:

WARNING:

HOT COOLANT

To avoid scalding from the expulsion of hot coolant, never remove the cooling system pressure cap while the engine is at operating temperature. Wear adequate protective clothing (face shield, rubber gloves, apron, and boots). Remove the cap slowly to relieve pressure.

1. When the engine is cool, drain the coolant from the radiator.
2. Remove the turbocharger from the engine.
3. Disconnect the coolant pump shunt line from the coolant pump inlet pipe and move it out of the way.
4. Remove the oil filter cap. Inspect the O-ring and filter for damage and replace them if necessary. Drain the oil remaining in the filter into a clean container.
5. Disconnect the wiring harness from the oil pressure/temperature sensor.

All information subject to change without notice.
6SE412 0403 Copyright © 2004 DETROIT DIESEL CORPORATION

6. Remove the oil filter/heat exchanger housing from the cylinder block. See Figure 3-20. Catch any oil that drains out in a clean container. Discard the gasket and set aside the housing bolts for later installation.

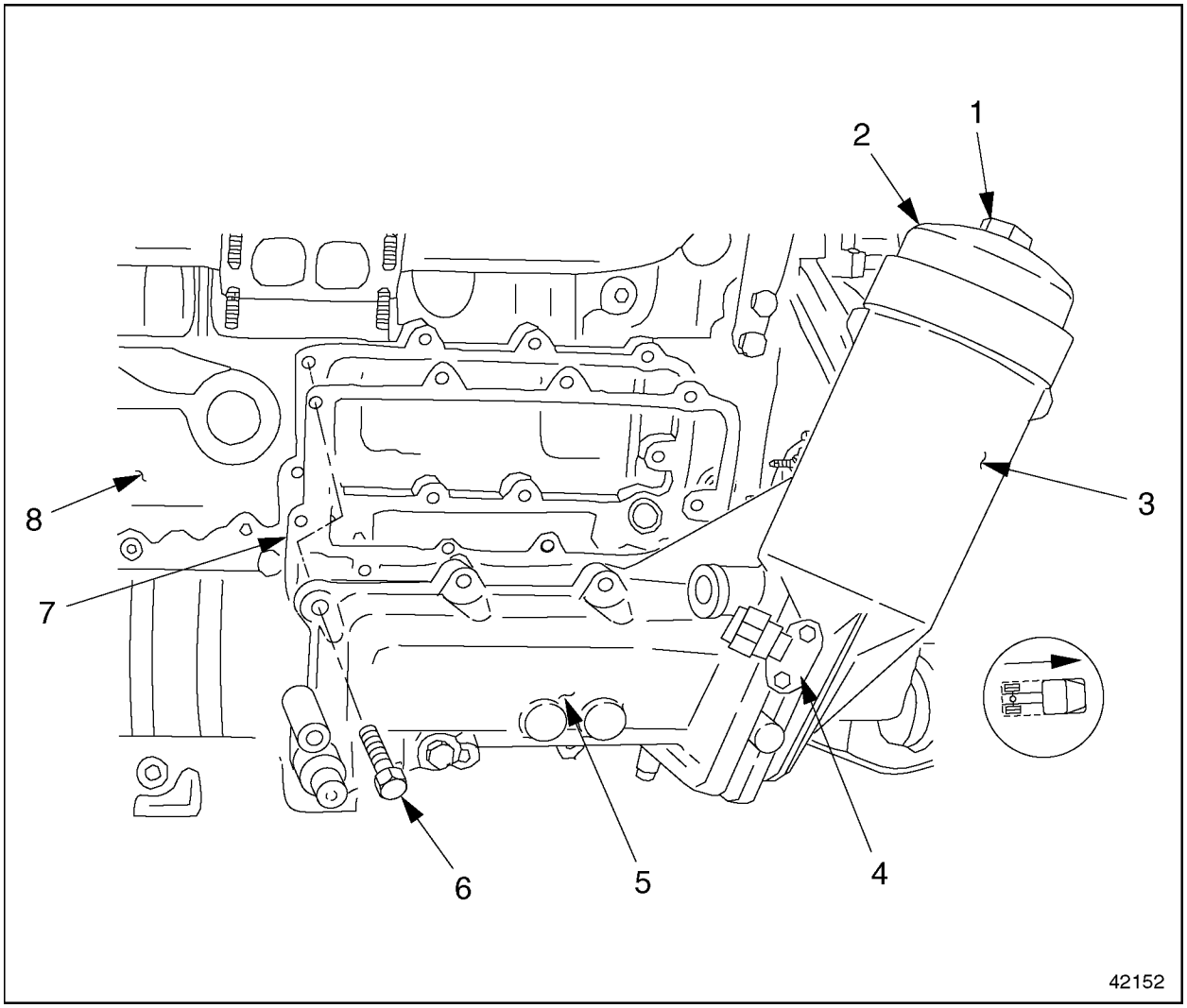

1. Oil Filter Cap Nut
2. Oil Filter Cap
3. Oil Filter Housing
4. Oil Pressure/Temperature Sensor
5. Heat Exchanger Housing
6. Housing Bolt
7. Gasket
8. Cylinder Block

Figure 3-20 Heat Exchanger Housing Removal

NOTE:
The oil filter housing and the heat exchanger housing are made from the same casting.

 Copyright © 2004 DETROIT DIESEL CORPORATION

https://truckmanualshub.com/

7. Remove the oil heat exchanger (oil radiator) from the heat exchanger housing. Discard the gaskets and save the heat exchanger bolts for later installation.

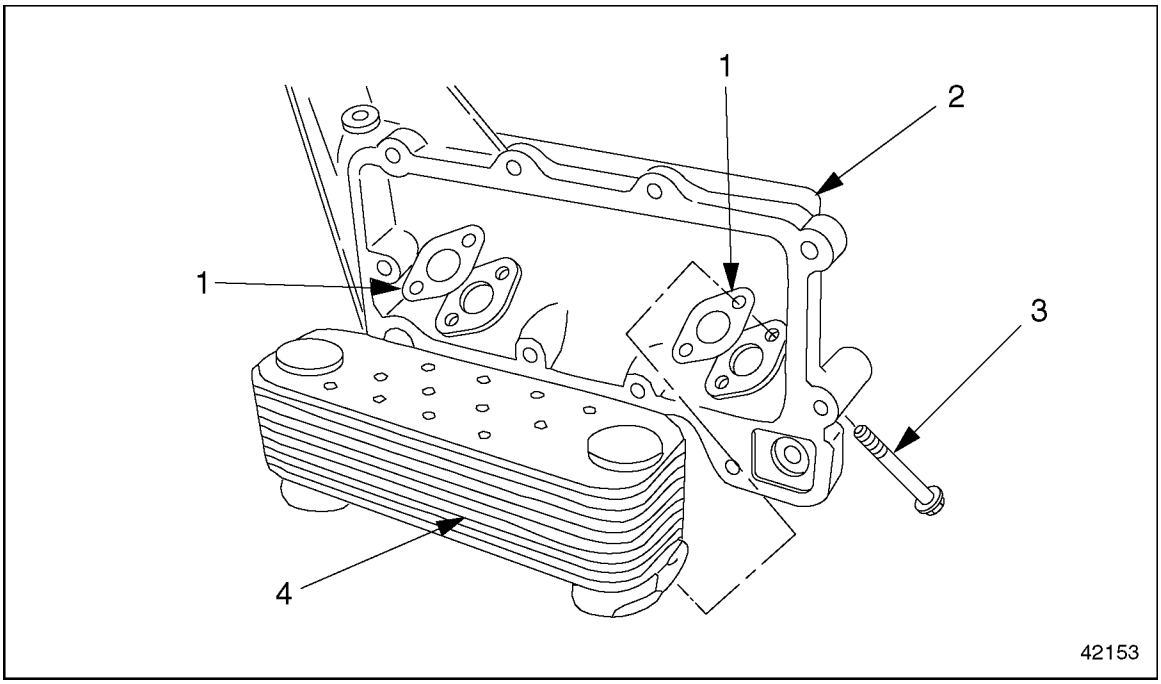

1. Gasket
2. Heat Exchanger Housing
3. Heat Exchanger Bolt
4. Oil Heat Exchanger

Figure 3-21 Heat Exchanger Assembly (typical)

8. Remove the oil pressure/temperature sensor from the heat exchanger/filter housing.

3.7.2 Oil Heat Exchanger and Filter Housing Installation

Install the oil heat exchanger and filter housing as follows:

1. Check the oil heat exchanger and the inside of the heat exchanger housing for corrosion, contamination by metal particles, or abrasive material, such as sand.
   [a] If corrosion is found, clean or replace the oil heat exchanger, as necessary.
   [b] Clean the mating surfaces of the oil heat exchanger and heat exchanger housing. Remove any bits of adhering gasket material.
2. Install the oil heat exchanger and new gaskets on the heat exchanger housing. Tighten the heat exchanger bolts 25 N·m (18 lb·ft).

All information subject to change without notice.
6SE412 0403 Copyright © 2004 DETROIT DIESEL CORPORATION

3. Install the heat exchanger housing on the cylinder block. Install the housing bolts and tighten them in the order shown in see Figure 3-22. Tighten each bolt 60 N·m (44 lb·ft).

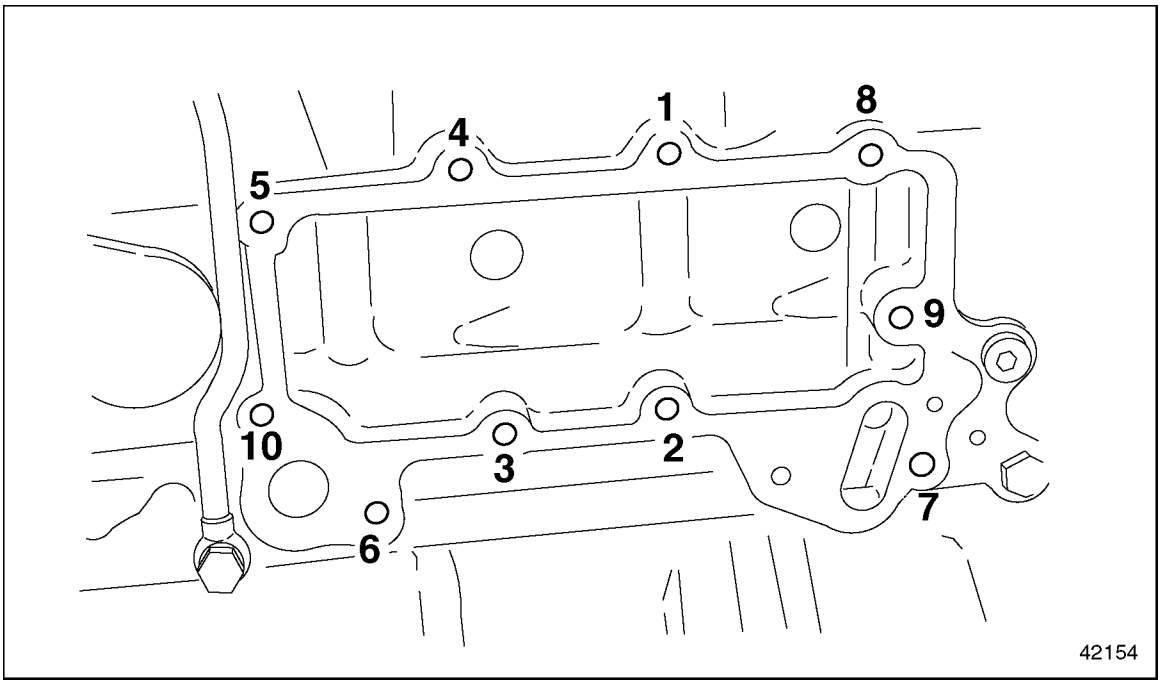

Figure 3-22 Tightening Pattern, Heat Exchanger Housing Bolts

[a] Clean the mating surfaces of the heat exchanger housing and the cylinder block. Remove any bits of adhering gasket material.

[b] Replace the heat exchanger housing gasket.

 Copyright © 2004 DETROIT DIESEL CORPORATION

https://truckmanualshub.com/

4. Install a new filter element and O-ring in the oil filter housing. See Figure 3-23.

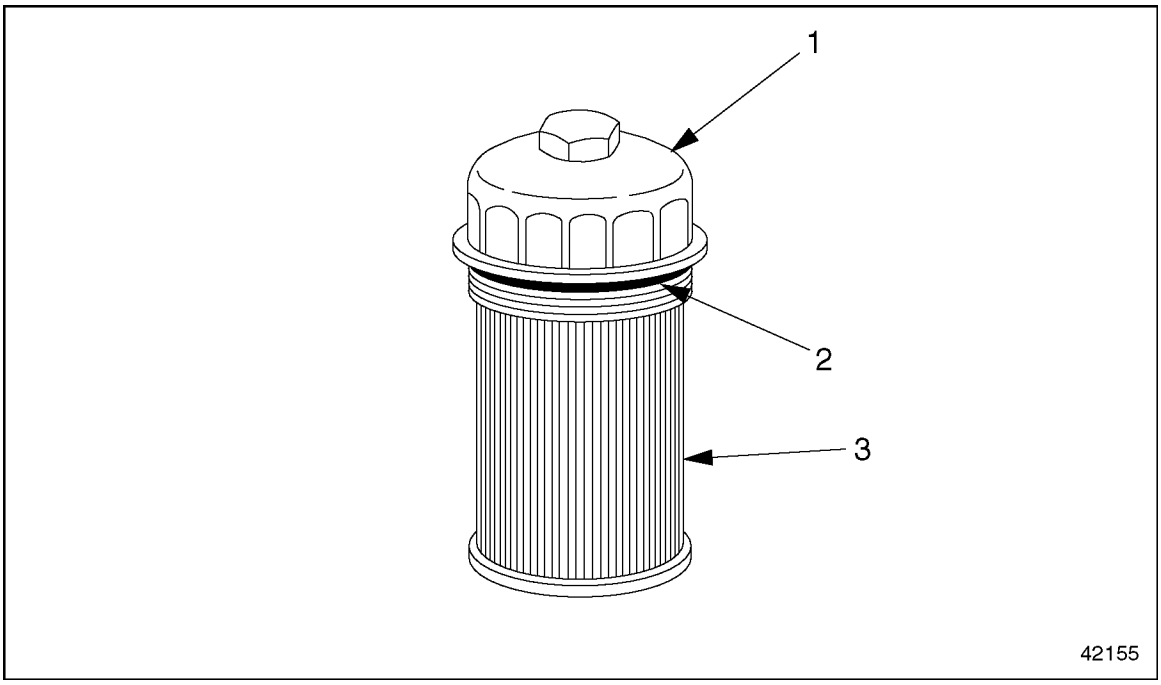

1. Oil Filter Cap
2. O-ring
3. Oil Filter Element

Figure 3-23 Oil Filter Assembly

5. Install the oil filter cap. Tighten the cap nut 25 N·m (18 lb·ft).
6. Install the oil pressure/temperature sensor on the heat exchanger/filter housing.
7. Connect the wiring harness to the oil pressure/temperature sensor.
8. Install the turbocharger on the engine. Refer to section 6.3.3.
9. Connect the coolant pump shunt line to the coolant pump inlet pipe.
10. Fill the cooling system. Refer to section 4.1.1.

All information subject to change without notice.
6SE412 0403 Copyright © 2004 DETROIT DIESEL CORPORATION

https://truckmanualshub.com/

WARNING:

PERSONAL INJURY

Diesel engine exhaust and some of its constituents are known to the State of California to cause cancer, birth defects, and other reproductive harm.

- ☐ **Always start and operate an engine in a well ventilated area.**
- ☐ **If operating an engine in an enclosed area, vent the exhaust to the outside.**
- ☐ **Do not modify or tamper with the exhaust system or emission control system.**

11. Start the engine. Check the gauge for the correct oil pressure; check the oil lubrication system and the coolant pump inlet pipe for leaks. The correct oil pressures are listed in Table 3-3.

Engine Speed	Minimum Pressure
At idling rpm	50 kPa (7 psi)
At maximum rpm	250 kPa (36 psi)

Table 3-3 Engine Oil Pressures

 Copyright © 2004 DETROIT DIESEL CORPORATION

https://truckmanualshub.com/

3.8 OIL PRESSURE AND TEMPERATURE SENSOR

Perform the following procedures for removal and installation of the oil pressure and temperature sensor.

3.8.1 Oil Pressure and Temperature Sensor Removal

Removal the oil pressure and temperature sensor as follows:

1. Loosen the oil filter cap. Lift up the cap and filter to allow the oil to drain. Inspect the O-ring for damage and replace if necessary.
2. Disconnect the wiring connector from the oil pressure/temperature sensor. See Figure 3-24.

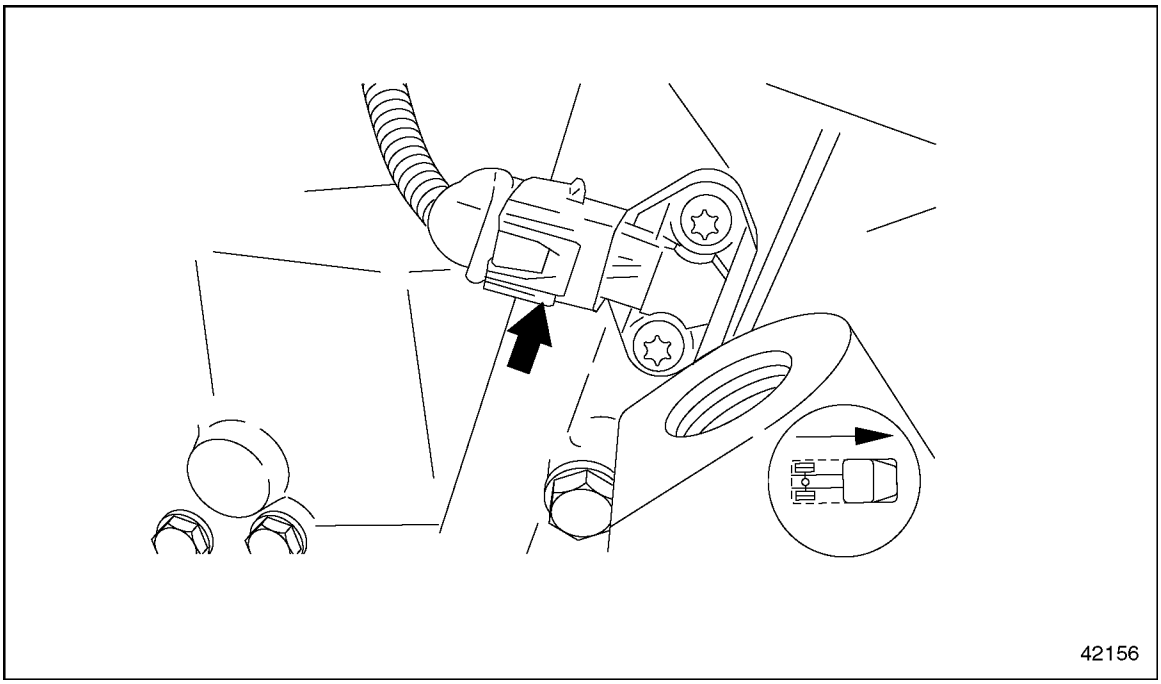

Figure 3-24 Sensor Installation

3. Remove the oil pressure/temperature sensor.

3.8.2 Oil Pressure and Temperature Sensor Installation

Install the oil pressure and temperature sensor as follows:

1. Position the oil pressure/temperature sensor and install the mounting screws. Tighten the fasteners 10 N·m (7 lb·ft).
2. Connect the wiring harness at the oil temperature sensor.
3. Using a new O-ring (if necessary), install the oil filter cap. Tighten the nut 25 N·m (18 lb·ft).

All information subject to change without notice.
6SE412 0403 Copyright © 2004 DETROIT DIESEL CORPORATION

https://truckmanualshub.com/

WARNING:

PERSONAL INJURY

Diesel engine exhaust and some of its constituents are known to the State of California to cause cancer, birth defects, and other reproductive harm.

- ☐ **Always start and operate an engine in a well ventilated area.**
- ☐ **If operating an engine in an enclosed area, vent the exhaust to the outside.**
- ☐ **Do not modify or tamper with the exhaust system or emission control system.**

4. Start the engine. Check the gauge for the correct oil pressure; check the lubrication system for leaks.
5. Check and add engine oil as needed.

 Copyright © 2004 DETROIT DIESEL CORPORATION

https://truckmanualshub.com/

All information subject to change without notice.
6SE412 0403 Copyright © 2004 DETROIT DIESEL CORPORATION

https://truckmanualshub.com/

3.A ADDITIONAL INFORMATION

Description **Page**

SPECIFICATIONS 3-36
Lubrication System 3-36
Oil Pump 3-37
Oil Heat Exchanger 3-38

 Copyright © 2004 DETROIT DIESEL CORPORATION

https://truckmanualshub.com/

SPECIFICATIONS

This section contains the specifications for servicing the engine.

Lubrication System

Listed in Table 3-4 is the lubricating oil capacity for the engine. The lubrication system torque values are listed in Table 3-5. and listed in Table 3-6.

Description	All Engines
Oil Pan Capacity	42 L (44.4 quarts)

Table 3-4 Lubricating Oil Capacity

Description	N·m (lb·ft)
Adaptor Nut (to oil pan)	50 (37)
Dipstick Guide Tube Fitting (to adaptor)	20 (15)
Heat Exchanger Housing Bolts (to block)	60 (44)
Heat Exchanger Bolts (to heat exchanger housing)	25 (18)
Oil Fill Tube Bolt (to oil pan)	25 (18)
Oil Fill Tube Retainer Bolt (to block)	25 (18)
Oil Filter Cap	25 (18)
Oil Pan Drain Plug	80 (59)
Oil Pan Bolts (to block)	35 (26)
Oil Pressure/Temperature Sensor Mounting Screws	8 (6)
Oil Pump Face Plate Mounting Bolts (to oil pump housing)	25 (18)
Oil Pump Mounting Bolt (to block)	35 (26)
Oil Spray Nozzle Hollow-Core Bolt	40 (30)
Pressure Limiting Valve Bolts (to block)	35 (26)
Sump Pipe Bracket Bolt	50 (37)
Sump Pipe Mounting Bolt (to oil pump)	25 (18)

Table 3-5 Torque Values

All information subject to change without notice.
6SE412 0403 Copyright © 2004 DETROIT DIESEL CORPORATION

Description	Torque, N·m (lb·ft)
Injector Unit Pump (IUP) Lubricator Bolt	20 (15)
Main Oil Gallery - Engine Block Rear bottom plug - M26 x 1.5	150 (110)
Main Oil Gallery - Inner Plug - M22 x 1.5	50 (37)
Main Oil Gallery - Engine Block Rear Top Plug - M24 x 1.5	120 (88)
Main Oil Gallery - Engine Block Front Plug - M22 X 1.5	100 (74)
Main Oil Gallery - Engine RIght Hand Side Top Plug before the Oil Filter Housing - M18 x 1.5	60 (44)
Main Oil Gallery - Engine Right Hand Side Bottom Plug before the Oil Filter Housing - M16 x 1.5	60 (44)
Main Oil Gallery - Engine Right Hand Side Bottom Plug after the Oil Filter Housing - M16 x 1.5	60 (44)

Table 3-6 Torque Values

Oil Pump

The oil pump inspection limits are listed in Table 3-7. Listed in Table 3-8 are the oil pump installation specifications.

Description	mm (inch)
Diameter of Shaft Seat (in pump housing and face plate)	22.000-22.021 (0.8661-0.8670)
Diameter of Idler Gear and Pump Drive Gear Shaft	21.93-21.94 (0.8634-0.8638)
Clearance of Pump/Idler Gear to Walls of Pump Housing	0.030-0.122 (0.0012-0.0048)
Gear Backlash (clearance between gear cogs)	0.312-0.476 (0.0123-0.0187)

Table 3-7 Oil Pump Inspection Limits

Description	mm (inch)
Projection of Pump Drive Gear	0.5 (0.02)
Pump/Idler Gear End Play	0.050-0.128 (0.0020-0.005)

Table 3-8 Oil Pump Installation Specifications

 Copyright © 2004 DETROIT DIESEL CORPORATION

https://truckmanualshub.com/

Oil Heat Exchanger

The minimum engine oil pressure is listed in Table 3-9.

Engine Speed	Minimum Pressure
At idling rpm	50 kPa (7 psi)
At maximum rpm	250 kPa (36 psi)

Table 3-9 Engine Oil Pressures

All information subject to change without notice.
6SE412 0403 Copyright © 2004 DETROIT DIESEL CORPORATION

https://truckmanualshub.com/

4 COOLING SYSTEM

Section **Page**

4.1	COOLING SYSTEM	4-3
4.2	COOLANT PUMP	4-8
4.3	EGR COOLANT PUMP	4-20
4.4	FRONT IDLER AND TENSIONER SUPPORT	4-22
4.5	THERMOSTAT	4-25
4.6	EGR THERMOSTAT HOUSING	4-30
4.7	COOLANT TEMPERATURE SENSOR	4-32
4.A	ADDITIONAL INFORMATION	4-35

https://truckmanualshub.com/

All information subject to change without notice.
6SE412 0403 Copyright © 2004 DETROIT DIESEL CORPORATION

4.1 COOLING SYSTEM

4.1.1 Cooling System Draining and Flushing

Drain and flush the cooling system as follows:

WARNING:

HOT COOLANT

To avoid scalding from the expulsion of hot coolant, never remove the cooling system pressure cap while the engine is at operating temperature. Wear adequate protective clothing (face shield, rubber gloves, apron, and boots). Remove the cap slowly to relieve pressure.

1. Open the cap on the surge tank slowly, to allow excess pressure to escape. Set the cap aside. See Figure 4-1.

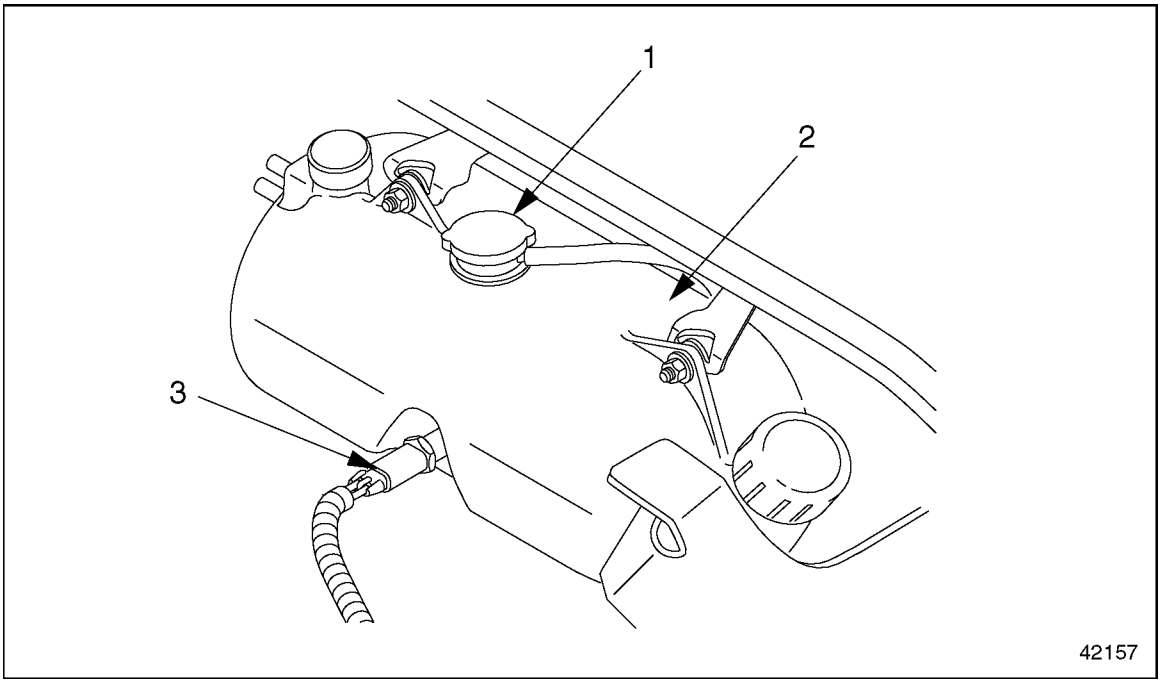

1. Cap
2. Surge Tank
3. Low-Coolant- Level Probe

Figure 4-1 Surge Tank

2. Open the water regulating valve for the heating system.

 Copyright © 2004 DETROIT DIESEL CORPORATION

https://truckmanualshub.com/

3. Drain the coolant from the radiator. See Figure 4-2. Cooling system capacity is listed in Table 4-1.

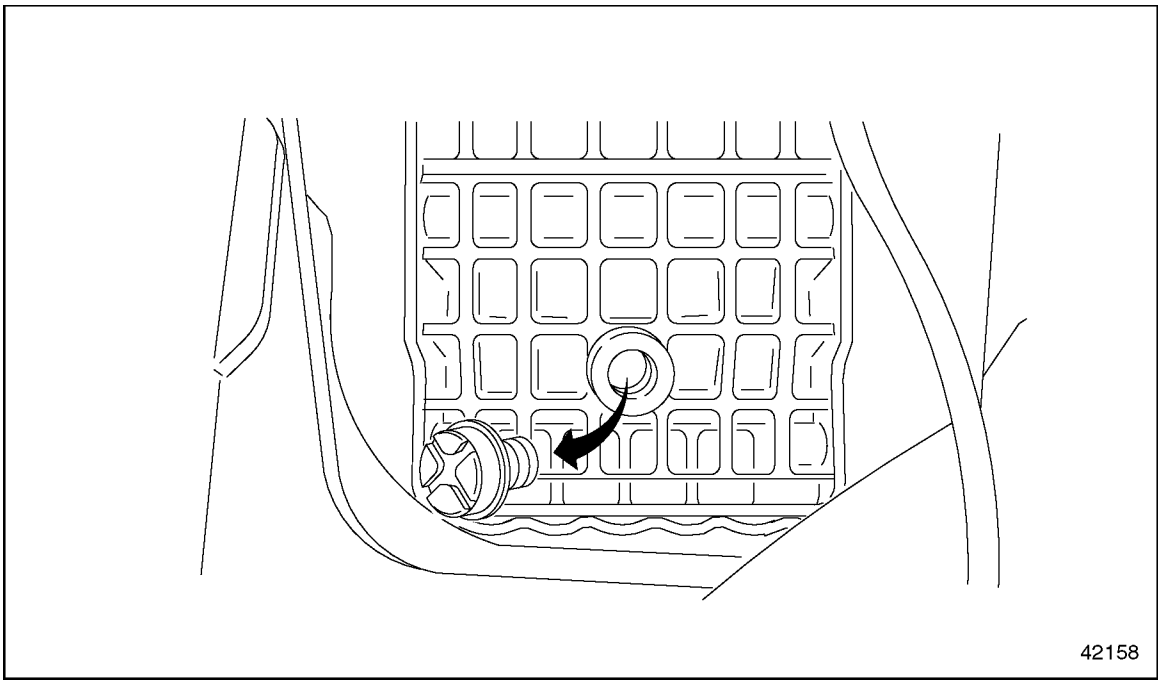

Figure 4-2 Coolant Drain Plug

All information subject to change without notice.
6SE412 0403 Copyright © 2004 DETROIT DIESEL CORPORATION

https://truckmanualshub.com/

Description	Capacity in liters (Quarts)
Engine Coolant Capacity (all vehicles	
Engine capacity*	30.0 (31.7)
Century Class and Columbia Cooling System Capacity	
Total capacity†	57.4 (60.7)
Antifreeze quantity at 50 percent	28.7 (30.4)
Antifreeze quantity at 55 percent	31.6 (33.4)
Sterling A-Line and L-Line Cooling System Capacity	
Total capacity	53.8 (56.8)
Antifreeze quantity at 50 percent	26.9 (28.4)
Antifreeze quantity at 55 percent	29.6 (31.3)
FL112 Cooling System Capacity	
Total capacity	42.0 (44.4)
Antifreeze quantity at 50 percent	21.0 (22.2)
Antifreeze quantity at 55 percent	23.1 (24.4)

* Does not include capacity of cooling system.

†With 1200 sq. ft. radiator.

Table 4-1 Cooling System Capacity

[a] Place a receptacle underneath the coolant drain plug. Choose one that is large enough to hold the expected quantity of coolant.

NOTE:
Make sure the coolant can flow unobstructed into the receptacle.

[b] Open the coolant drain plug located on the bottom of the radiator.

 Copyright © 2004 DETROIT DIESEL CORPORATION

https://truckmanualshub.com/

WARNING:

EYE INJURY

To avoid injury from flying debris when using compressed air, wear adequate eye protection (face shield or safety goggles) and do not exceed 40 psi (276 kPa) air pressure.

4. Flush the radiator.
   [a] Attach a flushing gun nozzle to the radiator outlet.
   [b] Run water in until the radiator is full.
   [c] Apply no more than 140 kPa (20 psi) air pressure intermittently to help dislodge sediment buildup in the core.

NOTICE:

When flushing the radiator, do not apply more than 20 psi (140 kPa) air pressure. Excessive pressure can damage the radiator or heater core.

5. Drain the radiator, and flush the radiator until clean water flows from the radiator. Remove the flushing gun.
6. When the coolant has drained, install the coolant drain plug on the bottom of the radiator.
7. Add coolant in the specified concentration. Listed in Table 4-1 is the cooling system capacity. Listed in Table 4-2 is the coolant mixing ratio.

Antifreeze Protection Down to °F (°C)	Water Percentage by Volume	Corrosion-Inhibiting Antifreeze Percentage by Volume
-34 (-37)	50	50
-49 (-45)	40	Maximum 60

Table 4-2 Coolant Mixing Ratio

   [a] Tighten the coolant drain plug 30 N·m (22 ft·lb).
   [b] Add coolant up to the maximum fill level on the surge tank.
8. Check the coolant level and check the cooling system for leaks.

All information subject to change without notice.
6SE412 0403 Copyright © 2004 DETROIT DIESEL CORPORATION

https://truckmanualshub.com/

WARNING:

PERSONAL INJURY

Diesel engine exhaust and some of its constituents are known to the State of California to cause cancer, birth defects, and other reproductive harm.

- ☐ **Always start and operate an engine in a well ventilated area.**
- ☐ **If operating an engine in an enclosed area, vent the exhaust to the outside.**
- ☐ **Do not modify or tamper with the exhaust system or emission control system.**

[a] Start the engine and run it for about one minute at varying speeds to release air pockets in the cooling system.

[b] Check all hoses at the radiator, coolant pump, and surge tank for leaks.

[c] Check the coolant level and add more coolant if necessary.

9. Shut down the engine.
10. Close and tighten the cap on the surge tank.

 Copyright © 2004 DETROIT DIESEL CORPORATION

https://truckmanualshub.com/

4.2 COOLANT PUMP

Perform the following procedures for removal and installation of the coolant pump.

4.2.1 Coolant Pump Removal

Remove the coolant pump as follows:

WARNING:

HOT COOLANT

To avoid scalding from the expulsion of hot coolant, never remove the cooling system pressure cap while the engine is at operating temperature. Wear adequate protective clothing (face shield, rubber gloves, apron, and boots). Remove the cap slowly to relieve pressure.

1. Drain the coolant from the engine. Refer to section 4.1.1.
2. Remove the fan.
3. Release the tension on the main drive belt and the fan belt and set the belts aside

All information subject to change without notice.
6SE412 0403 Copyright © 2004 DETROIT DIESEL CORPORATION

4. Remove the fan support from the cylinder block. See Figure 4-3. Refer to section 4.7.1.

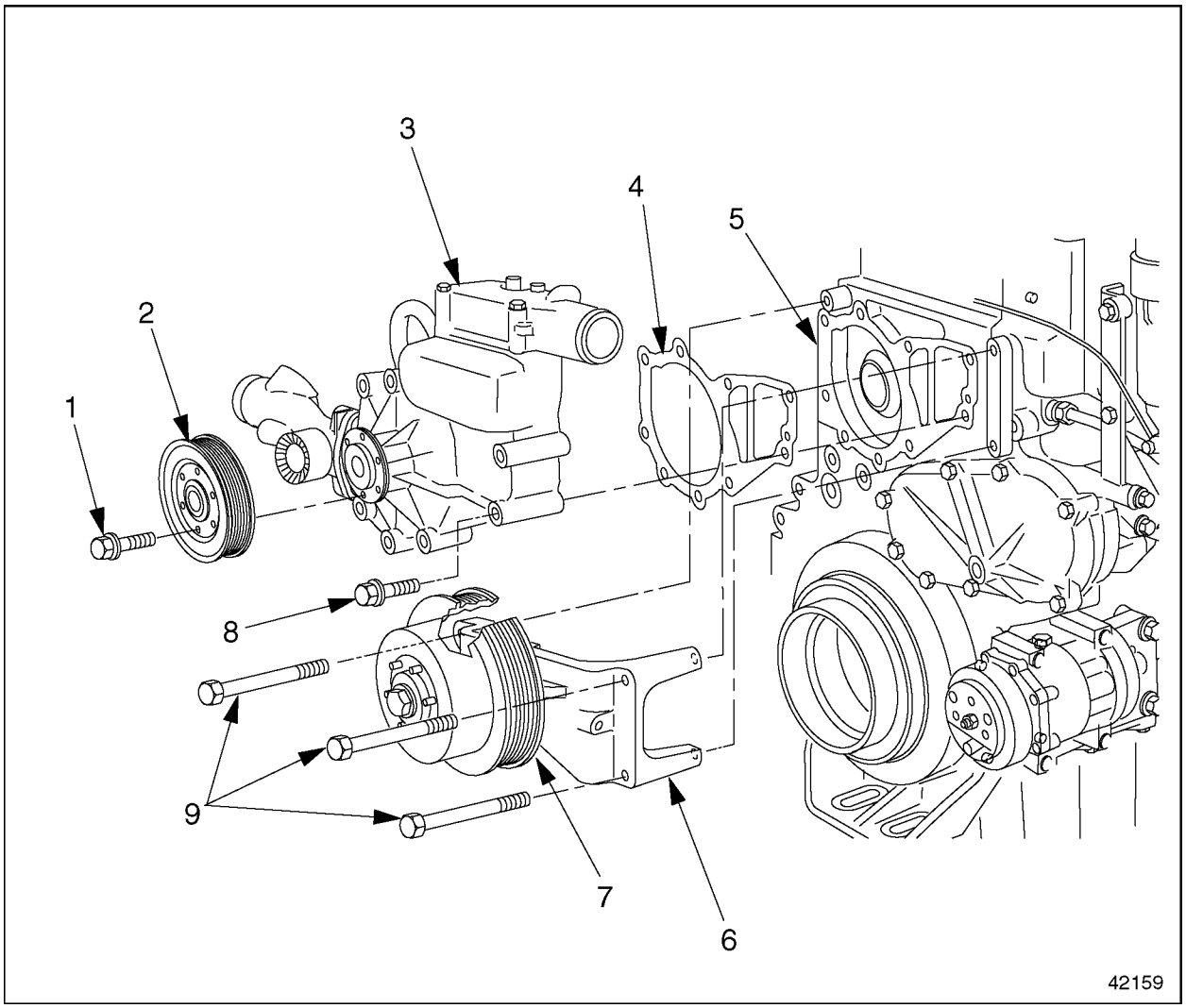

1. Coolant Pump Pulley Mounting Bolt
2. Coolant Pump Pulley
3. Coolant Pump Assembly
4. Gasket
5. Cylinder Block
6. Fan Support
7. Fan Pulley
8. Pump Mounting Bolt
9. Fan Support Mounting Bolt

Figure 4-3 Fan Support and Coolant Pump Removal

5. Remove the coolant pump pulley from the coolant pump housing.
6. Remove the mounting bolts from the front idler and tensioner support. Slide the support to the right-hand side of the engine. See Figure 4-4.
7. Remove the upper alternator mounting bolt, loosening the alternator enough to tilt it out of the way.

 Copyright © 2004 DETROIT DIESEL CORPORATION

https://truckmanualshub.com/

8. Remove the inlet pipe from the coolant pump housing. See Figure 4-4.

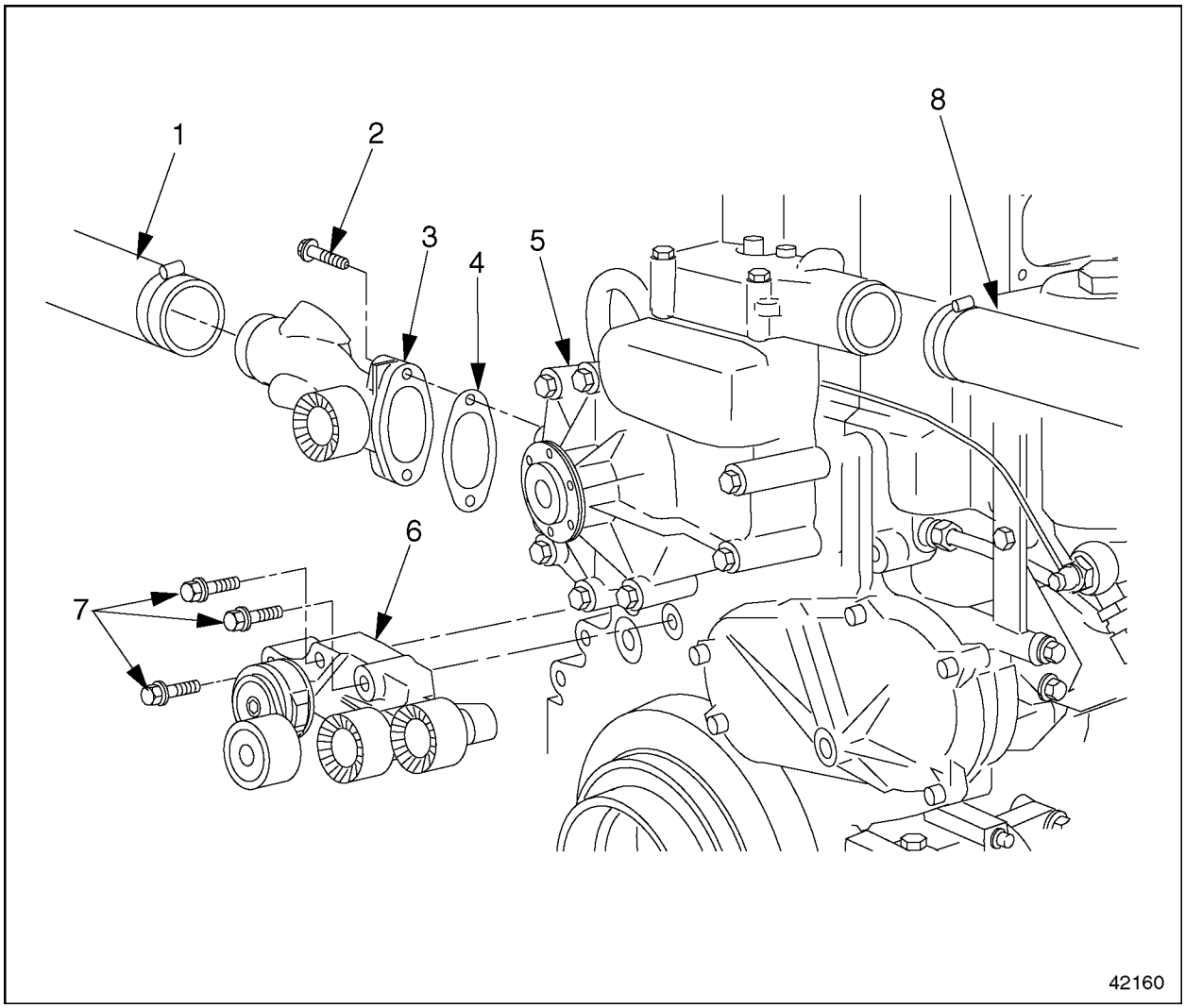

1. Lower Coolant Tube
2. Inlet Pipe Mounting Bolt
3. Inlet Pipe
4. Inlet Pipe Gasket
5. Coolant Pump Housing
6. Front Idler and Tensioner Support
7. Coolant Pump Support Mounting Bolt
8. Upper Coolant Tube

Figure 4-4 Coolant Pump Inlet Pipe (exploded view)

NOTE:
Catch any coolant that runs out of the inlet pipe or coolant pump in a suitable container.

9. Remove the upper coolant tube from the thermostat housing.
10. Remove the coolant pump from the cylinder block. Discard the gasket.
11. On both the coolant pump and the cylinder block, clean the sealing surfaces (where the gasket was attached) of any adhering bits of gasket material.

All information subject to change without notice.
6SE412 0403 Copyright © 2004 DETROIT DIESEL CORPORATION

12. Remove the thermostat housing from the coolant pump.

4.2.2 Coolant Pump Disassembly

Disassemble the coolant pump unit as follows:

1. Remove the coolant pump from the engine. Refer to section 4.2.1.
2. Using a puller, pull the coolant pump hub away from the bearing. See Figure 4-5.

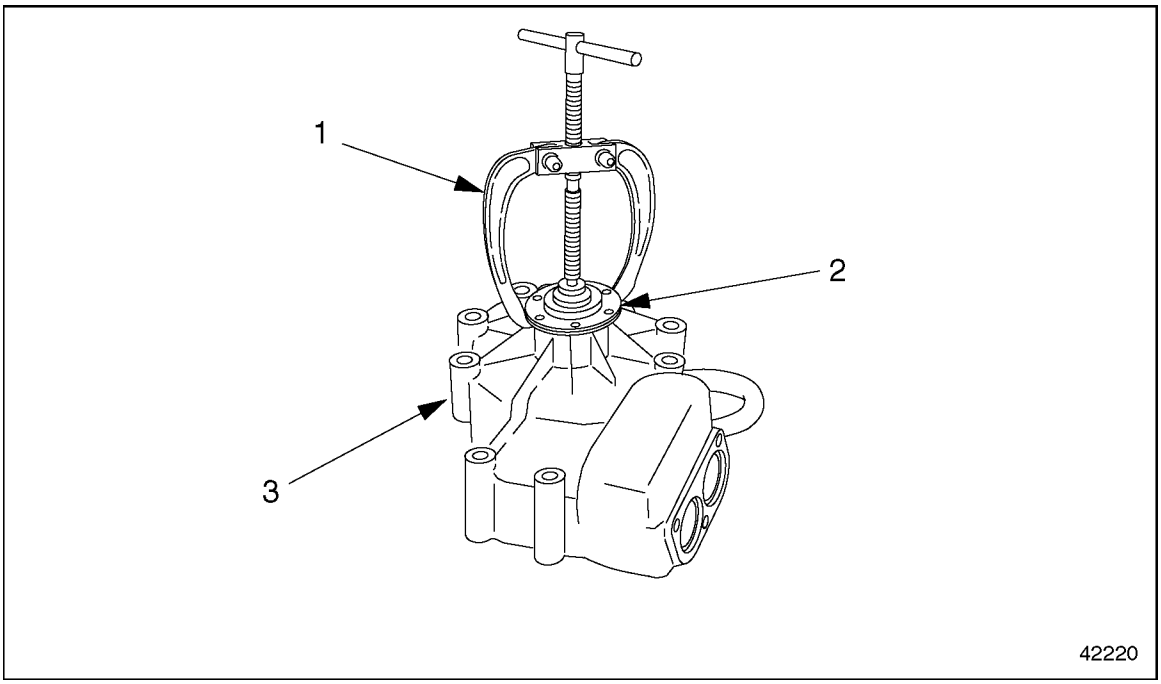

1. Puller
2. Hub
3. Coolant Pump Housing

Figure 4-5 Pulling the Hub

 Copyright © 2004 DETROIT DIESEL CORPORATION

https://truckmanualshub.com/

3. Remove the snap ring from the coolant pump housing. See Figure 4-6.

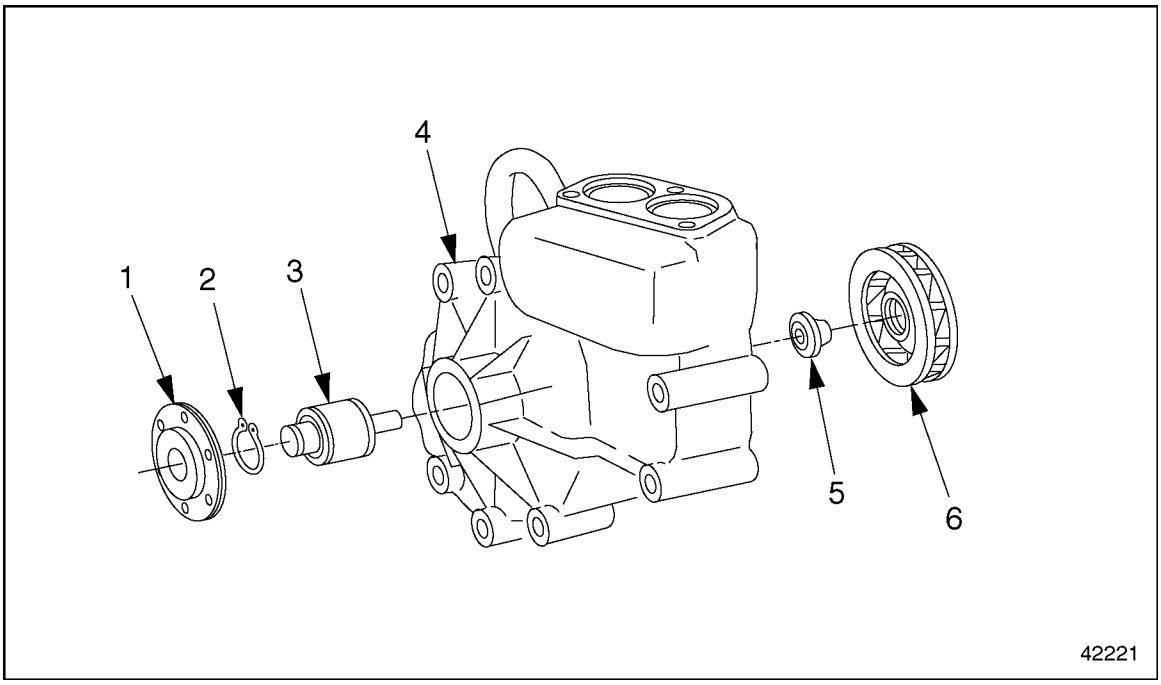

1. Hub
2. Snap Ring
3. Drive Shaft and Bearing Assembly
4. Coolant Pump Housing
5. Sleeve Seal
6. Impeller

Figure 4-6 Coolant Pump Assembly (exploded view)

All information subject to change without notice.
6SE412 0403 Copyright © 2004 DETROIT DIESEL CORPORATION

4. Using an appropriate drift, press the drive shaft and bearing assembly out of the impeller and through the coolant pump housing. This frees the impeller from the housing. See Figure 4-7.

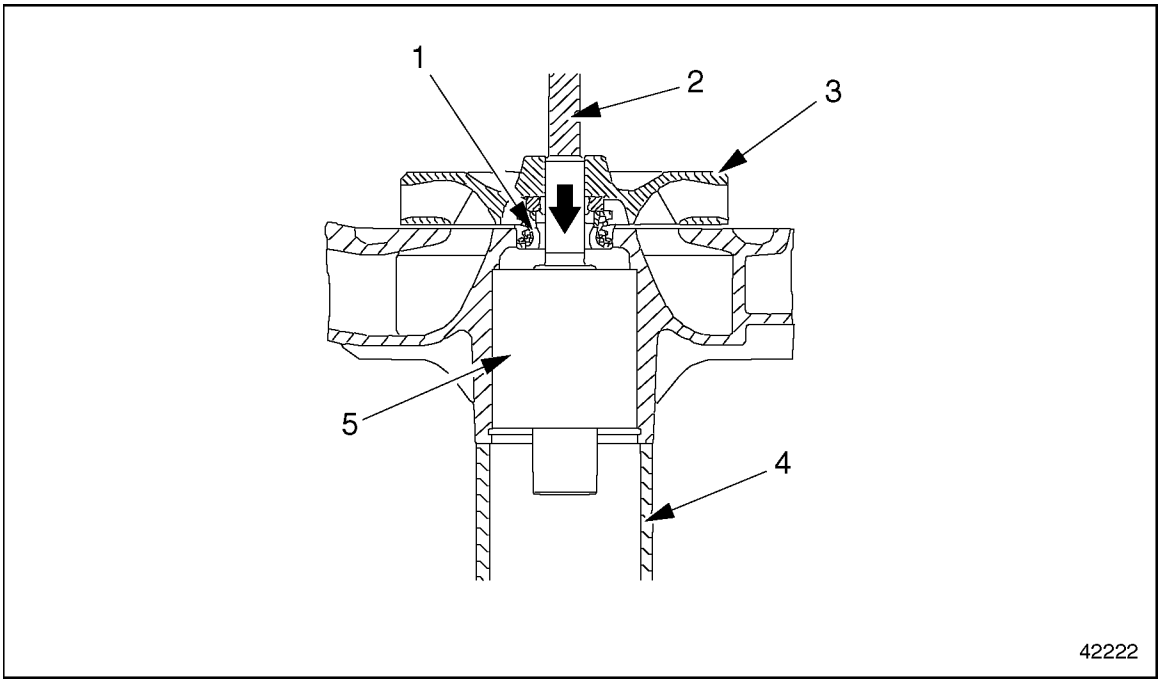

1. Sleeve Seal
2. Drift
3. Impeller
4. Receptacle
5. Drive Shaft and Bearing Assembly

Figure 4-7 Removing the Drive Shaft

5. Remove the sleeve seal from the coolant pump housing.

4.2.2.1 Coolant Pump Inspection

Inspect the coolant pump unit as follows:

1. Check all coolant pump components for signs of damage. Replace any damaged components.

 Copyright © 2004 DETROIT DIESEL CORPORATION

https://truckmanualshub.com/

2. Measure the following wear dimensions. Replace any component that is not within tolerance as Listed in Table 4-3.

Description	Wear Dimensions, mm (inch)
Drive Shaft Diameter (at the hub)	25.048-25.061 (0.9861-0.9867)
Hub Inside Diameter	24.995-25.008 (0.9841-0.9846)
Bearing Outside Diameter	54.981-54.994 (2.1646-2.1651)
Bearing Housing Diameter	54.930-54.960 (2.1626-2.1638)
Drive Shaft Diameter (at the impeller)	15.045-15.056 (0.5923-0.5928)
Impeller Inside Diameter	15.000-15.018 (0.5906-0.5913)
Impeller Outside Diameter	124-125 (4.88-4.92)
Impeller - Maximum Out-Of-Round	0.15 (0.0059)

Table 4-3 Coolant Pump Assembly Wear Dimensions

4.2.3 Coolant Pump Assembly

Assemble the coolant pump unit as follows:

1. Press the drive shaft and bearing assembly into the coolant pump housing. See Figure 4-8.

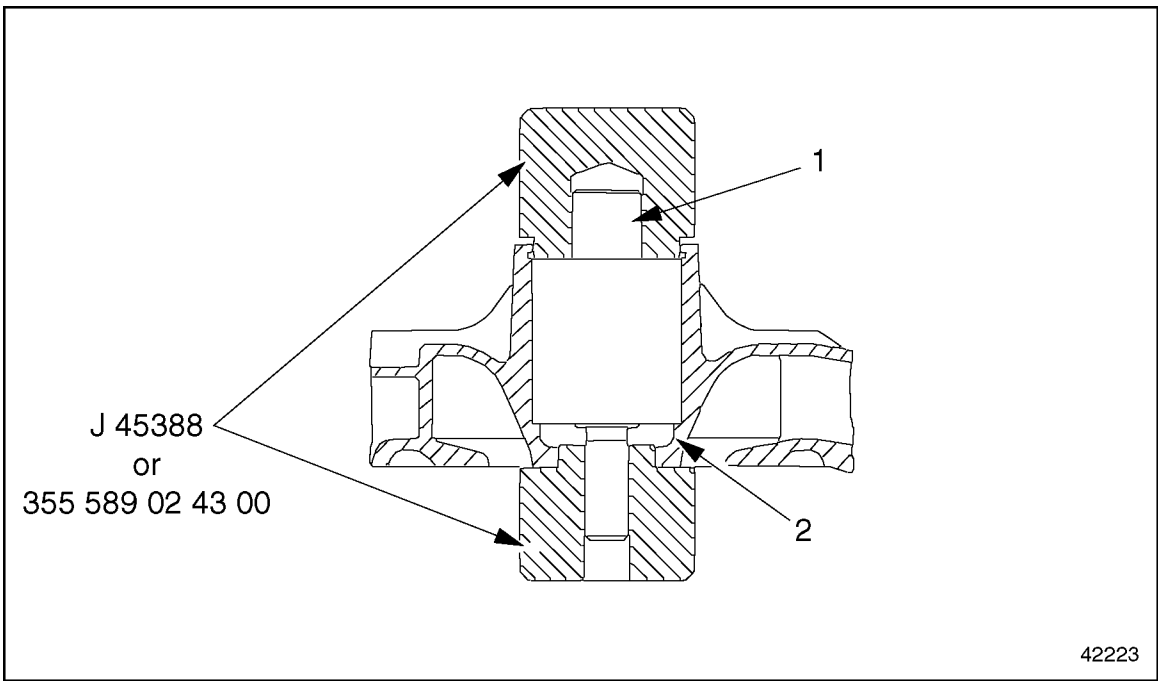

1. Drive Shaft
2. Coolant Pump Housing

Figure 4-8 Installing the Drive Shaft

All information subject to change without notice.
6SE412 0403 Copyright © 2004 DETROIT DIESEL CORPORATION

[a] Place the coolant pump housing in a press.

[b] Place the coolant pump pressure piece, (J 45388 of 355 589 02 43 00), over the outer bearing race.

[c] Place the receptacle, (J 45388 of 355 589 02 43 00), under the coolant pump housing.

NOTICE:

To prevent damage to the drive shaft and bearing assembly, press only on the outer bearing race.

[d] Press the outer race of the bearing into the coolant pump housing.

2. Secure the bearing in place with the snap ring.

WARNING:

PERSONAL INJURY

To avoid injury from hot surfaces, wear protective gloves, or allow engine to cool before removing any component.

3. Press the hub onto the drive shaft and bearing assembly.

[a] Heat the hub to 175°F (80°C).

NOTICE:

To prevent damage to the bearing, make sure the drive shaft is supported evenly before pressing on the hub.

[b] Press the hub onto the drive shaft, while holding the bearing and drive shaft assembly to prevent it from turning. Make sure the hub is flush with the end of the drive shaft.

 Copyright © 2004 DETROIT DIESEL CORPORATION

https://truckmanualshub.com/

4. Using the coolant pump bearing drift (352 589 08 15 00), press the sleeve seal into the coolant pump housing. See Figure 4-9.

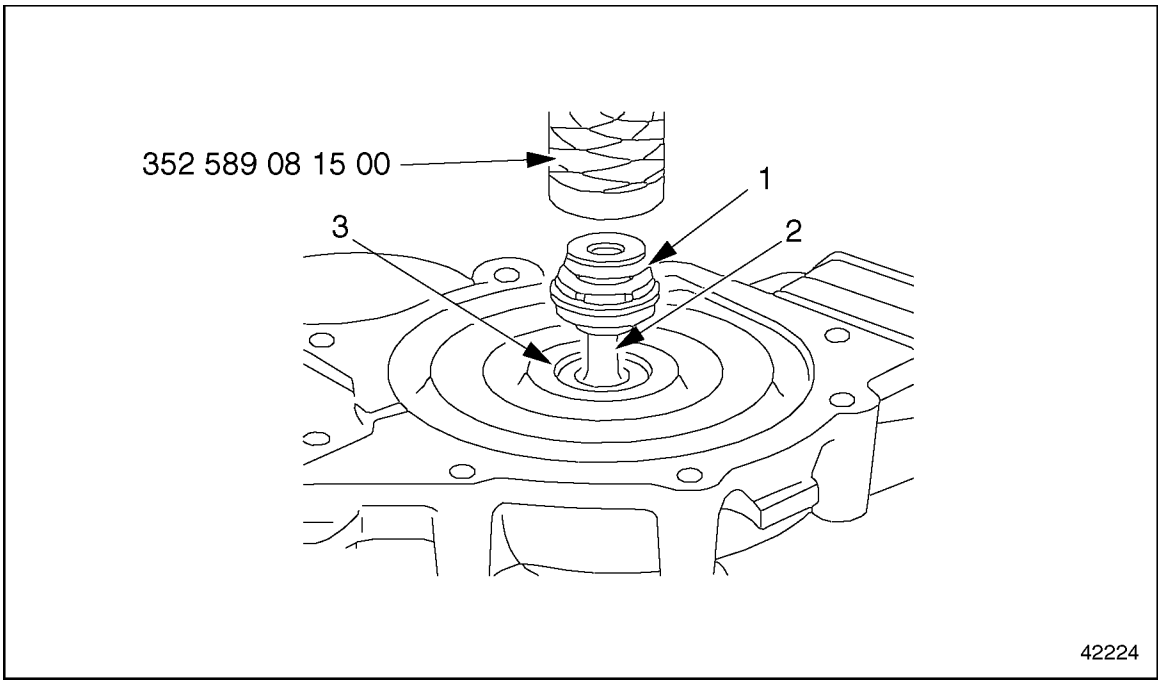

1. Sleeve Seal
2. Drive Shaft
3. Coolant Pump Housing

Figure 4-9 Installing the Sleeve Seal

All information subject to change without notice.
6SE412 0403 Copyright © 2004 DETROIT DIESEL CORPORATION

5. Press the impeller onto the drive shaft and bearing assembly. See Figure 4-10.

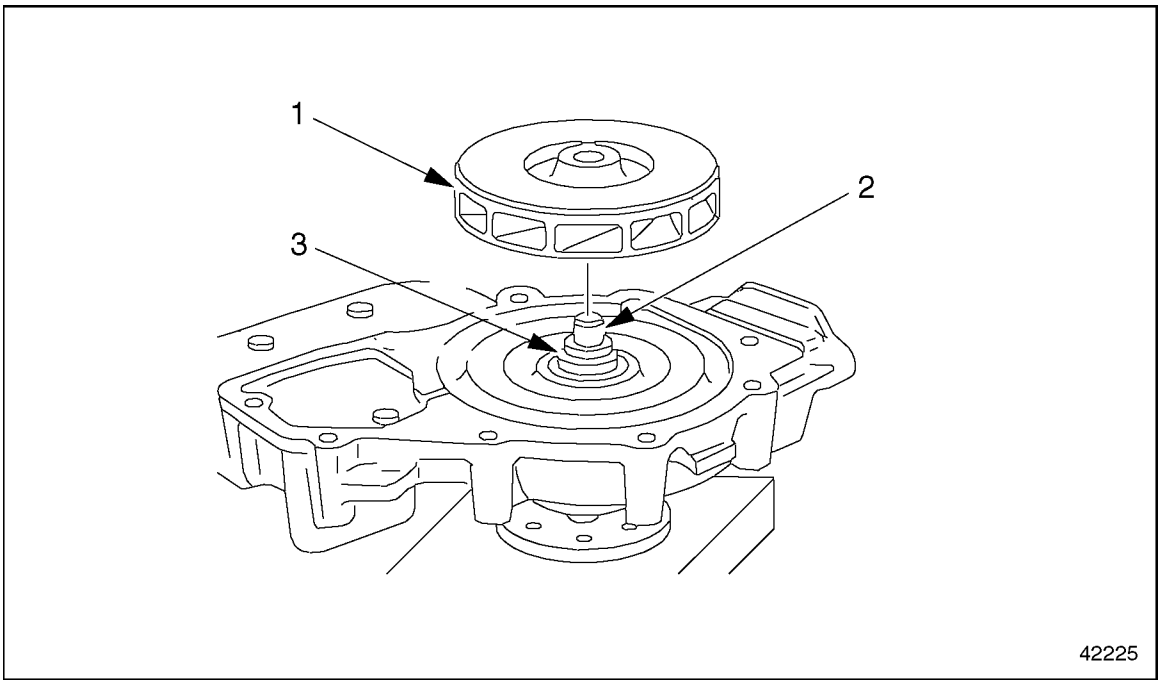

1. Impeller
2. Drive Shaft
3. Sleeve Seal

Figure 4-10 Pressing in the Impeller

NOTE:
Secure both the drive shaft and hub to prevent them from turning while the impeller is being installed.

 Copyright © 2004 DETROIT DIESEL CORPORATION

https://truckmanualshub.com/

6. Measure the gap between the impeller and the coolant pump housing. This gap, listed in Table 4-4, must be more than 0.6 mm (0.023 inch) and less than 1.0 mm (0.039 inch). See Figure 4-11.

Description	mm (inch)
Gap Between the Impeller and the Coolant Pump Housing	0.6-1.0 (0.023-0.039)

Table 4-4 Coolant Pump Assembly, Critical Dimension

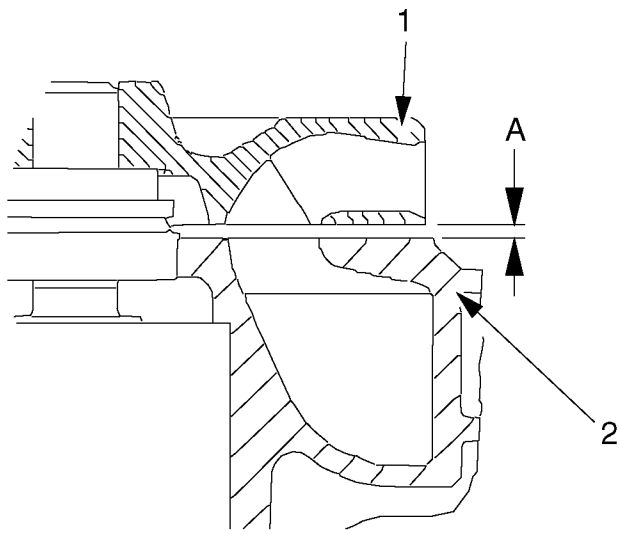

A = GAP BETWEEN THE IMPELLER AND THE COOLANT PUMP HOUSING

42226

1. Impeller
2. Coolant Pump Housing

Figure 4-11 Gap Between the Impeller and the Housing

7. Rotate the coolant pump drive shaft to make sure it moves easily and freely.
8. Install the coolant pump on the engine.

4.2.4 Coolant Pump Installation

Install the coolant pump as follows:

1. Install the coolant pump on the cylinder block. Install a new gasket. Tighten the mounting bolts 30 N·m (22 lb·ft).
2. Connect the inlet pipe to the coolant pump housing, as removed. Install a new gasket on the mating surface between the inlet pipe and the coolant pump housing. Tighten the inlet pipe mounting bolts 50 N·m (37 lb·ft).

All information subject to change without notice.
6SE412 0403 Copyright © 2004 DETROIT DIESEL CORPORATION

https://truckmanualshub.com/

3. Tilt the alternator back into the correct position. Install the upper alternator mounting bolt and restore the alternator to operating condition.
4. Install the upper coolant tube onto the thermostat housing.
5. Install the coolant pump pulley and the mounting bolts attaching the coolant pump pulley to the coolant pump. Tighten the bolts 25 N·m (18 lb·ft).
6. Move the front idler and tensioner support back into place on the cylinder block. Tighten the mounting bolts 60 N·m (44 lb·ft).
7. Install the fan support on the cylinder block.
8. Release the belt tensioners for the main drive and fan belts. Route the two belts around their pulleys and restore the belt tension.
9. Install the fan.
10. Fill the engine with coolant, as removed, and check for leaks.

All information subject to change without notice.
6SE412 0403 Copyright © 2004 DETROIT DIESEL CORPORATION

https://truckmanualshub.com/

4.3 EGR COOLANT PUMP

The coolant pump for the EGR engine has the same removal and installation instructions as the non-EGR engine (refer to section 4.2.1), but the pump design is different to accommodate the EGR coolant inlet pipe connection. See Figure 4-12.

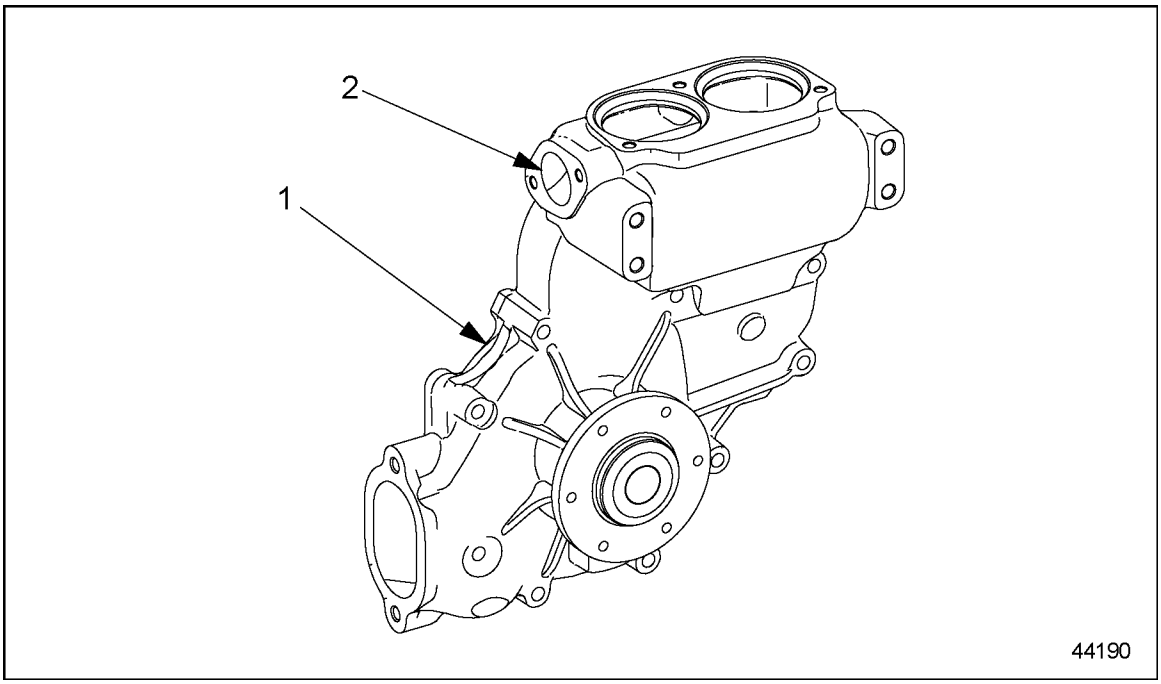

1. EGR Coolant Pump
2. EGR Coolant Pipe Inlet

Figure 4-12 EGR Coolant Pump

All information subject to change without notice.
6SE412 0403 Copyright © 2004 DETROIT DIESEL CORPORATION

https://truckmanualshub.com/

This page intentionally left blank.

 Copyright © 2004 DETROIT DIESEL CORPORATION

https://truckmanualshub.com/

4.4 FRONT IDLER AND TENSIONER SUPPORT

Perform the following procedures for removal and installation of the front idler and tensioner support.

4.4.1 Front Idler and Tensioner Support Removal

Remove the front idler and tensioner support as follows:

1. Disconnect the batteries.
2. Release the tension on the main drive belt and fan belt. Set the belts aside.
3. Remove the upper alternator mounting bolt and the lower alternator mounting bolt. Slide the alternator backwards (towards the rear of the engine).
4. Remove the belt tensioner from the front idler and tensioner support.

All information subject to change without notice.
6SE412 0403 Copyright © 2004 DETROIT DIESEL CORPORATION

https://truckmanualshub.com/

5. Remove the support from the cylinder block. See Figure 4-13.

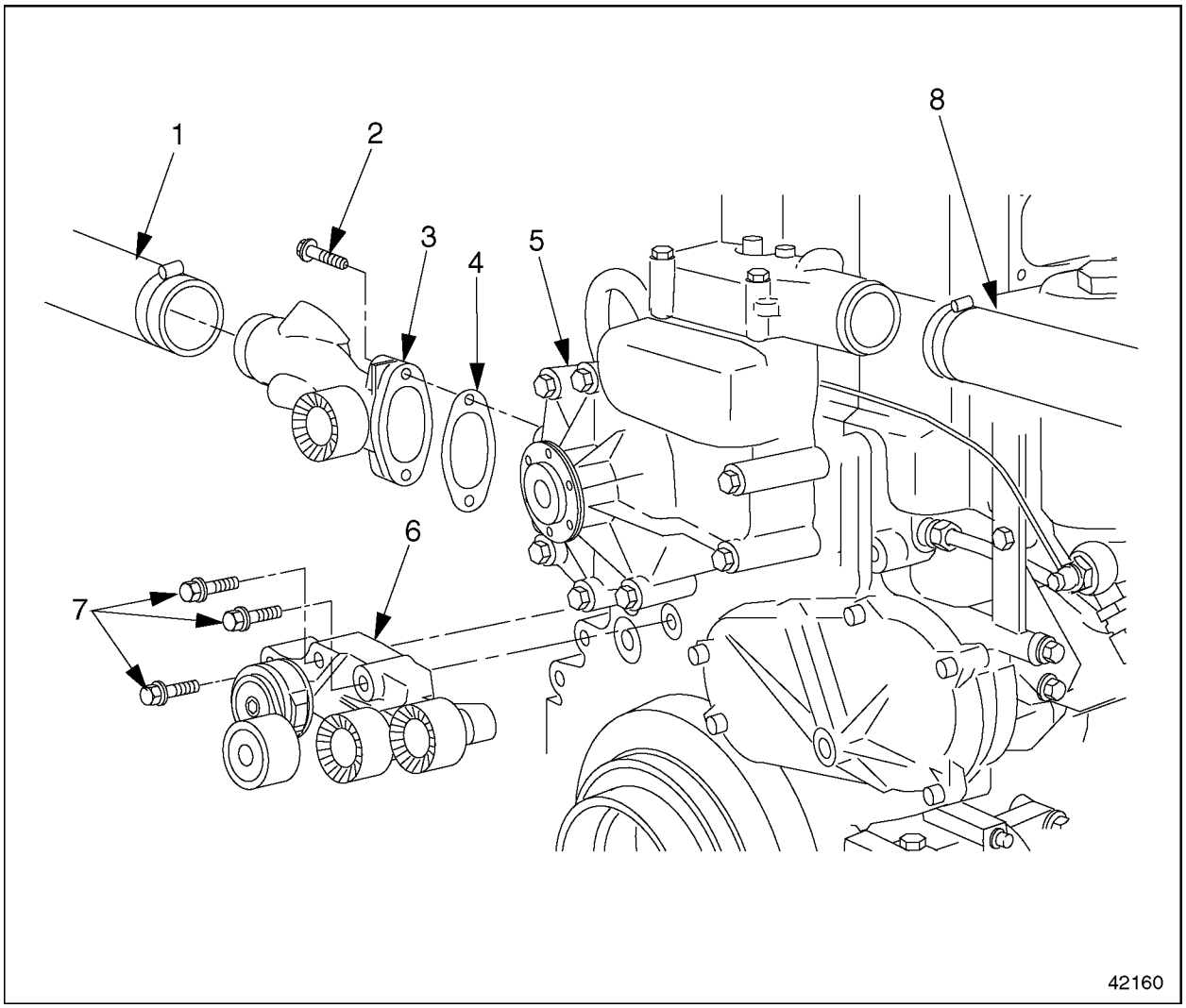

1. Lower Coolant Tube
2. Mounting Bolt, Inlet Pipe
3. Inlet Pipe
4. Inlet Pipe Gasket
5. Coolant Pump Housing
6. Front Idler and Tensioner Support
7. Mounting Bolt, Front Idler and Tensioner Support

Figure 4-13 Front Idler and Tensioner Support (exploded view)

4.4.2 Front Idler and Tensioner Support Installation

Install the front idler and tenisoner support as follows:

1. Install the front idler and tensioner support on the cylinder block. Tighten the mounting bolts 60 N·m (44 lb·ft).
2. Install the belt tensioner on the support.

 Copyright © 2004 DETROIT DIESEL CORPORATION

https://truckmanualshub.com/

3. Move the alternator forward and mount it on the engine, as removed.
4. Release the tension on the main belt tensioner and install the main drive belt. Release the tension on the fan belt tensioner and install the fan belt.
5. Connect the batteries.

All information subject to change without notice.
6SE412 0403 Copyright © 2004 DETROIT DIESEL CORPORATION

https://truckmanualshub.com/

4.5 THERMOSTAT

Perform the following procedures for removal and installation of the thermostat.

4.5.1 Thermostat Removal

Remove the thermostat as follows:

WARNING:

HOT COOLANT

To avoid scalding from the expulsion of hot coolant, never remove the cooling system pressure cap while the engine is at operating temperature. Wear adequate protective clothing (face shield, rubber gloves, apron, and boots). Remove the cap slowly to relieve pressure.

1. Drain the coolant from the engine. Refer to section 4.1.1.
2. Remove the upper coolant tube from the thermostat housing. See Figure 4-14.

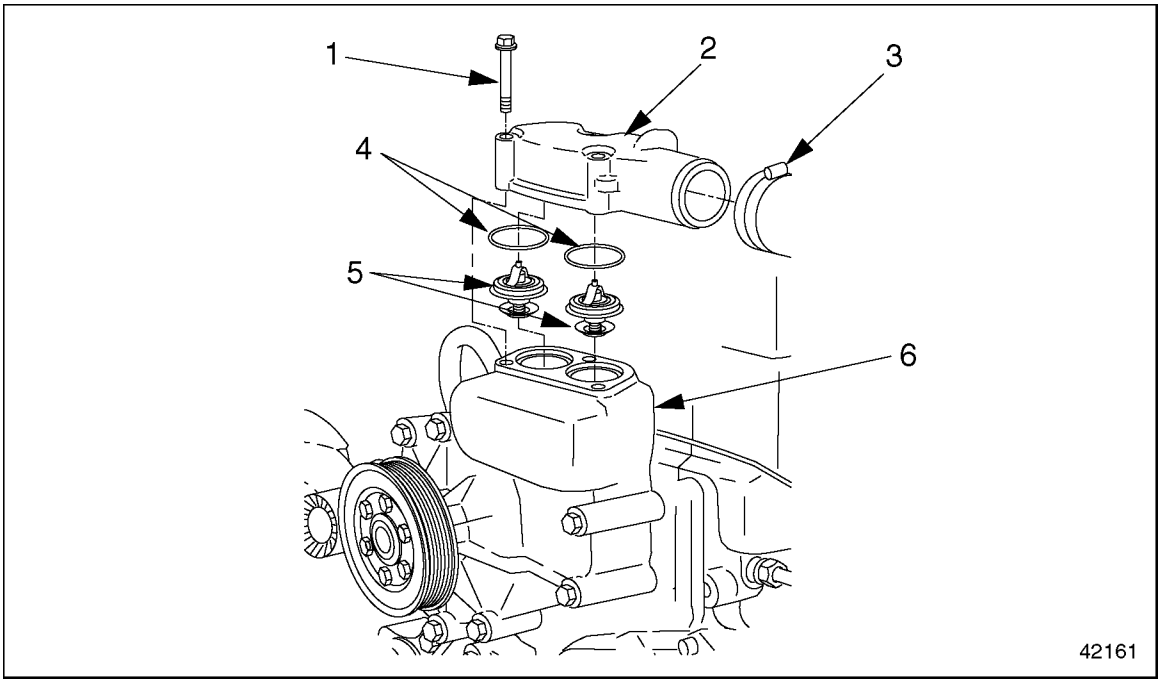

1. Mounting Bolt
2. Thermostat Housing
3. Upper Coolant Tube
4. O-ring
5. Thermostat
6. Coolant Pump Housing

Figure 4-14 Thermostat Removal or Installation

 Copyright © 2004 DETROIT DIESEL CORPORATION

https://truckmanualshub.com/

3. Remove the mounting screws attaching the thermostat housing to the coolant pump housing. Remove the thermostat housing.

NOTE:
Catch any coolant that runs out of the upper coolant tube or coolant pump housing.

4. Remove the thermostats and O-rings from the coolant pump housing. Discard the O-rings.
5. Check both thermostats for proper operation. For detailed procedures, refer to section 4.5.2.1. Replace any thermostat that fails one or more tests.

4.5.2 Thermostat Installation

Install the thermostat as follows:

1. Install a new O-ring on each thermostat.
2. Install the original and/or replacement thermostats.
3. Install the thermostat housing. Install the mounting bolts attaching the thermostat housing to the coolant pump housing. Tighten each mounting bolt 25 N·m (18 lb·ft). See Figure 4-14.
4. Install the upper coolant tube on the thermostat housing. Tighten the hose clamp until firm.
5. Fill the engine with coolant, and check for leaks and proper operation. Refer to section 4.1.1.

4.5.2.1 Thermostat Checking

Check the thermostat as follows:

1. Remove the thermostat from the coolant pump. Refer to section 4.5.1.

All information subject to change without notice.
6SE412 0403 Copyright © 2004 DETROIT DIESEL CORPORATION

2. Hang the thermostat by a wire inside a container filled with water. See Figure 4-15.

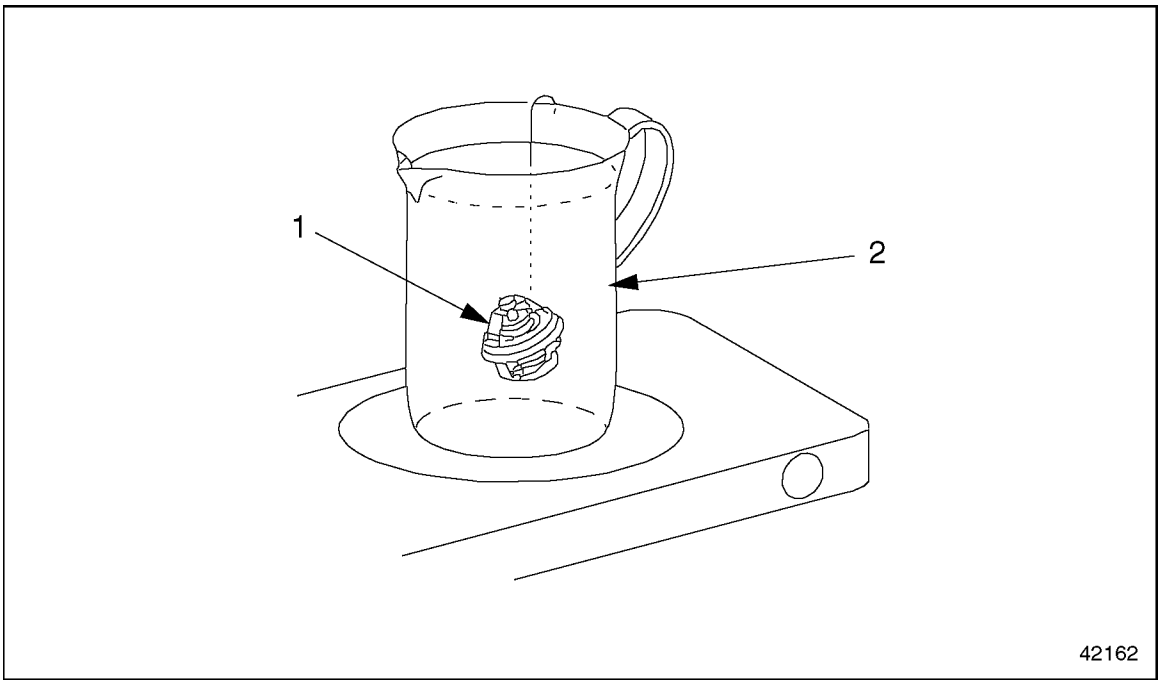

1. Thermostat
2. Container

Figure 4-15 Heat the Thermostat

NOTE:
To allow the thermostat to heat evenly, make sure it is not touching the sides of the container.

NOTICE:
To prevent damage to the thermostat or heating container, do not ever use a welding torch or soldering gun as a source of heat.

3. Heat the water with a suitable heating element. Stir the water occasionally to help equalize the temperature.

 Copyright © 2004 DETROIT DIESEL CORPORATION

https://truckmanualshub.com/

WARNING:

PERSONAL INJURY

To avoid injury from hot surfaces, wear protective gloves, or allow engine to cool before removing any component.

[a] Measure the water temperature. As the temperature climbs to around 165°F (75°C), slow the rate of heating down to about 2 to 3°F (1 to 2°C) per minute.

[b] In about five minutes, the main valve should begin to open.

4. Continue to heat the water at this rate for about six to eight minutes until it reaches the opening temperature of the main valve. If the main valve is not completely open, replace the thermostat. See Figure 4-16.

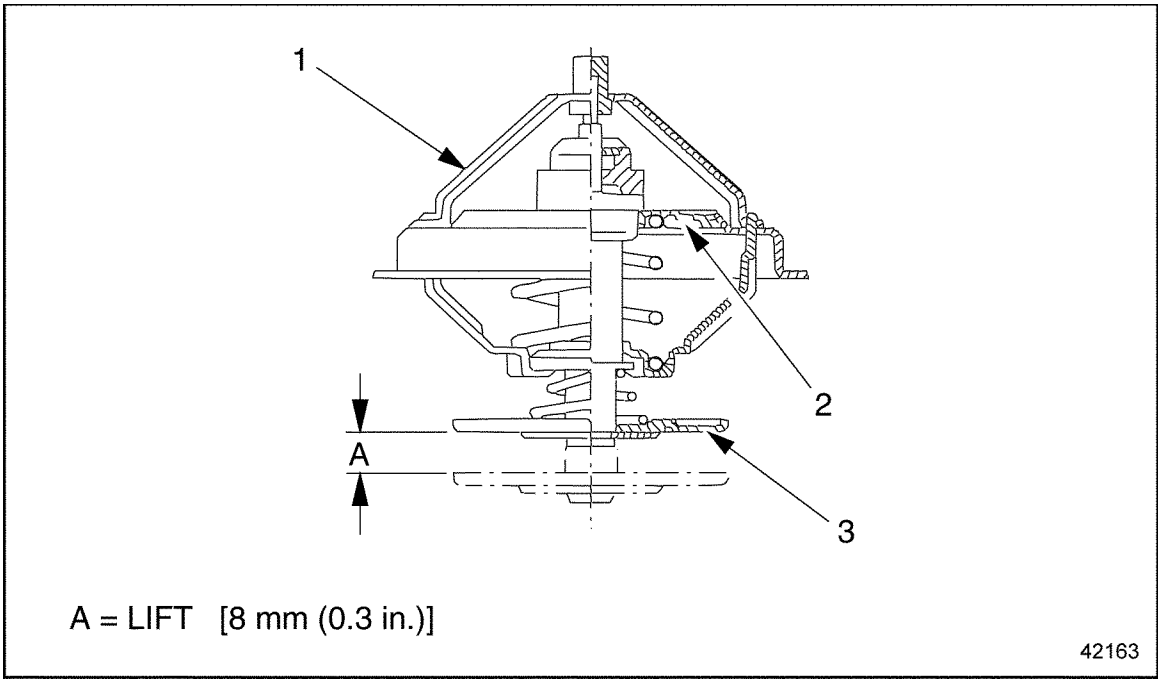

1. Thermostat
2. Main Valve
3. Short Circuit Valve

Figure 4-16 Thermostat Lift

All information subject to change without notice.
6SE412 0403 Copyright © 2004 DETROIT DIESEL CORPORATION

5. Check all the test values for the main valve listed in Table 4-5. If any of the values is not met, replace the thermostat.

Description	Temperature	Distance mm (inch)
Main Valve Starts To Open	177 to 185°F (81 to 85°C)	—
Main Valve Fully Open	203°F (95°C)	—
Main Valve Minimum Lift	—	8 mm (0.3 inch)
Short Circuit Valve Fully Closed	198°F (92°C)	—
Short Circuit Valve Minimum Lift	—	6 to 7.5 mm (0.24 to 0.295 inch)

Table 4-5 Thermostat Test Values

[a] At the temperature of 185°F (85°C), check that the main valve has started to open.

[b] At the opening temperature of 203°F (95°C), check that the main valve is fully open.

[c] Check the minimum lift of the main valve at the opening temperature.

6. Check all the test values for the short circuit valve listed in Table 4-5. If any of the values is not met, replace the thermostat.

[a] At the temperature of 198°F (92°C), check that the short circuit valve is fully closed.

[b] Check the minimum lift of the short circuit valve at the closing temperature.

7. Install the original or replacement thermostat(s), as necessary, the upper coolant hose inlet, and O-ring(s) on the coolant pump, as removed.
8. Fill the engine with coolant, as removed, and check for leaks and proper operation.

 Copyright © 2004 DETROIT DIESEL CORPORATION

https://truckmanualshub.com/

4.6 EGR THERMOSTAT HOUSING

The thermostat for the EGR engine has the same removal, installation, and checking instructions as for the non-EGR engine (refer to section 4.5), but the thermostat housing cover is different by design to accommodate the EGR modulated control valve mounting. See Figure 4-17.

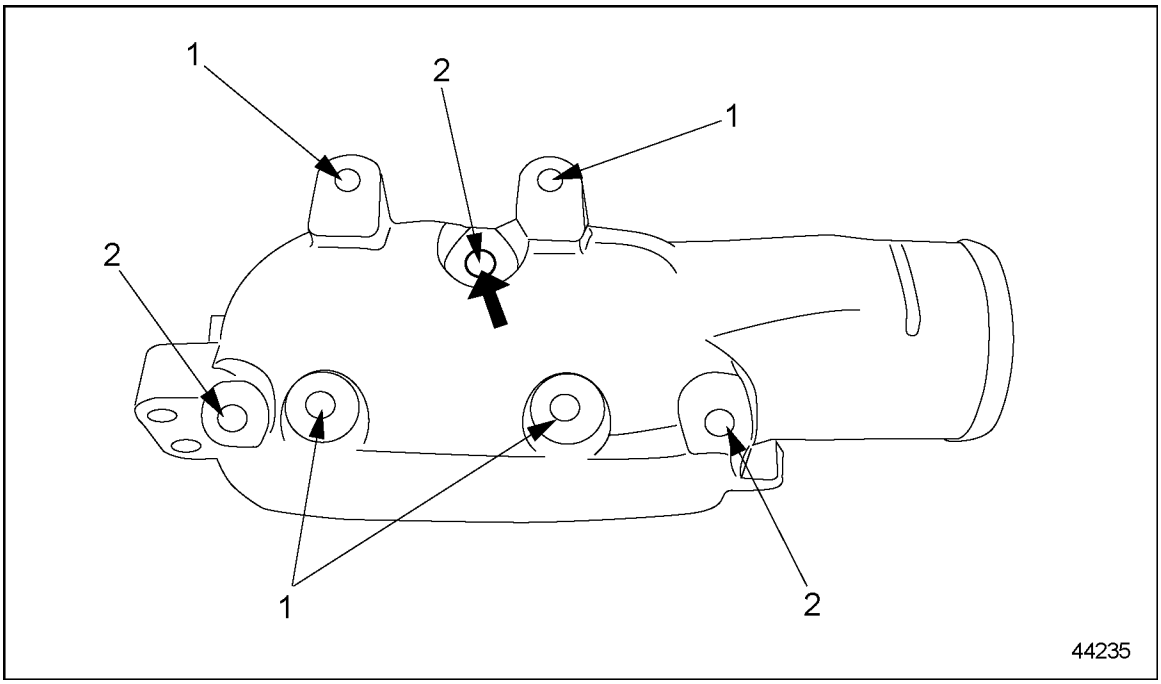

1. EGR Modulated Valve Mounting Holes
2. Thermostat Housing Cover Mounting Holes

Figure 4-17 EGR Thermostat Housing Cover

4.6.1 EGR Thermostat Housing Cover Removal

Remove the EGR thermostat housing cover as follows:

1. Remove the four bolts that attach the EGR modulated control valve to the housing cover and remove the valve.
2. Remove the three thermostat housing cover mounting bolts.
3. Remove the two bolts that attach the reed valve housing bracket to thermostat cover. Remove bracket.
4. Remove any other hose or fitting connections.

4.6.2 EGR Thermostat Housing Cover Installation

Install the EGR thermostat housing cover as follows:

All information subject to change without notice.
6SE412 0403 Copyright © 2004 DETROIT DIESEL CORPORATION

1. Attach the thermostat housing cover to the thermostat housing using the three mounting bolts. Install the first bolt where heavy arrow is pointing in graphic. See Figure 4-18. Torque to 30 N·m (22 lb·ft).

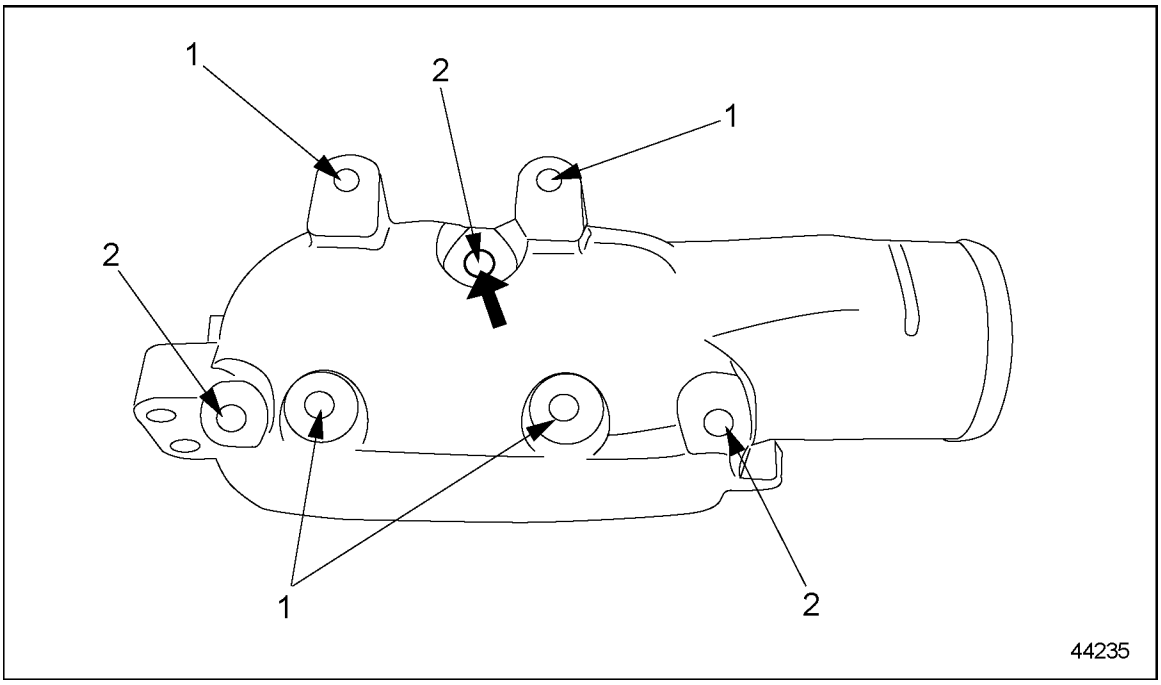

1. EGR Modulated Valve Mounting Holes
2. Thermostat Housing Cover Mounting Holes

Figure 4-18 EGR Thermostat Housing Cover Installation

2. Install EGR modulated valve to thermostat housing cover using four bolts.
3. Attach reed valve housing bracket to thermostat cover.
4. Install any other hose or fitting connections.

 Copyright © 2004 DETROIT DIESEL CORPORATION

 https://truckmanualshub.com/

4.7 COOLANT TEMPERATURE SENSOR

Perform the following procedures for removal and installation of the coolant temperature sensor.

4.7.1 Coolant Temperature Sensor Disassembly

Disassemble the coolant temperature sensor as follows:

WARNING:

HOT COOLANT

To avoid scalding from the expulsion of hot coolant, never remove the cooling system pressure cap while the engine is at operating temperature. Wear adequate protective clothing (face shield, rubber gloves, apron, and boots). Remove the cap slowly to relieve pressure.

1. Drain some coolant from the engine.

NOTE:
It is not necessary to drain all the coolant from the engine to do this procedure. Enough has to be drained to prevent coolant from leaking out while the sensor is being changed.

2. Remove the engine trim panel.

All information subject to change without notice.
6SE412 0403 Copyright © 2004 DETROIT DIESEL CORPORATION

3. Locate the temperature sensor behind the engine harness, between unit pumps #2 and #3. See Figure 4-19.

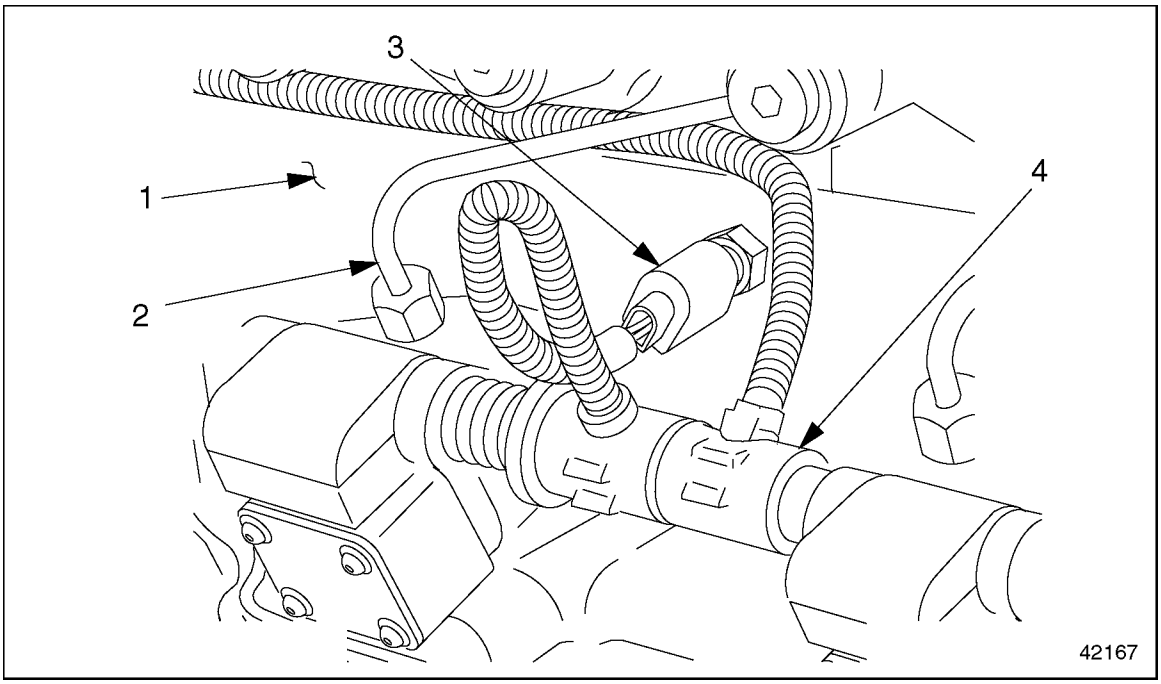

1. Cylinder Block
2. High-Pressure Fuel Line
3. Coolant Temperature Sensor
4. Engine Harness

Figure 4-19 Coolant Temperature Sensor Location

4. Remove the electrical connector from the sensor.
5. Unscrew the sensor from the wall of the cylinder block.

4.7.2 Coolant Temperature Sensor Assembly

Assemble the coolant temperature sensor as follows:

1. Screw the new sensor into the hole in the cylinder block, as removed.
2. Connect the electrical connector to the sensor. Make sure the connection is secure.
3. Install the engine trim panel.
4. Fill the engine with coolant, and check for leaks and proper operation.

 Copyright © 2004 DETROIT DIESEL CORPORATION

https://truckmanualshub.com/

All information subject to change without notice.
6SE412 0403 Copyright © 2004 DETROIT DIESEL CORPORATION

4.A ADDITIONAL INFORMATION

Description **Page**

SPECIFICATIONS 4-36
Cooling System Overview 4-37
Coolant Pump 4-38
Thermostat 4-39
Coolant Sensor 4-39

 Copyright © 2004 DETROIT DIESEL CORPORATION

https://truckmanualshub.com/

SPECIFICATIONS

This section contains the specifications for servicing the engine.

All information subject to change without notice.
6SE412 0403 Copyright © 2004 DETROIT DIESEL CORPORATION

Cooling System Overview

The coolant specifications are listed in Table 4-6. Listed in Table 4-7 are the cooling system capacity figures. The coolant mixing ratio is listed in Table 4-8.

Type of Coolant	Requirement
Fully -Formulated Ethylene Glycol*	TMC RP-329 Type "A"
Water plus Corrosion Inhibitors	Temperature must not fall below 32°F (0°C)

*Preferred coolant

Table 4-6 Coolant Specifications

Description	Capacity in liters (Quarts)
Engine Coolant Capacity (all vehicles	
Engine capacity*	30.0 (31.7)
Century Class and Columbia Cooling System Capacity	
Total capacity†	57.4 (60.7)
Antifreeze quantity at 50 percent	28.7 (30.4)
Antifreeze quantity at 55 percent	31.6 (33.4)
Sterling A-Line and L-Line Cooling System Capacity	
Total capacity	53.8 (56.8)
Antifreeze quantity at 50 percent	26.9 (28.4)
Antifreeze quantity at 55 percent	29.6 (31.3)
FL112 Cooling System Capacity	
Total capacity	42.0 (44.4)
Antifreeze quantity at 50 percent	21.0 (22.2)
Antifreeze quantity at 55 percent	23.1 (24.4)

* Does not include capacity of cooling system.

†With 1200 sq. ft. radiator.

Table 4-7 Cooling System Capacity

Antifreeze Protection Down to °F (°C)	Water Percentage by Volume	Corrosion-Inhibiting Antifreeze Percentage by Volume
-34 (-37)	50	50
-49 (-45)	40	Maximum 60

Table 4-8 Coolant Mixing Ratio

 Copyright © 2004 DETROIT DIESEL CORPORATION

https://truckmanualshub.com/

Coolant Pump

The torque values for the cooling system are listed in Table 4-9. The wear dimensions for the coolant pump assembly are listed in Table 4-10. Listed in Table 4-11 is the critical dimension for the coolant pump assembly.

Fastener	Torque Value, mm (in.)
Coolant Pump Inlet Pipe Mounting Bolts	50 (37)
Coolant Pump Mounting Bolts	30 (22)
Coolant Pump Pulley Mounting Bolts	25 (18)
Front Idler and Tensioner Support Mounting Bolts	60 (44)
Thermostat Housing Mounting Bolts	25 (18)

Table 4-9 Cooling System Torque Values

Description	Dimensions, mm (in.)
Drive Shaft Diameter (at the hub)	25.048 - 25.061 (0.9861 - 0.9867)
Hub Inside Diameter	24.995 - 25.008 (0.9841 - 0.9846)
Bearing Outside Diameter	54.981 - 54.994 (2.1646 - 2.1651)
Bearing Housing Diameter	54.930 - 54.960 (2.1626 - 2.1638)
Drive Shaft Diameter (at the impeller)	15.045 - 15.056 (0.5923 - 0.5928)
Impeller Inside Diameter	15.000 - 15.018 (0.5906 - 0.5913)
Impeller Outside Diameter	124 - 125 (4.88 - 4.92)
Impeller - Maximum Out-of-Round	0.15 (0.0059)

Table 4-10 Coolant Pump Assembly Wear Dimensions

Dimension	Description	mm (in.)
A	Gap between the Impeller and the Coolant Pump Housing	0.6 - 1.0 (0.023 - 0.039)

Table 4-11 Critical Dimension for Coolant Pump Assembly

All information subject to change without notice.
6SE412 0403 Copyright © 2004 DETROIT DIESEL CORPORATION

Thermostat

The thermostat test values are listed in Table 4-12.

Description	Temperature	Distance mm (inch)
Main Valve Starts To Open	177 to 185°F (81 to 85°C)	—
Main Valve Fully Open	203°F (95°C)	—
Main Valve Minimum Lift	—	8 mm (0.3 inch)
Short Circuit Valve Fully Closed	198°F (92°C)	—
Short Circuit Valve Minimum Lift	—	6 to 7.5 mm (0.24 to 0.295 inch)

Table 4-12 Thermostat Test Values

Coolant Sensor

The sensor torque value is listed in Table 4-13.

Description	Torque, N·m (lb·ft)
Coolant Temperature Sensor to the Engine Block	30 (22)

Table 4-13 Torque Value

 Copyright © 2004 DETROIT DIESEL CORPORATION

https://truckmanualshub.com/

All information subject to change without notice.
6SE412 0403 Copyright © 2004 DETROIT DIESEL CORPORATION

https://truckmanualshub.com/

5 FUEL, LUBRICATING OIL, AND COOLANT

Section **Page**

5.1 FUEL 5-3
5.2 LUBRICATING OIL 5-5
5.3 COOLANT 5-7
5.A ADDITIONAL INFORMATION 5-13

https://truckmanualshub.com/

All information subject to change without notice.
6SE412 0403 Copyright © 2004 DETROIT DIESEL CORPORATION

https://truckmanualshub.com/

5.1 FUEL

Use only commercially available vehicle diesel fuel. Grades such as marine diesel fuel, heating oil, and others are not permissible.

NOTE:
Do not use fuel additives. Using fuel additives could affect your warranty.

If using diesel fuel with a high sulphur content, exceeding 0.5 percent by weight, change the engine oil at shorter intervals.

NOTICE:
Fuel added from drums or cans could be contaminated. This could lead to malfunctions in the fuel system. Always filter the fuel before adding it to the tank.

5.1.1 Flow Improvers

The effectiveness of flow improvers is not guaranteed with all fuels. Comply with the product manufacturer's recommendations. Any authorized dealer can provide information on approved flow improvers.

5.1.2 Kerosene

⚠ CAUTION:
The addition of kerosene lowers the flash point of diesel fuel. To prevent fire and risk of injuries due to burning, do not smoke or use open flames around fuel mixed with kerosene. Comply with all appropriate safety regulations.

Keep the quantity added as low as possible, bearing in mind the outside temperature. The addition of five percent by volume of kerosene will improve the fuel's resistance to cold by about 1.8°F (1°C). Never add more than 50 percent kerosene to the fuel.

For safety reasons, add the kerosene to the diesel only in the fuel tank. Add the kerosene first, then the diesel. Run the engine for a short time to allow the mixture to reach all parts of the fuel system.

5.1.3 Winter Grade Diesel Fuel for Cold Weather

At low outside temperatures, paraffin may separate from the diesel and affect its ability to flow freely.

Avoid breakdowns caused by this problem (for example, blocked filters) by using cold-resistant winter-grade diesel fuel with improved low-temperature flow characteristics. In most cases, winter-grade fuel can be used without problems at cold outside temperatures.

 Copyright © 2004 DETROIT DIESEL CORPORATION

https://truckmanualshub.com/

If using summer-grade fuel or a less cold-resistant winter grade, a flow improver or kerosene can be added. The amount needed depends on the outside temperature.

NOTICE:
Do not add gasoline to diesel fuel or engine damage will result.

Flow improver or petroleum spirit must be mixed with diesel fuel before its flow characteristics have been adversely affected by paraffin separation. If changes have already been caused by paraffin separation, they can be corrected only by heating the entire fuel system. Do not add anything to cold-resistant winter-grade diesel fuels. The fuel's low-temperature flow characteristics could actually deteriorate with additives.

All information subject to change without notice.
6SE412 0403 Copyright © 2004 DETROIT DIESEL CORPORATION

https://truckmanualshub.com/

5.2 LUBRICATING OIL

The engine is delivered from the factory filled with an approved engine oil.

NOTICE:
The use of non-approved engine oils could affect warranty rights, and cause engine damage.

To ensure long and trouble-free service, it is important to select oil of the correct viscosity and service designation. Only multigrade oils of American Petroleum Institute (API) service designation CH-4 will achieve proper performance. Look for the service mark printed on the oil container. See Figure 5-1.

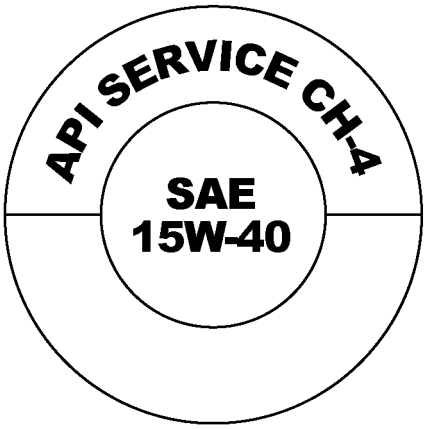

Figure 5-1 API Lubricant Service Mark

When maintenance work is performed, record engine oil changes including details of the brand used, the quality category, and the Society of Automotive Engineers (SAE) viscosity rating of the oil. When topping off, use only engine oils of the correct API designation and SAE rating.

5.2.1 Synthetic Oils

Synthetic oil may be used in MBE 4000 engines, provided they are of the correct API designation and viscosity, as required for non-synthetic oil.

Synthetic oil offers improved low-temperature flow properties and high-temperature resistance to oxidation. However, it is generally more costly than non-synthetic oil.

 Copyright © 2004 DETROIT DIESEL CORPORATION

https://truckmanualshub.com/

Review carefully the product information published by the synthetic oil manufacturer. Performance additive systems often respond differently in synthetic oil. Use of synthetic oil does not change the recommended oil change service interval.

5.2.2 Low Viscosity Engine Oil for Cold Weather

When changing the engine oil, estimate the interval before your next oil change. Choose an oil from the SAE viscosity class which corresponds to the outside temperatures anticipated during this period of operation. See Figure 5-2.

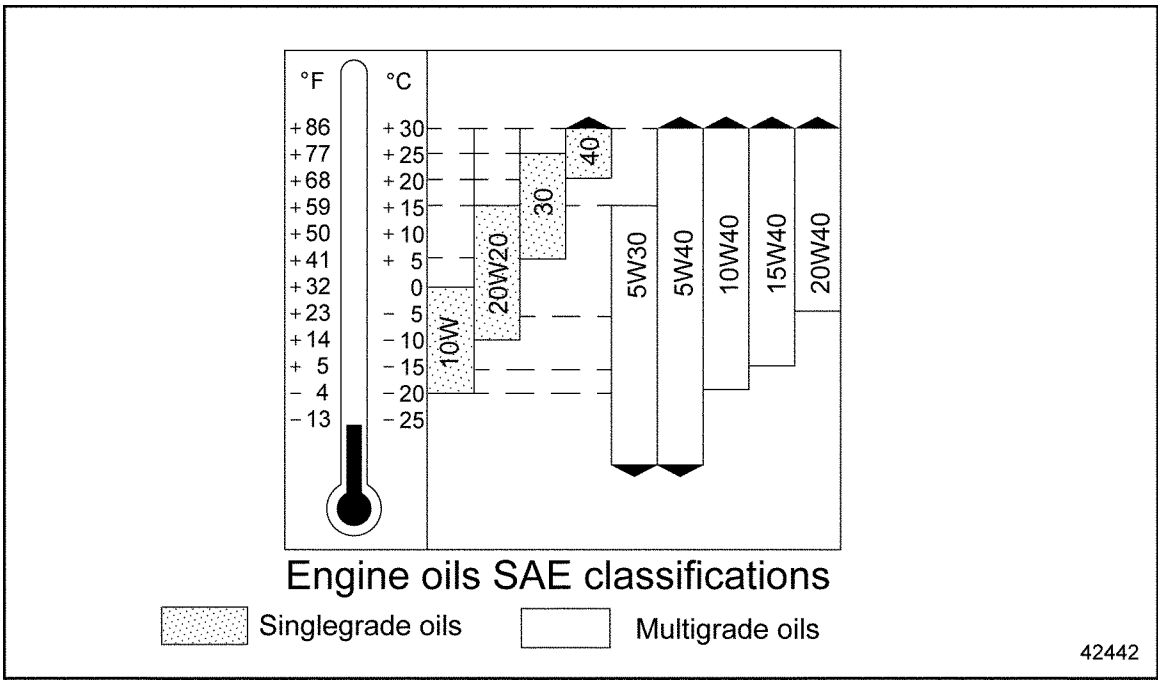

Figure 5-2 Engine Oil Temperature Ranges

All information subject to change without notice.
6SE412 0403 Copyright © 2004 DETROIT DIESEL CORPORATION

5.3 COOLANT

Coolant is a mixture of water and antifreeze. Under normal conditions, it is a mixture of 50 percent water and 50 percent antifreeze, but under extreme cold weather conditions, as much as 60 percent antifreeze can be added. For reasons of anticorrosion protection and to raise the boiling point, the coolant must remain in the cooling system all year round.

Regardless of mileage, replace the coolant every two years since the degree of corrosion protection gradually drops with time.

5.3.1 Fully Formulated Antifreeze

Antifreeze approved for use in the MBE 4000 engine is a mixture of glycol compound (ethylene glycol), and corrosion inhibitors. Antifreeze containing glycol compounds and corrosion inhibitors is known as fully-formulated antifreeze.

NOTE:
Do not use propylene glycol.

Fully-formulated antifreeze has the following properties:

- ☐ It protects the radiator and engine from freezing.
- ☐ It provides protection against corrosion and cavitation for all components in the cooling system.
- ☐ It raises the boiling point of the coolant. This slows the rate of evaporation, avoiding coolant loss at high temperatures.

5.3.2 Water

Water containing no additives is not suitable as a coolant, even if no antifreeze protection is needed.

The water used in the coolant must comply with certain requirements, which are not always satisfied by drinking water. If water quality is inadequate, the water must undergo suitable treatment.

The following types of water are preferred for use in coolant:

- ☐ Distilled water
- ☐ Water purified by reverse osmosis
- ☐ De-ionized water

 Copyright © 2004 DETROIT DIESEL CORPORATION

https://truckmanualshub.com/

NOTICE:
In some areas, tap water can contain high levels of dissolved chlorides, sulfates, magnesium, and calcium, causing scale deposits, sludge deposits and/or corrosion. These deposits can damage the coolant pump and allow the engine to overheat.

5.3.2.1 Coolant Specifications and Concentration

To avoid damage to the cooling system, use only an approved corrosion-inhibiting antifreeze. Approved antifreeze must be fully-formulated and comply with the requirements of the Truck Maintenance Council (TMC). Coolant specifications are listed in Table 5-1.

Type of Coolant	Requirement
Fully-Formulated Ethylene Glycol	TMC RP-329 Type "A"
Water plus Corrosion Inhibitors	Temperature Must Not Fall Below 32°F (0°C)

Table 5-1 Coolant Specifications

When topping off the cooling system after a drop in the coolant level, the concentration of corrosion-inhibiting antifreeze in the coolant must be 50 percent by volume. This affords protection down to a temperature of –34°F (–37°C). The cooling mixing ratio is listed in Table 5-2.

NOTE:
If the concentration is too low, there is risk of corrosion/cavitation in the cooling system.

Do not increase the proportion (mixing ratio) of corrosion-inhibiting antifreeze beyond 60 percent by volume (this gives the maximum antifreeze protection). Further increases in the mixing ratio would reduce the level of antifreeze protection and adversely affect the coolant's ability to dissipate heat.

Antifreeze Protection Down to °F (°C)	Water % by Volume	Corrosion - Inhibiting Antifreeze % by Volume
–34 (–37)	50	50
–62 (–52)	40	The cooling mix ratio is Max. 60

Table 5-2 Coolant Mixing Ratio

5.3.3 Supplemental Coolant Additives for Fully Formulated Coolant

The concentrations of some inhibitors will gradually deplete during normal engine operation. SCAs replenish the protection for cooling system components. The coolant must be maintained with the proper concentration of SCA. Detroit Diesel Power Cool maintenance SCAs are recommended.

All information subject to change without notice.
6SE412 0403 Copyright © 2004 DETROIT DIESEL CORPORATION

NOTICE:
Failure to properly maintain coolant with SCA can result in damage to the cooling system and its related components. Conversely, over-concentration of SCA inhibitor can result in poor heat transfer, leading to engine damage. Always maintain concentrations at recommended levels. Do not use traditional SCAs with NOAT coolant.

The proper application of SCA will provide:

- ☐ pH control
- ☐ Restored inhibitor levels to prevent corrosion
- ☐ Water-softening to deter formation of mineral deposits
- ☐ Cavitation protection to protect wet sleeve cylinder liners

5.3.4 Recycled Antifreeze

Recycled antifreeze that complies with TMC RP-329 Type “A” (for ethylene glycol) is approved for use in MBE 4000 engines. The antifreeze must be recycled by distillation, reverse osmosis, or ion exchange.

Other recycled antifreeze, especially any antifreeze recycled by means of filtration processes, is not approved.

5.3.5 Corrosion Inhibitors

Corrosion inhibitors are very important in maintaining engine life. All corrosion inhibitors protect against corrosion caused by acid, and cavitation of wet cylinder liners. SCAs also protect against mineral deposits.

The concentrations of some inhibitors will gradually diminish during normal engine operation. To protect the engine, nitrite concentration must be checked at regular intervals, and inhibitors added as necessary. The intervals are longer if NOAT inhibitors are used.

 Copyright © 2004 DETROIT DIESEL CORPORATION

https://truckmanualshub.com/

NOTICE:

Always maintain inhibitor at the recommended level. Failure to properly maintain coolant with SCA can result in damage to the cooling system and related components. Over-concentration of SCA inhibitor can result in poor heating transfer and lead to engine damage.

NOTICE:

Do not mix types of corrosion inhibitors. Do not add additional inhibitors to new, fully-formulated antifreeze, or coolant containing new, fully-formulated antifreeze. This can cause deposits or dropout in the cooling system.

The following types of corrosion inhibitors are approved for use in MBE 4000 engines:

- ☐ Supplemental Coolant Additives (SCAs)
- ☐ Nitrated Organic Acid Technology (NOAT) Inhibitors

Corrosion inhibitors are very important in maintaining engine life. All corrosion inhibitors protect against corrosion caused by acid, and cavitation of wet cylinder liners. SCAs also protect against mineral deposits.

The concentrations of some inhibitors will gradually diminish during normal engine operation. To protect the engine, nitrite concentration must be checked at regular intervals, and inhibitors added as necessary. The intervals are longer if NOAT inhibitors are used.

NOTICE:

Always maintain inhibitor at the recommended level. Failure to properly maintain coolant with SCA can result in damage to the cooling system and related components. Over-concentration of SCA inhibitor can result in poor heating transfer and lead to engine damage.

The following types of inhibitor must not be used in MBE 4000 engines:

- ☐ Soluble oil additives cause poor heat transfer and lead to engine damage.
- ☐ Chromate additives can lead to the build-up of "green slime" (chromium dioxide) in the engine, leading to engine damage.

5.3.5.1 Dropout

Excessive amounts of some corrosion inhibitors can cause a gel or crystalline deposit that reduces both heat transfer and coolant flow. This deposit is called "dropout."

Dropout takes the color of the coolant when wet, but becomes a white or gray powder when dry. It can pick up solid particles in the coolant and become gritty. It will cause premature wear of the coolant pump seals and other components of the cooling system.

All information subject to change without notice.
6SE412 0403 Copyright © 2004 DETROIT DIESEL CORPORATION

The wet gel can be removed using an alkaline (non-acid) cleaner containing either sodium nitrite or sodium tetraborate.

If the gel is allowed to dry, it is necessary to disassemble the engine and clean it with a caustic solution, or physically clean the individual components.

5.3.6 Non-Approved Coolants

The following types of coolant are not approved for use in MBE 4000 engines:

- ☐ Antifreeze or coolant containing phosphate can cause dropout, overheating, and damage to coolant pump seals.
- ☐ Automotive coolants offer no protection against liner pitting, and generally contain high levels of phosphate and silicate.
- ☐ Antifreeze based on methyl alcohol can damage the non-metallic components of the cooling system. They are not suitable for use with diesel engines because of their low boiling point.
- ☐ Antifreeze based on methoxy propanol is not compatible with the fluoroelastomer seals used in the cooling system.
- ☐ Glycol-based HVAC coolants contain phosphates which can deposit on hot internal engine surfaces and reduce heat transfer.

5.3.7 Disposal

Coolants are biologically degradable substances.

When disposing of used coolant, comply with local legal requirements and waste water regulations.

Consult the local water supply authorities to determine the best method of disposal.

A modern engine coolant has complex tasks to perform. Do not allow any form of "reprocessing" which consists only of mechanical purification.

5.3.8 Batteries

Batteries should receive more frequent maintenance and recharging during the cold season of the year.

Careful maintenance and low current consumption will help to maintain the full battery charge. Starting capacity drops severely in cold weather. For example, at 14°F (–10°C) starting capacity is only about 60 percent of normal. If the engine is shut down or out of use for an extended period of time, store the batteries out of the vehicle in a heated area if possible. Ensure good ventilation when recharging.

 Copyright © 2004 DETROIT DIESEL CORPORATION

https://truckmanualshub.com/

All information subject to change without notice.
6SE412 0403 Copyright © 2004 DETROIT DIESEL CORPORATION

https://truckmanualshub.com/

5.A ADDITIONAL INFORMATION

Description **Page**

SPECIFICATIONS 5-14
Coolant 5-14

 Copyright © 2004 DETROIT DIESEL CORPORATION

https://truckmanualshub.com/

SPECIFICATIONS

This section contains the specifications for servicing the engine.

Coolant

Listed in Table 5-3 are the coolant specifications. The coolant mixing ratio islisted in Table 5-4.

Type of Coolant	Requirement
Fully-Formulated Ethylene Glycol	TMC RP-329 Type "A"
Water plus Corrosion Inhibitors	Temperature Must Not Fall Below 32°F (0°C)

Table 5-3 Coolant Specifications

Antifreeze Protection Down to °F (°C)	Water % by Volume	Corrosion - Inhibiting Antifreeze % by Volume
–34 (–37)	50	50
–62 (–52)	40	The cooling mix ratio is Max. 60

Table 5-4 Coolant Mixing Ratio

All information subject to change without notice.
6SE412 0403 Copyright © 2004 DETROIT DIESEL CORPORATION

https://truckmanualshub.com/

6 AIR INTAKE SYSTEM

Section		Page
6.1	INTAKE MANIFOLD	6-3
6.2	CHARGE PRESSURE/TEMPERATURE SENSOR	6-5
6.3	TURBOCHARGER	6-6
6.A	ADDITIONAL INFORMATION	6-17

https://truckmanualshub.com/

All information subject to change without notice.
6SE412 0403 Copyright © 2004 DETROIT DIESEL CORPORATION

https://truckmanualshub.com/

6.1 INTAKE MANIFOLD

Perform the following procedures for removal and installation of the intake manifold.

6.1.1 Intake Manifold Removal

Remove the intake manifold as follows:

1. Apply the parking brakes, shut down the engine, and chock the rear tires. Tilt the hood.

WARNING:

PERSONAL INJURY

To avoid injury before starting and running the engine, ensure the vehicle is parked on a level surface, parking brake is set, and the wheels are blocked.

2. Remove the intake air inlet pipe. Discard the inlet pipe gasket. See Figure 6-1.

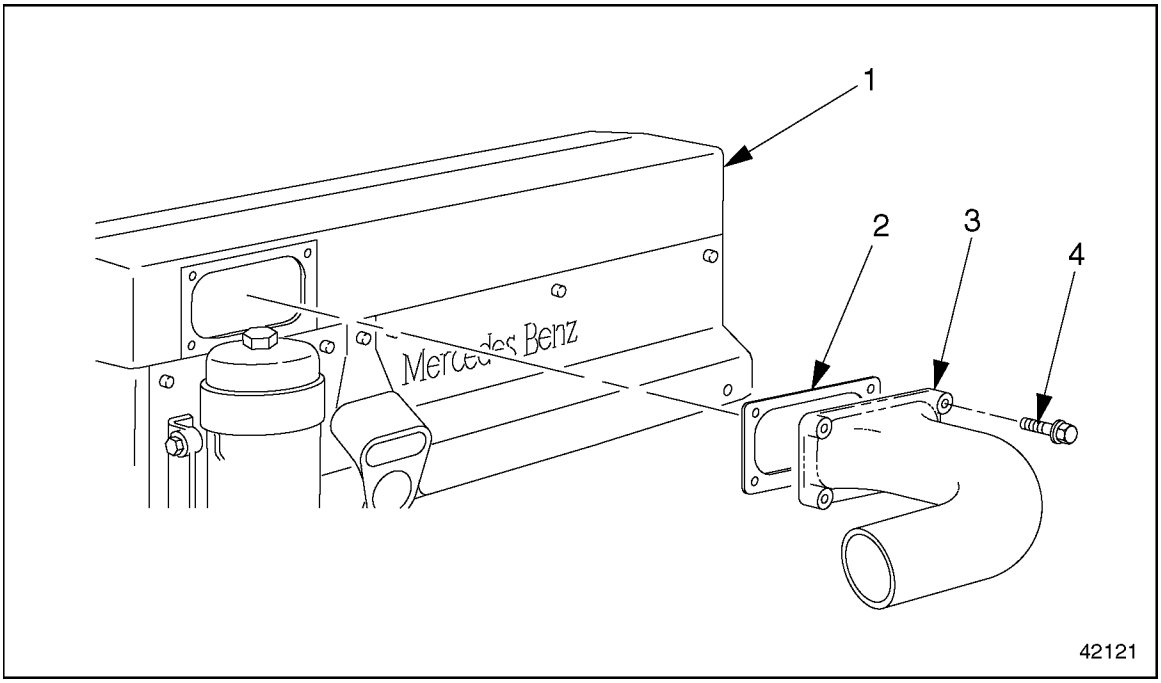

1. Intake Manifold
2. Inlet Pipe Gasket
3. Intake Air Inlet Pipe
4. Manifold Mounting Bolt

Figure 6-1 Manifold Removal and Installation

3. Remove the bolts from the engine trim cover. Move the side panels down and out of the way to expose the manifold mounting bolts.

 Copyright © 2004 DETROIT DIESEL CORPORATION

https://truckmanualshub.com/

4. Remove the mounting bolts attaching the manifold to the cylinder heads.
5. Move the manifold out enough to expose the sensor attached to the back of the manifold. Disconnect the electrical connector from the socket on the charge air pressure/temperature sensor. See Figure 6-2.

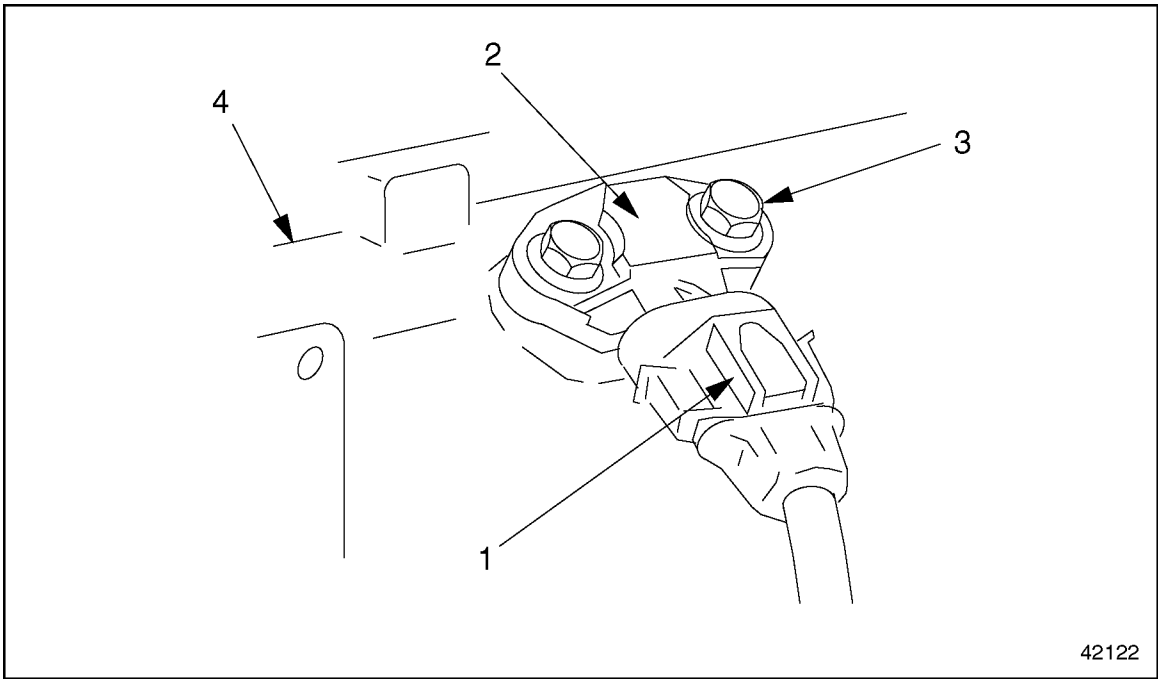

1. Electrical Connector
2. Intake Manifold Pressure/Temperature Sensor
3. Sensor Mounting Bolt
4. Intake Manifold

Figure 6-2 Sensor Removal

6. Remove the charge air manifold from the cylinder heads.
7. Remove the charge air manifold gaskets. Clean any bits of sealant material from the manifold and the mating surfaces on the cylinder heads.

6.1.2 Intake Manifold Installation

Install the intake manifold as follows:

1. Place new manifold gaskets on the heads.
2. Connect the electrical connector to the charge air pressure/temperature sensor.
3. Install the manifold on the cylinder head. Tighten the mounting bolts 40 N·m (30 lb·ft).
4. Install the engine trim cover side panels, as removed.
5. Install the charge air inlet pipe, with a new gasket, on the charge air manifold.
6. Lower the hood and remove the chocks from the rear tires.

All information subject to change without notice.
6SE412 0403 Copyright © 2004 DETROIT DIESEL CORPORATION

https://truckmanualshub.com/

6.2 CHARGE PRESSURE/TEMPERATURE SENSOR

Perform the following procedures for removal and installation of the charge pressure/temperature sensor.

6.2.1 Charge Pressure/Temperature Sensor Removal

Remove the charge pressure/temperature sensor as follows:

1. Apply the parking brakes, shut down the engine, and chock the rear tires. Tilt the hood.

WARNING:

PERSONAL INJURY

To avoid injury before starting and running the engine, ensure the vehicle is parked on a level surface, parking brake is set, and the wheels are blocked.

2. Remove the #2 cylinder head cover.
3. Disconnect the electrical connector.
4. Remove the fasteners that attach the pressure/temperature sensor, then remove the sensor.

6.2.2 Charge Pressure/Temperature Sensor Installation

Install the charge pressure/temperature sensor as follows:

1. Install the pressure/temperature sensor. Tighten the fasteners 10 N·m (7 lb·ft).
2. Connect the electrical connector.
3. Install the #2 cylinder head cover.
4. Lower the hood and remove the chocks from the rear tires.

 Copyright © 2004 DETROIT DIESEL CORPORATION

https://truckmanualshub.com/

6.3 TURBOCHARGER

Perform the following procedures for removal and installation of the turbocharger.

6.3.1 Turbocharger Inspection

Inspect the turbocharger as follows:

1. Chock the rear tires and lift the hood.

WARNING:

PERSONAL INJURY

To avoid injury before starting and running the engine, ensure the vehicle is parked on a level surface, parking brake is set, and the wheels are blocked.

WARNING:

PERSONAL INJURY

Diesel engine exhaust and some of its constituents are known to the State of California to cause cancer, birth defects, and other reproductive harm.

- ☐ **Always start and operate an engine in a well ventilated area.**
- ☐ **If operating an engine in an enclosed area, vent the exhaust to the outside.**
- ☐ **Do not modify or tamper with the exhaust system or emission control system.**

2. Place the transmission in neutral and start the engine.

All information subject to change without notice.
6SE412 0403 Copyright © 2004 DETROIT DIESEL CORPORATION

WARNING:

PERSONAL INJURY

To avoid injury, use care when working around moving belts and rotating parts on the engine.

3. Check the turbocharger for unusual noises and excessive vibration.

NOTE:
Unusual noises and excessive vibration can be caused by damage to the turbocharger wheels, or by leaks in the charge-air piping.

4. Visually check the turbocharger outlet pipe and air cleaner elbow for leaks. See Figure 6-3.

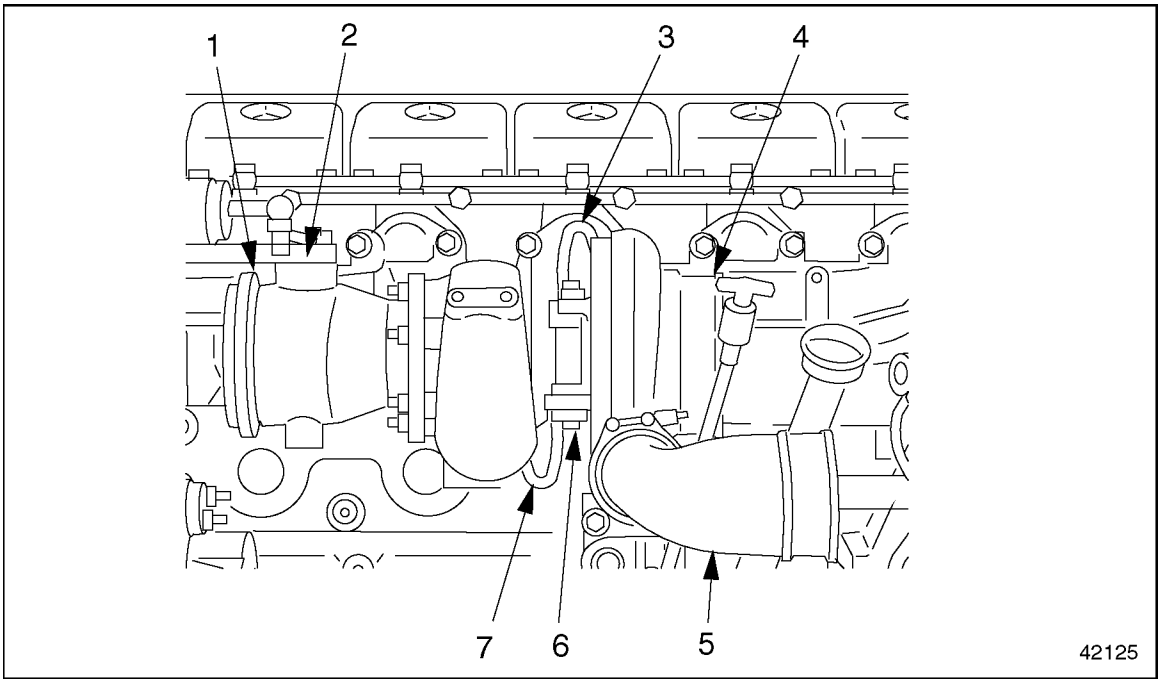

1. Exhaust Brake Valve Housing
2. Bracket
3. Oil Supply Line
4. Air Cleaner Inlet
5. Turbocharger Outlet Pipe
6. Return Line Mounting Bolt
7. Oil Return Line

Figure 6-3 Turbocharger Components

5. Check the charge air piping for leaks. To find leaks, coat the outside of the pipe with a thin film of soapy water.
6. Check the exhaust system for leaks. To find leaks, check for color changes to the pipe caused by heating around the leak area.

 Copyright © 2004 DETROIT DIESEL CORPORATION

https://truckmanualshub.com/

7. Shut down the engine.

6.3.1.1 Checking Turbocharger Radial and Axial Play

Check the turbocharger radial and axial play as follows:

1. Remove the exhaust brake valve housing to expose the turbocharger wheel. See Figure 6-4.

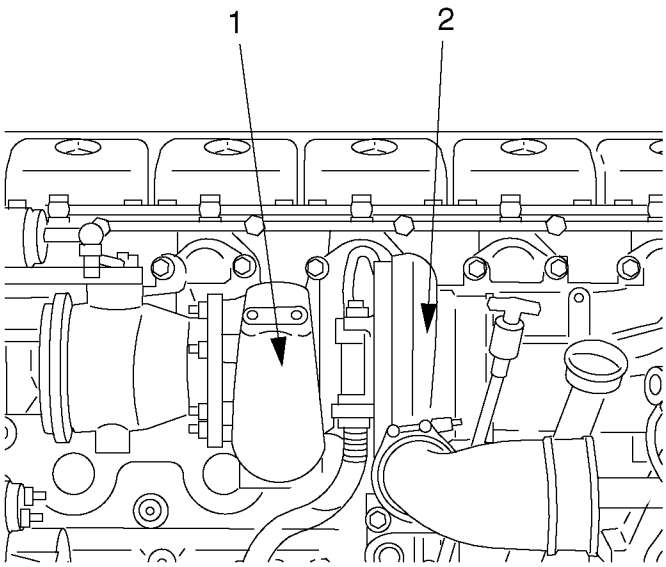

1. Turbocharger Wheel
2. Compressor Wheel

Figure 6-4 Location of Wheels

2. Remove the exhaust brake valve housing and the air cleaner inlet pipe to expose both wheels. See Figure 6-4.
3. Check both wheels for damage to the blade caused by dirt, debris, and other foreign matter in the turbocharging air system. See Figure 6-5 for the turbocharger wheel and see Figure 6-6 for the compressor wheel.

All information subject to change without notice.
6SE412 0403 Copyright © 2004 DETROIT DIESEL CORPORATION

https://truckmanualshub.com/

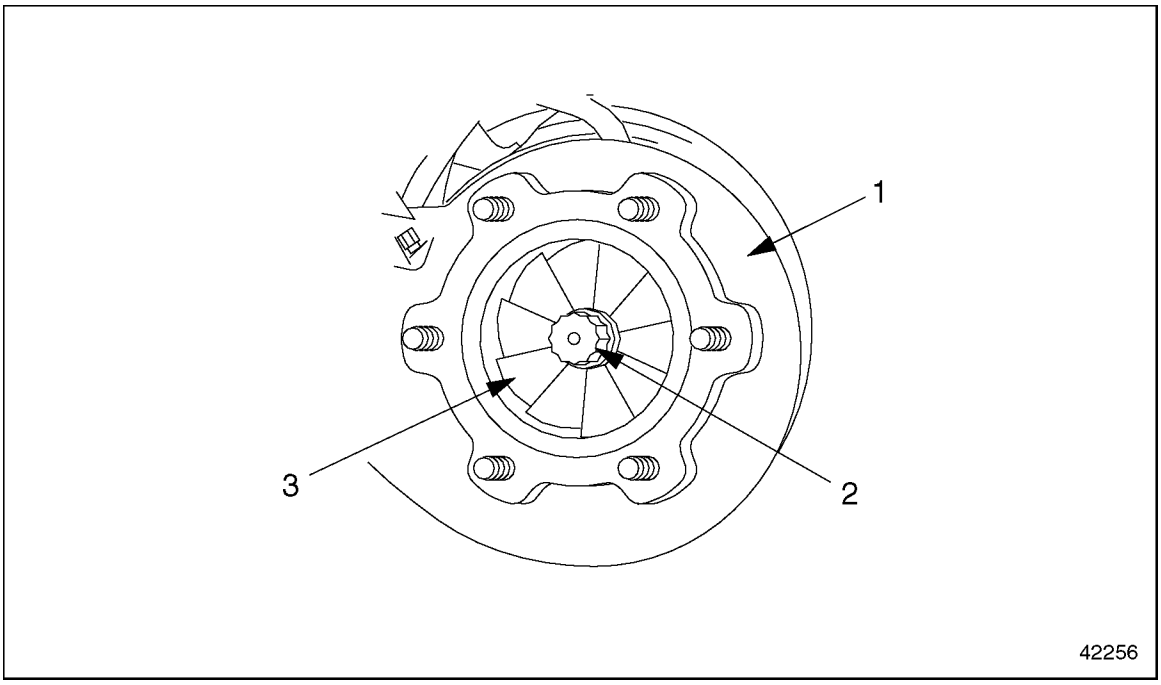

1. Turbocharger Housing
2. Rotor Shaft
3. Blade

Figure 6-5 Turbocharger Wheel

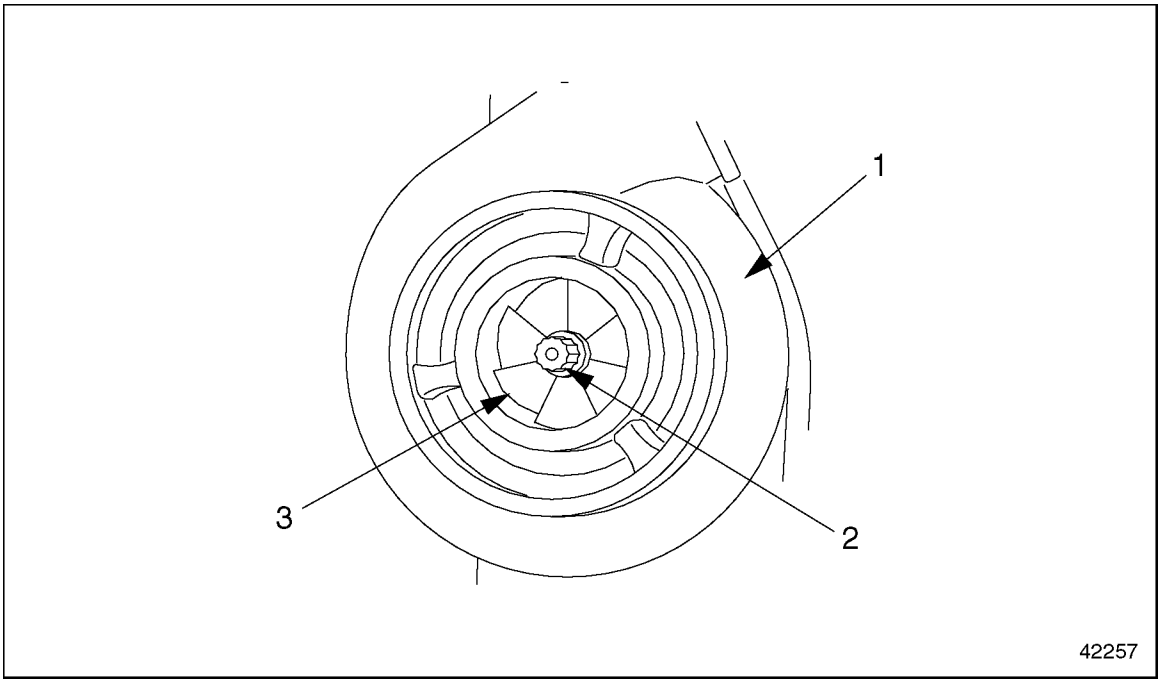

1. Turbocharger Housing
2. Rotor Shaft
3. Blade

Figure 6-6 Compressor Wheel

 Copyright © 2004 DETROIT DIESEL CORPORATION

https://truckmanualshub.com/

[a] If wheel blades are worn at the leading edges, ripped, cut, or bent backwards, clean the exhaust manifold and the entire turbocharging air system.

[b] If there is any damage, replace the turbocharger.

4. Check the turning smoothness and uniformity of the rotor shaft.

[a] Turn the shaft alternately, in both clockwise and counterclockwise directions, until it is clear of carbonized oil.

[b] Turn the nut on the end of the rotor shaft. Check that the shaft does not bind in some places and spin in others (smoothness).

[c] Turn the nut on the end of the rotor shaft. Check that the same amount of turn on the nut always causes the same amount of turn on each wheel (uniformity).

5. Check the axial play of the rotor shaft. See Figure 6-7.

NOTE:
Move the shaft in the direction shown by the arrows.

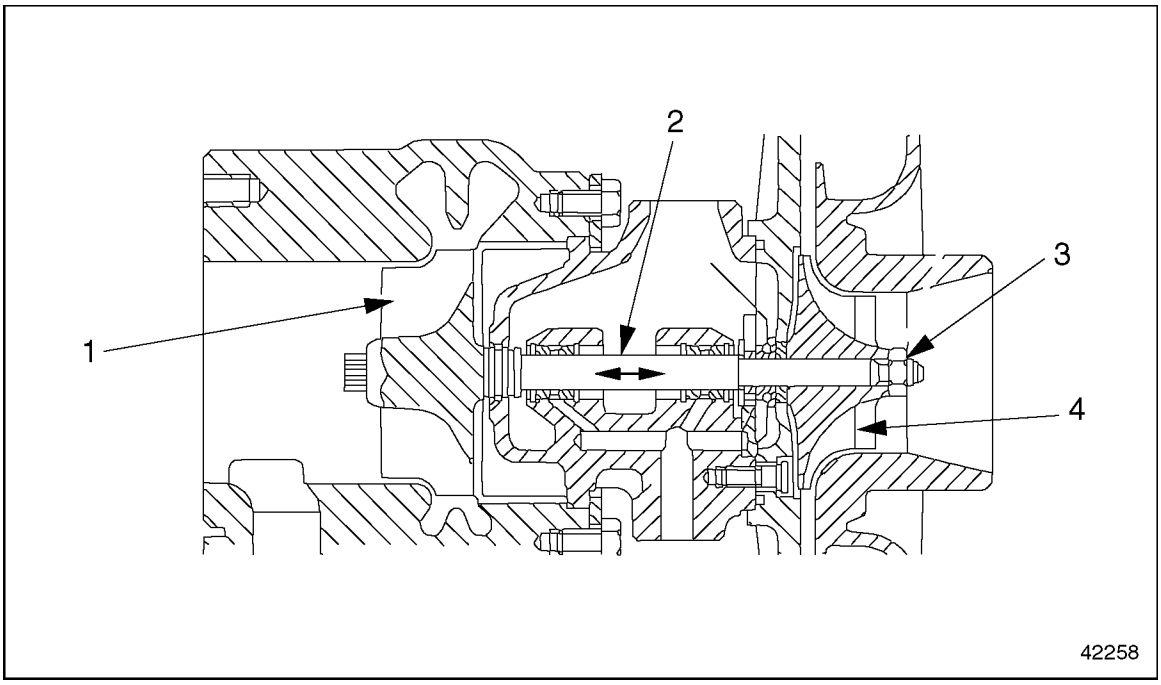

1. Turbocharger Wheel
2. Rotor Shaft
3. Rotor Nut
4. Compressor Wheel

Figure 6-7 Turbocharger Axial Play

[a] Move the rotor shaft from end to end and check for friction between the wheels and the turbo housing. Neither turbo wheel nor compressor wheel should rub against the housing.

[b] If there is friction or contact with either side of the housing, replace the turbocharger.

All information subject to change without notice.
6SE412 0403 Copyright © 2004 DETROIT DIESEL CORPORATION

6. Check the radial play of the rotor shaft. See Figure 6-8.

NOTE:
Move the shaft in the direction shown by the arrows.

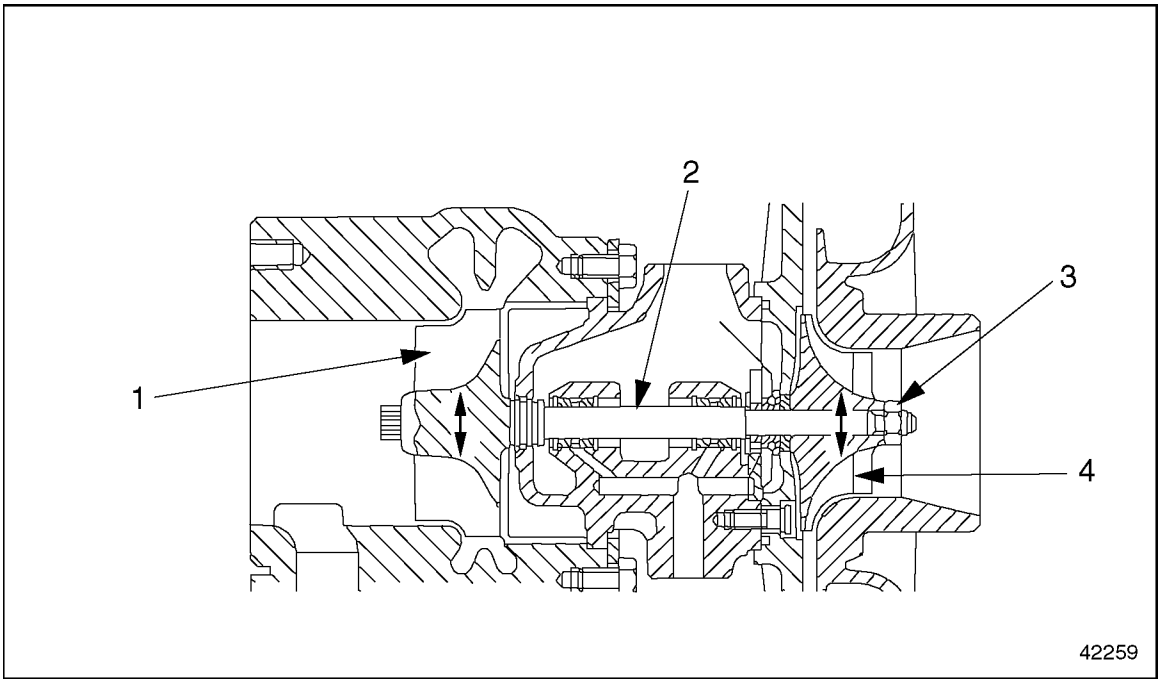

1. Turbocharger Wheel
2. Rotor Shaft
3. Rotor Nut
4. Compressor Wheel

Figure 6-8 Turbocharger Radial Play

[a] Move the rotor shaft from side to side and check for friction between the wheels and the turbo housing. Neither turbo wheel nor compressor wheel should rub against the housing.

[b] If there is friction or contact with either side of the housing, replace the turbocharger.

7. Install the air cleaner pipe.
8. Install the exhaust brake valve housing.
9. Lower the hood and remove the chocks from the rear tires.

6.3.2 Turbocharger Removal

Remove the turbocharger as follows:

1. Apply the parking brakes, shut down the engine, and chock the rear tires. Tilt the hood.

 Copyright © 2004 DETROIT DIESEL CORPORATION

https://truckmanualshub.com/

WARNING:

PERSONAL INJURY

To avoid injury before starting and running the engine, ensure the vehicle is parked on a level surface, parking brake is set, and the wheels are blocked.

2. To gain access to the turbocharger, remove the air cleaner.
3. Disconnect the exhaust pipe from the exhaust brake valve housing.
4. Remove the air hose from the exhaust brake cylinder.
5. Disconnect the turbocharger outlet pipe from the turbocharger housing. See Figure 6-9.

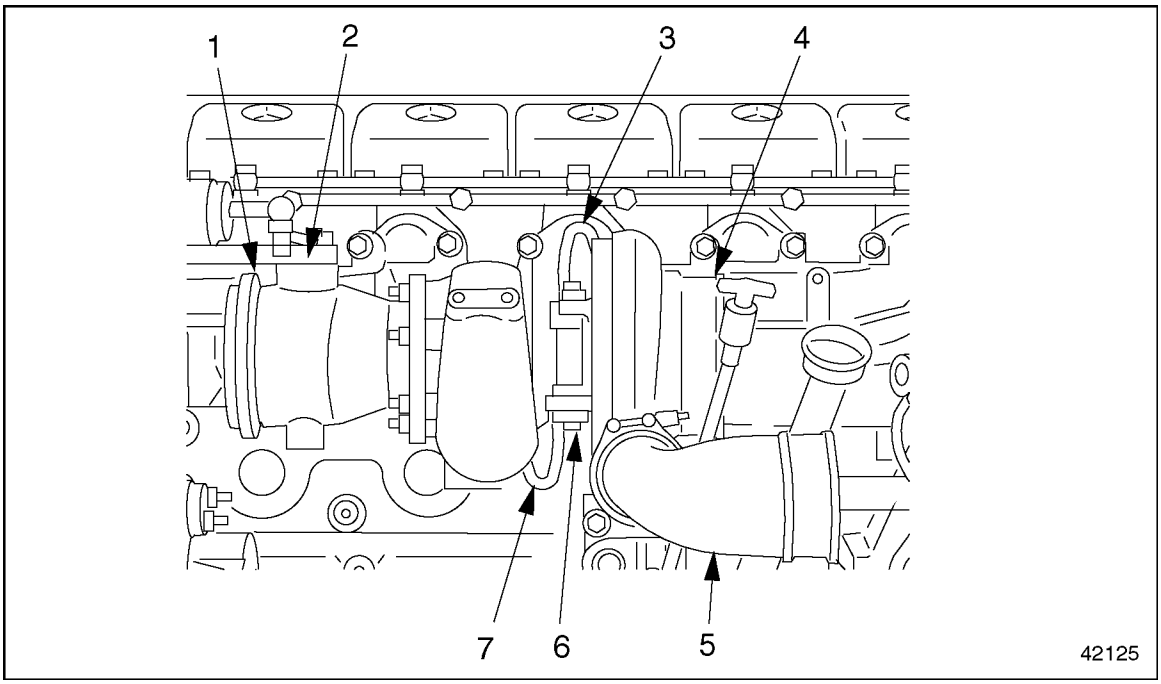

1. Brake Valve Housing
2. Bracket
3. Oil Supply Line
4. Air Cleaner Inlet
5. Turbocharger Outlet Pipe
6. Return Line Mounting Bolt
7. Oil Return Line

Figure 6-9 Turbocharger Air Outlet

All information subject to change without notice.
6SE412 0403 Copyright © 2004 DETROIT DIESEL CORPORATION

6. Disconnect the air intake elbow from the turbocharger. See Figure 6-10.

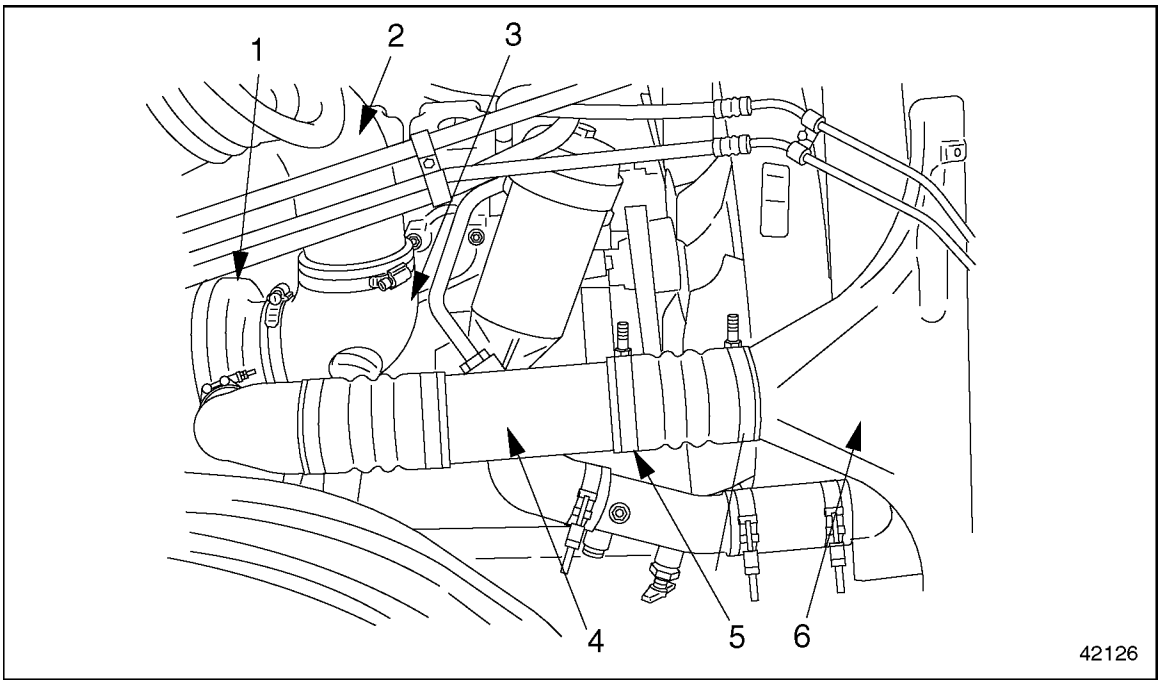

1. Turbocharger
2. Air Cleaner Pipe
3. Air Intake Elbow
4. Turbocharger Outlet Line
5. Constant-Torque Clamp
6. Charge Air Cooler

Figure 6-10 Turbocharger Air Intake

7. Remove the oil return line from the turbocharger and the cylinder block.
   [a] Remove the two bolts attaching the oil return line to the turbocharger. Discard the gasket.
   [b] Remove the banjo bolt attaching the oil return line to the cylinder block. Discard the two seal rings.

 Copyright © 2004 DETROIT DIESEL CORPORATION

https://truckmanualshub.com/

8. Remove the oil supply line from the turbocharger and the cylinder block. See Figure 6-11.

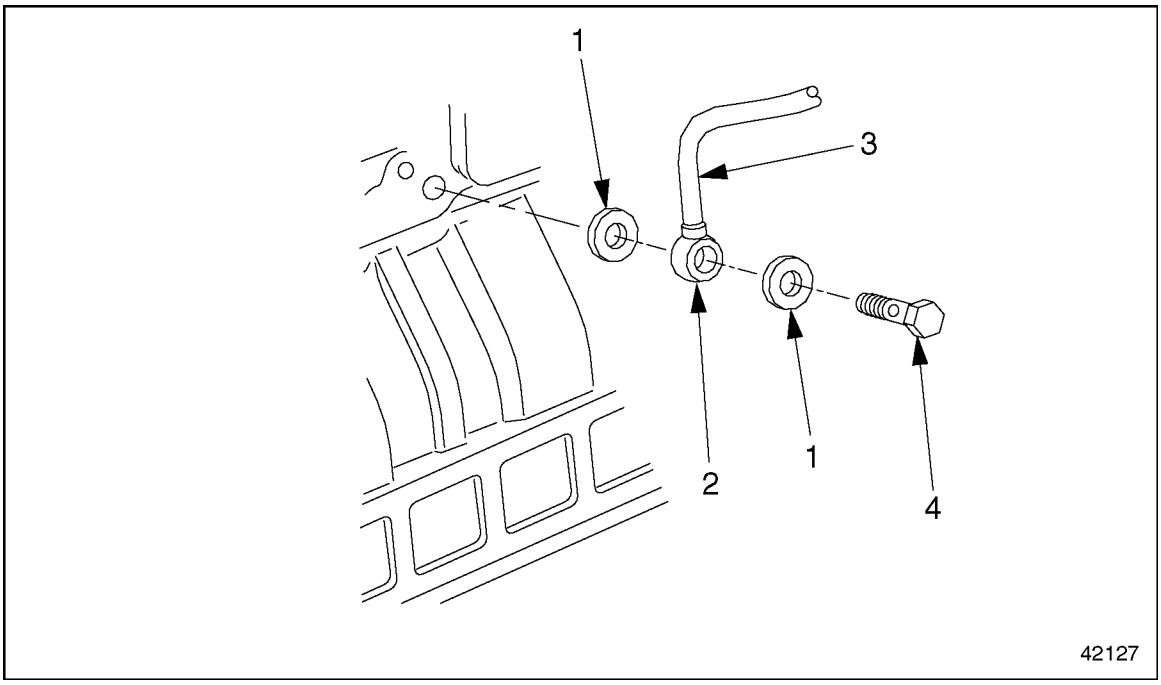

1. Seal Ring
2. Banjo Fitting
3. Oil Supply Line
4. Banjo Bolt

Figure 6-11 Oil Supply Line Fasteners

[a] Remove the two bolts attaching the oil supply line to the turbocharger. Discard the gasket.

[b] Remove the banjo bolt attaching the oil supply line to the cylinder block. Discard the two seal rings.

9. Remove the nuts that attach the turbocharger to the exhaust manifold. Remove the turbocharger and exhaust brake valve housing.
10. Remove the exhaust brake valve housing from the turbocharger (if needed).

6.3.3 Turbocharger Installation

Install the turbocharger as follows:

1. Inspect the turbo inlet hose, turbocharger outlet pipe, and the oil supply and return lines for restrictions or foreign objects.
2. Using new nuts, install the exhaust brake valve housing on the turbocharger (if removed). Tighten the nuts 50 N·m (37 lb·ft).

All information subject to change without notice.
6SE412 0403 Copyright © 2004 DETROIT DIESEL CORPORATION

3. Install the turbocharger on the exhaust manifold. listed in Table 6-1 are the torque values.

Description	N·m (lb·ft)
Exhaust Brake Valve Housing to Turbocharger	50 (37)
Heat Shield Mounting Bolts	25 (18)
Turbocharger to Exhaust Manifold	50 (37)
Turbocharger Oil Return Line Mounting Bolts	25 (18)
Turbocharger Oil Line Banjo Bolts	35 (26)
Turbocharger Oil Supply Line Mounting Bolts	25 (18)
Turbocharger Oil Return Line Connection	50 (37)
Turbocharger Oil Return Line Banjo Bolt	120 (88)

Table 6-1 Turbocharger Torque Values

[a] Coat four new prevailing torque locknuts with a light coating of high temperature grease.

[b] Make sure that the mating surfaces of the turbocharger and the exhaust manifold are clean and free of damage.

[c] Position the turbocharger over the mounting studs on the exhaust manifold.

[d] Install the nuts and tighten them 50 N·m (37 lb·ft).

4. Attach the oil return line to the turbocharger and the cylinder block. Listed in Table 6-1 are the torque values.

[a] Install a new gasket where the end flange of the return line meets the turbocharger.

[b] Install the mounting bolts through the holes in the end flange. Tighten them 25 N·m (18 lb·ft).

[c] Install two new seal rings on the banjo fitting at the other end of the return line.

[d] Install the banjo bolt attaching the return line to the engine oil return inlet. Tighten the bolt 35 N·m (26 lb·ft).

5. Fill the bearing housing with clean engine oil through the oil inlet port. Turn the turbocharger wheel several times to coat the bearings with oil.

NOTE:
If the turbocharger wheel cannot be spun freely by hand or if there is any indication of rubbing or scraping, determine the reason before starting the engine. One cause of wheel rubbing is a misaligned turbocharger housing.

6. Refill the oil inlet port and connect the oil supply line. listed in Table 6-1 are the torque values.

[a] Install a new gasket where the end flange of the supply line meets the turbocharger.

 Copyright © 2004 DETROIT DIESEL CORPORATION

https://truckmanualshub.com/

[b] Install the mounting bolts through the holes in the end flange and the heat shield bracket. Tighten them 25 N·m (18 lb·ft).

[c] Install two new seal rings on the banjo fitting at the other end of the supply line.

[d] Install the banjo bolt attaching the supply line to the cylinder block. Tighten the bolt 35 N·m (26 lb·ft).

7. Attach the air intake elbow to the turbocharger. Tighten the clamp 10 N·m (7 lb·ft).
8. Attach the turbocharger outlet pipe to the turbocharger. Tighten the clamp 6 N·cm (4 lb·ft).
9. Connect the exhaust pipe to the exhaust brake valve housing.
10. Install the air line on the exhaust brake cylinder, as removed.
11. Install the air cleaner.

WARNING:

PERSONAL INJURY

Diesel engine exhaust and some of its constituents are known to the State of California to cause cancer, birth defects, and other reproductive harm.

- ☐ **Always start and operate an engine in a well ventilated area.**
- ☐ **If operating an engine in an enclosed area, vent the exhaust to the outside.**
- ☐ **Do not modify or tamper with the exhaust system or emission control system.**

12. Start the engine and allow it to run at idle speed for three to four minutes before accelerating.
13. Check for oil leaks. Correct any if found.
14. Lower the hood and remove the chocks from the rear tires.

All information subject to change without notice.
6SE412 0403 Copyright © 2004 DETROIT DIESEL CORPORATION

https://truckmanualshub.com/

6.A Additional Information

Description **Page**

SPECIFICATIONS 6-18
Charge Air Cooler 6-18
Turbocharger 6-18

 Copyright © 2004 DETROIT DIESEL CORPORATION

https://truckmanualshub.com/

SPECIFICATIONS

This section contains the specifications for servicing the engine.

Charge Air Cooler

The torque values for the charge air cooler are listed in Table 6-2.

Description	N·m (lb·ft)
Charge Air Cooler Mounting Bolts (to radiator strut)	25 (18)
Charge Air Inlet Hose Clamps	10 (7)
Charge Air Inlet Pipe Mounting Bolts	60 (40)
Charge Air Manifold Mounting Bolts	40 (30)
Fuel Line Banjo Bolt	50 (37)
Manual Priming Pump Banjo Bolt	45 (33)
Radiator Strut Mounting Bolts (to engine)	50 (37)
Turbo Outlet Hose Clamps	6 (4)
Turbo Outlet Pipe Mounting Bolts (to bracket)	50 (37)

Table 6-2 Torque Values for Charge Air Cooler

Turbocharger

The torque values for the turbocharger are listed in Table 6-3.

Description	N·m (lb·ft)
Exhaust Brake Valve Housing to Turbocharger	50 (37)
Heat Shield Mounting Bolts	25 (18)
Turbocharger to Exhaust Manifold Prevailing Torque Nuts	50 (37)
Turbocharger Oil Return Line Mounting Bolts	25 (18)
Turbocharger Oil Supply Line Banjo Bolt	35 (26)
Turbocharger Oil Return Line Connection	50 (37)
Turbocharger Oil Return Line Banjo Bolt	120 (88)

Table 6-3 Turbocharger Torque Values

All information subject to change without notice.
6SE412 0403 Copyright © 2004 DETROIT DIESEL CORPORATION

https://truckmanualshub.com/

7 EXHAUST SYSTEM

Section		Page
7.1	EXHAUST MANIFOLD	7-3
7.2	EXHAUST BRAKE ASSEMBLY	7-6
7.3	EGR EXHAUST MANIFOLD	7-14
7.4	EGR COOLER AND COOLER SUPPORT BRACKET	7-26
7.5	EGR CONTROL VALVE, GAS OUTLET PIPE, AND GAS MIXER	7-43
7.6	EPV (ELECTRONIC PROPORTIONAL VALVE) AND WABCO® AIR SOLENOID VALVE	7-51
7.7	HENGST® BREATHER FILTER	7-55
7.A	ADDITIONAL INFORMATION	7-59

https://truckmanualshub.com/

All information subject to change without notice.
6SE412 0403 Copyright © 2004 DETROIT DIESEL CORPORATION

https://truckmanualshub.com/

7.1 EXHAUST MANIFOLD

Perform the following procedures for removal and installation of the exhaust manifold:

7.1.1 Exhaust Manifold Removal

Remove the exhaust manifold as follows:

1. Disconnect the batteries and tilt the hood.
2. Remove the turbocharger from the exhaust manifold.

 Copyright © 2004 DETROIT DIESEL CORPORATION

https://truckmanualshub.com/

3. Loosen all the exhaust manifold mounting bolts, but do not remove them yet. See Figure 7-1.

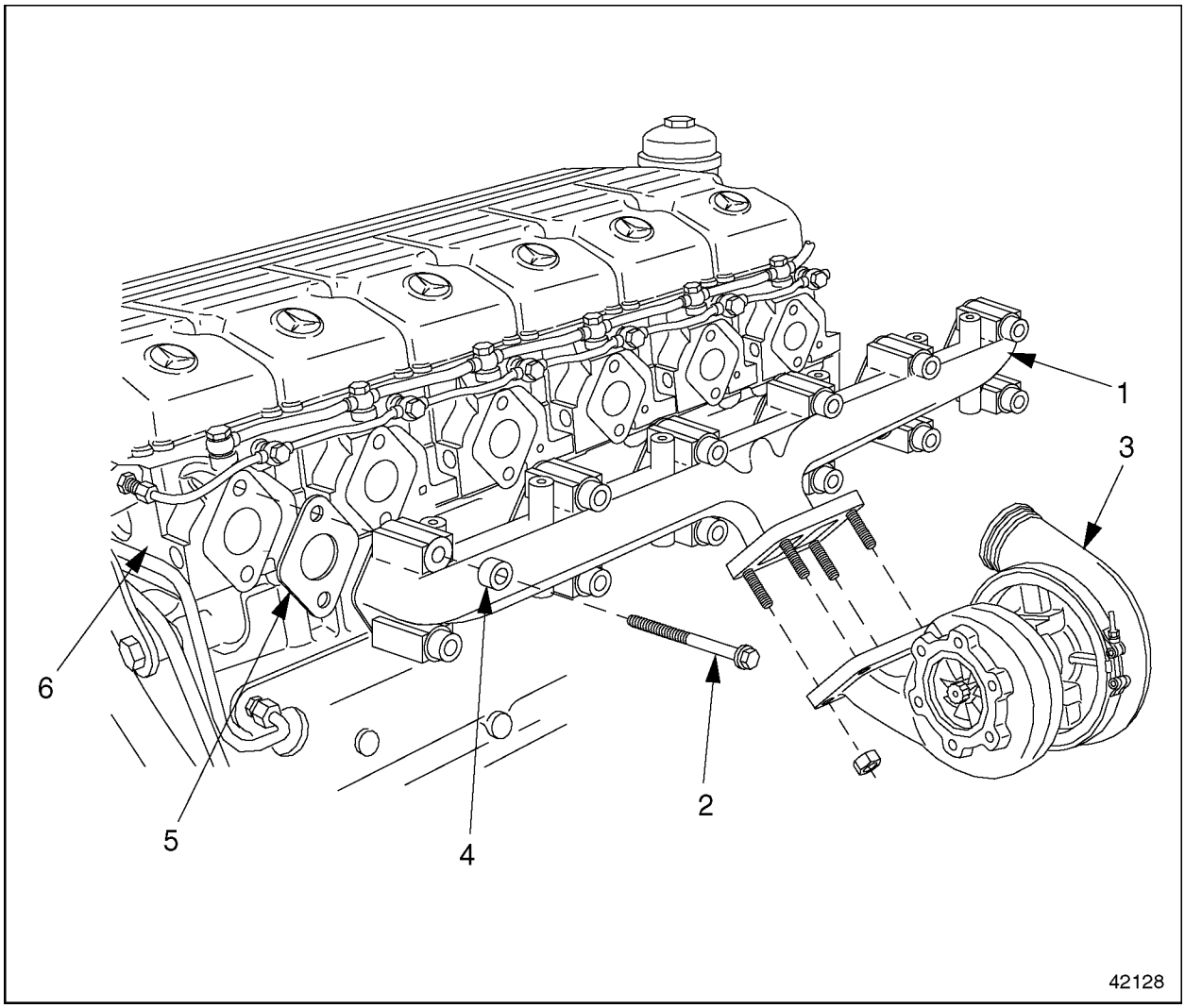

1. Exhaust Manifold
2. Mounting Bolt
3. Turbocharger
4. Spacer
5. Gasket
6. Cylinder Heads

Figure 7-1 Exhaust Manifold Removal and Installation

4. Remove the exhaust manifold components from each cylinder head.
   [a] Remove each mounting bolt and spacer from the exhaust manifold and each cylinder head.
   [b] Remove the spacer from each mounting bolt.
   [c] Remove the exhaust manifold.

All information subject to change without notice.
6SE412 0403 Copyright © 2004 DETROIT DIESEL CORPORATION

5. Remove and discard the gaskets from the exhaust port on each cylinder head. Clean any bits of adhering gasket material from the exhaust manifold and the exhaust ports.

7.1.2 Exhaust Manifold Installation

Install the exhaust manifold as follows:

1. Install a gasket on each exhaust port. Fasten the gasket to the engine by installing one mounting bolt on the forward side of each exhaust port.
2. Position the exhaust manifold next to the heads, and install it by sliding the manifold to the right until it comes to rest on the bolts that were installed in the previous step.
3. Line up each gasket and install the remaining bolt and spacer on each exhaust port.

NOTE:
Make sure that each gasket is properly aligned before tightening the mounting bolts on that exhaust port.

4. Tighten each of the mounting bolts 50 N·m (37 lb·ft).
5. Install the turbocharger on the mounting studs on the exhaust manifold. Using new nuts, tighten each nut 50 N·m (37 lb·ft).
6. Connect the batteries and lower the hood.

WARNING:

PERSONAL INJURY

Diesel engine exhaust and some of its constituents are known to the State of California to cause cancer, birth defects, and other reproductive harm.

- ☐ **Always start and operate an engine in a well ventilated area.**
- ☐ **If operating an engine in an enclosed area, vent the exhaust to the outside.**
- ☐ **Do not modify or tamper with the exhaust system or emission control system.**

7. Start the engine and make sure there is oil pressure. Shut down the engine and check for leaks.

 Copyright © 2004 DETROIT DIESEL CORPORATION

https://truckmanualshub.com/

7.2 EXHAUST BRAKE ASSEMBLY

Engine braking is controlled by a pneumatically-operated exhaust brake on the turbocharger and by a constant-throttle system. For greater braking power, an optional turbo brake is available.

7.2.1 Exhaust Brake Assembly Removal

Remove the exhaust brake assembly as follows:

1. Disconnect the batteries.

WARNING:

PERSONAL INJURY

To avoid injury before starting and running the engine, ensure the vehicle is parked on a level surface, parking brake is set, and the wheels are blocked.

2. Chock the rear tires and tilt the hood.
3. To gain access to the exhaust brake, remove the air cleaner.

WARNING:

PERSONAL INJURY

To avoid injury, never remove any engine component while the engine is running.

WARNING:

PERSONAL INJURY

To avoid injury from the sudden release of a high-pressure hose connection, wear a face shield or goggles.

4. Remove the exhaust brake compressed-air line from the exhaust brake cylinder.

All information subject to change without notice.
6SE412 0403 Copyright © 2004 DETROIT DIESEL CORPORATION

5. Remove the clamp that fastens the exhaust pipe to the brake valve housing. See Figure 7-2.

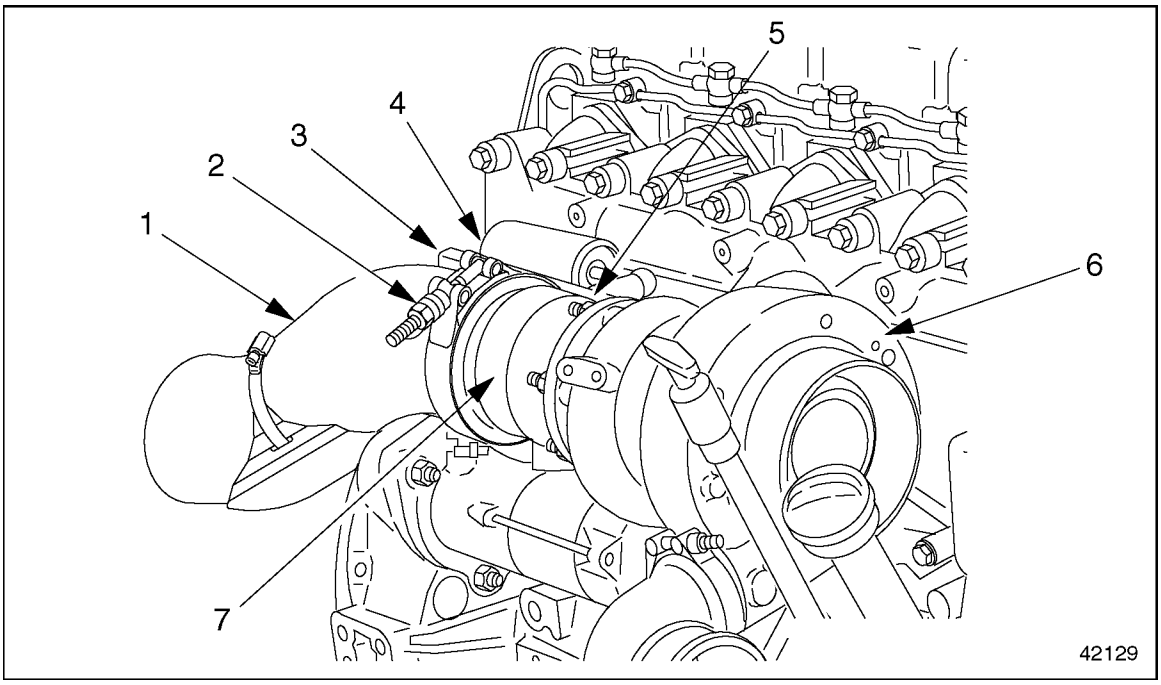

1. Exhaust Pipe
2. Constant-Torque Clamp
3. Bracket
4. Exhaust Brake Cylinder
5. Mounting Stud
6. Turbocharger
7. Brake Valve Housing

Figure 7-2 Exhaust Brake Assembly Removal

6. Remove the locknuts that attach the brake valve housing to the studs on the turbocharger. Remove the housing from the engine.

7.2.2 Exhaust Brake Disassembly

Disassemble the exhaust brake unit as follows:

 Copyright © 2004 DETROIT DIESEL CORPORATION

https://truckmanualshub.com/

1. Remove the exhaust brake assembly from the engine. See Figure 7-3.

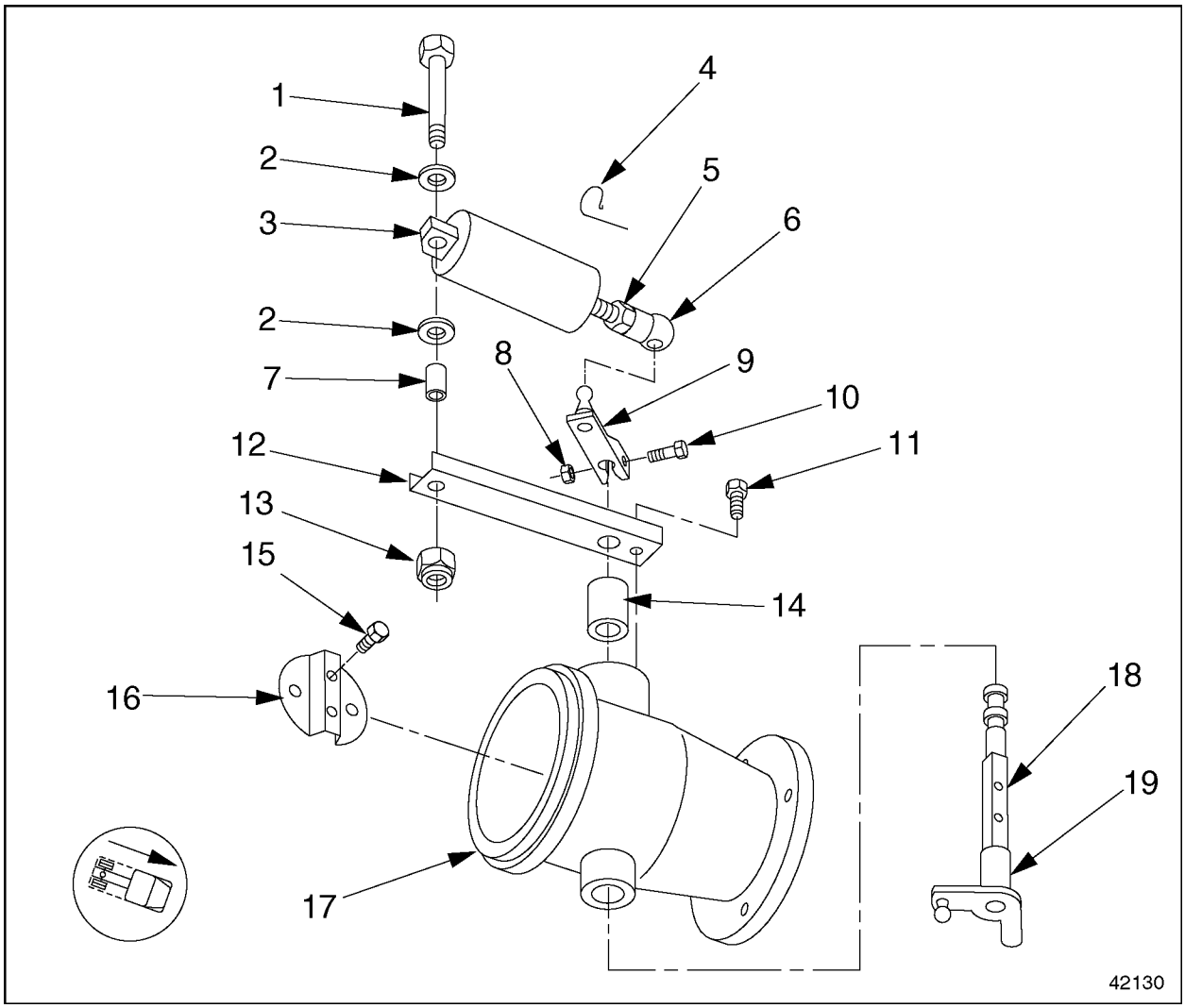

1. Mounting Bolt
2. Washer
3. Exhaust Brake Cylinder
4. Locking Element
5. Jam Nut
6. Ball Socket
7. Spacer
8. Adjusting-Lever Hexnut
9. Adjusting Lever
10. Adjusting Lever Bolt
11. Bracket Mounting Bolt (2 qty.)
12. Bracket
13. Locknut
14. Rear Bushing
15. Valve Mounting Bolt (2 qty.)
16. Exhaust Brake Valve
17. Brake Valve Housing
18. Shaft
19. Front Bushing (integral to shaft)

Figure 7-3 Exhaust Brake Assembly

All information subject to change without notice.
6SE412 0403 Copyright © 2004 DETROIT DIESEL CORPORATION

2. Remove the exhaust brake cylinder from the bracket.
   [a] Remove the mounting bolt, locknut, spacer, and washers from the exhaust brake cylinder. Discard the locknut.
   [b] Remove the locking element from the ball socket.
   [c] Separate the ball socket from the adjusting lever.
   [d] Remove the cylinder from the bracket.
3. Check the end play (movement back and forth) and radial play (movement up and down) of the exhaust brake shaft. If there is too much play in either direction, the shaft is worn and must be replaced. Listed in Table 7-1 are the acceptable ranges.

Description	mm (inch)
End Play (axial play)	0.4 - 0.7 mm (0.016 - 0.028 in.)
Radial Play	0.200 - 0.263 mm (0.00787 - 0.01035 in.)

Table 7-1 Exhaust Brake Shaft Specifications

4. Remove the adjusting lever.
   [a] Remove the hexnut and bolt on the adjusting lever to release the clamping pressure on the exhaust brake shaft.
   [b] Lift the adjusting lever off the shaft, taking care not to damage the splines of the shaft.
5. Remove the two bracket mounting bolts that secure the bracket to the exhaust brake valve housing. Remove the bracket from the valve housing.
6. Remove the bolts that fasten the exhaust brake valve (butterfly valve) to the shaft. Remove the exhaust brake valve from the brake valve housing.
7. Using a suitable drift, press the shaft, and its integral front bushing, out of the brake valve housing.
8. Using a suitable drift, press the rear bushing out of the brake valve housing.

7.2.3 Exhaust Brake Assembly

Assemble the exhaust brake unit as follows:

 Copyright © 2004 DETROIT DIESEL CORPORATION

https://truckmanualshub.com/

1. Install the rear bushing in the bracket side of the exhaust brake valve housing. See Figure 7-4.

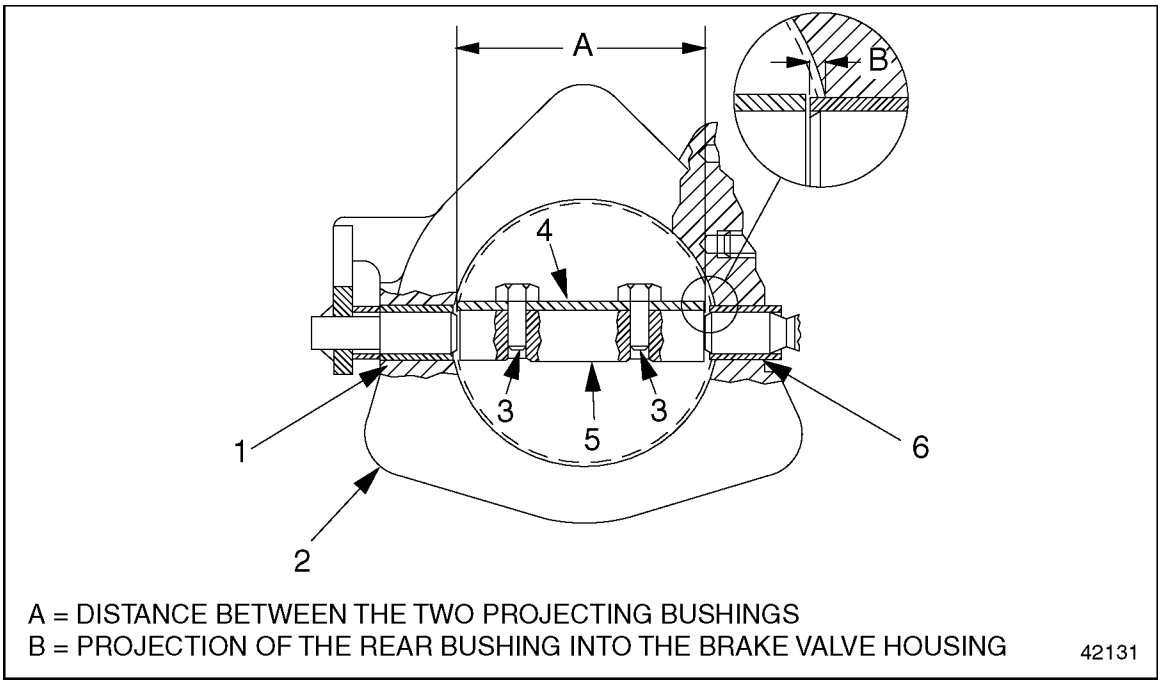

1. Front Bushing (on shaft)
2. Brake Valve Housing
3. Valve Mounting Bolt (2 qty.)
4. Exhaust Brake Valve
5. Shaft
6. Rear Bushing

Figure 7-4 Bushing Alignment

[a] Lubricate the rear bushing with a light coating of bearing grease.

[b] Using a suitable drift, press in the bushing. Allow the bushing to project slightly into the valve housing bore.

2. Measure bushing projection (dimension B, listed in Table 7-2.)

Description	mm (inch)
Distance Between the Two Projecting Bushings (Ref. A)	84.2 (3.31)
Projection of the Rear Bushing into the Brake Valve Housing (Ref. B)	2.6 (0.10)

Table 7-2 Bushing Alignment Specifications

[a] Choose a feeler gauge equal to dimension B, 2.6 mm (0.10 inch).

[b] Insert the feeler gauge into the bore in the brake valve housing until it is touching the rear bushing.

All information subject to change without notice.
6SE412 0403 Copyright © 2004 DETROIT DIESEL CORPORATION

[c] Adjust the projection inward or outward until the face of the bushing is flush with the feeler gauge.

3. Install the shaft, with its integral front bushing, into the brake valve housing (with the rear bushing installed).

   [a] Lubricate the front bushing with a light coating of bearing grease.

   [b] Using a suitable drift, press in the shaft until the front bushing projects slightly into the other side of the brake valve housing bore.

4. Measure the distance between the bushing faces inside the brake valve housing (dimension A, see Figure 7-4.)

   [a] Using calipers or another suitable measuring device, measure the distance between the face of the front bushing and the face of the rear bushing.

   [b] Adjust the distance until it is equal to 84.2 mm (3.31 inches).

5. Install the exhaust brake valve on the shaft.

   [a] Position the valve correctly on the shaft. The valve should be centered inside the valve housing, and equidistant between the two bushings.

   [b] Apply anti-seize compound to the threads of the two valve mounting bolts.

   [c] Install and tighten the two valve mounting bolts 30 N·m (22 lb·ft).

   [d] With the bolts tightened, move the valve to and fro a few times to make sure it does not interfere with the brake valve housing at any point.

6. Install the bracket on the brake valve housing. Tighten the bracket mounting bolts 35 N·m (25 lb·ft).

7. Install the adjusting lever on the shaft.

   [a] Rotate the valve until it is fully open.

   [b] Install the adjusting lever so that the lever stop rests against the bracket with the valve still fully open.

   [c] Install the adjusting-lever bolt and nut. Tighten the nut 15 N·m (11 lb·ft).

8. Install the exhaust brake cylinder on the bracket.

   [a] Install the bolt, washers, spacer, and a new locknut on the cylinder and bracket, as removed.

 Copyright © 2004 DETROIT DIESEL CORPORATION

https://truckmanualshub.com/

[b] Measure the length, listed in Table 7-3, of the uninstalled pneumatic cylinder, for specified preload after installation. See Figure 7-5, measurement B.

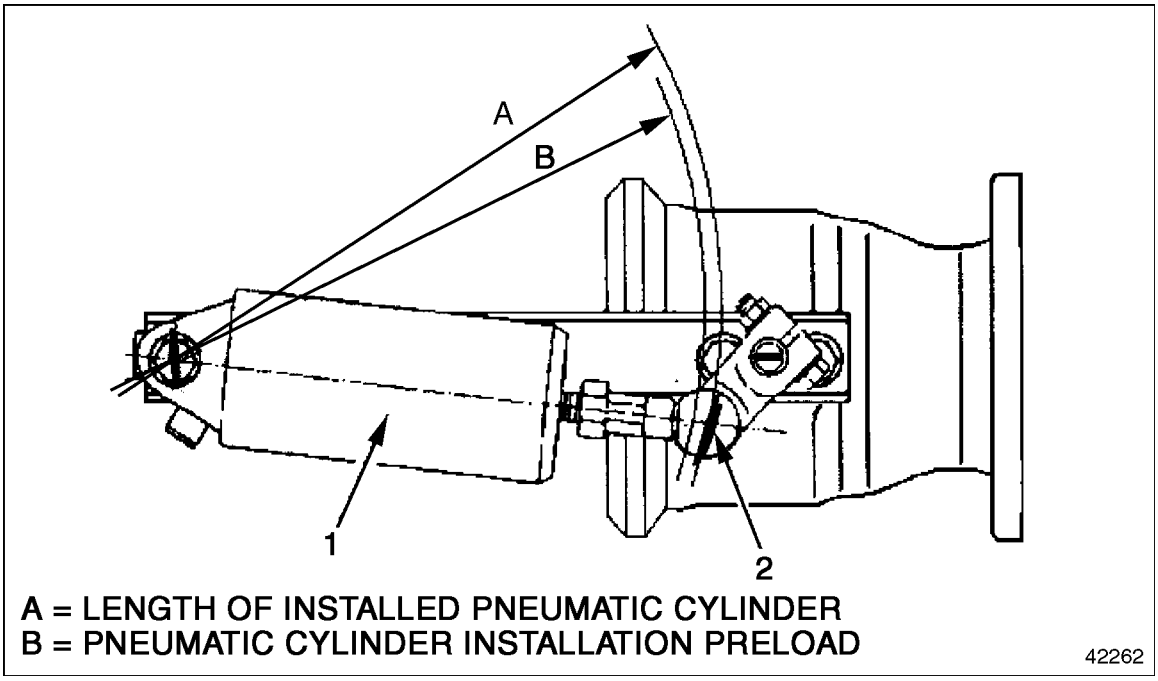

1. Pneumatic Cylinder
2. Ball Joint

Figure 7-5 Exhaust Brake Assembly

Designation	Measurement, mm (inch)
Length of installed pneumatic cylinder	187.0 mm (7.36 in.)
Length of uninstalled pneumatic cylinder, for specified preload after installation	183.50 - 184.50 mm (7.22 - 7. 26 in.)

Table 7-3 Length of Installed and Uninstalled Exhaust Brake Assembly

[c] With the valve open, turn the ball socket (on the cylinder) until it sits right on top of the ball stud (on the adjusting lever).

[d] Measure the length of the installed pneumatic cylinder. See Figure 7-5, measurement A.

[e] With the valve still open, turn the ball socket over two full turns.

[f] Using high temperature resisting grease, fit the ball socket onto the ball stud, and install the locking element.

[g] Tighten the locknut 25 N·m (18 lb·ft).

9. Install the exhaust brake assembly on the engine.

All information subject to change without notice.
6SE412 0403 Copyright © 2004 DETROIT DIESEL CORPORATION

7.2.4 Exhaust Brake Assembly Installation

Install the exhaust brake assembly as follows:

1. Clean the mating surfaces on the brake valve housing and the turbocharger.
2. Install the brake valve housing on the turbocharger by slipping the housing over the turbocharger studs. Tighten the locknuts 50 N·m (37 lb·ft).

WARNING:

PERSONAL INJURY

To avoid injury from the sudden release of a high-pressure hose connection, wear a face shield or goggles.

3. Install the compressed-air line on the exhaust brake cylinder.
4. Clean the sealing surfaces on the exhaust pipe and brake valve housing.
5. Slide the exhaust pipe and clamp over the end of the housing. Tighten the clamp.
6. Install the air cleaner.
7. Connect the batteries, lower the hood, and remove the chocks from the rear tires.

 Copyright © 2004 DETROIT DIESEL CORPORATION

https://truckmanualshub.com/

7.3 EGR EXHAUST MANIFOLD

The EGR exhaust manifold is a three-piece manifold. The manifold assembly is assembled apart from the cylinder heads, then the entire assembly is installed to the heads.

7.3.1 EGR Exhaust Manifold Removal

Remove the EGR exhaust manifold as follows:

NOTE:
Although not shown in the below graphic, the heat exchanger and heat exchanger bracket are still installed on the engine before the exhaust manifold is removed.

1. Remove the bolt that attaches the smaller front heat shield to the main heat shield, then remove the three bolts attaching the shield to the bottom of the exhaust manifold. Now remove the heat shield. See Figure 7-6.

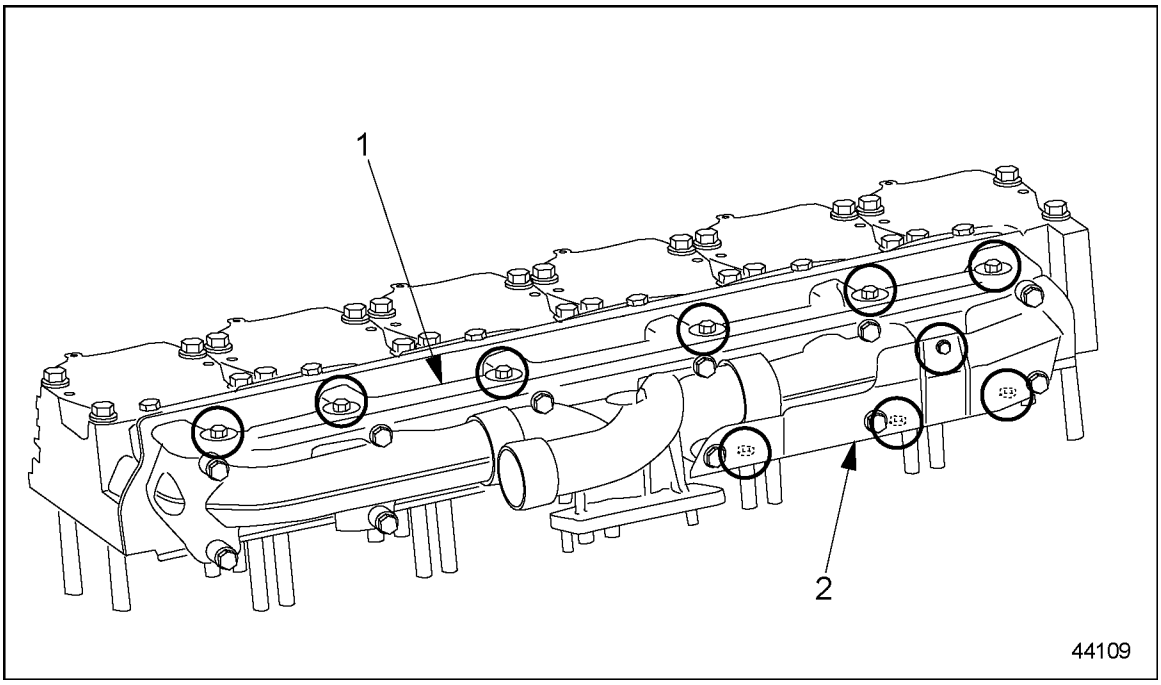

1. Upper or Main Heat Shield
2. Lower or Front Heat Shield

Figure 7-6 Removal or Installation of the Exhaust Manifold Front Heat Shield

NOTE:
Upper or main heat shield must remain on the exhaust manifold assembly until the assembly is removed due to inaccessibility of some of the heat shield mounting bolts.

All information subject to change without notice.
6SE412 0403 Copyright © 2004 DETROIT DIESEL CORPORATION

2. Loosen and remove outside nut that is resting on outside face of stud bracket. See Figure 7-7.

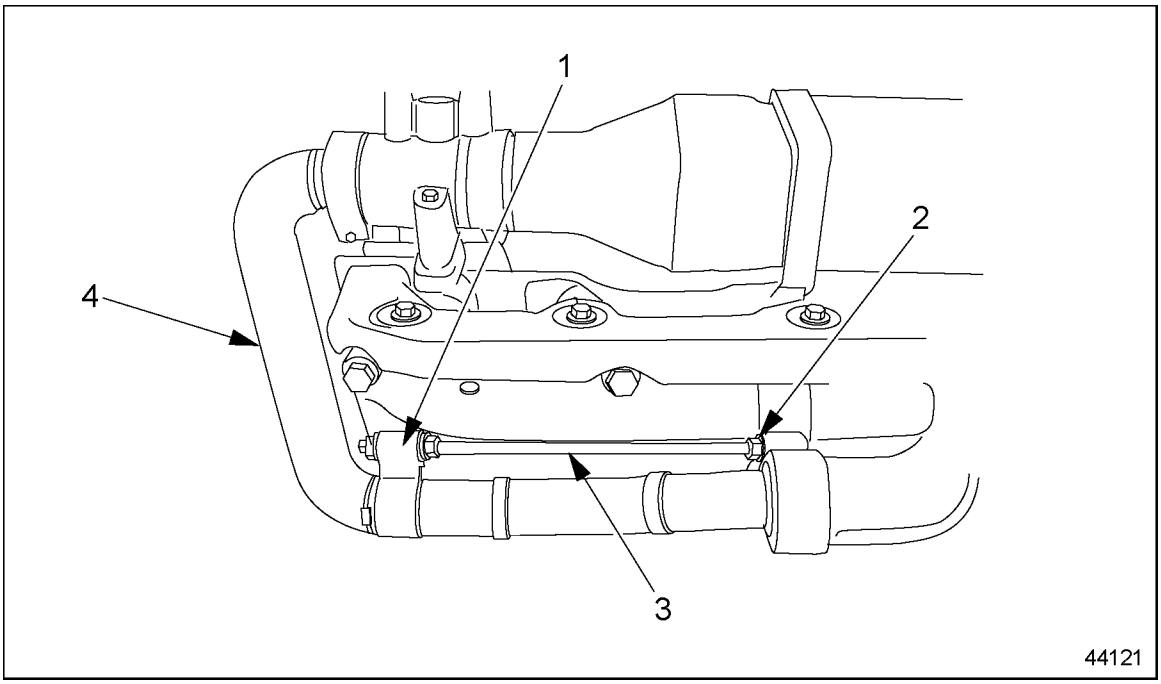

1. Stud Bracket
2. Stud Nut
3. Stud
2. Exhaust Gas Inlet Pipe (Hot Pipe)

Figure 7-7 Removing Stud from Exhaust Manifold and Inlet Pipe

3. Loosen center nut on stud that is resting on the inside, against the intake manifold center piece. See Figure 7-7.

NOTE:
If the inside nut that rests against the stud bracket is NOT loosened or moved at this point, it is possible that the stud dimension adjustment will remain the same without needing further adjustment when reinstalled.

NOTE:
Stud and stud bracket should be loose enough to allow removal of the exhaust manifold inlet pipe.

 Copyright © 2004 DETROIT DIESEL CORPORATION

https://truckmanualshub.com/

4. Loosen and remove bolt from positioning clamp which holds the gas inlet pipe to the throttle valve. See Figure 7-8.

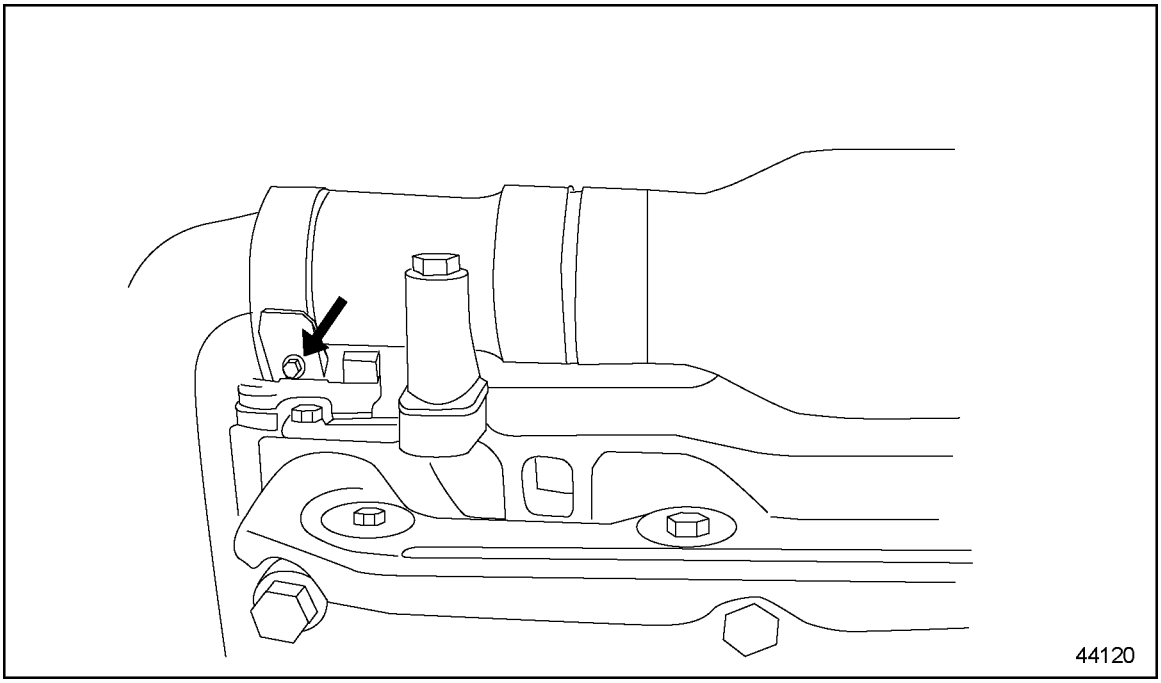

Figure 7-8 Removing or Installing Positioning Clamp to Throttle Inlet Pipe

All information subject to change without notice.
6SE412 0403 Copyright © 2004 DETROIT DIESEL CORPORATION

5. Gently pull exhaust manifold gas inlet pipe from center piece of exhaust manifold and from throttle valve (see arrows in graphic). Remove the fey rings (four per groove) on the gas inlet pipe leading to the exhaust manifold center piece. See Figure 7-9.

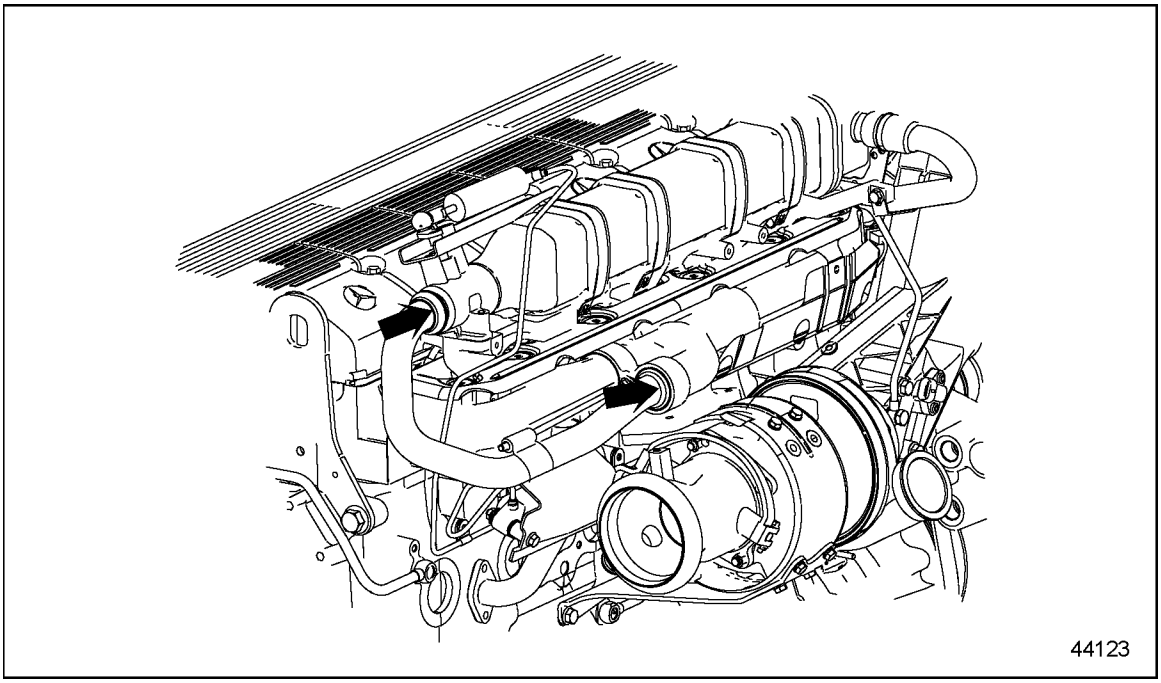

Figure 7-9 Exhaust Manifold Gas Inlet Pipe Removal

 Copyright © 2004 DETROIT DIESEL CORPORATION

https://truckmanualshub.com/

6. Remove the twelve bolts connecting the three-piece exhaust manifold to the block; remove the exhaust manifold assembly by first lowering the left side, then the right side out from under the heat exchanger bracket (not shown in graphic). See Figure 7-10.

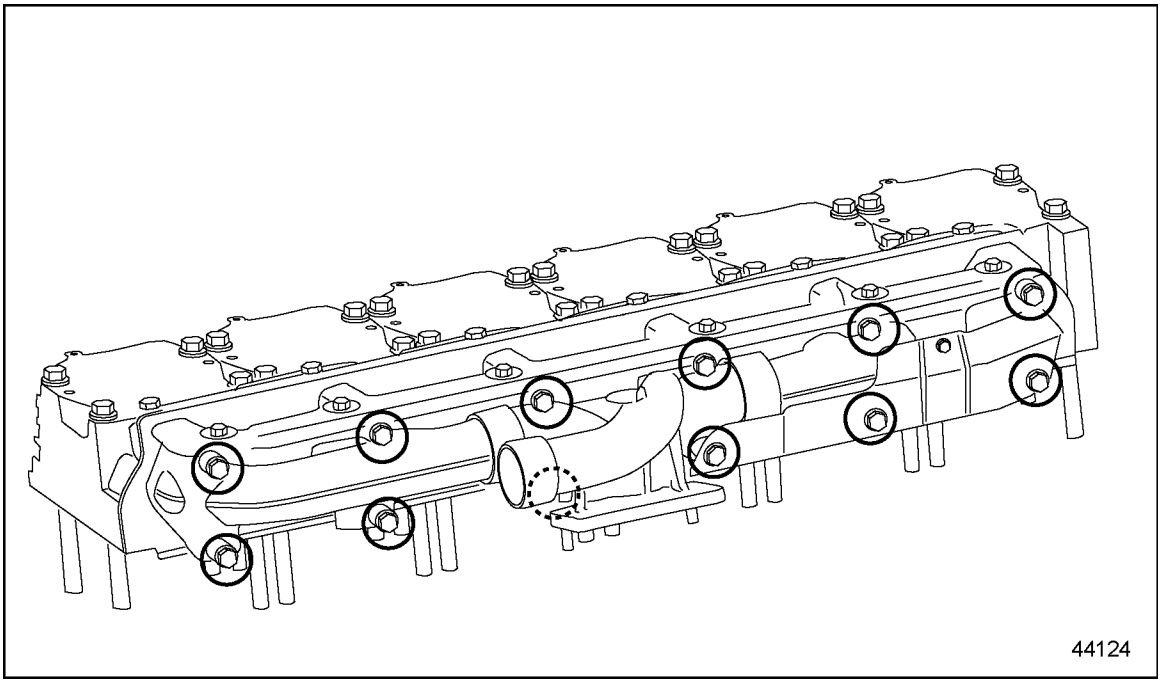

Figure 7-10 Removing or Installing Three-piece Exhaust Manifold Assembly

All information subject to change without notice.
6SE412 0403 Copyright © 2004 DETROIT DIESEL CORPORATION

7. Remove the six mounting bolts from the main or upper heat shield at this point. Remove the heat shield. See Figure 7-11.

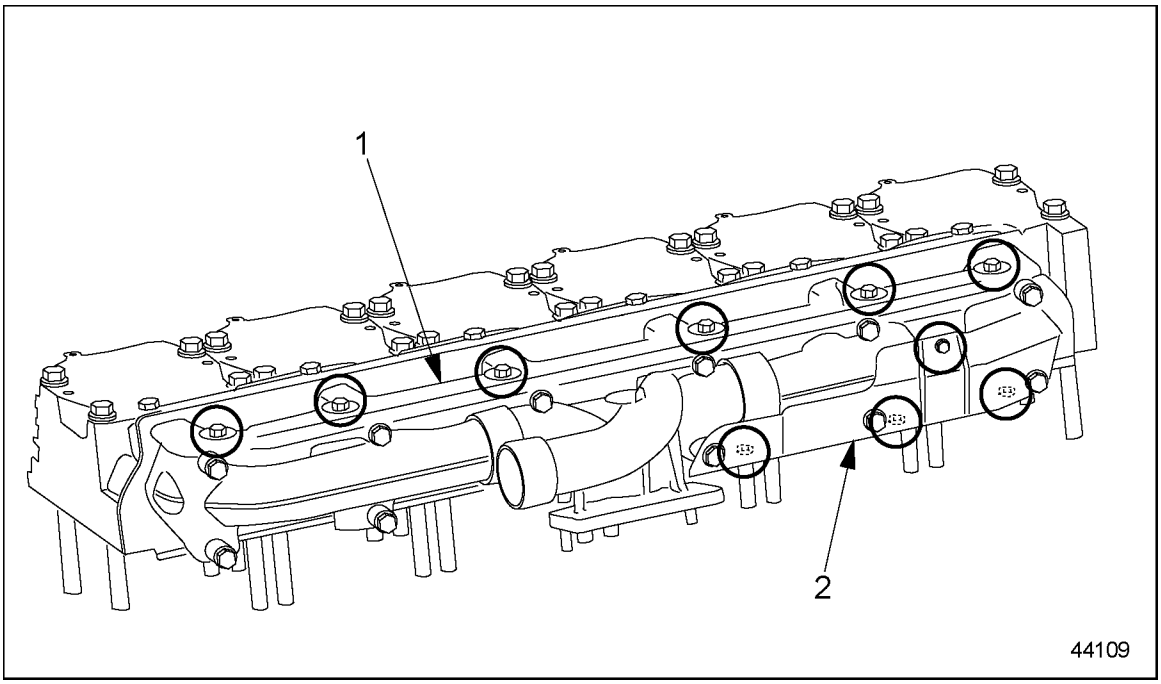

1. Upper or Main Heat Shield
2. Lower or Front Heat Shield

Figure 7-11 Removing Upper Heat Shield

8. Remove the stud and M8 nut and collar still attached to the center exhaust manifold piece.

 Copyright © 2004 DETROIT DIESEL CORPORATION

https://truckmanualshub.com/

9. Remove the two side pieces of the exhaust manifold from the center piece. See Figure 7-12.

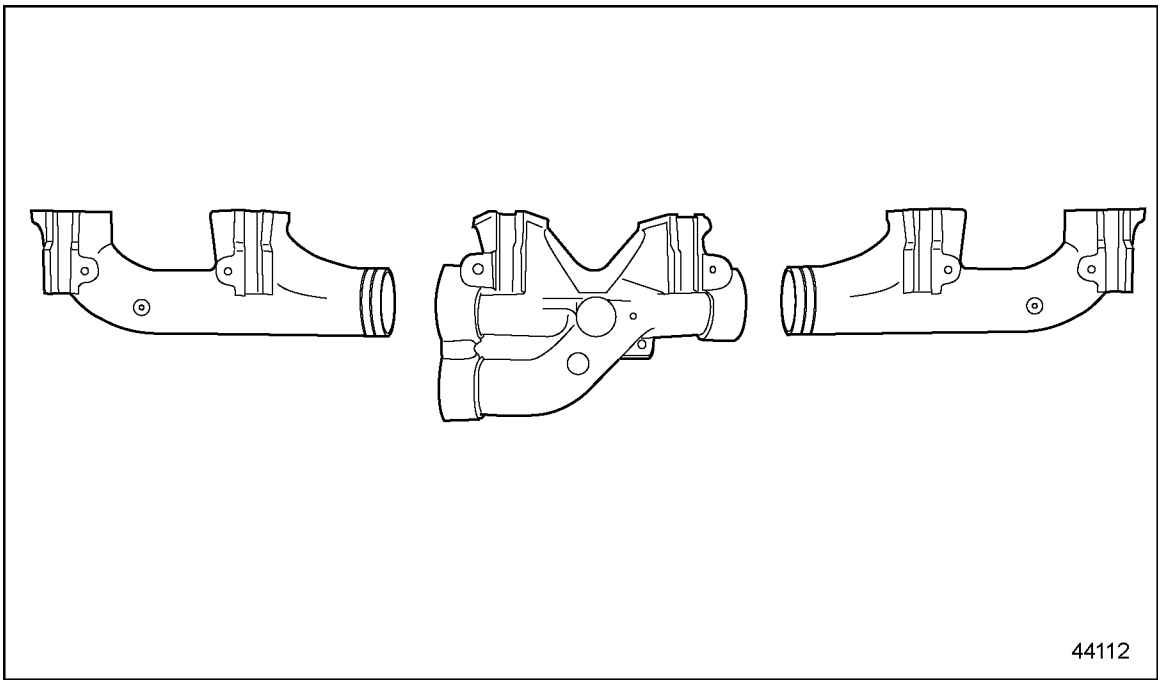

Figure 7-12 Three Piece Exhaust Manifold Assembly

All information subject to change without notice.
6SE412 0403 Copyright © 2004 DETROIT DIESEL CORPORATION

10. Remove the fey rings (2 in each groove) from the two grooves of each exhaust manifold end piece. See Figure 7-13.

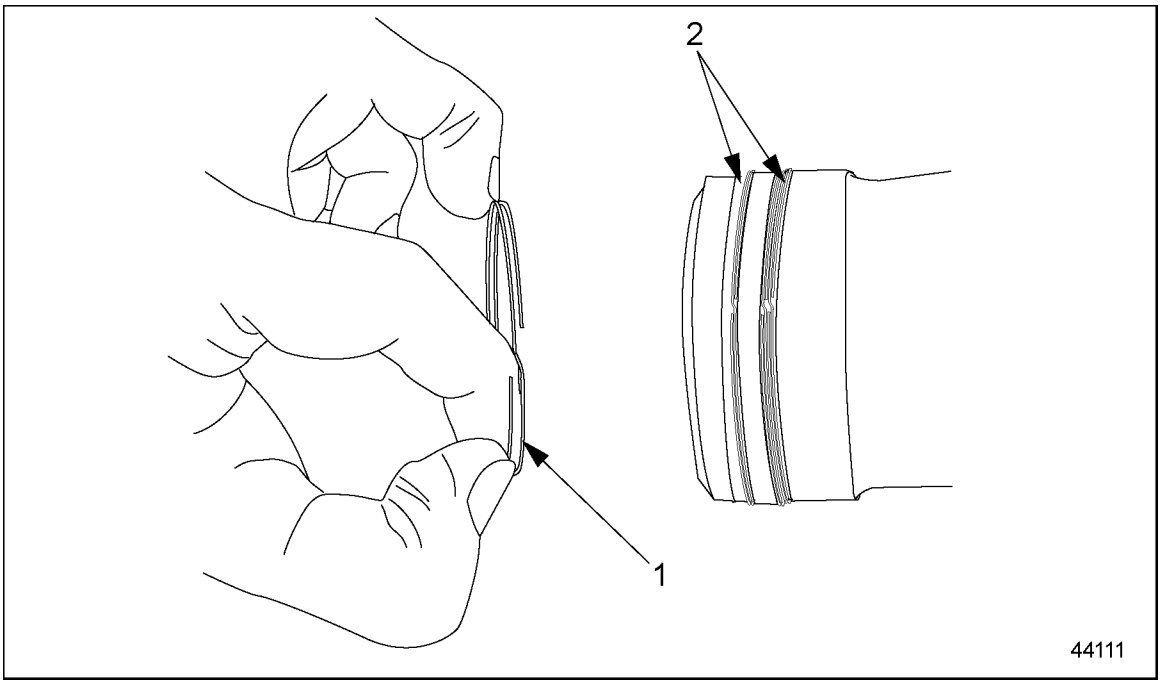

1. Fey Ring
2. Exhaust Manifold Grooves

Figure 7-13 Installing or Removing Rings in Exhaust Manifold Grooves

NOTE:
EGR cooler and cooler bracket will need to be removed before removing the exhaust manifold gaskets. Refer to section 7.4.1.

 Copyright © 2004 DETROIT DIESEL CORPORATION

https://truckmanualshub.com/

11. Remove exhaust manifold two-piece gasket from cylinder heads. See Figure 7-14.

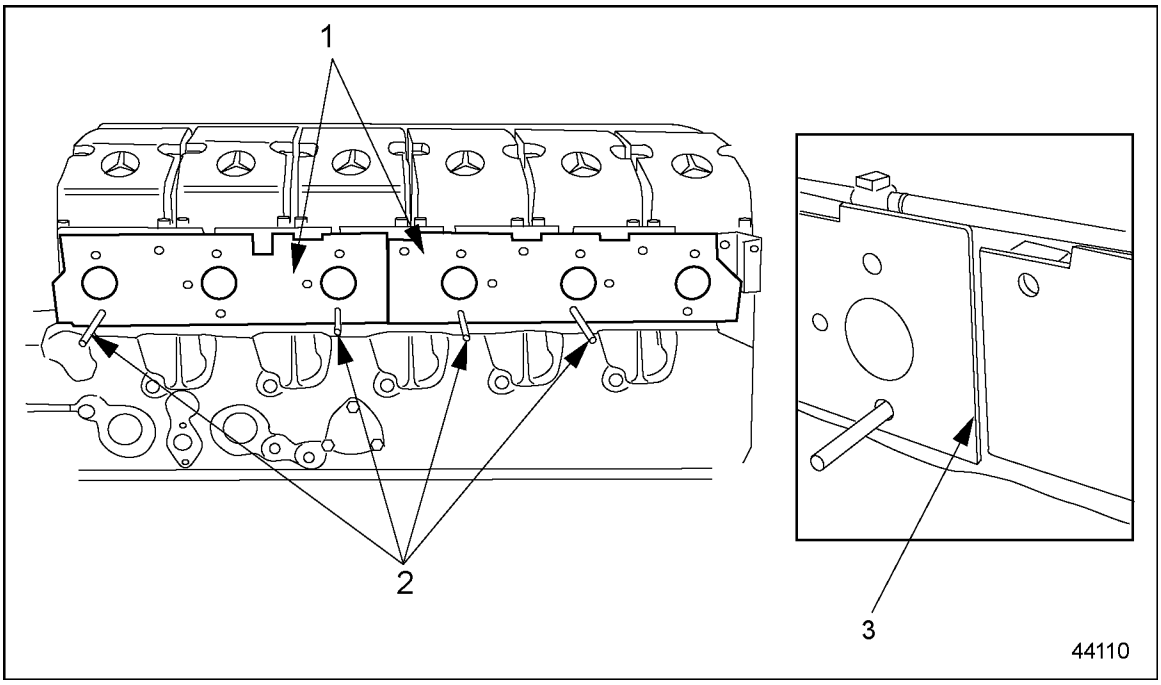

1. Two-Piece Gasket
2. Guide Studs
3. Gasket Overlap (Rear overlaps the Front)

Figure 7-14 Removal or Installation of Exhaust Manifold Gaskets

7.3.2 EGR Exhaust Manifold Installation

Install the EGR exhaust manifold as follows:

NOTE:
The three-piece exhaust manifold and its related parts are first put together as an assembly; it is then mounted to the cylinder heads as one unit.

1. Install the exhaust manifold guide studs to the cylinder head and mount the two exhaust manifold gaskets. The rear gasket will overlap the front in the center of block. See Figure 7-14.

All information subject to change without notice.
6SE412 0403 Copyright © 2004 DETROIT DIESEL CORPORATION

NOTICE:
There is a front and rear exhaust manifold gasket and the rear gasket is marked with a deep notch on top. The front gasket must be installed *before* the rear gasket can be installed.

NOTE:
At this point, the heat exchanger and heat exchanger mounting bracket should be installed on the block, but the remaining exhaust manifold installation graphics will not show these two parts installed.

NOTE:
The exhaust manifold gasket studs are to be removed after installing the EGR cooler support bracket.

2. Install stud with M8 nut with collar onto exhaust manifold center piece. Do not tighten nut at this point.

NOTE:
Stud must be installed on exhaust manifold center piece before fitting the two end pieces of manifold into center piece.

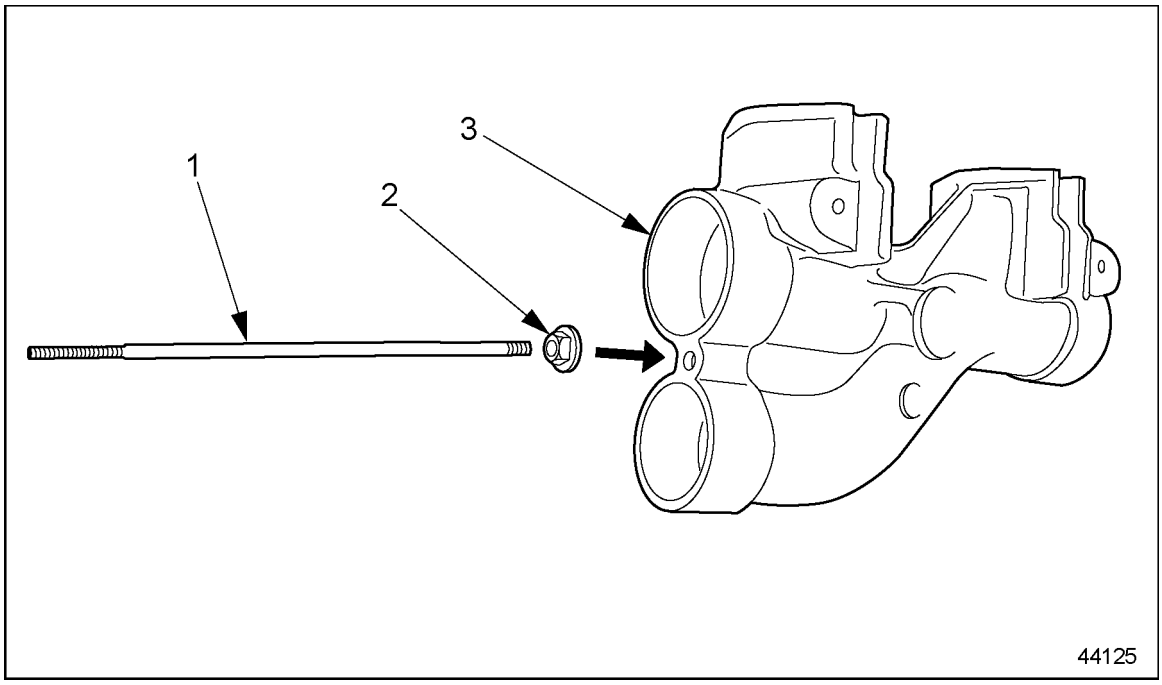

1. Stud
2. M8 Nut with Collar
3. Exhaust Manifold Center Piece

Figure 7-15 Installing Stud in Exhaust Manifold Center Piece

 Copyright © 2004 DETROIT DIESEL CORPORATION

https://truckmanualshub.com/

3. Install the fey rings (2 in each groove) in the two grooves of each exhaust manifold end piece. See Figure 7-16.

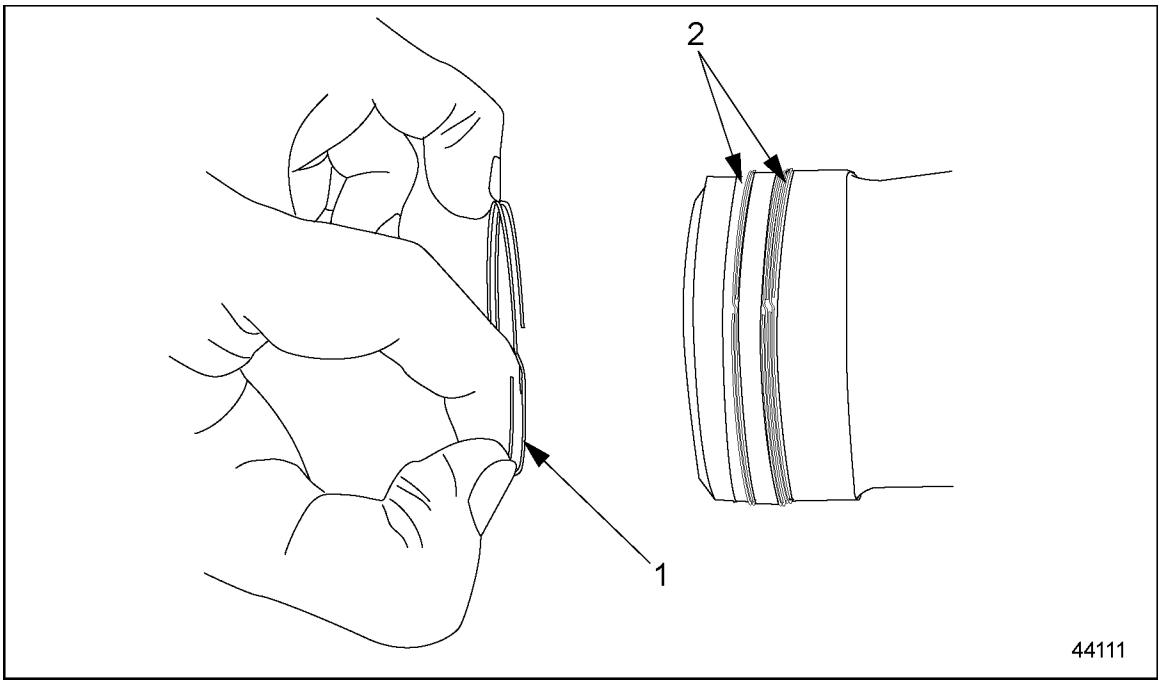

1. Fey Rings (2 per groove)
2. Exhaust Manifold Grooves

Figure 7-16 Installing or Removing Rings in Exhaust Manifold Grooves

4. Fit fey-ring ends of exhaust manifold pieces into center part of exhaust manifold. Do not use lubricant. See Figure 7-12.
5. Bolt upper heat shield to exhaust manifold using the six mounting bolts (M8 x 12mm). Finger-tighten all of the bolts, but torque the first bolt nearest the front part of the manifold to 25 N·m (19 lb·ft).

NOTE:
Upper heat shield bolt that is closest to front of engine is torqued before assembly is attached to engine due to impossible access after attachment to engine.

6. Bolt the lower heat shield to the upper heat shield with one captured bolt and washer (M8 x 12mm). Torque to 25 N·m (19 lb·ft).
7. Install the entire exhaust manifold assembly onto the cylinder heads by lifting the right side (or front) into place first, followed by the left (or rear). Install all exhaust manifold bolts, and then torque all 12 mounting bolts to 50 N·m (38 lb·ft), using a crisscross sequence.
8. Torque remaining three mounting bolts (captured bolt and washer type) of the lower heat shield to the exhaust manifold. Torque to 25 N·m (19 lb·ft).
9. Torque remaining five mounting bolts (captured bolt and washer type) of the upper heat shield to the exhaust manifold. Torque to 25 N·m (19 lb·ft).

All information subject to change without notice.
6SE412 0403 Copyright © 2004 DETROIT DIESEL CORPORATION

10. Install the fey rings (4 per groove) on the gas inlet pipe leading to exhaust manifold center piece. Do not use lubricant.
11. Gently push gas inlet pipe into center exhaust manifold piece. Do not use lubricant.
12. Push gas inlet pipe of heat exchanger into throttle valve. Tighten screw at bottom of positioning clamp on throttle valve assembly. Clamp must be tightened to 10 N·m (7 lb·ft) *after* stud adjustment. Refer to step 14.
13. Screw the nut onto stud installed in exhaust manifold. Fit stud in the bracket that is attached to the gas inlet pipe. Attach a nut to the outer edge of bracket also.
14. Adjust 219 mm dimension on stud by doing the following:

    [a] Apply 25 N·m (19 lb·ft) tightening torque to the nut on exhaust manifold. Position stud to avoid any friction between the exhaust manifold and the gas inlet pipe. See Step One in see Figure 7-17.

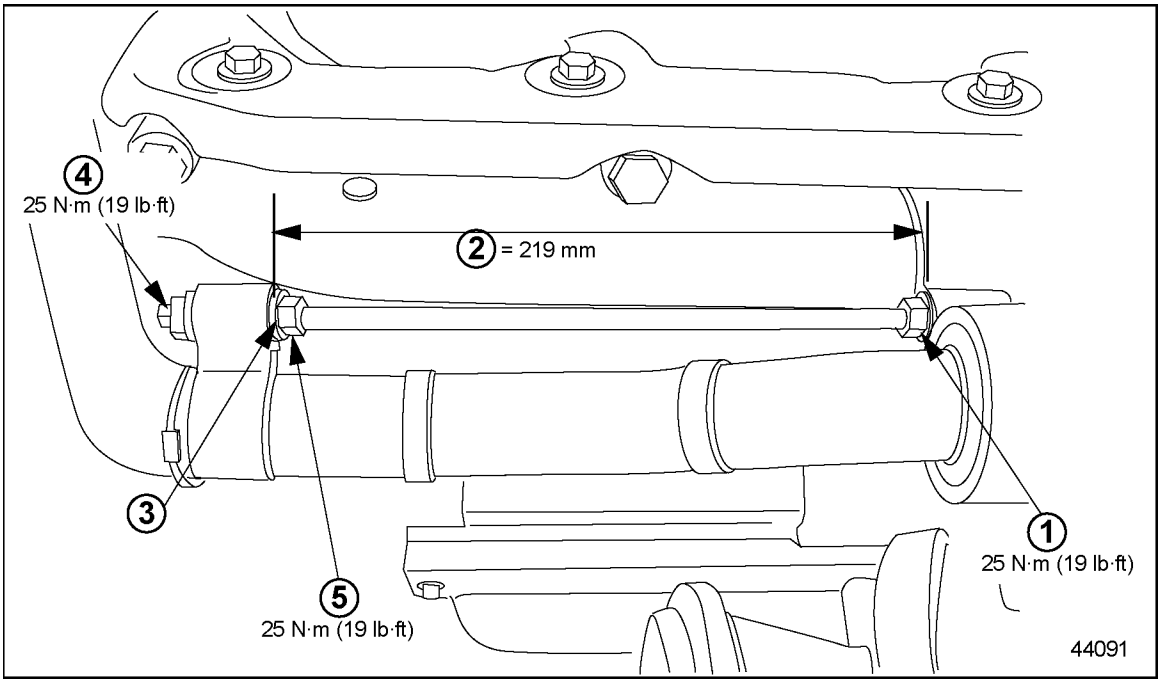

Figure 7-17 Stud Adjustment

[b] Adjust dimension to 219 mm (8.62 in.). This measurement is from the machined face of manifold to the resting face on the pipe. See Step Two in see Figure 7-17.

[c] Bring nut against the resting face on pipe (internal). See Step Three in see Figure 7-17.

[d] Apply 25 N·m (19 lb·ft) tightening torque to nut on resting face on pipe (external). See Step Four in see Figure 7-17.

[e] Apply 25 N·m (19 lb·ft) tightening torque to nut on resting face on pipe (internal). See Step Five in see Figure 7-17.

 Copyright © 2004 DETROIT DIESEL CORPORATION

https://truckmanualshub.com/

7.4 EGR COOLER AND COOLER SUPPORT BRACKET

The EGR system is equipped with a single-pass cooler. Exhaust gasses coming from the first three cylinders are directed through the EGR shut off valve, through the cooler and reed valves, past the EGR control valve and the mixer, then back to the cylinder.

7.4.1 EGR Cooler and Support Bracket Removal

Remove the EGR cooler and its support bracket as follows:

NOTE:
The exhaust manifold and the gas inlet pipe have already been removed at this point. It is then possible to remove the cooler and support bracket without removing the throttle valve first.

1. Disconnect the coolant vent line located on top of the EGR cooler. See Figure 7-18.

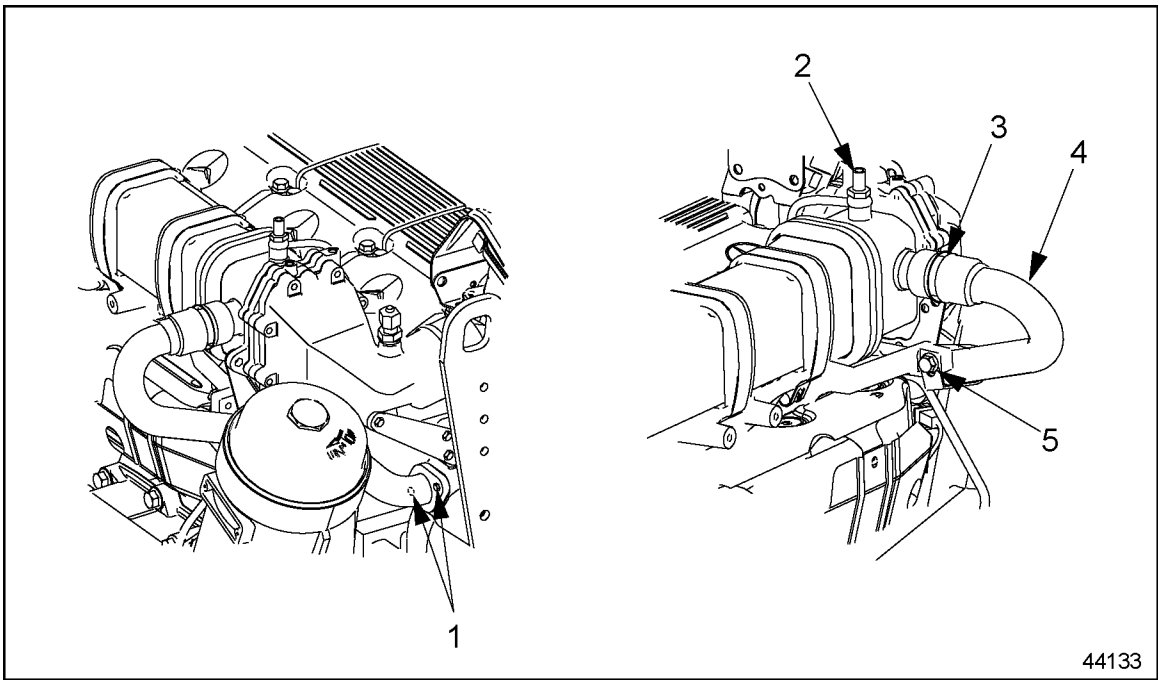

1. Coolant Outlet Pipe Bolts
2. Coolant Vent Line
3. Membrane
4. EGR Coolant Outlet Pipe
5. Coolant Outlet Pipe Bracket

Figure 7-18 Removal of Coolant Vent Line and Coolant Outlet Pipe

2. Remove the bolt attaching the coolant outlet pipe bracket to the pipe. Remove the bracket.
3. Remove the two bolts attaching the coolant outlet pipe flange to the coolant pump. Discard the gasket.

All information subject to change without notice.
6SE412 0403 Copyright © 2004 DETROIT DIESEL CORPORATION

https://truckmanualshub.com/

4. Pull the coolant outlet pipe away from the cooler, leaving the connecting membrane in the EGR cooler boss.
5. Remove the EGR temperature sensor from the reed valve housing and disconnect the sensor wiring harness where it is attached with cable ties to the reed valve housing mounting bracket. See Figure 7-19.

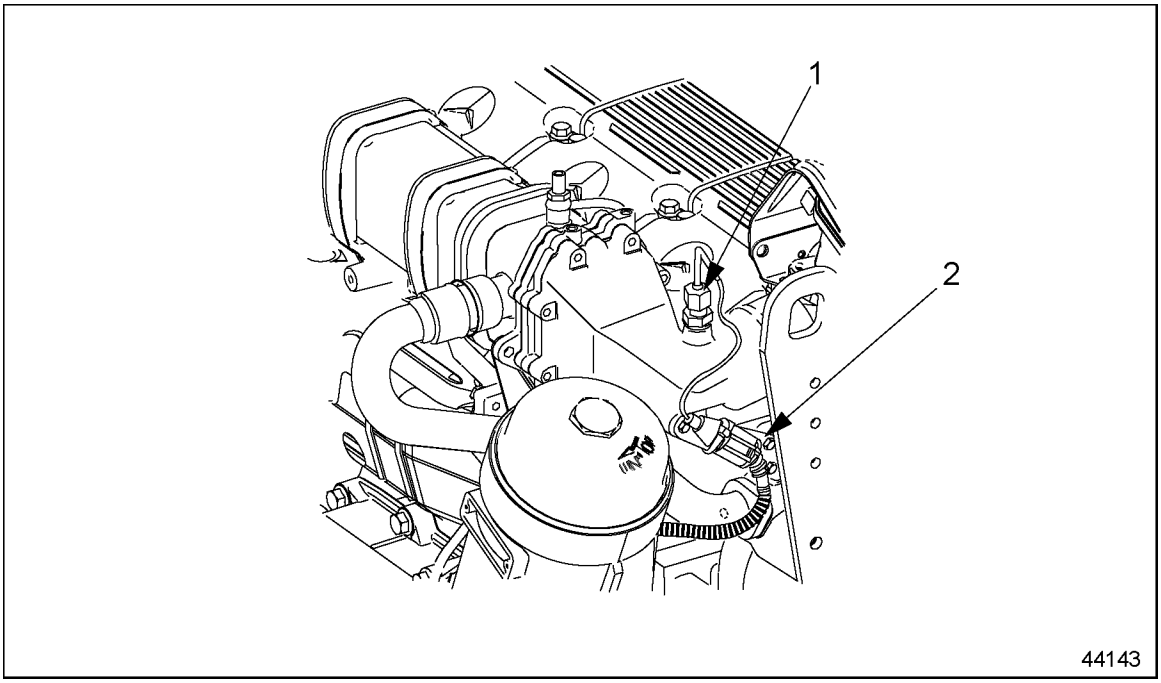

1. EGR Air Temperature Sensor
2. Reed Valve Housing Bracket

Figure 7-19 Removing EGR Air Temp. Sensor

6. Remove the three bolts from the front bracket that holds and stabilizes the reed valve housing to the thermostat housing. See Figure 7-19.

 Copyright © 2004 DETROIT DIESEL CORPORATION

https://truckmanualshub.com/

7. Remove the two front sheet metal support-to-cooler support bolts (See number 1 in graphic). See Figure 7-20.

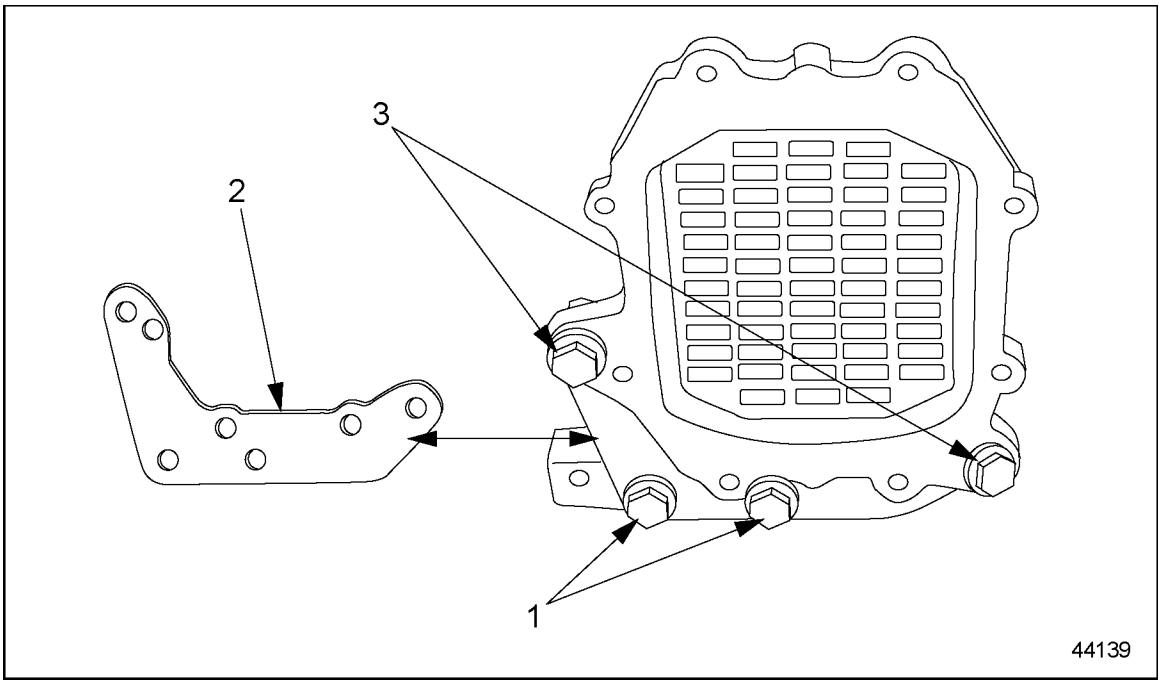

1. Front Sheet Metal Support-to-Cooler Support Bolts
2. Front Sheet Metal Support
3. EGR Cooler-to-Sheet Metal Support bolts

Figure 7-20 Removing Front Sheet Metal Support

NOTE:
Do not remove the eight mounting bolts attaching the reed valve housing to the cooler at this time. Also, do not remove the two EGR cooler-to-sheet metal support bolts at this time. They will all be removed once the EGR cooler as an assembly is taken off of the engine.

All information subject to change without notice.
6SE412 0403 Copyright © 2004 DETROIT DIESEL CORPORATION

8. Remove the two bolts mounting the lower coolant inlet pipe to the block and remove the bracket bolt, just below the membrane, which attaches the lower coolant inlet pipe to the block. Remove gasket. See Figure 7-21.

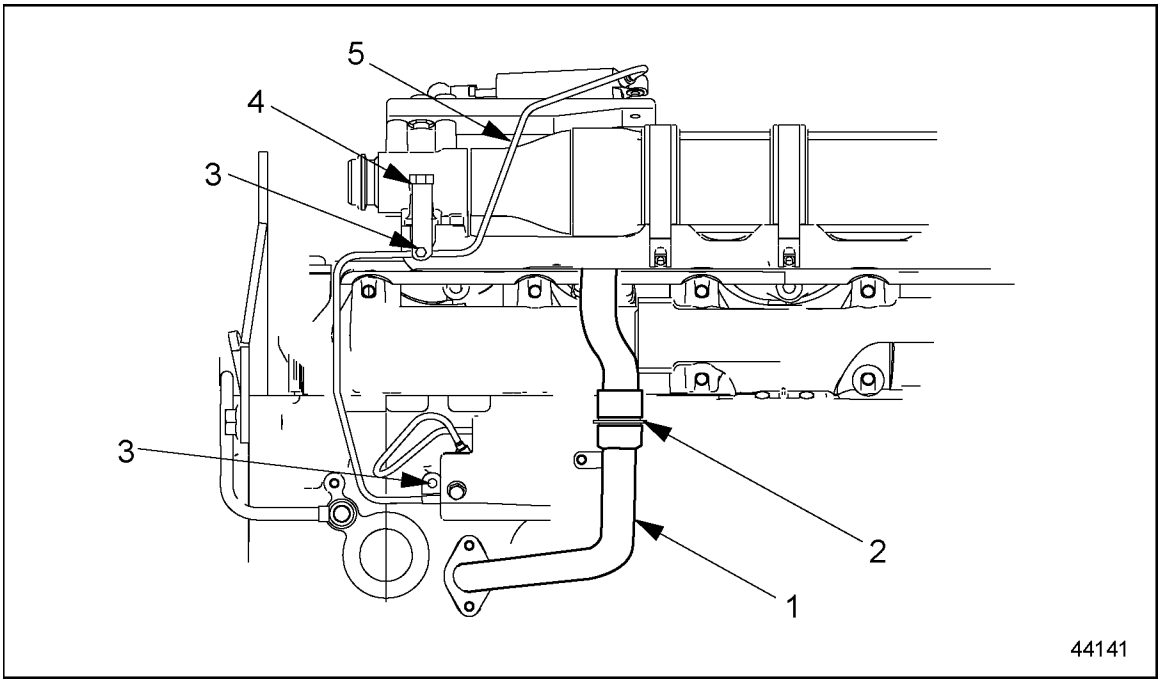

1. Lower Coolant Inlet Pipe
2. Membrane
3. Air Line Mounting Bolts
4. Shut off Valve Housing Bolt (2 qty.)
4. Air Supply Line

Figure 7-21 Removing Coolant Inlet Pipe

9. Pull down on the lower coolant inlet pipe to loosen it from the upper pipe. Remove the membrane also.

NOTE:
Have a container nearby to drain any unused coolant from the inlet pipes.

10. Remove the two shut off valve housing bolts that hold the valve housing to the EGR cooler support. See Figure 7-21.
11. Remove the air line mounting bolts. Loosen and remove the air supply line from the EGR shut off valve. See Figure 7-21.

https://truckmanualshub.com/

12. Loosen and remove the four bolts from the four tightening clamps that are holding the EGR cooler to the cooler support bracket. Remove the four tightening tools for clamps also. See Figure 7-22.

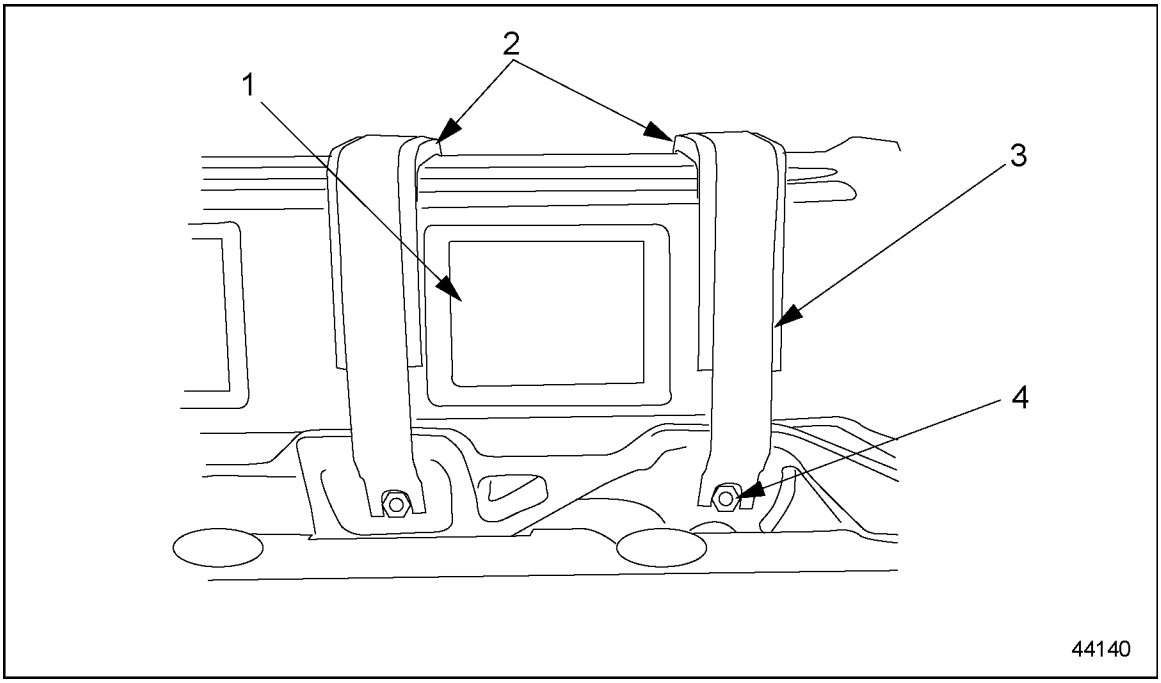

1. EGR Cooler
2. Tightening Tool for Clamps
3. Clamps (4 Qty.)
4. Clamp Bolts

Figure 7-22 Removing Tightening Clamps on the Cooler

NOTE:
The oil filter and oil filter cover should be removed for good clearance when removing and installing the EGR cooler assembly.

All information subject to change without notice.
6SE412 0403 Copyright © 2004 DETROIT DIESEL CORPORATION

13. With the cooler completely loosened at this point, pull the cooler housing flange away from the EGR control valve. As the cooler is lifted, slide the cooler inlet pipe up through the opening in the cooler support bracket. See Figure 7-23.

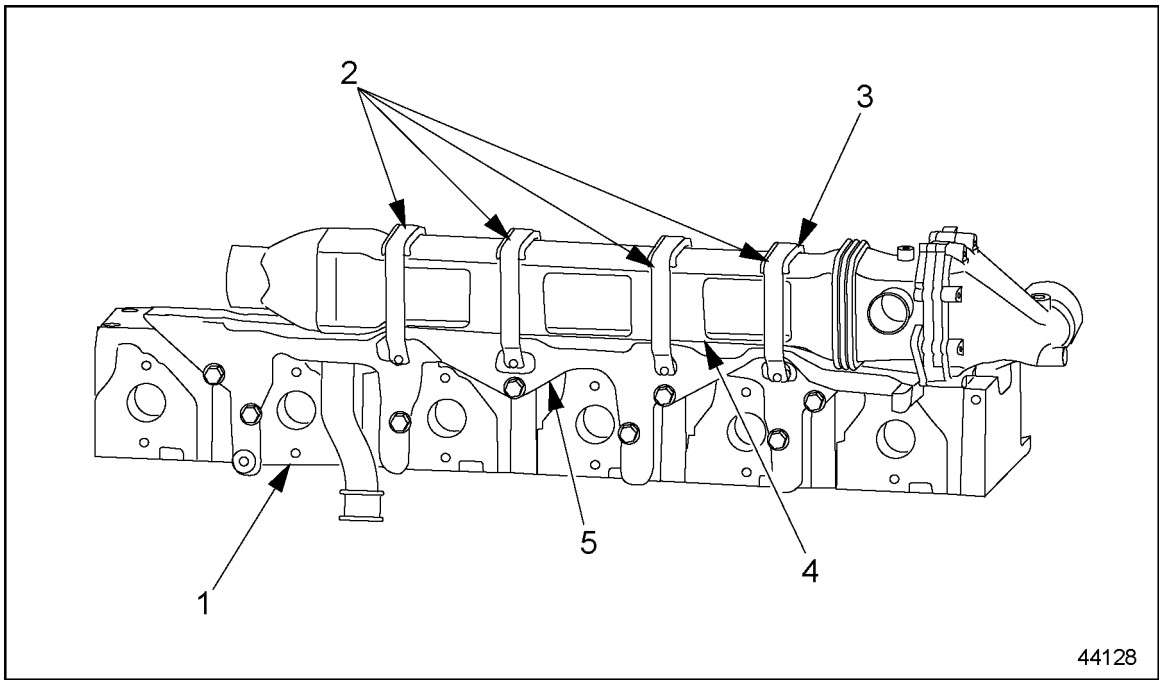

1. Cylinder Heads
2. EGR CoolerTightening Clamps
3. Tightening Tool for Clamps
4. EGR Cooler
5. EGR Cooler Support

Figure 7-23 Removing EGR Cooler

NOTE:
Before removing the eight bolts from the EGR cooler support, insert the four guide studs into the exhaust manifold gasket holes to support the gaskets once the cooler support is removed.

 Copyright © 2004 DETROIT DIESEL CORPORATION

https://truckmanualshub.com/

14. Remove the eight mounting bolts from the EGR cooler support and remove the support from cylinder heads. See Figure 7-24.

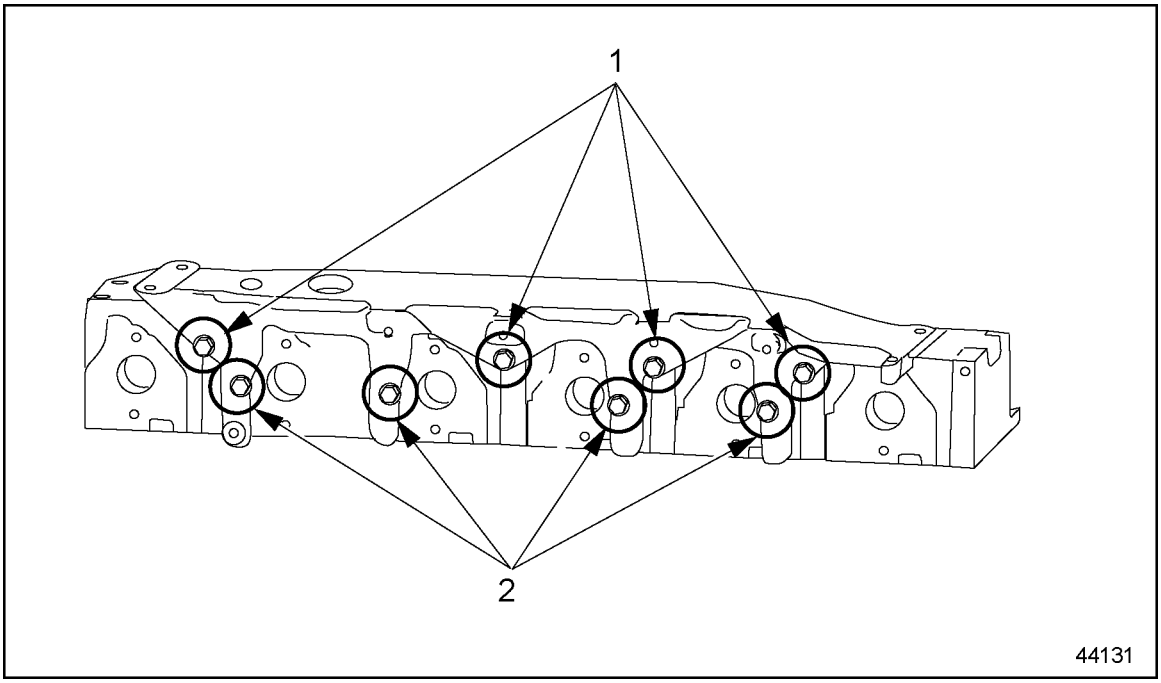

1. M10 x 65 mm bolts
2. M10 x 45 mm bolts

Figure 7-24 Removing the EGR Cooler Support

All information subject to change without notice.
6SE412 0403 Copyright © 2004 DETROIT DIESEL CORPORATION

15. Remove the eight mounting bolts from the EGR cooler flange, which houses the reed valves. See Figure 7-25.

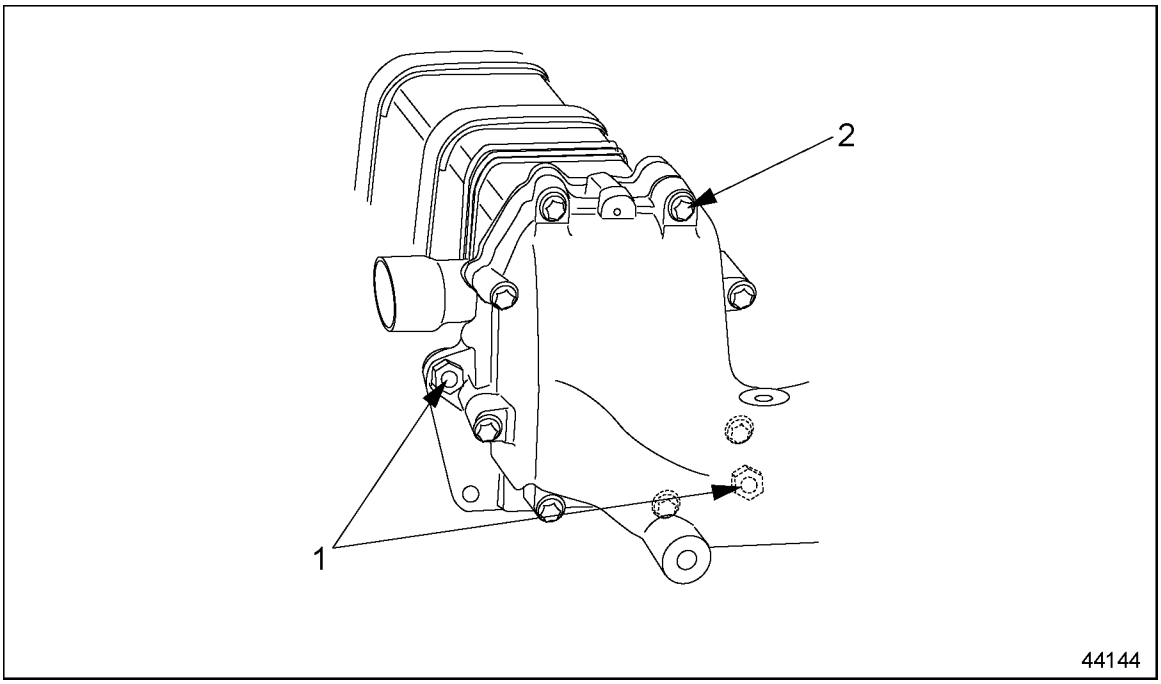

1. EGR Cooler-to- Sheet Metal Support Bolts
2. EGR Cooler Flange Bolts

Figure 7-25 Removing the EGR Cooler Flange

16. Remove the two EGR cooler-to-sheet metal support bolts. See Figure 7-25.

 Copyright © 2004 DETROIT DIESEL CORPORATION

https://truckmanualshub.com/

17. Remove the reed valves from housing. See Figure 7-26.

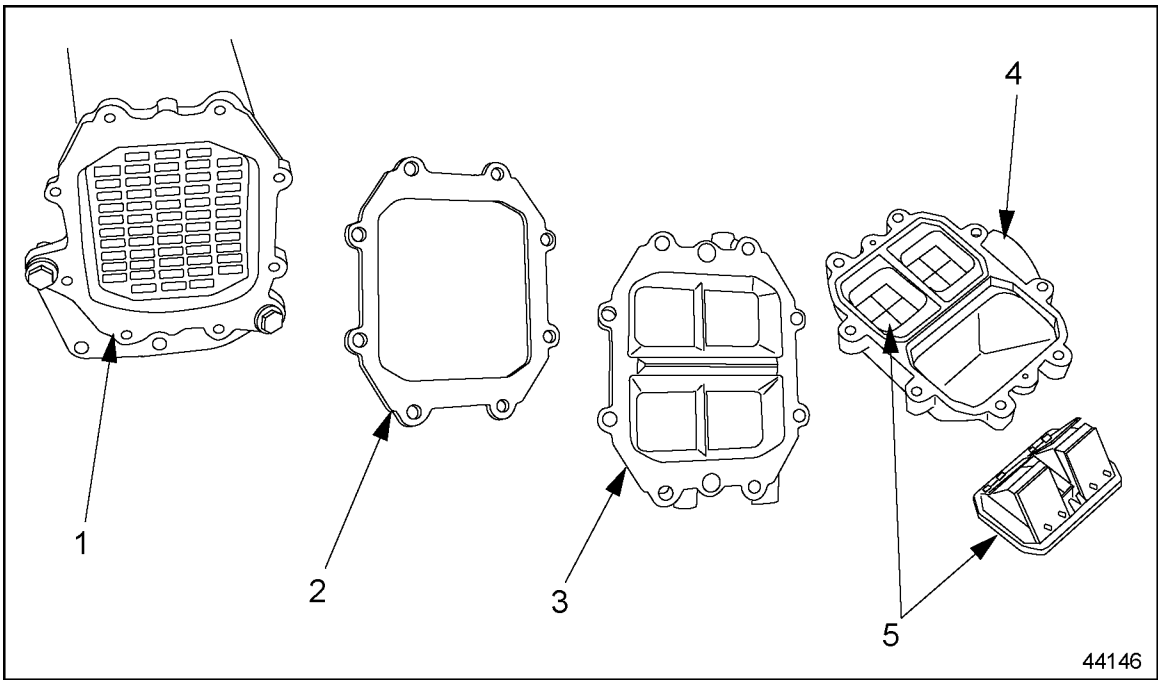

1. EGR Cooler Housing
2. EGR Cooler Gasket
3. EGR Cooler Intermediate Flange
4. EGR Reed Valve Flange
5. Reed Valves

Figure 7-26 Removing the EGR Cooler Flange and Components

18. Remove the intermediate flange and gasket from cooler flange assembly. See Figure 7-26.

7.4.2 EGR Cooler and Support Bracket Installation

Install the EGR cooler and the EGR cooler support bracket as follows:

NOTE:
Exhaust manifold gaskets will have to be installed before EGR cooler support or cooler can be installed. Refer to section 7.3.2.

All information subject to change without notice.
6SE412 0403 Copyright © 2004 DETROIT DIESEL CORPORATION

1. Install coolant outlet pipe. Install the two M8 x 25 mm bolts through the coolant pipe flange, metal gasket and into the coolant pump. Leave loose until the cooler assembly is installed, then torque bolts to 35 N·m (26 lb·ft). See Figure 7-27.

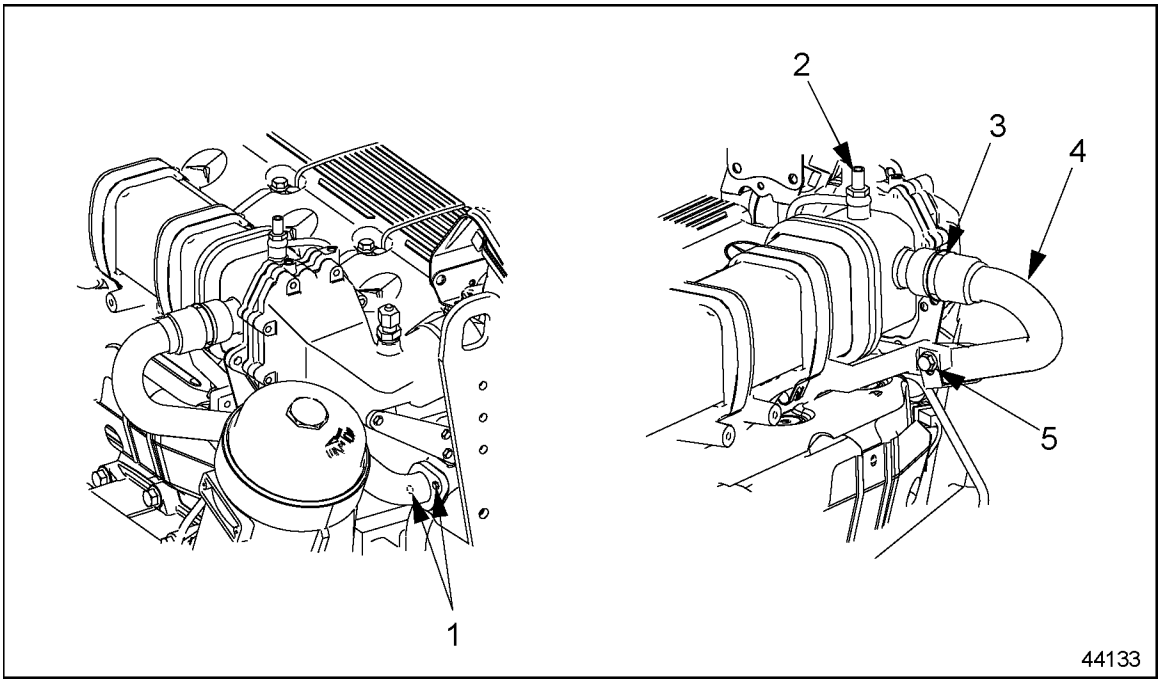

1. Coolant Outlet Pipe Bolts
2. Coolant Vent Line
3. Membrane
4. EGR Coolant Outlet Pipe
5. Coolant Outlet Pipe Bracket

Figure 7-27 Installation of Coolant Outlet Pipe

NOTE:
Coolant outlet pipe *must* be installed to coolant pump *before* the EGR cooler support and cooler are installed.

 Copyright © 2004 DETROIT DIESEL CORPORATION

https://truckmanualshub.com/

2. Install the cooler support to the cylinder heads using the eight mounting bolts. Torque all bolts to 25 N·m (19 lb·ft). See Figure 7-28.

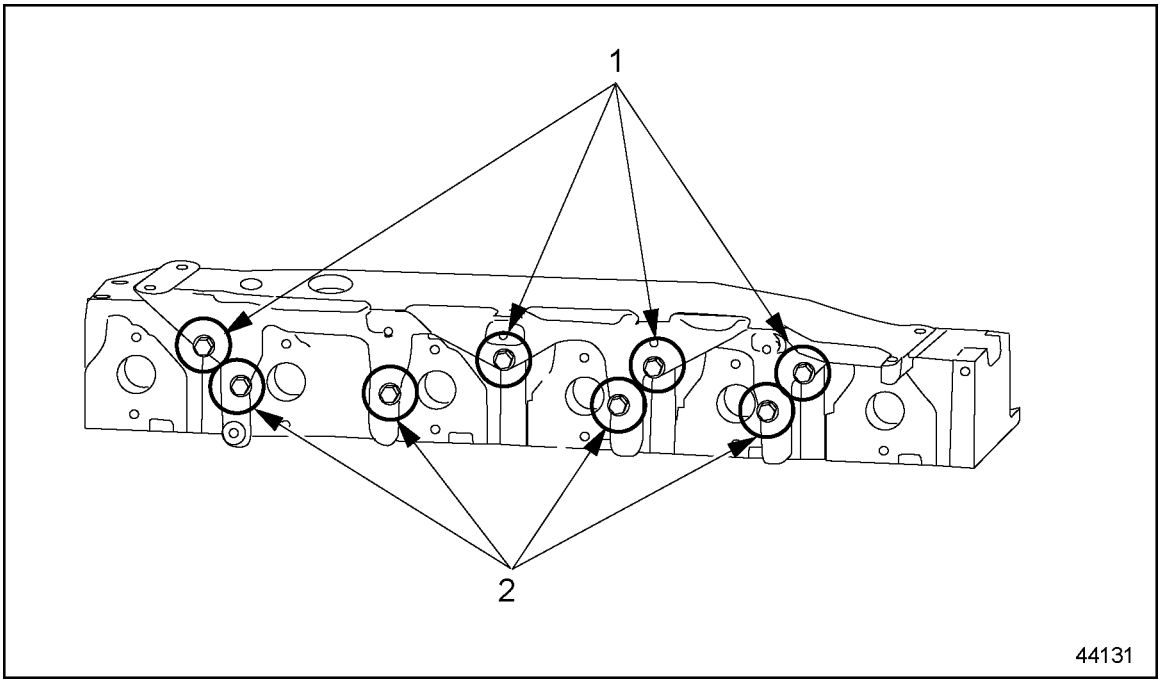

1. M10 x 65 mm bolts
2. M10 x 45 mm bolts

Figure 7-28 Installing EGR Cooler Support

NOTE:
If at this point the exhaust manifold gasket studs are still in place, they will need to be removed.

NOTE:
Assemble and attach the EGR reed valve housing to the cooler before mounting the cooler to the cooler support.

3. Insert the reed valves into the EGR reed valve housing flange.

All information subject to change without notice.
6SE412 0403 Copyright © 2004 DETROIT DIESEL CORPORATION

4. Assemble the EGR reed valve housing flange, cooler intermediate flange, gasket and front sheet metal support together. Attach all to the cooler housing using the eight mounting bolts. Torque the bolts to 10 N·m (8 lb·ft). See Figure 7-29.

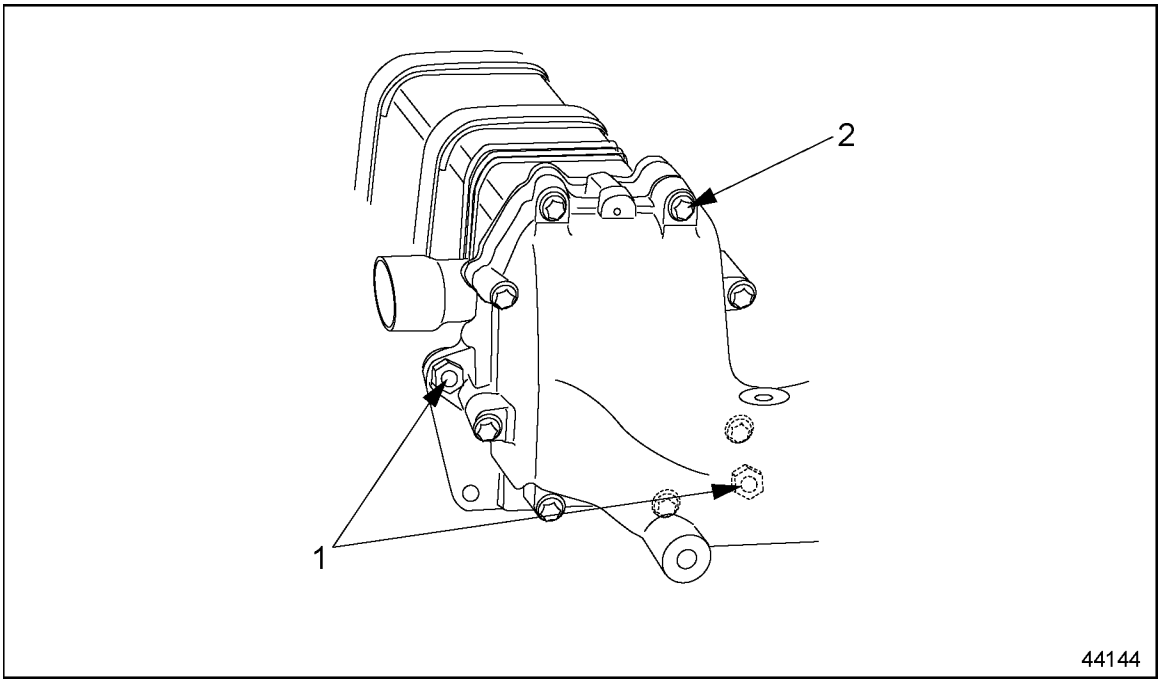

1. EGR Cooler-to- Sheet Metal Support Bolts
2. EGR Cooler Flange Bolts

Figure 7-29 Installing the EGR Cooler Flange

5. Attach the EGR cooler to the front sheet metal support with two bolts. Torque to 25 N·m (19 lb·ft). See Figure 7-29.

 Copyright © 2004 DETROIT DIESEL CORPORATION

https://truckmanualshub.com/

6. Using industrial petroleum grease, insert a membrane into the side of the EGR control valve that is closest to the EGR cooler. See Figure 7-30.

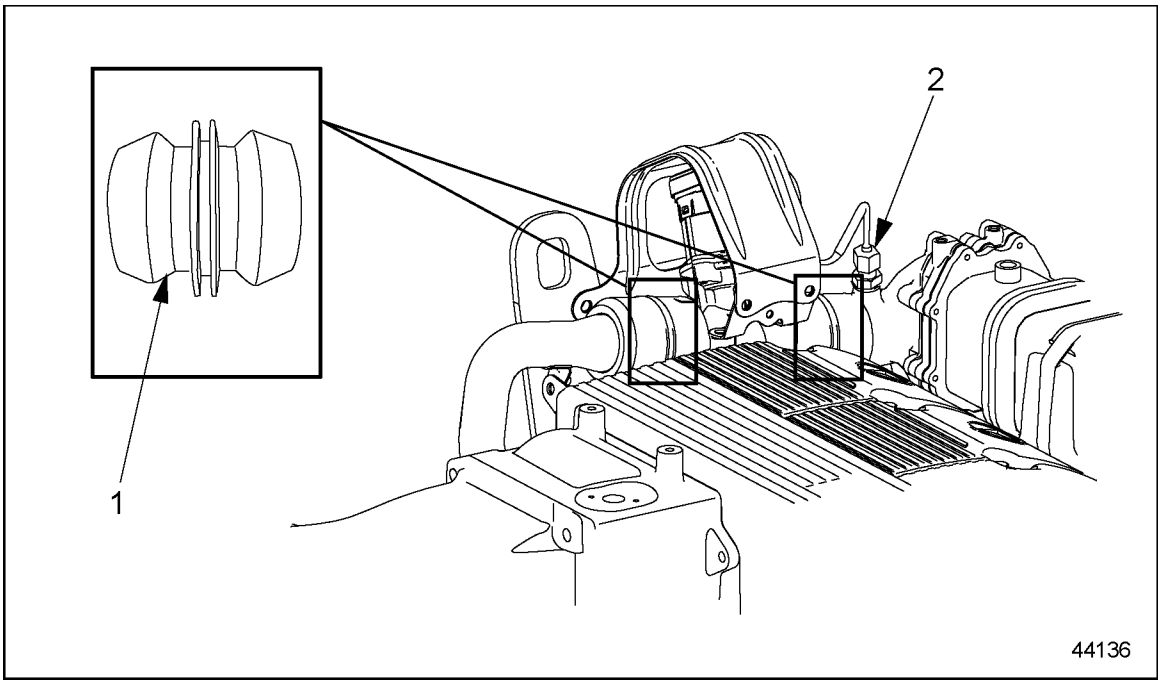

1. Symmetric membrane
2. EGR Temperature Sensor

Figure 7-30 Installing Symmetric Membrane into EGR Valve

7. Lift entire EGR cooler with attached cooler flange and sit this on top of cooler support, taking care to insert the upper half of the coolant inlet pipe down through the appropriate hole in the cooler support. At the same time, push the cooler flange into the membrane. See Figure 7-30.

NOTE:
The oil filter and oil filter cover should be removed for good clearance when removing and installing the EGR cooler assembly.

All information subject to change without notice.
6SE412 0403 Copyright © 2004 DETROIT DIESEL CORPORATION

8. Insert the connecting membrane in the EGR cooler boss using industrial petroleum grease and push the EGR coolant outlet pipe onto the cooler. See Figure 7-31.

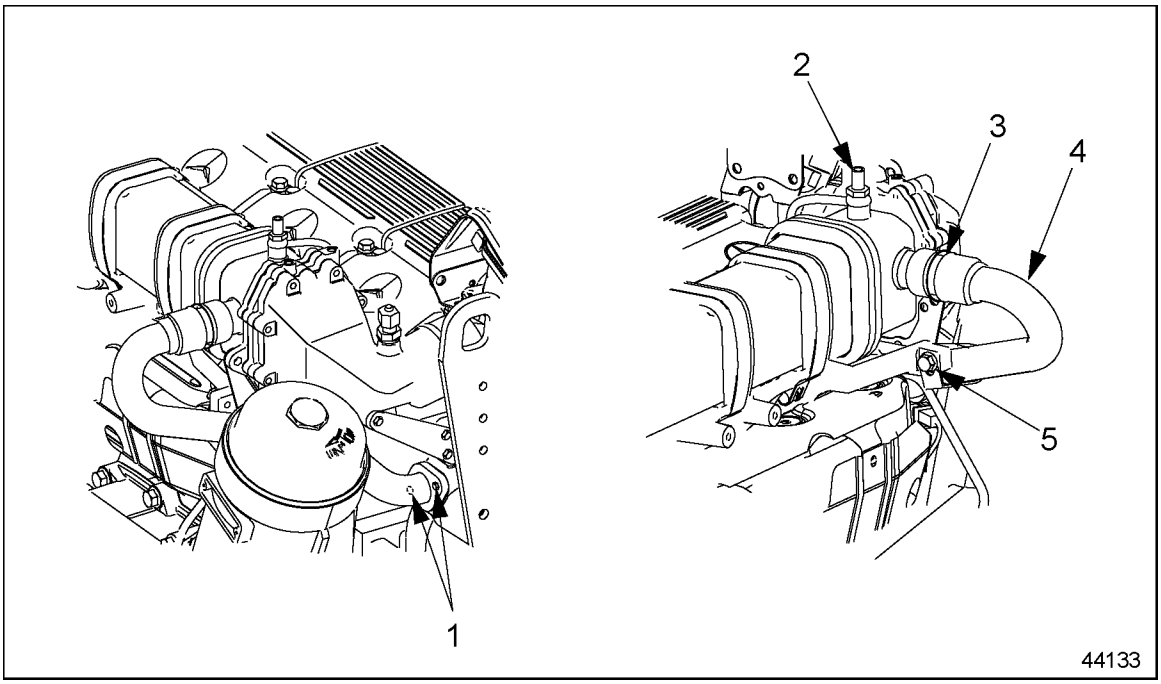

1. Coolant Outlet Pipe Bolts
2. Coolant Vent Line
3. Membrane
4. EGR Coolant Outlet Pipe
5. Coolant Outlet Pipe Bracket

Figure 7-31 Installation of Coolant Vent Line and Coolant Outlet Pipe

9. Attach front sheet metal support-to-cooler support using two M8 x 12 mm bolts. Torque to 25 N·m (19 lb·ft).
10. Install the bolt to the coolant outlet pipe bracket. Torque to 35 N·m (26 lb·ft). See Figure 7-31.
11. Install coolant vent line. Torque to 25 N·m (19 lb·ft).
12. Install the reed valve-housing bracket to the thermostat housing with the three mounting bolts. Torque to 25 N·m (19 lb·ft). See Figure 7-32.
13. Install the EGR air temperature sensor into reed valve housing flange. Torque to 25 N·m (19 lb·ft). Using plastic ties, attach remainder of sensor to reed valve-housing bracket. See Figure 7-32.

 Copyright © 2004 DETROIT DIESEL CORPORATION

https://truckmanualshub.com/

NOTICE:
There is a possibility of installing the air temperature sensor wrong-sided. Take care to install it properly.

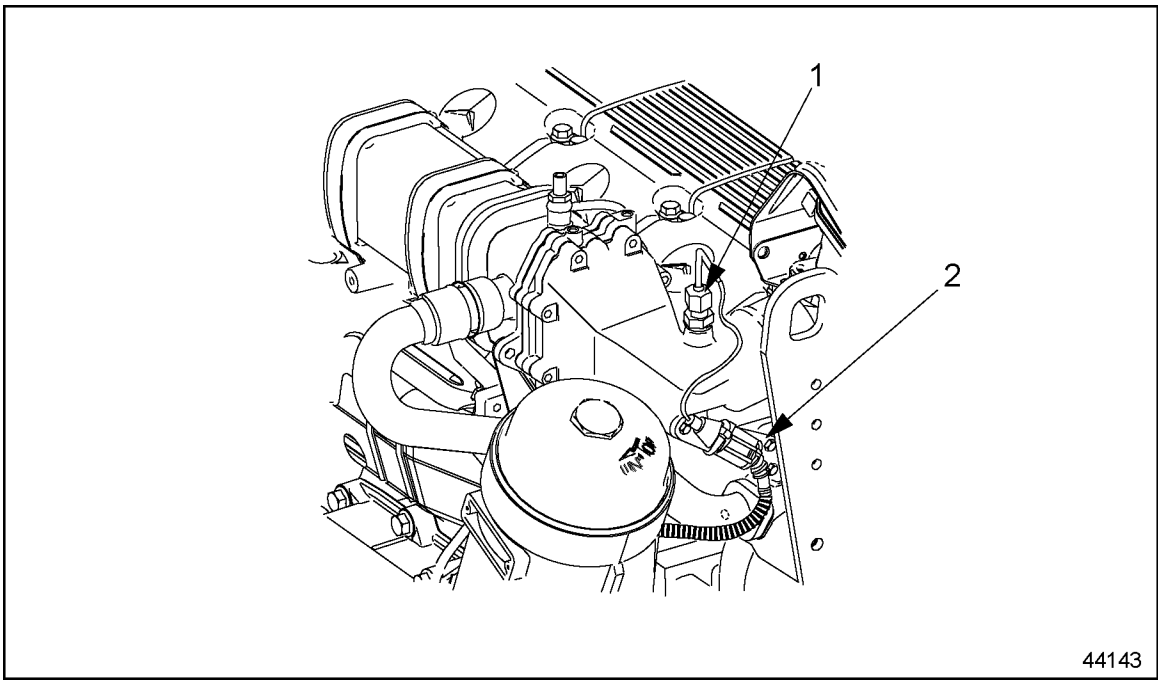

1. EGR Air Temperature Sensor
2. Reed Valve Housing Bracket

Figure 7-32 Installing the EGR Air Temp. Sensor and Housing Bracket

All information subject to change without notice.
6SE412 0403 Copyright © 2004 DETROIT DIESEL CORPORATION

14. Install the four tightening tools with four tightening clamps that hold the EGR cooler to the cooler support bracket. Apply 10 N·m (8 lb·ft) clamping force to clamps. See Figure 7-33.

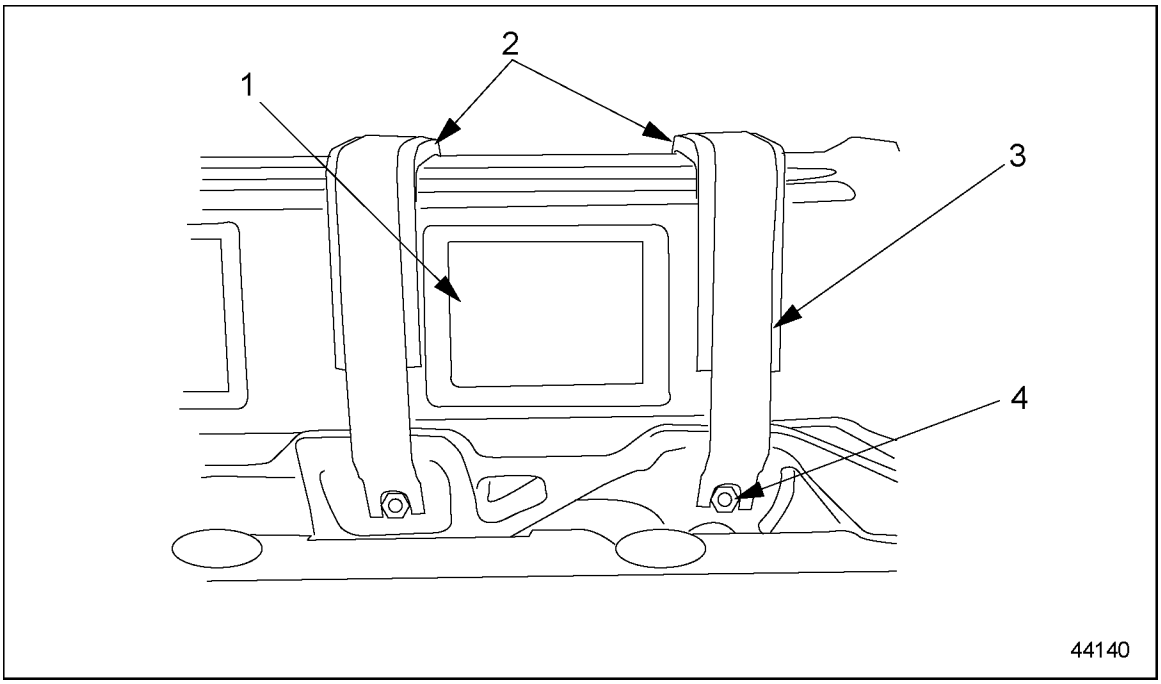

1. EGR Cooler
2. Tightening Tool for Clamps
3. Clamps (4 Qty.)
4. Clamp Bolts

Figure 7-33 Installing Tightening Clamps on the Cooler

 Copyright © 2004 DETROIT DIESEL CORPORATION

https://truckmanualshub.com/

15. Fit lower coolant inlet pipe into the symmetric membrane. Install the two bolts in the metal gasket and engine block. Also install bolt in pipe support bracket. Torque both bolts to 35 N·m (26 lb·ft).

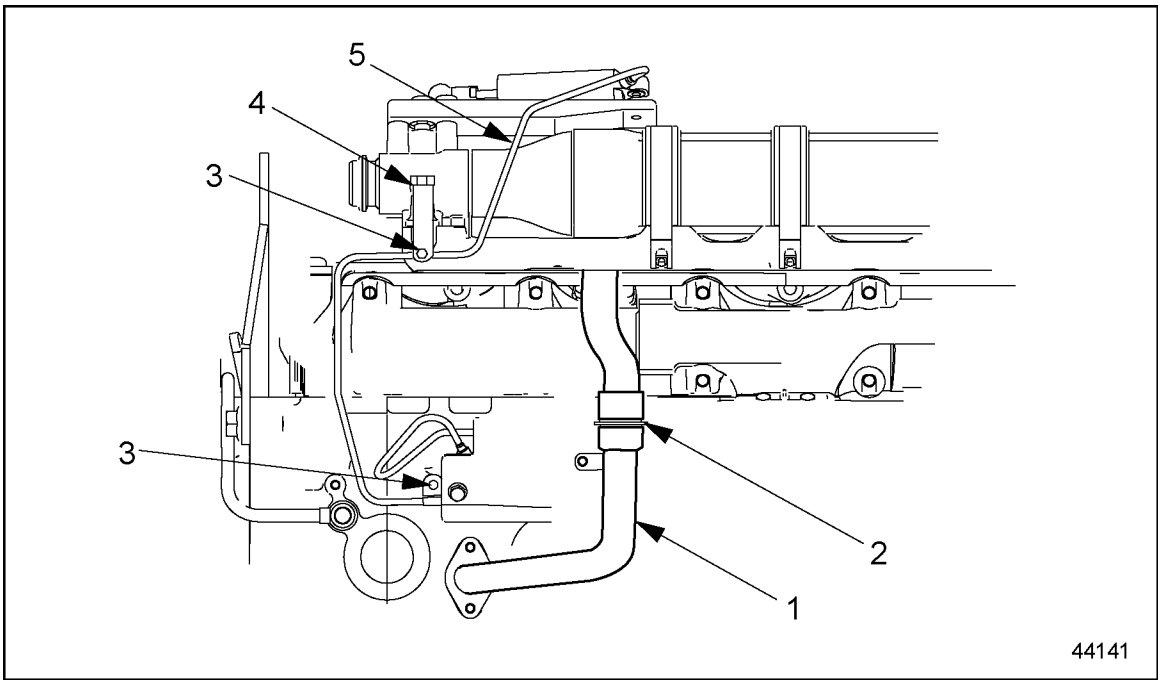

1. Lower Coolant Inlet Pipe
2. Membrane
3. Air Line Mounting Bolts
4. Shut off Valve Housing Bolt (2 qty.)
4. Air Supply Line

Figure 7-34 Installing Coolant Inlet Pipe

16. Tighten EGR shutoff valve using two bolts. Torque to 35 N·m (26 lb·ft).
17. Install and attach air supply line using two mounting bolts.

All information subject to change without notice.
6SE412 0403 Copyright © 2004 DETROIT DIESEL CORPORATION

https://truckmanualshub.com/

7.5 EGR CONTROL VALVE, GAS OUTLET PIPE, AND GAS MIXER

The EGR control valve controls the quantity of exhaust gas returning back to the intake manifold.

7.5.1 Removal of EGR Control Valve, Gas Outlet Pipe, and Gas Mixer

Remove the EGR control valve, gas outlet pipe, and gas mixer as follows:

1. Remove the EGR control valve cover mounting bolts attached to the front lifter bracket and to the rear of the EGR valve. See Figure 7-35.

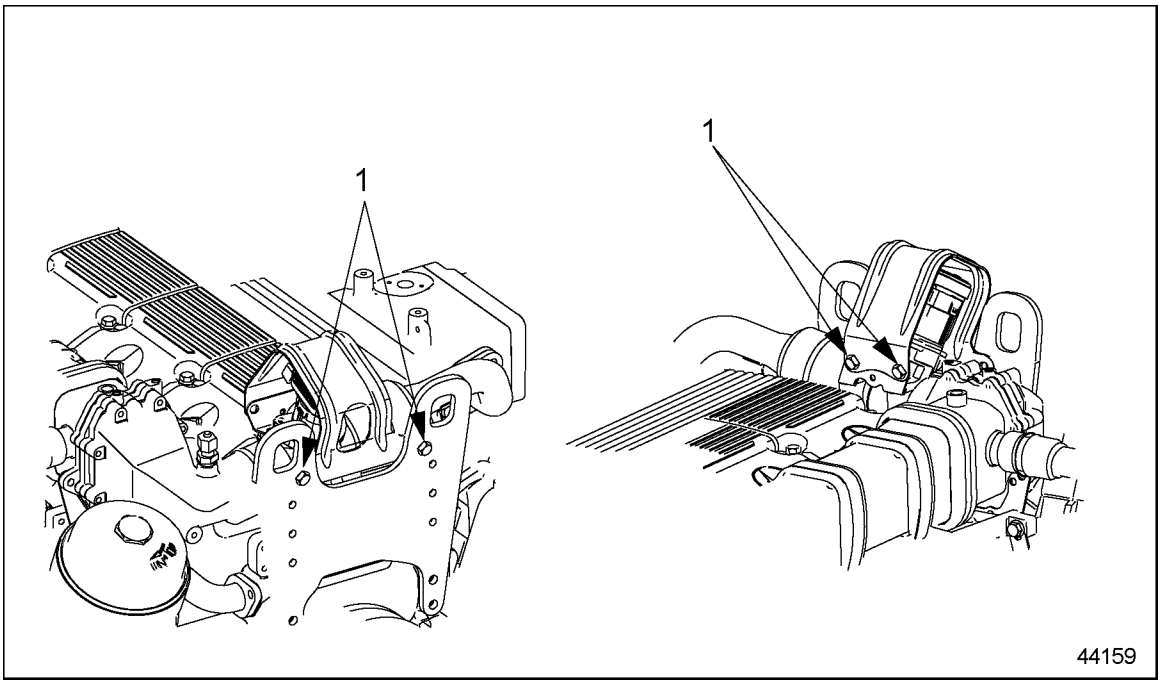

1. EGR Control Valve Cover Mounting Bolts

Figure 7-35 Removal of EGR Control Valve Cover

2. Loosen the wiring harness terminal from the back cover mounting bracket by punching the push-mount cable tie out of the drilled hole in the mounting bracket. Remove the two

 Copyright © 2004 DETROIT DIESEL CORPORATION

https://truckmanualshub.com/

mounting bolts attaching the back cover bracket to the control valve. See Figure 7-36. Remove back bracket.

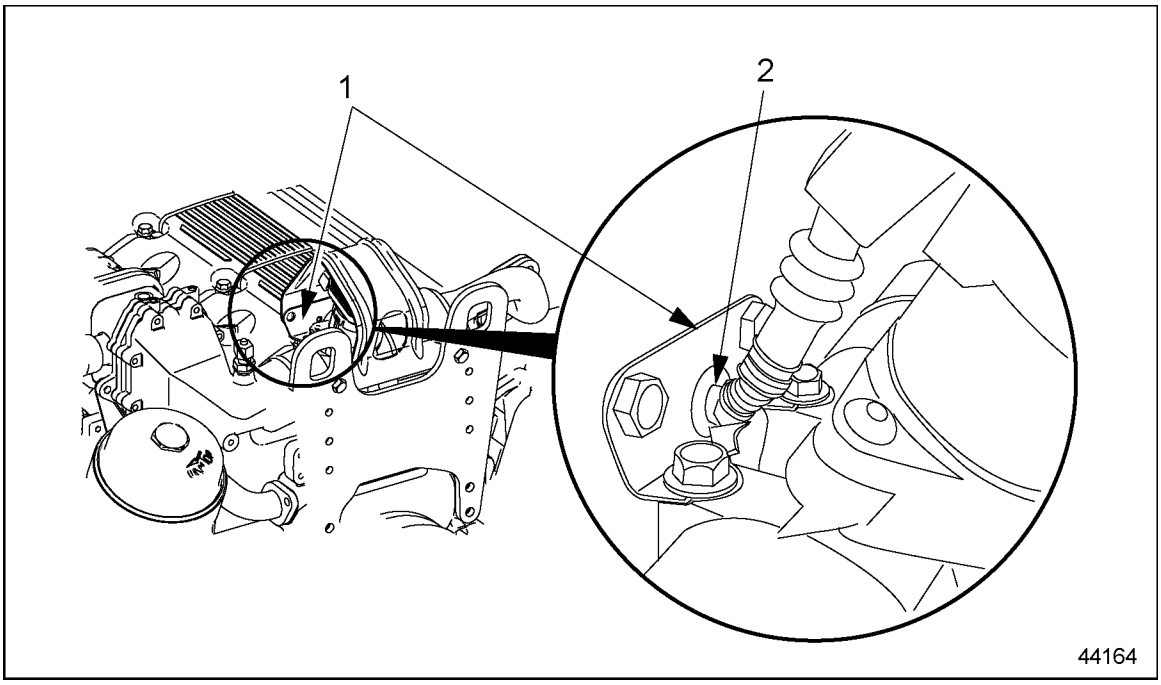

1. EGR Control Valve Back Mounting Bracket
2. Push-Mount Cable Tie

Figure 7-36 Removing the Back Control Valve Cover Bracket

All information subject to change without notice.
6SE412 0403 Copyright © 2004 DETROIT DIESEL CORPORATION

3. Remove the two bolts from gas outlet pipe attaching the pipe to the gas mixer. See Figure 7-37.

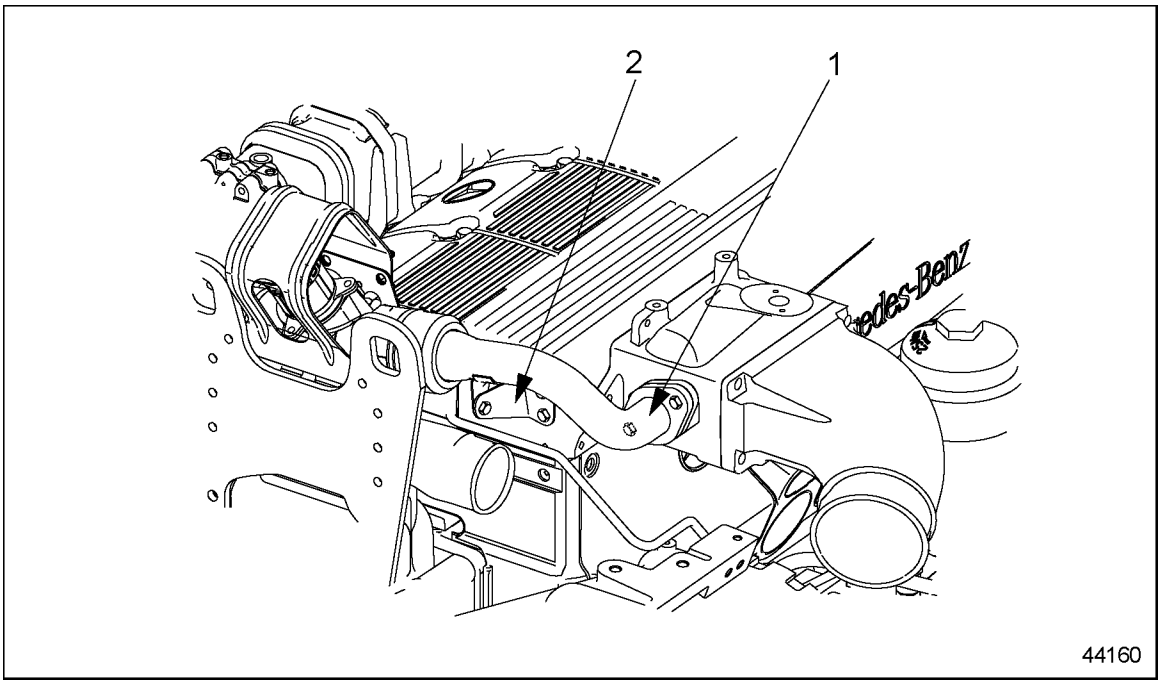

1. Gas Outlet Pipe Flange
2. Gas Outlet Pipe Mounting Bracket

Figure 7-37 Removal of EGR Gas Outlet Pipe

4. Remove the metal gasket.
5. Remove the three bolts that attach the gas outlet pipe mounting bracket to the intake manifold and to the outlet pipe. See Figure 7-37.

 Copyright © 2004 DETROIT DIESEL CORPORATION

https://truckmanualshub.com/

6. Pull outlet pipe away from mixer and from the EGR control valve, exposing the membrane in the control valve. See Figure 7-38.

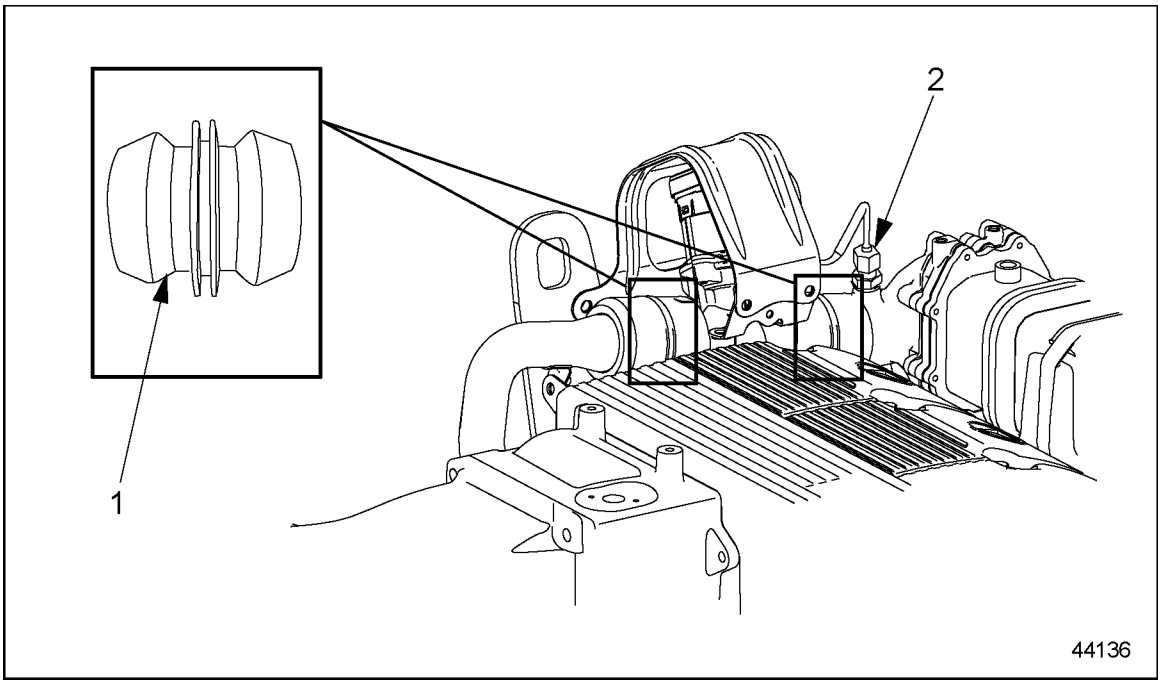

1. Membrane
2. EGR Temperature Sensor

Figure 7-38 Removing the Symmetric Membrane on Gas Outlet Pipe Side

7. Remove membrane from the EGR control valve.
8. Disconnect wiring harness terminal from valve connector. See Figure 7-39.

All information subject to change without notice.
6SE412 0403 Copyright © 2004 DETROIT DIESEL CORPORATION

9. Remove the four bolts attaching the EGR control valve to the thermostat housing. See Figure 7-39.

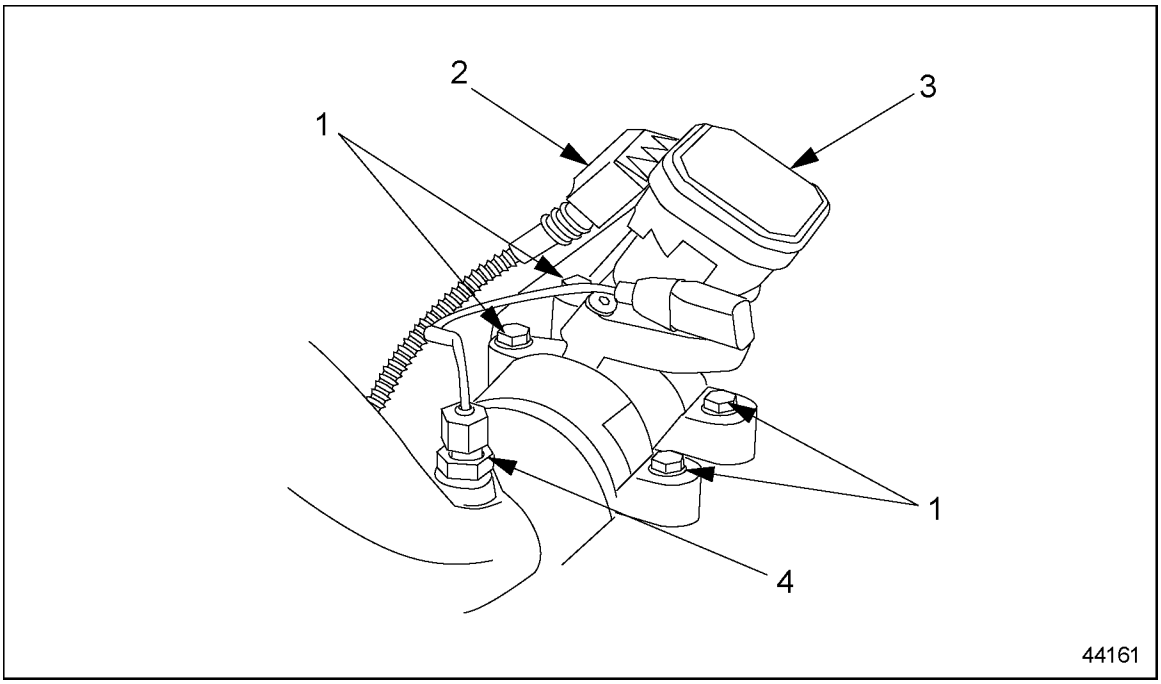

1. EGR Control Valve Mounting Bolts
2. Wiring Harness Terminal
3. EGR Control Valve
4. EGR Temperature Sensor

Figure 7-39 Removal or Installation of EGR Control Valve

10. Pull the EGR control valve out of the reed valve housing flange.
11. Remove symmetric membrane from the housing flange. See Figure 7-38.

https://truckmanualshub.com/

12. Pull the gas mixing pipe and metal gasket out of the air inlet pipe of mixer. See Figure 7-40.

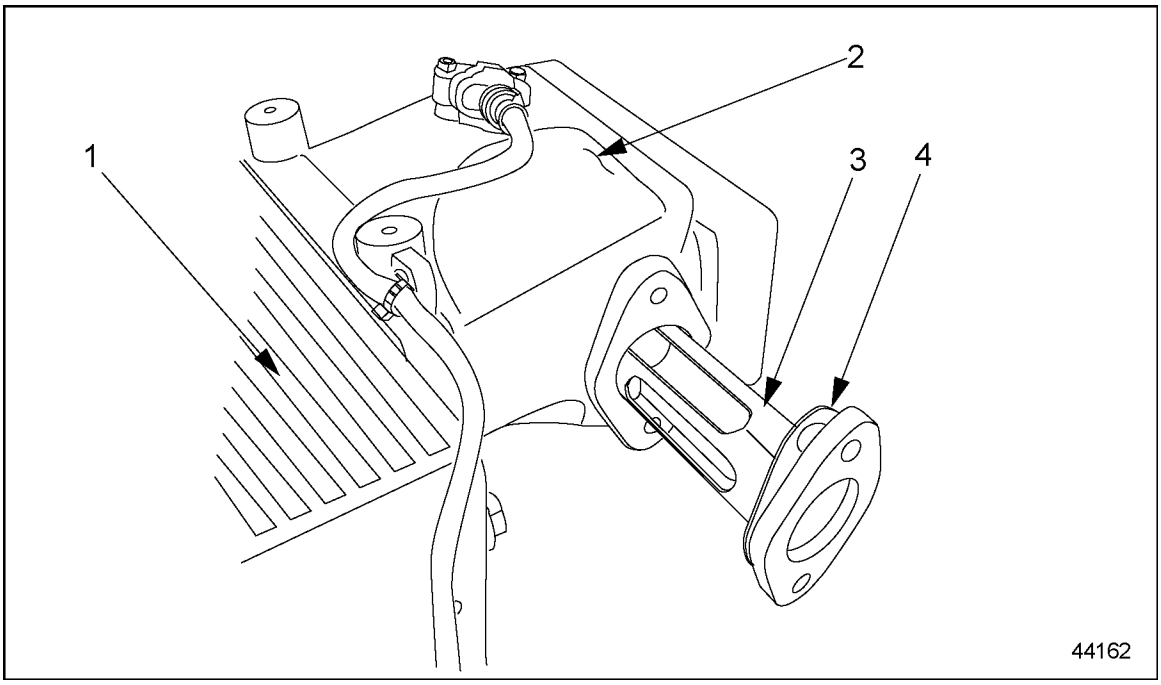

1. Intake Manifold
2. AIr Inlet Mixer
3. Gas Mixing Pipe
4. Metal Gasket

Figure 7-40 Removal of Gas Mixing Pipe

13. Remove the turbo boost/air temperature sensor attached to the gas mixer.

All information subject to change without notice.
6SE412 0403 Copyright © 2004 DETROIT DIESEL CORPORATION

14. Remove the four bolts that attach the air intake pipe to the gas mixer. Remove the metal gasket as well. See Figure 7-41.

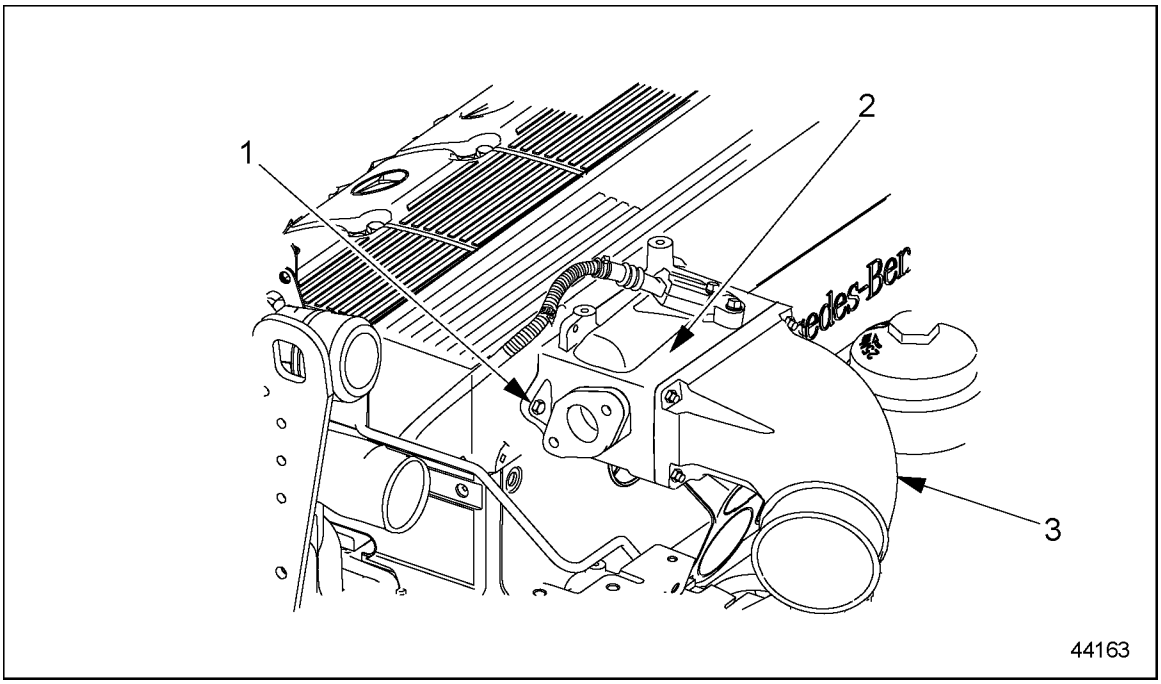

1. Air Inlet Mixer Mounting Bolts (2 qty.)
2. EGR Gas Mixer
3. Air Inlet Pipe

Figure 7-41 Removal of EGR Gas Mixer

15. Remove the two bolts that attach the EGR gas mixer to the intake manifold. See Figure 7-41. Pull gas mixer off of four long studs away from intake manifold.
16. Unscrew the four studs from intake manifold.
17. Remove the metal gasket.

7.5.2 Installation of EGR Control Valve, Gas Outlet Pipe, and Gas Mixer

Install the EGR control valve and gas outlet pipe as follows:

1. Insert a symmetric membrane into the reed valve housing flange using industrial petroleum jelly. See Figure 7-38.
2. Insert the EGR control valve onto this membrane using petroleum jelly.
3. Install the back two bolts of the EGR control valve (M8 x 90 mm). Install the front two bolts (those closest to the front lifter bracket) of the EGR control valve (M8 x 40 mm). Torque all bolts to 25 N·m (19 lb·ft).
4. Using two bolts, install the back control valve bracket that holds the wiring harness terminal in place. Torque to 25 N·m (19 lb·ft).

 Copyright © 2004 DETROIT DIESEL CORPORATION

https://truckmanualshub.com/

5. Connect wiring harness terminal to valve connector.
6. Insert a second membrane into the right side of the EGR control valve housing using industrial petroleum jelly.
7. Taking the EGR gas outlet pipe in hand, fit component manually onto symmetric membrane, using petroleum jelly.
8. Install the four gas mixer mounting studs into the intake manifold.
9. Install metal gasket over studs.
10. Fit gas mixer over mounting studs and push on as far as possible.
11. Install the gas mixing pipe into the air inlet pipe of mixer using a new metal gasket. See Figure 7-40.

NOTICE:
To avoid any engine damage, ensure that the gas passage of the mixing pipe is turned towards the intake manifold.

NOTE:
Due to its awkward shape, gas outlet pipe must be mounted to gas mixer before the gas mixer can be firmly attached to intake manifold.

12. Mount gas outlet pipe to gas mixer using a new metal gasket and two M8 x 16 mm bolts. Adjust gas mixer if necessary to accommodate the gas outlet pipe. Torque to 25 N·m (19 lb·ft).
13. Position support bracket in place for gas outlet pipe. Install bracket using three M8 x 16 mm bolts. Torque to 25 N·m (19 lb·ft).
14. Install the air inlet pipe to the gas mixer using four nuts. Torque to 50 N·m (37 lb·ft). See Figure 7-41.
15. Install the turbo boost/air intake temperature sensor to the gas mixer.

All information subject to change without notice.
6SE412 0403 Copyright © 2004 DETROIT DIESEL CORPORATION

7.6 EPV (ELECTRONIC PROPORTIONAL VALVE) AND WABCO® AIR SOLENOID VALVE

Listed in Table 7-4 is each proportional valve listed and the component it activates.

Proportional Valve	Component
PV1	Exhaust flap enable + EGR shutoff valve or boost control = wastegate valve (Turbobrake)
PV2	EGR control valve
PV3	Fan
PV4	Fan
PV5	CTV (Constant Throttle Valve)
PV6	Turbobrake sliding sleeve + EGR shutoff valve

Table 7-4 Proportional Valve Chart

7.6.1 Removal of EPV Valve and Wabco Air Solenoid Valve

Perform the following steps to remove the EPV valve, Wabco air solenoid valve and all the corresponding connections:

1. Disconnect wiring harness from the EPV valve and the Wabco solenoid valve.

 Copyright © 2004 DETROIT DIESEL CORPORATION

https://truckmanualshub.com/

WARNING:

PERSONAL INJURY

To avoid injury from the sudden release of a high-pressure hose connection, wear a face shield or goggles.

2. Disconnect the compressed air pipe between inlet connection installed at EPV valve and turbo brake actuator. See Figure 7-42.

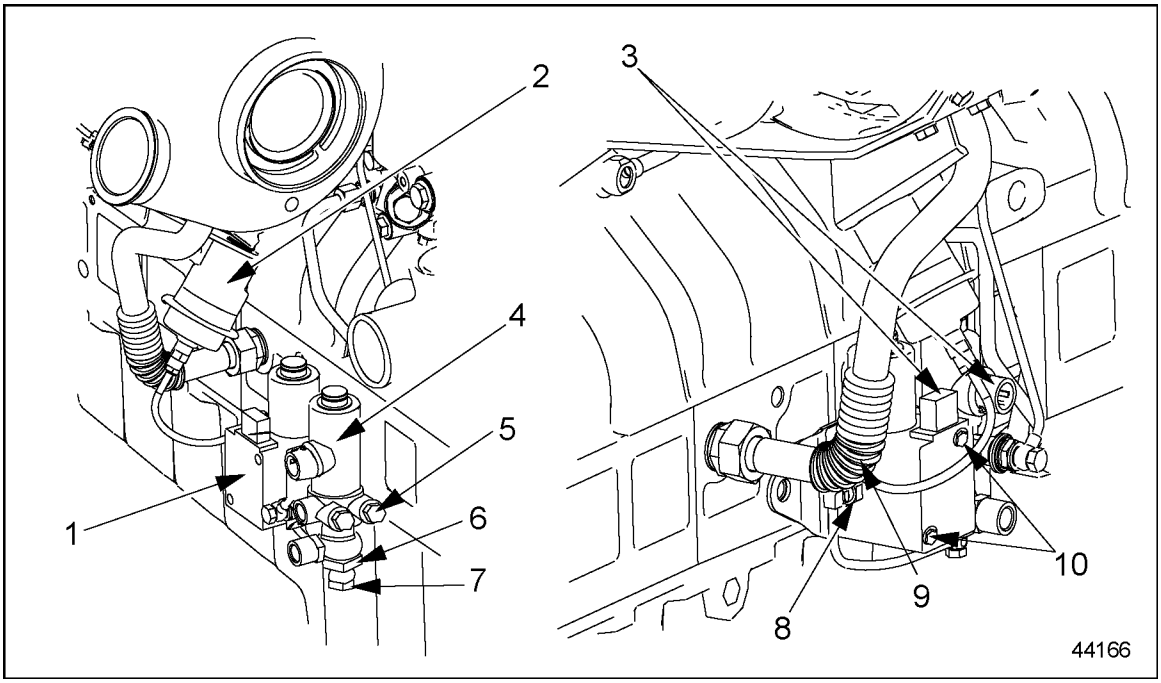

1. EPV (Electronic Proportional Valve)
2. Wastegate
3. Electric Wiring Harness Terminals
4. Wabco Valve
5. Solenoid Valve Mounting Bolts
6. Large Hollow Screw
7. Small Hollow Screw
8. EPV Valve Inlet
9. EPV Valve Outlet (hidden)
10. EPV Valve Mounting Bolts

Figure 7-42 Installing the EPV Valve / Wabco Solenoid Valve

3. Remove the smaller hollow screw below the larger hollow screw.
4. Disconnect the inlet and outlet connections at EPV pressure regulating valve.
5. Remove the large hollow screw in threaded connection.
6. Remove the two M8 x 50 mm bolts that hold the EPV valve on the left side of bracket.
7. Remove the two M8 x 50 mm bolts that hold the Wabco solenoid valve on the right side of bracket.

All information subject to change without notice.
6SE412 0403 Copyright © 2004 DETROIT DIESEL CORPORATION

8. Remove the two M14 x 25 mm bolts that hold the EPV/solenoid valve bracket to the block.

7.6.2 Installation of EPV Valve and Wabco Air Solenoid Valve

Perform the following steps to install the EPV valve, Wabco air solenoid valve and all corresponding connections:

1. Install the EPV/solenoid valve bracket to the block with two M14 x 25 mm bolts. Torque to 100 N·m (74 lb·ft).
2. Mount the Wabco solenoid valve on right side of bracket using two M8 x 50 mm bolts. Apply 25 N·m (19 lb·ft) tightening torque. See Figure 7-43.

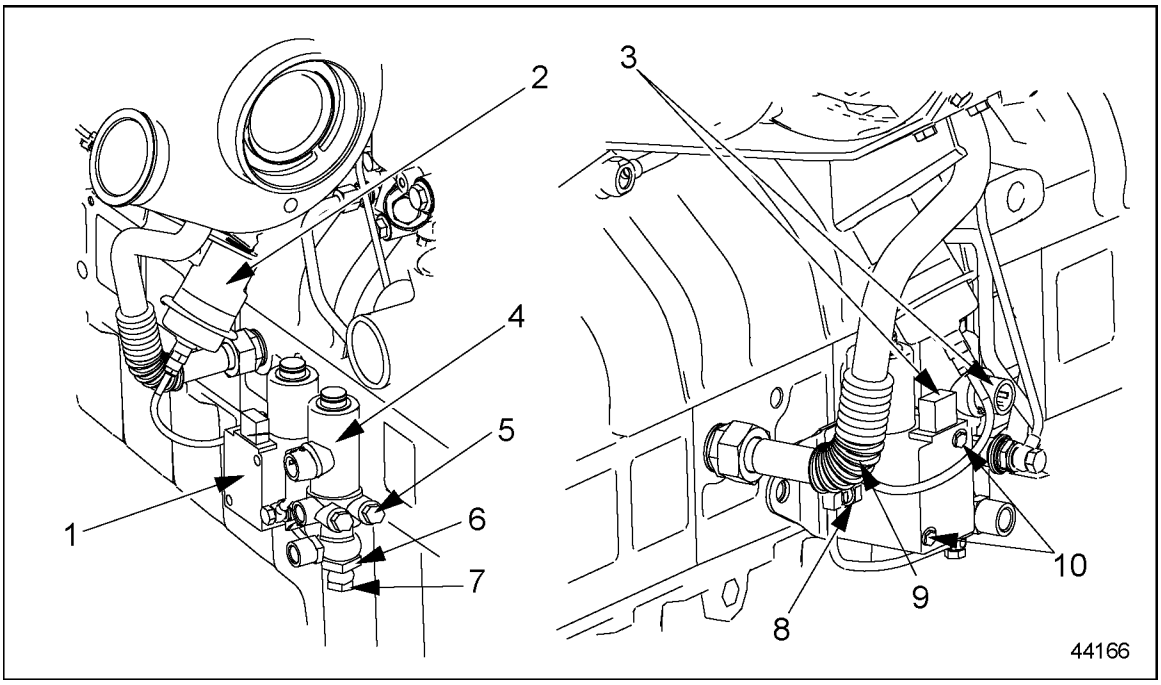

1. EPV (Electronic Proportional Valve)
2. Turbo Brake Actuator
3. Electric Wiring Harness Terminals
4. Wabco Valve
5. Solenoid Valve Mounting Bolts
6. Hollow Screw
7. Small Hollow Screw
8. EPV Valve Inlet
9. EPV Valve Outlet (hidden)
10. EPV Valve Mounting Bolts

Figure 7-43 Installing the EPV Valve / Wabco Solenoid Valve

3. Mount the EPV valve on left side of bracket using two M8 x 50 mm bolts. Torque to 25 N·m (19 lb·ft) tightening torque.
4. Install large hollow screw in threaded connection. Torque to 50 N·m (37 lb·ft). See Figure 7-43.

 Copyright © 2004 DETROIT DIESEL CORPORATION

https://truckmanualshub.com/

WARNING:

PERSONAL INJURY

To avoid injury from the sudden release of a high-pressure hose connection, wear a face shield or goggles.

5. Install inlet and outlet connections at EPV pressure regulating valve. Torque to 15 N·m (11 lb·ft).

NOTICE:

Avoid friction on compressed air pipe traveling under the EPV valve or potential damage to engine could result.

6. Install smaller hollow screw below larger hollow screw, securing connection. Torque to 15 N·m (11 lb·ft).
7. Fit the pipe between inlet connection installed at EPV valve and turbo brake actuator.
8. Connect wiring harness to EPV valve and Wabco valve.

All information subject to change without notice.
6SE412 0403 Copyright © 2004 DETROIT DIESEL CORPORATION

7.7 HENGST® BREATHER FILTER

7.7.1 Removal of Hengst Filter and Bracket

Perform the following steps to remove the Hengst filter:

1. Disconnect the breather piping from the Hengst filter. See Figure 7-44.

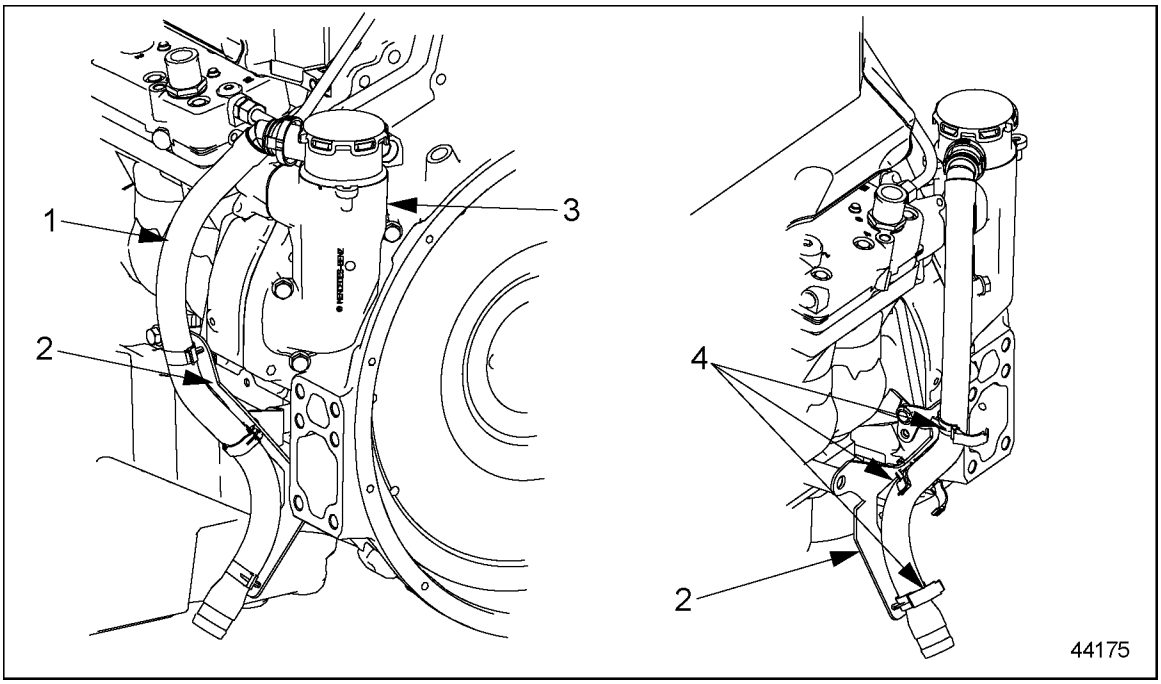

1. Filter Piping
2. Filter Piping Bracket
3. Hengst Filter
4. Plastic Clamps

Figure 7-44 Removal of Hengst Filter and Related Parts

 Copyright © 2004 DETROIT DIESEL CORPORATION

https://truckmanualshub.com/

2. Unsnap the filter cap and remove the spring and diaphragm insert from centrifugal filter. Remove the two assembly bolts from the breather filter assembly, and pull the breather assembly out. See Figure 7-45.

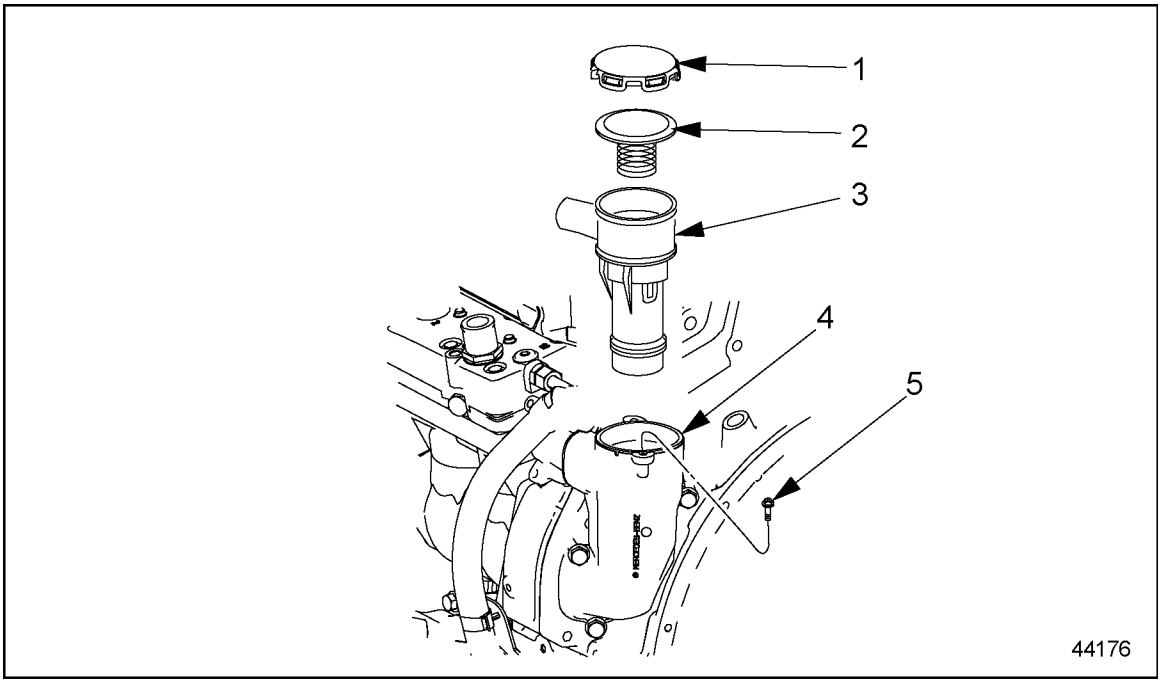

1. Filter Cap
2. Spring and Diaphragm
3. Centrifugal Filter
4. Breather
5. Assembly Bolt

Figure 7-45 Hengst Filter Assembly

3. Remove the three plastic clamps holding the breather piping to the bracket. Remove the piping. See Figure 7-44.
4. Remove the two bolts from the air compressor and the block that are holding the piping bracket on. Remove the piping bracket.
5. Remove the three M8 x 35 mm bolts holding the breather filter to the timing case.
6. Remove the two M8 x 25 mm bolts holding the breather filter to the block.
7. Remove the breather filter.

7.7.2 Installation of Hengst Filter

Perform the following steps to install the Hengst filter:

All information subject to change without notice.
6SE412 0403 Copyright © 2004 DETROIT DIESEL CORPORATION

1. Assemble the centrifugal filter, spring and diaphragm insert and the cap into the breather housing. Bolt down with two hex head bolts. See Figure 7-46.

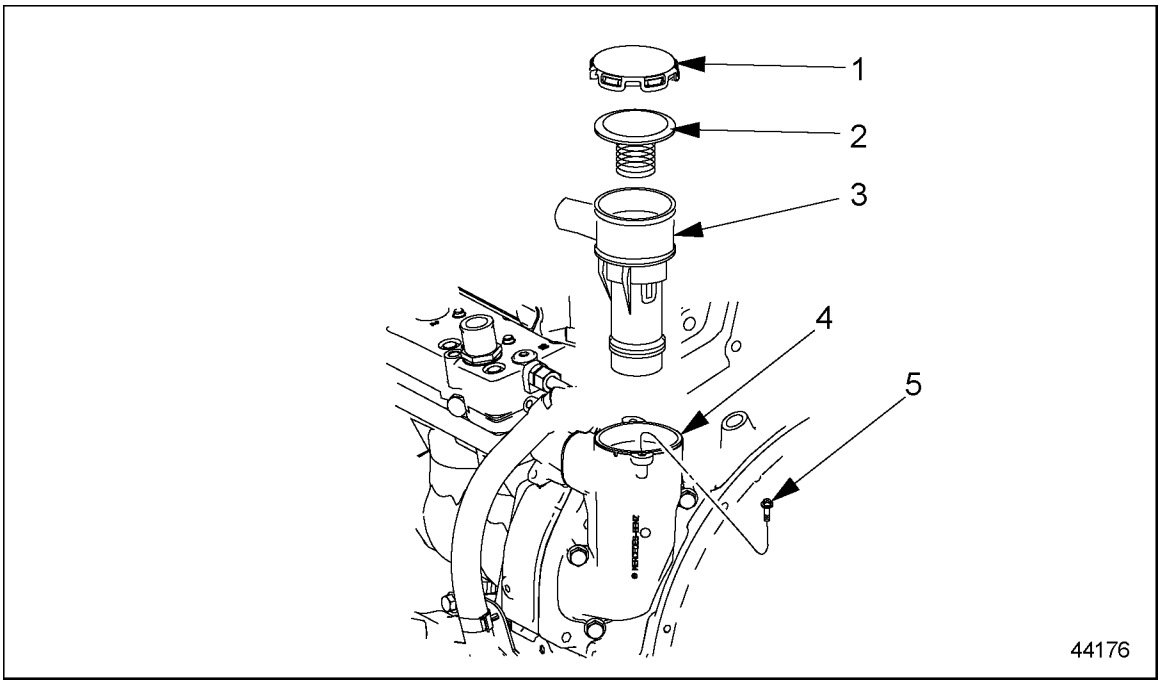

1. Filter Cap
2. Spring and Diaphragm
3. Centrifugal Filter
4. Breather
5. Assembly Bolt

Figure 7-46 Hengst Filter Assembly

 Copyright © 2004 DETROIT DIESEL CORPORATION

https://truckmanualshub.com/

2. Install the filter assembly onto the timing case using three M8 x 35 mm bolts. Torque to 25 N·m (19 lb·ft).

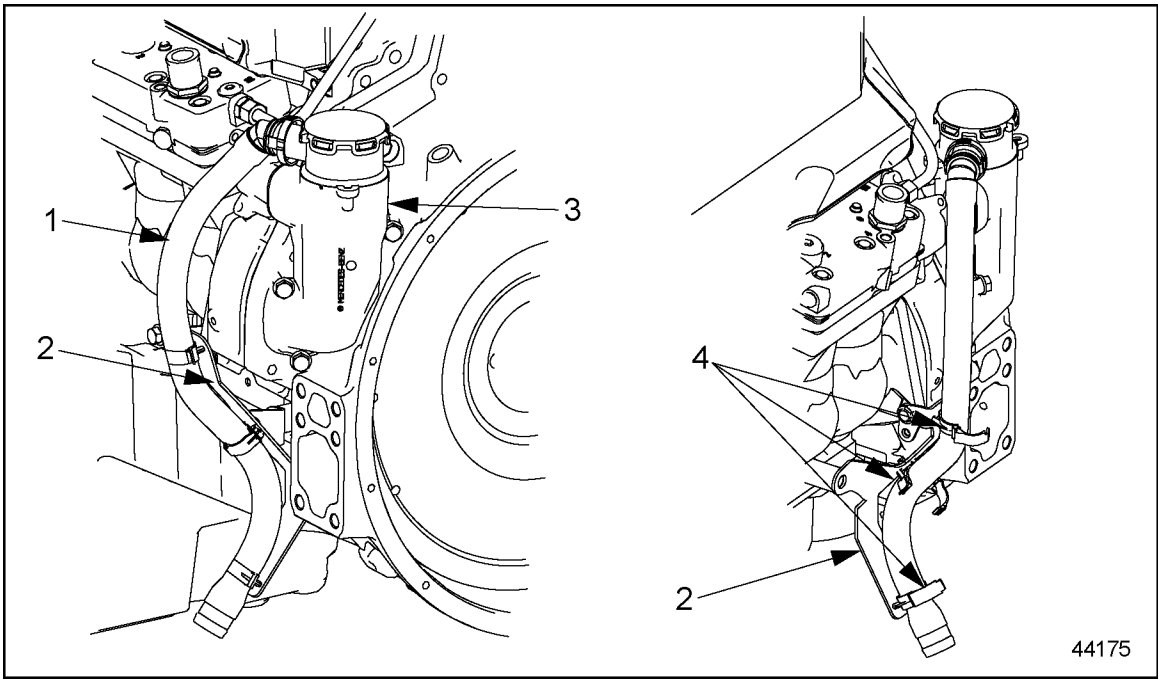

1. Filter Piping
2. Filter Piping Bracket
3. Hengst Filter
4. Plastic Clamps

Figure 7-47 Installation of Hengst Filter and Related Parts

3. Install the assembly to the block using two M8 x 25 mm bolts. Torque to 25 N·m (19 lb·ft).
4. Attach the temporary filter piping bracket to the air compressor and block as follows:
   [a] Install a M14 x 60 mm bolt with a spacer at the engine block.
   [b] Install a M10 x 35 mm bolt at the air compressor.
   [c] Torque to 60 N·m (44 lb·ft) at the air compressor and 100 N·m (74 lb·ft) torque at the block.
5. Install pipe, connecting it at the Hengst filter mouth.
6. Install three plastic clamps at pipe bracket. See Figure 7-47.

All information subject to change without notice.
6SE412 0403 Copyright © 2004 DETROIT DIESEL CORPORATION

https://truckmanualshub.com/

7.A ADDITIONAL INFORMATION

Description **Page**

SPECIFICATIONS 7-60
Exhaust Manifold 7-60
Exhaust Brake Assembly 7-60

 Copyright © 2004 DETROIT DIESEL CORPORATION

https://truckmanualshub.com/

SPECIFICATIONS

This section contains the specifications for servicing the engine.

Exhaust Manifold

The torque values for the turbocharger and the exhaust manifold are listed in Table 7-5.

Description	N·m (lb·ft)
Turbocharger to Exhaust Manifold Nuts	50 (37)
Exhaust Manifold Mounting Bolts	50 (37)

Table 7-5 Turbocharger and Exhaust Manifold Torque Values

Exhaust Brake Assembly

The exhaust brake assembly specifications are listed in Table 7-6. Listed in Table 7-7 are the exhaust brake assembly torque values.

Description	Value in mm (in.)
End Play (axial play) of Exhaust Brake Shaft	0.4 - 0.7 (0.016 - 0.028)
Radial Play of Exhaust Brake Shaft	0.200 - 0.263 (0.00787 - 0.01035)
Distance between the two Projecting Bushings,	84.2 (3.31)
Projection of the Rear Bushing into the Brake Valve Housing	2.6 (0.10)

Table 7-6 Exhaust Brake Assembly Specifications

Description	N·m (lb·ft)
Adjusting Lever Bolt	15 (11)
Bracket Mounting Bolt	35 (25)
Exhaust Brake Cylinder Locknut	25 (18)
Valve Mounting Bolts	30 (22)

Table 7-7 Exhaust Brake Assembly Torque Values

All information subject to change without notice.
6SE412 0403 Copyright © 2004 DETROIT DIESEL CORPORATION

https://truckmanualshub.com/

8 ELECTRICAL EQUIPMENT

Section **Page**

8.1 DRIVE BELTS 8-3
8.A ADDITIONAL INFORMATION 8-15

https://truckmanualshub.com/

All information subject to change without notice.
6SE412 0403 Copyright © 2004 DETROIT DIESEL CORPORATION

https://truckmanualshub.com/

8.1 DRIVE BELTS

There are three v-ribbed drive belts on the MBE 4000 engine:

- ☐ The main drive belt — (nine ribs)
- ☐ The fan belt — (eight ribs)
- ☐ The air conditioner compressor belt (installed only on vehicles with air conditioning) — (six ribs)

The main drive belt has nine ribs and drives the alternator and coolant pump. The fan belt has eight ribs and the air conditioner compressor belt (if installed) has six ribs.

NOTE:
Before removing and installing a belt, check belt function and make sure to install the correct belt.

There are three idler pulleys on the MBE 4000 engine, one on the main drive belt and two on the fan belt. One of the fan belt idler pulleys has a ribbed belt contact surface; the others are smooth. There is no idler pulley installed for the air conditioner compressor belt.

8.1.1 Main Drive Belt Removal

Remove the main drive belt as follows:

NOTE:
There are three v-ribbed drive belts on the MBE 4000 engine. Be sure to remove and install the correct belt(s).

1. Disconnect the batteries.

 Copyright © 2004 DETROIT DIESEL CORPORATION

https://truckmanualshub.com/

2. Release the tension on the main drive belt. See Figure 8-1.

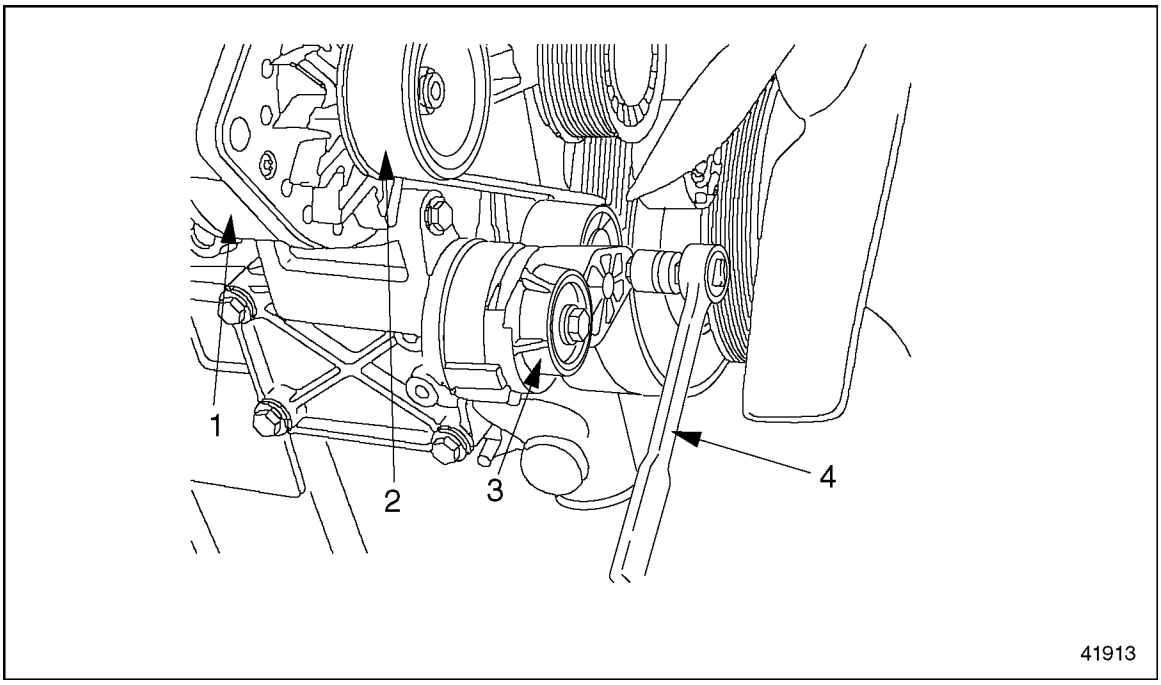

1. Alternator
2. Main Drive Belt
3. Belt Tensioner
4. Socket Wrench

Figure 8-1 Releasing Belt Tension

[a] Place a socket wrench on the tensioner pulley bolt.

[b] Pull the socket wrench (swivel the tensioner pulley counterclockwise) to remove the tension from the belt.

[c] Hold the tensioner pulley in this position for the next step.

All information subject to change without notice.
6SE412 0403 Copyright © 2004 DETROIT DIESEL CORPORATION

https://truckmanualshub.com/

3. Remove the drive belt from the alternator, coolant-pump and idler pulleys. Be careful not to kink, stretch, or otherwise damage the belt. See Figure 8-2.

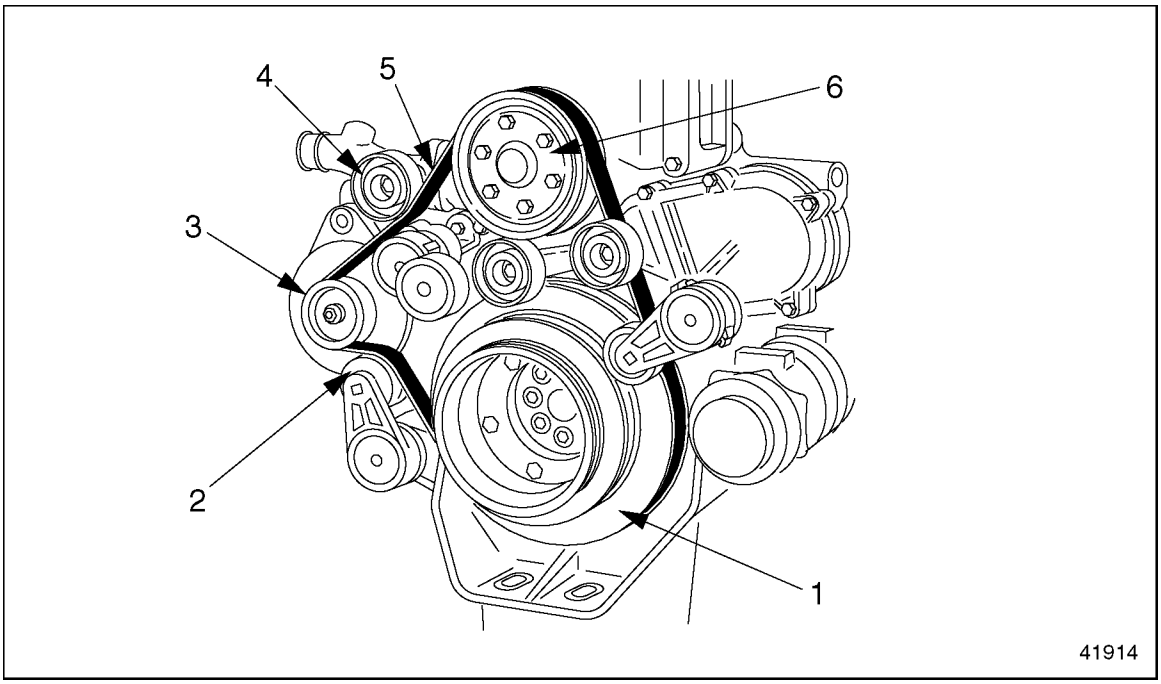

1. Vibration Damper
2. Tensioner Pulley
3. Alternator Pulley
4. Idler Pulley
5. Main Drive Belt
6. Coolant Pump Pulley

Figure 8-2 Main Drive Belt Removal

4. Release the tensioner pulley.
5. Inspect the drive belt for nicks, wear, or other damage. Replace the belt if necessary.
6. Inspect the following parts and replace any that are damaged or worn:
   - ☐ vibration damper
   - ☐ alternator pulley
   - ☐ coolant-pump pulley
   - ☐ belt tensioner
   - ☐ tensioner pulley
   - ☐ idler pulley

8.1.2 Main Drive Belt Installation

Install the main drive belt as follows:

 Copyright © 2004 DETROIT DIESEL CORPORATION

https://truckmanualshub.com/

1. Fit the main drive belt on the belt pulleys. Be careful not to kink, stretch, or otherwise damage the belt. For correct routing, see Figure 8-3. Do not fit the belt onto the tensioner pulley yet.

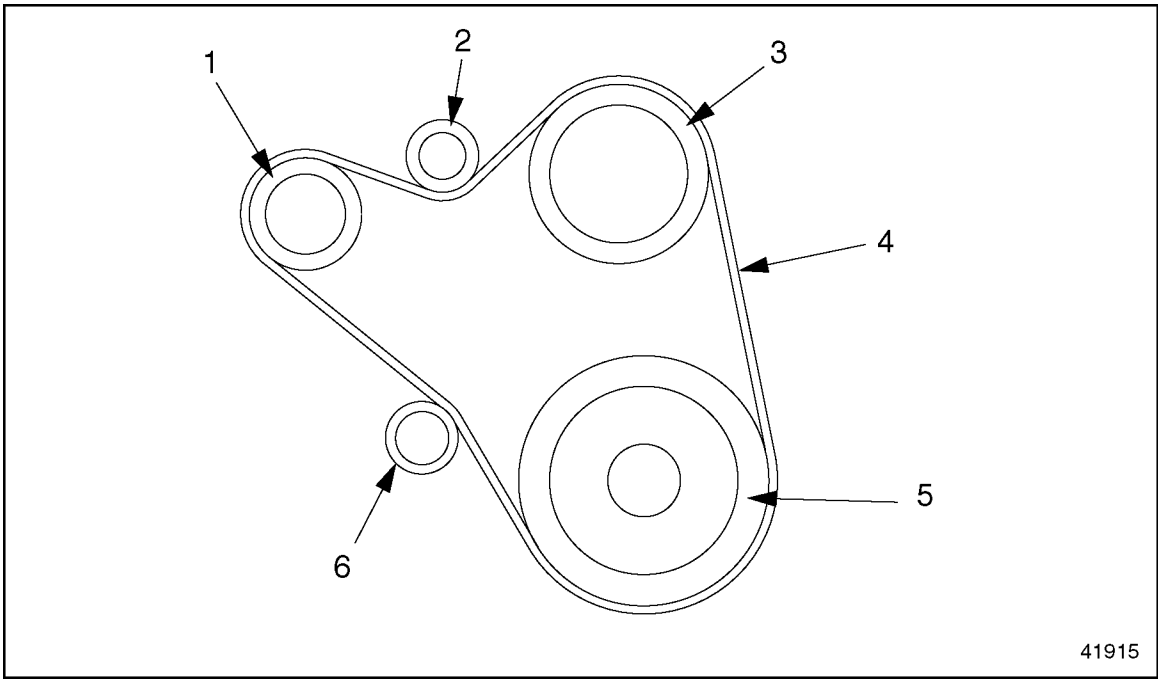

1. Alternator Pulley
2. Idler Pulley
3. Coolant Pump Pulley
4. Main Drive Belt
5. Vibration Damper
6. Tensioner Pulley

Figure 8-3 Main Drive Belt Routing

2. Release the tension on the main drive belt. See Figure 8-1.
3. Make sure the belt is correctly positioned for the tensioner pulley.
4. Restore the tension on the belt.
   [a] Lower the socket wrench to return the tensioner pulley to its original position.
   [b] Remove the socket-wrench bit from the pulley bolt.
5. Check the main drive belt to make sure it is in the correct position and properly aligned on the pulleys.
6. Connect the batteries.

8.1.3 Fan Belt Removal

Remove the fan belt as follows:

1. Disconnect the batteries.
2. Release the tension on the fan drive belt. See Figure 8-1.

All information subject to change without notice.
6SE412 0403 Copyright © 2004 DETROIT DIESEL CORPORATION

[a] Place a socket wrench on the tensioner pulley bolt.

[b] Pull the socket wrench (swivel the tensioner pulley counterclockwise) to remove the tension from the belt.

[c] Hold the tensioner pulley in this position for the next step.

3. Remove the drive belt from the fan and idler pulleys. Be careful not to kink, stretch, or otherwise damage the belt. See Figure 8-4.

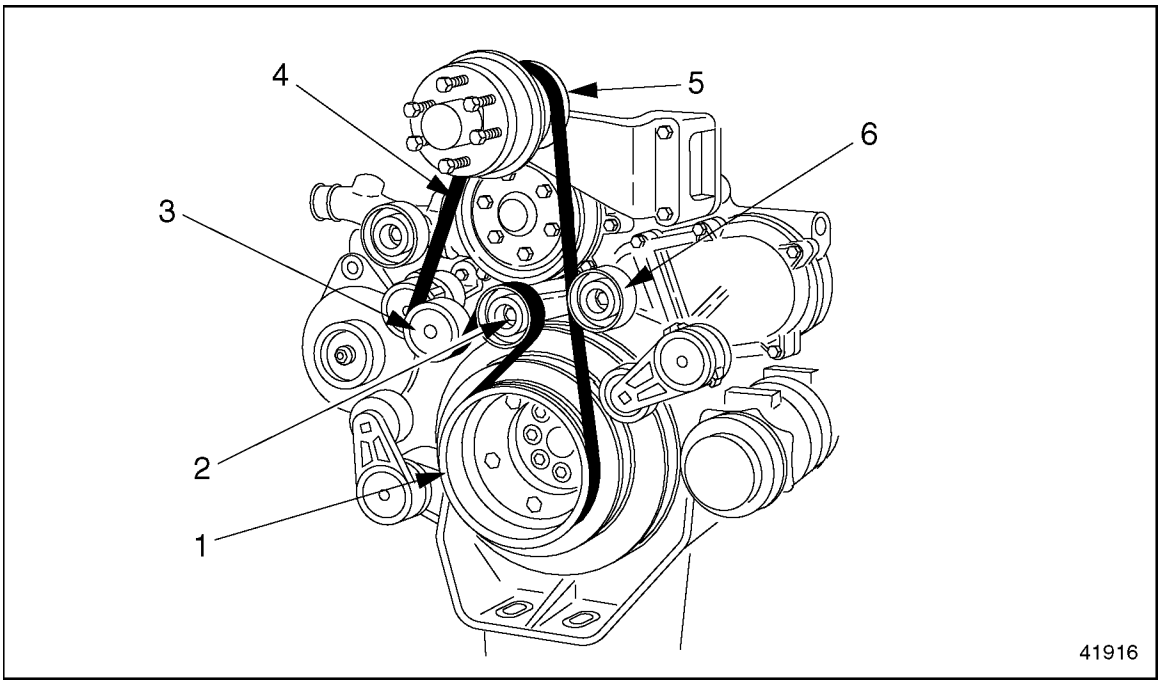

1. Crankshaft Pulley
2. Idler Pulley #1
3. Fan Belt Tensioner
4. Fan Belt
5. Fan Pulley
6. Idler Pulley #2

Figure 8-4 Fan Belt Removal

4. Release the tensioner pulley.
5. Inspect the fan belt for nicks, wear, or other damage. Replace the belt if necessary.
6. Inspect the following parts and replace any that are damaged or worn:
   - ☐ vibration damper
   - ☐ fan pulley
   - ☐ belt tensioner
   - ☐ tensioner pulley
   - ☐ idler pulley

8.1.4 Fan Belt Installation

Install the fan belt as follows:

 Copyright © 2004 DETROIT DIESEL CORPORATION

https://truckmanualshub.com/

1. Fit the fan drive belt on the belt pulleys. Be careful not to kink, stretch, or otherwise damage the belt. For correct routing, see Figure 8-5. Do not fit the belt onto the tensioner pulley yet.

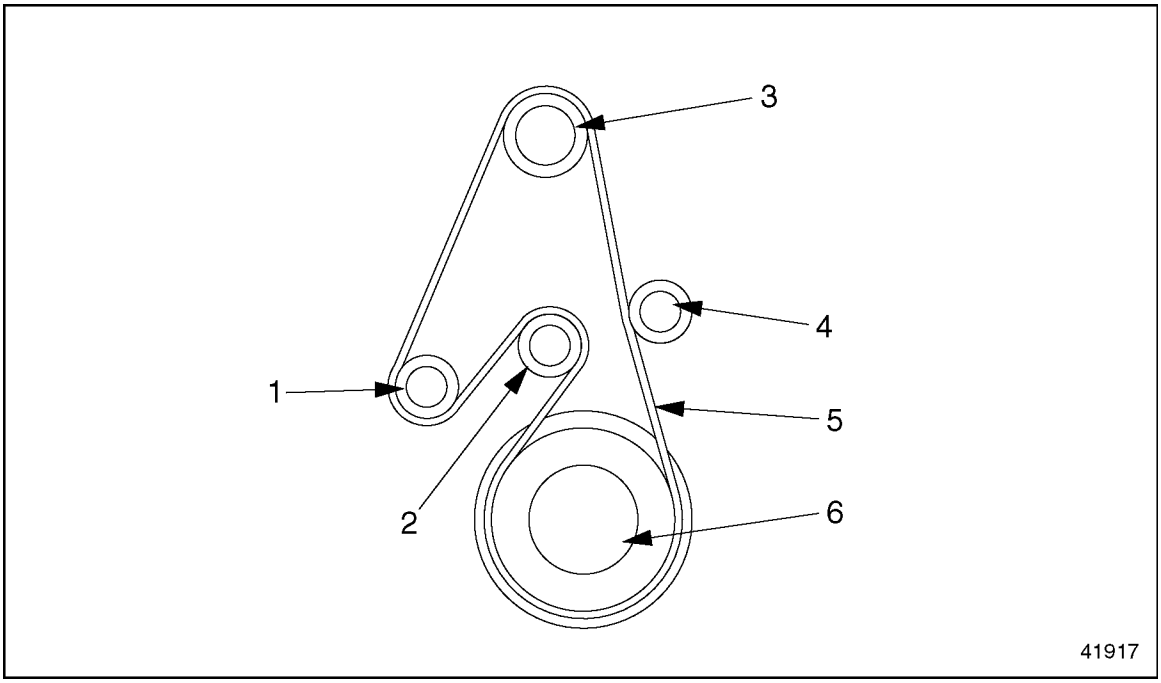

1. Tensioner Pulley
2. Idler Pulley #1
3. Fan Pulley
4. Idler Pulley #2
5. Fan Belt
6. Crankshaft Pulley

Figure 8-5 Fan Belt Routing

2. Release the tension on the fan belt. See Figure 8-1.
3. Make sure the belt is correctly positioned for the tensioner pulley.
4. Restore the tension on the belt.
   [a] Lower the socket wrench to return the tensioner pulley to its original position.
   [b] Remove the socket-wrench bit from the pulley bolt.
5. Check the fan belt to make sure it is in the correct position and properly aligned on the pulleys.
6. Connect the batteries.

8.1.5 Air Conditioner Compressor Belt Removal

Install the air conditioner (A/C) compressor belt as follows:

NOTE:
The A/C compressor belt is installed only on vehicles with air conditioning.

All information subject to change without notice.
6SE412 0403 Copyright © 2004 DETROIT DIESEL CORPORATION

1. Disconnect the batteries.
2. Release the tension on the A/C compressor drive belt. See Figure 8-1.
   [a] Place a socket wrench on the tensioner pulley bolt.
   [b] Pull the socket wrench (swivel the tensioner pulley clockwise) to remove the tension from the belt.
   [c] Hold the tensioner pulley in this position for the next step.
3. Remove the drive belt from the A/C compressor pulley. Be careful not to kink, stretch, or otherwise damage the belt. See Figure 8-6.

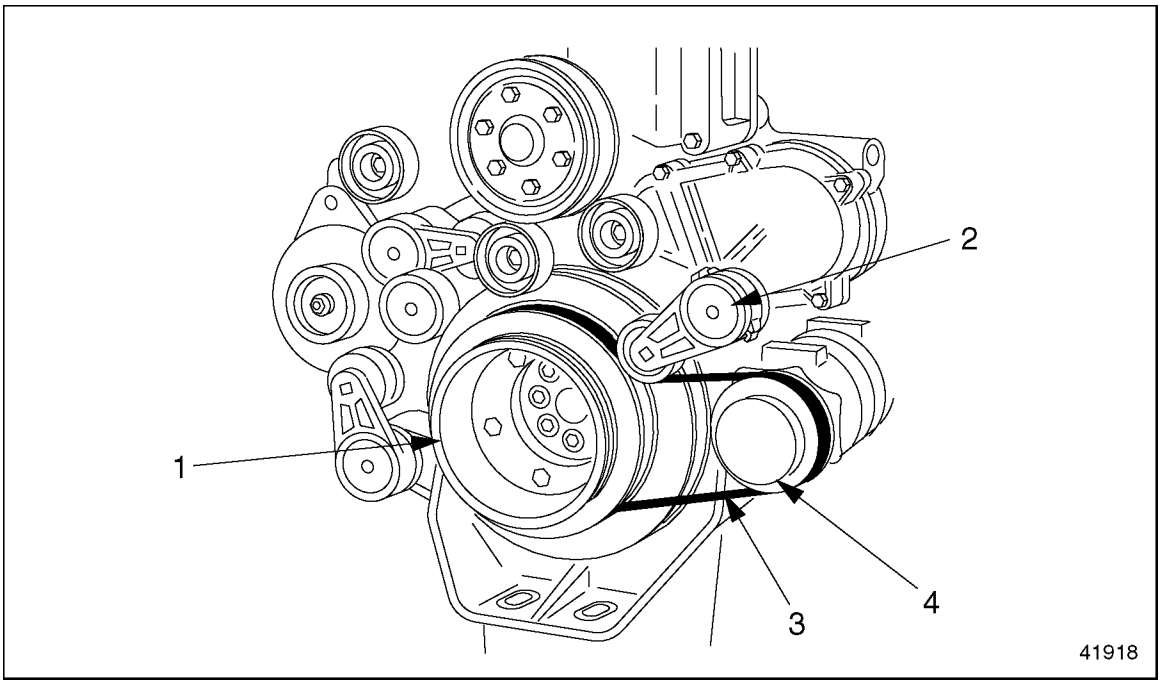

1. Crankshaft Pulley
2. A/C Compressor Belt Tensioner
3. A/C Compressor Belt
4. A/C Compressor Pulley

Figure 8-6 Air Conditioner Compressor Belt Removal

4. Release the tensioner pulley.
5. Inspect the A/C compressor belt for nicks, wear, or other damage. Replace the belt if necessary.
6. Inspect the following parts and replace any that are damaged or worn:
   - ☐ vibration damper
   - ☐ A/C compressor pulley
   - ☐ belt tensioner
   - ☐ tensioner pulley
   - ☐ idler pulley

 Copyright © 2004 DETROIT DIESEL CORPORATION

https://truckmanualshub.com/

8.1.6 Air Conditioner Compressor Belt Installation

Install the A/C compressor belt as follows:

1. Fit the A/C compressor drive belt on the belt pulleys. Be careful not to kink, stretch, or otherwise damage the belt. For correct routing, see Figure 8-7. Do not fit the belt onto the tensioner pulley yet.

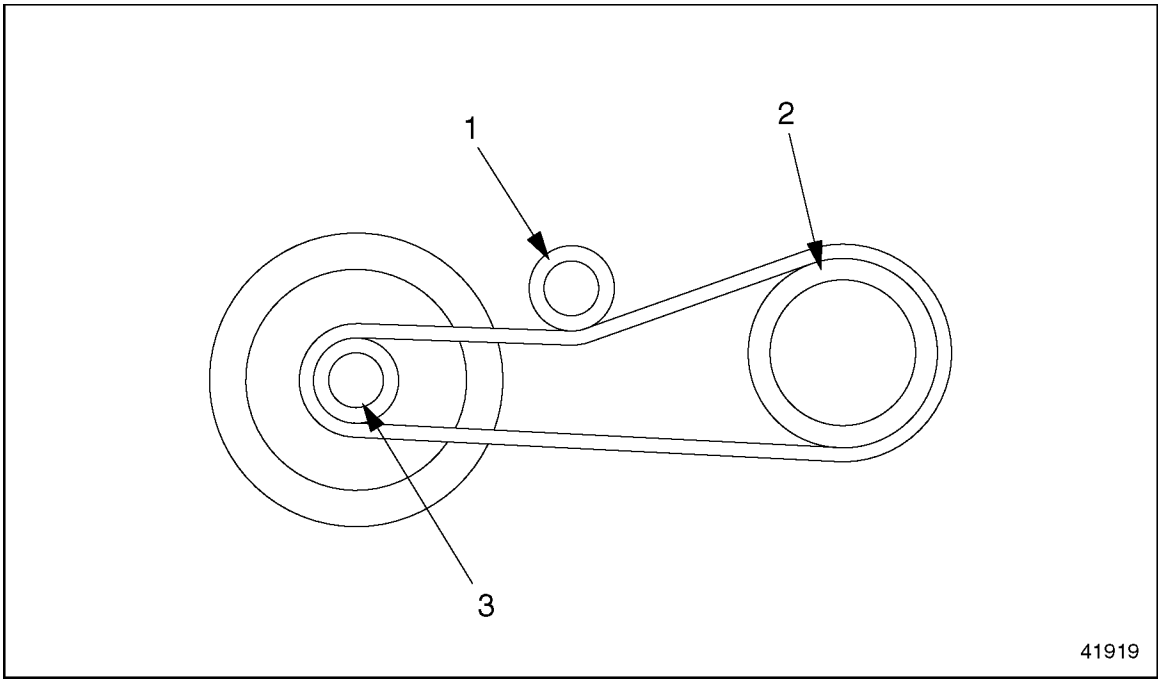

1. Tensioner Pulley
2. A/C Compressor Pulley
3. Crankshaft Pulley

Figure 8-7 Air Conditioner Compressor Belt Routing

2. Release the tension on the A/C compressor belt. See Figure 8-1.
3. Make sure the belt is correctly positioned for the tensioner pulley.
4. Restore the tension on the belt.
   [a] Lower the socket wrench to return the tensioner pulley to its original position.
   [b] Remove the socket-wrench bit from the pulley bolt.
5. Check the A/C compressor belt to make sure it is in the correct position and properly aligned on the pulleys.
6. Connect the batteries.

All information subject to change without notice.
6SE412 0403 Copyright © 2004 DETROIT DIESEL CORPORATION

8.1.7 Belt Tensioner Removal

Remove the belt tensioner as follows:

NOTE:
This procedure works for all belt tensioners. See Figure 8-8 to identify the correct belt tensioner.

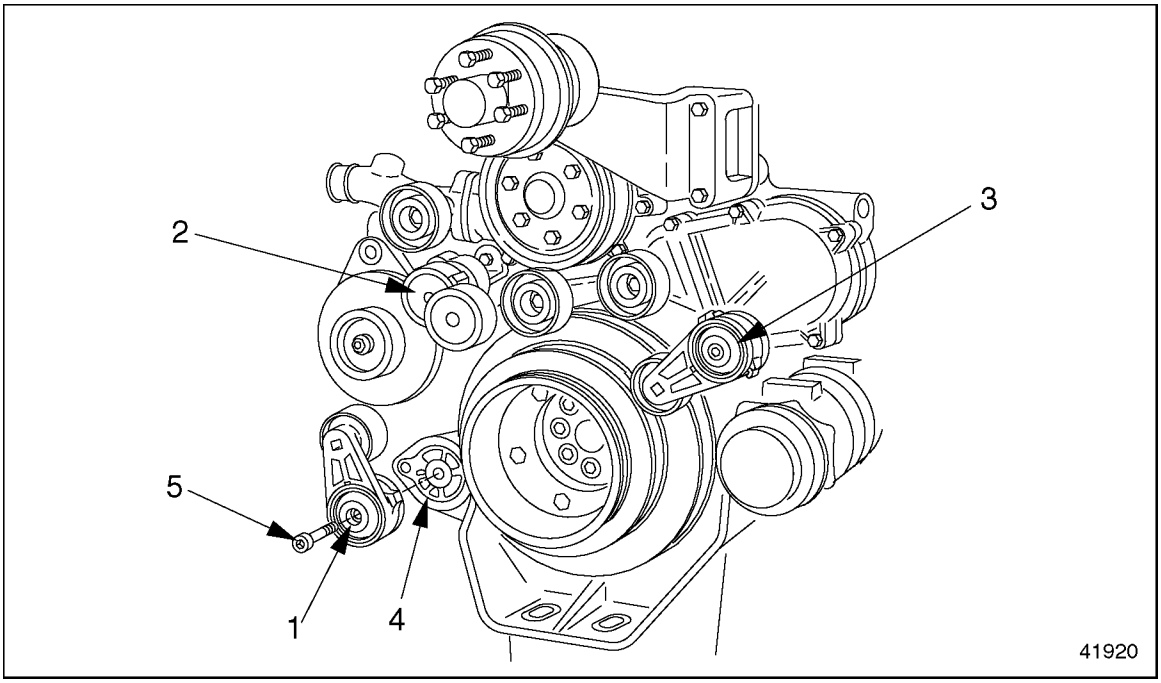

1. Main Drive Belt Tensioner
2. Fan Belt Tensioner
3. A/C Compressor Belt Tensioner
4. Mounting Pad
5. Socket-Head Mounting Bolt

Figure 8-8 Belt Tensioners

WARNING:

PERSONAL INJURY

To avoid injury to hands and fingers from the spring-loaded auto belt tensioner violently snapping back, do not cut the belt to remove it.

1. Release the tension on the main drive belt (alternator and coolant pump), fan belt, and/or A/C compressor belt, as desired. Refer to section 8.1.1.
2. Release the tensioning pulley.
3. Remove the mounting bolt that fastens the belt tensioner and tensioner pulley to the cylinder block.

 Copyright © 2004 DETROIT DIESEL CORPORATION

https://truckmanualshub.com/

4. Remove the belt tensioner and tensioner pulley from the mounting pad on the cylinder block.

8.1.8 Belt Tensioner Installation

Install the belt tensioner as follows:

1. Align the guide pins on the belt tensioner with the holes in the mounting pad.
2. Position the belt tensioner to the mounting pad and secure in place with the mounting bolt. Tighten the bolt 50 N·m (37 lb·ft).
3. Release the belt tensioner to allow the belt to be installed. Refer to section 8.1.1.
4. Install the drive belt on the pulleys, as removed.
5. Restore the tension on the drive belt.

8.1.9 Idler Pulley Removal

Remove the idler pulley as follows:

NOTE:
This procedure works for all idler pulleys. To identify the correct pulley, see Figure 8-9.

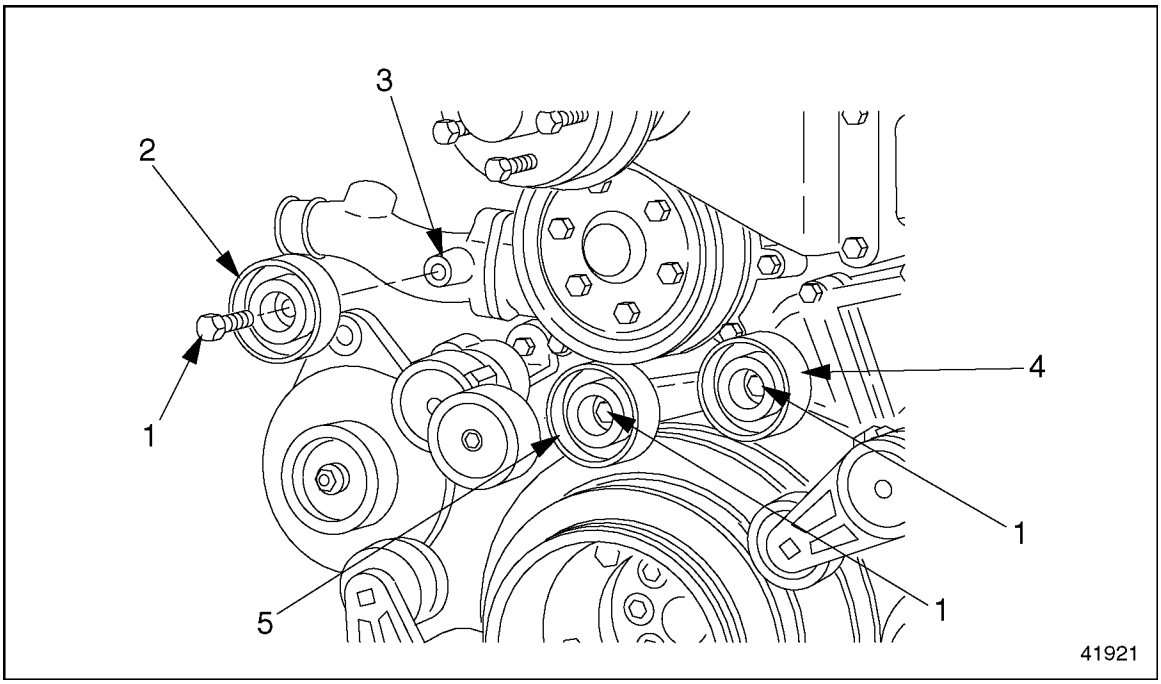

1. Mounting Bolt
2. Main Drive Belt Idler Pulley
3. Coolant Pump Inlet Pipe
4. Fan Idler Pulley #2
5. Fan Idler Pulley #1

Figure 8-9 Idler Pulleys

All information subject to change without notice.
6SE412 0403 Copyright © 2004 DETROIT DIESEL CORPORATION

1. Release the tension on the main drive belt (alternator and coolant-pump), and/or fan belt, as desired. Refer to section 8.1.1 for detailed instructions.
2. With belt tension relaxed, remove the belt from contact with the idler pulley.
3. Release the tensioning pulley.
4. Remove the cover from the idler pulley.
5. Remove the socket-head bolt fastening the pulley to the mounting pad.
6. Remove the pulley from the mounting pad.

8.1.10 Idler Pulley Installation

Install the idler pulley as follows:

1. Position the pulley on the mounting pad, as removed.
2. Secure the pulley with the socket-head bolt. Tighten the bolt 45 N·m (33 lb·ft).
3. Release the tension on the belt tensioner. Refer to section 8.1.1 for detailed instructions.
4. Position the belt around the new pulley.
5. When the belt is in place, restore the tension on the drive belt. Refer to section 8.1.1 for detailed instructions.
6. Install the idler pulley cover.

8.1.11 Air Conditioner Compressor Pad Removal

Remove the A/C compressor pad as follows:

NOTE:
The A/C compressor belt tensioner is attached to the A/C compressor pad.

1. Remove the A/C compressor.
2. Remove the belt tensioner from the pad.

 Copyright © 2004 DETROIT DIESEL CORPORATION

https://truckmanualshub.com/

3. Remove the bolts attaching the A/C compressor pad to the cylinder block. See Figure 8-10.

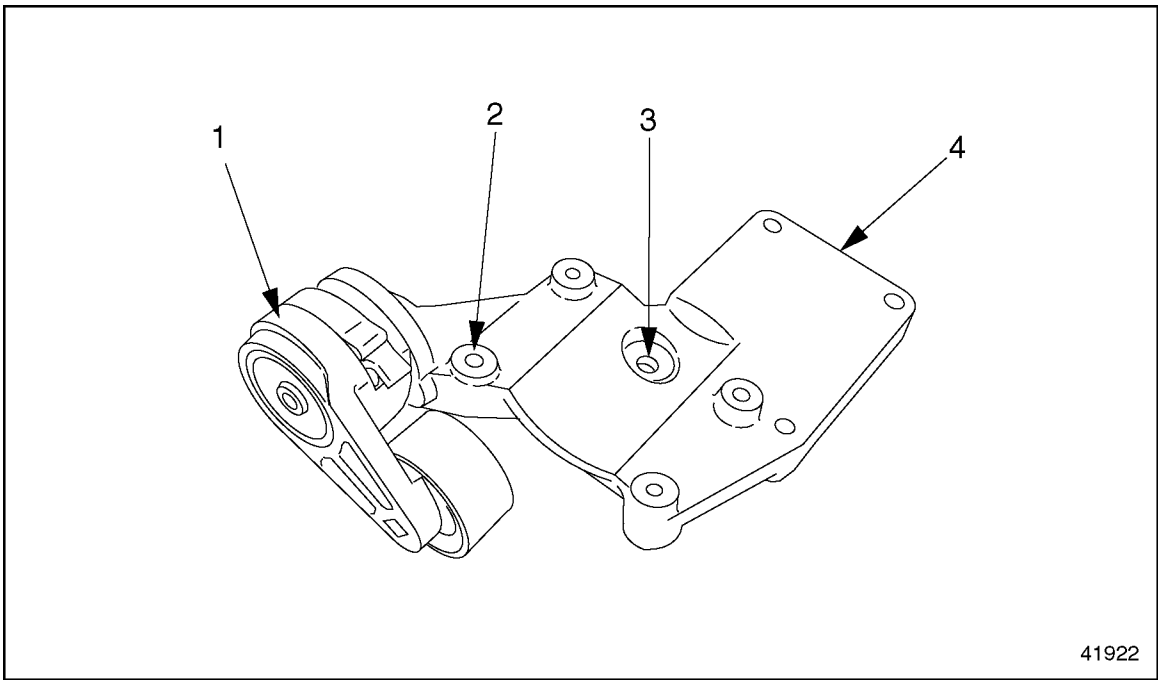

1. Belt Tensioner
2. A/C Compressor Mounting Holes
3. Pad Mounting Hole
4. A/C Compressor Mounting Pad

Figure 8-10 Air Conditioner Compressor Pad Removal

4. Remove the A/C compressor pad from the engine.

8.1.12 Air Conditioner Compressor Pad Installation

Install the A/C compressor pad as follows:

1. Position the A/C compressor pad on the cylinder block, as removed.
2. Install the mounting bolts and tighten them 150 N·m (110 lb·ft).
3. Install the belt tensioner on the pad.
4. Install the A/C compressor.

All information subject to change without notice.
6SE412 0403 Copyright © 2004 DETROIT DIESEL CORPORATION

https://truckmanualshub.com/

8.A ADDITIONAL INFORMATION

Description **Page**

SPECIFICATIONS 8-16
Drive Belts 8-16

 Copyright © 2004 DETROIT DIESEL CORPORATION

https://truckmanualshub.com/

SPECIFICATIONS

This section contains the specifications for servicing the engine.

Drive Belts

The torque values for the drive belts are listed in Table 8-1.

Description	Torque Value, N·m (lb·ft)
Socket-Head Mounting Bolt Belt Tensioner	50 (37)
Idler Pulley, Mounting Bolt	45 (33)
A/C Compressor Pad, Mounting Bolt	150 (110)

Table 8-1 Drive Belts Torque Values

All information subject to change without notice.
6SE412 0403 Copyright © 2004 DETROIT DIESEL CORPORATION

https://truckmanualshub.com/

9 POWER TAKE-OFF

Section **Page**

9.1 POWER TAKE-OFF 9-3

https://truckmanualshub.com/

All information subject to change without notice.
6SE412 0403 Copyright © 2004 DETROIT DIESEL CORPORATION

https://truckmanualshub.com/

9.1 POWER TAKE-OFF

Power take-off is not applicable for the MBE 4000 engine.

 Copyright © 2004 DETROIT DIESEL CORPORATION

https://truckmanualshub.com/

All information subject to change without notice.
6SE412 0403 Copyright © 2004 DETROIT DIESEL CORPORATION

https://truckmanualshub.com/

10 SPECIAL EQUIPMENT

Section **Page**

10.1 AIR COMPRESSOR 10-3
10.A ADDITIONAL INFORMATION 10-11

https://truckmanualshub.com/

All information subject to change without notice.
6SE412 0403 Copyright © 2004 DETROIT DIESEL CORPORATION

https://truckmanualshub.com/

10.1 AIR COMPRESSOR

The air compressor, with a power-steering pump attached, is driven by a gear on the camshaft. Perform the following procedures for removal and installation of the air compressor.

10.1.1 Air Compressor Removal

Remove the air compressor as follows:

WARNING:

HOT COOLANT

To avoid scalding from the expulsion of hot coolant, never remove the cooling system pressure cap while the engine is at operating temperature. Wear adequate protective clothing (face shield, rubber gloves, apron, and boots). Remove the cap slowly to relieve pressure.

1. Drain the coolant.

 Copyright © 2004 DETROIT DIESEL CORPORATION

https://truckmanualshub.com/

2. Remove the two bolts attaching the power steering pump to the air compressor. See Figure 10-1.

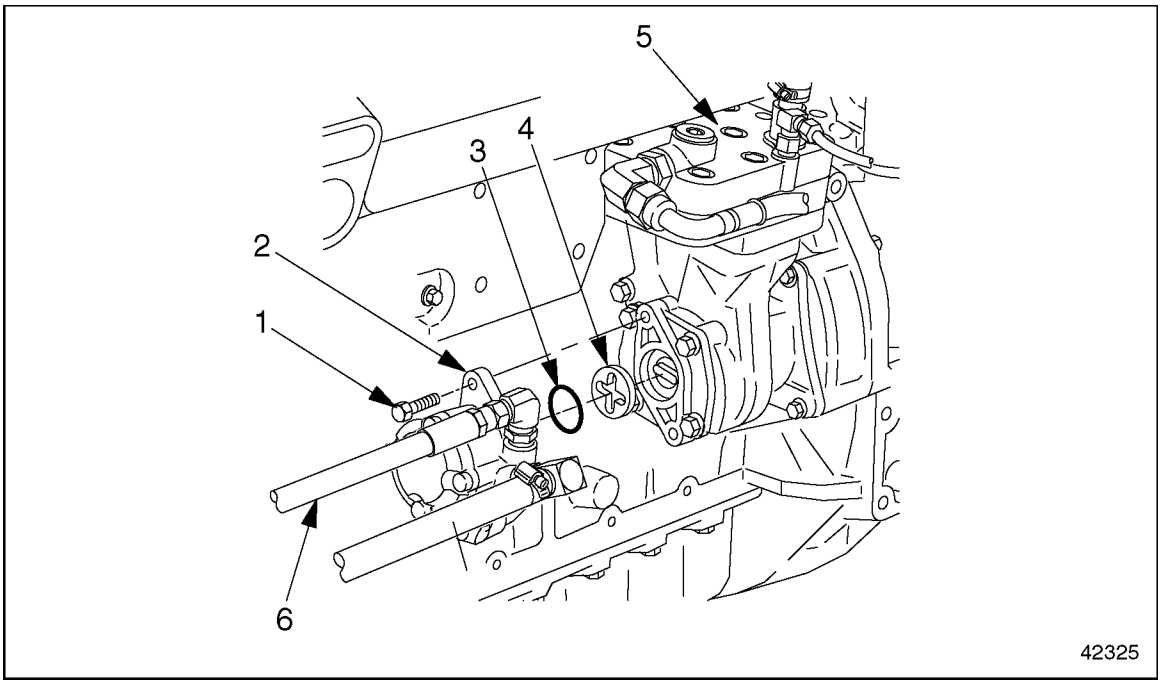

1. Mounting Bolt
2. Power Steering Pump
3. O-ring
4. Cross Plate
5. Air Compressor
6. Hydraulic Lines

Figure 10-1 Power Steering Pump Removal

NOTE:
Do not remove the power steering lines. Tie up the lines and move the pump out of the way.

3. Remove the cross plate between the compressor and the power steering pump.

All information subject to change without notice.
6SE412 0403 Copyright © 2004 DETROIT DIESEL CORPORATION

4. Remove the three air lines. See Figure 10-2.

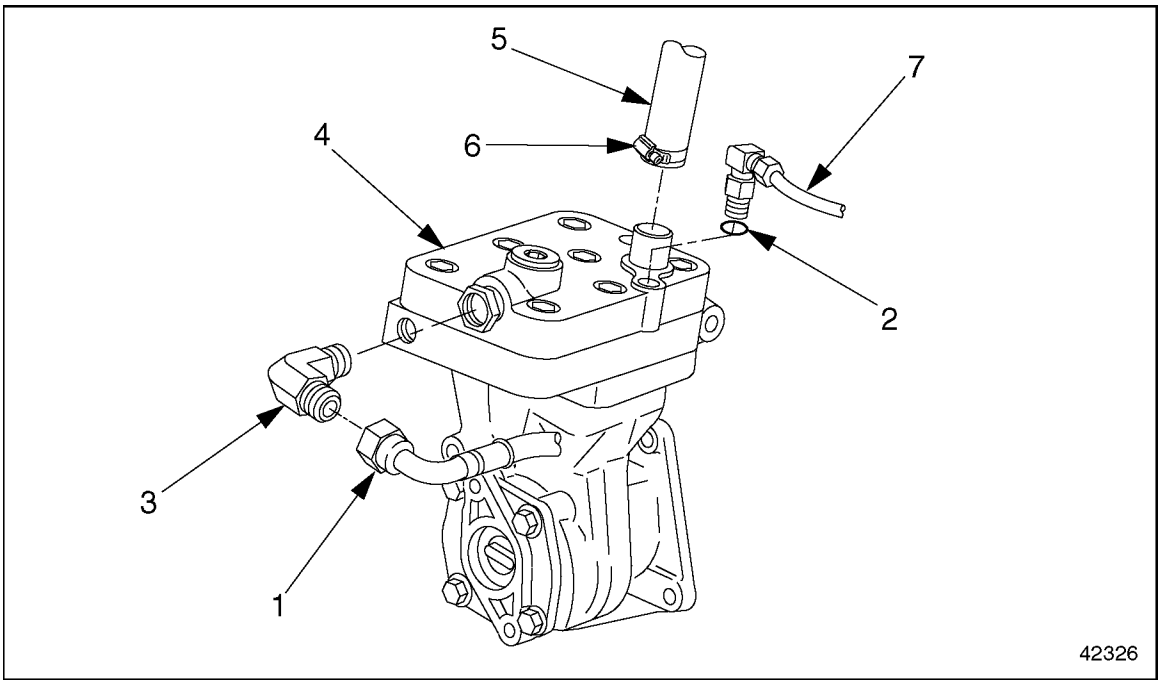

1. Discharge Air Line
2. O-ring
3. 90° Elbow
4. Air Compressor
5. Intake Air Line
6. Hose Clamp
7. Unloader Air Line

Figure 10-2 Air Line Attachments

WARNING:

PERSONAL INJURY

To avoid injury from the sudden release of a high-pressure hose connection, wear a face shield or goggles.

[a] Remove the discharge (compressed air) line and the 90° elbow. Check inside the discharge line for carbon deposits. If deposits are found, replace the discharge line.

NOTE:
The 90° elbow on the discharge line must be removed to allow removal of the engine trim cover.

[b] Remove the unloader line. Check the fittings for damage and replace if necessary.

[c] Loosen the hose clamp and remove the intake (suction) air line.

 Copyright © 2004 DETROIT DIESEL CORPORATION

https://truckmanualshub.com/

5. Remove the engine trim cover.

NOTE:
The bottom of the engine trim cover overhangs the coolant delivery line fasteners, making them difficult to remove.

6. Remove the coolant delivery line and coolant return line. Discard the seal rings. See Figure 10-3.

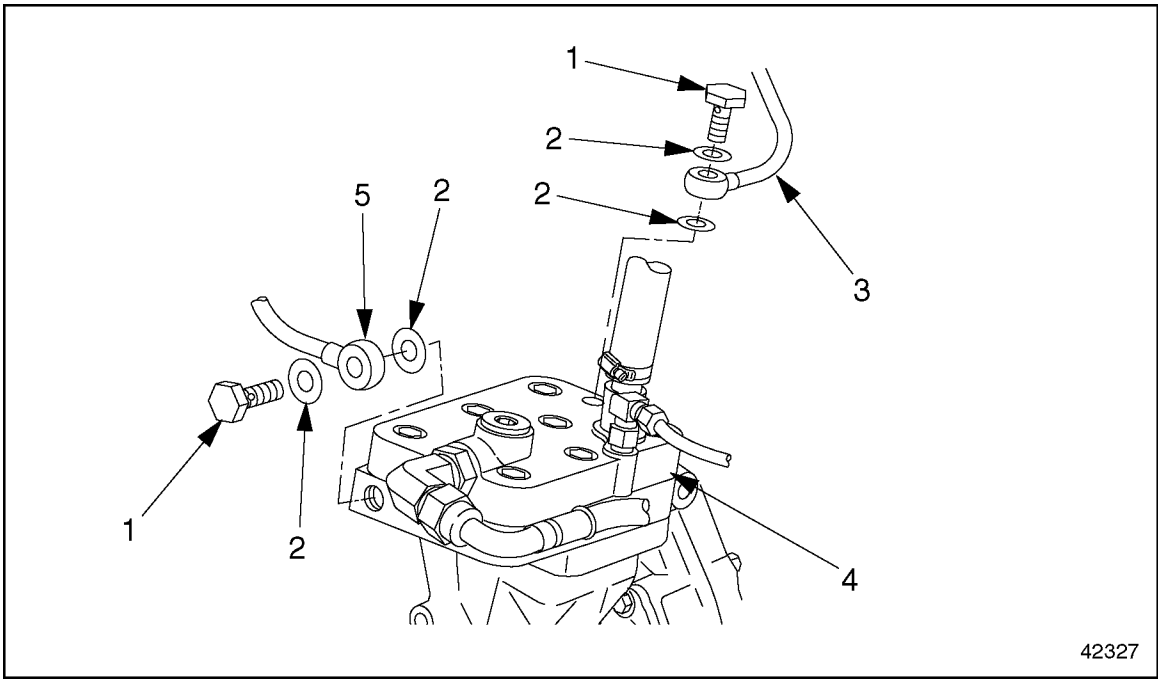

1. Hollow-Core Banjo Bolt
2. Seal Ring
3. Coolant Delivery Line
4. Air Compressor
5. Coolant Return Line

Figure 10-3 Air Compressor Coolant Lines

All information subject to change without notice.
6SE412 0403 Copyright © 2004 DETROIT DIESEL CORPORATION

7. Remove the four mounting bolts attaching the air compressor to the crankcase. See Figure 10-4.

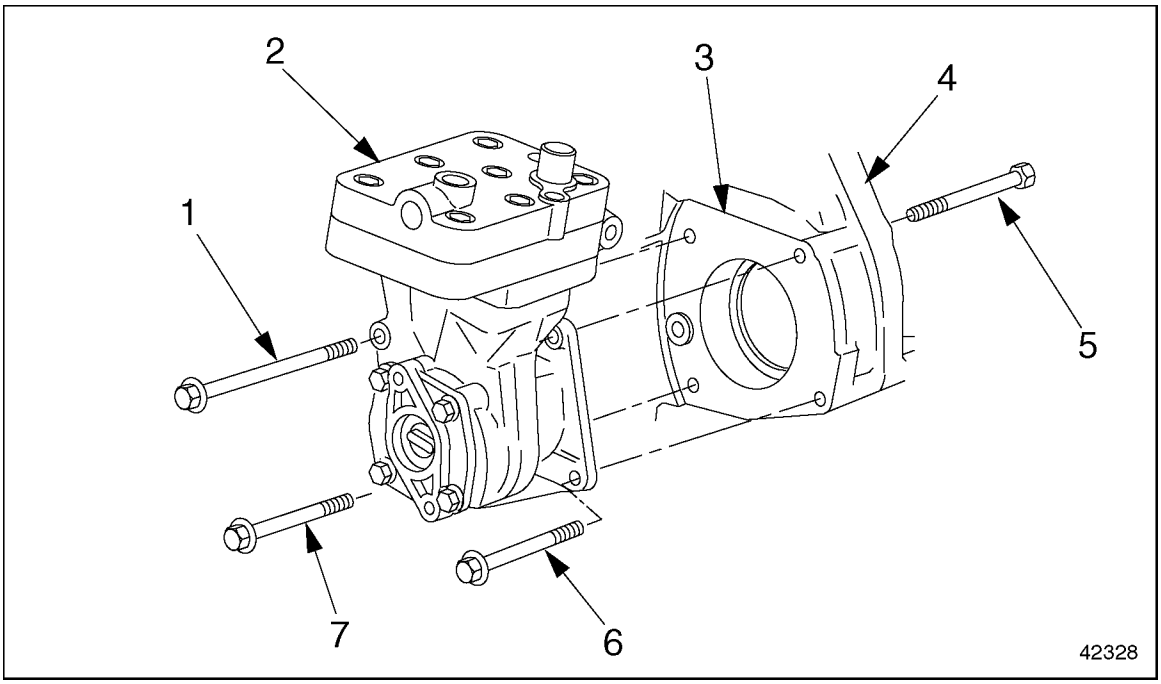

1. Inboard Upper Mounting Bolt
2. Air Compressor
3. Cylinder Block
4. Flywheel Housing
5. Outboard Upper Mounting Bolt
6. Outboard Lower Mounting Bolt
7. Inboard Lower Mounting Bolt

Figure 10-4 Air Compressor Mounting

NOTE:
The mounting bolts are of different lengths. The outboard upper mounting bolt is removed from the rear.

8. Slide the drive gear away from the flywheel. Catch any oil that runs out and dispose of it properly.

10.1.1.1 Air Compressor Inspection

Inspect the air compressor as follows:

1. Inspect the O-rings on the fittings at the air system ports and replace if necessary. If the O-rings are damaged, replace the fittings also.
2. Replace the O-ring between the power steering pump and the air compressor.
3. Install the locking device (J 46177 or 457 589 03 63 00) on the driveshaft end of the air compressor. This locks the driveshaft to allow removal of the drive nut.
4. Remove the drive gear from the air compressor.

 Copyright © 2004 DETROIT DIESEL CORPORATION

https://truckmanualshub.com/

[a] Place the air compressor and locking device (J 46177 or 457 589 03 63 00) in a vise. Make sure the locking device is tightly secured and cannot slip or slide out of the vise.

[b] Using an impact wrench, remove the drive nut from the drive gear.

[c] Remove the locking device (J 46177 or 457 589 03 63 00) from the air compressor and the vise.

[d] Remove the drive gear from the air compressor with a gear puller, if necessary.

[e] Discard the O-ring on the driveshaft end of the air compressor.

5. Inspect the drive gear for worn or broken teeth, spalling, and corrosion. Replace the drive gear if necessary.
6. Install the drive gear, drive nut, and a new O-ring on the driveshaft end of the air compressor. Tighten the drive nut 290 N·m (214 lb·ft). See Figure 10-5.

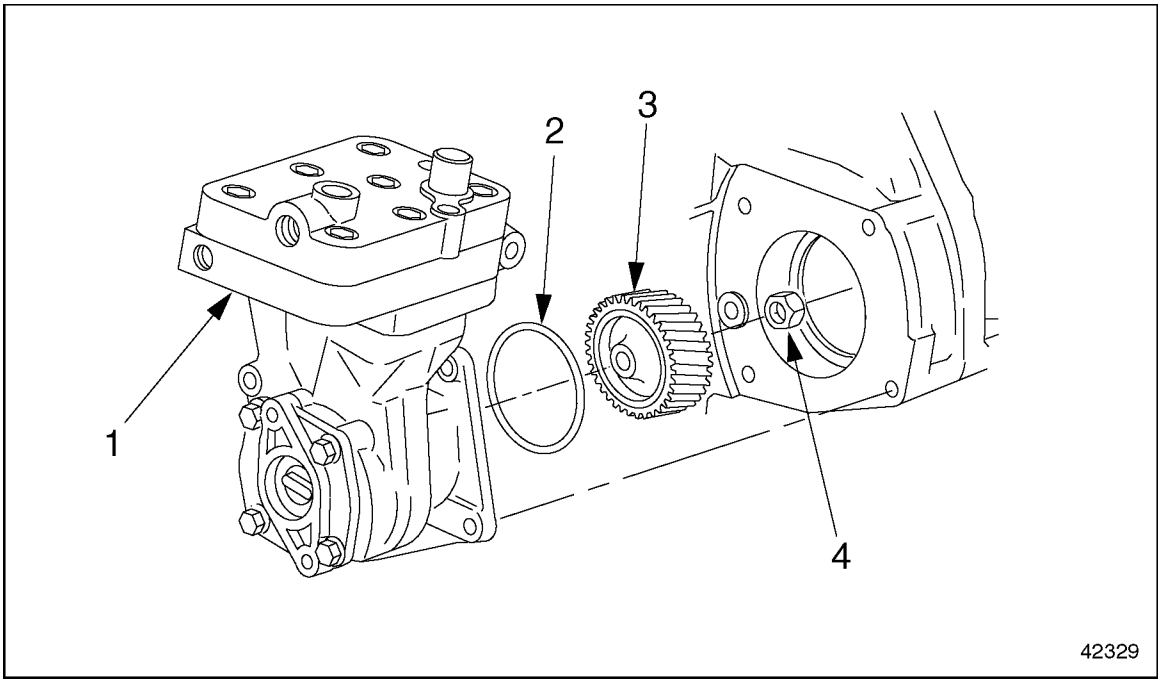

1. Air Compressor
2. O-ring
3. Drive Gear
4. Drive Nut

Figure 10-5 Air Compressor Drive Gear Installation

7. Release the air compressor from the vise.

10.1.2 Air Compressor Installation

Install the air compressor as follows:

1. Install the air compressor.

All information subject to change without notice.
6SE412 0403 Copyright © 2004 DETROIT DIESEL CORPORATION

2. Install the four air compressor mounting bolts. Tighten each bolt 60 N·m (44 lb·ft). See Figure 10-4.

NOTE:
Be sure the correct mounting bolt is mounted at each location. The outboard upper mounting bolt is installed from the rear.

3. Install the two coolant lines.
   [a] Replace the seal rings on the coolant lines.
   [b] Install the coolant delivery line at the rear of the air compressor. Tighten the hollow-core banjo bolt 30 N·m (22 lb·ft).
   [c] Install the coolant return line at the front of the air compressor. Tighten the hollow-core banjo bolt 30 N·m (22 lb·ft).
4. Install the engine trim cover.
5. Install the three air lines. See Figure 10-2.
   [a] Install the discharge line and the 90° elbow. Make sure the O-ring is properly installed on the fitting.
   [b] Install the uploader line. Make sure the O-ring is properly installed on the fitting.
   [c] Tighten the fittings 80 N·m (60 lb·ft).
   [d] Install the intake air line and tighten the hose clamp.
6. Install the cross plate. Use grease to hold it in place while installing the power steering pump.
7. Install the two bolts attaching the power steering pump to the air compressor. Tighten the bolts 40 N·m (30 lb·ft).
8. Fill the radiator with coolant.

 Copyright © 2004 DETROIT DIESEL CORPORATION

https://truckmanualshub.com/

All information subject to change without notice.
6SE412 0403 Copyright © 2004 DETROIT DIESEL CORPORATION

https://truckmanualshub.com/

10.A ADDITIONAL INFORMATION

Description **Page**

SPECIFICATIONS 10-12
Air Compressor 10-12

 Copyright © 2004 DETROIT DIESEL CORPORATION

https://truckmanualshub.com/

SPECIFICATIONS

This section contains the specifications for servicing the engine.

Air Compressor

The torque values for the air compressor are listed in Table 10-1. The air governor torque values are listed in Table 10-2. Listed in Table 10-3 are the approved pipe thread sealants.

Description	N·m (lb·ft)
Air Compressor Mounting Bolts	60 (44)
Discharge Line Fitting	80 (60)
Coolant Line Banjo Bolts	30 (22)
Drive Nut	290 (214)
Power Steering Pump Mounting Bolts	40 (30)

Table 10-1 Air Compressor Torque Values

Description	N·m (lb·ft)
Air Governor Mounting Bolt, M8	25 (18)

Table 10-2 Air Governor Torque Values

Protectant Material	Approved Brand
Pipe Thread Sealant (49-00094-108)	Loctite® 567
	Henkel® 790 Pipegrip
	Perma-Lok® LH-150

Table 10-3 Approved Pipe Thread Sealants

All information subject to change without notice.
6SE412 0403 Copyright © 2004 DETROIT DIESEL CORPORATION

https://truckmanualshub.com/

11 OPERATION AND VERIFICATION

Section **Page**

11.1 PREPARATION FOR A FIRST TIME START 11-3
11.2 STARTING THE ENGINE 11-7
11.3 RUNNING THE ENGINE 11-10
11.4 STOPPING THE ENGINE 11-12

https://truckmanualshub.com/

All information subject to change without notice.
6SE412 0403 Copyright © 2004 DETROIT DIESEL CORPORATION

11.1 PREPARATION FOR A FIRST TIME START

NOTE:
Before starting the engine, do all the recommended pretrip inspections and daily maintenance. Check the engine oil and fuel levels, and drain contaminants from the fuel/water separator (optional).

NOTE:
If you drain the fuel/water separator completely, you may have to prime the fuel system.

Read the appropriate chapters in the driver's manual for detailed information on instruments, gauges, and controls. Be sure you are familiar with all of the instruments, gauges and controls which are needed to operate the engine.

Note especially the location and function of the following:

- ☐ Oil pressure gauge
- ☐ Low oil pressure warning light
- ☐ Coolant temperature gauge
- ☐ High coolant temperature warning light
- ☐ Water in fuel warning light
- ☐ Tachometer
- ☐ Air restriction indicator

When you start the engine, and while you are driving, watch for any signs of engine problems. If the engine overheats, uses excessive fuel or lubricating oil, vibrates, misfires, makes unusual noises, or shows an unusual loss of power, turn the engine off as soon as possible and determine the cause of the problem. Frequently, engine damage may be avoided by a quick response to early indications of problems.

11.1.1 Checking the Batteries

Use only batteries that have been correctly filled and serviced. To provide corrosion protection, apply pumpable dielectric grease, part number 48-02349-000, liberally to the terminal pads. Approved suppliers are listed in Table 11-1.

Manufacturer	Lubricant or Part Number
Shell Oil Co.	No. 71032; No. 71306
Texaco, Inc.	No. 955
Quaker State	No. NYK-77

Table 11-1 Approved Electrical Lubricants

11.1.2 Checking the Oil Level

Check the oil level as follows:

 Copyright © 2004 DETROIT DIESEL CORPORATION

https://truckmanualshub.com/

1. Check the oil level using the oil dipstick. See Figure 11-1.

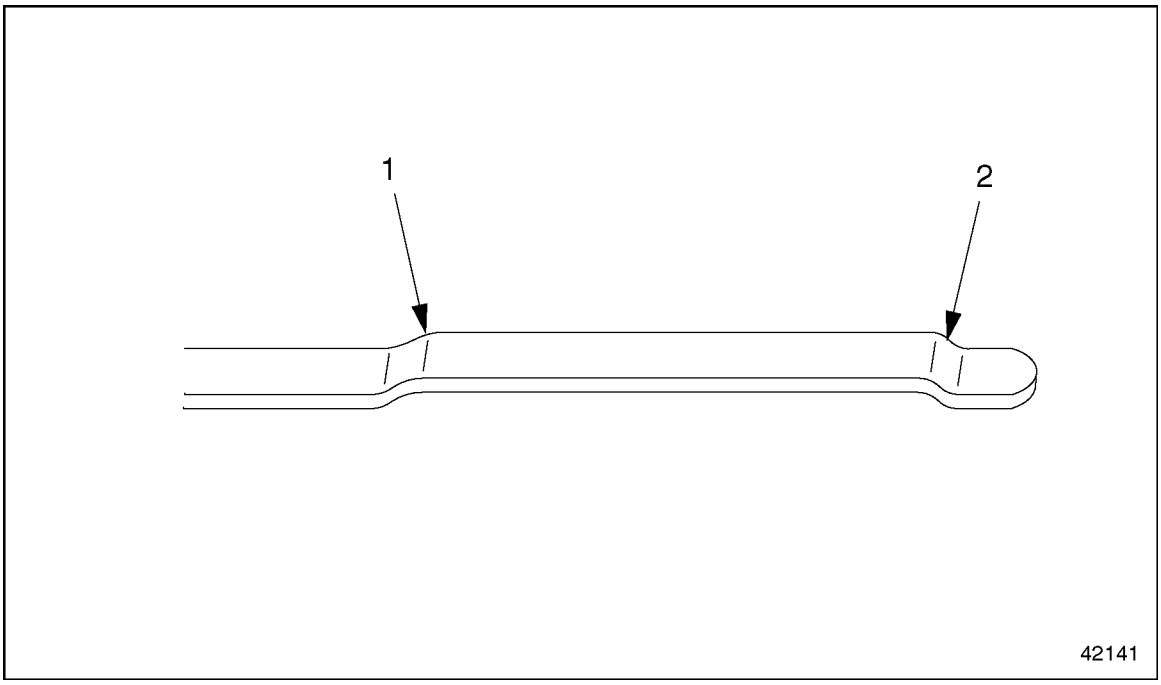

1. Maximum Fill Level
2. Minimum Fill Level

Figure 11-1 Oil Dipstick

All information subject to change without notice.
6SE412 0403 Copyright © 2004 DETROIT DIESEL CORPORATION

https://truckmanualshub.com/

2. If necessary, top off by filling engine oil through the oil fill cap until the maximum fill level on the oil dipstick has been reached. See Figure 11-2.

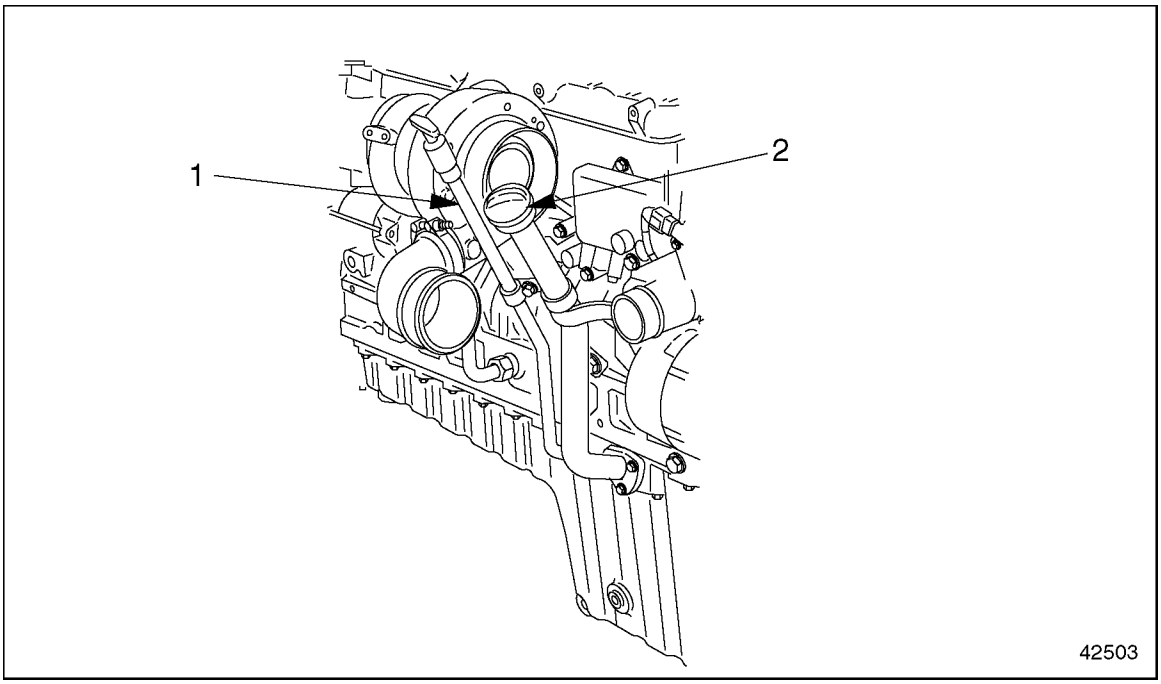

1. Oil Dipstick
2. Oil Fill Cap

Figure 11-2 Oil Fill Cap

11.1.3 Checking the Coolant Level (Cold Check)

Check coolant level as follows:

1. Ensure that all coolant plugs in the bottom of the radiator and on the radiator outlet pipe are secure and tight.
2. Check the coolant level. The cooling system is correctly filled when the coolant is between the maximum and minimum marks on the surge tank.

11.1.4 Adding Fuel

When adding fuel, pay attention to the following:

- ☐ Add winter or summer grade fuel according to the season of the year.
- ☐ Work in the cleanest conditions possible.
- ☐ Prevent water from entering the fuel tank.

11.1.5 Priming the Fuel System

Prime the fuel system as follows:

 Copyright © 2004 DETROIT DIESEL CORPORATION

https://truckmanualshub.com/

NOTICE:

Correct torque on the high pressure lines is critical. Incorrect torques could result in leaks or lack of power due to restricted fuel flow.

1. Make sure that all high-pressure and low-pressure lines are securely tightened.
2. If equipped with a hand pump on the fuel/water separator, work the hand pump 50 times.

NOTE:
There should be a strong resistance in the hand pump, caused by the pressure build-up within the fuel system.

WARNING:

PERSONAL INJURY

Diesel engine exhaust and some of its constituents are known to the State of California to cause cancer, birth defects, and other reproductive harm.

- ☐ **Always start and operate an engine in a well ventilated area.**
- ☐ **If operating an engine in an enclosed area, vent the exhaust to the outside.**
- ☐ **Do not modify or tamper with the exhaust system or emission control system.**

3. Crank the engine for 30 seconds at a time, but no longer. Wait at least two minutes. The engine should start within four 30-second attempts.

WARNING:

PERSONAL INJURY

To avoid injury from the sudden release of a high-pressure hose connection, wear a face shield or goggles.

4. If the engine still does not start, open the high-pressure lines and bleed the air from the fuel system while cranking. Tighten the high-pressure lines and repeat the priming procedure.

All information subject to change without notice.
6SE412 0403 Copyright © 2004 DETROIT DIESEL CORPORATION

https://truckmanualshub.com/

11.2 STARTING THE ENGINE

Before operating the engine, do the work described under "Preparation for a First Time Start." Start the engine as follows:

NOTICE:
Never attempt to start any Mercedes-Benz electronic engine using ether or any other starting fluid. Serious engine damage could result.

NOTE:
As a safety function, the electronic engine control system allows the engine to start only if the transmission is in neutral.

WARNING: PERSONAL INJURY
To avoid injury when working near or on an operating engine, remove loose items of clothing and jewelry. Tie back or contain long hair that could be caught in any moving part causing injury.

1. Turn on the ignition switch.
2. With the accelerator pedal in the idle position, start the engine.
3. Check the engine for leaks.
   [a] Check all hoses, hose clamps, and pipe unions on the engine for tightness. Shut down the engine and tighten them if necessary.
   [b] Check the oil feed and return lines at the turbocharger for tightness. Shut down the engine and tighten them if necessary.
4. Shut down the engine.
5. Approximately five minutes after shutdown, check the engine oil level. If necessary, add oil up to the maximum fill level on the oil dipstick.
6. Check all the mounting fasteners on the engine for tightness.

11.2.1 Checking the Coolant Level (Hot Check)

Check the coolant levels as follows:

1. Allow the engine to run for approximately five minutes at a moderate speed.

 Copyright © 2004 DETROIT DIESEL CORPORATION

https://truckmanualshub.com/

WARNING:

HOT COOLANT

To avoid scalding from the expulsion of hot coolant, never remove the cooling system pressure cap while the engine is at operating temperature. Wear adequate protective clothing (face shield, rubber gloves, apron, and boots). Remove the cap slowly to relieve pressure.

2. Then, with the coolant temperature above 122°F (50°C), recheck the coolant level.
3. Add more coolant if necessary. Open the heater valves before adding coolant.
4. Do not close the heater valves until the engine has been run briefly and the coolant level again checked and corrected as necessary.

11.2.2 Starting an Engine That Has Not Been Run for a Long Time

Before starting an engine which has not been run for a long time, certain special work must be carried out.

NOTE:
At outside temperatures below –4°F (–20°C), a coolant preheater is recommended.

WARNING:

PERSONAL INJURY

To avoid injury before starting and running the engine, ensure the vehicle is parked on a level surface, parking brake is set, and the wheels are blocked.

1. Chock the tires, place the transmission in neutral, and set the parking brake.
2. Turn on the ignition switch and start the engine

All information subject to change without notice.
6SE412 0403 Copyright © 2004 DETROIT DIESEL CORPORATION

https://truckmanualshub.com/

WARNING:

PERSONAL INJURY

Diesel engine exhaust and some of its constituents are known to the State of California to cause cancer, birth defects, and other reproductive harm.

- ☐ **Always start and operate an engine in a well ventilated area.**
- ☐ **If operating an engine in an enclosed area, vent the exhaust to the outside.**
- ☐ **Do not modify or tamper with the exhaust system or emission control system.**

3. If the engine doesn't start after 20 seconds, stop. Try again after waiting about one minute.

NOTICE:

Do not rev the engine if the oil pressure gauge indicates no oil pressure. To avoid engine damage, shut down the engine if no oil pressure appears within approximately ten seconds. Check to determine the cause of the problem.

4. Monitor the oil pressure gauge immediately after starting the engine.

NOTE:
Do not place the engine under full load until it reaches operating temperature.

 Copyright © 2004 DETROIT DIESEL CORPORATION

https://truckmanualshub.com/

11.3 RUNNING THE ENGINE

The following sections cover normal operations:

11.3.1 Battery Charge

The battery charge indicator light must go out once the engine starts.

If the indicator light comes on while the engine is running, do the following:

1. Shut down the engine.
2. Check the poly-V belt for tightness.

WARNING:

FIRE

To avoid injury from fire, keep all potential ignition sources away from diesel fuel, including open flames, sparks, and electrical resistance heating elements. Do not smoke when refueling.

3. Do a load test on the batteries. Charge or replace the batteries as needed.
4. If necessary, visit the nearest authorized dealer to have the alternator voltage and output checked.

11.3.2 Oil Pressure

When the engine has reached its normal operating temperature, the engine oil pressure must not drop below the following values:

- ☐ 250 kPa (36 psi) at rated speed
- ☐ 50 kPa (7 psi) at idling speed

If oil pressure drops below these values, stop the engine and determine the cause.

11.3.3 Excessive Idling

Never allow the engine to idle for more than 30 minutes. Excessive idling can cause oil to leak from the turbocharger.

11.3.4 Changing the Idle Speed

The rpm range of the MBE 4000 engine is 600 to 850 rpm if the parameters in the VCU are set to the default range.

Change the idling speed as follows:

All information subject to change without notice.
6SE412 0403 Copyright © 2004 DETROIT DIESEL CORPORATION

1. Turn the cruise control switch to the OFF position.
2. To increase the idle speed, push the "Resume" switch until the idle is fast enough.
3. To decrease the idle speed, push the "Decel" switch until the idle is slow enough.

11.3.5 Emergency Running Mode

The engine is equipped with the electronic engine control system, which monitors the engine as it is running.

As soon as a fault is detected, it is evaluated and one of the following measures is initiated.

NOTICE:
To prevent possible serious engine damage, have any faults corrected without delay by an authorized dealer.

- ☐ In conjunction with the ICU (instrumentation control unit), the code for the electronic control unit reporting the fault can be read immediately on the display.
- ☐ Complete fault codes are transmitted and can be read using minidiag2 at any authorized dealer.
- ☐ If the fault is serious enough to impair normal operation, the electronic engine system switches over to emergency running mode. When in emergency running mode, the engine operates at a constant 1300 rpm. This allows you to move the vehicle to a service location.

 Copyright © 2004 DETROIT DIESEL CORPORATION

https://truckmanualshub.com/

11.4 STOPPING THE ENGINE

If the engine has been running at full output or the coolant temperature has been high, allow the engine to idle for one to two minutes without load.

Then turn off the ignition keyswitch.

If any the following occur, shut down the engine immediately.

- ☐ The oil pressure swings back and forth or falls sharply.
- ☐ Engine power and rpm fall, even though the accelerator pedal remains steady.
- ☐ The exhaust pipe gives off heavy smoke.
- ☐ The coolant and/or oil temperature climb abnormally.
- ☐ Abnormal sounds suddenly occur in the engine or turbocharger.

11.4.1 Shutting Down After Hard Operation

After hard operation, do the following:

NOTICE:
After hard operation, allow the engine to idle for one to two minutes without load. Shutting down the engine without idling may cause damage to the turbocharger.

1. If the engine has been running at full output or the coolant temperature has been high, allow the engine to idle for one to two minutes without load.
2. Turn off the ignition switch and shut down the engine.

All information subject to change without notice.
6SE412 0403 Copyright © 2004 DETROIT DIESEL CORPORATION

https://truckmanualshub.com/

12 ENGINE TUNE-UP

Section **Page**

12.1 VALVE LASH CHECKING 12-3
12.2 ADJUSTING VALVE LASH 12-10

https://truckmanualshub.com/

All information subject to change without notice.
6SE412 0403 Copyright © 2004 DETROIT DIESEL CORPORATION

12.1 VALVE LASH CHECKING

Check and adjust the valve lash as follows:

NOTE:
Adjust the valve lash when the engine is cold. Wait at least 30 minutes after shutdown, even if the engine ran only a short time.

Select a method for adjusting the valves. There are two acceptable methods for adjusting the valves, prior to checking the valve lash:

- ☐ In order, according to the timing sequence used for fuel injection (see Method One—Adjust Each Cylinder in Firing Order);
- ☐ By type of valve, depending on crankshaft position (see Method Two—Adjust All Valves Using Two Crankshaft Positions).See Figure 12-1 for the cylinder and valve layout on MBE 4000 engines.

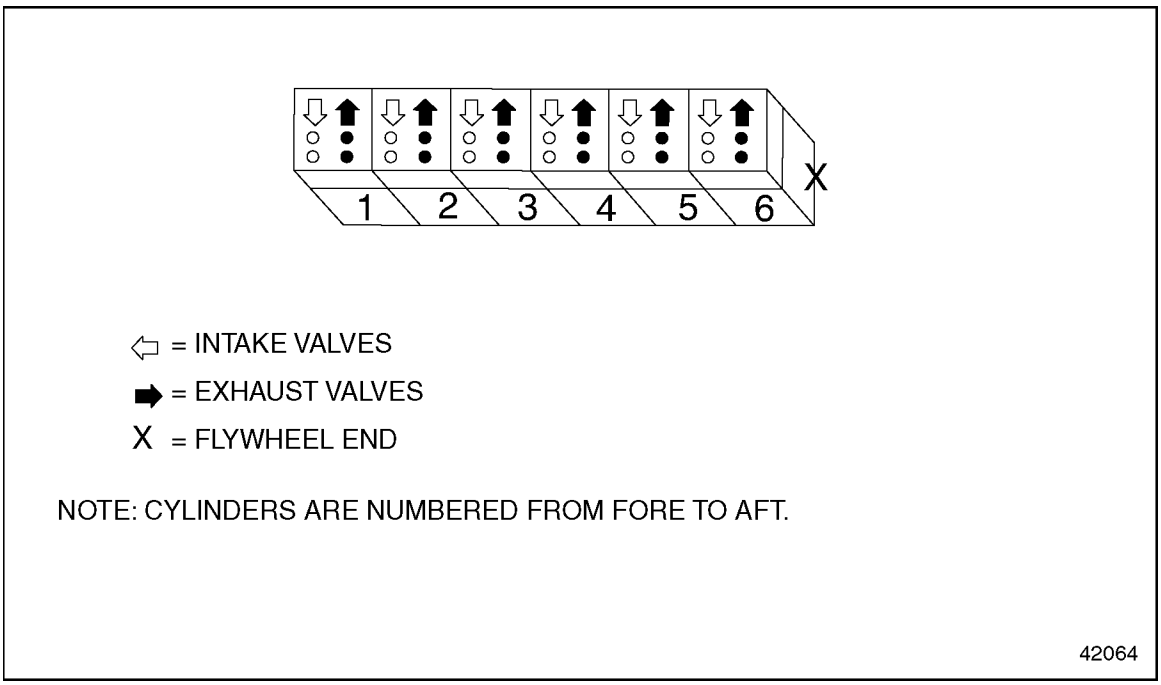

Figure 12-1 Cylinder and Valve Layout

 Copyright © 2004 DETROIT DIESEL CORPORATION

https://truckmanualshub.com/

12.1.1 Method One — Adjust Each Cylinder in Firing Order

Method one allows you to adjust each cylinder in the order in which fuel is injected. The crankshaft must be repositioned after each cylinder is adjusted as listed in Table 12-1.

Engine	Crankshaft Position	Cylinders	Cylinders	Cylinders	Cylinders	Cylinders	Cylinders
MBE 4000	Ignition TDC	1	5	3	6	2	4
MBE 4000	Valve Overlap	6	2	4	1	5	3

Table 12-1 Valve Adjustment (Method One)

NOTE:
Clean each cylinder head cover before removing it.

1. Remove the cylinder head covers. See Figure 12-2. Refer to section 1.1.1.

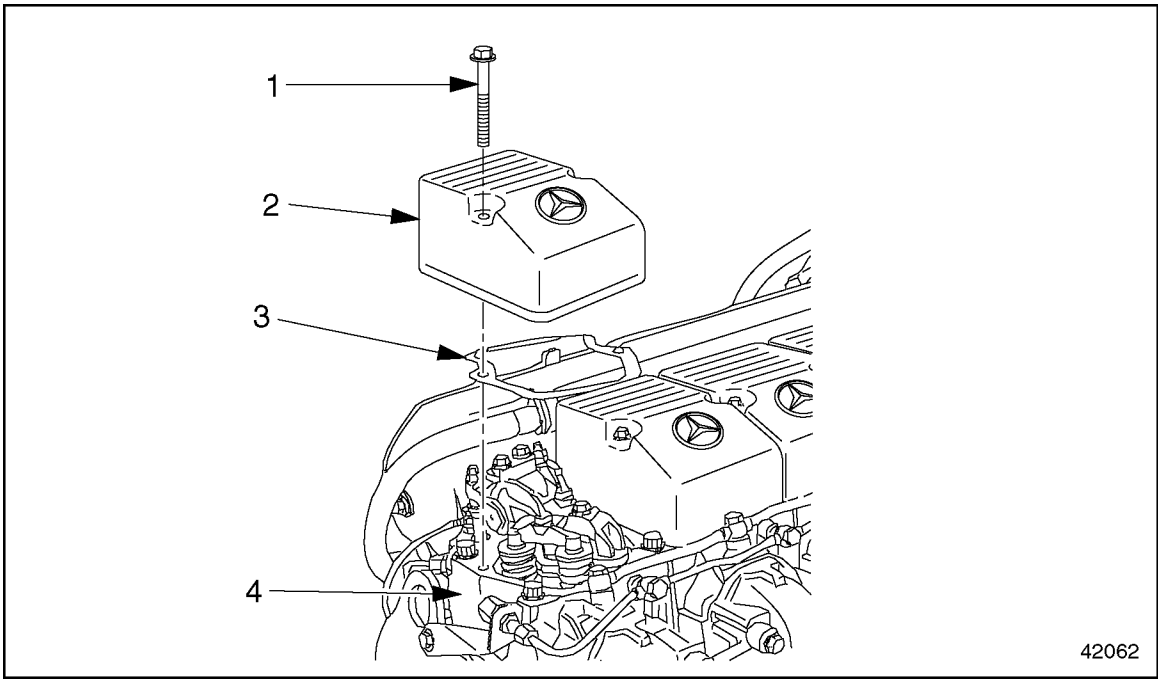

1. Socket-Head Bolt
2. Cylinder Head Cover
3. Gasket
4. Cylinder Head

Figure 12-2 Cylinder Head Cover, (exploded view)

2. Remove the inspection cover on theflywheel housing.

All information subject to change without notice.
6SE412 0403 Copyright © 2004 DETROIT DIESEL CORPORATION

3. Fit the engine cranking tool (J 46167 or 407 589 00 63 00) into the inspection hole on the flywheel housing. See Figure 12-3.

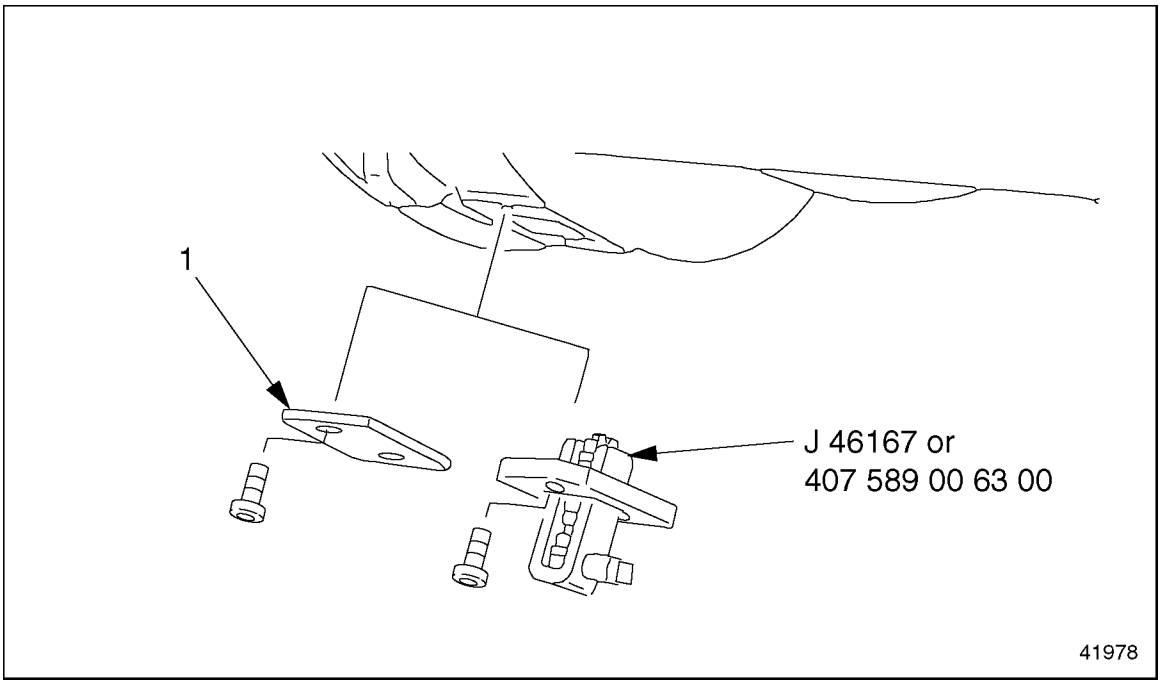

1. Inspection Cover

Figure 12-3 Placement of Engine Cranking Tool

4. For each cylinder, use the cranking tool (J 46167 or 407 589 00 63 00) to turn over the crankshaft until the piston is exactly at top dead center (TDC) in the compression stroke. The valves must be closed and it must be possible to turn the pushrods without effort.

NOTE:
When the piston in cylinder #1 is at ignition TDC, the valves of cylinder #6 will overlap, meaning that both intake and exhaust valves are partially open, and show no measurable play when tested with a feeler gauge.

5. Check each valve and adjust it (if necessary), using the procedures under the heading "Adjusting Valve Lash."
6. For each valve, measure the valve lash with a feeler gauge between the rocker arm and valve bridge. It should be possible to pull the feeler gauge through with no more than light resistance.

https://truckmanualshub.com/

7. If the value measured is within the range given in the "Check For" column listed in Table 12-2, check the next valve.

Valve Type	Check For: mm (inches)	Adjust to: mm (inches)
Intake	0.30 to 0.60 (0.012 to 0.024)	0.40 (0.016)
Exhaust	0.50 to 0.80 (0.020 to 0.032)	0.60 (0.024)

Table 12-2 Valve Lash Checking and Adjustment

If the value measured is outside the range given in the "Check For" column listed in Table 12-2, adjust the valve lash.

12.1.2 Method Two — Adjust All Valves Using Two Crankshaft Positions

Method two allows you to adjust all the valves using just two crankshaft positions.

NOTE:
Clean each cylinder head cover before removing it.

1. Remove the cylinder head covers. See Figure 12-4. Refer to section 1.1.1.

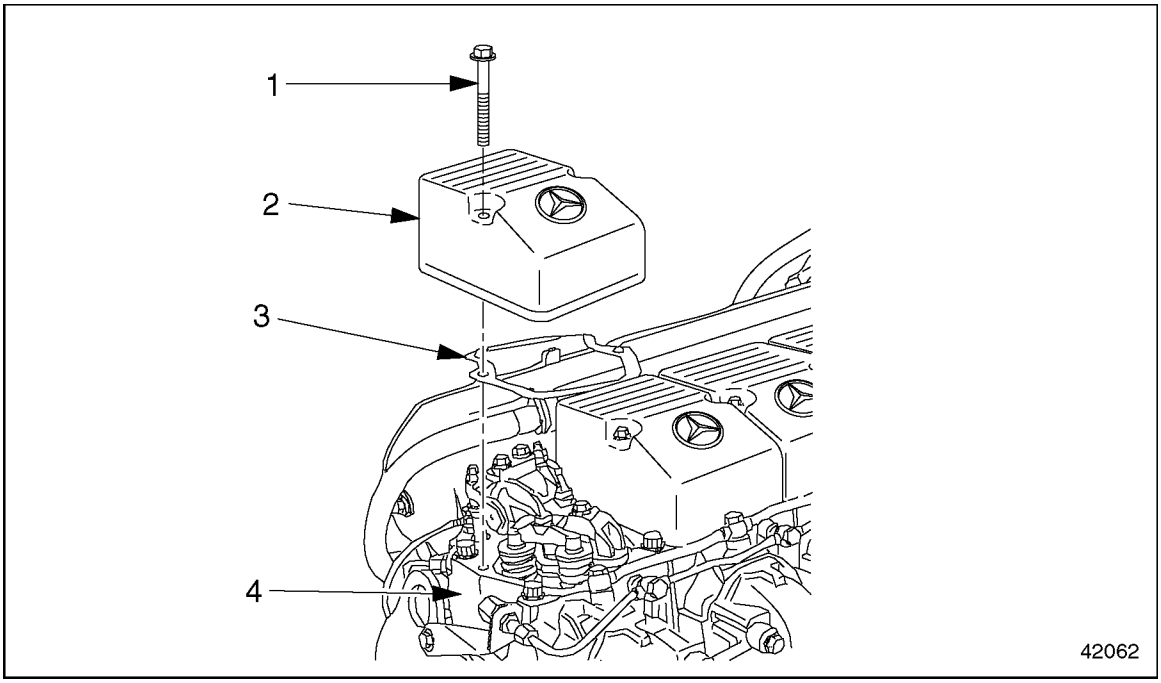

1. Socket-Head Bolt
2. Cylinder Head Cover
3. Gasket
4. Cylinder Head

Figure 12-4 Cylinder Head Cover, (exploded view)

2. Remove the inspection cover on the flywheel housing.

All information subject to change without notice.
6SE412 0403 Copyright © 2004 DETROIT DIESEL CORPORATION

3. Fit the engine cranking tool (J 46167 or 407 589 00 63 00) into the inspection hole on the flywheel housing. See Figure 12-5.

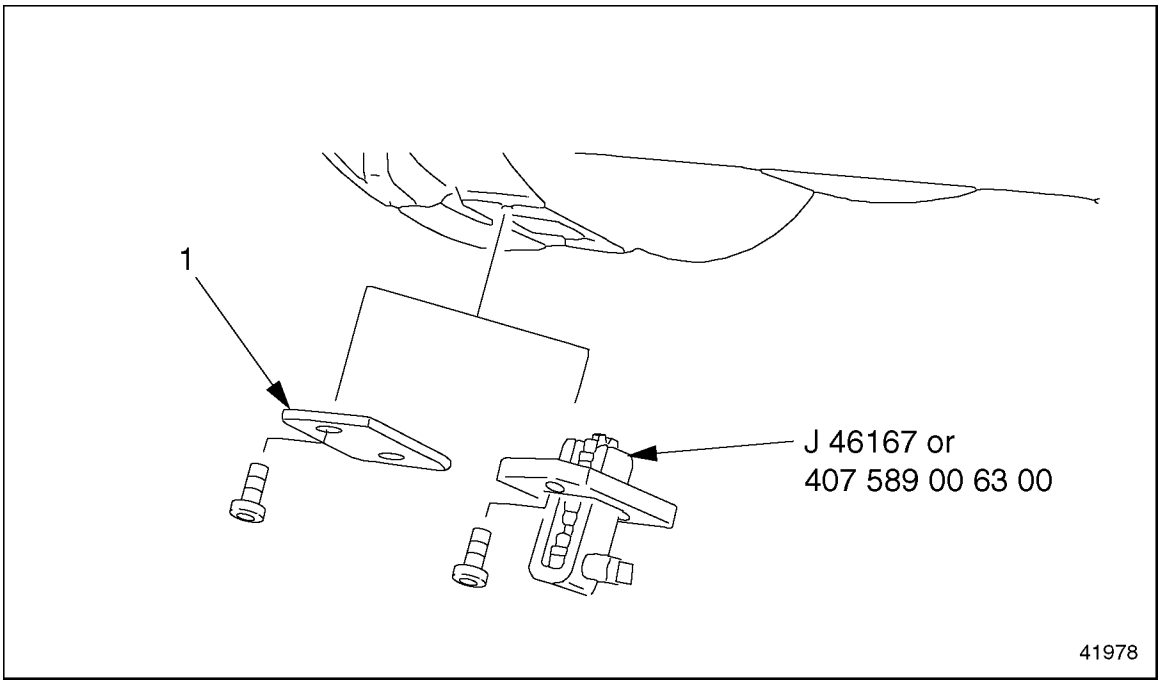

1. Inspection Cover

Figure 12-5 Placement of Engine Cranking Tool

 Copyright © 2004 DETROIT DIESEL CORPORATION

https://truckmanualshub.com/

4. Using the cranking tool (J 46167 or 407 589 00 63 00), turn the crankshaft until cylinder #1 is at the ignition TDC position (all valves are closed) and cylinder #6 is at the valve overlap position (all valves are open).

NOTE:
When the piston in cylinder #1 or #6 is at ignition TDC, there will be a small bevelled alignment mark visible through the inspection hole. See Figure 12-6.

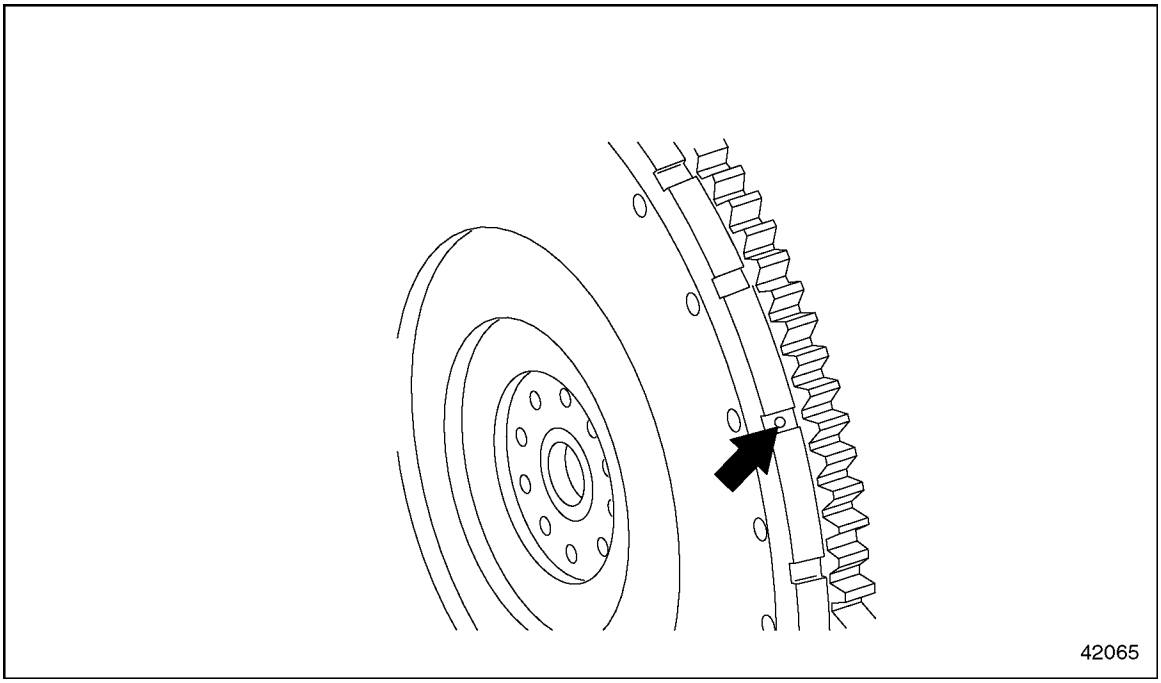

Figure 12-6 Flywheel Alignment Mark

5. Check the valves in the "Ignition TDC" row listed in Table 12-3, and adjust them (if necessary), using the procedures under the headings "Checking Valve Lash" and "Adjusting Valve Lash."

Engine	Cylinder #1 Crankshaft Position	Cylinder Valves/Types*	Cylinder Valves/Types*	Cylinder Valves/Types*	Cylinder Valves/Types*	Cylinder Valves/Types*	Cylinder Valves/Types*
		1	2	3	4	5	6
MBE 4000	Ignition TDC	I/E	I	E	I	E	—
MBE 4000	Valve Overlap	—	E	I	E	I	I/E

* I= Intake Valve and E= Exhaust Valve

Table 12-3 Valve Adjustment (Method Two)

All information subject to change without notice.
6SE412 0403 Copyright © 2004 DETROIT DIESEL CORPORATION

6. Using the cranking tool (J 46167 or 407 589 00 63 00), turn the crankshaft until cylinder #6 is at the ignition TDC position (all valves are closed) and cylinder #1 is at the valve overlap position (all valves are open).
7. Using the same procedure, check the valves in the "Valve Overlap" row listed in Table 12-3and adjust them (if necessary), using the procedures under the headings "Checking Valve Lash" and "Adjusting Valve Lash."
8. For each valve, measure the valve lash with a feeler gauge between the rocker arm and valve bridge. It should be possible to pull the feeler gauge through with no more than light resistance.
9. If the value measured is within the range listed in Table 12-4 in the "Check For" column, check the next valve.

Valve Type	Check For: mm (inches)	Adjust to: mm (inches)
Intake	0.30 to 0.60 (0.012 to 0.024)	0.40 (0.016)
Exhaust	0.50 to 0.80 (0.020 to 0.032)	0.60 (0.024)

Table 12-4 Valve Lash Checking and Adjustment

If the value measured is outside the range given in the "Check For" column listed in Table 12-2, adjust the valve lash.

 Copyright © 2004 DETROIT DIESEL CORPORATION

https://truckmanualshub.com/

12.2 ADJUSTING VALVE LASH

Adjust the valve lash as follows:

1. If adjustment is needed, unscrew the locknut. See Figure 12-7. Turn the adjusting screw until the valve lash is correct. Use the exact settings given in the "Adjust To" column listed in Table 12-4.

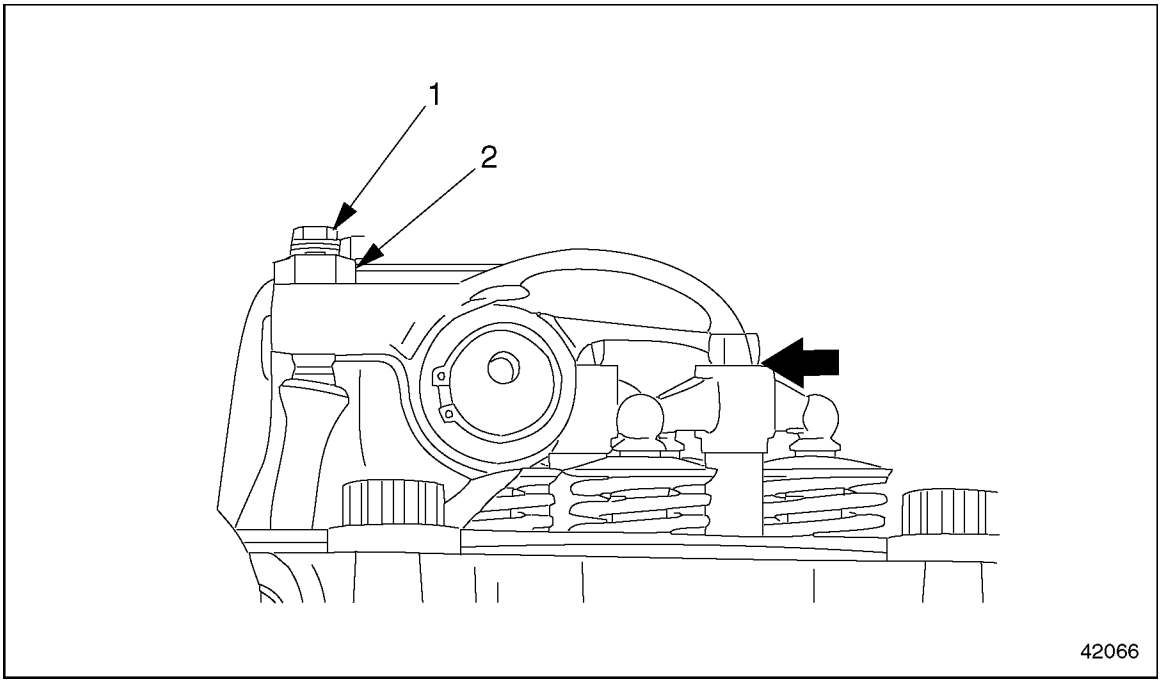

1. Adjusting Screw
2. Locknut

Figure 12-7 Valve Lash Adjustment

NOTE:
When adjusting the valves, adjust to the exact setting. Use the range only for checking adjustment.

2. Tighten the locknut 50 N·m (37 lb·ft).
3. Check the valve lash again. Adjust again if necessary.
4. Install the cylinder head covers. Refer to section 1.1.2.
5. Remove the cranking tool (J 46167 or 407 589 00 63 00) from the inspection hole in the flywheel housing.
6. Replace the end cover on the inspection hole and tighten the bolts 25 N·m (18 lb·ft).

All information subject to change without notice.
6SE412 0403 Copyright © 2004 DETROIT DIESEL CORPORATION

https://truckmanualshub.com/

13 PREVENTIVE MAINTENANCE

Section **Page**

13.1 SCHEDULED INTERVALS 13-3

https://truckmanualshub.com/

All information subject to change without notice.
6SE412 0403 Copyright © 2004 DETROIT DIESEL CORPORATION

13.1 SCHEDULED INTERVALS

When performed on a regular basis, changing the engine oil and filters is the least costly way of obtaining safe and reliable vehicle operation. Added benefits and savings occur when you check that the valves, fuel injectors, and oil and cooling circuits are in good working order during oil changes.

The maintenance section of this manual explains when you should change your oil and what to look for when checking for wear or damage.

All service intervals and maintenance operations are based on the parts and accessories expressly approved for your engine.

The scope and frequency of maintenance work are determined by the engine's operating conditions: severe duty, short haul, or long haul.

Evidence of regular maintenance is essential if a warranty claim has to be submitted.

If optional equipment is installed, be sure to comply with the maintenance requirements for these extra items.

NOTE:
If the engine is stored for more than 18 months, the oil must be changed before the engine can be brought into service.

13.1.1 Maintenance Schedule Types

There are three types of maintenance schedule. To determine which schedule to use, find the distance traveled by the vehicle in a year, regardless of vehicle type.

- ☐ **Schedule I (Severe Service)**Severe Service applies to vehicles that annually travel up to 6000 miles (10,000 kilometers) or that operate under severe conditions. Examples of Severe Service usage include: operation on extremely poor roads or where there is heavy dust accumulation; constant exposure to extreme hot, cold, salt-air, or other extreme climates; frequent short-distance travel; construction-site operation; city operation (fire truck, garbage truck); or farm operation.
- ☐ **Schedule II (Short Haul)**Short Haul applies to vehicles that annually travel up to 60,000 miles (100,000 kilometers) and operate under normal conditions. Examples of Short-Haul usage are: operation primarily in cities and densely populated areas; local transport with infrequent freeway travel; or high percentage of stop-and-go travel.
- ☐ **Schedule III (Long Haul)**Long Haul (over-the-road transport) is for vehicles that annually travel more than 60,000 miles (100,000 kilometers), with minimal city or stop-and-go operation. Examples of Long-Haul usage are: regional delivery that is mostly freeway miles; interstate transport; or any road operation with high annual mileage.

 Copyright © 2004 DETROIT DIESEL CORPORATION

https://truckmanualshub.com/

13.1.1.1 Maintenance Schedule and Interval Operations

The three different schedules of vehicle usage (severe, short haul, and long haul) are listed in Table 13-1. For each schedule, the appropriate distance interval (in miles and kilometers) is given for performing and repeating each maintenance operation.

Maintenance Schedule	Maintenance Interval Operation	Maintenance Intervals		
		Frequency	Miles	Km
Schedule I (Severe Service) vehicles that annually travel up to 6000 miles (10 000 km)	Maintenance 1 (M1)	every	10,000	17,000
	Optional oil centrifuge (change rotor)	every	20,000	32,000
	Maintenance 2 (M2)	every	20,000	32,000
	Maintenance 3 (M3)	first	20,000	32,000
		then every	40,000	68,000
Schedule II (Short Haul) vehicles that annually travel up to 60,000 miles (100 000 km)	Maintenance 1 (M1)	every	15,000	25 000
	Optional oil centrifuge (change rotor)	every	20,000	32,000
	Maintenance 2 (M2)	every	30,000	50,000
	Maintenance 3 (M3)	first	30,000	50 000
		then every	60,000	100,000
	Maintenance 4 (M4)	every	120,000	20,000
Schedule III (Long Haul)vehicles that annually travel more than 60,000 miles (100 000 km)	Optional oil centrifuge (change rotor)	every	20,000	32,000
	Maintenance 1 (M1)	every	25,000	42,000
	Maintenance 2 (M2)	every	50,000	84,000
	Maintenance 3 (M3)	first	50,000	84,000
		then every	100,000	167,000
	Maintenance 4 (M4)	every	200,000	334,000

Table 13-1 Maintenance Schedule Table

The descriptions of all maintenance operations, indicating all maintenance operation sets at which each operation must be performed are listed in Table 13-2, listed in Table 13-3, listed in Table 13-4.

These three maintenance interval tables show which maintenance operation must be performed at the actual distances (in miles or kilometers) for each maintenance operation. The schedule of actual distances is based on the intervals given in the Maintenance Schedule Table.

All information subject to change without notice.
6SE412 0403 Copyright © 2004 DETROIT DIESEL CORPORATION

Maint. No	Maintenance Interval	Miles	Km
1	M1	10,000	17,000
2	M1, M2 and M3	20,000	32,000
3	M1	30,000	50,000
4	M1 and M2	40,000	67,000
5	M1	50,000	84, 000
6	M1, M2 and M3	60,000	100, 000
7	M1	70,000	117,000
8	M1 and M2	80,000	134,000
9	M1	90,000	150,000
10	M1, M2 and M3	100,000	167,000
11	M1	110,000	184,000
12	M1 and M2	120,000	200,000
13	M1	130,000	217,000
14	M1, M2 and M3	140,000	234,000
15	M1	150,000	250,000
16	M1 and M2	160,000	267,000

Table 13-2 Maintenance Intervals for Schedule I, Severe Service

 Copyright © 2004 DETROIT DIESEL CORPORATION

https://truckmanualshub.com/

Maint. No.	Maintenance Interval	Miles	Km
1	M1	15,000	25 000
2	M1 and M3	30,000	50,000
3	M1	45,000	75,000
4	M1 and M2	60,000	100,000
5	M1	75,000	125,000
6	M1and M3	90,000	150,000
7	M1	105,000	120,000
8	M1, M2 and M4	120,000	200,000
9	M1	135,000	225,000
10	M1, M2 and M3	150,000	250,000
11	M1	165,000	275,000
12	M1 and M2	180,000	300,000
13	M1	195,000	325,000
14	M1, M2 and M3	210,000	350,000
15	M1	225,000	375,000
16	M1, M2 and M4	240,000	400,000

Table 13-3 Maintenance Intervals for Schedule II, Short Haul

All information subject to change without notice.
6SE412 0403 Copyright © 2004 DETROIT DIESEL CORPORATION

Maint. No	Maintenance Interval	Miles	Km
1	M1	25,000	42,000
2	M1, M2 and M3	50,000	84,000
3	M1	75,000	125,000
4	M1 and M2	100,000	167,000
5	M1	125,000	209,000
6	M1, M2 and M3	150,000	250 000
7	M1	175,000	292,000
8	M1, M2, and M4	200,000	334,000
9	M1	225,000	375,000
10	M1, M2 and M3	250,000	417,000
11	M1	275,000	459,000
12	M1 and M2	300,000	500,000
13	M1	325,000	542,000
14	M1, M2 and M3	350,000	584,000
15	M1	375,000	625,000
16	M1, M2, and M4	400,000	667,000

Table 13-4 Maintenance Intervals for Schedule III, Long Haul

13.1.1.2 Maintenance Operation Sets

Each Maintenance Operations Sets Table (M1 through M3) lists the descriptions of only those maintenance operations that must be performed at that maintenance operation set. Each maintenance operation set is listed in a separate Maintenance Operations Table.

 Copyright © 2004 DETROIT DIESEL CORPORATION

https://truckmanualshub.com/

The descriptions of all maintenance operations, and the maintenance operation sets at which each operation must be performed are listed in Table 13-5 and listed in Table 13-6.

Operation Description	M1	M2	M3
Engine Inspecting	✓	✓	✓
Valve Lash Checking and Adjusting			✓
Fuel /Water Separator Pre-Filter Element Cleaning	✓	✓	✓
Main Fuel Filter Element Changing		✓	✓
Engine Oil and Filter Changing	✓	✓	✓
Coolant Concentration and Inhibitor Level Checking	✓	✓	✓
Coolant Flushing and Changing*		✓	✓
Cooling System Inspecting	✓	✓	✓

* Coolant flushing and changing must be done at least every two years.

Table 13-5 Required Maintenance Operations Sets, Schedule I

Maintenance Operation Description	M1	M2	M3	M4
Engine Inspecting		✓	✓	✓
Valve Lash Checking and Adjusting†				✓
Fuel /Water Sepator Pre-Filter Element Cleaning		✓	✓	✓
Main Fuel Filter Element Changing		✓	✓	✓
Engine Oil and Filter Changing	✓	✓	✓	✓
Coolant Concentration and Inhibator Level Checking	✓	✓	✓	✓
Coolant Flushing and Changing*				✓
Cooling System Inspecting		✓	✓	✓

* Coolant flushing and changing must be done at least every two years.

† For Schedule II and III, the valve lash checking and adjusting must be done first at 60,000 and then every M4.

Table 13-6 Required Maintenance Operations Sets, Schedule II and III

13.1.2 Fuel/Water Separator Pre-Filter Element Cleaning

Clean the pre-filter element as follows:

All information subject to change without notice.
6SE412 0403 Copyright © 2004 DETROIT DIESEL CORPORATION

1. Loosen the bleed screw. See Figure 13-1.

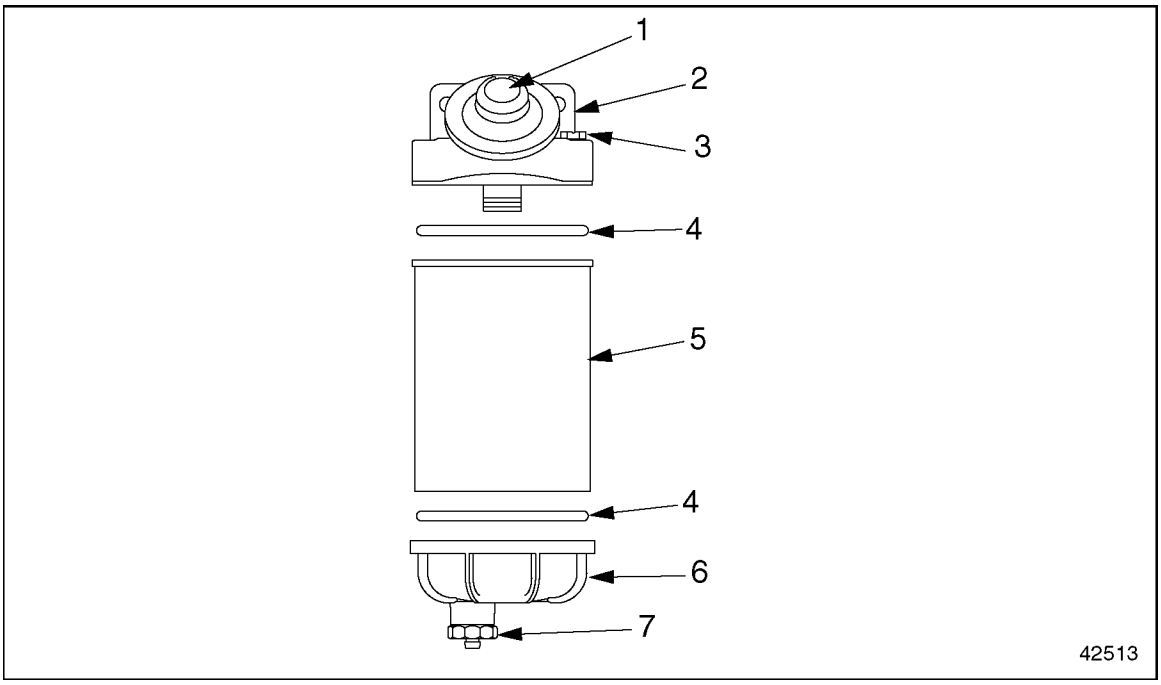

1. Hand Pump
2. Separator Head
3. Bleed Screw
4. O-ring
5. Pre-Filter Element
6. Sight Bowl
7. Drain Plug

Figure 13-1 Fuel /Water Separator

2. Unscrew the drain plug and drain the fuel in the pre-filter.
3. Twist off the sight bowl and remove the filter element from the separator head.
4. Separate the sight bowl from the filter element. Clean the sight bowl. Discard the old filter element and both O-rings.
5. Replace the filter element and O-rings.
6. Assemble the sight bowl and the pre-filter element.
   [a] Lubricate one O-ring with a light coating of engine oil.
   [b] Insert the lubricated O-ring into the sight bowl.
   [c] Screw the pre-filter element and sight bowl together.
7. Assemble the pre-filter element and the separator head.
   [a] Lubricate the other O-ring with a light coating of engine oil.
   [b] Insert the lubricated O-ring into the open end of the pre-filter element.

 Copyright © 2004 DETROIT DIESEL CORPORATION

https://truckmanualshub.com/

[c] Screw the pre-filter element onto the separator head and tighten firmly, using hands only.

NOTE:
Do not use tools to tighten the pre-filter element.

8. Insert the filter element into the pre-filter housing and screw the cap onto the housing. Tighten the cap 25 N·m (18 lb·ft).
9. Tighten the drain plug.
10. Bleed the fuel system.

[a] Make sure that all high-pressure lines have been tightened to 25 N·m (18 lb·ft) and all banjo bolts to 50 N·m (37 lb·ft).

NOTICE:
Correct torque on the high pressure lines is critical. Incorrect torques could result in leaks or lack of power due to restricted fuel flow.

[b] If equipped with a hand pump on the fuel/water separator, work the hand pump 50 times.

NOTE:
There should be a strong resistance in the hand pump, caused by the pressure build-up within the fuel system.

All information subject to change without notice.
6SE412 0403 Copyright © 2004 DETROIT DIESEL CORPORATION

https://truckmanualshub.com/

WARNING:

PERSONAL INJURY

Diesel engine exhaust and some of its constituents are known to the State of California to cause cancer, birth defects, and other reproductive harm.

- ☐ **Always start and operate an engine in a well ventilated area.**
- ☐ **If operating an engine in an enclosed area, vent the exhaust to the outside.**
- ☐ **Do not modify or tamper with the exhaust system or emission control system.**

[c] Crank the engine for 30 seconds at a time, but no longer. Before cranking the engine again, wait at least two minutes. The engine should start within four 30 second attempts.

13.1.3 Main Fuel Filter Element Changing

Change the main fuel filter element as follows:

1. Open the fuel filler cap to release pressure in the fuel system. Replace and tighten the cap.

 Copyright © 2004 DETROIT DIESEL CORPORATION

https://truckmanualshub.com/

2. Clean the outside of the fuel filter housing. See Figure 13-2.

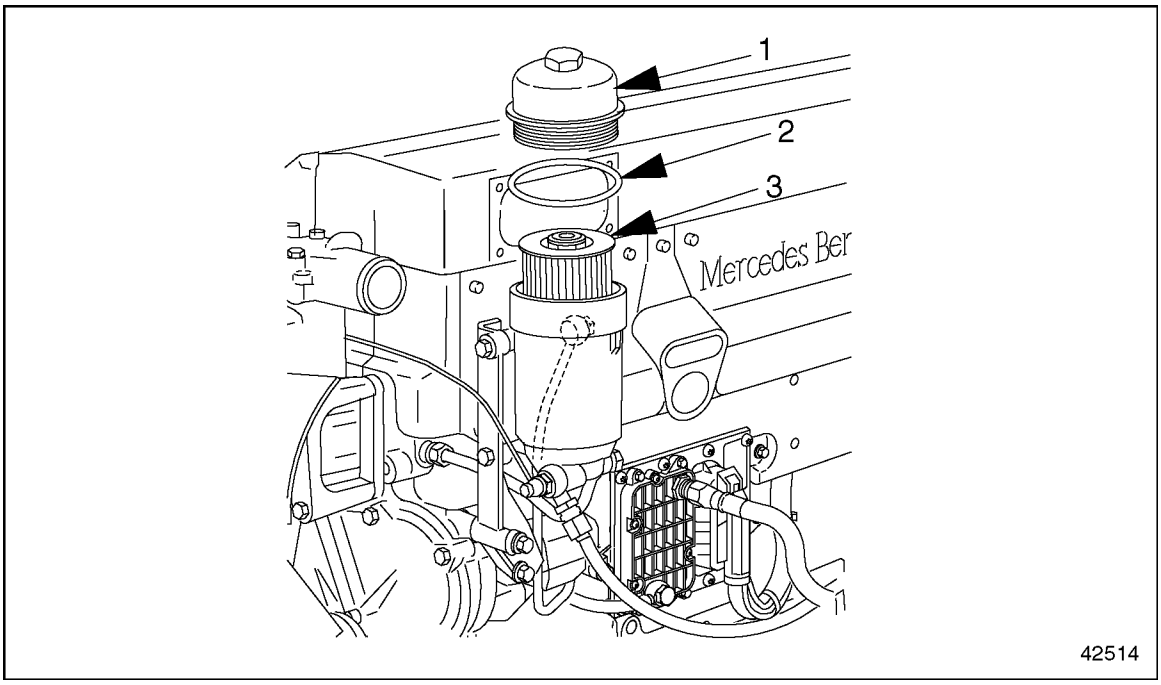

1. Filter Housing Cap
2. O-ring
3. Filter Element

Figure 13-2 Main Fuel Filter

3. Using a 36-mm socket wrench insert, unscrew the cap on the fuel filter and remove it, along with the filter element. Pull both the cap and the filter element a short distance out of the filter housing. Allow the fuel to drain off the filter into the housing.
4. Remove the cap with the filter element. To release the filter element, twist the lower edge of the filter element to one side.

NOTICE:
To prevent damage to the filter housing, do not allow dirt to get into the filter housing.

5. Clean the filter housing cap.
6. Replace the O-ring.
7. Install the new filter element in the cap. Make sure the filter element is securely in place.
8. Screw on the cap with the filter element. Tighten the cap 25 N·m (18 lb·ft).
9. Bleed the fuel system.
   [a] Make sure that all high-pressure lines have been tightened to 25 N·m (18 lb·ft) and all banjo bolts to 50 N·m (37 lb·ft).

All information subject to change without notice.
6SE412 0403 Copyright © 2004 DETROIT DIESEL CORPORATION

https://truckmanualshub.com/

NOTICE:

Correct torque on the high pressure lines is critical. Incorrect torques could result in leaks or lack of power due to restricted fuel flow.

[b] If equipped with a hand pump on the fuel/water separator, work the hand pump 50 times.

NOTE:
There should be a strong resistance in the hand pump, caused by the pressure build-up within the fuel system.

WARNING:

PERSONAL INJURY

Diesel engine exhaust and some of its constituents are known to the State of California to cause cancer, birth defects, and other reproductive harm.

- ☐ **Always start and operate an engine in a well ventilated area.**
- ☐ **If operating an engine in an enclosed area, vent the exhaust to the outside.**
- ☐ **Do not modify or tamper with the exhaust system or emission control system.**

[c] Crank the engine for 30 seconds at a time, but no longer. Wait at least two minutes, then crank again. The engine should start within four 30-second attempts.

10. Start the engine. Check the fuel filter housing for leaks.

 Copyright © 2004 DETROIT DIESEL CORPORATION

https://truckmanualshub.com/

13.1.4 Engine Oil and Filter Changing

Select the SAE class (viscosity) on the basis of the average air temperature for the season. See Figure 13-3.

NOTE:
Too strict adherence to the SAE classes will result in frequent oil changes. For this reason, view the temperature ranges for the various SAE classes as guidelines that can be exceeded for a short time.

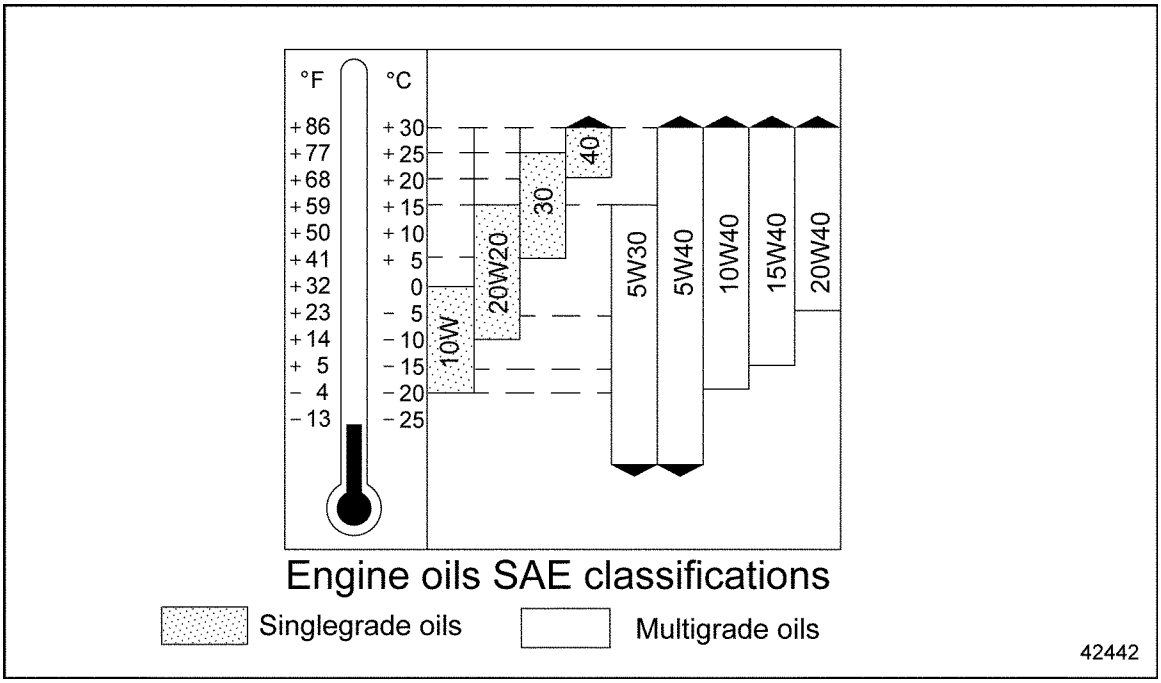

Figure 13-3 Engine Oil Temperature Ranges

Use approved multigrade oils to extend the temperature range.

To ensure the engine is protected and the oil stays clean until the next oil change, use only oils of API classification CH4.

Drain oil as follows:

All information subject to change without notice.
6SE412 0403 Copyright © 2004 DETROIT DIESEL CORPORATION

WARNING:

PERSONAL INJURY

To avoid injury before starting and running the engine, ensure the vehicle is parked on a level surface, parking brake is set, and the wheels are blocked.

1. Chock the tires, place the transmission in neutral, and set the parking brake.

NOTE:
Change the engine oil only when the engine is at a temperature of approximately 140°F (60°C).

2. Using a 36-mm socket, unscrew the oil filter cap. See Figure 13-4.

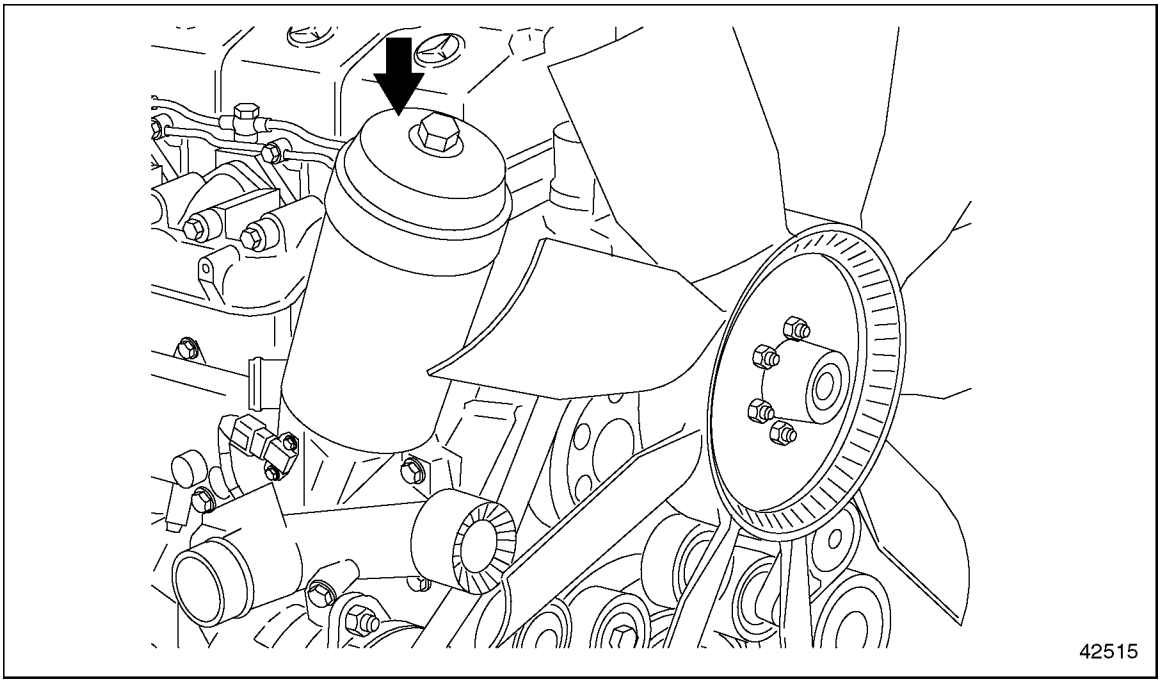

Figure 13-4 Oil Filter Cap

 Copyright © 2004 DETROIT DIESEL CORPORATION

https://truckmanualshub.com/

WARNING:

FIRE

To avoid injury from fire, keep open flames, sparks, electrical resistance heating elements, or other potential ignition sources away when draining lubrication oil. Do not smoke when draining lubricating oil.

3. Drain the oil.
   [a] Place a suitable receptacle beneath the oil drain plug on the underside of the oil pan.
   [b] Carefully unscrew the oil drain plug on the oil pan and allow the oil to drain out.
   [c] Discard the O-ring on the oil drain plug.

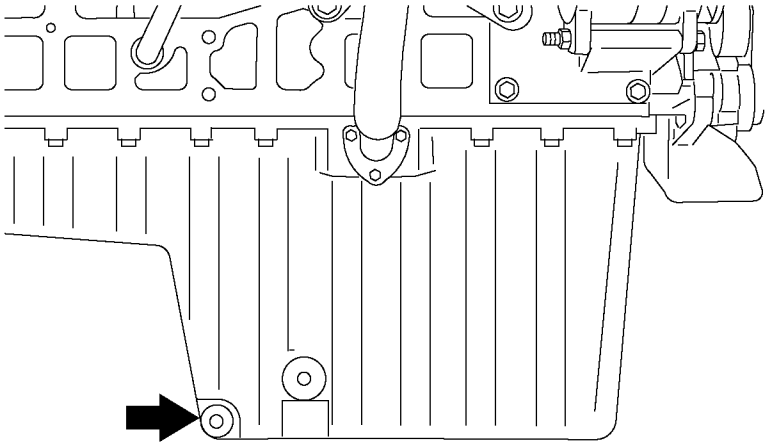

Figure 13-5 Engine Oil Drain Plug

All information subject to change without notice.
6SE412 0403 Copyright © 2004 DETROIT DIESEL CORPORATION

4. Remove both the filter cap and the filter element. To release the filter element, twist the lower edge of the filter element to the side. See Figure 13-6.

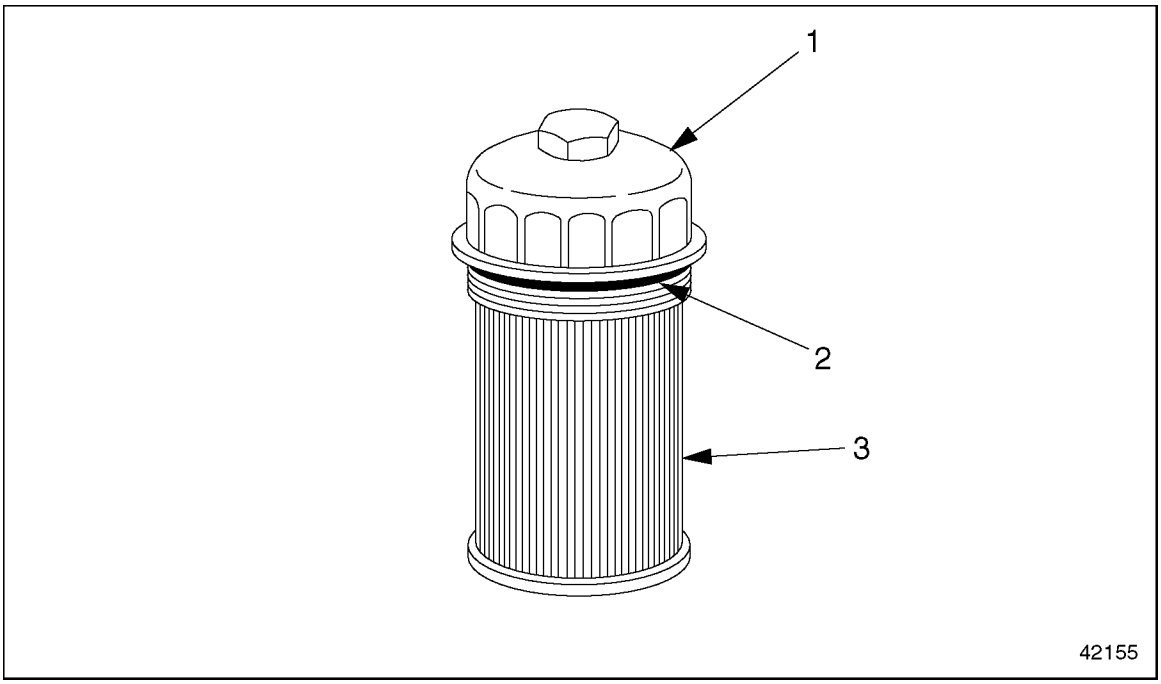

1. Cap
2. O-ring
3. Filter Element

Figure 13-6 Cap with Oil Filter Element

NOTICE:
To prevent damage to the filter housing, ensure that no foreign objects get inside it. Do not wipe clean the filter housing.

5. Replace the O-ring on the cap. See Figure 13-6.
6. Install the new filter into the cap. Make sure the filter element is securely in place.
7. Screw the cap onto the oil filter housing. Tighten the cap 45 N·m (33 lb·ft).
8. Install the oil drain plug, using a new O-ring. Tighten the plug 80 N·m (60 lb·ft).

 Copyright © 2004 DETROIT DIESEL CORPORATION

https://truckmanualshub.com/

9. Add new engine oil through the oil fill, see Figure 13-7, until the maximum fill level on the oil dipstick has been reached. Engine fill capacity is 44.4 qts (42.0 L).

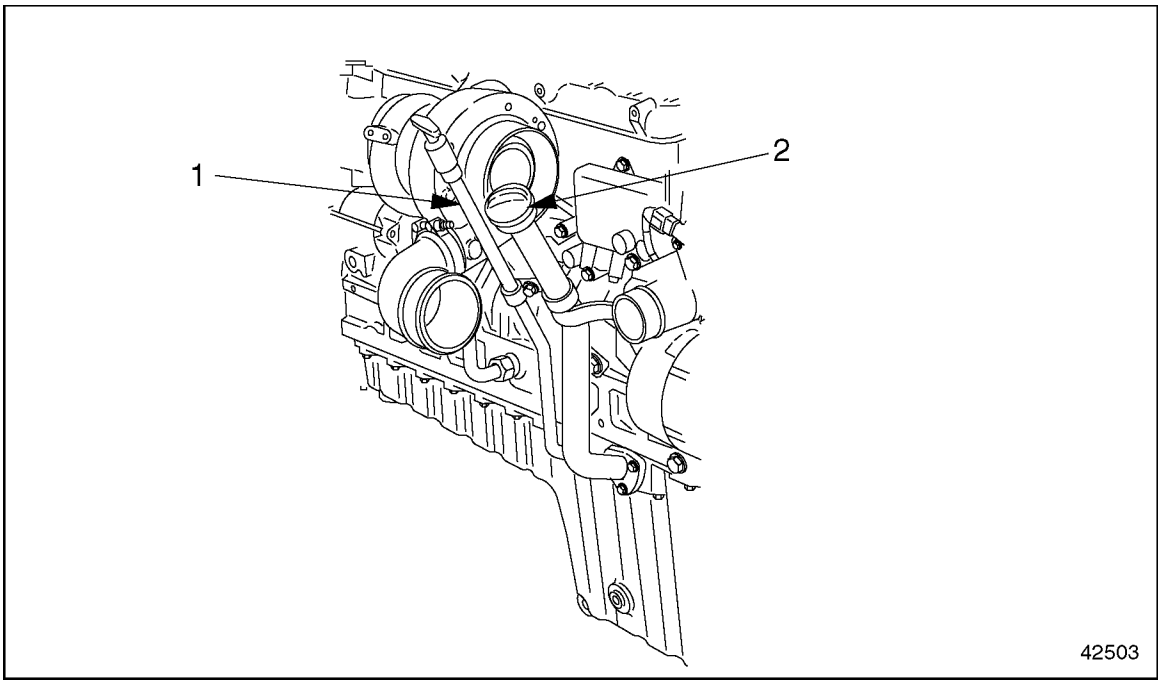

1. Oil Dipstick
2. Oil Fill Cap

Figure 13-7 Oil Fill

WARNING:

PERSONAL INJURY

Diesel engine exhaust and some of its constituents are known to the State of California to cause cancer, birth defects, and other reproductive harm.

- ☐ **Always start and operate an engine in a well ventilated area.**
- ☐ **If operating an engine in an enclosed area, vent the exhaust to the outside.**
- ☐ **Do not modify or tamper with the exhaust system or emission control system.**

10. Start the engine with the accelerator pedal in the idle position. Monitor the oil pressure gauge.

All information subject to change without notice.
6SE412 0403 Copyright © 2004 DETROIT DIESEL CORPORATION

NOTICE:

Keep the engine running at idling speed until an oil pressure reading is obtained. If no oil pressure is shown after approximately 10 seconds, stop the engine and determine the cause. Failure to do so could result in engine damage.

11. Check the filter and oil drain plug for signs of leakage.
12. Stop the engine. Check the oil level again after approximately five minutes. If necessary, add oil up to the maximum fill level on the oil dipstick.

13.1.5 Coolant Concentration and Inhibitor Level Checking

Check the coolant concentration as follows:

WARNING:

HOT COOLANT

To avoid scalding from the expulsion of hot coolant, never remove the cooling system pressure cap while the engine is at operating temperature. Wear adequate protective clothing (face shield, rubber gloves, apron, and boots). Remove the cap slowly to relieve pressure.

NOTE:
Check and correct the coolant level only when the coolant temperature is below 122°F (50°C).

1. Open the cap on the surge tank slowly, to allow excess pressure to escape. Set the cap aside.
2. Before adding coolant, use a suitable tester to check the concentration of corrosion-inhibiting antifreeze. If the concentration is lower than 50 percent by volume,

 Copyright © 2004 DETROIT DIESEL CORPORATION

https://truckmanualshub.com/

drain coolant/add antifreeze until the concentration is correct. The coolant mixing ratio is listed in Table 13-7.

Antifreeze Protection Down to °F (°C)	Water Percentage by Volume	Corrosion-Inhibiting Antifreeze Percentage by Volume
–34 (–37)	50	50
–62 (–52)	40	Maximum 60*

*Concentrations of 60 percent affords the maximum antifreeze protection. Higher concentrations adversely affect heat dissipation.

Table 13-7 Coolant Mixing Ratio

NOTE:
When topping off, use only a pre-prepared coolant mixture containing a 50 percent concentration by volume of corrosion-inhibiting antifreeze.

NOTICE:
If the concentration of antifreeze is too low, there is a risk of corrosion or cavitation in the cooling system.

3. Check the coolant level and add more coolant if necessary.

13.1.6 Coolant Inhibitor Test Intervals

Coolant inhibitor level should be checked at the intervals listed in Table 13-8.

If topping off is needed, add coolant which is identical to the initial fill coolant.

Check the nitrite concentration at regular intervals as listed in Table 13-9 with a Power Trac 3–Way Test Strip. Nitrite levels must be within 800–2400 PPM. Additional SCA must be added to the coolant when it becomes depleted, as indicated by a nitrite concentration of 800 PPM or less. If the nitrite concentration is greater than 800 PPM, do not add additional SCA. If the nitrite concentration is above 2400 PPM, the system is over-inhibited and should be partially drained and filled with a 50/50 mix of water and EG or PG.

NOTE:
Drain intervals listed in Table 13-9 are dependent on proper maintenance.

Service Application	Inhibitor Test Interval
On-highway Trucks and Motor Coaches	20,000 Miles (32,000 Kilometers
City Transit Coaches, Pick-up and Delivery Short Trip, and Emergency Vehicles	6,00 Miles (9,600 Kilometers) or three months, whichever comes first
Industrial, Continuous Duty Generator Set, and all Other Applications	500 Hours or three months, whichever comes first
Stand-by Generator Set	200 Hours or yearly, whichever comes first

Table 13-8 Required Coolant Inhibitor Test Intervals

All information subject to change without notice.
6SE412 0403 Copyright © 2004 DETROIT DIESEL CORPORATION

Coolant	Maintenance Interval	Action
Antifreeze/Water + SCA Inhibitor (DDC Power Cool)	A. 20,000 miles (32,000 km) or 3 months B. 500 hours or 3 months	Test nitrite concentration with test strip. Add SCA or dilute coolant as needed.
	A. 30,000 miles (480,000 km) B. 2 years or 4,000 hours	Drain and clean system. Replace with new coolant.
Ethylene Glycol/Water + SCA Inhibitor	A. 20,000 miles (32,000 km) or 3 months B. 500 hours or 3 months	Drain and clean system. Replace with new coolant.
	A. 300,000 miles (480,000 km) B. 2 years or 4,000 hours	Drain and clean system. Replace with new coolant.
Ethylene Glycol/Water + NOAT Inhibitor	A. 300,000 miles (480,000 km) or 2 years B. 5,000 hours	Add Power Cool Plus Extender
	A.600,000 miles (960,000 km) B. 4 years or 10,000 hours	Drain and clean system. Replace with new coolant.
Water Only + SCA Inhibitor	A. 20,000 miles (32,000 km) or 3 months B. 500 hours or 3 months	Drain and clean system. Replace with new coolant.
	A. 3000,000 miles (480,000 km) B. 2 years or 4,000 hours	Drain and clean system. Replace with new coolant.
Water Only + NOAT Inhibitor	A. 3000,000 miles (480,000 km) or 2 years B. 5,000 hours	Add Power Cool Plus Extender
	A. 6000,000 miles (960,000 km) B. 4 years or 10,000 hours	Drain and clean system. Replace with new coolant.

A = On-highway trucks and motor coaches, city transit coaches, pickup and delivery, short trip, and emergency vehicles.

B = Industrial, generator set, and other applications

Table 13-9 Nitrite Interval Checks

13.1.7 Inhibitor Level Checking

Use Detroit Diesel PowerTrac 3–way Coolant Test Strips to measure nitrite and glycol concentrations. Cavitation/corrosion protection is indicated on the strip by the level of nitrite concentration. Freeze/boil-over protection is determined by glycol concentration.

Check the inhibitor level as follows:

 Copyright © 2004 DETROIT DIESEL CORPORATION

https://truckmanualshub.com/

WARNING:

HOT COOLANT

To avoid scalding from the expulsion of hot coolant, never remove the cooling system pressure cap while the engine is at operating temperature. Wear adequate protective clothing (face shield, rubber gloves, apron, and boots). Remove the cap slowly to relieve pressure.

1. Dip the test strip into the coolant for one second, then remove it. Shake the strip vigorously to remove excess liquid.
2. Immediately compare the end pad to the color chart on the container to determine the glycol concentration.
3. Sixty seconds (one minute) after dipping, compare the nitrite pad to the color chart on the container to determine the nitrite concentration.
4. If the additive indicator (middle pad) shows any color change, this indicates the presence of an unauthorized inhibitor.
5. If any problems exist, change the coolant.
6. After each use, replace and tighten the cap on the test strip container. Discard any test strips that have turned light pink or tan in color.
7. Close and tighten the cap on the surge tank.

13.1.8 Coolant Flushing and Changing

Flush and change the coolant as follows:

WARNING:

HOT COOLANT

To avoid scalding from the expulsion of hot coolant, never remove the cooling system pressure cap while the engine is at operating temperature. Wear adequate protective clothing (face shield, rubber gloves, apron, and boots). Remove the cap slowly to relieve pressure.

1. Open the cap on the surge tank slowly, to allow excess pressure to escape. Set the cap aside.
2. Open the water regulating valve for the heating system.

All information subject to change without notice.
6SE412 0403 Copyright © 2004 DETROIT DIESEL CORPORATION

https://truckmanualshub.com/

3. Drain the coolant from the engine. See Figure 13-8. The coolant system capacity is listed in Table 13-10.

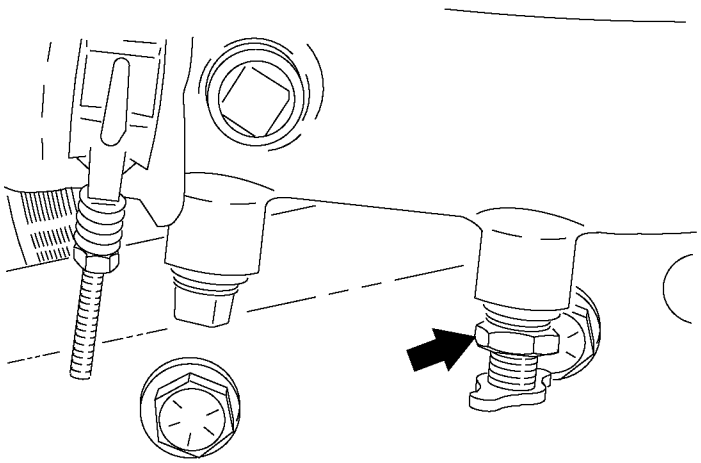

Figure 13-8 Coolant Drain Plug

System	Description	Capacity Quarts (Liters)
Engine Coolant Capacity (all vehicles)	Engine capacity*	31.7 (30.0)
Century Class and Columbia Cooling System Capacity	Total capacity†	60.7 (57.4)
	Antifreeze quantity at 50%	60.7 (57.4)
	Antifreeze quantity at 60%	36.4 (34.4)
Sterling A-Line and L-Line Cooling System Capacity	Total capacity	56.8 (53.8)
	Antifreeze quantity at 50%	28.4 (26.9)
	Antifreeze quantity at 60%	34.1 (32.3)
FL112 Cooling System Capacity	Total capacity	44.4 (42.0)
	Antifreeze quantity at 50%	22.2 (21.0)
	Antifreeze quantity at 60%	26.6 (25.2)

*Does not include capacity of cooling system.

†With 1200 sq. in. radiator.

Table 13-10 Coolant Capacity

 Copyright © 2004 DETROIT DIESEL CORPORATION

https://truckmanualshub.com/

[a] Place a receptacle underneath the coolant drain plug. Choose one that is large enough to hold the expected quantity of coolant.

NOTE:
Make sure the coolant can flow unobstructed into the receptacle.

[b] Open the coolant drain plug on the bottom of the radiator.

NOTICE:
When flushing the radiator, do not apply more than 20 psi (140 kPa) air pressure. Excessive pressure can damage the radiator or heater core.

4. Flush the radiator.
   [a] Attach a flushing gun nozzle to the radiator outlet.
   [b] Run water in until the radiator is full.
   [c] Apply no more than 20 psi (140 kPa) air pressure intermittently to help dislodge sediment buildup in the core.
5. Drain the radiator, and flush the radiator until clean water flows from the radiator. Remove the flushing gun.
6. When the coolant has drained, install the coolant drain plug on the radiator.
7. Add coolant in the specified concentration until the maximum mark on the surge tank is reached. The coolant system capacity is listed in Table 13-10.

All information subject to change without notice.
6SE412 0403 Copyright © 2004 DETROIT DIESEL CORPORATION

https://truckmanualshub.com/

WARNING:

PERSONAL INJURY

Diesel engine exhaust and some of its constituents are known to the State of California to cause cancer, birth defects, and other reproductive harm.

- ☐ **Always start and operate an engine in a well ventilated area.**
- ☐ **If operating an engine in an enclosed area, vent the exhaust to the outside.**
- ☐ **Do not modify or tamper with the exhaust system or emission control system.**

8. Start the engine and run it for about one minute at varying speeds to release air pockets in the cooling system. Make sure the heater valve is still open. Check the coolant level and add more coolant if necessary.
9. Shut down the engine.
10. Close and tighten the cap on the surge tank.

13.1.9 Cooling System Inspecting

Inspect the cooling system as follows:

WARNING:

HOT COOLANT

To avoid scalding from the expulsion of hot coolant, never remove the cooling system pressure cap while the engine is at operating temperature. Wear adequate protective clothing (face shield, rubber gloves, apron, and boots). Remove the cap slowly to relieve pressure.

NOTE:
Before doing this inspection, make sure to do either maintenance operation "Coolant Concentration Checking," or maintenance operation "Coolant Flushing and Changing."

1. Inspect the radiator, the condenser, the coolant pump, the engine oil cooler, the freeze plugs, and the heat exchanger for damage and leaks.
2. Check all pipes and hoses in the cooling system for damage and leaks. Make sure all pipes and hoses are properly positioned to avoid chafing, and are securely fastened.
3. Check the outside of the radiator and condenser for blockage by dirt or debris. Make sure the fins are not damaged, and straighten them if necessary.

 Copyright © 2004 DETROIT DIESEL CORPORATION

https://truckmanualshub.com/

All information subject to change without notice.
6SE412 0403 Copyright © 2004 DETROIT DIESEL CORPORATION

https://truckmanualshub.com/

14 ENGINE STORAGE

Section **Page**

14.1 PREPARING ENGINE FOR STORAGE 14-3

https://truckmanualshub.com/

All information subject to change without notice.
6SE412 0403 Copyright © 2004 DETROIT DIESEL CORPORATION

14.1 PREPARING ENGINE FOR STORAGE

When an engine is to be stored for a period of time, special precautions should be taken to protect the interior and exterior of the engine.

14.1.1 Cleaning the Engine

Please follow the equipment manufacturer's operating instructions for using high-pressure cleaning equipment.

Information on suitable cleaning and protective products is available from any authorized dealer.

NOTICE:
To prevent damage to engine components during the cleaning process, keep the water moving at all times. Never direct water onto electrical components, plug connectors, seals or flexible hoses.

Comply with the minimum working distance between the high-pressure nozzle and the surface being cleaned:

- ☐ Approximately 28 inches (700 mm) for circular pattern jets
- ☐ Approximately 12 inches (300 mm) for 25-degree flat jets and dirt cutters

14.1.2 Cleaning the Cooling System

Clean the cooling system as follows:

NOTE:
Collect the used coolant, cleaning solutions, and washing liquids. Dispose of them in accordance with applicable laws regarding the protection of the environment.

 Copyright © 2004 DETROIT DIESEL CORPORATION

https://truckmanualshub.com/

NOTICE:

Clean at moderate pressures only; otherwise the fins of the radiator grille could be damaged.

WARNING:

EYE INJURY

To avoid injury from flying debris when using compressed air, wear adequate eye protection (face shield or safety goggles) and do not exceed 40 psi (276 kPa) air pressure.

1. Remove debris (dust, insects, etc.) from the fins of the radiator grille by blowing them through with compressed air or spraying them out with water. Work from the rear of the radiator (in the opposite direction of the normal cooling air flow).
2. Drain the coolant when the engine is cold. For detailed procedures, see the vehicle/chassis maintenance manual. For types of coolant,
3. If the HVAC unit is connected to the cooling system, open the regulating valves all the way.

14.1.3 Degreasing the Cooling System

Degrease the cooling system as follows:

1. Fill the cooling system with a 5% solution (1.6 ounces per quart of water—50 grams per liter) of a mildly alkaline cleaning agent, such as sodium carbonate.

All information subject to change without notice.
6SE412 0403 Copyright © 2004 DETROIT DIESEL CORPORATION

https://truckmanualshub.com/

WARNING:

PERSONAL INJURY

Diesel engine exhaust and some of its constituents are known to the State of California to cause cancer, birth defects, and other reproductive harm.

- ☐ **Always start and operate an engine in a well ventilated area.**
- ☐ **If operating an engine in an enclosed area, vent the exhaust to the outside.**
- ☐ **Do not modify or tamper with the exhaust system or emission control system.**

2. Run the engine at moderate speed until the thermostat starts to open, at an operating temperature of approximately 176°F (80°C). Then run it for about five minutes longer. Shut down the engine and allow it to cool to approximately 112°F (50°C).
3. Drain all the cleaning solution.
4. Flush the cleaning solution from the cooling system.
   [a] Immediately after draining the cleaning solution, flush the system with clean water.
   [b] Once the clean water has drained, fill the system again with clean water.
   [c] Run the engine. Allow the engine to warm up to approximately 176°F (80°C), and then run it about five minutes longer.
   [d] Drain the hot water.
5. Fill the cooling system with new coolant. For detailed procedures, see the vehicle/chassis maintenance manual. For types of coolant,

14.1.4 Storage

Required protective measures for the MBE 4000 engine depend on the following:

- ☐ The length of time that the engine will be out of service
- ☐ The climate and conditions where the engine is stored

After cleaning, engines should, whenever possible, be placed in a dry, well-ventilated place.

In all cases, protect the engine against direct exposure to moisture (rain/splash water).

If the engine is to be out of service for 12 months or less, anticorrosion measures are not necessary, provided that the place of storage are dry and well-ventilated as described above.

 Copyright © 2004 DETROIT DIESEL CORPORATION

https://truckmanualshub.com/

If the engine is to be out of service for over 12 months, or under extraordinary storage or transportation conditions, then special protective measures are necessary. Information is available from any authorized dealer. It is strongly recommended that you request this information.

NOTE:
If the engine is to be out of service for over 18 months, the oil must be changed before the engine can be brought back into service.

All information subject to change without notice.
6SE412 0403 Copyright © 2004 DETROIT DIESEL CORPORATION

https://truckmanualshub.com/

15 MECHANICAL TROUBLESHOOTING

Section **Page**

15.1 TROUBLESHOOTING THE ELECTRONIC ENGINE CONTROL SYSTEM 15-3
15.2 GENERAL TROUBLESHOOTING 15-4

https://truckmanualshub.com/

All information subject to change without notice.
6SE412 0403 Copyright © 2004 DETROIT DIESEL CORPORATION

https://truckmanualshub.com/

15.1 TROUBLESHOOTING THE ELECTRONIC ENGINE CONTROL SYSTEM

When the electronic engine control system detects a fault, it broadcasts a message on the datalink. The dash display will show the code "ECU 128," indicating there is an engine fault.

NOTE:
To read the complete fault code, bring the vehicle to an authorized dealer. Complete fault codes can be read using minidiag2.

 Copyright © 2004 DETROIT DIESEL CORPORATION

https://truckmanualshub.com/

15.2 GENERAL TROUBLESHOOTING

The tables that follow are designed to identify the causes of common problems, suggest further checks and appropriate remedies. When dealer service is necessary, this is mentioned in the table.

Problem - The Engine Will Not Crank	
Cause	**Remedy**
The batteries are damaged or weak.	Test the batteries. Replace them, if needed.
The ignition switch is damaged.	Replace the ignition switch.
The battery cables are damaged and/or corroded.	Replace the battery cables.
The starter is damaged and/or worn.	Have an authorized dealer replace the starter.
The clutch or transmission is damaged.	Bring the vehicle to an authorized dealer for service.
There is internal damage to the engine.	Bring the vehicle to an authorized dealer for service.

Problem—The Engine Turns Over Slowly	
Cause	**Remedy**
The batteries are damaged or weak.	Test the batteries. Replace them, if needed.
The ignition switch is damaged.	Replace the ignition switch.
The battery cables are damaged and/or corroded	Replace the battery cables.
The starter is damaged and/or worn.	Have an authorized dealer replace the starter.
The engine oil does not meet the correct specifications.	Change the engine oil, using the correct type of oil.
The transmission fluid does not meet the correct specifications.	Change the transmission fluid, using the correct type of fluid.

All information subject to change without notice.
6SE412 0403 Copyright © 2004 DETROIT DIESEL CORPORATION

https://truckmanualshub.com/

Problem—The Engine Cranks, But Won't Start	
Cause	**Remedy**
The batteries are damaged or weak.	Test the batteries. Replace them, if needed.
The cranking speed is not set correctly.	Bring the vehicle to an authorized dealer for service.
No intake air preheater is installed, and it is too cold to start without one.	Install an intake air preheater.
The intake air preheater is malfunctioning.	Check the intake air preheater, and replace it, if necessary.
The camshaft TDC sensor and/or the crank angle position sensor are out of adjustment.	Push both sensors into their holes as far as they will go. If this does not solve the problem, bring the vehicle to an authorized dealer for service.
The camshaft TDC sensor and/or the crank angle position sensor are damaged.	Bring the vehicle to an authorized dealer for service.
There is air in the fuel system.	Check the fuel lines for air pockets. Bleed the fuel system and start the engine.
The air filter is clogged.	Clean or replace the air filter.
The fuel filter is clogged.	Replace the filter element.
The exhaust brake valve is malfunctioning.	Have an authorized dealer check the operation of the valve.
The valves are not adjusted properly.	Check the valve lash.
There are other problems in the fuel system.	Bring the vehicle to an authorized dealer for service.

Problem—The Engine Starts Only After Cranking for a Long Time	
Cause	**Remedy**
The fuel tank is low or empty.	Add fuel and bleed the fuel system, if necessary.
There are leaks in the fuel lines.	Check the fuel lines for leaks and repair them, if necessary.
The fuel filter is clogged.	Replace the filter element.
The fuel line, the fuel pre-filter, or the screen in the fuel tank is blocked.	Clean and bleed the system. Have the fuel lines and filters checked by an authorized dealer.
The camshaft TDC sensor and/or the crank angle position sensor are out of adjustment.	Push both sensors into their holes as far as they will go. If this does not solve the problem, bring the vehicle to an authorized dealer for service.
The camshaft TDC sensor and/or the crank angle position sensor are damaged.	Bring the vehicle to an authorized dealer for service.
There are other problems in the fuel system.	Bring the vehicle to an authorized dealer for service.

 Copyright © 2004 DETROIT DIESEL CORPORATION

https://truckmanualshub.com/

Problem—The Engine Starts, But Dies	
Cause	**Remedy**
The fuel tank is low or empty.	Add fuel and bleed the fuel system, if necessary.
The fuel filter is clogged.	Replace the filter element.
The fuel line, the fuel pre-filter, or the screen in the fuel tank is blocked.	Clean and bleed the system. Have the fuel lines and filters checked by an authorized dealer.
The camshaft TDC sensor and/or the crank angle position sensor are out of adjustment.	Push both sensors into their holes as far as they will go. If this does not solve the problem, bring the vehicle to an authorized dealer for service.
The camshaft TDC sensor and/or the crank angle position sensor are damaged.	Bring the vehicle to an authorized dealer for service.
The constant-throttle valves are malfunctioning.	Bring the vehicle to an authorized dealer for service.
There are other problems in the fuel system.	Bring the vehicle to an authorized dealer for service.

Problem—The Engine Fan Doesn't Work	
Cause	**Remedy**
The fan hub is damaged.	Replace the fan hub.
The fan wiring is damaged.	Repair the fan wiring.
The parameter settings in the PLD or VCU control unit are incorrect.	Have an authorized dealer reprogram the control unit.

Problem—The Engine Fan Is Constantly On	
Cause	**Remedy**
The fan override switch is on.	Check the operation of the fan override switch.
The fan hub is damaged.	Replace the fan hub
The parameter settings in the PLD or VCU control unit are incorrect.	Have an authorized dealer reprogram the control unit.

All information subject to change without notice.
6SE412 0403 Copyright © 2004 DETROIT DIESEL CORPORATION

https://truckmanualshub.com/

Problem—Fuel Consumption Is Too High	
Cause	**Remedy**
The tires are not properly inflated.	Check all tires for correct pressure.
The air filter and/or intake air system is clogged.	Check the air restriction indicator. Clean the intake air system and replace the air filter if necessary.
The fuel filter is clogged.	Replace the filter element.
The exhaust brake valve is malfunctioning.	Have an authorized dealer check the operation of the valve.
The engine performs poorly, or does not develop full power.	The remedies are listed in "The Engine Performs Poorly, Does Not Develop Full Power."

Problem—The Engine Performs Poorly, Does Not Develop Full Power	
Cause	**Remedy**
The air filter and/or intake air system is clogged.	Check the air restriction indicator. Clean the intake air system and replace the air filter if necessary.
The exhaust brake valve is malfunctioning.	Have an authorized dealer check the operation of the valve.
The fuel filter is clogged.	Replace the filter element.
There are other problems with the fuel system.	Bring the vehicle to an authorized dealer for service.
The valves are not adjusted properly	Check the valve lash. See
The coolant temperature sensor is damaged or reading incorrectly.	Bring the vehicle to an authorized dealer for service.
The fuel temperature sensor is damaged or reading incorrectly.	Bring the vehicle to an authorized dealer for service.
The engine oil temperature sensor is damaged or reading incorrectly.	Bring the vehicle to an authorized dealer for service.
The charge-air temperature sensor is damaged or reading incorrectly.	Bring the vehicle to an authorized dealer for service.
There are problems with the PLD or VCU control unit.	Bring the vehicle to an authorized dealer for service.
There is internal damage to the engine.	Bring the vehicle to an authorized dealer for service.

All information subject to change without notice.
6SE412 0403 Copyright © 2004 DETROIT DIESEL CORPORATION

https://truckmanualshub.com/

Problem—The Engine Performs Poorly, Does Not Develop Full Power	
Cause	**Remedy**
The air filter and/or intake air system is clogged.	Check the air restriction indicator. Clean the intake air system and replace the air filter if necessary.
The exhaust brake valve is malfunctioning.	Have an authorized dealer check the operation of the valve.
The fuel filter is clogged.	Replace the filter element.
There are other problems with the fuel system.	Bring the vehicle to an authorized dealer for service.
The valves are not adjusted properly	Check the valve lash. See
The coolant temperature sensor is damaged or reading incorrectly.	Bring the vehicle to an authorized dealer for service.
The fuel temperature sensor is damaged or reading incorrectly.	Bring the vehicle to an authorized dealer for service.
The engine oil temperature sensor is damaged or reading incorrectly.	Bring the vehicle to an authorized dealer for service.
The charge-air temperature sensor is damaged or reading incorrectly.	Bring the vehicle to an authorized dealer for service.
There are problems with the PLD or VCU control unit.	Bring the vehicle to an authorized dealer for service.
There is internal damage to the engine.	Bring the vehicle to an authorized dealer for service.

Problem—The Engine Is in Emergency Running Mode (constant speed 1,300 rpm)	
Cause	**Remedy**
The PLD or VCU control unit is damaged.	Bring the vehicle to an authorized dealer for service.

All information subject to change without notice.
6SE412 0403 Copyright © 2004 DETROIT DIESEL CORPORATION

Problem—The Coolant Temperature Is Above Normal	
Cause	**Remedy**
The coolant level is too low.	Check for coolant leaks, and repair as needed.
The poly-V belt is loose.	Tighten or replace the poly-V belt.
The coolant temperature gauge and/or sensor is not reading correctly.	Bring the vehicle to an authorized dealer for service.
The radiator is damaged or dirty.	Clean the radiator. Repair or replace the radiator if necessary.
The coolant pump is damaged.	Have an authorized dealer replace the coolant pump.
The thermostat is damaged.	Have an authorized dealer replace the coolant pump.
The fan is not operating properly.	Bring the vehicle to an authorized dealer and have the fan hub checked. Bring the vehicle to an authorized dealer and have the parameter settings reprogrammed in the engine control unit (PLD) or vehicle control unit (VCU).

Problem—The Coolant Temperature Is Below Normal	
Cause	**Remedy**
The coolant temperature gauge and/or sensor is not reading correctly.	Bring the vehicle to an authorized dealer for service.
The thermostat is damaged.	Have an authorized dealer replace the thermostat.
The fan is not operating properly.	Bring the vehicle to an authorized dealer and have the fan hub checked. Bring the vehicle to an authorized dealer and have the parameter settings reprogrammed in the engine control unit (PLD) or vehicle control unit (VCU).

Problem—The Cooling System Is Losing Coolant	
Cause	**Remedy**
There is an external coolant leak.	Repair the leaking component.
The radiator cap is leaking.	Replace the radiator cap.
The air compressor head is damaged.	Have an authorized dealer replace the air compressor.
The cylinder head gasket is leaking.	Have an authorized dealer replace the head gasket.

 Copyright © 2004 DETROIT DIESEL CORPORATION

https://truckmanualshub.com/

Problem—There Is Coolant in the Engine Oil	
Cause	**Remedy**
The cylinder head gasket is damaged.	Have an authorized dealer replace the head gasket.
The oil/water heat exchanger is leaking.	Have an authorized dealer replace the heat exchanger.
There is an internal coolant leak.	Bring the vehicle to an authorized dealer for service.

Problem—There Is Foam in the Engine Oil	
Cause	**Remedy**
The oil level is too low or too high.	Correct the oil level.
The oil has not been changed within the recommended interval.	Change the oil.
The oil is not of the recommended quality.	Change the oil.

Problem—The Engine Oil Pressure Is Low	
Cause	**Remedy**
The oil pressure gauge and/or sensor is not reading correctly.	Bring the vehicle to an authorized dealer for service.
There is fuel in the oil.	Bring the vehicle to an authorized dealer for service.
The oil filter is clogged.	Replace the filter element.
The oil filter bypass valve is damaged.	Replace the bypass valve.
The oil pump and/or relief valve is damaged.	Have an authorized dealer replace the oil pump.

Problem—The Engine Exhaust Is White	
Cause	**Remedy**
The fuel is of poor quality.	Add fuel of the right quality.
The intake air preheater is malfunctioning.	Check the intake air preheater, and replace it, if necessary.
The valves are not adjusted properly.	Check the valve lash.

All information subject to change without notice.
6SE412 0403 Copyright © 2004 DETROIT DIESEL CORPORATION

https://truckmanualshub.com/

Problem—The Engine Exhaust Is Black	
Cause	**Remedy**
The air filter and/or intake air system is clogged.	Check the air restriction indicator. Clean the intake air system and replace the air filter if necessary.
The exhaust brake valve is malfunctioning.	Have an authorized dealer check the operation of the valve.
The intake air preheater is malfunctioning.	Check that the heater is not staying on all of the time.
The valves are not adjusted properly.	Check the valve lash.
There is damage to the fuel system: the fuel pump, one or more fuel injectors, or one or more unit pumps are damaged.	Bring the vehicle to an authorized dealer for service.
The charge-air temperature sensor is damaged.	Bring the vehicle to an authorized dealer for service.
There is internal damage to the engine.	Bring the vehicle to an authorized dealer for service.

Problem—The Engine Exhaust Is Blue	
Cause	**Remedy**
The engine oil level is too high (engine oil is reaching the combustion chamber).	Adjust the oil level, and then have the oil level checked by an authorized dealer.
The turbocharger is leaking oil.	Have an authorized dealer replace the turbocharger
The valve stem seals are loose or damaged.	Have an authorized dealer replace the seals.
The piston rings are worn.	Have an authorized dealer replace the piston rings.

Problem—Engine Brake Performance Is Poor	
Cause	**Remedy**
The engine brake control switch is damaged.	Replace the switch
The exhaust brake is not operating properly.	Have an authorized dealer check the operation of the valve.
The constant-throttle valves are malfunctioning.	Bring the vehicle to an authorized dealer for service.
Components of the PLD and/or VCU control unit are damaged.	Bring the vehicle to an authorized dealer for service.

Problem—Cruise Control Is Not Working	
Cause	**Remedy**
One or more of the cruise control switches are damaged.	Replace the damaged switch.
Components of the PLD and/or VCU control unit are damaged or not working properly.	Bring the vehicle to an authorized dealer for service.

All information subject to change without notice.
6SE412 0403 Copyright © 2004 DETROIT DIESEL CORPORATION

https://truckmanualshub.com/

Problem—The Battery Charge Indicator Light Does Not Come On When the Engine Is Not Running	
Cause	**Remedy**
The bulb is damaged.	Change the bulb.
The circuit is broken.	Repair the break in the circuit.

Problem—The Battery Charge Indicator Light Comes On When the Engine is Running	
Cause	**Remedy**
The poly-V belt is too loose.	Check the belt tension; if necessary, have an authorized dealer replace the belt tensioner.
The belt tensioner is damaged.	Have an authorized dealer replace the belt tensioner.
he poly-V belt is worn or damaged.	Replace the belt.
The alternator is damaged (has a damaged rectifier or voltage regulator).	Have an authorized dealer replace the alternator.

All information subject to change without notice.
6SE412 0403 Copyright © 2004 DETROIT DIESEL CORPORATION

https://truckmanualshub.com/

INDEX

A

Adjusting Valve Lash, 12-10

Air Compressor, 10-3
- Air Compressor Installation, 10-8
- Air Compressor Removal, 10-3
  - Air Compressor Inspection, 10-7

C

Camshaft and Camshaft Sensor, 1-170
- Camshaft Installation, 1-175
  - Camshaft Inspection, 1-176
- Camshaft Removal, 1-170
- Camshaft Sensor Replacement, 1-180

Charge Pressure/Temperature Sensor, 6-5
- Charge Pressure/Temperature Sensor Installation, 6-5
- Charge Pressure/Temperature Sensor Removal, 6-5

Coolant, 5-7
- Batteries, 5-11
- Corrosion Inhibitors, 5-9
  - Dropout, 5-10
- Disposal, 5-11
- Fully Formulated Antifreeze, 5-7
- Non-approved Coolants, 5-11
- Recycled Antifreeze, 5-9
- Supplemental Coolant Additives, 5-8
- Water, 5-7
  - Coolant Specifications and Concentration, 5-8

Coolant Pump, 4-8
- Coolant Pump Assembly, 4-14
- Coolant Pump Disassembly, 4-11
  - Coolant Pump Inspection, 4-13
- Coolant Pump Installation, 4-18
- Coolant Pump Removal, 4-8

Coolant Temperature Sensor, 4-32
- Coolant Temperature Sensor Assembly, 4-33

 Copyright © 2004 DETROIT DIESEL CORPORATION

https://truckmanualshub.com/

Coolant Temperature Sensor Disassembly, 4-32
Cooling System, 4-3
Cooling System Draining and Flushing, 4-3
Crankshaft Assembly, 1-57
Crankshaft Gear Replacement, 1-80
Crankshaft Installation, 1-62
Crankshaft End Play Checking, 1-77
Crankshaft Measuring and Inspection, 1-65
Crankshaft Radial Play Checking, 1-71
Crankshaft Removal, 1-58
Crankshaft Vibration Damper, 1-84
Crankshaft Vibration Damper Installation, 1-85
Crankshaft Vibration Damper Removal, 1-84
Cylinder Block, 1-24
Cylinder Liner Installation, 1-28
Cylinder Liner Bore Inspection and Measurement, 1-32
Cylinder Liner Protrusion Measurement, 1-36
Cylinder Liner Removal, 1-24
Cylinder Head, 1-5
Cylinder Head Installation, 1-10
Cylinder Head Inspection and Machining, 1-14
Engine Compression Testing, 1-18
Cylinder Head Removal, 1-6
Cylinder Head Cover, 1-3
Installation, 1-4
Removal, 1-3

D

DDEC Electronic Control Unit, 2-29
DDEC Electronic Control Unit Installation, 2-32
DDEC Electronic Control Unit Removal, 2-29
Drive Belts, 8-3
Air Conditioner Compressor Belt Installation, 8-10
Air Conditioner Compressor Belt Removal, 8-8
Air Conditioner Compressor Pad Installation, 8-14
Air Conditioner Compressor Pad Removal, 8-13

All information subject to change without notice.
6SE412 0403 Copyright © 2004 DETROIT DIESEL CORPORATION

Belt Tensioner Installation, 8-12
Belt Tensioner Removal, 8-11
Fan Belt Installation, 8-7
Fan Belt Removal, 8-6
Idler Pulley Installation, 8-13
Idler Pulley Removal, 8-12
Main Drive Belt Installation, 8-5
Main Drive Belt Removal, 8-3

E

EGR Camshaft, 1-181
EGR Camshaft Changes, 1-181
EGR Camshaft Lubrication Sprayer, 3-13
EGR Camshaft Lubrication Sprayer Installation, 3-13
EGR Camshaft Lubrication Sprayer Removal, 3-13
EGR Control valve, gas outlet pipe, and gas mixer, 7-43
Installation, 7-49
Removal, 7-43
EGR Coolant Pump, 4-20
EGR Cooler and Cooler Support Bracket, 7-26
EGR Cooler and Support Bracket Installation, 7-34
EGR Cooler and Support Bracket Removal, 7-26
EGR Cylinder Head and Block, 1-40
Cylinder Block Changes, 1-42
Cylinder Head Changes, 1-41
Cylinder Liner Changes, 1-41
EGR Cylinder Head Installation, 1-40
EGR Exhaust Manifold, 7-14
EGR Exhaust Manifold Installation, 7-22
EGR Exhaust Manifold Removal, 7-14
EGR Front and Rear Lifter Brackets, 1-43
Installation, 1-44
Removal, 1-43
EGR Fuel Filter, 2-41
EGR Fuel Filter Bracket Installation, 2-42
EGR Fuel Filter Bracket Removal, 2-41

 Copyright © 2004 DETROIT DIESEL CORPORATION

https://truckmanualshub.com/

EGR Fuel Injector Nozzle, 2-24

EGR Injector Unit Pump, 2-11
- EGR Injector Unit Pump Programming, 2-11

EGR Oil Pump and pick up tube, 3-21

EGR Piston, Piston Ring, and Connecting Rod, 1-135
- Piston Installation, 1-136
- Piston Removal, 1-135

EGR Thermostat Housing, 4-30
- EGR Thermostat Housing Cover Installation, 4-30
- EGR Thermostat Housing Cover Removal, 4-30

EGR Valves, 1-161
- Valve Installation in the EGR Engine, 1-163
- Valve Removal in the EGR Engine, 1-161
- Valve Seats, 1-165
- Valve Stem Seal and Valve Stem Sealing Ring Replacement in the EGR Engine, 1-163

Engine Brake, 1-45
- Constant-throttle Valve Installation, 1-50
- Constant-throttle Valve Removal, 1-45

Engine Cranking Tool, 1-102
- Engine Cranking Tool Installation, 1-102
- Engine Cranking Tool Removal, 1-103

EPV (Electronic Proportional Valve) and Wabco® Air Solenoid Valve, 7-51
- Installation, 7-53
- Removal, 7-51

Exhaust Brake Assembly, 7-6
- Exhaust Brake Assembly, 7-9
- Exhaust Brake Assembly Installation, 7-13
- Exhaust Brake Assembly Removal, 7-6
- Exhaust Brake Disassembly, 7-7

Exhaust Manifold, 7-3
- Exhaust Manifold Installation, 7-5
- Exhaust Manifold Removal, 7-3

F

Flywheel, 1-86
- Flywheel Inspection, 1-92

All information subject to change without notice.
6SE412 0403 Copyright © 2004 DETROIT DIESEL CORPORATION

Flywheel Inspection, 1-92
Flywheel Machining, 1-93
Flywheel Installation, 1-90
Flywheel Removal, 1-86
Flywheel Housing, 1-104
Flywheel Housing Installation, 1-105
Flywheel Housing Removal, 1-105
Front Cover Housing, 1-82
Front Cover Housing Installation, 1-83
Front Cover Housing Removal, 1-82
Front Idler and Tensioner Support, 4-22
Front Idler and Tensioner Support Installation, 4-23
Front Idler and Tensioner Support Removal, 4-22
Front Radial Seal, 1-51
Front Radial Seal Installation, 1-52
Front Radial Seal Removal, 1-51
Fuel, 5-3
Flow Improvers, 5-3
Kerosene, 5-3
Winter Grade Diesel Fuel, 5-3
Fuel Filter, 2-37
Fuel Filter Installation, 2-39
Fuel Filter Removal, 2-37
Fuel Heat Exchanger, 2-34
Fuel Heat Exchanger Installation, 2-36
Fuel Heat Exchanger Removal, 2-34
Fuel Injector Line, 2-13
Fuel Injector Line Installation, 2-16
Fuel Injector Line Removal, 2-13
Fuel Injector Nozzle, 2-18
Fuel Injector Nozzle Installation, 2-20
Fuel Injector Nozzle Removal, 2-18
Fuel Pump, 2-43
Fuel Pump Installation, 2-45
Fuel Pump Removal, 2-43
Fuel System Inspection, 2-47

 Copyright © 2004 DETROIT DIESEL CORPORATION

https://truckmanualshub.com/

Performing a Fuel Pressure Test, 2-48
Fuel Pressure Test Troubleshooting Procedures, 2-50
Performing a Fuel System Test using minidiag2, 2-51
Checking the Fuel Pump Driven Gear Bolt Torque, 2-54
Idle Smoothly Balance Troubleshooting, 2-52
Impact Delay Time Troubleshooting, 2-53

G

General Troubleshooting, 15-4

H

Hengst® Breather Filter, 7-55
Installation, 7-56
Removal, 7-55

I

Injector Unit Pump, 2-3
Injector Unit Pump Installation, 2-8
Injector Unit Pump Removal, 2-3
Intake Manifold, 6-3
Intake Manifold Installation, 6-4
Intake Manifold Removal, 6-3

L

Lubricating Oil, 5-5
Low Viscosity Engine Oil, 5-6
Synthetic Oils, 5-5

O

Oil Filter, 3-23
Oil Filter Element Replacement, 3-23
Oil Heat Exchanger and Filter Housing, 3-26
Oil Heat Exchanger and Filter Housing Installation, 3-28
Oil Heat Exchanger and Filter Housing Removal, 3-26
Oil Pan, 3-3
Oil Pan Installation, 3-6
Oil Pan Removal, 3-3

All information subject to change without notice.
6SE412 0403 Copyright © 2004 DETROIT DIESEL CORPORATION

Oil Pressure and Temperature Sensor, 3-32
Oil Pressure and Temperature Sensor Installation, 3-32
Oil Pressure and Temperature Sensor Removal, 3-32
Oil Pump, 3-14
Oil Pump Assembly, 3-17
Oil Pump Disassembly, 3-16
Oil Pump Installation, 3-20
Oil Pump Removal, 3-14
Oil Spray Nozzle, 3-9
Oil Spray Nozzle Installation, 3-12
Oil Spray Nozzle Removal, 3-9

P

Pilot Bearing, 1-100
Pilot Bearing Installation, 1-100
Pilot Bearing Removal, 1-100
Piston, Piston Ring, and Connecting Rod, 1-106
Connecting Rod Bushing Replacement, 1-133
Piston Installation, 1-109
Piston Removal, 1-106
Piston Ring Replacement, 1-116
Connecting Rod End Play Measurement, 1-123
Connecting Rod Radial Play Measurement, 1-126
Piston Inspection, 1-120
Power Take-off, 9-3
Preparation, 11-3
Adding Fuel, 11-5
Checking the Batteries, 11-3
Checking the Coolant Level (Cold Check), 11-5
Checking the Oil Level, 11-3
Priming the Fuel System, 11-5
Preparing Engine, 14-3
Cleaning the Cooling System, 14-3
Cleaning the Engine, 14-3
Degreasing the Cooling System, 14-4
Storage, 14-5

 Copyright © 2004 DETROIT DIESEL CORPORATION

https://truckmanualshub.com/

Protective Sleeve, 2-25
Crank Angle Position Sensor Replacement, 2-27
Protective Sleeve Installation, 2-27
Protective Sleeve Removal, 2-25

R

Rear Radial Seal, 1-54
Rear Radial Seal Installation, 1-55
Rear Radial Seal Removal, 1-54
Ring Gear, 1-96
Ring Gear Replacement, 1-96
Rocker Arm, 1-166
Rocker Arm Assembly, 1-168
Rocker Arm Disassembly, 1-167
Rocker Arm Installation, 1-168
Rocker Arm Removal, 1-166
Running the Engine, 11-10
Battery Charge, 11-10
Changing the Idle Speed, 11-10
Emergency Running Mode, 11-11
Excessive Idling, 11-10
Oil Pressure, 11-10

S

Scheduled Intervals, 13-3
Coolant Concentration and Inhibitor Level Checking, 13-19
Coolant Flushing and Changing, 13-22
Coolant Inhibitor Test Intervals, 13-20
Cooling System Inspecting, 13-25
Engine Oil and Filter Changing, 13-14
Fuel/Water Separator Pre-filter Element Cleaning, 13-8
Inhibitor Level Checking, 13-21
Main Fuel Filter Element Changing, 13-11
Maintenance Schedule Types, 13-3
Maintenance Operation Sets, 13-7
Maintenance Schedule and Interval Operations, 13-4
Starting the engine, 11-7

All information subject to change without notice.
6SE412 0403 Copyright © 2004 DETROIT DIESEL CORPORATION

Checking the Coolant Level (Hot Check), 11-7
Starting an Engine That Has Not Been Run, 11-8
Stopping the Engine, 11-12
Shutting Down After Hard Operation, 11-12

T

Thermostat, 4-25
Thermostat Installation, 4-26
Thermostat Checking, 4-26
Thermostat Removal, 4-25
Troubleshooting the Electronic Engine Control System, 15-3
Turbocharger, 6-6
Turbocharger Inspection, 6-6
Checking Turbocharger Radial and Axial Play, 6-8
Turbocharger Installation, 6-14
Turbocharger Removal, 6-11

V

Valve Lash checking, 12-3
Method One — Adjust Each Cylinder in Firing Order, 12-4
Method Two — Adjust All Valves Using Two Crankshaft Positions, 12-6
Valves, 1-138
Measuring Valve Standback, 1-150
Valve Installation, 1-159
Valve Lash Adjusting, 1-149
Valve Lash Checking, 1-142
Method One — Adjust Each Cylinder in Firing Order, 1-143
Method Two — Adjust All Valves Using Two Crankshaft Positions, 1-146
Valve Lift Checking, 1-138
Valve Removal, 1-153
Valve Stem Seal Replacement, 1-159

 Copyright © 2004 DETROIT DIESEL CORPORATION