https://truckmanualshub.com/

Baoli

Original instructions

OPERATION & SERVICE MANUAL

1-3T Balance Weight Type Electric Forklift Truck

CPD10-30 DC
CPD10J-30J AC

KION Baoli (Jiangsu) Forklift Co., Ltd.

https://truckmanualshub.com/

CPD10-30 DC
CPD10J-30J AC

1-3T

Balanceweight Type Electric Forklift Truck

OPERATION & SERVICE MANUAL

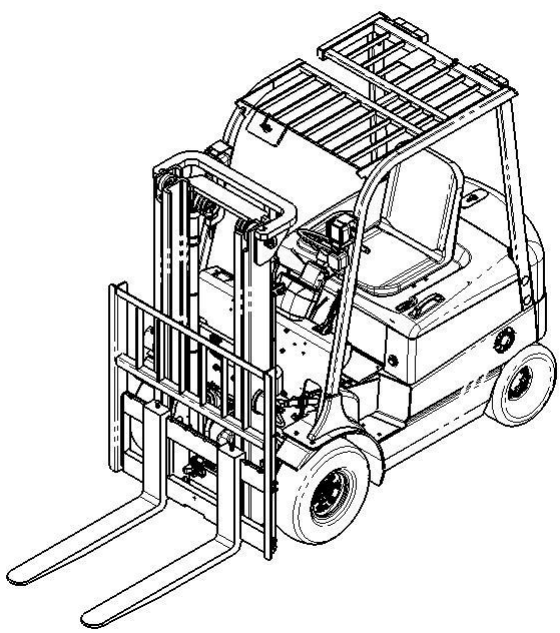

KION Baoli (Jiangsu) Forklift Co., Ltd.

https://truckmanualshub.com/

PREFACE

Balance weight type electric forklift trucks are designed on the base of the advanced features available from both local and foreign designs. These trucks are suitable to handle, transport and stack goods in factories, mines, stations, ports, freight yards, warehouses and used widely in food processing, textiles and other light industries. The use of forklift trucks fitted with kinds of attachments will become extensive.

These forklift trucks feature a wide-vision mast system, full powered steering unit, self-boost brake, stepless speed control, open type overhead guard and high quality motor, battery, multifunction integration electric controller and large-screen combination meter, so they have a lot of advantages such as good performance, easy operation, wide vision, flexible steering, reliable braking, powerful and smooth power, low noise, no pollution and beautiful appearance.

Newly designed AC system can control the torque intelligently, the standard soft provides a complete toolkit to meet the demands of users, and it optimizes the operation and reduces the producing cost of trucks. It adopts imported motors and electric controllers, improving the reliability of trucks and making the performance more superior. The combination meter based on User Interface makes the operation more easily and conveniently.

This manual states the forklift truck's specifications, operation, maintenance, main assemblies' constructions and working principles so as to help operators to use the trucks correctly and attain the highest functions. It is necessary to read over the manual before operating or maintaining the forklift trucks. The rules and notices in this manual should be abided seriously by all of relative personnel to enable these trucks in optimized working state for long period and bring the highest efficiency.

The partial content in this manual might not correspond with the actual condition because of technical improvement. Our products are subject to improvements and changes without notice.

https://truckmanualshub.com/

CONTENTS

Ⅰ. External view and specification 1

Ⅱ. Safety instruction, operation & maintenance of electric forklift truck 8

2.1 Shipping, loading, unloading and slinging of electric forklift truck 8

2.2 Storage of forklift truck 9

2.3 Precautions before operation 9

2.4 Information of safety operation 9

2.5 Periodic servicing and maintenance of electric forklift truck 13

2.6 Brief operation instruction 16

2.7 Caution plates 20

Ⅲ. Construction, principle, adjustment & maintenance of electric forklift truck... 26

1. Transmission system 26

1.1 General description 26

1.2 Assembly of wheel hub 31

2. Brake system 32

2.1 General description 32

2.2 Disassembly, assembly and adjustment of wheel brake 39

3. Steering system 45

3.1 General description 45

3.2 Adjustment and maintenance 49

4. Electric system 51

4.1 General description 51

4.2 Multifunctional integration control system (DC) 56

4.3 SME AC electric controller assy 58

4.4 Distribution and setting of sensor (AC) 58

4.5 AC microtron 61

4.6 LED instrument (DC) 62

4.7 SME compact meter (AC) 66

https://truckmanualshub.com/

4.8 Harness 72

5. Motor 75

5.1 General description of DC motor 75

5.2 SME three-phase AC motor 77

5.3 Inspection and maintenance of DC motor 78

5.4 Failure diagnosis of DC motor 84

6. Battery and charger 85

6.1 Structure of battery 85

6.2 Specification of battery and charger 85

6.3 Usage and maintenance of battery 86

6.4 Troubleshooting guide 90

6.5 Charger 91

7. Hydraulic system 94

7.1 General description 94

7.2 Maintenance and adjustment of hydraulic system 104

8. Lifting system 109

8.1 General description 109

8.2 Maintenance and adjustment of lifting system 112

Charging record card of electric forklift truck 115

NOTE 116

EC DECLARATION OF CONFORMITY..... 117

Ⅰ. External view and specification

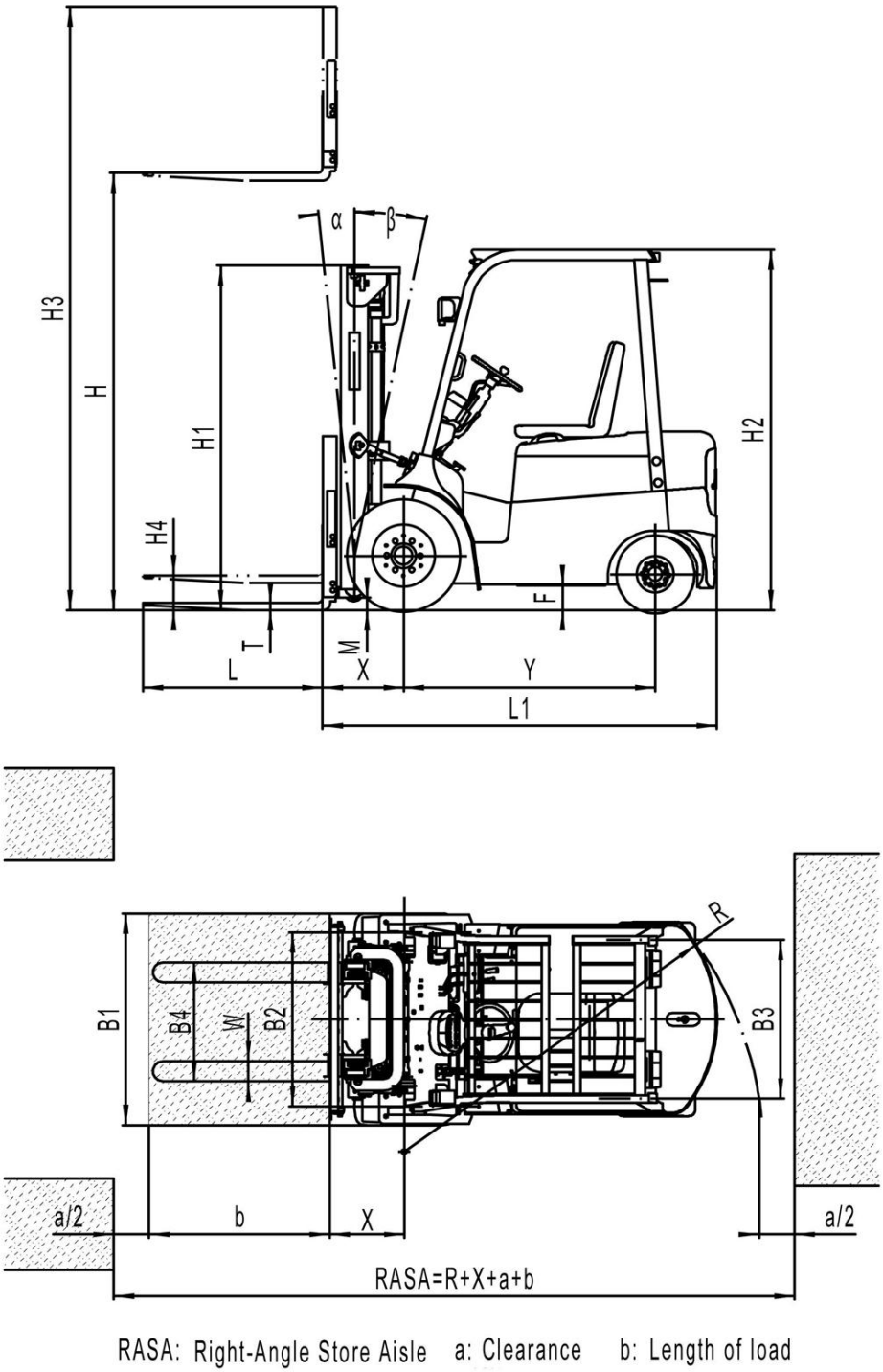

External view of electric forklift truck

SPECIFICATION (CPD10 CPD15)

General	Model				CPD10	CPD15
	Power type				Battery	
	Rated capacity			kg	1000	1500
	Load center			mm	500	
Dimension	Lift height		H	mm	3000	
	Free lift height		H4	mm	162	
	Fork size		L×W	mm	920×100×40	
	Fork outside spread (Min./Max)		B4	mm	200/968	
	Mast tilt angle (forward/backward)		α/β	°	6/12 6/12	
	Front overhang		X	mm	429	
	Overall dimension	Length to fork face	L1	mm	2056	
		Overall width	B1	mm	1090	
		Mast lowered height	H1	mm	1995	
		Mast extended height	H3	mm	4042	
		Overhead guard height	H2	mm	2162	
	Min. turning radius		R	mm	1820	
	Min. right angle stacking aisle width		RAX	mm	3370	
Performance	No load/ full load	Travel speed		km/h	13.5/11.5	13/11
		Lifting speed		mm/sec	400/300	390/285
	Max. grade ability			%	15	
	Service weight			kg	2900	3120
	Max. pull force(full load)			KN	6	6.5
Chassis	Tyre	Front		mm	6.50-10-10PR	
		Rear		mm	5.00-8-8PR	
	Tread	Front	B2	mm	890	
		Rear	B3	mm	920	
	Wheelbase		Y	mm	1250	
	Ground clearance (No load / full load)	Mast	M	mm	110/95	
		Frame	F	mm	105/95	
Power & Control	Battery	Voltage		V	48	
		Capacity		Ah	*400/440/480	
	Motor	Drive motor		KW/rpm	5.3/1700	
		Hydraulic motor		KW/rpm	8.2/1600	
	Controller				GE separate excitation controller	

SPECIFICATION (CPD10J CPD15J)

General	Model				CPD15J
	Power type				Battery
	Rated capacity			kg	1500
	Load center			mm	500
Dimension	Lift height		H	mm	3000
	Free lift height		H4	mm	162
	Fork size		L×W×T	mm	920×100×40
	Fork outside spread (Min./Max)		B4	mm	200/968
	Mast tilt angle (forward/backward)		α/β	°	6/12
	Front overhang		X	mm	429
	Overall dimension	Length to fork face	L1	mm	2056
		Overall width	B1	mm	1090
		Mast lowered height	H1	mm	1995
		Mast extended height	H3	mm	4042
		Overhead guard height	H2	mm	2162
	Min. turning radius		R	mm	1820
	Min. right angle stacking aisle width		RAXA	mm	3370
Performance	No load/ full load	Travel speed		km/h	15/13
		Lifting speed		mm/sec	400/300
	Max. grade ability			%	15
	Service weight			kg	3120
	Max. pull force(full load)			KN	6.5
Chassis	Tyre	Front		mm	6.50-10-10PR
		Rear		mm	5.00-8-8PR
	Tread	Front	B2	mm	890
		Rear	B3	mm	920
	Wheelbase		Y	mm	1250
	Ground clearance	Mast	M	mm	110/95
		Frame	F	mm	105/95
Power & Control	Battery	Voltage		V	48
		Capacity		Ah	*400/440/480
	Motor	Drive motor		KW/rpm	8/1600
		Hydraulic motor		KW/rpm	10/2450
	Controller				Italian SME AC Controller

SPECIFICATION (CPD20 CPD25)

General	Model				CPD20	CPD25
	Power type				Battery	
	Rated capacity			kg	2000	2500
	Load center			mm	500	
Dimension	Lift height		H	mm	3000	
	Free lift height		H4	mm	140	
	Fork size		L×W×T	mm	1070×120×40	1070×120×45
	Fork outside spread (Min./Max)		B4	mm	240/1040	
	Mast tilt angle (forward/backward)		α/β	°	6/12	
	Front overhang		X	mm	479	484
	Overall dimension	Length to fork face	L1	mm	2349	2381
		Overall width	B1	mm	1152	
		Mast lowered height	H1	mm	2060	
		Mast extended height	H3	mm	4040	
		Overhead guard height	H2	mm	2159	
	Min. turning radius		R	mm	2050	2100
	Min. right angle stacking aisle width		RAXA	mm	3715	3755
Performance	No load/ full load	Travel speed		km/h	12.5/11	12.5/10.5
		Lifting speed		mm/sec	400/260	390/250
	Max. grade ability			%	10	
	Service weight			kg	4160	4360
	Max. pull force(full load)			KN	8	
Chassis	Tyre	Front		mm	7.00-12-12PR	
		Rear		mm	18×7-8-14PR	
	Tread	Front	B2	mm	960	
		Rear	B3	mm	950	
	Wheelbase		Y	Y	1500	
	Ground clearance	Mast	M	mm	120/100	
		Frame	F	mm	120/100	
Power & Control	Battery	Voltage		V	48	
		Capacity		Ah	*630/700	
	Motor	Drive motor		KW/rpm	7.0/1400	
		Hydraulic motor		KW/rpm	8.6/1600	
	Controller				GE separate excitation controller	

SPECIFICATION (CPD20J CPD25J)

General	Model				CPD20J	CPD25J
	Power type				Battery	
	Rated capacity			kg	2000	2500
	Load center			mm	500	
Dimension	Lift height		H	mm	3000	
	Free lift height		H4	mm	140	
	Fork size		L×W×T	mm	1070×120×40	1070×120×45
	Fork outside spread (Min./Max)		B4	mm	240/1040	
	Mast tilt angle (forward/backward)		α/β	°	6/10	
	Front overhang		X	mm	459	464
	Overall dimension	Length to fork face	L1	mm	2349	2381
		Overall width	B1	mm	1265	
		Mast lowered height	H1	mm	2040	
		Mast extended height	H3	mm	4240	
		Overhead guard height	H2	mm	2125	
	Min. turning radius		R	mm	2050	2100
	Min. right angle stacking aisle width		RAXA	mm	3715	3755
Performance	No load/ full load	Travel speed		km/h	14/12	
		Lifting speed		mm/sec	420/310	420/300
	Max. grade ability			%	10	
	Service weight			kg	4160	4360
	Max. pull force(full load)			KN	8	
Chassis	Tyre	Front		mm	23×9-10-16PR	
		Rear		mm	18×7-8-14PR	
	Tread	Front	B2	mm	1040	
		Rear	B3	mm	950	
	Wheelbase		Y	mm	1500	
	Ground clearance	Mast	M	mm	105/85	
		Frame	F	mm	140/120	
Power & Control	Battery	Voltage		V	48	
		Capacity		Ah	*630/700	
	Motor	Drive motor		KW/rpm	8/1300	
		Hydraulic motor		KW/rpm	15/2200	
	Controller				Italian SME AC Controller	

SPECIFICATION (CPD30)

General	Manufacturer				KION Baoli
	Model				CPD30
	Power type				Battery
	Rated capacity			kg	3000
	Load center			mm	500
Dimension	Lift height		H	mm	3000
	Free lift height		H4	mm	145
	Fork size		L×W×T	mm	1070×125×45
	Fork outside spread (Min./Max)		B4	mm	250/1100
	Mast tilt angle (forward/backward)		α/β	°	6/10
	Front overhang		X	mm	454
	Overall dimension	Length to fork face	L1	mm	2481
		Overall width	B1	mm	1265
		Mast lowered height	H1	mm	2040
		Mast extended height	H3	mm	4273
		Overhead guard	H2	mm	2125
	Min. turning radius		R	mm	2230
	Min. right angle stacking aisle width		RAXA	mm	3915
Performance	No load/ full load	Travel speed		km/h	13/12
		Lifting speed		mm/sec	380/250
	Max. grade ability			%	10
	Service weight			kg	4850
	Max. pull force(full load)			KN	10
Chassis	Tyre	Front		mm	23×9-10
		Rear		mm	18×7-8
	Tread	Front	B2	mm	1040
		Rear	B3	mm	980
	Wheelbase		Y	mm	1630
	Ground clearance	Mast	M	mm	105/85
		Frame	F	mm	140/120
Power & Control	Battery	Voltage		V	80
		Capacity		Ah	*500/600
	Motor	Drive motor		KW/rpm	10.2/1500
		Hydraulic motor		KW/rpm	10/2000
	Controller				GE separate excitation

SPECIFICATION (CPD30J)

General	Model				CPD30J
	Power type				Battery
	Rated capacity			kg	3000
	Load center			mm	500
Dimension	Lift height		H	mm	3000
	Free lift height		H4	mm	145
	Fork size		L×W×T	mm	1070×125×45
	Fork outside spread (Min./Max)		B4	mm	250/1100
	Mast tilt angle (forward/backward)		α/β	°	6/10
	Front overhang		X	mm	454
	Overall dimension	Length to fork face	L1	mm	2481
		Overall width	B1	mm	1265
		Mast lowered height	H1	mm	2040
		Mast extended height	H3	mm	4273
		Overhead guard height	H2	mm	2125
	Min. turning radius		R	mm	2230
	Min. right angle stacking aisle width		RAXA	mm	3915
Performance	No load/ full load	Travel speed		km/h	14.5/12
		Lifting speed		mm/sec	420/280
	Max. grade ability			%	10
	Self weight			kg	4850
	Max. pull force(full load)			KN	10
Chassis	Tyre	Front		mm	23×9-10
		Rear		mm	18×7-8
	Tread	Front	B2	mm	1040
		Rear	B3	mm	980
	Wheelbase		Y	mm	1630
	Ground clearance	Mast	M	mm	105/85
		Frame	F	mm	140/120
Power & Control	Battery	Voltage		V	80
		Capacity		Ah	*500/600
	Motor	Drive motor		KW/rpm	13/1500
		Hydraulic motor		KW/rpm	22/2100
	Controller				Italian SME AC Controller

Ⅱ. Safety instruction, operation & maintenance of electric forklift truck

It is important for drivers and managers to remember the principle of “first safety” and ensure the safety operation as the description of Operation & Service Manual. Please read this manual thoroughly. This will give you a complete understanding of Baoli forklifts and permit you to operate them correctly and safely.

2.1 Shipping, loading, unloading and slinging of forklift truck

2.1.1 Ship the forklift truck

(1) Apply the parking brake when shipping the forklift trucks by container or freight car.

(2) Fix the mast and the balance weight with steel wire and use jacks to prevent the forklift trucks from moving in the cabin.

(3) Pay attention to the overall length, width, height when loading, unloading and shipping and conforming the regulations is necessary.

(4) Single transporting if necessary after disassembling the mast and balance weight.

2.1.2 Load and unload the forklift truck

(1) Use the plate with enough length, width and strength.

(2) Pull the parking brake and use jacks to stop the wheel.

(3) Fasten the plate on the center of the cabin, there must be no grease on the plate.

(4) The left and right height of the plate must be equal to make the loading and unloading smooth.

(5) Don’t change the direction on the plate to prevent the danger.

(6) Reverse the truck slowly when loading the forklift on the freight car.

2.1.3 Sling the forklift truck

(1) Only the specially trained personnel can sling the truck.

(2) Sling points should be always at the positions specified in sling index plate.

(3) The slinging cable must be enough to hang the forklift truck.

(4) Disassembled parts of forklift truck must be slinged in appointed position.

Model	Mast		Balance weight	
	Dimension (mm)	Weight(kg)	Dimension(mm)	Weight(kg)
1.5T	1885×1094×485	530	1065×280×926.5	712
2.0T	1890×1040×470	750	1135×365×936.5	860
2.5T	1890×1040×470	750	1135×397×936.5	1030
3.0T	1935×1100×470	860	1135×397×936.5	1200

Notice:

Dismantling and slinging the component shall not be performed without the approval of our company. Under special circumstances, the appointed sling position should be used. The balance weight, fork and mast of the truck all have their appointed hang up position. The above – mentioned weight is only for a reference, which may be adjusted because of configuration difference or technology optimization.

2.2 Storage of forklift truck

(1) Lower the mast to the lowest position.

(2) Turn off the key switch, place the levers in the neutral position. Disconnect the power plug.

(3) Apply the parking brake.

(4) Wedge up the front and rear wheels.

(5) If the truck leaves unused for long time, build the wheels on stilts. Charge the battery once a month.

2.3 Precautions before operation

(1) Check all the instruments.

(2) Check the tyre inflation pressure.

(3) Check all the levers and pedals.

(4) Check if the voltage of the battery is in normal limit. Check if the density and level of the electrolyte is appropriate.

(5) Check for all the terminals and plugs.

(6) Check hydraulic oil, electrolyte and brake fluid for leakage.

(7) Check all connectors and fasteners for looseness.

(8) Check if all the lamps and signals are in normal state.

(9) Release the parking lever.

(10) Make trial of the mast for lifting and lowering, forward and backward tilting, and the truck for steering and braking.

(11) The contamination level of the hydraulic oil should be lower than grade 12.

2.4 Information of safety operation

(1) The forklift truck belongs to special equipment. Only trained and authorized operator shall be permitted to operate and service the truck.

(2) Wear the safety guards, such as clothing, shoes, helmet and gloves while operating the truck.

(3) When the distance between the gravity center of loads and the fork arms is 500mm, the max. capacity is the rated capacity. When the distance exceeds 500mm, the capacity shall be based on the load chart. Handle only loads within the allowable capacity of the truck. The goods handled should not exceed the rated capacity of the truck.

(4) Operate your truck on a hard ground. Operate on other ground, the lift capacity and travel speed must be decreased. Wipe off the oil and grease from the floor.

(5) Daily maintenance services should be done before or after using the truck. Anytime you find that the truck is not functioning normally, operation of the truck should be halted and check or repair at once.

(6) When operate one lever, pay attention not to shift another lever. Don’t operate the lever at any position out of the driver seat.

(7) Don’t handle unfixed or loose goods. Be careful to handle bulky goods. To prevent the collapse of stacked goods, tighten them. Forbid loading loose or little volume goods without tray.

(8) If the truck is equipped with a load-handling attachment, its usage sphere will be wider, but its allowable load and stability is reduced. The attachment and special device is not to be diverted to any other purpose. It’s very dangerous to rebuild the attachment. Please read the additional instruction we supplied and operate the truck following it strictly.

(9) Fork can not be used to pull out any embedded goods, if necessary, the pulling force should be estimated.

(10) Insert forks deeply under goods. Adjust fork’s distance according to the capacity of goods. Make the loads distribute on the forks evenly to avoid tilt and slide of goods. Don’t pick the loads with one fork tip.

(11) When handling bulky loads which restrict your vision, operate the forklift truck in reverse or have a guide.

(12) When loading the goods, lower the forks to the floor. After the fork inserting stacked goods, the fork arms should be in contact with the goods. Drive the truck with mast tilting back for stabilizing the load. Before traveling, raise the forks for 200mm-300mm from the floor.

(13) While mast’s lifting and lowering, anyone is absolutely prohibited from standing under the lifting rack or being lifted with forks. Never permit anyone to stand or walk under upraised forks.

(14) When loading and unloading goods, keep the mast vertical and the truck is in braking state.

(15) Because the rear wheels steer your truck, the rear end swings wide when you turn. Use care in aisles and other tight places.

(16) During operation, pay attention to the performance and condition of machinery, hydraulic, electric and speed adjuster.

(17) Connect the power source, turn on the key switch, select the position of directional switch, check the truck for normal operation by turning steering wheel, depress the accelerator pedal softly to keep proper acceleration.

(18) When the voltage drops below 43.2V (1-2.5t forklift truck) or below 72V (3t forklift truck) during operation with load, it's necessary to charge the battery or replace a full charged battery at once.

(19) The shift distance of control valve lever can control the speed of the lifting or descending of the goods. When the goods are lifted or descended, the initial speed shouldn't be too fast in either case.

(20) It is necessary to brake before tilting the mast forward or backward. It's also necessary to tilt forward slowly so as to prevent the goods from slipping off the rack.

(21) Tilt the mast of the high lift forklift truck as backward as possible when the truck works. Use minimum forward and backward tilt when loading and unloading. It is dangerous to travel or turn at high levels.

(22)On the high lift forklift truck with lifting height more than 3m, it is noted that the goods on it will fall down, take the protection measures if necessary.

(23) The overhead guard is main part which is strong enough to meet safety standard, and protect the operator from falling materials. It's very dangerous to dismantle or rebuild the overhead guard, because these conditions could lead to an accident.

(24) A load backrest shall be used as protection against back falling objects on the fork. It's very dangerous to dismantle or rebuild the load backrest, because these conditions could lead to an accident.

(25) Load should be contacting with a load backrest. Do not handle the load which exceeds height of a backrest. When loads go over the load backrest, there is a danger of load's falling against operator.

(26) The stability of the truck is influenced by the wind-force during outside operation, you must notice specially.

(27) Be careful and slowly driving over a dock board or bridge-plate.

(28) When travel with load, don't tilt mast forward, don't do handling. Don't brake abruptly to prevent the bulk from slipping off the forks.

(29) Drive the forklift truck to the stacked goods at a low speed, at the same time, pay much attention to sharp and hard objects near the goods, otherwise, the tyres will be pricked.

(30) Pay attention to pedestrian, obstacle and bumpy road when driving. Pay attention to the clearance over the forklift truck.

(31) Keep your head, hands, arms, feet and legs within the confines of the operator's compartment. Never allow other persons on the forklift truck.

(32) Crossing, turning and tilting shall not be taken on a slope. It could cause turning sideways of the truck, it is very dangerous. On a slope, drive the truck with load forward to ascend and backward to descend. When the truck goes down on a slope, drive slowly with the brakes on. Make sure that the engine should not be shut down when traveling on a slope.

(33) The starting, turning, driving, braking and stopping of the truck should be done smoothly. When steering on the humid or slippery road, the truck should be decelerated.

(34) Operate the controls smoothly, don't jerk the steering wheel. Avoid sudden stop, acceleration, stop or turn. In the case of improper operation, the truck will turn over. In case of this, the driver must keep calm, don't jump off the truck. The driver must hold tightly the control wheel with two hands; meanwhile, his body must incline in opposite direction of truck's turning over.

(35) The unloaded forklift truck with attachment should be operated as a loaded truck.

(36) Check the chains periodically to make sure that good lubrication condition exists between the chain elements, the degree of tightness between left and right chain is identical. If the variation value of the chain pitch exceeds 2% standard value, it indicates that the chains have been worn excessively, replace it immediately.

(37) Before the truck decelerating and stopping, don't put it into reverse gear, so as to ensure the safety of loading.

(38) Don't make a sudden braking when the truck traveling with loads.

(39) When leaving, lower the forks on the ground and let the shift lever to neutral, cut down the electric supply. If parking on a slope is unavoidable, apply the parking brake and

block the wheels.

(40) When tilting the mast forward or backward to the limit or lifting the fork to the maximum height, return the directional lever to neutral.

(41) Don't adjust the control valve and relief valve at will to prevent the damage of hydraulic system and its components because of excessive pressure passing them.

(42) Tyres should be inflated according to the pressure valve specified in the marking plate of "Tyre Pressure".

(43) According to the Directive 2000/14/EC and based on EN12053 standard，when the forklift truck during the test of lifting, traveling and idling, but the noise of the forklift truck may fluctuate due to different operation and the influence of the external environment.

(44) The driver feels the vibration of the forklift truck when operating and traveling the forklift truck. According to ISO3691 and based on EN 13059 standard. The vibration of the forklift truck fluctuates according to environment condition. In normal working condition, the vertical direction acceleration mean value from the seat to the operator is referred to the following table. But the vibration frequency felt by the driver depends on the working condition (etc. road, operation method), so the actual vibration frequency must be determined according to environment condition when necessary.

Model	The noise pressure level at the operator's position	The vertical direction acceleration mean value from the seat to the operator
	EN 12053	EN 13059
CPD10-15	69.1dB(A)	1.10(m/s^2)
CPD20-25	78.3dB(A)	1.08(m/s^2)
CPD30	63.9dB(A)	1.11(m/s^2)

(45) Users select "Lengthening fork" in order to carry widening loads. Pay much attention not to overload and observe the allowable load and the capacity chart on the truck. Careful driving should be taken when traveling and turning.

(46) When operating the machine, observe and follow all markings on the machine. The marking plates must be replaced if lost or damaged.

(47) The forklift truck must be used under the following environment: below an elevation of 1000 meters and temperature between -15℃and 35℃, relative humidity is 95%. Careful operation must observe under other adverse circumstances.

(48) To prevent the fire, accident or other unpredictable event, prepare the fire extinguisher in advance and operate it according to the instructions.

(49) You can't change or add other working equipments on the truck without our company's permit, or the rated capacity and safety operation will be affected.

(50) Keep safety when serving on high position.

2.5 Periodic servicing and maintenance of electric forklift truck

During operating the forklift truck, it is necessary to operate carefully, service and maintenance periodically to make the forklift truck keep in good condition.

2.5.1 Handling a new forklift

The performance and service life of forklift depends heavily upon the way you handle it during the break-in period. Drive with special caution while becoming familiar with a new forklift. Retighten the fasteners after the replacing.

(1) Replace gear oil in the differential and reducer after the new forklift working for 100 hours. Retighten the fasteners after replacing.

(2) Readjust the clearance of the driving and driven gear in the reducer after the new forklift working for 200 hours.

2.5.2 Cautions for starting

(1) The amount of hydraulic oil: The oil level should be at the middle position between the upper and lower scale marks of oil level meter.

(2) Check if any leak or damage found on the piping joints, pumps and valves.

(3) Check the traveling brakes: The free stroke of brake pedal is 20-30 mm; when achieving effective brake, the clearance between the front floor and the pedal should be more than 20mm.

(4) Check the parking brake: The unload truck can park on stated ramp, when the parking lever is pulled to the bottom.

(5) Check the meters, lamps, connectors, switches and electric circuit if they are running properly.

2.5.3 Charging the battery

(1) Please refer to Manual of Battery about the initial charging and normal charging of the battery.

(2) When the truck working with load, the voltage of the battery reduces to 43.2V(1-2.5t forklift truck), or to 72V(3t forklift truck), or the voltage of each cell drops below 1.80V, the warner of battery capacity flashes, stop the truck until charge the battery or replace a full charged battery.

(3) Measure the density, level and temperature of the electrolyte.

(4) After the battery is used, it should be charged immediately, the time left idle of the battery must be less than 24 hours. You should try to prevent them from over being discharged or over charged. Either way will affect their service time and functions.

Refer to Manual of Battery about charging method and maintenance.

2.5.4 Essentials of servicing

(1) Some critical components must be replaced according to demands periodically. Use genuine parts only.

(2) Use genuine or recommended oil only when replacing or adding.

(3) If any damage or fault is found, the matter should be reported to the manager. Only trained and authorized serviceman shall be permitted to service the truck. Do not operate the truck until the truck has been repaired completely.

(4) Maintain the motor, electric controller and battery according to their manuals.

(5) Check all plugs once a month.

(6) Don’t wash the truck with a water syringe. Outdoor using the truck in rainy day is forbidden.

(7) Clean the dust of photoelectric coupler of the hydraulic motor switch.

(8) Clean and dry the surface of the battery usually.

(9) Periodic maintenance must be done according to the following list after using the forklift truck.

No.	Item	Contents	Period	Remark
1	Bearing, steering wheel	Replace grease	1000	
2	Bearing, drive wheel	Replace grease	1000	
3	Steering link lever	Replace grease	1000	
4	Parking brake lever	Add grease	200	
5	Pin, foot brake	Add grease	200	
6	Drive axle body	Replace gear oil	2400	
7	Braking oil	Add	Whenever necessary	
8	Pin, tilting cylinder	Add lubricating grease	400	
9	King pin of knuckle	Replace grease	1000	
10	Hydraulic tank and filter	Clean	1000	
11	Hydraulic oil	Replace	1000	
12	Lift chain	Replace	3000	If damaged, Replace it.
13	H. P. hose	Replace	3000	
14	Switch, hydraulic motor	Clean photoelectric coupler	200	
15	Brush, traction motor	Check	1000	
16	Brush, hydraulic motor	Check	1000	
17	Brush, P.S. motor	Check	1000	

Notice:

When serving and checking the truck, do not use the mast or the load backrest instead of a ladder, these actions will lead to a dangerous condition unexpectedly.

2.5.5 Recommended oil and grease

Name	Brand or code		Amount			Remark
	Domestic	Overseas	1-1.5T	2-2.5T	3T	
Hydraulic oil	HM32#(winter) or HM46#(summer)	ISOVG30	26L	30L	32L	To the dipstick level
Gear oil	GL-5 85W/90	SAE85W/90	3L	6L	6L	To the oil level
Brake fluid	DOT3 Compound brake fluid		0.4L	0.4L	0.4L	
Lubricant grease	3# Lithium base grease (drop point 170)	JISK2220/2#	Right amount			

Adding oil, grease and coolant should follow relevant automobile standard. The waster of the forklift truck must be reclaimed obeying the relevant laws and regulations. Incorrect treatment will pollute water, soil and atmosphere etc. Wear a helmet, safety shoes and working clothes to avoid contacting with body when adding oil, grease and coolant.

2.6 Brief operation instruction

2.6.1 Operation device and meter

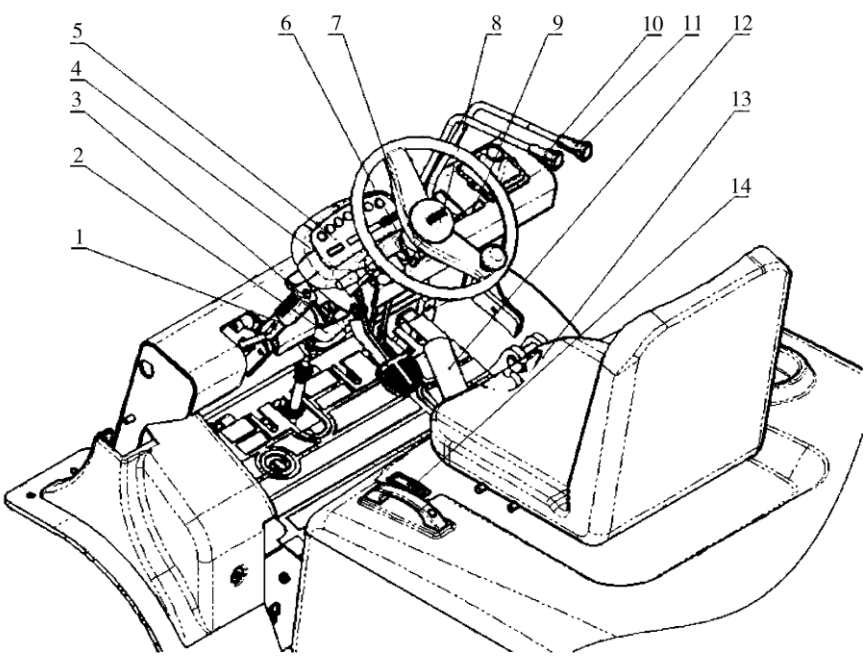

Function and working condition of operation device and meter:

No.	Name	Function	Working condition
1	Parking brake	Park the truck.	Pull the lever backward fully.
2	Adjust lever, hand wheel	Adjust hand wheel's angle.	
3	Foot brake pedal	Brake the truck.	Depress the pedal to brake.
4	Shift lever	Change traveling direction.	Pull the lever forward, the truck travels forward.
5	Meter panel	Refer to Chapter Electric System in this manual.	
6	Key switch	Control electric system.	Connect the meter and power when turning right (shift I).
7	Lamps switch	Control head combination lamp,	Push or pull the double-shift switch when lighting.
8	Horn button	Control the horn.	The horn sounds when pressing the button.
9	Operating lever, turning lights	Indicate turning direction.	Pull operating lever when turning.
10	Operating lever, lift cylinder	Control lift cylinder.	Mast lifts when pulling backward, descends when pushing forward.
11	Operating lever, tilt cylinder	Operate tilt cylinder.	Tilt backward when pulling backward, it's forward oppositely.
12	Accelerator pedal	Control output voltage.	Press and accelerate.
13	Seat adjust handle	Adjust seat position.	
14	Lock, battery cover	Lock the battery cover	Press the rear button of battery cover to open the lock

2.6.2 Electric forklift truck with DC motor

(1) Start: Before starting, put the hand brake switch on the brake position, turn on the urgent power-down switch, pull the shift direction switch to neutral. If not, the safe circuit plays its part, then the forklift truck can't start.

Turn the start switch (electric lock) clockwise to shift Ito turn on the power, meter indicator and electric control circuit, release the hand brake switch.

Push the shift direction switch forward, press down the accelerator pedal, then the truck goes forward; if pull the direction switch backward, the reverse lamps light and the back-up buzzers sound. If having an operational error, the meter will show relevant error code, then reset the key switch to restart the forklift truck.

(2) Lamp switch: Pull shift Ⅰ, front and rear clearance lamps light. Pull shift Ⅱ, the head lamps light while the clearance lamps light too.

(3) Steering signal: Pull the steering lamp switch backward, the front and rear combination turning signals on the left side of the truck light; pull the turning lamp switch forward, the front and rear combination turning signals on the right side light.

(4) Brake signal: When braking, press down the brake pedal and turn on rear combination brake lamps (red) light.

(5) Reverse signal: When reversing the truck, pull the direction switch backward, then the travel motor reverses, rear combination reversing lamps (white) light and the back-up buzzers sound.

2.6.3 Electric forklift truck with AC motor

(1) Start: Before starting, put the hand brake switch on the brake position, the shift direction switch and seat switch on neutral, turn on the urgent power-down switch. If not, the safe circuit plays its part, and then the forklift truck can't start.

Turn the start switch clockwise to shift Ⅰto turn on the power, meter indicator and electric control circuit, release the hand brake switch.

Push the shift direction switch forward, press down the accelerator pedal, then the truck goes forward. If pull the direction switch backward, the reverse lamps light and the back-up buzzers sound. If having operational errors or others, the meter will show different error codes, some common features as follows:

If pressing down the accelerator pedal first, then turning on the direction switch, the meter will show code 64 expressing start error.

When turning on the key switch, meter shows error code 50, it expresses that the lift is in the state of start-up.

If the voltage of the battery is too low, the error code 12 will indicate.

When meter shows code 40, the lift sensor is wrong.

The common error code as 90, it shows failure steering sensor or the damaged or loosen sensor.

(2) Lamp switch: Pull shift Ⅰ, front and rear clearance lamps light; pull shift Ⅱ, the head lamps light while the clearance lamps light too.

(3) Steering signal: Pull the steering lamp switch backward, the front and rear

combination turning signals on the left side of the truck light; pull the steering lamp switch forward, the front and rear combination turning signals on the right light.

(4) Brake signal: When braking, press down the brake pedal to turn on the rear combination brake lamps (red).

(5) Reverse signal: When reversing, pull the direction switch backward, then the travel motor reverses, rear combination reversing lamps (white) light and the back-up buzzers sound.

(6) Press E/S/H or tortoise key on the right of the meter, the operating mode and speed will be adjusted too.

2.6.4 Maintenance of the control system

During using the electric forklift truck, it’s necessary to maintain the control system periodically.

(1) Check the contact terminal for wear status and contactor if works freely. Check the contact point every three months.

(2) Check foot pedal or micro-switch of levers. Measure the voltage drop between the contact terminals with multimeter to make sure there is no resistance between terminals. Make sure that the sound of turning on or off the micro-switch is slivery. The inspections of micro-switch should be done every three months.

(3) Check the connecting lines of primary circuit and make sure good insulation and connecting tightness of cables of the battery, controller and motor. Check the cables every three months.

(4) Check the spring of foot pedal or levers, make sure the usual deformation and smoothly resiling of spring. Do the inspections every three months.

(5) Check if the contactor terminal is working freely and not felted. Do the inspections every three months.

Notice:

The controller needn’t be repaired by users, so don’t open it for it may be damaged and lose guarantee. Make the controller clean and dry, inspect and clear the diagnosis history documents periodically. Never start the electric control of incorrectly-installing vehicles.

Only trained people can do periodic maintenance and replace the damage parts with

genuine parts of controller. Use the genuine parts produced by our company for ensuring the quality.

During inspection, if there is status that may bring damage or cause dangerous, inform the agent immediately, they will make a decision of the operating security.

2.6.5 Particular notice

(1) As a special vehicle, electric forklift trucks need professional maintenance and authorized persons' driving to suit for the working environment, or errors will be shown in electric system (including meter).

(2) As the power of the vehicle, battery is different from traditional energy; its actual capacity is related to working state and aging, different from rated capacity. According to the common performance, when capacity drops to 20% (one cell), charge the battery to prolong the life of battery.

(3) Using PC machine or hand-hold device connecting with control device, the users can enter into software setting interface with powerful functions within certain limits. You can measure and know the working condition of truck more intuitively, for example as follows: working current and rotating speed of (AC) drive motor; working current, rotating speed, working hours and trouble list of lift motor, and other system parameters.

2.7 Caution plates

The caution plates attached on the vehicle indicates the operating method and instructions. Before driving it, please be sure to read them thoroughly. If the caution plate drops, stick it again. When maintaining, check if the caution plate is complete and the writing is legible, if necessary, please replace them.

(1) Safety mark

People are forbidden to stand on or down the fork.

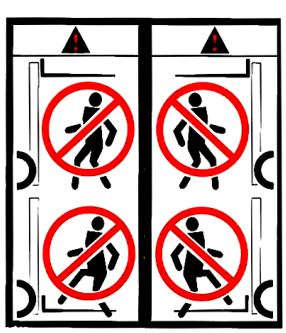

(2) General information when operating

(3) Nameplate of forklift truck

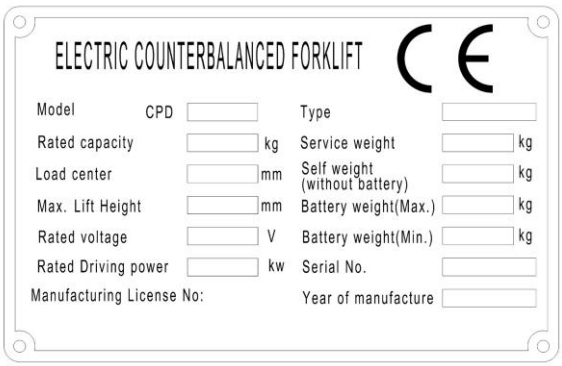

(4) Lubrication system

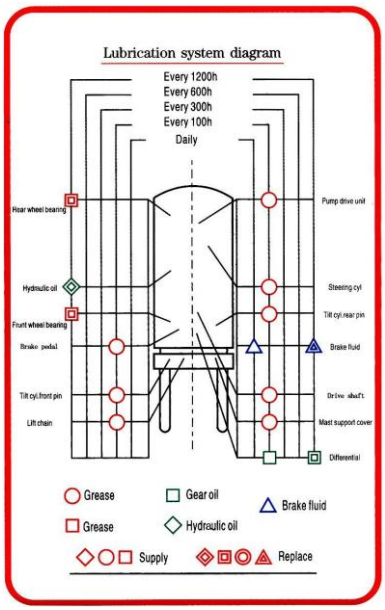

(5) Capacity chart

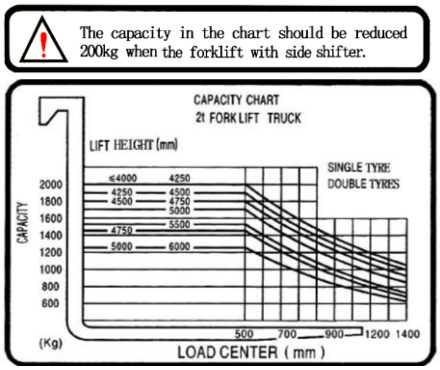

(6) Inspections before starting

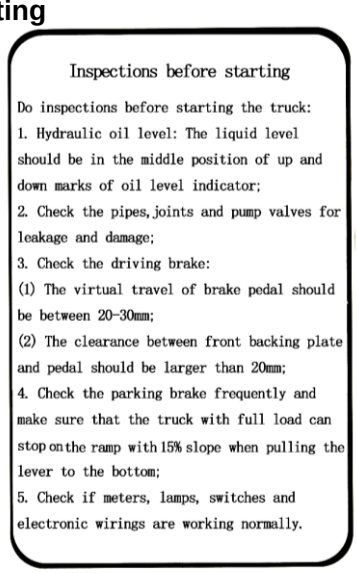

Inspections before starting

Do inspections before starting the truck:

1. Hydraulic oil level: The liquid level should be in the middle position of up and down marks of oil level indicator;
2. Check the pipes, joints and pump valves for leakage and damage;
3. Check the driving brake:
(1) The virtual travel of brake pedal should be between 20-30mm;
(2) The clearance between front backing plate and pedal should be larger than 20mm;
4. Check the parking brake frequently and make sure that the truck with full load can stop on the ramp with 15% slope when pulling the lever to the bottom;
5. Check if meters, lamps, switches and electronic wirings are working normally.

(7) Adjust parking brake

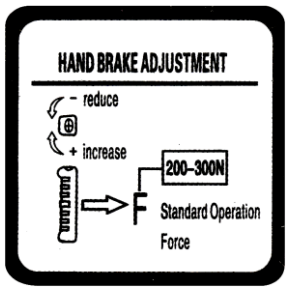

(8) Add hydraulic oil

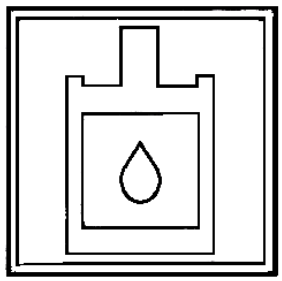

(9) Tyre safety decal (charging tyre)

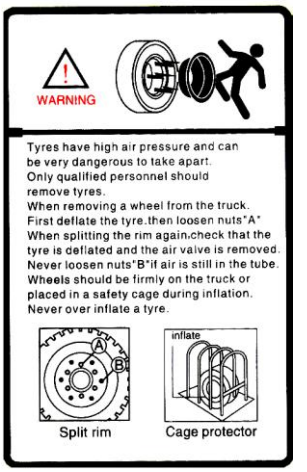

(10) Sling decal

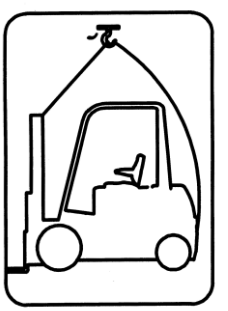

(11) Sling point indication

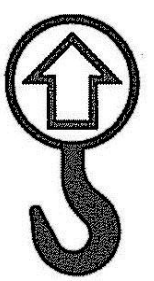

(12) Forbid entering into the rear space of the mast

(13) Tyre pressure decal (charging tyre)

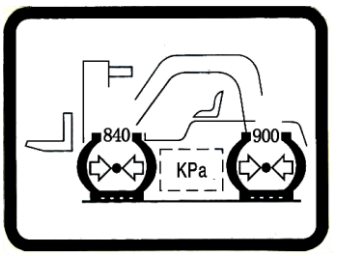

(14) Hand caution decal

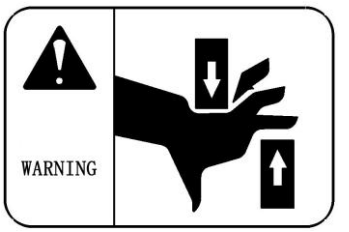

(15) Forbid conveying person

(16) Routine battery use

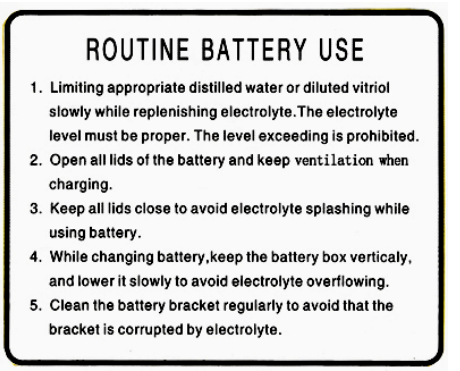

ROUTINE BATTERY USE

1. Limiting appropriate distilled water or diluted vitriol slowly while replenishing electrolyte.The electrolyte level must be proper. The level exceeding is prohibited.
2. Open all lids of the battery and keep ventilation when charging.
3. Keep all lids close to avoid electrolyte splashing while using battery.
4. While changing battery,keep the battery box verticaly, and lower it slowly to avoid electrolyte overflowing.
5. Clean the battery bracket regularly to avoid that the bracket is corrupted by electrolyte.

(17) Routine battery maintenance

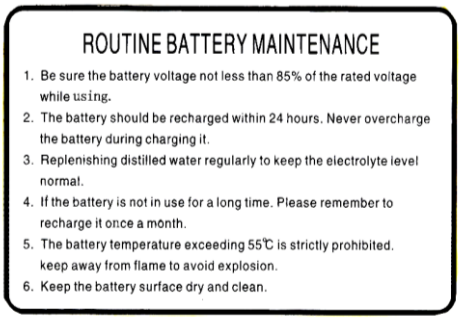
ROUTINE BATTERY MAINTENANCE

1. Be sure the battery voltage not less than 85% of the rated voltage while using.
2. The battery should be recharged within 24 hours. Never overcharge the battery during charging it.
3. Replenishing distilled water regularly to keep the electrolyte level normal.
4. If the battery is not in use for a long time. Please remember to recharge it once a month.
5. The battery temperature exceeding 55℃ is strictly prohibited. keep away from flame to avoid explosion.
6. Keep the battery surface dry and clean.

(18) Faulty starting decal (electric forklift truck witch DC motor)

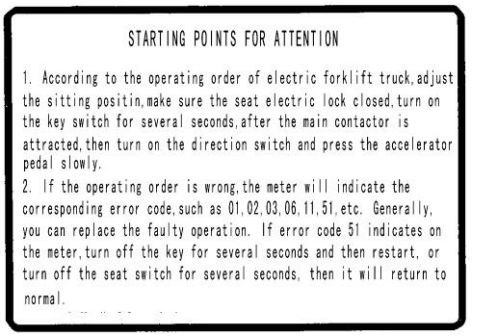
STARTING POINTS FOR ATTENTION

1. According to the operating order of electric forklift truck, adjust the sitting positin, make sure the seat electric lock closed, turn on the key switch for several seconds, after the main contactor is attracted, then turn on the direction switch and press the accelerator pedal slowly.
2. If the operating order is wrong, the meter will indicate the corresponding error code, such as 01, 02, 03, 06, 11, 51, etc. Generally, you can replace the faulty operation. If error code 51 indicates on the meter, turn off the key for several seconds and then restart, or turn off the seat switch for several seconds, then it will return to normal.

(19) Overturn caution decal

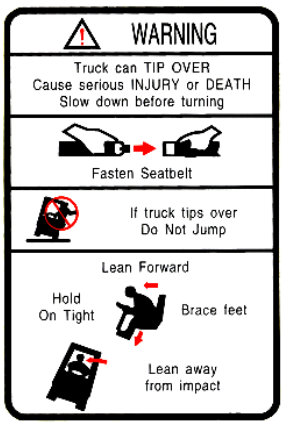

Ⅲ Construction, principle, adjustment and maintenance of electric forklift truck

1. Transmission system

1.1 General description

The transmission system consists of a gear box assembly, differential assembly and drive axle. With direct connection of the drive gear and the drive motor, the travel speed of the truck can be changed with rotating speed of the motor, and the travel direction can be changed with the rotation direction of the motor.

(1) Gear box and differential

Gear box is located between the drive axle and drive motor. This device is utilized to reduce rotating speed of output shaft of drive motor, increase the torque transmitted from output shaft and then transmit the torque to the differential. Refer to Fig1-1(1.5t), Fig1-2(2-3t).

The differential is fitted on the front portion of reducer housing with two end bearing seats, the front end of the differential is connected with the axle housing. The differential case is of splitting type, with two half-shaft gears and four planet gears. Refer to Fig1-3.

(2) Drive axle

The driving axle assembled on the front of frame mainly consists of housing, wheel-hubs and wheels. The axle housing is of integrally casting construction. The tyre with rim is fixed to the hub with stubs and nuts. The power is transmitted through the differential to the half-shafts, which drives the front wheels through the hubs. Each hub is fixed on the axle housing with conical roller bearing, so that the half-shafts bear only the torque transmitted to the hubs. There are oil seals inside the hub to prevent the entering of water and dust or leaking of oil. Refer to Fig1-4.

The type of front tyre and rim and the pressure of front tyre is indicated in following table.

Item \ Model		1t 1.5t	2t 2.5t		3t
Drive axle	Type	Fully floated half shaft			
	Tyre	6.50-10-10PR	7.00-12-12PR	23×9-10-16PR	23×9-10
	Rim	5.00F	5.00S	6.50F-10	6.50F-10
	Tyre pressure	0.78MPa	0.84MPa	0.8MPa	

Notice：For the difference of manufacturer′s standard, charge the tyre pressure according to the actual tyres.

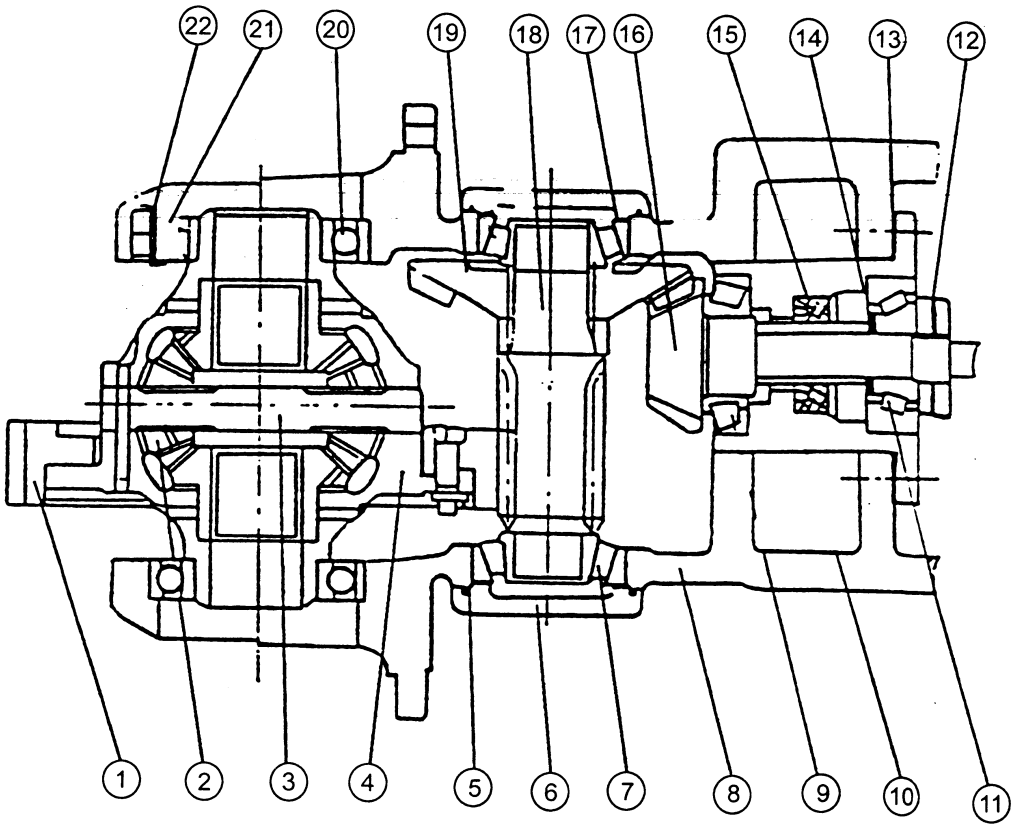

Fig.1-1 Gear box and differential (1-1.5t)

1.Ring gear	2.Planet gear	3.Gear shaft	4.Differential housing
5.O-ring	6.Cover	7.Bearing	8.Reducer housing
9.Bearing	10.Bearing seat	11.Bearing	12.Nut
13.Adjust shim	14.Adjust shim	15.Oil seal	16.Drivel gear & shaft
17.Shim	18.Gear shaft	19.Bevel gear	20.Bearing
21.Bearing seat	22.Lock washer		

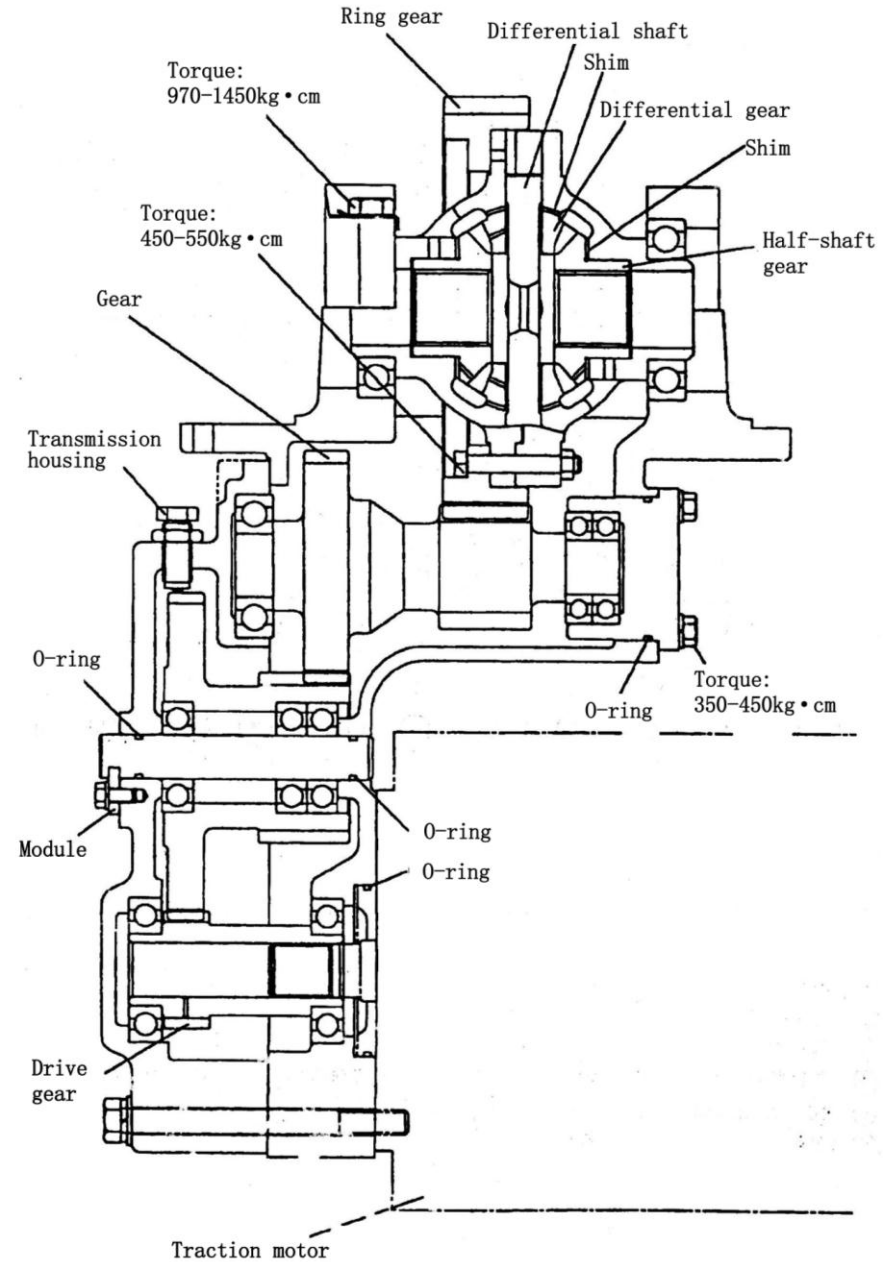

Fig.1-2 Gear box and differential (2-3t)

https://truckmanualshub.com/

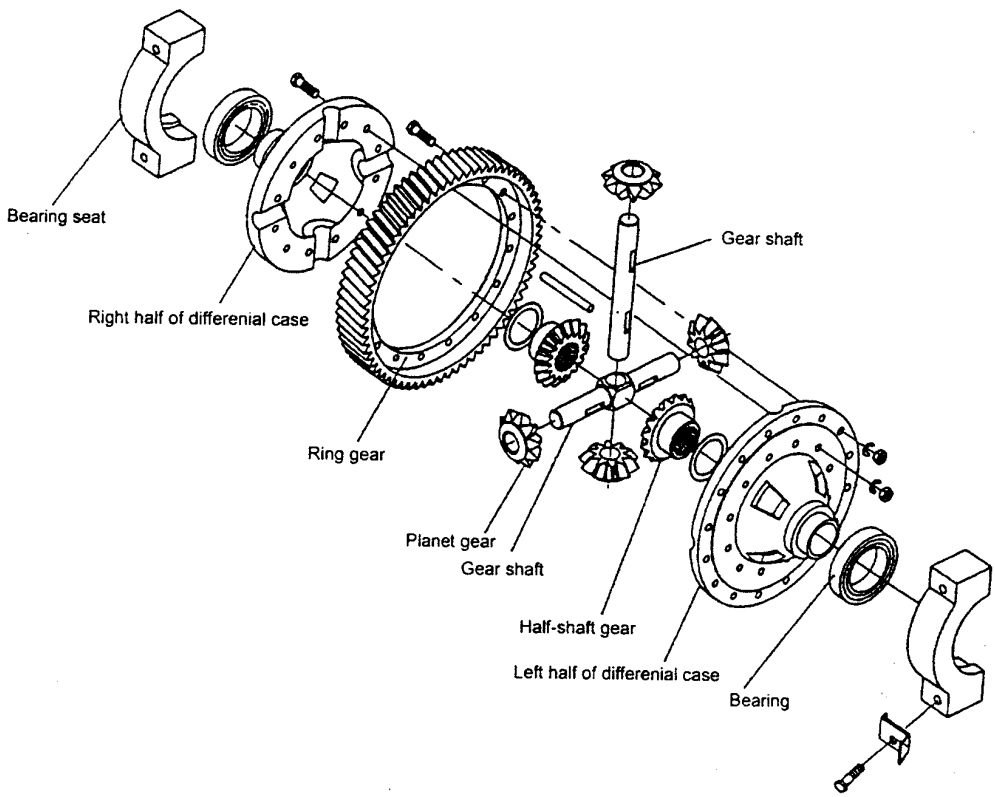

Fig.1-3 Differential

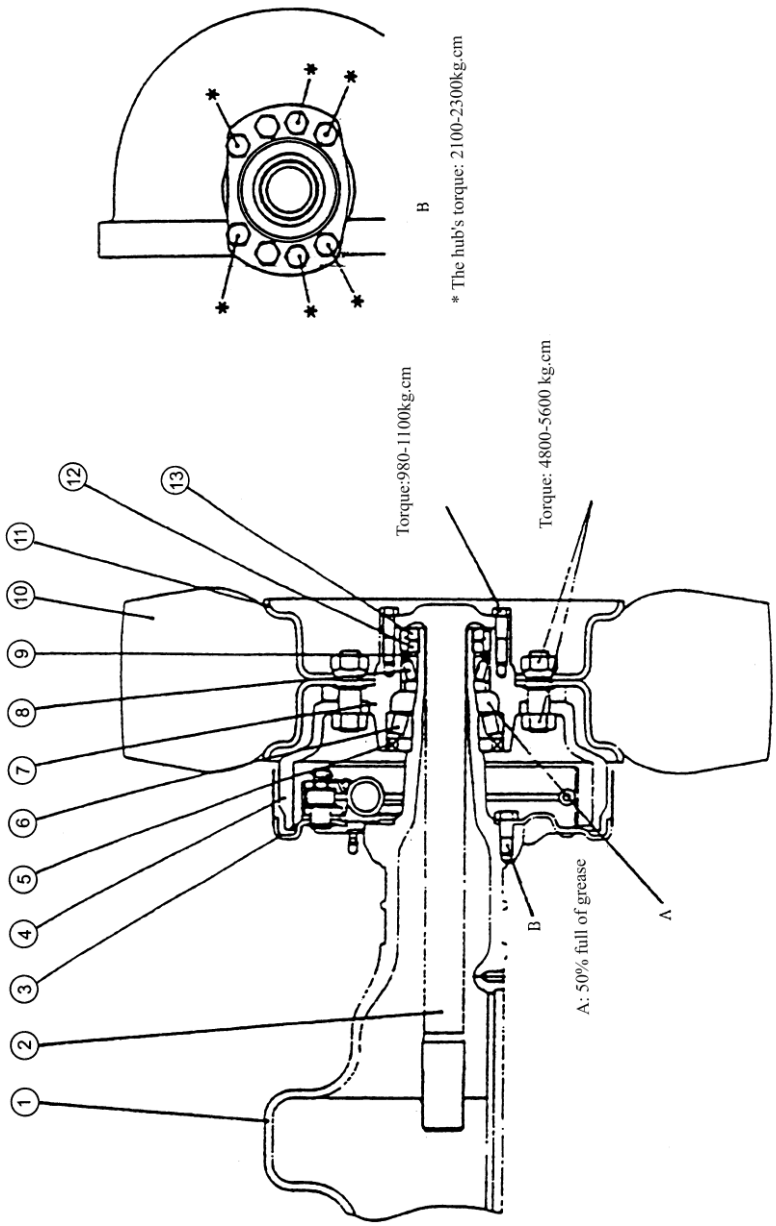

1. Housing
2. Half-shaft
3. Wheel brake
4. Brake drum
5. Oil seal
6. Taper bearing
7. Wheel hub
8. Taper bearing
9. Oil seal
10. Tyre
11. Rim
12. Hub nut
13. Lock nut

Fig.1-4 Drive axle

1.2 Assembly of wheel hub

(1) Fill the chamber of wheel hub with lithium base grease about 100 cc, then fit the hub on the shaft.

(2) Screw down the adjusting nut with a torque for about 1kg.m and then loosen it for 1/2 turn.

(3) Put the spring balance up on the bolt to measure the hubs' starting torque. When the starting torque arrives to the specified value, lock the nuts slowly.

Starting torque：5 to 15 kg.m

(4) Install the lock plates and lock nuts, after that pull the lock plates up to lock the bolts.

(5) Wheel assembly

Install the inner rim and gasket inside the outer rim and assemble the outer rim and inner rim. Pay attention to the following points:

(a) Put the air valve rod in the notch of the rim and make it face outside.

(b) Make the tops of the rim mounting bolts face outside.

(c) Don't stand near the tyre when inflating air.

(d) When the tyre pressure reaches 98KPa (1kgf/cm^2), knock the tyre lightly to make the inner tyre and gasket into the rim.

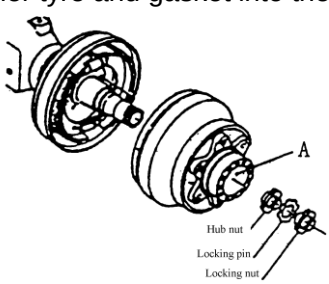

Fig.1-5 Fill grease

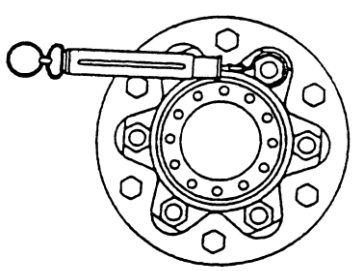

Fig.1-6 Measure starting torque

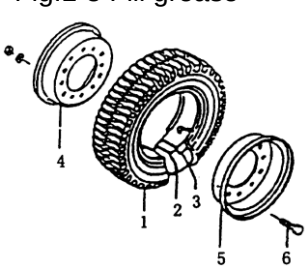

Fig.1-7 Wheel assembly

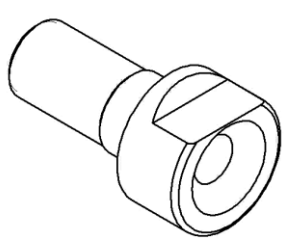

Rim bolt construction

1. Tyre	2. Air valve	3.Bushing
4. Inner rim	5.Outer rim	6.Rim bolt

2. Brake system

2.1 General description

The brake system is the front two-wheel braking interior extended hydraulic type consisting of a master cylinder, wheel brakes and brake pedal.

2.1.1 Brake pedal

The structure of the brake pedal which is assembled on meter rack with bracket is indicated in Fig.2-1.

With the push rod of mast cylinder, the pedal converts the force acting on pedal to brake oil pressure force.

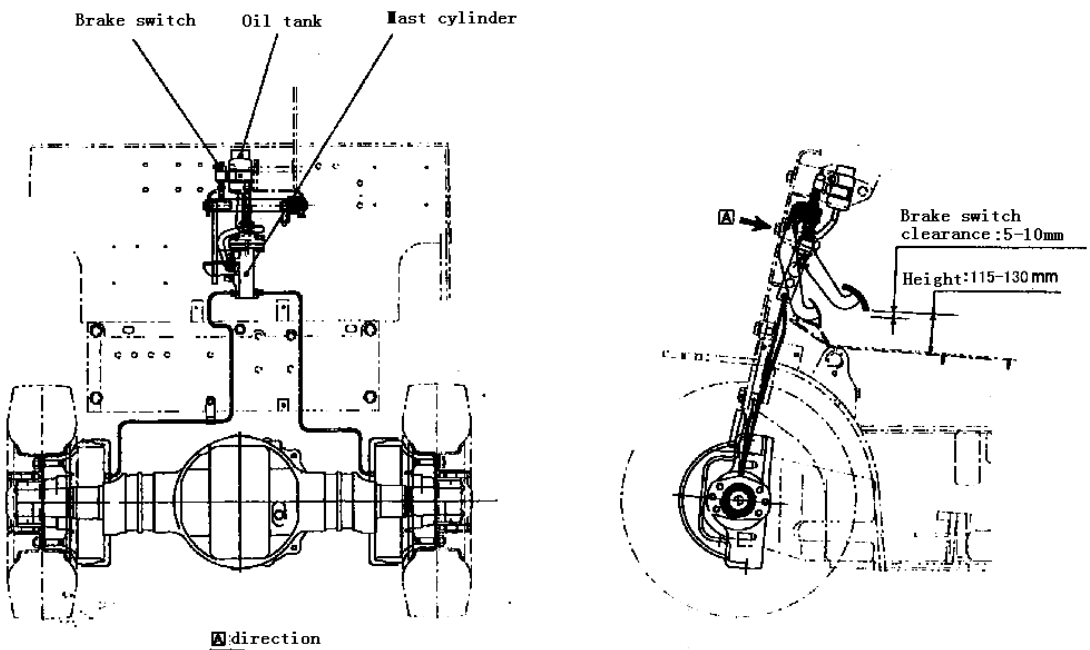

Fig.2-1 Brake pedal

2.1.2 Master cylinder

The cylinder contains a valve seat, a check valve, a return spring, primary cup, piston and secondary cup, which are all kept in place with a stop washer and a stop wire. The exterior of the cylinder is protected from dust by means of a rubber dust cover. The piston is actuated through the push rod by operation of the brake pedal. As the brake pedal is pressed, the push rod pushes the piston forwards. The brake fluid in the cylinder flows

back to the reserve tank through the return port until primary cup blocks up the return port. After the primary cup passes through the return port, the brake fluid in the cylinder is pressurized and opens the check valve, flowing through the brake pipeline to the operating cylinder. Thus, each operating cylinder piston is forced outwards. This brings the friction pieces on the brake shoes come into contact with the brake drum and slows or stops the truck. Meanwhile, the back cavity of the piston is filled with brake fluid led through the return port and inlet port. When the brake pedal is released, the piston is forced back by the return spring. At the same time, the brake fluid in each operating cylinder is pressurized by the return spring, returning into the master cylinder through the check valve. With the piston in its original position, the brake fluid in the master cylinder flows into the reserve tank through the return port. The brake fluid in the brake pipelines and operating master has a residual pressure proportioned to the set pressure of the check valve, which makes each operating cylinder piston cup securely seated to prevent oil leakage and eliminates a possibility of air locking when the truck is sharply braked.

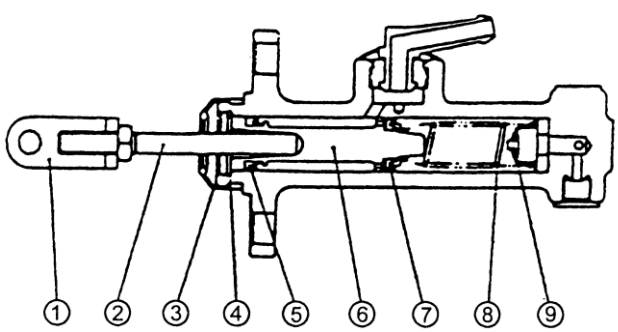

1. Link rod
2. Push rod
3. Dust cover
4. Snap ring
5. Secondary cup
6. Piston
7. Primary cup
8. Spring
9. Check valve

Fig.2-2 Master cylinder

2.1.3 Wheel brake

Mounted on each side of the drive axle, the wheel brake is the internal expansion hydraulic type consisting of two brake shoes, operating cylinder and adjuster.

The brake shoe, one end of it being connected to the anchor pin and the other to the adjuster, is stressed on parking brake plate by the spring and spring pull rod. The primary shoe is provided with the parking pull rod while the secondary shoe with the adjuster lever of the clearance self-adjuster. See Fig2-3, 2-4, 2-5.

(1) The operation of wheel brake is as follows:

The primary and secondary shoes are respectively forced by a force equaled in value and contrary in direction, by operation of the operating cylinder to bring that the friction piece being in contact with the brake drum. The primary shoe forces the adjuster with the aid of friction force between the friction piece and the drum. Due to this, the adjuster pushes the secondary shoe by larger force than that offered by operation of the operating cylinder. The secondary shoe upper end is forced strongly against the anchor pin, providing large braking force. See Fig. 2-3.

On the other hand, the braking operation in the truck's reverse travel is performed in reverse order, but the braking force is the same as that being in the case of the truck's forward travel. See Fig.2-4.

(2) Parking brake

Built in the wheel brake, the parking brake device consists of pull rod and push rod.

Assembled on the side of primary brake shoe by pin, the operation of the pull rod transmits to the side of secondary brake shoe through the push rod. See Fig2-5.

(3) Clearance self-adjuster

The clearance self-adjuster keeps appropriate clearance between the friction piece and brake drum. This adjuster, however, actuates only when the truck is braked in reverse travel. Its structure refers to Fig.2-6.

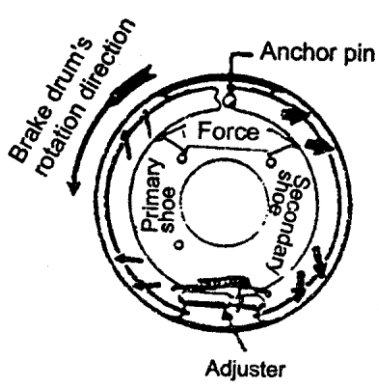

Fig.2-3 Braking operation in forward travel

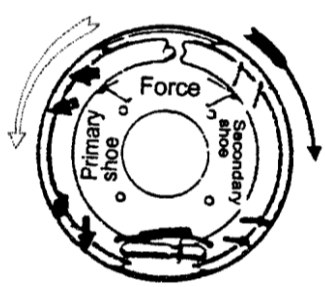

Fig.2-4 Braking operation in reverse travel

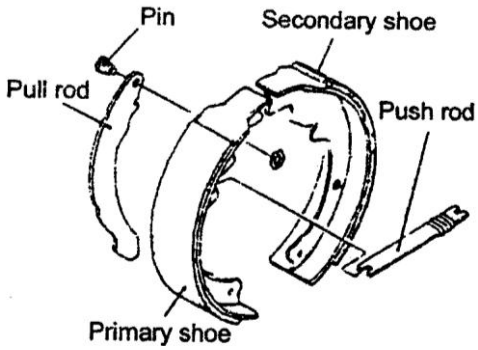

Fig.2-5 Parking brake device

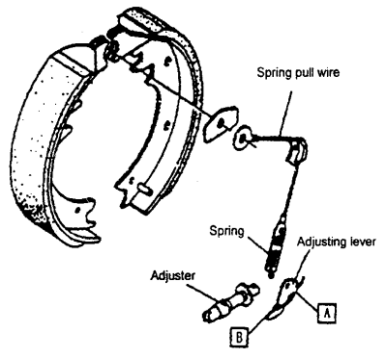

Fig.2-6 Clearance self-adjuster

▲Motion of clearance self-adjuster

When the brake pedal is pressed in reverse travel, the brake shoes are expanded, as a result, the primary and secondary shoes come into contact with the brake drum and rotate together. This brings that the brake pull rod turns right round point A, then point B is lifted. On the other hand, as the brake is released, the lever turns left actuated by the spring, point B descends. The descending distance of point B becomes further with enlarging of clearance between friction pieces and brake drum. This cause adjusts lever get long and clearance decrease. See Fig.2-6, Fig2-7.

Range of adjustable clearance:

Model	1.0-1.5t	2.0-3t
Clearance	0.35-0.55mm	0.40-0.45mm

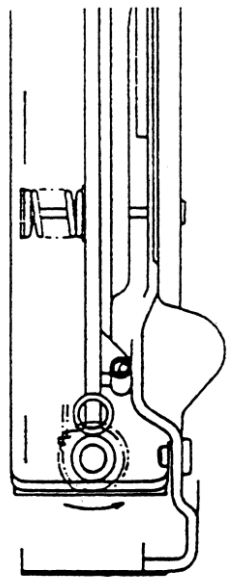

Fig2-7 Clearance self-adjuster

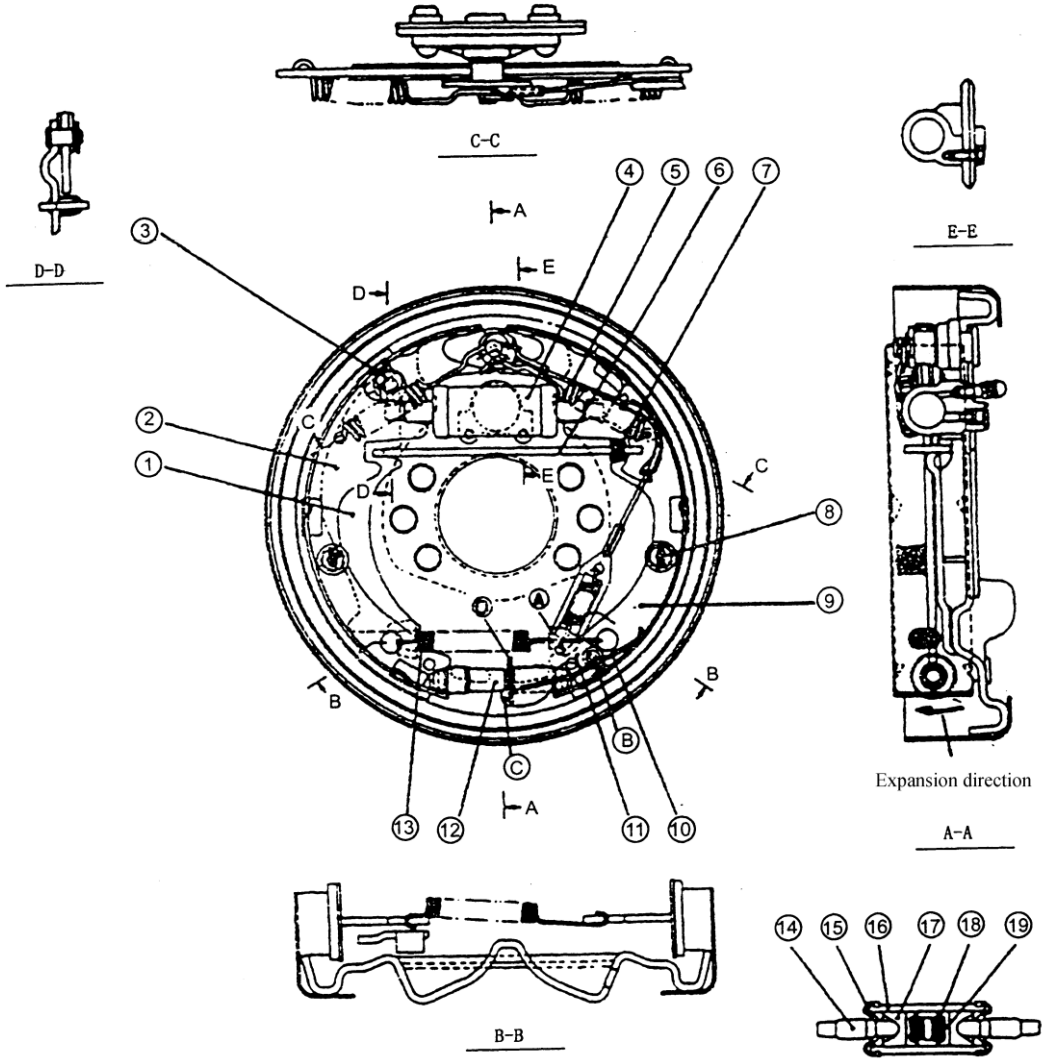

Fig.2-8 Wheel brake (1-1.5t)

1	Parking pull rod	8	Pressure spring	15	Dust ring
2	Primary brake shoe	9	Secondary brake shoe	16	Cylinder body
3	E-retainer	10	Spring	17	Piston
4	Operating cylinder	11	Ratchet pawl	18	Spring
5	Return spring	12	Clearance self-adjuster	19	Cup
6	Parking push rod	13	Spring		
7	Spring	14	Push rod		

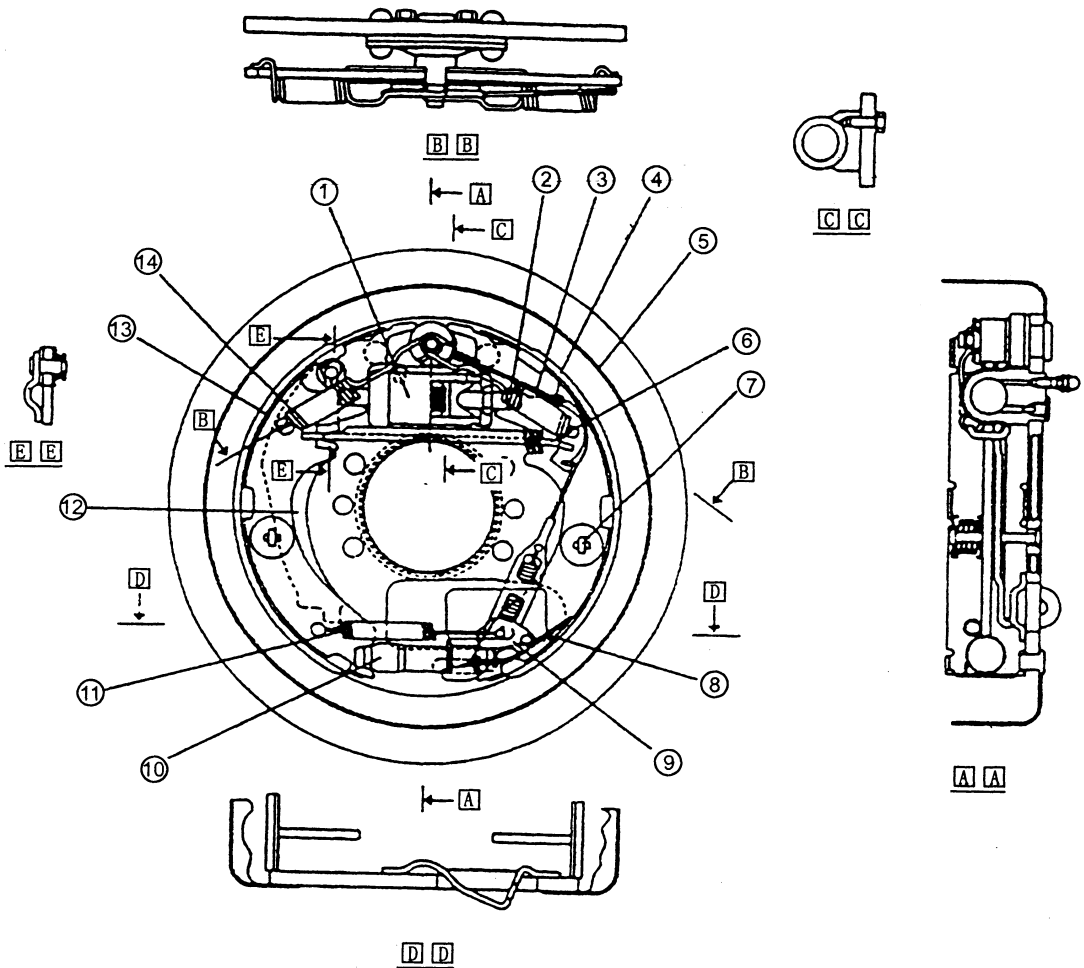

Fig.2-9 Wheel brake (2-3t)

1	Operating cylinder	6	Parking push rod	11	Spring
2	Spring	7	Pressure spring	12	Parking pull rod
3	Push rod	8	Spring	13	Primary brake shoe
4	Secondary brake shoe	9	Ratchet pawl	14	Return spring
5	Backing plate	10	Clearance self-adjuster		

2.1.4 Parking brake control device

The parking brake lever is of a cam type. The brake force can be adjusted with the adjuster on the end of the brake lever. Brake force adjustment:

When you turn the adjuster clockwise, the force increases, otherwise, when you turn the adjuster counterclockwise, the force decreases. See Fig. 2-10. Pull force: 15 to 30 kg.

▲Pull force adjustment of control lever (Fig. 2-10)

(1) Position of releasing the brake.

(2) Pull the lever (point B) with 15-30Kg force, it can be pulled to diagrammatic position. When the force is great, the point A turns to right, on the contrary turns to left.

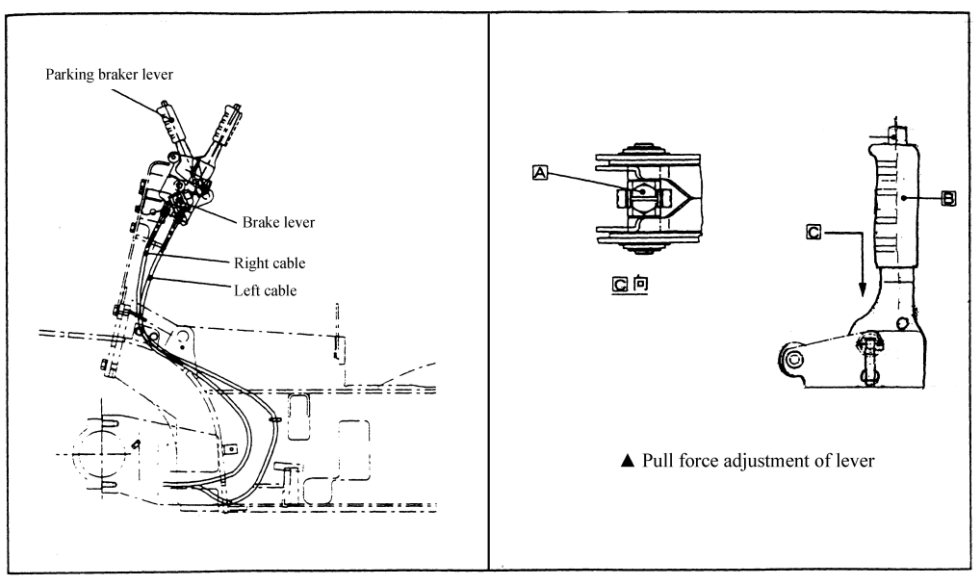

Fig 2-10 Parking brake

▲Adjustment of switch (Fig.2-11)

(1) Loose two mounted bolts.

(2) Pull the parking brake lever.

(3) Mount the roller on the bracket of control lever, after hearing the sound of motion, press for 1mm and tighten it.

(4) Release the parking brake and pull the control lever again, make sure the switch is “ON”.

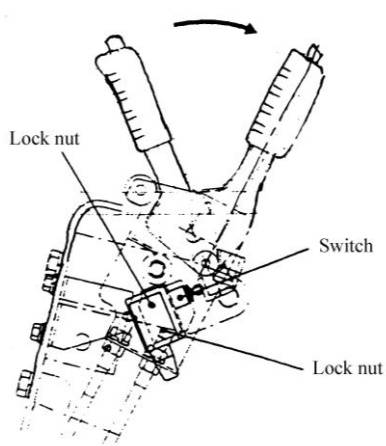

Fig.2-11 Parking brake lever

2.2 Disassembly, assembly and adjustment of wheel brake

This paragraph covers the disassembly, assembly and adjustment of the wheel brake, the adjusting method of brake pedal, when the wheel and wheel hub is disassembled. The description here is mainly for the brake of 3t forklift truck, the other forklift trucks are similar in maintenance in general except the structure of adjuster.

2.2.1 Disassembly of wheel brake

(1) Remove the hold-down spring of secondary shoe. Remove the anchor pin, adjust lever, adjusting device and spring. See Fig.2-12.

(2) Remove return springs of two shoes. See Fig.2-13.

(3) Remove three hold-down springs of primary brake shoe. See Fig. 2-14.

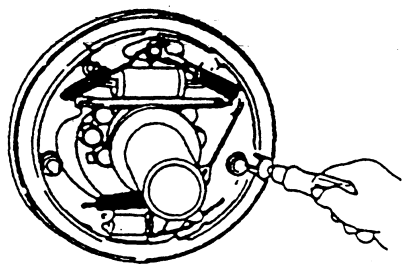

Fig.2-12

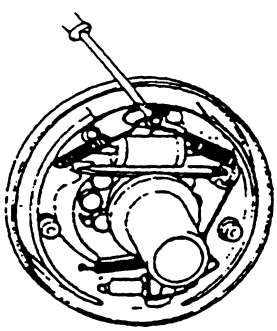

Fig.2-13

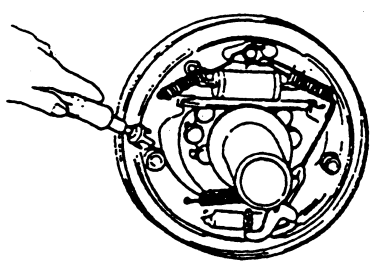

Fig.2-14

(4) Remove the primary and secondary shoes. At the same time, remove the adjuster and adjuster spring. See Fig. 2-15.

(5) Remove the brake line from the operating cylinder, then remove the mounting bolts of operating cylinder and detach the operating cylinder from the backing plate of wheel brake. See Fig. 2-16.

(6) Remove the E-retainer for securing the parking brake cable to the backing plate. Remove the backing plate mounting bolts and detach the backing plate from the drive axle.

See Fig. 2-17.

(7) Disassembly of operating cylinder: Remove the dust ring and push the piston

assembly out of the operating cylinder. See Fig.2-18.

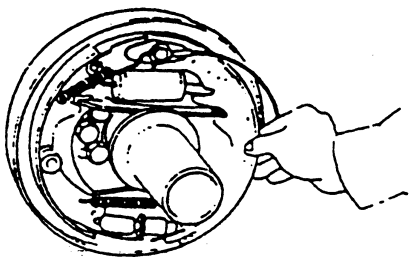

Fig.2-15

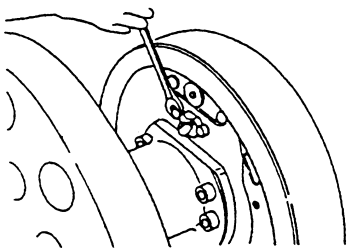

Fig.2-16

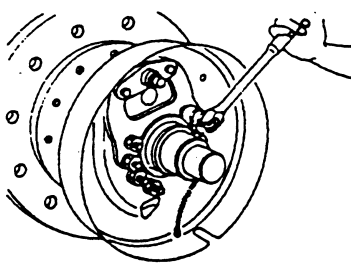

Fig.2-17

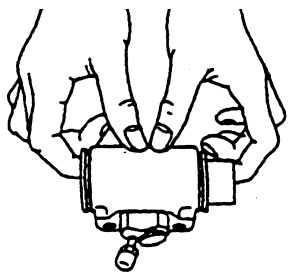

Fig.2-18

2.2.2 Inspection of wheel brake

Inspect all parts to make sure if there's any worn or damaged part. If necessary, repair or replace with new one.

(1) Check the inner surface of operating cylinder and the periphery surface of the piston for rusting. Then, measure the clearance between the piston and pump body. (Fig.2-19)

Specified clearance: 0.03-0.10mm

Maximum clearance: 0.15mm

(2)Visually check the piston cup for damage or deformation. If unsatisfactory, replace with new one.

(3) Check the free length of the spring of operating cylinder. If unsatisfactory, replace it.

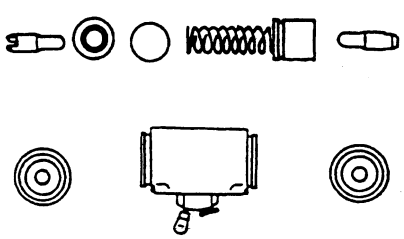

Fig. 2-19

(4) Check the friction piece for thickness to see if it is excessive worn. If necessary, replace it.

See Fig. 2-20.

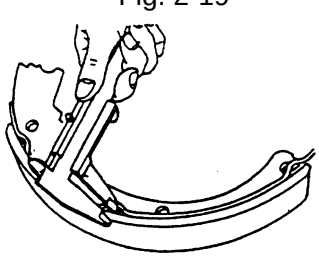

Fig. 2-20

Unit: mm

	1.0-1.5	2.0t-2.	3t
Specified	4.8	7.2	7.2
Min. thickness	2.5	5.0	5.0

(5) Check the condition of the brake drum's inner surface. If any damage or excessive wear is found, repair by machining or replace it. See Fig. 2-21.

Unit: mm

	1.0-1.5t	2.0t-2.5t	3t
Specified	254	310	310
Max. thickness	256	312	312

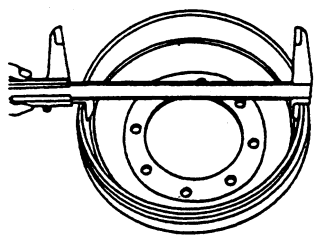

Fig. 2-21

2.2.3 Reassembly of wheel brake

(1) Apply brake fluid to the piston and the piston cup, and reinstall the spring, the piston, cup and the dust cover in this order.

(2) Install the operating cylinder on the backing plate.

(3) Install the backing plate on the front axle.

(4) Apply grease on the points indicated in Fig.2-22, with care not to contaminate the friction piece with grease.

a) Contact surface between backing plate and brake shoes

b) Anchor pin

c) Contact surfaces between brake shoe and spring seat

d) Supporting pin of parking pull rod

e) The screw of the adjuster and other rotating parts

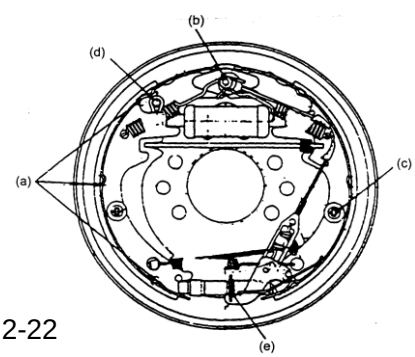

Fig.2-22

(5) Install the brake cable assembly on the backing plate with an E-retainer.

(6) Install shoes on the backing plate with hold-down springs. See Fig. 2-23.

(7) Put the spring on the parking push rod then install the rod on the shoe.

(8) Install the shoe guide plate on the anchor pin, and install the shoe return spring on primary brake shoe firstly and secondary brake shoe secondly. See Fig.2-24.

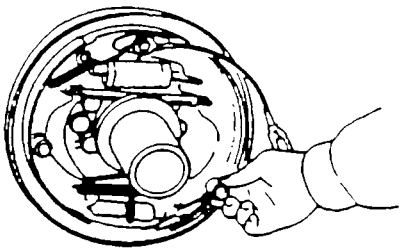

Fig. 2-23

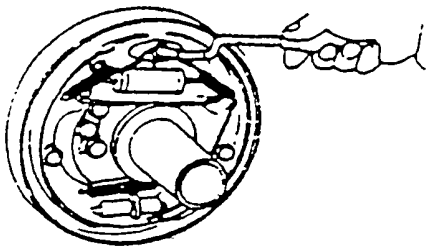

Fig. 2-24

(9) Install the adjuster, adjuster spring, push rod and its return spring.

Pay attention to the following points:

(a) Thread direction of the adjuster and its mounting direction.

(b) Adjuster spring direction (Do not allow the adjuster gear teeth to contact with the spring).

(c) Return spring direction of the push rod: Spring hook at anchor pin side should be located at the opposite side to push rod.

(d) Make sure that the adjusting lever lower end is in contact with the adjuster gear teeth.

(10) Install the brake line on the operating cylinder.

(11) Measure the inner and outer diameter of brake drum. Adjust the adjuster to obtain the difference needed between the drum inner diameter and the friction piece outer diameter. Specified difference: 1mm.

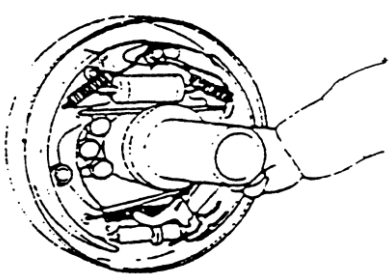

Fig. 2-25

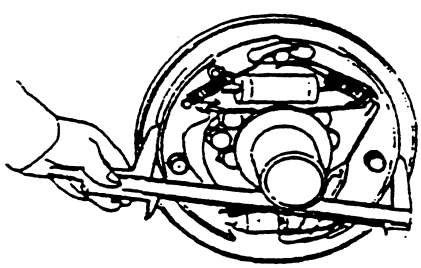

Fig. 2-26

2.2.4 Operation test of clearance self-adjuster

(1) Make the brake shoe diameter approach the specified mounting size, and pull the adjusting level with your finger along the arrow marks as shown in Fig.2-27 to turn the adjuster gear. When removing off your finger, the adjusting lever should return to its original position without rotation of the adjuster gear.

Note: Even if the adjuster gear turns back along the adjusting lever motion when removing your finger, the adjuster will still operate normally after it is fit in the truck.

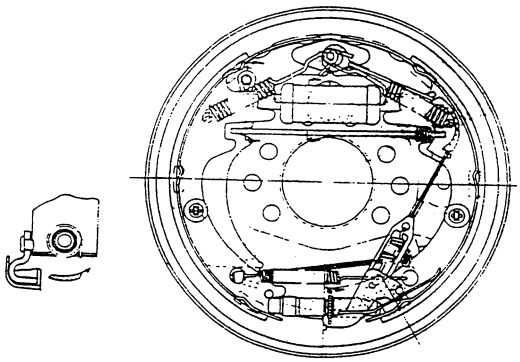

Fig. 2-27

(2) If the adjuster fails to do the above operation when the adjusting lever is pulled, proceed with the following inspection:

a) Make sure that the adjusting lever, push rod, rod spring and the return spring for push rod are securely installed.

b) Check the push rod return spring and adjuster spring for damage, and also check the adjuster gear for rotating condition and meshing section for undue wear or damage. Check if lever and gear is contacted. If above-mentioned condition occurs, replace the damage parts with new ones.

2.2.5 Brake pedal adjustment (see Fig.2-28)

(1) Push the master cylinder lever.

(2) Adjust the pedal height with the stopper bolt, shown as Fig.2-28.

(3) With the brake pedal pressed and pull the rod out until its front end comes into contact with the master cylinder piston.

(4) Tighten the push rod locking nut.

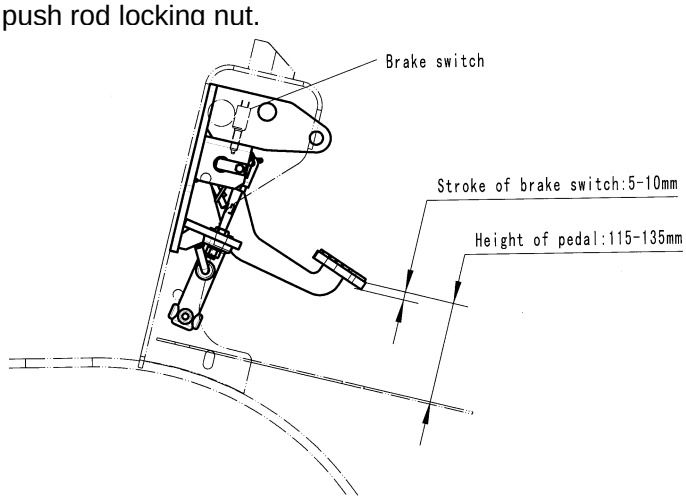

Fig. 2-28

▲ Brake switch adjustment

(1) After you adjust the height of the brake pedal, loose the lock nut of the brake switch.

(2) Pull the plug out to let the lead separate.

(3) Turn the switch to make the clearance about 1mm.

(4) When you press the brake pedal make sure that the brake lamps light at the same time.

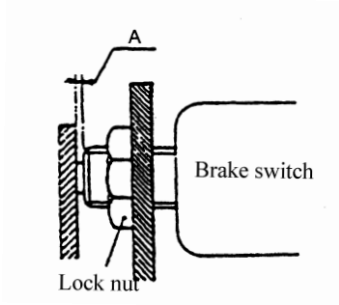

2.2.6 Wheel brake troubleshooting

Problem	Probable Cause	Remedy
Poor braking	1.Fluid leaks from brake system	Repair
	2.Maladjustment of brake shoe clearance	Adjust the adjuster
	3.Brake overheating	Check for dragging
	4.Poor contact between drum and friction piece	Readjust
	5.Foreign matter adhered on friction piece	Repair or replace
	6.Foreign matter mixed in brake fluid	Check brake fluid
	7.Maladjustment of brake pedal (inching valve)	Adjust
Noisy brake	1.Hardened friction piece surface or foreign matter adhered there	Repair or replace
	2.Deformed backing plate or loose bolts	Repair or replace
	3.Deformed shoe or incorrect installation	Repair or replace
	4.Worn friction piece	Replace
	5.Loose wheel bearing	Repair
Uneven braking	1.Oil-contaminated friction piece	Repair or replace
	2.Maladjustment of brake shoe clearance	Adjust the adjuster
	3.Malfunction of operating cylinder	Repair or replace
	4.Shoe return spring deteriorated	Replace
	5.Deflected drum	Repair or replace
Soft or spongy brake	1.Oil leaks from brake system	Repair
	2.Maladjustment of brake shoe clearance	Adjust the adjuster
	3.Air mixed in brake system	Exhaust air
	4.Maladjustment of brake pedal	Readjust

3. Steering system

3.1 General description

The steering system consists of steering hand-wheel, steering shaft, steering oil pump, and steering axle. The steering shaft is connected with steering unit by knuckle, which connects the connection shaft and hand-wheel. The steering column can be tilt forward and backward to suitable position (see Fig. 3-1). Assembled on the rear end-bracket of frame, the steering axle consists of one steering knuckle separately on the left and right. The steering cylinder piston pushes the steering knuckle to steer through lever, then the steering wheel will be deflected and carry out steering.

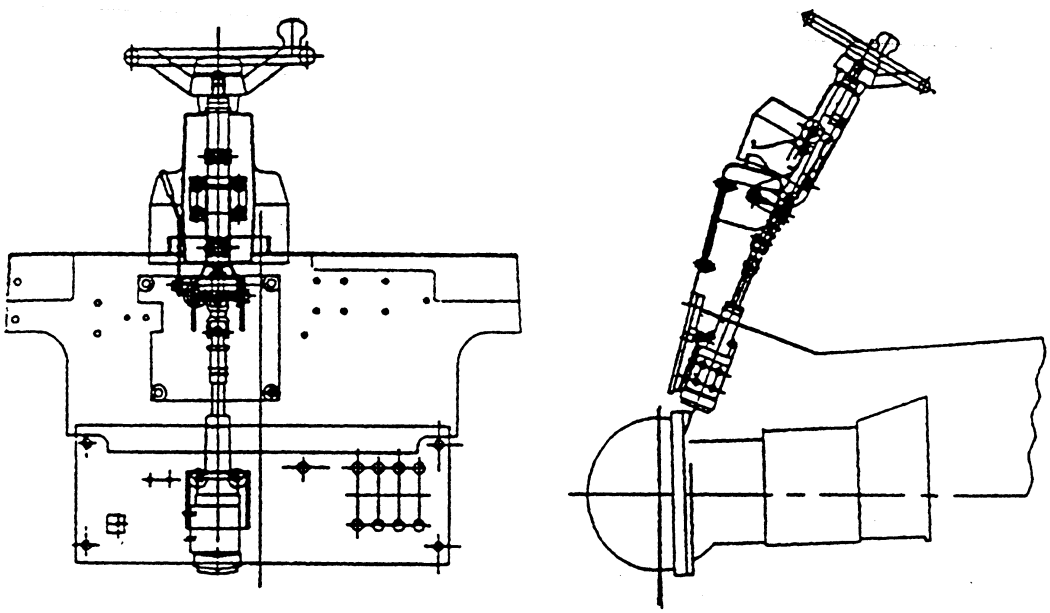

Fig.3-1 Steering control device

3.1.1 Hand wheel

Hand wheel is operated in normal way, that is to say, when turning the hand wheel right, the truck will turn right; when turning the hand wheel left, the truck will turn left. The rear wheels of the forklift truck are steering wheels, which make the back of the truck swing out when turning. The turning method can be mastered easily through practice.

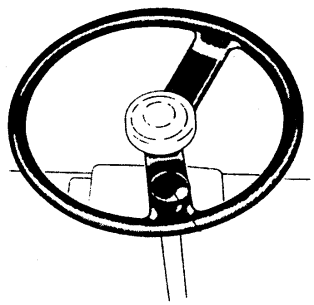

3.1.2 Powered steering unit (Fig. 3-2)

The powered steering unit can transmit the pressure oil from the flow-divider by metering to the steering cylinder in terms of the rotating angle of the hand-wheel. When the steering pump stops running, a manpowered steering should be adopted.

The powered steering unit consists of a general steering unit and a combination valve. The hole on the cover of combination valve is relief valve. In the valve body, there is a bipartite over-load warning valve, which protects the parts from damage when the truck wheels suffer unexpected impact and cause high pressure for hydraulic system. We have adjusted the relief valve and bipartite over-load warning valve, the users can't adjust them without permission.

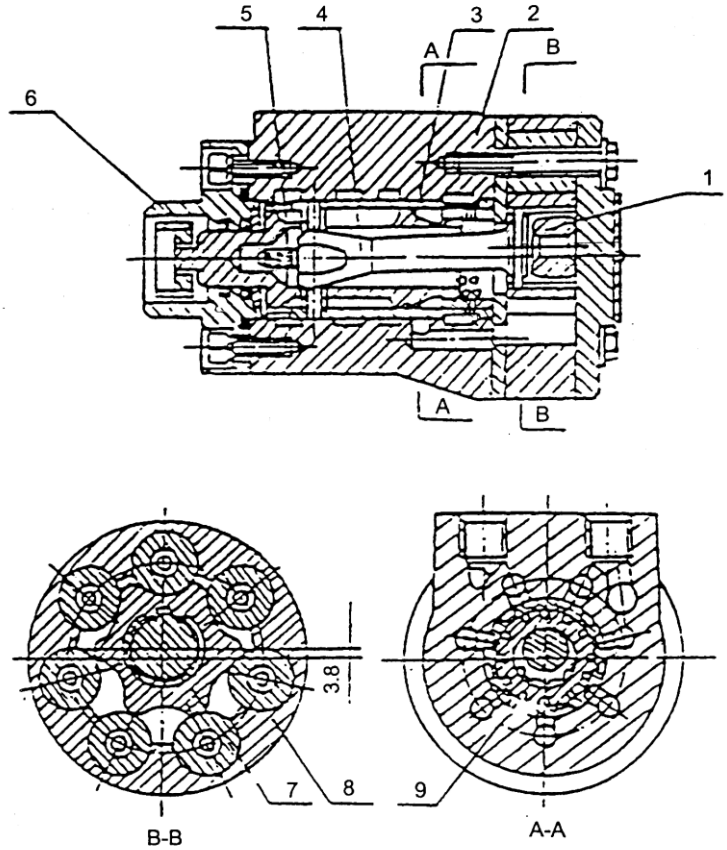

Fig. 3-2 Powered steering unit

1. Spacing sleeve	4. Interlock axle	7. Rotor
2. Valve body	5. Spring piece	8. Stator
3. Valve core	6. Joint sleeve	9. Valve sleeve

3.1.3 Steering axle

The steering axle is of section-boxed welded construction type (Fig.3-3). It includes axle body, steering cylinder, link lever, steering knuckle and steering wheel. The steering axle is of slider crank mechanism. The cylinder piston rod pushes knuckle steering through link lever, causing wheel's deflection and truck's steering. The steering axle is pivoted in the bearing seats bolted to the rear frame, thus causing the axle body be able to oscillate around the axles. Left and right knuckles are positioned at two sides of the steering axle respectively. The rear wheel hubs are fitted to the knuckle shafts through tapered roll bearings with oil seals keeping the grease in the chambers of the hubs and the knuckles. The wheels with rims are bolted on the hubs.

The steering tyre, rim and the pressure of the steering wheel:

Truck model	1-1.5t	2-2.5t	3t
Tyre size	5.00-8-8PR	18×7-8-14PR	18×7-8
Rim size	3.50D	4.33R	4.33R
Tyre pressure	0.7MPa	0.9MPa	
Pressure of steering unit	7.5MPa	9MPa	9MPa

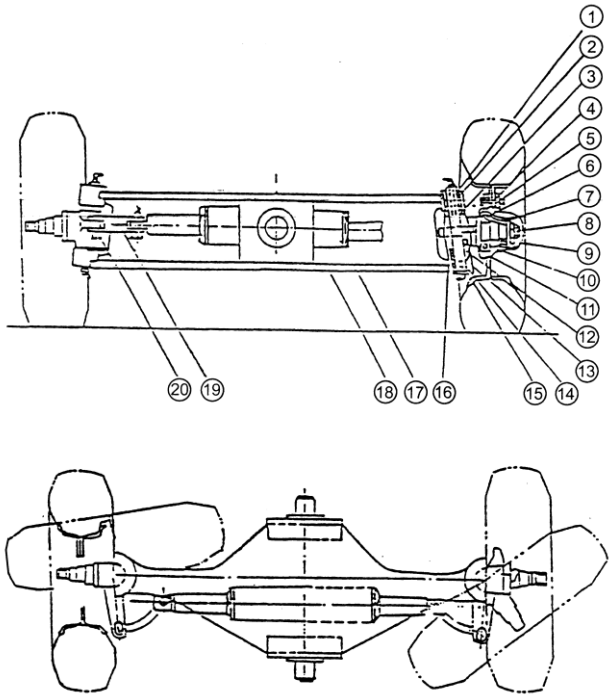

Fig.3-3 Steering axle

1. Oil seal
2. Needle bearing
3. Thrust bearing
4. Oil seal
5. Hub nut
6. Tapered roll bearing
7. Tapered roll bearing
8. Lock nut
9. Hub cap
10. Steering hub
11. Lock pin
12. Adjust shim
13. Needle bearing
14. Oil seal
15. King pin
16. Knuckle
17. Steering cylinder
18. Steering axle body
19. Pin shaft
20. Pin shaft

(1) Steering knuckle

Both steering knuckles are fitted between the upper and the lower axle body through two king pins, tapered bearing, dust cover and O-ring. The king pin is locked on the steering axle body with upper being with backing pin and lower being with cotter pin. Both ends of the king pin are supported by tapered bearing which are pressed into the axle body. See Fig. 3-4.

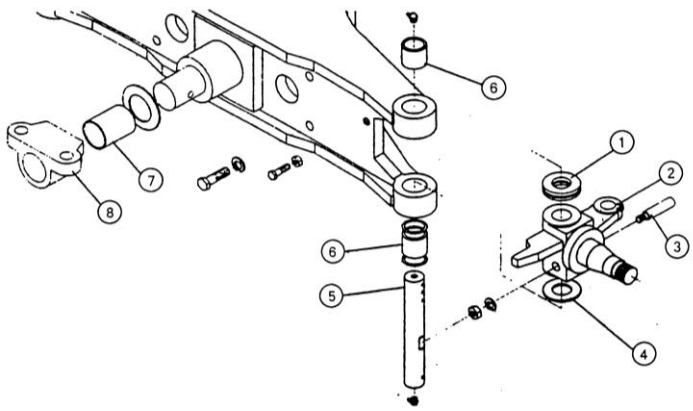

1. Thrust bearing
2. Knuckle
3. Lock pin
4. Shim
5. King pin
6. Needle bearing
7. Bushing
8. Support seat

Fig. 3-4 Knuckle

(2) Steering cylinder

The steering cylinder is of double-action piston type. Both end of the piston rod are connected with steering knuckles through connection rod. Left or right steering of the truck is achieved with the help of the left or right travel of the piston rod driven by the pressure oil from the powered steering unit. The piston seal adopts combination seal of support ring and O-ring. The Yx-ring seal is adopted on cylinder cap and piston rod. The cylinder is fixed on the steering axle through cylinder caps of both sides. See Fig. 3-5.

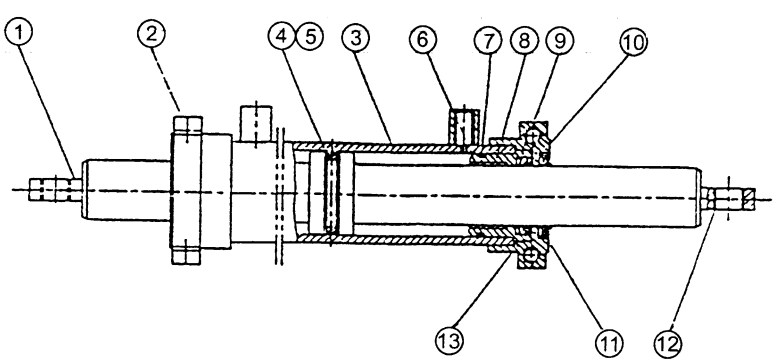

Fig. 3-5 Steering cylinder

1. Thrust bearing
2. Cylinder cover
3. Cylinder body
4. O-ring
5. Support ring
6. Sleeve
7. O-ring
8. Sleeve
9. Yx-ring
10. Gasket
11. Dust-ring
12. Bushing
13. Clip ring

(3) Wheel hub

The rear wheel hubs are fitted to the knuckle shafts through two tapered roller bearings, the wheels with rims are bolted on the hubs. There are oil seals keeping the grease in the hubs and the chambers of the knuckles between the inside of the two tapered roller bearings. The degree of the bearing tightness is adjusted by the nut.

3.2 Adjustment and maintenance

3.2.1 Rear wheel bearing pre-load adjustment

(1) As shown in Fig.3-6, fill up the chamber formed by wheel hubs, wheel hub bearing and wheel hub covers with lubricating grease. Coat the lips of the oil seal with lubricating grease.

(2) Press the hub bearing into the hub and fit the hub on the knuckle shaft.

(3) Fit a flat washer and tighten a castle nut with torque of 206-235N.m (21-24kg.m) and loosen it, and then tighten it again with torque of 9.8N.m (1kg.m).

(4) To ensure firm installation of the hub, slightly knock at it with a wooden hammer and in the meantime, rotate the hub for 3-4 turns.

(5) Tighten the castle nut and align one of its notches with a cotter pin hole drilled in the steering knuckle.

(6) Again slightly knock at the hub with a wooden hammer and in this time, rotate manually the hub for 3-4 turns to ensure its smooth rotation with a specified torque of 2.94-7.8N.m (0.3-0.8kg.m).

(7) If the torque value necessary to rotate the hub is more than the specified above-mentioned, screw out the castle nut for 1/6 turn and then measure the torque value.

(8) When the torque value measured is up to the specified one, lock the castle nut with a cotter pin.

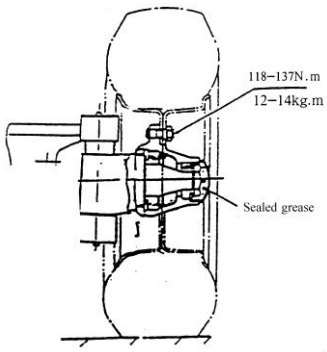

Fig. 3-6 Pre-load adjustment

3.2.2 Inspection after reassembling the steering system

(1) Turning the steering hand-wheel right and left to the bottom, inspect whether strength of left and right steering is uniform, the steering power is smooth.

(2) Inspect whether connection of the hydraulic pipeline and left and right steering is correct.

(3) Lift up the rear wheels and slowly turn the steering hand-wheel right and left several times to exhaust air from the hydraulic pipeline and the steering cylinder.

3.2.3 Troubleshooting of steering system

Problem	Analysis of trouble	Remedy
Fail to turn hand-wheel	Pump damaged or broke down	Replace
	Hose or joint damaged or pipeline blocked	Clean or replace
Difficult to turn hand-wheel	Too low pressure of the relief valve	Adjust the pressure
	Air in steering oil circuit	Exhaust air
	Steering unit fail to reposition due to spring piece damaged or elasticity insufficient	Replace spring piece
	Oil leakage in the steering cylinder	Inspect the seal of the piston
Truck's snaking or moving with oscillation	Spring damaged or elasticity insufficient	Replace
Excessive noise	Too low oil level in the oil tank	Refill oil
	Suction pipeline or oil filter blocked	Clean or replace
Oil leakage	Seals of guide sleeve, pipeline or joint damaged	Replace

Note:

The steering motor is controlled by direction switch, it will run only when the direction switch is on forward or backward position and pressing the accelerator pedal.

When exhausting, start the steering motor by lightly turning the hand-wheel. If occurs abnormal performance, turn off the power source and find out the trouble to remedy it. The hand-wheel must be convenient and flexible and the steering wheel can be deflected. Do the steering left and right several times, and then the air in the steering system can be exhausted.

4. Electric system

4.1 General description

The electric system is composed of battery, drive motor, lift motor, multifunctional controller system, control switch, LCD combined instrument and lamps etc.

The construction and principle of electric system is referred to:

Electric forklift truck with DC motor (Fig.4-1, Fig.4-2, Fig.4-3).

Electric forklift truck with AC motor (Fig.4-4, Fig.4-5).

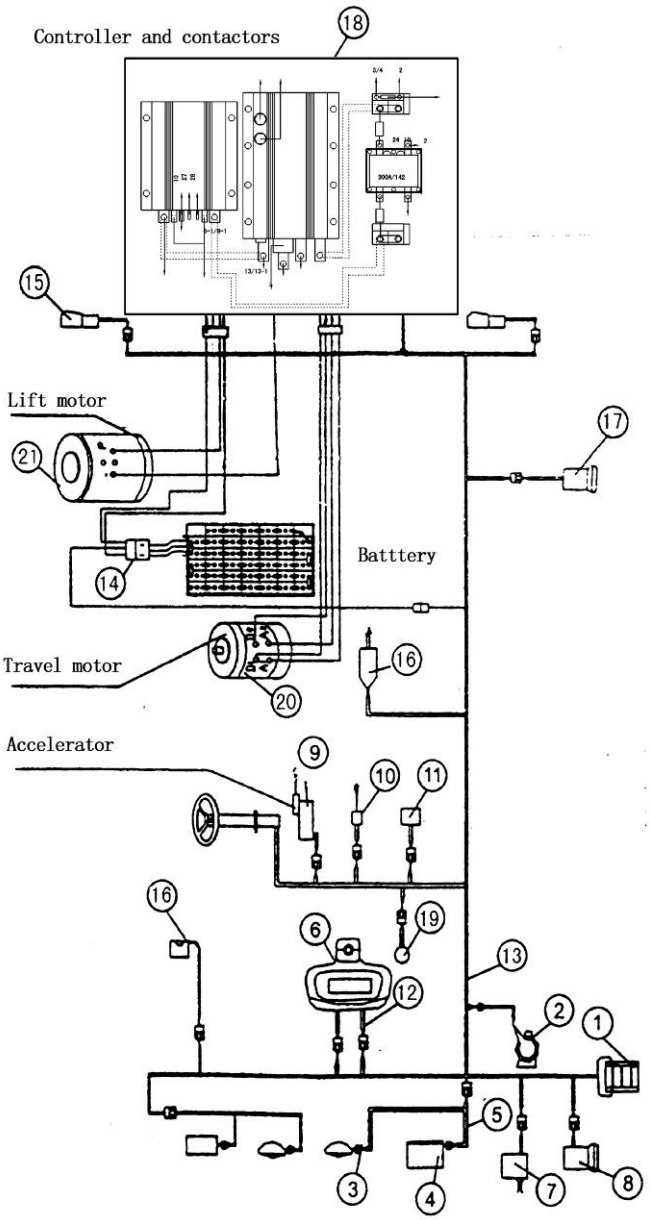

1. Fuse box
2. Horn
3. Head lamp
4. Front combination lamp
5. Harness, front overhead guard
6. Dashboard assy
7. Hand brake switch
8. Flasher unit
9. Direction switch
10. Turn lamp switch
11. Brake lamp switch
12. Harness, dashboard
13. Harness, meter
14. Battery socket assy
15. Rear combination lamp
16. Lift switch
17. Back buzzer
18. Separately excited controller
19. Foot horn switch
20. Travel motor
21. Lift motor

Fig.4-1 Construction of electric system (DC)

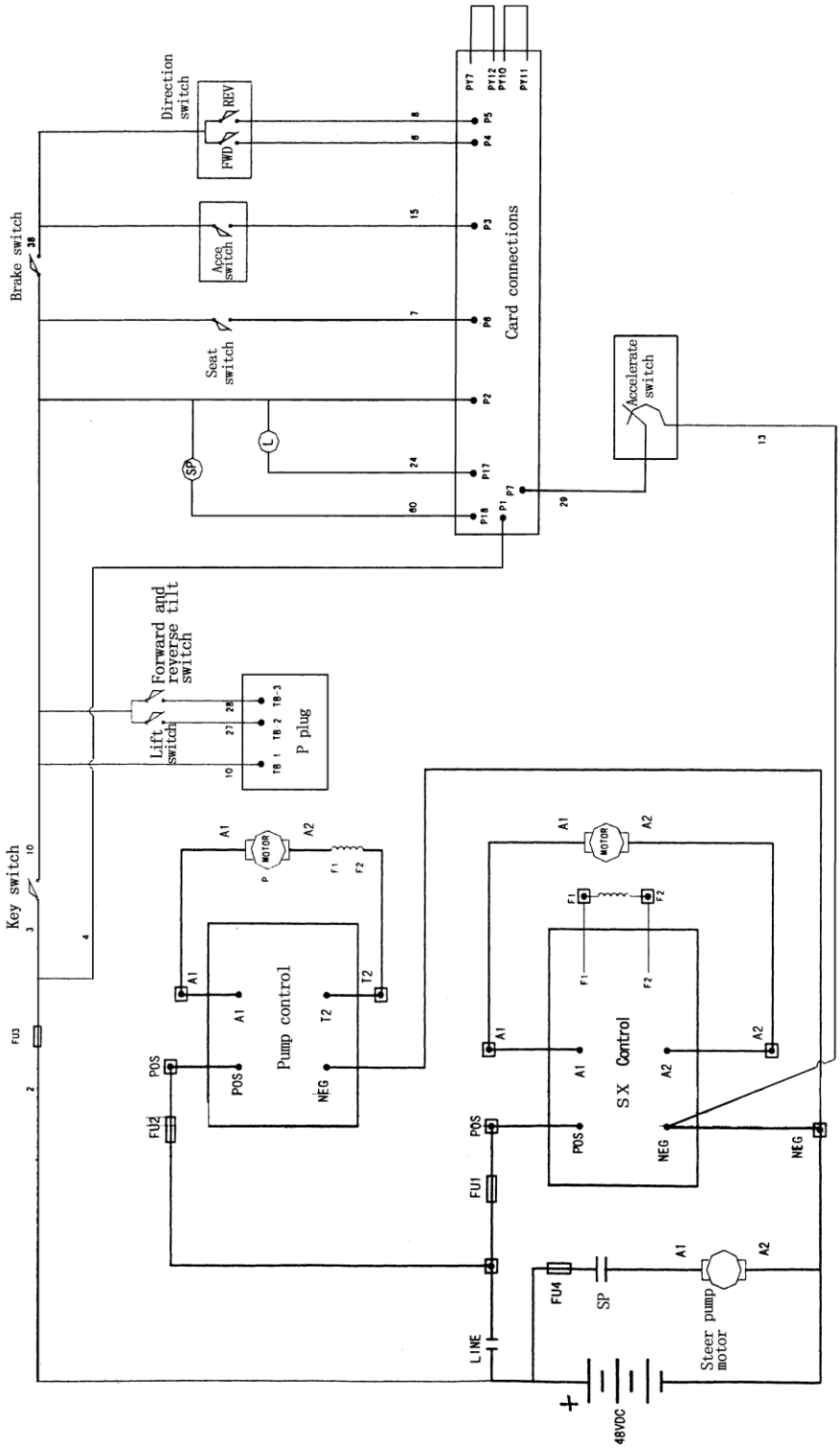

Fig.4-2 Principle of electric system (DC CPD10-25)

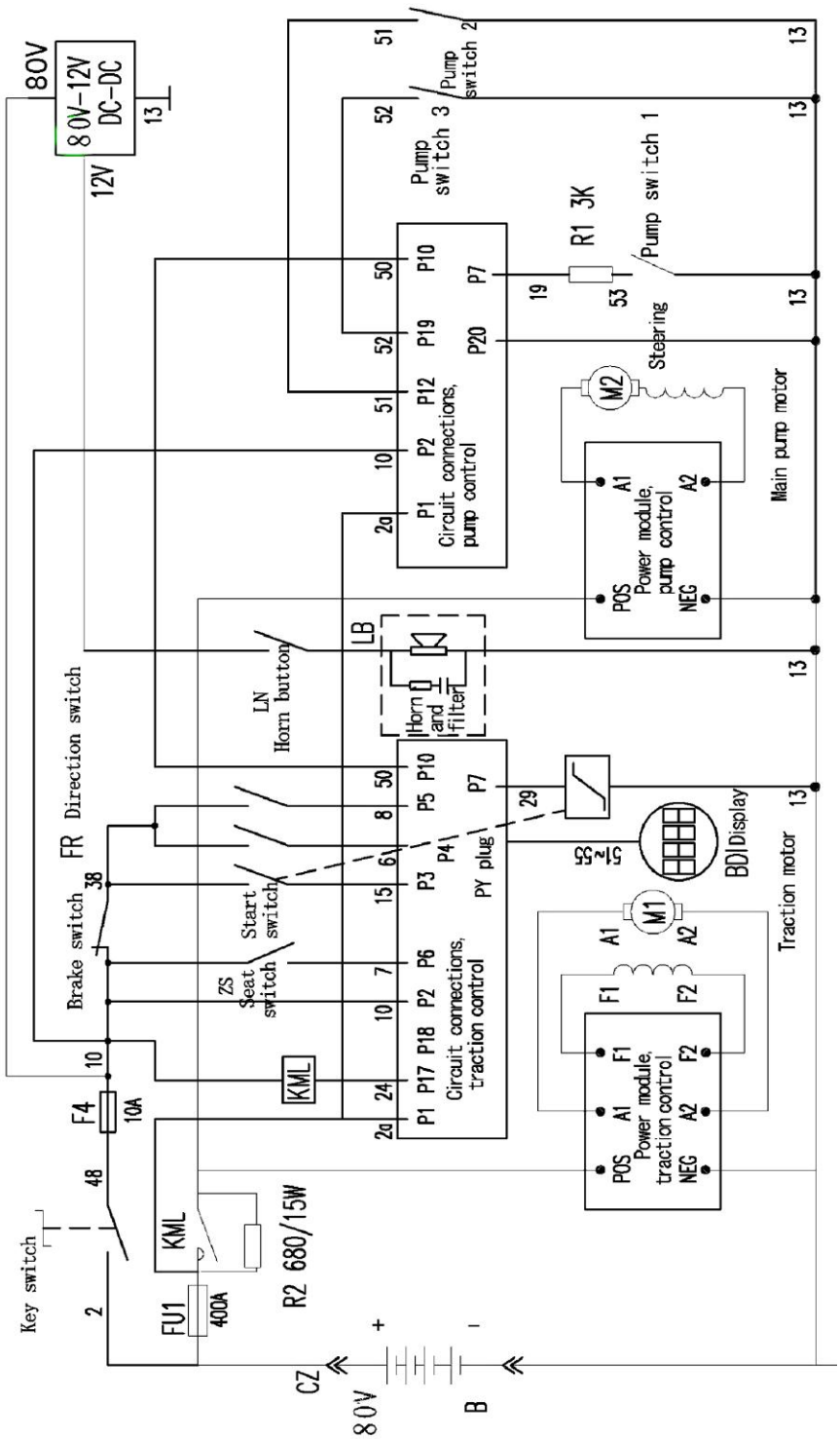

Fig.4-3 Principle of electric system (DC CPD30)

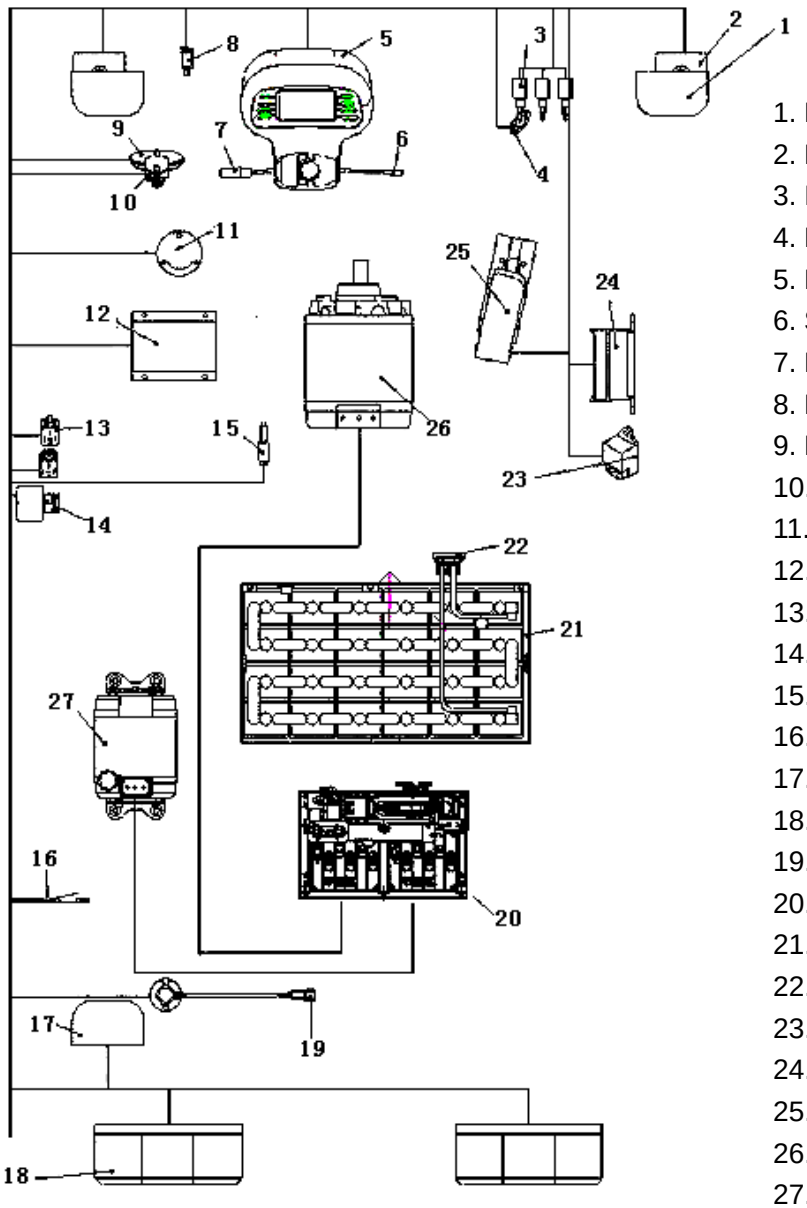

1. Head lamp
2. Front combination lamp
3. Inching switch
4. Lift potentiometer
5. Meter assy
6. Steering switch
7. Direction switch
8. Hand brake
9. Horn
10. Horn absorber
11. Foot horn switch
12. DC convertor
13. Microrelay
14. Back-up buzzer
15. Foot brake switch
16. Seat switch
17. Warning lamp
18. Rear combination lamp
19. Steering potentiometer
20. Controller assy
21. Battery assy
22. Socket and connector
23. Flasher
24. Fuse box
25. Accelerator
26. Traction motor
27. Lifting motor

Fig.4-4 Construction of electric system (AC)

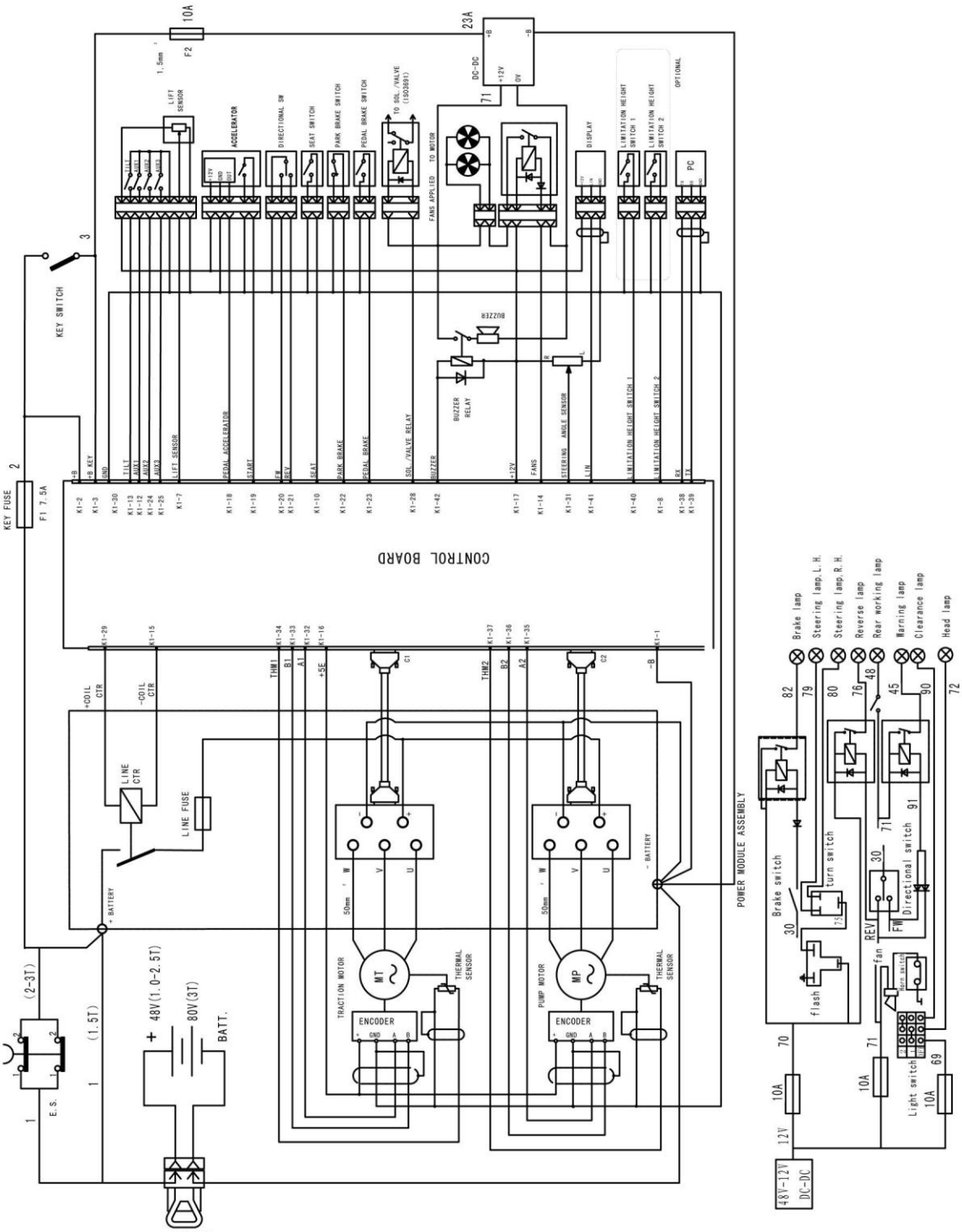

Fig.4-5 Principle of electric system (AC)

4.2 Multifunctional integration control system (DC)

Multifunctional integration control system consists of separately excited motor controller, pump controller and contactor. Separately excited motor controller is composed of controller and accelerator. (Fig.4-6, Fig.4-7)

(1) SX transistor controller

SX transistor controller is introduced by GE in USA using the advanced technology, it has the advantages as follows: independently controlling the armature and excitation circuit, the best attributes of both the series and the shunt motors can be combined, it has high torque at low speed, a plug braking, regeneration control, thermal protector and battery protector etc.

(2) The accelerator is composed of start switch and potentiometer. The potentiometer converts the degree of the pedal into changes in the resistance of the potentiometer, then transfer to the controller by means of voltage change. (Fig.4-8)

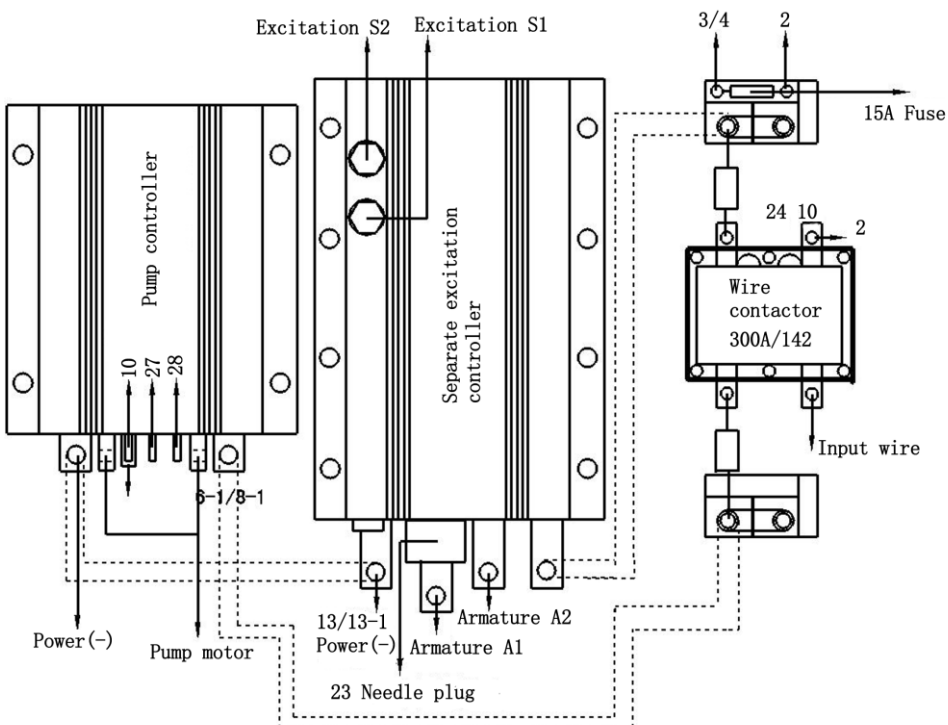

Fig.4-6 Controller assy(DC CPD10-25)

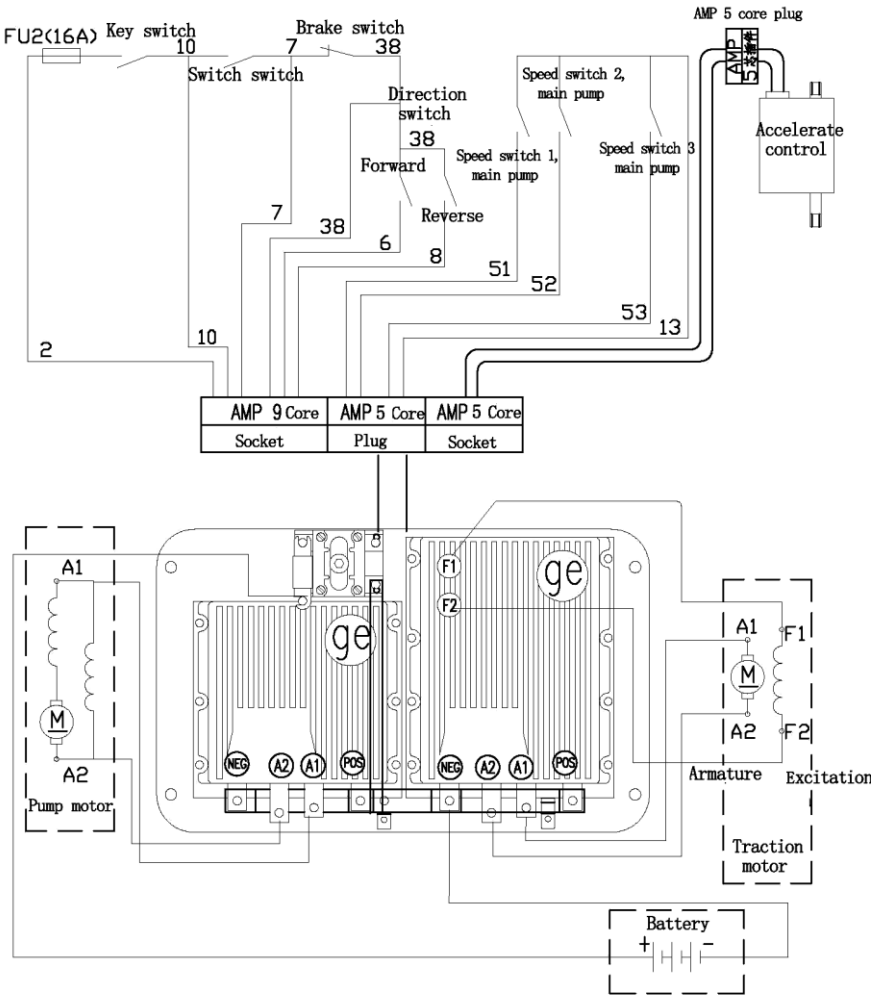

Fig.4-7 Controller assy (DC CPD30)

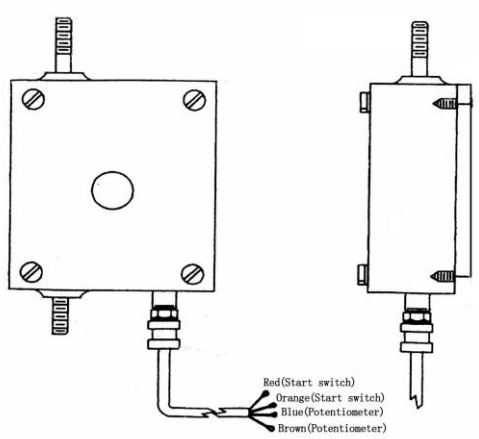

Red (Start switch)

Orange (Start switch)

Blue (Potentiometer)

Brown (Potentiometer)

Fig.4-8 Accelerator

4.3 SME AC electric controller assy

(1) General description

Four-wheel AC controller assy is composed of two power inverters which separately drives traveling and lifting motor, main control box, DC contactor, control aluminum sheet. Main control box is connected with power source module, separately controlling two power modules.

(2) Structure of controller

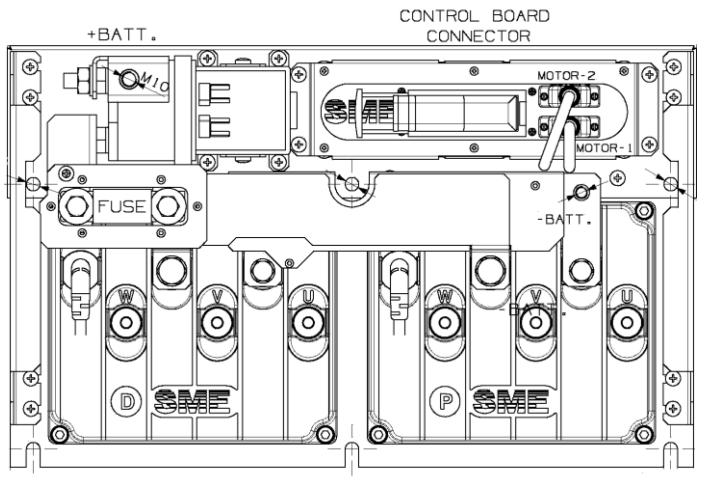

NOTICE: The electric control device contains capacitance which is discharged by procedure through hydraulic motor when cutting off the key switch, then cut off the main contactor to turn off the circuit power. Before doing the service, maintenance and inspection for the forklift, firstly cut off the key switch for one minute, then discharge the capacitance completely by process control.

4.4 Distribution and setting of sensor (AC)

4.4.1 General description

The electric forklift truck embodies many superior features, such as infinitely variable lifting speed, steering speed adjuster and pedal setting, which can be adjusted and set in real-time by EYE software. These functions have been initialized before delivery and needn’t to be changed except the conditions as follows:

1. After long-term operation, the loose parts will be indicated with alarm codes.
2. The damaged electronic components are indicated with alarm code, replace them.
3. When replacing or disassembling other parts, after disassembling steering, lifting potentiometers, it’s necessary to reset the value.

4.4.2 Steering potentiometer

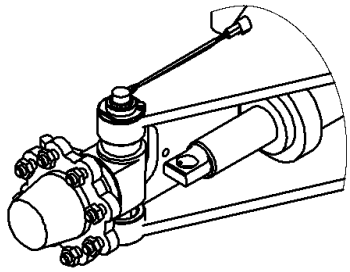

1. Specification of steering potentiometer

Resistance limitation: 0KΩ-5KΩ

Steering angle: 0° -360°

Voltage: 12V

2. Adjustment

a) Install the potentiometer on truck body, make steering wheels on zero degree(straight traveling direction), adjust potentiometer to make output resistance value be about 2.5 KΩ, if there is deviation, the output resistance must be between 0 KΩ and 5 KΩ when locating on 90^0, -90^0 position.

b) Connect PC machine with controller connector.

c) If electric potentiometer installs correctly, the output voltage value will be changed with hand wheel's turning.

d) Enter STEERING SENSOR CALIBRATION menu.

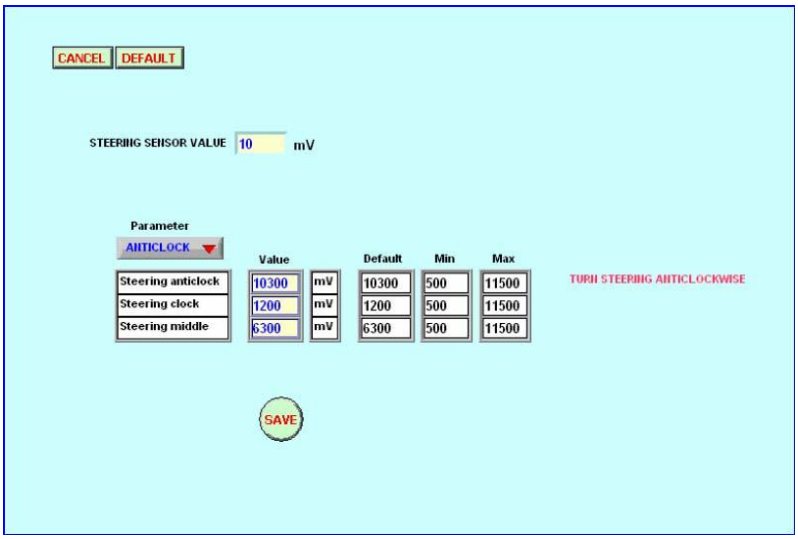

e) Select ANTICLOCK parameter, turn hand wheel left until minimum steering value displays, save it.

f) Enter CLOCK menu.

g) Turn hand wheel right, until maximum steering value displays, save it.

h) Enter MIDDLE menu.

i) Turn the steering wheel left and right until zero value displays (straight traveling direction), save it.

j) Quit the menu.

Do trial operation, check if the position of steering wheel and displaying angle of meter is consistent (range over 0^0, 90^0, -90^0).

4.4.3 Lifting potentiometer

1. Specification

Resistance limitation: 0KΩ-5KΩ

Effective straight travel: 9±0.5mm

Voltage: 12V

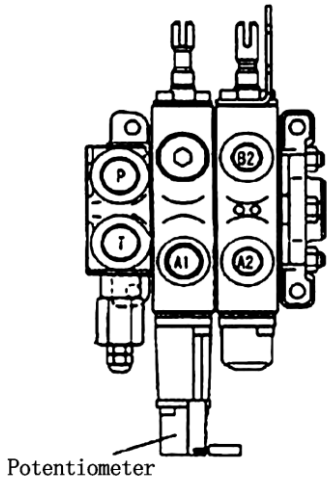

2. Adjustment

a) Install potentiometer on the first level lift of multi-way valve, make sure that the top lever of potentiometer runs freely.

b) Connect PC machine with controller connector.

c) Enter LIFT CALIBRICATION menu.

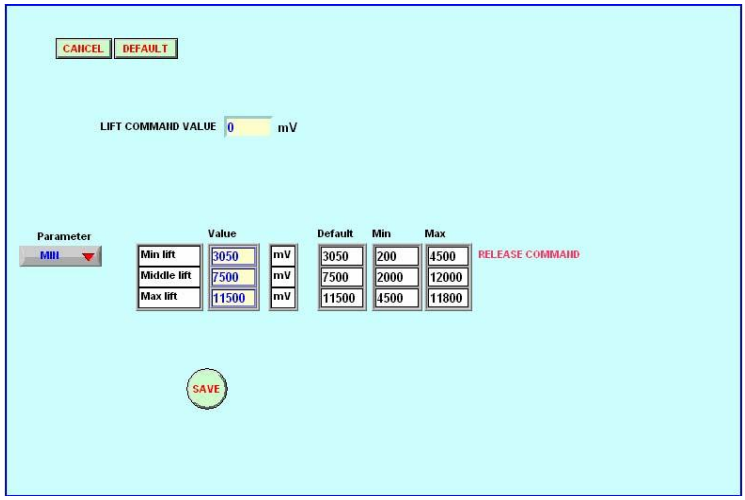

d) Select MINIMUM parameter, the minimum value will be indicated in “lift calibration value” frame, save it.

e) Enter MAXIMUM menu.

f) Operate lift lever, until the maximum potentiometer output value indicates and save it.

g) Enter MIDDLE menu.

h) Operate lift lever, until indicating middle value between minimum value and maximum value, save it.

i) Quit the menu.

4.5 AC microtron

1. Outline and port function

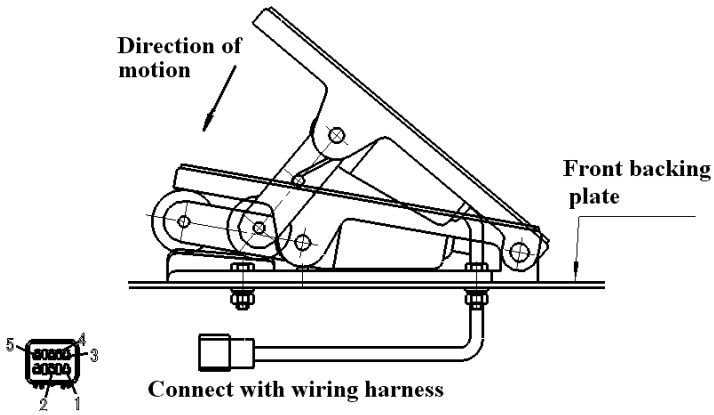

2. Sketch for connector and port

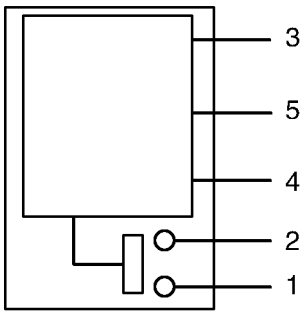

No.	Definition	Color
1	Switch output1	Yellow
2	Switch output2	Blue
3	Power positive input (12V+)	Red
4	Power negative input (12V-)	Black
5	Accelerator signal output	Green

Accelerator signal: linear ranged from 0.38V～0.42V to 3.9V～4.1V

Switch signal: Non-polarity opening contact. Capacity: 2A/100V

3. Setting for accelerator

a) Install potentiometer on front backing plate, make sure the accelerator pedal on initial state.

b) Connect PC machine with controller connector.

c) If accelerator connects correctly, the output voltage will change with the stroke of the pedal.

d) Enter ACCELERATION PEDAL CALIBRATION menu.

e) Press the pedal slowly until START lamp lights, save it.

f) Select MINIMUM menu, press the pedal slowly until output value is larger than start value, save it.

g) Select MAXIMUM menu, press the pedal slowly until the max output value occurs, save it.

h) Get out of menu.

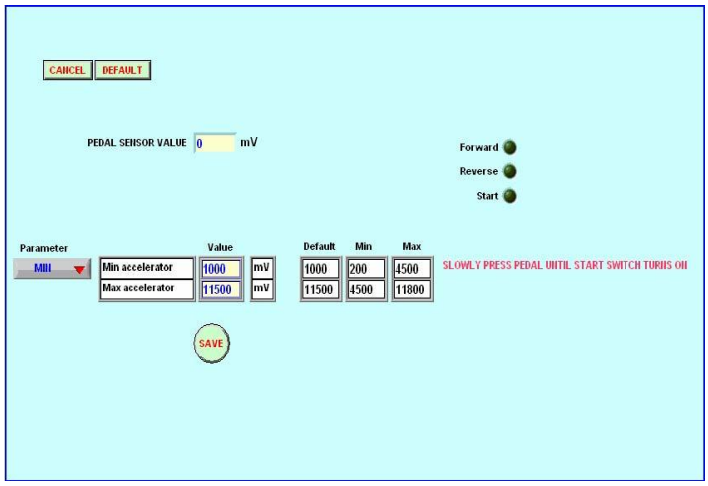

4.6 LED instrument (DC)

The electric forklift truck adopts newly displaying with combination of LED and LCD. Control circuit adopts micro computer technology, sampling, displaying and controlling in real-time. The intense and feeble circuit in the instrument adopts light-electricity separating with control relay. It has under-voltage warning and high automatic supporting function. Refer to Fig4-9.

4.6.1 Outline and instructions of instrument

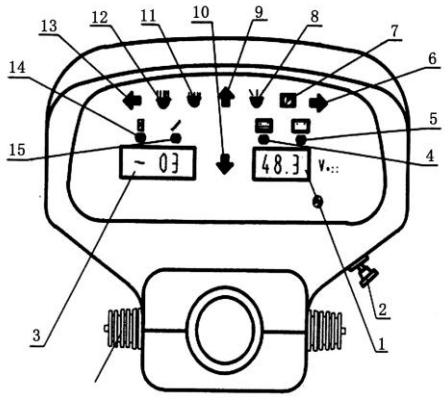

Fig4-9 LED instrument

(1) Voltmeter

It indicates voltage of the battery. The single cell voltage must greater than 1.80V, that is to say, when the forklift truck with load, the voltage of 48V battery can't be lower than 43.2V, the voltage of 80V battery can't be lower than 72V.

(2) Lamp switch & electric key (electric key not indicated in the diagram)

Pull the lamp switch to the first shift, the front and rear clearance lamps light. Pull the switch to the second shift, the headlamps light while the front lamps and rear lamps keep on. Turn the key switch clockwise to connect electric controller, the instrument circuit and the electric circuit are ready for work.

(3) Error code display

When the electric controller is in trouble, a specific code displays, it can afford serviceman fault information. To make a detailed diagnosis, please refer to the list of alarm code. At the moment when the start switch is cut off, the alarm code on the left of meter will show the working hours and disappear after several seconds.

(4) Signal of normal battery voltage

When turn off the key switch, this lamp lights, meaning working state is normal.

(5) Warning of under-voltage battery

The lamp lights when the battery is in a state of under-voltage, in the meantime, the controlling power of lift switch (negative pole) is cut, the lifting is prohibited. The under-voltage value of the battery (48V) is set on 40V. It means if the voltage is below 40V, the value will be held for several seconds, the under-voltage protecting circuit comes into play.

(6) Right turning signal	(7) Brake signal
(8) Width indication	(9) Forward state signal
(10) Backward state signal	(11) Short signal
(12) Headlamp signal	(13) Left turning signal
(14) Electric controller hour meter	(15) Working hour meter

4.6.2 Lighting signal

Include all kinds of illuminating lamps, signal lamps, horn and buzzer, etc.

Headlamp: 55W

Front combination lamp (turning/clearance): 10W/5W

Rear combination lamp (turning/clearance/backward/braking):

10W (red)/5W (red)/ 21W (white)/21W(red)

Warning lamp: 21W (optional)

4.6.3 Meter connector

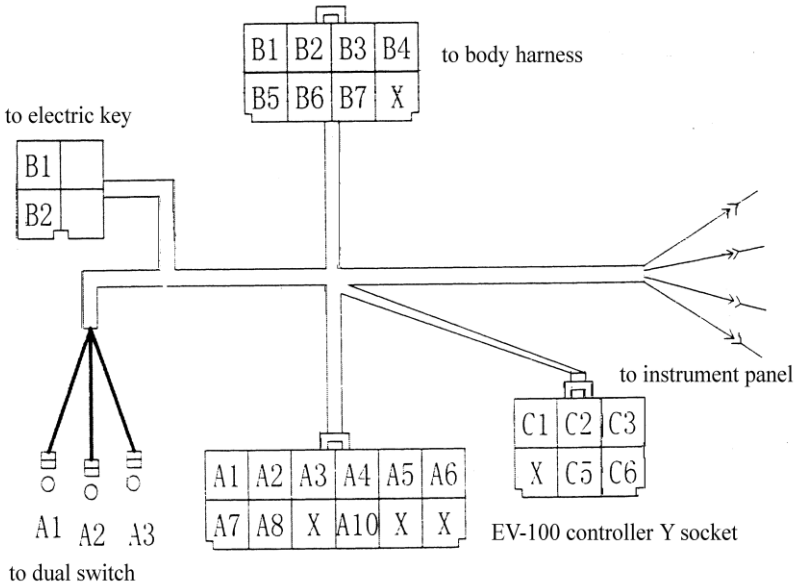

Port No.	Function	Color
A1	Input power 12V	Red
A2	Dual switch shift Ⅰ(width indication)	Purple
A3	Dual switch shift Ⅱ (head lamp)	Orange
A4	Hand brake signal(48V)	Blue
A5	Forward signal	Brown
A6	Backward signal	Gray
A7	Input left turning signal	Yellow
A8	Input right turning signal	Green
A10	Input short signal	Pink
B1	12V(key switch)	Grown
B2	Output 12V(key switch)	Red
B3	Input 48V (Input 80V)	Yellow and green
B4	Output 48V(Output 80V)	Purple
B5	Power negative	Black
B6	Voltage measuring(pump output)	Light blue
B7	Backing buzzer output (12V)	Green

4.6.4 Troubleshooting instructions

If misoperation of the vehicle or trouble of electronic control occurs, a state code will be displayed on the instrument. With the status code number, follow the procedures outlined in the status code instruction sheets to determine the problem.

Status code	Description of status
-01	No seat switch input
-02	Forward directional switch is closed when initial power on.
-03	Reverse directional switch is closed when initial power on.
-05	Start switch or brake switch fails to close.
-06	Accelerator depressed with no direction selected.
-07	Too high input voltage of accelerator
-08	Accelerator input voltage too low when power up after initial key switch closure.
-09	Both the forward and reverse directional switches are closed at the
-11	Start switch closed when power up after initial key switch closure.
-15	Battery voltage is too low or control card is miss-adjusted.
-16	Battery voltage is too high or control card is miss-adjusted.
-17	“Control card type” selection is invalid.
-23	Motor field current is high when start up in the reverse direction.
-24	Motor field current is high when start up in the forward direction.
-27	Control’s power supply is less than 10 Volt DC.
-28	Motor field current is too high during the run mode.
-41	Open thermal protector (TP) or transistor over temperature.
-42	Motor armature offset voltage is too high.
-43	Motor armature offset voltage is too low.
-44	Armature transistor can not turn off normally.
-45	Armature transistor did not turn on normally.
-46	“Look Ahead” test for A2 volts is less than 12% of battery voltage.
-49	Motor field current is too low during the run mode.
-51	Capacitor volts are low before the contactor closes.
-57	Controller “motor current sensor” input voltage is too low during
-64	The line drive input is less than 12% of battery voltage.
-65	The line coil current is too high during the run mode.
-66	The field current exceeds the current limit of field transistor.
-67	The armature current exceeds the armature transistor limit.
-69	The power steering coil current is too high during the run mode.
-76	Capacitor (1C) voltage too high.
-77	Motor current is detected during regenerative braking.
-82	If the armature motor current is greater than 450 amps for longer than 3.5 seconds, the armature motoring current will be turned off.

4.7 SME compact meter (AC)

4.7.1 General description

Four-wheel AC electric forklift truck adopts Italy SME newly LCD meter, displaying in real-time on high definition LCD. The CAN wire of meter is connected with control main board according to RS232 communication standard. The EYE software obtains allowable landing and upgrade panel, with functions of detailed upgrade, diagnosis and adjustment. The control circuit adopts SCM technology, sampling, displaying and controlling in real-time. The intense and feeble circuit in the instrument adopts light-electricity separating with control relay.

4.7.2 Structure of meter

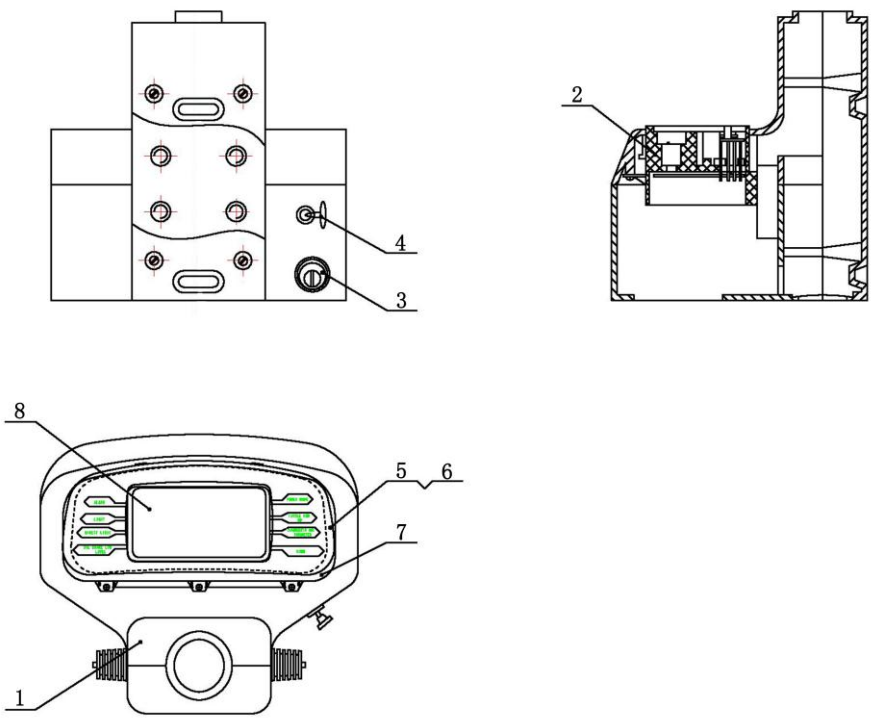

1. Panel body	2. Wick	3. Key switch	4. Lamp switch
5. Meter panel	6. Meter gasket	7. Meter hood	8. SME meter

SME meter connector

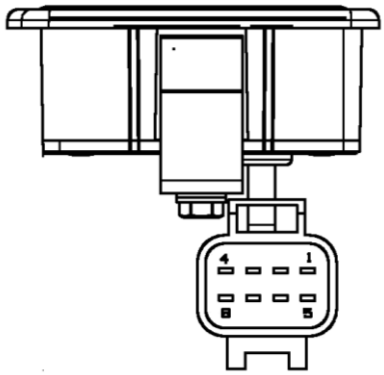

CONNECTOR AMP
ECONOSEAL 174984-2

Illustration for SME meter connector

Display type	Specification
Operating voltage	+12V
Supply current	150A MAX.
Operating temperature	-30℃～+50℃
Protection	IP54

Connections lin-bus	
1	Input1
2	Input2
3	Input3
4	Input4
5	Lin-bus 19.2 KBIT/S
6	/
7	GND
8	+12V

4.7.3 Outline and instructions of meter

Compact meter engineered by SME

15.9	Traveling speed (km/h)
(P)	Hand brake switch, lamp lights when pulling the hand brake
	With safety seat switch open, meter indicates seat symbol, main contactor can't be connected and truck can't travel until seat switch closes.
15863.9	Time meter (Odometer)
	Turning angle, indicating the position of rear wheel
	Maintenance time indication Remind the users to maintain and service the forklift truck.
	Slow-speed operating With the lamp on, the traveling speed and lifting speed will be reduced in slow-speed mode.
	Traveling speed (Indicated by 0-9 forms)
	Overheated motor temperature warning

	Battery level (indicated by 9 segments) Display signals with alarm code 12 when battery is completely discharged. Charge the battery when indicating on 1 segment.
E S H	Press E-S-H button, you can set operating mode for system. (E-economic mode, S-midrange mode, H-high mode)
	H-High mode: High acceleration, decelerate rate, max. grade ability, suitable for loading large quantity goods in short time and climbing abrupt slope, this mode wastes electricity, only used when necessary.
	S-Midrange mode: The parameter lower than High mode
	E-Economic mode: The parameter has been optimized. Working on this mode in general for saving electricity.
ENTER	1. Start the key switch, press ENTER button for 3 seconds, enter into adjust and diagnosis mode.
	2. When operating, press for 3sec, enter into diagnose mode.
	3. Quit when pressing ENTER under diagnosing mode, the enter key is used for setting new parameter.
	1. Reduce the parameter in adjusting mode when pressing this key.
	2. The parameter can be reduced in adjusting mode.
	3. Press the key for 1sec, indicating mileage or weight.
Note: The function of Up key is same to down key, enter, up and down key have some functions not activated.	

Four LED signals on the left of compact meter indicate when operating the relevant switch.

	Alarm indication; red color LED
	Lamps indication; green color LED
	Steering switch on, steering signal activated; green color LED
	Insufficient brake fluid; red color warning LED (optional)

4.7.4 Process and instruction of meter

(1) Turn on the key switch, some initial value mode will indicate for 3sec on the meter. The mode helping operators judge the type of the forklift truck will indicate on the position indicated speed, such as the four-wheel forklift truck is represented by CO. The information about speed, electric energy, turning angle, hand brake, seat switch, E/S/H selection and working hours is indicated on the meter, which help confirm the working state.

(2) Alarm indication is on the first left line of the liquid crystal form, indicating three working states when it lights up, as follows:

· Normally operating (When the system key is on or off, the lamp lights up)

· Meter is not connected to the controller (The lamp is on after this state remains for 3sec)

· Meter is not working (lamp lights)

No alarm code and the alarm indication lights off when the truck works normally.

(3) Move the turning switch forward and backward, the left and right turning signals flash. When turn on the headlamp, lamp indication lights up.

(4) Brake indication

Operating the hand brake, indication as ◯,P lights up; pull the hand brake, the signal turns off.

Note: When the electric quantity is below normal, that is to say the position of the hand on the meter is down one form, please charge up the battery.

4.7.5 Working circumstance

(1) Elevation is lower than 1200 meters.

(2) Working temperature -25℃～+40℃.

(3) Relative humidity is not larger than 95%.

4.7.6 Cautions

(1) Forbid wetting the meter. When washing the truck, don’t let water into the meter, if it happens, clean it with dry cloth.

(2) Don’t pull the plug of the meter and harness for the connection.

(3) Forbid impacting or scratching the meter strongly.

(4) When the meter works abnormally, contact with our company for maintenance.

4.7.7 Troubleshooting of AC electric forklift truck

Alarm code	Alarm description	Alarm code	Alarm description
1	Maximum battery voltage	2	Minimum battery voltage
3	Pedal trimmer fault	5	Eeprom alarm
6	Pre-charge	8	Power inverter
		25	
9	Inverter	11	Capacitors
12	Low battery voltage	13	Over-temperature motor
15	Motor current offset alarm	17	Main breaker
16			
18	Watchdog timer alarm	20	Power inverter over-temperature
		22	
37	Alarm on 5V encoder voltage	38	Alarm on 12V output voltage
50	Pump motor commands active on start	61	Motor blocking over-temperature
		62	
		65	
63	Seat switch open on start	64	Wrong star
74	Encoder alarm	77	Motor thermal sensor alarm
75		78	
80	Inverter temperature alarm	83	CRC fault alarm
81			
84	Bank CRC restored	90	Steering sensor alarm
91	Brake pedal switch alarm	98	Capacitors pre-charge too slow
99	Capacitors pre-charge timeout		

4.8 Harness

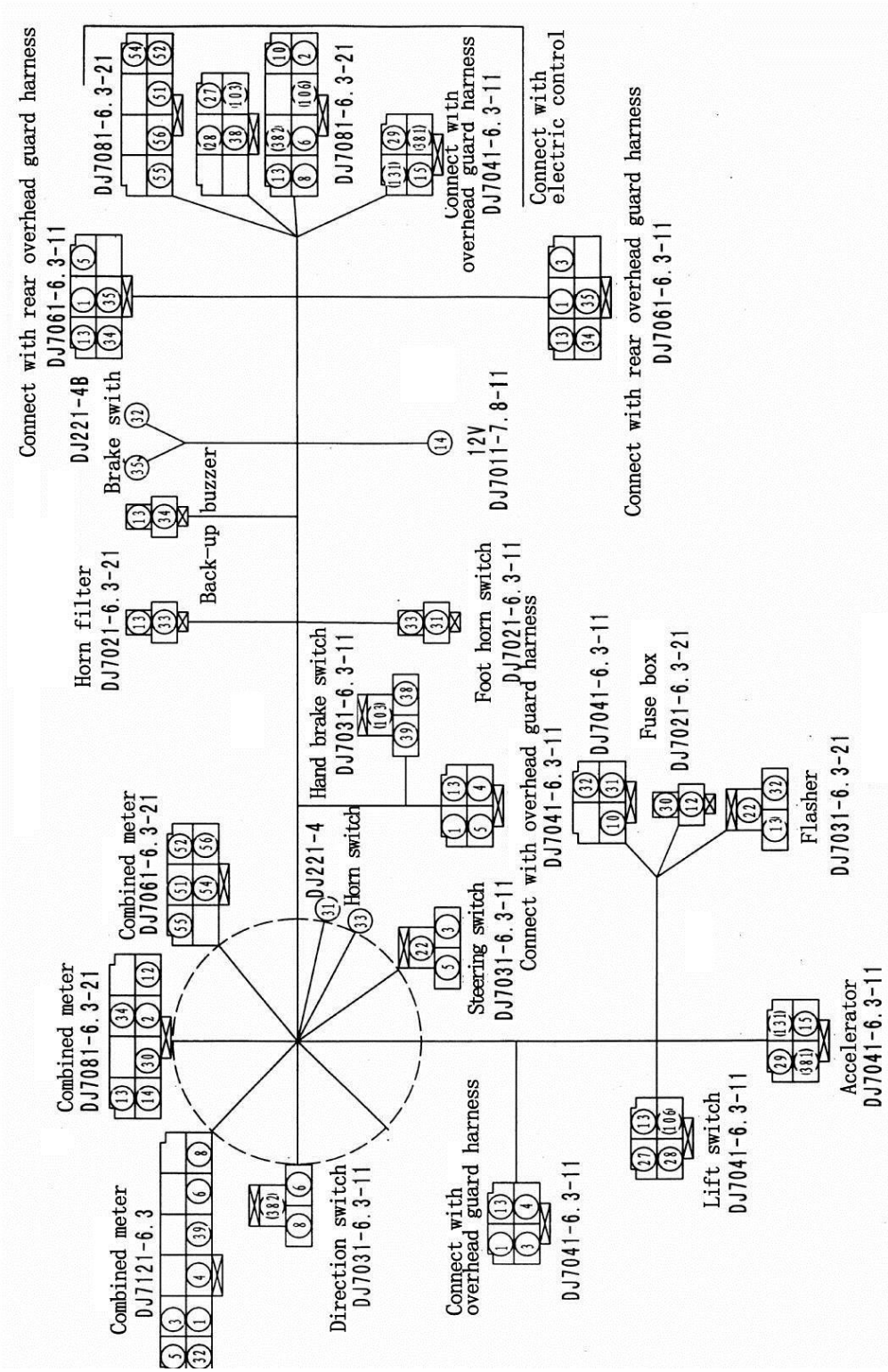

Fig.4-10 Harness (DC CPD10-30)

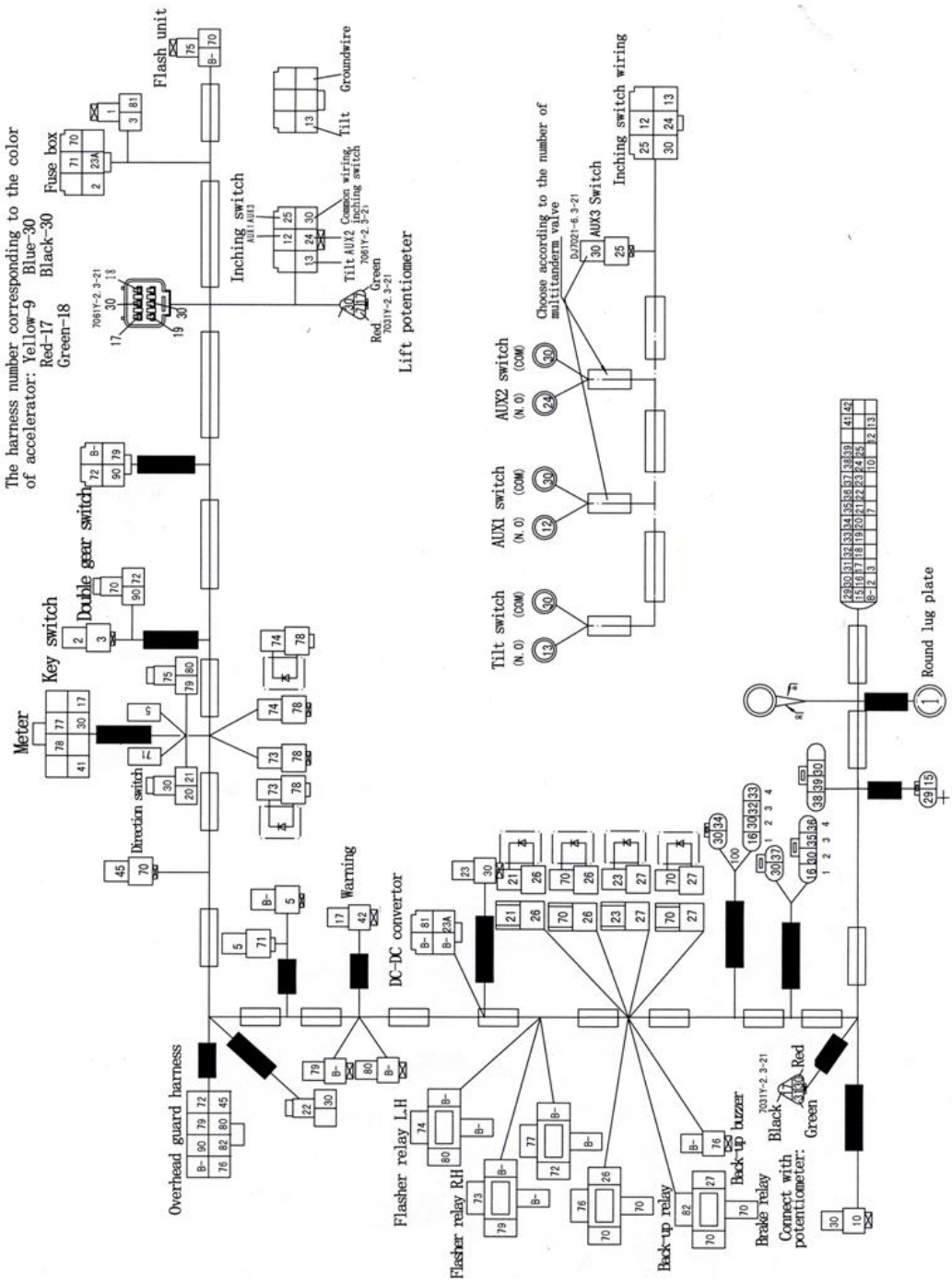

Fig. 4-11 Harness (AC CPD10J-15J)

https://truckmanualshub.com/

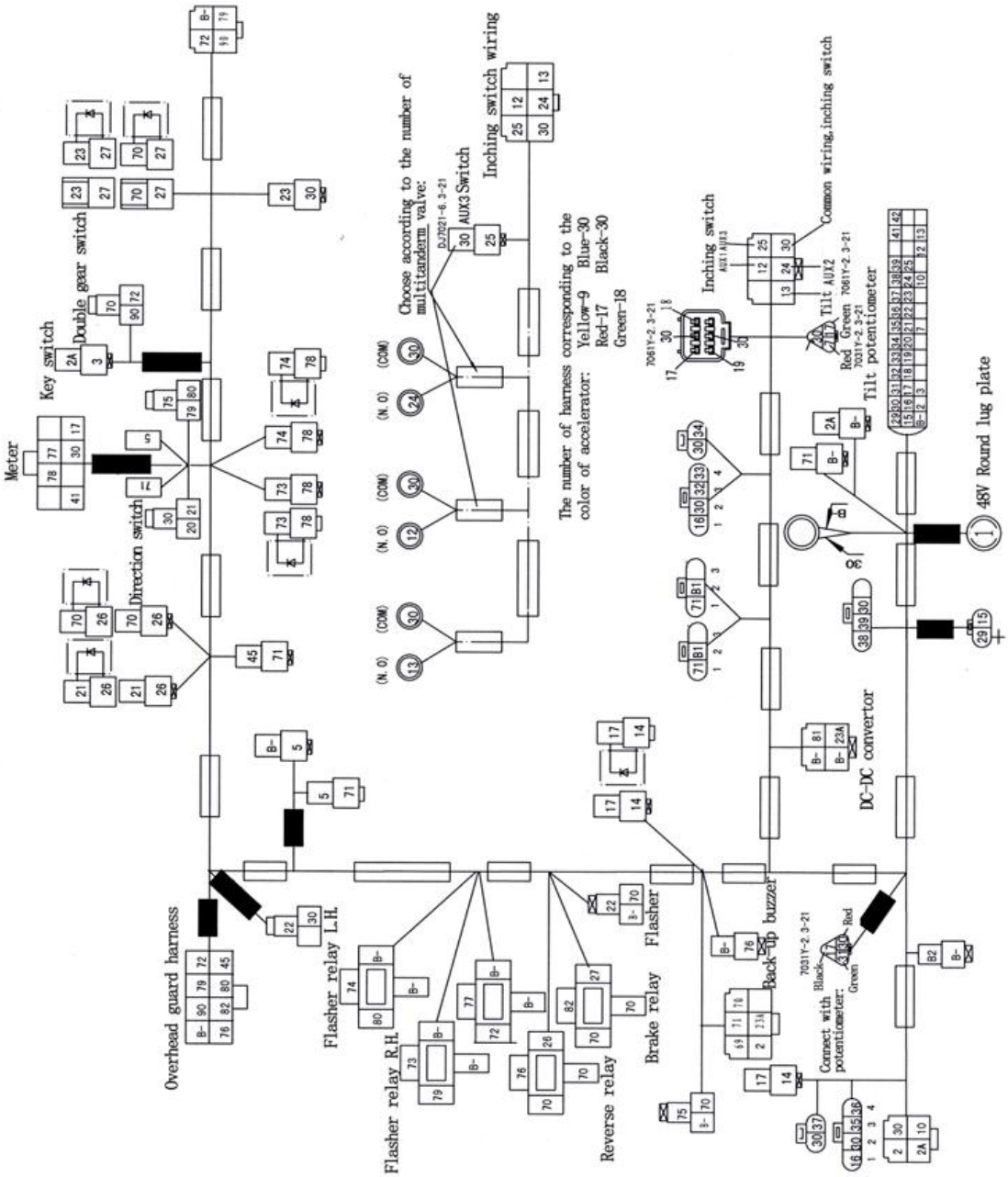

Fig. 4-12 Harness (AC CPD20J-30J)

5. Motor

5.1 DC motor

5.1.1 Main parameter

Type / Item	1-1.5t forklift truck	2-2.5t forklift truck	3t forklift truck
Drive motor			
Name	XQ-5-3A1	XQ-7A3	XQ-10.2A
Excitation	Separately	Separately	Separately
Rated power	5.3kw (an hour)	7kw (an hour)	10.2kw (an hour)
Rated voltage	45V	45V	75V
Rated current	139A	180A	162.5A
Weight	95kg	60kg	115kg
Lifting motor			
Name	XQD-8.2-1	XQD-8.6-3D	XQD—10-3D
Excitation	Series	Series	Series
Rated power	8.2kw (a quarter)	8.6kw (a quarter)	10kw (a quarter)
Rated voltage	45V	45V	75V
Rated current	240A	248A	160A
Weight	45kg	47kg	90kg

5.1.2 Drive motor

Installed on reduction box of drive device, the rotation of the drive motor is controlled by low-power transistor H-axle circuit in the controller.

Rotation status of the motor is determined by the current direction that flows through motor excitation coils.

5.1.3 Lifting motor

Lifting motor drives the main pump, it is installed on the left frame of the forklift truck. The sketch of structure and assembly refers to Fig.5-1 and Fig.5-2.

The rotation of lifting motor is controlled by the pump controller assembled in the counterweight.

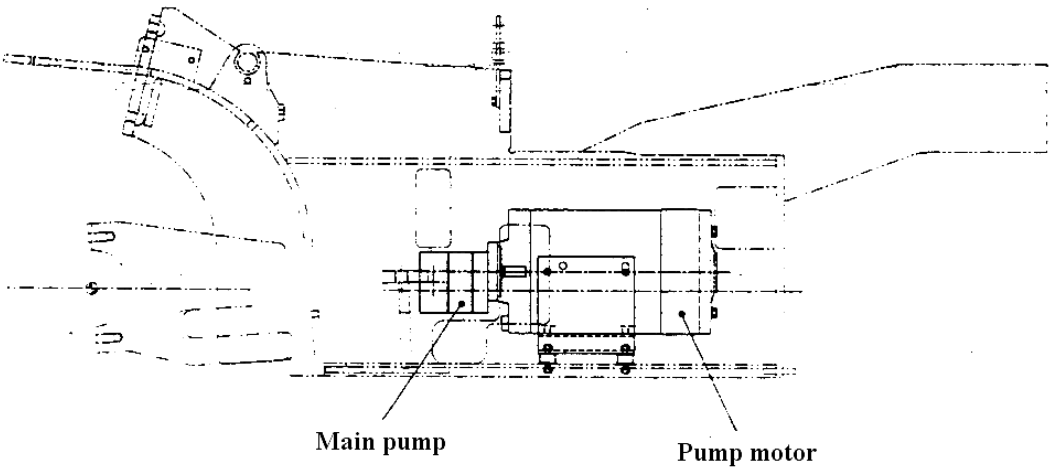

Fig 5-1 Assembly diagram of lifting motor

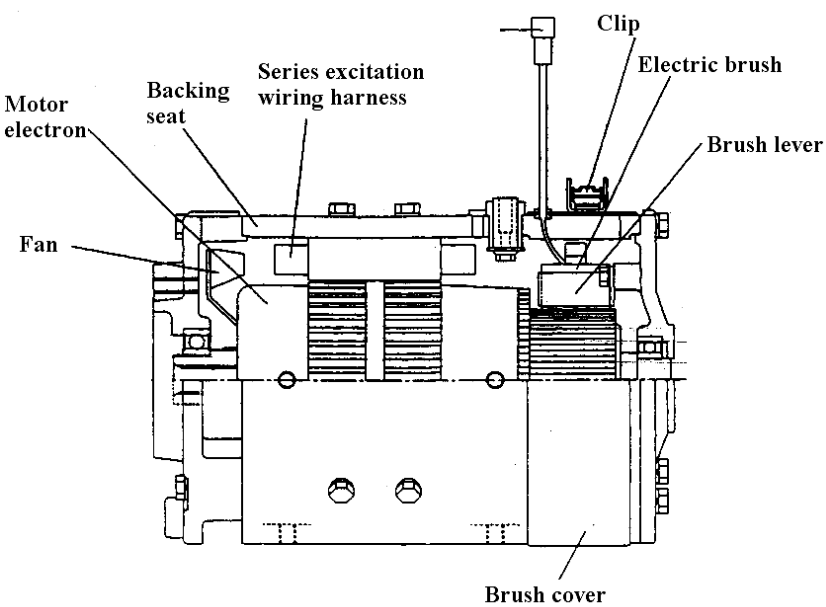

Fig5-2 Lifting motor

5.2 SME three-phase AC motor

The power system of four-wheel electric forklift truck is composed of three-phase AC drive motor and three-phase AC lifting motor. It’s with function of speed sensor, temperature sensor, simple construction, reliable performance, free of maintenance. (Fig.5-3)

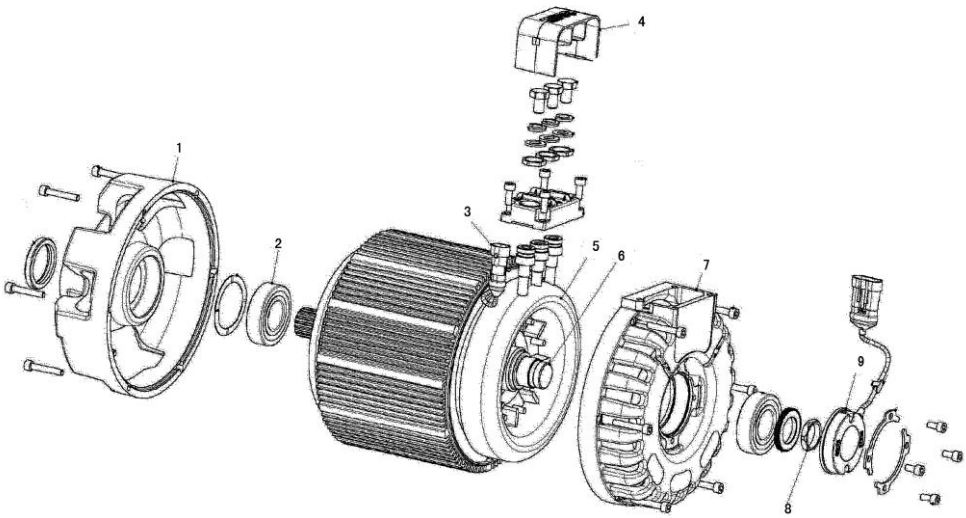

Fig.5-3 Structure of AC motor

1. Front cover	2. Bearing	3. Temperature sensor
4. Support cap	5. Stator	6. Rotor
7. Rear cover	8. Gear sensor	9. Speed sensor

5.2.1 Operating environment

Operate normally under the following conditions:

(1) Elevation is lower than 1200 meters.

(2) Air temperature ranges between -25℃ and +40℃.

(3) Relative humidity is 100%.

5.2.2 Daily inspection and maintenance

(1) Always keep clean and no water, oil pollution or dust in the motor.

(2) Check the bearing for heat or leakage.

(3) The load current of the motor can’t be over rated current.

(4) If there is friction, scream or other noise, stop working at once, after removing the failure, the motor will keep on working.

5.3 Inspection and maintenance of DC motor

5.3.1 Maintenance and service when driving

Item		Part	Judgment	Remedy
Environment	Dust	Motor frame	Visualization: Compare with the normal driving conditions and judge if the temperature is normal.	Clean the dust
	Foreign matter, liquid			Return to normal.
High temperature		Motor frame, Bearing	Compare with normal temperature. Motor frame:80℃ Bearing:55℃	Return to normal.
Vibration		Motor frame, bearing, board or others	Compare with normal vibration.	Check and troubleshoot.
Abnormal noise			Ear measurement: compare with normal noise.	Check and troubleshoot.

5.3.2 Maintenance and service when stopping

Item	Part	Judgment	Remedy
Assembly part	Assembly screws etc.	Visualization: Looseness, dust or rust	Tighten, clean and spray paint.
Terminal	Connected part	Visualization: Looseness or insulation process.	Tighten and check.
Connection	Inlets and outlets wire	Visualization: abnormal damage	Professional repair.

5.3.3 Periodic inspection of motor

1. Inspecting judgment

Inspection frequency of the motor is related with operation time every day. But at thick dust or high humidity place, it is necessary to add inspection frequency.

Operation time	More than 12 hours everyday	Less than 12 hours everyday
Check frequency	Once every year	Once every two years

Periodic inspection must be done according to the following list.

Item	Part	Judgment	Remedy
Roller bearing	Bearing (sealed)	Visualization, hearing: grease leakage, noise and dust	Clean, replace.
Connection part	Surface	Visualization: high roughness because of damage, rustiness.	Clean, correct.
	Screw	Visualization: looseness, rustiness and dust	Tighten, antirust, replace.
Terminal	Surface	Visualization: high roughness because of damage, rustiness	Clean, correct.
	Connection	Visualization: connection, looseness, insulating treatment.	Tighten, replace.
	Wire	Visualization: damage of covering protection.	Professional repair.
	Resistance	0.0063Ω±5% (20℃)	Professional repair.
Rotor	Core	Visualization: dust	Clean
	Coil	Insulating resistance higher than 1MΩ (measured with 500V ohmmeter).	Clean, heat, treat with varnish
Damage	Spray paint	Visualization: damage, discolor, peeling and rustiness.	Antirust and repaint.
Clean	Foreign matter, dust	Visualization: dirty, dust, and rustiness.	Clean, antirust and paint

2. Inspecting essential

During periodic inspections, please abide by the following essentials.

(1) Select a clean and dry place.

(2) When disassembling, taking notes of the order of disassembled parts is necessary. Put the screws and washers into a prepared empty box.

(3) When disassembling or assembling parts such as bracket, strike at it slightly with a wood hammer. If striking with a metal hammer, the bracket may be broken.

(4) Don’t damage the parts during operation. Make the stator coil and bearing far away from water, dust or sand, especially from being damaged.

(5) It’s necessary to clean and check after finishing disassembling. If find parts lack or damaged, replenish or replace at once.

(6) Wipe the coil with dry cloth or soft brush instead of hard material or gasoline, petroleum and other solvent.

(7) Dry the coil when the insulating resistance is too low. Heat the coil to 80℃-90℃ until the resistance is more than 1MΩ.

(8) Check if the bolts are loose and tighten them.

(9) Please refer to the fifth item: Inspection and maintenance of bearing.

(10) When the paint has discolored or peeled off, antirust treatment or repaint is necessary.

(11) Tighten the terminals securely. The pontes must be insulated completely with insulating rubberized fabric.

(12) After assembling, check carefully for any residual parts and if the screws are loosen. Before trial operation, rotate the shaft with hands, check for any abnormality.

(13) Select a place away from moisture, dust, alkaline or other harmful gas for storing motor. Smear anticorrosive oil on the ends of the shaft and wrap with oil paper or membrane, etc.

3. Usage and maintenance of commutator

Commutator has four check windows for checking, maintaining commutator and replacing electric brush. The seat has four equi-spaced magnetic poles with coil made of F copper wire soaked with Grade F insulating paint. The stator parts and the neutral position of electric brush have been adjusted, the users can’t disassemble or adjust it unauthorized.

(1) Check the armature rotation for flexibility.

(2) Check the terminals and outlets for correctness and tightness.

(3) The electric brush must slide smoothly in brush box.

(4) Check if commutator pieces are clean, if necessary, clean the carbon powder on gaps between commutator pieces and on the commutator surface with soft down less cloth. If there is oil on the surface, clean it with white cloth with alcohol. Do it when stopping the truck.

(5) Check the fasteners for tightness.

(6) The brush holder must be firm. When turning or disassembling, first make a sign, and then loosen the screw.

(7) When assembling the brush frame, tighten the screw aimed on the marking to make the electric brush on the original neutral position.

(8) Check the coil insulating resistant periodically. If the data is below normal when reaching the working temperature, it's necessary to make it dry.

(9) Open the shutter regularly to check if the inner parts out of shape and the commutator operating normally.

(10) Usually clean the dirt on the casing to help radiating heat.

(11) Check the motor every half a year as follow methods:

(a) Check and clean the dust of the motor.

(b) Clean or replace the bearing. Pay attention to the abnormal noise of the bearing when operating.

(c) Check the electric brush for wear, replace it if necessary.

4. Inspecting and polishing of electric brush

(1) Inspection of brush and brush spring

The line marked on the electric brush indicates wearing limit. When roughness is excessive, replace it.

Measure the tension of the brush spring on the rectifier with spring balance meter.

(2) Polishing of the electric brush

(a) When replacing the electric brush, polish it with 00# emery cloth. When polishing, pull the cloth left and right.

(b) After polishing electric brush and cleaning commutator, for safety, the motor should work in limited speed with capacity until the surface of electric brush is polished.

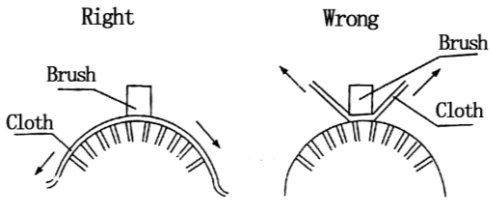

Fig. 5-4 Method of polishing

5. Inspection and maintenance of bearing

(1) Inspection and maintenance

The service life of the bearing varies with the load and driving condition. If the bearing was observed high temperature or abnormal noise, replace it immediately.

Sealed bearing is of effective lubrication because it is sealed high quality lithium grease, its structure also can prevent the dust from entering, with no need of replenishing butter for long time.

Inspect the sealed bearing according to the following periods. If necessary, replace it. Especially at thick dust place, or the place that butter may flow for deterioration because of harmful gas or solvent, adding inspection frequency is necessary.

Operation time	More than 12 hours	Less than 12 hours
Check frequency	Once every year	Once every two years

(2) Disassembly and assembly of bearing

If the bearing has abnormal noise or firing, disassemble the bearing from the shaft. When disassembling, give a force on the outer circle of bearing with a small dismantler. The bearing disassembled can not be used again (Fig.5-5).

When assembling a new bearing, give a force on the inner circle of the bearing with a barrel appliance (Fig.5-6).

▲Disassemble bearing

Disassemble bearing with special dismantler.

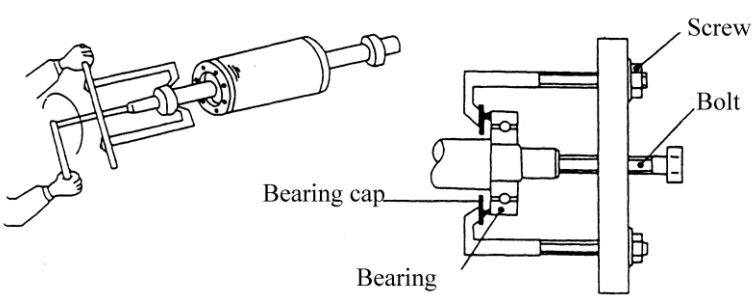

Fig.5-5 Disassemble bearing

▲Assemble bearing

Assemble bearing with steel pipe or retainer.

The temperature can't be out of 60℃-80℃when loosening the motor bearing.

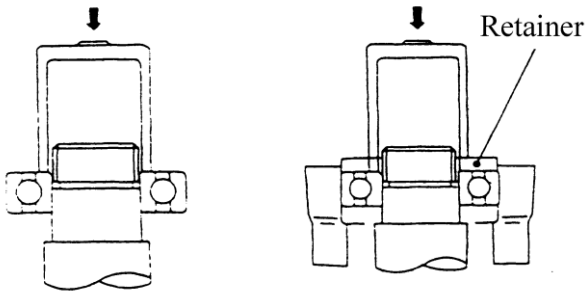

Fig.5-6 Assemble bearing

6. Measure insulating resistance

Connect negative pole of the meter with motor bedplate, positive pole with either of the two terminals, the measured value should be more than 0.5 MΩ.

If the measured value below 0.5 MΩ, clean the baked carbon in the motor with compressed air, if necessary, dry the motor with airer, then measure it again. If the measured value is still abnormal, replace the motor.

7. Inspection of rectifier

Rectifier is the most important part of the motor. If oil or foreign matter adhered on it, it will cause electric brush excessive roughness and weaken the efficiency of the rectifier. Clean it with compressed air or dry cloth.

Polish up the roughness of the rectifier surface with 500# or 600# sand paper and clean carefully. If appearing excessive roughness, maintain the rectifier with cutting tools.

After the cutting, correct the thickness of mica lamination.

Maintaining rectifier needs special mechanical tool, so you'd better call qualified serviceman.

5.4 Failure diagnosis of DC motor

Failure	Reason
All copper pieces are black	·The pressure of electric brush is incorrect.
The commutator pieces are black with the regular order.	·Commutator pieces are short circuit. ·Armature coil is short circuit. ·The commutator pieces and armature coil are faulty welding or break in the circuit.
The commutator pieces are black, but nothing regular.	·The middle line of commutator is out of position. ·The surface of commutator is not plat or round.
The electric brush is damaged, discolored or burst.	·The motor vibrates. ·The clearance between the electric brush and the brush box is too large. ·The distance between brush box and commutator surface is too large. ·The mica between commutator sheets sticks out. ·The electric brush materials isn't fitting. ·The trademark of electric brush is not correct.
Spark is great.	·The motor is over capacity. ·The commutator is not clean. ·The commutator is not plat or round. ·Mica sheets or some commutator pieces stick out. ·The electric brush is badly grinded. ·The pressure of electric brush is not large enough. ·The trademark of electric brush is not correct. ·The electric brush is blocked in the brush box. ·The brush holder is loose or vibrated. ·The magnetic polarity and order is improper.
Electric brush and brush wire gets very hot.	·The spark of the electric brush is too great. ·The electric brush and soft wire are contacted poorly. ·The area of the soft wire coil is too small.
The electric brush makes abnormal noise.	·The surface of commutator is not plat.

6. Battery and charger

6.1 Structure of battery

The battery is composed of lower-pole plate, negative plate, clapboard, capping and electrolyte.

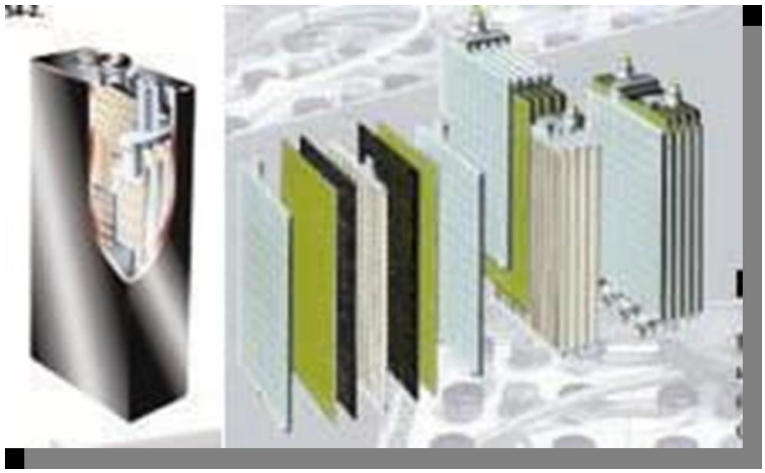

6.2 Specification of battery and charger

Item \ Type		1-1.5t forklift truck	2-2.5t forklift truck	3t forklift truck
Battery	Capacity	440AH/5h	700AH/5h	500AH/5h
	Name	D-440BS	7DB700	55VBS500
	Voltage	48V	48V	80V
	Density of electrolyte	1.280g/cm^3	1.280g/cm^3	1.280g/cm^3
	Weight	940kg	1160kg	1242kg
Charger	Form	Intelligent control, single-phase AC steady-voltage charger		
	Rated power	4.5KVA	5.5KVA	9.5 KVA
	Voltage	220V/50HZ	380V/50HZ	380V/50HZ
	Appropriate battery capacity	570AH	1000AH	600AH
	Output voltage	72V	72V	108V
	Current	50A	100A	60A
	Weight	60kg	75kg	120kg

6.3 Usage and maintenance of battery

The correct using and daily maintenance is very important for the performance and useful life of lead-acid battery. Operators must maintain and service the battery according to the manual and realities, fill in the record card of charging. The card can be copied as the daily inspection record, referred to the attached list at the back of the manual.

6.3.1 Information about battery operation

(1) Before using the new battery, clean the surface and check for the damage. Smear butter or Vaseline on the connectors to retard corrosion.

(2) The battery is assembled on the truck for balance weight, if it's lower than the Min. weight, the load capacity will be affected. When assembling the battery on the truck, fasten it with pin. The pin must be assembled after lifting and replacing the battery. The stability of the truck will be affected with no fixed pin.

(3) The first charge before using new battery is initial charge, after that, the current of common charging must keep the specified value, and input capacity is 130%-150% of output capacity, the battery must charge for about 12 hours.

(4) When operating the battery, avoid over-discharging (mean the voltage of single battery is lower than 1.80V) and over-charging, for it will effect the usual life and performance of battery.

(5) When charging, open the cap for pouring liquid. After finishing charging, close the cap. Keep the vent clear, for prevent exploding and damage of battery.

(6) After using the battery, charge it in time. If not charging in time, undercharge usually, standing idle without charging for long time or over discharging, the pole plates of the battery will be sulfatization, which effect a decline in performance of the battery or cause failure if seriously.

(7) There is ox hydrogen separated out when charging, it's necessary to keep good ventilation condition and avoid burning to keep off the explosion.

(8) During using and charging, the level of the electrolyte will decrease and the density will increase. Usually add distilled water to keep normal capacity and density of electrolyte.

Notice: Electrolyte can't be added directly.

(9) Keep the surface of the battery clean, maintain and service the pole terminals, bolts and connectors, loose connections or poor contact must be removed in time.

(10) During using the battery, if the voltage of the single battery is uneven or the

battery is not often used, a balanced charging (an amount over charge) every month is necessary.

6.3.2 Compound electrolyte

(1) The electrolyte of battery must be compounded with sulphuric acid and distilled water or deionizer water according to GB4554 standard. The density of electrolyte is 1.280-1.290g/cm^3 (25℃)

▲Temperature conversion of density

The density of electrolyte is changed with temperature, the relation is counted as follow formula: D 25=D t＋0.0007 (t－25)

D25—the density of electrolyte (g/cm^3) at standard temperature (25℃).

D t—The real density (g/cm^3) when the temperature is t.

0.0007—Exchange factor of temperature

t—The temperature of electrolyte when measuring density.

(2) Compound the electrolyte with ceramics cylinder which is anti-acid, anti-heat, without iron, or other anti-acid containers. When compounding the electrolyte, first put measured distilled water or deionizer water in clean container, then put measured thick sulphuric acid into water, at last mix them with vitriol stick.

Note: Don't put water into thick sulphuric acid against spattering and causing injury.

6.3.3 Perfusing electrolyte

(1) After assembling the battery, twist pore plug and pour the electrolyte cooled down to 30℃into the battery, which will be absorbed by pole plates, add electrolyte to 15-20mm upper the plate in time.

(2) After perfusing the electrolyte, the temperature of the battery will raise. Charge the battery after the fluid cooling down to 35℃about 4-8 hours later.

Note: Normally, the electrolyte in the battery has been compounded, so it's not necessary to add again. The electrolyte only can be added and compounded according to the need when the professional repairs the battery.

6.3.4 Measure density of electrolyte

The density of electrolyte is changed with the temperature. When measuring the

density of electrolyte, put the sucker of the densimeter into the electrolyte vertically, extruding the rubber tube with finger, then the electrolyte will be absorbed into the glass tube, at last, the buoy of densimeter will float. Read the number of densimeter.

Note: The densimeter must be floated vertically, not lean to the glass tube.

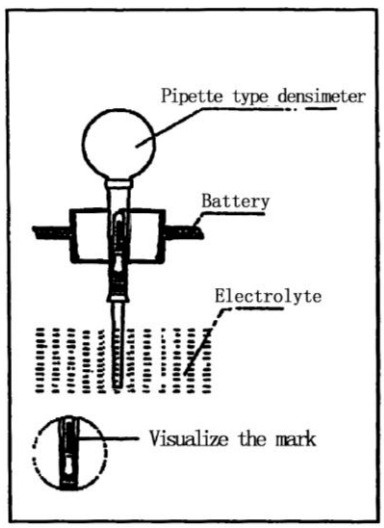

6.3.5 Adding distilled water

(1) Get a certain amount of distilled water with a graduated container.

(2) Open all pouring caps of battery units.

(3) Absorb distilled water with ball type injector to charge the battery. When electrolyte is over 15-20mm upper the plate, stop charging.

(4) After charging, tighten the pouring cap.

(5) Clean the surface of battery unit with a wet cloth.

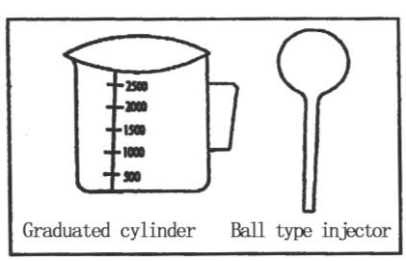

Note: (1) Wear eyes-protect glasses, rubber overshoes and rubber gloves.

(2) When adding the distilled water, never exceed the appointed amount. Adding too much will lead the leakage of electrolyte, then the truck will be damaged when charging or discharging.

(3) When adding too much, draw out water with ball type injector.

6.3.6 Charge the battery

(1) Precaution when charging

(a) Each time after the battery is discharged, it should be charged in time. Don't place the discharged battery more than a day. If it is left idle for long time without charging, sulphatized pole plates will make the battery reduce performance.

(b) When the forklift truck is seldom used, it is necessary to charge the battery full before laying aside and then charge it once a month.

(c) Measure the density when the discharging quantity is thought very weak, when the density is below 1.160, it is necessary to charge the battery.

(d) Balanced charging is necessary when the density difference is over 0.020, usually give the battery a balanced charging every two months.

(e) When the time of balanced charging is too more, that is over charging, battery's life will be shorten.

(f) If the temperature of electrolyte is above 55℃ before charging, it is necessary to leave the battery idle for a period of time, not until the temperature come down can it be charged.

(g) Overcharging or over discharging could make the temperature of electrolyte go up. When charging the battery, open the battery cover to radiate heat and ventilate.

(2) Characteristics of full charging battery

(a) The battery voltage of is about 52V (1-2.5t forklift truck with 24 groups batteries,), or 86.8V (3t forklift truck with 40 groups batteries).

(b) The density of electrolyte is about 1.280g/cm^3.

6.3.7 Storage of battery

(1) Store the battery in dry, clean, proper ventilation warehouse. (5℃—40℃)

(2) Let the battery far away from the direct sunshine, insolating and drenching, and the heat source over 2 meters.

(3) Avoid the battery being upside-down, tailed-flat, knocked or pressed.

(4) Far from any poisonous or mordant things. Forbid any metals and foreign matters dropping into the battery.

(5) Don't store the battery with electrolyte. Under special conditions, charge the battery and adjust the fluid level and density of electrolyte. In the process of storage, charge the battery according to the common way every month.

6.3.8 Handle waste battery

Waste battery should be handled properly in line with relevant laws and regulations.

6.4 Troubleshooting guide

There are lots of reasons for the troubles, besides production quality or transportation and storage, unsuitable maintenance will lead to many troubles. After the failure launch, it's necessary to analyze and take effective measures to remedy as soon as possible. The features, reasons and troubleshooting of the common troubles are as follow:

Feature		Cause	Remedy
Capacity drops	1. Rated capacity not being reached or not enough.	Not enough charge.	Balanced charging, improve the operating way.
		Density of electrolyte is too low.	Adjust the density of electrolyte.
		The connecting line isn't clear, too high resistance.	Unblock the outer connection line and reduce the resistance.
	2. Capacity drops gradually.	Pole plates are sulphated	Charging repeatedly to exhaust the condition of sulphating.
		There is harmful matter in electrolyte.	Check electrolyte, replace it if necessary.
		The battery is localized short circuit.	Check and remove.
	3.Capacity drops suddenly.	The inner or outer short circuit of battery	Check and remove.
Voltage is abnormal	1. The voltage is too high when charging, drops quickly when discharging.	The pole plates are sulphated	Exhaust the condition of sulphating.
	2. Opening voltage reduces markedly.	Opposite pole, short circuit.	Check signal voltage and exhaust it.

Feature		Cause	Remedy
Abnormally giving off gas	1. No gas or little during the end stage of charging.	Low charging current or charging not enough.	Adjust charging current and go on charging
	2. No gas after charging.	Short circuit of the inner battery.	Repair the short circuit
	3. Giving off too early with large quantity gas when charging.	Pole plates are sulphated.	Exhaust the condition of sulphating
	4. Give off gas on the process of laying or charging.	No laying after charging, or there is matter in electrolyte.	Discharge or replace electrolyte after laying for 1 hour.
Temperature of electrolyte is high	1. When charging normally, the temperature raises abnormally.	Too large current or short circuit when charging.	Adjust the charging current or exhaust the short circuit.
	2. Some batteries' temperature is higher than others.	Pole plates are sulphated.	Exhaust the condition of sulphating.
Color and density of electrolyte is abnormal	1. Density rises less or stays.	Pole plates are sulphated	Exhaust the condition of sulphating
	2. After charging, the density drops heavily when storage.	Quick self-discharging.	Much matter is in electrolyte, replace electrolyte.
	3. The color and smell is abnormal, and with turbid sediment.	Electrolyte is not pure, active matter gives away.	Replace electrolyte and clean the inner part

6.5 Charger

Charger consists of controller, power block and transformer. It adopts intelligent closed cycle control, it can display the status of charge and fault, and can measure the battery automatically. It's with dynamic tracking, closed cycle controlling, making the battery keep in the critical state of optimal charging electrochemical reaction.

6.5.1 Charger panel

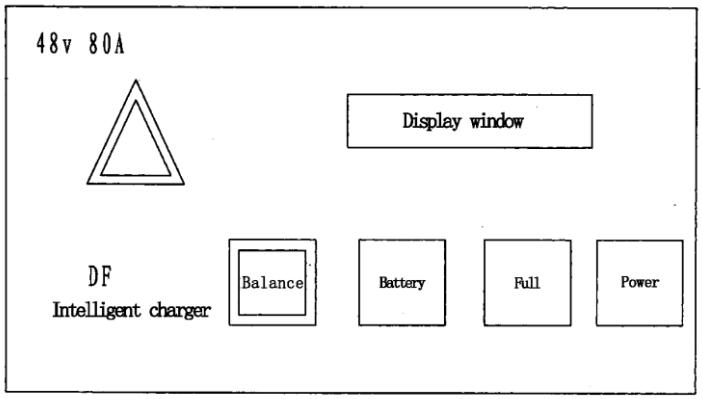

(1) When connect to power and turn switch, “Power” indication lamp lights.

(2) When the battery quantity is full, “Full” indication lamp lights.

(3) When the battery needs balanced charging, press “Balance” button and connect power, “-JH-”displays on the display screen, when pressing the button again, the charger restores to normal.

6.5.2 Usage of the charger and charging method

(1) Daily charging

When the under voltage warning of the battery displays on the liquid crystal displayer, please charge in time according to the following essentials:

(a) Park the truck at appointed place. Turn the key switch on “OFF” position and connect the battery. When replace the battery, sling it from the truck as rules.

(b) Confirm the input voltage and frequency of the charger, select appropriate the switch socket matched with the battery.

(c) The minimum quantity of electrolyte should be kept, the level of the electrolyte must be higher than guide plate for 15-20mm, or be in the scale range ruled by vent plug.

(d) Correctly connect the plug of the battery with relevant charger.

(e) Turn on the switch, the charger displays system’s version， the voltage of battery and the maximum charging current of charging. The charger begins to give an automatic test.

(f) After testing, the charger enters formal charging procedure, scroll displaying as follows: voltage [**.*U], current [**.*A], charging time [H**.**] (indicating **hour**minute) and ampere-hours charged [***AH].

(g) When the full indicator flashes, the battery capacity is full. The charger has entered automatically floating state, at the same time, the floating current of the charger is 1-3A.

(h) After having charged, turn off the switch, disconnect the battery plug from the charger.

(i) Before using the forklift truck, make sure the specific gravity of battery electrolyte has achieved the value as follows:

Temperature of electrolyte	Specific gravity of electrolyte	Temperature of electrolyte	Specific gravity of electrolyte
5℃	1.294	25℃	1.280
15℃	1.287	35℃	1.273

(2) Balanced charging

After the battery fully discharging, measure the specific gravity when charged distilled water, and that of all batteries, then converse the values (setting the temperature 25℃), come out the difference. When the difference is over 0.02, and other performance ruled, balanced charging is necessary. Charging equally according to these procedures:

After operating by the way the same with daily operating, press “balance” charging function button, the “balance” indicator flushes and “—JH—” appears. When the battery is fully charged, press the “balance” button to release. The charger returns to normal condition.

Notice: If charged more frequently, it may lead overcharge and shorten the useful life of battery.

7. Hydraulic system

7.1 General description

The hydraulic system consists of gear pump, control valve, lift cylinder, tilt cylinder and hydraulic lines. Oil pump directly connected with motor supplies hydraulic oil which distributed to each cylinder by control valve.

1. Performance of components

Item \ Forklift model		1-1.5t	2-2.5t	3t
Gear pump	Type	Gear pump		
	Displacement	16ml/rev	20ml/rev	20ml/rev
	Drive type	Connect with motor		
Control valve	Type	Pommel type		
	Model	CBT-F15D	CBT-F15D	CBT-F15D
	Setting pressure	14.5MPa	17.5MPa	17.5MPa
Lift cylinder	Type	Single-action piston type with cut-off valve		
	Bore diameter	Φ45mm	Φ50mm	Φ56mm
	Outer diameter	Φ36mm	Φ40mm	Φ45mm
	Stroke	1495mm (lifting height is 3000mm)		
Tilt cylinder	Type	Dual-action piston type		
	Bore diameter	Φ63mm	Φ70mm	Φ70mm
	Outer diameter	Φ30mm	Φ32mm	Φ32mm
	Stroke	147mm	167mm	132mm
Steering cylinder	Type	Dual-action piston type		
	Bore diameter	Φ70mm	Φ70mm	Φ70mm
	Outer diameter	Φ50mm	Φ50mm	Φ50mm
	Stroke	160mm	160mm	160mm
Content of hydraulic oil tank		24L-28L	28L- 32L	30L-34L

2. Diagram of hydraulic system

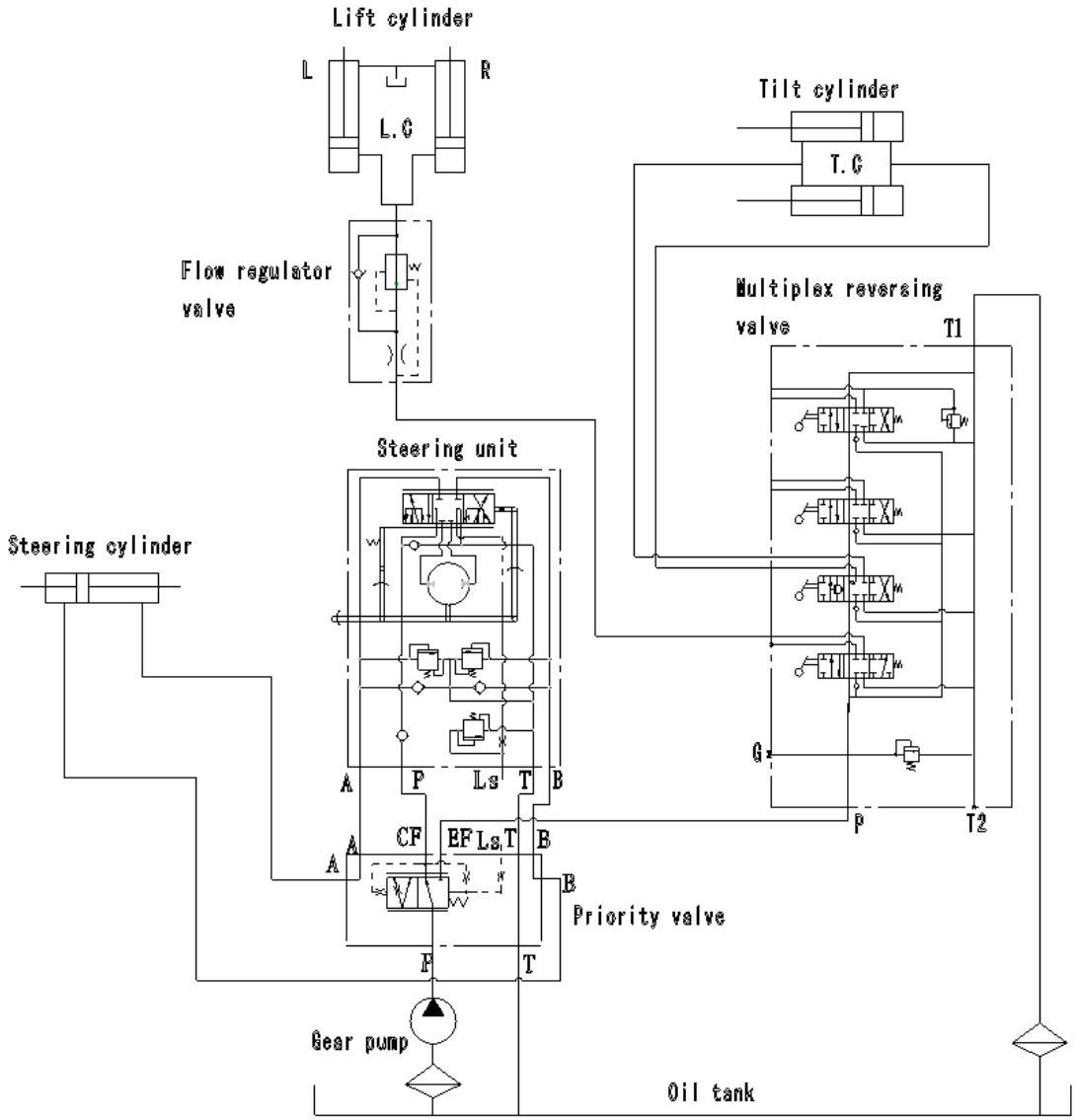

Principle diagram of hydraulic system

Model		CPD10 CPD15	CPD20 CPD25	CPD30
Primary pressure, hydraulic system P1	Mpa	14.5	17.5	17.5
Steering pressure P2	Mpa	7.5	9	9

3. Hydraulic oil circuit

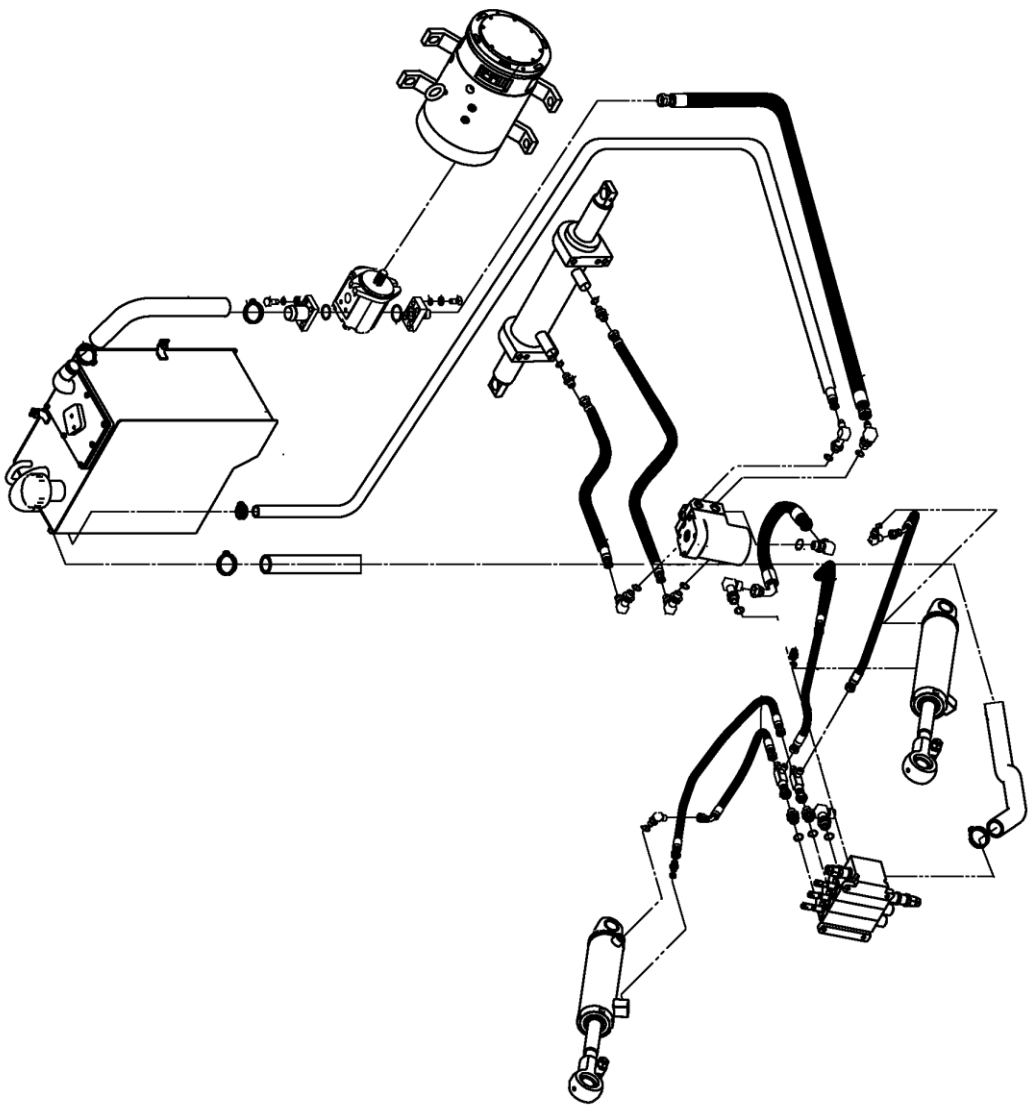

7.1.1 Control valve

The control valve consists of four valve housings, two spools and one relief valve. The control valve lever distributes the hydraulic oil from oil pump to lift cylinder or tilt cylinder. In the control valve, there is relief valve and self-locking valve. The relief valve installed upon control valve inlet can control the pressure of system, and the self-locking valve set on the tilting valve pieces is used for preventing serious results' happening of tilting cylinder because of misoperation when there is no pressure source. The retaining valve is separately installed between inlet and lift valve inlet port, and between lift valve inlet port and tilt valve inlet port. The diagram of control valve is referred to Fig. 7.1.

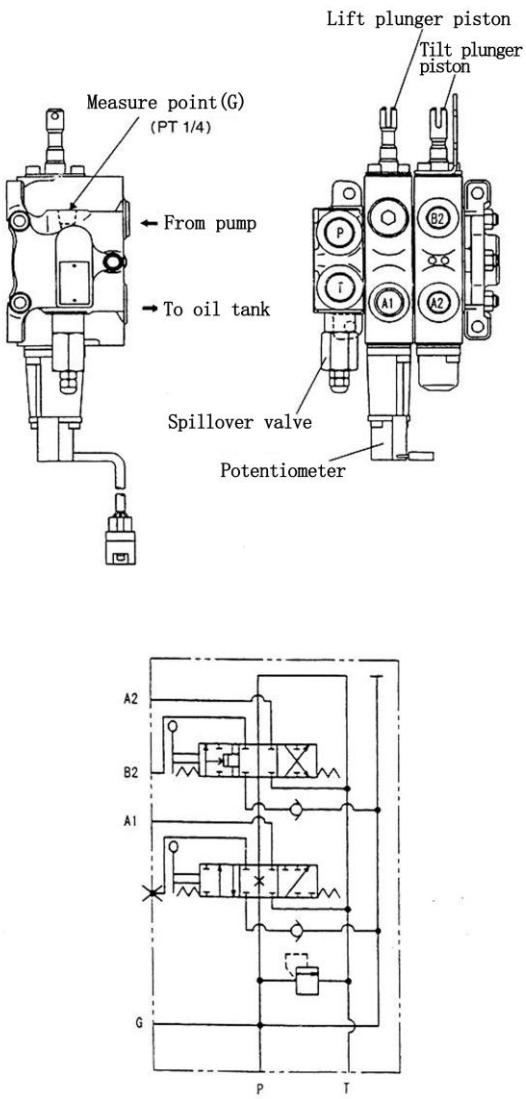

Fig.7-1 Diagram of control valve

(1) Operation of the control valve

The control valve is operated by the levers. All control levers are mounted on a linking shaft fitted on the cabinet through a bracket. The control levers operate the spools through the linking rod.

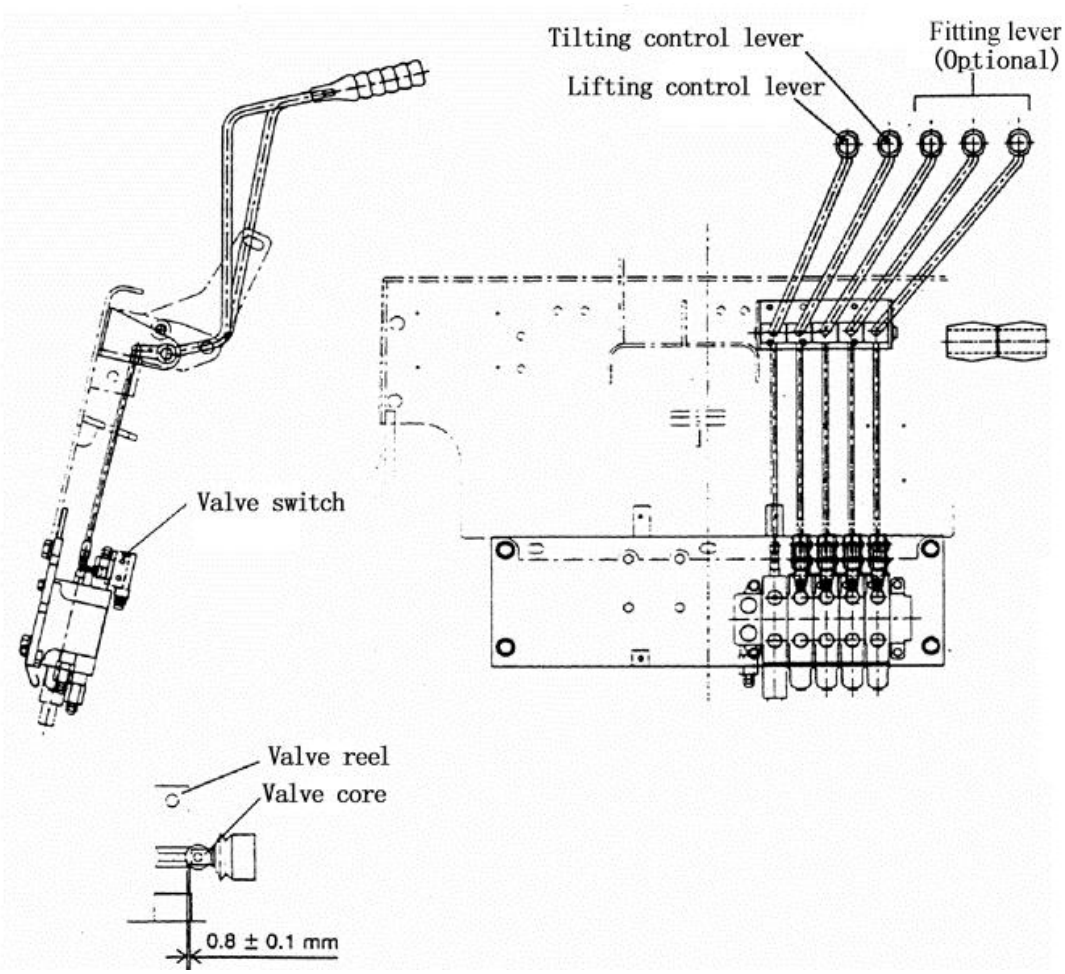

Fig.7-2 Operation of control valve

▲ **Install the inching switch**

Make the inching switch bulb and camshaft keep identical center, with the tangency of bulb surface and reel, then press the inching switch bulb with control valve rod, make the stroke no less than 0.8±0.1mm，make the inching switch keep ON position, which can be opened or closed freely by adjusting the clearance properly.

(2) Setting pressure of the relief valve (Fig7-3)

The pressure of the relief valve has been set before delivery. Don't adjust the pressure at will, for it will bring danger for system and safety. If the oil pressure is different with standard value as the following form, according to the measure method specified in JB/T3300, specialized servicemen adjust the pressure as follows:

(a) Screw out the measured hole plug from the inlet port of control valve and install the oil-pressure gauge (20MPa) on it.

(b) Operate the tilt lever, measure the pressure when the stroke is to the bottom.

(c) When the oil pressure is different from the specified value, loosen the lock nut of the surplus valve, adjust the adjusting screw left and right to achieve the specified value. Turn the screw left when pressure is high, and turn right when it is low.

(d) After having adjusted, tighten up the lock nut.

Setting pressure	1-1.5t	2-2.5t	3t
Pressure of relief valve	14.5MPa	17.5MPa	17.5MPa
Pressure of steering unit	7MPa	9MPa	9MPa

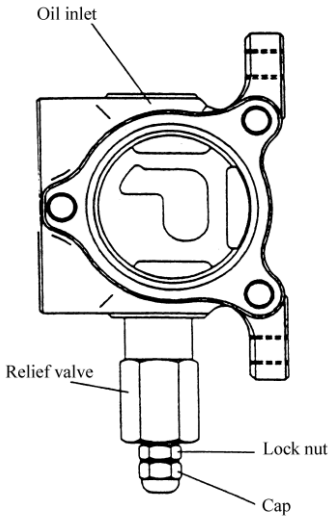

Fig.7-3 Setting pressure of relief valve

7.1.2 Lift cylinder

The lift cylinder is of single-action piston type. It consists of cylinder body, piston rod, piston and cylinder head. The bottom of the cylinder is connected with the cylinder supporter of the outer mast by bolts and pins, while its top (i.e. piston rod head) is connected with the upper beam of the inner mast.

The piston, fastened to the piston rod with spring wire is fitted with oil seals and wearing on its outer periphery.

At the bottom of the lift cylinder there is a cut-off valve, which operates when the high-pressure hose bursts for any reason to prevent the load from dropping abruptly.

There are steel-backed bearing and oil seal assembled on cylinder head to support the piston rod and prevent the dust. The diagram of lift cylinder is referred to Fig7-4.

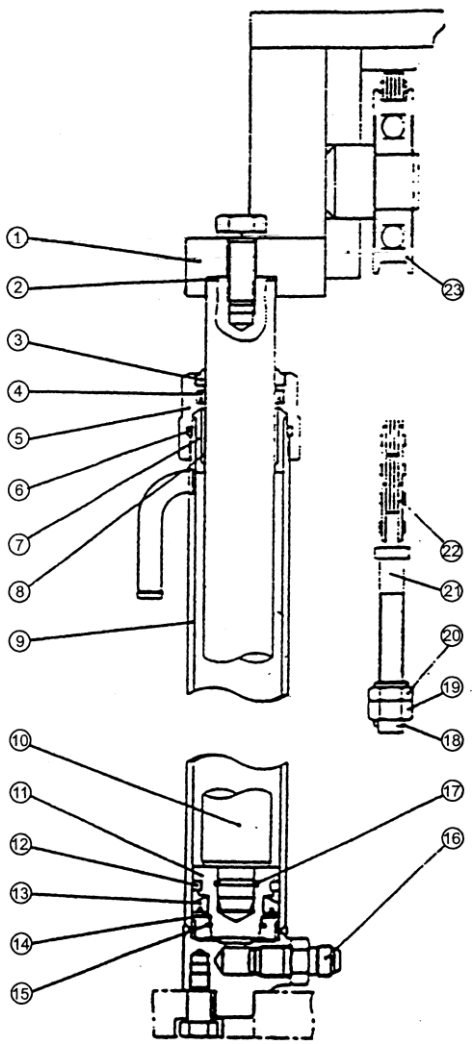

1. Upper beam
2. Adjust shim
3. Dust ring
4. Oil seal
5. Guide sleeve
6. O-ring seal
7. Cylinder head
8. Steel-backed bearing
9. Cylinder body
10. Piston rod
11. Piston
12. Oil seal, piston
13. Oil seal
14. Ring
15. Snap ring
16. Cut-off valve
17. Spring lock ring
18. Cotter pin
19. Nut, lock
20. Nut, adjustment
21. Joint
22. Chain
23. Chain wheel

Fig.7-4 Lift cylinder

▲ Action of cut-off valve

There is a cut-off valve that operates when the high-pressure hose bursts for any reason to prevent the load from dropping down abruptly at the bottom of the lift cylinder (Fig. 7.5). The oil from the lift cylinder flows through small holes in the circumference of the cut-off valve spool and produce a pressure difference between two chambers. As the pressure difference is smaller than the spring force as result of passing the holes so that the cut-off valve spool won't move. If the high-pressure hose bursts, the pressure difference will be big enough to overcome the spring force, causing the spool to move until the holes on the circumference of the spool are blocked up and allowing only a small amount of oil to flow through the holes at the spool end to let the forks descend at low speed.

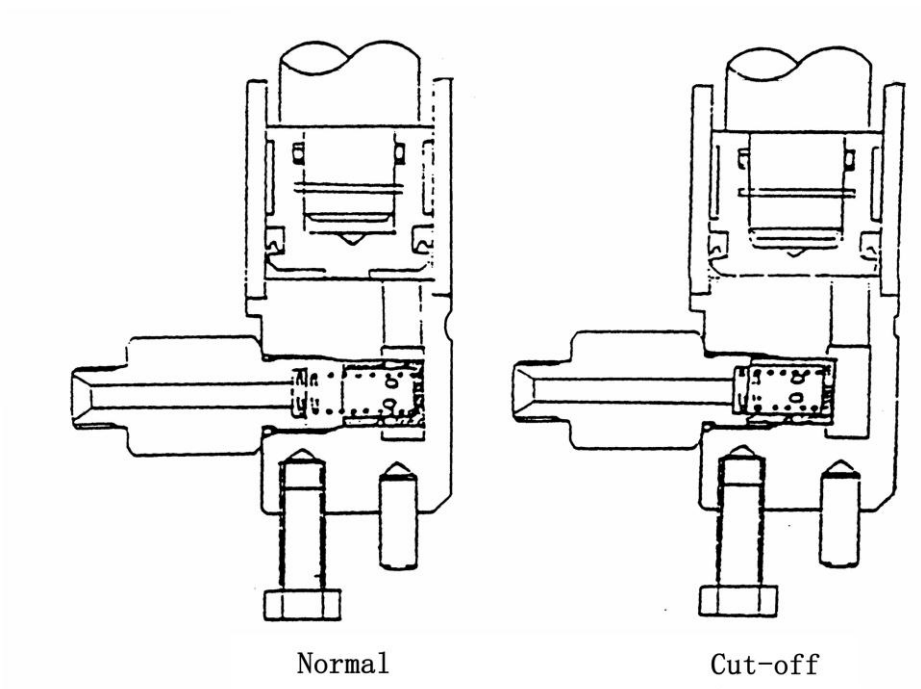

Fig.7-5 Action of cut-off valve

7.1.3 Flow regulator valve

The flow regulator valve located in the lift cylinder circuit is to limit the descending speed of loaded forks, and support when there are accidents, such as bursting because of high pressure, its construction is referred to Fig. 7-6.

▲ Operation of flow regulator valve

(Fig.7－7)

When the lift spool is placed in the “lift” position, the oil from the control valve flows through the oil chambers A and B, oil holes C, D, E and F, and the chamber G to the lift cylinder without any regulation. When the lift spool is placed in the “down” position, the oil flows in the reverse direction. When much oil passes the orifice plate, the pressure difference overcomes the force of the spring and moves the valve core right, thus the oil flow being decreased by narrowing of the hole D and C, and reduces the oil flow passing through the orifice plate, the descending speed of the fork becomes slower.

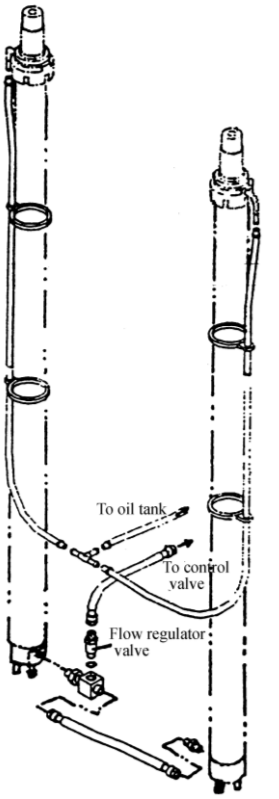

Fig.7-6

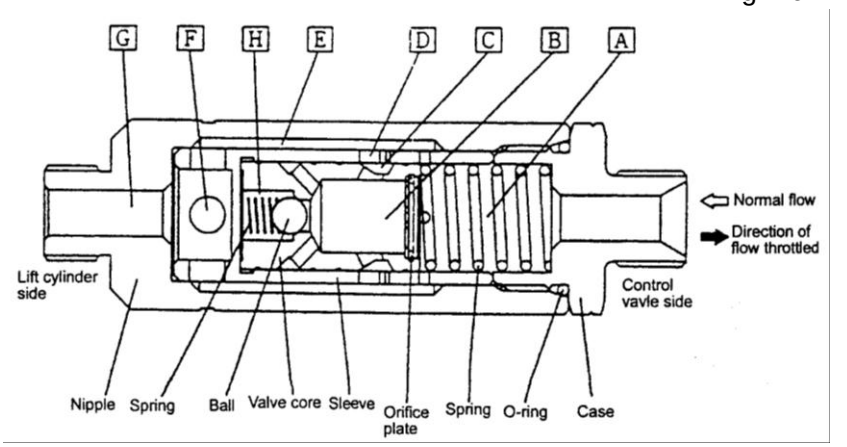

Fig.7-7 Flow regulator valve

7.1.4 Tilt cylinder

The tilt cylinder is of double-acting type. Each truck has two tilt cylinders that are installed on two sides of the frame with pin while their piston rod ends are connected with the outer mast.

The tilt cylinder consists primarily of piston, piston rod, cylinder body, cylinder base, guide sleeve and seals. The piston, welded to the piston rod, is fitted with two Yx-rings and one wear ring on its circumference. A bushing press-fitted to the inner side of the guide sleeve supports the piston rod. The guide sleeve is with dust seal, snap ring, Yx-ring and O-ring to prevent oil leakage and keep dust off. Fitted with them, the guide sleeve is screwed into the cylinder body. The construction of tilt cylinder is referred to Fig.7-8.

When the tilt lever is pushed forward, the high-pressure oil enters into the cylinder body from the cylinder tail, moving the piston forward and causing the mast assembly to tilt forward until 6 degrees. When the tilt lever is pulled backward, high pressure oil enters into the cylinder body from the guider sleeve and moves the piston backward, tilting the mast assembly backward until 12 degrees.

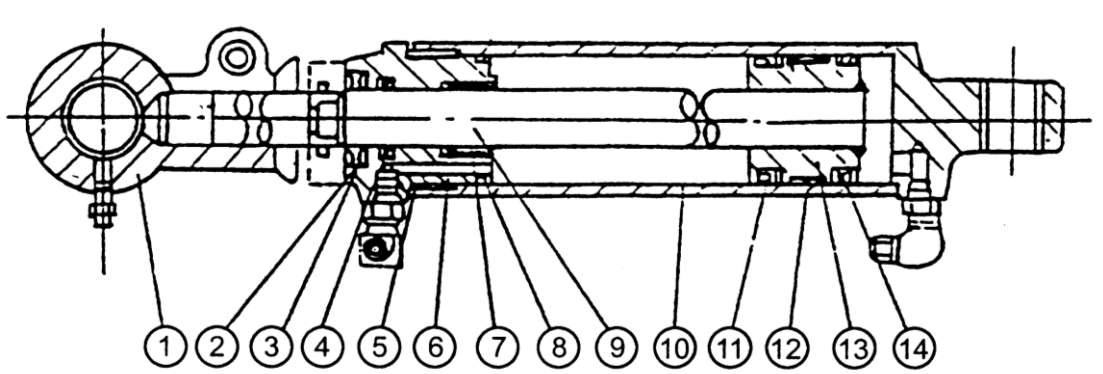

Fig. 7-8 Tilt cylinder

1. Ear-ring
2. Dust ring
3. Snap ring
4. Yx-ring
5. O-ring
6. Guide sleeve
7. Bushing
8. O-ring
9. Piston rod
10. Cylinder body
11. Yx-ring
12. Wear ring
13. Piston
14. Yx-ring

7.1.5 Oil tank

The oil tank is located on the right side of the frame. There is an inlet filter in the oil tank and a return filter in the return oil pipe in order to supply cleanly oil.

▲ Replace oil filter

(1)Loose the drain plug and discharge oil.

(2)Clean the oil tank board and disassemble the screw.

(3)Remove the inlet pipe and return pipe.

(4)Remove the oil tank board.

(5)Remove the return filter, replace new filter.

(6)Remove the inlet filter, replace new filter.

(7)Remove the old gasket, replace new one and smear sealant (Three Bood 400# or equivalence).

(8)Install the oil tank board, connect the inlet pipe and the return pipe.

7.2 Maintenance and adjustment of hydraulic system

7.2.1 Maintenance of gear pump

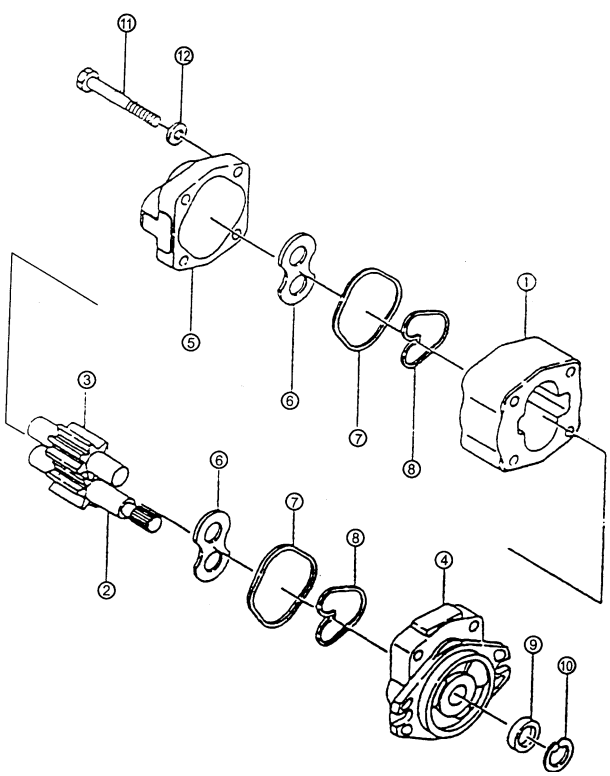

1. Pump body
2. Driving gear
3. Driven gear
4. Front cover
5. Rear cover
6. Lining plate
7. Seal ring
8. Ring
9. Oil seal
10. Snap ring
11. Bolt
12. Washer

Fig.7-9 Gear pump

1. Disassembly

Before disassembly the pump, make it clean and put the removed parts on the paper or cloth. Don't damage the parts.

(a) Hold the pump in a vice by lightly clamping the flange section.

(b) Remove bolts ⑤ 11, pump cover ⑤, pump body ①(Fig.7-9).

(c) Remove lining plate ⑥, driving gear ② and driven gear ③.

(d) Remove seal ring ⑦ and ring ⑧ from the front and rear covers.

Caution: If the seal ring needn't be replaced, don't remove it from the front cover.

2. Inspection

The disassembled parts except rubber parts should be washed with gasoline.

(a) Pump body inspection (Fig. 7-10)

If the scraping trace is up to 1/2 long of the inner periphery, it indicates that the bearing and gear shaft are subject to excessive wear, replace the pump body.

(b) Lining plate inspection (Fig. 7-11)

Inspect the contact surface of the lining plate. If the surface is worn or its thickness is smaller than the specified value, replace the lining plate.

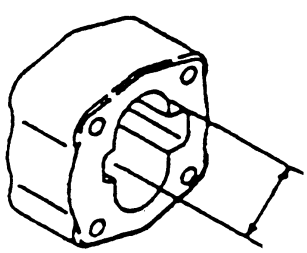

Fig. 7-10

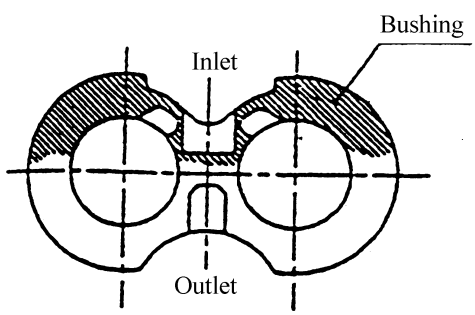

Fig. 7-11

(c) Front and rear cover (Fig. 7-12)

If the inner surface of bushings discolored, replace.

(d) Inspect the driving gear and the driven gear. If they are worn, replace them. (Fig. 7-13)

(e) Replace seal rings, bushing seals, snap rings, oil seals and spring snap rings as require.

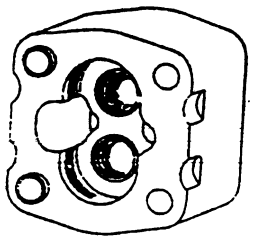

Fig. 7-12

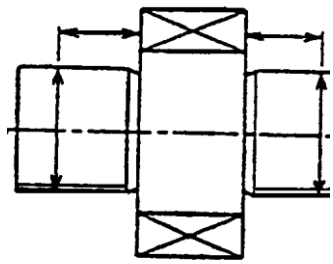

Fig. 7-13

3. Assembly

(a) Install a new seal ring and a new ring on the front cover of pump.

(b) Install the lining plate on the groove of the front cover, don't confuse the inlet oil port and the outlet oil port.

(c) Install the driving gear and the driven gear on the front cover.

(d) Install the lining plate on the side of the gear, with groove aiming gear point, don't confuse the inlet oil port and the outlet oil port. (Fig. 7-14)

(e) Install a new seal ring and a new ring on the groove of the rear cover. (Fig. 7-15)

(f) Install the rear cover on the pump body, don't confuse the inlet oil port and the outlet oil port.

(g) Tighten up the connecting bolts with a specified torque of 9 to 10 kg.m after all.

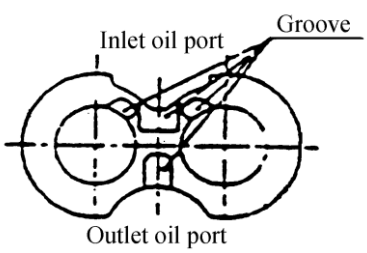

Fig. 7-14 Lining plate

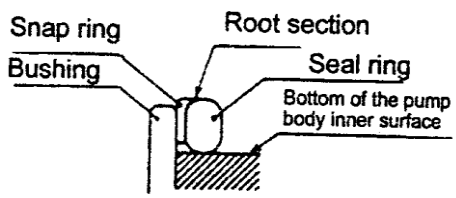

Fig. 7-15 Seal

Notice: The maintenance data of oil pump parts may be different because of the difference of manufacturers.

4. Trial run

After installing the gear pump in the truck, check it reassembled for specified performance and do the trial run for it. If the pump's gears are seized or internal parts worn excessively, you should renew the hydraulic oil and filters or clean them. The trial run procedures are as follows:

(a) Install the gear pump in the truck. Then install a pressure gauge in pressure inspection port of the control valve.

(b) Loose the adjustment screw of the relief valve and run the pump at 500 to 1000 rpm for ten minutes. The oil pressure should be lower than 10 kg/cm^2.

(c) Increase the speed of the pump to 1500 to 2000 rpm for ten minutes.

(d) Without the change of the speed in step, increase the pressure to 20 to 30 kg/cm^2 at a time and run the pump for five minutes. Then increase the pressure to 175 kg/cm^2. Each circuit works for five minutes and then renews the return filter.

During the increase of the pressure, observe the change of oil temperature and pump body surface temperature and working voice. If the oil temperature or pump body surface temperature is excessively high, decrease the load to reduce the oil temperature, then go on doing the test.

(e) After the trial run, measure the flow amount through lift speed with the pressure of 175 kg/cm^2 of the relief valve.

7.2.2 Troubleshoot

If the hydraulic system has a fault, find out the possible cause according to the following tables and repair it.

1. Control valve

Problem	Possible cause	Remedy
Lower oil pressure of the lifting oil circuit	Spool is held up	Disassembly and clean
	Oil hole is blocked	Disassembly and clean
Vibrate and the oil pressure rising slowly	Spool is held up	Disassembly and clean
	Exhaust not fully	Exhaust fully
The oil pressure of the steering oil	Spool is held up	Disassembly and clean

Problem	Possible cause	Remedy
circuit is more than the specified	Oil hole is blocked	Disassembly and clean
Lower oil amount	Misadjusted relief	Adjust
Noisy control valve	Misadjusted relief	Adjust
	Slide surface worn	Replace relief valve
Oil leakage (outside)	O-ring seal aging or broken down	Replace O-ring seal
Lower setting pressure	Spring is worsen	Replace spring
	Valve seat surface is worsen	Adjust or replace relief valve
Oil leakage (inside)	Valve seat surface is worsen	Correct valve seat surface
Higher setting pressure	Valve is held up	Disassembly and clean

2. Gear pump

Problem	Possible cause	Remedy
Less exhausting oil	Lower oil level of oil tank	Add oil up to specified level
	Blocked pipe-line or oil filter	Clean or replace oil
Lower pressure of gear pump	Lining plate, seal ring, bushing seals or snap ring broken down	Replace
	Misadjusted surplus valve	Adjust the pressure of surplus valve to specified value with pressure gauge.
	Air entering into the pump	Retighten loose connections for suction pipe; Add oil into oil tank; Replace oil seal
Noisy gear pump	Worn suction pipe or blocked oil filter	Check pipe or repair filter
	Air entering in resulting from loose suction connections	Retighten the connection
	Too high oil stickiness	Use oil with proper stickiness
	Air bubble in oil	Find out cause and correct
Oil leakage in pump	Oil seal or seal ring broken	Replace
	Pump broken down	Replace

8. Lifting system

8.1 General description

The lifting system is the type of lifting and descending vertically with rollers of the two-stage. It consists of the inner mast, the outer mast and the lift bracket.

The fork is fastened on the bracket upper beam groove with pin, the fork clearance can be adjusted. The fork and bracket can be exchanged according to the international standard.

8.1.1 Inner and outer mast (Fig.8-1 and Fig. 8-2)

The inner and outer mast both are welded parts. The bottom of outer mast is assembled on the drive axle with support. The outside middle of outer mast is connected with the frame by tilt cylinders. The mast assembly can be tilted forward and backward by operating tilt cylinders. The outer mast has C-shaped cross section, fixed with main rollers and side rollers on the top of it. The inner mast has J-shaped cross section, fixed with main rollers and side rollers at the bottom of it.

NOTICE: Please pay more regard to safety when maintaining the main rollers and side rollers on the upper of the mast.

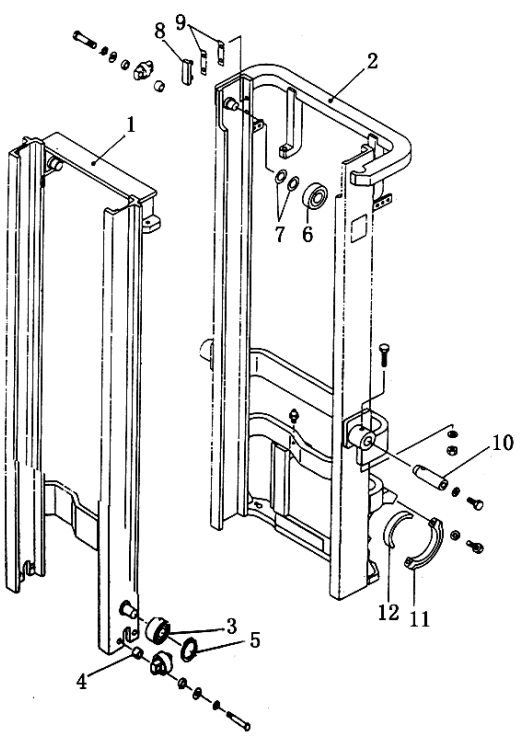

1. Inner mast
2. Outer mast
3. Main roller
4. Shim
5. Ring
6. Main roller
7. Gasket
8. Slipper
9. Shim
10. Pin shaft
11. Cap
12. Bushing

Fig. 8-1 Inner and outer mast (1-1.5t)

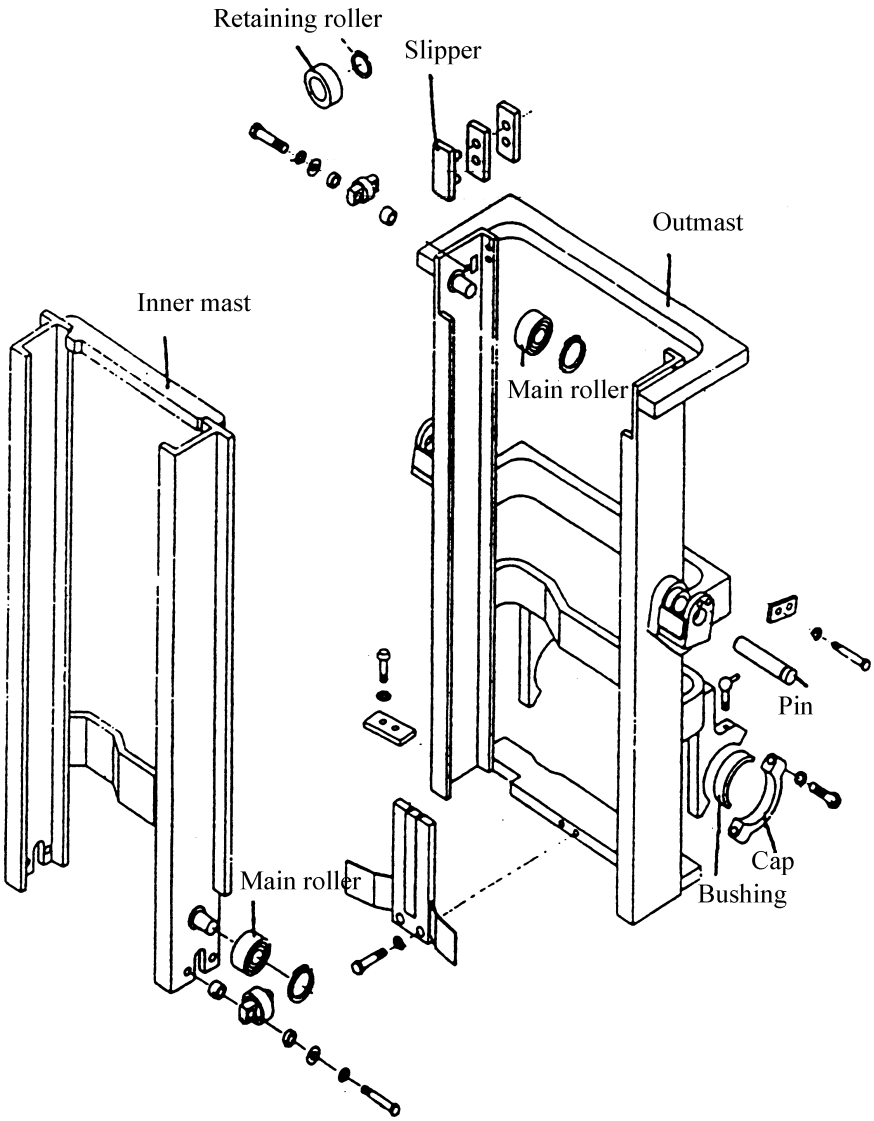

Fig. 8-2 Inner and outer mast (2-3t)

8.1.2 Lift bracket

The lift bracket moves up and down smoothly along the channel of the inner mast with main rollers. The main roller is fixed on the axis of the main roller by snap ring. And the axis of the main roller is welded on the lift bracket. But the side roller is assembled on the lift bracket with bolts. The moving along inner mast wind plate can be adjusted by shim. To prevent the clearance when moving, make two immovable side rollers move along the outside of inner mast wind plate. Main rollers sustain the longitudinal loads. And side roller sustains the transverse loads. When forks reach the maximum height, the upper pair of main rollers will come out from the top of the inner mast. (Fig. 8-3, Fig. 8-4)

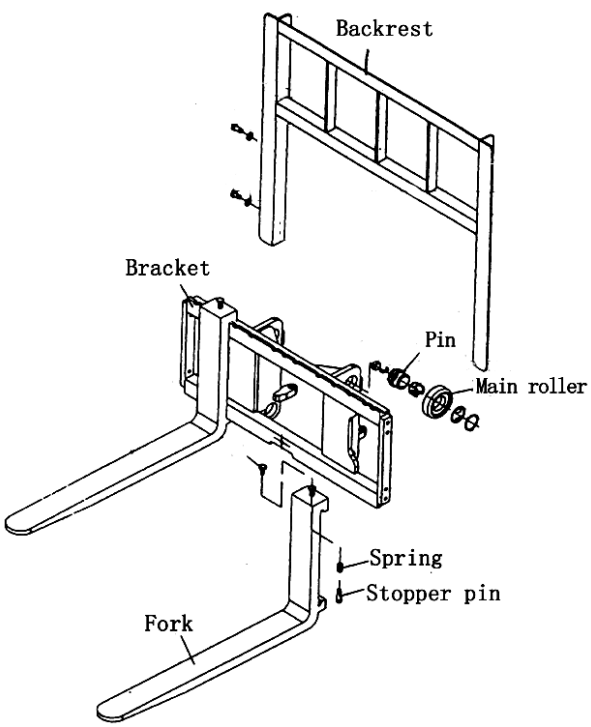

Fig. 8-3 Lift bracket (1-1.5t)

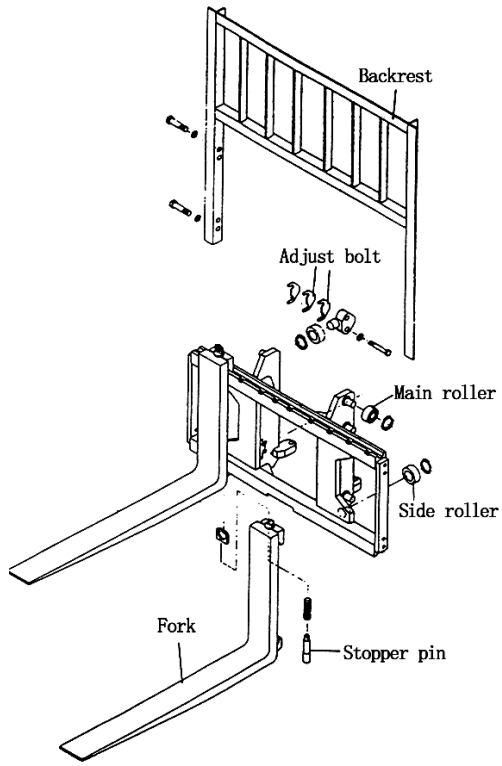

Fig. 8-4 Lift bracket (2-3t)

8.1.3 Fork pin

The fork pin fastens the fork on the definite position. When adjusting the clearance of the fork, pull the fork pin turn 1/4 circle, the fork clearance must be adjusted according to the loaded goods.

8.2 Maintenance and adjustment of lifting system

8.2.1 Adjust lift cylinder (Fig. 8-5)

Readjust the stroke of the lift cylinder when replacing the lift cylinder, the inner mast or the outer mast as following:

(1) Place piston rod heads without shims into the upper beam of the inner mast.

(2) Ensure that two lift cylinders are lifted at the same time when the mast ascended at its height.

(3) If they not lifted synchronously, add shims between the upper beam of the inner mast and the piston rod head which reaches to its height firstly. The shims' thickness is 0.2mm or 0.5mm.

(4) Adjust the tightness of lift chains.

NOTICE: Please pay more regard to safety when adjusting the lift cylinder at an elevated height.

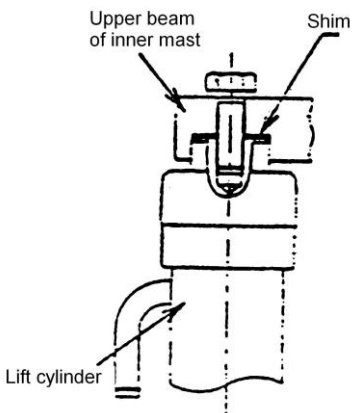

Fig. 8-5 Adjust lift cylinder

8.2.2 Adjust the height of lift bracket

(1) The truck should be stopped on horizontal ground. And ensure the mast vertical.

(2) Lower the forks on the ground, adjust the set nut on the upper of chains to assure the distance A between main rollers and the lift bracket. (Fig. 8-6)

Type of forklift	A(mm)
1-1.5t	36～41
2-3t	24～29

(3) Make the mast tilt backward when forks are descended to the ground, adjust the top joint of lift chains and let the tightness of two lift chains be equal. (Fig. 8-7)

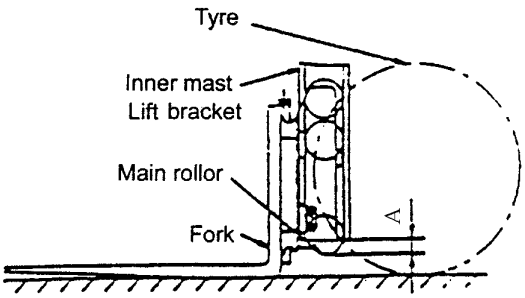

Fig. 8-6

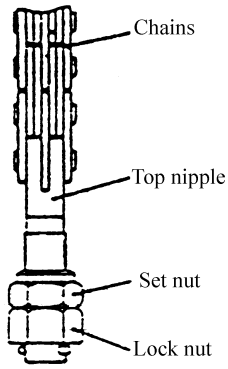

Fig. 8-7

8.2.3 Replacing rollers of the lift bracket

(1) Place a salver on the forks and make the forklift stop on the flat ground.

(2) Make the forks and salver descend to the ground.

(3) Take down the top joint of the chains. And take out chains from sheave.

(4) Lift the inner and outer mast. (Fig.8-8 ①)

(5) The forklift will be reversed when the lift bracket is disengaged from the outer mast. (Fig. 8-8 ②)

(6) Replace main rollers

·Take apart all the snap rings from the lift bracket and take out main rollers except the adjust shims.

· Make the new main roller (the same type as the old one) fit on the lift bracket and fastened with snap ring.

8.2.4 Replace rollers

(1) Take apart the fork bracket from the inner mast, then replace the main roller following the way as 8.2.3.

(2) Park the truck on the flat ground and lift up the front-wheel 250-300 mm away from the ground. (Fig. 8-9)

(3) Pull parking brake lever fully, and use a wedge to make back-wheel stationary.

(4) Take apart bolts which fastened lift cylinders and the inner mast. Hang up the inner mast without losing shims of the piston rod heads carefully.

(5) Take apart bolts which jointed lift cylinders and the bottom of outer mast and take apart the oil–pipe between two lift cylinders without loosing the nipple.

(6) Main rollers on the upper outer mast will be showed on the top of the inner mast as soon as main rollers were taken apart from bottom of the inner mast after laying down the inner mast.

(7) Replace main rollers

· Take apart the upper rollers without losing shims.

· Fit the new main roller and shims together on the outer mast.

(8) Hang up the inner mast and let all rollers in the inner mast.

(9) Assemble the lift cylinder and the lift bracket as the procedures contrary to disassembly.

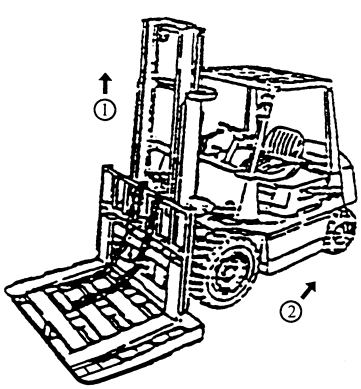

Fig. 8-8

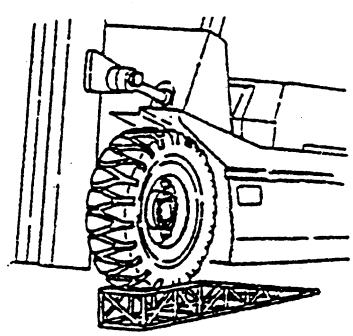

Fig. 8-9

Appendix:

The charging record card of electric forklift truck

Model of truck：　　Identification No：　　Date of purchasing：

Model of battery：　　Battery No：　　Date of first using：

Date	Fluid level of electrolyte (normal / lower)	Density of electrolyte (g/cm^3) (before charge /after charge)	Charging hours (begin/over)	Voltage (V)	Charged electricity (Ah)	Distilled water (ml)
		/	/			
		/	/			
		/	/			
		/	/			
		/	/			
		/	/			
		/	/			
		/	/			
		/	/			
		/	/			
		/	/			
		/	/			
		/	/			
		/	/			
		/	/			
		/	/			
		/	/			
		/	/			

Density of electrolyte (St)：　It must be charged when the density of electrolyte is lower than 1.160g/cm^3.

S25=St+0.0007(t-25)

S25: The density when the temperature is 25℃

St: The density when the temperature is t℃(measured value)

t: The temperature of liquid (measured value)

Final voltage: about 52V(1-2.5t)　　about 86.8V(3t)

Charged electricity: 130%-150% of battery ration.

Liquid level: Higher than the shield for 15-20mm

Abnormal condition:

Note:

Please copy and fill in this list strictly, it will provide basis for maintenance and service of battery.

https://truckmanualshub.com/

NOTE

https://truckmanualshub.com/

EC DECLARATION OF CONFORMITY

MANUFACTURE

Name: KION Baoli(Jiangsu) Forklift CO., LTD.

Address: No.8 Xinzhou Road, Economic Development Zone, Jingjiang ,Jiangsu, China

Post: 214500 ,Jiangsu, China

THE TECHNICAL DOCUMENTATION WAS COMPILED BY:

Name: Wu,Yun-Cheng

Address: Hoppengarten 19,Germany

Post: 40489 Duesseldorf,Germany

HEREBY DECLARES THAT THE PRODUCT DESCRIBED BELOW:

Description: Industrial truck – Counterbalanced Lift truck

Model:

Serial number:

Manufacturing year:

COMPLIES WITH THE PROVISIONS OF THE FOLLOWING EUROPEAN DIRECTIVES:

2006/42/EC	Machinery Directive
2004/108/EC	EMC Directive
2006/95/EC	LVD Directive

COMPLIES WITH THE PROVISIONS OF THE FOLLOWING HARMONIZED STANDARDS:

EN 1726-1：1998	Safety of industrial trucks—Self-propelled trucks up to and including 10000 kg capacity and industrial tractors with a drawbar pull up to and including 20000 N
Annex I of Machinery Directive 2006/42/EC	Essential health and safety requirements relating to the design and construction of machinery

Done at: Jingjiang ,Jiangsu, China Name of the signatory: 陈斌/ChenBin

On : _____ Title: Director of Quality Assurance

Signature: _____

https://truckmanualshub.com/

KION Baoli (Jiangsu) Forklift Co., Ltd.

Service Hotline: 400-828-2789

Tel: +86 523 8461 6148

Fax: +86 523 8461 6126

P.C.: 214500

Add: No. 8 Xinzhou Road·Economic Development Zone·Jingjiang·Jiangsu·China

www.baoli-mh.com

* We reserve the right to make any changes or modifications of pictures and specifications in this manual without giving previous notice and without incurring any obligation.

Edition: ME07-03:2010

https://truckmanualshub.com/

KION Baoli (Jiangsu) Forklift Co., Ltd.

Tel: +86 523 8461 6148

Fax: +86 523 8461 6126

P.C.: 214500

Add: No.8 Xinzhou Road • Economic Development Zone
Jingjiang • Jiangsu • China

www.baoli-mh.com

* We reserve the right to make any changes or modifications in this manual without giving previous notice and without incurring any obligation.

Edition: ME07-02 : 2009