https://truckmanualshub.com/

COMBiLiFT
LiFTING INNOVATION

*Dear Customer,*

*Thank you for choosing Combilift and showing your faith in our range of material handling products. By choosing Combilift you now own a high-quality machine designed by our team of experienced engineers using the most up to date design techniques and technology with the sole aim of producing a machine that fulfils your material handling requirements in a safe, reliable and efficient manner. The Combilift product possesses a vast range of multi-functional application possibilities that make it one of the leading products in the material handling industry.*

*In order to familiarise yourself with your truck in a quick comprehensive manner please read this manual attentively. In addition to the information regarding safety and operation, this manual also contains important maintenance checks and instructions for ensuring continuous safe and reliable operation of your truck. Should you have any questions or problems relating to your truck, please contact your local Combilift partner who will be happy to respond to your questions, suggestions and/or comments. We are confident that you will be wholly satisfied with your Combilift truck.*

**www.combilift.com**

https://truckmanualshub.com/



## Preface

This manual describes how to operate and maintain the Combilift C-Series truck safely and efficiently. It is essential that this manual remain with the truck at all times. It is essential that the operator and all persons involved in work with the truck read this manual before attempting to operate or service the truck.

Follow all local laws and regulations with regard to the operation of lift trucks where they apply at the place of use.

Follow all instructions, prohibitive or otherwise, found in this manual. They are there to protect the life of the operator and the lives of others working in the vicinity of the truck.

Always perform the Pre-Use Inspection as indicated in this manual and follow the guidelines on service intervals. Ensure that the truck is in good mechanical condition at all times. Report any fault and have it corrected immediately otherwise even minor faults may result in major failures and dangerous operating conditions.

## About This Manual

The descriptions and illustrations contained in this manual are not in any way binding. Combilift must reserve the right to make changes without prior notice in the interest of the enhancement of the product.

Some trucks may be customised to suit the needs of individual customers. Therefore these trucks may deviate slightly from the descriptions contained within this manual.

Every effort has been made to ensure that the information contained herein is accurate at the time of writing. However it cannot be guaranteed that all of the statements in this manual are completely correct.

Whenever the terms front, rear, right and left are used throughout this manual, it is from the point of view of the operator sitting on the seat in the operating enclosure looking forward.

This manual is not designed for the purpose of extensive maintenance work. Such work must be performed by approved professionals.

The table of contents on the following pages outlines the structure of the information contained within this manual and makes for easier location of information.

**Warning**

**Operating, servicing and maintaining a passenger vehicle or off-road vehicle can expose you to chemicals including engine exhaust, carbon monoxide, phthalates, and lead, which are known to the State of California to cause cancer and birth defects or other reproductive harm. To minimize exposure, avoid breathing exhaust, do not idle the engine except as necessary, service your vehicle in a well-ventilated area and wear gloves or wash your hands frequently when servicing your vehicle.**

**For more information go to www.P65Warnings.ca.gov/passenger-vehicle.**

https://truckmanualshub.com/



## Warranty Registration

The warranty registration form should be filled in and submitted online at:

www.combilift.com – Service – Warranty Registration

Please complete the warranty registration online within 30 days of receipt of the truck.

https://truckmanualshub.com/



# Contents

**Section 1: Safety Information ..... 6**
1.1 Safety Statements ..... 6
1.2 Operator Safety ..... 6
1.3 Safety Decals ..... 7
1.4 Safety Equipment ..... 8
1.5 Warning Devices ..... 9
1.6 Operator Qualification and Responsibilities ..... 10
1.7 Work Place Operating Conditions ..... 12
1.8 Diesel Particulate Filter (DPF) Regeneration ..... 15
1.9 Decommissioning Recycling and Disposal ..... 16

**Section 2: Basic Information ..... 17**
2.1 Intended Use ..... 17
2.2 General ..... 17
2.3 Vehicle Description ..... 18
2.4 Principle of Operation ..... 19
2.5 Serial Number and Serial Plate ..... 20
2.6 Rated Capacity, Centre of Gravity and Stability ..... 21
2.7 Load Centre & Load Chart ..... 24
2.8 Attachments ..... 25
2.9 Tilting ..... 26

**Section 3: Components & Controls ..... 27**
3.1 Machine Overview and Components ..... 27
3.2 Operating Components & Controls ..... 28
3.2.1 Steering Wheel / Column ..... 29
3.2.2 Inch Brake Pedal ..... 30
3.2.3 Accelerator Pedal ..... 30
3.2.4 Operator's Seat ..... 30
3.2.4.1 Kab 100 Series Seat Adjustments ..... 32
3.2.4.2 Grammer Seat Adjustments ..... 34
3.2.5 Switches/Buttons ..... 36
3.2.6 Switches/Buttons for Optional Extras ..... 37
3.2.1 Multifunction Display Console (MDC) ..... 39
3.2.7 Battery Isolator Key Switch ..... 40
3.3 Hydraulic Function Lever Operation ..... 41
3.4 Hydraulic Joystick Operation (If Fitted) ..... 42

**Section 4: Operation Monitoring ..... 43**
4.1 Daily Pre-Shift Inspection Screen ..... 43
4.2 MDC Home Screen ..... 44
4.3 MDC Pop Up Icons ..... 52
4.4 Miscellaneous Dash Panel Indicator Lights ..... 55
4.5 MDC Engine Fault Codes ..... 56

**Section 5: Operation ..... 57**
5.1 Pre-Use Checks ..... 57
5.2 Fuel Handling & Storage ..... 62

https://truckmanualshub.com/



5.2.1 Refuelling - Diesel ..... 63
5.2.2 Refuelling - LP Gas ..... 64
5.3 Checking Engine Oil Level ..... 66
5.4 Diesel Particulate Filter (DPF) Regeneration * ..... 67
5.4.1 Automatic DPF Regeneration ..... 68
5.4.2 Standstill DPF Regeneration ..... 68
5.5 Checking Coolant Level ..... 70
5.6 Checking Hydraulic Oil Level ..... 72
5.7 Front Wheel Alignment ..... 73
5.8 Entering and Exiting the Operator's Cabin ..... 74
5.9 Starting the Engine ..... 74
5.9.1 Diesel engine starting procedure: ..... 75
5.9.2 LPG engine starting procedure: ..... 76
5.10 Stopping the Engine ..... 76
5.10.1 Diesel engine stopping procedure: ..... 76
5.10.2 LPG engine stopping procedure: ..... 77
5.11 Moving Off ..... 77
5.12 Turning ..... 78
5.13 Stopping ..... 78
5.14 Changing Travel Direction ..... 79
5.15 Parking ..... 80
5.16 Picking Up, Placing, Stacking & De-stacking Loads ..... 81
5.16.1 Undercutting a Load ..... 83
5.16.2 Picking up a Load ..... 84
5.16.3 Placing a Load ..... 84
5.16.4 Stacking Long & Palletised Loads ..... 85
5.16.5 De-stacking Long & Palletised Loads ..... 86
5.17 Adjusting the Forks ..... 87
5.18 Travelling Safely with a Load ..... 88
5.19 Driving on Slopes ..... 89
5.20 Towing ..... 90
5.20.1 Hydrostatic Drive Bypass Function ..... 90
5.20.2 Mechanical Release of Park Brake ..... 91]

**Section 6: Maintenance ..... 93**
6.1 Basic Safety Instructions for Servicing and Inspection ..... 94
6.2 Initial Service – Conducted at 100 hours of Operation ..... 96
6.3 General Truck Maintenance Schedule ..... 97
6.4 Diesel Engine Maintenance Schedule ..... 98
6.5 LPG Engine Maintenance Schedule ..... 99
6.6 Wheel Nut Torque ..... 100
6.7 Grease Point Chart ..... 101
6.8 Engine Oil System ..... 102
6.8.1 Recommended Engine Oil Specification ..... 102
6.8.2 Lubricating oil change intervals ..... 102
6.8.3 Engine Oil Viscosity Class ..... 103
6.8.4 Changing Engine Oil & Filter ..... 103
6.9 Diesel Fuel System (If Applicable) ..... 105
6.9.1 Draining Water Separator ..... 106
6.9.2 Changing Filter Elements ..... 106

https://truckmanualshub.com/



6.9.3 Priming The Diesel Fuel System ..... 107
6.10 LP Gas System (If Applicable) ..... 108
6.10.1 LP Gas Lock Off Valve Filter ..... 109
6.10.2 LP Gas In-line Cannister Filter ..... 109
6.10.3 LP Gas Pressure Regulator ..... 110
6.11 Engine Cooling System ..... 111
6.12 Belt Drive System ..... 115
6.13 Air Filter System ..... 116
6.14 Battery Maintenance ..... 119
6.14.1 Checking the Battery Electrolyte Level ..... 119
6.14.2 Removing the Battery ..... 120
6.14.3 Installing a new Battery ..... 120
6.14.4 Battery Charging ..... 121
6.14.5 Jumpstarting ..... 121
6.15 Hydraulic Oil System ..... 122
6.15.1 Hydraulic Oil Selection ..... 122
6.15.2 Hydraulic Oil Filters ..... 123
6.15.3 Hydraulic Oil & Strainer Filter ..... 125
6.16 Mast Maintenance ..... 128
6.16.1 Mast Channel Maintenance ..... 128
6.16.2 Fork Carriage With Hydraulic Fork Positioning Maintenance ..... 128
6.16.3 Mast Chain Maintenance ..... 128
6.16.4 Mast Bearings ..... 133
6.17 Cleaning & Greasing The Mast Carriage Channels ..... 134
6.18 Mast Carriage Alignment / Wear Pad Adjustment Procedure ..... 135
6.19 Fork Maintenance ..... 136
6.20 Air Conditioning (AC) System Maintenance (If Fitted) ..... 138

**Section 7: Technical ..... 139**
7.1 Checking the Charge Pressure ..... 139
7.2 Valve Chest Pressure Settings ..... 140
7.3 Steering & Hydraulic Functions Circuit ..... 143
7.4 Hydraulic Drive Circuit ..... 144
7.5 Fuses ..... 145
7.5.1 14-Way Fuse Box ..... 145
7.5.2 Power Distribution Module (PDM) Fuses ..... 146
7.5.3 Inline Fuses ..... 147
7.6 Relays ..... 147

**Section 8: Appendices ..... 148**
8.1 Pre-Use Check Sheet ..... 149

https://truckmanualshub.com/



# Section 1: Safety Information

## 1.1 Safety Statements

To ensure safe operation and maintenance of the truck, it is necessary to follow all the instructions in this manual.

The following symbols and signal words **WARNING**, **CAUTION** and **NOTE**, and the adjacent text, indicate hazards and instructions.

This is the Environmental Hazard Symbol. It is used to alert the reader to potential damage to the environment.

This is the Safety Alert Symbol. It is used to alert the reader to potential safety hazards.

**Warning**

**Warning indicates a hazardous situation which if not avoided could result in serious injury or death.**

**Caution**

**Caution indicates an unsafe practice which if not avoided could result in serious injury or property damage.**

**Note**

**Used without the safety symbol indicates a situation that if not avoided could result in damage to the equipment and/or property.**

**Also indicates important information regarding the operation and servicing of the truck.**

## 1.2 Operator Safety

Before commencing use of the Combilift, operators must thoroughly read and understand the material contained within this manual to become familiar with:

- The trucks capabilities.
- The meanings of the various machine signs (decals) found on the truck.

Whether you are a new operator or have used forklift trucks for many years, read through this manual thoroughly. It provides instructions to help operate the Combilift in a safe and efficient manner.

https://truckmanualshub.com/



## 1.3 Safety Decals

Maintain all safety decals on the machine in a legible manner. If a safety decal becomes damaged or illegible, replace it with a new decal - available from your local Combilift partner.

The machine safety decals are illustrated below and are accompanied by a description of the meaning of each decal. The part number of each decal is also shown for reordering.

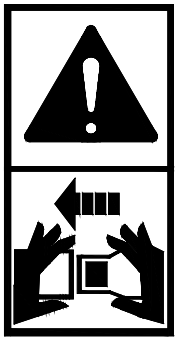

**Warning**

Personal injury hazard. Always wear the seat belt while sitting in the truck.

*Part No. CPD00009*

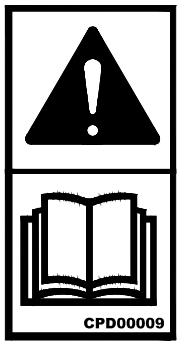


**Warning**

Read the operators manual before operating or working with the truck.

*Part No. CPD00009*

**Warning**

Shearing hazard from rotating fan. Stop the engine before approaching.

*Part No. CPD00004*

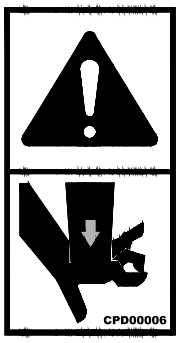


**Warning**

Crushing hazard from moving parts. Stop the truck and isolate the battery before approaching.

*Part No. CPD00006*

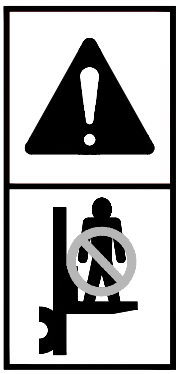

**Warning**

Personal injury hazard. Do not stand on the forks.

*Part No. CPD00003*

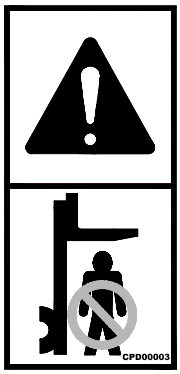


**Warning**

Personal injury hazard. Do not stand under the forks.

*Part No. CPD00003*

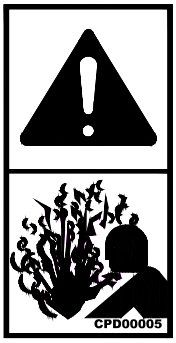


**Warning**

Scalding hazard. Only remove the cap from the radiator when cool.

*Part No. CPD00005*

https://truckmanualshub.com/



## 1.4 Safety Equipment

Safety equipment is provided to protect the operator from potential danger while using the truck. The safety equipment must be checked frequently as part of the pre-use inspection and maintained in good working condition at all times.

**Caution**

**The safety devices are installed to protect the life of the operator and those working in the vicinity of the truck. Do not remove or bypass any of the safety devices.**

**Combilift will not assume liability for injuries or damages arising from or caused by the removal or bypassing of any of the trucks safety devices.**

**Cabin Overhead Guard**

The cabin overhead guard is not designed for roll over protection. It is only intended to offer protection from the impact of falling objects.
DO NOT operate the truck if the cabin overhead guard is damaged, corroded or has been modified in any way.

**Warning**

**Never use the truck without the cabin properly installed.**

**Do NOT drill, weld, straighten or bend the cabin overhead guard.**

**Allow only trained authorised personnel to install a new cabin.**

**Battery Isolator Key Switch**

The battery isolator key switch allows the battery to be disconnected from the electrical system.

**Note**

**After turning the ignition key switch to the off '0' position to stop the engine, the engine control unit (ECU) remains active to save system data before it switches off. For this reason, the power supply to the engine must not be interrupted at the battery isolator switch or by removing the battery leads until the ECU has switched off.**

**Seat Belt**

The purpose of the seat belt is to retain the operator in the seat and so prevent or reduce injuries suffered in a crash. The seat belt ensures that as little contact is made between the operator and cabin as possible. It also significantly reduces the risk of being thrown from the cabin.

**Park Brake**

The park brake prevents inadvertent movement of the truck when it is parked or stopped.

https://truckmanualshub.com/



**Seat Switch**
The purpose of the seat switch is to prevent the truck from being operated from an incorrect position. When the seat is unoccupied the drive is disabled and the hydraulic function levers are locked (the hydraulic joystick – if fitted – is blocked).

**The following safety devices may be fitted as optional extras:**

**Seat Belt Switch**
The purpose of the optional seat belt switch is to encourage the operator to wear the seatbelt. The seatbelt should always be fastened across the top of the lap when driving the truck. If fitted, the truck will not drive unless the seat belt is buckled.

**Mast Above Height Drive Cut-out**
This optional safety feature disables the drive when the forks are raised above a predetermined height. This helps to avoid collisions between the mast and potential overhead obstructions. To enable the drive, lower the mast below the cut-out height or press and hold the cut-out override button.

**Mast Lift Cut-out**
This optional safety feature cuts out the lift function when the forks reach a predetermined height. This helps to avoid collisions between the mast and potential overhead obstructions. To continue raising the mast press and hold the lift cut-out override button whilst operating the control lever.

**Mast Not Fully Retracted Drive Cut-out (If Fitted)**
This optional safety feature disables the drive if the mast reach function is not fully retracted. This helps to avoid collisions between the forks and potential obstructions. To enable the drive, retract the mast reach fully.

**Inch Brake Pedal Brake Switch**
The inch brake pedal brake switch applies the park brake when the inch brake pedal is depressed and held in for 3 seconds or more. This safety feature brings the truck to a complete stop.

## 1.5 Warning Devices

Warning devices are installed to make individuals in the vicinity of the truck aware of its presence while it is being operated. The warning devices must be checked frequently as part of the pre-use inspection and maintained in good working condition at all times.

**Caution**

**The warning devices are installed to protect the life of the operator and those working in the vicinity of the truck. Do not remove or bypass any of the warning devices.**

**Combilift will not assume liability for injuries or damages arising from or caused by the removal or bypassing of any the trucks warning devices.**

https://truckmanualshub.com/



**Horn**
The horn allows the operator to alert anyone in the vicinity of the truck that it is approaching. It can be used to request people to stay clear of the truck.

**Reversing Alarm**
The reversing alarm sounds when the truck begins to move in reverse. This is to alert individuals in the presence of the truck that it is reversing.

**Flashing Beacon**
The flashing beacon is activated when the key switch is turned to the ON position to alert individuals in the vicinity of the truck that it has been switched on.

**The following optional warning devices may be fitted to the truck if required:**

**Forewarning Lights**
Optional forewarning lights that illuminate when the truck begins to move in a certain direction may be fitted if requested. The forewarning lights alert anyone in the trucks path that it is approaching.

**Motion Alarm**
The motion alarm sounds when the truck begins to move in any direction. This is to alert individuals in the vicinity of the truck that it is in motion.

## 1.6 Operator Qualification and Responsibilities

**Warning**

**Every forklift operator must be trained in accordance with the rules provided by the relevant local Health and Safety Authority (HSA).**

**Employers must ensure that each powered industrial truck operator is competent to operate a powered industrial truck safely as demonstrated by the successful completion of the relevant training as specified by the relevant local authority. Operating a powered industrial truck without the proper training can cause serious injury or death.**

- The operator of the Combilift must be qualified to operate the truck through successful completion of a training program delivered by Combilift Driver training personnel or a Combilift authorised training organisation.
- Operators shall be aware of all local authority regulations and laws regarding the qualification of material handling equipment operators.
- No one shall operate the truck if impaired due to intoxication or drug reaction.
- Always ensure that the truck is in good working order before commencing work. This is achieved by performing the pre-use inspection. The inspection is to be carried out at the beginning of the working day or at the start of each shift.

https://truckmanualshub.com/



- It is the operators' responsibility to perform the pre-use inspection before each shift. The Inspection and how it should be conducted is covered later in this publication.
- Operation of the truck controls is only permitted when the operator is sitting on the operator's seat in the cabin with the seatbelt buckled and the cabin door closed and latched securely.
- Never place any part of the body outside the confines of the cabin when operating the truck.
- Diagnosis and repair of the truck shall be performed by trained competent technicians unimpaired by intoxication or drug reaction.
- Unless authorised and trained to do so, the operator must not attempt any repairs, but report defects immediately. When authorised to perform maintenance work and/or repairs, ALWAYS ensure that the appropriate Health and Safety regulations are strictly adhered to.
- Report any operational problems that may develop, (damaged pallets, ground surface breaking up etc.) which could not only reduce safety but also cause damage to the truck.
- Never attempt to exceed the truck's handling capacity and take all precautions to ensure the safety of others as well as yourself. In no circumstances should counterweights be added to increase capacity.
- Stop working and switch off if for any reason, the truck becomes unsafe or defective. Remove the key and place an 'out of order' sign in a prominent place on the truck.
- Prohibit unauthorised and untrained people from accessing the starting key and operating of the truck.
- The operator is responsible for visually monitoring the work area of the truck and preventing anyone from entering the area without permission.
- If a person enters the work area while the truck is in operation, the operator shall stop the truck and instruct the person to leave the work area until the work is complete and the operator deems it safe to enter. The person may then approach the machine in full view of the operator.
- Personnel being trained, educated, instructed or participating in a general training program may only work on or with the machine under constant supervision of an experienced supervisor.
- Work on the machine's electrical equipment may only be carried out by an electrician or by trained persons under the direction and supervision of an electrician.
- Work on the chassis, brakes and steering system may only be performed by trained, specialised personnel.
- Only trained, specialised personnel with specific knowledge of and experience in hydraulics may work on hydraulic units.
- If the mast mechanism malfunctions or becomes stuck in a raised position, operate the mast control lever to eliminate any slack in the chains. DO NOT go under the elevated parts of the truck to attempt to carry out repairs.

https://truckmanualshub.com/



## 1.7 Work Place Operating Conditions

**Warning**

**Workplace situations are constantly changing. Check the work area before beginning each shift. If in doubt, consult with the relevant supervisor. Failure to observe new workplace conditions can lead to serious injury or death.**

Operators must be aware of special situations in their workplace in order to avoid forklift accidents. Even if an operator works in the same area every day, there could be changes that affect safety, such as:

- Contractors doing maintenance
- Wet areas
- Overhead repair work

Be on the lookout for anything that might present a hazard such as:

- Potholes
- Pedestrian traffic
- Very narrow aisle ways
- Overhead obstructions
- Poor lighting making it hard to see hazards
- Wet, oily, or rough terrain
- Other equipment or vehicles operating in the area

Do not block any of the following safety critical items/areas with the truck or the materials being handled:

- Electrical panels
- Fire exits
- Emergency stop buttons
- Aisle ways
- Fire extinguishers/hoses

**Ground Surface**
Floor, road and yard surfaces should be of adequate load capacity, firm, smooth and level. Approaches to kerbs, railway crossings etc. should also be firm, smooth and adequately ramped to prevent possible displacement.

**Aisle Dimensions**
Aisles should be arranged to eliminate corners, angles, inclines, steep ramps, narrow passages and low ceilings. When operating in guided aisles ensure that the mast is retracted fully before entering the aisle. Enter the aisle slowly to reduce the impact on rollers and guide rails.

**Headroom**
Structures over aisles, which may be potential obstacles should be defined and marked with a conspicuous colour. Low doorways should be marked with their clearance limits.

https://truckmanualshub.com/



## Power Lines

**Warning**

**Always be aware of overhead electrical power cables. Always remain a safe distance from overhead power lines as an electric arc can occur even when approaching an electric line. This poses a high risk, not only for the operator but for other personnel nearby.**

**If contact with a live electric source occurs:**

- Do not leave the truck until the electricity has been disconnected and a qualified technician directs the operator to leave the machine.
- If possible, drive the truck away from the danger area.
- Warn any people around the truck not to get any closer and not to touch the truck.
- Arrange to have the power turned off.

The following table outlines the minimum clearance distance that must be observed when working in the vicinity of power lines.

| Nominal Voltage | Clearance Distance |
|---|---|
| Up to 1000 V | 1 metre (1.1 yards) |
| Over 1 kV up to 110 kV | 3 metres (3.3 yards) |
| Over 110 kV up to 220 kV | 4 metres (4.4 yards) |
| Over 220 kV up to 380 kV | 5 metres (5.5 yards) |
| Unknown nominal voltage | 5 metres (5.5 yards) |

## Operating in Hazardous Areas

Standard trucks are not equipped to operate in cold stores, flammable or explosive areas, corrosive atmospheres or areas containing a high degree of dust contamination. Sparks from the exhaust or electrical system or hot parts can ignite explosions and fires.

- Do not attempt to lift or place a load in a poorly lit area where vision is obscured or reduced.
- Do not work in enclosed spaces where flammable materials, explosive vapours, or combustible dust are found.
- Stay clear of flammable materials such as hay, straw, paper and cardboard.
- Park the truck only in areas free of flammable materials.
- Diesel engine exhaust emissions are toxic in concentrated amounts. Do not operate the truck in enclosed spaces or inadequately ventilated spaces.
- Wear appropriate personal protective equipment (breathing filter, protective suit) for protection against specific dangers, e.g. poisonous gases, corrosive steam, poisonous surroundings, etc.

https://truckmanualshub.com/



**Gradients**
When differences in levels exist, low gradient ramps should be provided, having smooth, gradual level changes at the top and bottom to prevent shocks to the load or fouling of the forks. Except in emergencies, do not turn the truck on gradients. Correct gradient procedure – covered in section 5.19 on page 89 - should be followed at all times. Do not park on a gradient. In an emergency apply the park brake and chock the wheels, but do not leave the truck unattended.

**Adverse Weather Conditions**
There are a number of weather conditions for which extra care must be taken.

- High Winds: Do not raise the mast in winds that are greater in speed than 50km/hr as this can have serious effects on the stability of the machine.
- Electrical Storms: Always discontinue operation of the truck in the event of an approaching electrical storm due to the associated risks of lightning.
- Extreme Temperatures: These forklift trucks are designed for use in ambient temperatures ranging from -25°C (-13°F) to +40°C (+104°F) if the correct hydraulic oils and greases are used. If the temperature falls below or rises above this range discontinue operation of the machine in order to prevent damage to various components. For operation outside these temperatures, please consult your Combilift partner as special modifications and lubricants are required.

**Leaks & Spills**

Any leaking or spilled oil, fuel or coolant must be cleaned up immediately and the source of the leak repaired to avoid:

- Environmental hazards
- Fire hazards
- Slip hazards
- Personal injury hazards

Do not attempt to perform repairs to the hydraulic system until any residual hydraulic pressure has been relieved.
Observe the valid safety and environmental regulations for the respective product when handling oil, grease and other chemical substances. Do not service the truck immediately after operation. Wait until hot surfaces have cooled and can be touched comfortably. Smoking and open flames are prohibited during fuelling.

**Noise/Hearing Protection**

Prolonged exposure to loud noise can cause impairment or loss of hearing. Wear a suitable hearing protective device such as earmuffs or earplugs to protect against objectionable or uncomfortably loud noises.

https://truckmanualshub.com/

**Exhaust Emissions**

Never allow the truck to remain stationary in confined spaces with the engine running. Engine exhaust fumes are harmful. Do not inhale exhaust. When performing service and inspection work in an enclosed space, vent the exhaust out of the area.

**Warning**

**Breathing diesel engine exhaust exposes you to chemicals known to the State of California to cause cancer and birth defects or other reproductive harm.**

- **Always start and operate the engine in a well-ventilated area.**
- **If in an enclosed area, vent the exhaust to the outside.**
- **Do not modify or tamper with the exhaust system.**
- **Do not idle the engine except as necessary.**

**For more information go to** www.P65warnings.ca.gov/diesel**.**

**Dock Boards (Bridge Plates)**

Dock boards are designed and maintained so that one end contacts the dock (or loading platform) and the other end contacts the transport vessel. When you load or unload the transport vessel the dock board must be locked in place to prevent it from rocking or sliding. Dock boards must have a high friction surface designed to reduce the possibility of people or trucks slipping.

If using dock boards on loading docks:

- Never exceed the carrying capacity marked on portable or powered dock boards.
- Portable dock boards must be secured in position, using anchors or other devices that prevent slipping.

**Trailers and Rail Cars**

1. Before loading or unloading a trailer or rail car, set the brakes and chock the wheels to prevent it from moving unintentionally.
2. In addition to setting the brakes and chocking the wheels, if a semi-trailer is not coupled to a tractor, make sure that all four corners are supported to prevent upending or corner dipping.
3. Maintain a safe distance from the edge of ramps, platforms, or other similar working surfaces.
4. Never attempt to move a trailer with the Combilift truck.

## 1.8 Diesel Particulate Filter (DPF) Regeneration

During automatic and standstill DPF regeneration, the engine will run at elevated idle and hot temperatures for an extended period of time. Exhaust gases and exhaust filter components reach temperatures hot enough to burn people and ignite or melt common materials. Avoid exposure and skin contact with hot exhaust gases and components.

https://truckmanualshub.com/



## 1.9 Decommissioning Recycling and Disposal

Safety and environmental stewardship measures must be taken into account when decommissioning a machine and/or component. These measures include the following:

- Use appropriate tools and personal protective equipment such as clothing, gloves, face shields or glasses, during the removal or handling of objects and materials.
- Follow instructions for specialised components.
- Release stored energy by lowering suspended machine elements, disconnecting the battery, and releasing pressure in hydraulic components, accumulators, and other similar systems.
- Minimize exposure to components which may have residue from chemicals. Handle and dispose of these components appropriately.
- Carefully drain engines, fuel tanks, radiators, hydraulic cylinders, reservoirs, and lines before recycling components. Use leak-proof containers when draining fluids. Do not use food or beverage containers.
- Do not pour waste fluids onto the ground, down a drain, or into any water source.
- Observe all national, state, and local laws and regulations governing the handling or disposal of waste fluids (example: oil, fuel, coolant); filters; batteries; and, other substances or parts.
- Burning of flammable fluids or components in other than specially designed incinerators may be prohibited by law and could result in exposure to harmful fumes or ashes.
- Service and dispose of air conditioning systems appropriately. Government regulations may require a certified service centre to recover and recycle air conditioning refrigerants which could damage the atmosphere if allowed to escape.
- Evaluate recycling options for tyres, metal, plastic, glass, rubber, and electronic components which may be recyclable, in part or completely.
- Contact your local recycling centre for information on the appropriate way to recycle or dispose of waste.

https://truckmanualshub.com/



# Section 2: Basic Information

## 2.1 Intended Use

**Warning**

**Unintended use can endanger the lives of operating personnel or other persons in the vicinity of the truck.**
**Unintended use can cause extensive damage to the truck and/or to property or materials being handled.**

Operation by inexperienced persons, or in an unintended manner, can result in hazards that can lead to personal risk and subsequent harm to the operator and persons in the operating area of the truck. Improper use can damage the truck as well as the product being handled and property in the vicinity of operation.

Read and understand the operating instructions in this manual before operating the truck. Before performing production work, the operator should find a remote, open site to become familiar with the controls and trucks response. The truck must be in serviceable condition before attempting to use it as described in the operating instructions. If it is determined that the truck is not in a fit condition for operating, notify the site or machine supervisor to have it repaired before use.

The Combilift forklift has been designed to lift a load, transport it and place it in another location, taking into account the safety instructions listed in this manual and any other local laws and regulations where applicable. One work cycle consists of lifting, transporting and placing a load. Similar uses of the truck with alternative attachments which do not change the safety requirements for the truck but modify the way in which it is used are only acceptable when attachments that have been approved by Combilift are used. The intended operation is described in this Manual. The instructions describe how to operate, inspect and maintain the truck.

The truck must not be used for any of the following activities:

- lifting people without an approved work platform securely fitted
- transporting people
- pushing or pulling loads

The truck must not be used if:

- it has received unauthorised repairs
- it has received unauthorised modifications

## 2.2 General

This truck is designed for use in ambient temperatures ranging from -25°C (-13°F) to +40°C (+104°F) if the correct hydraulic oils and greases are used. For operation outside these temperatures, please consult the manufacturer as special modifications and lubricants are required.

https://truckmanualshub.com/



Standard trucks must not be operated in flammable areas, corrosive atmospheres, or in areas containing a high degree of dust contamination. Only trucks specifically designed or modified to suit these conditions can enter such areas.

The safe maximum load capacities of the truck with relation to the load centre and fork height, which MUST NOT BE EXCEEDED, are stated on the capacity plate.

The truck must be operated strictly in accordance with the operating instructions provided in this manual in conjunction with the safety regulations of the country in which the forklift truck is being operated.

## 2.3 Vehicle Description

The Combilift is a multifunctional, multidirectional forklift with four directions of travel – Forward, Reverse, Left & Right. In order for these travel directions to be possible the Combilift has two modes of travel, standard travel mode and sideward travel mode.

**Standard Travel Mode** – In standard travel mode the wheels are aligned parallel to the sides of the truck and the rear swivel arm is used to steer the truck. In this mode the truck can drive forward and reverse. **Forward Travel** is traveling with the forks leading. **Reverse Travel** is traveling with the forks trailing.

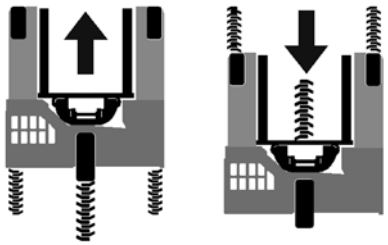

Forward Travel Reverse Travel

**Sideward Travel Mode** – In sideward travel mode the wheels are aligned perpendicular to the sides of the truck and the front swivel arms are used to steer the truck. In this mode the truck can drive left and right. **Left Travel** refers to travel with the cabin leading. **Right Travel** refers to travel with cabin trailing.

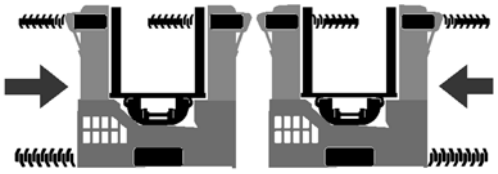

Right Travel Left Travel

The mast can be reached out and retracted in so that a palletised or long load can be lifted and moved back within the wheelbase of the truck. This makes the Combilift truck more stable when travelling with a load and also allows it to work in confined areas such as narrow aisles.

Having the ability to drive forward, back, left and right and the ability to reach and retract the mast means the Combilift C-series truck is capable of performing the functions of a standard counterbalance forklift truck, a reach truck and a side loading truck. Therefore it is ideal for handling palletised loads and also long loads such as pipes or timber.

The principle of this type of truck is that the weight of the load, which is lifted on the forks in front of the load wheels, is offset by the combined weight of the truck chassis and components.

https://truckmanualshub.com/



## 2.4 Principle of Operation

Drive is achieved by means of a hydrostatic pump coupled to an internal combustion (IC) engine. The engine drives the hydrostatic pump which pumps hydraulic oil through hoses to hydraulic motors. The trucks drive wheels are mounted on the hydraulic motors and as the pressurised hydraulic oil passes through the wheel motors the wheels turn to propel the truck. The engine speed – and therefore the trucks ground speed - is controlled by a throttle pedal located inside the operator's cabin.

Steering is achieved by means of a hydraulic gear pump coupled to an internal combustion (IC) engine. The IC engine drives the gear pump which pumps hydraulic oil through a steering orbital unit. When the steering wheel is turned pressurised oil is fed via the steering orbital to hydraulic steering cylinders to steer the truck.

Lift, reach and tilt along with any other optional auxiliary hydraulic mast/fork functions are achieved by means of a hydraulic gear pump coupled to an internal combustion (IC) engine. The IC engine drives the gear pump which pumps hydraulic oil through hoses to a block of valves. The valves - which are operated using levers or a joystick located inside the operator's cabin – allow the pressurised oil to be directed through hoses to various hydraulic cylinders that are connected to each of the mast/fork functions. The operating speed of the mast/fork functions may be increased by pressing the throttle pedal located inside the operator's cabin.

Forward, reverse, left or right travel may be selected using a four-way direction switch mounted inside the operator's cabin. Selecting a direction of travel sends electrical signals to a set of solenoid actuated hydraulic valves in the steering circuit. The valves direct the flow of hydraulic oil through the steering circuit to the steering cylinders to steer the swivel arms to the appropriate position to achieve the desired travel mode. A solenoid actuated direction control valve directs the flow of oil through the drive circuit to achieve the desired direction of travel.

The truck is equipped with analogue dash clusters that display information regarding the trucks operating condition such as the engine coolant temperature, engine oil pressure, low fuel, steering mode etc.

Park braking is provided by brake units that are integrated into each of the wheel motors. The park brake is applied by spring force; hydraulic pressure is required to release the park brake. The park brake is applied and released using a switch inside the cabin.

An inch brake slows the truck down when partially applied and brings the truck to a complete stop when fully applied and held on. It works by restricting and blocking the flow of hydraulic oil through the drive circuit which prevents the wheel motors from turning. The inch brake is applied by pressing a pedal located inside the operator's cabin.

https://truckmanualshub.com/



## 2.5 Serial Number and Serial Plate

The truck serial number (**A**) is stamped on the chassis on the main cross member at the front right hand side. The serial plate (**B**) is affixed inside the operator's cabin below the operator's seat.

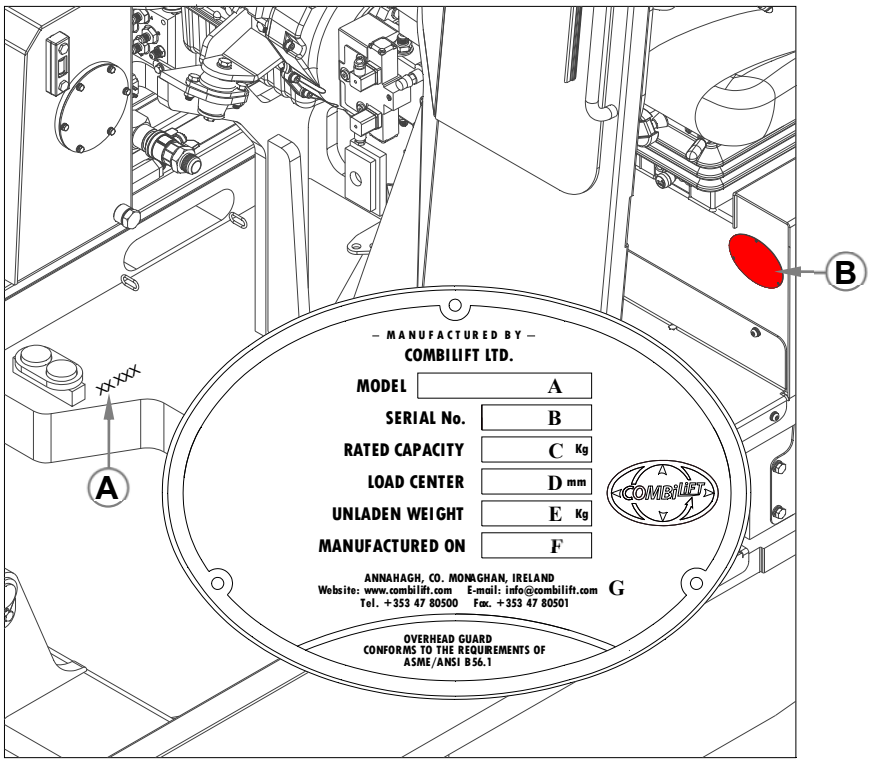


The serial plate is engraved with the following details:

- **A. Model:** The model type of the truck is engraved in this box.
- **B. Serial No:** The trucks serial number is engraved in this box.
- **C. Rated Capacity:** The trucks maximum rated capacity is engraved in this box and is given for the load centre engraved in the following box.
- **D. Load Centre:** The distance from the front face of the forks to the centre of gravity of the load for which the maximum rated capacity is given is engraved in this box.
- **E. Unladen Weight:** The weight of the truck only is engraved in this box
- **F. Manufactured On:** The date the truck was manufactured on is engraved in this box
- **G. The manufacturers name, address and contact details are displayed on the bottom of serial plate**

The serial plate must not be removed. If lost order a replacement from Combilift immediately.

# Note

**Ensure that the serial number on the chassis corresponds with the serial number on the serial plate before putting the truck into operation.**

https://truckmanualshub.com/



## 2.6 Rated Capacity, Centre of Gravity and Stability

The rated capacity is the maximum weight that a truck is designed to lift at a specified load height to a specific load centre distance under safe operating conditions. To understand the rated capacity it is necessary to be familiar with the term centre of gravity.

The centre of gravity is an imaginary point in a body where the total weight of the body may be considered to be concentrated. Every object has a centre of gravity. When a load is supported on the forks the truck and load may be considered as a single entity with a **combined centre of gravity**.

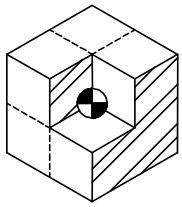

The Combilift has moving parts that change its centre of gravity. The centre of gravity moves forward and back as the mast is extended and retracted and also as the mast is tilted back and forth. The centre of gravity also moves up and down as the mast is raised and lowered.

The position of the **combined centre of gravity** is affected by the size, weight, shape and position of the load; the height to which the forks are raised; the position of the reach; the tilt angle and side shift position.

To understand the stability of the truck it is useful to use the analogy of a see saw where two objects are placed on opposite sides of a beam and the beam is supported at a single point halfway along its length. For the see saw to balance, the two objects must be equal in mass and placed at an equal and opposite distance from the support point, also known as the fulcrum. If the mass on one side is increased the see saw will tip to the side of the heavier mass. This can be corrected by moving the heavier mass in towards the centre or fulcrum. **This principle is the most important factor that must be taken into account when considering the stability of the truck.**

If we look at the diagram below what this translates to is that as long as F1 is equal to F2 then the system will balance.

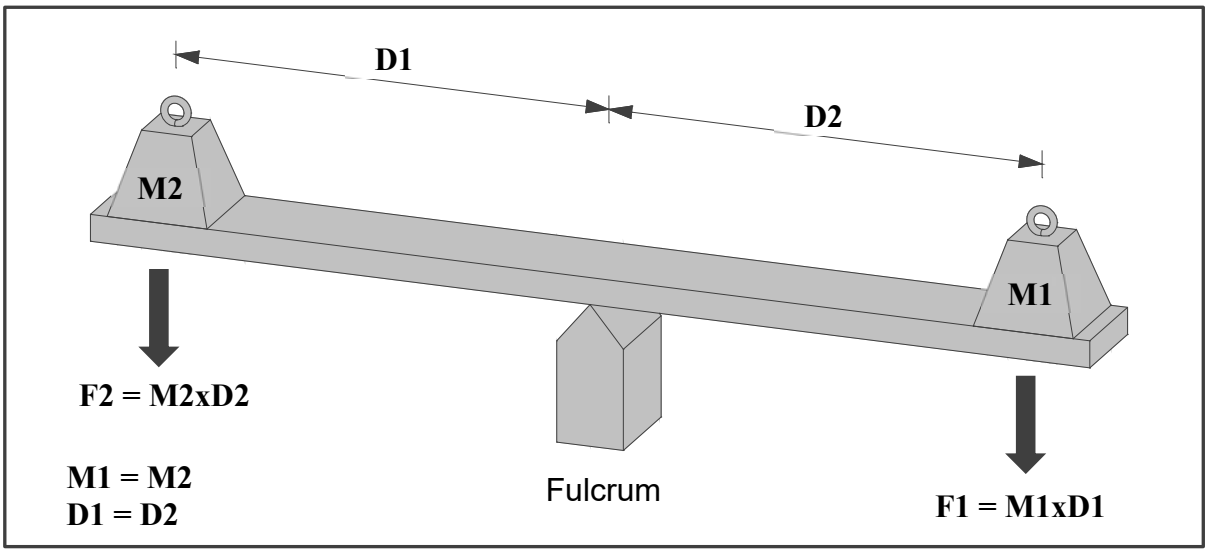

https://truckmanualshub.com/



The very same principle applies to the Combilift truck where the front wheels act as the fulcrum, M1 represents the mass of the trucks heavy chassis and components on one side of the fulcrum and D1 represents the distance from the fulcrum to the centre of gravity of the truck. M2 represents the mass of the load on the forks on the opposite side of the fulcrum and D2 represents the distance from the fulcrum to the centre of gravity of the load. In the case of the truck F2 must always be less than F1 otherwise the truck will become unstable.

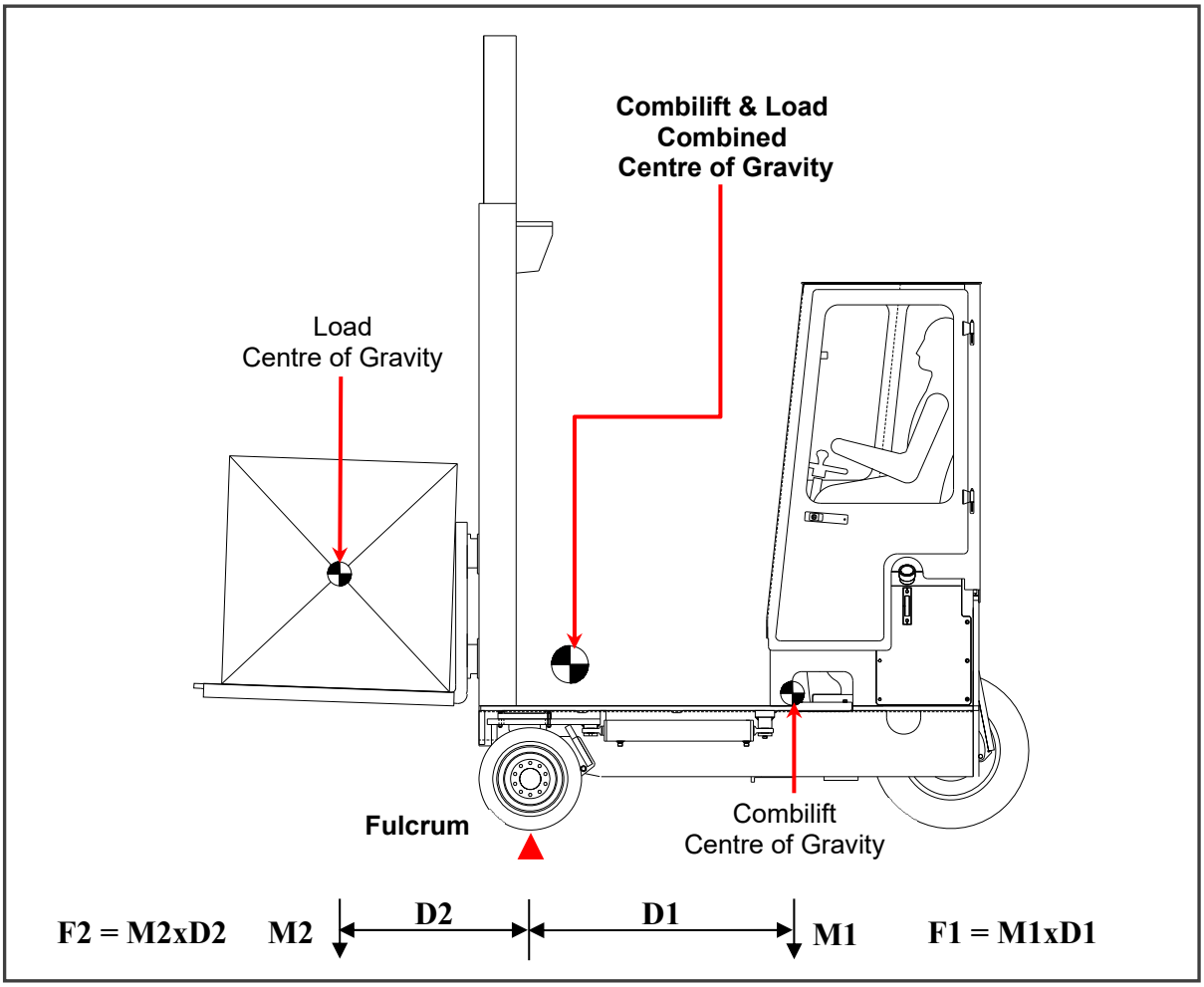


If the mass of the load (M2) is increased or the distance from the fulcrum to the centre of gravity of the load (D2) is increased such that F1 becomes greater than F2 then the truck will tip forward about the fulcrum.

https://truckmanualshub.com/



For the truck to remain stable both laterally and longitudinally, the combined centre of gravity of the truck and the load must stay within an area known as the stability triangle. To visualise the stability triangle, imagine three lines connecting each of the trucks three wheels. The area inside these three lines forms the stability triangle. If the combined centre of gravity moves outside the boundary of the stability triangle the truck will tip over.

The diagram below illustrates the truck with the stability triangle represented by the hatched area and a uniform load weighing less than the maximum rated capacity resting on the forks. In this case the combined centre of gravity lies inside the boundary of the stability triangle, therefore the truck and load will remain stable.

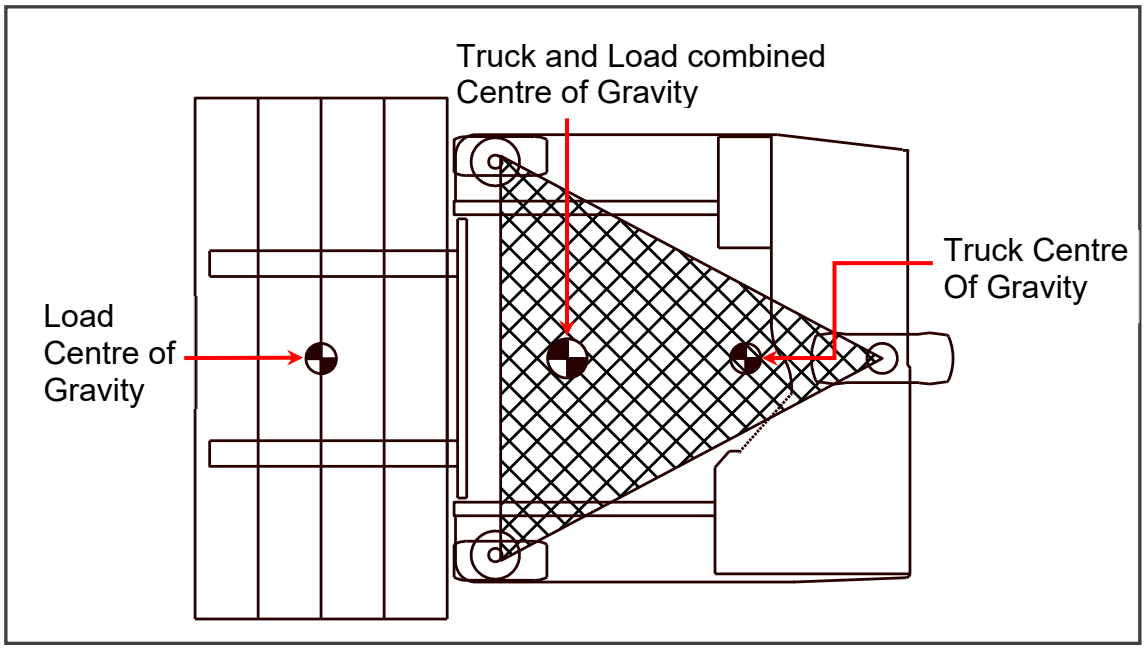


If a balanced uniform load greater than the maximum rated capacity is lifted on the forks the combined centre of gravity will move outside the front boundary of the stability triangle. In this case the truck and load will be unstable and a frontal tip-over is likely to occur.

If an unbalanced load is lifted on the forks such that the combined centre of gravity moves outside the left or right boundary of the stability triangle, the truck and load will be unstable and a tip-over to the left or right hand side is likely to occur.

Other factors that influence the stability of the truck to a lesser degree include sudden acceleration, harsh braking, driving on sloped or uneven terrain, or turning with elevated loads. Any of these factors alone or in combination can result in the combined centre of gravity moving outside the boundary of the stability triangle thus causing the truck to tip over.

https://truckmanualshub.com/



## 2.7 Load Centre & Load Chart

**Warning**

**The capacity rating of the truck decreases as the load centre of the load increases and as the load is raised.**
**Refer to the rated capacity at various heights listed on the load chart.**
**Failure to heed these guidelines can cause damage to the truck and property or lead to a tip over causing serious injury or death.**

**Warning**

**Make sure that the load is centred and the forks are fully engaged. Failure to do so can cause the load to fall or the truck to tip over, resulting in serious injury or death.**

The term “Load Centre” is used to describe the distance from the face of the forks to the Centre of Gravity of the load when the forks are fully engaged with the load. The maximum rated capacity of the Combilift is based on a load in the form of a cube measuring 1200mm (48”) in length, depth and height where the centre of gravity lies exactly in the centre of the cube i.e. 600mm (24″) from all sides.

If the size or shape of the load changes such that the position of its centre of gravity moves away from the forks the truck will have less capacity to lift the load.

Raising a load also causes the truck to loose capacity due to mast tilt and deflection. Therefore as the load centre and/or lift height increases the weight that can be safely lifted reduces.

The trucks capacities at various heights and load centres are displayed on a load chart located inside the operating enclosure. A sample load chart is shown below.

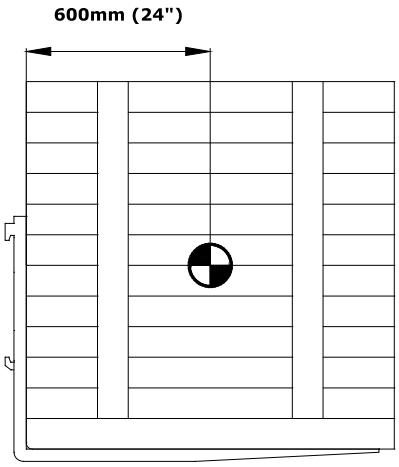


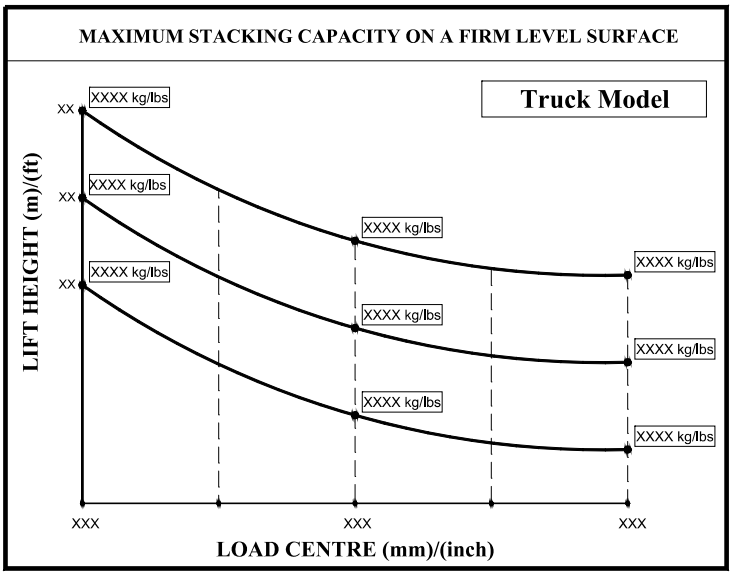

https://truckmanualshub.com/



To read the load chart the weight of the load (in kilograms or pounds) and the load centre (in millimetres or inches) must be ascertained. These values can then be compared to the values on the load chart to determine if it is safe to lift the load and to what height it can be lifted.

It is the responsibility of the operator to determine that the weight of the load to be handled is not greater than the capacity shown on the load chart. The operator must not handle any load that is greater than the capacity shown on trucks the load chart.

**Methods of determining the weight of the load:**

- Weight is listed on pallet wrapper
- Weight is listed on bill of lading
- Weight is determined by multiplying the weight of each small container/bag by the number of small containers/bags on a pallet. Each small container should be marked with its weight.
- Ask your supervisor when in doubt.

Always make sure the load is flush against the front vertical face of the forks and that loads that are unbalanced horizontally are loaded with the heaviest side of the load nearest to the truck.

Always make sure that loads that are unbalanced vertically are loaded with the heaviest side of the load nearest to the ground where possible.

## 2.8 Attachments

**Warning**

**Never make any modifications to the truck that may affect the capacity rating. Only options and attachments approved by Combilift Ltd. may be installed on the truck. Other modifications will void the warranty and can cause situations to arise that may lead to serious injury or death.**

**Fixed attachments** to the forks or fork carriage affect the trucks capacity rating. When the factory, dealer, or distributor installs a fixed attachment approved by Combilift a modified load chart shall be attached inside the operating enclosure. The modified load chart identifies the type of attachment and the capacity ratings on the load chart will be modified accordingly.

**Removable attachments** to the forks or fork carriage affect the trucks capacity rating. When the factory, dealer, or distributor supplies a removable attachment approved by, Combilift Ltd. an additional load chart shall be attached inside the operating enclosure. The additional load chart identifies the type of attachment and the changes to the rated capacity when the attachment is in use.

https://truckmanualshub.com/



## 2.9 Tilting

**Warning**

**DO NOT tilt the forks forward past horizontal with a load on the forks.**
**Use tilt with caution when the mast is in a raised position.**
**DO NOT use forward and backward tilt in quick succession.**

The degree of forward and backward tilt that may be used is governed by the application.

### Tilting Guidelines

- When travelling with the truck loaded tilt the mast back and keep the load low. This will help stabilize loads with an uneven weight distribution.
- When loading at high elevations, only tilt the load back far enough to seat it against the front vertical face of the forks.
- When unloading at high elevations, make sure to only use enough tilt to level the load for placing onto the rack or stack.
- Forward tilt past horizontal is only provided to assist the operator in withdrawing the forks from a load after the load has been placed.

https://truckmanualshub.com/



# Section 3: Components & Controls

All operators must be familiar with the Combilift trucks main components and controls, their function and where they are located before commencing operation of the truck. The major components are labelled in figure 3.1 below.

## 3.1 Machine Overview and Components

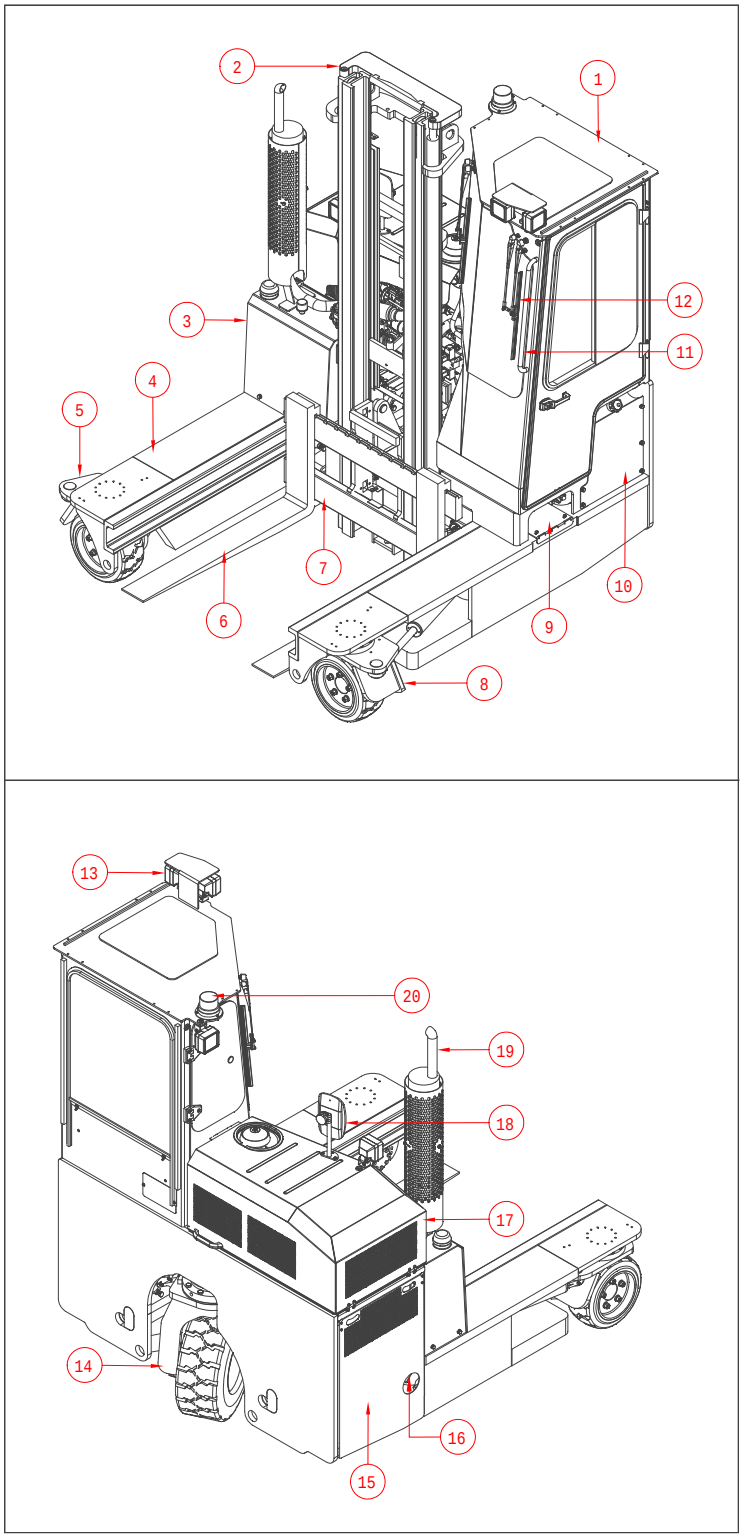


**Components**

1. Operator's Cabin
2. Mast
3. Hydraulic Tank
4. Load Platform
5. Front Right-Hand Swivel Arm
6. Fork
7. Fork Carriage
8. Front Left-Hand Swivel Arm
9. Cabin Access Step
10. Diesel Tank/LPG Bottle
11. Cabin Access Handgrip
12. Windscreen Wiper
13. Work Light
14. Rear Swivel Arm
15. Right-Hand Side Access Panel
16. Battery Isolator Key Switch
17. Bonnet
18. Mirror *
19. Exhaust
20. Flashing Beacon

**** If Fitted***

*Figure 3.1 Machine Components Layout*

https://truckmanualshub.com/



## 3.2 Operating Components & Controls

The controls and user adjustable components located inside the cabin of the truck are labelled in figure 3.2 below.

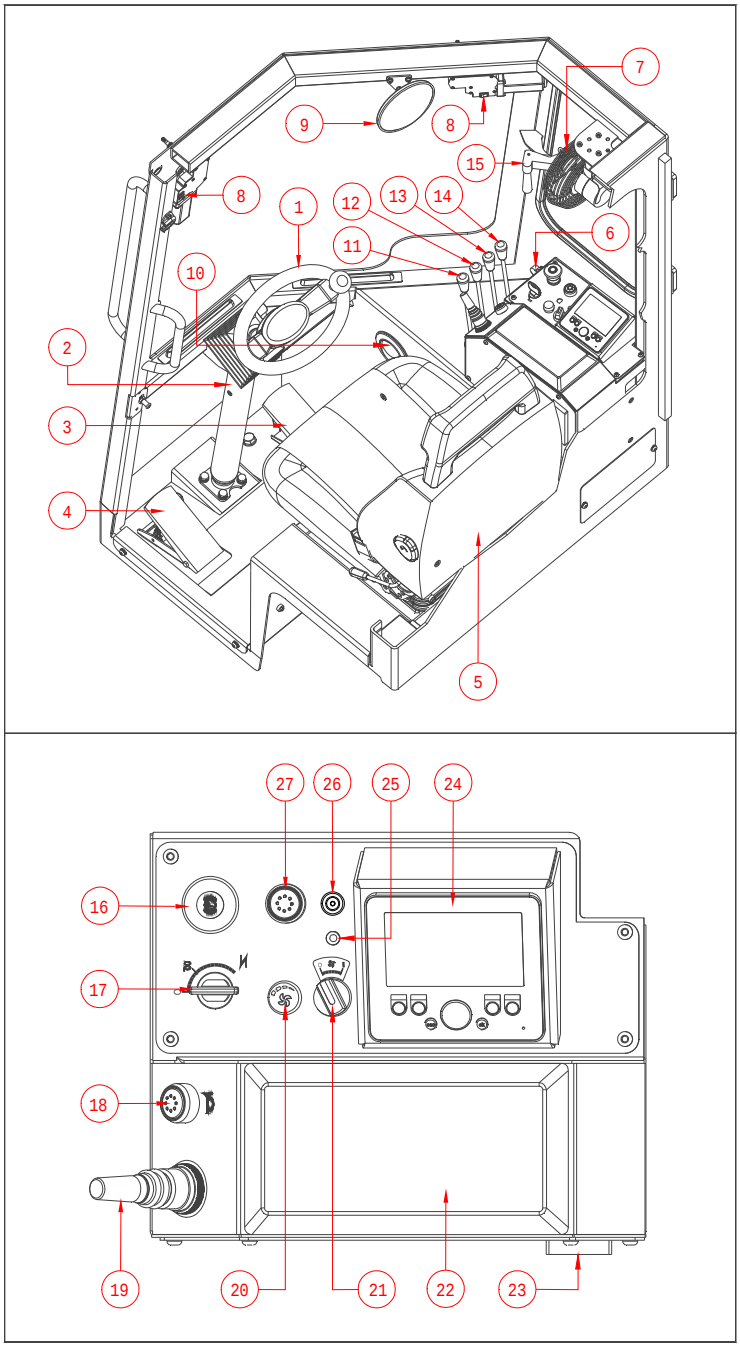


**Controls**

1. Steering Wheel
2. Adjustable Steering Column
3. Accelerator Pedal
4. Inch Brake Pedal
5. Operator's Seat
6. Heater Temperature Control *
7. Operator's Cooling Fan
8. Windscreen Wiper Switch
9. Convex Mirror *
10. Adjustable Air Vent *
11. Lift Control Lever
12. Reach Control Lever
13. Tilt Control Lever
14. Auxiliary Function Control Lever
15. RH Side Window Opener
16. Park Brake Switch
17. Ignition Key Switch
18. Horn Push Button
19. Four-Way Direction Switch
20. Heater Fan Switch *
21. Operator's Cooling Fan Switch
22. Armrest
23. Fusebox
24. Multifunction Display Console
25. MIL Light *
26. Programming Port
27. Drive/Lift Cut-Out Override *

**** If Fitted***

*Figure 3.2 Controls Layout*

# Note

**The layout of the controls displayed above applies only to a standard truck. The actual layout may vary depending on individual customer requirements.**

**Refer to the decals in the cabin of the individual truck if the layout is not standard.**

https://truckmanualshub.com/



### 3.2.1 Steering Wheel / Column

- The Combilift truck has both front and rear-end steering.
- In standard (0°) travel mode the front swivel arms are fixed and the truck is steered by turning the rear swivel arm.
- In sideward (90°) travel mode, the rear swivel arm is fixed and the truck is steered by turning the front swivel arms.
- The steering wheel is equipped with a spinner knob (**A**) for easier steering.
- The angle of the steering column is adjustable to increase driver comfort.

**Steering In Standard (0°) Travel Mode**

- When driving forwards, turn the steering wheel clockwise to turn the truck clockwise, turn the steering wheel anticlockwise to turn the truck anticlockwise.
- When driving in reverse, turn the steering wheel clockwise to turn the truck anticlockwise, turn the steering anticlockwise to turn the truck clockwise.

**Steering In Sideward (90°) Travel Mode**

- When driving in sideward travel mode, turn the steering wheel clockwise to turn the truck clockwise, turn the steering wheel anticlockwise to turn the truck anticlockwise.
- The same holds true for either left or right travel in sideward mode.

**Adjusting The Steering Column Angle**

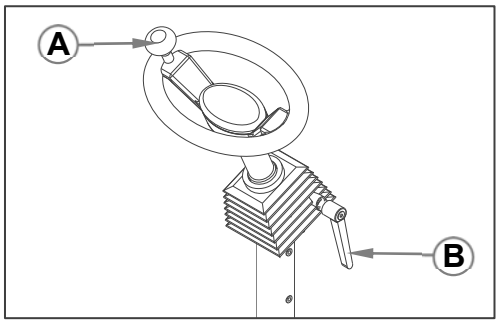


- Each operator should adjust the angle of the steering column so that they can comfortably reach the steering wheel when sitting in the seat with their back against the backrest.
- The seat and steering column should be adjusted simultaneously to achieve the optimum driving position. *See section 3.2.4 'Operator's Seat' on page 30 for instructions on how to adjust the seat.*
- To adjust the angle of the steering column, loosen the angle adjustment handle (**B**) on the right hand side of the column by turning the handle anticlockwise.
- Move the steering wheel to the optimum position.
- Lock the steering column in position by turning the handle clockwise until tight.

**Warning**

**Do not adjust the angle of the steering column when the truck is in operation.**

**Stop the truck and apply the park brake before adjusting the angle of the steering column.**

https://truckmanualshub.com/



### 3.2.2 Inch Brake Pedal

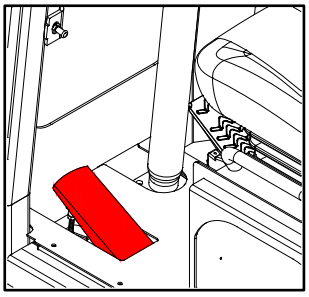

- The inch brake pedal is located on the cabin floor to the left hand side of the steering column as shown highlighted in red in the adjacent diagram.
- The inch brake pedal allows precise control of the travel speed which is invaluable when positioning the truck to lift or place a load or when operating in a confined area.
- When fully pressed down it blocks the flow of oil through the hydrostatic drive circuit, bringing the truck to a smooth controlled halt.
- When partially pressed down it restricts the flow of oil through the hydrostatic drive circuit thus reducing the travel speed.
- Press the pedal down gradually to reduce the travel speed gradually.
- Release the pedal gradually to increase the travel speed gradually.

### 3.2.3 Accelerator Pedal

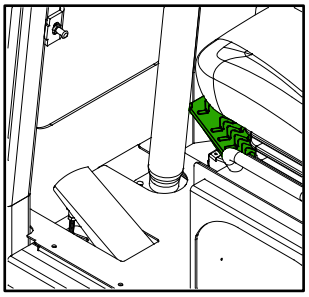

- The accelerator pedal is located on the cabin floor to the right hand side of the steering column as shown highlighted in green in the adjacent diagram.
- The accelerator pedal provides control of the engine speed (RPM).
- To INCREASE the engine RPM PRESS on the pedal.
- To REDUCE the engine RPM RELEASE the pedal.

### 3.2.4 Operator's Seat

A correctly functioning seat that has been adjusted to suit the height, weight and posture of each individual operator is essential to the operator's health.

The seat must be correctly adjusted before use and before each change of operator so that the steering wheel, pedals and hydraulic controls can be comfortably reached while the operator has their back resting against the seat backrest.

The angle of the steering column should be adjusted when the seat is being adjusted to achieve optimum comfort. See 'Adjusting the Steering Column'.

**Warning**

**DO NOT adjust the seat when the truck is in operation. Stop the truck and apply the park brake before making any adjustments to the seat.**

**Report any malfunction of the seat immediately. Maintenance may only be carried out by a competent authorised person.**

**DO NOT place or allow any objects to fall within the moving area of the seat.**

**Check that all setting stops are correctly engaged before starting the truck.**

**Loads – other than the operators weight – must not be placed on the seat.**

https://truckmanualshub.com/



**Warning**

**Not wearing the seatbelt or operating with a damaged seatbelt can result in injury to the operator.**
**DO NOT operate the truck unless the seatbelt is fastened across the top of the lap.**

**Note**

**If the truck has the seat belt switch option fitted the drive is disabled if the seatbelt tongue is not properly fastened in the seatbelt buckle.**

**Seat Sensor Pad**

The seat has a sensor pad in the pan that senses when the operator is sitting in the seat. The park brake is automatically applied - after a short time delay - when the operator vacates the seat.

**Note**

**The drive and the hydraulic mast and fork functions are all disabled if the operator is not sitting in the seat.**

**Seatbelt Switch (If Fitted)**

The seatbelt may have a switch fitted that senses when the seatbelt is fastened.

**Note**

**If the truck has the seat belt switch option fitted the drive is disabled if the seatbelt tongue is not properly fastened in the seatbelt buckle.**

https://truckmanualshub.com/



### 3.2.4.1 Kab 100 Series Seat Adjustments

The seat adjustments below apply only if a Kab 100 series seat has been fitted. Other optional seats may be fitted to suit the needs of individual customers.

**A.** Up-stop Adjustment

**B.** Height Adjustment

**C.** Ride Indicator

**D.** Backrest Angle Adjustment

**E.** Seat Belt

**F.** Horizontal Adjustment (Slide rails)

**G.** Backrest Extension

**H.** Lumbar Support Adjustment (5 positions)

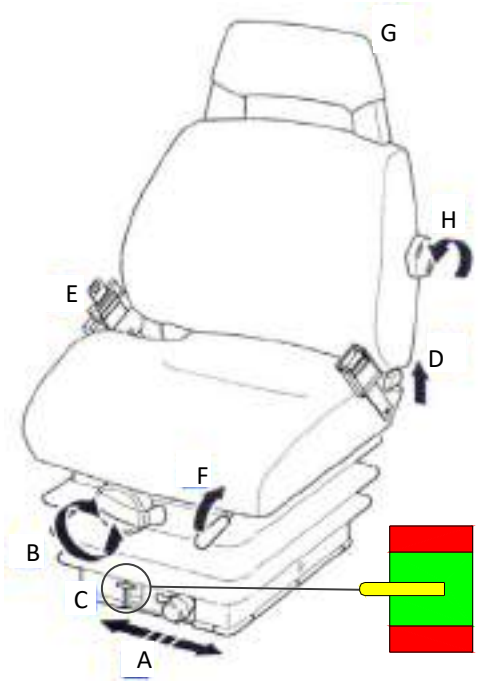


**A.** Up-stop Adjustment

The Up-stop adjustment lever **A** allows the upward travel of the seat suspension to be limited.

- Slide lever **A** fully to the right to allow maximum travel.
- Slide lever **A** fully to the left to limit the stroke to the minimum.

**B.** Height Adjustment

***Tip: Bring the backrest forward and slide the seat back fully before adjusting the height.***

To adjust the seat height for any individual operator the operator must be sitting on the seat.

Fold out the height adjustment handle **B** fully and hold the knob on the end of the handle.

- Turn handle **B** clockwise to raise the seat height.
- Turn handle **B** anticlockwise to lower the seat height.
- When the height has been set fold handle **B** back in.

**C.** Ride Indicator

When adjusting the height of the seat it is important to check the ride indicator. To protect the operator from shocks and vibrations the yellow ride indicator **C** should be in the green area when the operator is seated. The suspension automatically compensates for the weight of the operator.

https://truckmanualshub.com/



**D.** Backrest Angle Adjustment

To set the angle of the backrest the operator must sit on the seat with their back touching lightly against the backrest.

- To adjust the angle of the backrest pull up the locking lever (**D**) to release the backrest catch. Do not press back against the backrest when releasing the backrest catch.
- Lean forward or back at the waist to adjust the angle of the backrest. Release the locking lever when the backrest is at the desired angle.
- It should not be possible to move the backrest after it has been locked. Lean back and forward on the seat to ensure it is locked in position.

**E.** Seatbelt

To fasten the seatbelt:

- Sit back in the operator's seat.
- Pull the seatbelt out of its retractor and place it across the lap.
- The belt must not be twisted.
- Place the seatbelt tongue into the buckle.

To release the seatbelt press the red button on the buckle.

**F.** Horizontal Adjustment

The seat can be moved forward or back as required by the operator. Only touch the horizontal adjustment lever at the grip provided.

- Pull lever **F** up to release the horizontal adjustment catch.
- Slide the seat forward or back to the desired position.
- Release lever **F** to lock the seat in position.
- After the adjustment, the locking lever must latch into the desired position. It should not be possible to move the seat when it is locked.

**Warning**

**Risk of crushing! Only touch the lever at the grip, do not reach back under the lever.**

**G.** Backrest Extension

The backrest extension is not adjustable.

**H.** Lumbar Support Adjustment

The lumbar support adjustment knob **H** allows the support on the lower backrest to be adjusted to suit the individual operator. There are five setting positions.

- Turn knob **H** clockwise to increase the lumbar support.
- Turn knob **H** anticlockwise to reduce the lumbar support.

https://truckmanualshub.com/



### 3.2.4.2 Grammer Seat Adjustments

The seat adjustments below apply only if a Grammer seat has been fitted. Other optional seats may be fitted to suit the needs of individual customers.

**Note**

**The Grammer seat adjustments may vary slightly to those shown below depending on the model of Grammer seat that has been fitted.**

**The lumbar support option is not applicable to all Grammer seats.**

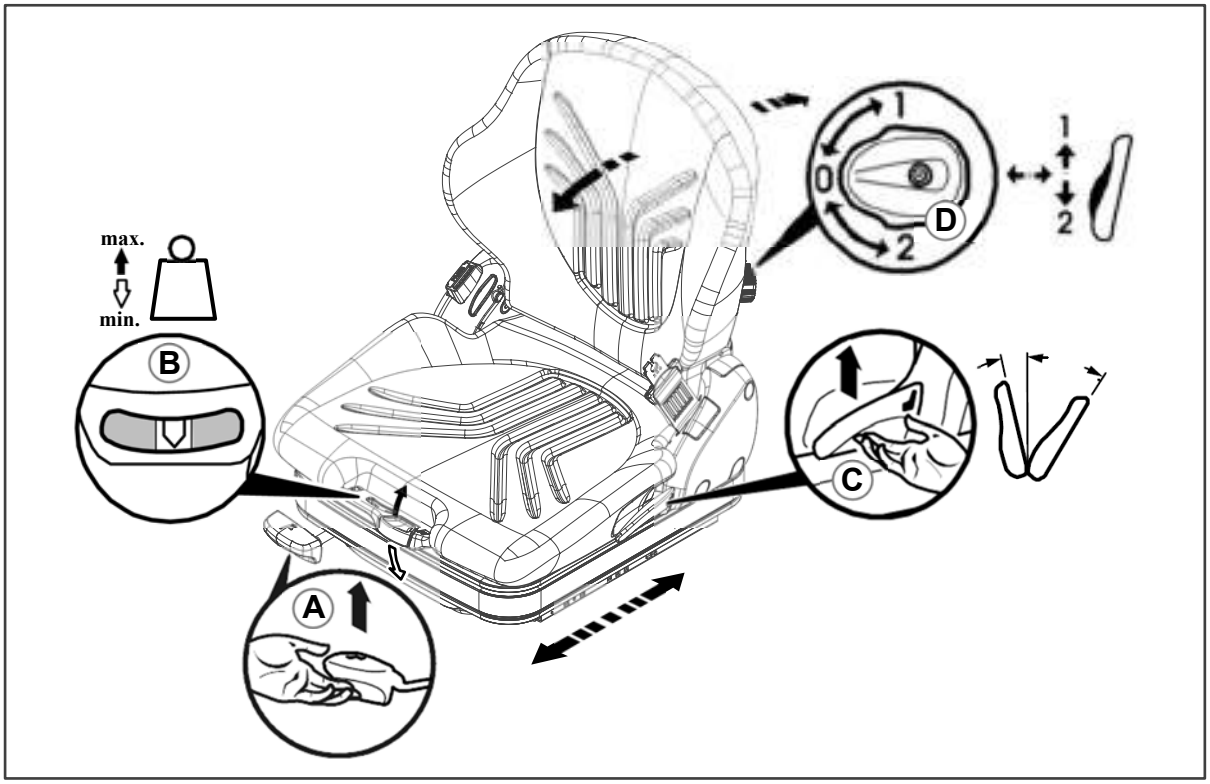


**A.** Fore/Aft Adjustment

**B.** Weight Adjustment

**C.** Backrest Angle Adjustment

**D.** Lumbar Support Adjustment

**A.** Fore/Aft Adjustment

- To slide the seat forward or back lift the seat slide lever (**A**) to release the catch then slide the seat to the desired position.
- After the adjustment, the locking lever must latch into the desired position with an audible click. It should not be possible to move the seat when it is locked.
- Do not lift the locking lever with any part of the leg.

**Warning**

**Risk of crushing! Only touch the lever at the indented grip, do not reach back under the lever.**

https://truckmanualshub.com/



**B.** Weight Adjustment

- To adjust the seat for the operator's weight pull or press the weight adjustment lever (**B**) when sitting on the seat.
- The seat is adjusted correctly for weight when the arrow is in the middle of the viewing window.
- Within the viewing area, the individual height can be adjusted to a minimum spring movement.
- When the minimum/maximum weight adjustment has been reached, you can hear it reaching the upper or lower end stop.

**C.** Backrest Angle Adjustment

- To adjust the angle of the backrest pull up the locking lever (**C**) to release the backrest catch. Do not press back against the backrest when releasing the backrest catch.
- Lean forward or back at the waist to adjust the angle of the backrest. Release the locking lever when the backrest is at the desired angle.
- It should not be possible to move the backrest after it has been locked. Lean back and forward on the seat to ensure it is locked in position.

**D.** Lumbar Support Adjustment

- The lumbar support increases the seat comfort.
- To adjust the curvature in the upper part of the backrest cushion turn the adjustment knob (**D**) clockwise.
- To adjust the curvature in the lower part of the backrest cushion turn the adjustment knob (**D**) anticlockwise.

https://truckmanualshub.com/



### 3.2.5 Switches/Buttons

**Window Wiper Switches**

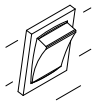

- The window wiper switches are two-position rocker switches.
- There is one of these switches on each of the two wiper motors located in the front of the operator's cabin. One in the top left corner and another in the top right corner. *See Item 8 in figure 3.2 on page 28.*
- Flip the switch on the wiper motor to the 'ON' position to activate the associated wiper.

**Ignition Key Switch**

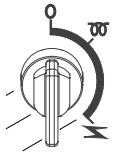

- This is a three-position key switch located on the left hand side of the dash. *See Item 17 in figure 3.2 on page 28.*
- It is used to power up the trucks electrical system and to start and switch off the engine.
- *See 5.9 'Starting the Engine' on page 74 and 5.10 'Stopping the Engine' on page 76.*

**Park Brake Switch**

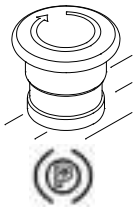

- The park brake switch is a latching push button switch located on the dash. *See Item 16 in figure 3.2 on page 28.*
- To APPLY the park brake, press the button. The button should lock in the closed position and the park brake indicator - on the dash cluster - will illuminate to alert the operator that the park brake is applied.
- To RELEASE the park brake, rotate the button clockwise. It should pop up into the open position.
- The Machine will NOT drive with the park brake on.

**Four-Way Direction Switch**

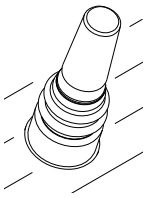

- The four-way direction switch is a five position lever switch located on the left hand side of the dash. *See Item 19 in figure 3.2 on page 28.*
- It can be set to forward, reverse, left, right, or neutral.
- In order to select a direction of travel move the lever in the desired direction e.g. to drive left move the lever to the left.
- Always return the lever to the neutral position when the drive is not being used.

**Note**

**The truck will NOT start unless the direction control switch is in the neutral position.**

https://truckmanualshub.com/



**Horn Button**

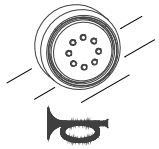

- The horn button is a momentary push button switch located on the left hand side of the dash. *See Item 18 in figure 3.2 on page 28.*
- Press the horn button to activate the horn.
- Release the horn button to deactivate the horn.

**Cabin Cooling Fan Switch**

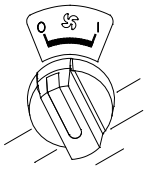


- The cabin cooling fan switch is a two position rotary switch located on the right hand side of the dash. *See Item 20 in figure 3.2 on page 28.*
- Turn the switch to '**I**' to activate the fan in the top rear right hand corner of the cabin.
- Turn the switch to '**0**' to deactivate the fan in the top rear right hand corner of the cabin.

## 3.2.6 Switches/Buttons for Optional Extras

**Heater Air Temperature Control (If Fitted)**

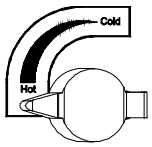


- The heater air temperature control is mounted on the right hand side of the cabin (if fitted). *See Item 6 in figure 3.2 on page 28.*
- It is used in conjunction with the cabin air blower fan switch (if fitted).
- To increase the temperature of the air expelled from the air vents (if fitted) turn the knob anti-clockwise.
- To decrease the temperature of the air expelled from the air vents (if fitted) turn the knob clockwise.

**Cabin Heating Switch (If Fitted)**

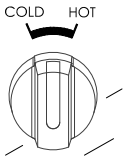


- The cabin heating switch is a two position rotary switch located on the dash (if fitted).
- It is used in conjunction with the cabin air blower fan switch (if fitted).
- Turn the switch to hot, to activate the cabin heating.
- Turn the switch to cold, to deactivate the cabin heating.

**Cabin Air Blower Fan Switch (If Fitted)**

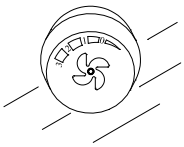

- The cabin air blower fan switch is a four position rotary switch located on the dash (if fitted). *See Item 20 in figure 3.2 on page 28.*
- It is used to switch on the cabin air blower fan and to select between - 1 low, 2 medium or 3 high fan speed.

https://truckmanualshub.com/



**Cabin Interior Light Switch (If Fitted)**

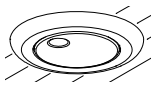

- The cabin interior light switch is located on the light inside the cabin at the top right hand side.
- Press on the small circular recess on the bottom face of the light to switch the light on.
- Press in the same place a second time to switch the light off.

**Direction Indicator Lights Switch (If Fitted)**

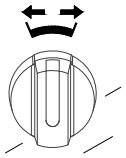

- This is a three position rotary switch used on trucks that have optional road lights fitted.
- In the centre position the indicator lights are off.
- When turning left turn the switch anticlockwise to operate the left hand side indicator lights.
- When turning right turn the switch clockwise to operate the right hand side indicator lights.

**Road Light Switch (If Fitted)**

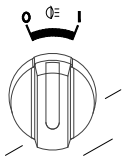

- This is a two position rotary switch used on trucks that have optional road lights fitted.
- Turn the switch to '**I**' to turn on the road lights if fitted.
- Turn the switch to '**0**' to turn off the road lights if fitted.

**High Mast Drive Cut-Out Override Button (If Fitted)**

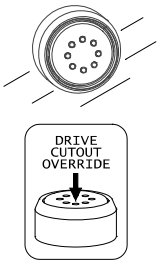


- The high mast drive cut-out option prevents the truck from driving if the mast is raised above a predetermined height.
- If this option is fitted a button will be provided to override the drive cut-out if required.
- To re-commence driving either:
  - Lower the forks below the set cut-out height using the lift/lower control.

    OR
  - Press and hold in the drive cut-out override button before attempting to drive.

**Mast/Forks Lift Cut-Out Override Button (If Fitted)**

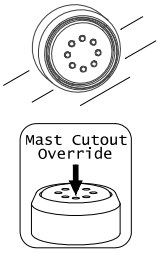


- The mast/forks lift cut-out option prevents the mast/forks from being raised above a predetermined height.
- If this option is fitted a button will be provided to override the mast/forks lift cut-out if required.
- To raise the mast/forks above the predetermined set height, press and hold in the mast/forks lift cut-out override button then operate the lift/lower control.

https://truckmanualshub.com/



### 3.2.1 Multifunction Display Console (MDC)

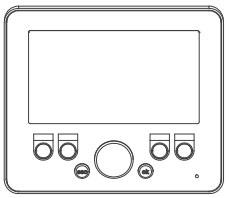

- The MDC is located on the control panel. *See Item 24 in figure 3.2 on page 28.*
- It consists of a display screen with buttons across the bottom of the screen.
- The buttons are used to activate and deactivate devices and functions and to select and navigate through the various screens and menu options. See '**Display Console Home Screen Button Allocation**' below.
- The home screen is used to monitor the operation of the truck. *See Section 4:'Operation Monitoring' on page 43.*

**Display Console Home Screen Button Allocation**

A. Hazard Warning Lights (if fitted)
B. Work Lights
C. Hydraulic Functions Lock/Unlock
D. Menu
E. Not Used
F. Menu Navigation
G. Select

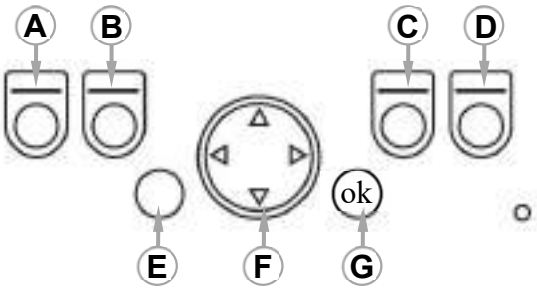


**A. Hazard Warning Lights (if fitted)**

- Press button (**A**) once to activate the optional hazard warning lights.
- Press button (**A**) a second time to deactivate the optional hazard warning lights.

**B. Work Lights**

- The work lights have three different activation settings.
- The default work lights setting of all work lights off is applied each time the truck is powered up.
- After starting the engine:
  - Press button (**B**) once to switch on the front and rear facing work lights only.
  - Press button (**B**) a second time to switch on the left and right facing work lights only.
  - Press button (**B**) a third time to switch on all work lights.
  - Press button (**B**) a fourth time to switch off all work lights.

**C. Hydraulic Function Lock**

- The hydraulic function lock prevents the use of any of the mast/fork hydraulic functions i.e. lift, reach, tilt etc. when applied.
- Press button (**C**) once to lock the mast/fork hydraulic functions.
- Press button (**C**) a second time to unlock the mast/fork hydraulic functions.

https://truckmanualshub.com/



**D. Menu**

- From the homescreen, press button (**D**) to enter the menu options screen.

**E. Not Used**

**F. Menu Navigation**

- Press the up, down, right and left arrows on button (**F**) to navigate through the various menu options.

**G. Select**

- Press button (**G**) to confirm the selection of a highlighted menu option.

# Note

**The layout positioning of controls and switches may be subject to change due to individual customer requirements. Please refer to the decals on the individual truck.**

**Operators must acquaint themselves with the layout of all controls before operating the truck.**

### 3.2.7 Battery Isolator Key Switch

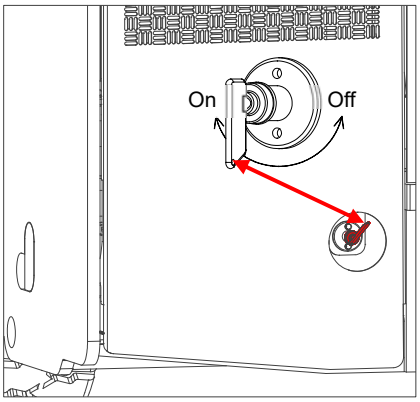


- The battery isolator key switch is used to disconnect the power from the battery to the electrical system.
- The switch is located behind the large access panel on the right hand side of the truck (see adjacent diagram).
- It can be accessed through an opening in the panel.
- To isolate the battery turn the switch ANTI-CLOCKWISE.
- To connect the battery turn the switch CLOCKWISE.

https://truckmanualshub.com/



## 3.3 Hydraulic Function Lever Operation

**Lift/Lower Lever** (Lever Closest To Operator)

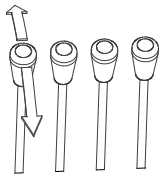

- The lift/lower lever controls the raising and lowering of the forks.
- To raise the forks, PULL the lever BACK.
- To lower the forks, PUSH the lever FORWARD.

**Mast Reach/Retract Lever** (2nd Lever from Operator)

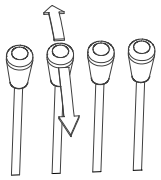

- The mast reach/retract lever controls the forward and backward movement of the mast carriage.
- To reach the mast out, PUSH the lever FORWARD.
- To retract the mast in, PULL the lever BACK.

**Mast Tilt Lever** (3rd Lever from Operator)

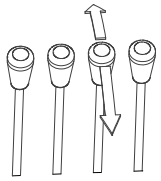

- The mast tilt lever controls the adjustment of the mast tilt angle.
- To tilt the mast forward, PUSH the lever FORWARD.
- To tilt the mast backward, PULL the lever BACK.

**Optional Auxiliary Function Levers** (4th / 5th Lever from Operator)

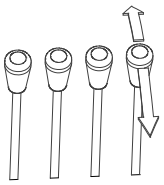

- Extra levers control auxiliary hydraulic functions.
- Trucks with more than one auxiliary function may have a 5th lever or a button may be fitted on top of the fourth lever.
- Operators must acquaint themselves with the operation of any extra functions before using the truck.
- The most common auxiliary functions fitted to Combilift trucks are:
  - Fork Positioning
  - Side shift
  - Telescopic forks
  - Lift Drop Forks

***Refer to the lever decal inside the trucks cabin for the operation of any auxiliary functions that have been fitted.***

***Operators <u>MUST</u> take time to familiarise themselves with any auxiliary functions on the Combilift and how they are operated.***

# Note

**When the truck is in neutral pressing the accelerator pedal will increase the working speed of the hydraulic functions.**

**The layout of the valve chest levers may be subject to change due to individual customer requirements. Please refer to the lever decal in the individual truck.**

**Operators must acquaint themselves with the layout of all controls before operating the truck.**

https://truckmanualshub.com/



## 3.4 Hydraulic Joystick Operation (If Fitted)

This is a four-way joystick with three push buttons on the handle. It is used to control the mast functions.

**Joystick Functions (Standard Setup)**

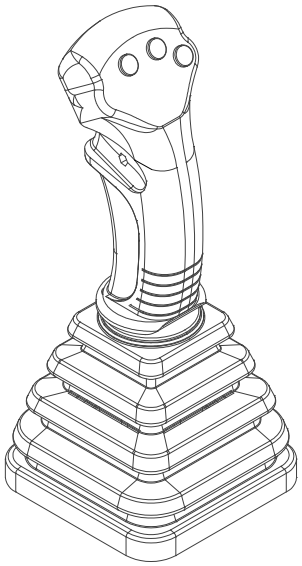

**Lift /Lower**

- To raise the forks, pull the joystick back.
- To lower the forks, push the joystick forward.

**Mast Reach/Retract**

- To reach the mast out, push the joystick to the right.
- To retract the mast in, pull the joystick to the left.

**Mast Tilt**

- To tilt the mast forward, push the joystick to the right whilst pressing the left hand button on the handle.
- To tilt the mast back, pull the joystick to the left whilst pressing the left hand button on the handle.

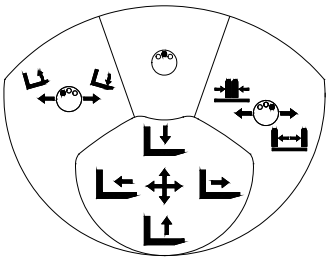

**Auxiliary**

- Auxiliary hydraulic functions are controlled by moving the joystick whilst pressing the right hand button on the handle.
- The middle button on the joystick may also be used on trucks fitted with more than one auxiliary function.
- The most common auxiliary hydraulic functions fitted to Combilift trucks are:
  - Fork Positioning
  - Side shift
  - Telescopic forks
  - Lift Drop Forks

***Refer to the joystick decal inside the trucks cabin for the operation of any auxiliary functions that have been fitted.***

***Operators MUST Take time to familiarise themselves with the operation of any auxiliary functions on the truck.***

# Note

**When the truck is in neutral pressing the accelerator pedal will increase the working speed of the hydraulic functions.**

**The layout of the joystick functions may be subject to change due to individual customer requirements. Please refer to the joystick decal in the individual truck.**

**Operators must acquaint themselves with the layout of all controls before operating the truck.**

https://truckmanualshub.com/



# Section 4: Operation Monitoring

Measured values, indicators, warnings and messages related to the operation of the truck and engine are displayed on a multifunction display console (MDC). The MDC is mounted on the control panel.

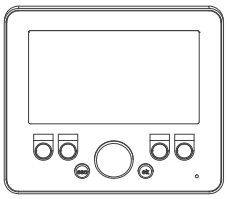

## 4.1 Daily Pre-Shift Inspection Screen

When the key switch is turned to position 1 (operating voltage) the MDC powers up and displays the daily pre-shift inspection screen illustrated below.

This screen is displayed in order to ensure that the trucks operator remembers to perform the pre-use checks before commencing operation of the truck. The pre-use checks are described in section **5.1 Pre-Use Checks on page 57.**

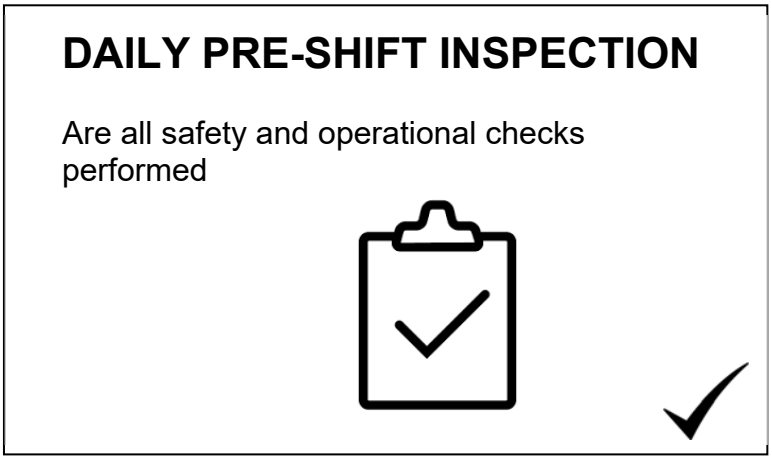


The screen above is displayed until button **'D'** - on the MDC - is pressed to accept that the message on the screen has been acknowledged.

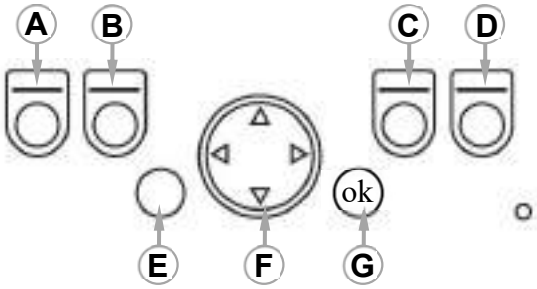


After button **'D'** has been pressed, the home screen, detailed on the following page is displayed.

https://truckmanualshub.com/



## 4.2 MDC Home Screen

The MDC home screen displays information concerning the operating condition of the truck and engine in the form of graphical symbols.

Figure 4.2 below shows every instrument and icon that can possibly be displayed on the MDC home screen. Some of these instruments and icons are always visible while others are only displayed under certain circumstances.

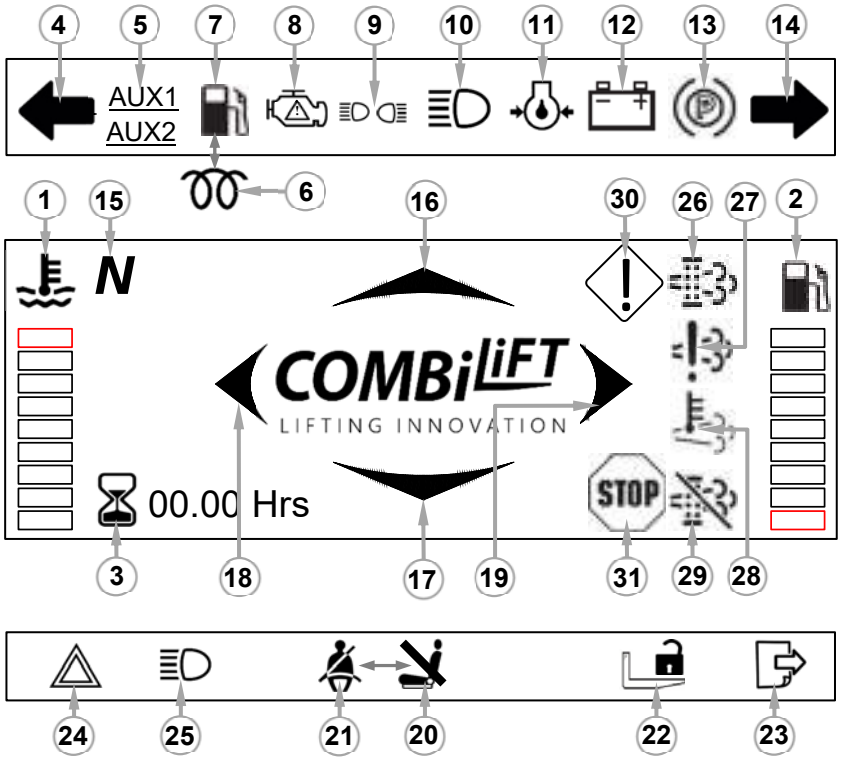


*Figure 4.2*

1. Engine Coolant Temperature Gauge
2. Fuel Level Gauge *
3. Hour Meter
4. Left Hand Turn Indicator Lights Icon **
5. Auxiliary Hydraulic Function Icon ***
6. Glow Heater Icon *
7. Low Fuel Warning Icon
8. Engine Fault Warning Icon
9. Side Road Lights Icon **
10. Head Lights Icon **
11. Low Engine Oil Pressure Warning Icon
12. Battery Charge Warning Icon
13. Park Brake Icon
14. Right Hand Turn Indicator Lights Icon **
15. Neutral Icon
16. Forward Drive Direction Icon
17. Reverse Drive Direction Icon
18. Left Drive Direction Icon
19. Right Drive Direction Icon
20. Seat Interlock Icon
21. Seat Belt Interlock Icon ****
22. Hydraulic Function Lock/Unlock Button Marker Icon
23. Menu Button Marker Icon
24. Hazard Warning Lights Button Marker Icon **
25. Work Lights Button Marker Icon
26. Diesel Particulate Filter (DPF) Regeneration Icon *
27. Exhaust Emissions System Fault/Malfunction Icon *
28. Exhaust Temperature Warning Icon *
29. Automatic DPF Regeneration Disabled Icon *
30. Warning Icon
31. Stop Icon

* *Diesel engine powered trucks only.*
** *Only applies if road lights have been fitted.*
*** *Only applies if auxiliary hydraulic mast/fork functions have been fitted.*
**** *Only applies if a seat belt switch has been fitted.*

https://truckmanualshub.com/



## Home Screen Instruments and Icons

The instruments and icons displayed on the home screen can be interpreted as follows:

### 1. Coolant Temperature Gauge

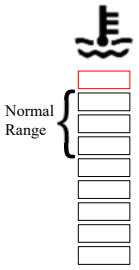


- The coolant temperature gauge displays the temperature of the coolant in the engines cooling system. It should be watched closely during engine operation.
- As the engine coolant temperature increases the bars fill in solid white.
- The normal engine coolant operating temperature range is within the upper three white bars on the gauge.
- If the red bar at the top fills in solid red the engine coolant temperature has reached 100°C (212°F).
- At a critical temperature above 100°C (212°F) the high temperature warning will pop up on the screen (*see section 4.3 on page 52).*
- If operation is continued and the coolant temperature is allowed to rise further - at a critical temperature above 100°C (212°F) - engine performance may be automatically reduced to protect the engine against the effects of overheating.

### 2. Fuel Level Gauge *

- The fuel level gauge displays the level of diesel fuel remaining in the diesel tank.
- When the tank is full all bars are filled in solid white.
- As the fuel is consumed the bars turn black and only the outline remains visible on the screen.
- A low fuel warning will pop up on the screen when the fuel level falls critically low (*see section 4.3 on page 52).*

** Diesel engine powered trucks only.*

### 3. Hour Meter

- The hour meter displays the total length of time the truck has been operating for.

### 4. Left Hand Turn Indicator Lights Icon **

- The left-hand turn indicator lights icon can only light up on trucks that have optional road lights fitted.
- The icon flashes green when the left turn indicator lights are activated.

*** Only applies if road lights have been fitted.*

### 5. Auxiliary Hydraulic Mast/Fork Function Icons ***

AUX1
AUX2

- The auxiliary hydraulic mast/fork function icons light up green when one of the optional auxiliary hydraulic functions has been selected.
- Optional auxiliary functions may be selected by various methods such as pressing a button on a hydraulic lever or joystick.

**** Only applies if auxiliary hydraulic mast/fork functions have been fitted.*

https://truckmanualshub.com/



### 6. Glow Heater Icon *

- The glow heater icon lights up amber when the ignition key switch is turned to position 1 (operating voltage) when the engine is cold.
- Wait until the glow heater icon extinguishes before turning the ignition key to position 2 (start).

** Diesel engine powered trucks only.*

### 7. Low Fuel Warning Icon

- The low fuel warning icon is displayed in the same position as the *'Glow Heater Icon'* when the fuel level is low.
- On LPG engine powered trucks a warning buzzer will also sound when the LPG level is low.
- The truck should be driven to a place where it can be refuelled as soon as the icon is displayed (*see section 5.2 Fuel Handling & Storage on page 62)*.

> **Note**
>
> **ALWAYS adhere to all safety precautions for refuelling the truck.**

### 8. Engine Fault Warning Icon

- The engine fault warning icon lights up amber or red when a fault has been detected by the engine control unit (ECU).
- If this icon is lights up while the engine is running, use the buttons on the screen to navigate to the engine fault page.
- When the fault has been remedied press button (**D**) (ACK) to signal that the fault has been acknowledged.
- The icon lights up amber if a minor fault is detected, and red if a more serious fault that requires immediate attention is detected.
- If the amber engine fault warning icon is displayed the warning icon (**30**) will also be displayed.
  - Depending on the fault, the engine power output may be reduced.
  - Arrange to have the engine serviced at the earliest possible convenience if the amber engine warning icon is displayed.
- If the red engine fault warning icon is displayed the stop icon (**31**) will also be displayed.
  - Depending on the fault, the engine power output may be reduced or the engine may shutdown automatically if necessary.
  - Switch off the engine immediately if the red engine warning icon is displayed.
  - If the truck is in a danger zone or if it is causing an obstruction or hazard it may be driven a short distance to a safe area.
  - Place an out-of-order sign on the steering wheel. Do not used the truck until the engine has been serviced.

> **Note**
>
> **In the event of a serious error being detected failure to switch off the engine promptly may lead to a loss of warranty.**

https://truckmanualshub.com/



- Indicators such as the oil pressure icon or the coolant temperature icon may light up on the home screen if applicable.
- The ECU will store information that will allow the fault to be diagnosed when a computer is connected to the ECU.
- Engine fault codes can be viewed on the 'Engine Information' screen. See section 4.5 'MDC Engine Fault Codes' on page 56 for instructions on how to view engine fault codes.

**9. Side Road Lights Icon ****

- The side road lights icon can only light up on trucks that have optional road lights fitted.
- The icon will light up green while the side road lights are illuminated.

*** Only applies if road lights have been fitted.*

**10. Headlights Icon ****

- The headlights icon can only light up on trucks that have optional road lights fitted.
- The headlights icon lights up blue while the headlights are illuminated.

*** Only applies if road lights have been fitted.*

**11. Low Engine Oil Pressure Warning Icon**

- When the key switch is turned to position 1 (operating voltage) the low engine oil pressure warning icon should light up red to confirm the icon is functioning.
- If the low engine oil pressure warning icon is lit up red when the engine is 'running' it indicates low engine oil pressure and/or insufficient oil in the sump.
- Stop the engine and investigate the issue (*see section 5.3 'Checking Engine Oil Level' on page 66)*.

# Note

**Stop the engine if the low engine oil pressure icon is red when the engine is running. Check the oil level on the dipstick. Check for oil leaks.**

**12. Battery Charge Warning Icon**

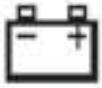

- When the key switch is turned to position 1 (operating voltage) the battery charge warning icon should light up red to confirm the icon is functioning.
- If the icon is lit up red when the engine is 'running' it indicates that the alternator is not providing enough voltage to power the electrics and charge the battery.

**13. Park Brake Icon**

- The park brake icon lights up red when the park brake is applied.

https://truckmanualshub.com/



**14. Right Hand Turn Indicator Lights Icon ****

- The right-hand turn indicator lights icon can only light up on trucks that have optional road lights fitted.
- The icon flashes green when the right turn indicator lights are activated.

*** Only applies if road lights have been fitted.*

**15. Neutral Icon**

- The neutral icon lights up green when the four-way direction switch is in the neutral position.

**16. Forward Drive Direction Icon**

- The forward drive direction icon lights up green when forward drive is selected with the four-way direction switch and the park brake is released.

**17. Reverse Drive Direction Icon**

- The reverse drive direction icon lights up green when reverse drive is selected with the four-way direction switch and the park brake is released.

**18. Left Drive Direction Icon**

- The left drive direction icon lights up green when left drive is selected with the four-way direction switch and the park brake is released.

**19. Right Drive Icon**

- The right drive direction icon lights up green when right drive is selected with the four-way direction switch and the park brake is released.

**20. Seat Interlock Icon**

- The seat interlock icon is displayed when the operator is not sitting in the seat.
- The drive is disabled and the hydraulic mast and fork functions are disabled when this icon is displayed.
- The park brake is automatically applied when the operator is not sitting in the seat.

**21. Seat Belt Interlock Icon ******

- The drive is disabled when this icon is displayed.
- The icon is displayed when the operator is sitting in the seat but does not have the seat belt buckled.
- It appears in the same position on the screen as the seat interlock icon.

***** Only applies if a seatbelt switch has been fitted.*

https://truckmanualshub.com/



**22. Hydraulic Function Lock Button Marker Icon**

- The hydraulic function lock button marker icon is displayed on the bottom of the screen above the button that locks and unlocks the hydraulic mast/fork functions (*see button C on page 39)*.
- The icon is lit up amber at all times.
- When the hydraulic functions are locked a closed lock is displayed within the icon.
- When the hydraulic functions are unlocked an open lock is displayed within the icon.

**23. Menu Button Marker Icon**

- The menu button marker icon is displayed on the bottom right of the screen above the button that is used to access the menu options screen (*see button D on page 39)*.

**24. Hazard Warning Lights Button Marker Icon ****

- This icon will only be visible if the truck has road lights fitted.
- The hazard warning lights button marker icon is displayed on the bottom left of the screen above the button that controls the hazard warning lights (see button A on page 39).
- The left-hand turn indicator lights icon (**4**) and right-hand turn indicator lights icon (**14**) flash green while the hazard warning lights are active.

*** Only applies if road lights have been fitted.*

**25. Work Lights Button Marker Icon**

- The work lights button marker icon is displayed on the bottom of the screen above the button that is used to control the work lights (*see button B on page 39)*.
- The icon is lit up amber at all times.
- The work lights have three different activation settings.
- A number from 0 - 3 is displayed alongside the icon to identify which setting the work lights are operating in.

**26. Diesel Particulate Filter (DPF) Regeneration Icon ***

** Diesel engine powered trucks only.*

- This icon is displayed when DPF regeneration is in progress **or** the DPF is in need of regeneration and the operator has disabled auto DPF regeneration.
  - If conditions are safe the operator should enable auto DPF regeneration (*see 5.4.1 'Automatic DPF Regeneration' on page 68)*.

- When the DPF regeneration icon is combined with the warning icon (**30**), there is a separate engine fault **or** the soot level in the DPF is moderately high. Engine performance is reduced (limp mode) to protect the DPF.
  - The operator should drive the truck to a safe location, enable auto DPF regeneration then activate standstill DPF regeneration (*see 5.4.2 'Standstill DPF Regeneration' on page 68)*.

https://truckmanualshub.com/



- **Important:** If standstill DPF regeneration is not performed successfully within approximately 1 hour, it will lead to a condition where it is only possible to activate standstill DPF regeneration by connecting a service tool. Stop using the truck and contact your local Combilift partner in this instance.

- When the DPF regeneration icon is combined with the stop icon (**31**), there is a separate engine fault **or** the particulate matter in the DPF can no longer be reduced sufficiently by the standstill regeneration process. Engine performance is reduced to protect the DPF.

  - If this combination is present the DPF must be replaced or removed for specialist cleaning. Stop using the truck and contact your local Combilift partner in this instance.

## Caution

**Temperatures on the exhaust pipe can reach 600°C/1112°F during DPF regeneration. Danger of burns!**

**A special engine operating state becomes active during standstill DPF regeneration, the truck <u>must not</u> be used until the process is complete.**

**Only activate standstill DPF regeneration when the truck is parked in a well-ventilated open area that is free of combustible materials.**

**Disable automatic DPF regeneration when the truck is operating in a location that is not safe for elevated exhaust temperatures.**

## Note

**If the exhaust filter icon is still being displayed after successfully completing the standstill DPF regeneration process, contact your local Combilift partner.**

**Change the engine oil when the interval between DPF regenerations becomes 5 hours or less, if this condition persists even after an oil change, it can be an indication of an engine fault that is causing excessive carbon emissions. Contact your local Combilift partner in this instance.**

### 27. Exhaust Emissions System Fault/Malfunction Icon *

** Diesel engine powered trucks only.*

- The exhaust emissions system fault/malfunction icon is displayed when engine emissions are outside of the normal operating range or there is a fault in the engine emissions system.

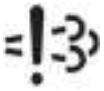

- Faults in the engine emissions system should be checked and repaired immediately. Engine performance may be reduced (limp mode) to protect the exhaust emissions system.
- The engine emissions system fault/malfunction icon will be displayed in combination with the warning icon (**30**) if a fault has not been repaired within 3 hours 15 minutes. After this time maximum torque is reduced by 50% and maximum speed is reduced by 40%.

https://truckmanualshub.com/



- The engine emissions system fault/malfunction icon will be displayed in combination with the stop icon (**31**) if a fault has not been repaired within 4 hours. After this time net torque is reduced to 0% and speed is reduced to near idle speed.

- If a repeat fault occurs within 40 hours of a previous fault, the fault timer will continue from the occurrence of the original fault and the reduction in engine performance will revert to the reduction that was in place when the original fault was repaired.
- If no repeat fault occurs within 40 hours of a previous fault, the fault timer will reset to zero.

### 28. Exhaust Temperature Warning Icon *

** Diesel engine powered trucks only.*

- The exhaust temperature warning icon is displayed when DPF regeneration is in progress or when the exhaust gas temperature exceeds a limit in normal operation.

- If the icon is displayed during operation, the truck can be operated as normal unless the operator determines that the truck is operating in an area deemed to be unsafe for high exhaust temperatures e.g. in close proximity to flammable/combustible materials.
- If the truck is operating in an area deemed to be unsafe for high exhaust temperatures, automatic DPF regeneration must be disabled temporarily (*see 5.4.1 'Automatic DPF Regeneration' on page 68)* until the truck has been moved to an area deemed to be safe for high exhaust temperatures.
- If the engine emissions system temperature warning icon is displayed in combination with the warning icon (**30**) or stop icon (**31**) engine performance will be reduced. Contact your local Combilift partner if this condition persists after successfully performing regeneration of the DPF.

** Diesel engine powered trucks only.*

## Caution

**Temperatures on the exhaust pipe can reach 600°C/1112°F during DPF regeneration. Danger of burns!**

**A special engine operating state becomes active during standstill DPF regeneration, the truck <u>must not</u> be used until the process is complete.**

**Only activate standstill DPF regeneration when the truck is parked in a well-ventilated open area that is free of combustible materials.**

**Disable automatic DPF regeneration when the truck is operating in a location that is not safe for elevated exhaust temperatures.**

## Note

**If the exhaust temperature warning icon is still being displayed after successfully completing the standstill DPF regeneration process, contact your local Combilift partner.**

https://truckmanualshub.com/



**29. Automatic DPF Regeneration Disabled Icon ***

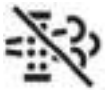

- The icon is displayed when the operator has engaged the request to disable automatic DPF regeneration (*see 5.4.1 'Automatic DPF Regeneration' on page 68)*.
- This icon remains on the screen until the operator enables automatic DPF regeneration.
- Disabling auto mode is not recommended for any situation unless it is safety-related or if the fuel tank lacks the required fuel to complete the cleaning process.
- ** Diesel engine powered trucks only.*

**30. Warning Icon**

- The warning icon is displayed when a condition exists that requires operator action.
- The amber engine fault warning icon (**8**) will also be displayed.
- Arrange to have the engine serviced at the earliest possible convenience.
- If a fault has been detected, engine torque may be reduced by the ECU when the warning icon is displayed.

**31. Stop Icon**

- The stop icon is displayed when a condition exists that requires immediate operator action and service.
- The red engine fault warning icon (**7**) will also be displayed.
- Switch off the engine and place an out-of-order sign on the steering wheel. Do not used the truck until the engine has been serviced.
- If the truck is in a danger zone or if it is causing an obstruction or hazard it may be driven a short distance to a safe area.
- Engine power may be reduced or the engine may shut down automatically when the stop icon is displayed.
- Engine fault codes can be viewed on the 'Engine Information' screen. *See section 4.5 'MDC Engine Fault Codes' on page 56 for instructions on how to view engine fault codes.*

**Note**

**Contact your local Combilift Partner for further information on engine faults.**

## 4.3 MDC Pop Up Icons

There are a number of icons - accompanied by a text message - that may pop up on the screen. If any of these icons are displayed, the relevant corrective action must be taken. After taking the relevant corrective action press Button (**D**) - below 'ACK' on the screen - on the display console to acknowledge the message and return to the home screen.

If button (**D**) is pressed without taking the relevant corrective action, the display will return to the home screen however the message will reappear after 10 seconds.

https://truckmanualshub.com/



**Routine Maintenance Pop Up Icon**

- The routine maintenance icon pops up on the screen along with the message “Service Required!” when routine maintenance is due. Initially it will be displayed after 100 operating hours.
- After the first 100-hour service the icon must be set to pop up every 250 operating hours in accordance with the maintenance schedule.
- Contact your local Combilift partner for further information.

**Low Engine Oil Pressure Pop Up Icon**

- The low engine oil pressure icon pops up on the screen along with the message “Low Engine Oil Pressure!” when the ECU has detected that the engine oil pressure is below the expected range.
- Switch off the engine immediately as it can be severely damaged if oil pressure is lost.
- Investigate the cause of the low oil pressure warning.
- The low pressure may be due to low oil level *(see 5.3 ‘Checking Engine Oil Level’ on page 66)*.

**High Engine Temperature Pop Up Icon**

- The high engine temperature icon pops up on the screen along with the message “High Engine Temperature!” when the ECU has detected that the engine coolant is overheating.
- Allow the engine to idle for at least 5 minutes to let it cool down gradually, then stop the engine.
- Investigate the cause of the overheating before resuming operation.
  - Check the coolant level, look for coolant leaks.
  - Check for obstructions around the cooling air inlet or outlet.
  - Check for dirt or dust between the radiator fins.
  - Check the fan belt tension.
  - Check the radiator water pipes for blockages.
- If operation is continued and the coolant temperature rises further - at a critical temperature above 100°C (212°F) - engine performance is automatically reduced to protect the engine against the effects of overheating.

**Drain Water Separator Pop Up Icon ***

- The drain water separator icon pops up on the screen along with the message “Drain Water Separator!” when water is detected in the water trap on the bottom of the fuel filter element.
- Stop the engine immediately and drain all water from the water trap (*see 6.9Diesel Fuel* System *on page 105)*.

** Diesel engine powered trucks only.*

https://truckmanualshub.com/



**Low Fuel Pop Up Icon**

- The low fuel icon pops up on the screen when the level of fuel in the fuel tank falls critically low.
- On LPG powered trucks a warning buzzer will also sound when the LPG level is low.
- The truck should be driven to a place where it can be refuelled as soon as the icon appears on the screen (*see 5.2 Fuel Handling & Storage on page 62)*.

# Note

**ALWAYS adhere to all safety precautions for refuelling the truck.**

**Engine Power Limited Pop Up Icon**

- The engine power limited icon pops up on the screen along with the message “Engine Power Limited!” when the ECU has detected a fault that requires the engine power or speed to be reduced to protect the engine.
- Stop the engine immediately and investigate the cause of the problem. Contact your local Combilift partner.

**Engine Air Intake Filter Dust Load Pop Up Icon ***

- The engine air intake filter dust load icon pops up on the screen along with the message “Air Intake Blocked!” when the engine air intake is restricted.
- The engine air intake filter must be serviced if this icon pops up (*see 6.13 Air Filter System on page 116)*.

** Diesel engine powered trucks only.*

**Exhaust Filter Soot Load High Pop Up Icon ***

- The exhaust filter soot load high icon pops up on the screen along with the message “Soot Load High: Perform Regen!” when the level of soot in the exhaust filter has reached the maximum limit.
- If this icon is displayed, the operator should drive the truck to a safe location, then activate the standstill exhaust filter cleaning process *(see section **5.4.2** ‘**Standstill** ’ on page 68).*

** Diesel engine powered trucks only.*

https://truckmanualshub.com/



## 4.4 Miscellaneous Dash Panel Indicator Lights

### Malfunction Indicator Light (MIL) ^

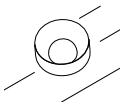

- The MIL is an amber coloured light that is mounted on the control panel on trucks fitted with an emissions certified LPG engine.
- It serves to notify the operator of a fault detected by the engine ECU.
- When the key switch is turned to the 'ON' position, with the engine at rest, the MIL should illuminate to verify that it is working.
- If the MIL is illuminated when the engine is running arrange for a service as soon as possible.

*^ LPG engine powered trucks only.*

### 90° Light (If Fitted)

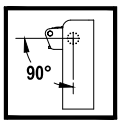


- The 90° light is a green coloured light that may be mounted on the dash panel.
- It illuminates when the wheels are all aligned in sideward mode.
- The 90° light is identified by a decal (shown adjacent).

### Hydraulic Oil Overheating Light (If Fitted)

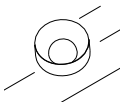

- The hydraulic oil overheating light is a red coloured light that may be mounted on the dash panel.
- The hydraulic oil overheating light illuminates if the hydraulic system temperature rises above a specified allowable limit.
- If this light illuminates discontinue use of the truck, switch off the engine and investigate the cause of the overheating.
- Continued use of the truck with the hydraulic oil overheating light illuminated will degrade the hydraulic oil and cause damage to hydraulic system parts. This may result in voidance of the warranty.
- The hydraulic oil overheating light is identified by a decal (shown adjacent).

**Note**

**Allow the engine to idle for 5 minutes before stopping it after a full load operation.**

### Low LP Gas Light (If Fitted) ^

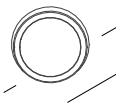

- The low LP gas light is a red coloured light that may be mounted on the control panel on trucks fitted with an LPG engine.
- The low LP gas light illuminates when the volume of LP gas in the gas bottle is running low.

*^ LPG engine powered trucks only.*

https://truckmanualshub.com/



## 4.5 MDC Engine Fault Codes

The engine fault warning icon (**8** on the MDC Home screen) lights up amber or red to indicate that an engine or emissions system fault (or faults) has been detected by the engine control unit (ECU). Fault information is stored by the ECU and active faults in the form of Suspect Parameter Number (SPN) codes and Failure Mode Identifier (FMI) codes be viewed by accessing the MDC Engine Information screen.

**To view fault codes on the MDC Engine Information screen:**

- With the Home screen displayed, press button (**D**) to display the options screen.
- Navigate to the engine icon using button (**F**), then press button (**G**) to display the engine information screen.
- Press button (**D**) to skip to the second engine information screen.
- The number of active faults will be displayed at the top of the screen.
- A list of SPN codes and FMI codes will be displayed if there are any faults active.

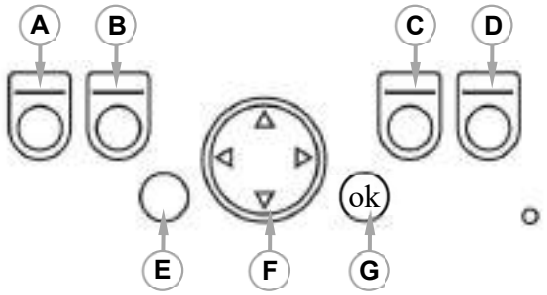


Engine and emissions system faults related to the SPN and FMI codes can be identified using the Diagnostic Trouble Code (DTC) list. The DTC list can be viewed at:

http://support.combilift.com/knowledge-base/engine-information-and-active-faults-ifm-screen/

***Note: A login is required to view the DTC codes.***

For further assistance please contact your local Combilift partner. Alternatively, you can contact us directly by filling in the form at:

https://warranty.combilift.net/combilift-engine-callout-request/

https://truckmanualshub.com/



# Section 5: Operation

Many people are under the impression that driving a lift truck is like driving any other vehicle. This is not the case. Lift trucks are designed for the purpose of lifting, and moving heavy loads in confined spaces. For this reason it is essential that operators are trained to:

- Thoroughly inspect the machine to confirm it is safe to use before commencing each shift.
- Operate the machine correctly.
- Always operate the machine in a safe and controlled manner.

**Warning**

**Check all systems before operating the truck. Report unsafe conditions and have them corrected before commencing operation.**

## 5.1 Pre-Use Checks

The truck must be maintained in a condition that is safe and without risk to safety and health. Pre-Use checks play a vital role in ensuring the truck is in safe working condition. Contact the local authorities in order to find out what regulations are in place regarding Pre-Use checks of industrial equipment of this nature.

**Warning**

**Before performing the pre-use checks:**

- **Park in a suitable area on level ground with adequate space and headroom around the truck to perform all tests and checks safely.**
- **Release any residual pressure in the hydraulic system i.e. lower the mast fully and tilt the mast fully forward.**
- **Isolate the battery and remove the key – unless performing operational checks.**
- **Smoking and naked lights are prohibited.**
- **Ensure the relevant personal protective equipment (PPE) is worn i.e. gloves, safety boots, eye protection, clothing.**

https://truckmanualshub.com/



**Caution**

**Escaping fluid under pressure can penetrate the skin causing serious injury. Avoid hazards by relieving pressure before disconnecting hydraulic or other lines. Tighten all connections before applying pressure. Search for leaks with a piece of cardboard. Protect hands and body from high pressure fluids. In the event of oil penetrating the skin, seek medical attention immediately.**

- Employers must ensure that the Pre-Use checks are performed and that records are kept.
- Operators must perform the checks and report any defects to the relevant supervisor.
- Never operate a truck that has not been checked or that has failed on any of the checks.
- If a truck becomes unsafe during a shift, stop operating the truck and report the problem immediately.
- If a truck has failed on any of the checks place an 'out of order' notice on the steering wheel until the problem has been resolved.

The pre-use checks must be carried out at the start of the working day before the machine commences operation. Alternatively if a multi shift system is being operated the checks should be carried out at the beginning of each shift.

**The following checks must be performed prior to using the truck:**

- **Overall Condition** – Look for scrapes, dents, and other signs of damage. Watch for missing or loose nuts and bolts. Check underneath the machine for signs of leaking fuel, engine coolant, engine oil, hydraulic oil and battery electrolyte.
- **Mast**
  - Check for twisting and distortion in the channels.
  - Look for signs of cracking and check that there are no missing or loose bolts.
  - Check the mast chains for wear and missing links and pins.
  - Make sure that the chains are of equal tension and are adequately lubricated. DO NOT place your hands inside the mast at any stage to check the chains tension. Press on the chains with a long stick or screwdriver.
  - Check around the lift and tilt cylinders for signs of leaking oil.
  - Check all bearings for damage, deformation and cracks.
  - Check all hoses on the mast for signs of leaking oil.
- **Mast Reach Carriage –** Check for excessive wear, damage, deformation and cracks in the welded assembly and the bearings.
- **Fork Carriage** – Check for excessive wear, damage, deformation and cracks.
- **Forks** – Check the forks for excessive wear, cracks, fractures and deformation. Check that both locating pins are in place and operational.

https://truckmanualshub.com/



- **Tyres and Wheels** – Check that all the wheel nuts are present and secure. Look for cuts in the tyres or foreign objects in the rubber. Also look for plastic straps, wire, and other debris caught between the wheel and the wheel motor. **Always wear gloves when checking the tyres to avoid injury on sharp pieces of debris.**
- **Access** – Check that all steps and grab handles are secure, clean and in good condition.
- **Load Backrest (if fitted)** – Check for deformation or cracks. Ensure it is fixed securely.
- **Hydraulics** - Inspect the hydraulic hoses for kinks, routing and wear. Check all seals and couplings for damage, wear and leaks. Use a piece of card when checking for pinhole leaks.
- **Hydraulic Oil Cooler** – Look for a build-up or dust or debris on or around the hydraulic oil cooler. Check around the fan and in the fins.
- **Operator's Cabin** – Look for signs of damage and cracking to the overhead guard. Ensure it is securely fixed. Report any signs of damage immediately to the relevant supervisor.
- **Front Wheel Alignment** – Check that the front wheels are aligned parallel to the sides of the truck and to each other when standard mode is selected. *See section 5.7 'Front Wheel Alignment' on page 73 if the front wheels are out of alignment.*
- **Safety Sign Decals** – Check that all safety decals are present and legible.
- **Hydraulic Tank** – Check for damage or leaks. Check the hydraulic oil level with the mast fully lowered. *See section 5.6 'Checking Hydraulic Oil Level' on page 72.*
- **Battery** - Check the battery connections are secure. Check the cells for damage and leaks. Check the terminals for corrosion.
- **Serial Plate and Capacity Chart** – Check they are present and securely attached and check the rated capacity.
- **Electrical Connections/Terminals** – Check they are securely connected and undamaged. Check leads for loose or bare wires.
- **Mirrors (If Fitted)** – Check mirrors are clean and in good condition.
- **Oil Level** – Check the engine oil level on the dipstick. It must be between the upper and lower level marks. Top up oil if necessary.
- **Coolant Level –** Check the coolant level in the coolant header tank by looking through the sight glass
- **Radiator** – Check for build-up of leaves, dust or other debris on or around the radiator.
- **Belts and Hoses** – Check that all of the belts and hoses are in good condition. Look for visible signs of wear and fraying.
- **Diesel Tank and Hoses (if applicable)** – Check the diesel tank for damage or corrosion. Check for signs of leaking fuel. Check the fuel cap is present and secure. Check the diesel hoses for damage or deterioration.

https://truckmanualshub.com/



- **LPG Tank and Hoses (if applicable)**
  - Check the LPG bottle/tank for scrapes, dents and other damage.
  - Check that the bottle is located on the locator pin.
  - Ensure the bottle is clamped securely in place.
  - Check the LPG hoses and connections for leaks – **Use a soapy water solution. NOT your hands. LP Gas can cause severe burns.**
  - Check that the tank fits inside the profile of the machine.

**Warning**

**Always wear appropriate protective clothing, gloves and face shield when checking LPG tanks and fittings. LPG can cause frostbite when released, due to its very low temperature.**

- **Fuel Pre-Filter Water Trap** – Check the contents of the water trap and empty if required. Empty immediately if the water level warning system is activated.
- **Engine Air Filter System** – Squeeze the dust unloader valve to clear any dust build-up. Check the air intake system hoses and connections for cracks and loose clamps.
- **Exhaust** - Check for excessive noise or smoke.
- **Engine Compartment** – Check the engine compartment for a build-up of combustible fluids and materials.
- **Seat Belt** – Enter the cabin using the three point contact method. Make sure that the seat belt functions correctly. Check for any cuts or fraying along the belt. Ensure that it buckles securely. **Always wear the seat belt provided when driving the Combilift.**
- **Seat** – Check it is anchored securely and that the runners and sliders operate freely. Check for objects under the seat that may interfere with the seat switch. The operator must ensure that the seat is correctly adjusted to suit their individual height and weight. Instructions on how to adjust the seat are presented in an earlier section.
- **Turn on the Machine –** Insert the key into the ignition and turn the key to the 'ON' position. Several lights should illuminate in the dash.
- **Horn** – the horn button is located on the panel to the right hand side of the seat. The Truck should not be operated if the horn is not functioning. Press the button to test the horn.
- **Reversing Alarm** – Select reverse drive. The reverse alarm should sound continuously while in reverse. The truck should not be operated if the reverse alarm is not functioning.
- **Start the Engine** - Ensure that the park brake is applied by pressing the large red button on the dash panel. Also ensure that the directional control lever is in the neutral position. *See section 5.9 'Starting the Engine' on page 74.*

https://truckmanualshub.com/



- **Sounds** – Listen to the engine for a few seconds before driving off. If any strange sounds are heard stop the machine immediately and investigate the problem.
- **Smells** - Check for any strange odours that may indicate a problem such as a very strong smell of gas, fumes or burning. If anything abnormal is detected, stop the machine immediately and investigate the problem.
- **Dash** – Check the multifunction display console (MDC) and the miscellaneous indicator lights on the dash to see if any warnings are active. If any of the warning icons are illuminated whilst the engine is running, stop the engine and report the fault. Fix an 'out of order' sign to the steering wheel. A full list of all the indicators on the dash can be found in Section 4: Operation Monitoring.
- **Work Lights** – Activate all of the work lights and check that they are all are working properly.
- **Road Lights (If Fitted)** - Activate all of the road lights and check that they are all are working properly.
- **Forewarning Safety Lights (If Fitted)** – Activate all of the forewarning lights and check that they are all are working properly.
- **Mast/Fork Hydraulic Functions** – Before checking the mast functions ensure that there is adequate space and headroom to perform all of the checks. Raise and lower the mast fully. Reach the mast out fully then retract it in fully. Watch for any signs of sticking. Tilt the mast forward fully and back fully. Test any auxiliary function(s) that may be fitted. Make sure that the operation of each function is smooth and controlled through the full extent of its travel.
- **Brakes** – With the park brake applied, select forward on the four-way direction switch. Keeping both feet away from the pedals, sound the horn, and release the park brake. The machine should start to move slowly forward. Press the inch pedal. The machine will stop. Release the pedal and the machine will move off again. Re-apply the park brake and the machine will stop. If either brake is not working do not operate the machine and report the fault to the relevant supervisor. In the highly unlikely event of neither brake working, the machine can be stopped by switching off the engine. Make sure there is adequate space around the truck to perform this test. Only perform the brake test on a level surface.
- **Four-Way Direction Switch** – With the engine running and the park brake applied, select forward mode. Release the park brake. The machine should move forward. Press the inch pedal to stop the machine. Select reverse and release the inch pedal. The machine should now travel backwards. Press the inch pedal to stop the machine then apply the parking brake. Select left, the wheels will start to realign for sideward (90°) mode. When the wheels have finished realigning, sound the horn and release the park brake. The machine should now travel to the left. Press the inch pedal to stop the machine, select right travel with the direction control lever, sound the horn and release the inch pedal. The machine should now travel to the right.
- **Steering** – Set the steering wheel to the most comfortable position for driving by use of the adjustment lever on the right hand side of the column. With the engine running and the park brake applied, turn the steering wheel fully clockwise and counter-clockwise. The steering should move easily in either direction, and not seem excessively stiff or loose. Perform this check in both standard (0°) mode and sideward (90°) mode.

https://truckmanualshub.com/



On completion of the inspection the operator should report any defects immediately to the relevant supervisor.

- Never operate a lift truck that is in need of repair
- Repairs should only be performed by authorised personnel

The details of the checks should be recorded on a copy of the Pre-Use Check Sheet provided at the back of this manual (see 8.1 Pre-Use Check Sheet on page 149). A record of the checks and any defects or repairs should be kept on file in order to keep track of the trucks service history.

**Note**

**Remember in many countries it is a legal requirement to perform these checks and to keep a record of the findings.**

## 5.2 Fuel Handling & Storage

The facilities for storing and handling fuel MUST be strictly in accordance with all current regulations.

Diesel fuel is hazardous to the environment. Do not allow diesel or LPG to leak into the environment. Clean up any diesel spillage immediately using binding material and dispose of it in accordance with environmental regulations.

Wear appropriate gloves when working with diesel or LPG. DO NOT allow diesel or LPG to come into contact with skin.

- Refuel at a well ventilated and open place.
- When fuel and/or lubricants are spilled, refuel after letting the engine cool down.
- DO NOT mix gasoline or alcohol with diesel fuel.

**Warning**

**No smoking, naked flames or other sources of ignition should be permitted in the vicinity of the refuelling area and signs to this effect should be clearly posted and free from obstructions at all times. Litter and other readily ignitable materials should not be permitted to accumulate or be stored in the refuelling area.**

**Warning**

**Adequate firefighting equipment must be readily available in the refuelling area at all times.**

https://truckmanualshub.com/



### 5.2.1 Refuelling - Diesel

The diesel tank is located at the left hand side of the truck below the operator's cabin.

Trained and authorised personnel should carry out refuelling at designated points only.

Before refuelling the truck, switch off the engine and apply the park brake.

If a pump appliance is not available, fuel MUST be stored and transported in clean, uncontaminated and approved containers. Containers MUST comply with current regulations and be clearly labelled.

When refuelling the truck, always ensure that the hose nozzle or the can pourer is making good electrical contact with the tank filler neck to prevent the accumulation of a hazardous charge of static electricity.

Clean up any spillage using non-combustible absorbent material before restarting the engine.

**To Refuel:**

- Stop the truck in a designated refuelling area.
- Lower the mast fully and tilt the mast forward fully.
- Turn the ignition key switch to the '**0**' off position, then remove the key.
- Remove the cap (**A**) from the diesel tank by turning anticlockwise.
- Add diesel fuel that meets the specifications below.
- Replace the cap, ensuring that it is securely fitted.
- Clean up any spilled fuel immediately.

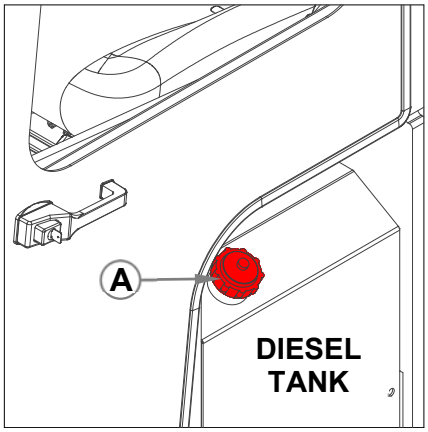


**Tank capacity: 50 litres / 53 quarts**

# Note

**Diesel fuel specification and sulphur content must be compliant with all applicable emission regulations for the location in which the engine is to be operated.**

**Ultra-low sulphur fuel is mandatory, when operating in US EPA regulated areas.**

**If high-sulphur diesel (sulphur content 0.50 % (5000 ppm) to 1.0 % (10000 ppm)) is used change the engine oil and oil filter at shorter intervals. (approximately half).**

**DO NOT USE Fuels that have sulphur content greater than 1.0 % (10000 ppm).**

**The following fuel specifications / standards are highly recommended:**

**Diesel Fuels** - EN 590 (Sulphur 10 ppm maximum)
- ASTM D 975 Grade 1-D S15 (Sulphur 15 ppm maximum)
- ASTM D 975 Grade 2-D S15 (Sulphur 15 ppm maximum)

Below 0°C (32°F) ambient temperature use winter diesel (down to -20°C (-4°F)
Refer to the operating manual for the Kubota diesel engine for further information.

https://truckmanualshub.com/



### 5.2.2 Refuelling - LP Gas

# LPG Emergency Procedures

## Action in Case of LPG Fire

- **Raise the alarm. The Fire Brigade should be notified immediately.**
- **Fires should normally be controlled but not extinguished until any source of gas escape can be cut off.**
- **If it is safe to do so, close tank valves in circumstances where a leak in pipework has ignited.**
- **Isolate all valves upstream and downstream to starve the fire of gas.**
- **A small fire can be dealt with using a dry powder fire extinguisher. Do not use water to extinguish LPG fires.**
- **Vessels should be cooled with water to prevent a pressure build-up.**

## Action in case of LPG Leak

- **Raise the alarm. The Fire Brigade should be notified immediately.**
- **Evacuate all persons, except those necessary to deal with the emergency.**
- **Whenever possible, and if it is safe to do so, turn off all isolation valves necessary to cut off or reduce the source or sources of escaping gas.**

## Caution

**Park the truck on level ground before releasing the antiluce fastener on the sliding gas bottle carrier.**

**LP gas can cause frostbite when released, due to its very low temperature.**

**When working with LP Gas the following Personal Protective Equipment (PPE) must be worn:**

- **Goggles and neoprene gloves or gauntlets**
- **Long sleeve cotton overalls or jacket**
- **Safety shoes/boots**

## Caution

**LP Gas bottles are heavy and must be handled with care to avoid injury.**

**Full bottles can weigh up to 40kg (90lbs)**

https://truckmanualshub.com/



The LPG bottle/tank is located at the left hand side of the truck below the operator's cabin.

Trained and authorised personnel should carry out refilling and changing LPG containers at designated points only.

LPG should not be refuelled or stored near underground entrances, lift shafts or any other place where leakage could collect in a potentially dangerous gas pocket.

When changing gas bottles ALWAYS ensure that the service valve on the bottle is closed and all gas in the connecting hoses has been used BEFORE disconnecting the coupling.

Damage such as dents, scrapes or gouges in the container may materially weaken the structure of the container and render it unsafe for use.

All containers should be checked regularly for dents, scrapes and gouges in the pressure vessel section.

**Check the LPG bottle/tank for:**

- Damage to the valves and the liquid level gauge.
- Debris in the relief valve.
- Deterioration, damage or loss of flexible seals in the filling or servicing connections.
- Indications of leakage at valves or threaded connections i.e. signs of frost on fittings and hoses usually signifies a leak.
- Any defective or damaged LPG container should be removed from service immediately.
- Any leaking container must be moved (at least 3 metres/10 feet) away from the truck immediately to a safe area free from all sources of ignition.

**To Refuel:**

- Park the truck according to the proper parking procedure in a well ventilated area.
- Switch off the engine.
- Refer to the gas bottle/tank suppliers instructions for filling the bottle/tank.

https://truckmanualshub.com/



## 5.3 Checking Engine Oil Level

The engine oil level is monitored via the dipstick (**A**) on the side of the engine.

**Caution**

**Switch off the engine before checking the oil level.**

**Wait for the engine to cool before checking the oil level.**

**Note**

**Do not operate the engine if the oil level is below the Min mark or above the Max mark.**

**On DPF-equipped engines fuel may get mixed with engine oil during the regeneration process. This dilutes the oil and increases its quantity. If the oil rises above the Max mark on the dipstick it has been diluted too much. Change the engine oil immediately if this is the case.**

**If the interval between DPF regenerations becomes 5 hours or less, change the engine oil.**

**Mixing of engine oils should be avoided because the worst properties of the mixture are always dominant.**

**Check the engine oil level before starting or wait at least 5 minutes after stopping the engine for the oil to drain into the oil pan.**

**To check the engine oil level:**

1. Stop the truck on level ground and apply the park brake.
2. Lower the forks fully and tilt the mast forward fully.
3. Turn the ignition key switch to the '**0**' off position, then remove the key.
4. Open the bonnet (**A**) from the rear of the truck to gain access to the dipstick.
5. Pull out the dipstick (**B**) and wipe the oil off the gauge on the bottom of the dipstick with a clean lint free cloth.
6. Reinsert the dipstick as far as it will go then pull it out again.
7. Check that the oil level lies between the Min and Max marks on the gauge.
8. If the oil level is below the Min mark, add oil *(see Engine Oil System on page 97)* of the permissible class and suitable viscosity but do not exceed the Max level.

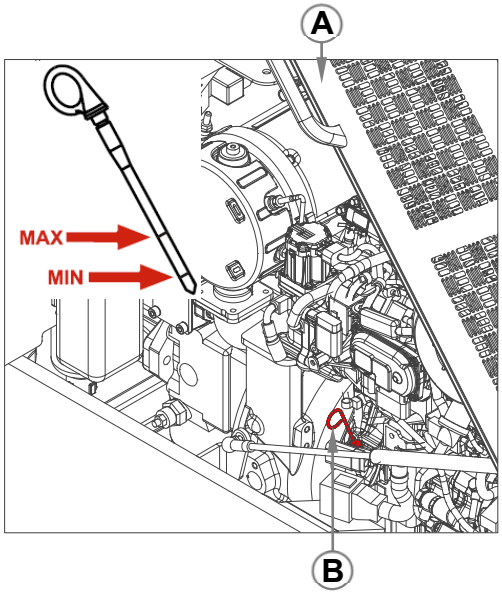

https://truckmanualshub.com/



## 5.4 Diesel Particulate Filter (DPF) Regeneration *

** Diesel engine powered trucks only.*

**Caution**

**Temperatures on the exhaust pipe can reach 600°C/1112°F during DPF regeneration. Danger of burns!**

**A special engine operating state becomes active during standstill DPF regeneration, the truck must not be used until the process is complete.**

**Only activate standstill DPF regeneration when the truck is parked in a well-ventilated open area that is free of combustible materials.**

**Disable automatic DPF regeneration when the truck is operating in a location that is not safe for elevated exhaust temperatures.**

**Caution**

**Do not power wash the exhaust filter assembly when the external skin temperature of the assembly exceeds 50 °C (120 °F).**

The exhaust filter, which includes the Diesel Oxidation Catalyst (DOC) and Diesel Particulate Filter (DPF), is a critical component in the engine's emissions control system and is required to meet governmental emissions regulations. The DPF captures diesel particulate matter or "soot" to prevent its release into the atmosphere. This soot must be eliminated from the DPF to keep it functioning properly. The process of eliminating collected soot is carefully controlled by the Engine Control Unit (ECU) and is called 'regeneration'. During this process, a rise in exhaust temperature occurs which allows the soot to be oxidised within the DPF.

Under normal machine operation with automatic regeneration enabled the exhaust filter system requires minimal operator interaction.

To avoid unnecessary build-up of diesel particulates or soot in the exhaust filter system:

1. Operate the truck with automatic DPF regeneration enabled.
2. Work the engine at high load conditions where possible and keep idling to a minimum.
3. Use only specified engine oil *(See 6.8 'Engine Oil System' on page 102).*
4. Use only ultra-low sulphur fuel *(See 5.2.1 'Refuelling - Diesel' on page 63).*

In addition to soot, ash deposits also slowly build up in the DPF. Ash cannot be removed by the DPF regeneration process. Specialist cleaning is required to remove ash deposits from the DPF every 6000 operating hours. If the DPF becomes overloaded with ash deposits before 6000 operating hours overloading is notified via the MDC. Contact your local Combilift partner to request ash removal.

https://truckmanualshub.com/



### 5.4.1 Automatic DPF Regeneration

Operating the truck with automatic DPF regeneration enabled allows the ECU to perform intelligent DPF regeneration as required. The DPF Regeneration icon and the Exhaust Temperature Warning icon will be displayed on the MDC when the system is actively performing DPF regeneration.

When the automatic DPF regeneration process is completed, the DPF Regeneration icon and the Exhaust Temperature Warning icon will automatically switch off.

**Caution**

**Temperatures on the exhaust pipe can reach 600°C/1112°F during DPF regeneration. Danger of burns!**

**Disable automatic DPF regeneration when the truck is operating in a location that is not safe for elevated exhaust temperatures.**

**Automatic DPF regeneration is enabled by default every time the ignition is switched off and on.**

**To Disable Automatic DPF Regeneration:**

- With the Home screen displayed, press button (**D**) to display the options screen.
- Navigate to the engine icon using button (**F**), then press button (**G**) to display the engine information screen.

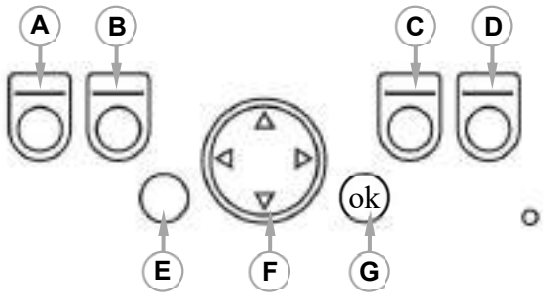


- With the Engine Information screen displayed, press button (**B**) to disable automatic DPF regeneration

AUTO

- The icon will change from AUTO to and automatic DPF regeneration will be disabled until button (**B**) is pressed a second time or until the ignition is switched off and back on.

### 5.4.2 Standstill DPF Regeneration

Standstill DPF regeneration is an automated process initiated at the request of the operator. This process allows the system to clean the DPF when the operator previously needed to disable auto DPF regeneration because of specific conditions.

During the process the engine speed will be controlled by the ECU and the machine must remain parked to complete the procedure.

https://truckmanualshub.com/



Complete cleaning times will vary depending on several criteria including fuel type, oil type, duty cycle, and the number of previously aborted exhaust filter cleaning requests. Average time for a standstill DPF regeneration to complete can range from 20-50 minutes.

After performing a standstill DPF regeneration allow time for the engine and the exhaust system to return to normal operating temperature before stopping the engine.

At any time during the parked procedure, the process can be aborted. Avoid aborting the parked regeneration procedure unless absolutely necessary. Repeated cancellations or ignoring of prompts to perform a standstill regeneration will cause engine power reductions and can eventually lead to a dealer service being required.

## Caution

**Temperatures on the exhaust pipe can reach 600°C/1112°F during DPF regeneration. Danger of burns!**

**The truck must be parked in a safe location away from any combustible materials or materials that may be damaged by heat before initiating a standstill DPF regeneration.**

## Note

**Active faults in the exhaust filter system prevent the initiation of standstill exhaust filter cleaning.**

**The engine must be warm before the standstill regeneration can be initiated. The engine coolant must be at a minimum temperature of 75°C/167°F.**

**To Initiate a Standstill DPF regeneration:**

- Warm up the engine until the engine coolant system has reached its stable operating temperature then drive the truck to an open area where it is well away from any flammable materials.
- Lower the forks fully and tilt the mast forward fully.
- Allow the engine to run at idle speed.
- Place the four-way direction switch in the neutral position and apply the park brake.
- Lock the hydraulic functions by pressing button (**C**) with the MFD home screen displayed.
- With the Home screen displayed, press button (**D**) to display the options screen.
- Navigate to the engine icon using button (**F**), then press button (**G**) to display the engine information screen.
- Press button (**D**) to skip to the second engine information screen.

https://truckmanualshub.com/



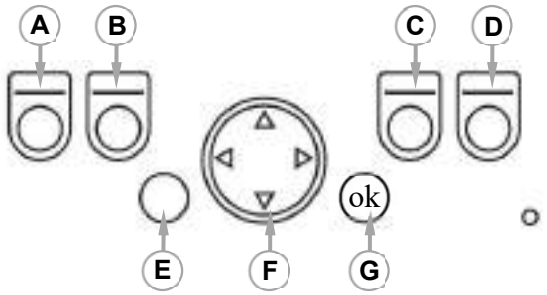


- With the second engine Information screen displayed, press and hold button (**C**) for 5 seconds. Standstill DPF regeneration will commence.
- The exhaust filter icon and the emissions system temperature warning icon will be displayed on the MFD screen until the process is complete.

**To Abort a Standstill DPF regeneration:**

- Press button (**C**) on the MFD with the home screen on the display.

Or

- Press button (**B**) on the MFD with the second engine information screen on the display.

AUTO

## 5.5 Checking Coolant Level

**Caution**

**Switch off the engine before working on the cooling system.**

**Explosive release of fluids from pressurised cooling system can cause serious burns.**

**The engine and cooling system must be cool to the touch before working on the cooling system.**

**Only remove the filler cap when cool enough to touch with bare hands. Slowly loosen the cap to relieve pressure before removing completely.**

**Coolant is harmful if swallow. Seek immediate medical attention if swallowed.**

**Avoid contact with skin and eyes. Wear protective gloves and goggles when handling coolant.**

**Note**

**If the coolant level drops due to evaporation, add water only.**

https://truckmanualshub.com/



Coolant is hazardous to the environment. Do not allow coolant to leak into the environment. Clean up any spillage using binding material and dispose of it in accordance with environmental regulations.

The coolant level is monitored via the transparent coolant bottle, mounted on the right hand side of the operator's cabin.

**To Check/Top Up The Coolant Level:**

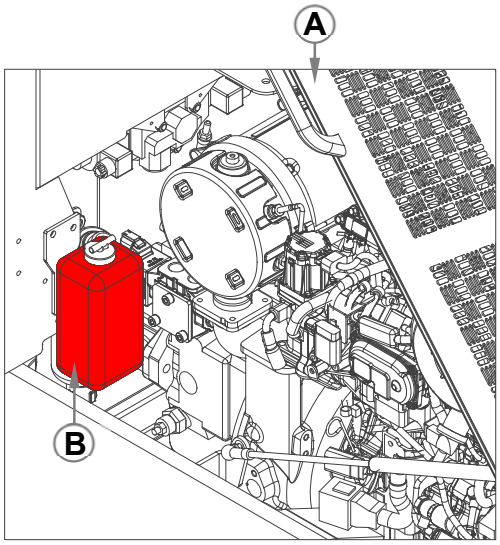


1. Park the truck in accordance with the recommended parking procedure.
2. Open the bonnet (**A**) from the rear of the truck.
3. Look in at the coolant bottle (**B**). The coolant level should be visible between the low and full level marks.
4. If the coolant level is low it must be topped up to half way between the low and full level marks.
5. If the coolant is not visible in the bottle the radiator must also be topped up.
6. The radiator cap must be cool enough to touch before removing.
7. Turn the cap anticlockwise gradually to release any pressure before removing fully.
8. Top up the coolant and replace the cap(s) securely. *See section 6.11 'Engine Cooling System' on page 111 for coolant and water quality details.*

https://truckmanualshub.com/



## 5.6 Checking Hydraulic Oil Level

The hydraulic oil level is monitored via a sight glass on the hydraulic tank.

**Caution**

**Switch off the engine before working on the hydraulic system.**
**Protective gloves and goggles must be worn when handling hydraulic oil.**
**Do not swallow. Ensure sufficient ventilation. Ensure cleanliness.**

**Note**

**Hydraulic oil is harmful to the environment. Do not allow hydraulic oil to be released into the ground, down a drain or into a stream, pond or lake.**

**To Check the Hydraulic Oil Level:**

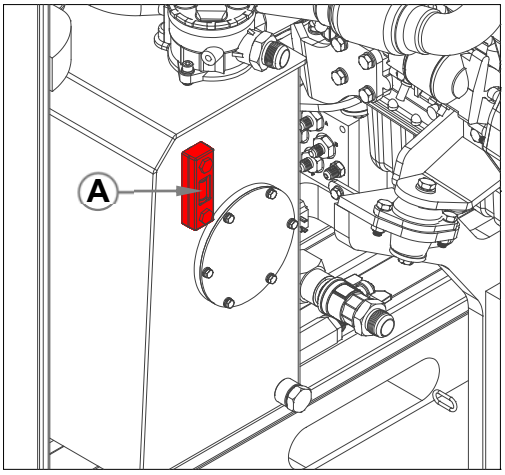


1. Stop the truck on level ground.
2. Retract the reach fully, lower the forks fully, tilt the mast forward fully and retract all cylinders on any attachments.
3. Turn the ignition key switch to the '**0**' off position, then remove the key.
4. Check the oil level on the sight glass (**A**) on the left hand side of the hydraulic tank.
5. The oil level should be approximately half way between the top and bottom of the sight glass.
6. If necessary top up with oil of the same grade and quality as that in the tank. *See section 6.15 'Hydraulic Oil System' on page 122.*

**To Add Hydraulic Oil:**

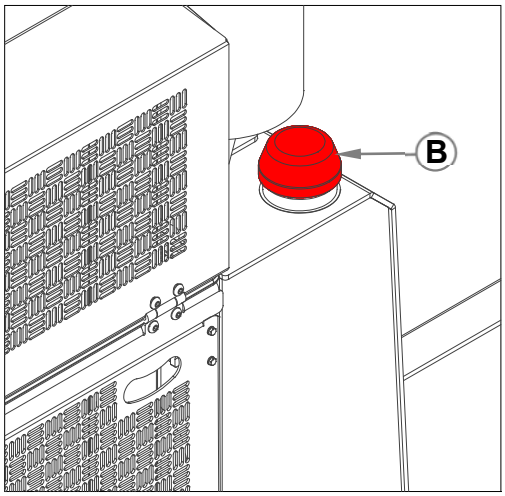


1. Park the truck in accordance with the recommended parking procedure.
2. Lower the forks fully, tilt the mast forward fully and retract all cylinders on any attachments.
3. Locate the filler cap (**B**) on the right hand side of the hydraulic tank.
4. Unscrew the filler cap.
5. Add hydraulic oil through the filler neck until the oil level is half way between the top and bottom of the sight glass (**A**).
6. Refit the filler cap securely.

https://truckmanualshub.com/



## 5.7 Front Wheel Alignment

**Note**

**Do not attempt to correct the wheel alignment by adjusting the front master steering cylinder rod end before trying the procedure outlined below.**

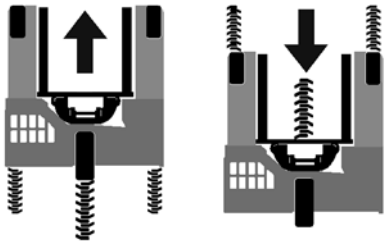

Wheels At Standard (0°) Mode

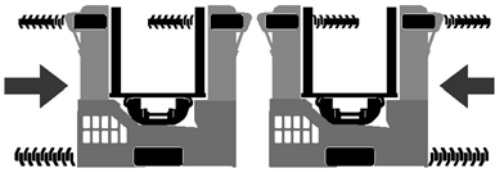

Wheels At Sideward (90°) Mode

**To Align the Front Wheels:**

1. Drive the truck in standard mode (i.e. forward or reverse) to an open area where the ground is firm and level.
2. Stop and apply the park brake.
3. Check the alignment of the front wheels. Both front wheels should be aligned parallel to each other and to the sides of the truck.
4. If the wheels are out of alignment, select sideward mode for **right** travel by moving the four-way direction switch to the **right**.
5. Wait for the swivel arms to finish repositioning.
6. Press the accelerator pedal to increase the engine speed and turn the steering wheel anticlockwise to fully extend both front steering cylinders.
7. When the cylinders are fully extended continue to turn the steering wheel against the resistance for 5-10 seconds (keep the engine speed up throughout).
8. Turn the steering wheel clockwise to fully retract both front steering cylinders. When the cylinders are fully retracted continue to turn the steering wheel against the resistance for 5-10 seconds (keep the engine speed up throughout).
9. Select standard mode for forward travel by moving the four-way direction switch forward.
10. Wait for the swivel arms to finish repositioning.
11. Release the park brake and drive the truck forward at least 1 metre.
12. Stop and apply the park brake.
13. Check the alignment of the front wheels.
14. Both front wheels should now be aligned parallel to each other and to the sides of the truck.

https://truckmanualshub.com/



## 5.8 Entering and Exiting the Operator's Cabin

**Warning**

**The 'Basic Information' section of this manual contains crucial information on topics such as 'centre of gravity' and 'rated capacity' that must be read and understood prior to operating the truck.**

When mounting or dismounting the truck three points must be kept in constant contact with the truck. That means one hand and two feet, or two hands and one foot – at all times. Anything less and the risk of a fall is increased. Handgrips and footsteps have been provided to allow easy and safe access to the operating enclosure. DO NOT use the steering wheel as a handgrip.

**When entering or exiting the operator's cabin:**

- Check that the handgrips and footsteps are clean and in good condition before using.
- Always face in towards the machine and use the handgrips and footsteps provided.
- Mount and dismount only when the truck is stopped.
- Break three-point contact only when you reach the ground or cabin.
- Take extra care in wet or frigid conditions.
- Avoid wearing loose or torn clothing that can catch on the truck.
- NEVER JUMP!

## 5.9 Starting the Engine

**Warning**

**Before starting the engine ensure that bonnet is closed and that there are no bystanders in the immediate vicinity of the truck.**

**Never allow the engine to run in an enclosed area. Engine exhaust fumes are harmful. Do not inhale exhaust.**

**Note**

**The truck will NOT start unless:**

- **The four-way direction switch is in the neutral position**
- **The battery isolator switch is in the 'ON' position**
- **The operator is sitting on the seat**
- **The seat belt is fastened ***

**** only if optional seat belt switch is fitted***

https://truckmanualshub.com/



# Note

**Do not run up the engine immediately to high idling speed / full load operation from cold. Warm up the engine at medium speed without load. An insufficiently warmed up engine can shorten its service life.**

**If the engine fails to start after 10 seconds turn the key to the off position and wait for 30 seconds before recommencing the starting procedure. The starter must not be operated continuously for more than 20 seconds. seconds.**

**When starting the engine after a long period in storage (more than 3 months), activate the starter for about 10 seconds to allow oil to reach every engine part.**

# Note

**When the truck is started the wheels will remain in whatever position they were in when the machine was stopped until the operator selects a direction of travel on the four-way direction switch.**

### 5.9.1 Diesel engine starting procedure:

# Note

**Do not use ether or any starting fluid for starting the engine as severe damage will occur.**

**If the DPF overheats, the engine cannot be restarted until the DPF temperature falls below 300°C (572°F).**

1. Ensure the park brake is applied and the four-way direction switch is in the neutral position.
2. Ensure the accelerator pedal is not being pressed.
3. Insert the key into the ignition switch and turn clockwise to position 1 – operating voltage. The MDC should power up.
4. In cold weather (when the coolant temperature is below 0°C (32°F)) wait until the glow heater icon goes off before proceeding.
5. Turn the ignition key further clockwise against spring pressure to position 2 - start. Release the ignition key as soon as the engine starts. The key will return automatically to position 1.
6. Check the MDC home screen for fault and warning icons.
7. If the engine oil pressure icon or the battery charge icon are displayed the engine must be stopped and the cause determined.
8. Warm up the engine at medium speed without load.
9. If the engine fails to start after 10 seconds turn the key to the off position for 30 seconds then repeat the starting procedure.

https://truckmanualshub.com/



### 5.9.2 LPG engine starting procedure:

1. Ensure the valve on the LPG bottle is open.
2. Ensure the park brake is applied and the four-way direction switch is in the neutral position.
3. Ensure the accelerator pedal is not being pressed.
4. Insert the key into the ignition switch and turn clockwise to position 1 – operating voltage.
5. Ensure that the MIL is illuminated.
6. Turn the ignition key further clockwise against spring pressure to position 2 - start. Release the ignition key as soon as the engine starts. The key will return automatically to position 1.
7. Check the MDC home screen for fault and warning icons, and ensure the MIL is not illuminated.
8. If the engine oil pressure icon or the battery charge icon are displayed the engine must be stopped and the cause determined.
9. Warm up the engine at medium speed without load.
10. If the engine fails to start after 10 seconds turn the key to the off position for 30 seconds then repeat the starting procedure.

## 5.10 Stopping the Engine

### 5.10.1 Diesel engine stopping procedure:

**Note**

**Allow the engine to idle for 5 minutes before stopping it after a full load operation. Failure to do so may lead to turbocharger trouble.**

**After turning the ignition key switch to the off ‘0’ position to stop the engine, the engine control unit (ECU) remains active to save system data before it switches off. For this reason, the power supply to the engine must not be interrupted at the battery isolator switch or by removing the battery leads until the ECU has switched off.**

1. Ensure the park brake is applied and the four-way direction switch is in the neutral position.
2. Lower the mast fully and tilt the mast forward fully.
3. Ensure the accelerator pedal is not being pressed.
4. Allow the engine to idle without load for 5 minutes.
5. Turn the ignition key switch anticlockwise to the ‘**0**’ position.
6. Remove the ignition key.

https://truckmanualshub.com/



### 5.10.2 LPG engine stopping procedure:

**Note**

**Allow the engine to idle for 2-3 minutes before stopping it after a full load operation.**

1. Ensure the park brake is applied and the four-way direction switch is in the neutral position.
2. Lower the mast fully and tilt the mast forward fully.
3. Ensure the accelerator pedal is not being pressed.
4. Allow the engine to idle without load for 2-3 minutes.
5. Turn the ignition key switch anticlockwise to the '**0**' position.
6. Close the valve on the LPG bottle/tank.
7. Remove the ignition key.

## 5.11 Moving Off

It is important to be aware of how the Combilift truck moves and how to drive it in a safe and efficient manner. The Combilift can be driven forward, backward, left or right by selecting the desired direction of travel with the four-way direction switch.

**Caution**

**Do not move the four-way direction switch when the truck is moving. Moving the four-way direction switch when the truck is moving may cause the truck to change direction abruptly and carries a risk of personal injury and machine damage.**

**After changing travel mode, confirm that the mode indicator on the dash cluster is in agreement with the mode selected.**

**If the direction control does not respond or the correct mode indicator does not illuminate park the truck in a safe location and inform the relevant supervisor.**

**Warning**

**Only operate the truck from the operator's seat with the seat belt buckled and the cabin door closed and latched securely. Do not place any part of the body outside the cabin while operating the truck. Do not carry passengers.**

**Remain in the seat with the seat belt fastened while the truck is moving. The seatbelt will help you remain inside the cabin should the truck tip over.**

**Never jump from the truck if it begins to tip over. Keep all body parts inside the cabin.**

**Failure to follow these guidelines can result in serious injury or death.**

https://truckmanualshub.com/



**To Move Off:**

- Start the engine as described in section 5.9.
- Raise the forks to approximately 100mm (4″) off the ground and tilt the mast back. This is the recommended travelling position.
- Select the desired direction with the four-way direction switch.
- Wait for the wheels to reposition if necessary.
- Press the inch brake pedal fully.
- Look all around carefully to make sure the way is clear.
- Release the park brake and hold the steering knob with the left hand.
- Sound the horn.
- Look in the intended direction of travel.
- Press the accelerator pedal lightly to increase the engine speed a little.
- Slowly release the inch brake pedal.
- As the truck starts to move, gradually press the accelerator pedal until the truck is moving at the desired speed.

**Note**

**The truck has a maximum ground speed of 14km/h (8.7mph). Always adhere to all speed limits for the area in which the truck is operating.**

## 5.12 Turning

**Warning**

**A lateral tip-over can occur if the truck is improperly operated. Slow down before turning! Failure to slow down can cause serious injury or death.**

- Slow down. Even if the forklift is not carrying a load it can tip-over if you turn at high speed.
- Sound the horn as you reach an intersection to warn pedestrians and other equipment operators you are approaching the intersection.
- Always follow the rules of the road and yield to other equipment operators and pedestrians as required.

## 5.13 Stopping

**Warning**

**When stopping, stay inside the operator's cabin until the truck comes to a complete stop. Failure to stay inside the cabin can result in serious injury or death.**

https://truckmanualshub.com/



**Warning**

**Do not apply brakes abruptly. If you stop abruptly the load may dislodge from the forks causing serious injury or death.**

**To Stop:**

- Release the accelerator pedal fully then gradually press the inch brake pedal to stop travelling.
- Apply the park brake, then release the inch brake pedal.

**To perform an emergency stop** release the accelerator pedal then press the inch brake pedal down fully. Keep the inch brake pedal fully depressed until the truck comes to a halt.

Stopping distances change depending on operating conditions such as inclines and the quality of the ground surface.

To make sure the truck can be brought to a stop within an acceptable safe distance it is important to operate in a manner that is appropriate for the current conditions. It may be necessary to:

- Reduce speed
- Reduce load size
- Allow adequate distance between the truck and any other vehicle, object or person.

**Note**

**Be careful when traveling in wet and/or frigid conditions.**
**Reduce travel speed considerably in the event of bad weather.**

## 5.14 Changing Travel Direction

The procedure for changing travel direction differs depending on whether the swivel arms have to realign for the change of travel mode e.g. from standard (0°) travel mode to sideward (90°) travel mode or not.

### Changing Travel Direction Without Changing Travel Mode

This procedure applies when a change of direction is required that does not require the mode to change i.e. when changing from forward to reverse or from right to left.

- Bring the machine to a complete stop by pressing the inch brake pedal.
- Select the desired change of travel direction with the four-way direction switch.
- Follow the instructions under ‘moving off’.

https://truckmanualshub.com/



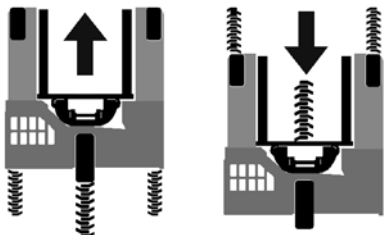

Standard (0°) Travel Mode

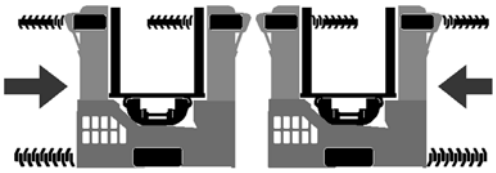

Sideward (90°) Travel Mode

**Changing Travel Direction With Travel Mode Change**

This procedure applies when a change of travel direction is required that also requires the travel mode to change e.g. when changing from forward to right or from reverse to left.

- Bring the machine to a complete stop by pressing the inch brake pedal.
- Apply the park brake then release the inch brake pedal.
- Select the desired change of travel direction with the four-way direction switch.
- As the swivel arms start to turn for the change of travel mode press the accelerator pedal lightly to speed up the operation.
- Wait until the swivel arms have stopped turning. Release the accelerator pedal when the operation is complete.
- Follow the instructions in section 5.11 ‘Moving Off’ on page 77.

## 5.15 Parking

When parking the Combilift always ensure that one of the two recommended parking methods are used to ensure the safety of the operator and others. There are two recommended methods for parking the Combilift. One is called the Attended parking method, for cases where the operator needs to exit the machine but will be no more than 25 feet (7 metres) away. The other is the Unattended parking method, for cases where the operator must exit the machine but will be further than 25 feet away.

**Caution**

**Before exiting the cabin, place all controls in neutral and apply the park brake. Never leave the seat without applying the park brake.**

**Park in a safe area on level ground. Never park on an incline/slope.**

**If the truck breaks down on an incline, securely chock the wheels, remove the key and place an ‘out of order sign’ on the steering wheel.**

**If the truck is to be left unattended, fully lower the mast, tilt the mast fully forward, turn the key switch to the ‘Off’ position and remove the key.**

**Ensure the parked truck will not cause an obstruction or safety hazard.**

https://truckmanualshub.com/



**The Attended Parking Method**

- Bring the truck to a complete stop.
- Once stopped, apply the park brake and set the four-way direction switch to the neutral position.
- Retract the reach fully, lower the forks fully and tilt the mast forward fully.
- If loaded with a palletised load, lower the load onto the ground.
- If loaded with a long load, lower the load onto the platforms of the truck.
- Leave the engine running.
- Remove the seatbelt from its buckle and exit the Combilift using the three point contact method as discussed earlier.
- Stay within 25 feet (7 metres) of the machine at all times.

**The Unattended Parking Method**

- Bring the truck to a complete stop.
- Once stopped, apply the park brake and set the four-way direction switch to the neutral position.
- Retract the reach fully, lower the forks fully and tilt the mast forward fully.
- If loaded with a palletised load, lower the load onto the ground.
- If loaded with a long load, lower the load onto the platforms of the truck.
- Turn the ignition key switch to the '**0**' off position, then remove the key to prevent unauthorised use of the truck.
- Remove the seatbelt from its buckle and exit the Combilift using the three point contact method as discussed earlier.

## 5.16 Picking Up, Placing, Stacking & De-stacking Loads

This section provides information on the correct way to pick up a load and set down a load.

There are a number of safety guidelines that should be adhered to at all times when lifting or placing loads.

- Read and understand the 'Basic Information' and 'Safety Information' sections of this manual before commencing operation.
- Assess the load before lifting. Check the weight, size, load centre and security. NEVER try to lift a load if its weight is unknown.
- Do not handle unstable or loosely stacked loads.
- Before picking up a load adjust the forks to ensure that they are equally spaced about the centre line of the fork carriage and as widely spaced as possible to take the weight of the load evenly.
- Make sure the forks are fully inserted into the pallet or under the load.
- Check that the forks are of sufficient length. The length should be at least two thirds of the depth (front to back) of the load.
- Forks must not protrude beyond the pallet/load.
- Use suitable attachments for lifting unusual loads.
- Make sure that pallets are in good condition.

https://truckmanualshub.com/


- Observe floor loading limits.
- Check safe working load (SWL) of racking before placing a load onto it.
- ALWAYS consult the capacity chart in the cabin of the truck before lifting a load and never exceed the rated capacity and load centre of the truck.
- When manoeuvring to pick up a load, avoid erratic movements that could result in damage to the load and/or truck.
- Use caution when handling long, high or deep loads.
- If the load obstructs view, drive in reverse, left or right. Always look in the direction of travel.
- Make sure there is adequate clearance for the truck and load including overhead.
- Do not allow anyone to stand beneath or pass under the mast or forks.
- Never use the forklift to elevate anyone without the use of an approved man up cage.
- Be aware of rear end swing when turning.
- Never carry passengers on the truck.
- Obey site rules and take particular care when there are pedestrians who should be given priority.
- Use banks men if operating in congested or busy areas.
- Operate controls smoothly.
- Stop the truck, apply the park brake and select neutral before lifting a load.

**Four-Way Drive Loading/Unloading Advantages**

- The four-way travel capability of the Combilift truck allows for much easier alignment of the forks/load with the picking/placing area than with any other conventional type of forklift truck such as a counterbalance, reach or side loader.
- To position the forks/load precisely with the placing/picking location select the required drive direction with the four-way direction switch.
- Press the inch brake pedal down fully, look all around to make sure the way is clear, then release the park brake.
- Press the accelerator pedal to increase the engine speed then gradually release the inch brake pedal until the truck starts to move slowly.
- Make small steering corrections as necessary to align and position the forks/load precisely.
- When aligned centrally with, parallel to and the correct distance from the desired location fully press the inch brake pedal to stop the truck.
- Apply the park brake, move the direction control switch to the neutral position then, release the inch brake pedal.

https://truckmanualshub.com/



### 5.16.1 Undercutting a Load

This is when the forks are not fully inserted into the pallet or under a load. It may be necessary to do this when it is not possible to get close enough to the pallet/load to insert the forks fully.

**Warning**

**The load centre is increased and therefore the lifting capacity is reduced when the front face of the forks is not touching the load.**
**Ensure the truck has sufficient capacity to cope with the increase in load centre.**

**To Pick Up a Load using Undercut:**

- Fully extend the reach to insert the forks as far as possible into the pallet or under the load.
- Gradually lift the load just enough to ensure it is stable.
- If the load is unstable lower it back to its original position and report the problem to the site supervisor.
- If the load is stable, retract the reach fully to bring the load closer to the truck.
- Reverse slowly just enough to clear the racking/stack.
- Lower a long load onto the trucks platforms ensuring that it is properly supported and stable on the platforms.
- Lower a palletised load onto the ground.
- Extend the reach again until the load is against the front face of the forks.
- The load is now ready to be lifted.
- Position the load in the safe travel position.

**To Set Down a Load using Undercut:**

- After transporting the pallet/load, extend the reach fully then lower it onto on the ground.
- Reposition the forks the required distance back from the load. The forks must be inserted by at least two thirds the depth of the pallet/load.
- Gradually lift the load just enough to check that it is stable.
- If the load is unstable lower it back onto the ground and report the problem to the relevant supervisor.
- If the load is stable proceed to stack it in the usual fashion. *See section 5.16.4 'Stacking Long & Palletised Loads' on page 85.*

https://truckmanualshub.com/



## 5.16.2 Picking up a Load

### Picking up a Palletised Load

- Manoeuvre the truck so that the forks are aligned centrally with the pallet and approximately 50mm (2″) from the front of the pallet.
- Use the four-way drive to get the truck into position if necessary.
- Apply the park brake and select neutral.
- Level the forks then adjust the space between the forks to suit the pallet *(see section 5.17 'Adjusting the Forks' on page 87)*.
- Use the tilt to level the forks then adjust the height of the forks to enable them to enter the pallet without fouling.
- Extend the reach to insert the forks into the pallet until the front face of the forks gently touch the pallet.
- Lift the load 100mm (4″) off the ground, then tilt the mast back to secure the load.
- Retract the reach fully.

### Picking up a Long Load

- Manoeuvre the truck so that the forks are aligned centrally with the load and approximately 50mm (2″) from the front of the load.
- Use the four-way drive to get the truck into position if necessary.
- Apply the park brake and select neutral.
- Level the forks then adjust the space between the forks *(see section 5.17 'Adjusting the Forks' on page 87)* to suit the load.
- Use the tilt to level the forks then adjust the height of the forks to enable them to pass under the load without fouling anything.
- Extend the reach to insert the forks under the load until the front face of the forks gently touch the load.
- Lift the load 100mm (4″) off the ground, then tilt the mast back to secure the load.
- Raise the load 100mm (4″) above platform height.
- Retract the reach fully.
- Gently lower the forks until the load is resting on the platforms and then ensure the truck is evenly balanced.
- Continue to lower the forks to 100mm (4″) off the ground and keep the mast tilted back.

## 5.16.3 Placing a Load

### Placing a Palletised Load

- Manoeuvre the truck so that the pallet is as close to the placing area as possible.
- Use the four-way drive to get the truck into position if necessary.
- Apply the park brake.
- Extend the reach.
- Level the load using the tilt function.
- Gently lower the load onto the placing surface.
- Retract the reach fully, tilt the mast back and raise/lower the forks to 100mm (4″) off the ground.

https://truckmanualshub.com/



**Placing a Long Load**

- Manoeuvre the truck so that the load is as close to the placing area as possible.
- Use the four-way drive to get the truck into position if necessary.
- Apply the park brake.
- Raise the load 100mm (4″) off the trucks platforms.
- Extend the reach.
- Level the load using the tilt function.
- Gently lower the load onto the placing surface.
- Retract the reach fully, tilt the mast back and raise/lower the forks to 100mm (4″) off the ground.

## 5.16.4 Stacking Long & Palletised Loads

- Slowly approach the placing location with the load in the safe travel position.
- Use the four-way drive to get the truck into position if necessary.
- Select neutral and apply the park brake.
- Raise the load 100mm (4″) off the trucks platforms if handling a long load.
- Level the load using the tilt function – or if the load is not secure keep it in the tilted back position.
- Check overhead to make sure there is adequate headroom before lifting. Pay attention to the highest point.

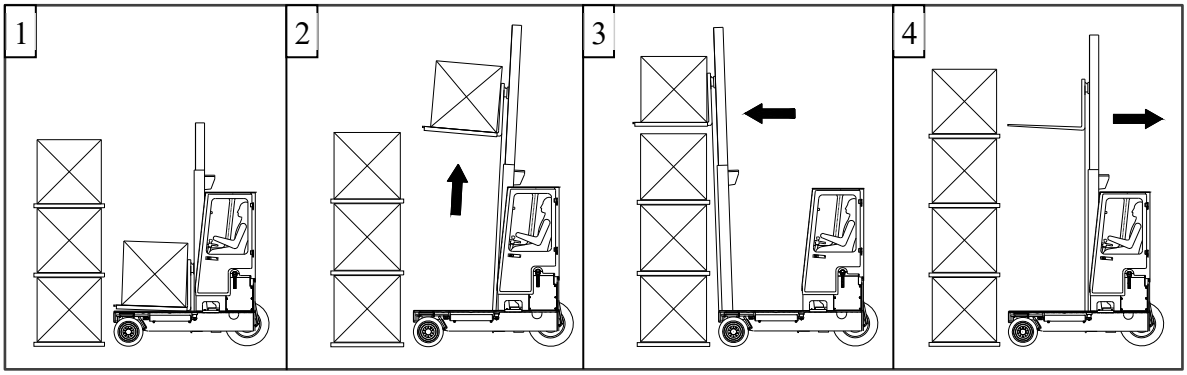


- Lift the load until the bottom of the pallet/load is 50-75mm (2-3″) clear of the racking (or the top of the load beneath if bulk stacking).
- Gradually operate the accelerator pedal to ensure that the engine speed is sufficient to prevent stalling and to give the required lifting speed.
- Ensure the load is not going to foul the racking or adjacent loads before traversing it out.
- Extend the reach until the load is directly above the desired location.
- If placing in racking, position the load with a 50-75mm (2-3″) gap each side and allow pallets to overhang the front of the racking by 25-50mm (1-2″).
- If bulk stacking, position the load exactly on top of the load beneath, keeping the stack perfectly upright and level.
- Use the tilt to level the load then lower the load gently onto the racking or stack.
- Position the forks at a height to clear the pallet/load without fouling on withdrawal.

https://truckmanualshub.com/



- Retract the reach fully, checking to make sure that the forks do not foul on the pallet or load on withdrawal. Make any necessary adjustments to prevent the forks from fouling.
- If appropriate reverse away from the load.
- When the forks are clear of the load/stack, lower the forks to 100mm (4˝) above the ground and tilt the mast back before moving off.

**Warning**

**Avoid any travel with the mast raised and/or the reach extended.**
**Extreme care must be taken to avoid jerky movement when using the tilt function, especially when the load is raised.**

### 5.16.5 De-stacking Long & Palletised Loads

- Slowly approach the placing location with the mast in the safe travel position.
- Use the four-way drive to get the truck into position if necessary.
- Select neutral and apply the park brake.
- Level the forks using the tilt function.
- Check overhead to make sure there is adequate headroom before lifting.
- Lift the forks to the required height to enter the pallet/load cleanly.
- Extend the reach until the fork heels gently touch the pallet/load.
- Check overhead to make sure there is adequate headroom before lifting. Pay attention to the highest point.

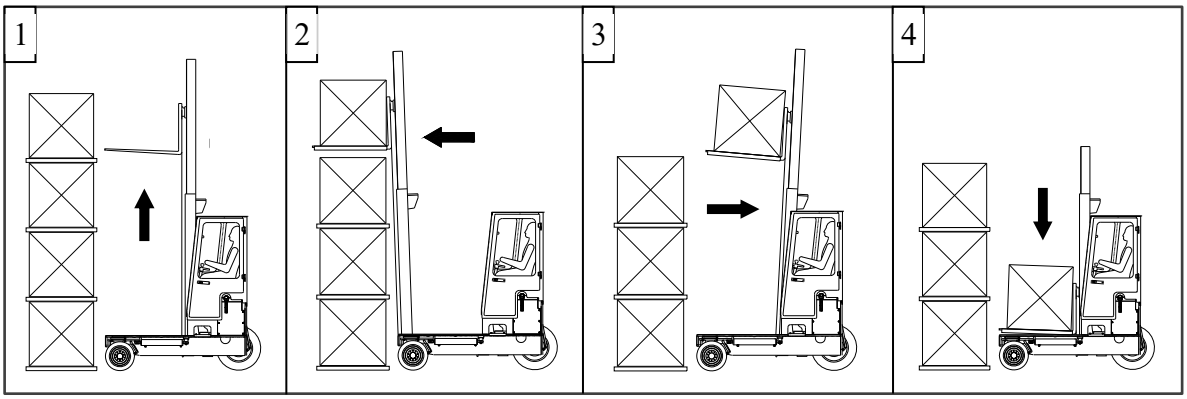


- Lift the pallet/load approximately 50-75mm (2-3˝). If the load dips use the tilt function to level the load before withdrawal.
- If the load is unstable use backward tilt to secure it if appropriate.
- Retract the reach fully, checking to make sure that the pallet/load does not foul on the racking or adjacent loads on withdrawal. Make any necessary adjustments to prevent the load from fouling.
- Lower the load smoothly under control (onto the platforms if the load is long) and ensue the load is evenly balanced.
- Position the forks in the safe travel position.
- If appropriate reverse away from the racking/stack.

https://truckmanualshub.com/



## 5.17 Adjusting the Forks

### Adjusting the Forks for Palletised Loads

- Measure the opening between the end stringers on the pallet.
- Raise the forks approximately 25mm (1″) off the ground.
- Apply the park brake and switch off engine.
- Release the fork keeper pins. *
- Move the forks until the spacing between them is equal to one-half the opening between the end stringers on the pallet.
- Position the forks equidistant from the ends of the fork carriage and engage the fork keeper pins in one of the notches in the top fork bar. *
- If the truck has hydraulic fork positioning fitted, use the fork positioning lever to adjust the forks.

**** Trucks fitted with hydraulic fork positioning do not have keeper pins in the forks or notches in the top fork bar.***

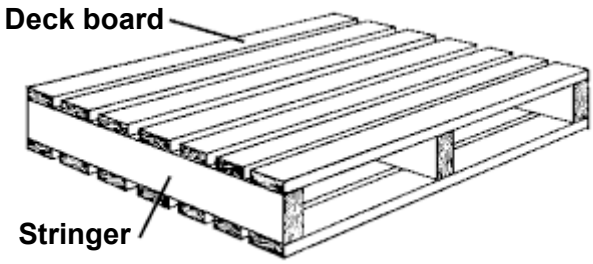


### Adjusting the Forks for Long Loads

Factors such as the length and rigidity of the load must be considered when positioning the forks. Forks on opposite sides of the truck must always be positioned equidistant from the centre of the fork carriage.

### To adjust the forks for a long load:

- Raise the forks approximately 25mm (1″) off the ground.
- Apply the park brake and switch off engine.
- Release the fork keeper pins. *
- Move the forks to the desired position.
- If a wide fork positioner or spreader bar is fitted, position the outer forks to best suit the load. Factors such as the length and rigidity of the load must be considered when positioning the outer forks.
- Position the forks equidistant from the ends of the fork carriage and engage the fork keeper pins in one of the notches in the top fork bar. *
- If the truck has hydraulic fork positioning fitted, use the fork positioning lever to adjust the forks.

**** Trucks fitted with hydraulic fork positioning do not have keeper pins in the forks or notches in the top fork bar.***

https://truckmanualshub.com/



## 5.18 Travelling Safely with a Load

- When travelling with a load always keep the load as low as possible.
- With palletised loads ensure the load is tilted back and resting against the front face of the forks.
- With long loads have the load resting on the platforms of the truck whenever possible and secure the load if necessary to prevent movement during travel.
- Try to avoid sudden and erratic movements with the machine. Accelerate and brake as smoothly as possible.
- When approaching a junction or corner, slow down, sound the horn and proceed only when you are sure that your path is unobstructed.
- When approaching crossings and areas where driving vision is restricted or obscured, reduce speed to a minimum and sound the horn - a series of short blasts is more effective than one long blast.
- Cross railway lines slowly, only at authorised points and diagonally whenever possible. Avoid bumps and kerbs.
- Be conscious of height and width restrictions and watch for the sudden appearance of pedestrians from behind obstacles.
- Do not carry unsafe or insecure loads. Never carry loads stacked higher than the top of the fork or load backrest (if fitted).
- Operator's arms, hands, head or legs must not overhang the running lines when the truck is in being operated. Take care when indicating a turn or other manoeuvre.
- Follow the correct procedure when travelling on sloped ground *(see section 5.19 'Driving on Slopes' on page 89)*.
- Take great care when travelling with a swinging load. If the load swings the centre of gravity of the truck also moves.
- Ensure the load is spread evenly on the forks.
- If the view forward is blocked by the load travel in reverse, left or right.
- Always look in the direction of travel and avoid obstacles such as sudden dips or potholes.
- Warn anyone in the vicinity of the truck to stay clear if the truck becomes unstable or begins to tip over.
- Turn slowly.
- If the truck begins to tip over, follow the instructions in the illustration below.

https://truckmanualshub.com/



## 5.19 Driving on Slopes

Always take great care when driving on a slope as the risk of an accident is increased. If a slope is greater than 5% the following guidelines must be followed.

**Do:**

- ✓ Drive slowly and use the brakes gently.
- ✓ Drive directly up or down the slope in standard mode.
- ✓ Ensure the **forks face uphill** when driving up or down a slope **with a load**.
- ✓ Ideally the **forks should face downhill** when driving up or down a slope **without a load**.
- ✓ Keep the mast tilted back and the forks approximately 100mm (4″) off the ground.

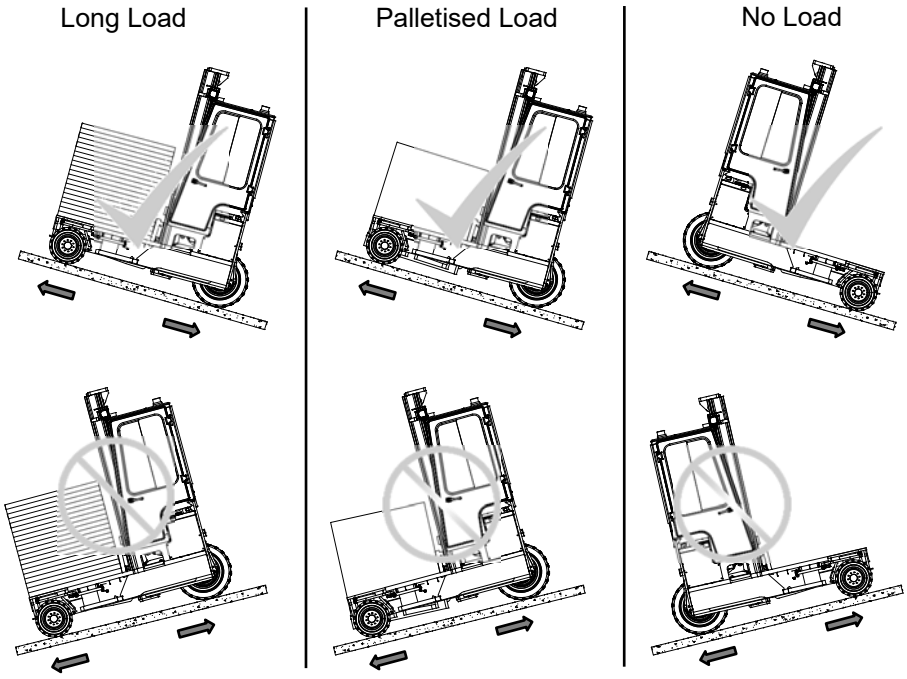


Driving in this way aids stability, traction and adhesion (meaning the truck is less likely to tip over or skid). If it is not possible to drive up and down the incline with the forks positioned as above then take great care.

**Don't:**

- × Drive diagonally on a slope.
- × Turn the truck around on or travel across a ramp or a slope.
- × Leave the truck on a slope, except in an emergency. In case of emergency always chock the wheels.

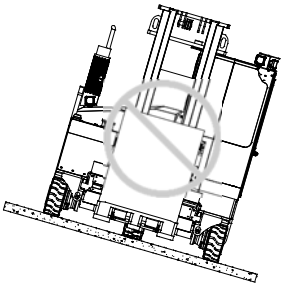

https://truckmanualshub.com/



If it is necessary to drive in sideward mode on a slope with a long load the situation must be fully assessed and a safe work procedure determined before proceeding.
It may be necessary to secure the load to prevent it from sliding on the platforms. Rubber sheeting or other nonslip coatings may be fixed to the platforms to prevent the load from sliding.

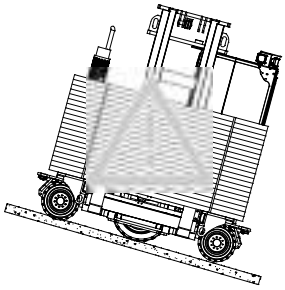

## 5.20 Towing

Should the need arise to Tow the truck it is necessary to first apply the bypass condition on the hydrostatic pump in order to prevent it from being damaged. It is also necessary to mechanically release the park brake on each of the wheel motors. The truck should only be towed if it has broken down in a location where it is deemed to be a safety hazard.

**Caution**

**Only tow the truck out of the immediate danger zone. Longer towing distances and high towing speeds will damage the drive pump.**

**The maximum permissible towing speed of 2 km/h should not be exceeded.**

**During and after towing the drive pump will be hot. Wear protective clothing.**

### 5.20.1 Hydrostatic Drive Bypass Function

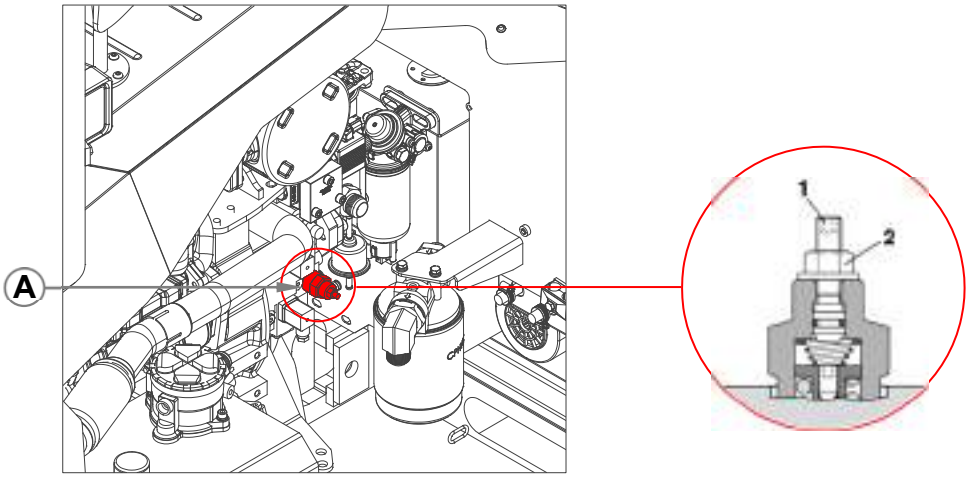


**To activate the bypass function:**

1. Raise the forks off the ground and extend the reach if possible.
2. Switch off the engine.

https://truckmanualshub.com/



3. Open the bonnet from the rear of the truck.
4. Allow the truck to cool down if necessary.
5. Loosen the lock nut (**2**) on the bypass valve (**A**) by turning counter-clockwise one half rotation with a 13mm spanner.
6. Use a 4mm Allen key to screw in the screw (**1**) clockwise until it is against the spring disc. This is apparent by the increased resistance. Then screw the screw (**1**) one half turn into the spring disc.
7. Tighten the lock nut (**2**) clockwise with a torque of 22 Nm.
8. Repeat steps 3 to 5 on the other bypass valve on the opposite side of the drive pump.

**Note**

**Switch off the bypass function immediately after towing.**

**To deactivate the bypass function:**

1. Loosen the lock nut (**2**) on the bypass valve with a 13mm spanner, then turn the screw (**1**) counter-clockwise with a 4mm Allen key to the stop.
2. Retighten the lock nut (**2**), turning clockwise with a torque of 22 Nm.
3. Repeat steps 1 and 2 on the other bypass valve on the opposite side of the drive pump.

### 5.20.2 Mechanical Release of Park Brake

**Caution**

**The truck must be secured to prevent it from rolling off before releasing the park brake.**

**Re-engage the park brake as soon as the towing operation is complete.**

**To release the park brake:**

1. Remove the rubber plug (**A**) from the centre of the brake protector plate.
2. Take a fully threaded M12x80mm socket head bolt and screw on an M12 hex nut (**B**) up to the bolt head.
3. Take an M12 flat washer and oil both sides, then insert the bolt into the washer.
4. Take a spacer (**C**) and insert the M12 bolt with the nut and washer into the hole in the spacer.
5. Place the spacer against the brake housing (**D**) with the M12 bolt inserted into the hole left by the rubber plug.

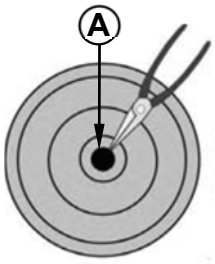


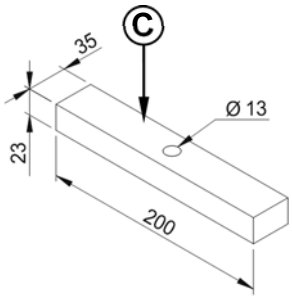

https://truckmanualshub.com/



6. Screw the bolt up to the end of the thread in the brake piston. **Do not over tighten the bolt!**
7. Hold the bolt in place with an Allen key and screw the nut up to the spacer so that the spacer is held firmly against the brake housing.
8. Hold the bolt in place and turn the nut clockwise approximately 1 full revolution.
9. This action will release the brake and allow the motor to turn freely.
10. The procedure must be performed on the rear wheel motor and on the front right-hand wheel motor.

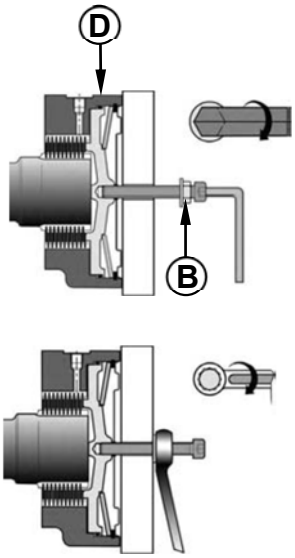


**To re-engage the park brake:**

1. Re-engage the park brake as soon as the towing operation is complete.
2. Hold the bolt in place and unscrew the nut (**B**) until the spacer comes loose.
3. Unscrew the bolt from the brake piston.
4. Insert a new rubber plug into the brake cover.
5. The procedure must be performed on the rear wheel motor and on the front right-hand wheel motor.

https://truckmanualshub.com/



# Section 6: Maintenance

Combilift trucks are thoroughly examined, tested and lubricated before leaving the factory; however, regular maintenance and lubrication are necessary to ensure smooth running and maximum life of components.

The recommended maintenance periods in the maintenance schedule are for trucks operating in normal, clean conditions when the specified fluids are used. For abnormal temperatures, dust contamination areas or moist conditions, etc., more frequent maintenance will be required. Maintenance periods should be halved when the truck is operating in a harsh environment.

When carrying out maintenance work, the use of original parts is highly recommended. These are specially designed for the truck and engine and ensure optimum performance. Non-compliance may result in voidance of the warranty!

## Warning

**Operating, servicing and maintaining a passenger vehicle or off-road vehicle can expose you to chemicals including engine exhaust, carbon monoxide, phthalates, and lead, which are known to the State of California to cause cancer and birth defects or other reproductive harm. To minimize exposure, avoid breathing exhaust, do not idle the engine except as necessary, service your vehicle in a well-ventilated area and wear gloves or wash your hands frequently when servicing your vehicle.**

**For more information go to www.P65Warnings.ca.gov/passenger-vehicle.**

## Caution

**The information contained in this section is provided for trained and authorised service personnel only. The specialist skills and knowledge can be obtained through training with Combilift Service.**

**Some maintenance tasks could result in serious injury or property damage if performed incorrectly.**

## Note

**Local laws and regulations governing the maintenance of forklift trucks and their engines may stipulate more frequent and more comprehensive maintenance than that recommended in this manual.**

**Strictly follow all local laws and regulations regarding maintenance of the truck and engine where applicable.**

**Maintenance, replacement, or repair of the emission control devices and systems may be performed by any non-road engine repair establishment or individual.**

https://truckmanualshub.com/



## 6.1 Basic Safety Instructions for Servicing and Inspection

- Perform servicing and inspection work only if you have read and understood the operator's manual for the truck and the operator's manual for the engine.
- Observe the basic safety instructions and all the warning signs attached to the truck.
- The descriptions of work processes contained within this manual are provided only for fully trained and competent maintenance staff with the necessary skills, knowledge and experience to carry out the work safely.
- Keep the operator's manual with the truck at all times.
- Perform servicing and inspection work only with suitable work clothing and personal protective equipment.
- Always wear safety glasses when performing servicing and inspection work.
- Always wear appropriate protective clothing, hats, gloves and safety shoes as warranted by the circumstances.
- Wear hearing protection should there be noise exceeding 90 dbA.
- All work must be carried out in a pre-designated safe working area on firm level ground with adequate space and headroom to perform all maintenance tasks safely.
- Take the necessary precautions to ensure the safety of others who may be affected by the work, e.g. other employees working nearby.
- Fire protection equipment must be present in the work area.
- Extend the reach at least half way to give access to the engine and filters.
- Lower the forks fully and tilt the mast forward fully before commencing maintenance tasks.
- Confirm that the hydraulic system pressure has been relieved before working on the hydraulic system.
- Pressurised jets of fluid can penetrate the skin causing serious injury. Use a piece of cardboard or paper to check for leaks. In the event that oil penetrates the skin, seek medical attention immediately.
- Remove the key and lock the cabin door to prevent anyone from starting the engine while maintenance is underway.
- Ensure there is no residual load in the system by supporting hung weights etc.
- Always isolate the power source from the drive or equipment.
- Hot surfaces and fluids can cause severe burns. Wait until surfaces and fluids have cooled and are comfortable to touch.
- Avoid skin and eye contact with oils and greases.
- Do not allow any fluids from the truck to spill on the ground or get into bodies of water. Clean up any spills immediately.
- Always ensure tools are in good working condition and used in the proper manner.
- Extract exhaust fumes using an extraction system and ensure the area is well ventilated.
- Perform a functional test after any maintenance work.

https://truckmanualshub.com/



## Cleaning

- Clean the truck thoroughly before performing any diagnosis or maintenance tasks. Pay particular attention to the areas of the truck where work is to be carried out e.g. around the filters.
- Do not use flammable solvents or cleaning agents that create harmful vapours.
- Do not pressure wash near electrical components or inside the operating enclosure.
- Wear appropriate protective clothing such as goggles and gloves.
- Blow dirt off or out. Always blow out the oil cooler and radiator cooling fins from the inside to the outside.
- When using a high pressure water or steam jet observe the following rules:
    - Maximum spray pressure 60 bar
    - Maximum steam temperature 90°C
    - Minimum distance 1 metre
- Warm up the engine

**Caution**

**Only carry out cleaning work on the engine when it is not running!**
**Cover all electrical/electronic parts and connections. (e.g. control units, generator, solenoid valves etc.).**
**Do not aim the water/steam jet directly at electrical components.**
**Allow the engine to warm up.**

## Battery Safety

- Wear protective clothing and safety glasses when working on the battery.
- If acid contacts the skin wash immediately with clean water.
- If acid contacts the eyes wash immediately with clean water and seek immediate medical attention.
- Keep sources of ignition away from batteries.
- Do not place metal objects on or near the battery terminals.
- Disconnect the battery when working on the electrical system.
- Always disconnect the battery before welding.
- Follow the correct procedure when connecting and disconnecting the battery.
    - Disconnecting: First negative and then positive
    - Connecting: First positive and then negative

https://truckmanualshub.com/



## 6.2 Initial Service – Conducted at 100 hours of Operation

The descriptions of work processes contained within this manual are provided only for fully trained and competent maintenance staff with the necessary skills, knowledge and experience to carry out the work safely. Follow the operator's manual for the engine for more details regarding engine servicing procedures.

To assure proper functioning of the truck, it is required that the first inspection be performed at 100 operating hours or 3 months (depending on which comes first), after initial start-up.

| Tasks To Be Performed At 100 Operating Hours or 3 months | ✓ |
|---|---|
| Check tension and condition of the engine v-belt(s) | |
| Change the hydraulic suction filter element | |
| Change the hydraulic return filter element | |
| Change the engine oil and the engine oil filter element | |
| * Change lock-off valve filter, change in-line cannister filter (if fitted) | |
| Check the hydraulic oil level | |
| Check the coolant level | |
| Check the machine for hydraulic, coolant and fuel leaks | |
| Check the engine air intake filter and clean or replace if necessary | |
| Check the engine air intake hoses and connections for cracks and loose clamps | |
| Check all mast reach carriage bearing lock nuts are tight | |
| Check mast reach carriage wear pads & alignment | |
| Check all bolts, nuts and fittings are present and secure | |
| Check the routing of hydraulic hoses, pipes and wires | |
| Check the chrome rods on all hydraulic cylinders are clean and undamaged | |
| Check the cleanliness of the radiator and hydraulic oil cooler(s) | |
| Check instruments and warning icons on the display console | |
| Check the electrical system, ensure all connections are secure | |
| Check the brakes, steering and the operation of all hydraulic functions | |
| Check all lights (i.e. work lights, road lights & safety lights if fitted) | |
| Check the operator's cabin & door for structural defects or damage | |
| Check the condition of the tyres | |
| Torque all wheel nuts *(see 6.6 Wheel Nut Torque on page 100)* | |
| Check mast chains; lubricate and adjust if required | |

** LPG engine powered trucks only.*

# Note

**All grease points indicated on the grease point chart MUST be greased every 100 operating hours / 3 months using EP2 Grease.**

# Note

**All wheel nuts should be visually checked daily and torqued every 250 hours**

***See section 6.6 – 'Wheel Nut Torque' on page 100***

https://truckmanualshub.com/



## 6.3 General Truck Maintenance Schedule

| Maintenance Task | Interval - Every | | ✓ | Page |
|---|---|---|---|---|
| Grease All Points Marked on the Grease Point Chart | 100 Hours | 3 Months | | *101* |
| Check All Electrical Connections/Terminals | 250 Hours | | | |
| Check All Nuts And Bolts Are Present & Secure | | | | |
| Check All Instruments & Warning Devices | | | | |
| Check Operation of Brakes, Steering & Hydraulic Functions | | 6 Months | | |
| Check All Lights (i.e. Work Lights, Road Lights & Safety Lights) | | 6 Months | | |
| Check the Tyres | | 6 Months | | |
| Check all Hydraulic Cylinder Chrome Rods for Dirt & Damage | | 6 Months | | |
| Check the Routing of all Hoses, Pipes & Wires | | | | |
| Check Battery Electrolyte Levels | | 6 Months | | *119* |
| Inspect & Lubricate Mast Chains, Measure Chain Stretch | | 6 Months | | *130* |
| Grease Mast Channels | | 6 Months | | *128* |
| Grease Mast Carriage Channels (Where Wear Pads Run Only) | | 6 Months | | |
| Torque All Wheel Nuts | | | | *96* |
| Check Hydraulic Oil Level | 500 Hours | | | *72* |
| Check Hydraulic Oil Cooler – Clean Fins If Necessary | | 1 Year | | |
| Check the Mast Bearings | | | | *134* |
| Check the Mast Bearing Wear Pads and Adjust (If Applicable) | | | | *134* |
| Check Mast Carriage Bearings, Ensure Locknuts are Tight | | | | |
| Check Mast Carriage Wear Pads & Alignment | | | | *135* |
| Check the Forks | | 1 Year | | *136* |
| Check Swivel Slew Ring Bearings | | | | |
| Check the Operator's Cabin & Door for Structural Damage | | 1 Year | | |
| Change Hydraulic Suction Filter Element | | 1 Year | | *123* |
| Change Hydraulic Return Filter Insert | | 1 Year | | *124* |
| Check Hydraulic System for Damage, Wear and Leaks | 1000 Hours | 2 Years | | |
| Change Hydraulic Oil & Strainer Filter (In-Tank) | 2000 Hours | 3-4 Years | | *126* |
| Change the Hydraulic Tank Breather | | | | *127* |

Perform the tasks in the truck maintenance schedule above, after the period of operating hours or the calendar period as they first arise to keep the truck in optimum working condition.

Perform all checks on the pre-use check sheet in conjunction with the maintenance schedule tasks (see page 149).

# Note

**The recommended maintenance intervals in the maintenance schedule are for maintaining trucks operating in normal conditions.**

**More frequent maintenance will be required if the truck is being operated in an arduous manner or in a harsh or aggressive environment. The frequency is governed by application and must be determined by the user.**

https://truckmanualshub.com/



## 6.4 Diesel Engine Maintenance Schedule

| Maintenance Task | Interval - Every | | ✓ | Page |
|---|---|---|---|---|
| Drain Fuel Filter Water Separator | 250 Hours | | | *106* |
| Check Fuel Hoses & Connections for Leaks | | | | |
| Squeeze Air Filter Dust Valve | | | | *116* |
| Clean Air Filter Primary Element | | | | *116* |
| Check V-belt Tension, Adjust If Necessary | | | | *115* |
| Check Air Intake Hose(s) & Clamps | | | | *116* |
| Check Radiator Hoses & Clamps | | | | * |
| Change Oil | | | | *103* |
| Change Oil Filter Element | | | | *103* |
| Change Second Fuel Filter Element | 500 Hrs | | | *106* |
| Change V-Belt | | 2 Years | | * |
| Remove Sediment from Fuel Tank | | | | |
| Change Water Separator Fuel Filter Element | | 1 Year | | *106* |
| Check Valve Clearance | 1000 Hours | | | * |
| Check Injector Tip | 1500 Hours | | | * |
| Check EGR Cooler | | | | * |
| Check Head Cover Valve | | | | * |
| Check Turbo-Charger | 3000 Hours | | | * |
| Check EGR System | | | | * |
| Remove Ash From Particulate Filter (DPF) | As Required / 6000 Hrs | | | * |
| Change Air Filter Primary Element | 1 Year | | | *116* |
| Clean Radiator | | | | |
| Check Exhaust Manifold for Cracks, Leaks, Damage | | | | * |
| Check DPF Related Piping | | | | * |
| Check EGR Piping | | | | * |
| Change Air Intake Hose(s) & Clamps | 2 Years | | | *116* |
| Change Rubber Water Hoses & Clamps | | | | * |
| Change Oil Separator Rubber Pipes | | | | * |
| Change Lubricant Rubber Piping | | | | * |
| Change Coolant | | | | *111* |
| Change DPF Related Rubber Piping | | | | * |
| Change EGR Cooler Rubber Piping | | | | * |
| Change Fuel Pipes & Clamps | | | | * |
| Change DPF Related Rubber Piping | | | | * |
| Change Air Filter Safety Element | 3 Years | | | *116* |

** Refer to the relevant engine manual. Contact your local Combilift partner if required.*

# Note

**The recommended maintenance intervals in the engine maintenance schedule are for maintaining engines operating in normal conditions.**

**More frequent maintenance will be required if the engine is being operated in an arduous manner or in a harsh or aggressive environment. The frequency is governed by application and must be determined by the user.**

https://truckmanualshub.com/



## 6.5 LPG Engine Maintenance Schedule

| Maintenance Task | Interval - Every | | ✓ | Page |
|---|---|---|---|---|
| Check Fuel Hoses & Connections for Leaks | 250 Hours | | | |
| Squeeze Air Filter Dust Valve | | | | *116* |
| Clean & Adjust Spark Plugs if Necessary | | | | * |
| Clean Air Filter Primary Element | | | | *116* |
| Check V-belt Tension, Adjust If Necessary | | | | *115* |
| Check Air Intake Hose(s) & Clamps | | | | *116* |
| Check Radiator Hoses & Clamps | | | | * |
| Change Oil | | | | *103* |
| Change Oil Filter Element | | | | *103* |
| Check the Fuel Tank | | | | *64* |
| Drain Regulator/Vaporiser Oil Build-up | | | | *110* |
| Change V-Belt | 500 Hours | 2 Years | | * |
| Check PCV Valve | 1000 Hours | | | * |
| Check Regulator/Vaporiser Water Lines For Leaks | | | | |
| Check Lock-Off Valve | | | | * |
| Check Valve Clearance | | | | * |
| Change Oil Separator Element | 1500 Hours | | | * |
| Change Spark Plugs | 2000 Hours | | | * |
| Change Air Filter Primary Element | 1 Year | | | *116* |
| Clean Radiator | | | | |
| Check Exhaust Manifold for Cracks, Leaks, Damage | | | | |
| Change Lock-Off Valve Filter | | | | *109* |
| Change Inline Cannister Filter (If Fitted) | | | | *109* |
| Clean Fuel Tank | | | | |
| Change Air Intake Hose(s) & Clamps | 2 Years | | | *116* |
| Change Rubber Water Hoses & Clamps | | | | * |
| Change Oil Separator Rubber Pipes | | | | * |
| Change Lubricant Rubber Piping | | | | * |
| Change Coolant | | | | *111* |
| Change Fuel Line Hose & Clamps | | | | * |
| Change Breather Hose | | | | * |
| Change Regulator/Vaporiser Water Lines | | | | * |
| Inspect Regulator/Vaporiser Internal Parts | | | | * |
| Change Air Filter Safety Element (If Fitted) | 3 Years | | | *116* |

** Refer to the relevant engine manual. Contact your local Combilift partner if required.*

# Note

**The recommended maintenance intervals in the engine maintenance schedule are for maintaining engines operating in normal conditions.**

**More frequent maintenance will be required if the engine is being operated in an arduous manner or in a harsh or aggressive environment. The frequency is governed by application and must be determined by the user.**

https://truckmanualshub.com/



## 6.6 Wheel Nut Torque

**Note**

**The wheel nut torque settings in the table below are for clean dry threads. If the threads are lubricated the settings must be reduced.**

All wheel nuts must be torqued every 250 hours. Park the truck in accordance with the recommended parking procedure. Torque the wheel nuts according to the settings in the wheel nut torque table below using a suitable torque wrench.

| Wheel Nut Torque Table | |
|---|---|
| Position | Torque Setting |
| Front Wheel | 210Nm / 155ft.lbs |
| Rear Wheel | 210Nm / 155ft.lbs |

https://truckmanualshub.com/



## 6.7 Grease Point Chart

The diagram below indicates all of the points on the Combilift that must be greased regularly. A copy of this diagram is located in the operator compartment in the form of a decal / Information sticker.

All Points must be greased every **100 hours or 3 months** with EP2 grease.

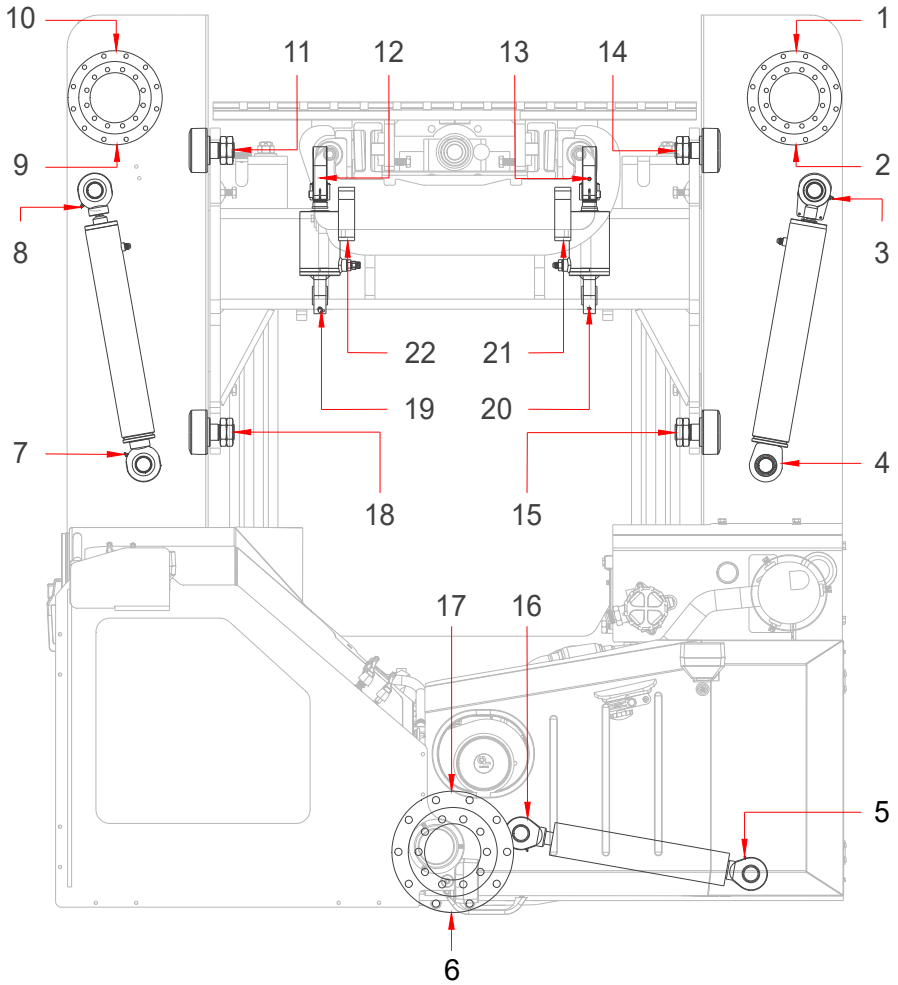


1. RH Swivel Slew 1
2. RH Swivel Slew 2
3. RH Steering Front
4. RH Steering Back
5. Rear Steering Back
6. Rear Swivel Slew 1
7. LH Steering Back
8. LH Steering Front
9. LH Swivel Slew 1
10. LH Swivel Slew 2
11. LH Carriage Front
12. LH Tilt Front
13. RH Tilt Front
14. RH Carriage Front
15. RH Carriage Back
16. Rear Steering Front
17. Rear Swivel Slew 2
18. LH Carriage Back
19. LH Tilt Back
20. RH Tilt Back
21. RH Mast Tilt Bush
22. LH Mast Tilt Bush

# Note

**Optional attachments with moving parts may have additional grease points that have not been indicated on the above chart.**

**Grease points on optional attachments and guide rollers must be located and greased every 100 hours or 3 months using EP2 grease.**

https://truckmanualshub.com/



## 6.8 Engine Oil System

**Caution**

**Switch off the engine before working on the lubricating system.**
**Wait until the engine and exhaust system are cool enough to touch before commencing work.**

The lubricating oil quality has a considerable influence on the life, performance and thus also on the cost effectiveness of the engine.

### 6.8.1 Recommended Engine Oil Specification

Diesel Engine: API – CJ-4 or CK-4

LP Gas Engine: API – SM Or Higher

**Note**

**Do not operate the engine if the oil level is below the Min mark or above the Max mark.**

**If using engine oil of a different brand or viscosity to the previous one, be sure to drain all the previous oil before adding the new engine oil.**

**On DPF-equipped diesel engines, fuel may get mixed with engine oil during the regeneration process. This dilutes the oil and increases its quantity. If the oil rises above the Max mark on the dipstick it has been diluted too much. Change the engine oil immediately if this is the case.**

**If the interval between DPF regenerations becomes 5 hours or less, change the engine oil.**

**Mixing of engine oils should be avoided because the worst properties of the mixture are always dominant.**

### 6.8.2 Lubricating oil change intervals

- The intervals depend on:
  - lubricating oil quality
  - sulphur content in the diesel fuel
  - type of application of engine
- The lubricating oil change interval must be halved if at least one of the following conditions applies:
  - the truck is operating in an extreme environment or under extremely arduous conditions.
  - Sulphur content in diesel fuel of >0.5 weight % (5000 ppm).
- If the lubricating oil change intervals are not reached within a year, the oil should be changed at least once a year.

https://truckmanualshub.com/



### 6.8.3 Engine Oil Viscosity Class

The oil used in the engine must be suitable for the ambient temperature range where the truck is operating as temperature affects the viscosity of the oil and therefore it's lubricating properties.

Too high a viscosity can lead to starting difficulties, too low a viscosity can endanger the lubrication effect and cause a high lubricating oil consumption. At ambient temperatures below -40 °C, the lubricating oil must be pre-heated.

The viscosity is classified according to SAE. Oils suitable for multiple ranges must always be used. See the adjacent viscosity chart for the recommended viscosity classes based on the ambient temperature.

The permissible engine oil class must be observed when selecting a viscosity class.

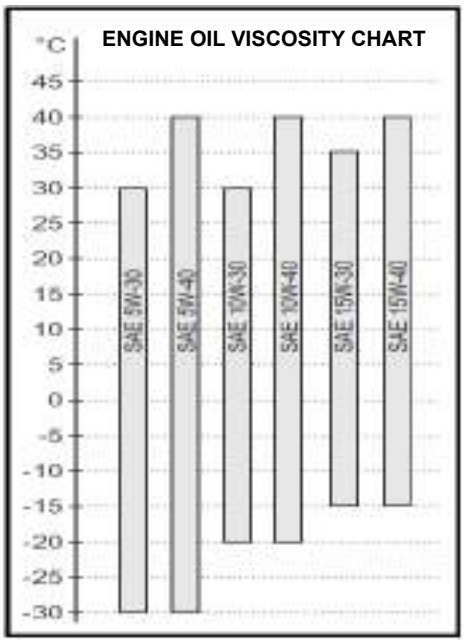


### 6.8.4 Changing Engine Oil & Filter

The engine oil and filter must be replaced at regular intervals in accordance with the maintenance schedule.

# Note

**Clean and dry the area around all components concerned thoroughly before commencing work.**

**Observe safety regulations when handling oils and avoid skin contact.**

**Do not pour fluids into the ground, down a drain or into a stream, pond or lake. Observe relevant environmental protection regulations when disposing of used oil and filters.**

**Engine Oil & Filter Change Procedure**

1. Park the truck in a designated service area (ground must be level) with the mast reach extended to allow access to the engine oil drain plug (**A**).
2. Lower the mast fully and tilt the mast forward fully.
3. If the engine is cold, run it for 5 minutes to warm the oil. This will help the oil to flow.
4. Turn the ignition key switch to the '**0**' off position, then remove the key.

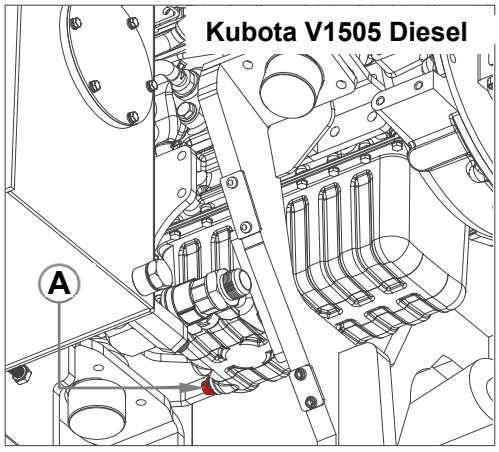

https://truckmanualshub.com/



5. Wait until the oil has cooled to a safe temperature before proceeding.
6. Enter the area between the left-hand and right-hand platforms - behind the mast. Ensure all surfaces are clean and dry and take great care to avoid slipping!
7. Position a suitable container *(see point 16 for the volume of oil in the engine)* below the oil drain plug (**A**) on the bottom of the engine to collect the used oil.
8. Remove the oil drain plug and allow the oil to drain completely.
9. Refit the oil drain plug with a new sealing ring and tighten.
   - Torque to 50 Nm (37 ft. lbs)
10. Open the bonnet.
11. Unscrew and remove the used engine oil filter (**B**) from the side of the engine.
    - *Front side of V1505 Diesel Engine*
    - *Rear side of WG2503 LPG Engine*

    Use a filter wrench if required.
12. Collect the draining oil from the filter in a suitable container.
13. Clean the sealing surface of the filter support with a clean lint free cloth.
14. Lightly coat the seal on a new original filter element with clean engine oil.
15. Screw on the new engine oil filter element by hand - ensuring that the seal is correctly placed – until the gasket is touching the sealing surface then tighten.
    - Torque to 10-12 Nm (7.5-9 ft. lbs)
16. Remove the oil filler cap/oil (**C**) from the rear side of the engine and pour in clean new engine oil with suitable viscosity that meets the recommended specification *(see page 102).* The volume of oil required is:

    **Diesel Engine: 6.7 litres / 7.08 quarts**

    **LPG Engine: 9.5 litres / 10 quarts**
17. Clean up any oil spills immediately.
18. Refit the oil filler cap securely, then close the bonnet.
19. Run the engine to warm up the oil, then check around the filter and drain plug for leaks.

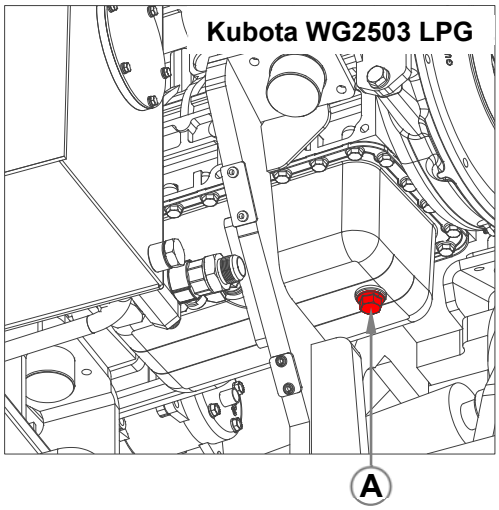


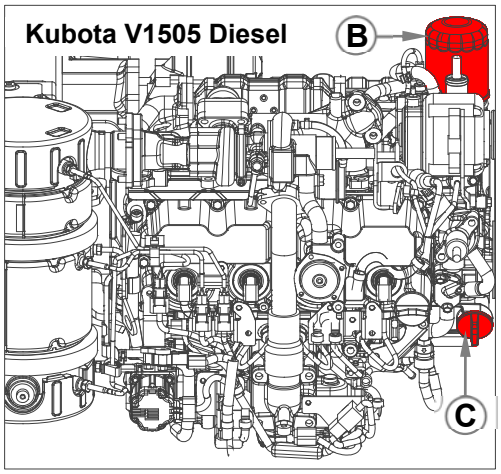


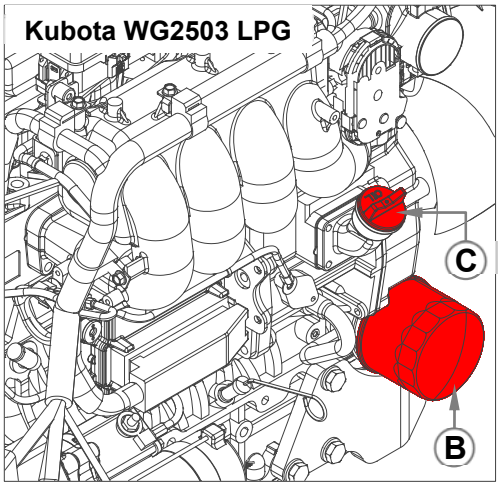

https://truckmanualshub.com/



20. Stop the engine and wait for approximately 5 minutes until the oil has drained back into the sump.
21. Check the oil level on the dipstick *(see 5.3 on page 66)* and top-up if necessary.
22. Dispose of waste oil and used filter elements in compliance with local regulations.

## 6.9 Diesel Fuel System (If Applicable)

**Caution**

**Switch off the engine before working on the fuel system.**

**Smoking and naked flames are prohibited when working on the fuel system.**

**Wait 5 minutes for the pressure to be relieved after the engine has shut down as the system is under high pressure.**

**Escaping fluid under pressure can penetrate the skin causing serious injury. Relieve pressure before disconnecting fuel lines. Tighten all connections before applying pressure. Use a piece of card to search for fuel leaks.**

**If any fluid is injected into the skin, it must be surgically removed within a few hours by a doctor familiar with this type injury or gangrene may result.**

**Note**

**Work on the fuel system may only be performed in a clean environment. Clean and dry the area around all components concerned thoroughly. Contamination must be avoided.**

**Replace filter elements immediately if they get plugged.**

**Do not fill new filter elements with fuel before installing. This could contaminate the fuel system with unfiltered fuel.**

The diesel fuel passes from the tank through a filter with a water separator (**A**) and is then conveyed by an electric pump through a second filter (**B**) to the fuel injection pump.

The diesel fuel filters are mounted on the back of the diesel tank. Extend the mast reach to allow access to the diesel fuel filters.

The fuel filters must be changed at regular intervals in accordance with the maintenance schedule.

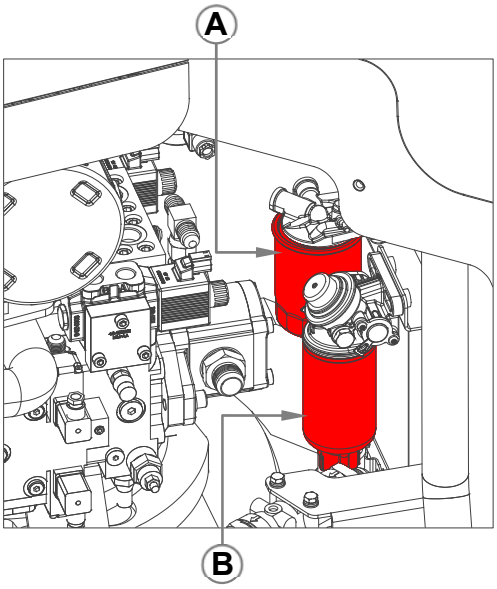

https://truckmanualshub.com/



# Note

**Observe safety regulations when handling fuels and avoid skin contact.**

**Observe relevant environmental protection regulations when disposing of waste fuel and used filter elements. DO NOT allow fuel to leak on the ground.**

### 6.9.1 Draining Water Separator

The water separator removes water and solid particles included in the fuel. When water collects in the water separator, a sensor detects its presence and the drain water separator icon pops up on the display screen along with the message “Drain Water Separator!”

**To drain the water separator:**

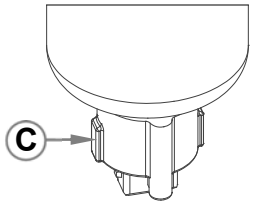


1. Park the truck in a designated service area.
2. Extend the mast reach to allow access to the diesel fuel filters.
3. Lower the forks fully and tilt the mast forward fully.
4. Turn the ignition key switch to the ‘**0**’ position, then remove the key.
5. Enter the area between the left-hand and right-hand platforms behind the mast. Ensure all surfaces are clean and dry and take great care to avoid slipping!
6. Disconnect the plug from the water sensor.
7. Loosen the drain plug and drain the fluid - into a suitable collection container - until clean diesel fuel starts to drain out.
8. Tighten the drain plug – Torque 1.6 Nm.
9. Connect the plug to the water sensor.

### 6.9.2 Changing Filter Elements

**To change the water separator filter element:**

1. Park the truck in a designated service area.
2. Extend the mast reach to allow access to the diesel fuel filters.
3. Lower the forks fully and tilt the mast forward fully.
4. Turn the ignition key switch to the ‘**0**’ position, then remove the key.
5. Enter the area between the left-hand and right-hand platforms behind the mast. Ensure all surfaces are clean and dry and take great care to avoid slipping!
6. Thoroughly clean and dry the filter assembly and the surrounding area to prevent dirt and debris from contaminating the fuel system.
7. Disconnect the plug from the water sensor.
8. Loosen the drain plug and allow all fuel to drain from the filter into a suitable collection container.
9. Unscrew and remove the drain plug and water sensor.
10. Unscrew and remove the used filter element.

https://truckmanualshub.com/



11. Clean the sealing surfaces on a new filter element and the sealing surfaces on the filter mount.
12. Apply a thin film of diesel to the sealing surfaces of the new filter element and screw onto the filter mount. (Torque to: 17-18Nm).
13. Refit the drain plug and water sensor.
14. Reconnect the plug to the water sensor connector.
15. Prime the fuel system.

**To change the second fuel filter element:**

1. Park the truck in a designated service area.
2. Extend the mast reach to allow access to the diesel fuel filters.
3. Lower the forks fully and tilt the mast forward fully.
4. Turn the ignition key switch to the '**0**' position, then remove the key.
5. Enter the area between the left-hand and right-hand platforms behind the mast. Ensure all surfaces are clean and dry and take great care to avoid slipping!
6. Thoroughly clean and dry the filter assembly and the surrounding area to prevent dirt and debris from contaminating the fuel system.
7. Unscrew and remove the used filter element.
8. Clean the sealing surfaces on a new filter element and the sealing surfaces on the filter mount.
9. Apply a thin film of diesel to the gasket on the new filter element and screw onto the filter head (torque to: 10-12Nm).
10. Prime the fuel system.

### 6.9.3 Priming The Diesel Fuel System

The fuel system is primed via the electric fuel supply pump. In order to ensure that no error messages are generated and that no damage to the high-pressure pump may occur, no attempt to start the system may be made during the priming procedure.

**Note**

**Do not attempt to start the engine until the priming procedure has been completed.**

**To prime the fuel system:**

1. Turn the ignition key switch to position 1 (operating voltage) to activate the electric fuel pump. ***Do not turn the ignition to the start position as damage to the fuel pump may occur.***
2. The electric fuel supply pump switches on for 20 seconds in order to prime the fuel system and to build up the required fuel pressure.
3. Wait until the fuel supply pump cuts out.
4. Turn the ignition key switch to the '**0**' off position.
5. Repeat steps 1-4 above two more times to fully prime the fuel system.
6. The engine may only be started following this.

https://truckmanualshub.com/



## 6.10 LP Gas System (If Applicable)

**Caution**

**DO NOT use Teflon tape to seal any LP gas fuel system fittings. Failure to follow this warning may cause leaks possibly resulting in serious injury, death, and/or property damage and may void any warranty coverage.**

**Caution**

**LP gas can cause frostbite when released, due to its very low temperature.**

**When working with LP Gas the following Personal Protective Equipment (PPE) must be worn:**

- **Goggles and neoprene gloves or gauntlets**
- **Long sleeve cotton overalls or jacket**
- **Safety shoes/boots**

**Caution**

**LP gas bottles are heavy and must be handled with care to avoid injury. Always assume that LP gas bottles are full for manual handling purposes. Check the weight of the bottle before lifting. Get an assistant to help lift the bottle or use suitable lifting equipment if necessary.**

**Note**

**Due to the inherent danger of gaseous fuels, LP gas system maintenance should only be performed by persons knowledgeable of the hazards associated with the use of gaseous fuels. Any maintenance, service or repair should be performed by trained and experienced service technicians.**

Perform maintenance on the LP gas system as described in the relevant engine maintenance manual in conjunction with the procedures described under ***LP Gas Lock Off Valve Filter*** and ***LP Gas Pressure Regulator***. Contact your local Combilift partner for assistance if required.

https://truckmanualshub.com/



### 6.10.1 LP Gas Lock Off Valve Filter

The LP gas lock-off valve is mounted on the LP gas regulator on top of the engine.

**Changing the LP Gas Lock Off Valve Filter:**

1. Park the truck on level ground in a well ventilated area and ensure no external ignition sources are present.
2. Lower the mast fully and tilt the mast forward fully.
3. Close the valve on the LPG bottle fully by turning it clockwise.
4. Run the engine until it cuts out (to burn off any remaining fuel in the lines).
5. Turn the ignition key switch to the '**0**' (off) position and remove the key.
6. Isolate the battery by turning the battery isolator key switch anticlockwise.
7. Open the bonnet (**A**) from the rear of the truck to gain access to the lock off valve filter.
8. Locate the lock off valve (**B**), then remove the fitting union (**C**) and open the filter chamber (**D**).
9. Replace the lock-off valve filter (**E**), magnet, seal and O-rings.
10. Reassemble the lock-off valve.
11. Tighten the fitting union (**C**) to between 11.2-12.8Nm (8.26-9.44ft. lbs).
12. Close the bonnet.

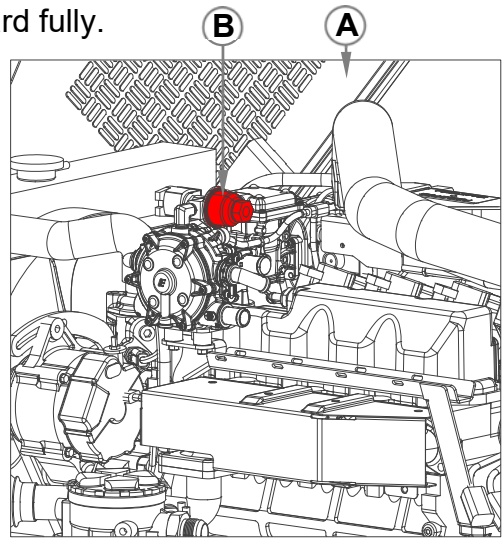


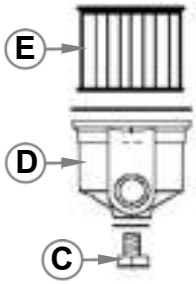


### 6.10.2 LP Gas In-line Cannister Filter

The LP gas inline filter is mounted next to the lock off valve filter on the LP gas regulator on top of the engine.

**Changing the LP Gas In-line Cannister Filter:**

1. Park the truck on level ground in a well ventilated area and ensure no external ignition sources are present.
2. Lower the mast fully and tilt the mast forward fully.
3. Close the valve on the LPG bottle fully by turning it clockwise.
4. Run the engine until it cuts out (to burn off any remaining fuel in the lines).
5. Turn the ignition key switch to the '**0**' (off) position and remove the key.
6. Isolate the battery by turning the battery isolator key switch anticlockwise.

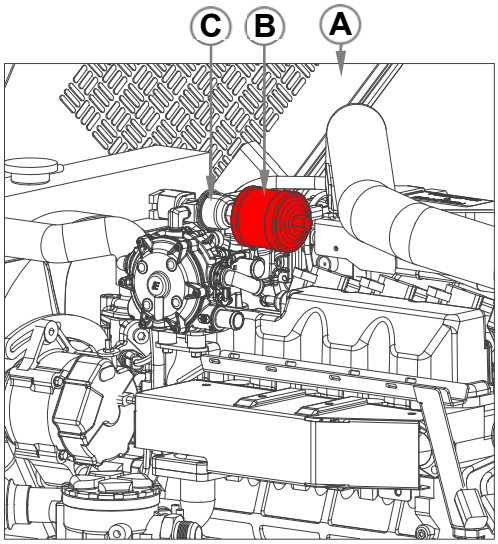

https://truckmanualshub.com/



7. Open the bonnet (**A**) from the rear of the truck to gain access to the cannister filter (**B**).
8. Unscrew the hose from the used cannister filter.
9. Unscrew and remove the used cannister filter (**B**).
10. Clean the threads on the hose and the fitting on the lock off valve (**C**).
11. Take a new cannister filter. Ensure the threads are clean, dry and free from oil and grease. **Apply B577 pipe seal to the threads of the new filter immediately before fitting.**
12. Fit the new cannister filter.
13. Allow at least 20 minutes for the B577 pipe seal to cure.
14. Slowly open the valve on the LP gas cylinder.
15. Check around the new cannister filter for leaks. Use a soapy water solution or an electronic leak detector. Repair any leaks.
16. Close the bonnet.

### 6.10.3 LP Gas Pressure Regulator

During the course of normal operation oil or “heavy ends” may build up inside the secondary chamber of the LPG pressure regulator/vaporiser. The oil and heavy ends may be a result of poor fuel quality, contamination of the fuel, or regional variation of the fuel make up. A significant build-up of oil can affect the performance of the pressure regulator/vaporiser.

The oil should be drained from the LPG pressure regulator/vaporiser periodically in accordance with the maintenance schedule. More frequent draining of the LPG pressure regulator/vaporiser is recommended if substandard fuel is used.

**Draining Oil Build-up from the LP Gas Pressure Regulator:**

1. Park the truck in a well ventilated area and ensure no external ignition sources are present.
2. Lower the mast fully and tilt the mast forward fully.
3. Start the engine and wait until it has reached its stable operating temperature. This will help the oil to flow from the regulator.
4. When the engine is warm, close the valve on the LPG bottle fully.The engine will continue to run until it has used up all the fuel in the fuel lines.
5. When the engine stops, turn the ignition key switch to the ‘**0**’ position and remove the key.

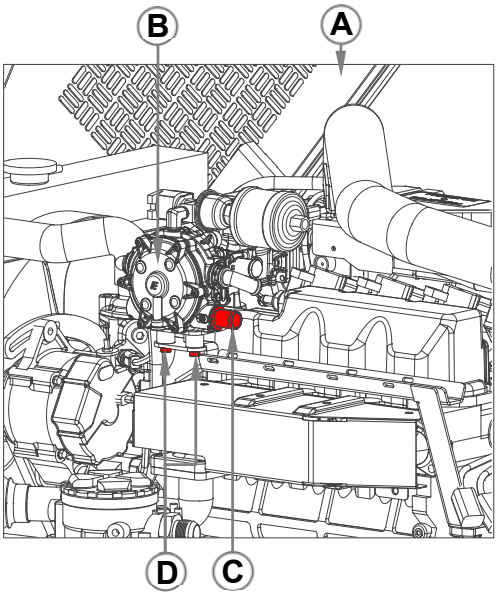


6. Isolate the battery by turning the battery isolator key switch anticlockwise.
7. Open the bonnet (**A**) from the rear of the truck to gain access to the LPG pressure regulator (**B**), which is mounted on top of the engine.

https://truckmanualshub.com/



8. Ensure all parts concerned are cool enough to touch, otherwise wear heat resistant gloves before proceeding.
9. Loosen the hose clamp on the LP gas outlet fitting (**C**) and remove the hose.
10. Remove the two bolts (**D**) from underneath the regulator.
11. Turn the regulator 90° so that the LP gas outlet fitting (**C**) is pointing towards the ground.
12. Allow any oil to drain from the regulator into a suitable receptacle.
13. Inspect the outlet for any large dried particles and remove if present.
14. When all the oil has drained completely, remove the receptacle.
15. Remount the regulator securely using the bolts that were removed at step 10.
16. Reconnect the hose to the LP gas outlet (**C**) securely.
17. Reconnect any other hoses that were removed during this procedure.
18. Slowly open the valve on the LPG bottle.
19. Start the engine and check for leaks at the regulator and the LP gas inlet and outlet fittings. Use a soapy water solution or an electronic leak detector. Repair any leaks.
20. Check coolant line connections to ensure no leaks are present.
21. Close the bonnet.
22. Dispose of drained material in compliance with local regulations.

## 6.11 Engine Cooling System

**Caution**

**Switch off the engine before working on the cooling system.**

**Never operate the engine without coolant.**

**Explosive release of hot fluids from the pressurised cooling system can cause serious burns.**

**The engine and cooling system must be cool to the touch before working on the cooling system.**

**Only remove the radiator cap when cool enough to touch with bare hands. Slowly loosen the radiator cap to relieve pressure before removing completely.**

**Coolant is harmful if ingested. Seek immediate medical attention if ingested.**

**Avoid contact with skin and eyes. Wear protective gloves and goggles when handling coolant.**

**Note**

**Do not pour coolant into the ground, down a drain or into a stream, pond or lake. Observe relevant local environmental protection regulations when disposing of used coolant.**

https://truckmanualshub.com/



**Note**

**It is advised not to mix different coolant products.**
**See www.combilift.com/coolant for a list of approved coolant products.**

### 6.11.1 Coolant

All Combilift IC engine powered trucks leave the factory with a mixture of 50% water to 50% coolant concentrate (***Glysantin® G64®)*** in the cooling system. This protects the engine against:

- Freezing down to -37°C (-34.6°F)
- Corrosion
- Cavitation
- Overheating

If greater protection against freezing is required the proportion of coolant concentrate can be increased to a maximum of 60%. This will provide protection against freezing down to -52°C (-62°F).

Coolant must be completely replaced when repairs are performed on the cooling system. Rinse out the cooling system before filling with new coolant. A mixture of clean water with 15% of the new coolant is recommended for rinsing.

**Note**

**When mixing coolant concentrate with water, do not use less than 40% or greater than 60% concentration of coolant. Less than 40% gives inadequate additives for corrosion protection. Greater than 60% can result in coolant gelation and cooling system problems.**

**Do not use cooling system sealing additives or antifreeze that contains sealing additives.**

**Do not mix ethylene glycol and propylene glycol based coolants.**

**Do not use coolants that contain nitrites.**

The coolant must be changed at regular intervals in accordance with the maintenance schedule.

The cooling system must be monitored regularly. This includes checking the concentration of coolant to water. The concentration of coolant concentrate to water must never be allowed fall below 40% as the protective effects fall away rapidly below this concentration.

https://truckmanualshub.com/



### 6.11.2 Coolant Water Quality

Water quality is important to the performance of the cooling system. Distilled, deionized, or demineralized water is recommended for mixing with antifreeze.
The water used in the cooling system must be clean and clear and should meet the following minimum specifications for quality:

| | |
|---|---|
| pH | 5.5 - 9.0 |
| Chlorides | <40mg/l |
| Sulphates | <100mg/l |
| Total Solids | <340mg/l |
| Total Dissolved Solids | <170mg/l |

Water that deviates from the values in the table must be conditioned.

**Note**

**Do not use bottled drinking water because it often contains higher concentrations of total dissolved solids.**

### 6.11.3 Draining the Cooling System

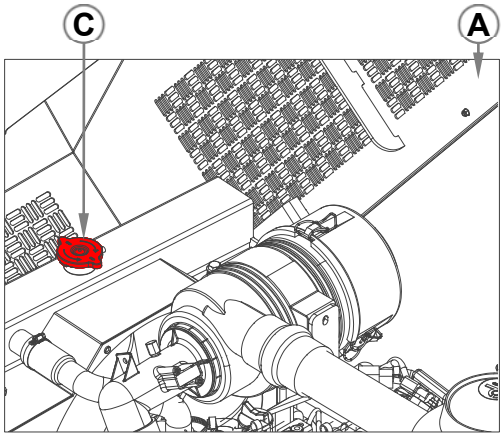


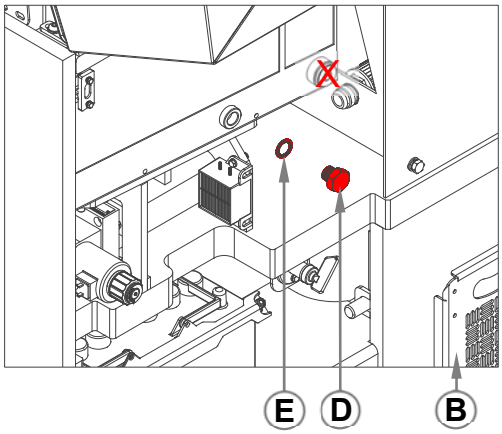


1. Stop the truck in a designated service area.
2. Lower the forks fully and tilt the forks forward fully.
3. Turn the ignition key switch to the '**0**' (off) position, then remove the key.
4. Allow the radiator to cool down.
5. Open the bonnet (**A**) fully.
6. Remove the access panel (**B**) from the right-hand side of the truck (pull out firmly at the top then lift up and out).
7. Remove the cap (**C**) from the top of the radiator. Turn the cap anticlockwise gradually to slowly release any pressure before removing fully.
8. Place a suitable container on the ground next to the drain plug (**D**) to collect the used coolant.
9. Unscrew the drain plug and allow time for the coolant to drain completely from the system.

   Tip: *Use a funnel or hose to channel the used coolant into the collection container.*
10. Refit the radiator drain plug (**D**) with a new seal and tighten into the radiator.
    - Torque to 94-98 Nm (70-72 ft. lbs)

https://truckmanualshub.com/



11. Empty the coolant bottle (mounted on the right-hand side of the cabin) into the used coolant collection container.
12. Clean up any coolant spills immediately.
13. Dispose of waste coolant in compliance with local regulations.

### 6.11.4 Flushing the Cooling System

1. Drain the system as described under 'Draining the Cooling System'.
2. Fill the radiator with clean clear water then refit the radiator cap securely.
3. Run the engine for 5 minutes.
4. Wait until the radiator is cool enough to touch.
5. Remove the radiator cap, top the radiator up to full again then refit the radiator cap securely.
6. If the truck has a cabin heater fitted, turn the temperature control knob to hot.
7. Run the engine for 15 minutes.
8. Watch the temperature gauge on the dash while the engine is running. If the needle moves into the red area, switch the engine off immediately.
9. Wait until the radiator is cool enough to touch then drain the system as described under *'Draining the Cooling System'*.
10. Repeat steps 2-9 using a solution of clean clear water (85%) mixed with the new coolant concentrate (15%) that is going to be used.
11. Flush out the coolant bottle thoroughly.
12. Clean up any coolant spills immediately.

### 6.11.5 Filling the Cooling System

1. Drain and flush the system as described under *'Draining the Cooling System'* and *'Flushing the Cooling System'*.
2. Remove the cap from the top of the radiator. The radiator must be cool enough to touch before removing the cap.
3. Turn the cap anticlockwise gradually to release any pressure before removing.
4. Fill with the specified coolant concentrate mixed with clean clear water (50% coolant concentrate to 50% water) up to the bottom of the radiator filler neck.
5. Fill the coolant bottle to half way between the full and low level marks with the same mixture.
6. If the truck has a cabin heater fitted, turn the temperature control knob to hot.
7. Run the engine for 5 minutes.
8. Wait until the radiator is cool enough to touch.
9. Remove the radiator cap, top the radiator up to full again then refit the radiator cap securely.
10. Run the engine up to operating temperature then switch off the engine and wait until the radiator is cool enough to touch.

https://truckmanualshub.com/



11. Check the coolant level in the radiator and top up to the bottom of the filler neck if necessary. Top up the coolant bottle also if required.
12. Clean up any oil spills immediately.

**Approximate Coolant System Capacity = 14 litres/14.8 quarts**

## 6.12 Belt Drive System

**Caution**

**Switch off the engine and remove the key from the ignition before working on the belt drives.**

**When work on the belt drives has been completed, check that all guards have been replaced and that all tools have been removed from the engine.**

The engine uses a v-belt to drive the water pump, fan and alternator. It is important to note that the v-belt is an integral part of the cooling and charging system and should be inspected in accordance with the maintenance schedule.

A second v-belt used to drive a compressor may be fitted if the truck has air conditioning. Check the air conditioning v-belt in the same fashion as the main v-belt.

Open the bonnet from the rear of the truck to gain access to the belt drive system on the engine.

**Checking the Belt Drive:**

- Check the entire belt drive (i.e. the belt(s) associated pulleys, bearings etc.) visually for signs of damage and wear and replace any damaged parts.
- Check the tension on the belt.
- Tension loose belts and replace belts showing signs of damage or wear.
- **Do Not** over tension the belt(s) as this will shorten the life of pulleys and bearings.

**When inspecting the belt check for:**

- Cracks
- Chunking of the belt
- Splits
- Material hanging loose from the belt
- Glazing, hardening

If any of these conditions exist the belt should be replaced with a genuine OEM belt.

https://truckmanualshub.com/



**To Check the Belt Tension:**

1. Park the truck in a designated service area.
2. Turn the ignition key switch to the '**0**' (off) position and remove the key.
3. Open the bonnet from the rear of the truck.
4. Apply a force of 98N (10lbf) to the belt half way between the alternator pulley and the fan drive pulley.
5. The belt should deflect by between 7mm (0.28″) and 9mm (0.35″).
6. If the belt deflects by more or less than the permissible amount, the tension must be adjusted.

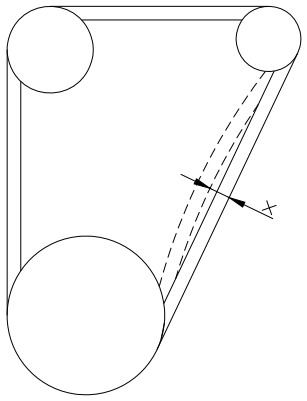


Belt Deflection x

**V-belt Tension Adjustment Procedure:**

1. Loosen the alternator mounting bolts and adjust the alternator position using a lever placed between the alternator and the engine block.
2. Tighten the mounting bolts and recheck the belt tension.
3. Adjust until the specified deflection is achieved.
4. Close the bonnet.

## 6.13 Air Filter System

**Caution**

**Switch off the engine before working on the air filter system.**

**Do not touch the engine, exhaust system, or cooling system immediately after stopping the engine.**

**Wait until the engine has cooled to the point that the exhaust system, engine, and cooling system are comfortable to touch.**

The truck is equipped with a dry air filter for filtering the engine intake air.

The dry air filter should be maintained in accordance with the maintenance schedule, however more frequent maintenance will be required if the truck is operating in high dust applications.

The dry air filter is mounted under the bonnet at the right hand side of the truck.

https://truckmanualshub.com/



# Note

**Clean and dry the area around the filter housing thoroughly. Contamination must be avoided. Block off the engine air intake if necessary.**

**Air contaminated with dust entering the engine will cause damage and reduce performance.**

**Never run the engine if parts of the air intake system are removed. Replace damaged air filter system parts immediately.**

### To Service the Air Filter

1. Stop the truck in a designated service area.
2. Lower the forks fully then tilt the mast forward fully.
3. Turn the ignition key switch to the '**0**' position, then remove the ignition key.
4. Open the bonnet (**A**) from the rear of the truck to gain access to the air filter (**B**).
5. Inspect the air intake hose for cracks or other damage and repair or replace as necessary. Inspect all connections and clamps and ensure they are tightly sealed. Any leaks here will admit dust directly to the engine.
6. Check the outlet slot on the dust valve (**C**) for dust build up. Remove dust by pinching the valve. Make sure the dust valve is flexible and not inverted, damaged or plugged. Replace the dust valve if necessary.
7. Unlatch the filter cover (**D**) and remove from the filter housing (**E**).

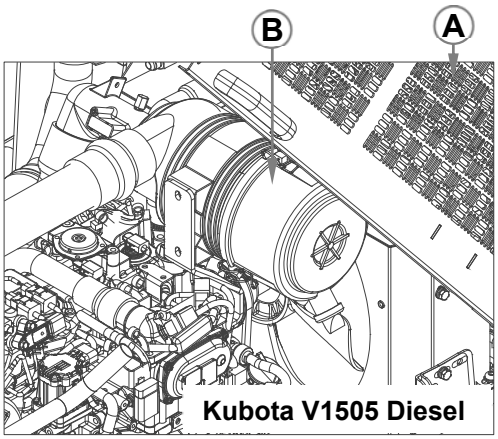

Kubota V1505 Diesel

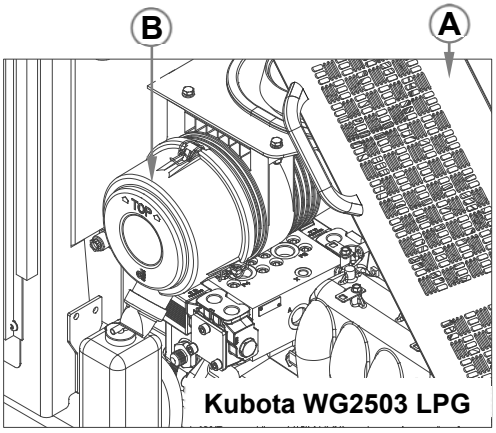

Kubota WG2503 LPG

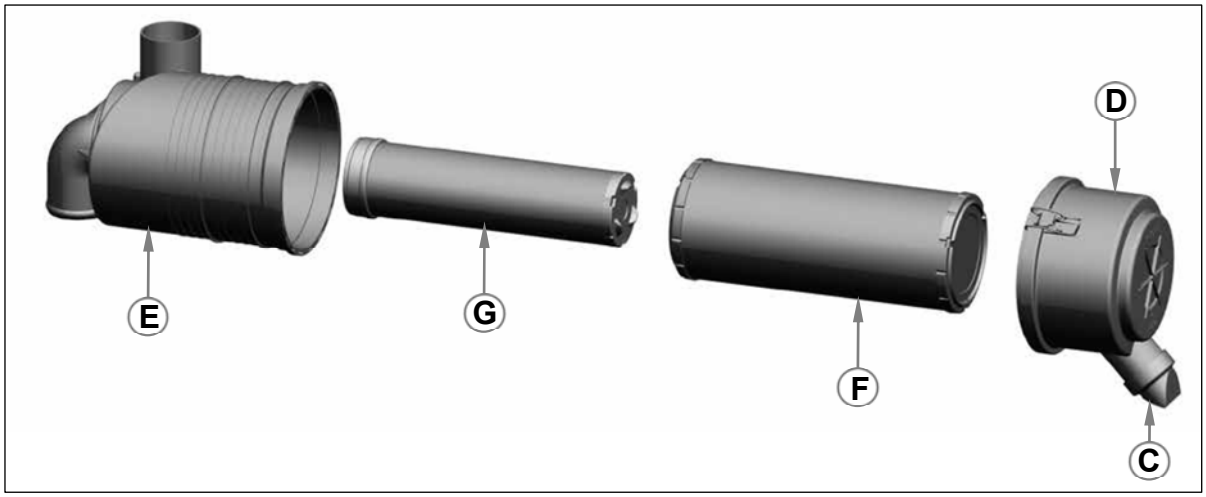

https://truckmanualshub.com/



8. Remove the primary filter element (**F**) – gently move the end of the filter back and forth to break the seal, then rotate while pulling it straight out. Avoid knocking it off the housing while removing.
9. Visually check the safety filter (**G**) in place for damage and check that it is properly seated.
   - Do not remove the safety filter unless it is due for replacement.
   - Change the safety filter every three primary filter changes.
   - DO NOT attempt to clean or reuse the safety filter.
   - When changing the safety filter use a clean damp cloth to wipe the filter sealing surface and the inside of the outlet tube.
10. Avoid leaving the outlet to the engine exposed for any period of time. Keep the outlet covered to avoid admitting dust to the engine.
11. Inspect the primary filter element. Clean if lightly soiled or replace if heavily soiled. If there is a streak of dust on the clean side of the filter it must be replaced.

    **To clean the filter :**
    - Lightly knock off as much dust as possible.
    - Blow out with dry compressed air (maximum 5 bar pressure) from the inside to the outside.
12. If fitting a the new primary filter element inspect the new element for damage. Never install a damaged filter. **Do not wipe the sealing area on the primary filter.**
13. Insert the new filter. If changing the safety filter at this service, seat it properly before installing the primary filter. Insert new filters carefully. Make sure filters are inserted completely into the housing. Press in by hand along the rim of the filter, not the flexible centre..
14. Reinstall the filter housing cover ensuring that the dust valve is pointing down towards the ground. The cover should not come into contact with the filter element before it is fully in place. If there is contact before the cover is fully in place the filter must be pushed in further before latching the cover.
15. Refit the large access panel to the right hand side of the truck.

https://truckmanualshub.com/



## 6.14 Battery Maintenance

The battery is located behind the large access panel to the right hand side of the truck.

The truck is supplied with a **12V 105Ah 735A** battery.

**Caution**

**Protective clothing and goggles should be worn and particular care taken not to come into contact with or spill battery electrolyte.**

**Batteries contain sulphuric acid which may leak for various reasons. Sulphuric acid is a corrosive and poisonous liquid that will cause burns and irritation to the skin and eyes.**

**Batteries generate explosive gases when being charged. Charge in a well-ventilated area and follow the instructions for the charger being used.**

**Never connect the positive terminal to the negative terminal on the same battery with a conductive object such as a metal tool.**

**The temperature of the battery must not exceed of 50° C (122° F) during charging.**

**Smoking and the use of naked flames in the charging area is prohibited.**

**Clean the battery and terminals with a damp cloth. Using a dry cloth can lead to a build-up of static electricity that may discharge and cause an explosion.**

### 6.14.1 Checking the Battery Electrolyte Level

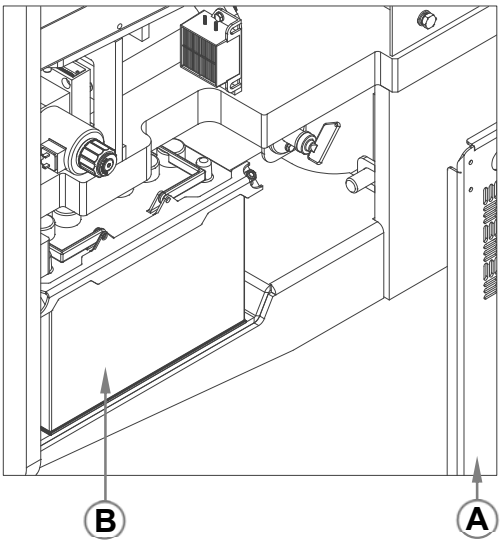


1. Stop the truck in a designated service area.
2. Lower the forks fully and tilt the mast forward fully.
3. Turn the ignition key switch to the '**0**' off position, then remove the key.
4. Remove the large access panel (**A**) from the right hand side of the truck (pull out firmly at the top then lift up and out) to gain access to the battery (**B**).
5. Check the electrolyte level in each cell by removing each of the caps and inspecting inside (clean the top of the battery before removing the caps).
6. The electrolyte should be just above the tops of the separators.
7. If required top up each cell with distilled or deionised water and refit the cap securely.
8. Refit the large access panel securely to the right hand side of the truck.

https://truckmanualshub.com/



### 6.14.2 Removing the Battery

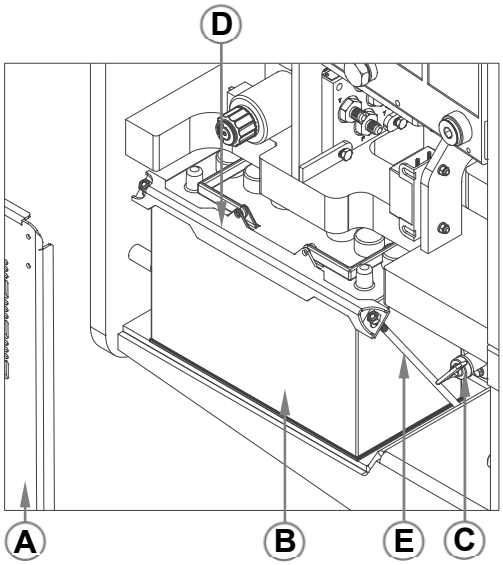


1. Park the truck in accordance with the recommended parking procedure then switch off the engine and all electrical components.
2. Remove the large access panel (**A**) from the right hand side of the truck (pull out firmly at the top then lift up and out) to gain access to the battery (**B**).
3. Isolate the electrical system by turning the isolator key (**C**) anticlockwise.
4. Remove the connector from the negative black (**-**) battery terminal first, then remove the connector from the positive red (**+**) battery terminal.
5. Remove the battery bar (**D**) by first unscrewing the two M8 locknuts from the battery rods (**E**) on. DO NOT allow the battery bar to come into contact with the battery terminals.
6. Use the handles on top of the battery to lift it out.

   **CAUTION the battery weights 27.6kg.**

# Note

**After turning the ignition key switch to the off '0' position to stop the engine, the engine control unit (ECU) remains active to save system data before it switches off. For this reason, the power supply to the engine must not be interrupted at the battery isolator switch or by removing the battery leads until the ECU has switched off.**

### 6.14.3 Installing a new Battery

1. Compare the new battery with the used battery and ensure the new battery has the same polarity and performance characteristics as the old battery
2. Check that the new battery is clean and dry and that the caps are secure.
3. Check that the new battery has a voltage above 12.40V. If not, charge the battery or use another that has a voltage above 12.40V.
4. Ensure the two plastic terminal caps are still fitted at this stage.
5. Ensure the battery location on the truck is clean and dry, then insert the new battery.
6. Ensure the connectors are clean and corrosion free. Remove corrosion with fine emery paper if required. Coat lightly with acid free grease.
7. Refit the battery bar then remove the plastic terminal caps and place them on the spent battery.
8. Connect the positive (**+**) red battery terminal first then connect the negative (**-**) black terminal.
9. Refit the large access panel to the right hand side of the truck.

https://truckmanualshub.com/



10. Turn the battery isolator key clockwise, then start the engine to test the battery.

**Note**

**DO NOT over tighten the battery bar or terminal clamps.**
**Dispose of used batteries at a battery collection point.**

### 6.14.4 Battery Charging

Charging the battery on the vehicle is not recommended. Follow the steps described under ***'Removing the Battery'*** to remove the battery from the truck. Follow the instructions for the battery charger being used.

Charging of the battery is required when the:

- Storage period is more than 6 months without charging.
- Battery operating current voltage (OCV) is less than 12.4V.

Steps Prior to Charging:

- Wear protective glasses whilst handling the battery.
- Do not carry out charging near any source of ignition e.g. flames or sparks.
- Do not charge a damaged or frozen battery.
- Boost charging is not recommended.

### 6.14.5 Jumpstarting

When performing a jump start using jumper cables, there can be bursts of high voltage of hundreds of volts when connecting the cables. Isolate the battery when connecting the jumper cables. Only use standardised battery jumper cables. Only connect batteries of the same nominal voltage. Before giving starting aid, try to figure out the reason for the battery weakness. If the reason is a failure in the vehicle electrical system, starting aid should not be given. The battery or the electric system of the vehicle giving starting aid might become damaged. Always protect your eyes and hands from the battery.

**Performing a jumpstart:**

1. Switch off the ignition in both vehicles.
2. Connect the red jumper cable to the positive pole of the weak battery.
3. Connect the red jumper cable to the positive pole of the donor battery.
4. Connect the black jumper cable to the negative pole of the donor battery.
5. Connect the black jumper cable to a bare metal earth point (away from the battery) on the vehicle with the weak battery.

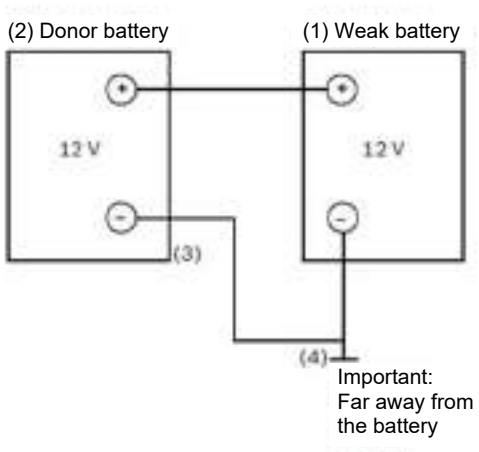

https://truckmanualshub.com/



6. Start the engine in the vehicle providing assistance, followed by the vehicle requiring assistance.
7. If the engine does not start after a maximum of 15 seconds, wait one minute before trying again.
8. Once the engine has started, let both engines idle for approximately 2 minutes before removing the cables.
9. Reverse the sequence of steps 1 to 5 when disconnecting the cables.

## 6.15 Hydraulic Oil System

**Note**

**Use of hydraulic oil that does not meet the required grade or temperature range may cause poor operation, reduced efficiency and/or damage to hydraulic components.**

**Combilift trucks are supplied with ISO Grade 46 hydraulic fluid unless otherwise stated. Refer to the decal on the hydraulic tank. Please check if the hydraulic fluid is suitable for the trucks operating temperature range.**

**Caution**

**Switch off the engine before working on the hydraulic system.**
**Wait until the engine and hydraulic tank are cool enough to touch before commencing work.**

**Note**

**Clean and dry the area around all components concerned thoroughly.**

**Observe safety regulations when handling oils and avoid skin contact.**

**Do not pour fluids into the ground, down a drain or into a stream, pond or lake. Observe relevant environmental protection regulations when disposing of used oil and filters.**

### 6.15.1 Hydraulic Oil Selection

The hydraulic oil used in the trucks hydraulic system must conform to **ISO 3448** viscosity classification grade and include additives for improved:

- Viscosity index
- Wear prevention
- Corrosion protection
- Stability against oxidation
- Deaerating and foam suppressing
- Compatibility with seals and gaskets
- Low pour point

https://truckmanualshub.com/



The oil must also have the correct temperature range for the operating temperature of the truck. If the operating temperature is outside the range of the standard grade 46 oil, the standard oil should be replaced with the appropriate grade of oil.

The correct grade of oil for the relevant operating temperature range can be determined using the following table:

| HYDRAULIC OIL TABLE | | | | |
|---|---|---|---|---|
| FLUID OPERATING TEMPERATURE RANGE | | -11°C to 66°C 12°F to 150°F | -4°C to 74°C 24°F to 166°F | 4°C to 89°C 39°F to 193°F |
| RECOMMENDED FLUIDS | Maxol Multivis | ISO GRADE 32 | ISO GRADE 46 | ISO GRADE 68 |
| | Castrol Hyspin AWH | | | |
| | BP Bartran HV | | | |
| | Mobil Univis N | | | |
| | Mobil DTE 10 Excel | | | |
| | Shell Tellus Oil T | | | |
| | Chevron Rando HDZ | | | |

## 6.15.2 Hydraulic Oil Filters

There are three oil filters in the hydraulic system. These are the:

- Suction Filter
- Return Filter
- Strainer Filter

### Suction Filter

The hydraulic oil suction filter is mounted on the rear of the hydraulic tank at the rear right hand corner of the truck.

The suction filter element must be replaced after the first 100 hours of operation and then at regular intervals in accordance with the maintenance schedule.

**To change the suction filter element:**

1. Stop the truck in a designated service area.
2. Extend the reach to allow access to the suction filter mounted on the right-hand side of the cabin.
3. Lower the forks fully and tilt the mast forward fully.
4. Turn the ignition key switch to the '**0**' off position, then remove the key.
5. Wait until the suction filter and the surrounding components are cool enough to touch, or wear heat resistant gloves before proceeding.

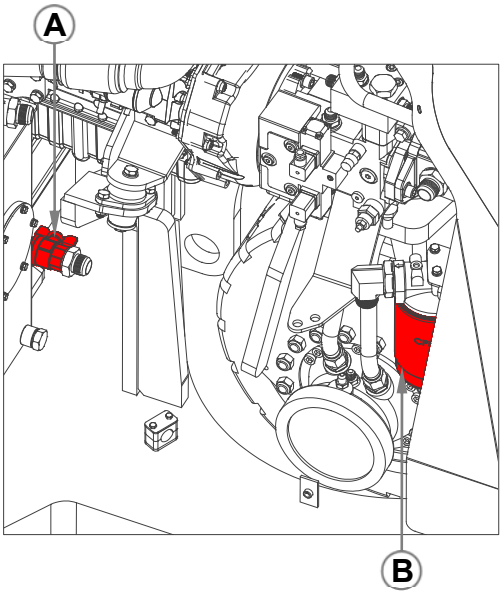

https://truckmanualshub.com/



6. Enter the area between the left-hand and right-hand platforms behind the mast. Ensure all surfaces are clean and dry and take great care to avoid slipping!
7. Close the shut-off valve (**A**) on the back of the hydraulic tank.
8. Clean the area around the suction filter (**B**) thoroughly before removing the used filter element to prevent any contamination from entering the hydraulic system.
9. Position a suitable container under the used filter element to collect any escaping oil.
10. Unscrew and remove the used filter element. Use a filter wrench if required.
11. Check the sealing surfaces and threads on the filter mount and on the new filter element and clean if necessary.
12. Apply a thin film of clean hydraulic oil to the O-ring on a new suction filter element.
13. Screw the new filter element on to the filter mount until it is hand tight only. DO NOT over tighten the filter element. Use a genuine OEM component.
14. Open the shut-off valve on the back of the hydraulic tank before starting the engine.
15. Start the engine and check around the suction filter for leaks. Repeat the check when the hydraulic oil has reached operating temperature.
16. Top up the hydraulic oil if necessary (*see section 5.6 'Checking Hydraulic Oil Level' on page 72*).
17. Dispose of waste oil and used filter elements in compliance with local regulations.
18. Clean up any oil spills immediately.

### Return Filter

The hydraulic oil return filter is mounted on the top of the hydraulic tank. It filters the oil as it is returned from the valve chest to the tank.

The return filter element must be replaced after the first 100 hours of operation and then at regular intervals in accordance with the maintenance schedule.

### To change the return filter element:

1. Stop the truck in a designated service area.
2. Lower the mast fully and tilt the mast forward fully.
3. Turn the ignition key switch to the '**0**' off position, then remove the key.
4. Ensure all parts concerned are cool enough to touch, otherwise wear heat resistant gloves before proceeding.
5. Clean and dry the return filter (**A**) and the surrounding area thoroughly to prevent any contamination from entering the hydraulic system.

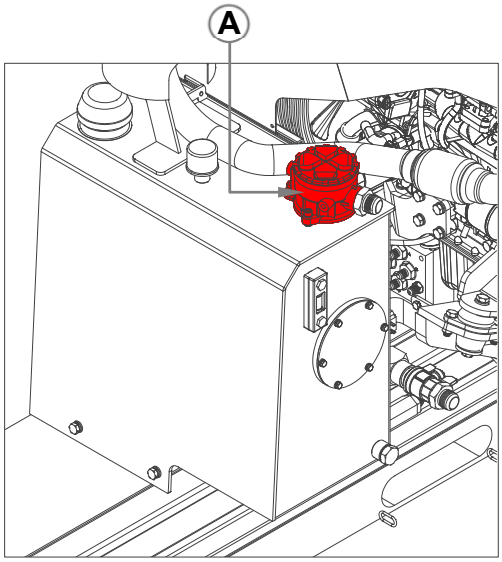

https://truckmanualshub.com/



6. Unscrew and remove the return filter cover (**B**).
7. Lift out the filter element (**C**) and bowl (**D**) using the handle on the filter element.
8. Remove the used filter element from the bowl.
9. Collect the used filter element and any escaping oil in a suitable container.
10. Apply a thin film of clean hydraulic oil to the O-ring on the bottom of a new filter element and fit into the bowl.
11. Check the condition of the bowl seal and replace if necessary (apply a thin film of clean hydraulic oil to a new seal before fitting).

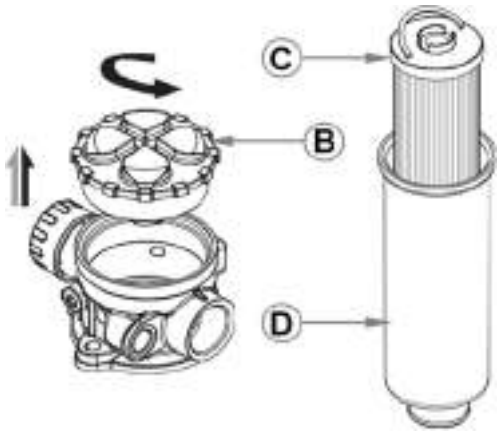


12. Insert the bowl into the housing.
13. Check the condition of the cover seal and replace if necessary (apply a thin film of clean hydraulic oil to a new seal before fitting).
14. Clean the filter cover if necessary then refit securely. Ensure that the spring is in place between the cover and the element.
15. Start the truck and check around the filter for leaks. Repeat the check when the truck has reached operating temperature.
16. Top up the hydraulic oil if necessary (*see section 5.6 'Checking Hydraulic Oil Level' on page 72*).
17. Dispose of waste oil and used filter elements in compliance with local regulations.
18. Clean up any oil spills immediately.

### 6.15.3 Hydraulic Oil & Strainer Filter

The hydraulic oil should be analysed regularly to determine its condition. If analysis of the hydraulic oil is not an option then it must be changed in accordance with the maintenance schedule. Only use oil of the correct specification and suitable grade for the ambient temperature range. The hydraulic oil and the strainer filter - located inside the hydraulic tank - must be changed simultaneously.

**Note**

**To achieve the correct hydraulic oil level, ensure that all cylinders are fully retracted where possible, then fill to half way up the sight glass on the hydraulic oil gauge. Otherwise the tank may be overfilled.**

*** Hydraulic Tank Capacity: 59 Litres / 62.3 quarts**

* *The hydraulic tank capacity given is to fill the tank to half way up the sight glass on the hydraulic oil gauge on the left hand side of the hydraulic tank.*

https://truckmanualshub.com/



**To change the hydraulic oil and strainer filter:**

1. Operate the truck for a period of time long enough for the oil in the system to become warm. This will help the oil to flow.
2. Stop the truck in a designated service area (ground must be level). Extend the mast reach to allow access to the left hand side of the hydraulic tank.
3. Lower the mast fully and tilt the mast forward fully.
4. Turn the ignition key switch to the '**0**' off position, then remove the key.
5. Ensure the hydraulic tank and oil are cool enough not to cause burns or wear heat resistant gloves before proceeding.
6. Unscrew and remove the filler cap (**A**) and place on a clean dry surface.
7. Position suitable containers for collecting the used oil on the ground to the right-hand side of the hydraulic tank. Use a fluid extractor to transfer the used oil from the hydraulic tank into the collection container(s). Remove the strainer from the filler neck and feed the suction pipe of the fluid extractor into the tank through the filler neck until it reaches the bottom of the tank.

**Or**

7. Position suitable containers for collecting the used oil below the oil drain plug (**B**). Unscrew the oil drain plug. Use a funnel with a flexible tube to channel the used oil into the collection containers. Allow the system time to drain completely. Refit the oil drain plug and tighten (fit a new seal if required).

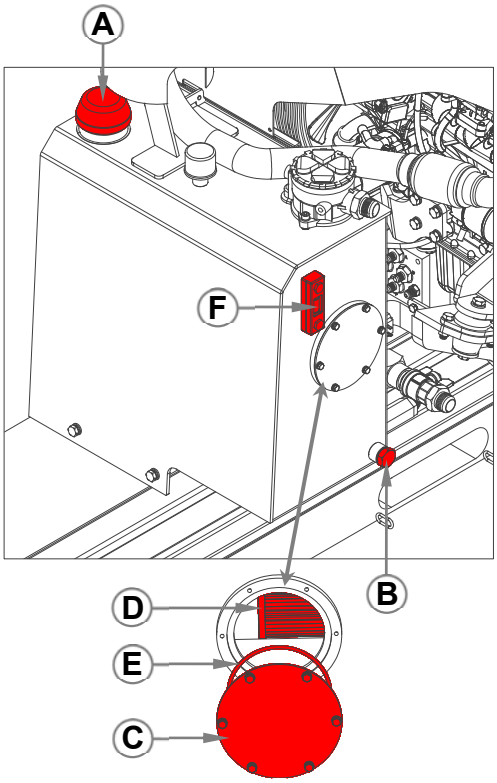


8. Enter the area between the left-hand and right-hand platforms behind the mast. Ensure all surfaces are clean and dry and take great care to avoid slipping!
9. Unbolt and remove the access panel (**C**) from the left hand side of the hydraulic tank and place on a clean dry surface.
10. Reach inside the tank, unscrew and remove the used strainer filter (**D**).
11. Extract any remaining oil and clean the bottom of the hydraulic tank through the opening.
12. Apply a little hydraulic sealant to the thread of a new strainer filter and fit the new filter securely inside the tank in place of the filter that was just removed. Use a genuine OEM component.
13. Inspect the tank access panel O-ring seal (**E**) and replace with a new seal if necessary.
14. Refit the access panel (**C**) securely. Remember to fit the O-ring seal correctly.
15. Clear the work area between the platforms, behind the mast of all waste and tools and exit the area. Take great care to avoid slipping.

https://truckmanualshub.com/



16. Half fill the tank with fresh, clean hydraulic oil then refit the filler cap securely.
17. Start the engine, raise the forks off the ground, retract the reach fully then lower the forks fully.
18. Turn the ignition key switch to the '**0**' off position, then remove the key.
19. Add hydraulic oil through the filler neck until the oil level is half way between the top and bottom of the sight glass (**F**). Refit the filler cap securely.
20. Clean up any oil spills immediately.
21. Operate the truck until the oil becomes warm then check the oil level.
22. Check around the drain plug (**B**) and the access panel (**C**) for oil leaks.
23. Dispose of waste oil and used filter elements in compliance with local regulations.
24. Clean up any oil spills immediately.

### Hydraulic Tank Breather

The hydraulic tank breather is mounted on the top of the hydraulic tank.

The hydraulic tank breather should be replaced at regular intervals in accordance with the maintenance schedule.

**To change the hydraulic tank breather:**

1. Stop the truck in a designated service area.
2. Lower the mast fully and tilt the mast forward fully.
3. Turn the ignition key switch to the '**0**' off position, then remove the key.
4. Clean the used breather (**A**) and the surrounding area thoroughly before removing the used breather.
5. Unscrew and remove the used breather from the top of the hydraulic tank.
6. Fit a new breather. Use a genuine OEM component.

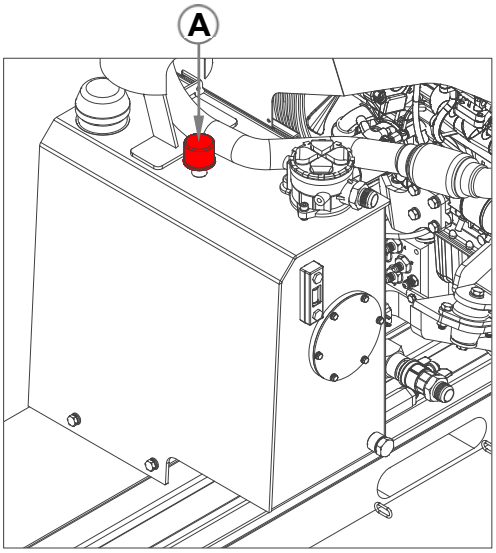

https://truckmanualshub.com/



## 6.16 Mast Maintenance

Perform checks on the mast as required by the Pre-Use checks and maintenance as required by the first 100 operating hours service and in accordance with the maintenance schedule. Details on how to perform the mast checks and maintenance are provided in this section.

**Warning**

**Never work on the mast with the forks in a raised position unless adequate supports are in place.**
**Block access to the lift truck control handles when working on the mast.**

### 6.16.1 Mast Channel Maintenance

Periodic lubrication of the mast channels is required to ensure maximum life span is achieved. All roller surfaces must be greased periodically where the fork carriage bearings and mast section bearings run. The frequency of this operation is at the discretion of the user and essentially depends upon the working conditions. A lubrication interval of 250 hours can be taken as a typical value under normal working conditions. For this purpose use graphite grease, avoid spray greases.

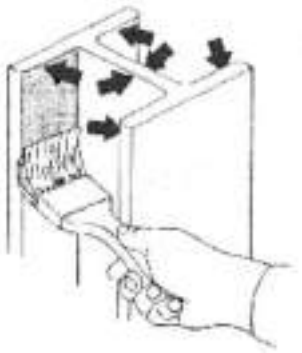

### 6.16.2 Fork Carriage With Hydraulic Fork Positioning Maintenance

Periodic lubrication of the fork carriage bars is required to ensure maximum life span is achieved. All surfaces where contact occurs between the forks and the fork bars must be greased periodically where the forks run. The frequency of this operation is at the discretion of the user and essentially depends upon the working conditions. A lubrication interval of 250 hours can be taken as a typical value under normal working conditions. For this purpose use graphite grease, avoid spray greases.

### 6.16.3 Mast Chain Maintenance

Regular inspection and lubrication of the chains will vastly increase their service life and reduce downtime. When performing chain maintenance, make sure to follow the guidelines in ‘Chain Inspection’, ‘Measuring Chain Stretch’, ‘Chain Lubrication’ and ‘Chain Adjustment’.

It is recommended that trucks used in arduous, harsh or aggressive environments such as marine, corrosive chemical, metal manufacturing or processing, cement/aggregate processing and brine processes (this list is not exhaustive) should have their mast chains and mast chain anchor pins replaced after a period not exceeding 4000 operating hours or two years, whichever is the shorter. Those operating in cold stores should be replaced after a period not exceeding 6000 hours or three years, whichever is the shorter. Additionally where the lifting mechanism uses a single leaf chain (e.g. free lift section), the leaf chain anchor bolts should also be replaced at the same time.

https://truckmanualshub.com/



## Chain Inspection

Inspect the chains for the following damage and defects:

| Symptom | Appearance | Probable cause | Correction |
|---|---|---|---|
| **Worn contour** | 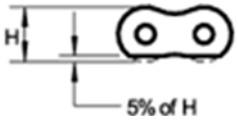 | Normal wear on sheave<br><br>Abnormal wear rubbing on guides | Replace leaf chain when 5% worn<br><br>Check Leaf chain alignment or increase clearance |
| **Worn surfaces on outer plates or pin heads** | 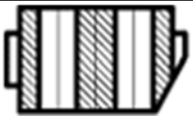 | Misalignment, rubbing on side flanges | Check leaf chain alignment and correct clearance as necessary |
| **Tight joints** | | Dirt or foreign substance packed in joints<br>or<br>corrosion or rust<br>or<br>bent pins | Clean & re-lubricate leaf chain<br><br>Replace leaf chain<br><br>Replace leaf chain |
| **Missing parts** | 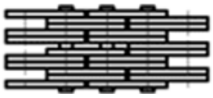 | Missing at original assembly | Replace leaf chain |
| **Abnormal protrusion or turned pins** | 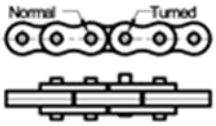 | Excessive internal friction caused by high loading and inadequate lubrication | Replace leaf chain, improve lubrication and eliminate overload conditions |
| **Cracked plates** (fatigue) | <br>Crack from aperture towards edge of linkplate at 90º to line of pull. Note there is no linkplate distortion. | Loading beyond chain's dynamic capacity (above fatigue endurance limit) | Replace chain with leaf chain of larger dynamic capacity or eliminate high load condition or dynamic (impulse) overloading |
| **Fractured plates (tension mode)** | <br>Note material distortion | High overload | Replace leaf chain and correct cause of overload |
| **Arc like cracked plates (stress corrosion)** | | Severe rusting or exposure to acidic or caustic medium, plus static pressure at press fit (between pin and pin linkplate). No cyclic stress is necessary for this phenomenon to occur. | Replace leaf chain and protect from hostile environment. |
| **Enlarged holes** | 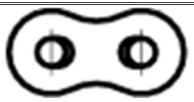 | High overload | Replace leaf chain and correct cause of overload |
| **Corrosion pitting** | | Exposure to corrosive environment | Replace leaf chain and protect from hostile environment. |
| **Worn leaf chain anchor bolt connecting pin** | | Normal wear | Replace worn leaf chain components and always when fitting new leaf chains |

https://truckmanualshub.com/



## Chain Lubrication

**Caution**

**The chains must be kept lubricated at all times.**

Running the chain dry will substantially shorten its life. Oil must be reapplied on a regular basis to ensure the chains maximum life is achieved.

The frequency of this operation is at the discretion of the user and essentially depends upon the working conditions and the workplace environment.

***Ensure that the chain is slack during the lubrication process so that the lubricant can flow between the chain link plates and pins.***

It is recommended that the lubricant used on the chains has the following properties:

- Satisfactory corrosion protection and lubrication
- Ability to penetrate through / under water
- Continuously viscous after application
- Good adhesion properties
- Layer thickness and protective film able to withstand later aggression (rain / hail etc.)

**The following lubricants (available in an aerosol can) are recommended:**

**Fuchs anticorit bw366**
**Molykote mkl-n**
**Kluber structovis bhd 75s**

Where chains are encased in dirt and dust the lubricant will be prevented from flowing to the vital load bearing contact areas of the chain between the link plates and pins.

It is essential with leaf chains that all dirt and debris is removed prior to lubrication.

### Recommended jet equipment cleaning method for leaf chain

The following method is recommended when the use of jet cleaning equipment cannot be avoided in **leaf chain maintenance**:

1. **Cleaning** - Clean the **leaf chain** using steam or hot water only. Absolutely no additives should be used.
2. **Compressed Air** - Immediately after cleaning the **leaf chain**, all water should be removed both from the surface and from inside the **chain** joints using high pressure compressed air. The articulating links of the **chain** should be moved several times during this process.
3. **Re-lubricating** – Make sure that the **chain** is slack and then spray with a preservative and lubricant. Articulate the **chain** several times so that the lubricant penetrates the **chain** joints.

https://truckmanualshub.com/



### Measuring Chain Stretch

Leaf chain failure is usually a result of gradual elongation as the chain wears. Measure the chain elongation with a chain wear gauge that displays the elongation of the chain as a percentage value. Follow the chain wear gauge instructions.

Chains should ideally be cleaned and measured in situ while placed under load. It is acceptable for the **chain** to be tensioned by the weight of the carriage and forks.

When checking a **chain** for wear it is vital that the section that passes over the pulley is measured as this section experiences the most wear during normal operation.

**Warning**

**If a chain has reached a level of 2% elongation, a safe time limit must be set for the chains to be replaced. If a chain has reached 3% elongation, it must be taken out of service immediately.**

- To check the free lift chains, raise the carriage 1ft (30 cm) off the ground to put tension on the chains.
- To check the main lift chains, raise the mast until the inner upright starts to rise putting tension on the chains.

### Adjusting for Chain Stretch

Chain elongation due to stretch (see ‘Measuring Chain Stretch’) can be compensated for by adjusting the chain anchors (**A**). However if the full length of the chain anchor is used up it will be necessary to remove a link.

The chain anchors are located on the fork carriage and also on the mast stages.

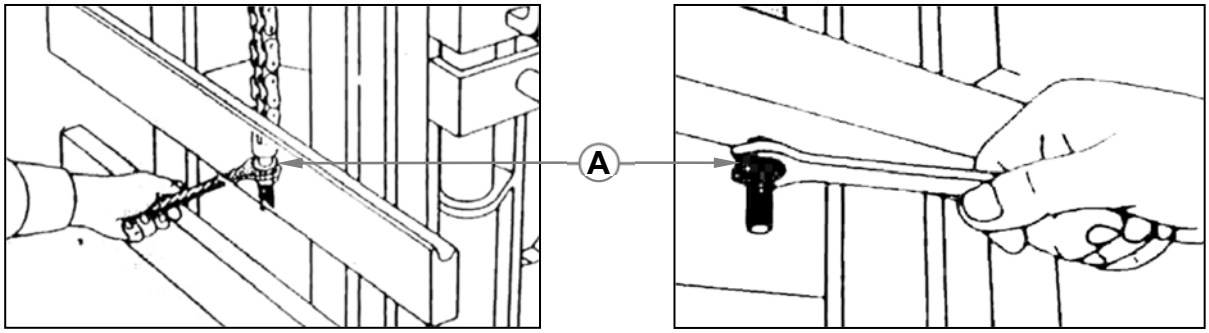


**Note**

**The truck must be parked on smooth level ground when adjusting the chains.**

https://truckmanualshub.com/



**Mast Chain Adjustment**

The chains connecting the mast stages must be adjusted in such a way as that the vertical mast channels are approximately flush with each other at the bottom and not in contact with the bottom plate when the mast is unloaded and fully lowered.

To adjust a mast stage, tighten or loosen the adjusting nut on one of the chain anchors to achieve the desired dimension. Adjust the opposite chain of the pair to achieve equal tension in the chains.

Raise the mast fully and check that a clearance of at least 1mm exists between the end of run stops ([**A**] and [**B**] in figure 6.16.1 and figure 6.16.2) on each of the mast stages.

**Fork Carriage Chain Adjustment**

The chains connecting the fork carriage to the mast stages must be adjusted so that the upper and lower end of run stops never make contact.

To set the clearance between the lower stop on the fork carriage (**A**) and the corresponding lower stop on the mast (**B**), remove the forks and lower the fork carriage fully. Adjust the chain anchors so that there is a clearance of approximately 5mm between the stops.

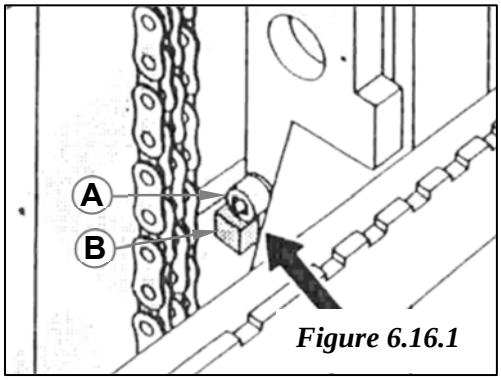

*Figure 6.16.1*

To set the clearance between the upper stop on the fork carriage (**A**) and the corresponding stop on the mast (**B**), remove the forks and raise the fork carriage fully. Adjust the chain anchors so that there is a clearance of approximately 1mm between the stops. When the forks and a load are present the clearance will increase to a desired value of approximately 5mm.

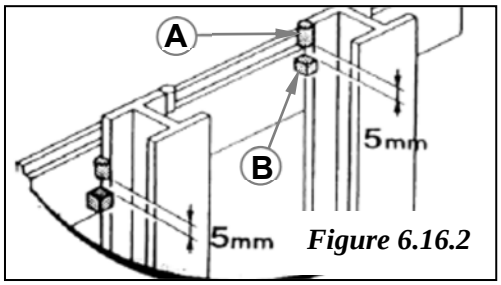

*Figure 6.16.2*

**Caution**

**If the lower stops are allowed to collide they will warp and the lower bearings on the mast carriage will come out of the mast channel.**

**If the upper stops are allowed to collide excessive forces will be placed on the chains and the free lift cylinder resulting in premature failure.**

https://truckmanualshub.com/



### Chain Tension Adjustment

The chains on the mast must be adjusted so that each chain acting as one of a pair is under equal tension to the opposite chain in the pair for proper load distribution and mast operation.

### Checking and Setting the Chain Tension

1. With the mast unloaded raise the sections to put the chains under tension.
2. Press the centre of a strand of chain with a suitable rod and then press at the same place on the opposite chain of the pair.
3. Each chain in a pair should have equal “give”.
4. If the tension is not equal, tighten the bolt on the anchor of the slack chain.
5. Test the tension again. Adjust until the tension is equal.

**Caution**

**Never place hands inside the mast to check chain tension.**

## 6.16.4 Mast Bearings

The bearings on the mast do not require periodic greasing. Check the mast bearings for cracks or flat areas on the surface and also check for restrictions to rolling. Replace if any of these are detected and try to eliminate the cause(s) of the failure.

### Principle Causes of Bearing Failure

**Insufficient Lubrication**

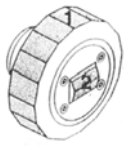

The rollers stop rolling and the external surfaces rub on the adjacent mast channel and start to wear causing flats on the surface.

**Shocks**

Violent frontal collisions during loading can cause bearings to fail.
The external surface will show cracks that cut the surface parallel to the rolling axis.

**Large Load Centre**

Another possible cause of breakage is the mounting of special equipment to handle loads with a very large load centre e.g. carpets, even if their weight is lower than the rated capacity.
This condition creates oscillations that cause the detachment of the external hardened surface of the bearing. In this case circumferential cracks will appear and will run completely around the roller.

**Note**

**The majority of bearings used on masts fitted to Combilift trucks are maintenance free, however a small number of masts utilise bearings that must be greased every 500 hours. Check the mast bearings for lubrication passages and grease with EP2 grease if applicable.**

https://truckmanualshub.com/



**Mast Bearing Wear Pads (If applicable)**

If the mast bearings are the type with integrated wear pads the wear pads must be checked every 500 hours and adjusted if necessary. Raise and lower the mast fully. Be on the lookout for kicking or sticking.

**Note**

**The truck must be parked on smooth level ground when checking and adjusting the mast bearing wear pads.**

To adjust the mast bearing wear pads:

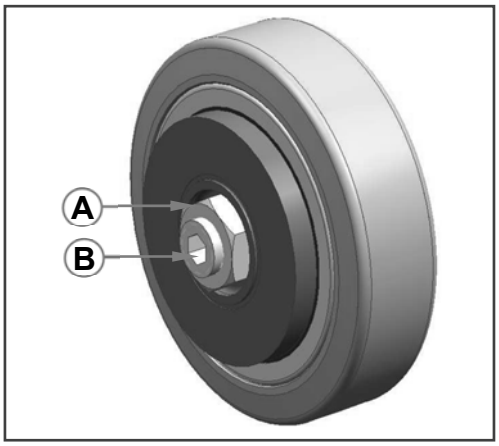


1. Turn the locking nut (**A**) anticlockwise a couple of turns to loosen.
2. Turn the adjusting screw (**B**) clockwise until the wear pad comes into contact with the adjacent mast channel.
3. Repeat steps 1 and 2 on the bearing directly opposite.
4. Turn the adjusting screw ¼ turn anticlockwise then tighten the locking nut.
5. Repeat step 4 on the bearing directly opposite.
6. Repeat steps 1-5 until the wear pads have been adjusted on all mast bearings

## 6.17 Cleaning & Greasing The Mast Carriage Channels

The mast carriage channels must be cleaned (if necessary) and greased (**only on the vertical (side) surfaces)** periodically where the wear pads run. The frequency of this operation is at the discretion of the user and essentially depends upon the working conditions and the workplace. A lubrication interval of about 250 hours can be taken as a typical value, under normal working conditions. For this purpose use EP2 grease.

https://truckmanualshub.com/



## 6.18 Mast Carriage Alignment / Wear Pad Adjustment Procedure

1. Check that the mast carriage cylinders are securely fastened. Check that the M24 castle nuts on the carriage cylinders are tight before commencing the mast carriage alignment/wear pad adjustment procedure.
2. Fully extend the mast carriage then bring it back in by approximately 50mm. Raise the mast until the bottoms of the forks are approximately 0.5m above head height. This allows access to the mast carriage wear pad locking nuts and adjustment bolts. Prop up the fork carriage using a suitable support to prevent it from dropping. Do not allow access to the machine controls while working under on the mast.

**Warning**

**Failure to support the fork carriage and block access to the fork controls while working under the mast could result in serious injury or death.**

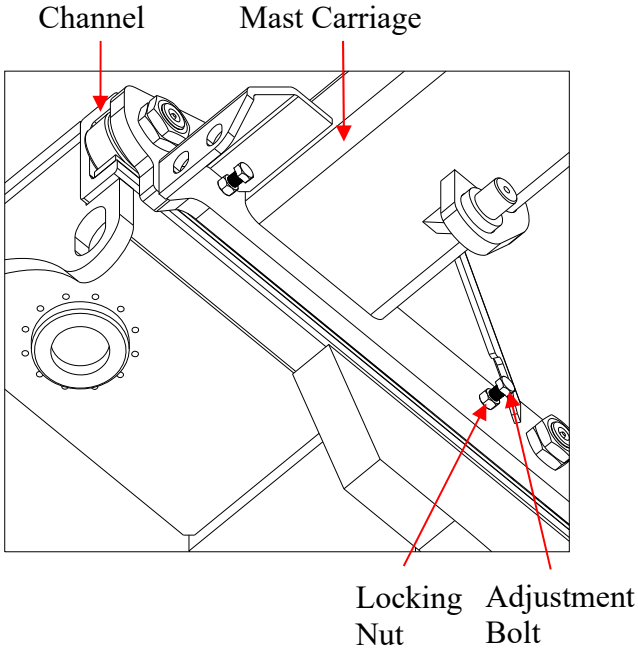


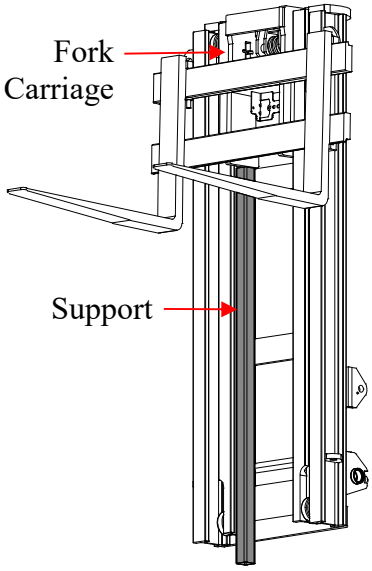


3. Loosen the locking nuts a couple of turns, then loosen the adjustment bolts a couple of turns. There are 4 wear pads on the mast carriage, 2 at the front and 2 at the back. Ensure that the nuts and bolts are loosened off at all 4 wear pads.

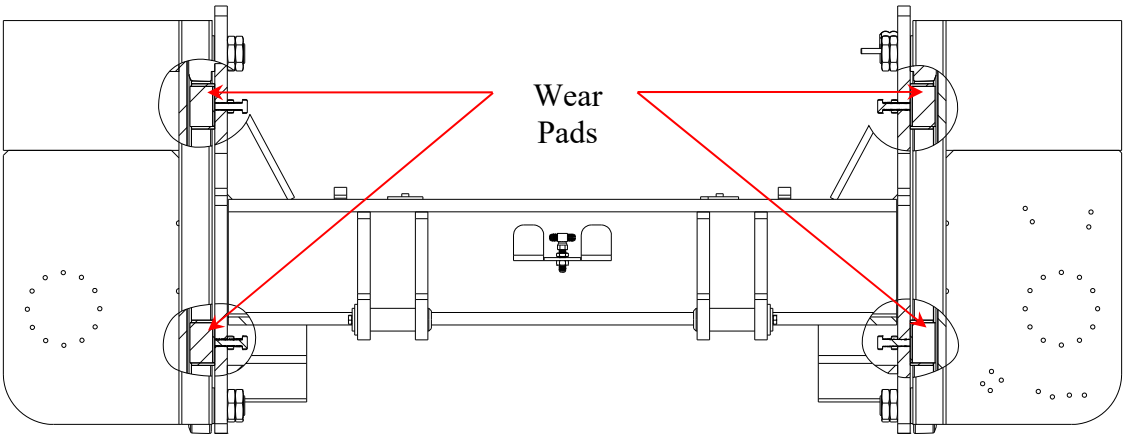

https://truckmanualshub.com/



4. Measure the distance **(x)** between the mast carriage side plate and the channel at the front of the machine on both sides of the truck. The distance **(x)** must be equal on both sides. Turn the front wear pad adjustment bolts clockwise to push the wear pads up against the channels. Adjust the wear pads until the distance (x) is equal on both sides.

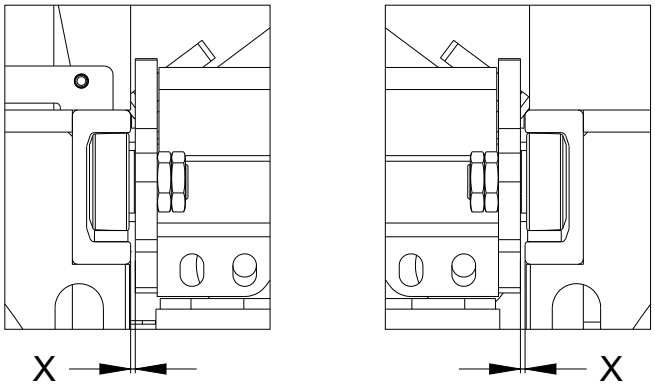


**Note**

**The wear pads must only be in light contact with the channels to allow the carriage to travel freely. Do not over tighten the adjustment bolts as the force between the wear pads and the channel will cause the carriage to stick. Maximum torque of the bolts should not exceed 25Nm (18.5ft.lb).**

5. Adjust the wear pads on the rear as described in point 4.
6. Check that the vertical faces of the channels where the wear pads run are clean and adequately lubricated. Operate the reach function to move the mast in and out several times through the full extent of its travel.
7. Check the torque of all the adjustment bolts. The torque must not exceed 25Nm (18.5ft.lb).
8. Tighten all the locking nuts up against the mast carriage side plates to lock the adjustment bolts in place. Use a spanner to prevent the adjustment bolts from turning while the locking nuts are being tightened.

## 6.19 Fork Maintenance

**Warning**

**Never operate the truck if the forks are damaged. If a defect is found in the forks or mounting components take the truck out of service until the fork is repaired or replaced. Report any fork damage to the relevant supervisor immediately. Failure to follow this warning can cause serious injury or death.**

Inspect the forks as required by the pre-use checks and the maintenance schedule. This section provides details on how to perform a complete fork inspection with the aim of detecting any damage, failure, deformation, etc., that may impair safe use. Any fork that bears such a defect must be removed from service.

https://truckmanualshub.com/



## Fork Overview

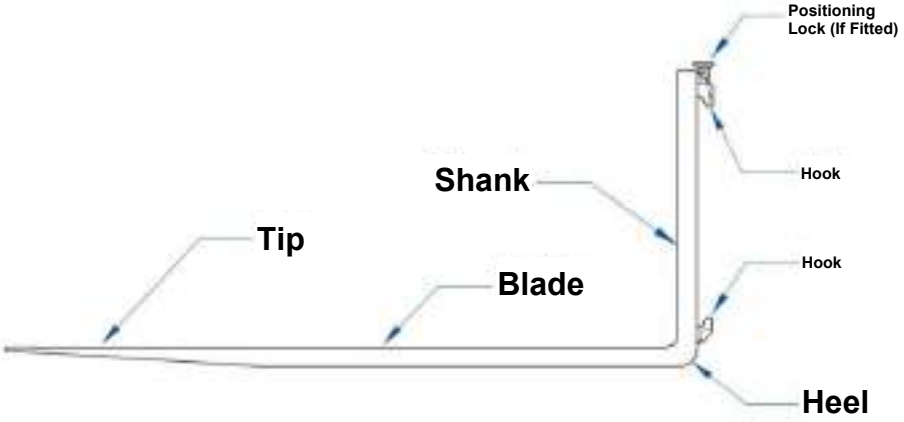


### Straightness of Blade and Shank

Check the straightness of the upper face of each blade and the front face of each shank. If the deviation from straightness exceeds 0.5% of the length of the blade and/or the height of the shank, respectively withdraw the fork from service.

### Cracks

Visually examine the forks for surface cracks. Pay special attention to:

- Fork heel
- Welds that attach mounting components to the fork blank

Forks with surface cracks should not be returned to service.

### Fork Angle

Check the angle between the front vertical face of each fork and the load face of each shank. If the deviation exceeds 3° from the original specification withdraw the fork from service.

### Difference in Height between Fork Tips

Check the difference in height between tips of the forks with the forks mounted on the fork carriage. If the difference in tip heights exceeds 3% of the length of the blade, the forks should be removed from service.

### Positioning Lock (If Applicable)

Check the positioning lock on each fork to make sure it functions properly. If any problems are noted, repair or replace the fork.
Forks on trucks with optional hydraulic fork positioning do not have positioning locks.

### Wear

Two different areas of the fork and fork attachment should be checked for wear.

- **Fork Blade and Shank** – Check each fork blade and shank for wear, pay special attention to the area surrounding the heel of the fork. If the thickness is reduced to 90% of the original thickness, remove the fork from service.

https://truckmanualshub.com/



- **Fork Hooks** – Check the support face of the top hook and the retaining faces of both hooks for wear, crushing, and other local deformations. If any of these deficiencies cause excessive clearance between the fork and the fork carriage, remove the fork from service.

**Fork Marking**

If the fork marking is not clearly legible, the fork manufacturer, or their representative should remark it.

**Repairing Forks**

If a fork needs to be repaired or replaced, return it to the manufacturer or other expert of equal competence who shall decide if it may be repaired or if it must be replaced with a new fork. Never try to repair surface cracks or wear by welding the fork. If you need to reset a fork, make sure it is subjected to an appropriate heat-treatment before it is returned to service.

**Load Testing Forks**

A fork that has undergone repairs - other than repair or replacement of the positioning lock or marking - must be load tested before it is returned to service. The test load must correspond to 2.5 times the rated capacity marked on the fork.

## 6.20 Air Conditioning (AC) System Maintenance (If Fitted)

The AC system is charged with approximately 0.85-0.95kg (1.87-2.1lbs) of R-134a refrigerant.

Use suitable equipment for recovery and recharging of the air conditioning system.

Only trained HVAC engineers may perform maintenance work on the AC system.

**Warning**

**Un-safe handling of refrigerant can result in frostbite when in contact with the skin or eyes.**

**Ensure the relevant personal protective equipment (PPE) is worn i.e. gloves, eye protection, clothing.**

https://truckmanualshub.com/



# Section 7: Technical

## 7.1 Checking the Charge Pressure

**Warning**

**Ensure that the engine is switched off until the pressure gauge has been attached securely.**

**To check the charge pressure:**

1. Stop the truck on a designated service area.
2. Extend the mast reach to allow access to the drive pump (**A**).
3. Release any residual pressure in the hydraulic system i.e. lower the mast fully and tilt the mast forward fully.
4. Turn the ignition key switch to the '**0**' off position, then remove the key.
5. Enter the area between the left-hand and right-hand platforms behind the mast. Ensure all surfaces are clean and dry and take great care to avoid slipping!
6. Ensure the hydraulic pumps are cool enough to touch before proceeding.

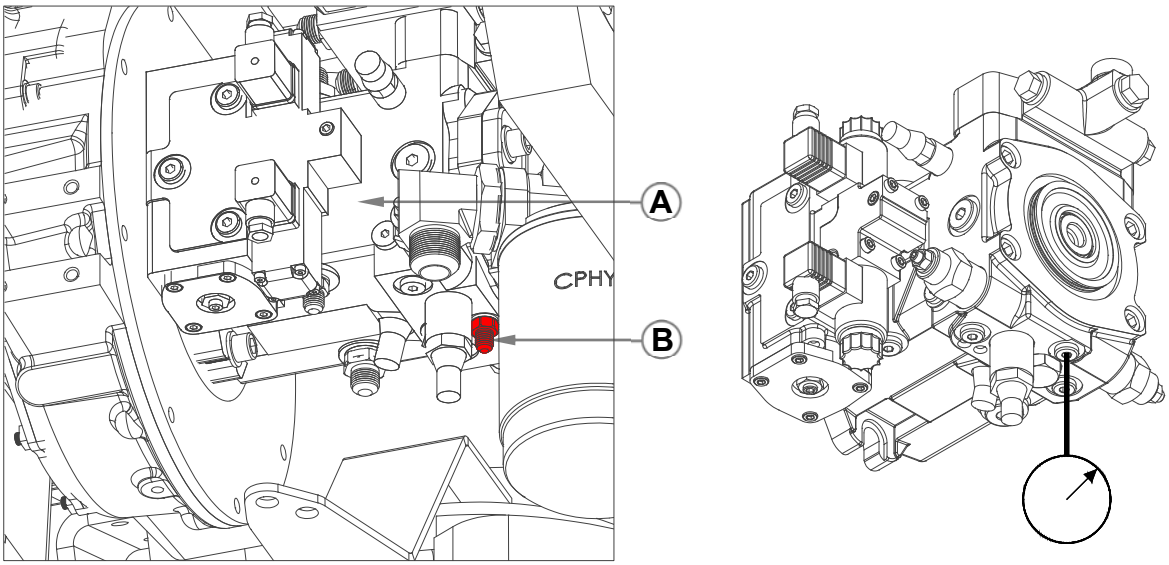


7. Clean and dry the area around port 'G' (**B**) thoroughly to prevent any contamination from entering the hydraulic system.
8. Unscrew and remove the hose end from port 'G' and seal the open end of the hose with a 9/16″ JIC male plug. **DO NOT** permit any contamination to enter the hydraulic system.
9. Collect any draining oil in a suitable container and dispose of in compliance with local regulations.
10. Unscrew and remove the hydraulic adapter from port 'G'.
11. Screw an M12 pressure gauge test point adapter in to port 'G' securely.
12. Attach a pressure gauge - ***capable of reading pressure up to 40 bar (580 PSI)*** – to the pressure gauge adapter.

https://truckmanualshub.com/



13. Start the engine and read the charge pressure from the gauge.
14. The pressure should read between **22 - 25 bar (320 - 362 PSI)** when the engine is idling.
15. Contact your local service representative or Combilift service if the charge pressure is outside the specified range.
16. Remove the gauge and refit the hydraulic adapter (ensure the adapter is clean and undamaged) and hose securely. Apply a suitable thread sealant to the threads on the adapter before refitting.
17. Clean up any oil spills immediately.

**Note**

**Port 'G' Thread Specification - M12x1.5 - 12mm deep**
**Max tightening torque 50Nm / 37ft.lb**

## 7.2 Valve Chest Pressure Settings

**Warning**

**Ensure that the engine is switched off until the pressure gauge has been attached.**
**Ensure there is adequate space and headroom to operate each of the hydraulic mast/fork functions through the full extent of their range.**

**To check the valve chest pressure settings:**

1. Park the truck in an area with adequate space and headroom to operate all mast functions through the full extent of their range.
2. Extend the reach to allow access to the pressure test point (**A**) on the valve chest.
3. Lower the mast fully and tilt the mast forward fully.
4. Turn the ignition key switch to the '**0**' off position, then remove the key.
5. Wait until all components in the vicinity of the test point are cool enough to touch or wear head resistant gloves before proceeding.

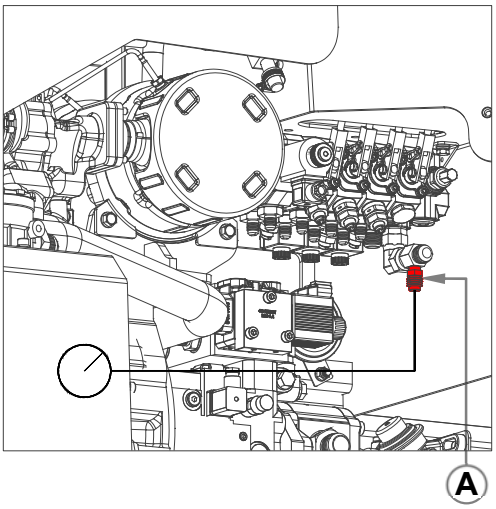


6. Enter the area between the left-hand and right-hand platforms behind the mast. Ensure all surfaces are clean and dry and take great care to avoid slipping!
7. Clean and dry the test point and the surrounding area thoroughly.

https://truckmanualshub.com/



8. Unscrew the cap from the test point and attach a pressure gauge - ***capable of reading pressure up to 300 bar (4400 PSI)***.
9. Exit the area between the left-hand and right-hand platforms behind the mast. Ensure all surfaces are clean and dry and take great care to avoid slipping!
10. Fully extend or retract the cylinder(s) of the function to be tested. For example when checking the tilt-back pressure the mast must be tilted back as far as it will go.
11. Press the accelerator pedal down fully and push/pull the lever on the section to be tested (in the example of testing the tilt back pressure the lever will be pulled back).
12. The reading on the pressure gauge indicates the pressure setting on one particular port on the valve chest.

**Example:** To check the lift pressure, raise the mast to full height. Press the accelerator pedal down fully and pull the lift lever back. The pressure gauge will display the setting on the lift port.

**Example:** To check the mast reach extend pressure, raise the forks off the ground then extend the mast reach out as far as it will go. Fully depress the accelerator pedal and push the reach lever forward. The pressure gauge will display the setting on the reach extend port.

The valve chest pressure readings should be in line with those given in the following tables.

| **Valve Chest Pressure Settings (Metric)** | | | |
|---|---|---|---|
| Model | | C2500 (kg) | C3000 (kg) |
| Main Relief Pressure | | 207 Bar | 221 Bar |
| Lift Pressure (Duplex) | | 193 Bar | 207 Bar |
| Lift Pressure (Triplex) | | 193 Bar | 207 Bar |
| Lift Pressure (Cascade) | | 221 Bar | 221 Bar |
| Tilt Pressure | Forward | 110 Bar | 110 Bar |
| | Back | 221 Bar | 221 Bar |
| Reach Pressure | | 166 Bar | 166 Bar |
| Side Shift Forks Pressure | | 166 Bar | 166 Bar |
| Fork Positioning Pressure | | 97 Bar | 97 Bar |
| Side Shift Forks & Fork Positioning Pressure | | 207 Bar | 207 Bar |
| Reach Forks Pressure | | 207 Bar | 207 Bar |
| Lift/Drop Forks Pressure | Up | 207 Bar | 207 Bar |
| | Down | 111 Bar | 111 Bar |

https://truckmanualshub.com/



| Valve Chest Pressure Settings (Imperial) | | | |
|---|---|---|---|
| Model | | C5000 (lbs) | C6000 (lbs) |
| Main Relief Pressure | | 3000 PSI | 3200 PSI |
| Lift Pressure (Duplex) | | 2800 PSI | 3000 PSI |
| Lift Pressure (Triplex) | | 2800 PSI | 3000 PSI |
| Lift Pressure (Cascade) | | 3200 PSI | 3200 PSI |
| Tilt Pressure | Forward | 1600 PSI | 1600 PSI |
| | Back | 3200 PSI | 3200 PSI |
| Mast Reach Pressure | | 2400 PSI | 2400 PSI |
| Side Shift Forks Pressure | | 2400 PSI | 2400 PSI |
| Fork Positioning Pressure | | 1400 PSI | 1400 PSI |
| Side Shift Forks & Fork Positioning Pressure | | 3000 PSI | 3000 PSI |
| Reach Forks Pressure | | 3000 PSI | 3000 PSI |
| Lift/Drop Forks Pressure | Up | 3000 PSI | 3000 PSI |
| | Down | 1600 PSI | 1600 PSI |

# Note

**The pressure values given in the tables above are to be used as a guideline only. The pressures may be set differently in the factory on occasion to suit different equipment and attachments.**

https://truckmanualshub.com/



## 7.3 Steering & Hydraulic Functions Circuit

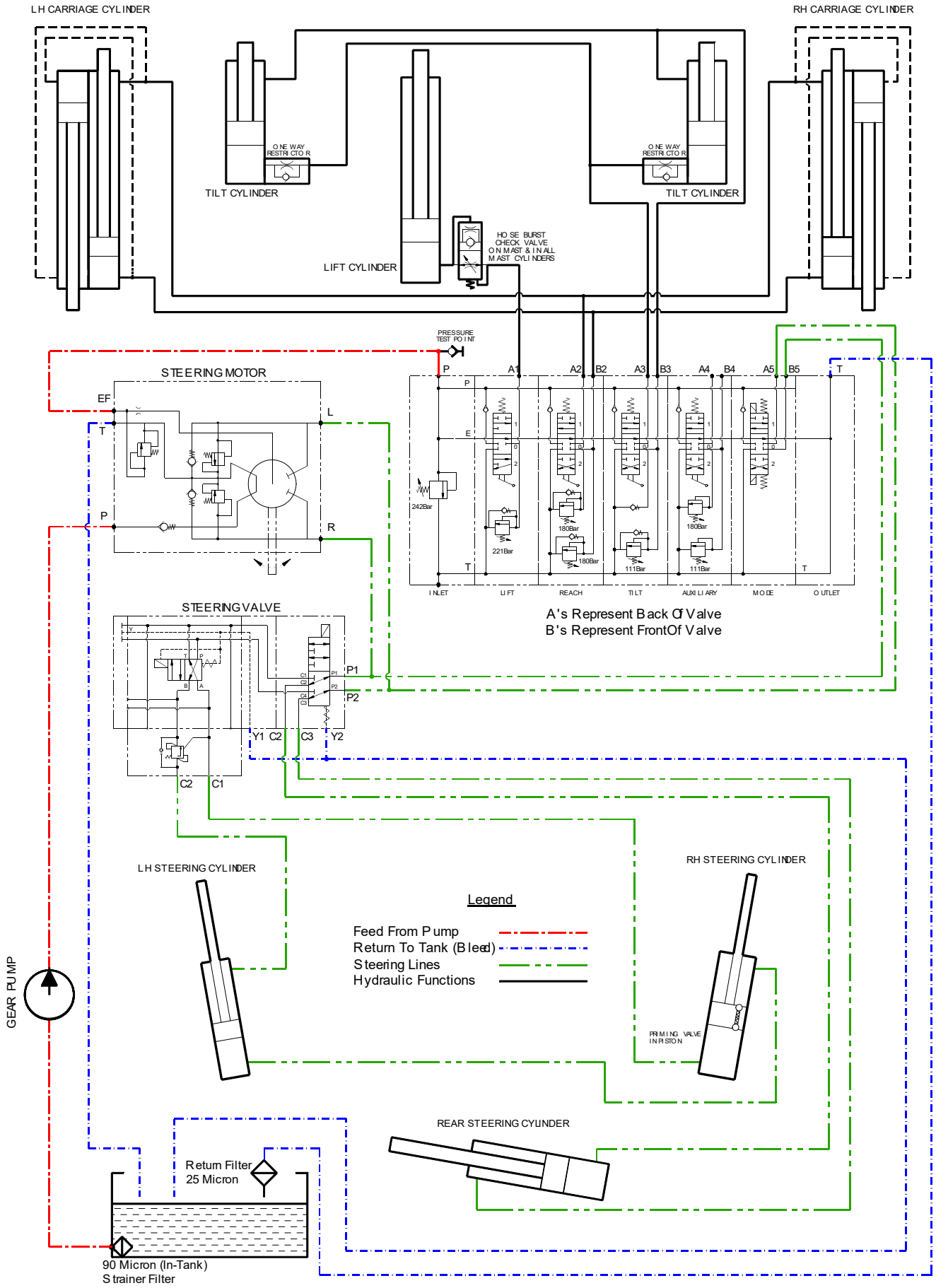

https://truckmanualshub.com/



## 7.4 Hydraulic Drive Circuit

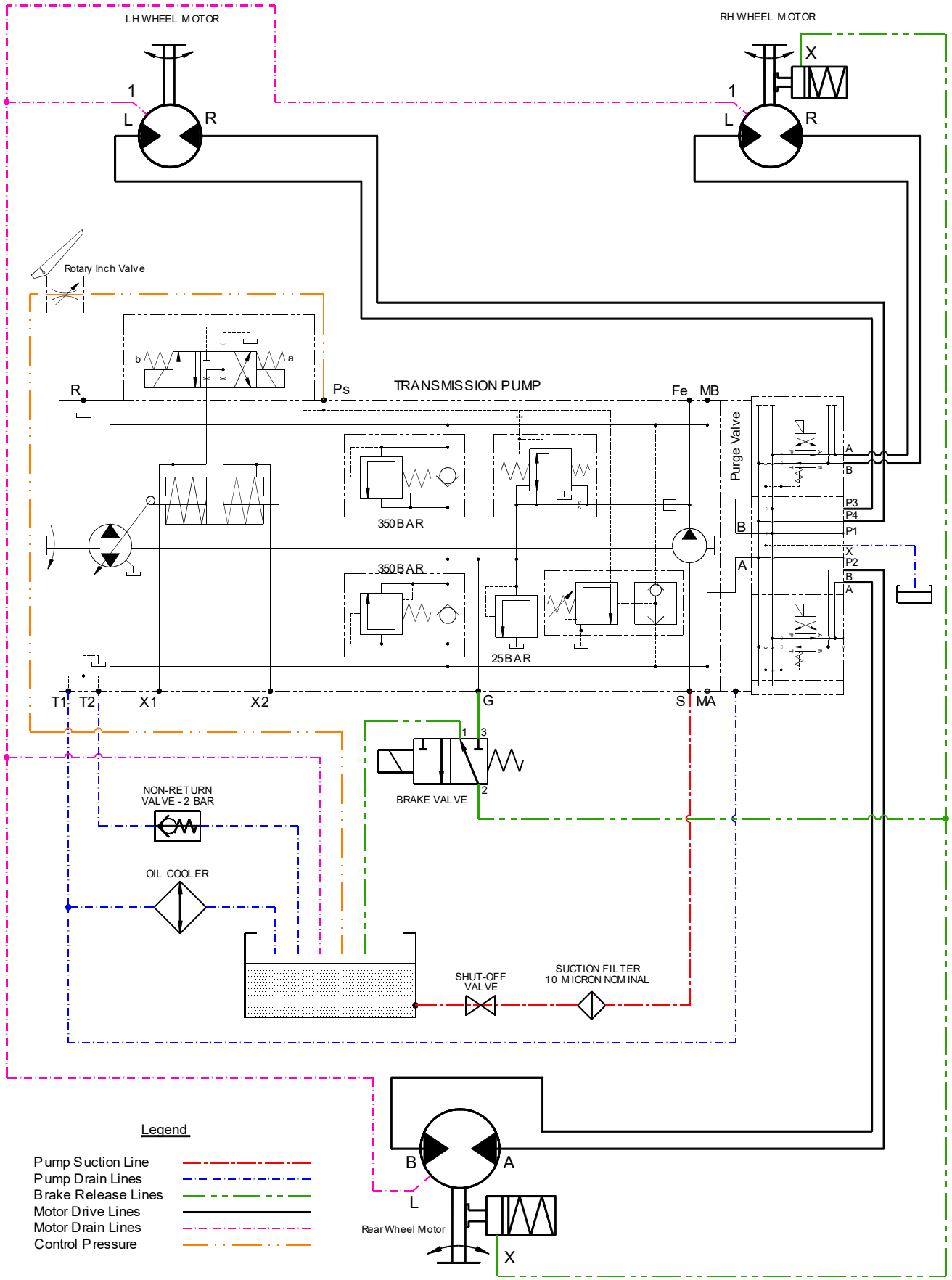

https://truckmanualshub.com/



## 7.5 Fuses

**Note**

**Turn the ignition key switch to the '0' off position and isolate the battery before working on the truck's electrical system.**

### 7.5.1 14-Way Fuse Box

The 14-way (ATO/regular blade fuse) fuse box is located on the dash to the right of the armrest *(see item 23 in figure 3.2 on page 28)*. Remove the cover from the fuse box to access the fuses.

The fuses are arranged in the order shown in the table to the right.

The fuses are numbered from 1 to 14 on the fuse box. The table below gives the rating of each fuse and the function related to each fuse in the 14-way fuse box.

| | | |
|---|---|---|
| Fuse 5 | | Fuse 10 |
| | Fuse 14 | |
| Fuse 4 | | Fuse 9 |
| | Fuse 13 | |
| Fuse 3 | | Fuse 8 |
| | Fuse 12 | |
| Fuse 2 | | Fuse 7 |
| | Fuse 11 | |
| Fuse 1 | | Fuse 6 |

**14-Way ATO/Regular Blade Fuse Table**

| Fuse | Amps | Circuit |
|---|---|---|
| 1 | 7.5 | Mast Raised Drive Cut-Out Override, Low LPG Warning Buzzer, Display Console & Programming Port, Engine ECU Enable |
| 2 | 7.5 | Four-Way Direction Switch, Neutral Relay Pin 86, Starter Relay Pin 86, LPG Engine MIL (malfunction indicator light) |
| 3 | 7.5 | 6-Way Auxiliary Fuse Box Relay |
| 4 | 20 | Steering 6-Port Diverter Valve Solenoid Supply |
| 5 | 7.5 | Push Button Brake Switch, Inch Brake Pedal Brake Switch, Brake Lights (If Fitted) |
| 6 | 15 | Wiper Motor(s) |
| 7 | 7.5 | Work Lights Relay |
| 8 | 15 | Cabin Auxiliary Hydraulic Function Solenoids |
| 9 | 10 | Cabin Heater Fan, Cabin Heating Valve Switch, Cabin Cooling Fan, Optional Radio |
| 10 | 7.5 | Horn |
| 11 | 7.5 | Proximity Switch Supply |
| 12 | 7.5 | Seat Switch, Seat Belt Switch (If Fitted), Joystick/Lever Buttons (If Fitted), Air Seat Relay Pin 86 (If Fitted) |
| 13 | 7.5 | Flashing Beacon |
| 14 | 10 | 12v Dash Plug Supply (If Fitted), Extra Oil Cooler Relay Pin 86 (If Fitted), Air Conditioning Relay Pin 86 (If Fitted) |

https://truckmanualshub.com/



### 7.5.2 Power Distribution Module (PDM) Fuses

The power distribution module (PDM) is mounted behind the large access panel on the right hand side of the truck. Remove the access panel (**A**) to gain access to the PDM (**B**).

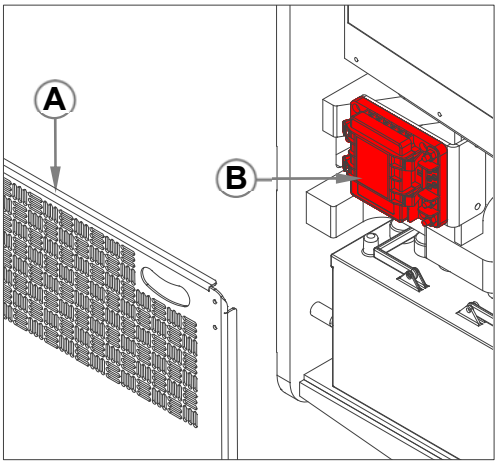


The PDM can hold four midi link fuses and six ATO/regular blade fuses. Remove the cover from the PDM to access the fuses.

The midi link fuses are numbered from 1 to 4 and the ATO/regular blade fuses are lettered from A to F.

The table below gives the rating of and the function related to each of the midi link fuses located inside the PDM.

| PDM Midi Link Fuse Table | | |
|---|---|---|
| Fuse | Amps | Circuit |
| 1 | 60 | Main Fuse - Ignition Key Switch Supply |
| 2 | 60 | Glow Heater Relay (Diesel Only) |
| 3 | 30 | Engine ECU Supply |
| 4 | 30 | Extra Oil Cooler With Electric Fan (If Fitted) |

The table below gives the rating of and function related to each of the ATO/regular blade fuses located inside the PDM.

| PDM ATO/Regular Blade Fuse Table | | |
|---|---|---|
| Fuse | Amps | Circuit |
| A | 15 | Supply To CR2532 PLC ST 1 – Steering Solenoids, Brake Solenoid, Reversing Bleeper |
| B | 15 | Supply To CR2532 PLC ST 19 – Drive Solenoid, Forward Solenoid, Reverse Solenoid, Dead Band Solenoid |
| C | 15 | Supply To CR2532 PLC EX 1 – Work Lights, Road Lights (If Fitted) |
| D | 15 | Supply To CR2532 PLC EX 19 – Valve Chest Locking Valve Solenoids, Auxiliary Hydraulic Function Solenoids (If Fitted), |
| E | 20 | Supply To Fuel Pump Relay Pin 30 (Diesel Only) |
| F | 15 | Supply Air Seat Relay (If Fitted) Pin 30 |

https://truckmanualshub.com/



### 7.5.3 Inline Fuses

There may be some ATO/regular blade fuses located inside the control panel. Remove the cover panel from the dash to access the inline fuses. The table below gives the rating of and function related to each of the inline fuses.

| Inline Midi Blade Fuse Table | | |
|---|---|---|
| Fuse | Amps | Function |
| Inline | 7.5 | Radio Memory Supply |

## 7.6 Relays

The relays are mounted inside the dash box and can be accessed by removing the dash cover panel.

The following table gives the function related to each of the relays fitted as standard.

| Relay | Function |
|---|---|
| 1 | Starter |
| 1a or 15 | Neutral Cut-Off |
| 2 (Diesel Only) | Glow Plug Timer Relay |
| 9 | 6-Port Valve (Steering) Solenoid Supply |
| M | ECU Allow |
| FPR | Fuel Pump Relay |

The following table gives the function related to relays that are fitted for common optional extras.

| Relays For Optional Extras | Function |
|---|---|
| 23 | Indicators - road lights |
| 26 | Brake - road lights |
| 32 | Auxiliary Hydraulic Function Solenoid |
| 32a | Auxiliary Hydraulic Function Solenoid |
| 32b | Auxiliary Hydraulic Function Solenoid |
| 34/OC | Extra Oil Cooler |
| 37 | Mast Retract Slowdown |
| 45 | Air Seat |
| CO | High Engine Temperature Cut-Out |

**Note**

**Some trucks may have additional relays that are not listed above. Please Contact Combilift and quote the truck serial number for information on the function related to any relay that have not been listed.**

https://truckmanualshub.com/



# Section 8: Appendices

## 8.1 Pre-Use Check Sheet

https://truckmanualshub.com/

# 8.1 Pre-Use Check Sheet

COMBiLiFT
LiFTING INNOVATION

**Model:**_____ **Serial Number:**_____

| CHECK ITEMS | | ✓ OK | X DEFECTIVE |
|---|---|---|---|
| **Visual Checks** | | | |
| **General:** | No damage, No loose or missing nuts or bolts, No leaking fluids, No excessive dirt or rust. Previous defects repaired. | ☐ | |
| **Mast** – **Channels:** | No damage or distortion. No excessive wear, scoring, dirt or foreign bodies in the channels. End stops secure. | ☐ | |
| **Mast** – **Chains:** | No damage, excessive wear or stretching. All links and pins in place. Equal tension, adequate lubrication. | ☐ | |
| **Mast** – **Rollers:** | No uneven wear or incorrect tracking. | ☐ | |
| **Reach Carriage** | No damage, excessive wear, deformation or cracks of weld assembly or bearings. End stop bolts present and secure. | ☐ | |
| **Fork Carriage:** | No damage, excessive wear, deformation or cracks. Square to mast and lubricated. End stop bolts present and secure. | ☐ | |
| **Forks:** | Correctly positioned. Not damaged, cracked, bent or excessively worn. Pins secure, not worn, loose or bent. | ☐ | |
| **Tyres:** | No damage, no excessive wear, cracks or cuts. No embedded foreign objects. No separation from rims. | ☐ | |
| **Wheels:** | No damage, excessive rust, cracks or debris. All nuts present and secure. | ☐ | |
| **Access:** | Steps and grab handles secure, clean and in good condition. | ☐ | |
| **Hydraulic Hoses:** | Routed correctly. No kinks or wear. Check all seals and couplings for damage, wear and leaks. | ☐ | |
| **Oil Cooler:** | No build-up of dust or debris around the fan or on the fins. | ☐ | |
| **Hydraulic Tank:** | No damage or leaks. Oil level (lower forks fully before checking). | ☐ | |
| **Operator's Cabin:** | Secure, clean, undamaged, no loose items. | ☐ | |
| **Battery:** | All connections secure, no damage, leaks or corrosion. | ☐ | |
| **Front Wheel Alignment:** | In standard drive mode check the front wheels are aligned parallel to the platforms and to each other. | ☐ | |
| **Lights, Windows, Mirrors:** | Clean and in good condition. | ☐ | |
| **Fire Extinguisher (if fitted):** | Secure and charged. | ☐ | |
| **Instruments & Indicators:** | All instruments & warning lights operating correctly. No warning lights illuminated when engine is running | ☐ | |
| **Electrical Connections/Terminals:** | All connections secure and undamaged, no melting or blackening, no loose or bare wires. | ☐ | |
| **Serial Plate, Capacity Chart & Safety Decals:** | Present, secure and easily legible. | ☐ | |
| **Engine Related Checks** | | | |
| **Fluids:** | Oil, fuel and coolant levels within normal range. No leaking fluids from the engine. | ☐ | |
| **Radiator:** | No build-up of dust or debris around the fan or on the fins. | ☐ | |
| **Belts:** | In good condition, no damage, wear or fraying. | ☐ | |
| **Exhaust:** | No damage or corrosion. No excessive smoke or noise. No sparks or flames. | ☐ | |
| **Engine Compartment:** | No build-up of debris or fluids, no combustible materials near engine. | ☐ | |
| **Fuel Tank & Hoses:** | No damage, wear, deterioration or corrosion, no leaking fuel. Tank cap present and secure. | ☐ | |
| **Diesel Filter Water Trap:** | Check the contents of the water trap and empty if required. Empty immediately if the warning system is activated. | ☐ | |
| **Air Filter System:** | Squeeze dust unloader valve to clear any dust. Check hoses and connections for cracks and loose clamps. | ☐ | |
| **Operational Checks** | | | |
| **Seat & Seat Belt:** | In good condition, secure, properly adjusted, in good working order. | ☐ | |
| **Ignition & Electrical System:** | All buttons and controls working correctly. All warning and indicator lights working. | ☐ | |
| **Horn & Reversing Alarm:** | Working properly. Sufficiently audible. | ☐ | |
| **Lights:** | In good working order. | ☐ | |
| **Engine:** | Starts easily and runs smoothly. No unusual sounds or smells. | ☐ | |
| **Mast/Fork Hydraulic Functions:** | Lift/lower, Tilt, Side Shift, Fork Positioning, Aux. - Working smoothly through the full range of movement. | ☐ | |
| **Brakes (Inch & Park):** | Working correctly. | ☐ | |
| **Drive & Mode Change:** | Drive operating smoothly in the correct direction. Wheels align correctly and change direction smoothly. | ☐ | |
| **Steering:** | Working correctly with no excessive play or restriction in either travel mode. | ☐ | |

**Defect Details:**

Operator's Signature: _____ Date: _____

Manager's / Supervisor's Signature: _____ Date: _____