https://truckmanualshub.com/

AR 640

OPERATING WEIGHT	ENGINE OUTPUT	SHOVEL CAPACITY
13,500 - 14,200 kg	**129 kW (173 HP)**	**2.5 - 3.0 m³**

weycor
BY ATLAS WEYHAUSEN

https://truckmanualshub.com/

“

WE’VE TAKEN IT TO THE LIMIT AND WE’VE THOUGHT OUTSIDE THE USUAL BOUNDARIES – AND DONE BUSINESS BEYOND THEM.

Artur Gabriel, Head of Design & Development on the AR 640

https://truckmanualshub.com/

07

TYPICAL WEYCOR!
The flexibility of a medium-sized enterprise and an outstanding team spirit combine to produce stellar results.

09

THE FIRST IMPRESSION
The AR 640 in impressive figures.

12

XXL EQUIPMENT
Six arguments that make our new wheel loaders unique.

14

LIMITLESS
The AR 640 feels at home everywhere, in earthworks and civil engineering, materials handling or extraction.

18

GREAT VIEW
360° all-round view and modern ergonomics to ensure comfort and precision while on the job.

22

BETTER EQUIPPED
The highlights of the AR 640 are impressive!

24

INNOVATIVE!
Powerful hydraulics and the latest control technology for work efficiency.

26

MORE FROM LESS
Best engine performance with low fuel consumption.

28

NUMBERS AND FIGURES
All technical specifications and important data at a glance.

https://truckmanualshub.com/

QUALITY AND RELIABILITY. EVEN IN THE XXL SERIES.

The exceptional flexibility of a medium-sized company and the outstanding team spirit which binds our employees as well as our dealers guarantee a high performance potential for our products. "Short and sweet", just how we like it in northern Germany: our organisation is clearly structured, our dealers are involved in our ideas, and decisions get made very quickly.

What's more, the opinions of our customers were also very important to us during the development process and had a positive influence on our decisions. The results are impressive: an XXL construction machine that meets the highest requirements in various application areas. The AR 640 – the new power class from Atlas Weyhausen.

1971

Launch of wheel loader production in Wildeshausen

AR 70 is the very first wheel loader to be produced in Wildeshausen in 1971. The identifier "AR" stands for "ATLAS Radlader (wheel loaders)" and has been used by customers and dealers as part of the naming process ever since.

1975

First wheel loader with hydrostatic drive

Hydrostatic – the new drive concept – replaces the manual gearbox. Atlas Weyhausen hydrostatic technology becomes, in compact models, the optimal type of drive when the continuous adjustment of wheel loader speed is required.

1998

New wheel loader concept

Rethinking wheel loaders: with a new design characterised by rounded shapes, the best all-round vision and ergonomic aspects. Atlas Weyhausen was already getting ready for the future!

2005

Compaction equipment from Wildeshausen

Compaction equipment demand grows all around the world. Therefore, Atlas Weyhausen introduces a new range of soil and asphalt rollers in Europe. Equipments are robust and powerful; designed for low service.

2013

Wheel loaders of the e-generation

The new wheel loader generation with the suffix "e" fulfils all the requirements of the stricter emission guidelines – and even surpasses them! In addition, all e-models enjoy a significant increase in performance.

2016

weycor by Atlas Weyhausen // New XXL wheel loaders

From the ATLAS brand comes weycor. The products from Wildeshausen now have a new brand name. Nothing else has changed!

Atlas Weyhausen revealed the AR 660 for the first time at the bauma 2016. The series was launched in April 2017.

https://truckmanualshub.com/

FIRST IMPRESSIONS COUNT!

We think the weycor XXL wheel loader is great. But the AR 640 is on a whole other level! With the AR 640, you get a power class that offers plenty for every application worldwide. It is tailor-made in every detail for your driver's comfort and work. On top of all this, the engine is extremely strong, leading-edge, environmentally friendly and impressively economical in its consumption.

13,500(1) KG
OPERATING WEIGHT

129(2) KW (173 HP)
ENGINE OUTPUT

2.5 M^3
SHOVEL CAPACITY

Dimensions

Operating weight	**13,500 kg**
Engine output	**129.0 kW**
Model	**Deutz diesel engine**
Design	**water-cooled**
Max. torque	**750 Nm**
Cubic capacity	**6,057 cm^3**
Number of cylinders	**6 in line**
Operating voltage	**24 V**
Fuel capacity	**250 litres**

Specifications

Turning radius around shovel edge	**5,497 mm**
Breakout force	**8,000 daN**
Thrust	**9,900 daN**
Tipping load extended	**9,117 kg**
Tipping load bent	**7,968 kg**
Average sound power level L_wA(3)	**100.0 dB(A)**
Guaranteed sound power level L_wA(3)	**101.0 dB(A)**
Sound pressure level L_pA(4)	**69.0 dB(A)**
Vibration values hand/arm/whole body vibration(5)	**< 2.5/0.5 m/s^2**

(3) According to 2000/14/EC and Annexes. (4) According to ISO 6396. (5) According to ISO 8041.

Important Information on Shovel Size / Shovel Contents:

The details contained in this brochure relate solely to the weycor shovels referred to in the respective data sheet, with the associated technical parameters and configurations on which the respective CE approval for the device is based. The volume of the specific usable shovel depends on the material-specific bulk weights (t/m^3) of the shovel contents, which you can take as approximations from the data sheet's TABLE OF SPECIFIC WEIGHTS IN t/m^3. Regardless of this, neither the wheel loader's permissible working weight nor its permissible tipping loads may be exceeded. If the wheel loader is equipped with shovels that are not manufactured and licenced by Atlas Weyhausen GmbH, the buyer and / or the operator is solely responsible for compliance with the relevant statutory regulations and licensing requirements – particularly those relating to road-traffic and road-traffic-licensing law.

(1) Service weight may vary with different equipment.
(2) Power output ISO 14396, exhaust gas aftertreatment according to EU 2016/1628.
All technical data refer exclusively to the standard unit.

https://truckmanualshub.com/

https://truckmanualshub.com/

AN XXL SIZE WITH XXL EQUIPMENT

1

100 % electrically-operated differential lock in front and rear axles

Powerful propulsion and high traction when needed. Wear on tyres is reduced.

2

Work cabin – with maximum all-round visibility

The curved front windscreen, the uninterrupted side window to the right with flush sliding window and the recessed rear windscreen provide an extraordinary all-round view.

The modern ergonomics of the driver's seat and the optimal accessibility of both the display controller and joystick eliminate work fatigue.

3

Most powerful engine and best power to weight ratio in its class

Sensitively tuned 2-stage drive and unique balance between thrust and lifting power. 129 kW (175 HP) offer significant power reserves.

4

Adjustable pulling force limit with 100 % kick-down function – for more power

Adjust the traction force to any substrate via the weycor controller – and go full power at any time using the weycor joystick by pressing the button for maximum push/pull.

5

Separate inch pedal and the drive pedal function – for greater sensitivity

Typical for weycor wheel loaders is the separate inch pedal for the sensitive distribution of thrust and lifting forces. The use of the accelerator as the drive pedal is just as practical. When using the hand throttle, the engine speed is kept constant, however the angle in the drive pump is variable, so the thrust can be finely regulated.

6

Extremely compact dimensions and low profile – for excellent visibility

The total height of an AR 640 with the standard tyre is 3.25 m. The compact design is a continuation of the style from the compact wheel loader series with excellent visibility.

https://truckmanualshub.com/

APPLICATION WITHOUT LIMITS

The AR 640 – the "Swiss army knife" of wheel loaders. There are no limits to our new workhorse, from the sandpits to industrial or agricultural use. A mighty engine provides a powerful drive with optimum traction, while the proven and robust weycor kinematics ensure high breakout forces and excellent lifting heights. With the appropriate accessory tool, the AR 640 is at home anywhere.

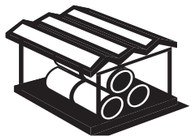

CIVIL ENGINEERING AND EARTHWORK

Loading shovel

For earthmoving work and transporting all kinds of bulk materials.

MATERIALS HANDLING

Light cargo shovel

Large volume shovel with or without teeth – depending on the density of the material.

EXTRACTION

Heavy duty shovel

Suitable for heavy cargo and earthwork, generally in a reinforced construction and with wear-resistant shovel blade.

RECYCLING

Shovel with hold-down device

A hydraulic hold-down device is used to secure loose or bulky material in the shovel.

AGRICULTURE AND BIOGAS

Agricultural attachments

Whether you need a bulk material shovel, high-tipping shovel, green forage fork or silo removal technology – versatility is a must in agriculture.

FORESTRY

Logging fork

Suitable for loading logs and timber, generally in a fork or hook design.

https://truckmanualshub.com/

https://truckmanualshub.com/

GREAT VIEWS FROM THE CABIN

The cabin in the AR 640 is a completely new experience.
We ensure a low sound level and a high level of safety as standard.

We also place great importance in optimal 360-degree all-round visibility, so the driver of the AR 640 can always keep their eyes firmly on their work environment.

The display and control elements also provide a good overview: Following an extensive visual field analysis, we ensured the optimal placement of all switches in the cabin, while keeping the display tidy and reduced to the essentials.
The cabin interior is rounded off with a well thought-out ventilation system and ergonomic design. The perfect atmosphere for work!

All-round visibility
The curved front windshield, the uninterrupted side window to the right with flush sliding window and the recessed rear windscreen provide an extraordinary all-round view – for precise work.

Narrow steering column
The steering column occupies only a third of the entire front and ensures seamless control of the shovel movements.

High safety
In addition to the specifications for ROPS, all FOPS Level 2 safety precautions were also included in the construction of the cabin – for maximum safety.

Low sound level
Thanks to good insulation, we have managed to achieve one of the lowest sound levels on the market. All equipment and elements that produce noise and heat are outside the cabin.

Seat comfort to reduce fatigue
The modern ergonomics of the driver's seat and the optimal accessibility of both the display controller and joystick eliminate work fatigue.

Carefully considered ventilation
The air filter placement at the highest, dust-free point of the machine guarantees fresh air in the interior. Additionally, an overpressure in the cabin prevents the entrance of pollutants.

https://truckmanualshub.com/

UNIQUE FIELD OF VISION

Front:
Unobstructed view at floor level without steering column blockage

Side and rear:
Perfect all-round vision without the need for a rear-view camera

CAREFULLY CONSIDERED DISPLAY

Display:
Simplified and clear display for easier operation

Controller:
Variable key fields for driving and working modes

ADJUSTABLE STEERING WHEEL

Steering wheel:
Individually adjustable in height and angle – the dash board swivels with the steering wheel column

INTUITIVE OPERATION

Control & operating elements:
Reduced elements for intuitive operation, joystick moves ergonomically with the seat and fits any hand size

GENEROUS STORAGE SPACE

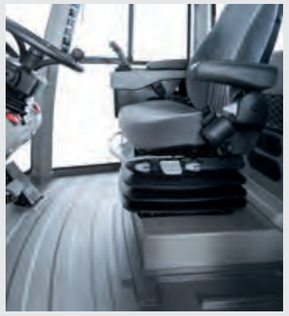

Storage options:
Fixed place for Euro boxes – for documents and the driver's private things, ideal for multi-shift operation

https://truckmanualshub.com/

MORE FROM LESS

6 cylinder, 173 HP: The AR 640 moves forward with power. Here, too, we've considered far ahead. The goal was to reduce fuel consumption by sustainably increasing the overall efficiency of the engine, for example by reducing the diesel engine speed and including generously designed hydraulic components. Due to the electronically controllable individual components, different systems are able to access and exchange useful data for better machine and maintenance performances.

The diesel engine thus delivers only as much power as is actually required. This reduces consumption, emissions and noise.

Comfortable cabin
Safe, fatigue-free working with excellent all-round visibility, clearly arranged instruments and ergonomic design. Readied additional mounting points for optional accessories.

Powerful drive
Optional traction via 100 % electrically-operated differential lock in front and rear axles.

Easy servicing
Fast, easy maintenance and upkeep as a result of centrally arranged, easily-accessible service points.

Unique engine mount
Independent suspension of the engine decoupled from the axle to avoid vibration and noise emission.

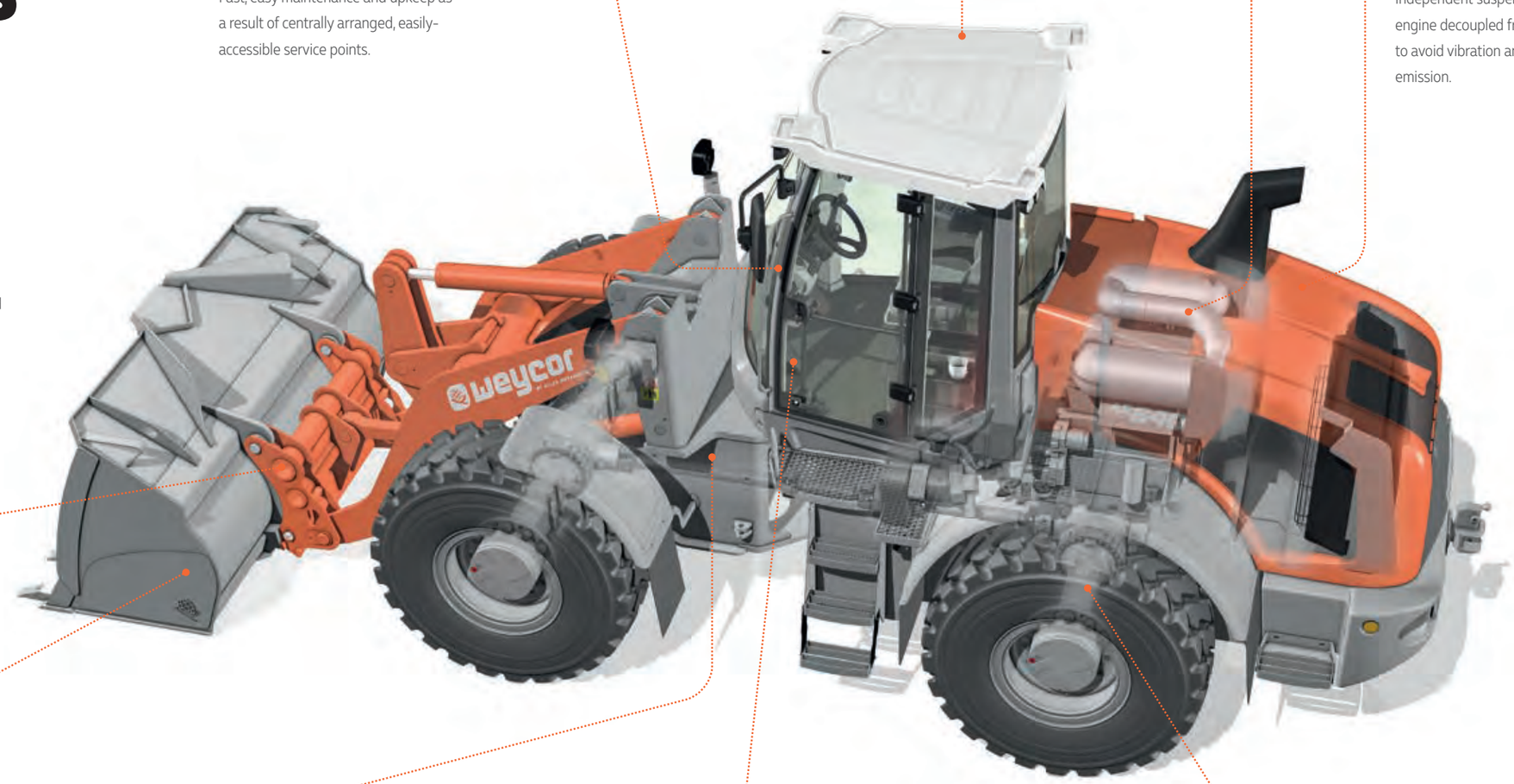

The latest kinematics
Tried and tested weycor kinematics with high breakout forces and an excellent lifting height.

Optional hydraulic quick-change mechanism according to ISO 23727
Makes it possible to change the attachment in seconds and turns the wheel loader into a real all-rounder.

Articulated joint & floating axle
For outstanding off-road capability and manoeuvrability. Unique stability because of the low centre of gravity, even off-road.

Only manufacturer with a separate inching pedal & the drive pedal function
Precise distribution of shearing and lifting forces, along with reduced wear and fuel consumption. Unlike a combined braking /inching pedal, the separate inching pedal eliminates the risk of inadvertently activating the main brake. The use of the accelerator as the drive pedal is just as practical. When using the hand throttle, the engine speed is kept constant, however the angle in the drive pump is variable. Here, again, the thrust force is finely regulated.

Wear-free negative brake
Holds the wheel loader securely in position on a slope when the brake or inching function is activated. All four wheels are automatically locked, even when the engine is stopped. The multiple-disc brake runs in an oil bath and is particularly low-maintenance and low-wearing as a result.

https://truckmanualshub.com/

INNOVATIVE HYDRAULICS CONCEPT

Power to perform
The hydraulics concept was developed and carefully coordinated with Bosch Rexroth. Powerful hydraulics and extreme user-friendliness position the new weycor large wheel loader as a front-runner amongst high-performance loaders of this size.

Flexible working hydraulics
Designed for fast movement at low speeds – the latest control valve technology and high forces ensure efficient work.

Fan drive
On-demand fan drive allows reduced emissions and fuel savings, even at outdoor temperatures of up to 50 °C.

Individual settings
The weycor display control system and quick-access buttons offer the driver a wide range of possible setting options, including diesel engine speed, flow rate and continuous operation.

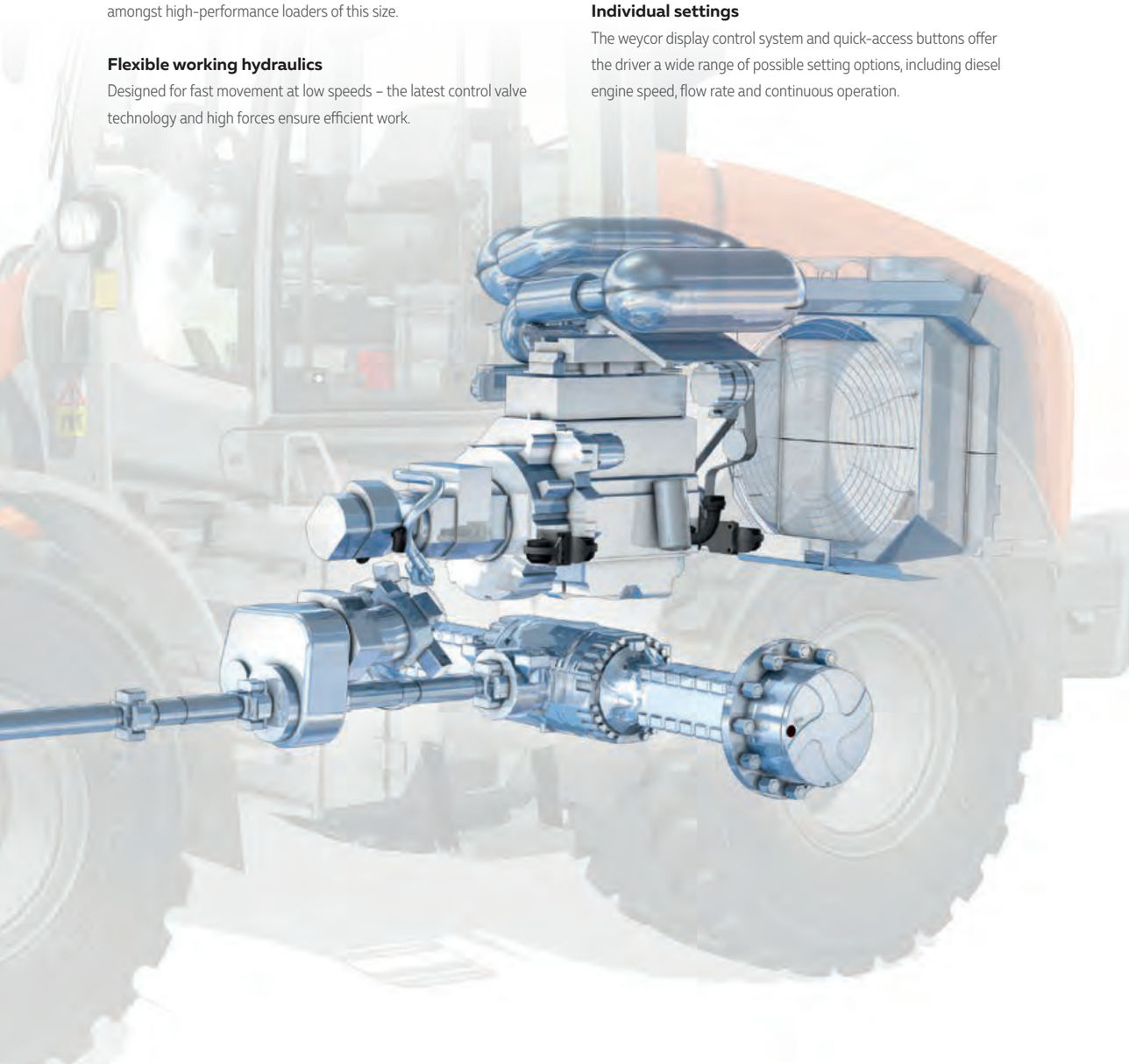

Drive
Powerful hydrostatic drive with fine dosing allows working in confined space without using the brake. The drive is optimally tuned to the diesel engine and runs steplessly up to 40 km/h with two drive engines. Both engines are operated up to 14 km/h. After that, the engine with the larger volume is swivelled into the zero position and the complete oil flow is made available only to the second engine with the smaller volume. Thermal problems are thus avoided. In addition, different driving modes (optional) can be set.

Charge mode
Maximum performance at up to 2000 rpm, high speed of work functions and dynamic acceleration and deceleration enable high handling performance.

Pallet mode
Thanks to the high engine speed in this driving mode, the machine is also able to accelerate and decelerate smoothly when the driver needs to drive delicately. This mode can also be used for shovel operation.

Powerful
The engine reaches its maximum torque at 1600 rpm.

Pulling force limit
Reduction of the pulling force to adapt to different substrates and to minimise tyre wear. Via the kick-down button on the joystick, the limit can be overridden at any time with 100 % power for a short period.

Speed limit
Limit the maximum speed for certain applications – regardless of the driving mode.

Hand throttle
Pre-selectable engine speed for applications such as snow ploughing, etc. The accelerator pedal serves as the drive pedal in this case and determines the speed of the machine.

Cruise control
Relieve the driver during longer journeys at a constant speed.

https://truckmanualshub.com/

INNOVATIVE ENGINE TECHNOLOGY

TCD 6.1 L6 – intelligent and efficient:
We have been convinced of the quality of Deutz engines for over 40 years. Our cooperation with Deutz also offers numerous benefits for the AR 640: such as the electronic engine control with intelligent connection to the drive management. This ensures the best engine performance with low fuel consumption. The water-cooled TCD 6.1 L6 diesel engine is at the heart of our new power class.

Mighty performance
129 kW at a maximum of 2000 rpm

Compliance with emission standards
Thanks to the exhaust system used, the engine complies with DOC/DPF/SCR TIER IV final and EU Stage 5.

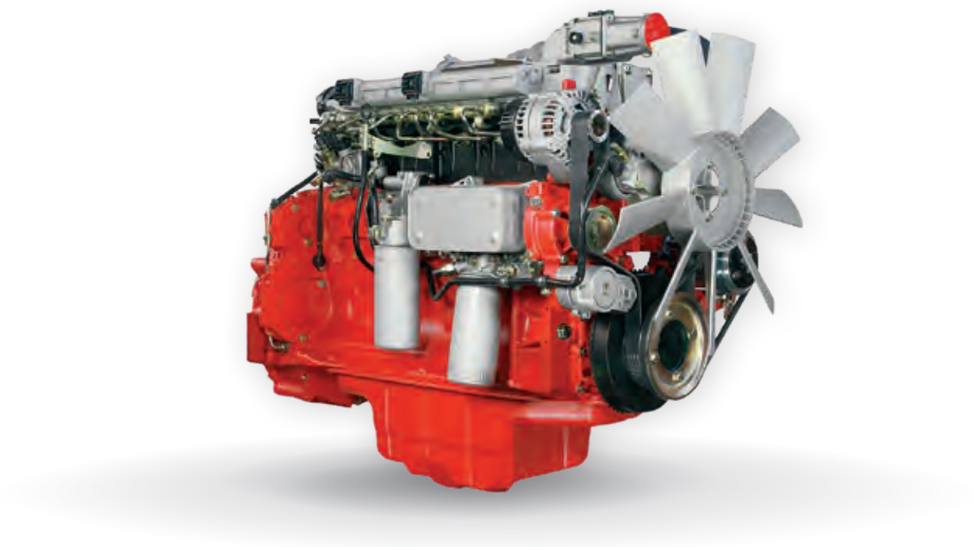

Deutz engine technology: TCD 6.1 L6
Water-cooled 6 cylinder in-line engine with turbocharging, intercooling and cooled external exhaust gas recirculation. The powerful Deutz Common Rail (DCR®) injection system and the electronic motor control (EMR 4) with intelligent connection to the drive management ensure the best engine performance with low fuel consumption. The engines meet the requirements of the EU Stage IV and US EPA Tier 4 standards with DVERT® selective catalytic reduction (SCR) and particle filter (DPF). With the use of the DPF, they compliant with the EU Stage V emission standard.

HIGH ENGINE POWER – AT LOW ENGINE SPEED

Torque characteristic

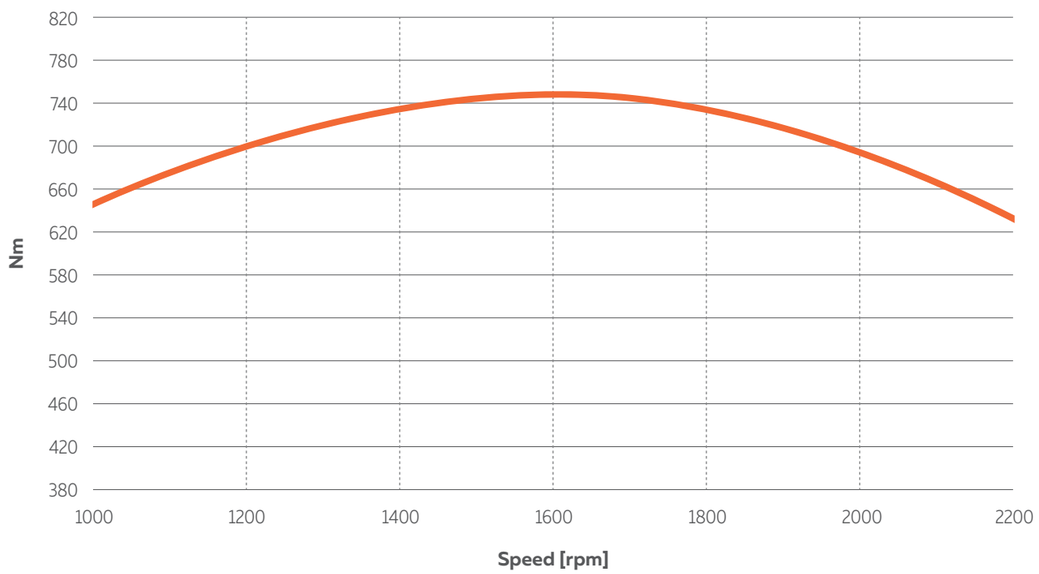

Powerful
The engine reaches its maximum torque at 1600 rpm.

Powerful fan drive with optional fan reversal for quick cleaning
Fan drive with electronic control and optimum efficiency in every speed range thanks to a generously sized variable displacement pump.

https://truckmanualshub.com/

TECHNICAL DATA

Engine	
Model	Deutz TCD 6.1 L6 diesel engine
Design	water-cooled
Output	175 HP (129 kW) at 2,000 rpm
Max. torque	750 Nm at 1,600 rpm
Cubic capacity	6,057 cm^3
Number of cylinders	6 in line

Electrical system	
Operating voltage	24 V
Battery	24 V / 100 Ah
Generator	24 V / 100 A
Starter	24 V / 4 kW

Drive

Maximum load-regulated, hydrostatic drive with pressure cut-off and closed circuit, acting on all 4 wheels. Speed ranges apply to standard tyres:
Operation 0-14 km/h
Fast speed 40 km/h
Shifting between 1st and 2nd hydraulic gear and between forward and reverse movement possible while under load. Control of forward/reverse movement and drive levels using weycor joystick. Control of the drive system using the drive pedal and a separate inching pedal for optimal distribution of the hydraulic power to thrust and lifting forces.

Braking

Operating brake: Oil bath multi-disc brake, acting on all 4 wheels. Supplementary brake function via the inching pedal and hydrostatic drive, acting on all 4 wheels.
Parking brake: Negative brake in spring-loaded design, acting on all 4 wheels. When the engine is stopped, the spring-loaded brake is activated.

Steering

Fully hydraulic central articulated steering and rear floating axle
Front and rear wheels run on one track
40° articulation angle both sides
Articulation angle ±12° at rear of vehicle

Tyres

Standard: 20.5 R 25 – construction machine tyres for use on relatively soft ground with high traction and good self-cleaning

Hydraulics

Variable displacement pump for loading and steering hydraulics
Priority valve prioritises steering
The 1st and 2nd control circuit are standard
Loading hydraulics hydraulically operated, controlled by weycor joystick, including lockable float position
Operating pressure 280 bar, flow rate 170 l/min

Capacities	
Fuel	250 litres
Hydraulic oil	106 litres
Engine oil	16 litres
Front axle	7.2 litres
Rear axle	7.2 litres
Gearbox	1.8 litres
Coolant	23 litres
AdBlue	20 litres

Loading equipment

Powerful and solid Z-kinematics with high breakout force
Operation of all functions via weycor joystick
Parallel guide for pallet fork operation via optional electrical control
Automatic shovel return to digging position
Locking for road travel in accordance with StVZO (German Highway Code)

Lifting	**5.9 s**
Lowering	**4.4 s**
Tipping	**1.8 s**

Equipment	series	option
weycor diagnostic system (ADS) for monitoring the machine parameters	•	
Foldable exterior rear-view mirror	•	
Heated rear windshield	•	
Single lever operation via weycor joystick	•	
Driving range display, forward/reverse travel	•	
Vehicle lighting acc. to StVZO (German Highway Code)	•	
Individually adjustable driver's seat with adjustable right armrest	•	
Water heating with heat exchanger and 3-speed fan	•	
Air conditioning	•	
Adjustable front windscreen ventilation	•	
Soundproofed ROPS cabin	•	
Front and rear working headlights	•	
Windshield wiper and washer system front and rear	•	
Sun visor, coat hook, interior light, storage space	•	
Steplessly adjustable and telescopic steering column	•	
Heat-proofed panoramic glass panes	•	
Warning lights for engine oil pressure, engine overheat, hydraulic oil temperature, battery charging, parking brake, air filter monitoring	•	
Central dashboard with indicators for pre-warming, engine temperature, fuel supply, operating hours counter	•	
Main battery switch		•
Lifting arm damping		•
20 km/h limitation		•
Trailer coupling		•
Special coatings		•
All-round lighting		•

Equipment	series	option
Heated driver's seat		•
Automatic climate control		•
Radio		•
Right sliding window	•	
Left sliding window		•
3rd and 4th section, max. 170 l/min		•
Quick-change device that meets ISO 23727		•
Return-to-dig		•
Engine pre-warming		•
Protection grille fans		•
Steel mud guard		•
Additional counterweight +250 kg		•

https://truckmanualshub.com/

TECHNICAL DATA

	Without quick-change device and with standard shovel	With quick-change device and standard shovel	With quick-change device and pallet fork
Tyres (D=1486)	20.5 – 25	20.5 – 25	20.5 – 25
A	7,474 mm	7,732 mm	8,090 mm
B*	3,260 mm	3,260 mm	3,260 mm
C	5,340 mm	5,510 mm	4,649 mm
C1	3,936 mm	3,936 mm	3,940 mm
C2 (45°)	2,888 mm	2,704 mm	1,831 mm
D	100 mm	100 mm	0 mm
E (45°)	1,006 mm	1,167 mm	809 mm
E1	-	-	1,683 mm
E2	-	-	1,013 mm
F	401 mm	401 mm	401 mm
G	3,000 mm	3,000 mm	3,000 mm
H	2,490 mm	2,490 mm	2,490 mm
I	2,530 mm	2,530 mm	2,060 mm
K	-	-	1,756 mm
L	1,924 mm	1,924 mm	1,924 mm
M	1,216 mm	1,456 mm	-
N	-	-	1,400 mm (fork length)
R	3,100 mm	3,100 mm	3,100 mm
R1	5,857 mm	5,857 mm	5,857 mm
R2	6,100 mm	6,100 mm	6,100 mm
W	6,258 mm	6,258 mm	6,258 mm
Y	3,670 mm	3,652 mm	-
Z	-	-	2,356 mm
α	40°	40°	-
β	30°	30°	-
γ	43°	43°	-
χ	46°	46°	-
Tipping angle	46.3°	46°	-
Tipping angle below	44.8°	45.3°	31°
Tipping angle transport	47.1°	46.9°	35°
Tipping angle above	49.3°	49.6°	38°

* For 750 / 65 R26 and 23.5 R25 tyres, height B changes to 3,310 mm.

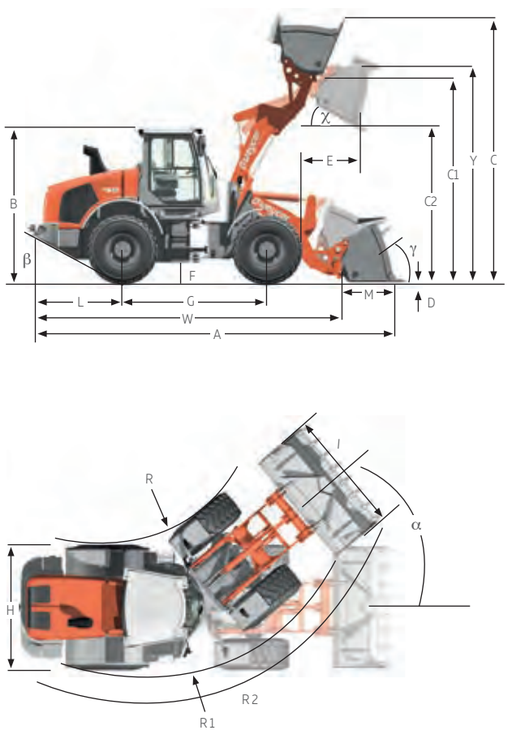

With quick-change device and standard shovel

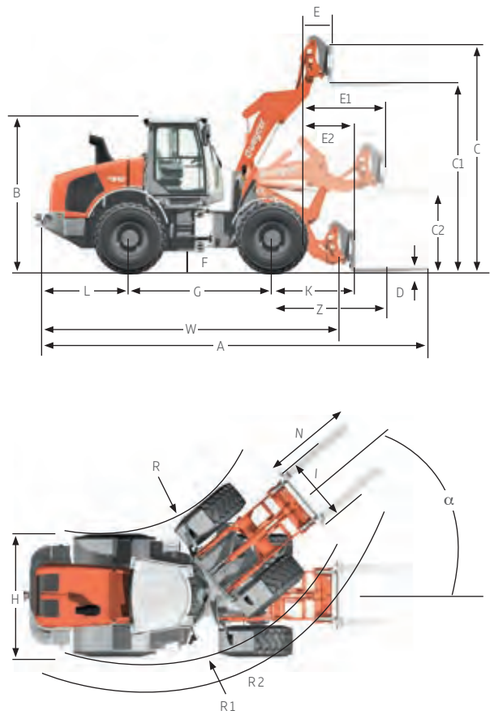

With quick-change device and pallet fork 1,400 mm

https://truckmanualshub.com/

TECHNICAL DATA

Model standard features	Tipping load bent	Tipping load extended	Operating weight
With quick-change device and standard shovel	7,411 kg	8,480 kg	13,600 kg
Without quick-change device and with standard shovel	7,968 kg	9,117 kg	13,500 kg

Model standard equipment + additional weight	Tipping load bent	Tipping load extended	Operating weight
With quick-change device and standard shovel	7,738 kg	8,855 kg	13,850 kg
Without quick-change deviceand with standard shovel	8,315 kg	9,914 kg	13,750 kg

Model with pallet fork 7 t	Tipping load	Load capacity 60 %	Load capacity 80 %
Model standard features	5,919 kg	3,551 kg	4,735 kg(1)

(1) When using the default pallet fork.

The tipping loads refer to the respective service weights. The service weight can vary, depending on the individual configuration.
Without a hydraulic quick coupler (HQC) and without an additional counterweight, the service weight is 13,500 kg.

Service weight with a hydraulic quick coupler	**13,600 kg**
Service weight with an additional counterweight	**13,750 kg**
Service weight with an additional counterweight and with a hydraulic quick coupler	**13,850 kg**

Table of specific weights in t/m³

Construction industry				Industry		Landscaping, agriculture	
Concrete	1.9	Sand (wet)	2.1	Ash	0.7	Crop (corn, beet)	0.7
Earth (dry)	1.5	Sandstone	2.4	Lignite briquette	0.8	Grain	0.6
Earth (wet)	2.0	Slate	2.2	Iron	7.8	Hay	0.3
Rock (broken)	2.4	Sludge	2.1	Iron ore	2.3	Potash	1.1
Granite	1.8	Rubble	1.5	Broken glass	1.9	Compost	1.0
Limestone	1.6	Road salt	1.3	Gas coke	0.4	Flour	0.5
Gravel (dry)	1.9	Clay	1.6	Wood	0.8	Marl (wet)	2.3
Gravel (wet)	2.1	Cement	1.7	Coal	1.2	Thomas slag	2.2
Loam	1.7	Brick (stacked)	1.8	Paper	0.9	Peat (wet)	1.1
Mortar	2.2			Slag (sand)	1.0	Peat (dry)	0.4
Sand (dry)	1.9			Slag (solid)	2.7	Complete fertiliser	1.0

Under our policy of continuous improvement, we reserve the right to change specifications and design without prior notice, errors expected.
The technical data refer only to the standard version, illustrations do not necessarily show the standard version of the machine.

https://truckmanualshub.com/

https://truckmanualshub.com/

en_06_2021_003

You can find our current product range and more exciting details at: **www.weycor.de**

Under our policy of continuous improvement, we reserve the right to change specifications and design without prior notice, errors expected. The technical data refer only to the standard version, illustrations do not necessarily show the standard version of the machine. Not all products are available in all markets.

weycor is a brand of ATLAS WEYHAUSEN GMBH.

ATLAS WEYHAUSEN GMBH · D – 27793 Wildeshausen
Phone +49 (0) 44 31 – 98 10 · info@weycor.de · **www.weycor.de**

weycor BY ATLAS WEYHAUSEN