https://truckmanualshub.com/

MINI EXCAVATOR

OPERATING AND MAINTENANCE MANUAL

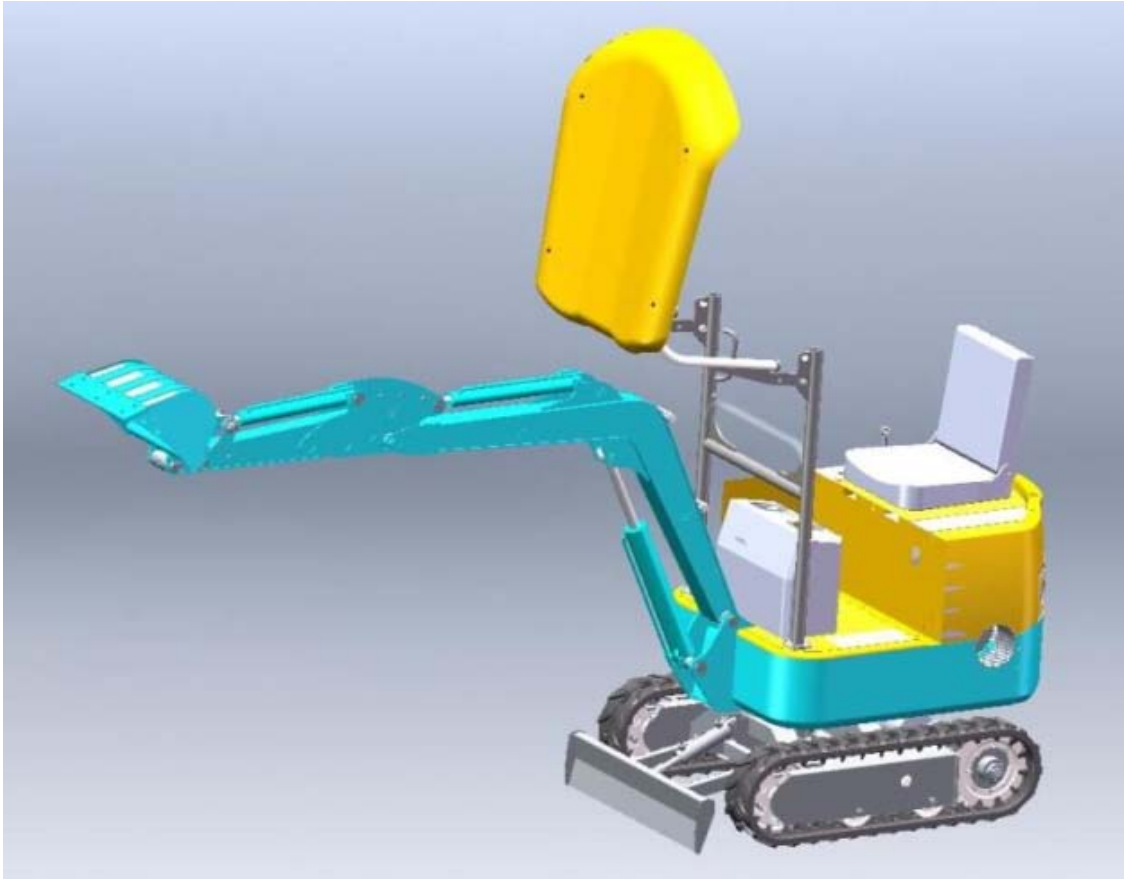

https://truckmanualshub.com/

AGRISON

2098 Hume Highway Campbellfield VIC AUSTRALIA 3061

Preface

Dear users,

Thank you for trusting and choosing our products! The Agrison series small excavator of our company is designed for mining operation as core operation and loading& unloading as auxiliary tasks, featuring with compact structure, properly matched power, product good stability and high cost performance. It could meet the excavation and loading & unloading requirements in different working conditions, such as on the plains, hills and forests. It is applicable for the brick and tile plant, kilns, river, construction, dredging and road construction. It is the ideal construction excavator for farmland and small project.

To make the users to correctly master the usage, adjustment and maintenance of the excavator, deliver the complete functions of the excavator, please carefully read the *Operation and Maintenance Manuals* to strictly implement the regulations of this manuals. Please refer to the *Engine Specification* prepared by the engine manufacturer for the usage and maintenance of the engine.

The operation section is the technical reference for the driver to use the excavator. The pictures and texts are applied to guide the driver to follow the correct procedures to inspect, start, operate and stop the excavator. The operation skills specified in the manual is a basis. The driver could improve the skills after learning the knowledge about the excavator and functions.

The maintenance section is to guide the user to carry out the maintenance of the excavator. The

demo pictures in it are ranked according to the maintenance interval from short time to long time. The specific maintenance measures of the tools are described in the *Lubrication and Maintenance Interval List* in details. The users shall carry out the maintenance for different items based on mechanical working hours according to the *Lubrication and Maintenance Interval List*.

In extremely poor, dusty or humid conditions, more lubrication shall be applied based on the operation of the excavator.

In order to display the structural characteristics of the excavator in a more intuitive way, the structure perspectives are used as demo pictures, so it may be different from the appearance of the actual product. If the actual vehicle mechanical structure and technical parameters change due to the technical improvement and are not shown in this manual, please ask the company for the latest product information.

The related documents shall be verified before using or repairing the excavator. Contact the company technical service station if necessary. Please provide the ex-factory date and excavator number when purchasing the parts.

The company sets up “three guarantees technical service stations for your convenience. If the Agrison small excavator you purchase has quality problem under normal operation during the warranty period, please timely contact the local three guarantees technical service stations of the Agrison excavator.

Since the product technology keeps innovating, we reserve all the rights to interpret this manual. The actual excavator will prevail in case of difference between the actual product and the manual picture.

https://truckmanualshub.com/

https://truckmanualshub.com/

Content

Page

1. General Precautions..... Safety1-1

1.1 Precautions when standing up from or leaving the driver's seat..... Safety1-4

1.2 Precautions during preparation..... Safety1-9

1.3 Precautions in the cab..... Safety1-11

2. Operation precautions ..... Operation 2-1

2.1 Precaution when walking on slope.....Operation 2-4

2.2 Precaution in traction .....Operation 2-15

3. Operating procedures ..... Operation 3-1

3.1 Walking precautions.....Operation 3-6

3.2 Precaution when stopping .....Operation 3-18

3.3 Transportation precautions .....Operation 3-19

4. Maintenance precaution ..... Maintenance 4-1

4.1 Refueling precautions.....Maintenance 4-7

Safety

1. General Precautions

You are obliged to follow the safety rules and laws of relevant departments, and operate, inspect and maintain the excavator according to the requirements of the manufacturer.

In fact, all the accidents are caused by failure to follow the basic safety regulations and precautions.

Most accidents can be avoided by identifying the potential danger in advance.

Please read and understand all the safety information about how to prevent the accidents. Operate the excavator only after you've learnt how to operate, inspect and maintain the excavator.

Follow all the safety rules

Only the trained and qualified employees are allowed to operate, inspect and maintain the excavator.

Please understand and follow all the rules, regulations, precautions and safety measures when operating, inspecting and maintaining the excavator.

Do not operate, inspect and maintain the excavator in case of adverse effects caused by alcohol, drugs, medicines and fatigue or lack of sleep.

In case of abnormal operation of the excavator

When the excavator is found abnormal (noise, vibration, odor, leakage, error alarm, etc.) in the operation or inspection and maintenance, inform the sales or service agents immediately and take appropriate measures. Do not operate the excavator before solve the abnormality.

Operation temperature scope

In order to maintain the performance of the excavator and avoid early wearing, please follow the operation conditions.

Do not operate the excavator if the external temperature is higher than+45℃ or lower than -15℃.

If the excavator works at the external temperature higher than +45℃, the engine may be overheated, causing the deteriorated oil performance. Moreover, the hydraulic oil may become very hot, damaging the hydraulic equipment.

If the excavator works at the external temperature below -15℃, the gaskets and other rubber parts may harden and cause early wearing or damage to the excavator.

If the excavator must work in such conditions, please consult your sales or service agent.

Wear proper clothes and protective equipment

Do not wear loose clothes or accessories that may be linked to the control rod or moving parts.

Do not wear the clothes with oil or fuel dirt that are easy to catch fire.

Wear the safety shoes, safety helmet, safety goggles, masks filter, thick gloves, ear protection and other protective equipment according to the working environment requirements. Wear suitable protective equipment, such as safety goggles and filter masks when using grinding excavator, crashing hammer or compressed air, since the metal debris or other objects may splash to cause serious injury.

Please apply the hearing protection device when operating the excavator. Exposure to high noise for a long time may damage the hearing loss, or even deafness.

Install the fire extinguisher and first aid kit

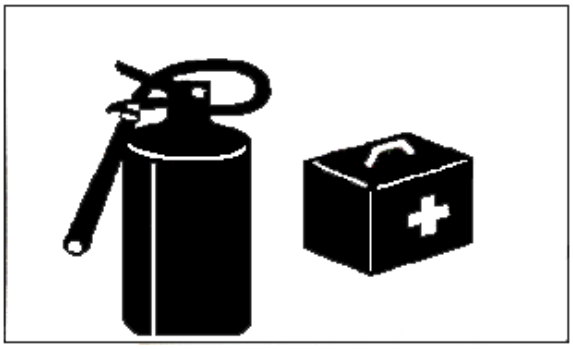

Make the preparation against the fire and accident

Install the fire extinguishers and first aid kit and learn how to use it.

Learn how to deal with the accident and fire.

Learn how to contact the emergency aid and prepare the contact list in case of emergency.

Do not remove the safety device

Please ensure that all the protective hurdles are installed in place and secured. Please repair or replace the damaged parts before operating the excavator.

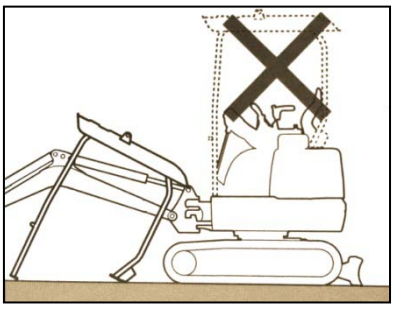

Do not remove any safety devices except for inspection and maintenance. All the safety devices must be in good working conditions.

Equipped with the signalman and flagman

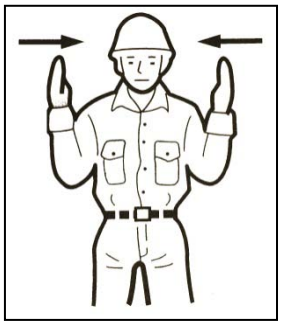

Learn the how to make a gesture required by specific operation, and confirm the person who makes the gesture.

All personnel must fully understand all gestures.

The operator must only respond to the gesture made by the designated person, however he/she must obey a stop sign at any time.

The signalman must stand at obvious place when he/she sends the signal.

1.1 Precautions when standing up from or leaving the driver's seat

When standing up from the driver's seat, lower the working device to the ground and shut the engine down. If you touch any control handle by accident, it will cause the excavator to move, and cause serious injury or death.

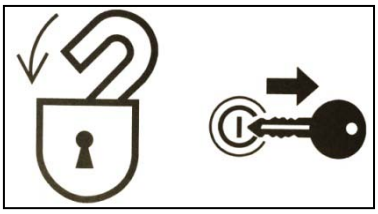

Please note the dozer, arm swing and auxiliary hydraulic control. Do not touch the control devices.

Lower working device to the ground working device before leaving the driver's seat, and shut the engine down. At the same time, pull out the key and carry it with you, then put it in a designated

place.

Avoid the fire and explosion hazards

Keep the fuel, lubricating oil, grease and anti-freeze from the flame. The fuel is very flammable and very dangerous.

Be away from the lit cigarette, matches, lighters, as well as other flame or fire when dealing with such inflammable things.

The smoking or open fire is prevented when dealing with the fuel or fuel system.

Do not leave the workplace when filling the fuel or lubricating oil.

Do not remove the fuel tank cap or fill the fuel when the engine is running or is still hot. Do not splash the fuel onto the excavator hot surfaces or electronic system components.

Immediately clean the overflowed fuel or lubricating oil.

Inspect the fuel and lubricating oil for leakage. Please eliminate the leakage and clean the excavator before the operation.

Please move the flammable items to a safe place in the polishing or welding operation.

Do not cut or weld the pipes or tubes containing flammable liquids. Please use anon-flammable solvent to thoroughly clean the pipes before cutting or welding.

Clear all the rubbish or debris from the excavator. Make sure that the excavator is free of the oil stains on the cloth or other flammable materials.

Deal with various solvents or dry chemicals (foam type extinguishers) according to the procedures on the manufacturer's container in a place with good ventilation.

Do not use the fuel for the purpose of cleaning. Always use non-flammable solvent.

Keep all the flammable liquid and materials in a safe place with good ventilation.

The short circuit of the electronic system may cause fire. Inspect whether the cable connection is loose or damaged every day. Retighten the loose wire connector and buckle. Repair or replace damaged wires.

Fire caused by pipe:

Make sure that the buckles, protective devices and buffer pads of the hose and pipe are fixed securely. The hose or pipe may be damaged due to vibration or contact with other parts in the operation if they are loose. The high pressure oil may spray, causing fire or damage.

The exhaust gas from the engine is toxic

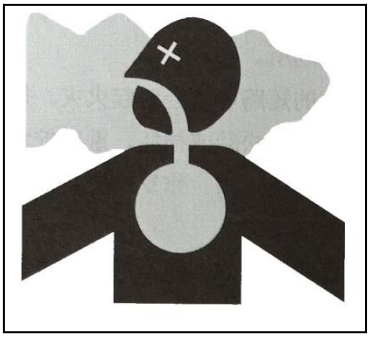

Do not operate the engine in the closed place with poor ventilation.

If the natural ventilation is impossible, install the ventilation fan, fan, lengthened exhaust pipe or other ventilation devices.

Treatment of asbestos dust

The inhalation of the asbestos dust may cause lung cancer. The following safety measures must be taken when treating the materials that may contain asbestos:

Do not use the compressed air to clean.

Avoid polishing or grinding the parts containing asbestos.

Please use the vacuum equipment with a high efficient particulate air filter for cleaning.

If there is no method to control the dust, please wear the respirator as require. Please install the ventilation system with polymer filter when working indoors.

Only the authorized personnel are allowed to enter into the operation area during working time.

Please strictly follow the rules and environmental standards applicable in the working area.

Take care to avoid squeezing

Do not put your hands feet, or other body parts between the upper and lower workshop or track, between the excavator and the working device or the cylinder and the moving part. The clearance may change when the excavator moves and may cause serious injury or death.

Use the optional parts

Please consult **AGRISON** before installing the options. The accessories may touch other parts

of the cab or the excavator according to the types of the accessories or combination. Please ensure that the installed options will not touch the other parts.

Do not use the accessories without the approval from **AGRISON** Doing so may endanger the safety or cause adverse impact on the operation of the excavator or the service life of the excavator.

AGRISON is not responsible for any injury, accident or product damage caused by using the unauthorized accessories.

Do not retrofit the excavator

The unauthorized retrofitting of the excavator may cause injury or death. Do not retrofit any section of the excavator without authorization.

Safety label (sign)

In order to ensure the safety of the operator and the workers surrounding, the following safety labels (sign) shall be placed at some section. Walk surrounding the excavator with the manual to inspect the contents and places to put these safety marks. Review all of these labels and instructions in this manual with your driver.

The safety labels shall be kept clean and clear, easy to identify. If any safety label is missing or damaged and becomes illegible, please replace with a new one. Please provide your product serial number when ordering the new labels from the **AGRISON** service agent.

When the parts/body with the safety label has been replaced, the label shall be posted on new parts / body.

1.2 Precautions during preparation

Understand the working area

Understand the operating area to ensure safety before the operation.

Inspect the terrain and the ground in the working area, inspect the building structure in the indoor operation, and take safety measures when necessary.

Be sure to avoid the danger and obstacles such as ditches, underground pipelines, trees, cliffs, overhead wires or the section with falling articles or landslide hazards.

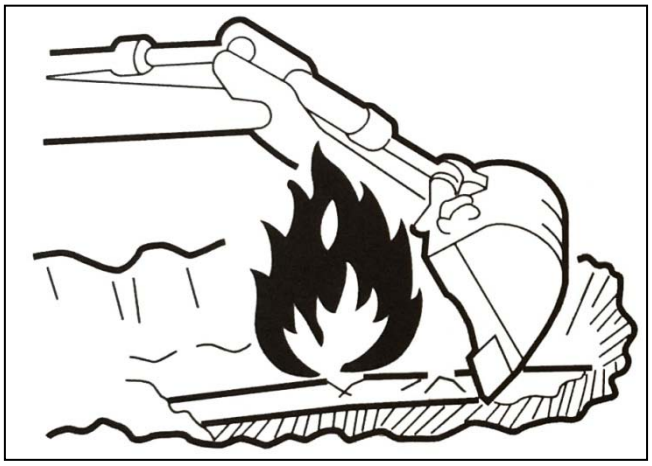

Inspect the location of buried gas pipe, water pipe and power cable with the administrator. Consult with the administrator and determine to take the specific safety measures to ensure safety if necessary.

Consider the safety of the pedestrians and vehicles when working on the road.

Use a signalman and / or signal.

Only the authorized personnel could enter into the isolated operation area,.

When working in the water or driving passing the shallow river, inspect the water depth, ground solidness and flow speed.

Inspect the bridge strength

When walking on a bridge or structure, inspect the permissible load. If the strength is not sufficient strengthen the bridge or structure.

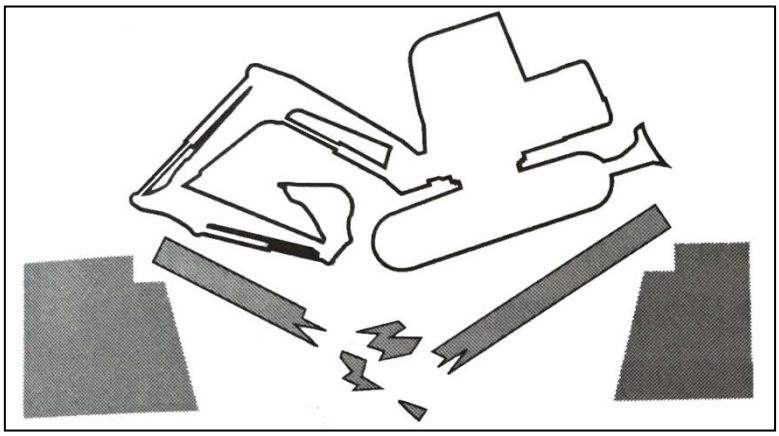

Always keep the excavator clean

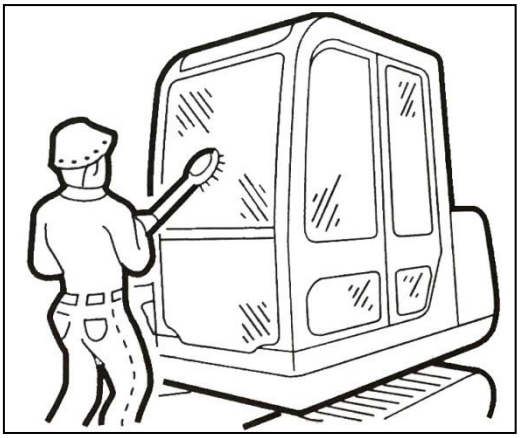

Wipe off the lubricating oil, grease, dirt, snow or ice to prevent the accidents caused by slipping.

Remove all the loose objects and unnecessary devices in the excavator.

Remove the dust, lubricating oil or grease from the engine parts to prevent fire.

Clean the operator seat and remove any unnecessary objects from the excavator.

Daily inspection and maintenance

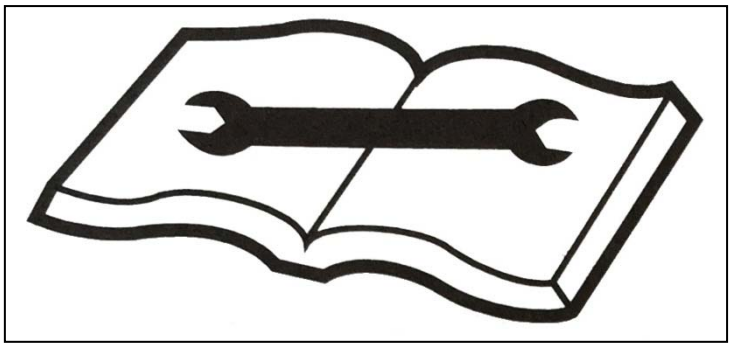

Failure to find out or repair the abnormal condition or damage may cause accidents.

Please carry out the specified inspection before the operation, and repair immediately if necessary.

If the excavator can't work due to accident or the engine has fault, please immediately shut down the excavator according to the procedures, and firmly park the excavator until the fault is fixed.

1.3 Precautions in the cab

Please remove the dirt and grease on your soles before going into the cab. If you operate the excavator pedal with dirt and grease on the soles, it may cause accident due to slipping.

Do not place parts or tools around the driver's seat.

Do not place any plastic bottle or any sucker in the cab. The plastic bottle or sucker may act as the lens, causing fire.

Safety measures when starting

Support your weight in a three-point safe posture when getting on / off the excavator.

Do not jump up or down the excavator. Do not attempt to get on and off the moving excavator.

Please open the doors fully to the locking position when getting on / off the excavator, inspect and confirm the door cannot move (for excavators with cab).

Climb up/down the pedal and hold the arm facing the excavator, support your weight in three-point safe (hands and feet) posture.

Do not use the control rod as a handle.

Any unauthorized personnel shall leave the area before starting the excavator

Start the excavator by inspecting the following items after the safety can be ensured.

Walk around the excavator and warn the staffs who carry out the maintenance and persons walking near the excavator. Start the excavator after not body is around the excavator.

Inspect whether there is “Do not operate” warning label or similar signs on the driver’s cab, control or start switch. If any, do not start the engine or touch any rod.

Sound the horn and warn the people around the excavator.

Sit on the driver’s seat and start the engine

Adjust the seat to firmly lock.

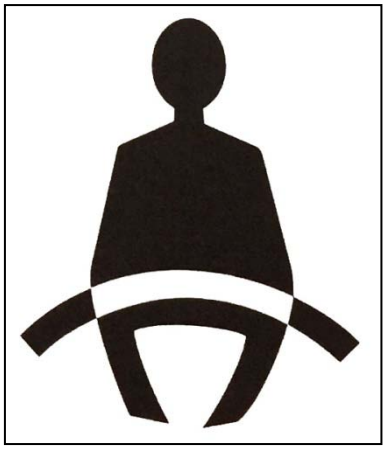

Fasten the seat belt.

Inspect whether the parking device is activated, and all the control rods and pedals are in the neutral position.

Make sure that no one is around the excavator.

Start and operate the excavator only from the driver’s seat.

Do not attempt to start the engine by means of a short connected starter.

Starting with jumper cable

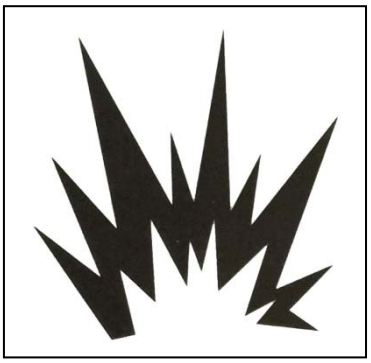

If you want to start with a jumper cable, it must be carried out as recommended. The improper use of the jumper cable will cause the battery explosion or unexpected excavator action.

After starting the engine

After starting the engine, carry out the operation and inspection in the place with no persons or obstacles. If you find any fault, shut down the engine according to the procedure of, and report the fault.

Preheat the engine and hydraulic oil.

Inspect whether the instrument and alarm device is working properly.

Inspect whether there is noise.

Test the engine speed control.

Operate the control device to ensure that they are working properly.

For cold weather

Pay attention that the frozen ground, pedal and handle are slipping.

Do not touch any metal part of the excavator with a bare hand in the cold weather. The skin will freeze to the metal, causing serious injury.

Do not apply the ether or starting fluid in the engine. The starting fluid can cause explosion and serious injury or death.

Preheat the engine and hydraulic oil. If the control rod is operated without preheating, the

https://truckmanualshub.com/

excavator will not react or move appropriately, causing the accident.

2. Operation precautions

To ensure good vision

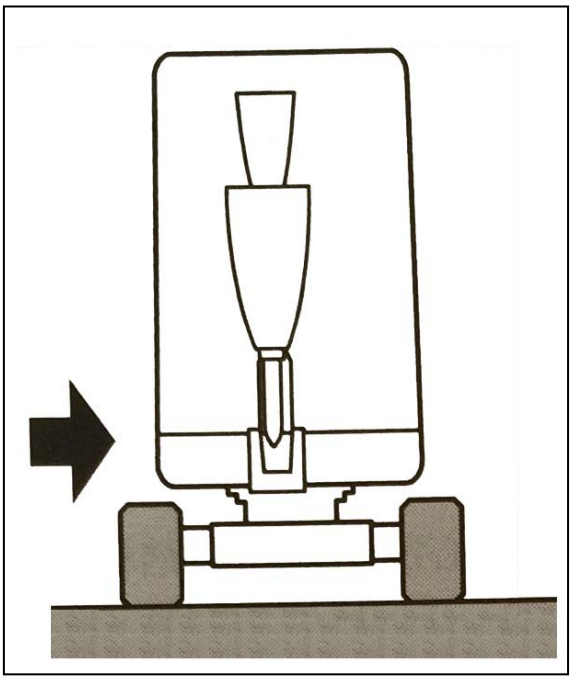

Turn on the working lamp and the headlamps of the excavator when working in the dark, and additional lighting equipment shall be installed when necessary.

Do not operate the excavator when the vision is poor due to the bad weather (rain, snow, fog or haze) until the vision recovers.

Do not carry people on the excavator

When the excavator is walking or working, no one is allowed to sit on any part of the excavator.

Inspect whether the working area is safe and reliable before operation

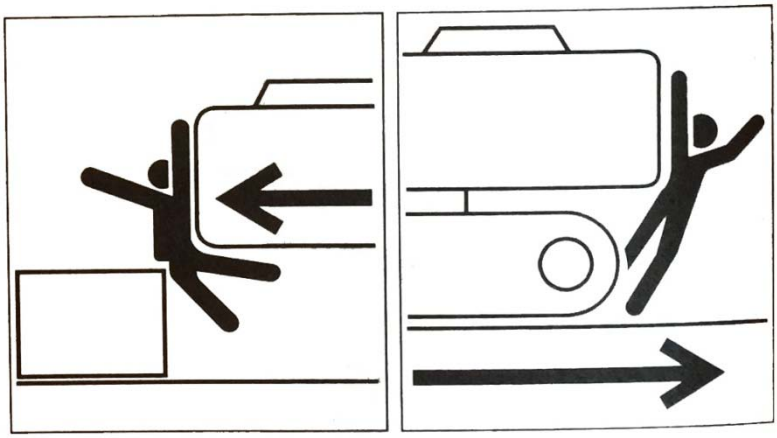

Identify the excavator’s performance limits.

A signalman will help on the road shoulder, in narrow place or with blocked vision.

Do not allow anybody to enter into the turning radius and path of the excavator.

Sounding the horn expresses your intention to move.

There is a vision blind spot in the rear of the excavator. Before walking backwards, please inspect the safety and confirm that no one is at the rear.

Inspect the lower frame (track) the position before walking

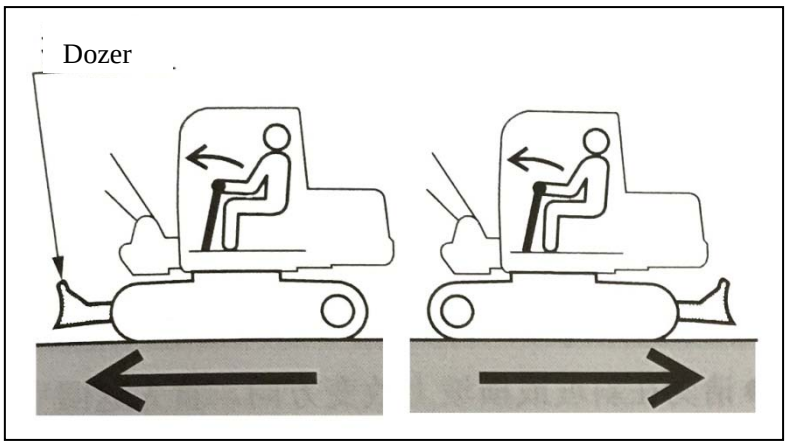

Please ensure that the dozer is at front of the driver's seat before operating the walking lever /pedal. Remember that the walking control lever / pedal operation direction must be reverse to the direction when the dozer is at the front of the driver’s seat when the dozer is at the rear of the driver seat.

Safe walking

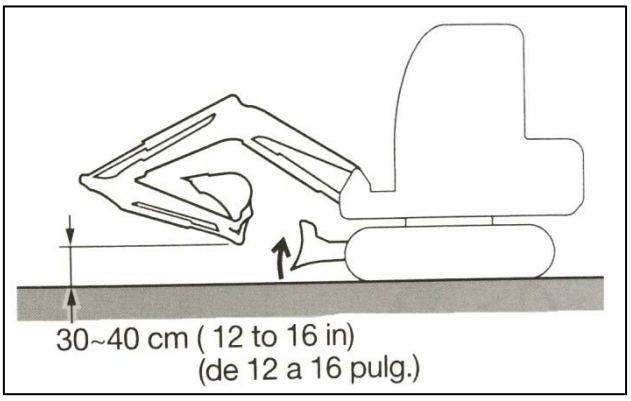

The dozer is rising when walking. Fold the dozer device as shown in Fig above and lift the dozer from the ground by 30 cm to 40 cm.

Do not turn when walking. If the dozer must be operated when walking, the speed must be so slow that you can completely control at any time.

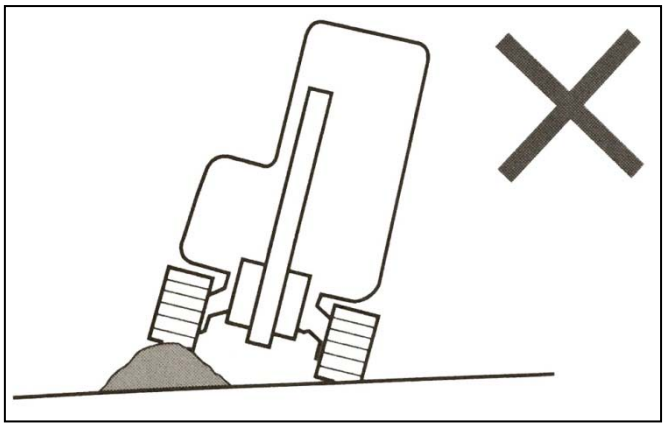

Try to avoid crossing the obstacles. If it is necessary, keep the dozer working device close to the ground, and walk slowly. Do not cross the obstacles that will tilt the excavator to an angle of 10° or higher.

Keep walking at low speed on the rough road; avoid the sudden start, stop or changing direction. Otherwise, the working device may be in contact with the ground, causing the excavator to lose balance and damage or destroy the structure surrounding.

2.1 Precaution when walking on slope

When walking on a slope or a ramp, pay attention to keep the excavator steady.

Never walk on steep slope where the excavator is unstable (Max angle: 30°, lateral inclination: 10°). Please note. As a matter of fact, the stability of the excavator will be lower than the values above depending g on the different working conditions,.

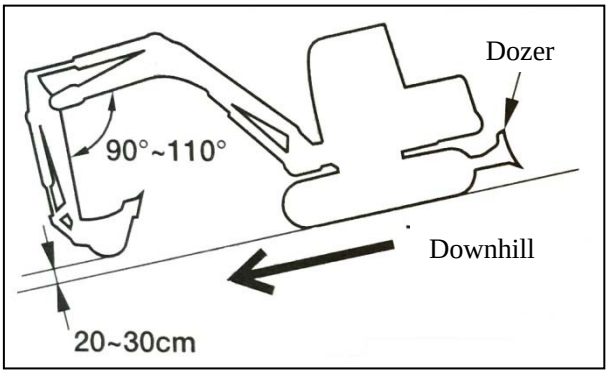

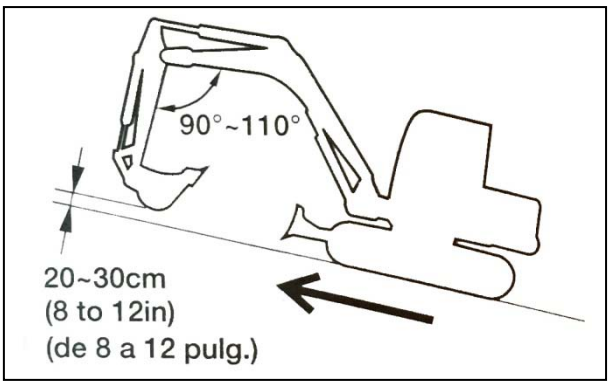

When climbing the hill, keep the driver's seat for the hillside. Keep the driver seat facing downhill when going down the hill. Pay attention to the ground in front of the excavator when walking.

When walking on the slopes, lower the dozer to the 20cm ~ 30 cm above the ground. Extend the front dozer working device to the front when climbing a steep hill. Lower the dozer to the ground and shut down the excavator in case of emergency.

Drive at low speed when walking on a slope or a ramp. Lower the engine speed when going down the slope.

Do not reverse when going down the hill.

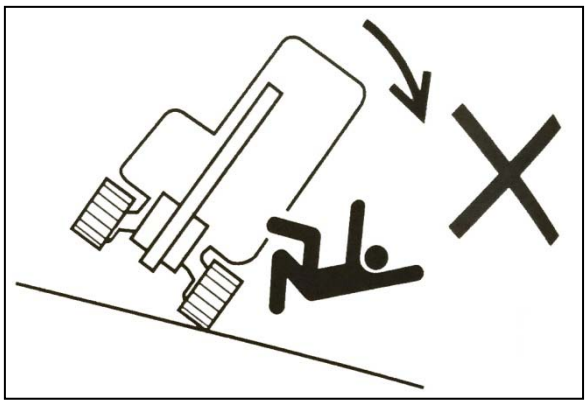

Do not change direction on a slope or a cross slope. First return to the flat surface, and then select another path.

When walking on the gentle slope covered with grass or leaves, or on the wet metal plate or frozen ground, the excavator may slip. Make sure that the excavator is not on the slope transversely.

If the excavator is shut down, please return the control lever to the neutral position, and then restart the engine.

Operate excavators on snow or ice with care.

When walking on the snowy or icy ground, drive at low speed; avoid the sudden start, stop or changing direction.

The objects placed on the road shoulder and roadside are buried in the snow, which is invisible. The excavator may overturn or crash into the objects covered by snow, so operate the excavator with care.

If the excavator enters into the thick snow, it may over turn or be buried in the snow. Be careful when driving, do not exceed the road shoulder or trapped in the snow.

As for the frozen surface, the ground becomes soft when the temperature rises, it may cause the excavator overturn, operator trapped in the excavator.

Lower the dozer when the excavator is parked on unstable surface.

Do not put the dozer over the head of the staff

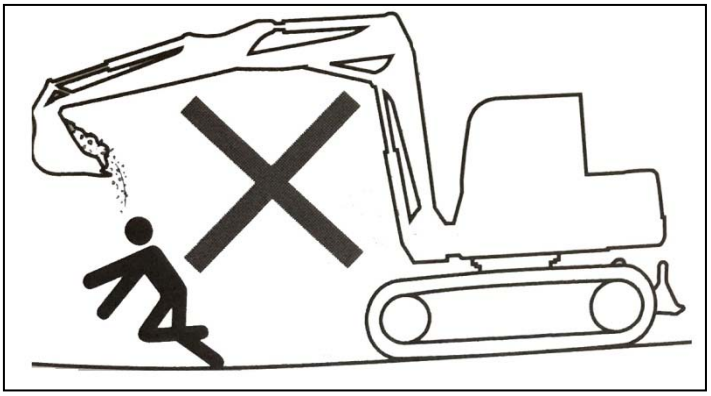

If the dozer moves over the person’s head, there is a danger for the goods scattered or dozer suddenly falling.

Ensure the driver safety when loading

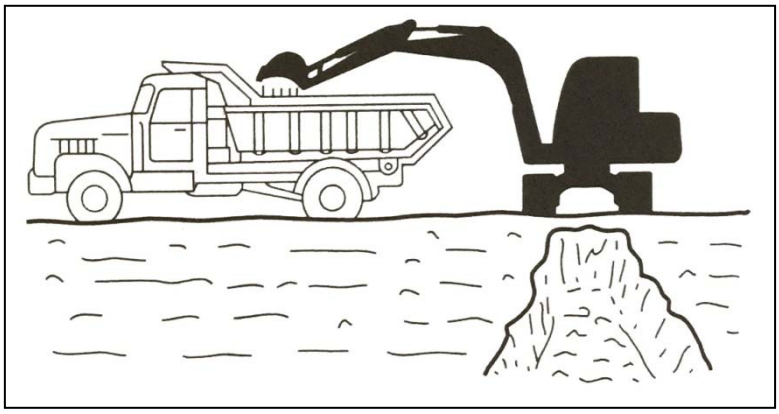

Do not apply load until the driver arrives at a safe place.

Do not swing or stop the dozer above the personnel or the cab.

Load from the back of the truck.

Keep safe distance from overhead high voltage cables

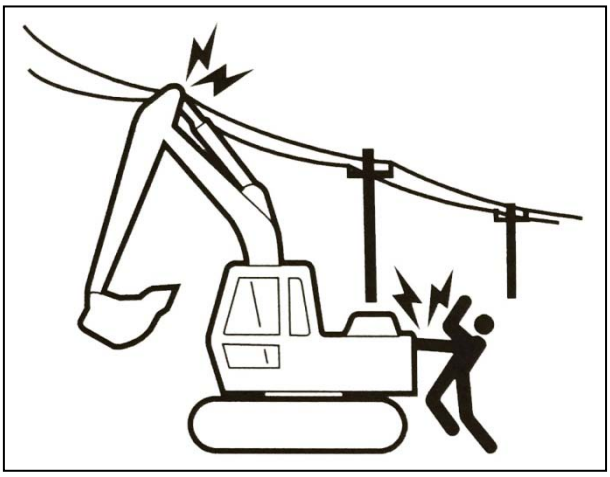

Do not make any part of the excavator or loading material close to the high voltage cable, unless all the local and national safety measures are taken. If people get close to or near or touch the excavator with discharging spark in power, there is a danger of electric shock and death.

Always keep a safe distance between the excavator and the high voltage cable.

Please verify the procedures related to safe operation from the local power company before

working.

Regard all the cables as high voltage cable, even if it is known or believed that the power supply is cut off and the cable is obviously grounded.

If the excavator is too close to the high-voltage cable, the signalman will send warning.

All the persons in the working area shall not get closed to the excavator or loading materials.

Please pay special attention to the buried high voltage cable.

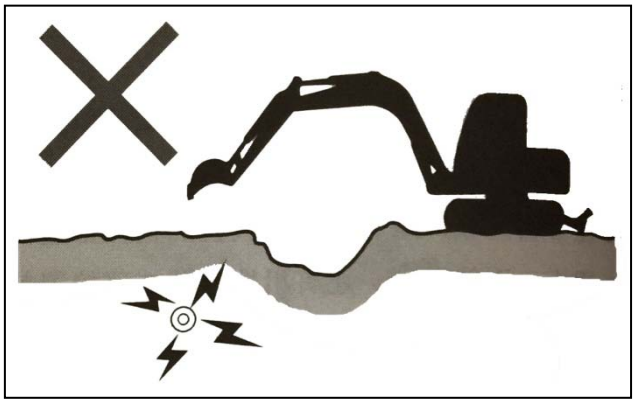

Pay close attention to the conditions of dangerous operation

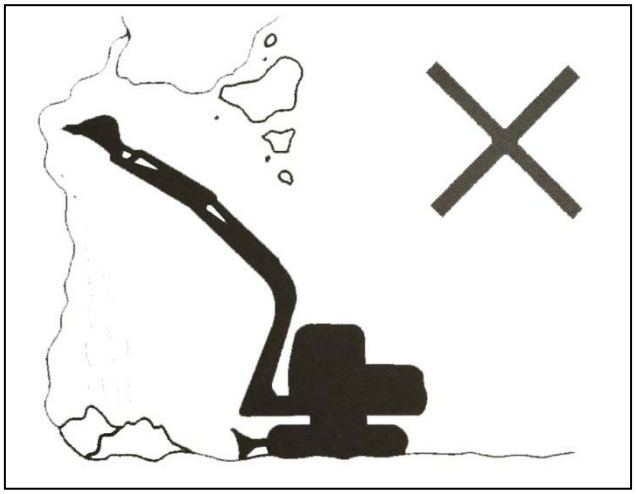

Do not dig at the bottom of high embankment. This may cause ground subsidence and is very dangerous.

Do not operate in a dangerous place with falling stones.

Keep a safe distance between the excavator and the edge of the site. Don't dig the ground in front of excavator.

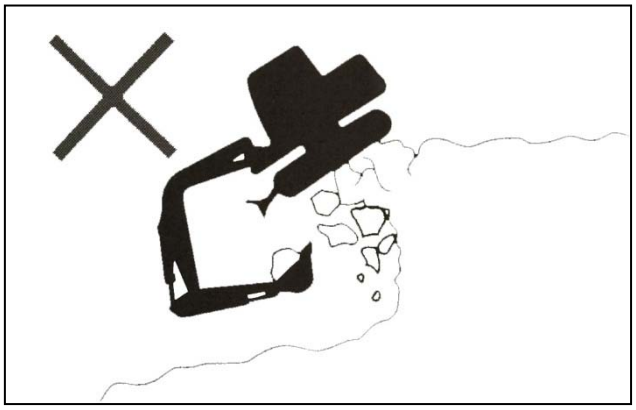

When working close to the cliff or on the road shoulder, to in when there is a problem is easy to escape, when in operation, make a right angle between the track and cliff or road shoulder with the dozer at the front in the operation for easy escaping in case of accident.

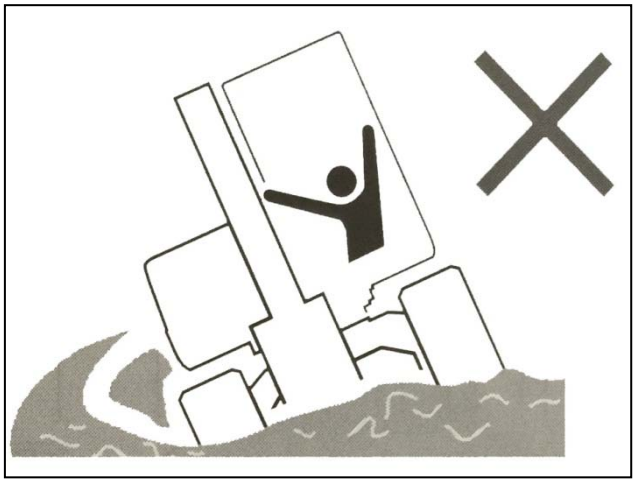

Do not enter into the area with soft ground. This will make the excavator to tilt due to the weight, leading to the collapse or falling into the ground.

Do not get close to the unstable ground (cliff, road shoulder, deep groove). If the ground vibrates or collapses due to the weight of the excavator, there may be risk of falling or rolling.

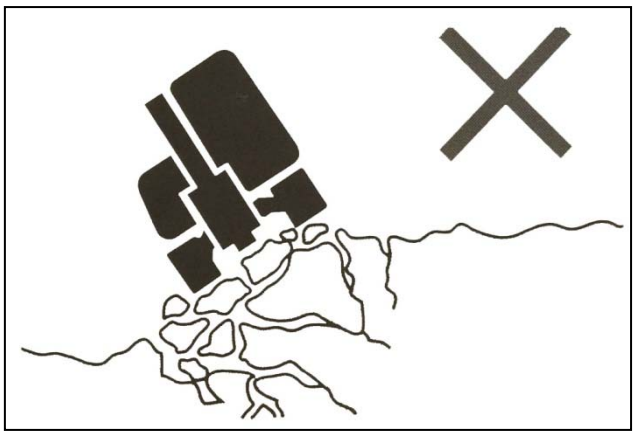

Remember that the soil is not solid after the heavy rain or blasting.

The ground on embankment top and surrounding the ditches is not solid.

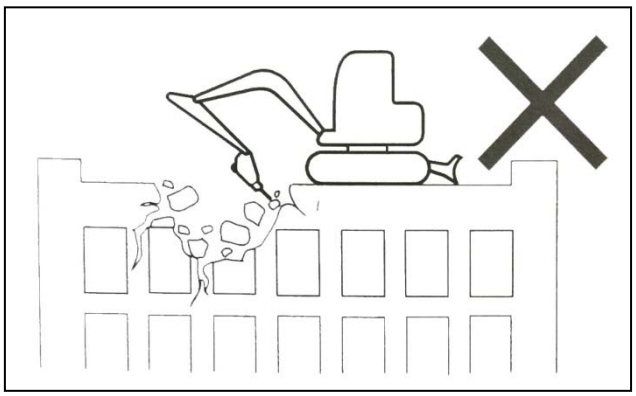

Do not disassemble under the excavator. Since the ground is unstable, the excavator may fall.

Inspect the strength and structure before the operation when working on the top of a building or other structures. If the building or structure collapses, it will cause serious damage or destruction.

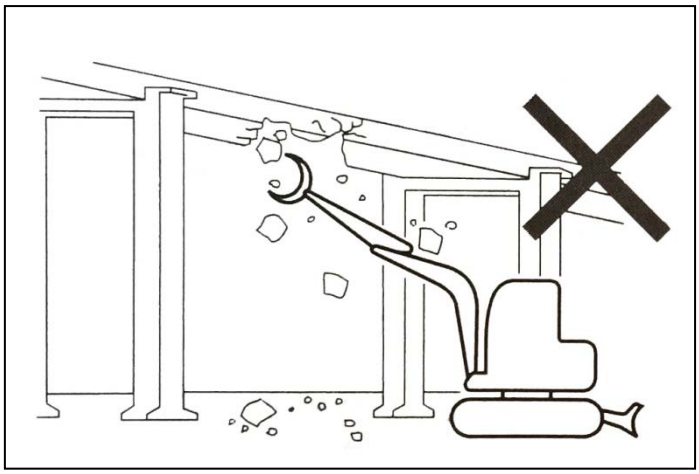

Do not disassemble from the top. There is risk of damaged objects falling and buildings collapsing, causing serious injury or destruction.

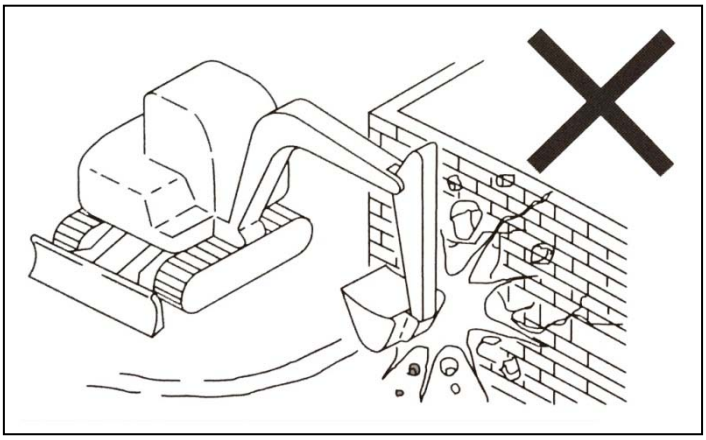

Do not use impact force of the dozer for destroying operation. The splashing debris and damaged dozer working device may cause injury or damage.

It’s dangerous to operate on a slope.

When operating on a slope or a ramp, the rotation or operation of the working device may result in instability and rolling of the excavator. Try to avoid the operation on the slope.

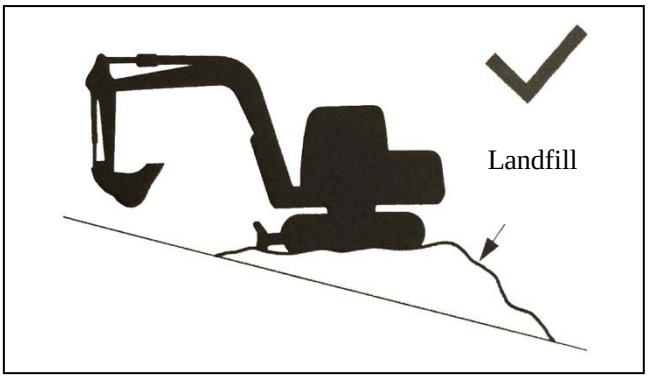

Flatten the working area.

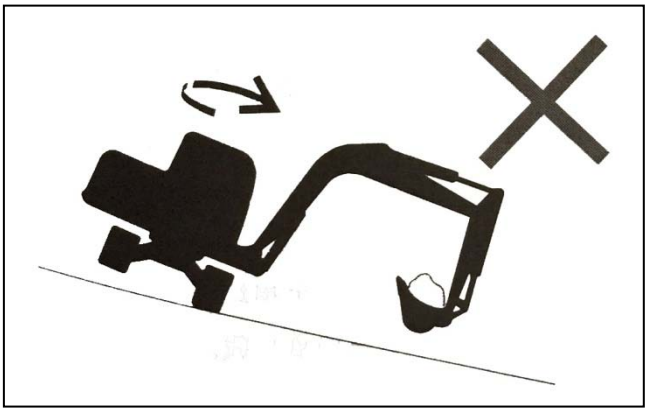

When the dozer is full of material, avoid turning to the downhill direction. This will reduce the stability of the excavator, and may cause rolling.

Do not turn (swing) laterally when the dozer carries heavy load

The excavator will more easily roll in the lateral direction than in the longitudinal direction.

When the end of dozer working device carries heavy load, do not turn (swing) laterally, especially not turning (swing) laterally on the slope.

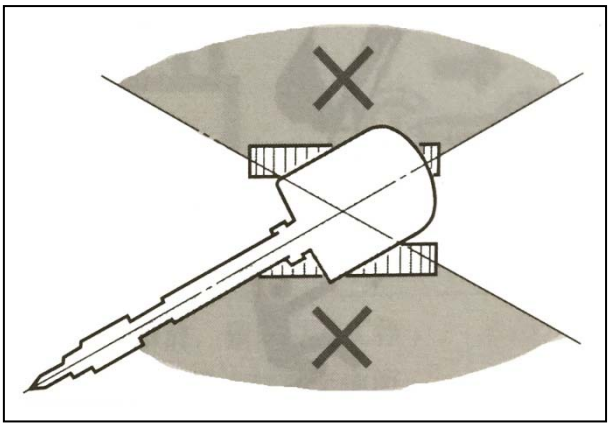

The accessory end is heavier than the standard dozer when the excavator is equipped with crashing hammer, crusher or a long bucket rod. Do not dig or operate laterally with rod (boom) toward the downhill direction.

Please pay attention to the objects overhead

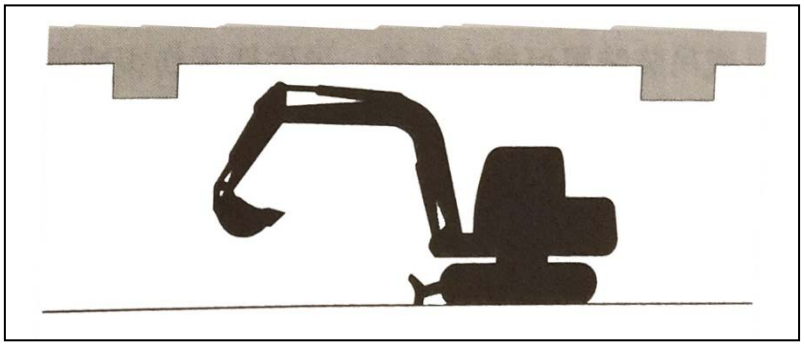

When operating under the bridge, in the tunnel, near the cable in the room, pay attention that the boom or dozer rod shall not hit the objects overhead.

The excavator is not designed for hoisting.

This excavator is designed for digging. Therefore, it has no safety device of the crane operation. If the excavator is used for hoisting, special attention shall be paid.

Do not overload when hoisting. Overload will cause the excavator rolling and even serious injury or death.

All the rated lifting capacity is based on the application on a stable and flat ground. As for the safe hoisting, the user shall keep proper margin for special working conditions, including soft or uneven ground, non horizontal state, lateral loads, dynamic or sudden loads, hazardous environment and personnel experience. The operators and other personnel shall be familiar with the operation manual before operating the excavator. Strictly follow the safety operation procedures of the equipment at any time.

If the chain or hoisting device is not connected properly, the dozer linkage or hoisting device may fail, serious injury or death.

When the excavator is used as a crane, do not attempt to pull stumps out from the ground. The load on the excavator is unknown in this case.

No one is allowed to stand above or below the object lifted, or near the working area.

Please pay attention to the flying objects.

This excavator is not equipped with a protective equipment to protect the operator from the damage of the flying objects. Please do not use this excavator in dangerous place where the

operator may be hit by the flying object.

2.2 Precaution in traction

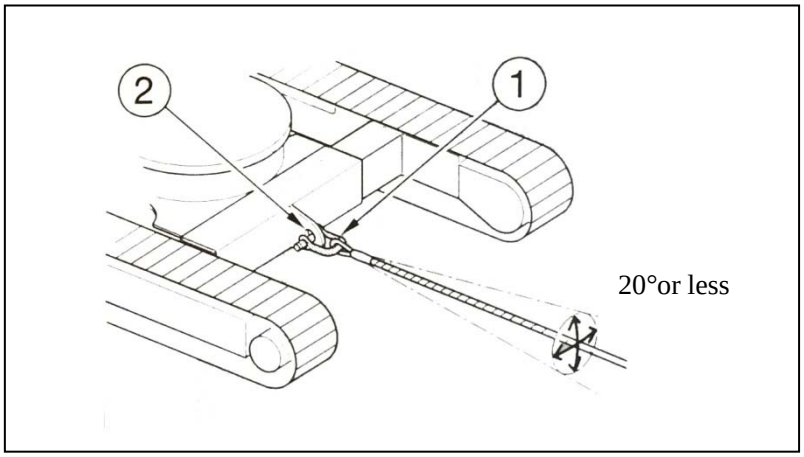

Improper operation, the wrong cable or improper inspection in the traction will cause serious injury or death.

The broken or detached cable will cause danger. Use the steel wire rope with matching traction.

Do not use twisted, kinked and even damaged cable.

Do not apply additional load on the rope suddenly.

Please wear the safety gloves when treating the cable.

Make sure that there is an operator respectively on the excavator that tows and the one that is pulled.

Do not tow on the slope.

Keep away from the cable in traction.

3. Operating procedures

Forbidden operation

Do not operate on bedrock (hard or soft).

Do not turn when walking. If the dozer working device must be operated when walking, the speed must be very slow, so that you can completely control the excavator at any time.

Do not apply the turning force for dismantling or leveling operation.

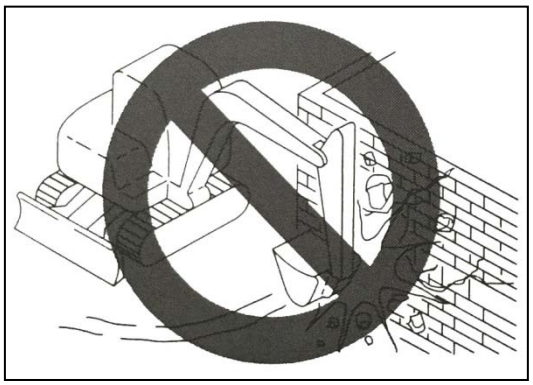

Do not use the turning force for wall dismantling or ground leveling. Moreover, do not make the bucket teeth in the ground. This will damage the dozer working device.

Do not dig when walking,

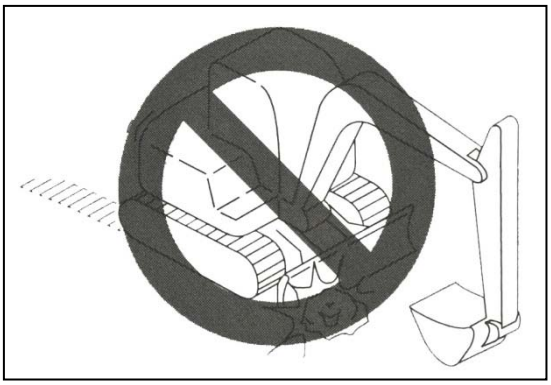

Do not put the dozer digging into the ground and dig by use the walking force.

Gently use the hydraulic cylinder.

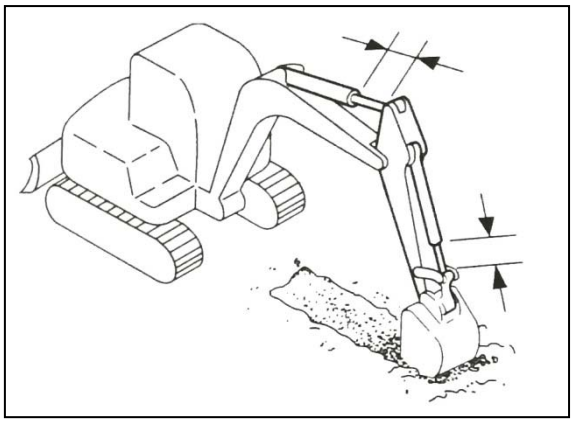

Do not stretch the hydraulic cylinder to the extreme position. Leave some clearance during the operation.

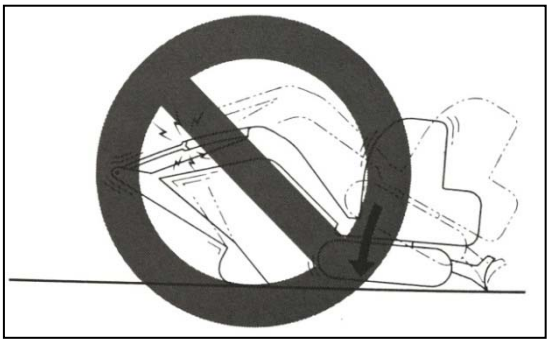

When the body is lowered and the dozer rod cylinder completely stretches, do not use the dozer working device to support the body. This will place the load on the dozer rod cylinder, and may damage the dozer rod cylinder.

Do not use the dozer to promote or punch the dozer for digging.

This will shorten the service life of the dozer working device. Use the hydraulic pressure to dig.

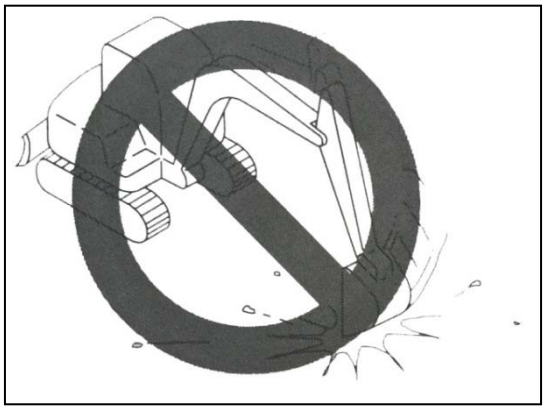

Do not use the excavator sinking force for the operation.

Application of extra strain on the excavator will shorten its service life. Use the hydraulic pressure of cylinder for digging, with small depth and long travel.

Dig the bedrock

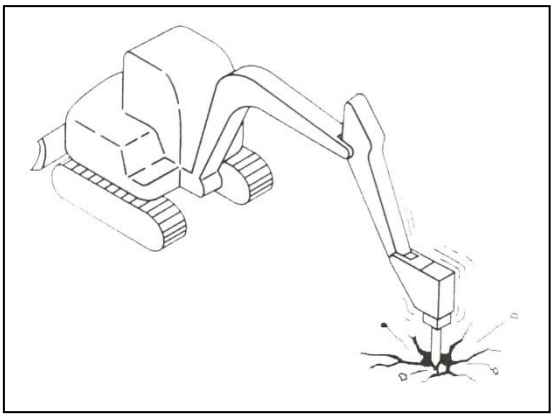

For hard rock: use the crushing hammer to break the rock into small pieces to prevent damage to the excavator, so it is more economic.

Pay attention to the impact on the dozer

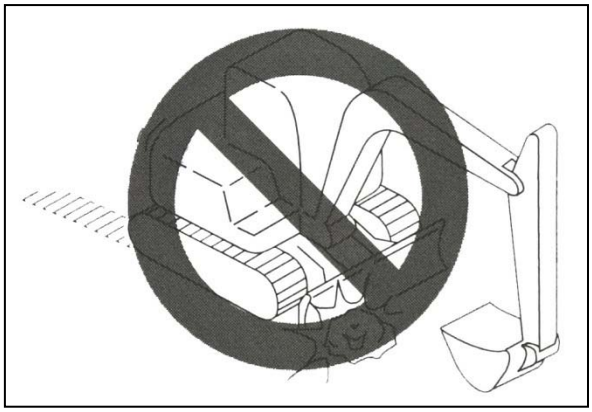

Using the blade to hit the rock may damage the blade and oil cylinder.

Carefully fold the dozer working device

When folding the dozer working device retracted, do not make the dozer impacting on the blade.

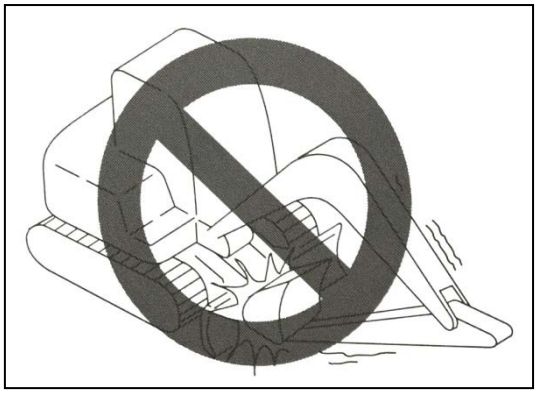

Do not use the blade as a support

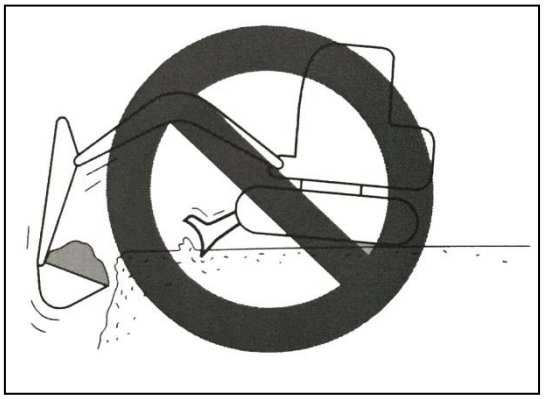

Pay attention to blade when digging

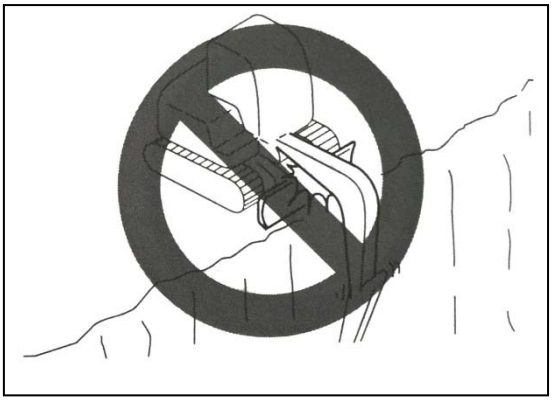

In deep digging, when the blade is at front, be careful to avoid the boom and dozer impacting on the blade.

Try to make the blade at the rear in the operation.

Carefully use the blade to dig downward.

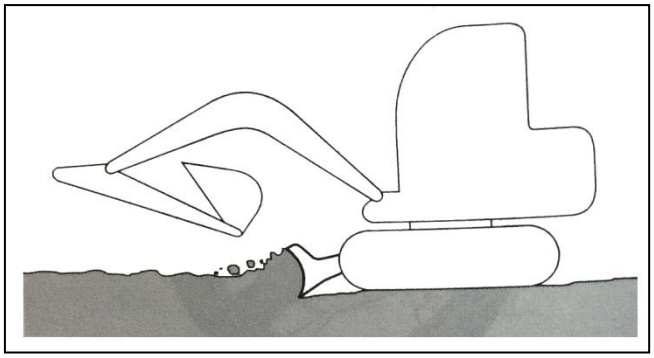

The blade is designed for simple push operation. Do not use the blade to dig down. This may damage the blade and the lower frame.

3.1 Walking precautions

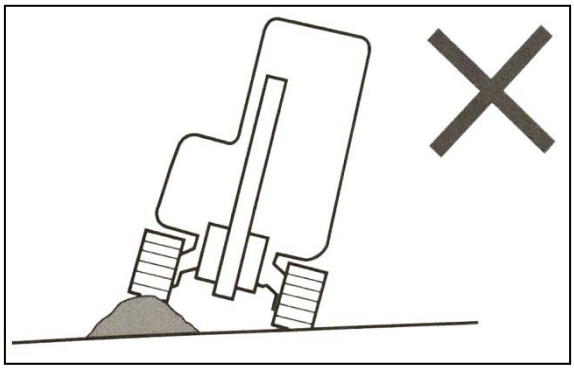

Walking on obstacles (rocks, stumps) may apply additional load to the body, and may cause damage. Try to avoid the obstacles. If the excavator must walk on such surface, make the dozer working device close to the ground and walk at low speed, make the central track over obstacles.

Precautions when walking at high speed

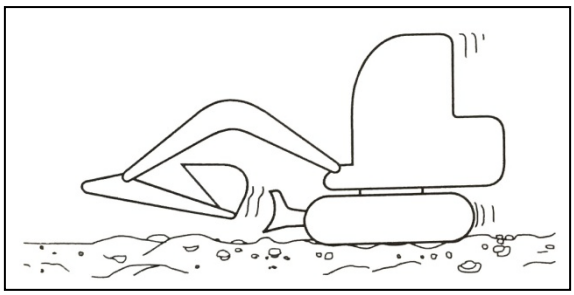

Keep walking on the rough road at low speed to avoid the sudden start, stop or changing direction.

Put the blade at the front when walking at high speed.

Precautions when the excavator works in the water.

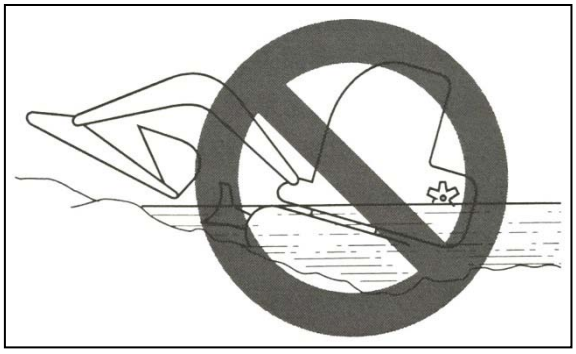

If the rear end of the excavator is submerged in the water as shown in the Fig. above, the radiator fan will rotate in the water, causing damage to the fan. It is forbidden to immerse the rear end of the excavator in water.

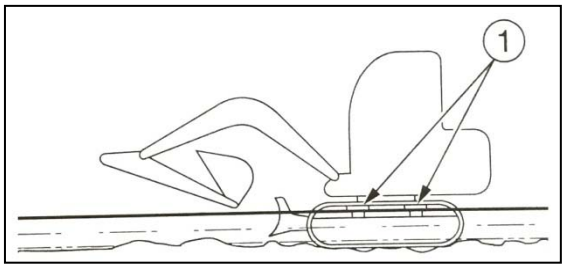

Allowable water depth

This excavator can be used only when the water does not exceed the middle section of track board.

Apply sufficient lubricating oil for those parts that are used in water for a long time until the old grease is squeezed. .

Do not immerse the turning bearing or body in the water or sand. If it has been immersed, please contact the Agrison service agent for inspection.

Out of the mud

If the excavator is trapped in the mud, please follow the steps below.

If one track is trapped mud

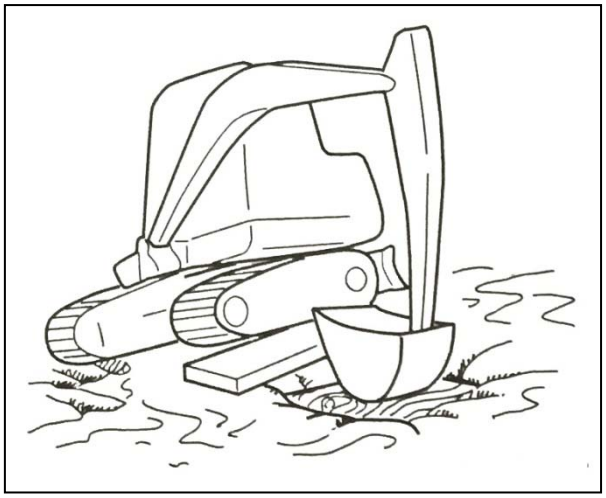

1. Swing the dozer s to track in the mud.

2. Set angle between the dozer rod and boom of 90° to 110°.

3. Push the dozer bottom (not dozer teeth) on the ground.

4. Put a piece of wood or similar objects under the lifted track.

5. Lift the dozer and slowly from get the excavator out of the mud.

If both tracks are trapped in the mud

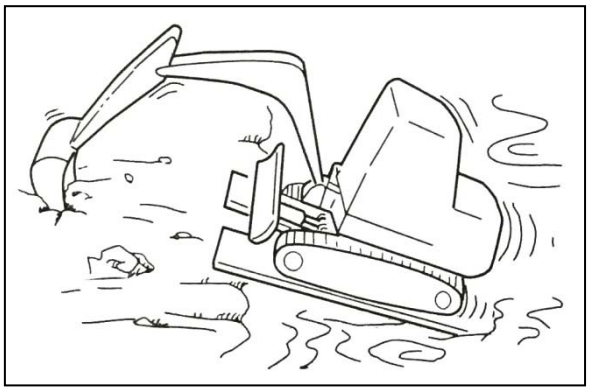

1. Implement from step 1 to 4 on the two tracks.

2. Put the dozer into the ground in front of the excavator,.

3. Pull the dozer rod when walking and move the excavator slowly.

Digging

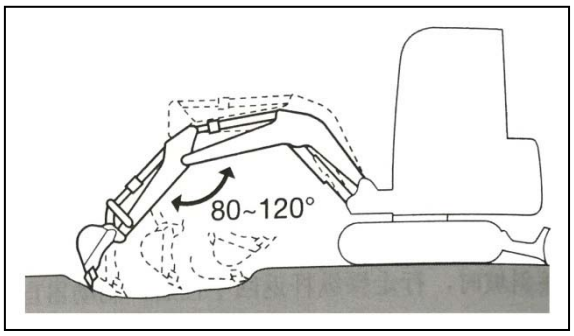

1. Put the blade at the opposite side of the digging area.

2. Dig with a rod and dozer, with small depth and long travel. The excavator could offer the max digging form when the angle between the boom and the dozer rod is 80° to120°. Dig effectively with this angle.

Digging ditches

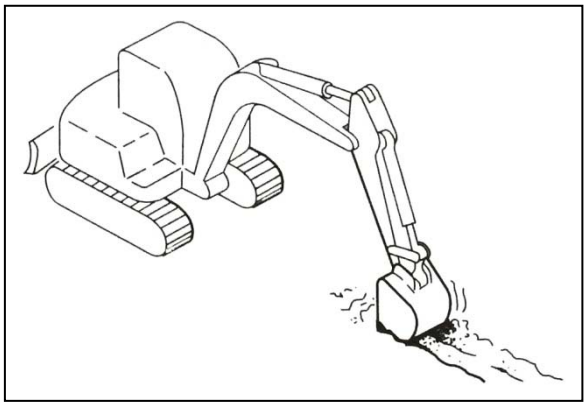

Install the dozer suitable for digging ditches; adjust the track to the parallel position with the ditches to improve the efficiency.

Dig the lateral side and then the middle when digging wide ditches.

Leveling

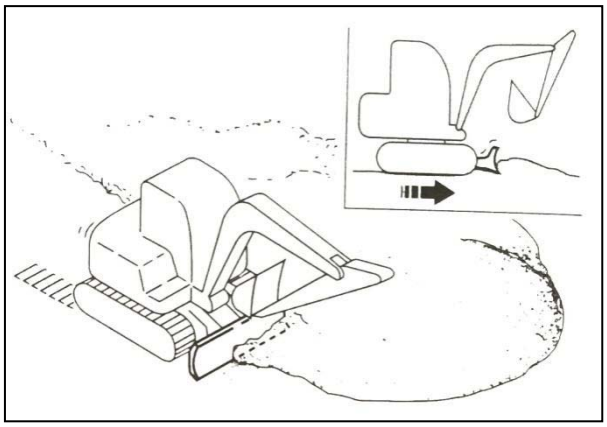

1. Get the dozer working device close to the excavator.

2. Slowly push the soil from the side of the mound.

3. When the mound is low, push the top soil from the top. If the load is too heavy for the body, lift or lower the blade for adjustment.

Handling the rubber tracks

The rubber track has inherent weakness: the lack of strength. Please comply with the following prohibitions and precautions to prevent damage or loss of track.

Prohibitions

Do not walk or operate the excavator at the following locations:

Walking and turning on the gravel, extremely rough hard rock, steel beam, scrap iron, or near the plate edge will damage the rubber track.

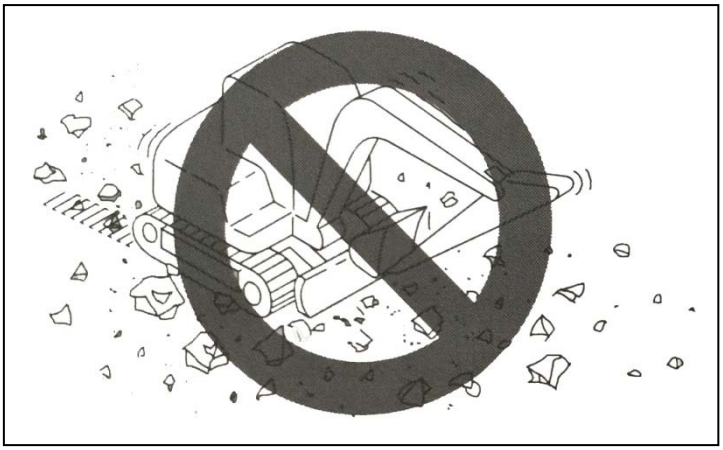

Walking on the river bed or ground with may gravels may cause gravel stuck in the track and damage the track, or to track off.

Do not use this excavator at the sea. The salt may corrode the steel core.

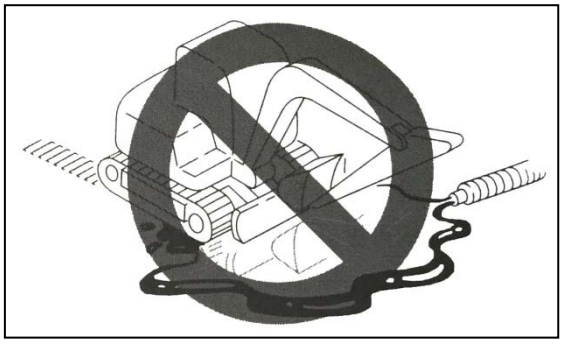

Do not make the fuel, lubricating oil, salt or chemical solvent adhering to the track. These substances may corrode the welding seam of the track steel core, causing rust or falling. If any such substances stick to the track, wash it immediately with water.

If the excavator walks on the irregular surface, such as a newly paved asphalt road, exposed to fire or on the hot iron under the sun, the handle may be worn or damaged.

Do not move the rubber track on the slipping ground. Otherwise it may accelerate the wearing of the handle.

Precautions

Please comply with the following precautions when operating the excavator:

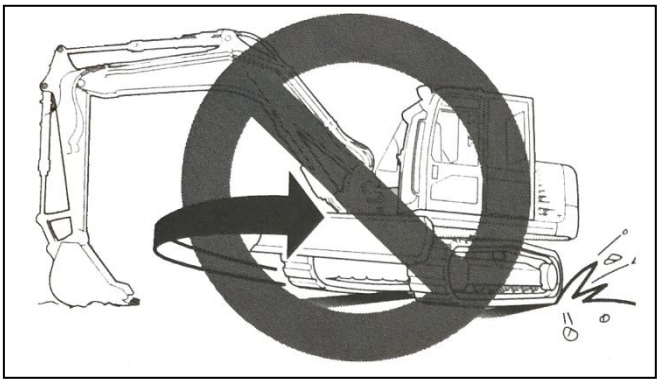

Do not turn the lower frame by using the dozer working device when the body rises at the front (excavator not turning). Otherwise the load will focus on a single point of the track that will twist, causing damage to the track quickly.

Try to avoid sudden direction changes or turning on the concrete at any time. It will cause wearing or damage of rubber track.

Try to avoid the impact on the track caused by falling.

The salt, potassium chloride, ammonium sulfate, potassium sulfate and lime superphosphate will damage the track. If any such substances stick to the track, clean immediately with water.

Keep the rubber track away from the friction between the concrete or wall.

Do not let the dozer hit the rubber track, causing damage to the track.

Pay special attention when working on snowy or icy surface in winter, because the track is easy to slip in these conditions.

Please use the rubber track at the temperature between -25℃ to +55℃.

In the long-term storage (three months or longer), please store the rubber track in the room without direct sunlight or rain.

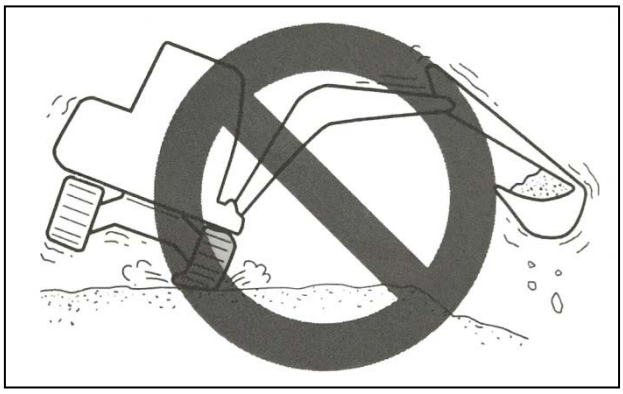

Since the entire handle is made of rubber, the rubber track is not as stable as the steel track. Be careful when turning laterally and swinging.

Prevent rubber tracks from falling

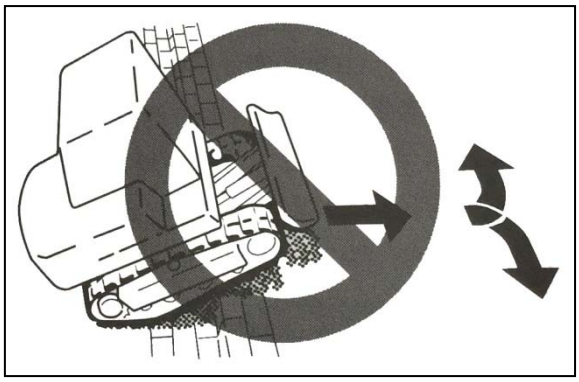

Comply with the following precautions to prevent the track from falling.

Always keep appropriate tension of the track.

When the vehicle goes cross such as pebbles or rocks and other large steps, (20 cm or higher), go up at a right angled and do not change the direction on the steps.

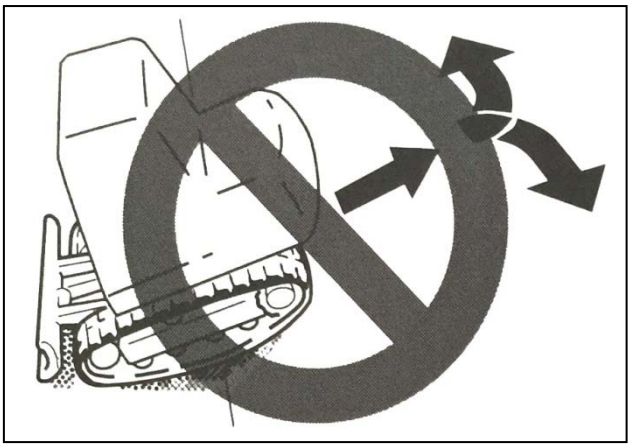

Do not change the direction at the beginning of the slope when climbing in reversing.

Please avoid putting one track on the slope or projected part while another track on the flat surface (the excavator inclines at angle of 10° or higher). Please walk with two tracks on the flat surface.

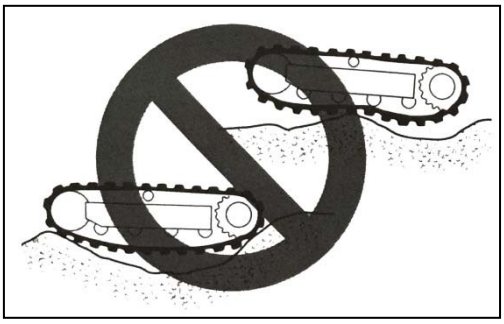

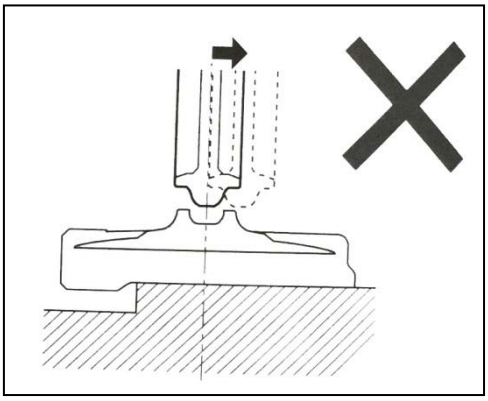

Please do not change direction when the track is loose as shown in figure.

In this case, if the excavator walks backwards, the rubber track will fall off.

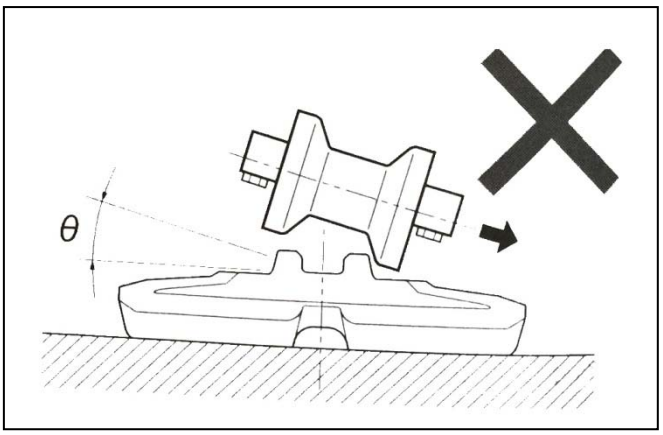

In this case, if the excavator rotates, the rubber crawler will fall off.

Hydraulic crushing hammer

Please refer to the single hydraulic hammer manual for the operation of the hammer.

When installing crushing hammer, tipping dozer or bucket, make sure that it is applicable for the excavator model.

Please contact your sales or service agent when selecting the accessories.

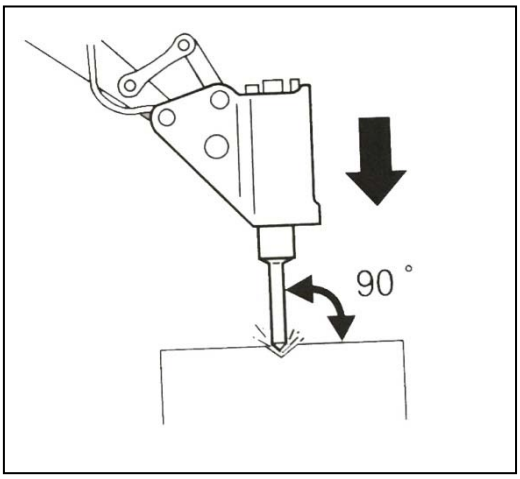

Carry out the crushing operation with the hammer head perpendicular to the working surface.

The hammer shall be properly aligned to the object to be crushed to avoid impacting on the air when crushing.

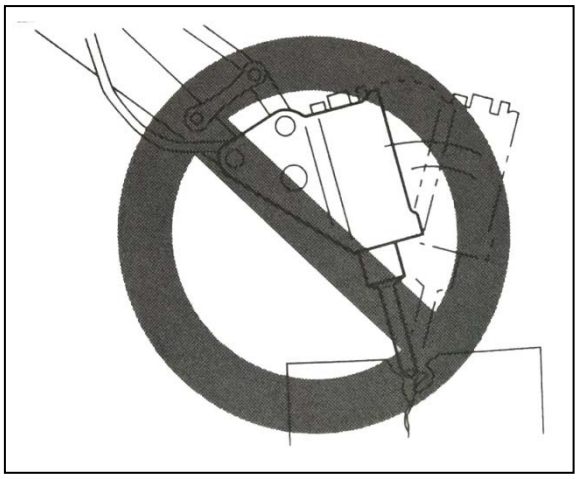

Do not use a hammer to pry, even in crushing.

Do not move the hammer when crushing.

Do not impact on the same surface for more than 30 seconds.

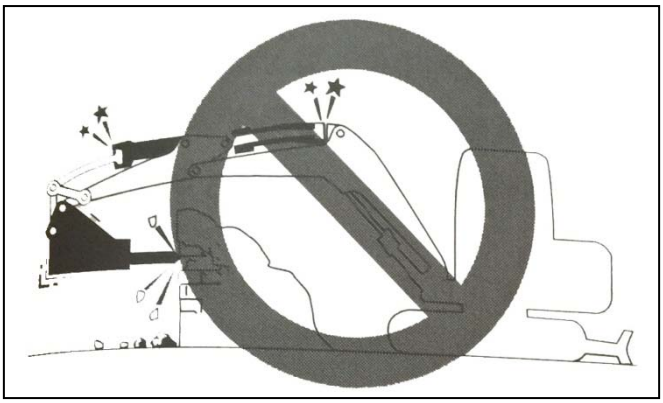

Do not crush when the cylinder full stretches or shrunk (end of travel). Keep a clearance at least 50mm.

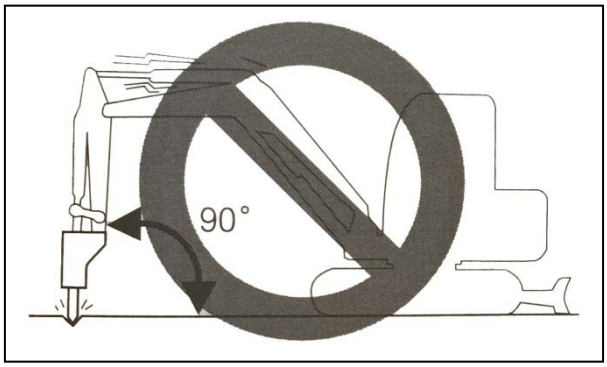

Do not crush when the dozer rod is vertical to the ground.

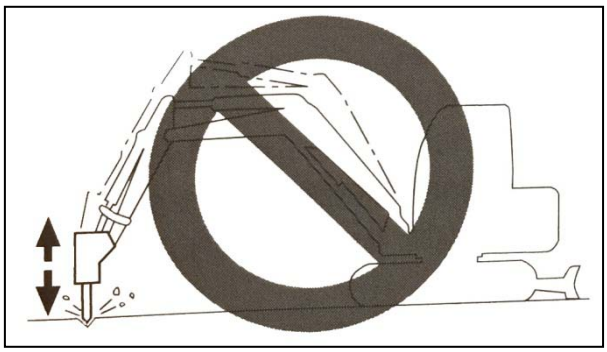

Do not crush the objects by the self-falling of the hammer itself.

Do not use the hammer to move the object or rock to be crushed.

Turn the excavator from time to time to cool the engine down.

If the hydraulic pipe has abnormal vibration, the reason may be the nitrogen accumulator leakage.

Please inspect as soon as possible.

3.2 Precaution when stopping

Safe parking

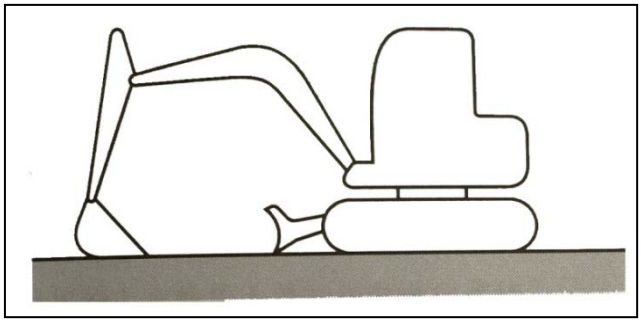

Park the excavator on a flat, solid and safe ground. Set the parking device.

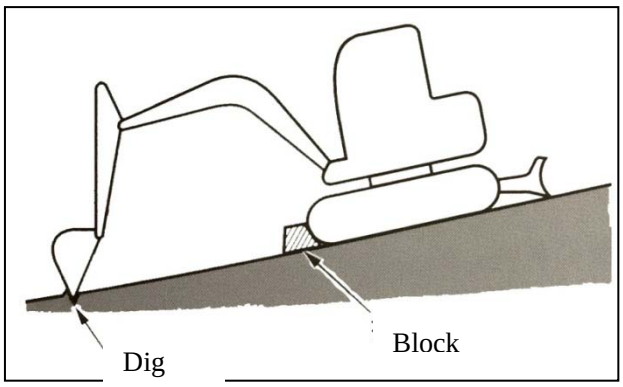

If the excavator must be parked on a slope or the body must be inclined, firmly park the excavator and prevented it from moving.

Apply the grille, warning signs, lights even visible at night when parking on the street, avoid the collision with other vehicles.

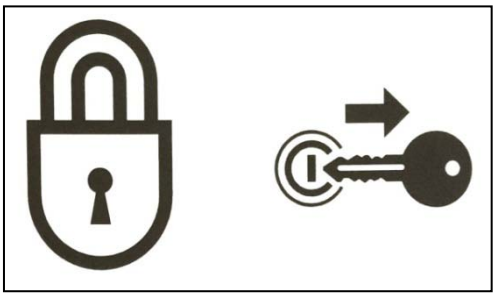

Prepare the following before leaving the excavator:

Lower the dozer and blade to the ground.

Shut down the engine and take out the key.

Lock the cab and cover, and take away the key.

3.3 Transportation precautions

Safely loading /unloading excavator

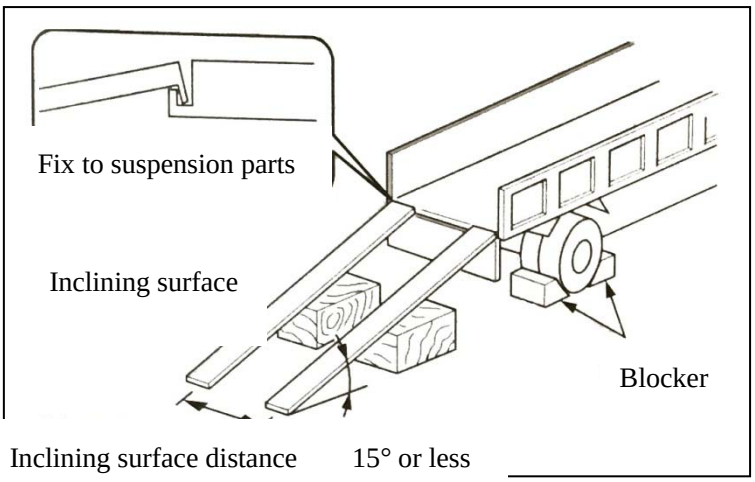

The excavator may roll or fall in loading and unloading. Please take the following safety measures:

Choose a solid flat ground with sufficient distance from the road shoulder.

Fix the inclined plane with sufficient strength and size to the truck compartment. The slope angle must not be higher than 15°. If the ramp is too large to bend down, apply a pillar or block to support.

Do not use the working device to load and unload the excavator. This will cause the excavator to roll or fall.

Keep the truck and loading surface clean with no oil, sand, ice, snow and other foreign matters to prevent excavator sliding. Sweep the track.

Apply the wedge to the wheels to prevent movement.

Please follow the signal of the signalman to walk at low speed when loading and unloading the excavator.

Do not change the direction on the slope.

Do not turn / swing on the slope. The machine may roll down.

When turning /swinging on the truck carriage, the anchor may be not stable enough, the action should be slow.

Please lock the door and lid after loading when possible. Otherwise, it may open during the transportation.

Apply a wedge to stabilize the track, and then fix the machine to the truck with a cable or chain.

Safely lift the machine

Master and apply the correct lifting gestures.

Check the lifting equipment everyday to find the damaged or missing parts, and replace it if necessary.

Please use the cable able to pull up the machine when lifting.

Lift the machine according to the procedures described below. Do not operate in any other manner; otherwise it may result in machine imbalance.

Do not lift the machine when the operator is on the machine.

Please slowly lift the machine so as to avoid the rolling.

Keep all the persons away from the operating site. Do not move the machine over the top of people’s head.

Safely transport the machine

Understand and comply with the applicable safety regulations, vehicle code and traffic rules when transporting the machine.

Consider the length, width, height and weight of the truck after loading the excavator in order to select the best transportation route.

Do not start or stop or run at high speed in the transportation. Otherwise the excavator will move or lose balance.

4. Maintenance precaution

Mark “Do not operate” warning message

If the unauthorized personnel starts the engine or touches the control device in the inspection or maintenance of the excavator, may cause serious injuries.

Please shut down the engine flameout before maintenance, remove the key and carry it with you.

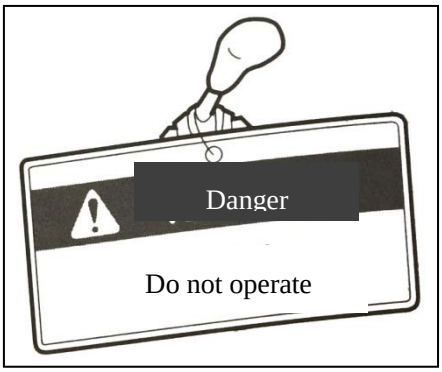

Mark “Do not operate” warning information at obvious place on the starting switch or control lever.

Use the right tools

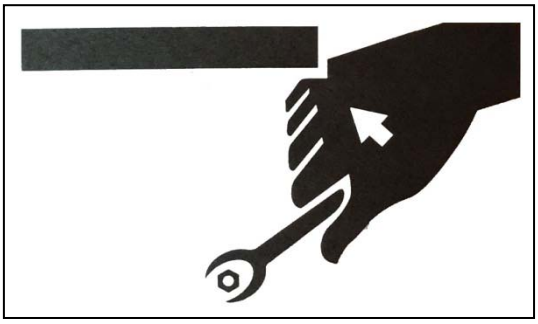

Do not use the damaged tools or tools with poor performance or tools with other purposes. Use the suitable operation tools.

Regular replacement of safety key parts

To ensure safe usage of the excavator over a longer period, regularly fill the fuel and carry out the

inspection and maintenance. In order to improve the safety, please regularly replace the hose and seat belt and other safety key parts.

“Regularly replaced safe key parts” refer to the parts that will age, wear and have deteriorated function after using repeatedly. The performance of such parts will change over time. The characteristics of such parts may cause mechanical damage or serious injury. It is difficult to judge the remaining service life by visual inspection or operation feeling.

If any damage is found in visual inspection, please regularly replace the safe key parts, even if it doesn’t reach the specified replacement interval.

Regularly replace the fuel hose. The fuel hose will wear over time, even if the fuel hose doesn’t show any signs of wearing.

Replace the parts in case of wearing no matter what the replacement schedule is.

To safely use the excavator, please carry out regular inspection and maintenance. Replace the following safe key parts regularly to improve the safety. The damaged parts will cause serious injury or fire.

Safe key parts list

<table>
<tr><th colspan="2">System</th><th>Regularly replaced safe key parts</th><th>Replacement time</th></tr>
<tr><td colspan="2" rowspan="2">Fuel system</td><td>Fuel pipe</td><td rowspan="4">Every 2 years</td></tr>
<tr><td>Packing on fuel tank cover</td></tr>
<tr><td rowspan="2">Hydraulic system</td><td rowspan="2">Host</td><td>Hydraulic pipe (pump outlet)</td></tr>
<tr><td>Hydraulic pipe (pump suction port)</td></tr>
</table>

		Hydraulic pipe (Turning motor)	
		Hydraulic pipe (walking motor)	
	Working device	Hydraulic pipe (boom cylinder pipe)	
		Hydraulic pipe (Rod cylinder pipe)	
		Hydraulic pipe (dozer cylinder pipe)	
		Hydraulic pipe (swinging cylinder)	
		Hydraulic pipe (blade cylinder)	
		Hydraulic pipe (pilot valve)	
		Hydraulic pipe (auxiliary pipe)	

Expolsion proof lighting

When inspecting the fuel, lubricating oil, coolant or battery electrolyte, please use the explosion-proof lamp to prevent the fire or explosion. Otherwise, the explosion may cause serious injuries and deaths.

Only authorized personnel are allowed in this area.

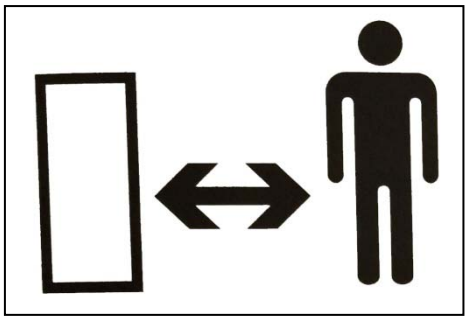

Keep the unauthorized personnel away from the working area when operating. Please take care when grinding, welding or using a hammer. You may be injured by the splashing debris from the excavator.

Working area preparation

Choose a stable operation area. Ensure proper lighting condition. If working in the room, ensure the ventilation.

Clear the obstacles and dangerous goods and eliminate the slippery area.

Always keep the excavator clean

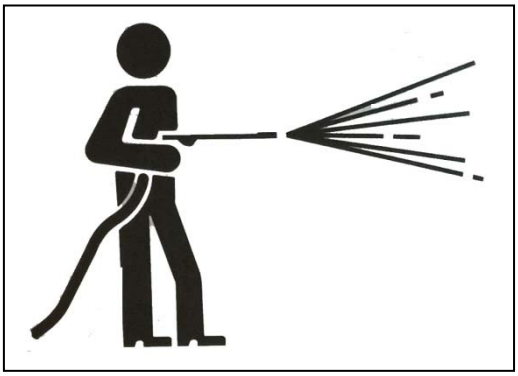

Clean the excavator before maintenance.

Shut down the engine before cleaning the excavator. Cover the electrical parts to prevent water. If the water enters into the electrical parts may lead to a short circuit or failure. Do not use water or vapor to clean the battery, electronic control units, sensors, connectors, or cab.

Shut down the engine before maintenance

When the excavator operates, or the excavator does not operate, but the engine works, avoid the lubricating or mechanically adjusting the excavator.

If maintenance must be carried out when the engine works, two persons shall be assigned to work in a team and communicate with each other.

One person must sit on the driver's seat so that he could shut down the engine immediately if necessary. Special attention shall be paid not to touch the control lever and the pedal except for special case.

The other person performing the maintenance shall keep the body or clothes away from the excavator moving parts.

Away from the moving parts

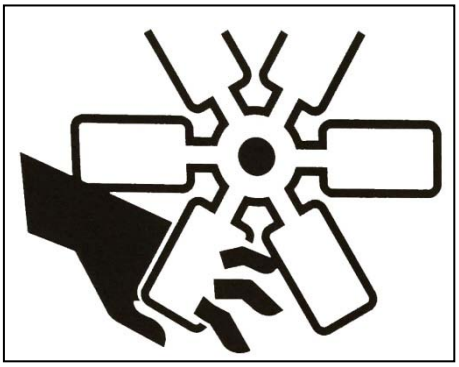

Keep away from all the rotating and moving parts. If the hand or tool is stuck in a rotating or moving part, it can cause serious injury or even death.

If a tool or other objects are dropped or inserted into a fan or fan belt, these objects can be blown into pieces or chopped up. Do not throw anything in or into the fan or fan belt.

Firmly fix the excavator or any part that may fall.

Lower all the movable working equipment onto the ground or at the lowest position before maintenance or repair under the excavator.

Fixed track

If you have to work under the lifted excavator or equipment, always apply a wooden block, jack, or other solid and stable support for fixing. Do not work under excavator or the working device if such equipment is not fixed stably. This procedure is especially important when working with the hydraulic oil cylinder.

Fix working device

When repairing and replacing the dozer teeth or side teeth, firmly fix the working device to prevent accidental movement of the excavator.

Keep it stable when the engine hood or cover is opened.

Fix the engine hood or cover before working in the excavator. Please keep the engine hood or cover closed when the wind is heavy or the excavator stops on the slope.

Place the heavy objects in a stable position.

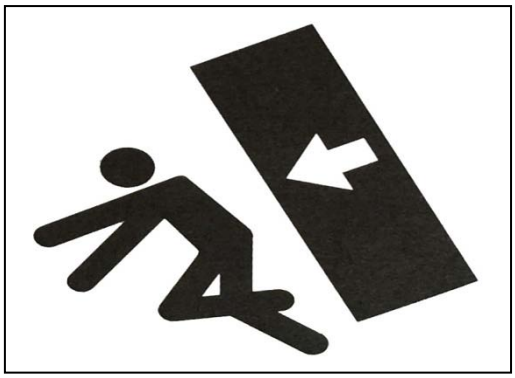

When the heavy objects or accessories are put on the ground in removing or installing, please be sure to put them in a stable place. Keep the unauthorized persons from the place where such items are stored.

4.1 Refueling precautions

The smoking or open fire is not allowed when refilling or near the filling station.

When the engine is running or is not cooled, do not remove the fuel tank cap or fill. Do not splash the fuel on the surface with high temperature of the excavator.

Fill in the fuel tank in a well ventilated place.

Do not fill the fuel tank full. Keep a space for oil expansion.

Clean the overflow fuel immediately.

Securely tighten the fuel tank. If the tank cover is missing, replace with the original one. Using the unauthorized tank cover with poor ventilation will generate internal pressure.

To prevent dust from entering

Install and remove the parts in the place with no dust. Clean the working area and the parts to prevent dust from entering.

Clean the installing surface

When installing and removing the parts, keep the contact surfaces of the parts clean. If the seal slot of the contact surface is damaged, please contact your sales or service agent for maintenance or repair.

Seal ring and cotter pin

Replace the removed seal ring and cotter pin with new parts.

Do not damage or twist the seal ring when installing.

Seal ring

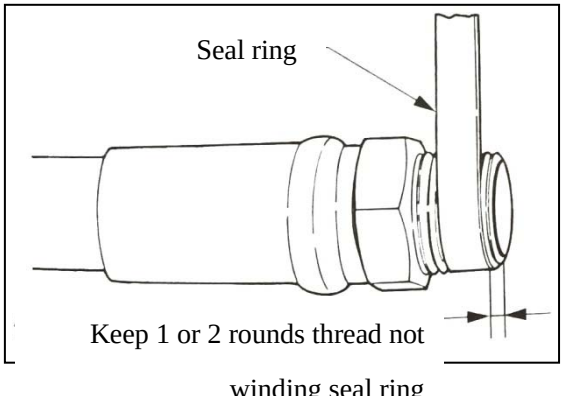

When using the seal tape to wrap the plug, clear the old seal tape on the thread and clean the thread.

Use the seal ring to wind the thread, keep 1 or 2 round not winding at the end of the plug.

Do not use the fuel for cleaning

Apply the correct grade for fuel and lubricating oil according to the season.

Please refer to the following table to select the appropriate fuel, lubricating oil and grease according to the temperature. No matter it reaches the designated time, if the oil becomes too dirty or has gone bad, please replace it.

Do not mix oil in different brands when filling. If you want to change the brand, replace all the fuel / oil.

Fuel

The diesel shall meet the following specifications; this table lists several diesel specifications available in the world.

Diesel specifications	Position	Diesel specifications	Position
GB252	China	BS2869-A1 or A2	Great Britain
ASTM D975 Number: 1-D, S15	USA Canada	ISO 8217DMX	International
Biodiesel Biodiesel blend for B5 D6751 D7467, ASTM			
EN590：96	European union	JIS K2204 2 level	Japan
Biodiesel Biodiesel blend for B5			

ENI4214, EN590			

Diesel oil tank

In order to maintain the engine performance and service life, always use clean, high quality fuel.

In order to prevent freezing in the cold weather, please choose to apply the diesel oil that can be used in the actual temperature condition at least 12℃ lower than the expected minimum outdoor temperature.

Please use the diesel oil with cetane value of 45 or higher. When working in the cold area or place with high altitudes, the fuel with higher cetane value is required

Use the fuel with sulfur content less than 0.05~0.0015%. (in the United States or Canada, using fuel with ultra low sulphur). Using the fuel with high sulphur may cause acid corrosion of the engine cylinder.

Never use kerosene. Do not mix kerosene, used lubricating oil or residual fuel and diesel oil

The fuel with poor quality will reduce the performance of the engine or damage the engine. It is not recommended to use the fuel additives. Some fuel additives will deteriorate the engine performance.

The metals, such as zinc, sodium, magnesium, silicon and aluminum, must be limited to one in a million (1 ppm mass) or less.

Using bio-diesel safety measures, the engine manufacturer warranty provisions are invalid for the excavator not meeting the standard or using deteriorated bio diesel.

Lubricating oil

API standards: America Petroleum Institute

ACEA standards: European Automobile Manufacturers' Association

SAE standard: Society of Automotive Engineers

Position	Type	According to the type of temperature Selection -4 14 32 50 68 86 104 ˚F -20 -10 0 10 20 30 40 ˚C	Replacement time
Oil sump	Diesel fuel API: CD level ACEA: E-3/E-4 or E-5	SAE 10W-30 SAE 15W-40	The first 50 hours every 250 hours after
Hydraulic oil tank	Anti wear hydraulic oil	ISO VG32 ISO VG46 ISO VG68	Every 2000 hours
Cooling system	Cooling water (water + Coolant)** SAE:J814C or J1034	50% coolant mixture 30% coolant mixture	Every 1000 hours
Walking reduction gear	Gear oil API:GL-4	SAE 90	The first 250 hours* every 1000 hours after
Turning motor	Lithium grease EP-2	-	Every 50 hours

Turning support	NLGI No.2		Every 50 hours
Working device			Every day or every 10 hours
Rod			When needed

*: If the walking time takes higher proportion in the total operation time, repthlace the gear oil before the specified interval..

**: Please use tap water (soft water). Do not use well water or river water. When the outdoor temperature drops below 0℃, add the coolant (antifreeze). Determine the mixing ratio according to the manufacturer's instructions.

***: The hydraulic oil replacement interval depends on the hydraulic oil used. Replace the hydraulic oil every 2000 hours when using the common wearing resistant hydraulic oil.

Hose handling

The lubricating oil or fuel leakage will cause a fire.

Do not twist, bent or impact the hose.

Do not use a twisted, bent or cracked pipe, metal pipe or hose, otherwise it may burst.

Re-tighten the loose connector.

Be careful when operating the parts with high temperature and high pressure

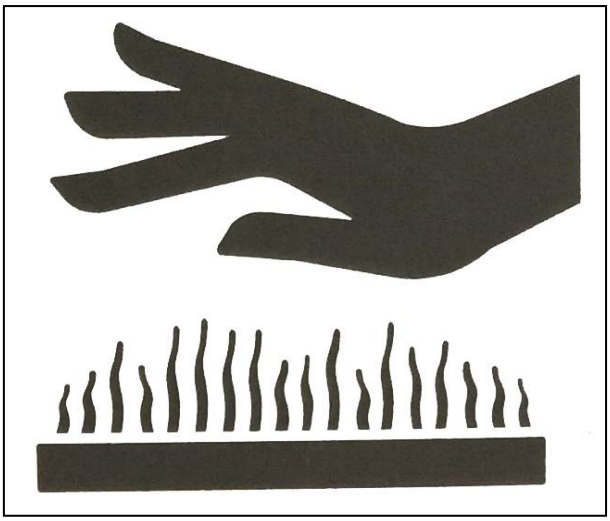

Shut down the engine and cool it down before maintenance.

The engine, exhaust pipe, radiator, hydraulic pipe, sliding parts and other parts are very hot when the engine is just shut down. Touching these parts may cause burns.

The engine coolant, hydraulic oil and other oil are under high temperature and high pressure.

Do not touch the hydraulic oil when releasing the cover or plug. If the excavator is operated in this case, it will cause burns or injury due to hot oil spray.

Be careful when operating the cooling system with high temperature

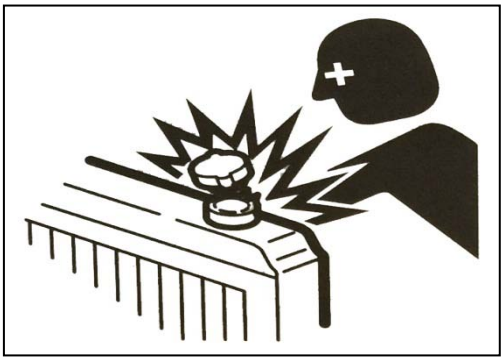

Do not remove the radiator cap or drain plug when the cooling water is hot. Shut the engine down and wait until the engine and cooling water is cooled down. Then slowly loosen the radiator cap to release the internal pressure, and then remove it.

Take care of internal oil pressure

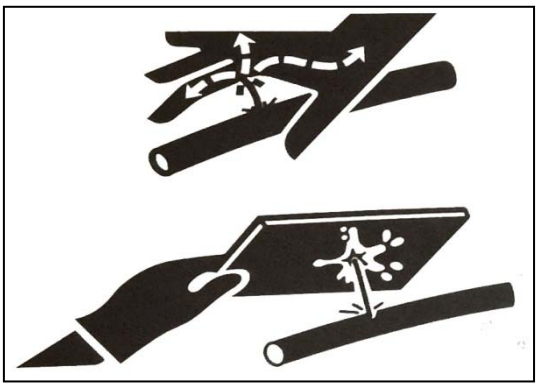

After the engine is shut down, the pressure in the hydraulic oil pipe will be maintained for a long time.

Completely release the internal pressure before the maintenance.

The high pressure of the hydraulic oil can pierce the skin or eyes, causing serious injuries, resulting in blindness and even death. Remember that the hydraulic oil leaking from the hole is almost invisible to the naked eye. Wear thick gloves and goggles when inspecting the leakage, and use cardboard or plastic to protect the skin to prevent the hydraulic oil from spraying.

If the hydraulic oil is invaded in the skin, doctor familiar with the condition shall clear it in a few hours.

Before working on the hydraulic system, carry out the pressure relief

Before relieving the pressure in the hydraulic system, the hydraulic oil may inject if the cap or filter is removed or the pipeline is disconnected.

Release the vent plug slowly to release the tank pressure.

When taking off the plug or screw or disconnecting the hose, stand on the side and slowly release to gradually release the plug to relieve the internal pressure, and then take it away.

The oil or oil plugs may be ejected by pressure in the walking motor tank. Slowly release the plug to release internal pressure.

Please pay attention to the splashing debris when using a hammer

The pin or metal debris may splash when using a hammer,. This may cause serious injuries.

Wear the goggles and gloves when using the hammer to knock the pin, dozer teeth, lateral teeth or bearing and hard metal parts. Please make sure that no one is surrounding when knocking the pin or teeth.

Pay attention to high pressure grease

In the track tension device, the grease pressure relief valve may fly to cause injury under high pressure, such as adjusting the tightening force, failure to follow the procedures below.

Do not loosen the grease pipe fittings.

Slowly release the grease pressure relief valve. Do not turn it over a round.

Do not place the face, arm, leg or body in front of the grease pressure relief valve.

When releasing the grease pressure relief valve, if there is no oil outflow, the valve has fault. Please contact the Agrison service agents for maintenance.

Do not remove the track tension unit

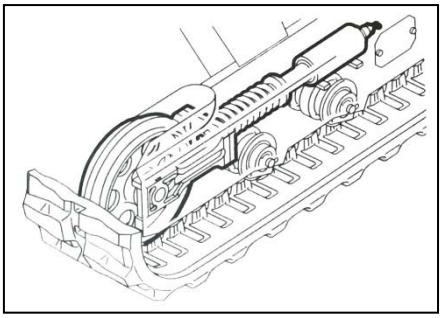

The track tension device is provided with a strong spring. When the track tensioning device is accidentally opened, the spring will pop out, which will cause serious injury. Do not remove the rack tension device.

Disconnect the battery line

Before conducting the electronic system operation or welding, please disconnect the battery wire. First disconnect the negative (-) battery cable. Connect the negative electrode (-) battery cable in re-connection.

Please be careful when handling battery

The battery contains sulfuric acid. If you touch it accidentally, the eyes or skin may be injured.

Wash immediately with clean water and quickly seek medical help if it enters into your eyes.

If swallowed, drink plenty of water or milk, and immediately seek medical help.

If the sulfuric acid contacts with the skin or clothes, immediately wash with plenty of water.

Wear the goggles and gloves when operating the battery.

The battery can generate flammable hydrogen, which may cause explosion. Keep it away from open fire, sparks, or lit cigarette.

Use a flashlight when inspecting the electrolyte level.

Before inspecting or handling the battery, make sure to turn off the switch to shut down the engine.

Do not let the metal tools or any metal objects touch the electrode and cause a short circuit.

When the electrode is loose, it will generate the electric spark. Tighten it firmly.

Make sure that the battery cover is firmly closed.

When the battery is frozen, do not charge or start the engine by jumper cable, or there may be an explosion. Heat the frozen battery 15℃ before using.

Do not use the battery when the liquid level is below the lower limit. Otherwise it will speed up the battery internal aging and shorten the battery life and cause cracking (explosion).

Do not fill distilled water to the upper limit. Otherwise the electrolyte will leak. Contact with the liquid can damage the skin, or corrode the excavator parts.

Use the wet cloth to clean the area around the electrolyte wire and inspect the electrolyte level. Do not use the dry cloth to clean; otherwise it can cause the accumulation of static electricity, leading combustion or explosion.

Using the battery charging wire for jumper start

When starting the engine by using a battery charging wire, connect the wire according to the following steps. The incorrect connection of the wire will cause the discharging and the battery

explosion.

Do not make the “excavator with problem” touching the “rescue excavator”.

Do not make the positive battery charging wire (+) and negative (-) wire touching or contact with the excavator.

When connecting, first of all, connect the battery charging wire positive to the positive (+) terminal. Disconnect the negative cable from the negative (-) terminal (the ground).

Please firmly connect the wire clip.

The last wire clamp of the battery charging wire is connected to the place far away from the battery.

When using the battery charging wire to start the engine, always wear goggles and gloves.

Use the battery charging wire and wire clip with capacity suitable for battery. Do not use the damaged or corroded battery charging wire and wire clamp.

Make sure that the battery of the “rescue excavator” has the same capacity with that of “excavator with problem”.

Please ask the Agrison service agent for welding.

Only the qualified personnel could weld at the workplace with complete equipment. To prevent any damage to any part of the excavator due to excessive current or electric spark, please observe the following.

Disconnect the battery before welding.

Do not keep on applying the voltage of 200V or higher.

The grounding point shall be connected within 1m away from the welding position. Do not

connect the grounding point to the electric control device / instrument or near the connector.

Make sure that there is no seal ring or bearing between the welding parts and grounding terminal.

Don’t take the grounding end around the pin or the hydraulic cylinder connected in working device.

A welding operation to the connector body, first disconnect the electric control device should be before the operation.

Vibration of the operator

As shown by the test results for the vibration caused by the excavator to the operator, the upper limb of operator endures vibration below 2.5m/s^2 it, and when sitting on the seat, the body endures the vibration below 0.5m/s^2.

Waste disposal

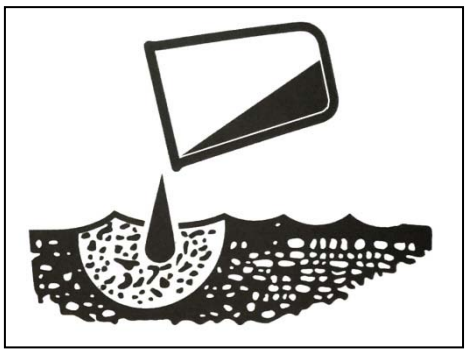

Ensure that the waste oil from the excavator is collected in the container. Improper handling of the waste oil will do harm to the environment.

Follow the applicable laws and regulations when dealing with harmful objects such as lubricating oil, fuel, coolant, solvent, filter and battery.

Treatment of hazardous chemicals

https://truckmanualshub.com/

Direct exposure to harmful chemicals will cause serious injury.

The hazardous chemicals used in this excavator include grease, battery electrolyte, coolant, paint and adhesives.

Please handle the hazardous chemicals carefully and properly.