The best of two worlds

HUDDIG 1370T

HUDDIG 1370

HUDDIG

https://truckmanualshub.com/

TWIN POWER

The same DNA – but each unique in their own way

Imagine a machine that improves your daily work – on every level. A machine that pushes boundaries to what ought to be possible and that creates new business opportunities for your company.

Imagine a machine that is so quiet that you can talk to your colleagues outside instead of having to shout. A machine that can be powered by electricity for up to two hours without compromising on power, torque or precision, and with a battery you can easily charge using the machine's own diesel engine in just 40 minutes.

Imagine a machine that makes you one of the pioneers of the sustainable construction industry of the future, while drastically reducing your fuel consumption.

Imagine a machine with a cab that is optimized from the ground up for outstanding comfort, functionality and handling.

But don't imagine just one machine.
Imagine two.

https://truckmanualshub.com/

Share the same DNA

The new “twins”, HUDDIG 1370 and HUDDIG 1370T, share the same DNA, but are each unique in their own way.

Taking their predecessor, the HUDDIG 1260E, as a starting point, these new models are larger, longer, better and more comfortable. The new backhoe unit has increased its reach by 10% and now extends more than 7.2 meters (incl. tiltrotator and excavator bucket G85). The new cab has been optimized for comfort, functionality and safety. The hydraulics have been updated and minor details have been fine-tuned to make your working day the best it can be.

The difference is electric

It is the power source that distinguishes one from the other. Like its predecessors, the HUDDIG 1370 has a powerful and reliable 6.7-liter Stage V diesel engine from Cummins, which can easily be run on HVO.

The HUDDIG 1370T with Tigon Technology is a hybrid machine that takes your company into the future with its revolutionary hybrid technology and supplementary diesel engine.

Two identical machines where the difference is electric. Which model will you choose?

https://truckmanualshub.com/

HUDDIG 1370T

HUDDIG 1370T is powered by our latest hybrid system Tigon Technology™, which enables the machine to run on electricity only, or diesel, in three diffrent modes, EV, ECO or PWR. This technology allows you to work for up to two hours on battery power alone, and when the machine needs charging, the engine starts automatically and fully charges the battery in just 40 minutes.

Truly silent

In EV mode it's immediately obvious that the 1370T is something out of the ordinary. You can talk to colleagues outside the machine without having to shout, which makes communication easier, clearer and safer. EV mode also enables the machine to operate in densely populated areas without disturbing local residents.

Minimizes fuel costs

With your HUDDIG 1370T with Tigon Technology, you not only drastically reduce your fuel costs, but you are also helping to pave the way for the sustainable construction industry of the future.

Benefits

- 10% greater reach – now over 7.2 meters (incl. tiltrotator and excavator bucket G85)
- Height above load bed has increased more than 600 mm
- Increased slewing force (51 kN)
- Improved cab comfort
- New HVAC unit
- New speed display
- 233 bar operating hydraulics
- Greater flexibility of hydraulic functions thanks to the new function FlexLever™
- The diesel engine can easily be run on HVO to reduce CO_2 emissions
- Proven hybrid technology (Tigon Technology™)
- Up to two hours operating on battery power
- No CO_2 emissions in EV mode
- The battery reaches full charge in 40 minutes using the machine's diesel engine
- Silent
- Drastically reduces your fuel costs
- Higher top speed – up to 50 km/h

HUDDIG 1370

The heart of the HUDDIG 1370 is a powerful 6.7-liter Cummins Stage V diesel engine with a full 157 hp – as reliable and dependable as ever.

The HUDDIG 1370 is the successor to the much lauded HUDDIG 1260E, but with additional improvements in a number of areas. What do you say, for instance, to a greater reach for the backhoe unit and an upgraded cab for an even better work environment?

A reach of 7.2 Meters

The backhoe unit on the HUDDIG 1370 is now 10% longer than on its predecessor, giving it a reach of 7.2 meters, (incl. tiltrotator and excavator bucket G85). This means that you can cover a larger area without having to move the machine. The load height has increased by more than 18%.

Upgraded operator environment

In addition to the functional upgrades, the interior has also been updated with, for example, improved climate control, new seat suspension, mountings for accessories, and the option to equip the machine with several different options.

Benefits

- 10% greater reach – now over 7.2 meters (incl. tiltrotator and excavator bucket G85)
- Height above load bed has increased more than 600 mm
- Increased slewing force (51 kN)
- Improved cab comfort
- New HVAC unit
- New speed display
- 245 bar operating hydraulics
- Greater flexibility of hydraulic functions thanks to the new function FlexLever™
- The diesel engine can easily be run on HVO to reduce CO_2 emissions

https://truckmanualshub.com/

Comparison Specifications

	HUDDIG 1370T	HUDDIG 1370	HUDDIG 1260E
Electric drive			
System	Tigon Technology™	–	–
Battery	Huddig/Alelion 44 kWh 90V	–	–
Number of electric motors (EMG) Transmission	Four pcs, Schabmüller	–	–
Number of electric motors (EMG) Hydraulics	Two pcs, Parker (+ 1 generator)	–	–
Runtime	Up to 2 hours on battery power alone	–	–
Power output	81 kW (108 hp)	–	–
Engine			
Diesel engine	Cummins turbocharged diesel engine QSB 4.5 EU Stage V/EPA Tier 4 Final	Cummins turbocharged diesel engine QSB 6.7 EU Stage V/EPA Tier 4 Final	Cummins turbocharged diesel engine QSB 6.7 EU Stage V/EPA Tier 4 Final
Power output	115 kW (154 hp) at 2000 rpm	116 kW (157 hp) at 1900 rpm	116 kW (157 hp) at 1900 rpm
Type	Straight 4-cylinder	Straight 6-cylinder	Straight 6-cylinder
Cylinder capacity	4.5 liters	6.7 liters	6.7 liters
Torque	651 Nm at 1500 rpm	650-662 Nm at 800-1400 rpm	650-662 Nm at 800-1500 rpm
Transmission			
Drive system	Electric operation	Hydrostatic operation	Hydrostatic operation
Gearbox	Bonfiglioli Two ranges	ZF/2HL 290 Two ranges	ZF/2HL 290 Two ranges
Speeds 1st (low range)	0–10 km/h	0–10 km/h	0–10 km/h
Speeds 2nd (high range)	0–50 km/h	0–42 km/h	0–42 km/h
Motor vehicle	Class 1	Class 1	Class 1
Axles	Tigon Technology™	ZF, automatic differential brake on both axles Planetary train type hub reduction	ZF, automatic differential brake on both axles Planetary train type hub reduction
The system is separate from the operating hydraulics			
Electrical system			
Voltage	24 V	24 V	24 V
Batteries	Two pcs, 12 V, 110 Ah	Two pcs, 12 V, 110 Ah	Two pcs, 12 V, 110 Ah
Generator output	108 A (DC/DC converter)	100 A, alternating current	100 A, alternating current
Starter motor output	5.8 kW	5.8 kW	5.8 kW
Hydraulic system			
Operating pressure	23.3 MPa (233 bar)	24.5 MPa (245 bar)	23.3 MPa (233 bar)
Operating pressure with boost hydraulics	26,0MPa (260 bar)	26,0MPa (260 bar)	26,0MPa (260 bar)
Nom. maximum flow at 1500 rpm	183 l/min (+ electric boost)	260 l/min	260 l/min
Nom. maximum flow at 2000 rpm	244 l/min	350 l/min	350 l/min
Single Acting Outlet maximum flow	170 l/min	170 l/min	170 l/min
Unit forces			
Breakout force	+/- 0%	+ 5%	103 kN
Digging force	- 3%	+ 2%	63 kN
Lifting force, max. reach	+ 20%	+ 28%	19.1 kN
Slewing torque	+ 40%	+ 40%	37 kN
Dimensions & weight			
Transport length (A)	8866 mm	8769 mm	8630 mm
Wheelbase (B)	2660 mm	2600 mm	2600 mm
Transport height (E*)	4450 mm	4450 mm	4380 mm
Reach (L)	6760 mm	6760 mm	6530 mm
Excavating depth (M)	4500 mm	4500 mm	4900 mm
Lifting height (N)	4370 mm	4370 mm	3770 mm
Maximum height (E2)	4525 mm	4525 mm	4380 mm

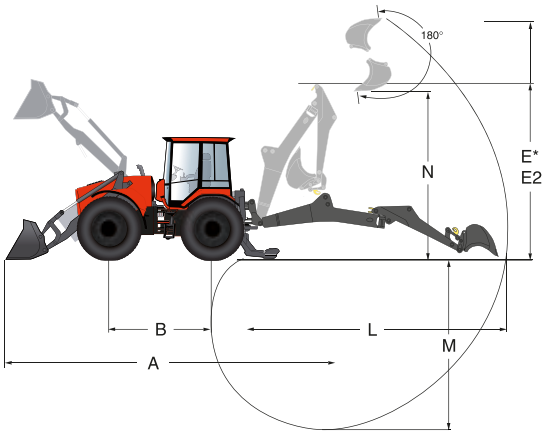

HUDDIG 1370T

Specifications

Electric drive

System	Tigon Technology™
Battery	Huddig/Alelion 44 kWh 90V
Number of electric motors (EMG) Transmission	Four pcs, Schabmüller
Number of electric motors (EMG) Hydraulics	Two pcs, Parker (+ 1 generator)
Runtime	Up to 2 hours on battery power alone
Power output	81 kW (108 hp) Diesel and electricity combined in PWR mode, 139kW = 190hp

Engine

Diesel engine	Cummins turbocharged diesel engine QSB 4.5 EU Stage V/EPA Tier 4 Final
Power output	115 kW (154 hp) at 2000 rpm
Type	Straight 4-cylinder
Cylinder capacity	4.5 liters
Torque	651 Nm at 1500 rpm

Transmission

Type	90V hybrid system of the "plug-in hybrid" type. Diesel engine with transfer case. Three electric motor generators (EMG) charge the machine's electric battery. The battery powers four electric wheel motors equipped with two-speed hub reducers. The wheel motors are of the regenerative type.
EMG GenSet	Three pcs, 90V AC
EMG Wheel Motor	Four pcs, 90V AC
Hub reduction	Four pcs, Two-speed with wet disc brakes
Speeds 1st (low ratio)	0-10 km/h
Speeds 2nd (high ratio)	0-50 km/h
Motor vehicle	Class 1
Axles	Tigon Technology™

The system is separate from the operating hydraulics

Wheels

Standard	620/60x34 (Lug)

Main display, control system

Monitor	10" TFT colour touchscreen

Brake system

Transport brakes	2-circuit braking system with two accumulators. Wet disc brakes on all wheels, proportionally actuated with hydraulic servo.
Backup brake	One of the two circuits of the service brake or the parking brake.
Service brake	Automatic engagement of transport brake when stationary (automatic function can be disengaged).
Parking brake	Mechanical negative brake, integrated in each hub reduction. Hydraulic release of the parking brake occurs when one of the transmission's two gears is engaged.

Steering system

Hydrostatic Orbitrol control system with dual cylinders in the centre pivot

Steering angle	±32°
Frame oscillation	±8°

Electrical system

Voltage	24 V
Batteries	2 pcs 12 V, 110 Ah
Generator output	108 A (DC/DC converter)
Starter motor output	5.8 kW

Hydraulic system

Load-sensing hydraulics with variable axial piston pumps, 50cc+72cc. For refilling there is internal low-pressure generation in the operational valves and a heating system (circulation pumping) for cold starts. Internal servo-supply in the operational valves and power feedback for digging functions. The hydraulic system is prepared for environmentally compatible hydraulic fluids.

Operating pressure	Standard: 23 MPa (233 bar) Boost: 26 MPa (260 bar)
Nom. max. flow at 1000 rpm	122 l/min
Nom. max. flow at 1500 rpm	183 l/min
Nom. max. flow at 2000 rpm	244 l/min
Single Acting outlet maximum flow	170 l/min

Dimensions & weight

Width	2489–2600 mm
Height to cab roof	3110 mm
Length	8630 mm
Gross weight, standard version	14620 kg
Gross weight, max	18000 kg

https://truckmanualshub.com/

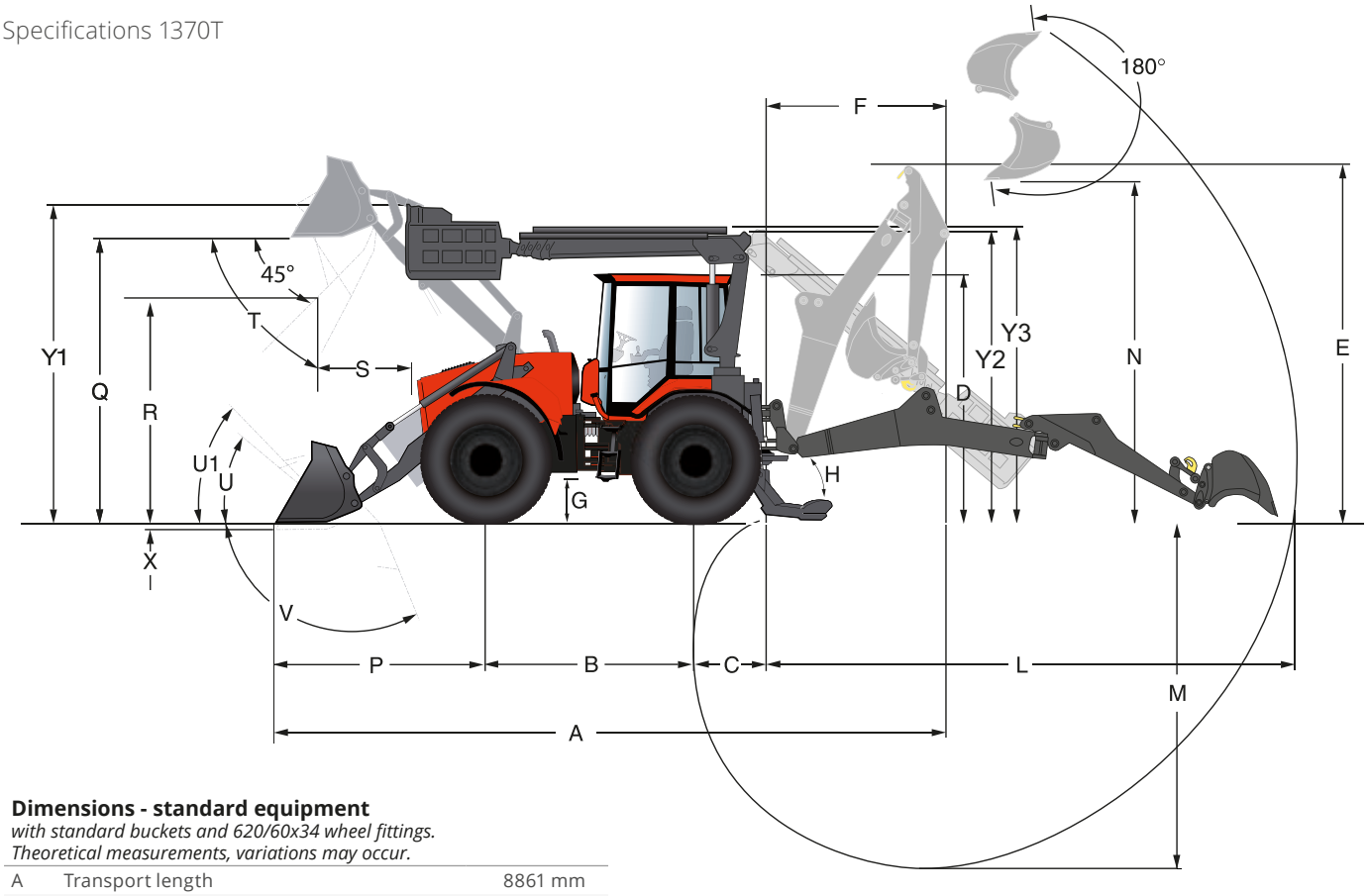

Dimensions - standard equipment

with standard buckets and 620/60x34 wheel fittings.
Theoretical measurements, variations may occur.

A	Transport length	8861 mm
B	Wheelbase	2660 mm
C	Backhoe overhang	1100 mm
D	Height above cab	3110 mm
E	Transport height, backhoe	4525 mm
F	Transport length, backhoe	2439 mm
G	Ground clearance	515 mm
H	Ground clearance angle, support legs	32°
I	Width support legs max. Width support legs parked position	3700 mm 2460 mm
J	Width front bucket	2600 mm
K	Width across wheels	2600 mm
r1	Slew radius outside of bucket	6469 mm
r2	Slew radius, outside of wheels	5951 mm

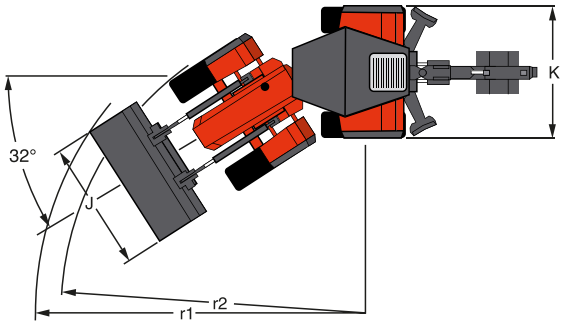

Backhoe unit

L	Reach	6764 mm
M	Depth	4492 mm
N	Load height	4374 mm
O	Digging width	4390 mm

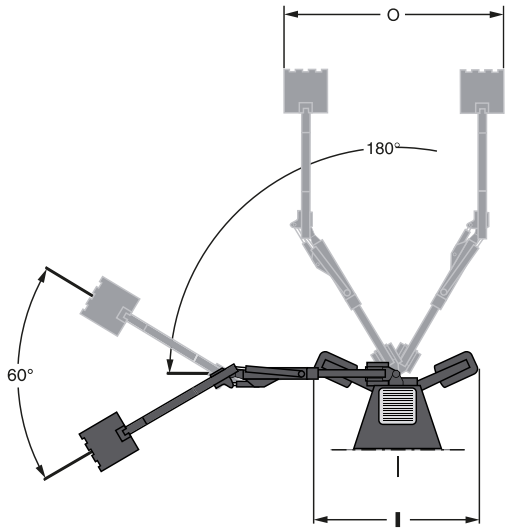

Load unit

P	Reach	2662 mm
Q	Lifting height, grading bucket	3500 mm
R	Load height 45° tilted bucket	2690 mm
S	Reach, 45° tilt angle	1030 mm
T	Max. tilt angle	63°
U	Load angle	40°
U1	Load angle in carrying position	46°
V	Tipping angle, ground level	112°
X	Excavation depth	90 mm

Lift

Y1	Height to top of working platform in transport position	3950–4080 mm
Y2	Height to top of arm in folded down position	3600–3880 mm
Y3	Height to top of arm in transport position	3840–4010 mm

Weight

Gross weight, standard version incl. buckets	14620 kg
Gross weight, max	18000 kg

HUDDIG 1370
Specifications

Engine

Diesel engine	Cummins turbocharged diesel engine QSB 6.7 EU Stage V/EPA Tier 4 Final
Power output	116 kW (157 hp) at 1900 rpm
Type	Straight 6-cylinder
Cylinder capacity	6.7 litres
Torque	662 Nm at 800–1400 rpm

Transmission

Drive system	Hydrostatic operation
Gearbox	ZF/2HL 290 Two ranges
Speeds 1st (low ratio)	0-10 km/h
Speeds 2nd (high ratio)	0-42 km/h
Motor vehicle	Class 1
Axles	ZF, automatic differential brake on both axles Planetary train type hub reduction

The system is separate from the operating hydraulics

Wheels

Standard	620/60x34

Brake system

Transport brakes	Servo assisted disc brakes
Service brake	Automatic engagement of transport brake when stationary (automatic function can be disengaged)

Main display, control system

Monitor	10" TFT colour touchscreen

Steering system

Hydrostatic Orbitrol control system with dual cylinders in the centre pivot

Steering angle	±32°
Frame oscillation	±8°

Electrical system

Voltage	24 V
Batteries	2 pcs 12 V, 110 Ah
Generator output	100A, alternating current
Starter motor output	5.8 kW

Hydraulic system

Load-sensing hydraulics with variable axial piston pumps, 60cc + 100cc (connected to stepped-up pump distribution box providing a total of 174 cc). For refilling there is internal low-pressure generation in the operational valves and a heating system (circulation pumping) for cold starts. Internal servo-supply in the operational valves and power feedback for digging functions. The hydraulic system is prepared for environmentally compatible hydraulic fluids.

Operating pressure	24.5 MPa (245 bar)
Nom. maximum flow at 1000 rpm	175 l/min
Nom. maximum flow at 1500 rpm	260 l/min
Nom. maximum flow at 2000 rpm	350 l/min
Single Acting outlet maximun flow	170 l/min

Dimensions & weight

Width	2489–2600 mm
Height to cab roof	3110 mm
Length	8630 mm
Weight excl. buckets	12500 kg

https://truckmanualshub.com/

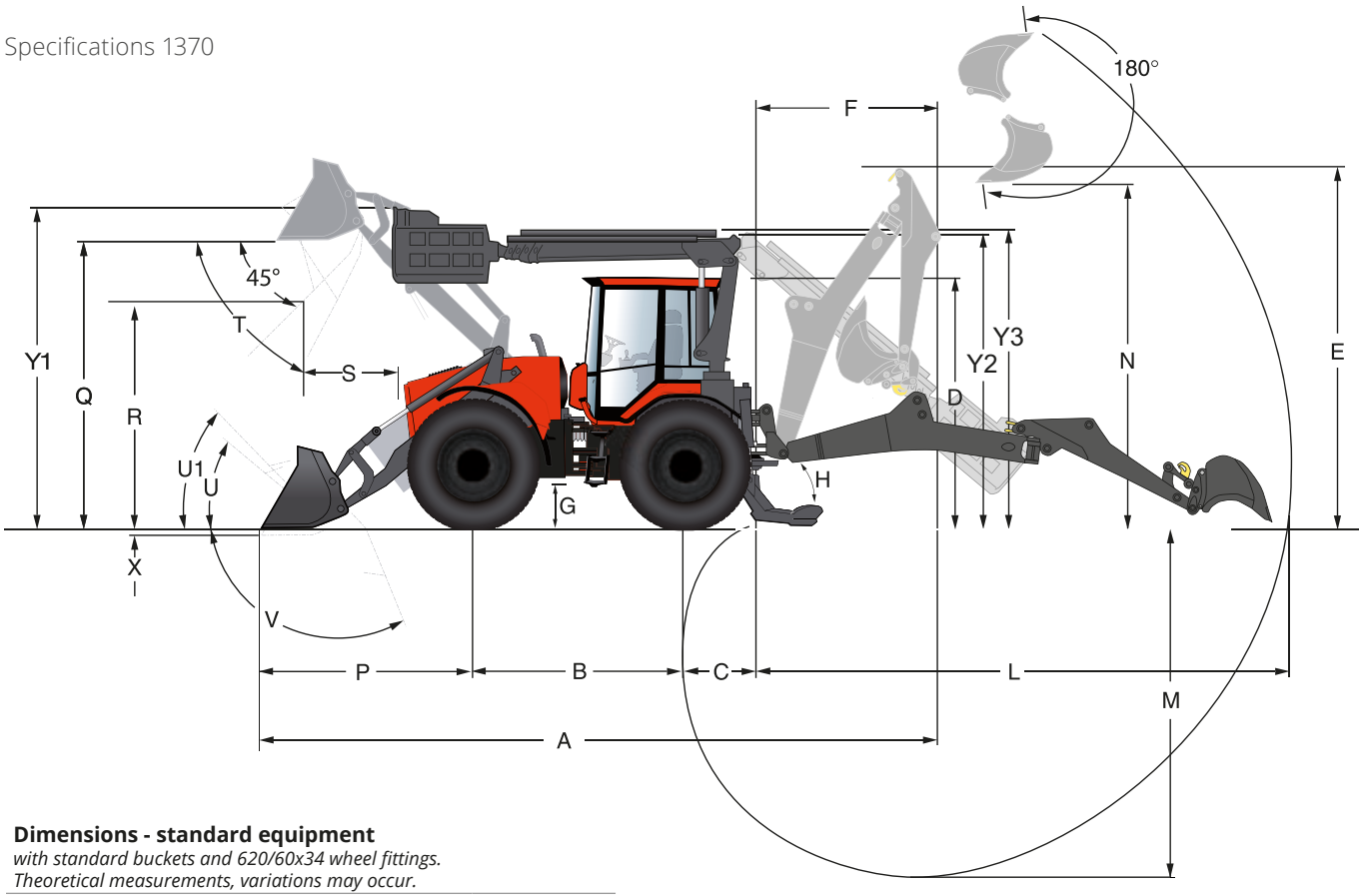

Dimensions - standard equipment

with standard buckets and 620/60x34 wheel fittings.
Theoretical measurements, variations may occur.

A	Transport length	8769 mm
B	Wheelbase	2600 mm
C	Backhoe overhang	1100 mm
D	Height above cab	3110 mm
E	Transport height, backhoe	4525 mm
F	Transport length, backhoe	2439 mm
G	Ground clearance	515 mm
H	Ground clearance angle, support legs	32°
I	Width support legs max. Width support legs parked position	3700 mm 2460 mm
J	Width front bucket	2600 mm
K	Width across wheels	2600 mm
r1	Slew radius outside of bucket	6290 mm
r2	Slew radius, outside of wheels	5760 mm

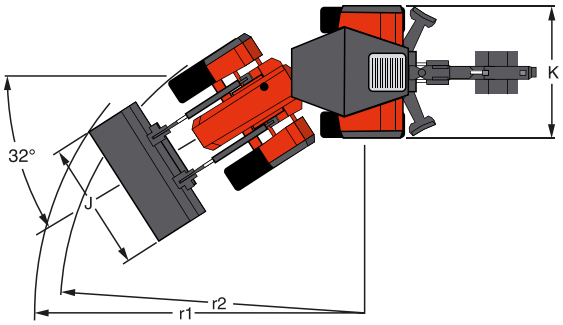

Backhoe unit

L	Reach	6764 mm
M	Depth	4492 mm
N	Load height	4370 mm
O	Digging width	4390 mm

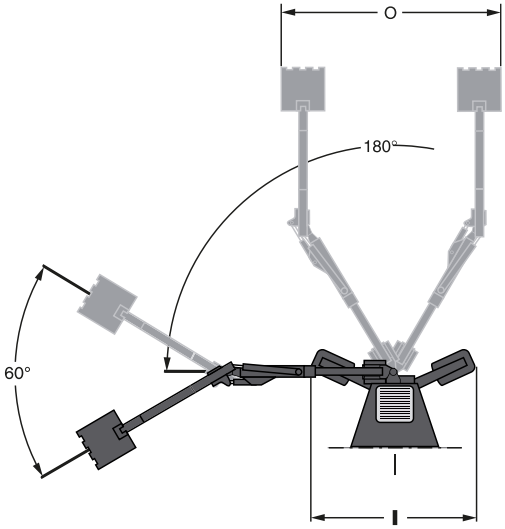

Load unit

P	Reach	2630 mm
Q	Lifting height, grading bucket	3500 mm
R	Load height 45° tilted bucket	2690 mm
S	Reach, 45° tilt angle	1030 mm
T	Max. tilt angle	63°
U	Load angle	40°
U1	Load angle in carrying position	46°
V	Tipping angle, ground level	112°
X	Excavation depth	90 mm

Lift

Y1	Height to top of working platform in transport position	3950–4080 mm
Y2	Height to top of arm in folded down position	3600–3880 mm
Y3	Height to top of arm in transport position	3840–4010 mm

Weight

Gross weight, standard version incl. buckets	13200 kg
Gross weight, max	18000 kg

https://truckmanualshub.com/

Built for maximum efficiency

Both the HUDDIG 1370 and HUDDIG 1370T can be optimized in three different segments – CITY, CABLE and RAIL. This means that the machines are equipped with options specifically adapted for work in each segment. This gives you maximum efficiency for your types of jobs.

CITY

Confined spaces. High safety requirements. Fast movement. Several different types of jobs in a single working day. Work in urban and park environments, residential areas and heavily-trafficked roads requires both a special machine and a knowledgeable operator.

HUDDIG CITY is the multifunctional backhoe loader, specially adapted to urban environments and that can be equipped with a wide range of accessories for unbeatable flexibility and efficiency. The frame pivot steered design makes it easy to work even in confined spaces, such as on footpaths in parks, on streets, in residential areas or next to the highway.

CABLE

A machine for a variety of work tasks – HUDDIG CABLE dominates in the service, maintenance and new construction of power lines and cable laying segments.

Line work is one of the hardest and toughest jobs in the construction industry. Getting out to hard-to-reach places, working in extreme conditions and with extra high safety requirements requires a powerful, flexible and safe machine. HUDDIG CABLE is a machine for a variety of work tasks – service, maintenance and new construction of power lines and cable laying.

RAIL

The obvious choice for railroad work – HUDDIG RAIL alone can replace several traditional machines and streamlines the maintenance and construction of the railroad network, both nationally and internationally. As functioning railroads become increasingly important in our society, the demands for more efficient machinery and more efficient working methods also increase. Railroad work is often carried out under time constraints, which means high demands and regulations – not least regarding safety but also in several other areas.

Huddig's RAIL machine can be equipped with powered or unpowered rail wheels

9A, i.e. powered rail wheels to run on the rails, is required on many stretches of railroad today. Therefore, Huddig has developed a powered railroad stand to meet the demands from customers to be able to work in 9A mode. We have chosen a technical solution that matches the HUDDIG machine and is controlled by the machine's own control system. This means that as a driver you get a seamless transition between 9A and 9C mode, i.e. rubber wheel drive or rail-wheel drive.

The machines can be supplied as completely unpowered for rubber wheel drive (9C) or as powered and can then be operated in both HiRail mode and rubber wheel drive. (9A or 9C).

https://truckmanualshub.com/

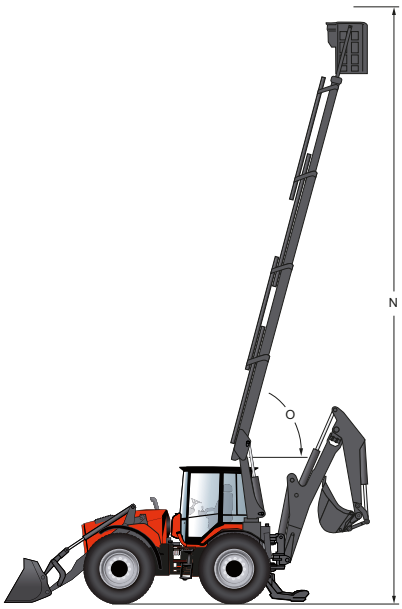

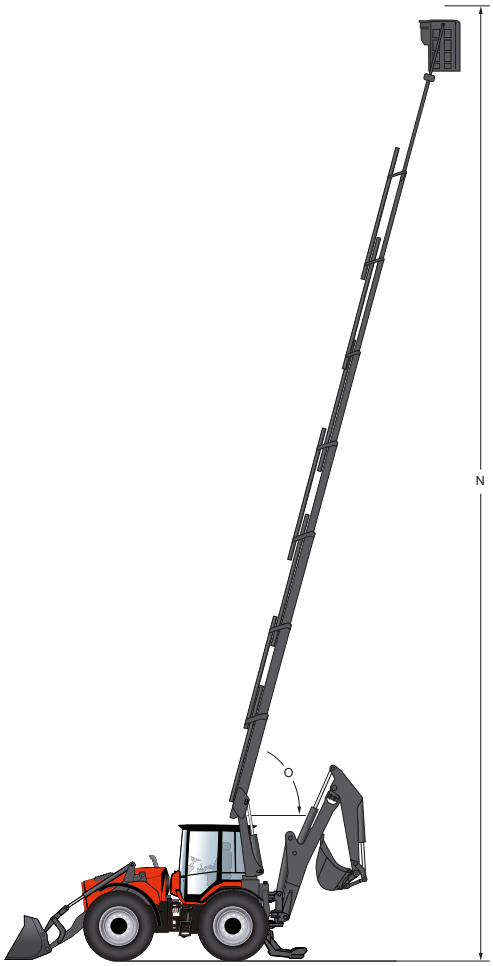

LIFT 1420B

Lift		
K	Height to top of working platform in transport position	3990 mm
L	Height to top of arm in folded down position	3620 mm
M	Height to top of arm in transport position	3840 mm
N	Working height	14.2 m
O	Lift angle	76°

LIFT 2000B

Lift		
K	Height to top of working platform in transport position	4070 mm
L	Height to top of arm in folded down position	3870 mm
M	Height to top of arm in transport position	4000 mm
N	Working height	20.1 m
O	Lift angle	76°

LIFT 2200

Lift		
K	Height to top of working platform in transport position	3950 mm
L	Height to top of arm in folded down position	3600 mm
M	Height to top of arm in transport position	3840 mm
N	Working height	21.5 m
O	Lift angle	76°

https://truckmanualshub.com/

LIFT 1420B

Optimal for railroad work

LIFT 1420B gives you more work opportunities with your machine. It is particularly suitable for railroad work because you can work further away from the machine due to its low weight. Its low transport height also enables passage through most tunnels. The lift can be operated from the cab or the working platform and is designed for two persons or a total weight of up to 200 kg (440 lbs). Stepless leveling provides an excellent working platform at height.

Benefits

- Certified according to the EN 280 standard, which specifies the latest design and safety requirements for mobile elevating work platforms.
- Complies with ISO 13849, safety-related parts of a control system.
- Smooth operation via 4-axis joystick in the cab.
- Durable and well-proven controls on the working platform.
- New stepless leveling provides improved working platform comfort.

Dimensions	
Max. work height manual extension	14.2 m
Max. horizontal reach	approx. 10.6 m
Number of hydraulic extensions	3
Slewing angle	355.5°
Slewing torque	5.8 kNm
Attachment coupling	Quick coupling for working platform and pole grab

Weight	
Weight	830 kg
Max. load on working platform (irrespective of height)	2 persons + equipment or max. load 200 kg

https://truckmanualshub.com/

LIFT 2000B

Built for versatility

LIFT 2000B is very popular for both railroad and overhead line work thanks to its agility and relatively high working height. It is designed for two persons or a total weight of up to 200 kg (440 lbs) and can be operated from the cab or working platform. Stepless platform leveling provides an excellent working platform at height. This is the most popular lift we manufacture thanks to its versatility. This lift is ideal for those who perform a lot of service work.

Benefits

- Certified according to the EN 280 standard, which specifies the latest design and safety requirements for mobile elevating work platforms.
- Complies with ISO 13849, safety-related parts of a control system.
- Smooth operation via 4-axis joystick in the cab.
- Durable and well-proven controls on the working platform.
- New stepless leveling provides improved working platform comfort.

Dimensions	
Max. work height manual extension	20.1 m
Max. work height, hydraulic extension	18.1 m
Max. horizontal reach 80 kg load in working platform	approx. 13.5 m
Max. horizontal reach 200 kg load in working platform	approx. 11 m
Number of hydraulic extensions	5
Number of manual extensions	1
Slewing angle	355.5°
Slewing torque	7.5 kNm
Attachment coupling	Quick coupling for working platform and pole grab

Weight	
Weight	1250 kg
Max. load on working platform (irrespective of height)	2 persons + equipment or max. load 200 kg

https://truckmanualshub.com/

LIFT 2200

Prepared For LWI

LIFT 2200 is developed according to our customers' needs and contains several exciting features. The lift has a proprietary arm system, work height of 21.5 meters (70 ft) and increased lifting capacity. Lift 2200 is also available in an LWI (live-line work insulator) version for voltage work. With LIFT 2200, it is possible to easily access difficult terrain to carry out maintenance and repair work on high-voltage lines safely.

Benefits

- LWI version for work with voltage according to AMS using the pole method
- Smart radio control that means no wiring in working platform, which is a prerequisite for AMS work
- Adjustable slide blocks on extension that provide a more stable arm system with reduced play
- Increased lifting capacity – 25% stronger than previous models
- Improved attachment for working platform provides reduced play and increased stability
- Improved slew bearing provides 100% better slewing force (encapsulated and roller bearing)

Dimensions	
Max work height, manual extension or live work kit	21.5 m
Max work heigt, hydraulic extension	19.5 m
Max horizontal reach with 80 kg load in working platform	ca 14.5 m
Max horizontal reach with 200 kg load in working platform	ca 12 m
Number of hydraulic extensions	6 st
Number of manual extensions	1 st
Slew radius	360°
Slewing torque	15 kNm
Control system	Radio control
Attachment coupling	Quick coupler for working platform and pole grab

Weight	
Weight	1850 kg
Max load in working platform (regardless of work height)	2 persons + equipment or max. load 200 kg

#802159 EN

huddig.com