https://truckmanualshub.com/

snorkel

TM12

CE

Inc. Option 2-2 deg

PARTS & SERVICE MANUAL

Part Number 514233-200

August 2017

Serial Number 060000 and after

Replaces Nov 2014

https://truckmanualshub.com/

TM12 PARTS AND SERVICE MANUAL

TM12 PARTS AND SERVICE MANUAL

https://truckmanualshub.com/

GENERAL INFORMATION

INTRODUCTION 1-1
OPERATION & SPECIFICATIONS 1-2
WASTE REMOVAL & DISPOSAL 1-3
CONTACT SNORKEL 1-4

REPAIR PARTS

GENERAL ASSEMBLY 2-1
CHASSIS ASSEMBLY 2-2
MAST ASSEMBLY 2-3
PLATFORM ASSEMBLY 2-4
LOWER CONTROLS ASSEMBLY 2-5
HYDRAULIC TANK ASSEMBLY 2-6
UPPER CONTROLS ASSY 2-7
HYDRAULIC ASSEMBLY & HOSE KIT 2-8
HYDRAULIC LIFT CYLINDER ASSEMBLY TYPE A & TYPE B 2-9
HYDRAULIC CYLINDER ASSEMBLY (Steer / Brake) TYPE A 2-10
HYDRAULIC CYLINDER ASSEMBLY (STEER - BRAKE) TYPE B 2-11
HYDRAULIC CYLINDER ASSEMBLY (POTHOLE) TYPE A 2-12
HYDRAULIC CYLINDER ASSEMBLY (POTHOLE) TYPE B 2-13
ELECTRIC KIT 2-14
LABEL KIT, EUROPEAN (ENGLISH) 2-15
LABEL KIT GERMAN 2-16
LABEL KIT FRENCH 2-17
LABEL KIT, USA 2-18

MAINTENANCE

MAINTENANCE 3-1
TROUBLESHOOTING 3-2

SCHEMATICS

HYDRAULIC SCHEMATICS 4-1
ELECTRICAL SCHEMATICS 4-2
Appendix A:Pages Index ..... A
Appendix B:Parts Index ..... B

https://truckmanualshub.com/

TM12

ENGLISH

When contacting Snorkel for service or parts information, be sure to include the model and serial numbers from the equipment name plate. Should the name plate be missing, the serial number is also stamped on top of the chassis above the front axle pivot.

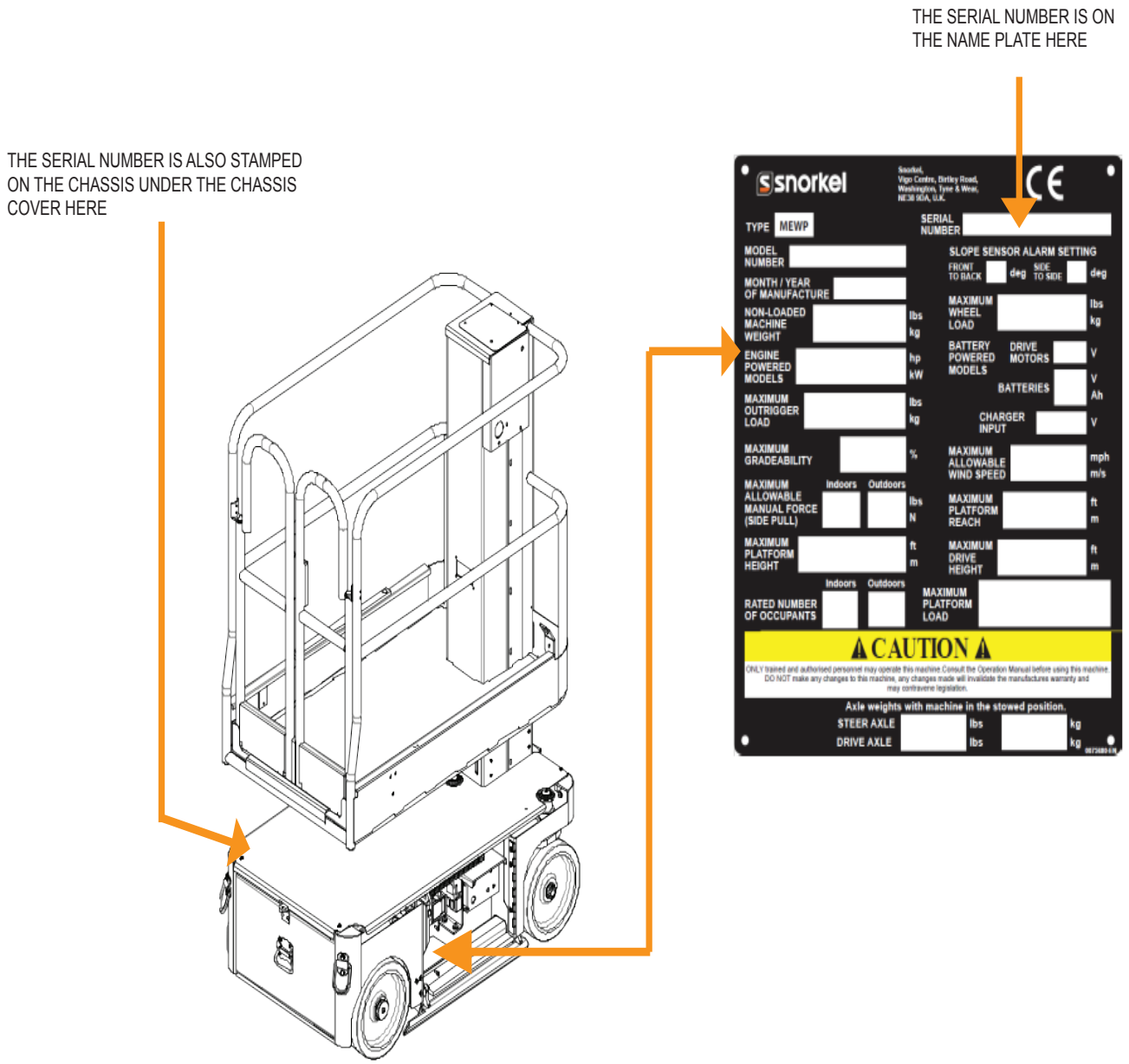

FIGURE 2-1: Serial number location on TM12

https://truckmanualshub.com/

TM12 SEVICE AND PARTS MANUAL

FOREWORD

HOW TO USE THIS MANUAL

This manual is divided into six sections.

SECTION 1 INTRODUCTION

General description and machine specifications.

SECTION 2 OPERATION AND SPECIFICATIONS

Information on how to operate the work platform and how to prepare it for operation.

SECTION 3 MAINTENANCE

Preventative maintenance and service information.

SECTION 4 TROUBLESHOOTING

Causes and solutions to typical problems.

SECTION 5 SCHEMATICS

Schematics and valve block diagram with description and location of components. Large schematic drawings may be located in the back of the manual.

SECTION 6 ILLUSTRATED PARTS BREAKDOWN

Complete parts lists with illustrations. Large parts drawings may be located in the back of the manual.

SECTION 7 WASTE REMOVAL AND DISPOSAL

SPECIAL INFORMATION

DANGER

Indicates an imminently hazardous situation which, if not avoided, will result in severe injury or death.

WARNING

Indicates a potentially hazardous situation which, if not avoided, could result in severe injury or death.

CAUTION

Indicates a potentially hazardous situation which, if not avoided, may result in minor or moderate injury.

NOTE: Gives helpful information.

https://truckmanualshub.com/

WORKSHOP PROCEDURES

All information contained in this manual is based on the latest product information available at the time of printing. We reserve the right to make changes at any time without notice. No part of this publication may be reproduced, stored in retrieval system, or transmitted, in any form by any means, electronic, mechanical, photocopying, recording, or otherwise, without the prior written permission of the publisher. This includes text, figures, and tables.

CAUTION

Detailed descriptions of standard workshop procedures, safety principles and service operations are not included. Note that this manual does contain warnings and cautions against some specific service methods that could cause personal injury, or could damage a machine or make it unsafe. Please understand that these warnings cannot cover all conceivable ways in which service, whether or not recommended by Snorkel, might be done, or of the possible hazardous consequences of each conceivable way, nor could Snorkel investigate all such ways. Anyone using service procedures or tools, whether or not recommended by Snorkel must satisfy themselves thoroughly that neither personal safety nor machine safety will be jeopardized. When in doubt, contact your local distributor or Snorkel.

https://truckmanualshub.com/

Section 1

INTRODUCTION

1.1 INTRODUCTION

PURPOSE

The purpose of this service and parts manual is to provide instructions and illustrations for the operation and maintenance of the TM12 manufactured by Snorkel.

SCOPE

The manual includes procedures for proper operation, maintenance, adjustment, and repair of the TM12 as well as recommended maintenance schedules and troubleshooting.

1.2 GENERAL DESCRIPTION

The TM12 consists of the platform, controller, elevating assembly, power / control module, and chassis.

WARNING

DO NOT use the work platform without guardrails properly assembled and in place.

Figure 1-1: TM12 Work Platform

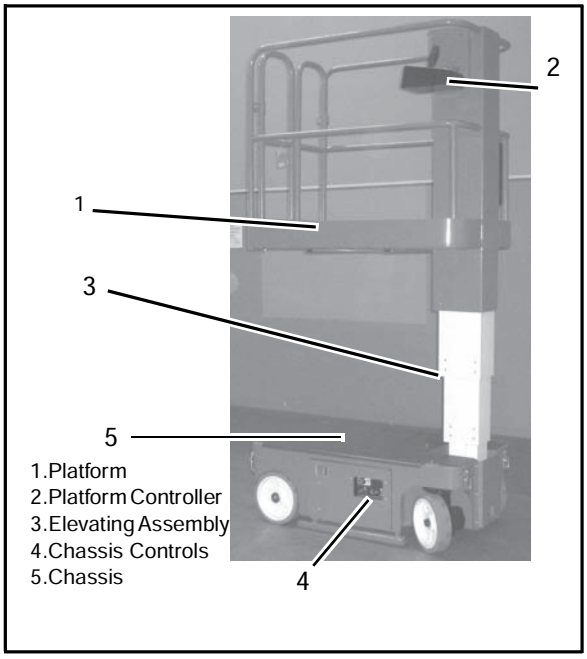

PLATFORM

The platform has a reinforced steel floor, 1.11 m (43.75 inch) high guardrails with midrail, 6 inch (152 mm) toeboards, and an entrance gate at the rear of the platform.

PLATFORM CONTROLLER

The platform controller contains the controls to operate the machine. It is located at the front of the platform. A complete explanation of control functions can be found in Section 2.

ELEVATING ASSEMBLY

The platform is raised and lowered by the elevating assembly. The hydraulic pump, driven by an electric motor, powers the cylinder. Solenoid operated valves control raising and lowering.

https://truckmanualshub.com/

CHASSIS

The chassis is a structural frame that supports all the components of the TM12 work platform. The platform is raised and lowered using a hydraulically operated mast mechanism incorporating a double acting hydraulic cylinder.

PURPOSE OF EQUIPMENT

The objective of the work platform is to provide a quickly deployable, self- propelled, variable height work platform to elevate personnel and materials to overhead work areas.

https://truckmanualshub.com/

OPERATION MANUAL

SAFETY RULES

WARNING

All personnel shall carefully read, understand and follow all safety rules and operating instructions before operating or performing maintenance on any SNORKEL aerial work platform.

ELECTROCUTION HAZARD	TIP OVER HAZARD	COLLISION HAZARD	FALL HAZARD	TRAPPING/CRUSHING HAZARD
	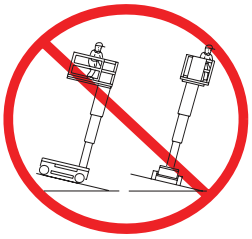			
THIS MACHINE IS NOT INSULATED	NEVER ELEVATE THE PLATFORM OR DRIVE THE MACHINE WHILE ELEVATED UNLESS THE MACHINE IS ON A FIRM LEVEL SURFACE	NEVER POSITION THE PLATFORM WITHOUT FIRST CHECKING FOR OVERHEAD OBSTRUCTIONS OR OTHER HAZARDS	NEVER CLIMB, STAND OR SIT ON PLATFORM GUARDRAILS OR MIDRAIL	BEWARE OF CRUSHING HAZARD WHEN HOLDING HANDRAILS WHILE THE PLATFORM IS MOVING IN CLOSE PROXIMITY TO OTHER OBJECTS

- **USE OF THE AERIAL WORK PLATFORM**: This aerial work platform is intended to lift a person or persons and their tools including material needed for a job. The work platform is designed to be used for repair and assembly jobs **ONLY** at overhead work places (ceilings, cranes, roof structures, buildings, etc.).

  The use and operation of the aerial work platform as a lifting tool or a crane is **prohibited!**

  Climbing up the railing of the platform, standing on or stepping from the platform unto buildings, steel or prefab concrete structures etc is **prohibited!**

  NEVER use the machine if damaged, not functioning properly, has damaged or missing decals.

  NEVER attach notice boards etc. to the platform as this will increase the wind loading.
- **INSULATION**: The aerial work platform is not insulated. It is imperative to keep a safe distance from live parts or electrical equipments. **DO NOT** get closer than the minimum distance recommended by the “National Regulations”.
- **PLATFORM CAPACITY**: Exceeding the specified permissible maximum load is **prohibited!** Refer to platform capacity on page 24 for details.
- **MANUAL FORCE**: **NEVER** exceed the manual force allowed for this machine. Refer to manual force on page 24 for details.
- **LOAD DISTRIBUTUION**: Ensure that all loads are distributed evenly on the platform.
- **SURVEILLANCE**: **NEVER** operate the machine without first surveying the work area for surface hazards such as holes, drop-offs, bumps, curbs or debris and avoiding them.
- **WHEEL LOAD: OPERATE** the machine only on surfaces capable of supporting wheel load.
- **WIND SPEED**: **NEVER** operate the machine when the wind speed exceeds the machine’s wind speed rating. Refer to the Beaufort scale for details.
- **EMERGENCY STOP**: In case of an emergency, push the **EMERGENCY STOP** switch to de-activate all powered functions.
- **ALARM**: If the alarm sounds while the platform is elevated, **STOP** operation immediately and carefully lower the platform. Move the machine to a firm, level surface.
- **ENTRY GATE**: Dismantling the entry gate or other railing components is **prohibited!** Always make certain that the entry gate is closed and securely locked.

  It is **prohibited** to keep the entry gate in an open position when the platform is raised.

  Extending the height of the platform by placing ladders, scaffolds or similar devices on the platform is **prohibited!**
- **SERVICING: NEVER** perform service on machine while platform is elevated without blocking the elevating assembly. Refer to “maintenance” for details.
- **INSPECT**: the machine thoroughly for cracked welds, loose or missing hardware, hydraulic leaks, loose wire connections and damaged cables or hoses before usage.
- **DECALS: VERIFY** that all labels are in place and legible before using the machine.
- **BATTERIES**: **NEVER** charge batteries near sparks or open flame. Charging batteries emit explosive hydrogen gas.
- **STORAGE**: **AFTER USE**, secure the work platform from unauthorised use by turning the key switch off and removing the key.
- **HARNESS**: Harness attachment points are provided on the platform and the manufacturer recommends the usage of a fall restraint harness especially where required by national safety regulations.

https://truckmanualshub.com/

SAFETY NOTICE

Harness attachment points are provided in the platform and the manufacturer recommends the usage of a fall restraint harness, especially where required by national safety regulations.

All harness attachment points on SNORKEL vehicles have been tested with a force of 3,650 lbs (16.3 KN) per person.

See below examples of harness attachment points used on SNORKEL vehicles with their corrosponding rating;

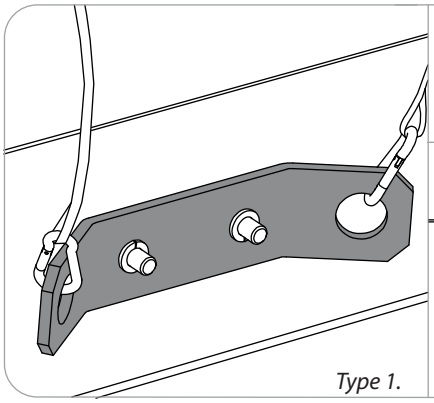

Harness attachment point ***Type 1.*** is rated for one lanyard attachment per loop as shown in the illustrations depending upon platform occupancy rating *(see operators manual & decals).*

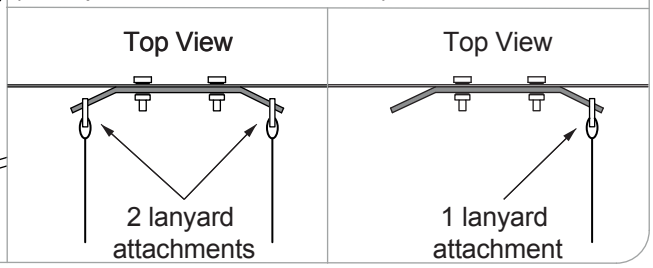

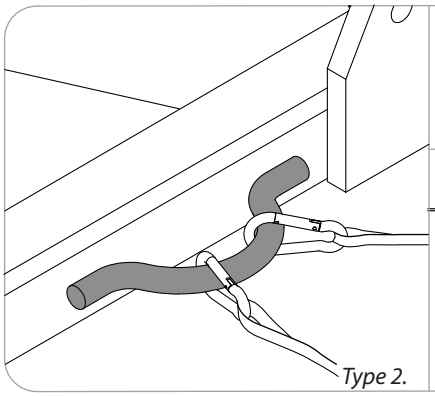

Harness attachment point ***Type 2.*** is rated for two lanyard attachments per loop as shown in the illustrations depending upon platform occupancy rating *(see operators manual & decals).*

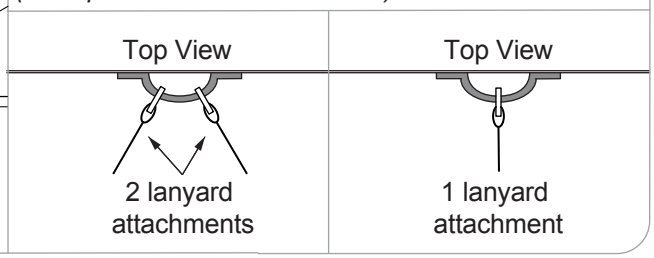

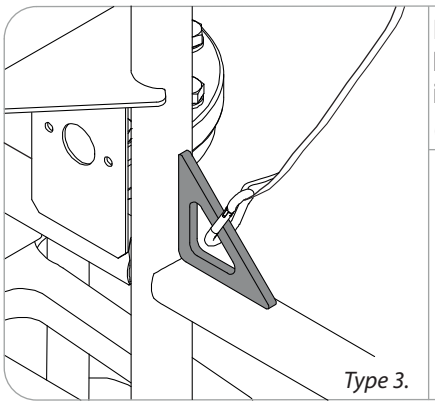

Harness attachment point ***Type 3.*** is rated for one lanyard attachment per loop as shown in the illustrations depending upon platform occupancy rating *(see operators manual & decals).*

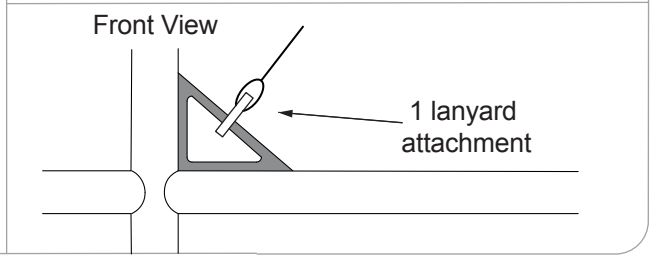

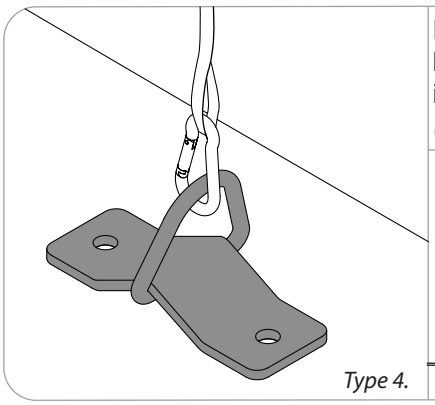

Harness attachment point ***Type 4.*** is rated for one lanyard attachment per loop as shown in the illustrations depending upon platform occupancy rating *(see operators manual & decals).*

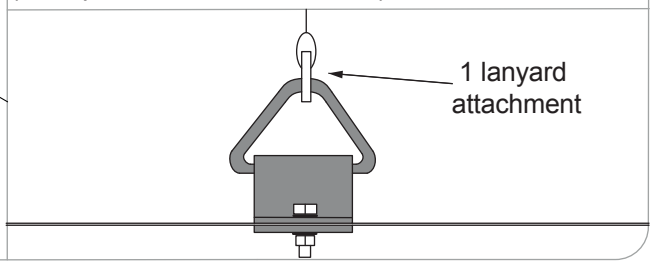

NOTE: There can be more harness attachment points per machine than the maximum number of occupants allowed in a platform. Refer to the platform decal & specifications table listed in the operators manual for the correct occupancy rating before use.

https://truckmanualshub.com/

SAFETY NOTICE

NOTE:

1. To bypass any safety equipment is **prohibited** and presents a danger for the person/persons on the aerial work platform and in its working range.
2. Modification to the aerial work platform is **prohibited** or permissible only at the approval of Snorkel.
3. The driving of MEWP'S on the public highway is subject to national traffic regulations.
4. It is important to ensure that the machine meets the requirements of stability during use, transportation, assembly, dismantling when out of service, testing or foreseeable breakdowns.
5. In an event of an accident or breakdown, refer to the "Emergency lowering" on page 16. **DO NOT** operate the aerial work platform if it is damaged or not functioning properly. Qualified maintenance personnel must correct the problem before putting the aerial platform back into service.

Model
Modell
Modele
Modelo

Modello
Verticaal model
Malli

TM12

Serial number
Matricola
Sarajanumero

Serienummer
Numero de serie
Matricola

Notified body
Notifizierte Stelle
Organisme notifie
Organismo notificado
Aangemelde instantie
Myndighet
Avendte harmoniserte standarder
Udpeget organ
Asiasta on tehty ilmoitus seuraaville tahoille
Ente Notificatore

Number 0545

Powered Access
Certification Ltd (PAC)
Applethwaite Lodge
Windermere
Cumbria LA23 1JQ
United Kingdom

EC Type Examination **Certificate number**
EC-Typenprufung Zertifikat-Nr
Examen type CE Numero de Certificat
Inspeccion tipo CE Numero de certificado
Attestato di certificazione CE nr
Onderzoek van het type EC Certificaatnummer
EU typkontroll Certifieringsnummer
EF-typeproving Sertifikatnummer
EF-typegodkendelse Nummer pa typeattest
EU-tyyppitarkastuksen nr.

Signed for Snorkel

Manufacturing Quality Manager

Date
Datum
Fecha
Data
Dato
Paivamaara

snorkel

EC Declaration of Conformity of Machinery 2006/42/EC
EC-Konformitätserklärung für Maschinen 2006/42/EC
Declaration De Conformite CE pour les Machines 2006/42/EC
Declaracion De Conformidad CE Para Maquinaria 2006/42/EC
Dichiarazione Di Conformità CE Per Le Macchine 2006/42/EC
CE Conformiteitsverklaring voor Machinerie 2006/42/EC
EU Deklaration Avseende Överensstammelse För Maskinutrustning 2006/42/EC
EF-Samsvarserklaering For Maskiner 2006/42/EC
EF-Overensstemmelseserklaering for Maskiner 2006/42/EC
EU Vaatimustenmukaisuusvakuutus 2006/42/EC

Manufacturer
Hersteller
Fabricant
Fabricante
Fabbricante

Snorkel,
Vigo Centre, Washington
Tyne and Wear, England
Tel: +44 (0) 845 1557 755
FAX: +44 (0) 845 1557 756

Fabrikant
Tillverkare
Produsent
Valmistaja

Authorized Representative
Autorisierte Vertretung
Representant autorise
Representante autorizado
Mandatario
Erkend vertegenwoordiger
Auktoriserad representant
Autorisert representant
Represenentant
Valtuutettu edustaja

Simon Downes (Global Project Manager)
Vigo Centre, Washington
Tyne and Wear, England
Tel: +44 (0) 845 1557 755
FAX: +44 (0) 845 1557 756

Description.....**Aerial Work Platform**
Bezeichnung .....**Arbeitsbühne**
Description .....**Plate-forme elevatrice de personnel**
Descripcion.....**Platforma aerea de trabajo con motor**
Descrizione.....**Piattaforma di sollevamento motorizzata**
Beschrijving .....**Mechanisch aangedreven werkplatform**
Beskrivning.....**Höj-och sänkbar arbetsplattform**
Beskrivelse .....**Selvgående arbetsplattform**
Beskrivelse .....**Motordrevet lofteplatform**
Kuvaus.....**Konevoimalla toimiva nostolava**
Selvgående personarbetslift

CE

https://truckmanualshub.com/

https://truckmanualshub.com/

INTRODUCTION

This manual covers all models of the TM12 aerial work platform. This manual must be stored on the machine at all times. Read, understand and follow all safety rules and operating instructions before attempting to operate the machine.

GENERAL DESCRIPTION

WARNING

***DO NOT** use the maintenance platform without guardrails properly assembled and in place.*

COMPONENTS OF THE TM12 SERIES

1. Main Platform
2. Entry gates
3. Elevating mast
4. Platform controls
5. Manual case
6. Chassis controls
7. Hydraulic reservoir
8. Power/Control module, including level sensor (EZlift 230)
9. Battery tray
10. Emergency lowering valve
11. Battery charger
12. Extension deck

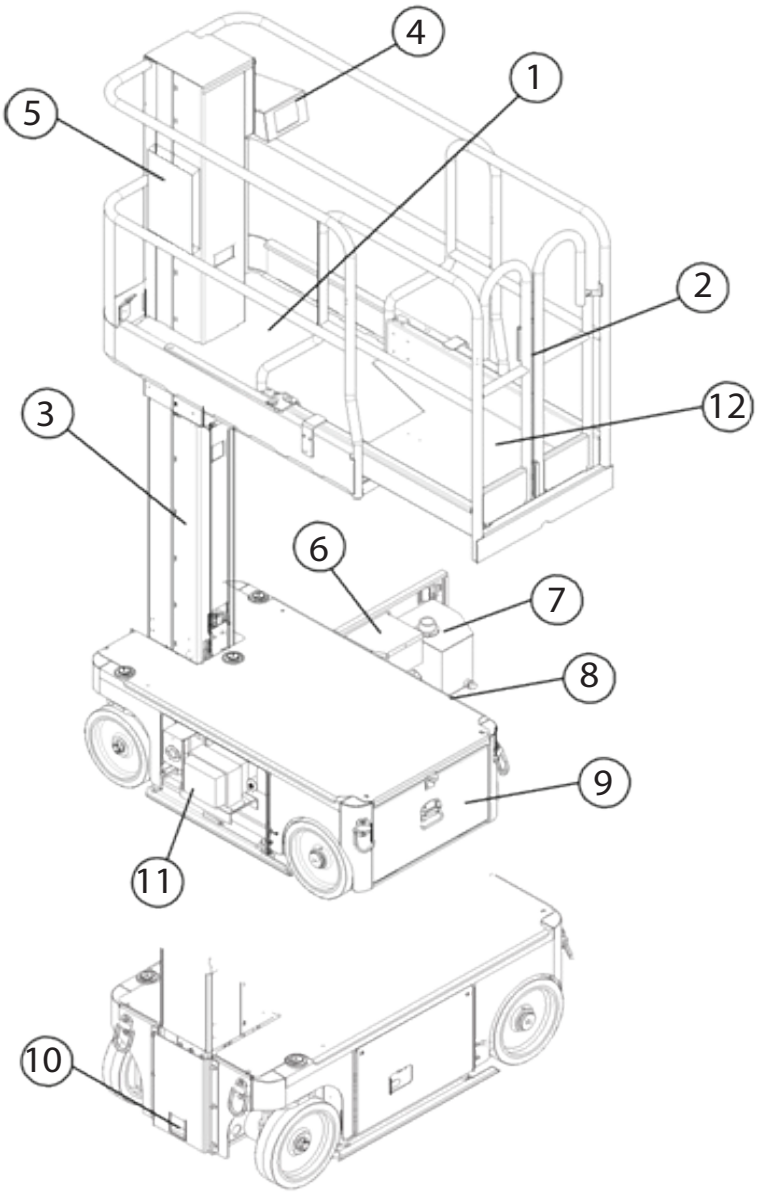

FIGURE 2-2: TM12 Series

https://truckmanualshub.com/

SPEED AND ELEVATION

- Travel with the platform raised is limited to a maximum speed of 0.43 km/h (0.27mph)
- Elevating the platform is limited to hard, level surfaces only.

DANGER

*The elevating function shall **ONLY** be used when the work platform is level and on a hard surface. The work platform is **NOT** intended to be driven over uneven, rough or soft terrain.*

PLATFORM CAPACITY

The maximum platform capacity for the TM12 is 227kg (500lbs). Two people may occupy the platform indoors (only one person on the extension deck) while only one may occupy the platform outdoors.

DANGER

***DO NOT** exceed the maximum platform capacity or the platform occupancy limits for this machine.*

MANUAL FORCE

Manual force is the force applied by the occupants to objects such as walls or other structures outside the work platform. The maximum allowable manual force is limited to 200N (45 lbs) of force per occupant outdoors, with a maximum of 400N (90 lbs) in total for two occupants indoors.

DANGER

***DO NOT** exceed the maximum amount of manual force for this machine.*

BEAUFORT SCALE

Never operate the machine when the wind speed exceeds 12.5 m/s (28mph). This falls under the Beaufort rating of 6 as shown on the Beaufort scale in table 2-1.

Beaufort Scale	m/Sec	Ground Conditions
3	3.5-5	*Leaves and small twigs in constant motion; wind extends light flag.*
4	6-8	*Raises dust and loose paper; small branches are moved*
5	9-10	*Small trees in leaf begin to sway; crested wavelets on inland waterways.*
6	11-13	*Large branches in motion; umbrellas used with difficulty.*
7	14-17	*Whole trees in motion; inconvenience felt when walking against wind.*
8	18-21	*Breaks twigs off trees; generally impedes progress.*
9	22-24	*Slight structural damage occurs (chimney pots and slates removed)*

TABLE 2-1: Beaufort scale

https://truckmanualshub.com/

CONTROLS AND INDICATORS

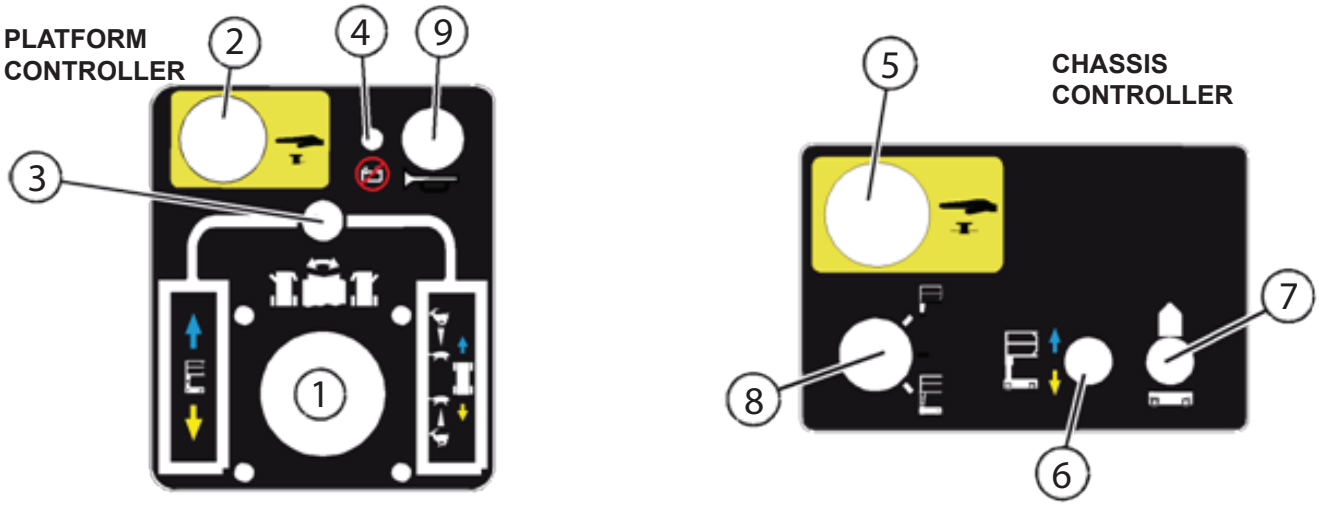

FIGURE 2-3: Controls and indicator locations

KEY			
1	JOYSTICK	6	PLATFORM RAISE/ LOWER SWITCH
2	EMERGENCY STOP	7	ENABLE SWITCH
3	LIFT/DRIVE SELECT SWITCH	8	KEYSWITCH
4	LOW BATTERY INDICATOR	9	HORN BUTTON
5	EMERGENCY STOP (CHASSIS)	10	EZcal DISPLAY

PRE-OPERATION AND SAFETY INSPECTION

NOTE: Carefully read, understand and follow all safety rules, operating instructions, labels and National Safety Instructions/Requirements. Perform the following steps each day before use.

1. Open the chassis door and inspect for damage, fluid leaks or missing parts.
2. ➢ Make sure the platform is fully lowered before checking the level of hydraulic fluid.
   ➢ Open the chassis door to gain access to the hydraulic tank.
   ➢ Check that the fluid level is between the minimum and maximum level marks indicated on either the side of the hydraulic tank or on the dipstick (if fitted).
   ➢ The dipstick (if fitted) can be found on the bottom of the filling cap.
   ➢ Add recommended hydraulic fluid if necessary using specifications set on page 24.
3. Check that the A.C. extension cord has been disconnected from the chassis outlet.
4. Check that the fluid level in the batteries is correct to that stated under “Battery maintenance” on page 20.
5. Verify that the batteries are charged by checking the % value under BCI on the EZcal display as shown on figure 2-3.
6. Check that all guardrails are in place and all fasteners are correctly tightened.
7. Inspect the machine thoroughly for cracked welds and structural damage, loose or missing hardware, hydraulic leaks, damaged control cable and loose wire connections.

https://truckmanualshub.com/

Refer to figure 2-2 and 2-3 for the locations of various controls and indicators.

WARNING

***STAND CLEAR** of the work platform while performing the following checks.*
Before operating the machine, survey the work area for surface hazards such as holes, drop off's bumps and debris.
Check in all directions, including above the work platform for obstructions and electrical conductors.

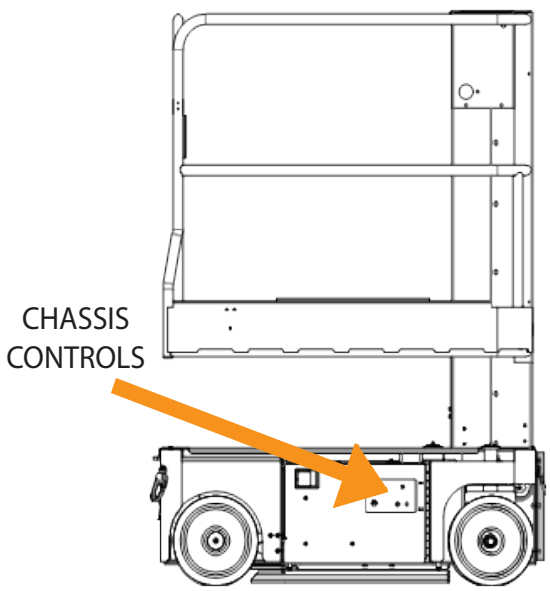

FIGURE 2-4: Chassis control unit

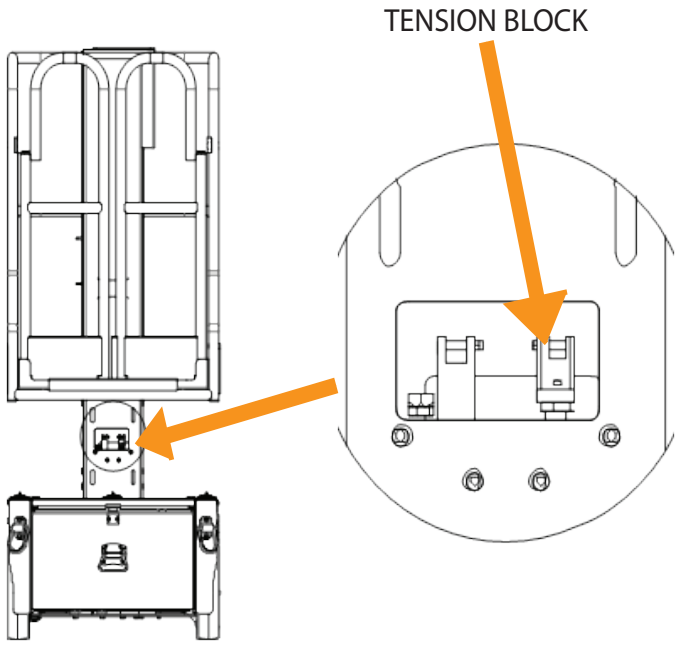

FIGURE 2-5: Tension blocks

1. Move the machine if necessary, to an unobstructed area to allow for full elevation.
2. Turn the chassis and platform emergency stop switches on by twisting clockwise and pulling the buttons out.
3. Check the level sensor operation by positioning the machine off level by more than 1.5 degrees side to side.
4. Raise the platform using the chassis controls. The alarm should sound and the platform should not be higher than 500 mm.
5. Lower the platform by pushing the chassis lift switch to a downwards position while holding the enable switch on and fully elevate the platform.
6. Repeat steps 3 and 4 with the machine off level by more than 2 degrees front to back.
7. Level the machine.
8. Push the chassis lift switch to the upwards position while holding the enable switch on and fully elevate the platform.
9. Visually inspect the mast assembly for damage or erratic operation. Check for missing or loose parts.
10. Refer to figure 2-5;
    - Visually inspect the two chain tensioning bolts on the platform mast and also the second mast to ensure locknuts are not loose.
    - Ensure the bolt thread is vissible through the inspection holes in the tension blocks.

https://truckmanualshub.com/

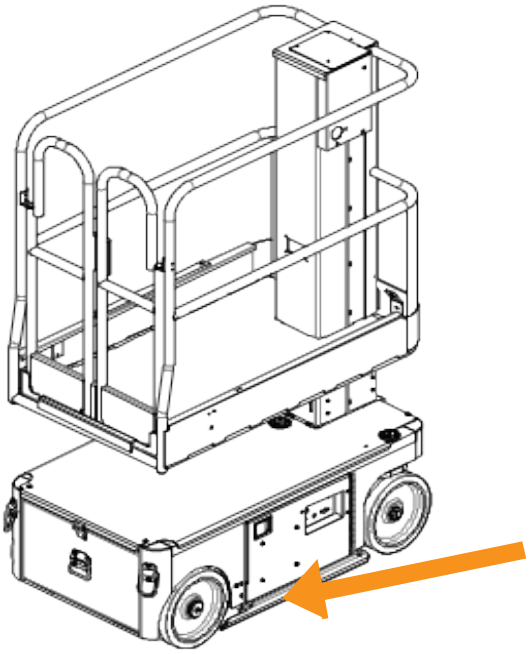

FIGURE 2-6: Pot hole bars

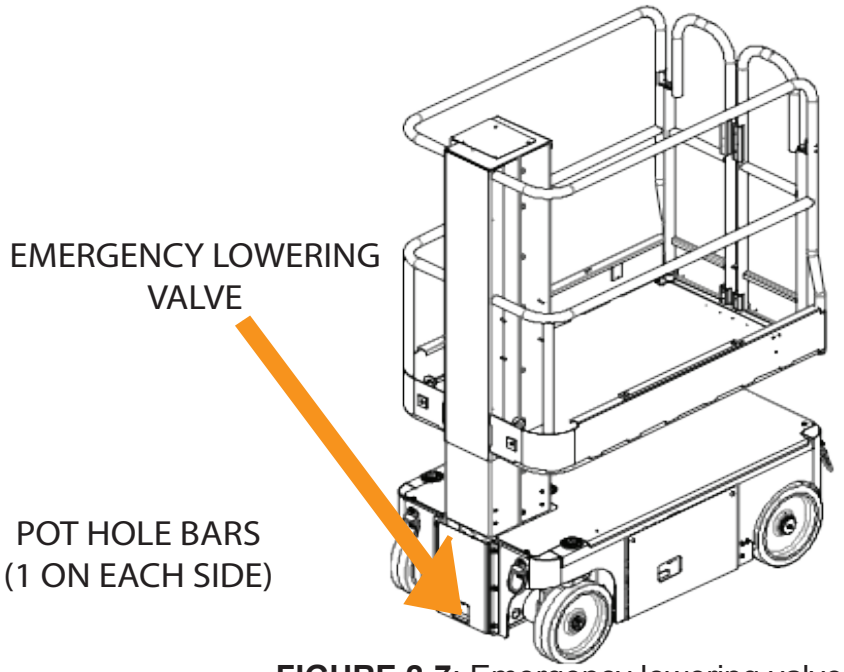

FIGURE 2-7: Emergency lowering valve

11. Verify that the pot hole cylinders have rotated the pot - hole bars into position under the machine.
12. Check to make sure the chassis emergency lowering valve as shown on figure 2-7 is operating correctly using the following procedure:
    - Open the valve by pulling the knob out.
    - Once the platform is fully lowered, close the valve by releasing the knob.
13. Push the chassis emergency stop switch into the off position to check that all machine functions are disabled. Pull out the chassis emergency stop switch to resume.
14. Check that the route is level and capable of supporting the wheel load, clear of holes and drop offs, persons and obstructions.
15. Turn the key switch to platform control and mount the platform.
16. After mounting the platform, ensure gates are closed. Secure gate latch if supplied (Australian machines only).
17. To inspect the platform extension;
    - Inspect the foot lever to ensure that it releases the pin to extend the platform as shown in figure 2-8.
    - While facing the rear of the platform, step down on the foot lever and push the top rail of the extension deck backwards until the pin engages the stop and locates securely.
    - To retract the extension deck, face the rear of the platform. Step down on the foot lever and grasp the top rail of the extension deck pulling backwards to retarct the deck until the pin engages the rear stop.
    - Make sure the platform extension deck is locked in position before continuing.
18. Select drive mode.
19. While pressing on the joystick interlock switch, slowly position the joystick to forward and reverse to check for speed and directional control. The further you push or pull the joystick from the centre, the faster the machine will travel.
20. While pressing on the joystick interlock switch, move the steering switch button right and then left to check for steering control.
21. Push the platform emergency stop switch down to the the off position to check that all machine functions are disabled. Twist and pull up the platform emergency switch to enable all machine functions.

https://truckmanualshub.com/

Before operating the machine, ensure that the pre-operation safety inspection has been completed and that any deficiencies have been corrected. Never operate a damaged or malfunctioning machine. The operator must be thoroughly trained on this machine.

STEERING

NOTE: Steering is not automatically centred. Wheels must be returned to straight ahead position by operating the steering switch.

1. Select DRIVE mode.
2.
   - While operating the interlock switch, push the steering switch to right or left to turn the wheels in the desired direction.
   - Observe the tyres while manoeuvring the machine to ensure it moves in the correct direction.

ELEVATING PLATFORM

NOTE: If the chasis inclination exceeds the specification maximum inclination value, the tilt alarm will sound and the machine will not lift or drive. If the tilt alarm sounds, the platform must be lowered and the machine moved to a level location before attempting to re-elevate the platform.

1. Check clearances below and to the sides of the platform.
2. Select LIFT mode
3. While operating the joystick interlock switch, push joystick forward to the up position. The further you push the joystick, the faster the platform will elevate.

LOWERING PLATFORM

1. Check clearances below and to the sides of the platform.
2. Select lift mode.
3. While operating the joystick interlock switch, pull back on the joystick.

TRAVEL WITH PLATFORM LOWERED

NOTE: The machine's full travel speed range is enabled when the platform is in the lowered (stowed) configuration.

1. Check that the route is level and capable of supporting the wheel load, clear of holes and drop-offs, persons and obstructions.
2. Verify that the chassis key switch is turned to platform control and the chassis emergency stop switch is on by twisting and pulling the button out.
3. After mounting the platform, ensure gates are close behind you.
4. Check clearances above, below and to the sides of the machine.
5. Be aware of the potential crushing hazards when holding handrails while the platform is moving in close proximity to other objects.
6. Twist and pull the platform controller emergency stops switch up to the on position.
7. Select drive mode.
8.
   - While operating the joystick interlock switch, slowly push or pull the joystick forward or reverse to travel in the desired direction.
   - The further you push or pull the joystick from the centre, the faster the machine will travel.

https://truckmanualshub.com/

TRAVEL WITH PLATFORM ELEVATED

NOTE: The machine will travel at reduced speed when the platform is elevated.

1. Check that the route is level and capable of supporting the wheel load, clear of holes and drop-offs, persons and obstructions.
2. Check clearances above, below and to the sides of the platform.
3. Be aware of the potential crushing hazards when holding handrails while the platform is moving in close proximity to other objects.
4. While the machine is elevated above 500mm, select “DRIVE” mode.
5. While operating the joystick interlock switch, push joystick to forward or reverse for desired direction of travel.
6.
   - If the chassis inclination exceeds the specification maximum inclination value, the tilt alarm will sound and the machine will not lift or drive.
   - If the tilt alarm sounds, the platform must be lowered and the machine moved to a level location before attempting to re-elevate the platform.

DRIVE SPEED

The drive speed is proportional to the joystick position. The further the joystick is moved, the faster the machine will travel. Always slow down before travelling over rough terrain or surfaces.

Drive speed ranges are interlocked via a mast proximity switch which senses the platform position (Stowed or Elevated).

- When the platform elevation (platform floor to floor level) is below approximately 750mm (29.5”), the full drive speed range is enabled.
- When the platform elevation (platform floor to floor level) is above approximately 750mm (29.5”), only reduced drive speed range is enabled.

WARNING

The potential for an accident increases when safety devices do not function correctly. Death or serious injury could result from such accidents. ***DO NOT*** *alter, disable or override any safety device.*

Do not use the aerial platform if it drives faster than 0.43km/h (0.27mph) which is 3600mm (17’9”) in 30 seconds when the platform elevation (platform floor to floor level) is above approximately 750mm (29.5”).

DRIVE/LIFT LEVEL SENSOR INTERLOCK

When the platform elevation (platform floor to floor level) is approximately 750mm (29.5”), lift and drive functions are interlocked through a level sensor system. If the chassis inclination is greater than 1.5 degrees side to side or 2 degrees front to back, platform raise and drive functions are disabled and an alarm sounds when these controls are activated.

If the drive/lift level sensor interlock shuts off the platform raise and drive functions, lower the platform and drive to a level surface.

https://truckmanualshub.com/

EXTENDING THE PLATFORM

WARNING

The extension deck is free to move when the foot lever is pressed down on. Personal injury may result from accidentally extending or retracting the deck. Make certain the pin is engaged when the deck is extended in the working position and when it is stowed. ***DO NOT*** *attempt to extend or retract the platform unless the aerial platform is on level surface.*

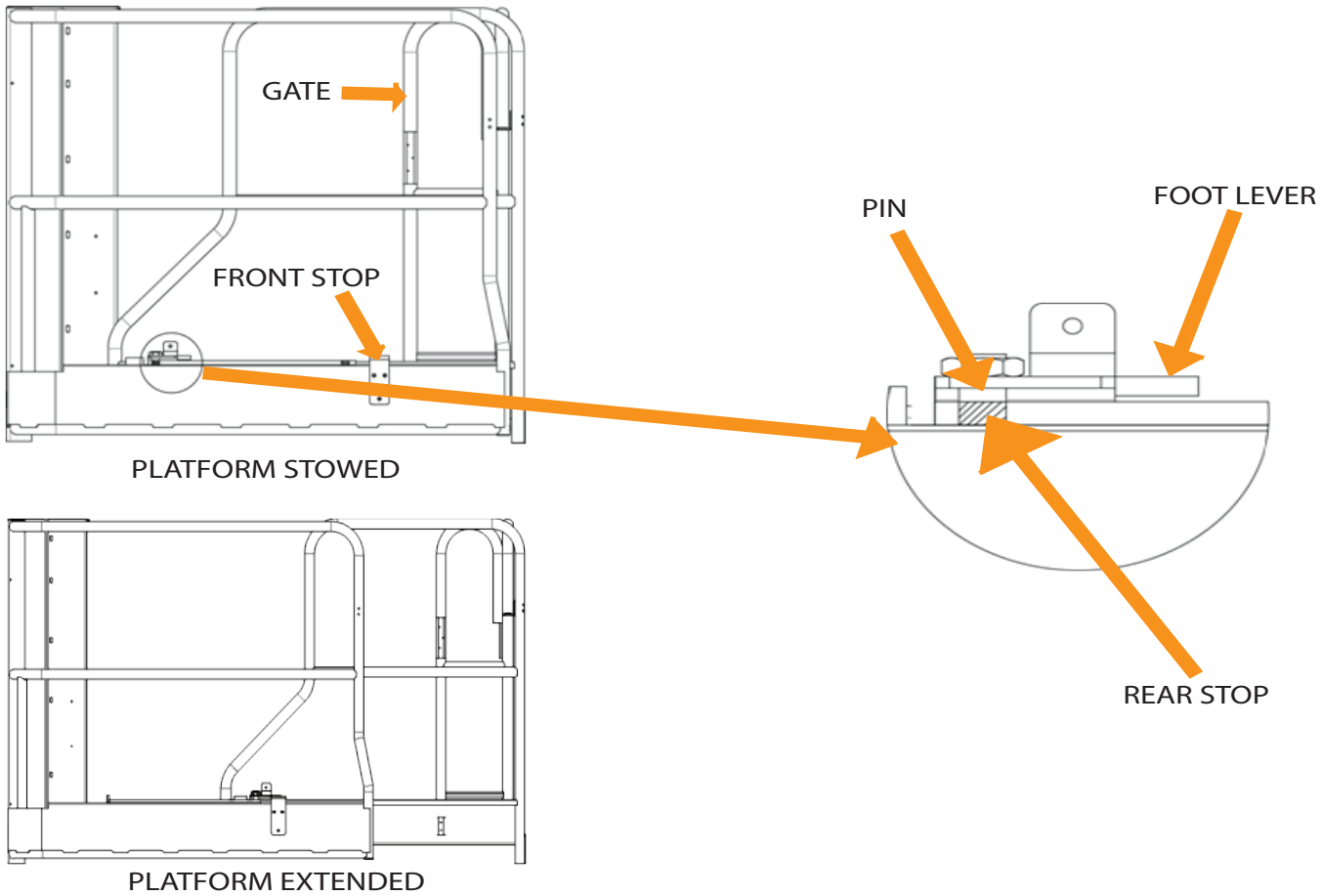

FIGURE 2-8: Platform stowed and extended positions

PLATFORM EXTENSION PROCEDURE

1. Enter the platform, close the gate and secure gate latch if supplied (Australian machines only)
2. While facing the rear of the platform, step down on the foot lever and push the top rail of the extension deck backwards to extend the deck until the pin engages the front stop. Refer to figure 2-8.
3. Try to move the rails back and forth to make sure the platform extension deck is locked in position.

PLATFORM RETRACTION PROCEDURE

1. Enter the platform, close the gate and secure gate latch if supplied (Australian machines only).
2. While facing the rear of the platform, step down on the foot lever and pull the top rail of the extension deck forward until the pin engages the rear stop. Refer to figure 2-8.
3. Try to move the rails back and forth to make sure the platform extension deck is locked in position.

https://truckmanualshub.com/

EMERGENCY LOWERING

WARNING

*If the platform should fail to lower, **NEVER** climb down the elevating assembly. **STAND CLEAR** of the elevating assembly while operating the emergency lowering valve knob.*

Ask a person on the ground to open the “Emergency lowering valve” to lower the platform. The “Emergency lowering valve” is located at the front of the chassis as shown on figure 8.

1. Open the “Emergency lowering valve” by pulling the knob out.
2. To close, release the knob.

NOTE: The platform will not elevate if the “Emergency lowering valve” is open.

PARKING BRAKE RELEASE

Perform the following procedure only when the machine will not operate under its own power and it is necessary to move the machine or when winching unto a trailer for transport.

1. Remove the spring compression nut so the spring is loose and the brake bars are away from the tyres.
2. Disconnect the drive motor hydraulic hose from port “D1” on the hydraulic manifold and immediately cap the opening to prevent foreign material from entering. Open the cap from the oil tank and place the end of the hose into the tank. This will allow the drive motors to turn freely and oil from them will be fed back into the tank.
3. The machine will now roll when pushed or pulled.

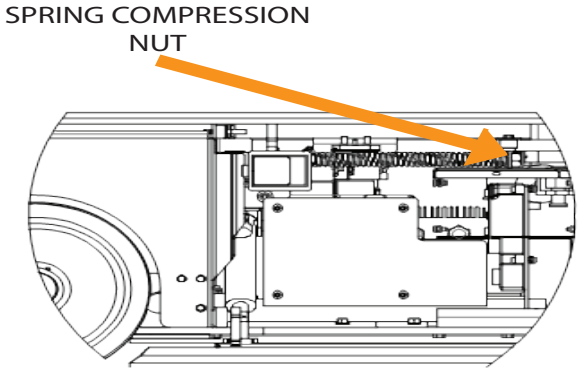

FIGURE 2-9: Parking brake release

After moving the machine and before normal operation:

1. Re-connect the drive motor hose to “D1” on the hydraulic manifold.
2. Ensure Drive/Steer wheels are clear of the ground.
3. Operate drive (fwd or rev), Assistance will be required to complete this process.
4. Adjust spring compression nut until spring is fully compressed.
5. Restore machine to its original position.

WARNING

***NEVER** tow faster than 0.3m/s (1ft/s). **NEVER** operate the machine with the parking brakes released. Serious injury or damage could result.*

After use each day;

1. Ensure that the platform is fully lowered.
2. Park the machine on a firm level surface, preferably under cover, secure against vandals, children and unauthorised operation.
3. Turn the chassis key switch to OFF and remove the key to prevent unauthorised operation.

https://truckmanualshub.com/

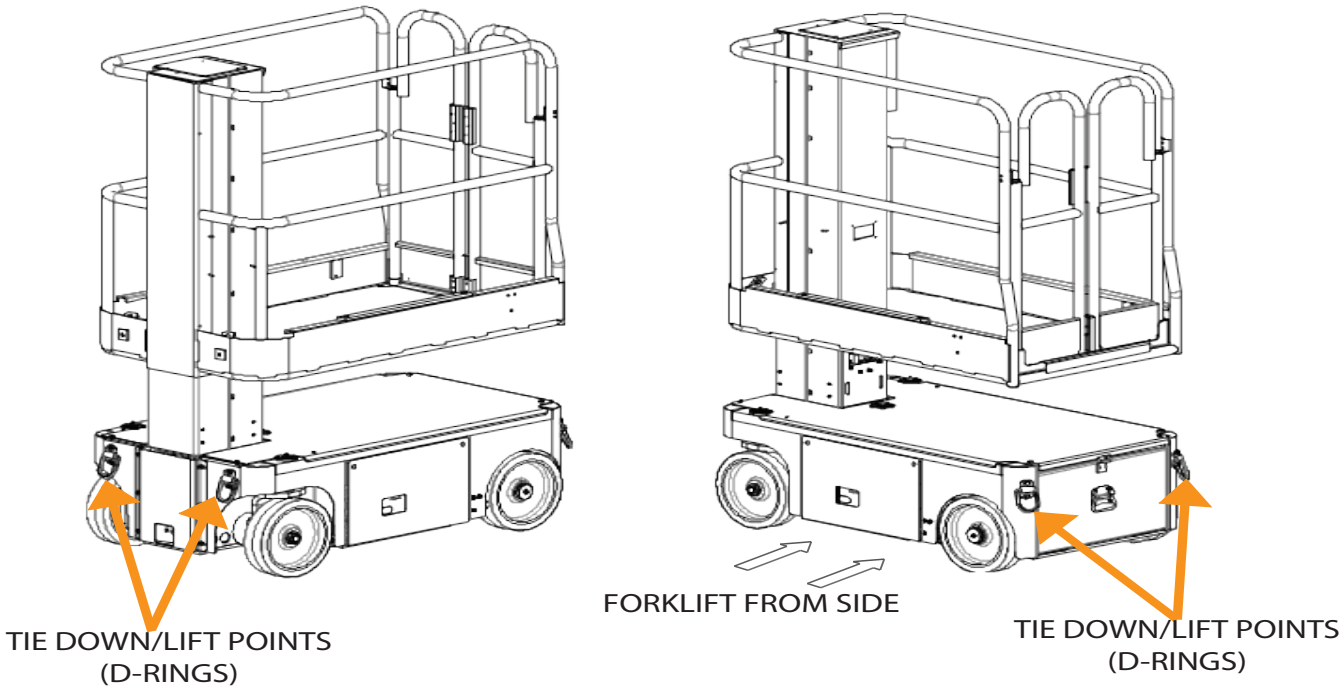

FIGURE 2-10: Safe transportation procedure

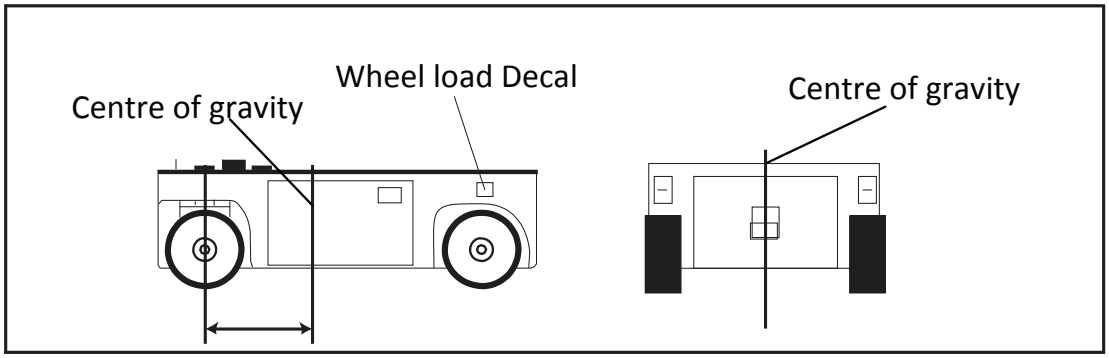

FIGURE 2-11: Centre of gravity when empty

The machine can be transported using any of the procedures stated below.

CRANE

Before lifting with a crane, ensure the straps to chassis lifting/tie down points are securely fastened. A view of the chassis lifting points is shown in figure 2-10.

FORKLIFT

DANGER

Forklift is for transport only. Refer to specifications for weight of the machine on page 24 and be certain that the forklift is of adequate capacity to lift the machine.

A view of the forklift lifting procedure is shown in figure 2-10.

https://truckmanualshub.com/

TRUCK

1. Manoeuvre the machine into transport position and chock the wheels.
2. Secure the machine to the transport vehicle with chains or straps of adequate load capacity attached to the chassis lifting/tie down points.

CAUTION

Over tightening of the chains or straps attached to the tie down lugs may result in damage to the machine

https://truckmanualshub.com/

BLOCKING THE ELEVATING ASSEMBLY

WARNING

***NEVER** perform service on the machine while the platform is elevated without first blocking the elevating assembly. **DO NOT** stand under the elevating assembly area while deploying or storing the brace.*

Before performing any maintenance operation on the machine (Chassis) which involves the platform in an elevated position, it is important to brace the 2nd mast with a block of wood as shown in figure 2-12.

INSTALLATION PROCEDURE

1. Park the machine on a hard level ground.
2. Verify that the chassis emergency stop switch is on.
3. Switch the key switch to chassis control.
4. Push and hold the enable toggle switch and push the chassis lift/lower toggle switch to the up position to elevate the platform approximately 1.2m (4ft.)
5. Place a solid wood block of size 51mm x 100mm x 450mm (2” x 4” x 18”) between the second mast section and chassis just behind the mast assembly.
6. Push and hold the enable toggle switch and push the chassis lift/lower toggle switch to the down position to gradually lower the platform until the second mast section is supported by the block.

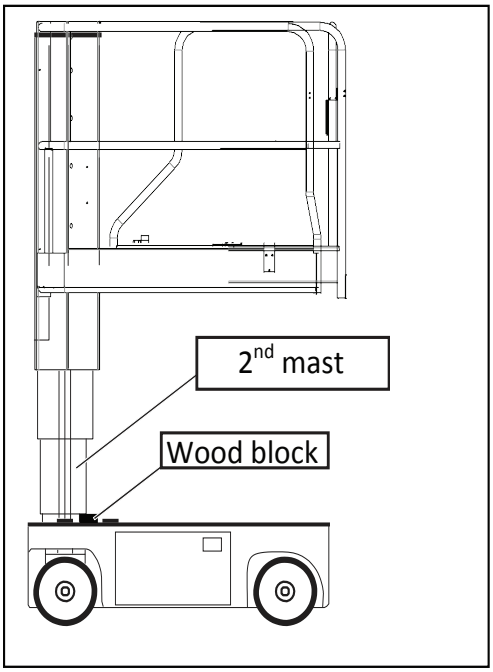

FIGURE 2-12: Supporting the elevated assembly

REMOVAL PROCEDURE

1. Push and hold the enable toggle switch and push the chassis lift/lower toggle switch to the up position and gradually raise platform until the wood block can be removed.
2. Remove the block.
3. Push and hold the enable toggle switch and push the chassis lift/lower toggle switch to the down position and completely lower the platform.

https://truckmanualshub.com/

HYDRAULIC FLUID

WARNING

NEVER *add hydraulic fluid to the reservoir if the platform is elevated.*

The hydraulic fluid reservoir is located on the chassis door as shown in figure 2-13.

HYDRAULIC FLUID CHECK PROCEDURE

1. Make sure that the platform is fully lowered.
2. Open the chassis door.
3. Check that the fluid level is between the minimum and the maximum level marks indicated on either the side of the hydraulic tank or on the dipstick (if fitted). The dipstick if fitted can be found on the bottom of the filling cap.
4. To add hydraulic fluid, remove the filler cap as shown in figure 2-13.
5. Add the recommended hydraulic fluid if necessary using specifications set on page 24

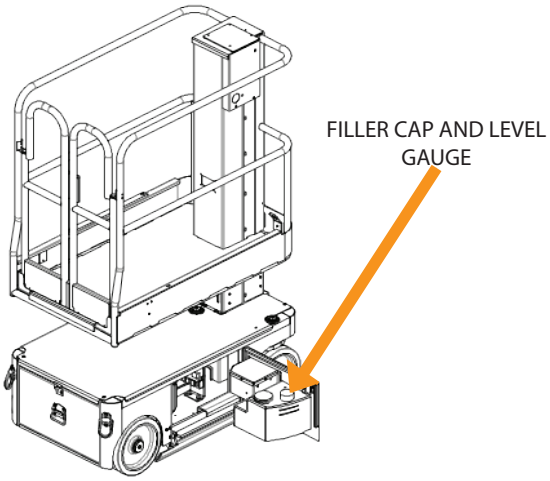

FIGURE 2-13: Hydraulic reservoir

BATTERY MAINTENANCE

WARNING

Explosive gas mixture hazard: *Keep sparks, flames and smoking material away from batteries.* ***ALWAYS*** *wear safety glasses when working near batteries. Battery fluid is highly corrosive. Thoroughly rinse away any spilled fluid with clean water.* ***ALWAYS*** *replace batteries with Snorkel batteries or manufacture approved replacements weighing 26.3 kg (58lbs) each.*

https://truckmanualshub.com/

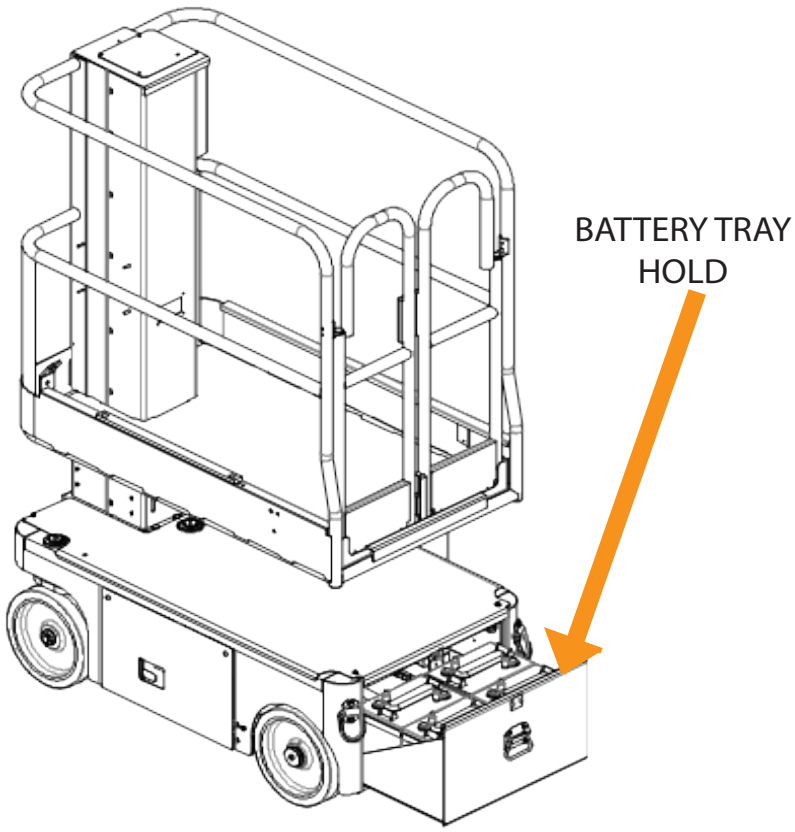

FIGURE 2-14: Battery access

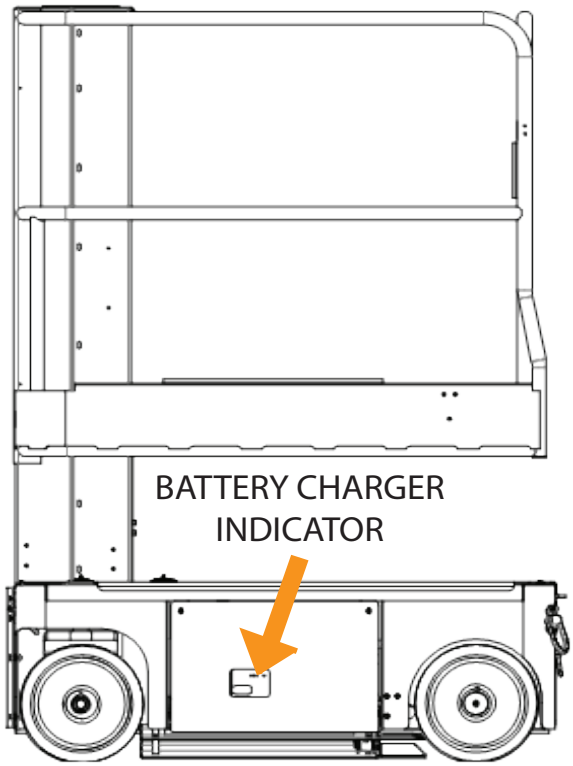

FIGURE 2-15: Battery charge indicator location

Refer to the service manual for complete service instructions to ensure an extended battery life span. The daily maintenance checks needed are;

1. Check the battery fluid level daily, especially if the machine is being used in a warm, dry climate.
2. Keep the terminals and the top of the batteries clean.

BATTERY CHARGING

WARNING

*Charge the batteries in a well ventilated area. **DO NOT** charge the batteries when the machine is near a source of sparks or flames. Permanent damage to the batteries will result if the batteries are not immediately re-charged after discharging. **NEVER** leave the battery charger operating for more than two days. **Never** disconnect the cables from the batteries when the charger is operating. Keep the charger dry.*

1. Check the battery fluid level. If the battery fluid level is lower than 10 mm (0.375 in.) above the plates, add distilled water only.
2. Connect an extension cord (1.5mm^2 [12 gauge] minimum conductor diameter; 15m (50ft.) maximum length) to the charger plug located at the left side of the chassis.

https://truckmanualshub.com/

3. The charger turns on automatically after a short delay. Look through the charge indicator cut-out to check the state of charge. The state of charge categories is stated below;

- 0-50% Charge:
  - First light - BLINKING -
  - Second and Third light - OFF
- 50% - 75% Charge:
  - First Light - ON
  - Second light - BLINKING -
  - Third light - OFF
- 75% - 100% Charge:
  - First and Second light - ON
  - Third light - BLINKING -
- Charge complete
  - All lights - ON

The charger automatically shuts down to low current after charging is complete and all lights turn on. Low current charging (equalizing charge) carries on for 3-4 hours after which the current shuts off completely.

4. Lights remain on until the AC power supply is disconnected.

NOTE: The battery charger circuit must be used with a GFI (Ground fault interrupt) outlet.
NOTE: **DO NOT** operate the machine while the charger is plugged in.

INSPECTION AND MAINTENANCE SCHEDULE

The complete inspection consists of periodic visual and operational checks along with periodic minor adjustments that assure proper performance. Daily inspection will prevent abnormal wear and prolong the life of all systems. The inspection and maintenance schedule should be performed at the specific intervals or at intervals to suit the relevant national body, whichever is the lesser. Inspection and maintenance shall be performed by personnel who are trained and familiar with mechanical and electrical procedures.

WARNING

Before performing preventative maintenance, familiarise yourself with the operation of the machine. ***ALWAYS*** *block the elevating assembly whenever it is necessary to perform maintenance while the platform is elevated.*

Table 2-2 below is a daily preventative maintenance checklist. The checklist has been designed for the machine service and maintenance. Please photocopy and use the checklist when inspecting the machine.

https://truckmanualshub.com/

DAILY PREVENTATIVE MAINTENANCE SCHEDULE

MAINTENANCE TABLE KEY

Y = Yes/Acceptable
N = No/Not Acceptable
R = Repaired/Acceptable

PREVENTATIVE MAINTENANCE REPORT

Date: _____
Owner: _____
Model #: _____
Serial #: _____
Serviced by: _____

COMPONENT	INSPECTION OR SERVICES	Y	N	R
Operator's Manual	Check that the operators manual is in the manual holder and all pages are intact and readable			
Labels & Decals	Check that labels and decals are in place, intact and readable			
Entire Unit	Perform pre-operation inspection			
	Check for and repair any damage			
Electrical system	Check cables and wiring harness condition (No wear or physical damage)			
Battery System	Check electrolyte level, (if applicable).			
	Check battery cable condition			
	Check terminals are clean and connectors are tight			
	Check charger condition and operation			
	Charge batteries			
Hydraulic fluid	Check oil level			
Hydraulic system	Check all fittings are tight and there are no leaks			
Drive motors	Check for operation and leaks			
Hydraulic pump	Check fittings are secure and there are no leaks			
Emergency lowering	Check emergency lowering correctly (See emergency lowering procedure)			
Controller	Check condition and operation			
Platform deck and rails	Check fasteners are in place, correctly tightened and not damaged			
	Check the structure and welds for damage, deformation, corrosion and cracks			
	Check condition of deck (no damage, deformation, corrosion or cracks			
	Check entry gate closure functions correcly			

COMPONENT	INSPECTION OR SERVICES	Y	N	R
Elevating assembly	Inspect for external damage, dents, loose rivets or cracks, loose chain tensioner locknuts			
	Check the structure and welds for damage, deformation, corrosion and cracks			
Chassis	Check cables for pinch or rubbing points			
	Check the structure and welds for damage, deformation, corrosion and cracks			
Lift Cylinder	Check for leaks			
Wheels	Check for loose components			
	Check for damage to tyres			
Harness anchor point	Check fasteners are secure			
	Check for damage, deformation, corrosion and cracks			
System function inspection	Conduct system function inspection (see system function inspection pocedure)			
Emergency stops	Check that the emergency stop button on the basket panels opertates correctly			
	Check that the emergency stop button on the ground control panel operates correctly			
Brakes	Check that the brakes operate correctly			
Horn	Check that the horn sounds when activated			
Proximity switch and controller	Check armguard lowering functions correctly when the platform is being lowered.			
	Check full drive speed range is enabled when the platform is stowed.			
	Check that only reduced drive speed range is enabled when the platform is elevated.			

Table 2-2: Daily preventative maintenance checklist

*** NOTE: Use ISO #46 during summer and ISO #32 during winter**

https://truckmanualshub.com/

SPECIFICATIONS

ITEM	TM12
Platform size	740 mm X 960 mm (29” X 38”)
Maximum platform capacity	227 kg (500 lbs)
Maximum number of occupants	2 people indoors/1 person outdoors
Maximum manual force	A) per occupants: 200N (45 lbs) maximum B) two occupants: 400N (90 lbs) maximum
Maximum wind speed	12.5 m/s (28 mph) [Beaufort scale 6]
HEIGHT Working height Maximum platform height Minimum platform height	 5600 mm (18ft) 3630 mm (11 ft 11”) 4830 mm (19”)
DIMENSIONS **Weight** Overall width Overall height Overall length	 **780 kg (1719 lbs.)/ with extension deck 830 kg (1829 lbs.)** 760 mm (30”) 1650 mm (65”) 1360 mm (53.5”)
DRIVE SPEED Platform lowered Platform raised	 3.2 km/h (1.99 mph) 0.43 km/h (0.27 mph)
PLATFORM OPERATION SPEED Platform lowering Platform raise	 19 seconds 16 seconds
Energy source	24V battery pack Four 220 ampere hour, 6 volt batteries, min. wt. 26.3 kg (58 lbs) each 4HP DC electric motor
System voltage	24 VDC
Battery charger	25 AMP, 220 V AC 50 Hz
Battery duty cycle	25% for 8 hours
Hydraulic reservoir capacity	7.2 L (1.9 gal)
Maximum hydraulic system pressure	165 bar (2400 psi)
HYDRAULIC FLUID Normal above 32° F [0° C] Low temperature below 32° F [0° C] Below 0° F [-17° C]	 ISO #46 ISO #32 ISO #15
Lift system	One single stage lift cylinder
Drive control	Proportional
Control system	Proprotional control handle with interlock, selector switch, red mushroom emergency stop switches
Horizontal drive	Dual front wheel
Tyres	305 mm (12”) diameter solid rubber, Non - marking
Parking brakes	Dual, spring applied, hydraulic release
Turning radius	370 mm (14.5”) inside
Maximum gradeability	14° (25%)
Wheel base	978 mm (38.5”)
Guardrails	1100 mm (43”)
Toeboard	152 mm (6”)
Maximum chassis inclination (see page 19 for 2 degree side to side option)	**1.5° side to side** **2.0° front to back**
Wheel loading no extension deck	325 kg per wheel / 716 lbs per wheel
Wheel loading with Extension deck	370 kg per wheel / 815 lbs per wheel
Machine vibration	Whole body vibration < 0.5 m/s², Hand/arm vibration < 2.5 m/s²
Sound pressure level	< 70dB (A) at Control station
Operating temperature range	-20°C to +50°C

TABLE 2-3: TM12 Specification

NOTE: Specifications are subject to change without notice. Hot weather or heavy use may affect performance. Refer to the service manual for complete parts and service information. This machine meets or exceeds all applicable CE and GS machinery directive requirements.

https://truckmanualshub.com/

WARNING

DO NOT *remove the ballast weight. Please be aware this machine gets fitted with additional ballast weight to allow for a 2 degree side to side chassis inclination. Removal of this additional ballast weight could make the machine unstable*

ITEM	TM12
Platform size	740 mm X 960 mm (29” X 38”)
Maximum platform capacity	227 kg (500 lbs)
Maximum number of occupants	2 people indoors/1 person outdoors
Maximum manual force	A) per occupants: 200N (45 lbs) maximum B) two occupants: 400N (90 lbs) maximum
Maximum wind speed	12.5 m/s (28 mph) [Beaufort scale 6]
HEIGHT Working height Maximum platform height Minimum platform height	 5600 mm (18ft) 3630 mm (11 ft 11”) 4830 mm (19”)
DIMENSIONS **Weight** Overall width Overall height Overall length	 **912 kg (2010 lbs)** 760 mm (30”) 1650 mm (65”) 1360 mm (53.5”)
DRIVE SPEED Platform lowered Platform raised	 3.2 km/h (1.99 mph) 0.43 km/h (0.27 mph)
PLATFORM OPERATION SPEED Platform lowering Platform raise	 19 seconds 16 seconds
Energy source	24V battery pack Four 220 ampere hour, 6 volt batteries, min. wt. 26.3 kg (58 lbs) each 4HP DC electric motor
System voltage	24 VDC
Battery charger	25 AMP, 220 V AC 50 Hz
Battery duty cycle	25% for 8 hours
Hydraulic reservoir capacity	7.2 L (1.9 gal)
Maximum hydraulic system pressure	165 bar (2400 psi)
HYDRAULIC FLUID Normal above 32° F [0° C] Low temperature below 32° F [0° C] Below 0° F [-17° C]	 ISO #46 ISO #32 ISO #15
Lift system	One single stage lift cylinder
Drive control	Proportional
Control system	Proprotional control handle with interlock, selector switch, red mush-room emergency stop switches
Horizontal drive	Dual front wheel
Tyres	305 mm (12”) diameter solid rubber, Non - marking
Parking brakes	Dual, spring applied, hydraulic release
Turning radius	370 mm (14.5”) inside
Maximum gradeability	14° (25%)
Wheel base	978 mm (38.5”)
Guardrails	1100 mm (43”)
Toeboard	152 mm (6”)
Maximum chassis inclination (see page 19 for 2 degree side to side option)	**2.0° side to side** **2.0° front to back**
Wheel loading no extension deck	325 kg per wheel / 716 lbs per wheel
Wheel loading with Extension deck	370 kg per wheel / 815 lbs per wheel

https://truckmanualshub.com/

Machine vibration	Whole body vibration < 0.5 m/s^2, Hand/arm vibration < 2.5 m/s^2
Sound pressure level	< 70dB (A) at Control station
Operating temperature range	-20°C to +50°C

TABLE 2-4: TM12 Specification for 2^{O} maximum chassis inclination option

NOTE: Specifications are subject to change without notice. Hot weather or heavy use may affect performance. Refer to the service manual for complete parts and service information. This machine meets or exceeds all applicable CE and GS machinery directive requirements.

https://truckmanualshub.com/

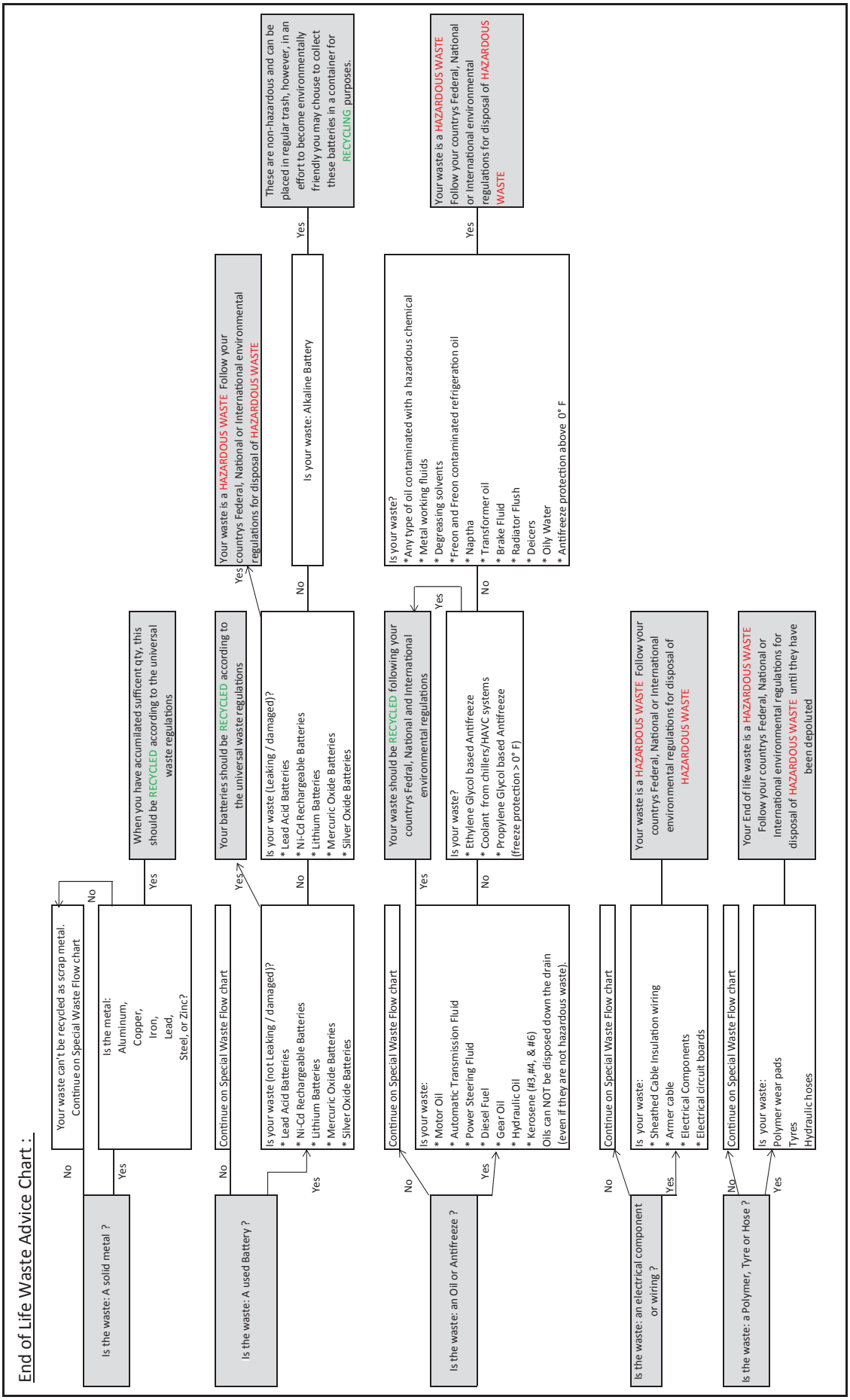

https://truckmanualshub.com/

Local Distributor / Lokaler Vertiebshändler / Distributeur local
El Distribuidor local / ll Distributore locale

EUROPE, MIDDLE EAST
AFRICA & ASIA
PHONE: +44 (0) 845 1550 058
FAX: +44 (0) 845 1557 756

NORTH & SOUTH AMERICA
PHONE: +1 785 989 3000
TOLL FREE:+1 800 255 0317
FAX: +1 785 989 3070

AUSTRALIA
PHONE: +61 1300 700 450
FAX: +61 2 9609 3057

NEW ZEALAND
PHONE: +64 6 3689 168
FAX: +64 6 3689 164

snorkel
www.snorkellifts.com

https://truckmanualshub.com/

REPAIR PARTS

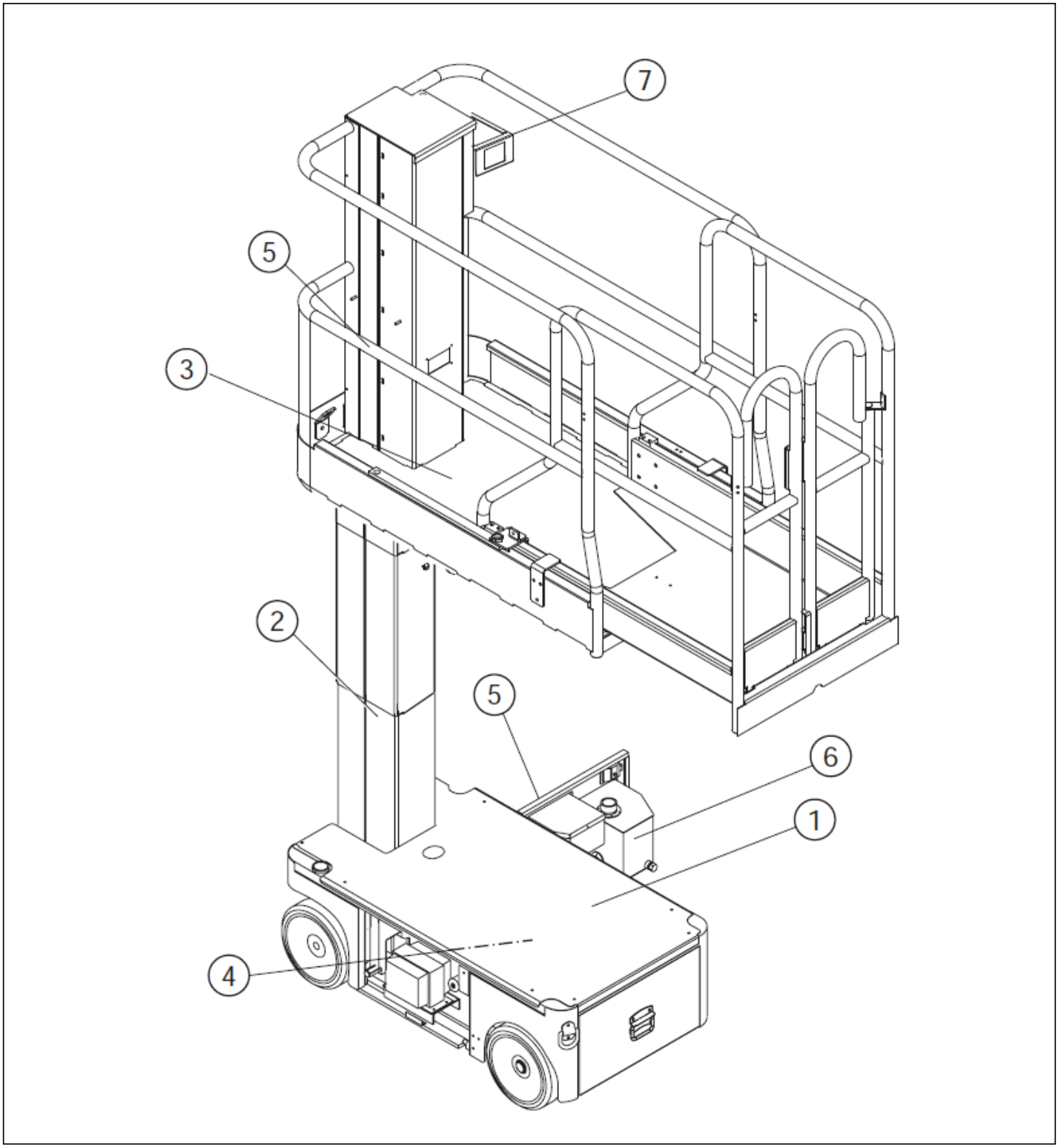

https://truckmanualshub.com/

Item	Part No.	Name	Qty	Uom
1	REF	CHASSIS	1	EA
2	REF	MAST ASSEMBLY	1	EA
3	REF	PLATFORM ASSEMBLY	1	EA
4	REF	CONTROL VALVE ASSEMBLY	1	EA
5	REF	LOWER CONTROLS ASSEMBLY	1	EA
6	REF	HYDRAULIC TANK ASSEMBLY	1	EA
7	REF	UPPER CONTROLS ASSEMBLY	1	EA

https://truckmanualshub.com/

REPAIR PARTS

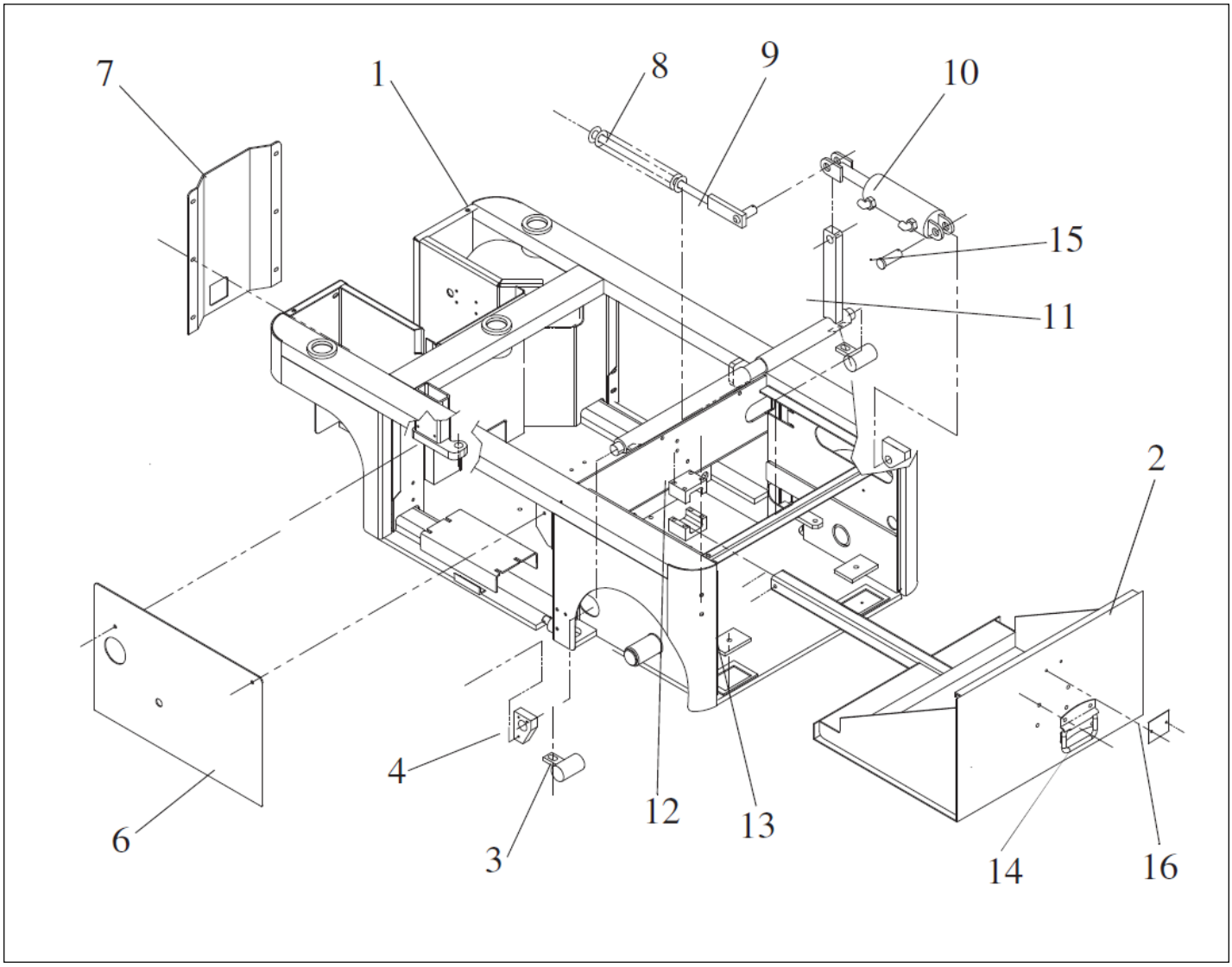

https://truckmanualshub.com/

Item	Part No.	Name	Qty	Uom
-	505001-000	CHASSIS ASSEMBLY		EA
1	512896-000	CHASSIS WELDMENT	1	EA
2	065465-000	BATTERY PAN WELDME NT	1	EA
3	065472-000	SHOE PARK BRAKE	2	EA
4	505031-001	BRAKE BEARING (RH) & (LH)	2	EA
5	N/A	N/A	N/A	EA
6	513057 - 000	CHASSIS ACCESS PANEL	1	EA
7	065532-000	FRONT COVER	1	EA
8	510931-000	SPRING COMPRESSION	1	EA
9	065474-000	TENSION BAR WELDMENT	1	EA
10	REF	CYLINDER ASSY (BRAKE)	1	EA
-	REF	SEAL KIT, CYLINDE R		EA
11	065469-000	BRAKE ACTUATOR WELDMENT	1	EA
12	509413-000	GUIDE PAD	2	EA
13	505030-000	SLIDE PAD	2	EA
14	026541-016	HANDLE	1	EA
15	011848-019	PIVOT PIN, STEERING CYLINDER	1	EA
16	065569-000	SPACER PLATE , BATTERY TRAY SECURING PIN	1	EA
17	065536-000	MAIN CHAS S IS COVE R (NOT SHOWN)	1	EA
17	514746-000	2° SIDE TO SIDE OPTION CHASSIS COVER (NOT SHOWN - OPTION)	1	EA
17	514747-000	2° SIDE TO SIDE OPTION BALLAST (NOT SHOWN - OPTION)	1	EA
17	510683-025	M10 X 25 HEX BOLT (NOT SHOWN - OPTION)	4	EA
17	510570-010	M10 SPRING WASHER (NOT SHOWN - OPTION)	4	EA
19	101125-001	MOTOR HYDRAULIC	2	EA

https://truckmanualshub.com/

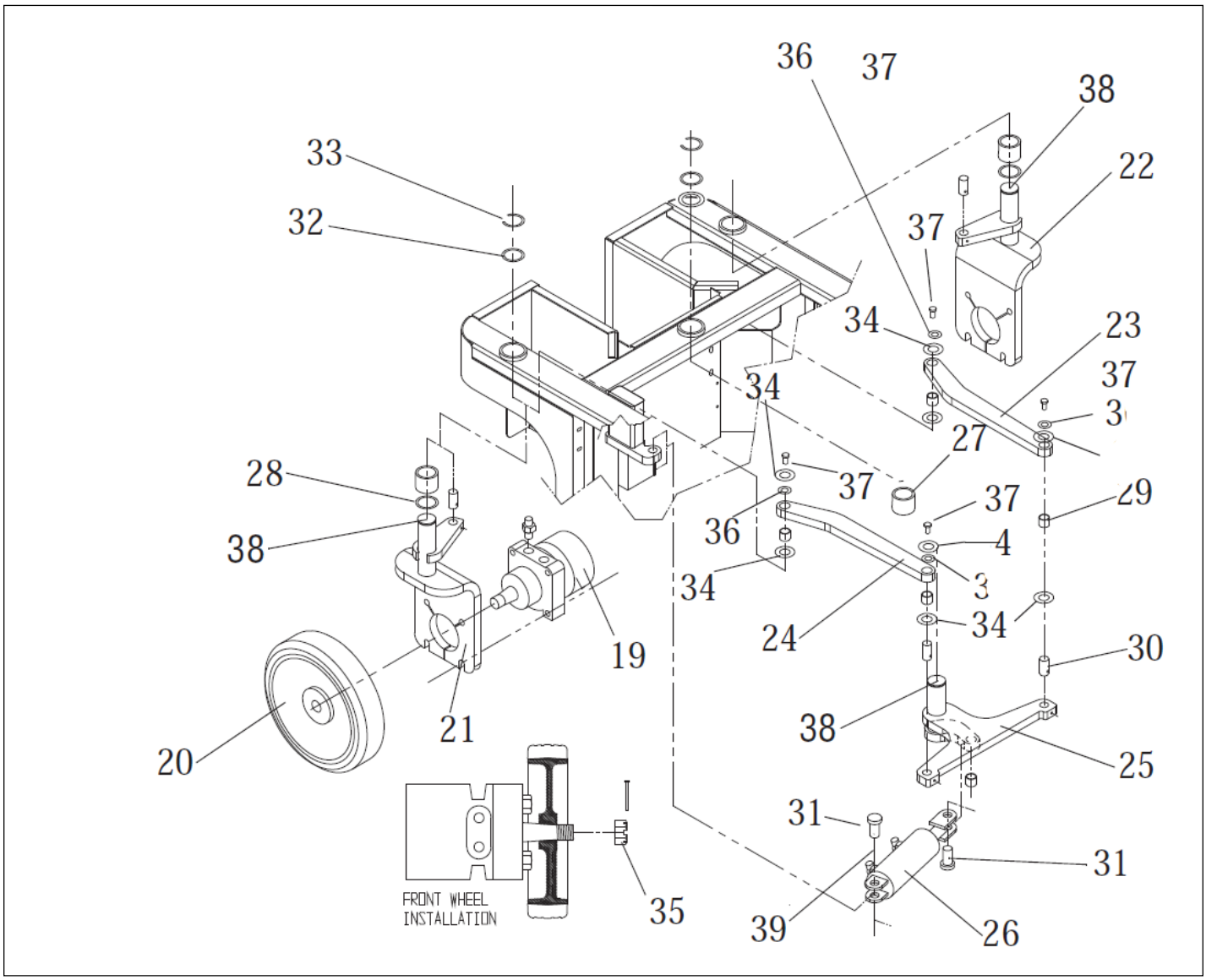

https://truckmanualshub.com/

Item	Part No.	Name	Qty	Uom
*	101125-010	SEAL KIT (MOTOR)	2	EA
20	510815-000	WHEEL, DRIVE	2	EA
21	107186-000	WHEEL YOKE, L.H.	1	EA
22	107185-000	WHEEL YOKE, R.H.	1	EA
23	065517-000	STEER LINK RH	1	EA
24	065518-000	STEER LINK LH	1	EA
25	065445-000	BELL CRANK WELDMT	1	EA
26	REF	CYLINDER ASSY, BRAKE/STEER	1	EA
-	REF	SEAL KIT, BRAKE/STEER CYLINDER	-	EA
27	505043-000	BUSHING, BELL CRANK & STEER YOKE PIVOT	3	EA
28	508108-000	BUSHING (FLAT), STEER YOKE PIVOT	3	EA
29	503673-000	BUSHING, STEERING LINK ARMS & BELL CRANK WELD'M	5	EA
30	505034-000	PIVOT PIN, STEERING LINK ARMS	4	EA
31	011848-019	PIVOT PIN, STEERING CYLINDER	2	EA
32	508108-000	BUSHING (FLAT), STEER YOKE PIVOT	2	EA
33	505038-000	CIRCLIP	2	EA
34	505045-000	SPACER (STEERING LINK)	8	EA
35	061817-011	CASTLE NUT, (DRIVE WHEELS)	2	EA
36	500509-016	WASHER M6 (STEERING LINKARMS)	4	EA
37	056491-016	M6 X 16 HEX HEAD SCREW	4	EA
38	057048-000	GREASE NIPPLE	3	EA
39	505075-000	SPACER	1	EA
40	512896-000	CHASSIS WELDMENT	REF	EA
41	514275-001	PUMP	1	EA
42	501814-000	VIBRATION MOUNT	4	EA

https://truckmanualshub.com/

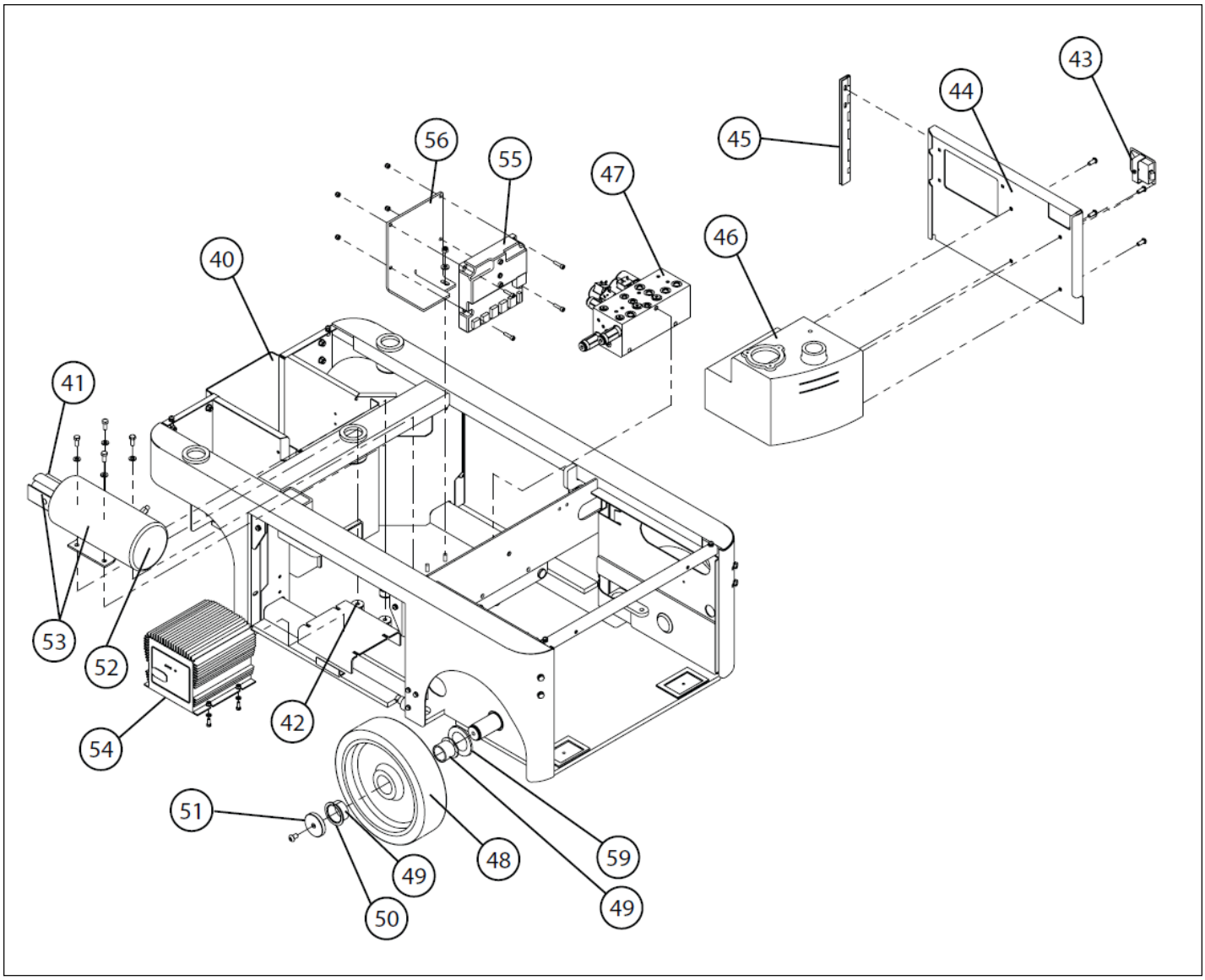

https://truckmanualshub.com/

Item	Part No.	Name	Qty	Uom
43	505024-000	LATCH (HINGING DOOR)	1	EA
44	107149-010	DOOR (HINGED)	1	EA
45	505025-000	HINGE	1	EA
46	REF	TANK, (HYDRAULIC RESERVOIR)	1	EA
47	513615-000	HYDRAULIC MANIFOLD BLOCK (see page 6-12)	1	EA
48	510816-000	IDLER WHEEL	2	EA
49	505041-000	BUSHING, SPACER	4	EA
50	505038-000	CIRCLIP	2	EA
51	505027-000	CIRCLIP COVER	2	EA
52	514275-002	PUMP MOTOR	1	EA
53	514275-000	PUMP / MOTOR ASSY. (MADE FROM ITEM 52 & 41)	REF	EA
54	1450029	BATTERY CHARGER	1	EA
55	3087800	EZ230 CONTROLLER	1	EA
56	510463-000	EZ230 CONTROLLER MOUNT BRACKET	1	EA
57	512950-000	WIRING HARNESS (NOT SHOWN, REFER TO ELECTRICAL SCHEMATIC 5.2)	1	EA
58	513048 - 000	BATTERY CABLE SET (NOT SHOWN, REFER TO SECTION 3-6, SERVICE & REPAIR FOR CABLE LOCATION)	1	EA
59	010092-014	THRUST WASHER	2	EA

https://truckmanualshub.com/

REPAIR PARTS

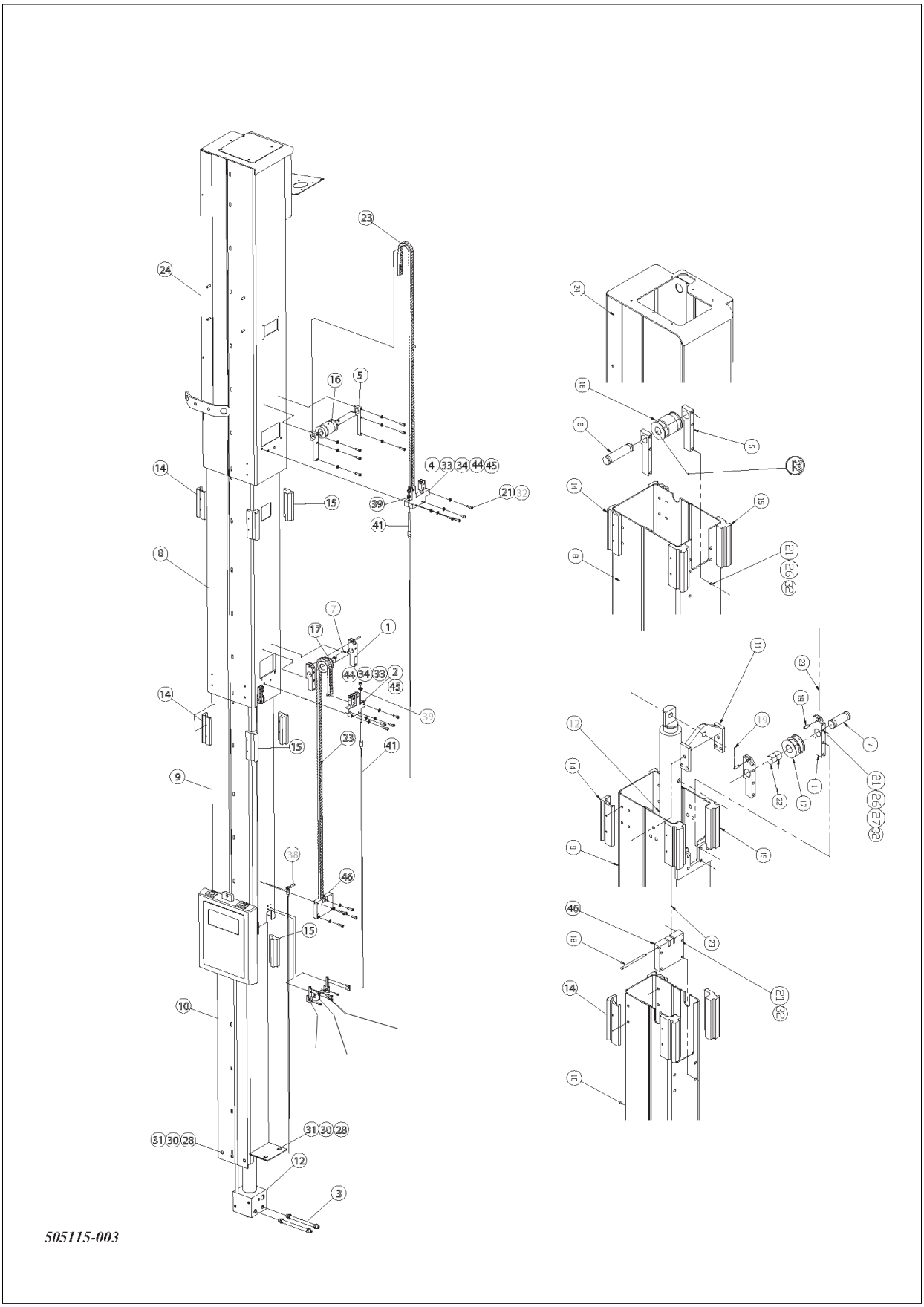

https://truckmanualshub.com/

Item	Part No.	Name	Qty	Uom
1	505066-000	INNER MOUNT	2	EA
2	513524-000	ANCHOR INNE R	2	EA
3	107082-000	STANDPIPE ADDAPTOR	2	EA
4	513523-000	OUTE R ANCHOR	1	EA
5	505063-000	OUTE R MOUNT	2	EA
6	505057-000	OUTE R AXLE	1	EA
7	505056-000	INNER AXLE	1	EA
8	512893-000	SECOND INNER MAST WELDMENT 4M	1	EA
9	065450-001	LOWER INNER MAST WELDME NT	1	EA
10	512888-000	HYDRAULIC CYLINDER ASSEMBLY (LIFT) TYPE B	1	EA
11	512894-00	CYL. BAR & PAD WELDMENT	1	EA
12	512895-00	LIFT CYLINDER ASSY	1	EA
Not Shown	REF	SEAL KIT, LIFT CYLINDE R	R E F	EA
Not Shown	513159-000	VALVE EMERGENCY DOWN (item 5)	R E F	EA
14	505062-000	FRONT PAD	12	EA
15	512887-000	REAR PAD	12	EA
16	505060-000	PULLEY OUTER	1	EA
17	505059-000	PULLEY INNER	1	EA
18	505054-000	PIN	3	EA
19	505055-000	ANCHOR PIN	2	EA
20	505084-013	HEX HEAD SELF TAPPE R (5.5 X 13)	36	EA
21	058502-020	M6 X 20mm SOCKET HEAD CAP SCREW	18	EA
22	505068-000	BEARING, 2220DU	4	EA
23	505067-000	CHAIN LEAF, BL434 (103 LINKS)	4	EA
24	512892-000	PLATFORM WELDMENT	R E F	EA

https://truckmanualshub.com/

Item	Part No.	Name	Qty	Uom
25	15048	SWITCH, PROXIMITY ASSY	1	EA
26	058502-035	SHCS M6 X 1 X 35 G12.9 ISO 4762 BLACK OXIDE	4	EA
27	500532-030	M6 X 30 SOCKET HEAD COUNTER SUNK SCREW	2	EA
28	510230-030	M12 HE X HE AD 30mm (GR ADE 10.9)	2	EA
29	510230-030	M12 HE X HE AD 30mm (GR ADE 10.9)	9	EA
30	056064-012	NUT NYLOCKNUT DIN985 M12 10.0	11	EA
31	510231-000	M12 FLAT WAS HE R HAR D/TEMP E R E D (GR ADE 10)	22	EA
32	511155-006	M6 HARDENED WASHERS, USED ON MACHINES 54092 & AFTER	18	EA
33	513525-000	CHAIN TENSIONER	2	EA
34	513526-000	PIN	4	EA
35	512879-000	PULLEY WHEEL	2	EA
36	512880-000	PULLEY WHEEL BRACKET	4	EA
37	512881-000	PULLEY AXLE	2	EA
38	512882-000	PIN	2	EA
39	512883-000	BELVILLE WASHER	10	EA
40	512885-000	BUSH	2	EA
41	512886-000	SEQUENCING ROPE	2	EA
42	512891-000	COUNTER BALANCE VALVE	1	EA
43	513286-000	EMERGENCY DOWN VALVE T-HANDLE	1	EA
44	056059-065	M8 X 65mm HEX HEAD	4	EA
45	056067-508	M8 JAM NUT	4	EA
46	512876-000	ANCHOR INNER	1	EA
47	513527-065	M12 x 1.25mm x 65mm SHCS 12.9 SELF COULOURED	2	EA
48	513528-012	M12 x 1.25mm HALF NUT	2	EA

https://truckmanualshub.com/

REPAIR PARTS

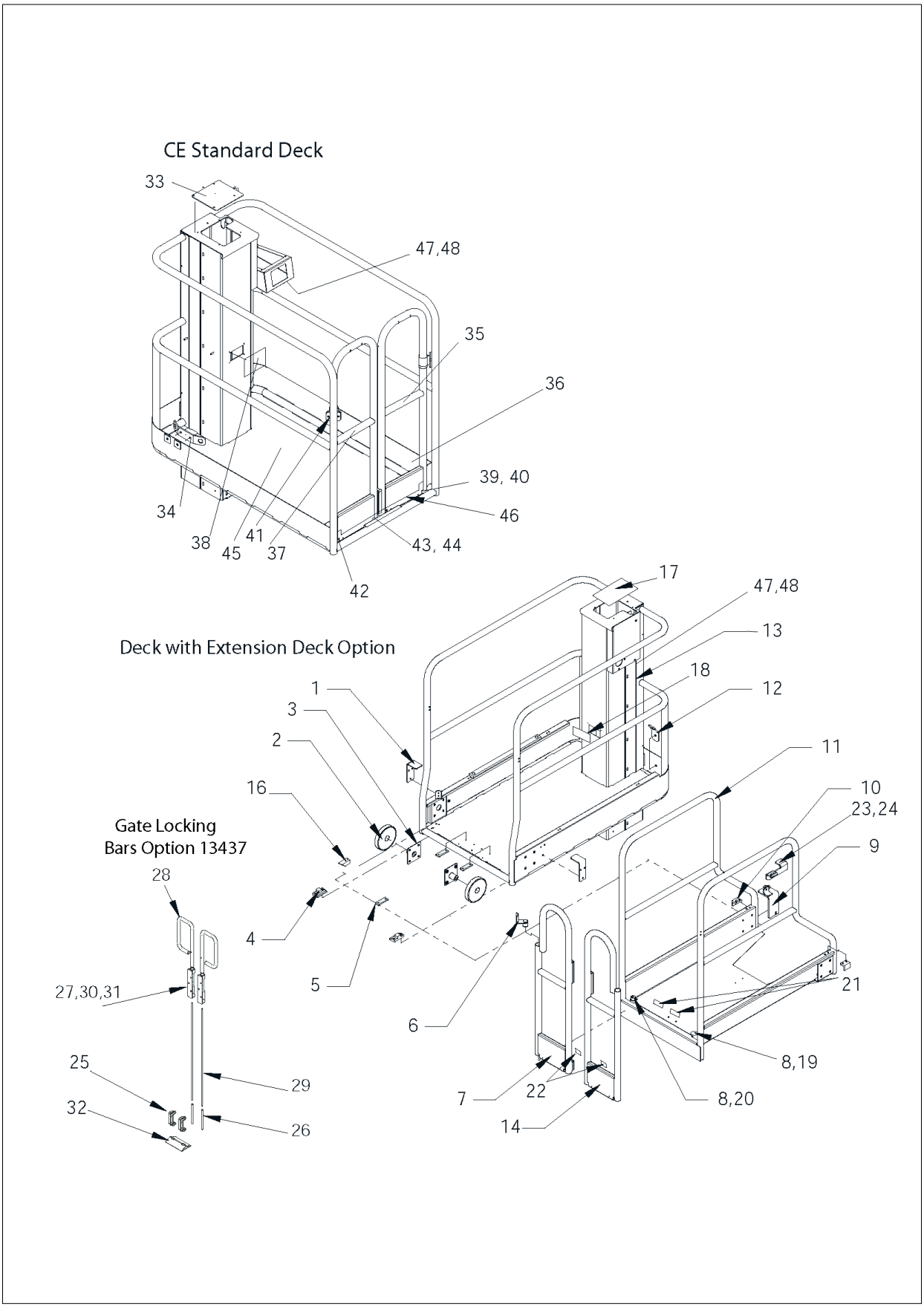

https://truckmanualshub.com/

Item	Part No.	Name	Qty	Uom
Not Shown	514184-850	PLATFORM EXTENSION DECK OPTION	2	EA
1	503657-000	EXT DECK RETAINER BRACKET	2	EA
2	502132-001	EXT DECK ROLLER	2	EA
3	502150-000	EXT DECK ROLLER MOUNT	2	EA
4	502131-000	EXT DECK GUIDE	3	EA
5	502148-000	EXT DECK WEAR PAD	2	EA
6	513252-000	HINGE BRACKET	1	EA
7	513227-000	LH GATE	2	EA
8	502206-000	DOOR PIVOT	1	EA
9	502145-000	LEVER PIVOT BRACKET WELDMENT	2	EA
10	502128-000	EXT DECK WEAR PAD	1	EA
11	513226-000	EXT DECK WELDMENT	2	EA
12	057094-002	HARNESS HARDPOINT BRACKET	1	EA
13	513222-000	MAIN PLATFORM	1	EA
14	513228-000	RH GATE	5	EA
15	027966-005	SAFTEY WALK 6” X 24”	2	EA
16	502129-000	ROLLER STOP	1	EA
17	065543-000	COVER PLATE (MAST TOP)	1	EA
18	107197-000	INSPECTION COVER	1	EA
19	502204-003	RH SPRING	1	EA
20	502204-002	LH SPRING	2	EA
21	511163-000	MAGNETIC CATCH	2	EA
22	511164-000	STRIKE PLATE	2	EA
23	502141-000	LEVER BRACKET	1	EA
24	009442-003	COMPRESION SPRING PLUNGER ASSY	1	EA
47	564136	BEACON (Optional)	1	EA
48	487686	CAGE FOR BEACON 1 (OPTIONAL EXTRA)	2	EA

https://truckmanualshub.com/

Item	Part No.	Name	Qty	Uom
Not Shown	13437	GATE LOCKING BARS OPTION		EA
25	13437-1	SUPPORT	2	EA
26	13437-2	LATCH	2	EA
27	13437-3	SPRING	2	EA
28	13437-4	HAND SHANK	2	EA
29	13437-5	CONNECTING ROD	2	EA
30	13437-6	SPACER BUSH	2	EA
31	13437-8	TOP SUPPORT	2	EA
32	513259-000	LATCH STOP	1	EA
Not Shown	PNNA	STANDARD CE PLATFORM		EA
33	065543-000	COVER PLATE (MAST TOP)	1	EA
34	057094-002	HARNESS HARDPOINT BRACKET	2	EA
35	513225-000	RH GATE	1	EA
36	513222-000	MAIN PLATFORM	1	EA
37	513224-000	LH GATE	1	EA
38	107197-000	INSPECTION COVER	1	EA
39	502204-003	RH SPRING	1	EA
40	502206-000	DOOR PIVOT	2	EA
41	513251-000	HINGE BRACKET	2	EA
42	502204-002	LH SPRING	1	EA
43	511163-000	MAGNETIC CATCH	2	EA
44	511164-000	STRIKE PLATE	2	EA
45	027966-005	SAFTEY WALK 6” X 24”	5	EA
46	513223-000	KICK PLATE INFILL	1	EA
47	564136	BEACON (Optional)	1	EA
48	487686	CAGE FOR BEACON 1 (OPTIONAL EXTRA)	1	EA

https://truckmanualshub.com/

REPAIR PARTS

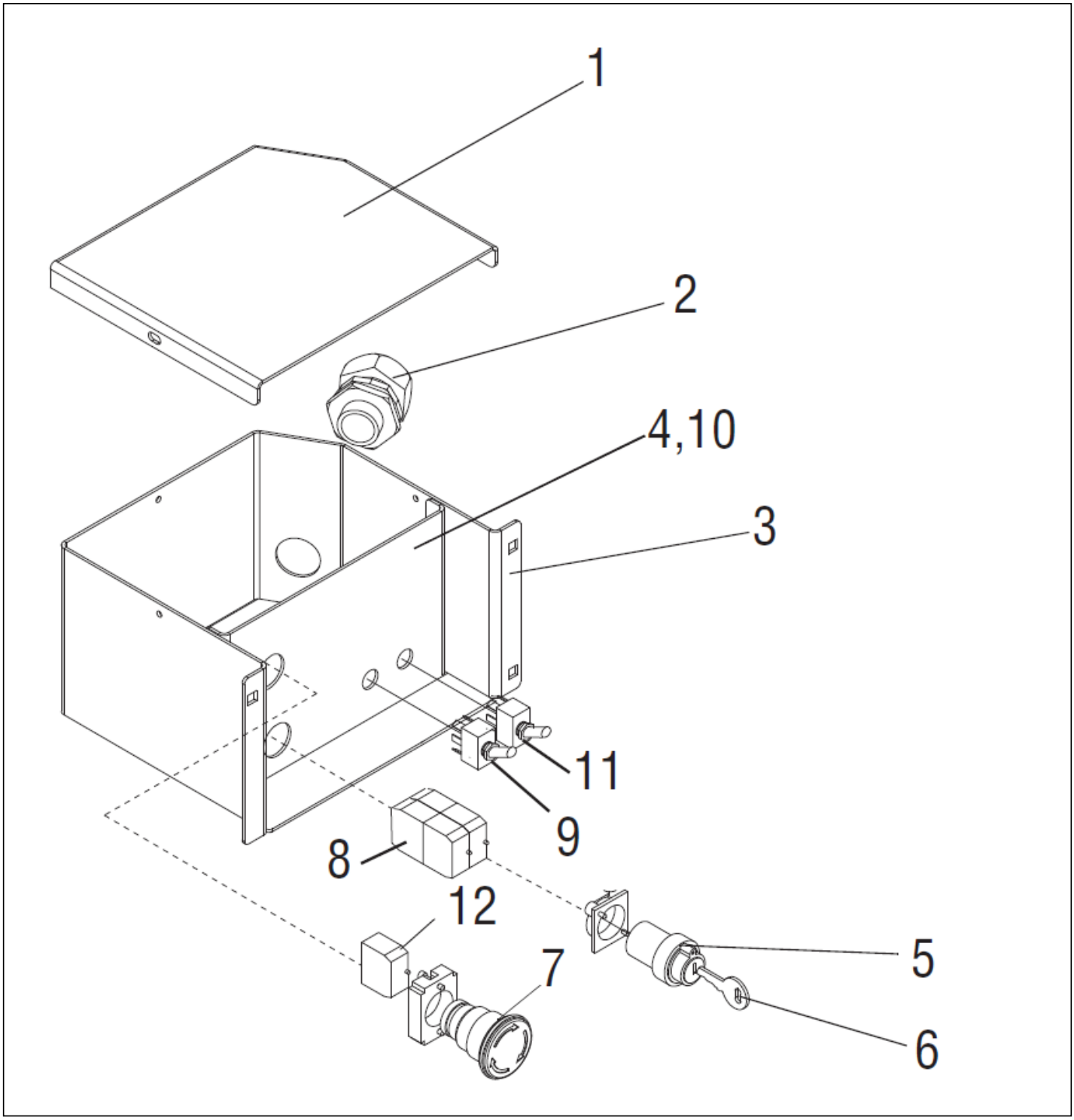

https://truckmanualshub.com/

Item	Part No.	Name	Qty	Uom
1	107148-000	LID, LCB BOX	1	EA
2	505053-000	CABLE GLAND M25 x 1.5 (ANSI ONLY)	1	EA
3	107400-000	LCB BOX (WELDMENT)	1	EA
4	510429-003	LCB OVERLAY	1	EA
5	512543-000	KEY SWITCH	1	EA
6	455	KEY	1	EA
7	510524-000	TWIST TO RELEASE E/STOP C/W 1	1	EA
8	510527-000	N/O CONTACT BLOCK	4	EA
9	510522-000	TOGGLE SWITCH (RAISE/LOWER)	1	EA
10	510462-001	FRONT PANEL, LCB BOX	1	EA
11	510521-000	GROUND OP SWITCH (ENABLE)	1	EA
12	510525-000	Contact block	1	EA

https://truckmanualshub.com/

REPAIR PARTS

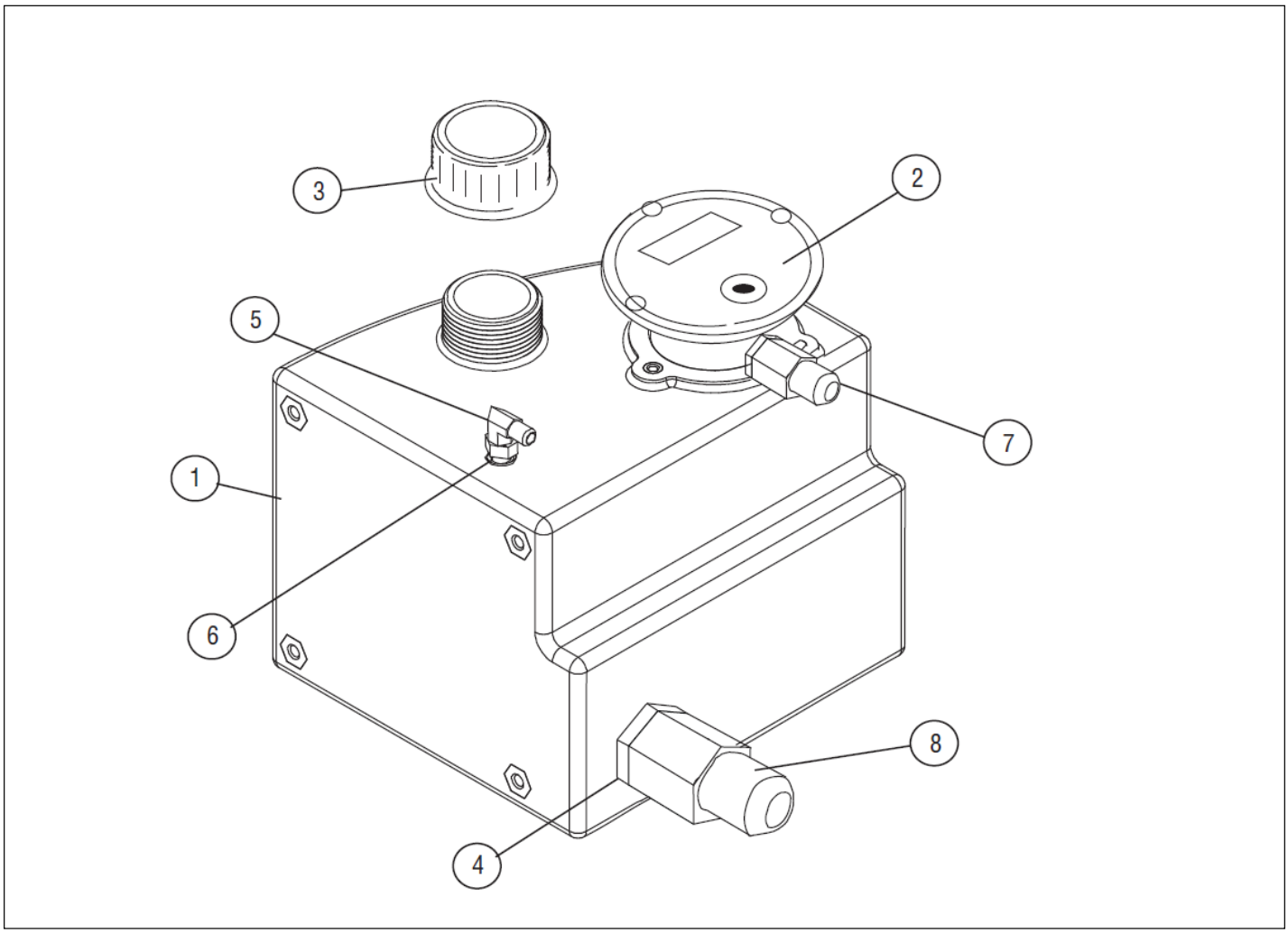

https://truckmanualshub.com/

Item	Part No.	Name	Qty	Uom
1	512545-000	TANK (PLASTIC)	1	EA
2	512566-000	RETURN FILTER (ELEMENT 510696-001)	1	EA
3	512565-000	BREATHER CAP	1	EA
4	512575-000	SUCTION STRAINER	1	EA
5	011937-001	ADAPTOR 90°	1	EA
6	514362-000	STRAIGHT ADAPTOR	1	EA
7	512951-000	STRAIGHT ADAPTOR	1	EA
8	512577-000	STRAIGHT ADAPTOR	1	EA

https://truckmanualshub.com/

REPAIR PARTS

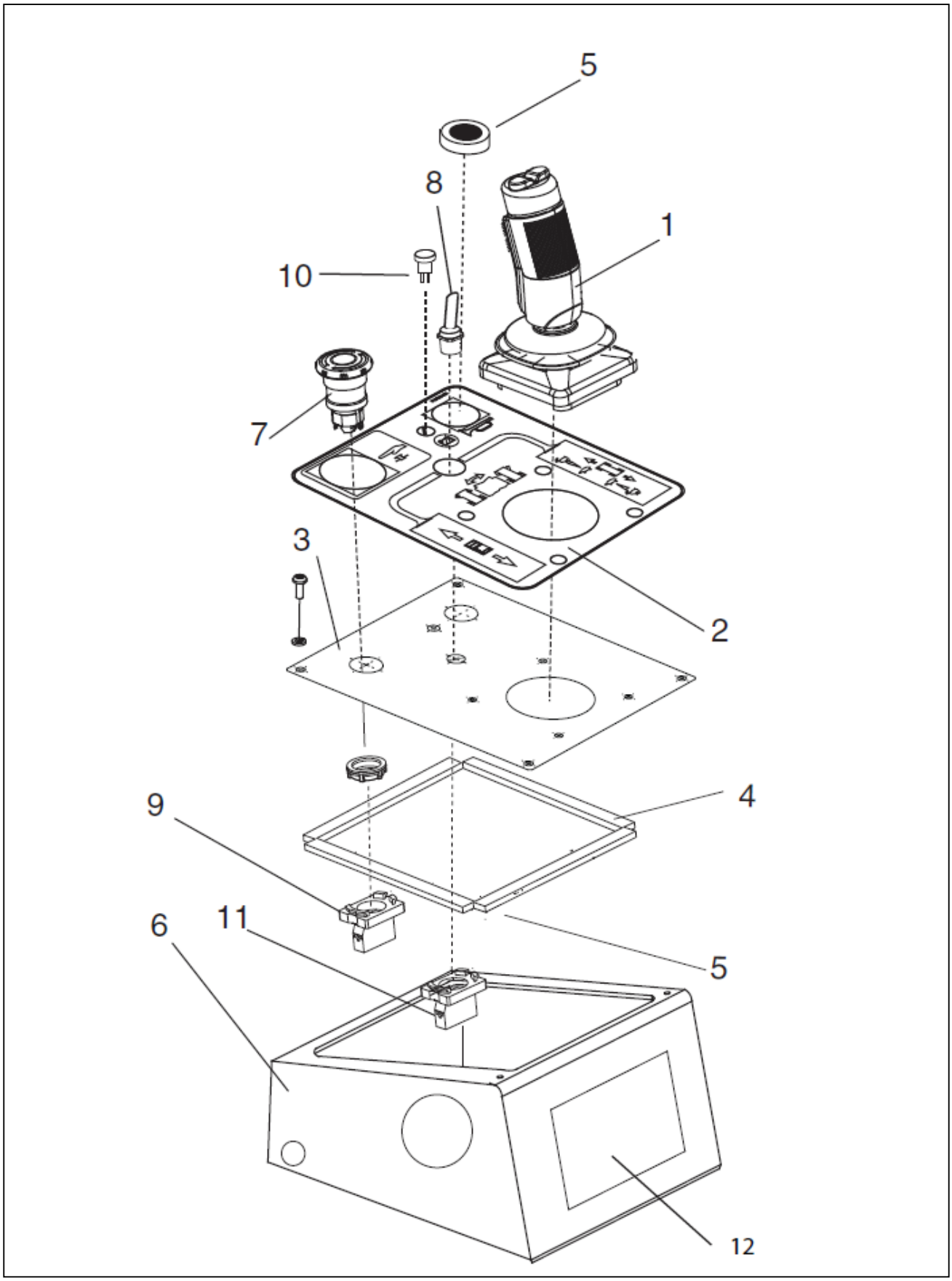

https://truckmanualshub.com/

Item	Part No.	Name	Qty	Uom
Not Shown	502541-002	UPPER CONTROLS ASSY		EA
1	3087801	JOYSTICK	1	EA
2	510428-001	DECAL,UPPER CONTROLS	1	EA
3	510461-000	MOUNTING PLATE	1	EA
4	510645-000	SEAL	0.75	EA
5	510542-000	PUSHBUTTON BLACK C/W 1 N/O CON	1	EA
6	511156-000	UPPER CONTROL BOX (BOX ONLY)	1	EA
7	510524-000	TWIST TO RELEASE E/STOP C/W 1	1	EA
8	510541-000	SW TGL SPDT (ON) OFF (ON)	1	EA
9	510525-000	Contact block	1	EA
10	510528-000	LED RED	1	EA
11	510527-000	N/O CONTACT BLOCK	1	EA
12	3087803	LCD SCREEN PG TRIONIC	1	EA

https://truckmanualshub.com/

REPAIR PARTS

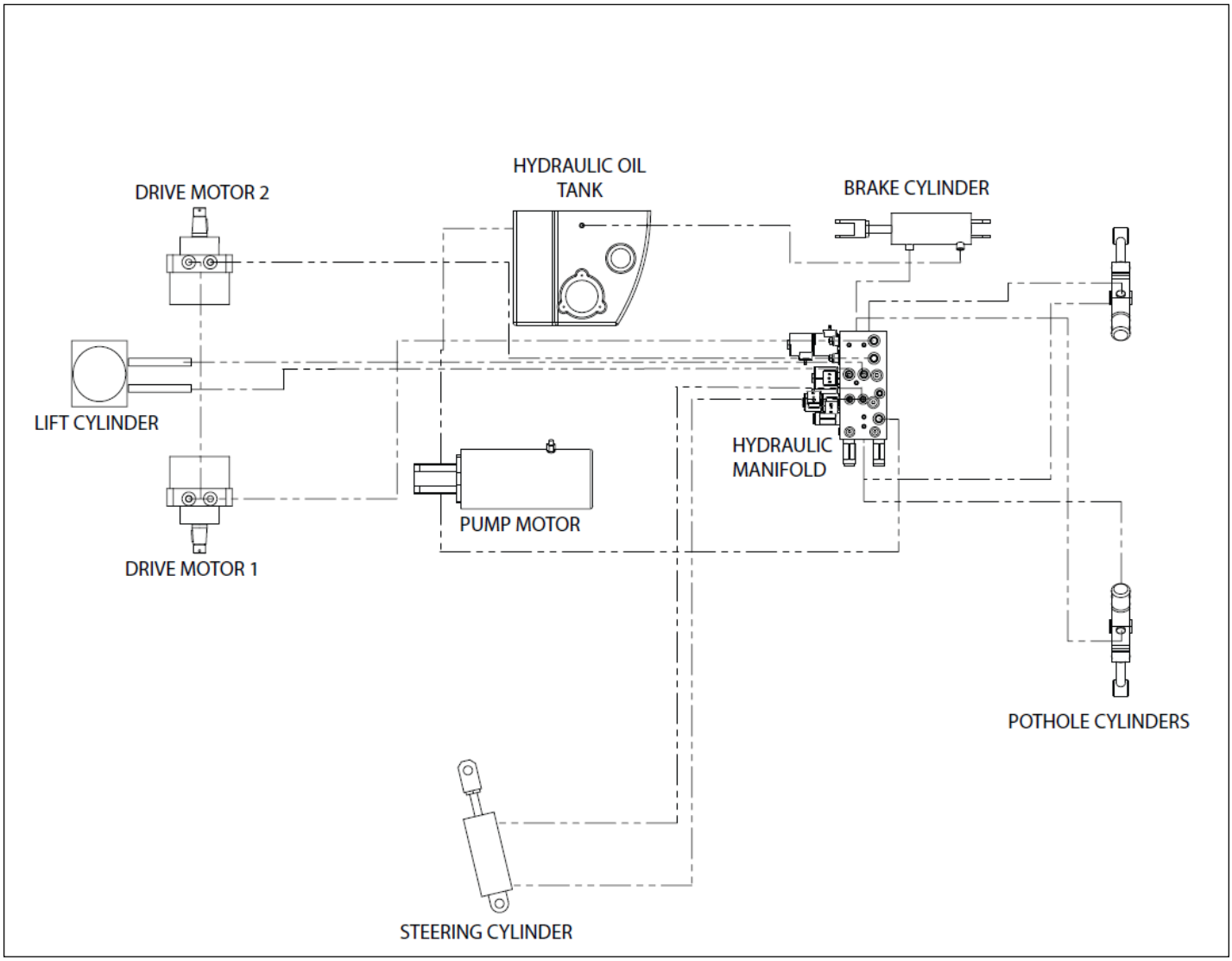

https://truckmanualshub.com/

Hose Kit with Fittings 512890-000

HYDRAULIC KIT

SNORKEL LIFTS, VIGO CENTRE, BIRTLEY ROAD, WASHINGTON, TYNE & WEAR, NE38 9DA

THIS DRAWING IS COPYRIGHT AND THE PROPERTY OF SNORKEL LTD. IT MUST NOT BE COPIED OR RE-ISSUED WITHOUT THEIR WRITTEN CONSENT

MACHINE DESCRIPTION : TM12PD-EX

PART NUMBER	QUANTITY OFF	LOCATION ON MACHINE / HOSES	WORKING PRESSURE PSI	HOSE SIZE	END FITTINGS END 'A'	END FITTINGS END 'B'	TOTAL HOSE LENGTH (CUT LENGTH) Dimension "X" mm	ANG. DISP.
107090-021	3	STEERING RETRACT - MANIFOLD PORT 'S2' / (RHS) POTHOLE EXTEND - MANIFOLD PORT 'PP1/ LHS POTHOLE RETRACT Manifold PP2	3000	1/4" R17	9/16" Female ORFS Swept (Elbow) 90°	9/16" Female ORFS Straight	580	N/A
107090-013	2	(LHS) POTHOLE EXTEND - MANIFOLD PORT 'PP1 / (RHS) POTHOLE RETRACT - MANIFOLD PORT 'PP2"	3000	1/4" R17	9/16" Female ORFS Swept (Elbow) 90°	9/16" Female ORFS Straight	330	N/A
513051-000	1	STEERING EXTEND - MANIFOLD PORT 'S1'	3000	1/4" R17	9/16" Female ORFS Swept (Elbow) 90°	9/16" Female ORFS Straight	650	N/A
107092-049	1	D2 DRIVE MOTOR - MANIFOLD PORT 'D2'	3000	1/4" R17 socked	9/16" Female ORFS Straight	9/16" Female ORFS Swept (Elbow) 90°	1200	N/A
107092-045	1	D1 DRIVE MOTOR - MANIFOLD PORT 'D1'	3000	1/4"R17 socked	9/16" Female ORFS Straight	9/16" Female ORFS Swept (Elbow) 90°	1200	N/A
065419-042	1	DRIVE MOTOR D1 - DRIVE MOTOR D2	3000	1/4" R17 socked	9/16" Female ORFS Straight	9/16" Female ORFS Straight	1070	N/A
510789-000	1	SUCTION LINE	150	3/4" SUCTION PIPE	1"3/16 Female ORFS Straight	1"3/16 Female ORFS Straight	660	N/A
510790-000	1	TANK FILTER - MANIFOLD PORT 'T'	3000	3/8" R17	11/16" Female ORFS Swept 90°	11/16" Female ORFS Swept 90°	1780	215°
510469-000	1	P/U PRESSURE - MANIFOLD PORT 'P'	3000	3/8" R17	11/16" Female ORFS Swept 45°	11/16" Female ORFS Straight	980	N/A
107291-045	1	LONG BRAKE HOSE	low pressure	1/4" hose R6	9/16" Female ORFS Straight	9/16" Female ORFS Straight	2250	N/A
107090-025	1	SHORT BRAKE HOSE - MANIFOLD PORT 'B'	3000	1/4" R17	9/16" Female ORFS Swept Straight	9/16" Female ORFS Straight	360	N/A
513049-000	1	(RHS) CYLINDER STAND PIPE - MANIFOLD PORT 'R'	3000	1/4" R17	9/16" Female ORFS Swept 90°	9/16" Female JIC Swept 90°	750	315°
513050-000	1	(LHS) CYLINDER STAND PIPE - MANIFOLD PORT 'L'	3000	1/4" R17	9/16" Female ORFS Swept 90°	9/16" Female JIC Swept 90°	640	270°
FITTINGS								
514365-000	1	PUMP			9/16" MALE UNF	11/16" MALE ORF ST		
510891-000	1	PUMP			3/4" MALE UNF	1"3/16 MALE ORFS ST		
011941-005	5	MOTORS & PUMP			9/16" MALE UNF	9/16" MALE ORFS ST		
011937-001	1	TANK VENT / PEE LINE			9/16" MALE ORFS	9/16" FEMALE ORFS POS 90°		
510892-000	4	CYLINDERS			7/16" MALE UNF	9/16" MALE ORFS POS 90°		
510893-000	4	CYLINDERS			9/16" MALE UNF	9/16" MALE ORFS POS 90°		
512577-000	1	STRAINER OUT			1"3/16 MALE ORFS	3/4" MALE NPT ST		
512951-000	2	FILTER IN - T Port Manifold			3/4" MALE UNF	11/16" MALE ORFS ST		
513054-000	1	BRAKE RESTRICTOR			7/16" MALE UNF **(1mm in line restrictor)**	9/16" MALE ORFS ST		
514362-000	1	Oil Tank Pee line			7/16" MALE UNF	9/16" MALE ORFS ST		
MANIFOLD FITTINGS								
011941-005	4	MANIFOLD			9/16" MALE UNF	9/16" MALE ORFS ST		
510695-000	1	MANIFOLD (PORT G)			7/16" MALE UNF	TEST PORT		
514362-000	6	MANIFOLD			7/16" MALE UNF	9/16" MALE ORFS ST		
104779-000	1	MANIFOLD			9/16" MALE UNF	11/16" MALE ORFS POS 90°		

ISSUE	0	1	2	3	4	5	6	7	8	9	10	11	12	13	14	15
ECR NO.	25920	26004	26062	26326	26458	26510										

DRAWN BY : S.REED | DATE : 15/02/2012 | DRAWING N°

APPROVED BY : | SHEET 1 of 1 | 512890-000

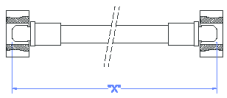

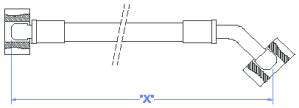

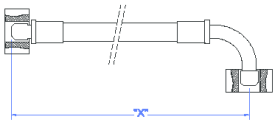

NOTES

ALL HOSES TO HAVE A PLAIN BLACK OUTER COVERING
ALL HOSES TO BE TESTED TO 1.5 TIMES THE WORKING PRESSURE
ALL HOSES TO BE CLEANED TO 'NAS 10 ' SPECIFICATIONS, AND ENDS PLUGGED OR CA
ALL HOSES TO BE CLEARLY MARKED WITH THE SNORKEL PART NUMBER
ANGULAR DISPLACEMENT CONVENTION - END A IS ALWAYS PLACED FURTHEST AWAY AND VERTICALLY UP. END B IS THEN TURNED CLOCKWISE FROM THE VERTICAL DATUM

https://truckmanualshub.com/

REPAIR PARTS

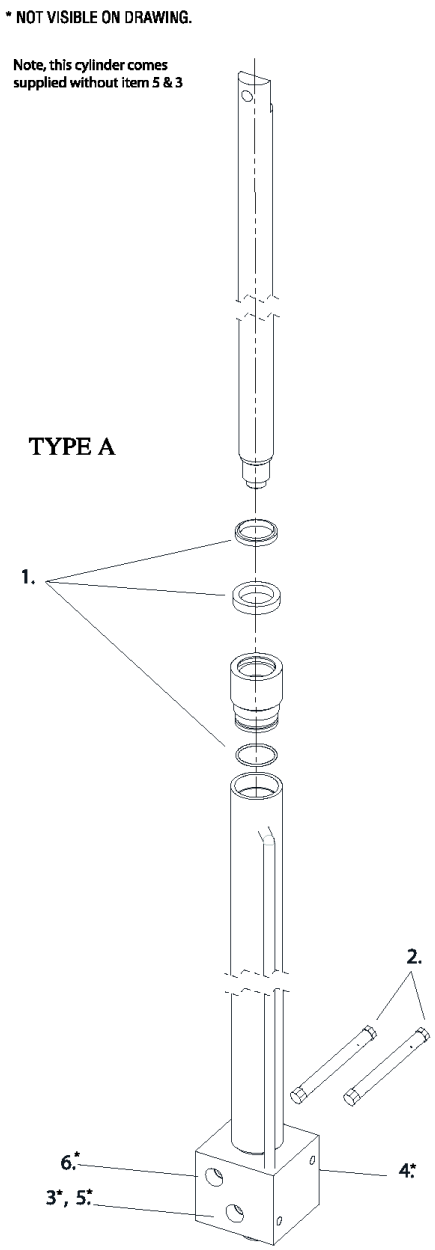

https://truckmanualshub.com/

Item	Part No.	Name	Qty	Uom
Not Shown	512888-000 Type A & Type B	HYDRAULIC LIFT CYLINDER ASSEMBLY		EA
-	TYPE A	PAGE 1		EA
1	513077-000	LIFT CYLINDER SEAL KIT	1	EA
2	107082-000	STANDPIPE ADDAPTOR	2	EA
3*	513286-000	EMERGENCY DOWN VALVE T-HANDLE	1	EA
4*	510892-000	FITTING, - 4 ORB, -4 JICM POS 90	2	EA
5*	512637-000	EMERGENCY DOWN VALVE AND COIL	1	EA
5a	513159-000	VALVE EMERGENCY DOWN (item 5)	1	EA
5b	513159-001	COIL FOR EMERGENCY DOWN (item 5)	1	EA
6	512891-000	COUNTER BALANCE VALVE	1	EA
-	TYPE B	PAGE 2		EA
10	512888-010	LIFT CYLINDER SEAL KIT	1	EA
11	107082-000	STANDPIPE ADDAPTOR	2	EA
12*	513286-000	EMERGENCY DOWN VALVE T-HANDLE	1	EA
13*	510892-000	FITTING, - 4 ORB, -4 JICM POS 90	2	EA
14	512637-000	EMERGENCY DOWN VALVE AND COIL	1	EA
14a	513159-000	VALVE EMERGENCY DOWN (item 5)	1	EA
14b	513159-001	COIL FOR EMERGENCY DOWN (item 5)	1	EA
15	512891-000	COUNTER BALANCE VALVE	1	EA

https://truckmanualshub.com/

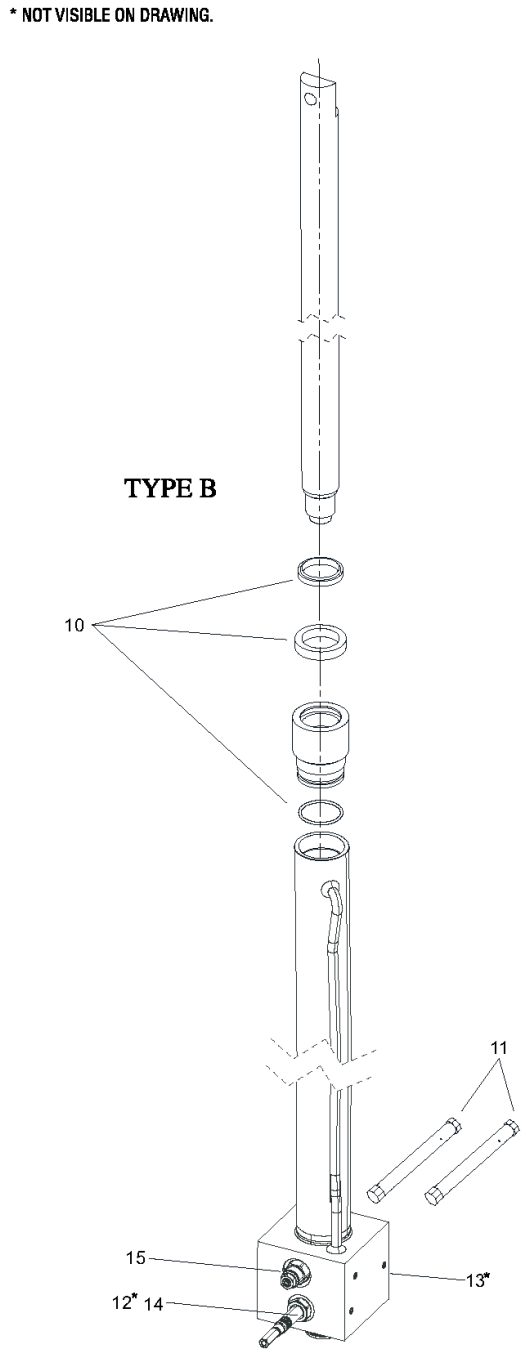

https://truckmanualshub.com/

REPAIR PARTS

NOTE: FITTINGS SHOWN APPLY TO STEERING CYLINDER, WHEN FITTING HOSES TO THE BRAKE CYLINDER FIT THE 1/8 M/M TO THE FULL BORE END AND THE 1/8 BLOCK 90 WITH 1/8 M/M TO THE ANNULAR END.

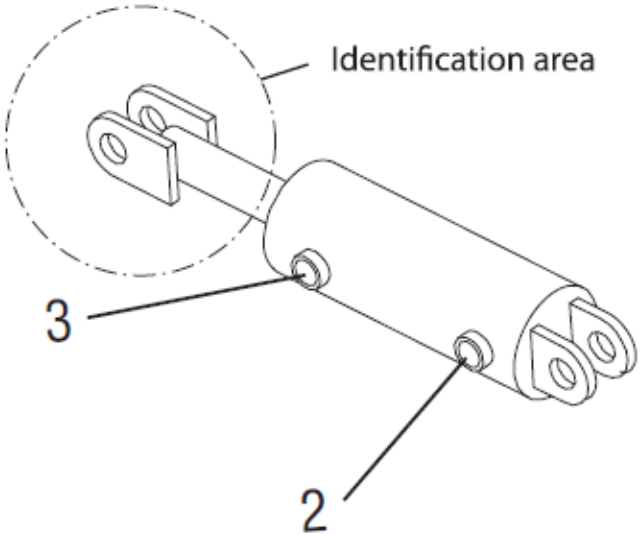

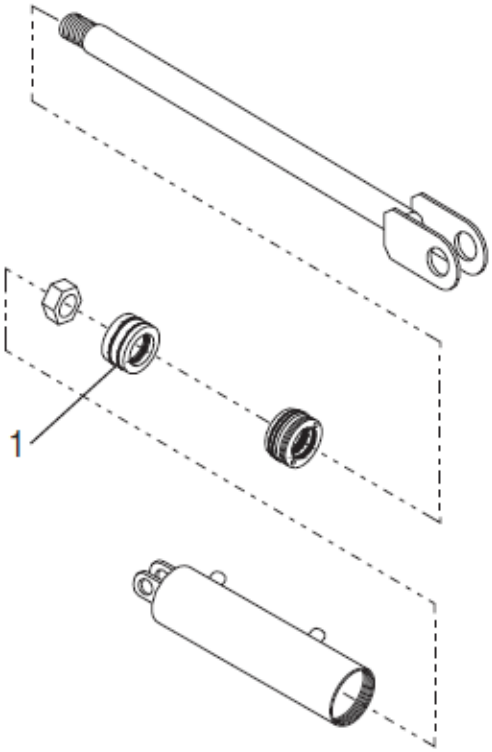

https://truckmanualshub.com/

Item	Part No.	Name	Qty	Uom
Not Shown	510895-000	HYDRAULIC CYLINDER ASSEMBLY (STEER - BRAKE) TYPE B		EA
1	505035-010	SEAL KIT, BRAKE/STEER CYLINDER (sn < 054179)	1	EA
1	512795-000	SEAL KIT, BRAKE/STEER CYLINDER (sn 054180 +)	1	EA
2	510893-000	FITTING, -6 ORB, -4 JICM, 90 POS	2	EA
3	510893-000	FITTING, -6 ORB, -4 JICM, 90 POS	1	EA

https://truckmanualshub.com/

REPAIR PARTS

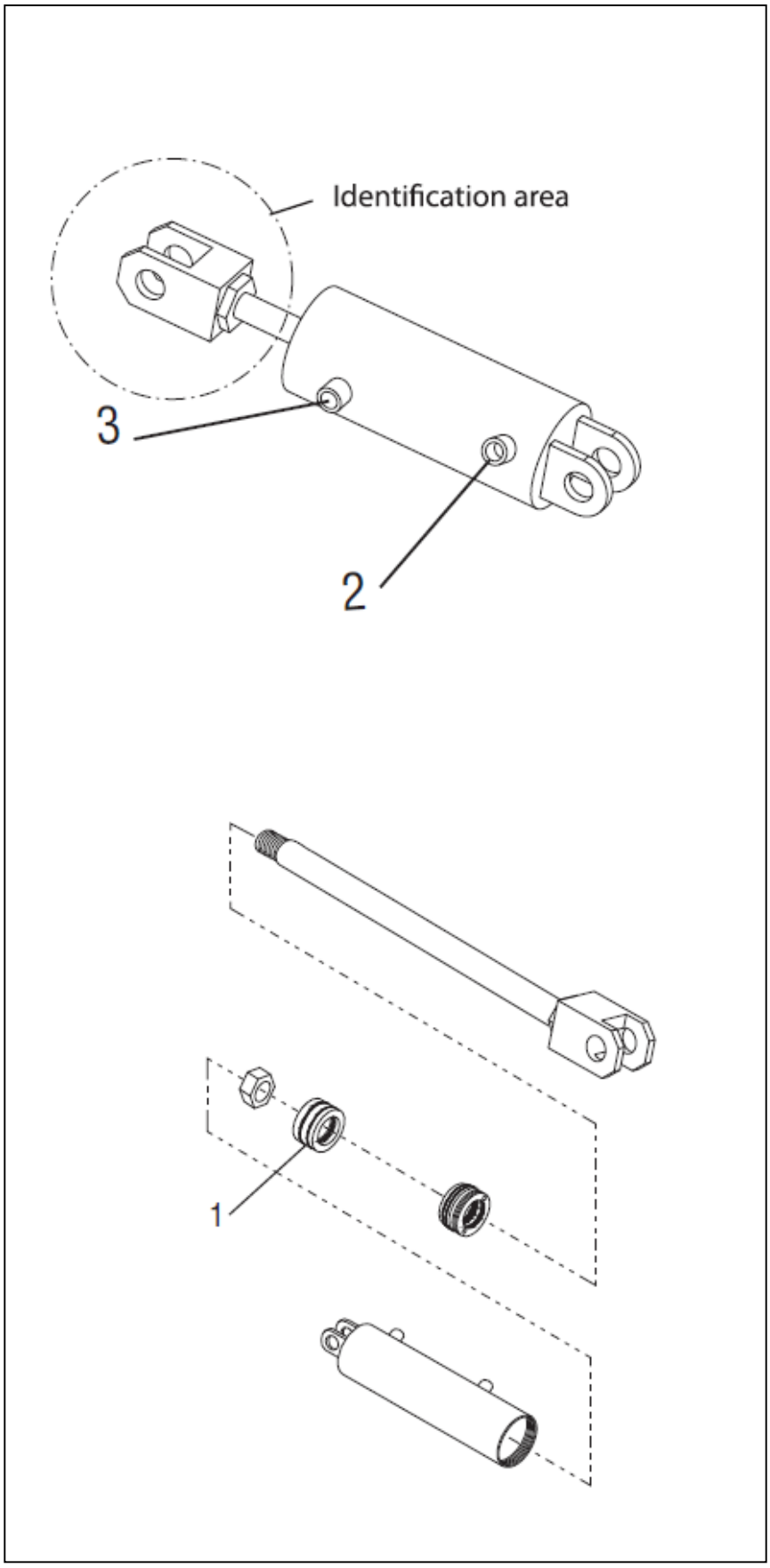

https://truckmanualshub.com/

Item	Part No.	Name	Qty	Uom
Not Shown	510895-000	HYDRAULIC CYLINDER ASSEMBLY (STEER - BRAKE) TYPE B		EA
1	510895-010	SEAL KIT, BRAKE/STEER CYLINDER	1	EA
2	510893-000	FITTING, -6 ORB, -4 JICM, 90 POS	2	EA
3	510893-000	FITTING, -6 ORB, -4 JICM, 90 POS	1	EA

https://truckmanualshub.com/

REPAIR PARTS

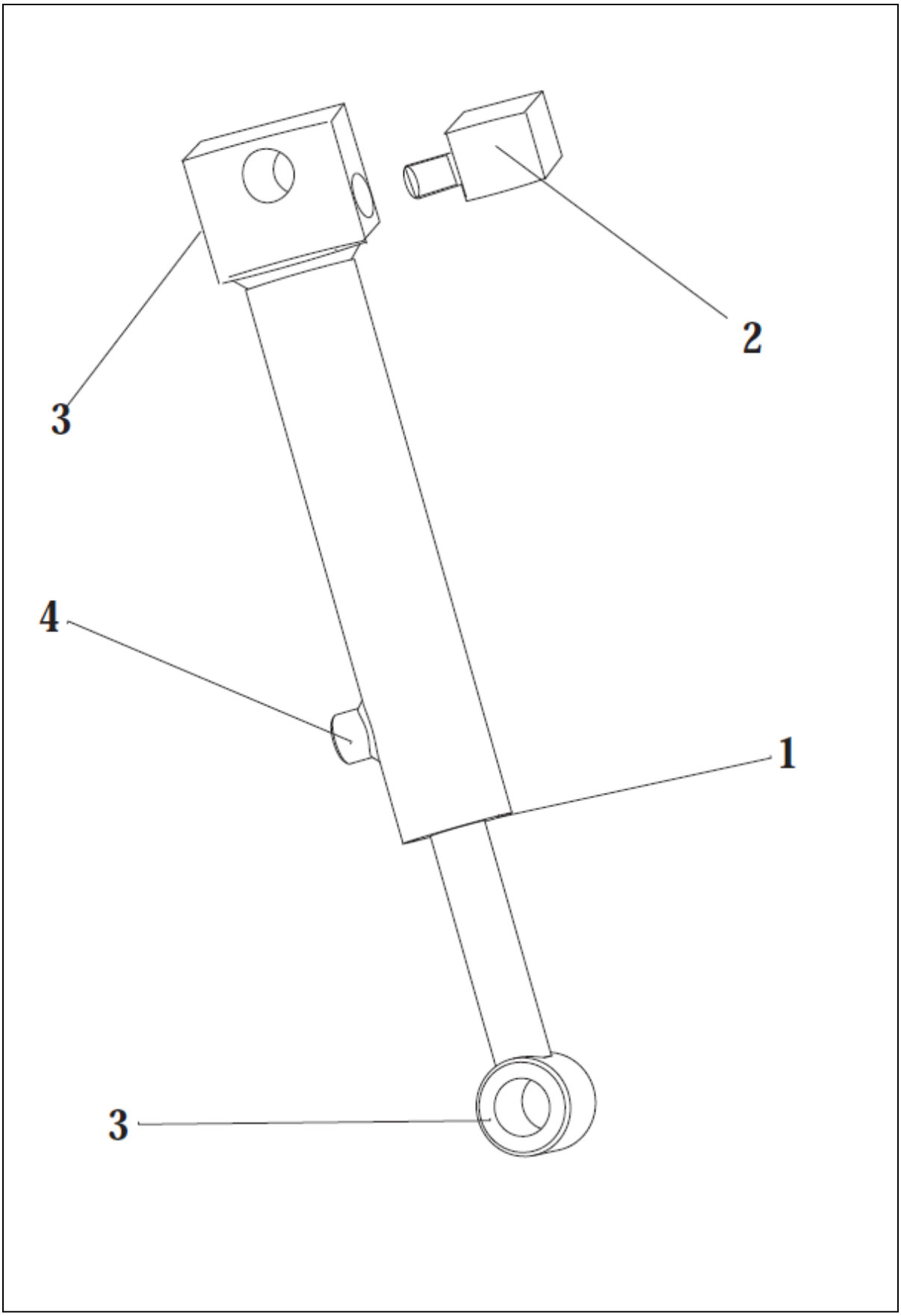

https://truckmanualshub.com/

Item	Part No.	Name	Qty	Uom
Not Shown	512638-000	HYDRAULIC CYLINDER ASSEMBLY (POTHOLE) TYPE B		EA
1	512794-000	SEAL KIT, POTHOLE CYLINDER	1	EA
2	512639-000	VALVE M1230E POTHOLE CYLINDER	1	EA
3	510892-000	FITTING, - 4 ORB, -4 JICM POS 90	1	EA
4	510892-000	FITTING, - 4 ORB, -4 JICM POS 90	1	EA

https://truckmanualshub.com/

REPAIR PARTS

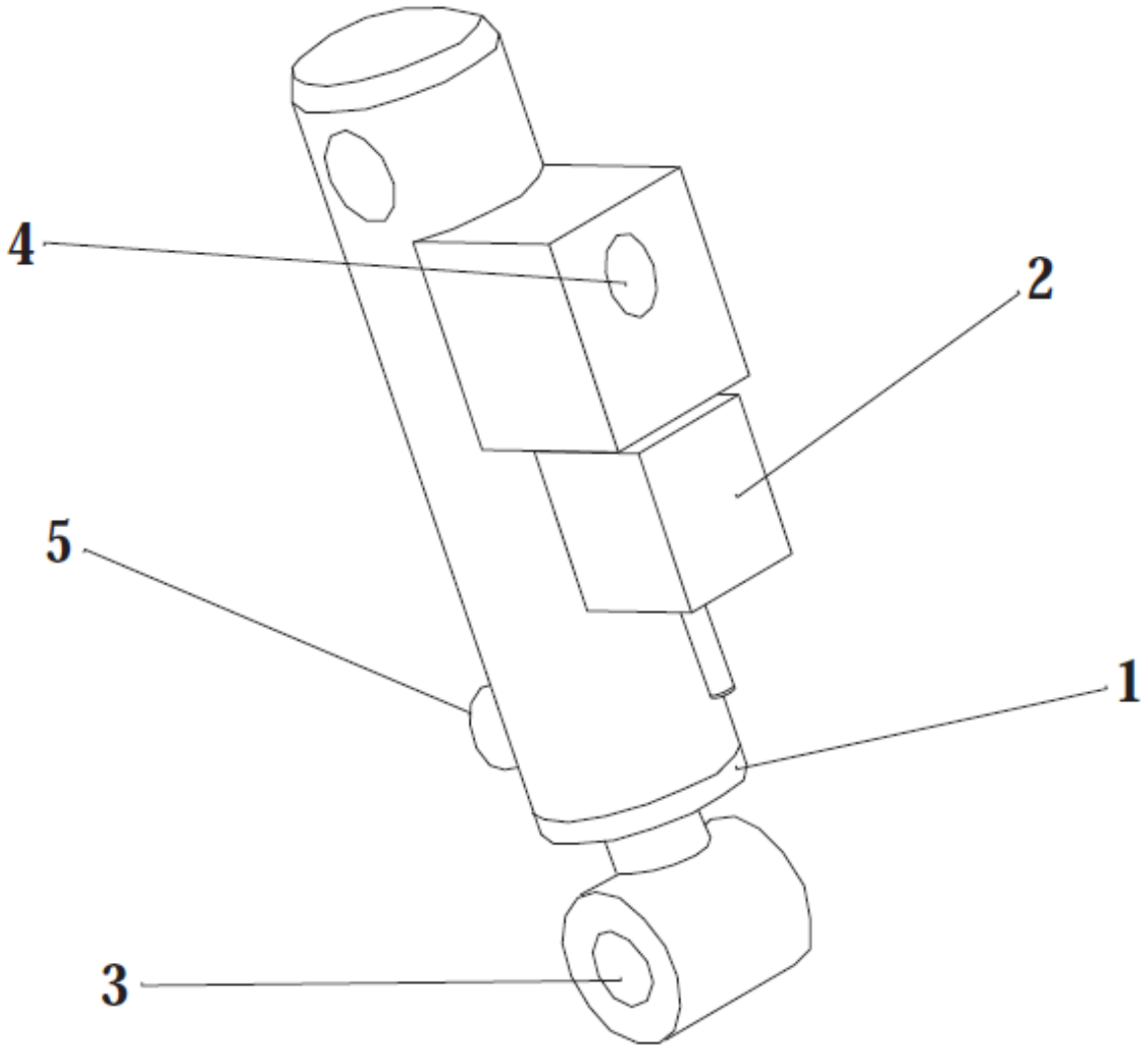

https://truckmanualshub.com/

Item	Part No.	Name	Qty	Uom
Not Shown	512638-000	HYDRAULIC CYLINDER ASSEMBLY (POTHOLE) TYPE B		EA
1	512638-010	SEAL KIT, POTHOLE CYLINDER	1	EA
2	512639-000	VALVE M1230E POTHOLE CYLINDER	1	EA
3	503760-000	BUSHING	2	EA
4	510892-000	FITTING, - 4 ORB, -4 JICM POS 90	1	EA
5	510892-000	FITTING, - 4 ORB, -4 JICM POS 90	1	EA

https://truckmanualshub.com/

REPAIR PARTS

Electric Kit *510520-000*

Kit Qty	Part Number	Description
Ground Control Box		
1	510522-000	Toggle Switch SPDT (on)-off-(on)
1	510521-000	Toggle Switch, on-(on)
1	510524-000	Twist to Release Emergency Stop
1	510525-000	Normally Closed Contact Block
2	510527-000	Normally Open Contact Block
Platform Control Box		
1	510541-000	Toggle Switch SPDT on-on
1	510542-000	Black Flush Pushbutton (Horn Pushbutton)
1	510524-000	Twist to Release Emergency Stop
1	510525-000	Normally Closed Contact Block
1	510527-000	Normally Open Contact Block
1	510528-000	Red LED, Prominent 24VDC
External Components		
1	501868-000	Disk Type Horn, High Note Continuous, 24V
1	502494-000	Fork Lift Truck Fuses, 175A
1	446086	Fuseholder
1	502588-000	Continuous Audible Alarm, 80-95dB, 4-28VDC
1	512684-000	Right Angled Bracket, for Mounting Buzzer
1	502489-000	WR DC SolenoidContactor
3	514182-000	Toggle switch rubber boot

Harness Kit *510950-000*

Item	Part No.	Description	Qty per
	512950-001	Platform Loom	1
	512950-002	Ground Control Loom	1
	512950-003	Valve Cables	1

https://truckmanualshub.com/

REPAIR PARTS

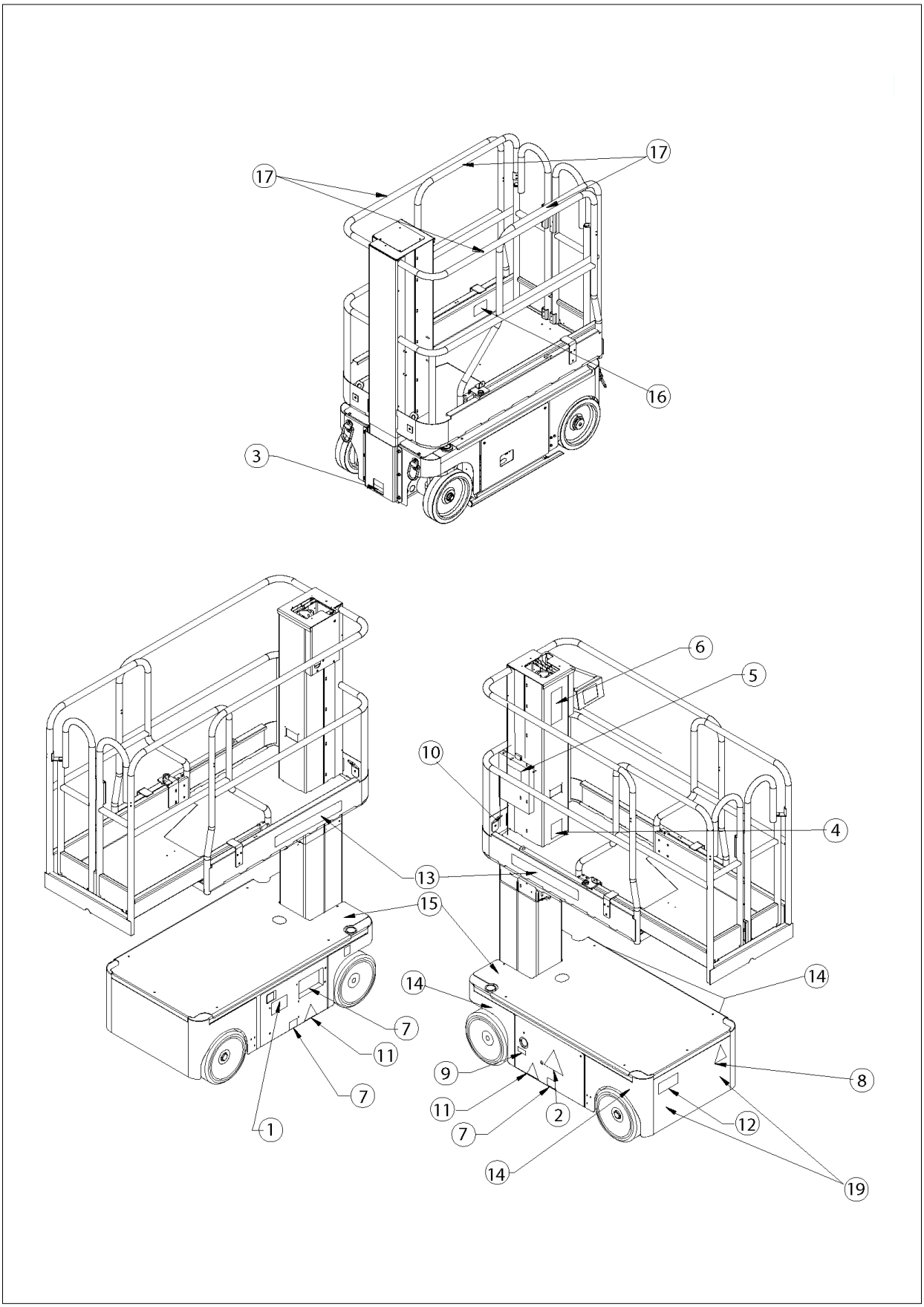

https://truckmanualshub.com/

Item	Part No.	Name	Qty	Uom
Not Shown	513858-000	LABEL KIT, EUROPEAN (ENGLISH)		EA
1	060197-001	DECAL,HYDRAULIC FLUID	1	EA
2	101210-000	Risk of hydrogen gas and battery leakage	1	EA
3	510280-000	DECAL, IPAf EMERG LWR	1	EA
4	107052-001	DECAL,SAFE WORKING LOAD	1	EA
5	010076-901	DECAL DOCUMENT BOX	1	EA
6	514361-000	DECAL,FOUR HAZARDS	1	EA
7	014222-903	DECAL,FORKLIFT POINT	2	EA
8	100102-900	DECAL,NOT INSULATED	1	EA
9	066522-900	DECAL,BATTERY SYMBOL	1	EA
10	068635-001	Harness anchor point	1	EA
11	501453-000	DECAL, FOOT TRAP	2	EA
12	503723-000	DECAL,BATTERY DISCONNECT	1	EA
13	511093-000	DECAL “SNORKEL TM12”	2	EA
14	512465-000	DECAL,WHEEL LOAD	4	EA
15	512572-000	DECAL, CRUSHING HAZARD	2	EA
16	513859-000	EXT DECK SWL 113kg,	1	EA
17	514360-000	DECAL, PINCH POINT	4	EA

https://truckmanualshub.com/

REPAIR PARTS

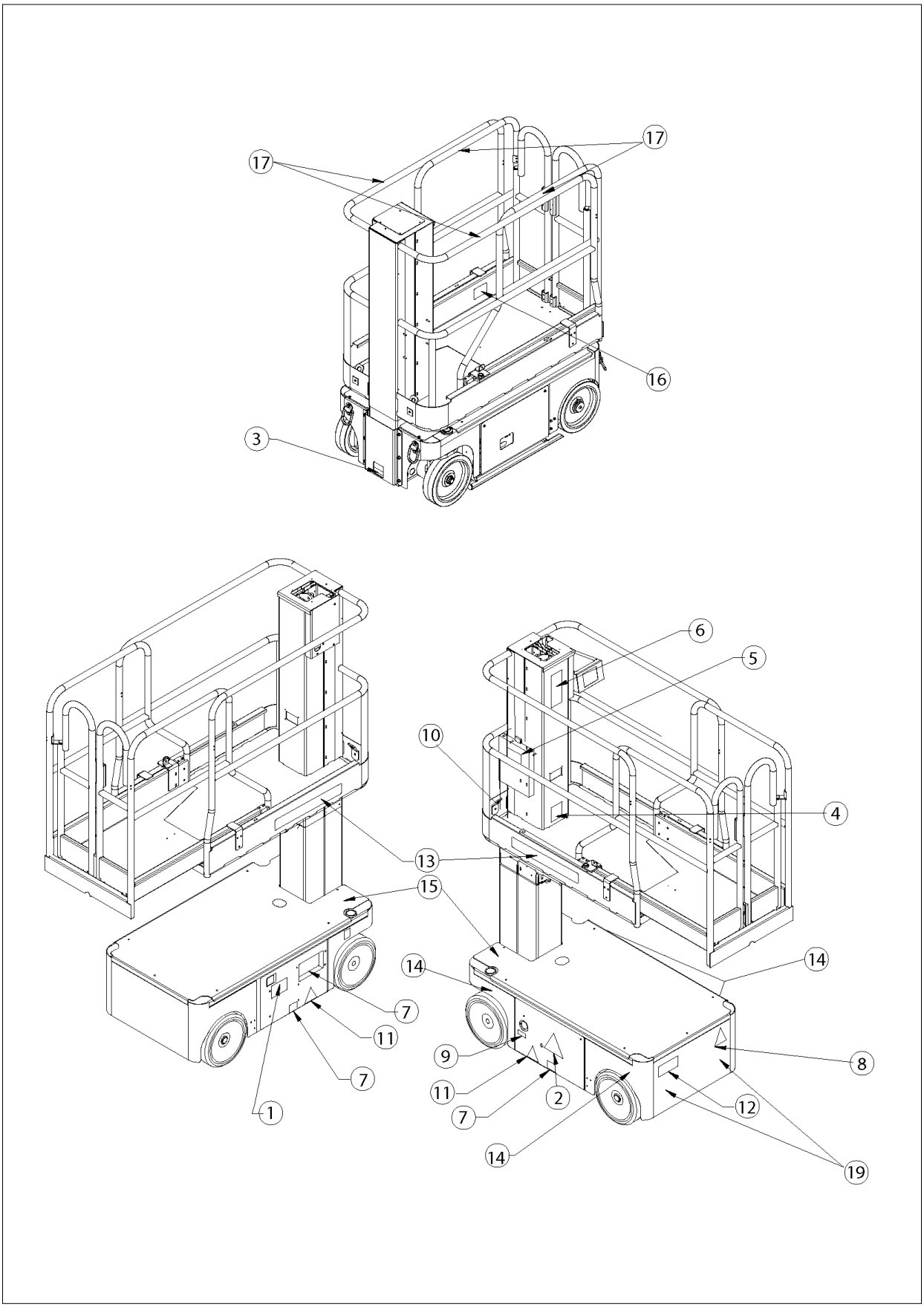

https://truckmanualshub.com/

Item	Part No.	Name	Qty	Uom
Not Shown	513858-002	LABEL KIT FRENCH		EA
1	060197-001	DECAL,HYDRAULIC FLUID	1	EA
2	101210-000	Risk of hydrogen gas and battery leakage	1	EA
3	510280-000	DECAL, IPAf EMERG LWR	1	EA
4	107052-001	DECAL,SAFE WORKING LOAD	1	EA
5	010076-901	DECAL DOCUMENT BOX	1	EA
6	514361-002	DECAL,FOUR HAZARDS FRENCH	1	EA
7	014222-903	DECAL,FORKLIFT POINT	2	EA
8	100102-900	DECAL,NOT INSULATED	1	EA
9	066522-900	DECAL,BATTERY SYMBOL	1	EA
10	068635-001	Harness anchor point	1	EA
11	501453-000	DECAL, FOOT TRAP	2	EA
12	503723-000	DECAL,BATTERY DISCONNECT	1	EA
13	511093-000	DECAL “SNORKEL TM12”	2	EA
14	512465-000	DECAL,WHEEL LOAD	4	EA
15	512572-000	DECAL, CRUSHING HAZARD	2	EA
16	513859-000	EXT DECK SWL 113kg,	1	EA
17	514360-000	DECAL, PINCH POINT	4	EA

https://truckmanualshub.com/

REPAIR PARTS

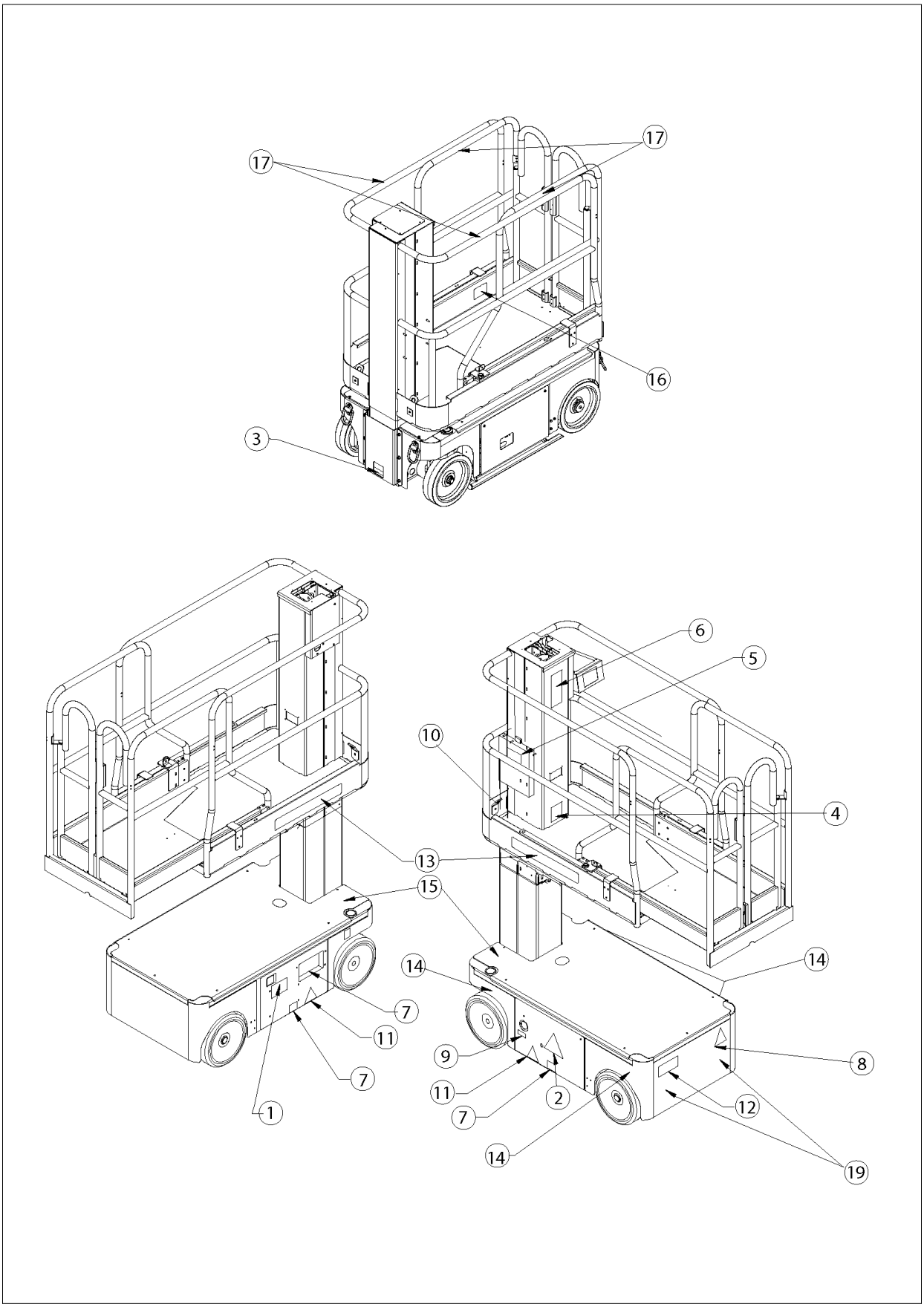

https://truckmanualshub.com/

Item	Part No.	Name	Qty	Uom
Not Shown	513858-002	LABEL KIT FRENCH		EA
1	060197-001	DECAL,HYDRAULIC FLUID	1	EA
2	101210-000	Risk of hydrogen gas and battery leakage	1	EA
3	510280-000	DECAL, IPAf EMERG LWR	1	EA
4	107052-001	DECAL,SAFE WORKING LOAD	1	EA
5	010076-901	DECAL DOCUMENT BOX	1	EA
6	514361-002	DECAL,FOUR HAZARDS FRENCH	1	EA
7	014222-903	DECAL,FORKLIFT POINT	2	EA
8	100102-900	DECAL,NOT INSULATED	1	EA
9	066522-900	DECAL,BATTERY SYMBOL	1	EA
10	068635-001	Harness anchor point	1	EA
11	501453-000	DECAL, FOOT TRAP	2	EA
12	503723-000	DECAL,BATTERY DISCONNECT	1	EA
13	511093-000	DECAL “SNORKEL TM12”	2	EA
14	512465-000	DECAL,WHEEL LOAD	4	EA
15	512572-000	DECAL, CRUSHING HAZARD	2	EA
16	513859-000	EXT DECK SWL 113kg,	1	EA
17	514360-000	DECAL, PINCH POINT	4	EA

https://truckmanualshub.com/

REPAIR PARTS

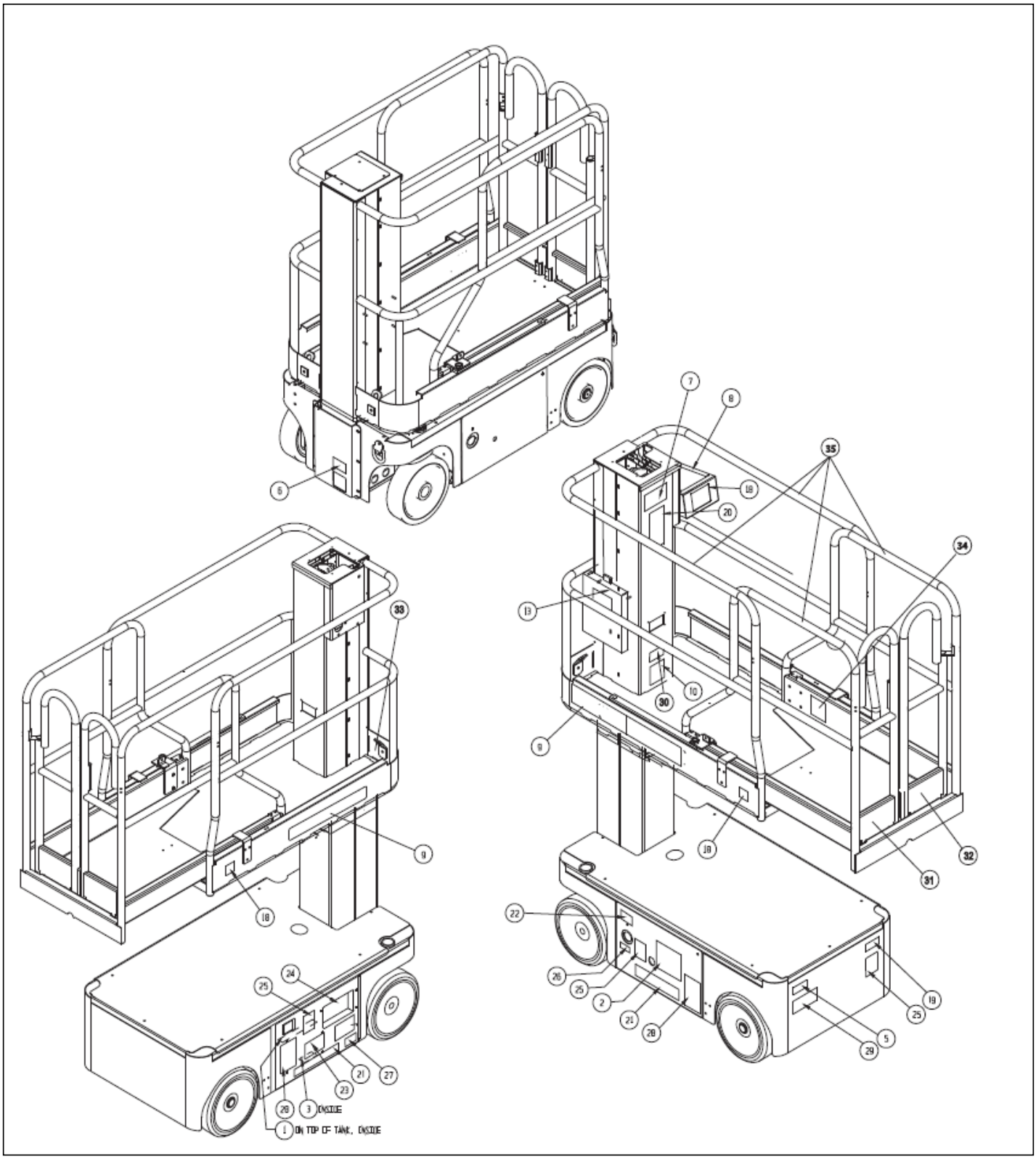

https://truckmanualshub.com/

Item	Part No.	Name	Qty	Uom
Not Shown	107012-011	LABEL KIT, USA		EA
1	0071927	DECAL, HYDRAULIC OIL	1	EA
2	060197-001	DECAL,HYDRAULIC FLUID	1	EA
3	514232-101	NAME PLATE	1	EA
5	005221-000	DECAL, BATTERY FLUID	1	EA
6	005223-005	DECAL, EMERGENCY DOWN	1	EA
7	066554-000	DECAL, BEFORE OPERATING	1	EA
8	510428-001	DECAL,UPPER CONTROLS	1	EA
9	511093-000	DECAL “SNORKEL TM12”	2	EA
10	101250-000	DECAL, MAX LOAD 500lbs	3	EA
13	010076-001	DECAL, ATTENTION	1	EA
18	061220-006	DECAL, ANSI	1	EA
19	058534-000	DECAL, BATTERIES	1	EA
20	066550-001	DECAL, DANGER	1	EA
21	014222-003	DECAL, FORK LIFT	2	EA
23	066555-000	DECAL, RELIEF VALVE	1	EA
24	510429-002	DECAL, LOWER CONTROLS	1	EA
25	066556-000	DECAL, COLLISION HAZARD	3	EA
26	066522-000	DECAL, BATTERY CHARGER	1	EA
27	101252-000	DECAL, MAX WHEEL LOAD (675lbs)	1	EA
28	066556-001	DECAL, CRUSHING HAZARD	2	EA
29	107051-000	DECAL, BATTERY DISCONNECT	1	EA
30	300699	DECAL, OPERATORS CHECKLIST	1	EA
31	508771-000	DECAL, DO NOT REMOVE COMPONENTS	1	EA
32	308772-000	DECAL, WARNING RESPONSIBILITIES	1	EA
33	068635-001	Harness anchor point	1	EA
34	513859-100	DECAL ,EXT DECK SWL	1	EA

https://truckmanualshub.com/

Item	Part No.	Name	Qty	Uom
35	514360-000	DECAL, PINCH POINT	4	EA

https://truckmanualshub.com/

Section 3

SERVICE AND REPAIR

This section contains instructions for the maintenance of the Work Platform. Refer to the General Information section for information relevant to all Snorkel work platforms. Referring to the Operator Manual will aid in understanding the operation and function of the various components and systems of the work platform, and help in diagnosing and repair of the machine.
Owners of this work platform must set up a maintenance programme and have prepared a safety statement in advance as required by the relevant National Body.

WARNING

Be sure to read, understand and follow all information in the Operation Section of this manual before attempting to operate or perform service on any Work Platform.

DANGER

Never perform service on the work platform in the elevating assembly area while platform is elevated without first blocking the elevating assembly.

DO NOT stand in elevating assembly area while deploying or storing brace.

TABLE OF CONTENTS

3-1 Supporting Elevating Assembly 3-3
Installation 3-3
Removal. 3-3

3-2 Preventative Maintenance 3-4

3-3 Preventative Maintenance Check List 3-5

3-4 Parts Location. 3-6

3-5 General Lubrication 3-7

3-6 Batteries 3-8
Battery Replacement 3-8
Battery Maintenance 3-8

3-7 Hydraulics 3-9
Hydraulic Oil Tank And Filter 3-9
Hydraulic Pump 3-10
Emergency Down Valve 3-11
Main Hydraulic Manifold 3-12
Setting Hydraulic Manifold Pressures 3-13

3-8 Cylinders 3-15
Depression Cylinder 3-15
Brake Cylinder 3-16
Steering Cylinder 3-17
Lift Cylinder 3-18

3-9 Drive Motors 3-19
Removal. 3-19
Installation 3-19

https://truckmanualshub.com/

3-10 Elevating Assembly 3-20
Lift Chain Lubrication 3-21
Elevating Assembly Wear Inspection 3-21
Chain Tension Inspection 3-22
Chain Elongation Inspection 3-22
Removal of Elevating Assembly 3-23
Installation of Elevating Assembly 3-23

3-11 Tilt Sensor. 3-24

3-12 Controls. 3-25
Platform Controls 3-25
Chassis Controls 3-26

3-13 Proximity Switch. 3-27

4-1 Trouble Shooting. 4-1
Introduction. 4-1
General Procedure 4-1

4-2 Trouble Shooting. 4-2
Special Tools 4-2
Adjustment Procedure 4-2
Diagnostics Using EZcal 4-3
Replacing The EZ230 Control Module 4-4

4-2 Trouble Shooting Guide 4-5
Electric 4-6
Hydraulic. 4-7

5-1 Schematics 5-1
Electric. 5-2
Hydraulic. 5-3

6-1 Illustrated Parts Breakdown 6-1
Contents 6-1

7-0 Waste Removal and Disposal 7-0

https://truckmanualshub.com/

3-1 Supporting Elevating Assembly

WARNING

Never perform service on the work platform in the elevating assembly area while platform is elevated without first blocking the elevating assembly.

***DO NOT** stand in elevating assembly area while deploying or storing brace.*

Figure 3-1: Supporting Elevating Assembly

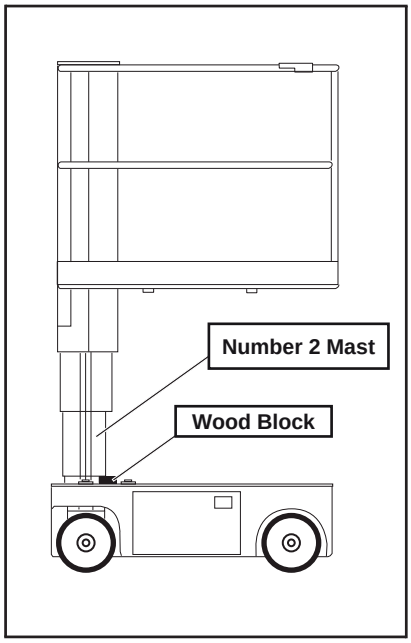

Installation

1. Park the Work Platform on firm level ground.
2. Verify Chassis Emergency Stop Switch is ON.
3. Switch the Key switch to chassis. control.
4. Push and hold the enable toggle switch and push the Chassis lift/lower toggle switch to the up position to elevate the platform approximately 1.2m (4 feet).
5. Place a wood block, 5cm x 10cm x 46cm (2 in. x 4 in. x 18 in.) long between the #2 Mast and Chassis just behind the Mast Assembly.
6. Push and hold the enable toggle switch and push the Chassis lift/lower toggle switch to the down position and gradually lower the platform until the second mast section is supported by the block.

Removal

1. Push and hold the enable toggle switch and push the Chassis Lift/Lower toggle Switch to UP to gradually raise Platform until the wood block can be removed.
2. Remove block.
3. Push and hold the enable toggle switch and push the Chassis Lift/Lower toggle Switch to the DOWN position and completely lower the Platform

https://truckmanualshub.com/

3-2 Preventative Maintenance

The complete inspection consists of periodic visual and operational checks, along with periodic minor adjustments to assure proper performance. Daily inspection will prevent abnormal wear and prolong the life of all systems. The inspection and maintenance schedule is to be performed at regular intervals. Inspection and maintenance shall be performed by personnel who are trained and familiar with mechanical and electrical procedures.

WARNING

Before performing preventative maintenance, familiarize yourself with the operation of the machine. Always block the elevating assembly whenever it is necessary to work between the platform and the chassis to perform maintenance while the platform is elevated.

The preventative maintenance table has been designed for machine service and maintenance repair. Please photocopy the following page and use the table as a checklist when inspecting the machine for service.

https://truckmanualshub.com/

3-3 Preventative Maintenance Check List

Preventative Maintenance Key

Interval

Daily=each shift or every day

50h/30d=every 50 hours or 30 days

250h/6m=every 250 hours or 6 months

1000h/2y=every 1000 hours or 2 years

Y=Yes/Acceptable

N=No/Not Acceptable

R=Repaired/Acceptable

Preventative Maintenance Report

Date: _____

Owner: _____

Model No: _____

Serial No: _____

Serviced By: _____

Service Interval: _____

COMPONENT	INSPECTION OR SERVICES	INTERVAL	Y	N	R
Operator Manual	Check that Operator's Manual is in manual holder and all pages are intact and readable	Daily			
Labels and Decals	Check that Labels and Decals are in place,	Daily			
Entire Unit	Perform Pre-Operation inspection	Daily			
	Check for and repair any damage	Daily			
	Lubricate (see Section 3-5)	30d			
	Check fasteners for correct torque	6m			
	Check for corrosion; remove and repaint	6m			
Electrical System	Check cables and wiring harness condition (No wear or physical damage)	Daily			
Battery System	Check electrolyte level	Daily			
	Check battery cable condition	Daily			
	Check terminals are clean and connectors are	Daily			
	Check charger condition and operation	Daily			
	Charge batteries	Daily			
	Check electrolyte specific gravity	6m			
	Clean exterior	6m			
	Clean terminals	6m			
Hydraulic Fluid*	Check oil level	Daily			
	Change Filter	6m			
	Drain and replace oil	2y			
Hydraulic System	Check all fittings are tight and no leaks	Daily			
	Check hose connections (Secure,no leaks, no Damage)	30d			
	Check hoses for exterior wear	30d			
Drive Motors	Check for operation and leaks	Daily			
Hydraulic Pump	Check fittings are secure and no leaks	Daily			
	Wipe clean	30d			
	Check for leaks at mating surfaces	30d			
	Check mounting bolts for correct torque	6m			
Emergency Lowering	Check Emergency Lowering operates correctly (see Emergency Lowering procedure)	Daily			
Controller	Check condition and operation	Daily			
Platform Deck and Rails	Check fasteners are in place, correctly tightened and not damaged.	Daily			
	Check the structure and welds for damage, deformation, corrosion and cracks	Daily			
	Check condition of deck (no damage, deformation, corrosion or cracks)	Daily			
	Check entry gate closure functions correctly	Daily			

*** NOTE: Use ISO #46 during summer and ISO #32 during winter.**

COMPONENT	INSPECTION OR SERVICES	INTERVAL	Y	N	R
Elevating Assembly	Inspect for external damage, dents, loose rivets or cracks, loose chain tensioner	Daily			
	Check the structure and welds for damage, deformation, corrosion and cracks	Daily			
	Inspect all elevating assembly components (e.g chains,sheaves,pullys,chain anchors, pins,etc.) for wear damage, deformation,	6m			
	Lubricate lift chains	6m			
	Check sequence ropes tension	6m			
	Check chain tension	1yr			
	Remove and inspect chains	5yr			
Chassis	Check cables for pinch or rubbing points	Daily			
	Check the structure and welds for damage, deformation, corrosion and cracks	Daily			
	Check component mounting for correct	6m			
Lift Cylinder	Check for leaks	Daily			
	Check for correct torque	6m			
Mast	Lubricate, see Section 3-5 for application.	3m			
Steering System	Oil pivot pins	30d			
	Oil king pins	30d			
	Check steering cylinder for leaks	30d			
	Check hardware & fittings for correct torque	6m			
Wheels	Check for loose components	Daily			
	Check for damage to tyres	Daily			
	Check Bearings for grease	3m			
Harness anchor point	Check fasteners are secure	Daily			
	Check for damage, deformation, corrosion	Daily			
System Function Inspection	Conduct System Function Inspection (see System Function Inspection procedure)	Daily			
Emergency Stops	Check Lower control Emergency Stop operates correctly (shuts off Lower control)	Daily			
	Check Upper control Emergency Stop operates correctly (shuts off Upper control)	Daily			
Brakes	Check that the brakes operate correctly	Daily			
Horn	Check that the horn sounds when activated	Daily			
Proximity Switch and Controller	Check armguard lowering functions correctly when the platform is being lowered.	Daily			
	Check that the level sensor functions correctly (drive and platform raise functions are disabled and only platform lowering enabled) when the chassis inclinination	Daily			
	Check full drive speed range is enabled when the platform is stowed.	Daily			
	Check that only reduced drive speed range is enabled when the platform is elevated.	Daily			

https://truckmanualshub.com/

3-4 Parts Location

Figure 3-2: Parts Location

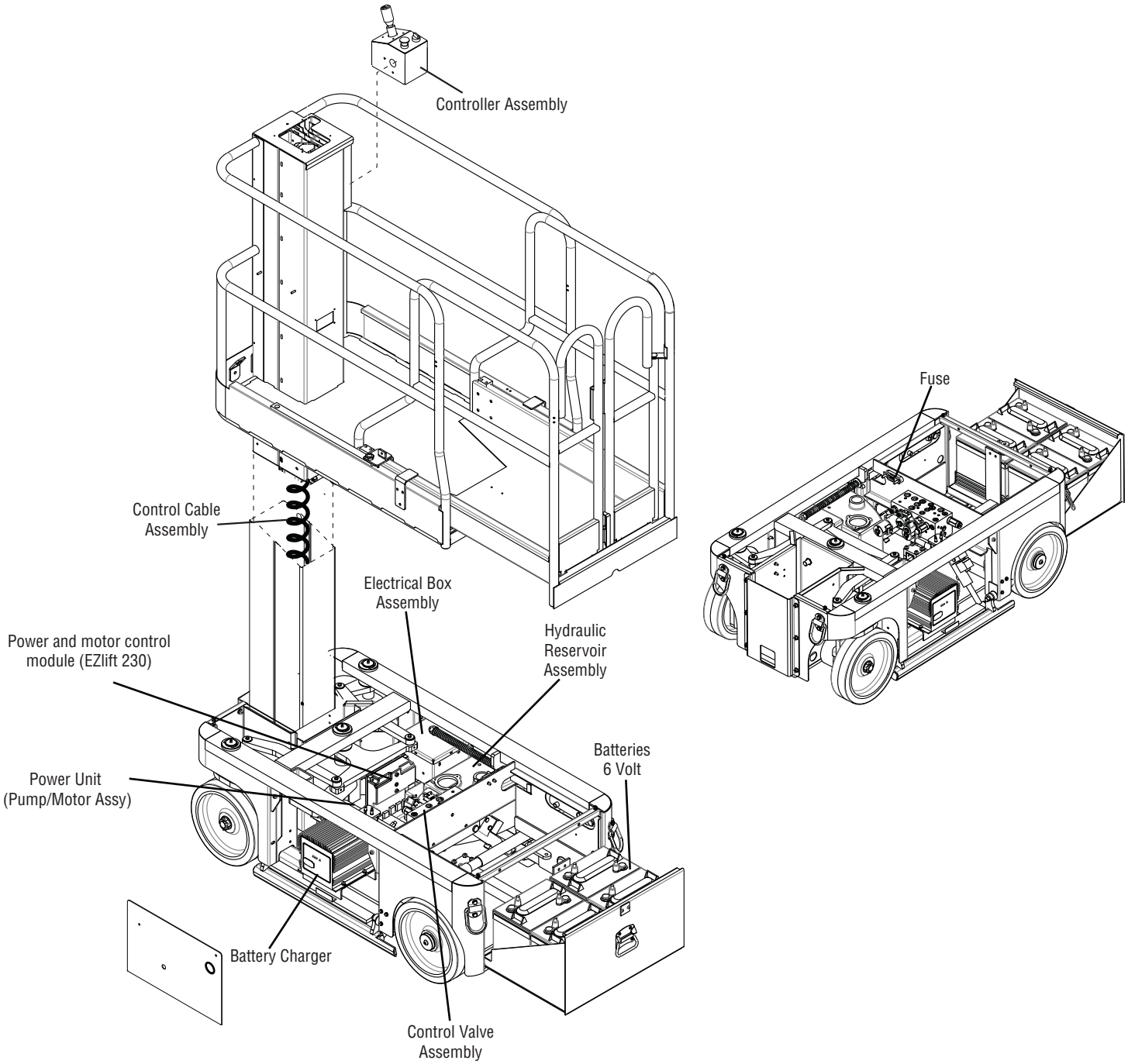

https://truckmanualshub.com/

3-5 General Lubrication

Mast Lubrication :

Approved Lubricant :

Interflon Fin Lube TF +Teflon

The use of Interflon Fin Lube is recommended as it dries to prevent dirt contamination of lubricated parts unlike other greases and gives excellent long lasting protection against wear.

The use of other types of 'heavy' grease are therefore not recommended.

Application:

Aerosol, Brush or Mist Application.

Lubricant should be applied as a extremely thin coating on the corners of the mast assembley sections where the Nylon Pads slide. It is recommended that the mast sections are cleaned and the Fin Lube TF reapplied at three monthly intervals and at each 6 and/or 12 monthly routine Inspection / Service.

Chain Lubrication (Mast) :

Approved Lubricant :

Interflon Fin Lube TF +Teflon

Application:

See section 3-10, Page 3-21.

Process Instructions

1. Cleaning Application:
   Mast must be cleaned first with an organic or Alkaline quick drying cleaning agent.
2. Fin Lube TF préparation:
   Shake container gently before use.Provide adequate ventilation.
3. Fin Lube TF Application:
   Spray mist Fin Lube TF sparingly onto each of the 3rd Mast.
4. Fin Lube TF Application:
   With a clean paper towel /cloth spread the Fin Lube TF down both corners Removing superfluous lubricant.
   Note: Fin lube TF works at its optimum with a thin layer rather than a thick layer. Do not use too much.

5. On 2nd and 3rd Mast repeat item 3 & 4

7. Allow 15 minutes for lubricant penetration.

8. Inspection: Check that there is a thin layer present and remove any redundant FIN LUBE TF from the bottom of the mast with a cloth if required.

Chain Lubrication (Fin Lube)

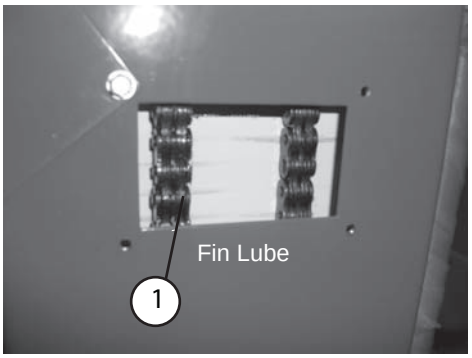

1. Chain

Figure 3-3: Additional Lubrication

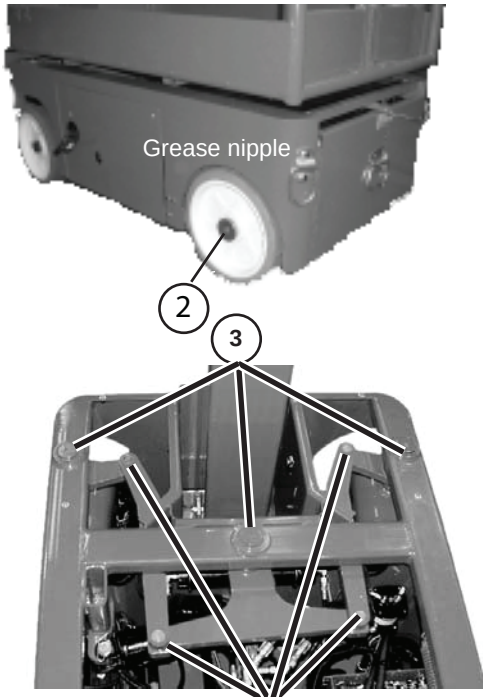

3. King Pin Bearings
4. Steering Linkage

Additional lubrication :

Rear idler wheel bearing·

Apply EP2 lithium grease to each bearing Fig 3-3 item 2 via grease nipple in wheel. See "maintenance check list" on page 3-5 for check frequency.

Bearings.

Approved Lubricant : EP.2 Lithium grease

Apply EP.2 Lithium grease to each fitting identified in Fig 3-3 **item 3**. See "Maintenance Check list" on Page 3-5 for check frequency.

Linkage.

Apply Fin Lube to linkage pins identified in Fig 3-3 item 4. See "Maintenance Check list" on Page 3-5 for check frequency.

https://truckmanualshub.com/

3-6 Batteries

Electrical Energy for the motor is supplied by four 6 volt batteries wired in series for 24 volts DC. Proper care and maintenance of the batteries and motor will ensure maximum performance from the work platform.

CAUTION

If battery electrolyte level is not maintained, batteries will not fully charge, creating a low discharge rate.

WARNING

Hazard of explosive gas mixture. Keep sparks, flame and smoking materials away from batteries.

Always wear safety glasses when working with batteries.

Battery fluid is highly corrosive. Thoroughly rinse away any spilled fluid with clean water.

Always replace batteries with Snorkel batteries or manufacturer approved replacements.

Before disconnecting the battery negative (-) lead, make sure all switches are OFF. If ON, a spark will occur at the ground terminal which could cause an explosion if hydrogen gas or fuel vapors are present.

Battery Replacement

The batteries are located in a slide-out tray in the rear of the machine. There are four 6 volt batteries wired in series for 24 volts DC. Battery cables must be installed as shown in the Battery Cable Installation Diagram.

Battery Maintenance

Refer to *Section 1: General Information* for complete battery maintenance instructions.

If Battery Discharge warning Light Illuminates (Fig 3-4), recharge batteries fully.

Refer to the *Operation Manual* included in this Service Manual for specific maintenance and charging instructions.

Figure 3-4: Battery Cables

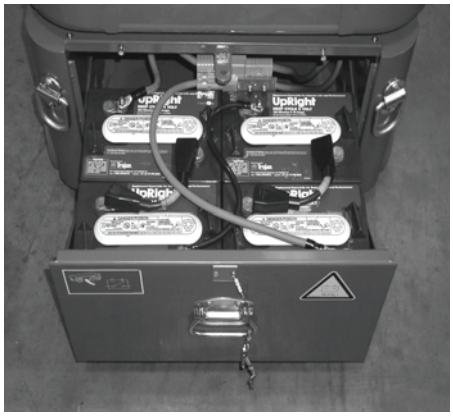

Batteries Installed

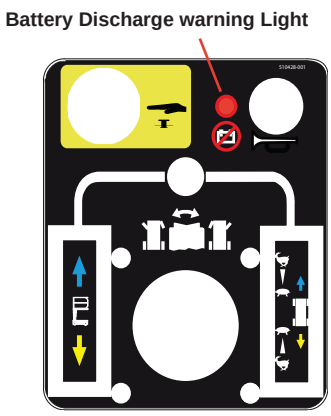

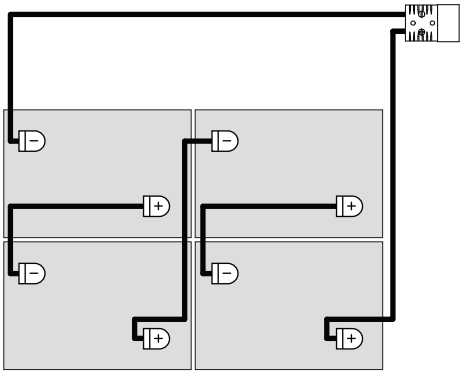

Battery Cable Installation Diagram

https://truckmanualshub.com/

3-7 Hydraulics

Hydraulic Oil Tank And Filter

Fluid Level

With platform fully lowered, oil should be visible between Max/Min lines on the tank (or on the dip stick (if fitted) which can be found on the bottom of the filling cap).
If not, then add or remove oil to adjust the oil level to the correct level.

DO NOT fill above the Max line when the platform is elevated.

Oil and Filter Replacement

1. Operate the work platform for 10-15 minutes to bring the hydraulic oil up to normal operating temperature.
2. Open the chassis door.
3. Remove Hydraulic oil using a suitable pump. The Hydraulic tank has a 7,2 liter (**1.9 US gal.**) capacity.
4. Extract Filter module by removing the 3 screws shown in fig 2.
5. Remove Spring and replace Old filter
6. Ensure the filter is sitting correctly and refit Spring
7. Apply a thin film of clean hydraulic oil (ISO #46) to the 'O' Ring housed in the Filter Lid.
8. Refit the three screws shown in Fig 2.
9. Fill the hydraulic reservoir with hydraulic oil until the oil comes up just past the Min line .
   Hydraulic tank has a 7,2 liter (**1.9 US gallon**) capacity.

Figure 3-5: Hydraulic Oil Tank and Filter

1. Tank
2. Hose Fittings
3. Suction Screen
4. Filter Module
5. Filter Cap

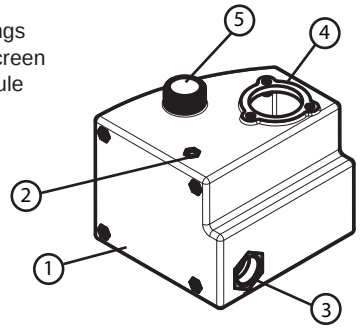

Fig 1

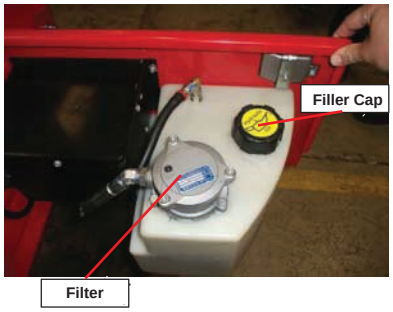

Fig 2

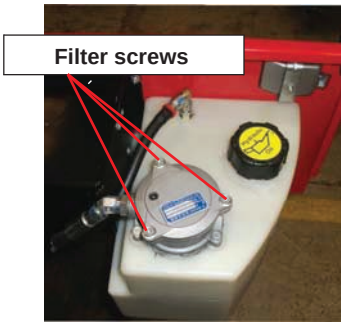

CAUTION

The hydraulic oil may be of sufficient temperature to cause burns. Wear safety gloves and safety glasses when handling hot oil.

https://truckmanualshub.com/

Hydraulic Pump

The Hydraulic Pump is located in the Power Module, and is mounted on the rear of the motor.

Removal

NOTE: If the hydraulic tank has not been drained, suitable means for plugging the hoses should be provided to prevent excessive fluid loss.

1. Mark, disconnect and plug the hose assemblies.
2. Loosen the capscrews and remove the pump assembly from the motor.

Installation

1. Lubricate the pump shaft with general purpose grease and attach the pump to the motor with the capscrews.
2. Using a crisscross pattern, torque each capscrew a little at a time until all capscrews are torqued to 27N-m (**20 ft-lbs**).
3. Unplug and reconnect the hydraulic hoses.
4. Check the oil level in the hydraulic tank before operating the work platform.

Figure 3-6: Hydraulic Pump

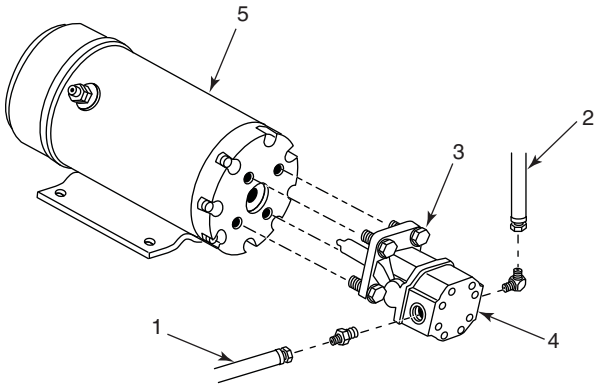

1. Inlet Hose
2. Outlet Hose
3. Capscrew
4. Pump Assembly
5. Electric Motor

Cylinder valve Assembly

https://truckmanualshub.com/

Emergency Down Valve

The Emergency Down Valve is located at the front of the machine and is mounted on the base of the cylinder.

Pull to activate

Figure 3-7: Emergency Down Valve

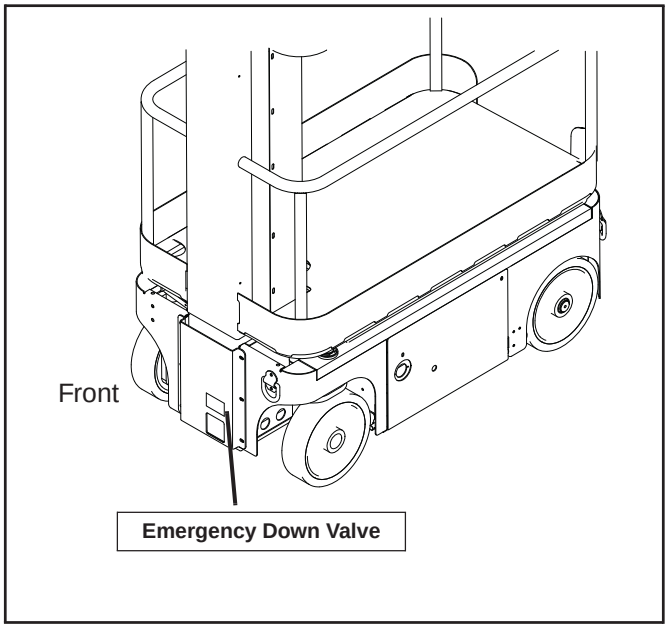

https://truckmanualshub.com/

Main Hydraulic Manifold

Though it is not necessary to remove the manifold to perform all maintenance procedures, a determination should be made prior to beginning as to whether or not the manifold should be removed before maintenance procedures begin.

Figure 3-8: Hydraulic Manifold, Exploded View

		ADAPTORS REQUIRED	
SNORKEL PN	**PORT LOCATION**	**END 'A'**	**END 'B'**
011941-005	D1	9/16" MALE UNF	9/16" MALE ORFS ST
011941-005	D2	9/16" MALE UNF	9/16" MALE ORFS ST
011941-005	R	9/16" MALE UNF	9/16" MALE ORFS ST
011941-005	L	9/16" MALE UNF	9/16" MALE ORFS ST
510695-000	G	7/16" MALE UNF	TEST PORT
514362-000	S1	7/16" MALE UNF	9/16" MALE ORFS ST
514362-000	S2	7/16" MALE UNF	9/16" MALE ORFS ST
104779-000	P1	9/16" MALE UNF	11/16" MALE ORFS POS 90°
514362-000	PP1	7/16" MALE UNF	9/16" MALE ORFS ST
514362-000	PP1-	7/16" MALE UNF	9/16" MALE ORFS ST
514362-000	PP2	7/16" MALE UNF	9/16" MALE ORFS ST
514362-000	PP2-	7/16" MALE UNF	9/16" MALE ORFS ST
512951-000	T	3/4" MALE UNF	11/16" MALE ORFS ST
513054-000	B	7/16" MALE UNF(1mm inline restrictor)	9/16" MALE ORFS ST
SNORKEL PN	**VALVE TYPE**		**VALVE LOCATION**
513145-000	SOLENOID VALVE, SV10-47B, 24V		SV4
513146-000	SOLENOID VALVE, SV10-40, 24V		SV1, SV3
513147-000	SOLENOID VALVE, SV08-47A, 24V		SV2
514384-000	RELIEF VALVE ASSY, RV08-22H, 24V		RV3
513148-000	RELIEF VALVE ASSY, RV08-20H, 24V		RV2
513149-000	RELIEF VALVE ASSY, RV08-20H, 24V		RV1
513150-000	EXPANDER PLUG,		NOT SHOWN
513151-000	SAE PLUG,		PLG6
513152-000	SAE PLUG,		PLG4
513153-000	SOLENOID, 24V		CL2
513154-000	SOLENOID, 24V		CL1
514385-000	CARTRIDGE VALVE		FR1
513156-000	COUNTERBALANCE VALVE		CBV1, CBV2
514386-000	BLOCK		BLK

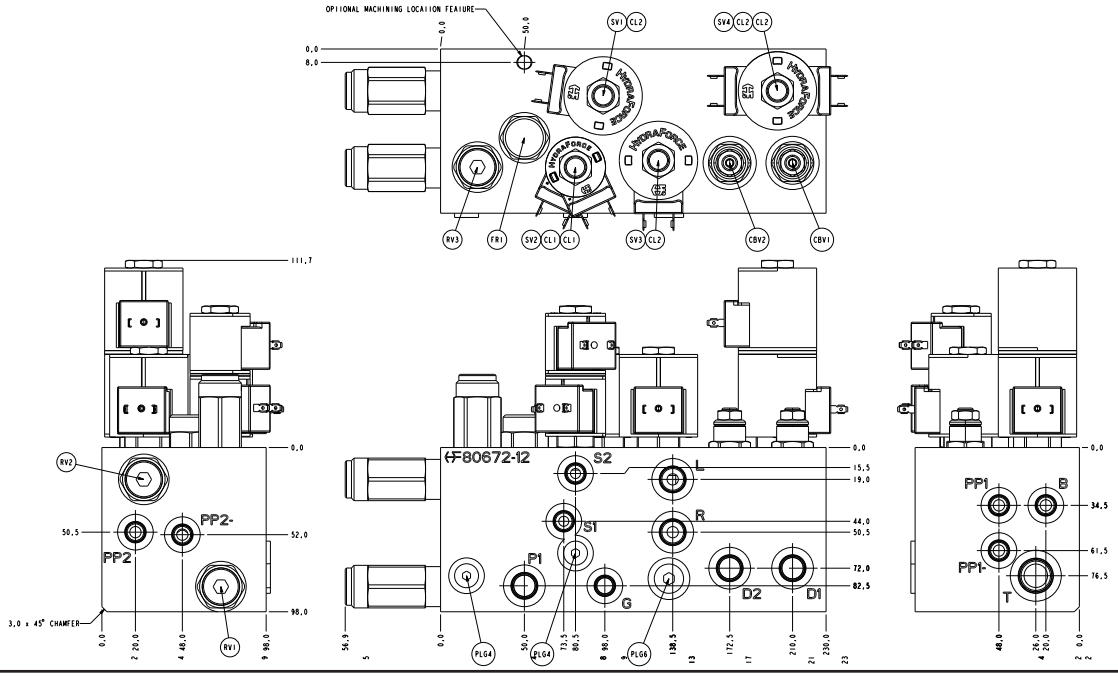

https://truckmanualshub.com/

Setting Hydraulic Manifold Pressures

WARNING

The hydraulic oil may be of sufficient temperature to cause burns. Wear safety gloves and safety glasses when handling hot oil.

The oil in the hydraulic system is under very high pressure which can easily cause severe cuts. ***Obtain medical assistance immediately if cut by hydraulic oil.***

NOTE: Check the hydraulic pressures whenever the pump, manifold or relief valves have been serviced or replaced

Lift Relief Valve

1. Operate the hydraulic system 10 to 15 minutes to warm the oil.
2. Remove the cap or loosen the locknut on the Lift Relief Valve.
3. Install a 0-207 bar (**0-3000 psi**) pressure gauge to the gauge port.
4. Turn the Chassis Keyswitch to CHASSIS and elevate the machine fully.
5. While holding the Chassis Lift Switch to the UP position, adjust the Lift Relief Valve RV 2 until the pressure gauge reads 115 bar (**1690 psi**).
6. Release the Chassis Lift Switch.
7. Replace the cap, or tighten the locknut on the Lift Relief Valve, and torque to 8N-m (**6 ft-lbs**) and replace the Cap.
8. Lower the platform.

Figure 3-9: Hydraulic Manifold

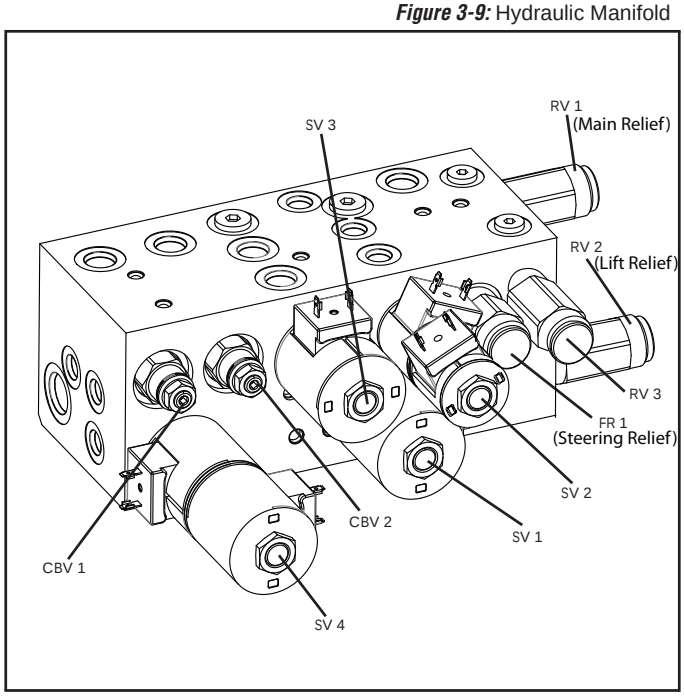

https://truckmanualshub.com/

Counterbalance Valves

1. Operate the work platform for 10-15 minutes to bring the hydraulic oil up to normal operating temperature.
2. Remove the gauge port cap and install the pressure gauge assembly.
3. Lift work platform and block front wheels off ground.
4. Loosen the locknuts on Counterbalance Valves.
5. With the machine fully powered up depress the **DRIVE** button on the upper control box, depress the interlock lever and slowly pull the control lever to **REVERSE** to drive the wheels.
6. Adjust the Forward Counterbalance Valve by turning the adjustment screw until the pressure gauge indicates 25 bar (**362.5 psi**).
7. Slowly push the Control Lever to **FORWARD** to drive the wheels.
8. Adjust the Reverse Counterbalance Valve by turning the adjustment screw until the pressure gauge indicates 25 bar (**362.5 psi**).
9. Check the settings by slowly moving the Control Lever **FORWARD**, then **REVERSE**, checking the gauge to ensure pressures are properly set. Re-adjust as needed.
10. Tighten locknuts on valves to 8N-m (**6 ft-lbs**). Remove blocks and lower work platform to ground.
11. Reconnect the red Control Cable wire to terminal #9.
12. Remove the gauge from the gauge port and re-install cap.
13. Check for proper operation of the drive system and brake.

Steering Relief Valves

1. Operate the work platform for 10-15 minutes to bring the hydraulic oil up to normal operating temperature.
2. Install gauge in the gauge port.
3. Loosen locknut or remove cover on the Steering Relief Valve and turn adjusting screw counter-clockwise two full turns.
4. While one person holds the Steering Switch to steer right or left, slowly turn the Steering Relief Valve adjusting screw clockwise to increase the pressure until the gauge reads 100 bar (**1450 psi**).
5. Tighten locknut or replace Steering Relief Valve cover and torque to 8N-m (**6 ft-lbs**).
6. Remove gauge and replace cap.

https://truckmanualshub.com/

3-8 Cylinders

Depression Cylinder

Figure 3-10: Depression Cylinder Remove & Replace

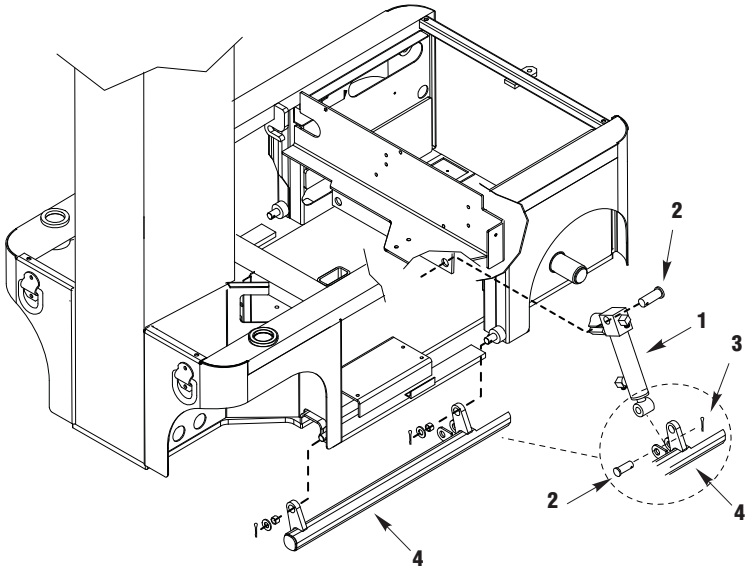

1. Depression Cylinder
2. Pivot Pin
3. Cotter Pin
4. Depression Guard

Removal

1. Mark and disconnect the hose assemblies from the cylinder fittings and immediately cap the openings to prevent foreign material from entering.
2. Place a support under the depression guard.
3. Remove the cotter pins from the pivot pins.
4. Remove the pivot pins while supporting the cylinder.
5. Remove the cylinder.

Repair

Refer to Cylinder Repair in Section 1 - General Information.

Installation

Installation is reverse of removal.

https://truckmanualshub.com/

Brake Cylinder

The brake cylinder is located inside the right rear chassis wall above the wheel.

Figure 3-11: Brake Cylinder, Remove & Replace

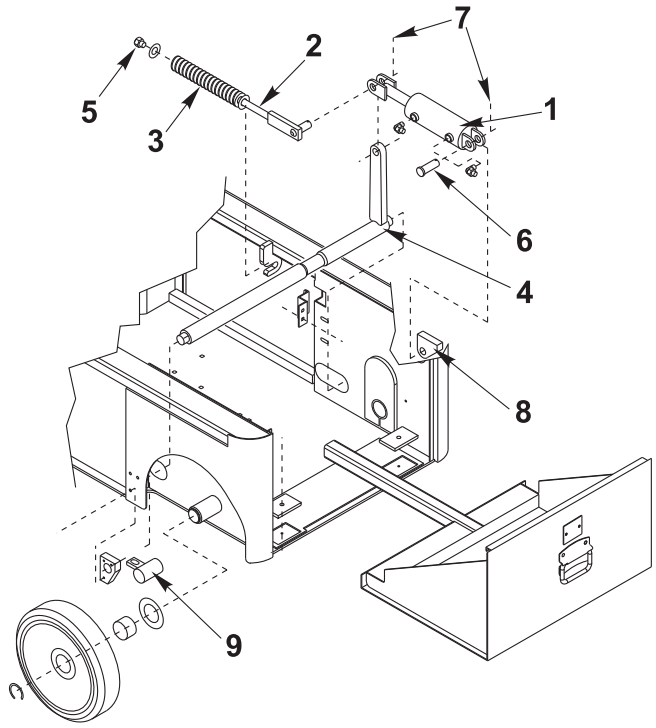

1. Brake Cylinder
2. Tension bar
3. Spring
4. Brake Actuator
5. Spring Compression Nut
6. Rear Cylinder Pivot Pin
7. Cotter Pin
8. Rear Cylinder Mount
9. Left Brake Bar

Removal

1. Block the wheels to prevent the work platform from rolling when the brake is removed.
2. Use a 1000Kg (**one ton**) capacity jack to raise the rear of the machine. Position blocks under the machine to prevent the work platform from falling if the jack fails.
3. Block the front wheels to prevent the machine from rolling.
4. Remove the spring compression nut and flat washer from the tension bar.
5. Remove the retaining ring and right rear wheel.
6. Remove the cotter pin and pivot pin from the rear cylinder mount.
7. Remove the cotter pin from the tension bar pivot allowing the cylinder to be lowered.
8. Disconnect the hose assemblies and cap the openings to prevent foreign material from entering.
9. Remove the cylinder from the chassis.

Repair

Refer to Cylinder Repair in Section 1 - General Information.

Installation

1. Connect the hose assemblies.
2. Install the tension bar pivot through the cylinder clevis and brake actuator and secure with a new cotter pin.
3. Install the pivot pin through the cylinder mounting tabs and rear cylinder mount and secure with a new cotter pin.
4. Install the wheel and retaining ring.
5. Install the flat washer and spring compression nut on the tension bar. Tighten the nut until at least flush with the tension bar shaft or until the brake bar has full engagement with the tire.
6. Lower the machine and operate the drive circuit and check that the brake bars retract and clear the tires when driving and fully engage the tires when stopped. Check for leaks

https://truckmanualshub.com/

Steering Cylinder

Removal

1. Mark and disconnect the hose assemblies from the cylinder fittings and immediately cap the openings to prevent foreign material from entering.
2. Remove the cotter pins from the pivot pins.
3. Remove the pivot pins while supporting the cylinder. Remove the cylinder.

Repair

Refer to Cylinder Repair in Section 1 - General Information.

Installation

1. Position the cylinder assembly in the chassis and insert pivot pins and secure with new cotter pins.
2. Connect the hose assemblies to the fittings.
3. Operate the steering circuit several times throughout its entire range of travel to expel trapped air and check for leaks.

Figure 3-12: Steering Cylinder Remove & Replace

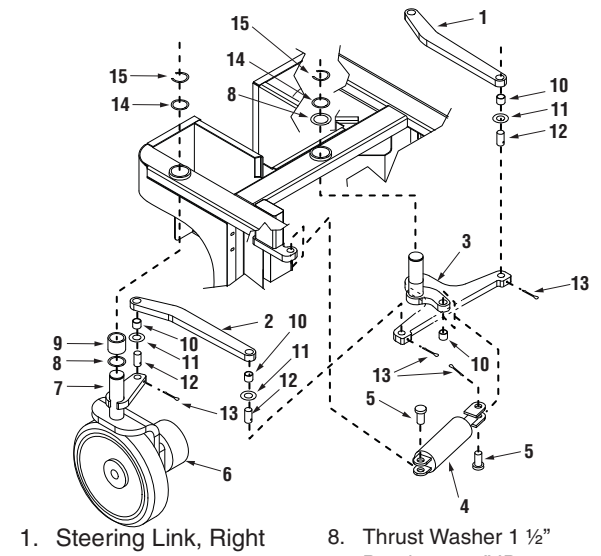

1. Steering Link, Right
2. Steering Link, Left
3. Bell Crank Weldment
4. Steering Cylinder
5. Pivot Pin
6. Drive Motor
7. Wheel Yolk
8. Thrust Washer 1 ½”
9. Bearing, 1 ½” ID
10. Bearing, ¾” ID
11. Thrust Washer, ¾”
12. Steer Pin
13. Cotter Pin

Figure 3-13: Brake and Steering Cylinder Seal Kit

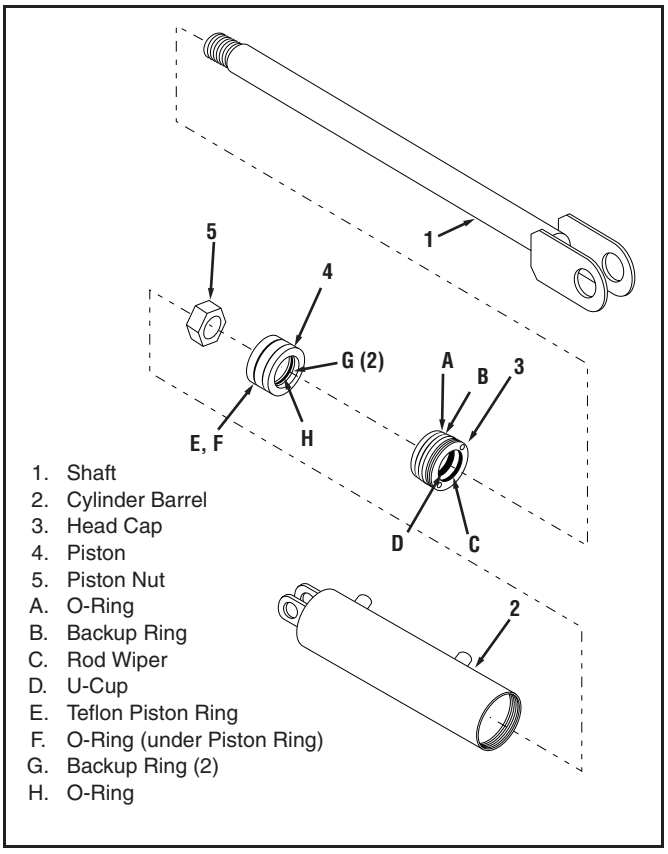

1. Shaft
2. Cylinder Barrel
3. Head Cap
4. Piston
5. Piston Nut

A. O-Ring
B. Backup Ring
C. Rod Wiper
D. U-Cup
E. Teflon Piston Ring
F. O-Ring (under Piston Ring)
G. Backup Ring (2)
H. O-Ring

https://truckmanualshub.com/

Lift Cylinder

Removal

Refer to Figure 3-16: “Elevating Assembly,” on page Section 3-20 for details.

1. Fully lower platform.
2. Provide a suitable container to catch the hydraulic fluid, then disconnect the hydraulic hose. Immediately plug hoses to prevent foreign material from entering.
3. Remove the adapter from the base of the cylinder, inside the chassis.
4. Remove the Emergency Lowering Valve Knob from the valve at the base of the cylinder, then remove the Emergency Lowering Valve out the access hole in the bottom of the chassis.
5. Remove the snap ring at the bottom of the cylinder under the chassis.
6. Remove the platform mast cover.
7. Remove the capscrew and locknut securing the cylinder rod to the upper cylinder mount.
9. Attach a suitable hoisting device and sling to the cylinder. Carefully lift the cylinder approximately 0.5 m (**18 in.**) until you can see the vent line tubing attached near the top of the cylinder barrel. Detach the tubing by depressing the green ring on the fitting at the same time you pull firmly on the tube. Plug the end of the tube and the fitting to prevent contamination.
10. Raise the cylinder the rest of the way through the top of the mast.

Installation

1. Attach a suitable hoisting device and sling to the cylinder. Carefully lower the cylinder through the top of the mast until you can reattach the vent line tubing. Simply push the tubing into the fitting until it goes no further. Pull firmly to ensure that it is installed correctly.
2. Lower the cylinder the rest of the way, and secure the cylinder to the chassis with the snap ring.
3. Install capscrew, washers and locknut securing cylinder rod to the upper cylinder mount.
4. Install platform mast cover.
5. Install the Emergency Lowering Valve, Knob and adapter to the base of the lift cylinder.
6. Remove the plug from the hydraulic hose and attach it to the adapter.
7. Attach the vent line to the hydraulic tank.
8. Test with weight at rated Platform load to check system operation. Check for leaks

https://truckmanualshub.com/

3-9 Drive Motors

Removal

1. Use a 1000Kg (**one ton**) capacity jack to raise the front of the machine. Position blocks under the machine to prevent the work platform from falling if the jack fails.
2. Block the rear wheels to prevent the machine from rolling.
3. Remove the cotter pin, nut, and washer.
4. Remove the wheel.

NOTE: Before disconnecting hoses, thoroughly clean off all outside dirt around fittings. (After disconnecting hoses and before removing from vehicle, IMMEDIATELY plug port holes.)

5. Tag, disconnect and plug the hose assemblies to prevent foreign material from entering.
6. Support the drive motor/wheel yoke assembly and remove the retaining ring at the top of the wheel yoke pivot. Remove the drive motor/wheel assembly from the machine.
7. Remove the locknuts, flat washers, capscrews and drive motor from the wheel yoke.

Installation

1. Position the drive motor in the wheel yoke and secure with capscrews, flat washers and locknuts.
2. Install the drive motor/wheel yoke assembly into the pivot bearing along with the lower thrust washer, thrust bushing, and retaining ring.
3. Align the steer pin with the hole in the steering link.
4. Remove the plugs from the hose assemblies and connect to the drive motor.
5. Install the shaft key, wheel, washer and slotted nut. Torque the locknut to 102 N-m (**75 ft-lbs**). Install a new cotter pin. **DO NOT** back-off the nut to install cotter pin.
6. Remove blocks, lower the jack and remove. Operate the drive system and check for leaks.

Figure 3-15: Drive Motor Assembly

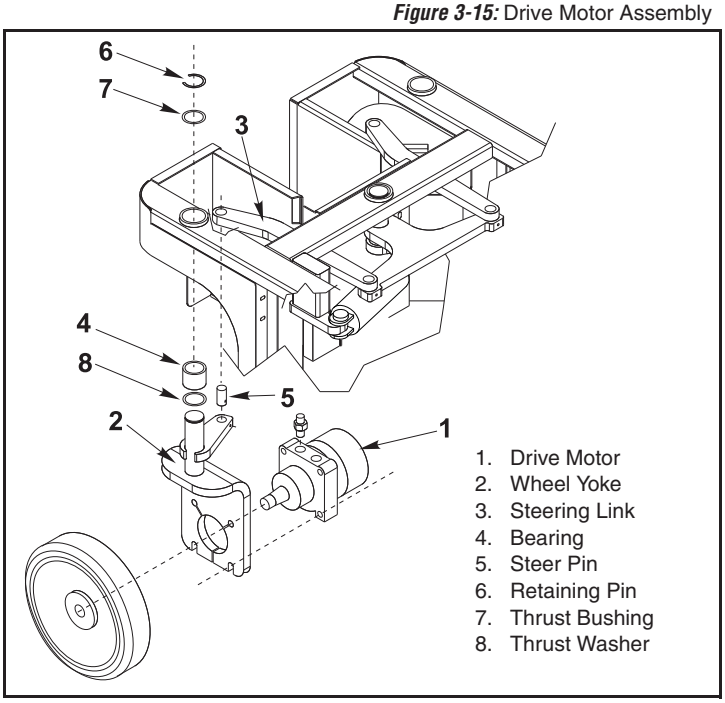

https://truckmanualshub.com/

3-10 Elevating Assembly

Maintenance of the elevating assembly consists of four separate tasks and maintenance intervals:

- Chain Lubrication . . . . . 6 months
- Elevating Assembly Wear Inspection . . . . . 6 months
- Sequence rope inspection . . . . . 6 months
- Chain Tension Inspection . . . . . 1 year
- Chain Elongation Inspection . . . . . 5 years

All of the tasks except the Elongation Inspection can be done without removing the chains from the assembly.

Figure 3-16: Elevating Assembly

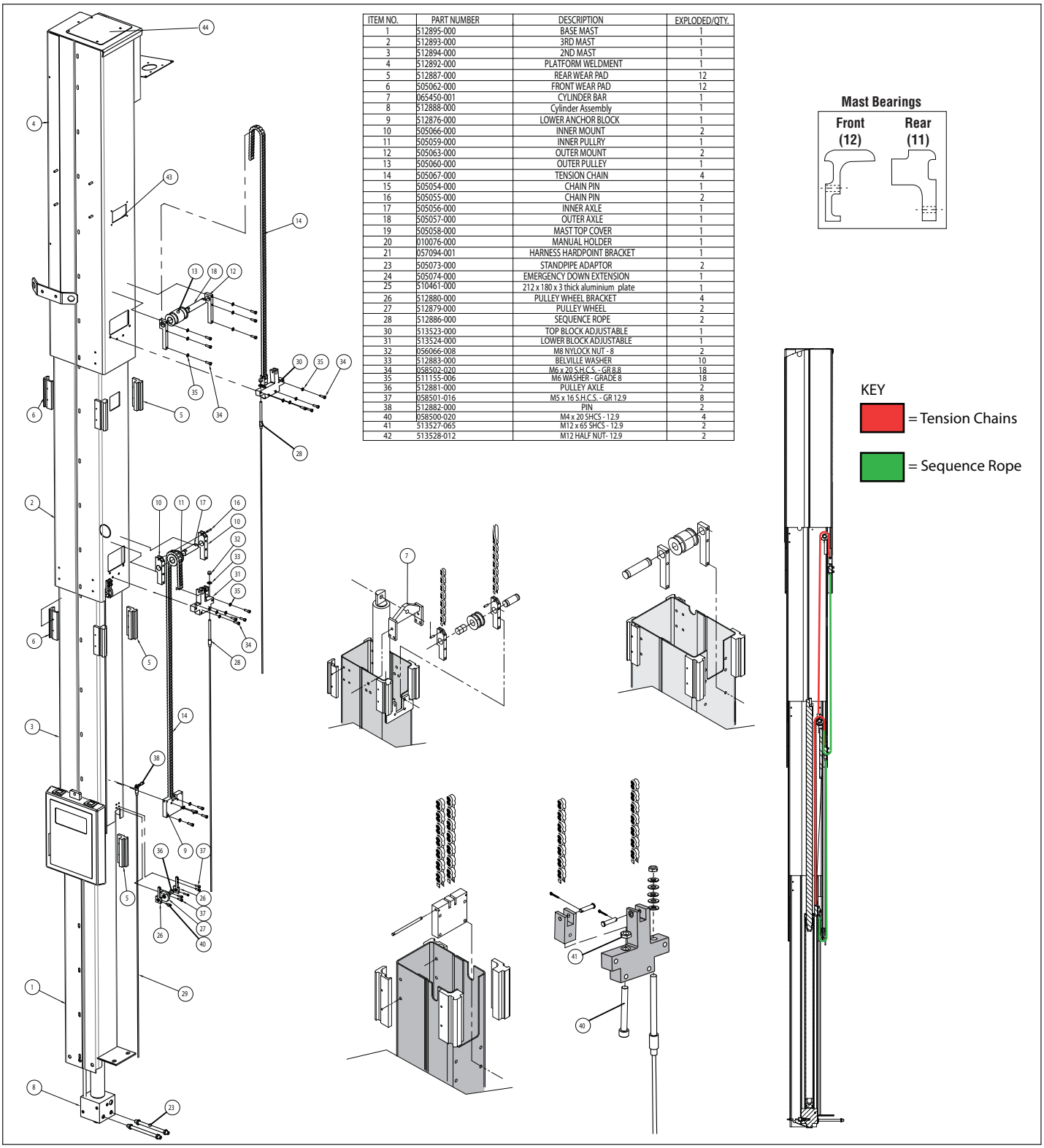

ITEM NO.	PART NUMBER	DESCRIPTION	EXPLODED/QTY.
1	512895-000	BASE MAST	1
2	512893-000	3RD MAST	1
3	512894-000	2ND MAST	1
4	512892-000	PLATFORM WELDMENT	1
5	512887-000	REAR WEAR PAD	12
6	505062-000	FRONT WEAR PAD	12
7	065450-001	CYLINDER BAR	1
8	512888-000	Cylinder Assembly	1
9	512876-000	LOWER ANCHOR BLOCK	1
10	505066-000	INNER MOUNT	2
11	505059-000	INNER PULLRY	1
12	505063-000	OUTER MOUNT	2
13	505060-000	OUTER PULLEY	1
14	505067-000	TENSION CHAIN	4
15	505054-000	CHAIN PIN	1
16	505055-000	CHAIN PIN	2
17	505056-000	INNER AXLE	1
18	505057-000	OUTER AXLE	1
19	505058-000	MAST TOP COVER	1
20	010076-000	MANUAL HOLDER	1
21	057094-001	HARNESS HARDPOINT BRACKET	1
23	505073-000	STANDPIPE ADAPTOR	2
24	505074-000	EMERGENCY DOWN EXTENSION	1
25	510461-000	212 x 180 x 3 thick aluminium plate	1
26	512880-000	PULLEY WHEEL BRACKET	4
27	512879-000	PULLEY WHEEL	2
28	512886-000	SEQUENCE ROPE	2
30	513523-000	TOP BLOCK ADJUSTABLE	1
31	513524-000	LOWER BLOCK ADJUSTABLE	1
32	056066-008	M8 NYLOCK NUT - 8	2
33	512883-000	BELVILLE WASHER	10
34	058502-020	M6 x 20 S.H.C.S. - GR.8.8.	18
35	511155-006	M6 WASHER - GRADE 8	18
36	512881-000	PULLEY AXLE	2
37	058501-016	M5 x 16 S.H.C.S. - GR 12.9	8
38	512882-000	PIN	2
40	058500-020	M4 x 20 SHCS - 12.9	4
41	513527-065	M12 x 65 SHCS - 12.9	2
42	513528-012	M12 HALF NUT- 12.9	2

https://truckmanualshub.com/

Lift Chain Lubrication

Refer to Figure 3-16: “Elevating Assembly,” on page Section 3-20.

With platform in the stowed position;

- remove the *platform mast cover* (43).
- apply enough aerosol chain lubricant to the exposed portion of all four chains to allow the lubricant to run down the chains.
- replace the cover.
- remove the chain inspection cover (44).
- raise platform approximately 10cm (**4 in.**), until the inner set of chains are visible through the chain inspection hole.
- apply enough aerosol chain lubricant to the exposed chain to allow the lubricant to run down the chain.
- replace chain inspection cover.

Elevating Assembly Wear Inspection

Refer to Figure 3-16: “Elevating Assembly,” on page Section 3-20.

At the same time as the chain lubrication task, inspect all elevating assembly components for wear.

With the platform in the stowed position;

- inspect the system through the *platform mast cover* (43) to look for worn *pulleys* (11 & 13) or damaged components.
- Inspect the *chain anchors* (7,10 and 12) and visible portions of lift chain as you lubricate it.
- Look for cracks in the chain links, kinks in any portion of chain, and excessive corrosion.

From the lower controls, raise the platform and block the elevating assembly (see Figure 3-1: “Supporting Elevating Assembly,” on page Section 3-3).

- Inspect the *inner chain anchors* (9, 30 and 31) and the ends of the chains for damage or worn parts. If damage is present, replace the components.

IMPORTANT: There are two pairs of two chains each, for a total of four chains. If only one chain of either pair is damaged, both chains in the pair must be replaced.

Sequence Rope Tension Inspection & Adjustment

1. Elevate the platform and support the elevating assembly, **see section 3.1.**

2. Adjust the tension in the ropes to ensure they will stay seated in their pulley wheels during lift and lowering as shown in the below picture, you should just be able to pull each rope against the outer mast with one finger.

3. Raise the platform to its full height and visually inspect each rope for damage.

https://truckmanualshub.com/

Chain Tension Inspection & Adjustment

Refer to Figure 3-16: “Elevating Assembly,” on page Section 3-20.

The lifting chains can be seperatly adjusted and should always be close to the same tension. This tension should be checked annually and adjusted if necessary. To do this task a spring scale will be needed with 20kg (**44 lb.**) capacity.

1. Place 227kg (**500 lbs.**) in the platform.
2. Remove the *chain inspection cover* (43) and raise the platform approximately 54cm (**21 in.**) until the outer inspection hole lines up with the inner inspection hole.
3. Attach the spring scale to one of the outer chains and pull until the chain makes contact with the inner surface of the mast section. Note the scale reading.
4. Repeat step 3 on the other outer chain.
5. Compare the scale readings. The readings for each chain in the outer set should be within 20% of each other. If not then carefully adjust the slack chain until the readings are equal. Torque up the locknuts to 25 Nm.
6. Repeat steps 3 - 5 for the inner set of chains. The readings for each chain in the inner set should be within 20% of each other.

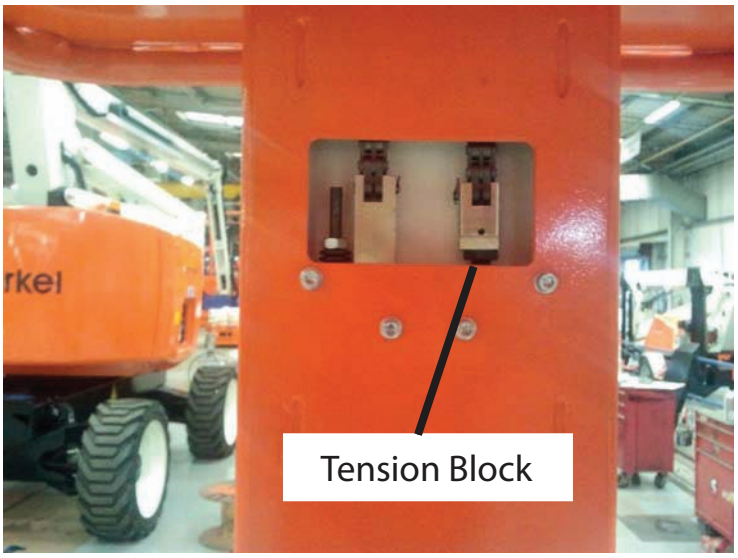

Chain Elongation Inspection

Figure 3-17: Chain Elongation Inspection

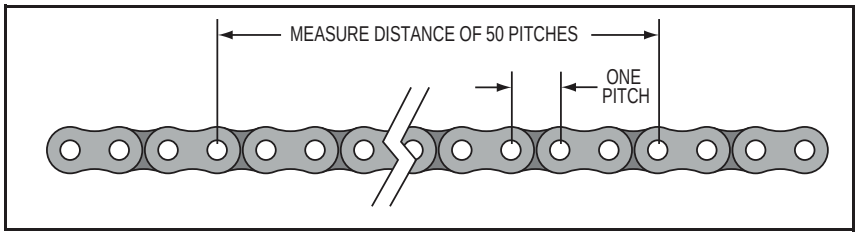

At five-year intervals, the chains should be removed from the mast and the entire length of the chain inspected for excessive wear and elongation. Follow the procedure below to disassemble the elevating assembly. With the lift chains removed, hang them vertically from something capable of holding 100kg (**220 lbs.**). Inspect the chains thoroughly, looking for cracks in the chain links, kinks in any portion of chain, and excessive corrosion. Complete the following elongation test:

1. Attach approximately 25kg (**55 lbs.**) to the lower end of each chain.
2. Measure the distance between 50 pins. This distance should be 64.5cm - 65.5cm (**25 in. - 25 1/2 in.**).
3. Remove the weight and measure the same on the other three chains.

If the chains have elongated beyond the indicated range, replace the lift chain sets. Before reinstalling the lift chains, take this opportunity to thoroughly clean and lubricate the entire chain. Reassemble the elevating assembly as described below.

https://truckmanualshub.com/

Removal of Elevating Assembly

Refer to Figure 3-16: “Elevating Assembly,” on page Section 3-20.

1. Elevate the platform and support the elevating assembly, see section 3.1.
2. Disconnect the batteries using the battery disconnect in front of the batteries in the battery tray.
3. Remove the *platform mast cover*, and the *controller cover plate.*
4. Detach the control cable inside the *controller*, remove the cable clamp in the top of the *platform mast* (4), and feed the cable into the *second inner mast* section (2).
5. Disconnect the outer sequence rope from the outer chain anchor.
6. Disconnect the *outer chain anchor* from the *platform mast*, but leave the anchor attached to the chains.
7. Remove the lower mast bearings from the *platform mast.*
8. Raise the *platform mast* straight up and off of the remaining mast sections. using a suitable hoisting device.
9. Lay the chain that was detached from the *platform mast* over the top of the *upper cylinder mount* (7), and place it down inside the *second inner mast* section.
10. Repeat steps 4 - 7 on the *second inner mast* section (3) and inner sequence rope. The lower mast bearings are removed by unscrewing the two screws on each bearing. Note, you will also have to remove the sequence rope pulley wheel assembly.
11. The upper chain set may now be removed by detaching the *upper chain/inner pulley mounts* from the *first inner mast* section (1). Carefully set the chain set aside on a clean surface.
12. Remove the single bolt that attaches the *cylinder* to the *upper cylinder mount* (7).
13. Using a suitable hoisting device, carefully raise the *first inner mast* section (1) up several inches.
14. Lay the remaining chain set over the top of the *cylinder*, and place it down inside the inner mast section.
15. Remove the lower mast bearings from the *first inner mast* section and remove the sequence rope pulley wheel assembly.
16. Raise the *first inner mast* section straight up and off of the remaining *base mast* section.
17. The inner chain set may now be removed.
18. If it is necessary to remove the *base mast* section, remove the nine bolts that secure it to the *chassis*. It may be required to remove the *lift cylinder* to provide easier access to the bolts (see “Lift Cylinder” on page Section 3-18).

Installation of Elevating Assembly

Refer to Figure 3-16: “Elevating Assembly,” on page Section 3-20.

Installation of the elevating assembly is the reverse of removal.

- Torque the nine bolts that retain the *base mast* section to 68N-m (**50 ft-lbs**).
- For all of the cap screws that attach the chain anchors to the mast sections, apply Loctite 242 to the screw threads and torque to 12N-m (**107 in-lbs**).
- For all of the screws that attach the mast bearings, apply Loctite Retainer #405 to the screw threads. *Do not torque, simply tighten securely.*
- Adjust the chain and sequence rope tensions as described in this section, ensure that the chain tensioner locknuts are correctly tightened and the tensioner bolt threads are visible through the inspection holes in the tensioner blocks.
- Check elevating assembly for proper operation.

https://truckmanualshub.com/

3.11 Tilt Sensor

Tilt Sensor Switch

The tilt sensor is incorporated in the EZ230 Control Module, the switch is activated if machine inclination is greater than 1.5 ° side to side or 2 ° front to back and the Mast Proximity switch is open, this results in a continuous audible alarm and all movement is disabled exept for platform lowering.The only way to clear this alarm is to return the machine inclination below 1.5 ° side to side and 2 ° front to back or bring the Mast down to close the Switch. The settings of this limit is preset at the factory and should on no account be adjusted.

Setting The Tilt Sensor To Zero

⚠ WARNING ⚠

If the EZ230 control module is replaced and/of moved within the machine for any reason the tilt sensor must be reset for zero° using the following procedure. Failure to do so could result in serious injury or death.

To follow this procedure you need to switch the Ezcal display in the Upper Control Box into “Calibration mode”.

1. Place the machine on a firm level surface , ≤ 0.25 °
2. Use a Gauge to confirm that the front and rear of the chassis are level to within +/- 0.25 ° in both directions
3. Switch the machine on, press and hold Esc for 5 seconds until “Ezlift Menu” Appears.
4. Scroll to access level.(Enter)
5. Enter code 2222 for access level 2 .(Enter)
6. Scroll to setups.(Enter)
7. Scroll to tilt setups . (Enter)
8. Calibrate level. (Enter)
9. Enter for yes.

To confirm calibration has worked switch the machine of then back on again.

10. Scroll to Diagnostics. (Enter)
11. System. (Enter)
12. Scroll to tilt, both readings should be below 0.2 ° if not repeat from 3.

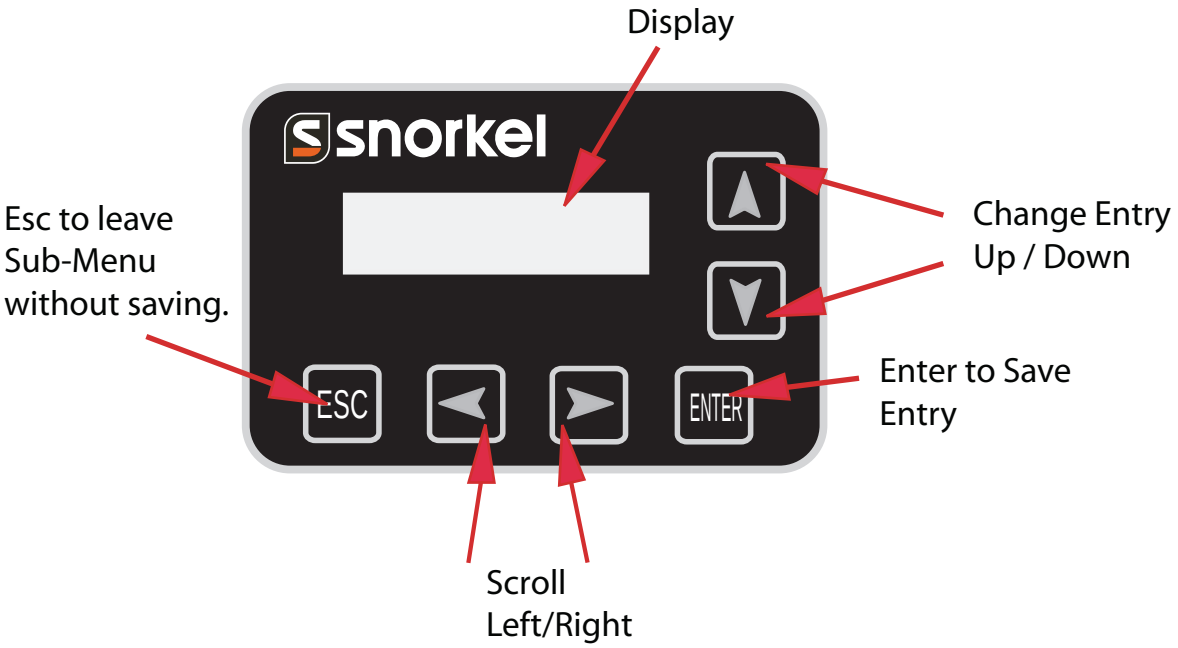

https://truckmanualshub.com/

3-12 Controls

Platform Controls

The Platform Controller can be disassembled to replace defective switches. See the Parts Manual for replacement part numbers.

Figure 3-19: Upper Controls

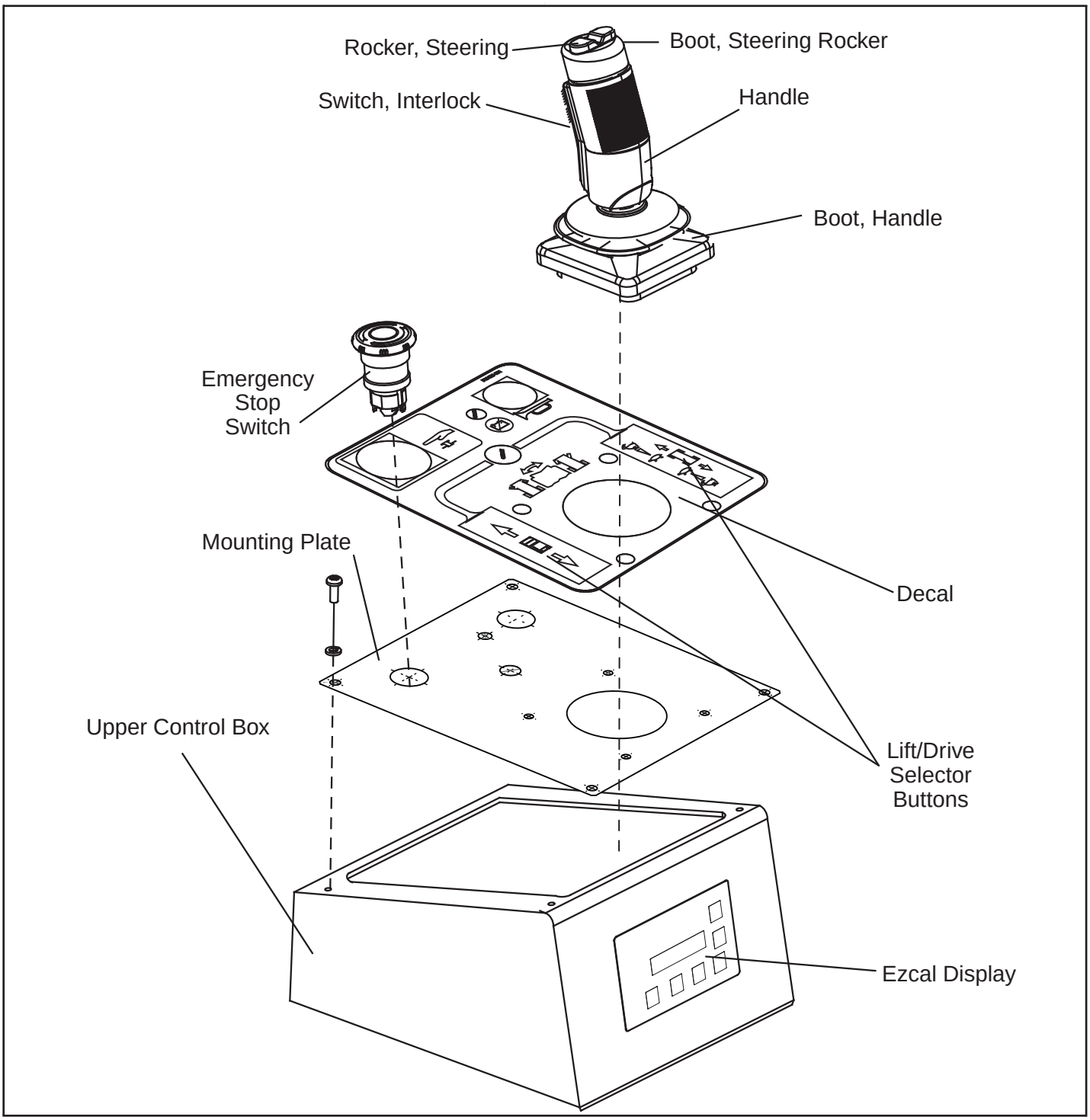

https://truckmanualshub.com/

Chassis Controls

The chassis control assembly is mounted on the inside of the chassis door, to the left of the Hydraulic tank.

Figure 3-20: Chassis Controls

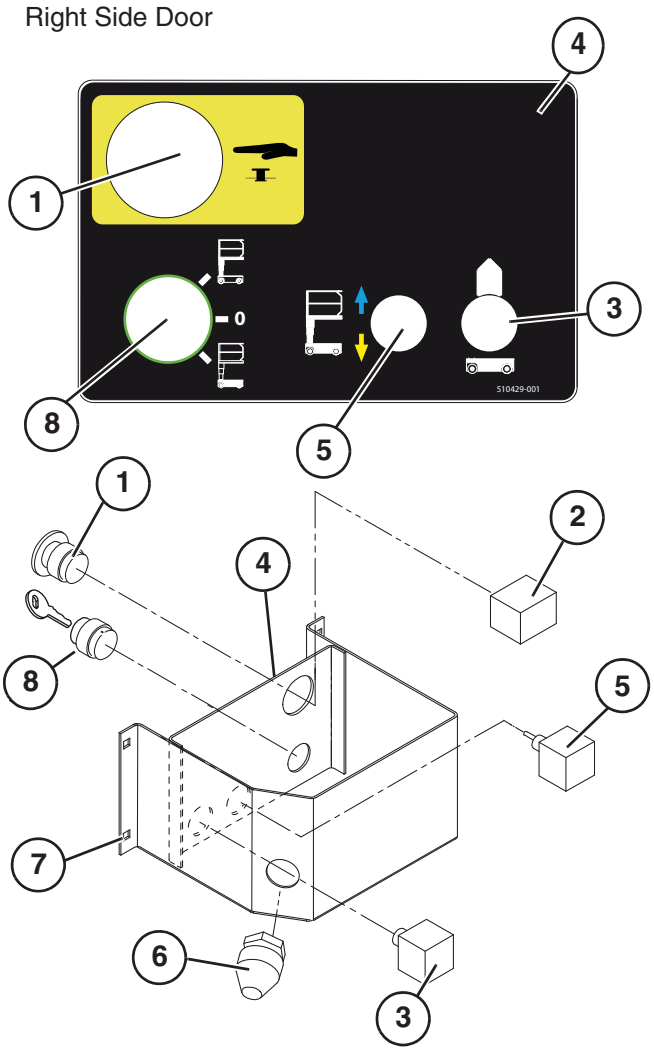

1. Emergency Stop
2. Contact Block (Emergency Stop)
3. Enable Button / Contact Block
4. Overlay
5. Toggle Switch (Up / Down)
6. Cable Gland
7. Control Box
8. Key Switch

https://truckmanualshub.com/

3-13 Proximity switch

WARNING

Never perform work within the elevating assembly area while the platform is elevated without first blocking the elevating assembly, **see Section 3-1.**

Removal

1. Raise the platform and gain access to the proximity switch located within the chassis on the front bulkhead close to the mast. **See WARNING note above**.
2. Turn the base control key-switch to OFF and press the emergency stop button to OFF.
3. Disconnect the proximity switch plug from the wiring harness proximity switch connector.
4. Remove one nut and one shakeproof washer from the proximity switch and remove the proximity switch (Refer to Figure 3-21).

Figure 3-21 Proximity Switch

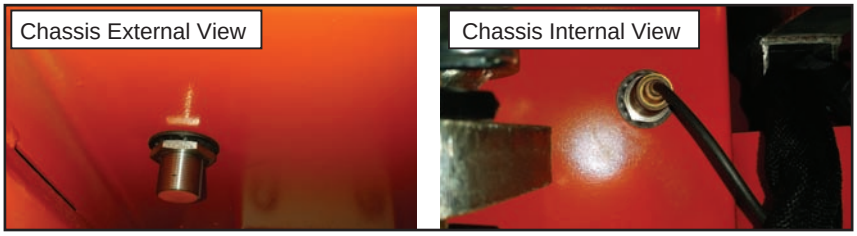

Installation

1. Remove one nut and one shakeproof washer from the proximity switch (Refer to Figure 3-21).
2. Fit the proximity switch into the chassis mounting hole at the front of the machine.
3. Refit the shakeproof washer and the nut.
4. Initially set the proximity switch with the sensing head projecting approximately 20mm externally from the chassis external face and tighten the proximity switch nut.
5. Connect the proximity switch plug into the wiring harness proximity switch connector.
6. Turn base control key-switch to Lower Control and twist and pull the emergency stop button to ON.
7. Remove the supporting block **(see Section 3-1)** prior to operating the mast lowering functions to check that the proximity switch will not foul the mast and that the proximity switch and related functions operate correctly.

To check that the proximity switch will not foul the mast:

8. Slowly lower the mast and ensure/check that the proximity switch will not foul the mast.

To check that the proximity switch position is set correctly and functions operate correctly:

9. Raise the platform floor approximately 500mm above the chassis.
10. Lower the platform and check if the proximity switch activates.
    Lowering of the platform will automatically stop (armguard delay) and requires the lowering controls to be released and waiting 3 seconds before the lowering controls can be reactivated to continue the platform lowering operation.
11. With the platform lowered (stowed position or below the proximity switch switching position, i.e. proximity switch is closed) activate the drive function. Check that the depression guard bars (see Figure 3-10) raise and that the full travel speed range is activated.
12. With the platform raised just above the proximity switch switching point i.e. proximity switch is open, activate the drive function. Check that the depression guard bars (see Figure 3-10) are lowered and only reduced travel speed is activated.

If the proximity switch does not activate or the functions do not operate correctly:

13. Raise the platform to gain access to the proximity switch. **See WARNING note above**.
14. Adjust the position of the proximity switch sensing head closer to the mast.
    Important: Positional adjustments are to be made in small increments only (approximately 1mm) followed by ensuring/checking that the proximity switch will not foul the mast and that the proximity switch position is set correctly and functions operate correctly (see relevant steps above).

https://truckmanualshub.com/

Section 4

TROUBLESHOOTING

4.1 INTRODUCTION

The following section on troubleshooting provides guidelines on the types of problems users may encounter in the field, helps determine the cause of problems, and suggests corrective actions.

Careful inspection and accurate analysis of the symptoms listed in the Troubleshooting Guide will localize the trouble more quickly than any other method. This manual cannot cover all possible problems that may occur. If a specific problem is not covered in this manual, call our number for service assistance.

Referring to Section 2.0 and 5.0 will aid in understanding the operation and function of the various components and systems and help in diagnosing and repair of the machine.

GENERAL PROCEDURE

Thoroughly study hydraulic and electronic schematics in **Section 5**. Check for loose connections and short circuits. Check/repair/replace each component in the Truth Table that is listed under each machine function that does not operate properly.

Use the charts on the following pages to help determine the cause of a fault.

NOTE: Spike protection diodes at components have been left out of the charts to eliminate confusion.

⚠ WARNING ⚠

When troubleshooting, ensure that the work platform is resting on a firm, level surface.

When performing any service that requires the platform to be raised, ensure that the platform and the masts are correctly supported, see section 3.1 "Supporting Elevating Assembly".

Unplug the machine or disconnect the battery when replacing or testing the continuity of any electrical component.

https://truckmanualshub.com/

4.2 TROUBLESHOOTING

1. Verify your problem.
- Do a full function test from both the platform and chassis controls, and note all functions that are not operating correctly.
2. Narrow the possible causes of the malfunction.
- Use the troubleshooting guide to determine which components are common to all circuits that are not functioning correctly.
3. Identify the problem component.
- Test components that are common to all circuits that are not functioning correctly. Remember to check wires and terminals between suspect components. Be sure to check connections to battery negative.
4. Repair or replace any component found to be faulty.
5. Verify that repair is complete.
- Do a full function test from both the platform and chassis controls to verify that all functions are operating correctly and that the machine is performing to specified values.

SPECIAL TOOLS

Following is a list of tools which may be required to perform certain maintenance procedures on the TM12 work platforms.

- Flow Meter with Pressure Gauge
  (P/N 067040-000)
- 0-69 bar (0-1000 psi) Hydraulic Pressure Gauge with Adapter Fittings (P/N 014124-010)
- 0-207 bar (0-3000 psi) Hydraulic Pressure Gauge with Adapter Fittings (P/N 014124-030)
- Adapter Fitting (P/N 063965-002)
- Inclinometer (P/N 010119-000)
- Crimping Tool (P/N 028800-009)
- Terminal Removal Tool (P/N 028800-006)

ADJUSTMENT PROCEDURES

Hydraulic settings must be checked whenever a component is repaired or replaced.

Remove counterbalance valves and "bench test" them if they are suspect.

Connect a pressure gauge of appropriate range to the test port located on the hydraulic manifold.

Correct pressure settings are listed in the hydraulic schematic.

CHECKING PUMP PRESSURES

Remove hose from pump port and connect pressure gauge.

DIAGNOSTICS USING EZCAL DISPLAY

The EZcal Display can be switched into calibration mode to become an invaluable tool when troubleshooting on this machine.
Switch the machine on, press and hold Esc for 5 seconds until “Ezlift menu” is displayed then select diagnostics, the following menu’s are available:

1. SYSTEM –
   - MODE : Platform or Ground Controls selected.
   - SUPPLY : Displays battery voltage, should be above 18v when the machine is not running.
   - VALVE SUPPLY : ON or OFF
   - MOTOR V : Supply voltage to motor (0v when motor not running.
   - MOTOR I : Supply current to motor (0A when motor not running
   - TEMPERATURE: Control temperature in °c, should be below 60.
   - TILT : Displays tilt angle of the machine in X and Y direction, both should be below 2°.
   - TILTED : YES or NO

The remaining submenu’s in SYSTEM are not applicable to this machine.

2. PLATFORM - Checks the function of the switches and joystick functions in the platform controller.
3. GROUND - Checks the function of the switches in the ground controller.
4. INPUTS - Displays the condition of all inputs to the EZ230, see the following table and the circuit diagram on page 5.2 for a list of I/0’s.
5. ANALOG - Displays the condition of all analog inputs from the EZ230.
6. OUTPUTS - Displays the condition of all outputs from the EZ230.

I/O PORT	DESCRIPTION
P1-1	5V to Joystick (low current)
P1-3	0V to Joystick (low current)
P1-4	Joystick analog input
P2-7	B+ feed (low current, for switches and sensors only)
P2-8	Lift down valve return (0V=active) CT13
P3-1	EMS Platform (B+ during platform mode)
P3-2	Valve supply (high current B+ during platform mode, supplies all valve outputs) P3-1 P3-2 are connected together
P3-6	Drive select switch (B+=active)
P3-7	Lift select switch (B+=active)
P3-8	Steer right switch (B+=active)
P3-9	Steer left switch (B+=active)
P3-12	Trigger switch (B+=active)
P4-1	EMS Ground (B+ during ground mode)
P4-4	Lift down switch (B+=active in ground mode only)
P4-5	Lift up switch (B+=active in ground mode only)
P4-6	Stack Proximity Switch (B+=lowered, open=elevated)
P4-7	Not used - Connect to P2-7
P5-1	Line contactor output (B+ when active)
P5-2	Forward valve output (B+ when active) CT11A
P5-3	Reverse valve output (B+ when active) CT11B
P5-4	Pothole Retract valve output (B+ when active) CT12
P5-6	Steer left valve output (B+ when active) CT6A
P5-8	Steer right valve output (B+ when active) CT6B
P5-10	Ground Alarm output (B+ when active)
P5-11	Up valve output (B+ when active) CT7
P5-12	Down valve output (B+ when active) CT13

https://truckmanualshub.com/

REPLACING THE EZ230 CONTROL MODULE

If for any reason you have to replace the EZ230 control module it is important that you complete the following procedures:

WARNING

If the EZ230 control module is replaced and/or moved within the machine for any reason the tilt sensor must be reset for zero ° using the following procedure.
Failure to do so could result in serious injury or death.

To follow this procedure you need to switch the Ezcal display in the upper Control box into "calibration mode".

1. Place the machine on a firm level surface , ≤ 0.25 °
2. Use a Gauge to confirm that the front and rear of the chassis are level to within +/- 0.25 ° in both directions
3. Switch the machine on and press and hold Esc for 5 Seconds until "Ezlift Menu" is displayed.
4. Scroll to access level.(Enter)
5. Enter code 2222 for access level 2 .(Enter)
6. Scroll to setups.(Enter)
7. Change defaults. (Enter)
8. Select 1= Scissor. (Enter)
9. Scroll to model. (Enter)
10. Select 1 = TM12 (Enter followed by ESC)
11. Scroll to tilt setups . (Enter)
12. Calibrate level. (Enter)
13. Enter for yes.

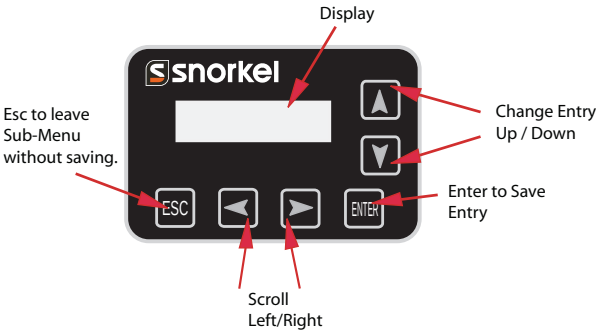

To confirm calibration has worked switch the machine of then back on again.

14. Scroll to Diagnostics. (Enter)
15. System. (Enter)
16. Scroll to tilt, both readings should be below 0.2 ° if not repeat from 5.

4.3 TROUBLESHOOTING TABLES

The next step is to refer to the Troubleshooting charts in Tables.

Refer to Hydraulics Section for detailed Troubleshooting information on the Pump/Motor Controller.

Read and understand the Principles of Operation before commencing any trouble shooting.

WARNING

RISK of SERIOUS INJURY.

Ensure that the work platform is resting on a firm, level surface.

The elevating assembly must be supported by an overhead hoist when troubleshooting and servicing the electrical/hydraulic system.

https://truckmanualshub.com/

4.3 TROUBLESHOOTING GUIDE

TROUBLE	PROBABLE CAUSE	POSSIBLE SOLUTION
All functions inoperable, electric motor does not start.	1. Blown electric motor fuse	Check electric motor fuse. Replace if blown.
	2. Faulty battery charger.	Check the voltage output of the battery charger. If less than 24 VDC, replace battery charger.
	3. Faulty battery(ies).	After completely charging batteries, test each battery. Replace as
	4. Loose or broken battery lead.	Check continuity of all battery and motor leads. Replace if necessary.
	5. Emergency Stop switch(es) failed open.	With emergency stop switch in the ON position, check continuity
All functions inoperable. Electric motor starts when control is actuated.	1. Oil level in hydraulic reservoir is low.	Check hydraulic fluid level, top up as required.
	2. Faulty hydraulic pump.	Check pressure and delivery of the hydraulic pump. Replace if necessary.
Platform will not elevate or elevates slowly.	1. Emergency Lowering valve open.	Close emergency down valve.
	2. Platform overloaded.	Observe maximum load rating. (see Operation section of this manual)
	3. Faulty controller at upper controls.	Check functionality of controller. Replace if faulty.
	4. Battery level low.	Check Battery Voltage. Charge if necessary.
Platform drifts down after being elevated	1. Emergency lowering valve open.	Ensure that emergency lowering valve is completely closed. Replace if necessary.
	2. Leaking piston seals in lift cylinders	Check for leakage at cylinder return line, replace seals if necessary.

https://truckmanualshub.com/

4-6 ELECTRIC

Table 4-1: Electrical Troubleshooting Table

Component / Function	Lower Controls	Upper Controls	Drive Forward	Drive Reverse	High Speed/Creep	Raise Platform	Lower Platform	Steer Left	Steer Right	Depression Mechanism Extend	Depression Mechanism Retract	Brakes	Tilt Alarm	Down Alarm	Battery Charge
Alarm															
Batteries	X	X	X	X	X	X	X	X	X	X	X	X	X	X	
Battery Charger															X
175 AMP Fuse	X	X	X	X	X	X	X	X	X	X	X	X			
EZ230 Controller	X	X	X	X	X	X	X	X	X	X	X	X	X	X	
Motor			X	X	X	X	X	X	X	X	X	X			
Chassis Emergency Stop Switch	X	X	X	X	X	X	X	X	X	X	X	X	X	X	
Chassis Key Switch	X	X	X	X	X	X	X	X	X	X	X	X	X	X	
Platform Emergency Stop Switch	X	X	X	X	X	X	X	X	X	X	X	X	X	X	
Interlock Switch		X	X	X	X	X	X	X	X						
PQ Control Handle		X	X	X		X	X								
Height Limit Switch						X									
Platform Steering Switch								X	X						
Steering Solenoid (right)									X						
Steering Solenoid (left)								X							
Platform Lift Solenoid						X									
Down Solenoid							X								
Reverse Solenoid				X											
Forward Solenoid			X												

https://truckmanualshub.com/

4-7 Hydraulic

Table 4-2: Hydraulic Troubleshooting Table

Component / Function	Lift Platform	Lower Platform	Steer Right	Steer Left	Drive Forward	Drive Reverse	Creep	Depression Mechanism Extend	Depression Mechanism Retract	Brakes
Check Valve								X	X	
Steering Cylinder			X	X						
Lift Cylinder--CYL1	X									
Depression Mechanism Cylinder								X	X	
Brake Cylinder										X
Suction Strainer	X		X	X	X	X	X	X	X	
Return Filter	X		X	X	X	X	X	X	X	
Drive Motors (2)					X	X				
Pump	X		X	X	X	X	X	X	X	
Main Relief Valve	X				X	X	X	X	X	X
Steering Relief Valve			X	X						
Lift Relief Valve	X									
Tank										
Steering Right/Left Valve			X	X						
Lift Valve	X									
Down/Emergency Lowering Valve		X								
Forward/Reverse Valve					X	X				
Counterbalance Valve					X	X	X			X

https://truckmanualshub.com/

5.3 HYDRAULIC SCHEMATIC

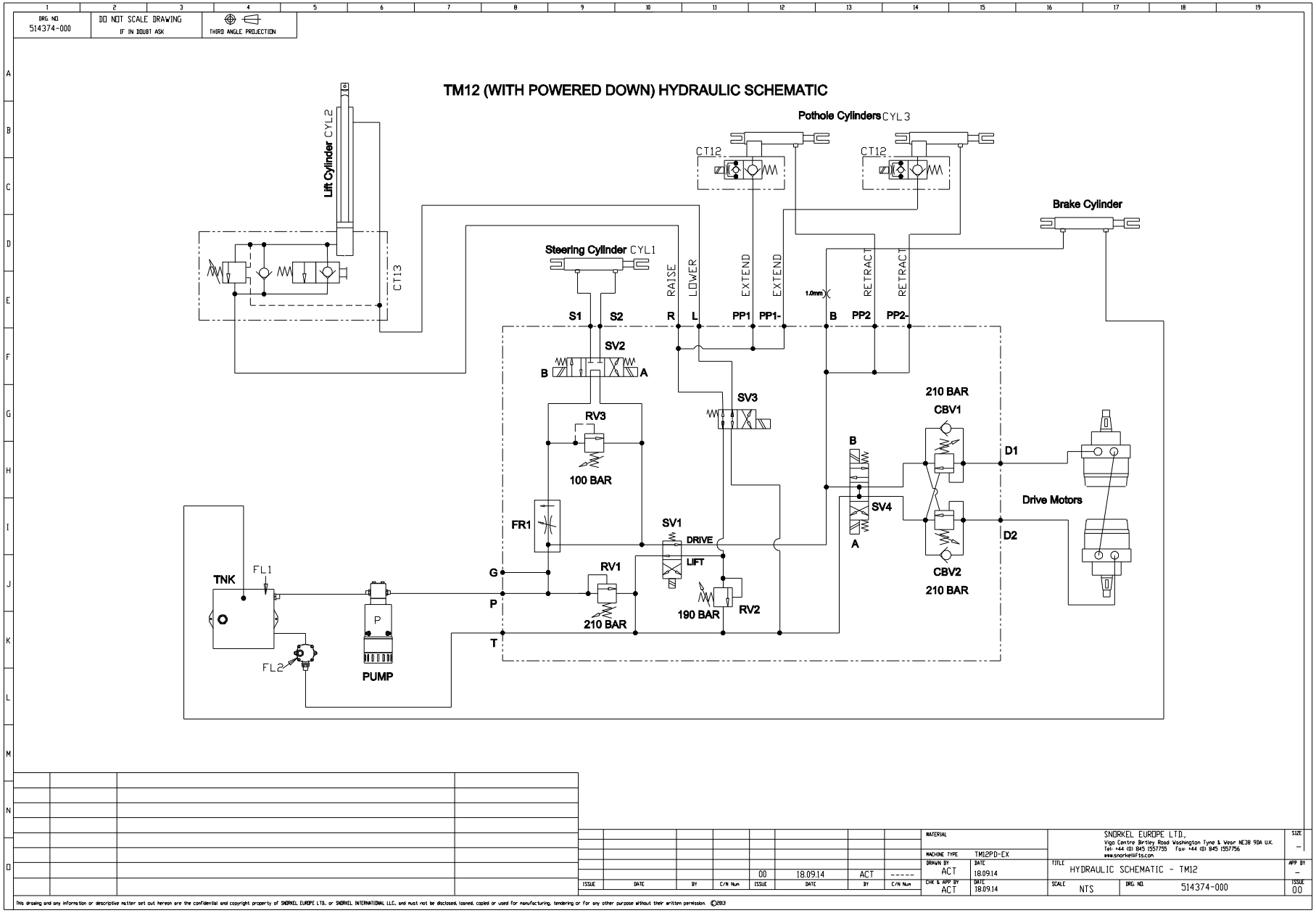

https://truckmanualshub.com/

5.2 ELECTRIC

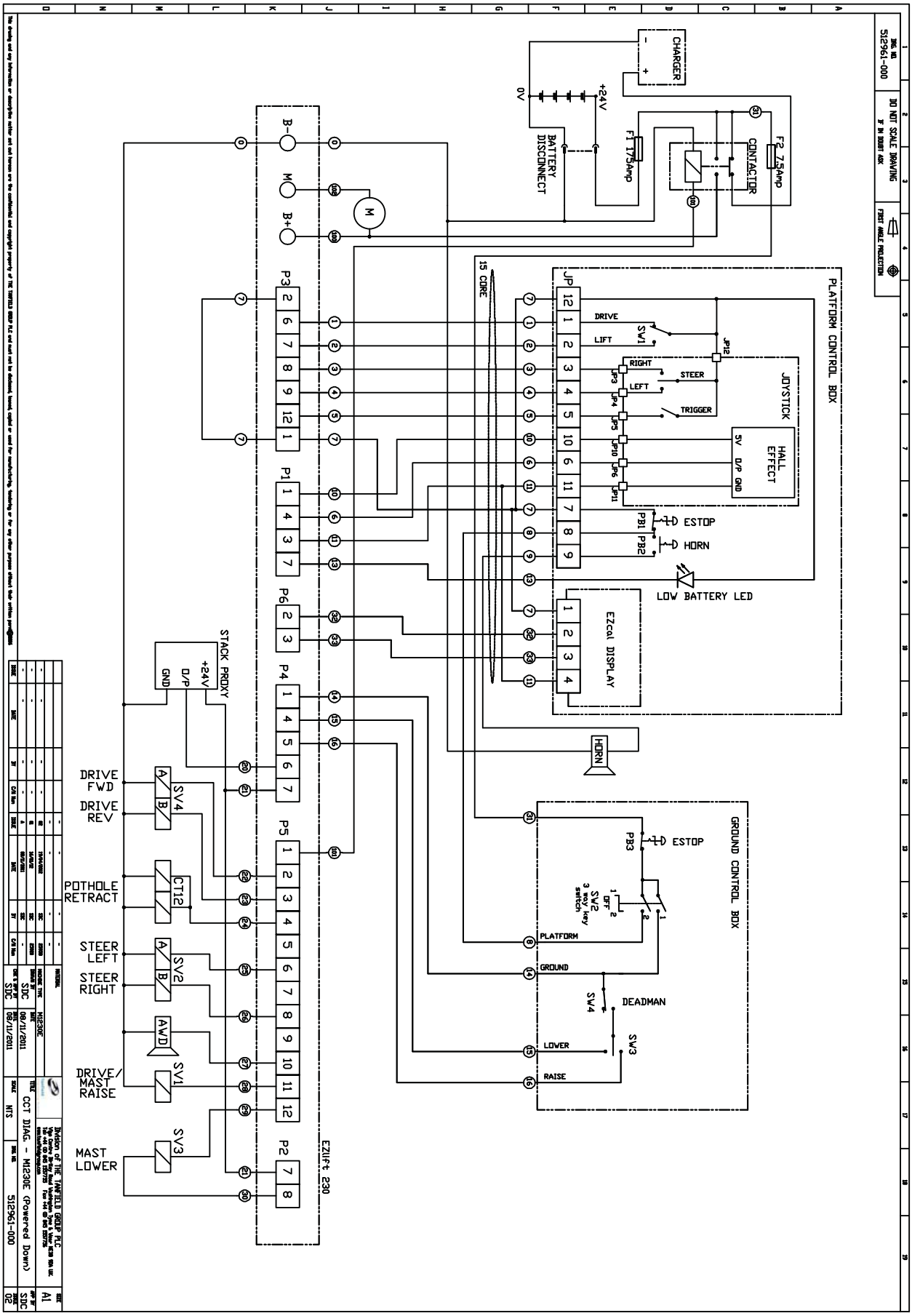

https://truckmanualshub.com/

Appendix A:Pages Index

CHASSIS ASSEMBLY 2-2
CONTACT SNORKEL 1-4
ELECTRIC KIT 2-14
ELECTRICAL SCHEMATICS 4-2
GENERAL ASSEMBLY 2-1
HYDRAULIC ASSEMBLY & HOSE KIT . . 2-8
HYDRAULIC CYLINDER ASSEMBLY
(POTHOLE) TYPE A 2-12
HYDRAULIC CYLINDER ASSEMBLY
(POTHOLE) TYPE B 2-13
HYDRAULIC CYLINDER ASSEMBLY
(STEER - BRAKE) TYPE B 2-11
HYDRAULIC CYLINDER ASSEMBLY (Steer /
Brake) TYPE A 2-10
HYDRAULIC LIFT CYLINDER ASSEMBLY
TYPE A & TYPE B 2-9
HYDRAULIC SCHEMATICS 4-1
HYDRAULIC TANK ASSEMBLY 2-6
INTRODUCTION 1-1
LABEL KIT FRENCH 2-17
LABEL KIT GERMAN 2-16
LABEL KIT, EUROPEAN (ENGLISH) 2-15
LABEL KIT, USA 2-18
LOWER CONTROLS ASSEMBLY 2-5
MAINTENANCE 3-1
MAST ASSEMBLY 2-3
OPERATION & SPECIFICATIONS 1-2
PLATFORM ASSEMBLY 2-4
TROUBLESHOOTING 3-2
UPPER CONTROLS ASSY 2-7
WASTE REMOVAL & DISPOSAL 1-3

https://truckmanualshub.com/

Appendix B:Parts Index

005221-000 2-18
005223-005 2-18
0071927 2-18
009442-003 2-4
010076-001 2-18
010076-901 . . . . . 2-15, 2-16, 2-17
010092-014 2-2
011848-019 . . . . . 2-2, 2-2
011937-001 2-6
014222-003 2-18
014222-903 . . . . . 2-15, 2-16, 2-17
026541-016 2-2
027966-005 . . . . . 2-4, 2-4
056059-065 2-3
056064-012 2-3
056067-508 2-3
056491-016 2-2
057048-000 2-2
057094-002 . . . . . 2-4, 2-4
058502-020 2-3
058502-035 2-3
058534-000 2-18
060197-001 . . . . . 2-15, 2-16, 2-17, 2-18
061220-006 2-18
061817-011 2-2
065445-000 2-2
065450-001 2-3
065465-000 2-2
065469-000 2-2
065472-000 2-2
065474-000 2-2
065517-000 2-2
065518-000 2-2
065532-000 2-2
065536-000 2-2
065543-000 . . . . . 2-4, 2-4
065569-000 2-2
066522-000 2-18
066522-900 . . . . . 2-15, 2-16, 2-17
066550-001 2-18
066554-000 2-18
066555-000 2-18
066556-000 2-18
066556-001 2-18
068635-001 . . . . . 2-15, 2-16, 2-17, 2-18
100102-900 . . . . . 2-15, 2-16, 2-17
101125-001 2-2
101125-010 2-2
101210-000 . . . . . 2-15, 2-16, 2-17
101250-000 2-18
101252-000 2-18
107012-011 2-18
107051-000 2-18
107052-001 . . . . . 2-15, 2-16, 2-17
107082-000 . . . . . 2-3, 2-9, 2-9
107148-000 2-5
107149-010 2-2
107185-000 2-2
107186-000 2-2
107197-000 . . . . . 2-4, 2-4
107400-000 2-5
13437 2-4
13437-1 2-4
13437-2 2-4
13437-3 2-4
13437-4 2-4
13437-5 2-4

https://truckmanualshub.com/

13437-6 2-4
13437-8 2-4
1450029 2-2
15048 2-3
300699 2-18
308772-000 2-18
3087800 2-2
3087801 2-7
3087803 2-7
455 2-5
487686 . . . . . 2-4, 2-4
500509-016 2-2
500532-030 2-3
501453-000 . . . . . 2-15, 2-16, 2-17
501814-000 2-2
502128-000 2-4
502129-000 2-4
502131-000 2-4
502132-001 2-4
502141-000 2-4
502145-000 2-4
502148-000 2-4
502150-000 2-4
502204-002 . . . . . 2-4, 2-4
502204-003 . . . . . 2-4, 2-4
502206-000 . . . . . 2-4, 2-4
502541-002 2-7
503657-000 2-4
503673-000 2-2
503723-000 . . . . . 2-15, 2-16, 2-17
503760-000 2-13
505001-000 2-2
505024-000 2-2
505025-000 2-2
505027-000 2-2
505030-000 2-2
505031-001 2-2
505034-000 2-2
505035-010 2-10
505038-000 . . . . . 2-2, 2-2
505041-000 2-2
505043-000 2-2
505045-000 2-2
505053-000 2-5
505054-000 2-3
505055-000 2-3
505056-000 2-3
505057-000 2-3
505059-000 2-3
505060-000 2-3
505062-000 2-3
505063-000 2-3
505066-000 2-3
505067-000 2-3
505068-000 2-3
505075-000 2-2
505084-013 2-3
508108-000 . . . . . 2-2, 2-2
508771-000 2-18
509413-000 2-2
510230-030 . . . . . 2-3, 2-3
510231-000 2-3
510280-000 . . . . . 2-15, 2-16, 2-17
510428-001 . . . . . 2-7, 2-18
510429-002 2-18
510429-003 2-5
510461-000 2-7
510462-001 2-5

https://truckmanualshub.com/

510463-000 2-2
510521-000 2-5
510522-000 2-5
510524-000 . . . . . 2-5, 2-7
510525-000 . . . . . 2-5, 2-7
510527-000 . . . . . 2-5, 2-7
510528-000 2-7
510541-000 2-7
510542-000 2-7
510570-010 2-2
510645-000 2-7
510683-025 2-2
510815-000 2-2
510816-000 2-2
510892-000 . . . . . 2-9, 2-9, 2-12, 2-12, 2-13, 2-13
510893-000 . . . . . 2-10, 2-10, 2-11, 2-11
510895-000 . . . . . 2-10, 2-11
510895-010 2-11
510931-000 2-2
511093-000 . . . . . 2-15, 2-16, 2-17, 2-18
511155-006 2-3
511156-000 2-7
511163-000 . . . . . 2-4, 2-4
511164-000 . . . . . 2-4, 2-4
512465-000 . . . . . 2-15, 2-16, 2-17
512543-000 2-5
512545-000 2-6
512565-000 2-6
512566-000 2-6
512572-000 . . . . . 2-15, 2-16, 2-17
512575-000 2-6
512577-000 2-6
512637-000 . . . . . 2-9, 2-9
512638-000 . . . . . 2-12, 2-13
512638-010 2-13
512639-000 . . . . . 2-12, 2-13
512794-000 2-12
512795-000 2-10
512876-000 2-3
512879-000 2-3
512880-000 2-3
512881-000 2-3
512882-000 2-3
512883-000 2-3
512885-000 2-3
512886-000 2-3
512887-000 2-3
512888-000 2-3
512888-000 Type A & Type B 2-9
512888-010 2-9
512891-000 . . . . . 2-3, 2-9, 2-9
512892-000 2-3
512893-000 2-3
512894-00 2-3
512895-00 2-3
512896-000 . . . . . 2-2, 2-2
512950-000 2-2
512951-000 2-6
513048 - 000 2-2
513057 - 000 2-2
513077-000 2-9
513159-000 . . . . . 2-3, 2-9, 2-9
513159-001 . . . . . 2-9, 2-9
513222-000 . . . . . 2-4, 2-4
513223-000 2-4
513224-000 2-4
513225-000 2-4
513226-000 2-4

https://truckmanualshub.com/

513227-000 2-4
513228-000 2-4
513251-000 2-4
513252-000 2-4
513259-000 2-4
513286-000 . . . . . 2-3, 2-9, 2-9
513523-000 2-3
513524-000 2-3
513525-000 2-3
513526-000 2-3
513527-065 2-3
513528-012 2-3
513615-000 2-2
513858-000 2-15
513858-002 . . . . . 2-16, 2-17
513859-000 . . . . . 2-15, 2-16, 2-17
513859-100 2-18
514184-850 2-4
514232-101 2-18
514275-000 2-2
514275-001 2-2
514275-002 2-2
514360-000 . . . . . 2-15, 2-16, 2-17, 2-18
514361-000 2-15
514361-002 . . . . . 2-16, 2-17
514362-000 2-6
514746-000 2-2
514747-000 2-2
564136 . . . . . 2-4, 2-4
N/A 2-2
TYPE A 2-9
TYPE B 2-9