https://truckmanualshub.com/

SCANIA

10:05-08

Issue 1 **en**

Scania Retarder

Troubleshooting

Mechanical system and hydraulic system

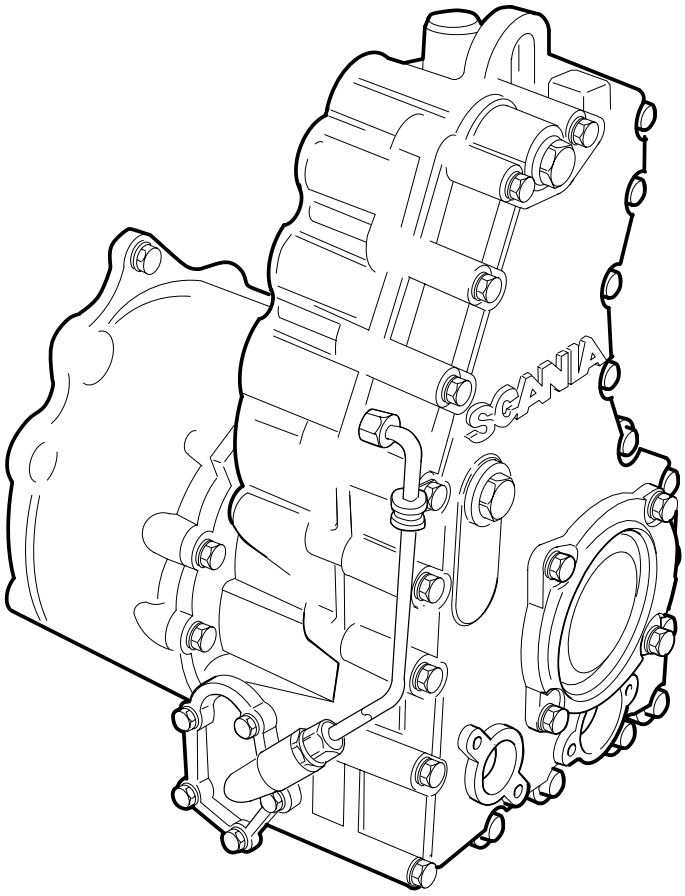

10:2288

1 712 029

© Scania CV AB 1999, Sweden

https://truckmanualshub.com/

Contents

Before starting troubleshooting

General 3
Road test 4
Renewing components 4

Troubleshooting

Poor braking 5
External oil leakage 23
Cover for temporarily blocking the retarder shaft output on the gearbox 27

Test report

Test report for test of proportional valve 28
Test report for test of hydraulic pressure 28
Valve housing and retarder housing 30

© Scania CV AB 1999, Sweden

Retarder

Before starting troubleshooting

General

The same retarder is used in trucks and buses but the installation differs with respect to the location of the oil cooler and accumulator, for example. These troubleshooting instructions apply to trucks and two-axle buses. Three-axle buses are covered where applicable.

This description covers the troubleshooting procedure for the retarder itself. The objective is to determine whether dismantling is necessary or not.

Spot repairs are often sufficient to make the vehicle operable again.

All work on the retarder must be carried out with the most thorough cleanliness possible.

The retarder is extremely sensitive to impurities.

WARNING!

Hot fluid and coolant can cause personal injury. This applies also to spot repairs.

Wiring and similar components are often the cause of a fault rather than the retarder. Therefore, always start by checking for fault codes.

Troubleshooting the entire auxiliary brake system, i.e. with accompanying controls and electrical equipment, is best achieved using SD.

Troubleshooting the auxiliary brake system can also be achieved with the help of the diagnostic lamp marked Retarder on the vehicle's diagnostic panel.

© Scania CV AB 1999, Sweden

https://truckmanualshub.com/

Road test

The following applies when road testing the vehicle to check, for example, whether a spot repair has given the desired result.

1. Drive the vehicle at a speed of at least 60 kph
2. Select a gear so that the engine speed is at least 1500 rpm.
3. Brake with the retarder lever in position 5, max position.

If retarder braking capacity is still insufficient, there is still a fault somewhere. Continue with the troubleshooting as directed.

Renewing components

Use preferably SD for troubleshooting rather than the Workshop Manual in order to avoid renewing components that are not defective.

The following components are often renewed despite them not being defective: hand control assembly, pedal travel sensor and proportional valve.

© Scania CV AB 1999, Sweden

Troubleshooting

Special tools

No.	Description	Illustration	Tool board
99 164	Hose	-	B
99 215	Pressure gauge	-	B
99 362	Measuring set	-	-
99 378	Cover with test outlet	-	-
99 404	T adapter	-	-

Poor braking

Check fault codes and oil level

Checking fault codes

Action

Check for stored fault codes. Use preferably SD; it will then be possible to see how many times each fault code has been registered. Then, repair any faults.

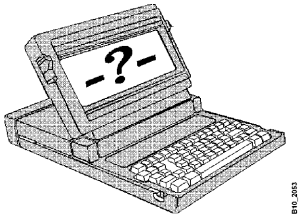

© Scania CV AB 1999, Sweden

https://truckmanualshub.com/

Check the oil level.

Action

Check and adjust the oil level in the retarder. Press the diagnostic switch to empty the oil accumulator. Top up if necessary.

Do not remove the level plug only. The oil accumulator may contain oil and the level check will be unreliable or directly misleading.

IMPORTANT! Empty the oil accumulator with the diagnostic switch before checking the oil level. Otherwise, the oil level will be too high, resulting in foaming and leakage.

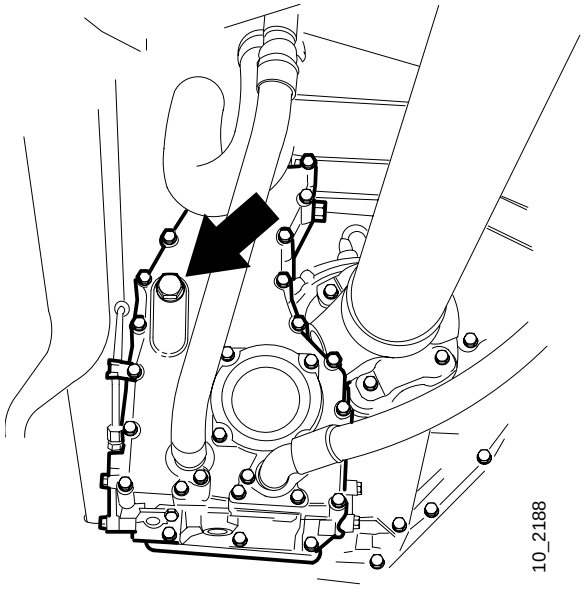

© Scania CV AB 1999, Sweden

Proportional valve

Checking the proportional valve

Action

The proportional valve increases the air pressure, and consequently the oil pressure, after which the operating current increases in strength. This can be checked in two ways; either with or without SD.

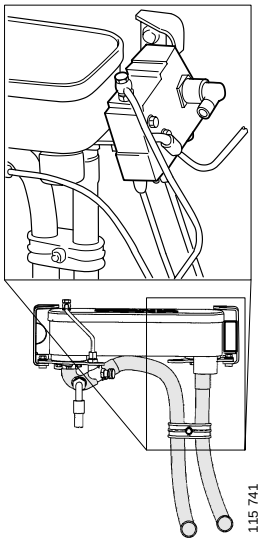

Location of new proportional valve in trucks, introduced from 9908 on trucks and 9910 on buses.

Before checking

- Fit T adapter 99 404 to the compressed air line between the valve block V97 or the proportional valve V76, and the retarder control piston.
- Connect the hose 99 164 and pressure gauge 99 215.

Note: Make sure the pressure gauge has been calibrated. Refer to Main Group 10 Brake system testing for calibrating.

Note: In order to include the hysteresis of the proportional valve, test readings must be taken both when the pressure is rising and when it is falling.

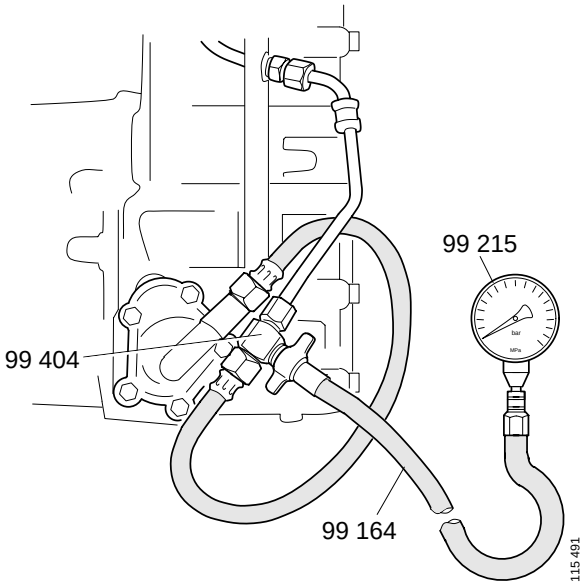

© Scania CV AB 1999, Sweden

https://truckmanualshub.com/

Checking with SD

1. Activate the solenoid valve for feed air and control of the proportional valve. Then, check the air pressure in relation to the current strength.
2. Use the test report, see Test report for test of proportional valve. Activate the proportional valve with 200 mA. The pressure gauge should read 1.6 - 2.0 bar.
3. Increase the activation to 400 mA. The reading should be 5.4 - 6.0 bar.
4. Increase to maximum current. Decrease to 400 mA. The reading should be 5.4 - 6.0 bar.
5. Decrease further to 200 mA. The reading should be 1.6 - 2.0 bar.

Checking without SD (requires two persons)

1. Drive the vehicle at 50 kph and brake with the retarder lever in position 5, max position.
2. Correct air pressure is 5.0 bar or higher.

If the value is incorrect

- Check the compensation setting of the proportional valve in Scania Programmer. It may be set incorrectly.

© Scania CV AB 1999, Sweden

If the air pressure stated above is not obtained

- Make sure that at least 6 bar is reaching the proportional valve. Use pressure gauge 99 215, hose 99 164, union 1 319 272 and an 8 mm adapter hose.
- Make the adapter from a 0.5 metre long piece of 8 mm hose. The adapter hose is to be fitted with sleeve 814 809, ferrule 813 221 and nut 812 888 on both ends. These will then fit to union 1 319 272.
- Fit the adapter to hose 99 164 and connect pressure gauge 99 215. Take a reading at the distributor piece that supplies the proportional valve with compressed air.
- If there is no pressure, the fault may be in the solenoid valve for the compressed air supply, ON/OFF valve.

Note: A minor and controlled air leakage from the proportional valve vent is normal. A hissing noise, therefore, does not indicate a fault.

If oil appears from the proportional valve vent, check the sealing rings for the control piston and the safety valve. Clean also the proportional valve filter.

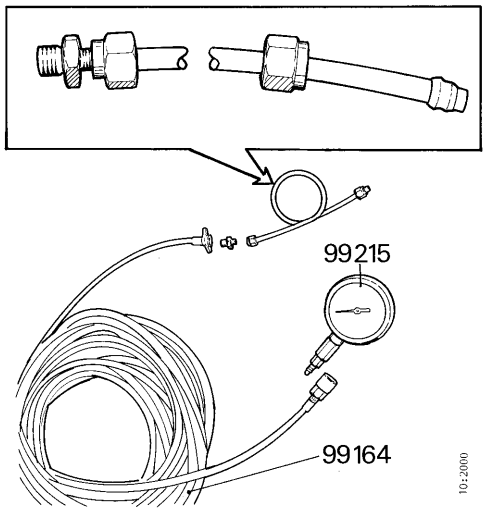

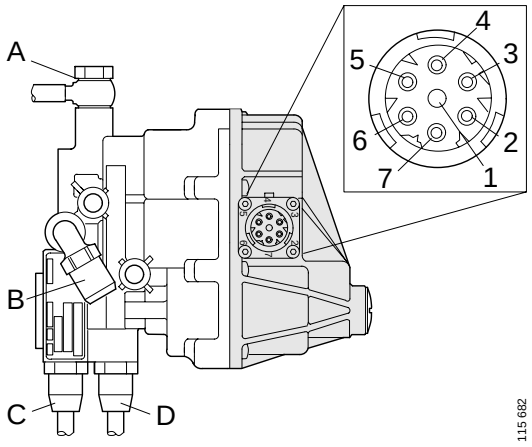

Valve block V97 with integrated proportional valve. The new valve block requires a higher pilot frequency, 360 Hz, which is obtained from control units manufactured from 9902.

1 Pin for proportional valve (+)
2 Pin for proportional valve (-)
3 Pin for solenoid valve for compressed air supply
4 Pin for earth
5 Pin for solenoid valve for oil accumulator
6 Pin for earth
A Air connection to oil accumulator
B Air supply
C Air connection to retarder
D Venting

© Scania CV AB 1999, Sweden

https://truckmanualshub.com/

Reasons for improvements introduced on the old proportional valve.

Impurities entering the valve

Action

The proportional valve on trucks has occasionally broken due to impurities entering. A new exchangeable valve with integrated air filter has been introduced in production from chassis number SS1238870, SN4391326, SA9031574 and SLA3503385.

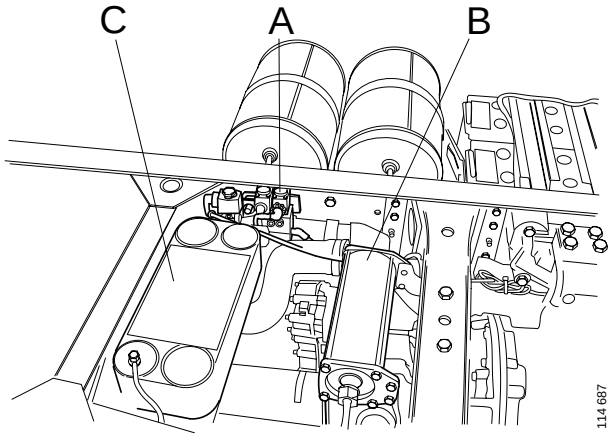

A. Location of proportional valve

Air leakage due to defective check valve

Action

There have been occurrences of air leakage from the proportional valve vent on trucks and buses. This is due to a defective rubber check valve.

The fault is easiest to locate in SD. The ON/OFF valve must be activated. If air leaks through the vent 4, the check valve is probably defective.

The proportional valve support sleeve has been modified and was introduced in production from chassis number SS1246832, SN4405293 and SA9038846.

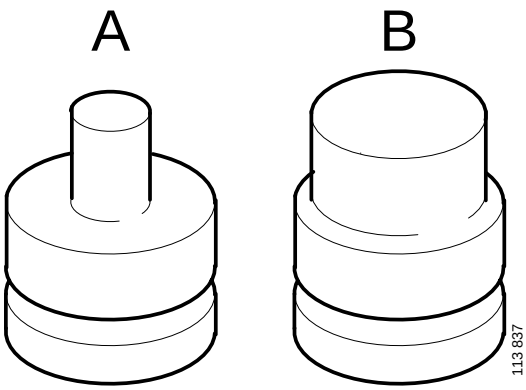

A. Old version of support sleeve.

B. New version of support sleeve.

© Scania CV AB 1999, Sweden

The check valve and support sleeve can be renewed to rectify a possible air leak.

Work Description

1 Remove the proportional valve.

2 Plug outlet A1/A2.

3 Clean the opening around the support sleeve 2.

4 Detach the retaining ring 3.

5 Connect the ON/OFF valve to 24 V.

6 Push out the support sleeve 2 and the check valve 1 by carefully adding compressed air to the supply P.

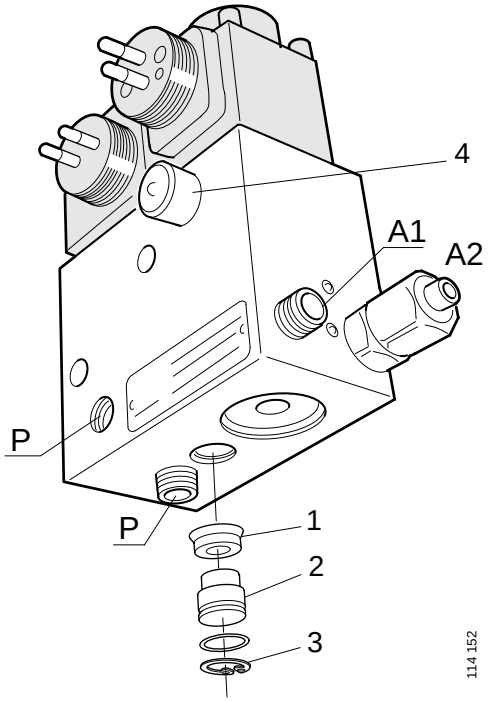

WARNING!

The support sleeve may come off with great force. Cover the support sleeve with a cloth.

7 Fit the new parts.

Note: Hold the check valve as illustrated and lubricate it with the grease included with the repair kit.

8 Refit the proportional valve.

© Scania CV AB 1999, Sweden

https://truckmanualshub.com/

Air leak due to sealing rings

Action

There have been occurrences of oil leakage from the proportional valve vent on trucks and buses. The oil comes primarily from the safety valve in which there is a leaking sealing ring. Leakage via the sealing ring on the control piston has also occurred. This leakage has occurred especially when parking in low outdoor temperatures.

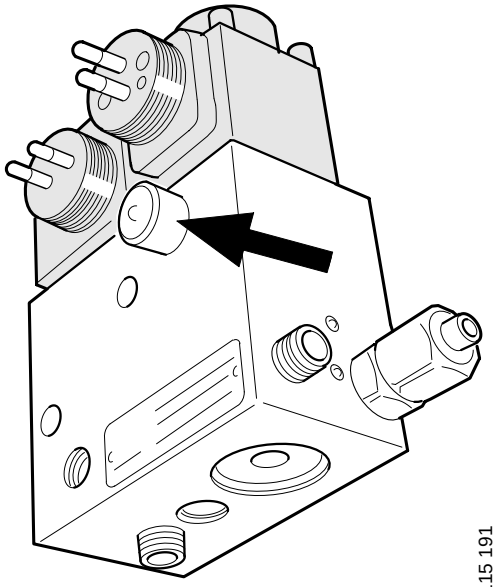

A new safety valve with double sealing rings has been introduced in production from chassis number SS1251239, SN4414949, SA9043610 and SBK 1835768.

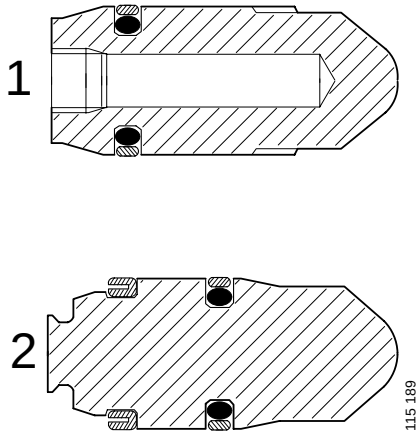

1 Old safety valve

2 New safety valve

© Scania CV AB 1999, Sweden

Uneven braking

Measuring hydraulic pressure

Action

Uneven retarder braking with abrupt engagement can be caused by the control piston sticking, e.g. due to metal shavings in the oil. In this case, it is advisable to test the hydraulic pressure during retarder braking with the retarder lever S43 in different positions.

IMPORTANT! Two people are required for this measure as the retarder quickly heats up.

- One person must be in the cab to activate the retarder, maintain engine speed and monitor the increase in temperature.
- One person must be outside the cab to take pressure readings and enter them into the report.

Hydraulic pressure measurement

1 Always disconnect the propeller shaft from the gearbox. Place the propeller shaft on a support, e.g. axle stands.

IMPORTANT! Do not allow the propeller shaft to rest on the retarder oil hoses.

Make sure there is sufficient free space between the drivers on the gearbox and the propeller shaft.

2 Replace the cover on the oil side of the control valve with a cover with test outlet, 99 378. Carefully pass the control piston spring over the nipple inside the cover. Leave the shims inside the spring.

3 Connect a multimeter and adapter to the nipple on the cover. The adapter is included in measuring set 99 362. This is where to measure the oil pressure obtained when using the retarder lever for activation.

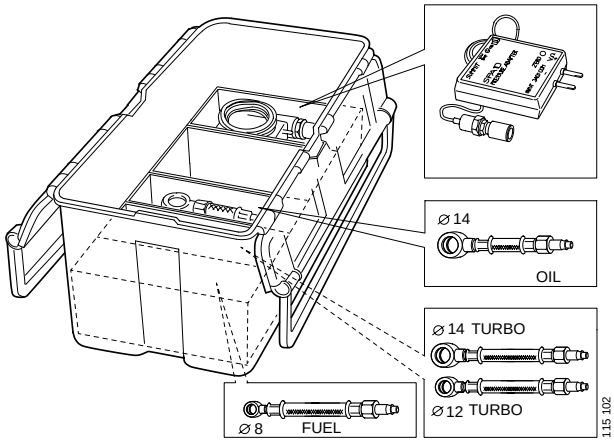

Measuring set 99 362

© Scania CV AB 1999, Sweden

https://truckmanualshub.com/

4 Fit T adapter 99 404 to the compressed air line between the valve block V97 or the proportional valve V76, and the retarder control piston.

5 Connect the hose 99 164 and pressure gauge 99 215. This is where to measure the air pressure obtained when using the retarder lever for activation.

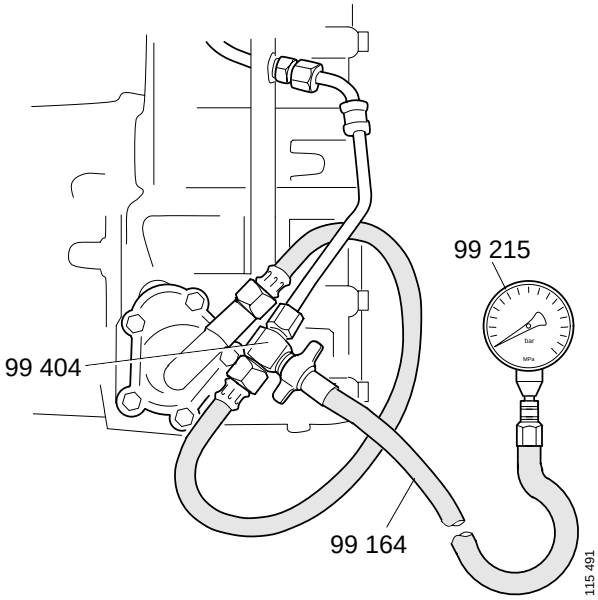

Note: Make sure the pressure gauge has been calibrated. Refer to Main Group 10 Brake system testing for calibrating.

6 Check the retarder oil level. Press the diagnostic switch to empty the oil accumulator. Top up if necessary.

7 Connect VCI and a PC.

8 Turn on the multimeter with adapter. Set it to measure DC voltage. Zero with the adapter adjusting screw.

9 Go to SD2/Auxiliary brake system/Read-Activate/Input signals 3. The following reading should be obtained during the test:

Propeller shaft speed 700 +/- 50 rpm

Temperature from retarder sensor. Should be 65 - 90 °C. Compare with the brake torque test in SD2 where the engine coolant temperature is measured.

© Scania CV AB 1999, Sweden

10 Prepare the test report, see Test report for test of hydraulic pressure.

IMPORTANT! Since the retarder temperature will increase rapidly, it is essential to take readings and fill in the report quickly. The system will decrease the retarder braking if the temperature exceeds 95 °C. In this case, disengage the retarder and allow the temperature to drop to 80 °C before turning off the engine.

11 Turn of the exhaust brake switch S17 on the instrument panel.

12 Start the engine. Engage the correct gear.

GRS890R/900R, gear 8 (4H), ratio 2.44

GR900R, gear 5, ratio 2.69

GR801R, gear 5, ratio 2.44

13 Rev up the engine and brake using the retarder lever to heat up the oil. Keep the brake applied until 65 °C is shown on both temperature sensors in SD2. The test results will be incorrect if the test is started at temperatures below 65 °C.

14 Activate the retarder with the lever in various positions. Make a note of the air and hydraulic pressures in the report.

Note: Stop the test if the temperature exceeds 90 °C. Keep the engine running until the temperature has dropped to 80 °C.

15 Evaluation: The test values should form a smooth line within the grey zone.

An uneven curve and erratic values will probably be caused by a sticking control valve. Change oil and renew filter. Clean the control piston and its barrel in the housing.

If several test values are below the grey zone, the number of shims under the control piston spring may be incorrect.

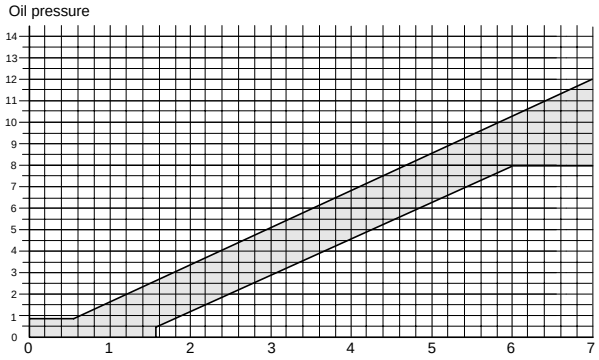

Lever position	0	1	2	3	4	5
Air pressure						
Oil pressure						

© Scania CV AB 1999, Sweden

https://truckmanualshub.com/

Braking force too low

Brake torque test

Action

If there are complaints about poor retarder braking, the brake torque can be tested with SD2. This test can only be carried out on vehicles equipped with EDC. SD2 calculates the retarder brake torque based on the amount of fuel injected into the engine. Consequently, the test will only give a true result provided the engine is in good condition and the fuel system is adjusted correctly.

IMPORTANT! The brake torque test must not be confused with the hydraulic pressure test.

- **The brake torque test** is used to check the maximum braking capacity of the retarder.
- **The hydraulic pressure test** is used to check that the increase in braking force of the retarder increases smoothly in the various lever positions.

The brake torque test is self-instructive in SD2. Just follow the steps described to quickly carry out the test. The steps that need to be taken before and after the test are described below.

1. Connect VCI and a PC. Check SD2 to see if there are any fault codes stored in the retarder or EDC. Any fault codes that are present must be rectified and cleared in order to perform the brake torque test.
2. Adjust the idling speed down to 500 rpm.
3. Disconnect the propeller shaft from the gearbox. Place the propeller shaft on a support, e.g. axle stands. Alternatively, remove the drive shafts.

IMPORTANT! Do not allow the propeller shaft to rest on the retarder oil hoses.

Make sure the distance between the gearbox driver and the propeller shaft is sufficient for them not to touch each other.

4. Check the retarder oil level. Press the diagnostic switch to empty the oil accumulator. Top up if necessary.

© Scania CV AB 1999, Sweden

5 Go to SD2/Auxiliary brake system/Scania Retarder/Read-Activate/Brake torque test.

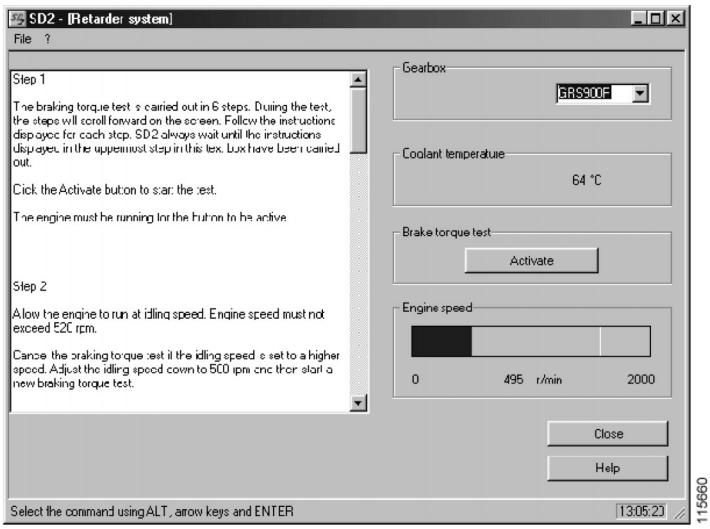

Illustration from SD2 before starting the brake torque test.

6 Follow the instructions in the SD2 window. After one action has been completed the next will be displayed at the top of the text box. Certain conditions apply before the test can be started, e.g. any faults in EDC and the auxiliary brake system must be rectified and all the fault codes cleared before the test can be started.

7 After clicking the brake torque test Activate button, the button will remain inactive until the window is closed. To repeat the test, the window must be closed and then opened again.

© Scania CV AB 1999, Sweden

https://truckmanualshub.com/

8 It is important that the temperature is within the limits specified in SD2 while the test is in progress. Stop the test if the temperature exceeds the upper limit. Allow the engine to idle so that the retarder and engine can cool down and the temperature can stabilise.

If the temperature is still too high to attempt another test, turn off the engine and wait until it has cooled down.

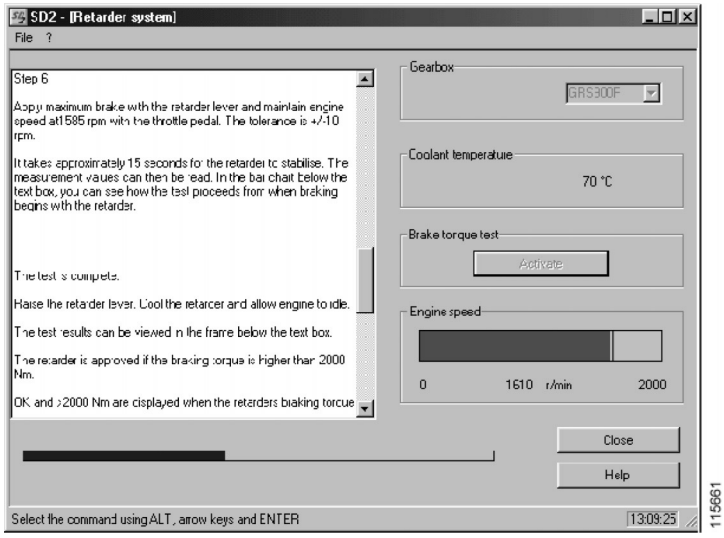

Illustration from SD2 when the test is in progress, i.e. maximum braking with the retarder. The time bar under the text box is successively filled. The engine speed bar goes red when the "ideal point" has been exceeded. It is essential that the engine speed is kept within +/- 10 rpm.

© Scania CV AB 1999, Sweden

9 The test result shows "OK (>2000 Nm)" if it is approved. If the retarder torque is below 2000 Nm, "LOW" will be displayed together with the current brake torque.

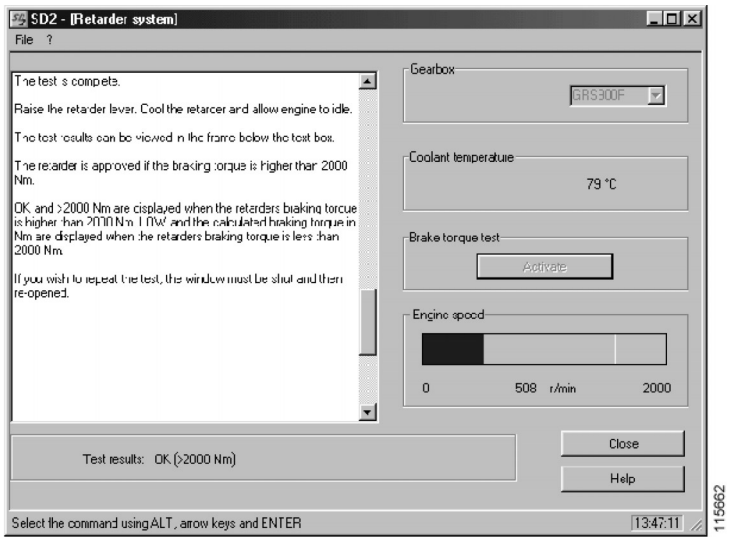

Illustration from SD2 after a test result has been approved.

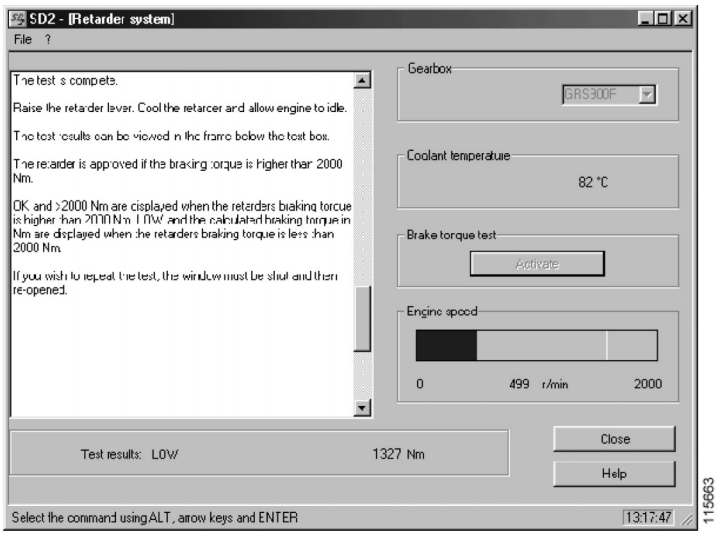

Illustration from SD2 after a test result has failed.

© Scania CV AB 1999, Sweden

https://truckmanualshub.com/

Checking components

Check the accumulator

Action

Check whether oil is appearing from the vent hole on the accumulator solenoid valve V75. If this is the case, the accumulator must be reconditioned or renewed.

The piston assembly must be renewed if there is a leak.

Before fitting the new piston, the cylinder must be thoroughly clean and free from damage, e.g. scores, burrs or ovality.

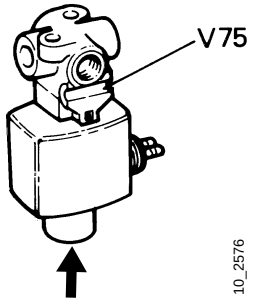

Check the valve block

Action

The checks described above for the proportional valve and accumulator are carried out on the valve block V97 in the same way as for the separate components. The difference being that if oil is leaking from the valve block vent, it is probably coming from the proportional valve or the accumulator solenoid valve.

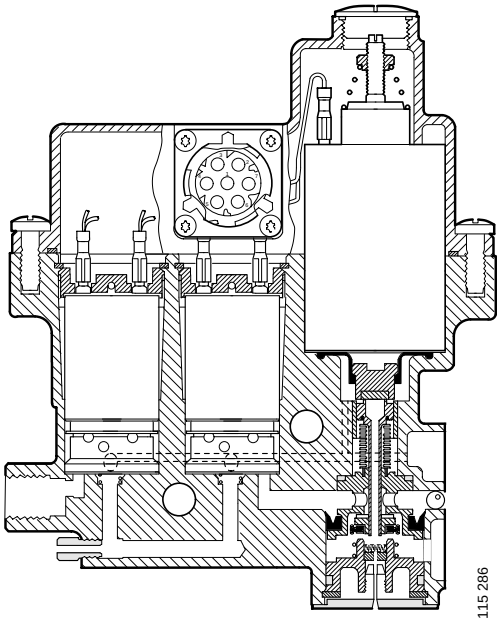

© Scania CV AB 1999, Sweden

Check the control piston

Action

Clean the outside of the retarder thoroughly and then drain the oil.

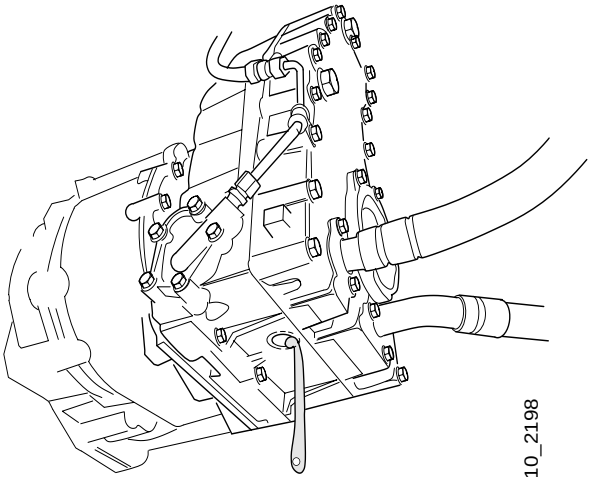

WARNING!

Beware of hot oil! Hot oil can cause personal injury. Wear protective gloves and goggles.

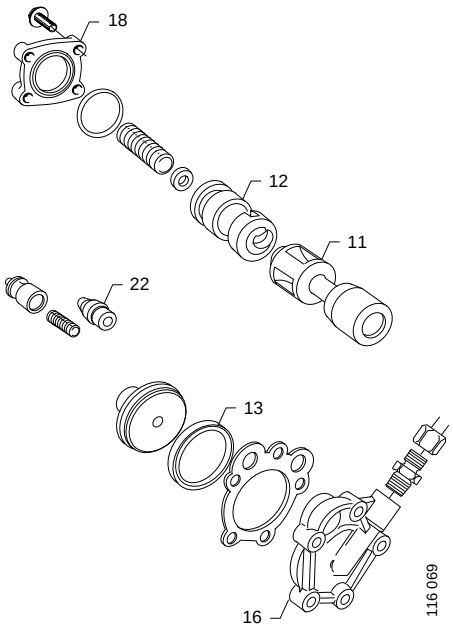

1 Remove the valve housing cover 16 where the compressed air enters the retarder.

2 Screw an M8 bolt into the valve plunger 10 and pull out the plunger.

Note: Do not press in the valve plunger. This will risk damaging the plunger ring 13 on sharp edges in the housing.

3 Remove the valve housing cover 18 on the other end.

4 Check that plungers 11 and 12 slide easily in their barrels, approx. 20 mm back and forth.

5 Check that the piston ring 13 is clean and in good condition.

IMPORTANT! It is important when refitting that plungers 11 and 12, and the valve housing cover 18 are fitted before the valve plunger 10. This will reduce the risk of damaging the ring 13 if the valve plunger 10 is pressed in too far.

© Scania CV AB 1999, Sweden

https://truckmanualshub.com/

Check the safety valve

Action

Check the safety valve 22. Pores must not be present in the O-ring groove. If the O-ring is damaged, it must be renewed.

Check the oil filter

Action

Remove the oil filter and check for blockages.

If the above steps do not reveal a fault, the retarder itself probably has an internal defect. In this case, remove the retarder and recondition it or fit an exchange unit.

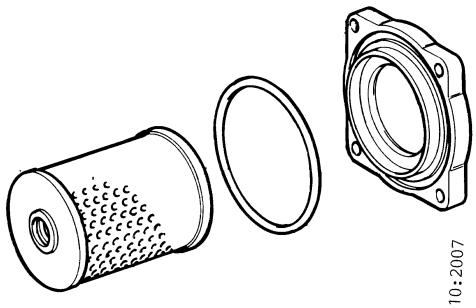

Critical components

Summary

Certain components must be checked especially thoroughly during spot repairs or reconditioning. Retarder braking capacity may be reduced if any of the following components are defective, if not for any other reason then because all the oil will eventually leak out.

Components shown in Valve housing

- Ring 13
- O-ring 19
- O-rings 1
- O-rings 26
- Safety valve 22

Components shown in Retarder housing

- Sealing rings 47
- O-ring 50
- Sealing ring of piston ring type 51
- O-rings 57

© Scania CV AB 1999, Sweden

External oil leakage

Impurities entering the retarder will shorten its service life. Therefore, clean the outside of the retarder thoroughly before detaching hoses, covers and similar parts.

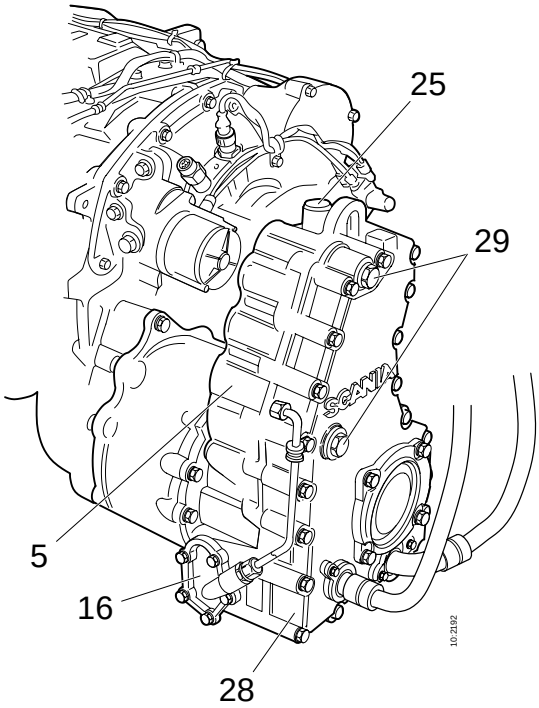

The numbers in the text refer to the illustrations under the headings Valve housing and Retarder housing.

5 Valve housing

16 Valve housing cover

25 Air filter

28 Oil sump cover

29 Plug

Checks for external oil leakage

Check the air filter 25

Action

Check whether the oil level is too high. If there is water in the oil, the retarder oil cooler is defective.

An improved air filter has been introduced to prevent oil leakage. The filter was introduced in production from chassis number SS1219748, SN4360756, SA9015143.

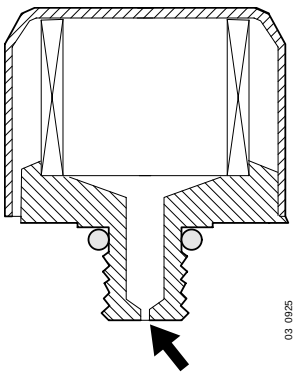

New air filter with restriction.

© Scania CV AB 1999, Sweden

https://truckmanualshub.com/

Check the drain plug 8

Action

Drain the oil and renew O-ring 9.

Check plugs 29

Action

Renew the respective O-rings 30. Check the oil level afterwards and top up if necessary.

Check the valve housing cover 18

Action

Drain the oil and renew O-ring 19.

Check the valve housing cover 16

Action

Drain the oil and renew ring 13 on the control piston and safety valve 22. Then, renew the gasket 17 on the cover.

Check the oil filter cover 33

Action

Drain the oil and renew O-ring 35.

Check between the oil sump cover 28 and the valve housing 5

Result

Leakage

Action

Dismantle the retarder and renew gasket 27. Check the two O-rings 26.

Note: Braking capacity will be reduced if there is a leak.

Check for a leak between the valve housing 5 and the end closure of the retarder 58.

Action

Dismantle the retarder and renew gasket 4. Seal between the studs and nuts with sealant 561 019. Check the two O-rings 1.

© Scania CV AB 1999, Sweden

Check for a leak between the end closure of the retarder 58 and the retarder housing 41

Action

Dismantle the retarder and renew O-ring 60. Check the two O-rings 49.

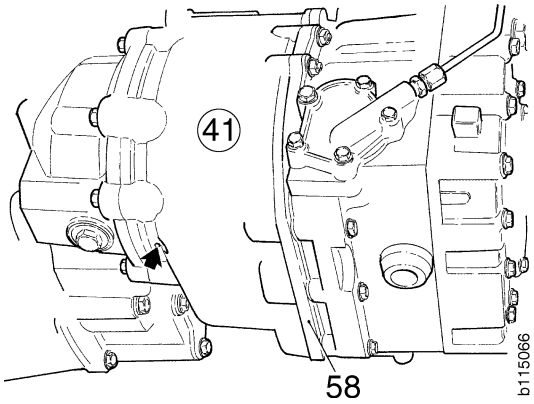

41 Retarder housing

58 Retarder end closure

Check for a leak between the retarder housing 41 and the gearbox

Action

Remove the retarder and renew the two O-rings 43 and 48.

Check the overflow opening at the base of the retarder housing.

Action

Dismantle the retarder and renew the sealing rings 47. Check their contact surfaces against the shaft, O-ring 50 and sealing ring 51 of piston ring type.

Tip: If gearbox oil is leaking from the opening, then sealing ring 47 closest to the gearbox is defective. If not, the retarder oil is leaking past the sealing ring 47 on the retarder side.

© Scania CV AB 1999, Sweden

© Scania CV AB 1999, Sweden

Cover for temporarily blocking the retarder shaft output on the gearbox

The vehicle can still be used when the retarder has been removed for reconditioning.

In this case, block the opening in the gearbox with the cover 1 304 917 and gasket 1 305 142. The gasket must be fitted with silicone.

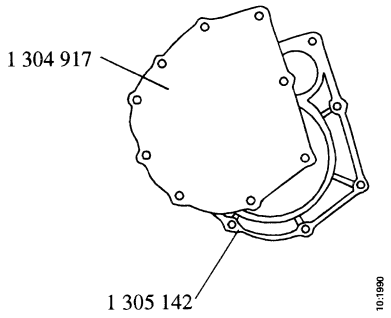

IMPORTANT! The retarder will be damaged by any impurities that enter the oil cooler or its hoses.

Detach the oil hoses from the retarder. Use two plastic plugs[1] with inside diameter 39 mm to block the ends of the hoses.

Fault codes will be generated when the vehicle is driven without the retarder. This is completely normal. Clear these codes when the retarder has been refitted and carry out a road test.

Finally, make sure no fault codes have been generated during the road test.

1. Not included in Scania's range of products; plugs must be purchased locally.

© Scania CV AB 1999, Sweden

https://truckmanualshub.com/

Test report

Test report for test of proportional valve

Current (mA)	Air pressure, correct (bar)	Air pressure reading
200	1.6 - 2.0	
400	5.4 - 6.0	
400	5.4 - 6.0	
200	1.6 - 2.0	

Test report for test of hydraulic pressure

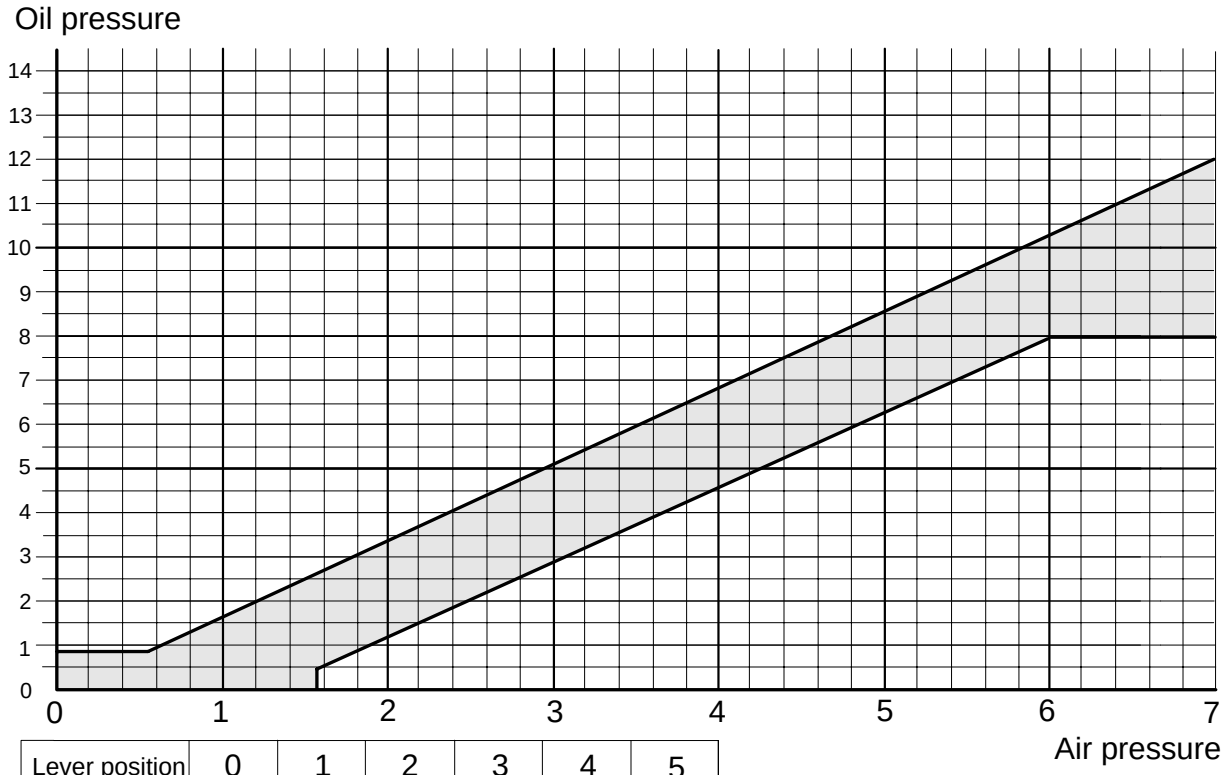

Lever position	0	1	2	3	4	5
Air pressure						
Oil pressure						

© Scania CV AB 1999, Sweden

© Scania CV AB 1999, Sweden

Valve housing and retarder housing

1 O-ring
2 Spacing sleeve
3 O-ring
4 Gasket plate
5 Valve housing
6 Drain pipe
7 Flange screw
8 Drain plug
9 O-ring
10 Valve plunger
11 Piston
12 Piston
13 Ring
14 Shim
15 Compression spring
16 Valve housing cover
17 Gasket
18 Valve housing cover
19 O-ring
20 Flange screw
22 Safety valve
23 Valve plunger
24 Compression spring
25 Air filter
26 O-ring
27 Gasket
28 Oil sump cover
29 Plug
30 O-ring
31 Flange screw
32 Oil filter
33 Filter cover
34 Flange screw
35 O-ring
36 Flange screw
37 Bolt
38 Bolt
39 Washer
40 Union
B Union nut with cone

© Scania CV AB 1999, Sweden

Valve housing

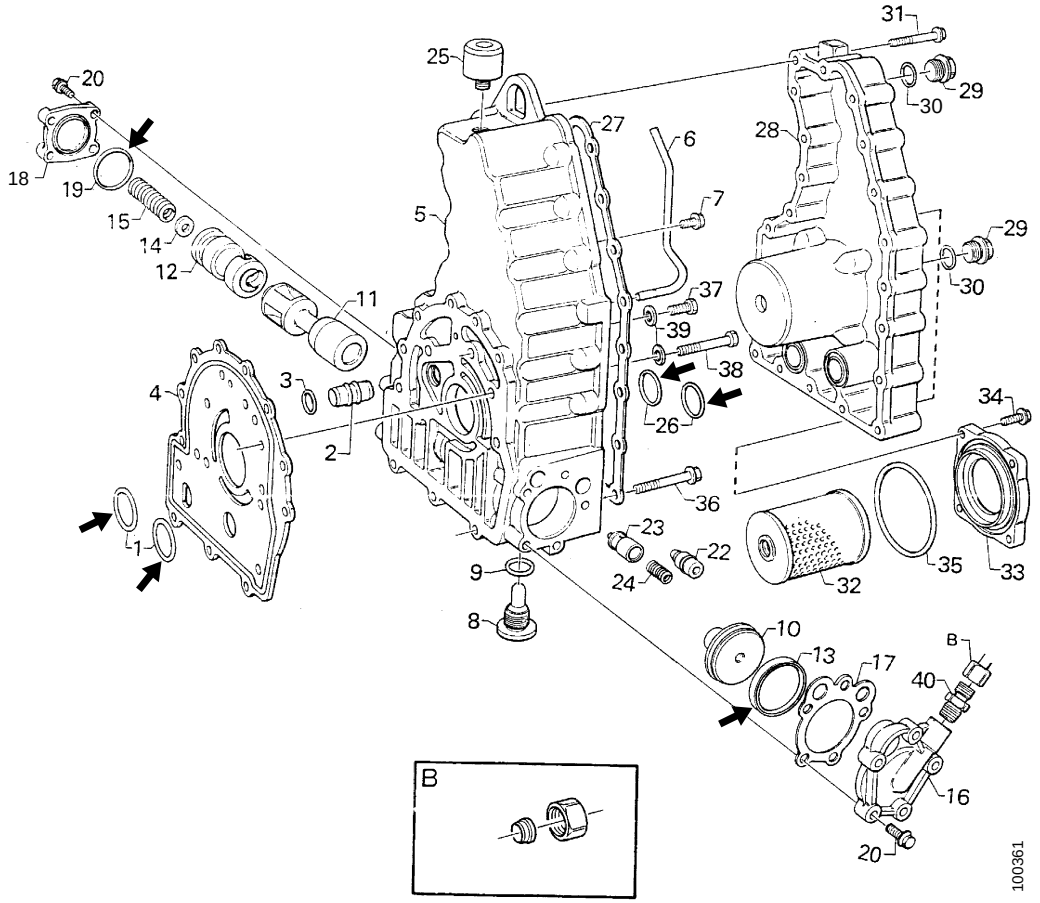

Components indicated with arrows must be in perfect condition or the retarder braking capacity will be reduced.

© Scania CV AB 1999, Sweden

41 Retarder housing
42Plug
43 O-ring
44 Shaft
45 Flange screw
46 Roller bearing
47 Sealing ring
48 O-ring
49 O-ring
50 O-ring
51 Sealing ring of piston ring type
52 Stator, inner
53 Hexagon socket screw
54 Rotor
55 Retaining ring
56 Stator, outer
57 O-ring
58 Retarder end closure
59 Plug
60 O-ring
61 Stud
62 Stud
63 Flange nut
64 Spacing ring 6.00 or 6.05 mm
65 Shim 0.3 / 0.4 / 0.5 mm
66 Roller bearing
67 Lock nut
68 Oil pump impeller, outer
69 Oil pump impeller, inner
70 Driver
71 Retaining ring
72 Ball
73 O-ring

© Scania CV AB 1999, Sweden

Retarder housing

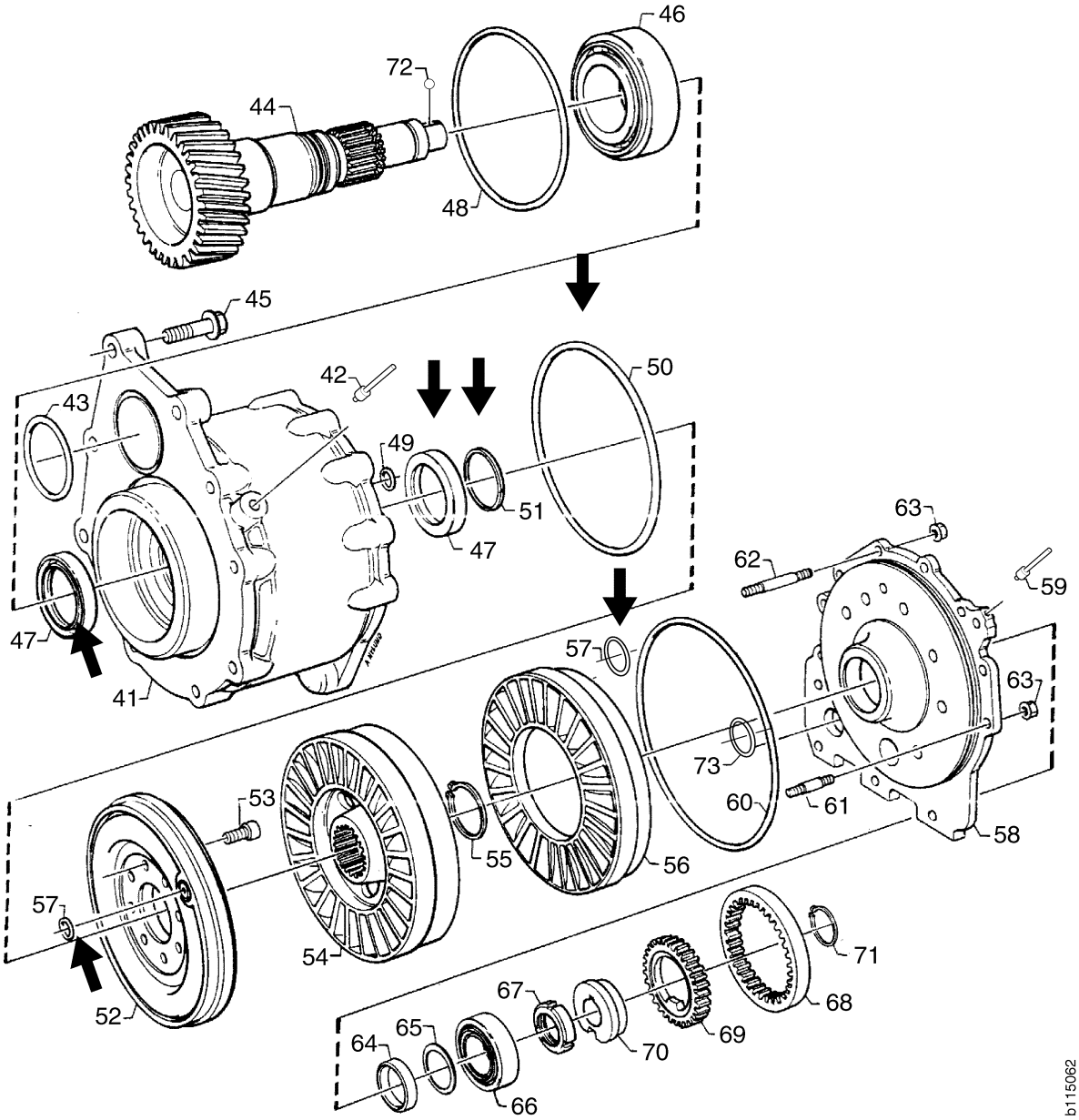

Components indicated with arrows must be in perfect condition or the retarder braking capacity will be reduced.

© Scania CV AB 1999, Sweden