https://truckmanualshub.com/

Kubota

U.S.A. : **KUBOTA TRACTOR CORPORATION**
3401 Del Amo Blvd., Torrance, CA 90503, U.S.A.
Telephone : (310)370-3370
Western Division : 1175 S. Guild Avc., Lodi, CA 95240
Telephone : (209)334-9910
Central Division : 14855 FAA Blvd., Fort Worth, TX 76155
Telephone : (817)571-0900
Northern Division : 6300 at One Kubota Way, Groveport, OH 43125
Telephone : (614)835-1100
Southeast Division : 1025 Northbrook Parkway, Suwanee, GA 30024
Telephone : (770)995-8855

Canada : **KUBOTA CANADA LTD.**
5900 14th Avenue, Markham, Ontario, L3S 4K4, Canada
Telephone : (905)294-7477

France : **KUBOTA EUROPE S.A.S**
19-25, Rue Jules Vercruysse, Z.I. BP88, 95101 Argenteuil Cedex, France
Telephone : (33)1-3426-3434

Italy : **KUBOTA EUROPE S.A.S Italy Branch**
Via Grandi, 29 20068 Peschiera Borrome (MI) Italy
Telephone : (39)02-51650377

Germany : **KUBOTA (DEUTSCHLAND) GmbH**
Senefelder Str. 3-5 63110 Rodgau /Nieder-Roden, Germany
Telephone : (49)6106-873-0

U.K. : **KUBOTA (U.K.) LTD.**
Dormer Road, Thame, Oxfordshire, OX9 3UN, U.K.
Telephone : (44)1844-214500

Spain : **KUBOTA ESPAÑA S.A.**
Avenida Recomba No.5, Poligno Industrial la Laguna, Leganes, 28914 (Madrid) Spain
Telephone : (34)91-508-6442

Australia : **KUBOTA TRACTOR AUSTRALIA PTY LTD.**
25-29 Permas Way, Truganina, VIC 3029, Australia
Telephone : (61)-3-9394-4400

Malaysia : **SIME KUBOTA SDN. BHD.**
No.3 Jalan Sepadu 25/123 Taman Perindustrian Axis,
Seksyen 25, 40400 Shah Alam, Selangor Darul Ehsan Malaysia
Telephone : (60)3-736-1388

Philippines : **KUBOTA PHILIPPINES, INC.**
232 Quirino Highway, Baesa, Quezon City 1106, Philippines
Telephone : (63)2-422-3500

Taiwan : **SHIN TAIWAN AGRICULTURAL MACHINERY CO., LTD.**
16, Fengping 2nd Rd, Taliao Shiang Kaohsiung 83107, Taiwan R.O.C.
Telephone : (886)7-702-2333

Indonesia : **PT KUBOTA MACHINERY INDONESIA**
Tower A at EightyEight@Kasablanka Lantai 16
Jalan Raya Casablanka Kav. 88, Jakarta 12870 Indonesia
Telephone : (62)-21-29568-720

Thailand : **SIAM KUBOTA CORPORATION CO., LTD.**
101/19-24 Moo 20, Navanakorn Industrial Estate, Tambon Khlongnueng, Amphur Khlongluang,
Pathumthani 12120, THAILAND
Telephone : (66)2-909-0300

Korea : **KUBOTA KOREA CO., LTD.**
41-27, Jayumuyeok-gil, Baeksan-myeon, Gimje-si, Jeollabuk-do, Korea
Telephone : (82)-63-544-5822

India : **KUBOTA AGRICULTURAL MACHINERY INDIA PVT. LTD.**
No.15, Medavakkam Road, Sholinganallur, Chennai-600119, T.N., India
Telephone : (91)44-6104-1500

Vietnam : **KUBOTA VIETNAM CO., LTD.**
Lot B-3A2-CN, My Phuoc 3 Industrial Park, Ben Cat District, Binh Duong Province, Vietnam
Telephone : (84)-650-3577-507

KUBOTA Corporation

English (U.S.A.)
Code No. TC550-1971-1

L2501

OPERATOR'S MANUAL

KUBOTA TRACTOR

MODEL L2501

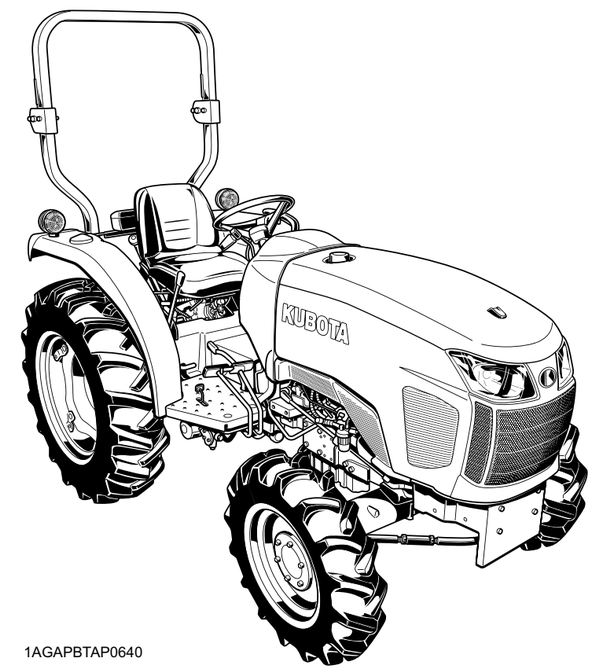

1AGAPBTAP0640

READ AND SAVE THIS MANUAL

PRINTED IN JAPAN

© KUBOTA Corporation 2014

Kubota

https://truckmanualshub.com/

ABBREVIATION LIST

Abbreviations	Definitions
2WD	2-Wheel Drive
4WD	4-Wheel Drive
API	American Petroleum Institute
ASABE	American Society of Agricultural and Biological Engineers, USA
ASTM	American Society of Testing and Materials, USA
DIN	Deutsches Institut für Normung, GERMANY
DT	Dual Traction [4WD]
fpm	Feet Per Minute
GST	Glide Shift Transmission
Hi-Lo	High Speed-Low Speed
HST	Hydrostatic Transmission
m/s	Meters Per Second
PTO	Power Take Off
RH/LH	Right-hand and left-hand sides are determined by facing in the direction of forward travel
ROPS	Roll-Over Protective Structures
rpm	Revolutions Per Minute
r/s	Revolutions Per Second
SAE	Society of Automotive Engineers, USA
SMV	Slow Moving Vehicle

California Proposition 65

⚠ WARNING ⚠

Engine exhaust, some of its constituents, certain vehicle components and fluids, contain or emit chemicals known to the State of California to cause cancer and birth defects or other reproductive harm.

IMPORTANT

The engine in this machine is not equipped by the manufacturer with a standard spark arrester.
It is a violation of California Public Resource Code Section 4442 to use or operate this engine on or near any forest-covered, brush-covered land, or grass- covered land unless the exhaust system is equipped with a working spark arrester meeting state laws. Other states or federal areas may have similar laws.

KUBOTA Corporation is ···

Since its inception in 1890, KUBOTA Corporation has grown to rank as one of the major firms in Japan.

To achieve this status, the company has through the years diversified the range of its products and services to a remarkable extent. Nineteen plants and 16,000 employees produce over 1,000 different items, large and small.

All these products and all the services which accompany them, however, are unified by one central commitment. KUBOTA makes products which, taken on a national scale, are basic necessities. Products which are indispensable. Products which are intended to help individuals and nations fulfill the potential inherent in their environment. KUBOTA is the Basic Necessities Giant.

This potential includes water supply, food from the soil and from the sea, industrial development, architecture and construction, and transportation.

Thousands of people depend on KUBOTA's know-how, technology, experience and customer service. You too can depend on KUBOTA.

L2501
AU. B. 4-8. 22. K

https://truckmanualshub.com/

UNIVERSAL SYMBOLS

As a guide to the operation of your tractor, various universal symbols have been utilized on the instruments and controls. The symbols are shown below with an indication of their meaning.

- Safety Alert Symbol
- Fuel-Level
- Engine-Rotational Speed
- Hourmeter/Elapsed Operating Hours
- Engine Coolant-Temperature
- Diesel Preheat/Glow Plugs (Low Temperature Start Aid)
- Battery Charging Condition
- Engine Oil-Pressure
- Turn Signal
- Engine-Stop
- Engine-Run
- Starter Control
- Power Take-Off Control-Off Position
- Power Take-Off Control-On Position
- Differential Lock
- Position Control-Raised Position
- Position Control-Lowered Position
- Draft Control-Shallow Position
- Draft Control-Deep Position
- 3-Point Lowering Speed Control
- OFF
- Remote Cylinder-Retract
- Remote Cylinder-Extend
- Steering Wheel-Tilt Control
- Hazard Warning Lights
- Master Lighting Switch
- Headlight-Low Beam
- Headlight-High Beam
- Audible Warning Device
- 4-Wheel Drive-On
- 4-Wheel Drive-Off
- Fast
- Slow
- Creep
- Read Operator's Manual
- Tractor-Forward Movement-Overhead View of Machine
- Tractor-Rearward Movement-Overhead View of Machine
- Engine Speed Control
- Brake System
- Clutch
- Parking Brake

https://truckmanualshub.com/

FOREWORD

You are now the proud owner of a KUBOTA Tractor. This tractor is a product of KUBOTA quality engineering and manufacturing. It is made of fine materials and under a rigid quality control system. It will give you long, satisfactory service. To obtain the best use of your tractor, please read this manual carefully. It will help you become familiar with the operation of the tractor and contains many helpful hints about tractor maintenance. It is KUBOTA's policy to utilize as quickly as possible every advance in our research. The immediate use of new techniques in the manufacture of products may cause some small parts of this manual to be outdated. KUBOTA distributors and dealers will have the most up-to-date information. Please do not hesitate to consult with them.

SAFETY FIRST

This symbol, the industry's "Safety Alert Symbol", is used throughout this manual and on labels on the machine itself to warn of the possibility of personal injury. Read these instructions carefully. It is essential that you read the instructions and safety regulations before you attempt to assemble or use this unit.

DANGER : Indicates an imminently hazardous situation which, if not avoided, will result in death or serious injury.

WARNING : Indicates a potentially hazardous situation which, if not avoided, could result in death or serious injury.

CAUTION : Indicates a potentially hazardous situation which, if not avoided, could result in minor or moderate injury.

IMPORTANT : Indicates that equipment or property damage could result if instructions are not followed.

NOTE : Gives helpful information.

https://truckmanualshub.com/

CONTENTS

⚠SAFE OPERATION ..... ⚠-1

SERVICING OF TRACTOR 1

SPECIFICATIONS 3
- SPECIFICATION TABLE 3
- TRAVELING SPEEDS 5

IMPLEMENT LIMITATIONS 6

INSTRUMENT PANEL AND CONTROLS 8

PRE-OPERATION CHECK 11
- DAILY CHECK 11

OPERATING THE ENGINE 12
- STARTING THE ENGINE 12
- STOPPING THE ENGINE 16
- WARMING UP 16
  - Warm-Up Transmission Oil in the Low Temperature Range 16
- JUMP STARTING 16

OPERATING THE TRACTOR 18
- OPERATING NEW TRACTOR 18
  - Do not Operate the Tractor at Full Speed for the First 50 Hours 18
  - Changing Lubricating Oil for New Tractors 18
- BOARDING AND LEAVING THE TRACTOR 18
- OPERATING FOLDABLE ROPS (if equipped) 18
  - To Fold the ROPS 18
  - To Raise the ROPS to Upright Position 19
  - Adjustment of Foldable ROPS 20
- STARTING 20
  - Operator's Seat 20
  - Seat Belt 21
  - Head Light / Turn Signal / Hazard Light Switch 21
  - Tractor Lights 22
  - Brake Pedals (Right and Left) 22
  - Clutch Pedal 23
  - Main Gear Shift Lever & Range Gear Shift Lever 24
  - Front Wheel Drive Lever 24
  - Hand Throttle Lever 25
  - Foot Throttle 25
  - Parking Brake 25
  - Range Gear Shift Lever (L-M-H) 26
  - Front Wheel Drive Lever 27
  - Hand Throttle Lever 27
  - Parking Brake 27
  - Speed Control Pedal 28
  - Cruise Control Lever 28
- STOPPING 30

https://truckmanualshub.com/

Stopping....30
CHECK DURING DRIVING 30
Immediately Stop the Engine if: 30
Easy Checker(TM)....30
Fuel Gauge 30
Coolant Temperature Gauge 31
Hourmeter/Tachometer....31
PARKING 32
Parking....32
OPERATING TECHNIQUES 32
Differential Lock 32
Operating the Tractor on a Road 33
Operating on Slopes and Rough Terrain 33
Transport the Tractor Safely 33
Directions for Use of Power Steering....33

PTO 34
PTO OPERATION.... 34
PTO Gear Shift Lever 34
Stationary PTO 35
PTO Shaft Cover and Shaft Cap 35

3-POINT HITCH & DRAWBAR.... 36
3-POINT HITCH 37
Selecting the holes of Lower Links 37
Selecting the top link mounting holes 37
Drawbar 37
Lifting Rod (Right)....37
Top Link 37
Check Chains 38
Lower link holder....38
DRAWBAR.... 38
Adjusting Drawbar Length 38

HYDRAULIC UNIT.... 39
3-POINT HITCH CONTROL SYSTEM.... 39
Position Control 39
Float Control 39
3-point Hitch Lowering Speed....39
AUXILIARY HYDRAULICS 40
Hydraulic Block Type Outlet 40
Hydraulic Control Unit Use Reference Chart 41

TIRES, WHEELS AND BALLAST.... 42
TIRES.... 42
Inflation Pressure....42
Dual Tires 42
WHEEL ADJUSTMENT 42
Front Wheels 42
Rear Wheels....43
BALLAST 44
Front Ballast....44
Rear Ballast 45

Liquid Ballast in Rear Tires 45

MAINTENANCE 46
SERVICE INTERVALS 46
LUBRICANTS, FUEL AND COOLANT 48

PERIODIC SERVICE 51
HOW TO OPEN THE HOOD 51
Hood 51
Side Cover 51
DAILY CHECK 52
Walk Around Inspection 52
Checking and Refueling 52
Checking Engine Oil Level 52
Checking Transmission Fluid Level 53
Checking Coolant Level 53
Cleaning Evacuator Valve 54
Cleaning Grill, Radiator Screen and Oil Cooler 54
Checking Brake Pedals and Clutch Pedal 54
Checking Gauges, Meter and Easy Checker(TM) 54
Checking Head Light, Turn Signal / Hazard Light etc. 54
Checking Seat Belt and ROPS 54
Checking and Cleaning of Electrical Wiring and Battery Cables 55
Checking Movable Parts 55
EVERY 50 HOURS 55
Lubricating Grease Fittings 55
Checking Engine Start System 57
Checking Operator Presence Control 58
Checking Wheel Bolt Torque 58
EVERY 100 HOURS 59
Cleaning Air Cleaner Element [Single Element Type] 59
Cleaning Fuel Filter 59
Adjusting Fan Belt Tension 60
Adjusting Clutch Pedal 60
Adjusting Brake Pedal 61
Checking Battery Condition 61
EVERY 200 HOURS 63
Replacing Transmission Oil Filter [HST Type] 63
Adjusting Toe-in 64
EVERY 400 HOURS 65
Changing Engine Oil 65
Replacing Engine Oil Filter 65
Changing Transmission Fluid / Replacing Hydraulic Oil Filter 66
Replacing Fuel Filter Element 67
Lubricating Grease Fitting [2WD Model] 67
EVERY 600 HOURS 67
Adjusting Front Axle Pivot 67
EVERY 800 HOURS 68
Changing Front Axle Case Oil 68
Adjusting Engine Valve Clearance 68
EVERY 1000 HOURS or 1 YEAR 68
Replacing Air Cleaner Element 68

https://truckmanualshub.com/

EVERY 1500 HOURS 68
Checking Fuel Injection Nozzle (Injection Pressure) 68
EVERY 2000 HOURS or 2 YEARS 69
Flushing Cooling System and Changing Coolant 69
Anti-Freeze 69
EVERY 3000 HOURS 70
Checking Injection Pump 70
EVERY 1 YEAR 70
Checking Fuel Line 70
Checking Intake Air Line 70
Checking Radiator Hose and Clamp 71
Checking Power Steering Line 71
Checking Oil Cooler Line 71
EVERY 4 YEARS 72
Replacing Radiator Hose (Water pipes) 72
Replacing Fuel Hose 72
Replacing Intake Air Line 72
Replacing Oil Cooler Line 72
Replacing Power Steering Hose 72
SERVICE AS REQUIRED 72
Bleeding Fuel System 72
Draining Clutch Housing Water 72
Replacing Fuse 73
Replacing Light Bulb 73
Replacing Head Lamp 74
Replacing Radiator Hose (Water pipes) 74
Replacing Fuel Hose 74
Replacing Intake Air Line 74
Replacing Power Steering Hose 74
Replacing Oil Cooler Line 74

STORAGE 75
TRACTOR STORAGE 75
REMOVING THE TRACTOR FROM STORAGE 75

TROUBLESHOOTING 76
ENGINE TROUBLESHOOTING 76

OPTIONS 77

APPENDICES 78
INDEX 78

https://truckmanualshub.com/

SAFE OPERATION

Careful operation is your best insurance against an accident.

Read and understand this manual carefully before operating the tractor.

All operators, no matter how much experience they may have, should read this and other related manuals before operating the tractor or any implement attached to it. It is the owner's obligation to instruct all operators in safe operation.

1. BEFORE OPERATING THE TRACTOR

1. Know your equipment and its limitations. Read this entire manual before attempting to start and operate the tractor.
2. Pay special attention to the danger, warning and caution labels on the tractor.
3. Do not operate the tractor or any implement attached to it while under the influence of alcohol, medication, controlled substances or while fatigued.
4. Before allowing other people to use your tractor, explain how to operate and have them read this manual before operation.
5. Never wear loose, torn, or bulky clothing around tractor. It may catch on moving parts or controls, leading to the risk of an accident. Use additional safety items, e.g. hard hat, safety boots or shoes, eye and hearing protection, gloves, etc., as appropriate or required.
6. Do not allow passengers to ride on any part of the tractor at anytime. The operator must remain in the tractor seat during operation.
7. Check brakes, clutch, linkage pins and other mechanical parts for improper adjustment and wear. Replace worn or damaged parts promptly. Check the tightness of all nuts and bolts regularly. (For further details, see "MAINTENANCE" section.)
8. Keep your tractor clean. Dirt, grease, and trash build up may contribute to fires and lead to personal injury.
9. Use only implements meeting the specifications listed under "IMPLEMENT LIMITATIONS" in this manual or implements approved by KUBOTA.
10. Use proper weights on the front or rear of the tractor to reduce the risk of upsets. When using the front loader, put an implement or ballast on the 3-point hitch to improve stability. Follow the safe operating procedures specified in the implement or attachment manual.
11. The narrower the tread, the greater the risk of a tractor upset. For maximum stability, adjust the wheels to the widest practical tread width for your application. (See "TIRES, WHEELS AND BALLAST" section.)

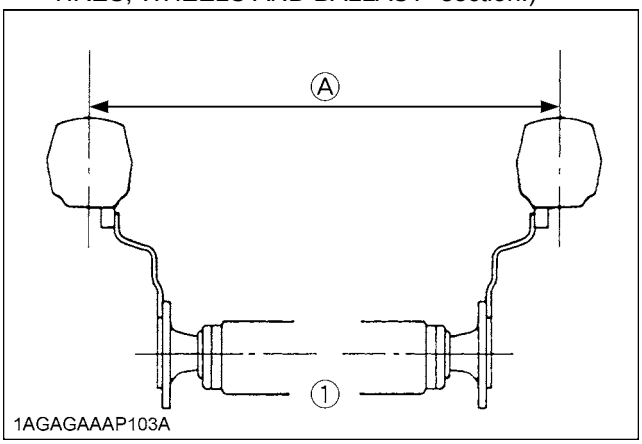

(1) Rear wheels *(A) Tread Width*

12. Do not modify the tractor. Unauthorized modification may affect the function of the tractor, which may result in personal injury.

◆ **CAB, ROPS**

1. KUBOTA recommends the use of a CAB or Roll Over Protective Structures (ROPS) and seat belt in almost all applications. This combination will reduce the risk of serious injury or death, should the tractor be upset. Check for overhead clearance which may interfere with a CAB or ROPS.
2. Set parking brake and stop engine. Remove any obstruction that may prevent raising or folding of the ROPS. Do not allow any bystanders. Always perform function from a stable position at the rear of the tractor. Hold the top of the ROPS securely when raising or folding. Make sure all pins are installed and locked.
3. If the CAB or ROPS is loosened or removed for any reason, make sure that all parts are reinstalled correctly before operating the tractor.
4. Never modify or repair any structural member of a CAB or ROPS because welding, bending, drilling, grinding, or cutting may weaken the structure.
5. If any structural member of the CAB or ROPS is damaged, replace the entire structure at your local KUBOTA Dealer.
6. If the tractor is equipped with a foldable ROPS it may be temporarily folded down only when absolutely necessary for areas with height constraints.
   (There is no operator protection provided by the ROPS in the folded position. For operator safety the ROPS should be placed in the upright and locked position and the seat belt fastened for all other operations.)

https://truckmanualshub.com/

7. Always use the seat belt if the tractor has a CAB or ROPS.
   Do not use the seat belt if a foldable ROPS is down or there is no ROPS. Check the seat belt regularly and replace if frayed or damaged.

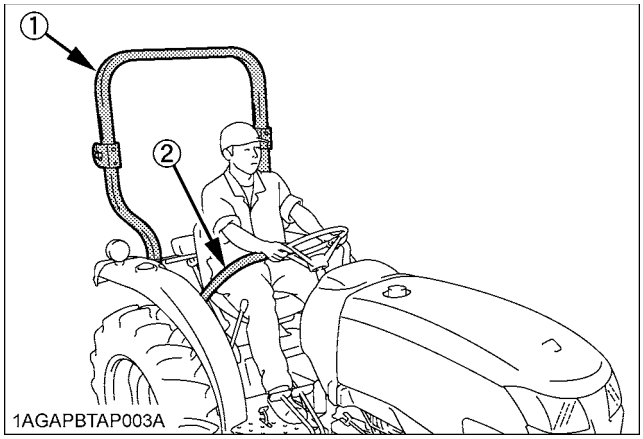

(1) ROPS
(2) Seat belt

2. OPERATING THE TRACTOR

Operator safety is a priority. Safe operation, specifically with respect to overturning hazards, entails understanding the equipment and environmental conditions at the time of use. Some prohibited uses which can affect overturning hazards include traveling and turning with implements and loads carried too high etc. This manual sets forth some of the obvious risks, but the list is not, and cannot be, exhaustive. It is the operator's responsibility to be alert for any equipment or environmental condition that could compromise safe operation.

◆ Starting

1. Always sit in the operator's seat when starting engine or operating levers or controls. Adjust seat per instructions in the operating the tractor section. Never start engine while standing on the ground.
2. Before starting the engine, make sure that all levers (including auxiliary control levers) are in their neutral positions, that the parking brake is engaged, and that both the clutch and the Power Take-Off (PTO) are disengaged or "OFF".
   Fasten the seat belt if the tractor has a CAB or a foldable ROPS in the upright and locked position.
3. Do not start engine by shorting across starter terminals or bypassing the safety start switch. Machine may start in gear and move if normal starting circuitry is bypassed.
4. Do not operate or idle engine in a non-ventilated area. Carbon monoxide gas is colorless, odorless, and deadly.
5. Check before each use that operator presence controls are functioning correctly. Test safety systems. (See "Checking Engine Start System" and "Checking Operator Presence Control" in "EVERY 50 HOURS" in "PERIODIC SERVICE" section.)
   Do not operate unless they are functioning correctly.

◆ Working

1. Pull only from the drawbar. Never hitch to axle housing or any other point except drawbar; such arrangements will increase the risk of serious personal injury or death due to a tractor upset.

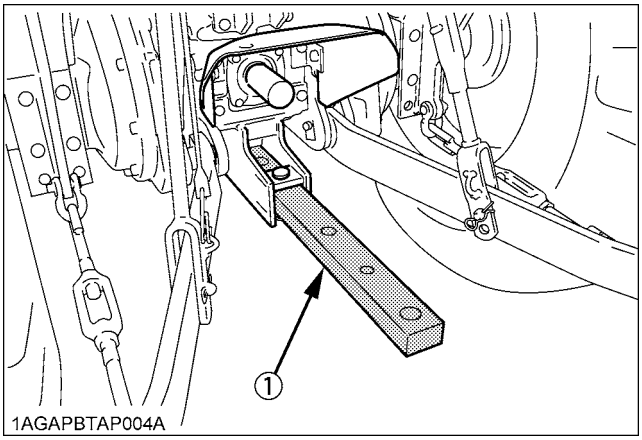

(1) Drawbar

2. For trailing PTO-driven implements, set the drawbar to the towing position.
3. Attach pulled or towed loads to the drawbar only.
4. Keep all shields and guards in place. Replace any that are missing or damaged.
5. Avoid sudden starts. To avoid upsets, slow down when turning, on uneven ground, and before stopping.
6. The tractor cannot turn with the differential locked and attempting to do so could be dangerous.
7. Do not operate near ditches, holes, embankments, or other ground surface features which may collapse under the tractor's weight. The risk of tractor upset is even higher when the ground is loose or wet. Tall grass can hide obstacles, walk the area first to be sure.
8. Watch where you are going at all times. Watch for and avoid obstacles. Be alert at row ends, near trees, and other obstructions.
9. When working in groups, always let the others know what you are going to do before you do it.
10. Never try to get on or off a moving tractor.
11. Always sit in the operator's seat when operating levers or controls.
12. Do not stand between tractor and implement or trailed vehicle unless parking brake is applied.

◆ Safety for children

Tragedy can occur if the operator is not alert to the presence of children. Children generally are attracted to machines and the work they do.

https://truckmanualshub.com/

1. Never assume that children will remain where you last saw them.
2. Keep children out of the work area and under the watchful eye of another responsible adult.
3. Be alert and shut your machine down if children enter the work area.
4. Never carry children on your machine. There is no safe place for them to ride. They may fall off and be run over or interfere with your control of the machine.
5. Never allow children to operate the machine even under adult supervision.
6. Never allow children to play on the machine or on the implement.
7. Use extra caution when backing up. Look behind and down to make sure area is clear before moving.

◆ Operating on slopes

Slopes are a major factor related to loss-of-control and tip-over accidents, which can result in severe injury or death. All slopes require extra caution.

1. To avoid upsets, always back up steep slopes. If you cannot back up the slope or if you feel uneasy on it, do not operate on it. Stay off slopes too steep for safe operation.
2. Driving forward out of a ditch, mired condition or up a steep slope increases the risk of a tractor to be upset backward. Always back out of these situations. Extra caution is required with 4-wheel drive models because their increased traction can give the operator false confidence in the tractor's ability to climb slopes.
3. Keep all movement on slopes slow and gradual. Do not make sudden changes in speed, direction or apply brake and make sudden motions of the steering wheel.
4. Avoid disengaging the clutch or changing gears speed when climbing or going down a slope. If on a slope disengaging the clutch or changing gears to neutral could cause loss of control.
5. Special attention should be made to the weight and location of implements and loads as such will affect the stability of the tractor.
6. To improve stability on slope, set widest wheel tread as shown in "TIRES, WHEELS AND BALLAST" section.
   Follow recommendations for proper ballasting.

◆ Driving the tractor on the road

1. Lock the 2 brake pedals together to help assure straight-line stops. Uneven braking at road speeds could cause the tractor to tip over.

[Manual Transmission Type]

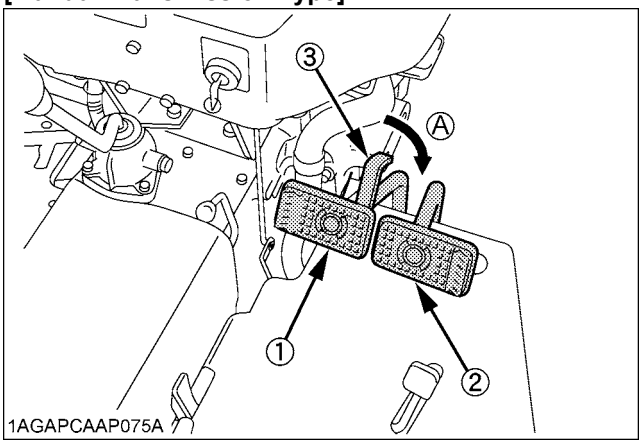

[HST Type]

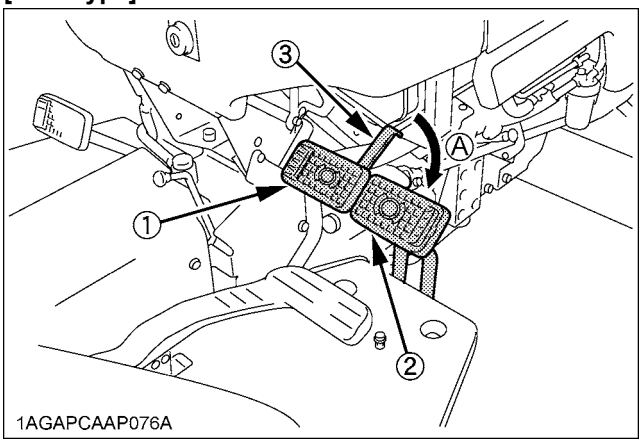

(1) Brake Pedal (LH)
(2) Brake Pedal (RH)
(3) Brake Pedal Lock
(A) Whenever travelling on the road

2. Check the front wheel engagement. The braking characteristics are different between 2 and 4-wheel drive. Be aware of the difference and use carefully.
3. Always slow the tractor down before turning. Turning at high speed may tip the tractor over.

https://truckmanualshub.com/

4. Make sure that the Slow Moving Vehicle (SMV) sign is clean and visible. Use hazard lights and turn signals as required.

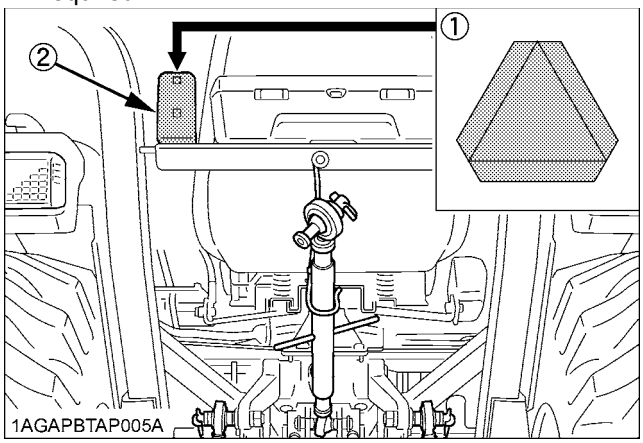

(1) SMV emblem
(2) Bracket

5. Observe all local traffic and safety regulations.
6. Turn the headlights on. Dim them when meeting another vehicle.
7. Drive at speeds that allow you to maintain control at all times.
8. Do not apply the differential lock while traveling at road speeds. The tractor may run out of control.
9. Avoid sudden motions of the steering wheel as they can lead to a dangerous loss of stability. The risk is especially great when the tractor is traveling at road speeds.
10. Keep the ROPS in the "UP" position and wear the seat belt when driving the tractor on the road.
    Otherwise, you will not be protected in the event of a tractor roll-over.
11. Do not operate an implement while the tractor is on the road. Lock the 3-point hitch in the raised position.
12. When towing other equipment, use a safety chain and place an SMV emblem on it as well.

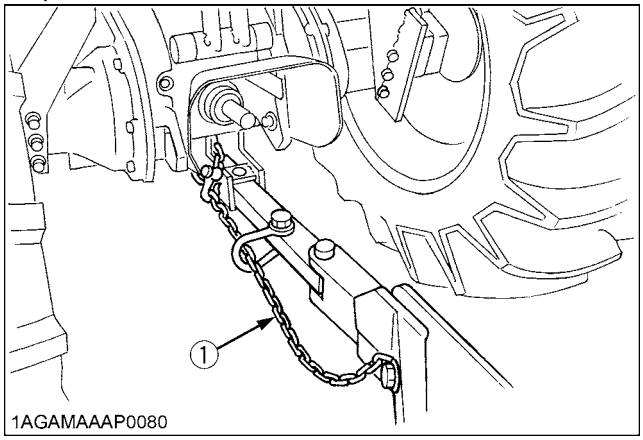

(1) Safety chain

13. Set the implement lowering speed knob in the "LOCK" position to hold the implement in the raised position.

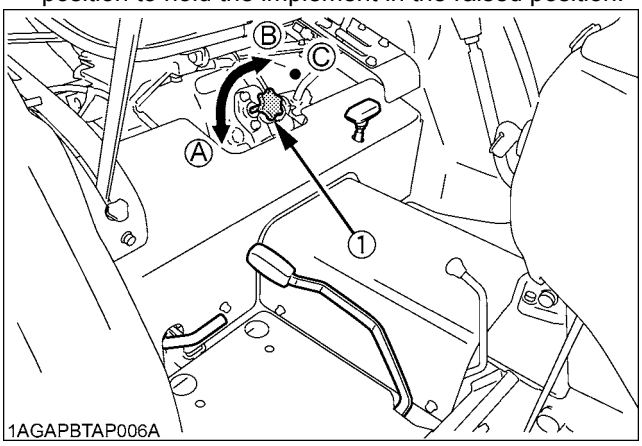

(1) 3-point hitch lowering speed knob
(A) "FAST"
(B) "SLOW"
(C) "LOCK"

3. PARKING THE TRACTOR

1. Disengage the PTO, lower all implements to the ground, place all control levers in their neutral positions, set the parking brake, stop the engine, remove the key from the ignition and lock the cab door (if equipped).
2. Make sure that the tractor has come to a complete stop before dismounting.
3. Avoid parking on steep slopes, if at all possible park on a firm and level surface; if not, park across a slope and chock the wheels.
   Failure to comply with this warning may allow the tractor to move and could cause injury or death.

https://truckmanualshub.com/

4. OPERATING THE PTO

1. Wait until all moving components have completely stopped before getting off the tractor, connecting, disconnecting, adjusting, cleaning, or servicing any PTO driven equipment.
2. Keep the PTO shaft cover in place at all times. Replace the PTO shaft cap when the shaft is not in use.

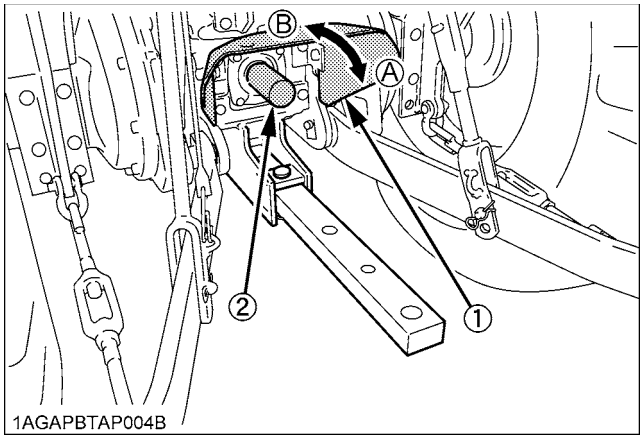

(1) PTO Shaft cover *(A) "NORMAL POSITION"*
(2) PTO Shaft cap *(B) "RAISED POSITION"*

3. Before installing or using PTO driven equipment, read the manufacturer's manual and review the safety labels attached to the equipment.
4. When operating stationary PTO driven equipment, always apply the tractor parking brake and place chocks behind and in front of the rear wheels. Stay clear of all rotating parts. Never step over rotating parts.

5. USING 3-POINT HITCH

1. Use the 3-point hitch only with equipment designed for 3-point hitch usage.
2. When using a 3-point hitch mounted implement, be sure to install the proper counterbalance weight on the front of the tractor.

6. SERVICING THE TRACTOR

Before servicing the tractor, park it on a firm, flat and level surface, set the parking brake, lower all implements to the ground, place the gear shift lever in neutral, stop the engine and remove the key.

1. Allow the tractor time to cool off before working on or near the engine, muffler, radiator, etc.
2. Do not remove radiator cap while coolant is hot. When cool, slowly rotate cap to the first stop and allow sufficient time for excess pressure to escape before removing the cap completely. If the tractor has a coolant recovery tank, add coolant or water to the tank, not the radiator. (See "Checking Coolant Level" in "DAILY CHECK" in "PERIODIC SERVICE" section.)
3. Always stop the engine before refueling. Avoid spills and overfilling.
4. Do not smoke when working around battery or when refueling. Keep all sparks and flames away from battery and fuel tank. The battery presents an explosive hazard, because it gives off hydrogen and oxygen especially when recharging.
5. Before "jump starting" a dead battery, read and follow all of the instructions. (See "JUMP STARTING" in "OPERATING THE ENGINE" section.)
6. Keep first aid kit and fire extinguisher handy at all times.
7. Disconnect the battery's ground cable before working on or near electric components.
8. To avoid the possibility of battery explosion, do not use or charge the refillable type battery if the fluid level is below the LOWER (lower limit level) mark. Check the fluid level regularly and add distilled water as required so that the fluid level is between the UPPER and LOWER levels.

https://truckmanualshub.com/

9. To avoid sparks from an accidental short circuit, always disconnect the battery's ground cable (-) first and reconnect it last.

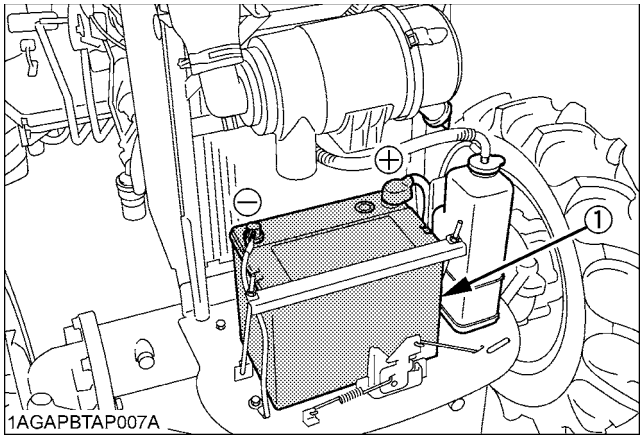

(1) Battery

10. Do not attempt to mount a tire on a rim. This should be done by a qualified person with the proper equipment.
11. Always maintain the correct tire pressure. Do not inflate tires above the recommended pressure shown in the operator's manual.

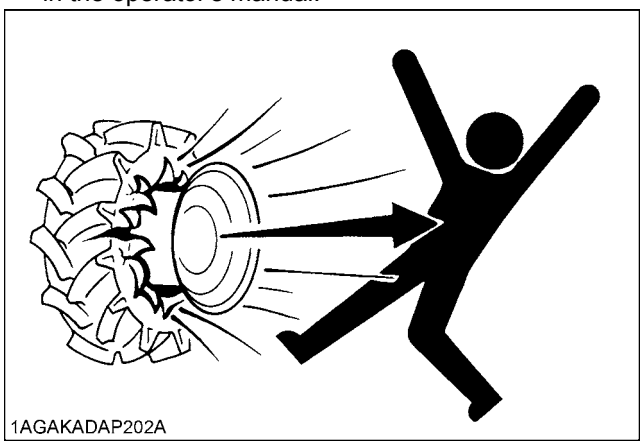

12. Securely support the tractor when either changing wheels or adjusting the wheel tread width.
13. Make sure that wheel bolts have been tightened to the specified torque.
14. Do not work under any hydraulically supported devices. They can settle, suddenly leak down, or be accidentally lowered. If it is necessary to work under tractor or any machine elements for servicing or adjustment, securely support them with stands or suitable blocking beforehand.
15. Escaping hydraulic fluid under pressure has sufficient force to penetrate skin, causing serious personal injury. Before disconnecting hydraulic lines, be sure to release all residual pressure. Before applying pressure to the hydraulic system, make sure that all connections are tight and that all lines, pipes, and hoses are free of damage.

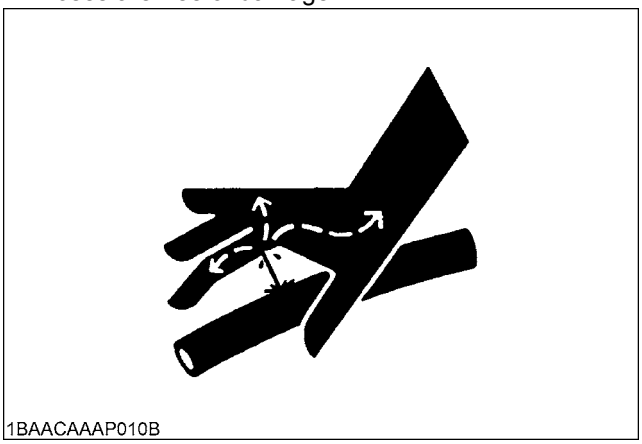

16. Fluid escaping from pinholes may be invisible. Do not use hands to search for suspected leaks; use a piece of cardboard or wood. Use of safety goggles or other eye protection is also highly recommended. If injured by escaping fluid, see a medical doctor at once. This fluid will produce gangrene or severe allergic reaction.

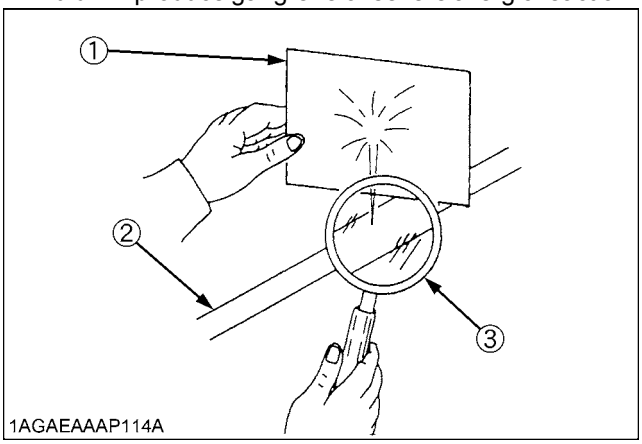

(1) Cardboard
(2) Hydraulic line
(3) Magnifying glass

https://truckmanualshub.com/

7. DANGER, WARNING AND CAUTION LABELS

(1) Part No.TA040-4965-2

1AGAMAAAP2450

(2) Part No.TA040-4959-3

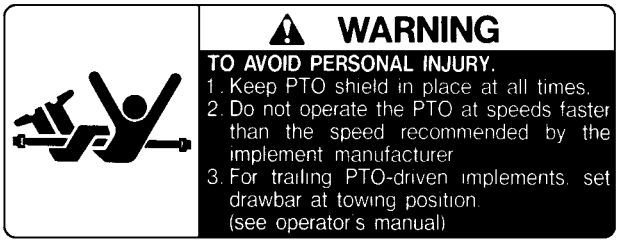

1AGAMAAAP2470

(3) Part No.TA140-4933-1 [Manual Transmission type]

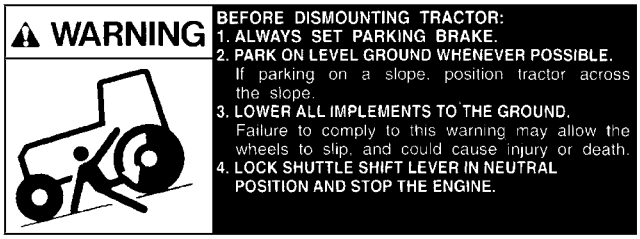

1AGAMAAAP4000

(3) Part No.TD170-4933-1 [HST type]

1AGAMAAAP3720

(4) Part No.6C300-4744-1

1AGAIHFAP069A

(5) Part No.TC420-4956-1

Diesel fuel only No fire

1AGAIDHAP154E

(6) Part No.TA040-4935-1

1AGAMAAAP2500

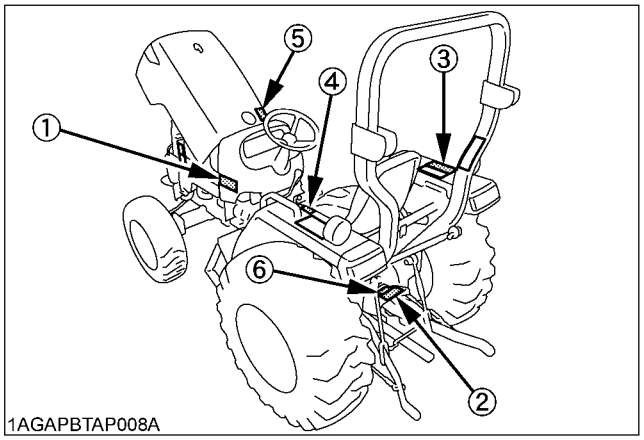

1AGAPBTAP008A

https://truckmanualshub.com/

(1) Part No.TC660-4997-1

⚠ WARNING

TO AVOID PERSONAL INJURY OR DEATH:

1. Read and understand the operator's manual before operation.
2. Before starting the engine, make sure that everyone is at a safe distance from the tractor and that the PTO is OFF.
3. Do not allow passengers on the tractor at any time.
4. Before allowing other people to use the tractor, have them read the operator's manual.
5. Check the tightness of all nuts and bolts regularly.
6. Keep all shields in place and stay away from all moving parts.
7. Lock the two brake pedals together before driving on the road.
8. Slow down for turns, or rough roads, or when applying individual brakes.
9. On public roads use SMV emblem and hazard lights, if required by local traffic and safety regulations.
10. Pull only from the drawbar.
11. Before dismounting, lower the implement to the ground, set the parking brake, stop the engine and remove the key.
12. Securely support tractor and implements before working underneath.

1AGAHAKAP0460

(3) Part No. 6C090-4958-2
Do not get your hands close to engine fan and fan belt.

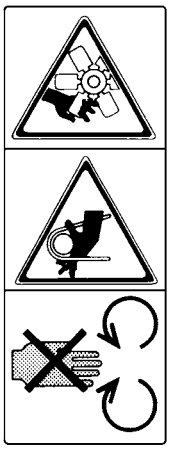

1AGAMAAAP2620

(2) Part No.TD020-3012-3

1AGASABAP107A

(4) Part No. TC030-4958-1
Do not touch hot surface like muffler. etc.

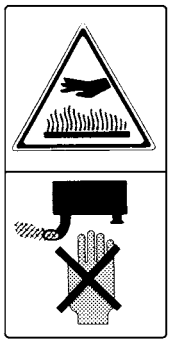

1AGAMAAAP2400

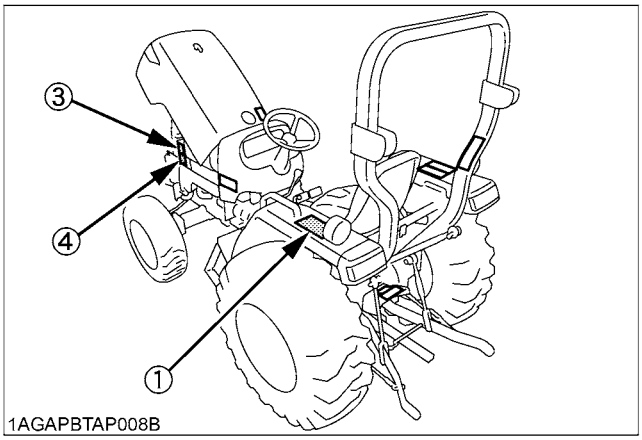

1AGAPBTAP008B

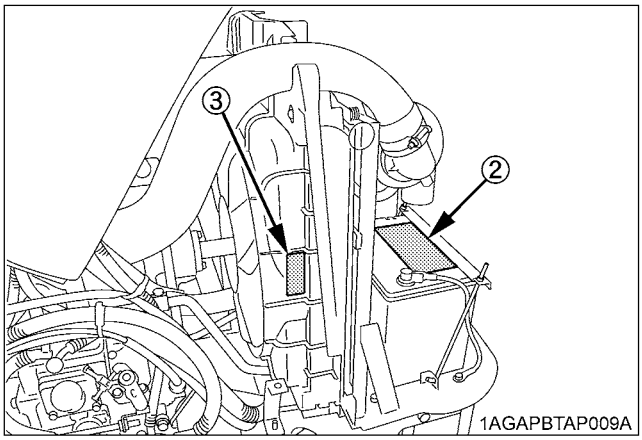

1AGAPBTAP009A

https://truckmanualshub.com/

(1) Part No.TA240-9848-2

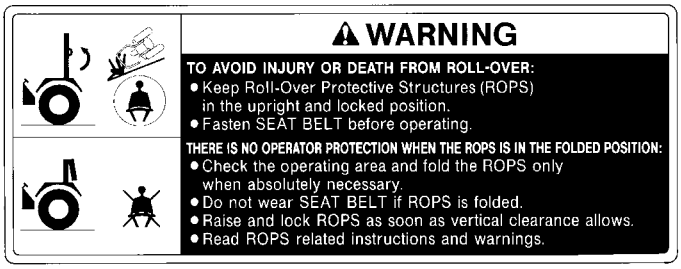

1AGAEBMAP071E

(2) Part No.6C540-9554-1

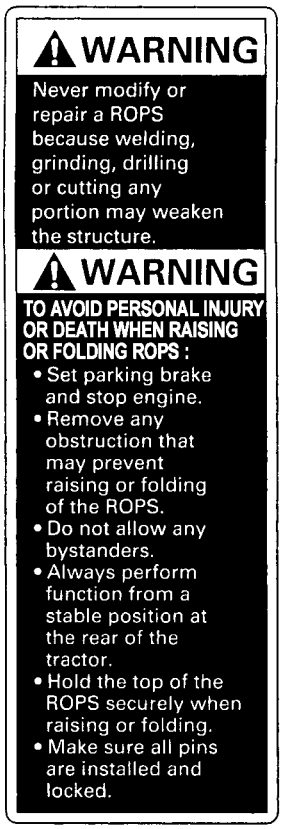

1AGAHAKAP032A

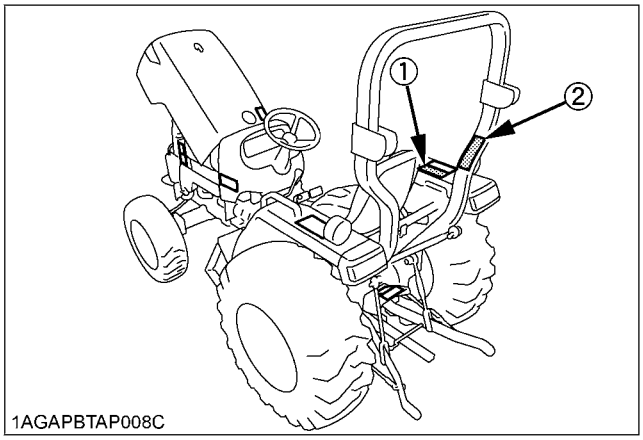

1AGAPBTAP008C

8. CARE OF DANGER, WARNING AND CAUTION LABELS

1. Keep danger, warning and caution labels clean and free from obstructing material.
2. Clean danger, warning and caution labels with soap and water, dry with a soft cloth.
3. Replace damaged or missing danger, warning and caution labels with new labels from your local KUBOTA Dealer.
4. If a component with danger, warning and caution label(s) affixed is replaced with new part, make sure new label(s) is (are) attached in the same location(s) as the replaced component.
5. Mount new danger, warning and caution labels by applying on a clean dry surface and pressing any bubbles to outside edge.

https://truckmanualshub.com/

https://truckmanualshub.com/

SERVICING OF TRACTOR

Your dealer is interested in your new tractor and has the desire to help you get the most value from it. After reading this manual thoroughly, you will find that you can do some of the regular maintenance yourself.
However, when in need of parts or major service, be sure to see your KUBOTA Dealer.
For service, contact the KUBOTA Dealership from which you purchased your tractor or your local KUBOTA Dealer.
When in need of parts, be prepared to give your dealer the tractor, CAB/ROPS and engine serial numbers.
Locate the serial numbers now and record them in the space provided.

	Type	Serial No.
Tractor		
CAB / ROPS		
Engine		
Date of Purchase		
Name of Dealer		
(To be filled in by purchaser)		

◆ **Warranty**
This tractor is warranted under the KUBOTA Limited Express Warranty, a copy of which may be obtained from your selling dealer. No warranty shall, however, apply if the tractor has not been handled according to the instruction given in the Operator's Manual even it is within the warranty period.

◆ **Scrapping the tractor and its procedure**
To put the tractor out of service, correctly follow the local rules and regulations of the country or territory where you scrap it. If you have questions, consult your local KUBOTA Dealer.

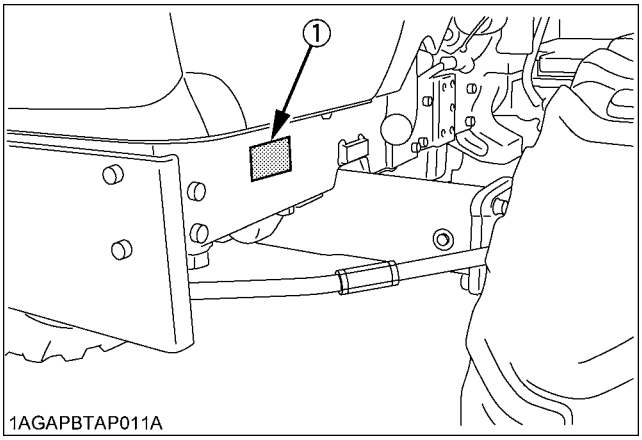

(1) Tractor identification plate

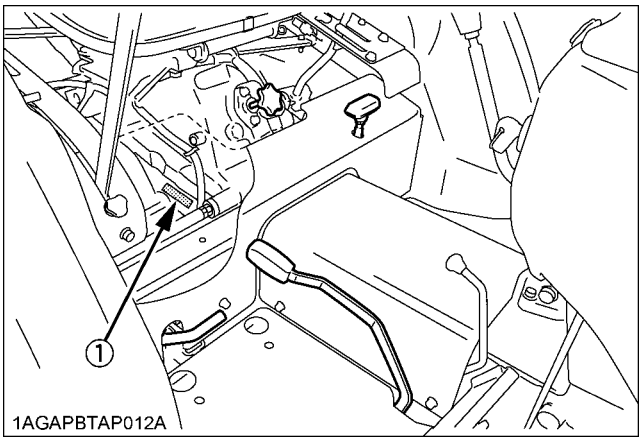

(1) Tractor serial number

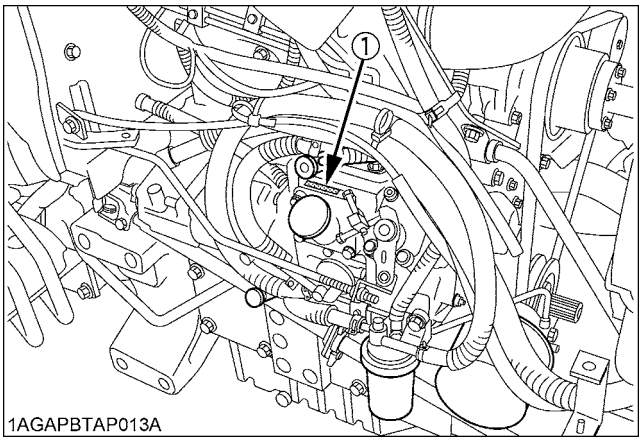

(1) Engine serial number

https://truckmanualshub.com/

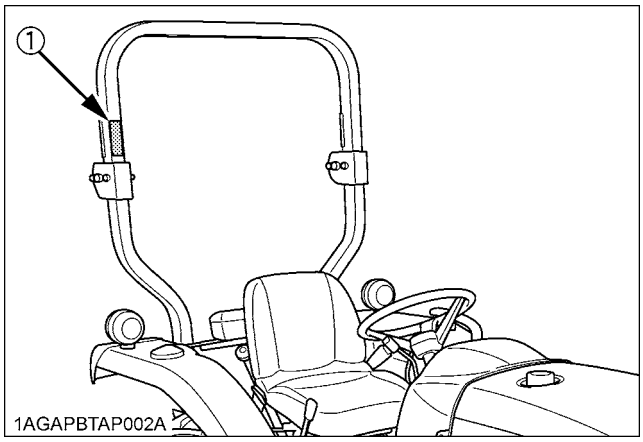

(1) ROPS identification plate (ROPS Serial No.)

https://truckmanualshub.com/

SPECIFICATIONS

SPECIFICATION TABLE

Model				L2501		
				Manual Transmission		HST
				2WD	4WD	4WD
PTO power*			kW (HP)	15.3 (20.5)		14.2 (19.0)
Engine	Maker			KUBOTA		
	Model			D1703-M-DI-E4		
	Type			Direct injection, Vertical, Water-Cooled 4 cycle diesel		
	Number of cylinders			3		
	Bore and stroke		mm (in.)	87 x 92.4 (3.4 x 3.6)		
	Total displacement		L (cu.in.)	1.647 (100.47)		
	Engine gross power*		kW (HP)	18.5 (24.8)		
	Engine net power*		kW (HP)	17.8 (23.9)		
	Rated revolution		rps (rpm)	36.7 (2200)		
	Low idling revolution		rps (rpm)	17.5 to 19.2 (1050 to 1150)		
	Maximum torque		N-m (ft-lbs.)	95.2 (70.2)		
	Battery			12V. RC : 123 min, CCA : 490 A		
Capacities	Fuel tank		L (U.S.gals.)	38.0 (10.0)		
	Engine crankcase (with filter)		L (U.S.qts.)	5.7 (6.0)		
	Engine coolant		L (U.S.qts.)	6.0 (6.3)		
	Transmission case		L (U.S.gals.)	27.0 (7.1)	27.5 (7.3)	23.5 (6.2)
Dimensions	Overall length (without 3p)		mm (in.)	2810 (110.6)	2700 (106.3)	
	Overall width (min.tread)		mm (in.)	1400 (55.1)		
	Overall height (with ROPS)		mm (in.)	2330 (91.7)		
	Overall height (Top of steering wheel)		mm (in.)	1475 (58.1)		
	Wheel base		mm (in.)	1610 (63.3)		
	Min. ground clearance		mm (in.)	345 (13.6)	340 (13.4)	
	Tread	Front	mm (in.)	1050 (41.3)	1095 (43.1)	
		Rear	mm (in.)	1115 (43.8), 1195 (47.1), 1290 (50.8)		
Weight (with ROPS)			kg (lbs.)	1100 (2425)	1180 (2601)	1190 (2623)

https://truckmanualshub.com/

Model				L2501		
				Manual Transmission		HST
				2WD	4WD	4WD
Traveling system	Tires	AG Front		5 - 15	7.2 - 16	
		AG Rear		11.2 - 24		
	Indust. (option)	Front		N / A	27 x 8.50 - 15	
		Rear		N / A	15 - 19.5R4	
	Clutch			Dry type Single stage		
	Steering			Integral type power steering		
	Transmission			Gear shift, 8 forward and 4 reverse		Hydrostatic transmission, 3 range speed
	Brake			Wet disk type		
	Min. turning radius (with brake)		m (feet)	2.4 (7.9)	2.5 (8.2)	
Hydraulic unit	Hydraulic control system			Position control		
	Pump capacity (main)		L / min (gal / min)	19.5 (5.15)		
	Pump capacity (PS)		L / min (gal / min)	11.8 (3.13)		
	3-point hitch			Category 1		
	Max. lift force	At lift points	kg (lbs.)	870 (1918)		
		24 in. behind lift points	kg (lbs.)	630 (1389)		
	System pressure		MPa (kgf / cm²) [psi]	15.2 (155) [2205]		
PTO	Rear PTO	PTO shaft size		SAE 1-3 /8, 6-splines		
		Type		Transmission driven with overrunning		Live-continuous running
	PTO / Engine speed		rpm	540 / 1910		540 / 2105

NOTE: *Manufacturer's estimate The company reserves the right to change the specifications without notice.

https://truckmanualshub.com/

TRAVELING SPEEDS

[Manual Transmission Type] (At rated engine rpm)

Model			L2501	
Tire size (Rear)			11.2-24	
	Range gear shift lever	Main gear shift lever	km/h	mph
Forward	Low	1	1.4	0.9
		2	1.8	1.1
		3	2.6	1.6
		4	4.5	2.8
	High	1	5.3	3.3
		2	6.9	4.3
		3	10.0	6.2
		4	17.3	10.7
Reverse	Reverse	1	1.9	1.2
		2	2.5	1.6
		3	3.6	2.2
		4	6.2	3.9

The company reserves the right to change the specifications without notice.

[HST Type] (At rated engine rpm)

Model		L2501	
Tire size (Rear)		11.2-24	
	Range gear shift lever	km/h	mph
Forward	L	0 to 5.1	0 to 3.2
	M	0 to 8.9	0 to 5.5
	H	0 to 18.5	0 to 11.5
Reverse	L	0 to 4.6	0 to 2.9
	M	0 to 8.0	0 to 5.0
	H	0 to 16.6	0 to 10.3

The company reserves the right to change the specifications without notice.

https://truckmanualshub.com/

IMPLEMENT LIMITATIONS

The KUBOTA Tractor has been thoroughly tested for proper performance with implements sold or approved by KUBOTA. Use with implements which are not sold or approved by KUBOTA and which exceed the maximum specifications listed below, or which are otherwise unfit for use with the KUBOTA Tractor may result in malfunctions or failures of the tractor, damage to other property and injury to the operator or others. [Any malfunctions or failures of the tractor resulting from use with improper implements are not covered by the warranty.]

	Tread (max. width) with farm tires			Lower link end max. lifting capacity W_0
	Front		Rear	
	2WD	4WD		
L2501	1050 mm (41.3 in.)	1095 mm (43.1 in.)	1290 mm (50.8 in.)	870 kg (1918 lbs.)

	Actual figures		
	Implement weight W_1 and/or size	Max. Drawbar Load W_2	Trailer loading weight W_3 Max. capacity
L2501	As in the following list (Shown on the next page)	330 kg (730 lbs.)	1000 kg (2200 lbs.)

Lower link end max. hydraulic lifting capacity .....W_0
Implement weight .....The implement's weight which can be put on the lower link : W_1
Max. drawbar load .....W_2
Trailer loading weight .....The max. loading weight for trailer (without trailer's weight) : W_3

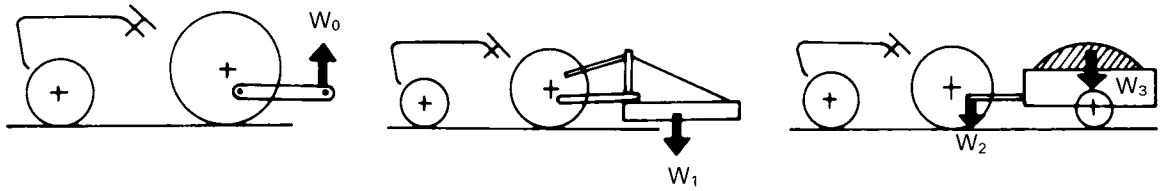

NOTE :
- Implement size may vary depending on soil operating conditions.

https://truckmanualshub.com/

No.	Implement		Remarks		L2501
1	Trailer		Max. load capacity	kg(lbs.)	1000 (2200)
			Max. drawbar load	kg (lbs.)	330 (730)
2	Mower	Rotary-Cutter	Max. cutting width	mm (in.)	1524 (60)
			Max. weight	kg (lbs.)	350 (770)
		Flail Mower	Max. cutting width	mm (in.)	1270 (50)
			Max. weight	kg (lbs.)	350 (770)
		Sickle Bar	Max. cutting width	mm (in.)	1829 (72)
			Max. weight	kg (lbs.)	400 (880)
3	Sprayer	Rear mounted	Max. tank capacity	L (gals.)	300 (80)
		Pull type	Max. tank capacity	L (gals.)	800 (210)
4	Rotary Tiller		Max. tilling width	mm (in.)	1370 (54)
5	Bottom Plow		Max. size		12 in. x 2, 16 in. x 1
6	Disk harrow : Pull type		Max. harrowing width	mm (in.)	1524 (60)
			Max. weight	kg (lbs.)	300 (660)
7	Chisel Plow		Max. width	mm (in.)	1829 (72)
			Max. weight	kg (lbs.)	350 (770)
8	Broad Caster		Max. tank capacity	L (gals.)	200 (53)
			Max. weight	kg (lbs.)	100 (220)
9	Manure Spreader		Max. capacity	kg (lbs.)	1000 (2200)
10	Cultivator		Max. width	mm (in.)	1524 (60)
			Number of rows		1
			Max. weight	kg (lbs.)	250 (550)
11	Front Blade		Max. cutting width	mm (in.)	1829 (72)
			Max. oil pressure	MPa (psi)	15.9 (2311)
			Sub frame		Necessary
12	Rear Blade		Max. cutting width	mm (in.)	1829 (72)
			Max. oil pressure	MPa (psi)	15.9 (2311)
13	Front-end Loader		Max lifting capacity	kg (lbs.)	460 (1014)
			Max. oil pressure	MPa (psi)	15.9 (2311)
			Sub frame		Not necessary
14	Box Blade		Max. cutting width	mm (in.)	1321 (52)
			Max. weight	kg (lbs.)	315 (694)
15	Backhoe		Max. digging depth	mm (in.)	2288 (90)
			Max. weight	kg (lbs.)	420 (926)
			Sub frame		Necessary
16	Snow Blade		Max. width	mm (in.)	1524 (60)
			Max. weight	kg (lbs.)	300 (660)
17	Snow Blower		Max. working width	mm (in.)	1524 (60)
			Max. weight	kg (lbs.)	250 (550)

NOTE :
- Implement size may vary depending on soil operating conditions.

https://truckmanualshub.com/

INSTRUMENT PANEL AND CONTROLS

■ Instrument Panel, Switches and Hand Controls

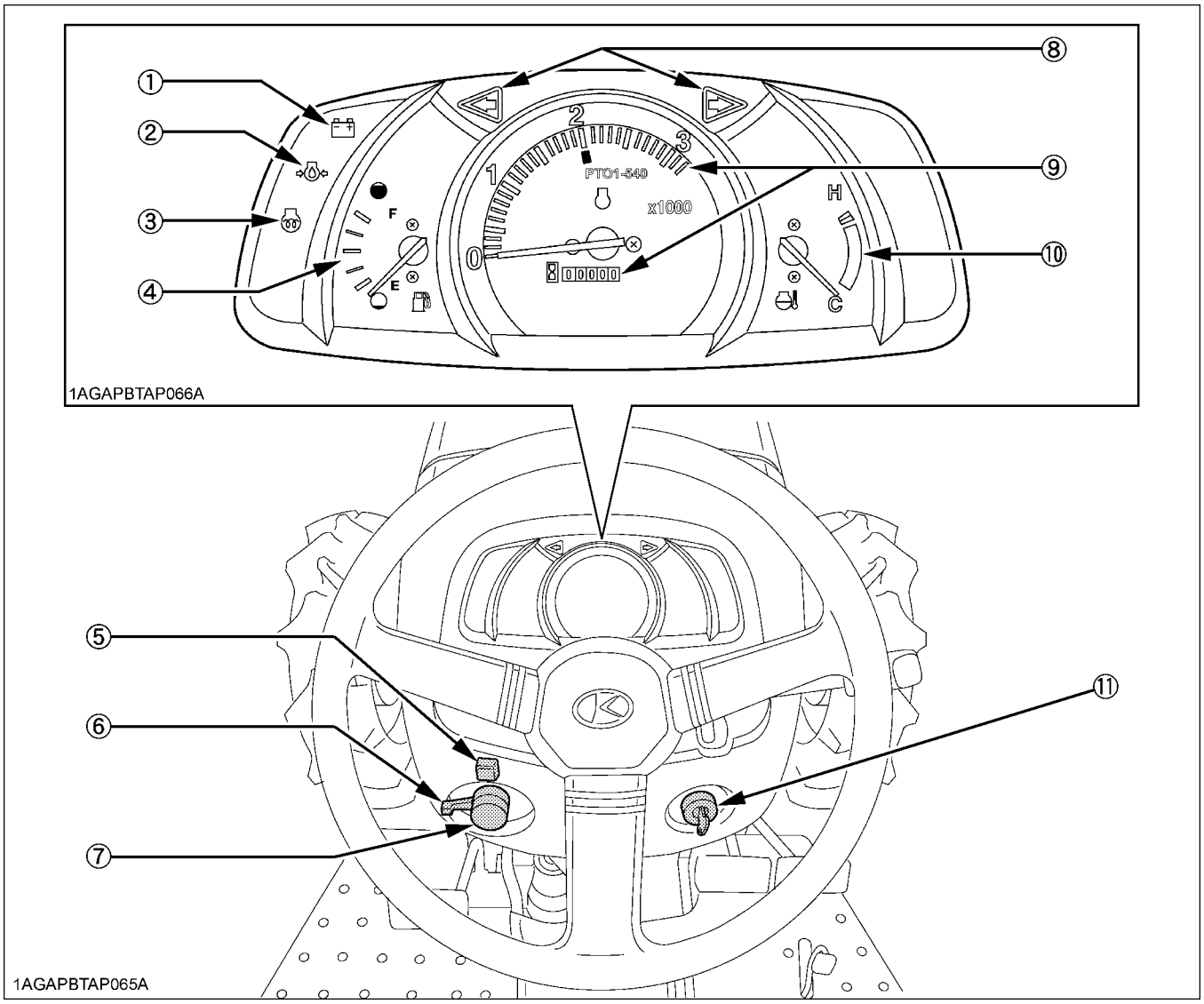

ILLUSTRATED CONTENTS

(1)	*Electrical charge lamp.....*	*30*
(2)	*Engine oil pressure lamp.....*	*30*
(3)	*Glow plug indicator.....*	*12*
(4)	*Fuel gauge.....*	*30*
(5)	*Hazard light switch.....*	*21*
(6)	*Turn signal switch.....*	*21*
(7)	*Head light switch.....*	*21*
(8)	*Turn signal / Hazard light indicator.....*	*21*
(9)	*Hourmeter / Tachometer.....*	*31*
(10)	*Coolant temperature gauge.....*	*31*
(11)	*Key switch.....*	*12*

https://truckmanualshub.com/

■ Foot and Hand Controls

◆ Manual Transmission Type

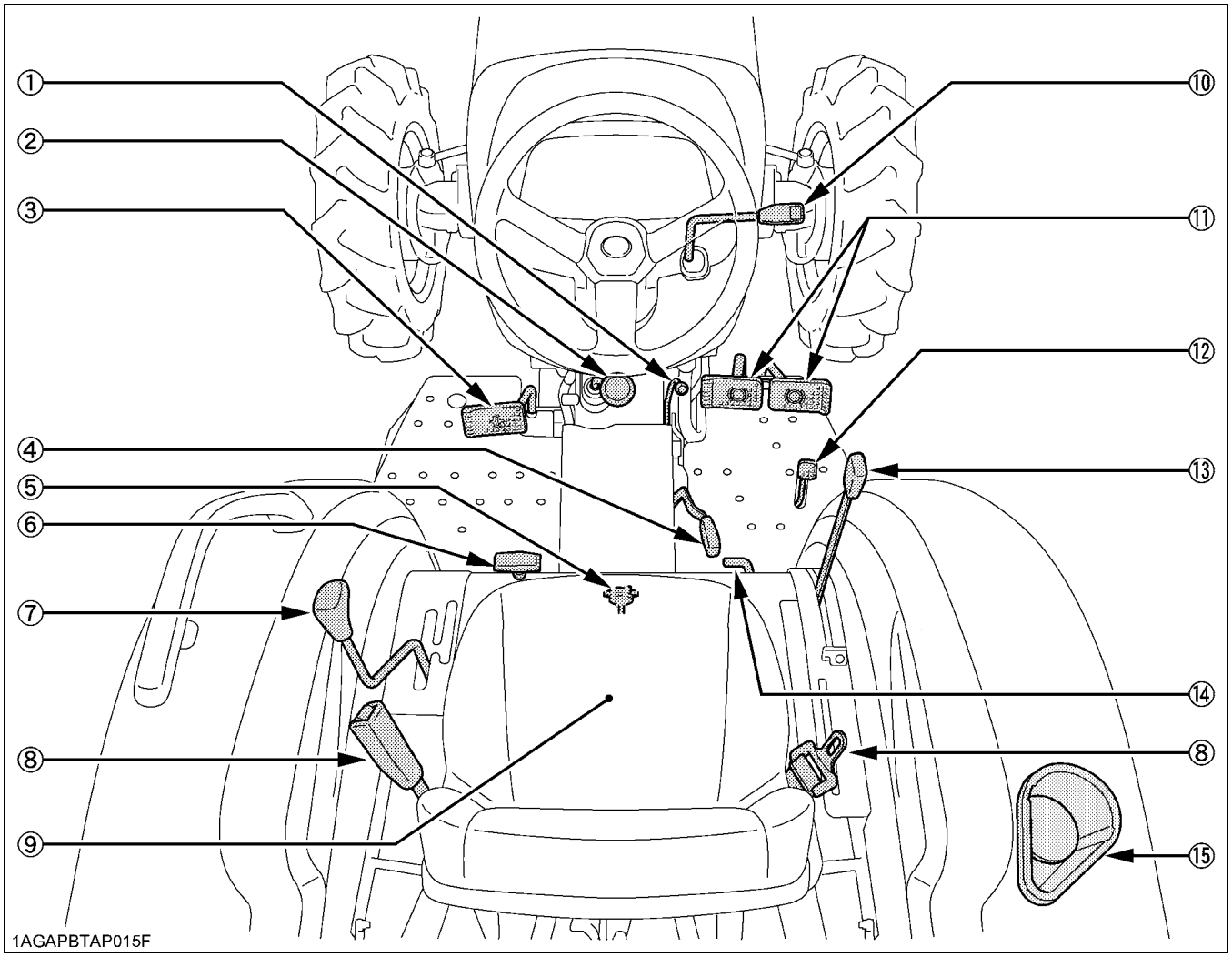

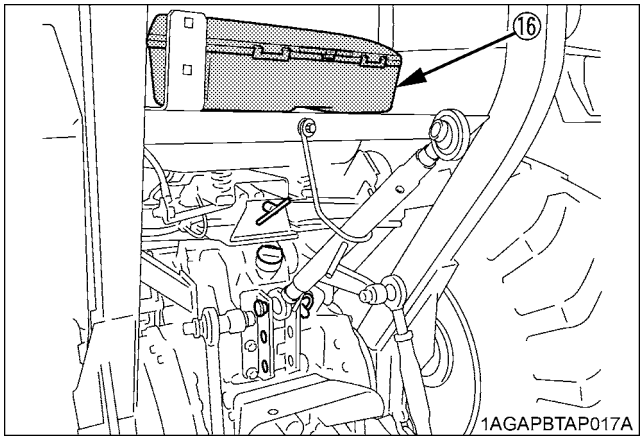

ILLUSTRATED CONTENTS

(1)	*Parking brake lever*	*32*
(2)	*Main gear shift lever*	*24*
(3)	*Clutch pedal*	*23*
(4)	*PTO gear shift lever*	*34*
(5)	*3-Point hitch lowering speed knob*	*39*
(6)	*Front wheel drive lever [4WD Type]*	*24*
(7)	*Range gear shift lever (Shuttle shift lever)*	*24*
(8)	*Seat belt*	*21*
(9)	*Operator's seat*	*20*
(10)	*Hand throttle lever*	*25*
(11)	*Brake pedal*	*22,25*
(12)	*Foot throttle*	*25*
(13)	*Position control lever*	*39*
(14)	*Differential lock pedal*	*32*
(15)	*Cup holder*	*-*
(16)	*Tool box*	*-*

https://truckmanualshub.com/

◆ **HST Type**

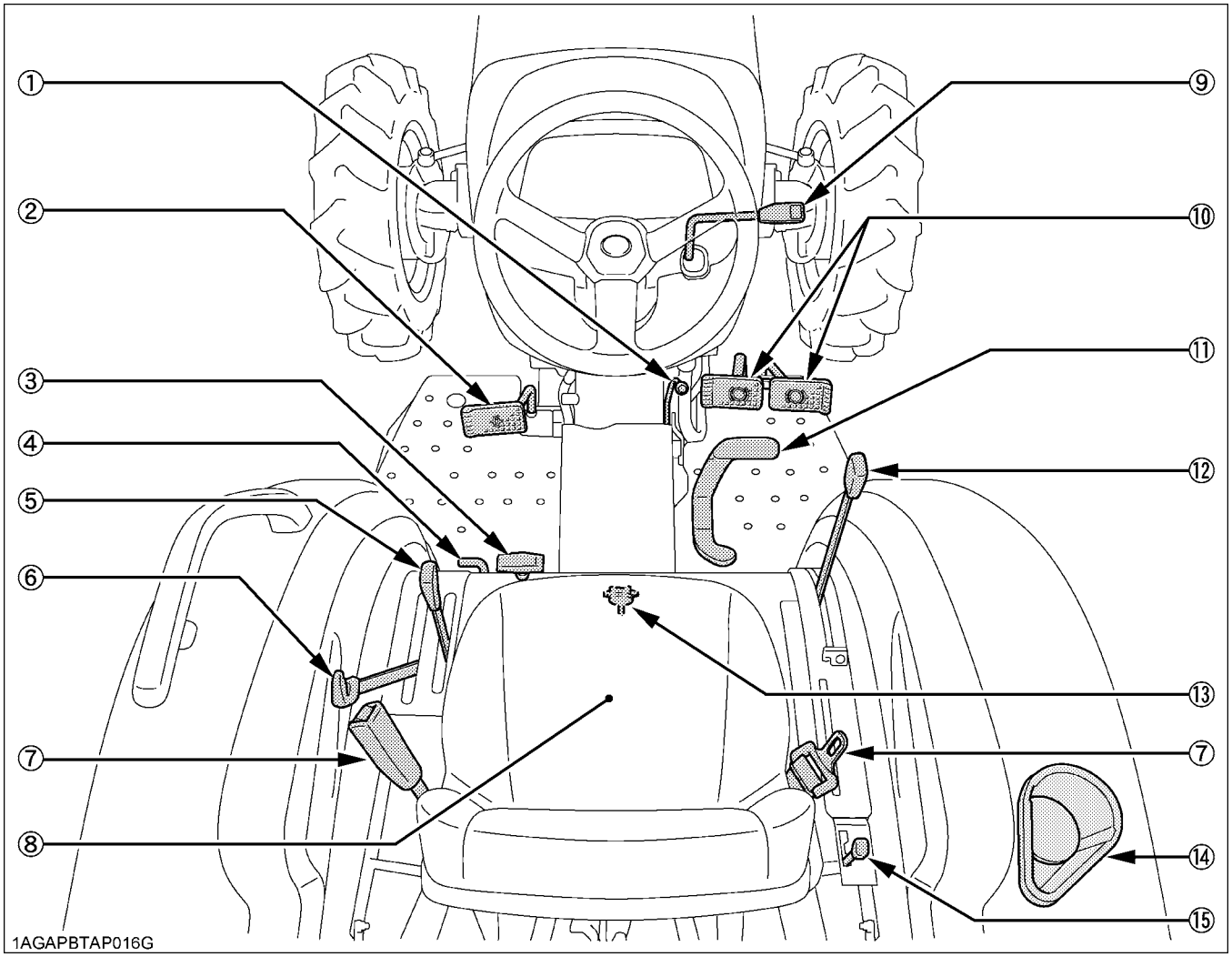

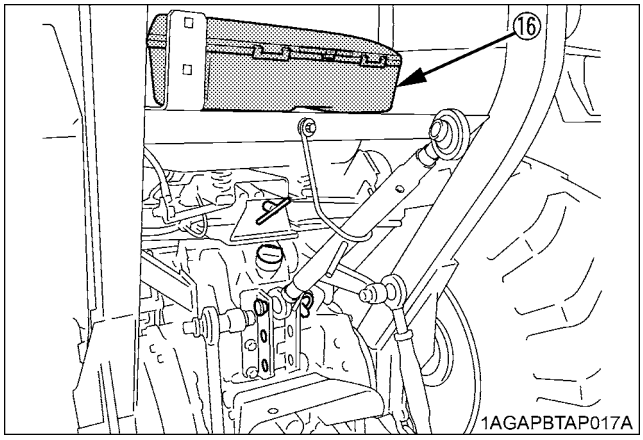

ILLUSTRATED CONTENTS

(1)	*Parking brake lever*	*32*
(2)	*Clutch pedal*	*23*
(3)	*Front wheel drive lever*	*27*
(4)	*Differential lock pedal*	*32*
(5)	*Range gear shift lever*	*26*
(6)	*Cruise control lever (if equipped)*	*28*
(7)	*Seat belt*	*21*
(8)	*Operator's seat*	*20*
(9)	*Hand throttle lever*	*27*
(10)	*Brake pedal*	*22,27*
(11)	*Speed control pedal*	*28*
(12)	*Position control lever*	*39*
(13)	*3-Point hitch lowering speed knob*	*39*
(14)	*Cup holder*	*-*
(15)	*PTO gear shift lever*	*34*
(16)	*Tool box*	*-*

https://truckmanualshub.com/

PRE-OPERATION CHECK

DAILY CHECK

To prevent trouble from occurring, it is important to know the condition of the tractor well. Check it before starting.

WARNING

To avoid personal injury or death:

- **Be sure to check and service the tractor on a level surface with the engine shut off and the parking brake "ON" and implement lowered to the ground.**

Check item

- Walk around inspection
- Check engine oil level
- Check transmission oil level
- Check coolant level
- Clean grill and radiator screen
- Clean oil cooler [HST model]
- Check air cleaner evacuator valve
  (When used in a dusty place)
- Check brake and clutch pedal
- Check indicators, gauges and meter
- Check lights
- Check wire harness
- Check seat belt and ROPS
- Check movable parts
- Refuel
  (See "DAILY CHECK" in "PERIODIC SERVICE" section.)
- Care of danger, warning and caution labels
  (See "DANGER, WARNING AND CAUTION LABELS" in "SAFE OPERATION" section.)

https://truckmanualshub.com/

OPERATING THE ENGINE

WARNING

To avoid personal injury or death:

- **Read "Safe Operation" in the front of this manual.**
- **Read the danger, warning and caution labels located on the tractor.**
- **To avoid the danger of exhaust fume poisoning, do not operate the engine in a closed building without proper ventilation.**
- **Never start engine while standing on ground. Start engine only from operator's seat.**
- **Make it a rule to set all shift levers to the "NEUTRAL" positions and to place PTO lever in "OFF" position before starting the engine.**

IMPORTANT :

- Do not use starting fluid or ether.
- To protect the battery and the starter, make sure that the starter is not continuously turned for more than 10 seconds.

STARTING THE ENGINE

1. Make sure the parking brake is set.

1. To set the parking brake;
   (1) Interlock the brake pedals.
   (2) Depress the brake pedals.
   (3) Latch the brake pedals with the parking brake lever.
2. To release the parking brake, depress the brake pedals again.

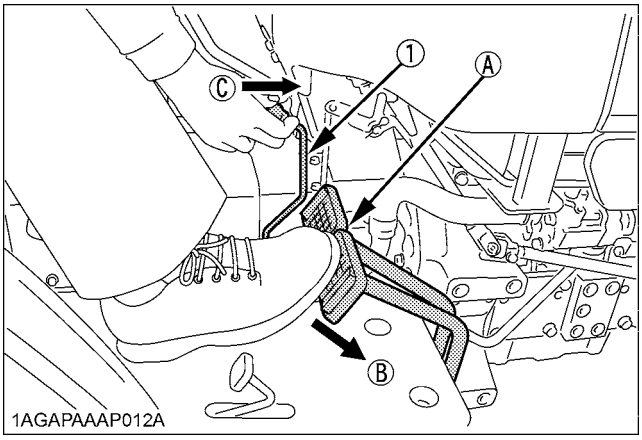

(1) Parking brake lever
(A) Interlock the brake pedals
(B) "DEPRESS"
(C) "PUSH"

IMPORTANT :

- To prevent damage to the parking brake lever, make sure that brake pedals are fully depressed before pushing the parking brake lever.

https://truckmanualshub.com/

2. Place the shift levers in "NEUTRAL" position.

[Manual Transmission Type]

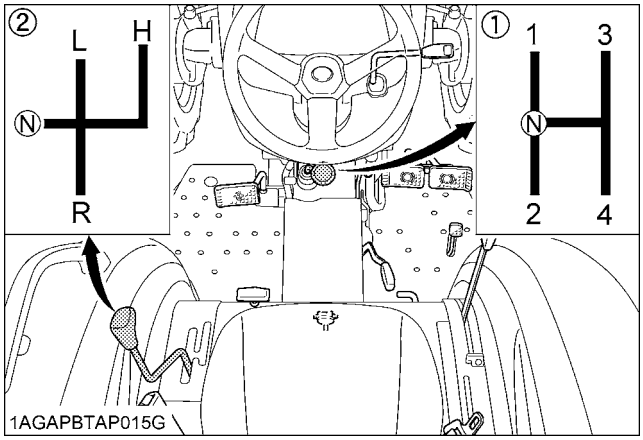

(1) Main gear shift lever
(2) Range gear shift lever
(H) "HIGH"
(N) "NEUTRAL POSITION"
(L) "LOW"
(R) "REVERSE"

2. Make sure the cruise control lever is in "OFF" position.
Place the Speed control Pedal in "NEUTRAL" position.
Place the range gear shift lever in "NEUTRAL" position.

[HST Type]

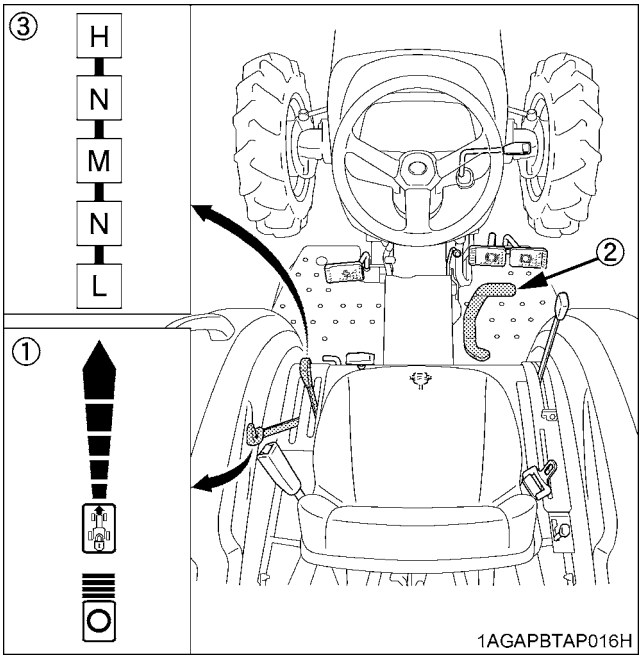

(1) Cruise control lever (if equipped)
(2) Speed control pedal
(3) Range gear shift lever
(N) "NEUTRAL POSITION"
"OFF POSITION"

NOTE :
- Depress the both brake pedals together, doing so the cruise control lever automatically returns to the off position.
- When removing the foot from speed control pedal, the pedal automatically returns to the neutral position.

https://truckmanualshub.com/

3. Place the PTO gear shift lever in "OFF" position.

[Manual Transmission Type]

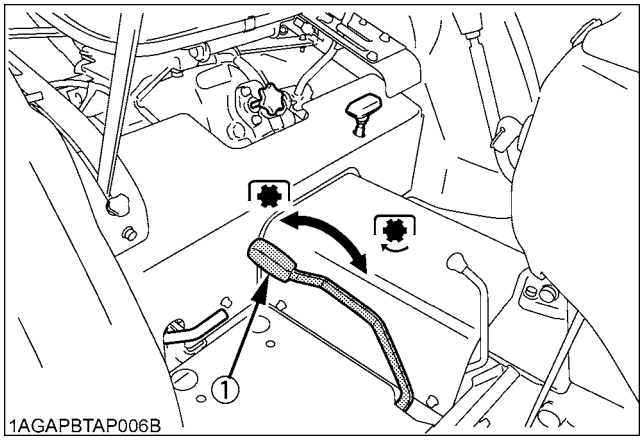

(1) PTO gear shift lever *"ON"* *"OFF"*

[HST Type]

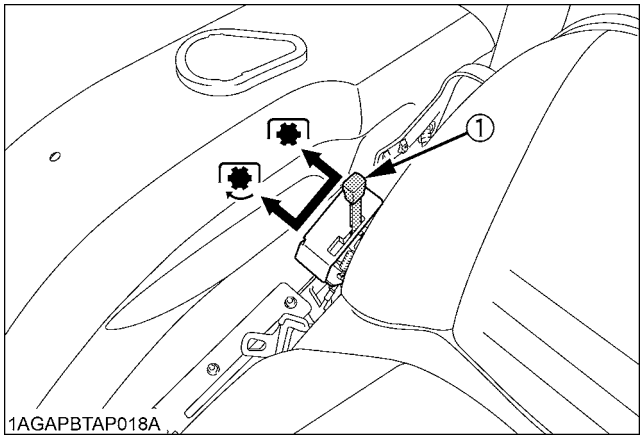

(1) PTO gear shift lever *"ON"* *"OFF"*

4. Place the position control lever in "LOWEST" position.

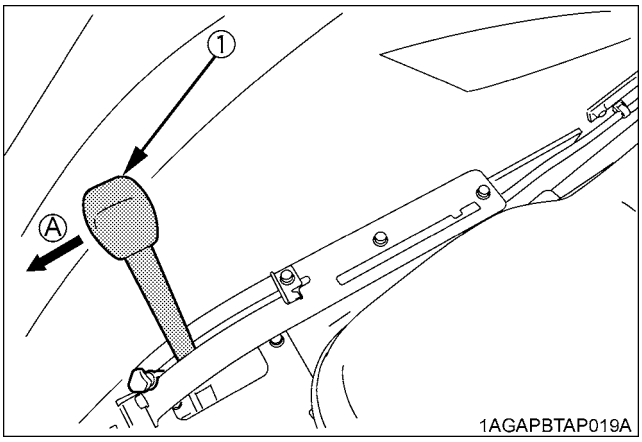

(1) Position control lever *(A) "DOWN"*

5. Set the throttle lever to about 1/2 way.

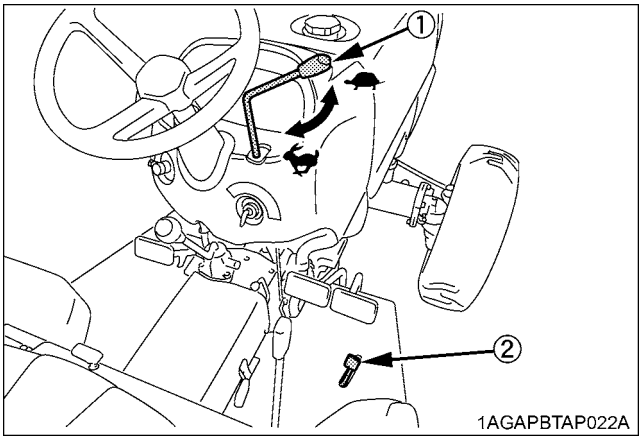

(1) Hand Throttle lever *"INCREASE"*
(2) Foot Throttle [except HST Type] *"DECREASE"*

https://truckmanualshub.com/

6. Insert the key into the key switch and turn it "ON".

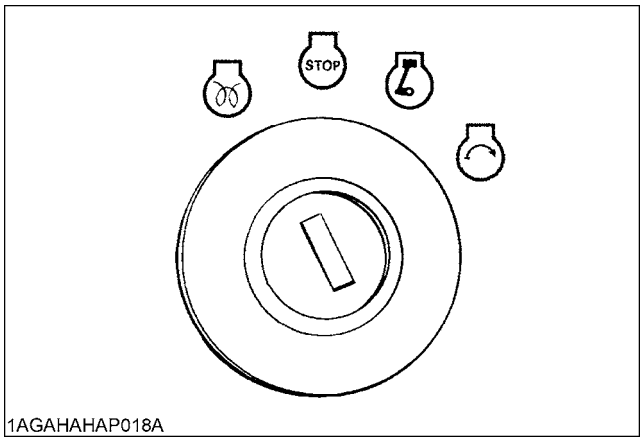

"PREHEAT" *"OFF"*
"ON" *"START"*

◆ **Check Warning lamps:**
When the key is turned "ON", lamps (1) (2) should come on. If trouble should occur at any location while the engine is running, the warning lamp corresponding to that location comes on.

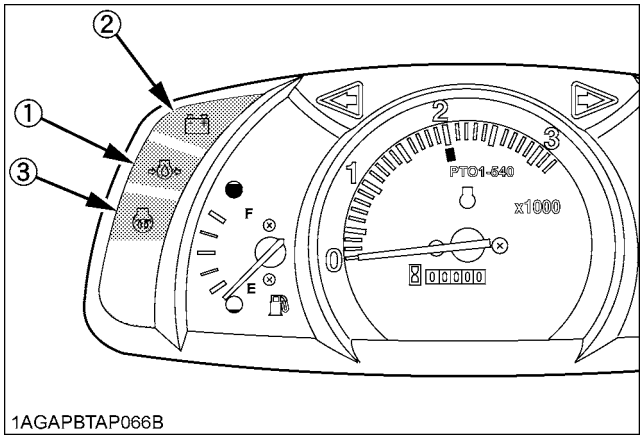

(1) Engine oil pressure *(3) Glow plug indicator*
(2) Electrical charge

IMPORTANT :
- Daily checks with the warning lamps only are not sufficient. Never fail to conduct physical daily checks carefully by referring to Daily Check section.
  (See "DAILY CHECK" in "PERIODIC SERVICE" section.)

7. Fully depress the clutch pedal, turn the key to "PREHEAT" position and hold it for the preheating.

For the appropriate preheating time, refer to the table below:

Temperature	Preheating Time
Over 0℃(32℉)	2 to 3 sec.
0 to -5℃(32 to 23℉)	5 sec.
-5 to -15℃(23 to 5℉)	10 sec.

NOTE :
- Glow plug indicator (3) comes on while engine is being preheated.

8. Turn the key to "START" position and release when the engine starts.

IMPORTANT :

[Manual Transmission Type]
- Because of the safety devices, the engine will not start except when the PTO gear shift lever is in the "OFF" position and the range gear shift lever is in the "NEUTRAL" position.

[HST Type]
- Because of the safety devices, the engine will not start except when the PTO gear shift lever is placed in the "OFF" position, speed control pedal is placed in the "NEUTRAL" position and clutch pedal is disengaged.

9. Check to see that engine oil pressure and electrical charge lamps are "OFF".

If the lamp is still on, immediately stop the engine and determine the cause.

10. Release the clutch pedal.

◆ **Cold Weather Starting**
When the ambient temperature is below -5℃ (23℉) and the engine is very cold. (If the engine fails to start after 10 seconds, turn off the key for 30 seconds. Then repeat steps **7** and **8**. To protect the battery and the starter, make sure that the starter is not continuously turned for more than 10 seconds.)

https://truckmanualshub.com/

STOPPING THE ENGINE

1. **After slowing the engine to idle, turn the key to "OFF".**
2. **Remove the key.**

NOTE :
- If key does not stop the engine, consult your local KUBOTA Dealer.

WARMING UP

WARNING

To avoid personal injury or death:
- **Be sure to set the parking brake during warm-up.**
- **Be sure to set all shift levers to the "NEUTRAL" positions and to place PTO lever in "OFF" position during warm-up.**

For 5 minutes after engine start-up, allow engine to warm up without applying any load, this is to allow oil to reach every engine part. If load should be applied to the engine without this warm-up period, trouble such as seizure, breakage or premature wear may develop.

■Warm-Up Transmission Oil in the Low Temperature Range

Hydraulic oil serves as transmission fluid. In cold weather, the oil may be cold with increased viscosity. This can cause delayed oil circulation or abnormally low hydraulic pressure for some time after engine start-up. This in turn can result in trouble in the hydraulic system. To prevent the above, observe the following instructions:
Warm up the engine at about 50% of rated rpm according to the table below:

Ambient temperature	Warm-up time requirement
Above 0℃ (32℉)	At least 10 minutes
0 to -10℃ (32 to 14℉)	10 to 20 minutes
-10 to -20℃ (14 to -4℉)	20 to 30 minutes
Below -20℃ (-4℉)	More than 30 minutes

IMPORTANT :
- Do not operate the tractor under full load condition until it is sufficiently warmed up.

JUMP STARTING

WARNING

To avoid personal injury or death:
- **Battery gases can explode. Keep cigarettes, sparks, and flames away from battery.**
- **If tractor battery is frozen, do not jump start engine.**
- **Do not connect the other end of the negative (-) jumper cable to the negative (-) terminal of the tractor battery.**

When jump starting the engine, follow the instructions below to safely start the engine.

1. Bring the helper vehicle with a battery of the same voltage as disabled tractor within easy cable reach. "THE VEHICLES MUST NOT TOUCH".
2. Engage the parking brakes of both vehicles and put the shift levers in neutral. Shut both engines off.
3. Wear eye protection and rubber gloves.
4. Attach the red clamp to the positive (red, (+) or pos.) terminal of the dead battery and clamp the other end of the same cable to the positive (red, (+) or pos.) terminal of the helper battery.
5. Clamp the other cable to the negative (black, (-) or neg.) terminal of the helper battery.
6. Clamp the other end to the engine block or frame of the disabled tractor as far from the dead battery as possible.
7. Start the helper vehicle and let its engine run for a few moments. Start the disabled tractor.
8. Disconnect the jumper cables in the exact reverse order of attachment. (Steps 6, 5 and 4).

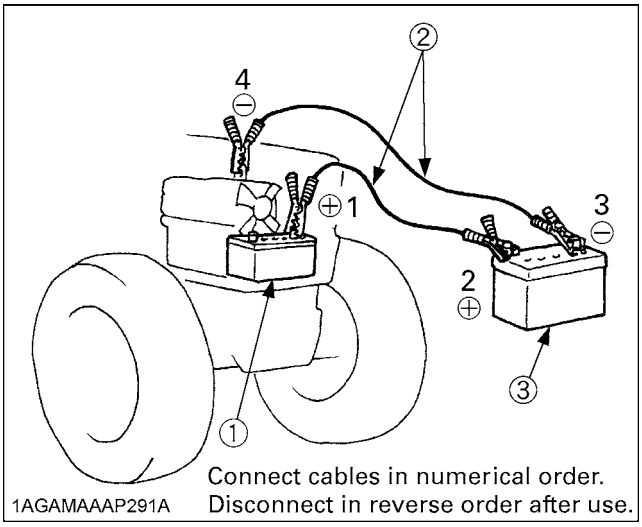

(1) Dead battery
(2) Jumper cables
(3) Helper battery

IMPORTANT :
- This machine has a 12 volt negative (-) ground starting system.

https://truckmanualshub.com/

- Use only same voltage for jump starting.
- Use of a higher voltage source on tractor's electrical system could result in severe damage to tractor's electrical system.
  Use only matching voltage source when "Jump starting" a low or dead battery condition.
- Do not operate the tractor with the battery cable disconnected from the battery.
- Do not operate the tractor without the battery mounted.
- Do not operate the tractor with the battery dead. Charge the battery fully enough before operating the tractor.
  Otherwise the tractor might malfunction.

https://truckmanualshub.com/

OPERATING THE TRACTOR

OPERATING NEW TRACTOR

How a new tractor is handled and maintained determines the life of the tractor.

A new tractor just off the factory production line has been, of course, tested, but the various parts are not accustomed to each other, so care should be taken to operate the tractor for the first 50 hours at a slower speed and avoid excessive work or operation until the various parts become "broken-in". The manner in which the tractor is handled during the "breaking-in" period greatly affects the life of your tractor. Therefore, to obtain the maximum performance and the longest life of the tractor, it is very important to properly break-in your tractor. In handling a new tractor, the following precautions should be observed.

■Do not Operate the Tractor at Full Speed for the First 50 Hours

- Do not start quickly nor apply the brakes suddenly.
- In winter, operate the tractor after fully warming up the engine.
- Do not run the engine at speeds faster than necessary.
- On rough roads, slow down to suitable speeds.
  Do not operate the tractor at fast speed.

The above precautions are not limited only to new tractors, but to all tractors. But it should be especially observed in the case of new tractors.

■Changing Lubricating Oil for New Tractors

The lubricating oil is especially important in the case of a new tractor. The various parts are not "broken-in" and are not accustomed to each other; small metal grit may develop during the operation of the tractor; and this may wear out or damage the parts. Therefore, care should be taken to change the lubricating oil a little earlier than would ordinarily be required.

For further details of change interval hours.

(See "MAINTENANCE" section.)

BOARDING AND LEAVING THE TRACTOR

1. Never try to get on or off a moving tractor or jump off the tractor to exit.
2. Face the tractor when getting into or out of the tractor. Do not use the controls as hand holds to prevent inadvertent machine movements.
3. Always keep steps and floor clean to avoid slippery conditions.

OPERATING FOLDABLE ROPS (if equipped)

WARNING

To avoid personal injury or death:

- **When raising or folding the ROPS, apply parking brake, stop the engine and remove the key.**
  Always perform function from a stable position at the rear of tractor.
- **Fold the ROPS down only when absolutely necessary and fold it up and lock it again as soon as possible.**
- **Before proceeding to fold ROPS, check for any possible interference with installed implements and attachments.**
  If interference occurs, contact your KUBOTA Dealer.

■To Fold the ROPS

1. Remove both set bolts.

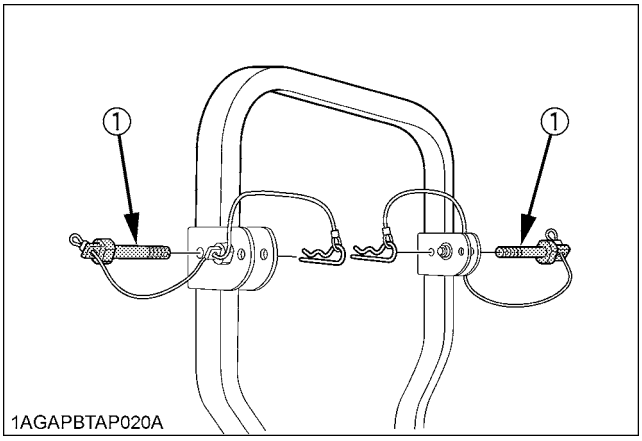

(1) Set bolt

https://truckmanualshub.com/

2. Fold the ROPS.

CAUTION

To avoid personal injury:

- **Hold the ROPS tightly with both hands and fold the ROPS slowly and carefully.**

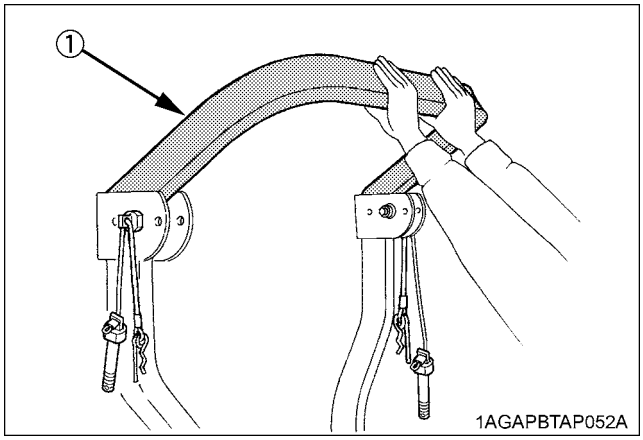

(1) ROPS

3. Align set bolt holes and insert both set bolts. Slightly tighten the set bolts and secure them with the hair pin cotters.

CAUTION

To avoid personal injury:

- **Make sure that both set bolts are properly installed and secured with the hair pin cotters.**

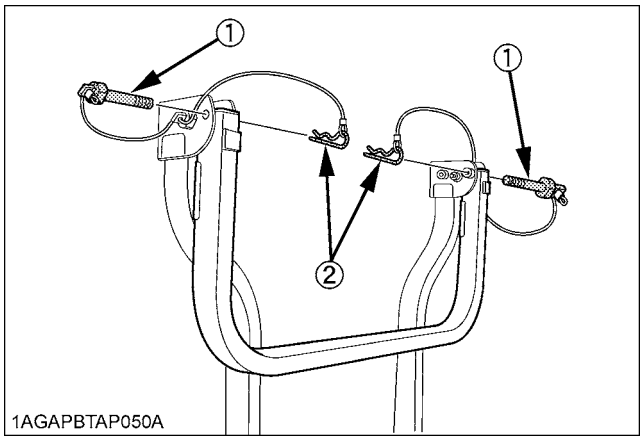

(1) Set bolt
(2) Hair pin cotter

■To Raise the ROPS to Upright Position

1. Remove both hair pin cotters and set bolts.

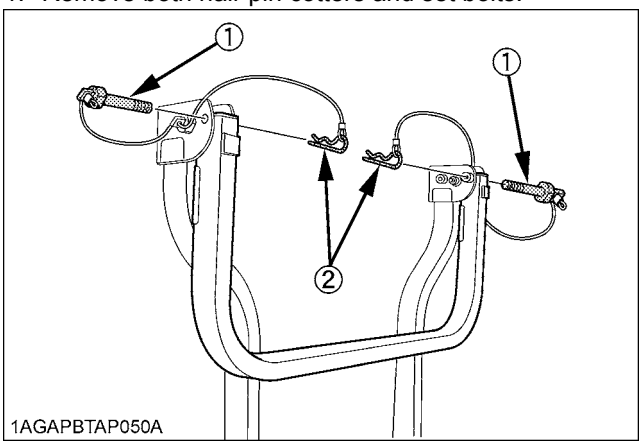

(1) Set bolt
(2) Hair pin cotter

2. Raise ROPS to the upright position.

CAUTION

To avoid personal injury:

- **Raise the ROPS slowly and carefully.**

3. Align set bolt holes, insert both set bolts. Slightly tighten the set bolts and secure them with the hair pin cotters.

CAUTION

To avoid personal injury:

- **Make sure that both set bolts are properly installed as soon as the ROPS is in the upright position and secured with the hair pin cotters.**

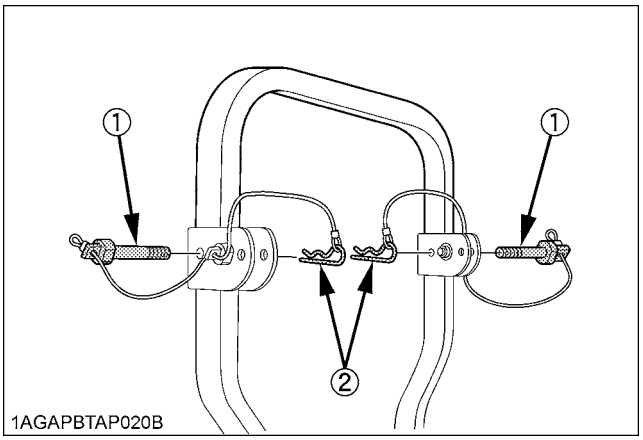

(1) Set bolt
(2) Hair pin cotter

https://truckmanualshub.com/

■Adjustment of Foldable ROPS

- Adjust free fall of the ROPS upper frame regularly.
- If you feel less friction in folding the ROPS, remove the cotter pin (1), tighten the nut (2) until you feel the right friction in the movement and then replace the cotter pin.

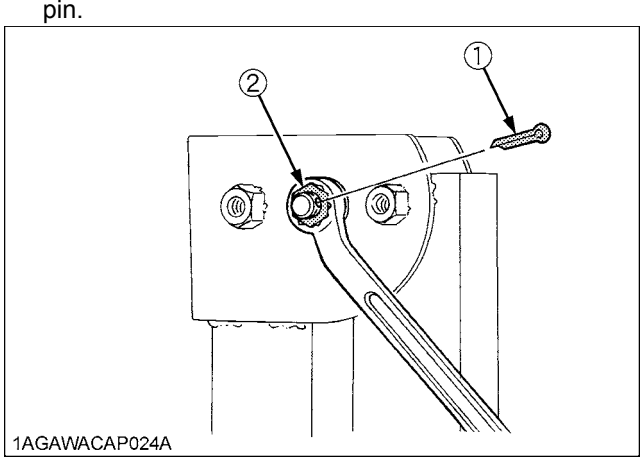

(1) Cotter pin
(2) Nut

STARTING

1. Adjusting the operator's position.

NOTE :
- The seat and suspension should be adjusted to ensure that the controls are comfortably at hand for the operator, ensuring that the operator maintains a good posture and minimizes risks from whole body vibration.

■Operator's Seat

WARNING

To avoid personal injury or death:
- **Make adjustments to the seat only while the tractor is stopped.**
- **Make sure that the seat is completely secured after each adjustment.**
- **Do not allow any person other than the operator to ride on the tractor.**

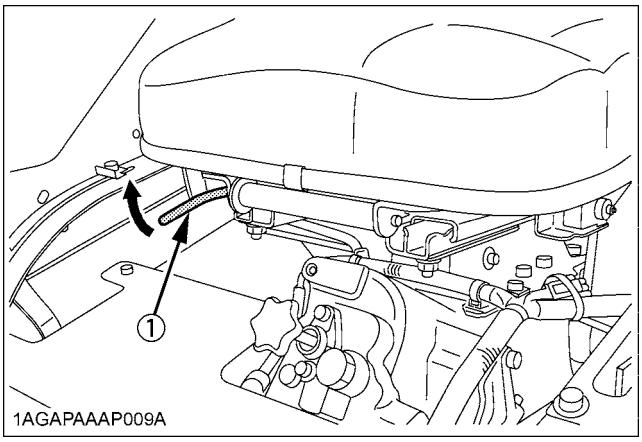

(1) Travel adjust lever

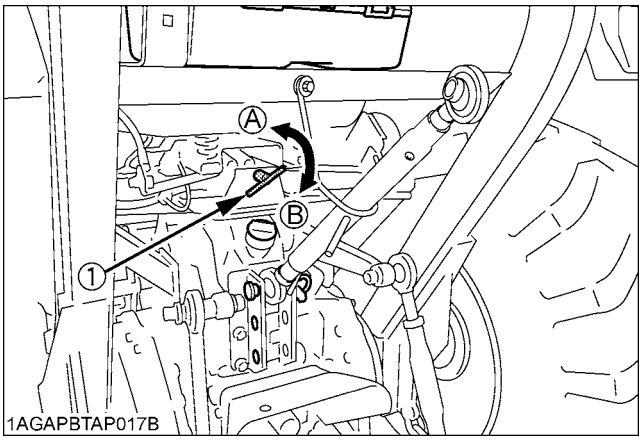

(1) Suspension adjust handle *(A) To decrease tension*
(B) To increase tension

◆ **Travel adjustment**

Pull up the travel adjust lever and slide the seat backward or forward, as required. The seat will lock in position when the lever is released.

◆ **Suspension adjustment**

Turn the suspension adjust handle to achieve the optimum suspension setting.

IMPORTANT :
- After adjusting the operator's seat, be sure to check to see that the seat is properly locked.
- Position the suspension adjust handle at the horizontal position.

https://truckmanualshub.com/

■Seat Belt

WARNING

To avoid personal injury or death:

- **Always use the seat belt when any ROPS or CAB are installed.**
- **Do not use the seat belt if a foldable ROPS is down or there is no ROPS.**

Adjust the seat belt for proper fit and connect the buckle. This seat belt is auto-locking retractable type.

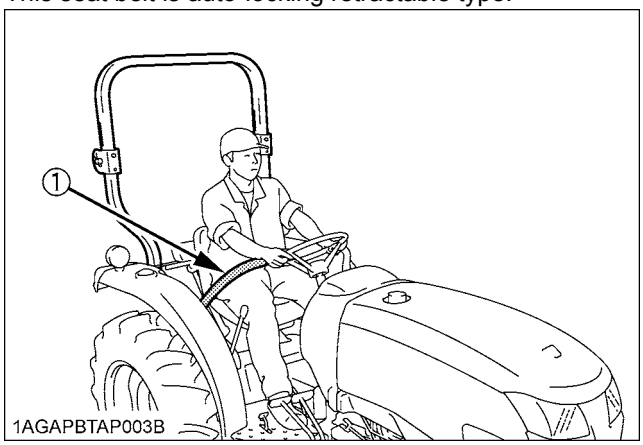

(1) Seat belt

2. Selecting light switch positions.

■Head Light / Turn Signal / Hazard Light Switch

◆ Head Light Switch

Turn the light switch clockwise, and the following lights are activated on the switch position.

(A) OFF.... Head lights OFF.

(B) .... Head lights dimmed, low beam.

(C) .... Head lights ON, high beam.

◆ Hazard Light Switch

When hazard light switch is pushed, the hazard lights flash along with the indicator on the instrument panel. Press the hazard light switch again to turn off the light.

◆ Turn Signal with Hazard Light

1. To indicate a right turn with the hazard lights already flashing (hazard on), turn the knob clockwise.
2. To indicate a left turn with the hazard lights already flashing, turn the knob counterclockwise.
3. When the left or right turn signal is activated in combination with the hazard lights, the indicated turning light will flash and the other will stay on.

◆ Turn Signal without Hazard light

1. To indicate a right turn without hazard lights (hazard off), turn the knob clockwise.
2. To indicate a left turn without hazard lights, turn the knob counterclockwise.
3. When the left or right turn signal is activated without the hazard lights, the indicated turning light will flash and the other will be on.

NOTE :

- Be sure to return switch to center position after turning.

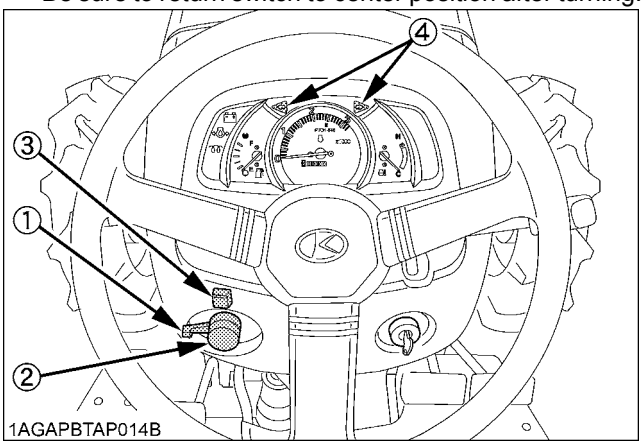

(1) Turn signal light switch
(2) Head light switch
(3) Hazard light switch
(4) Hazard / Turn signal indicator

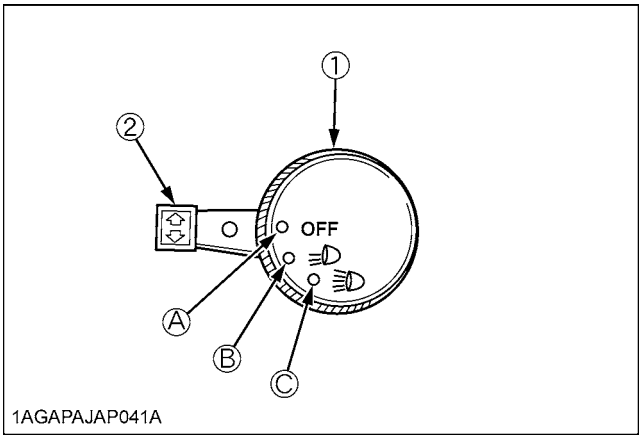

(1) Head light switch *(A) "OFF"*
(2) Turn signal light switch *(B) "ON (LOW)"*
(C) "ON (HIGH)"

https://truckmanualshub.com/

■Tractor Lights

(1) Head light
(2) Turn signal / Hazard light
(3) Rear turn signal / Hazard light
(4) Tail light

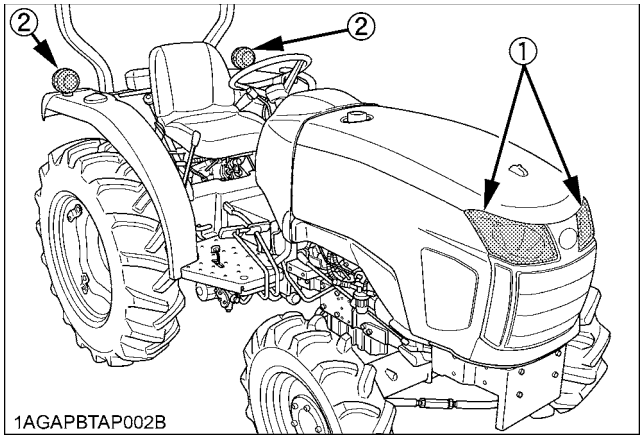

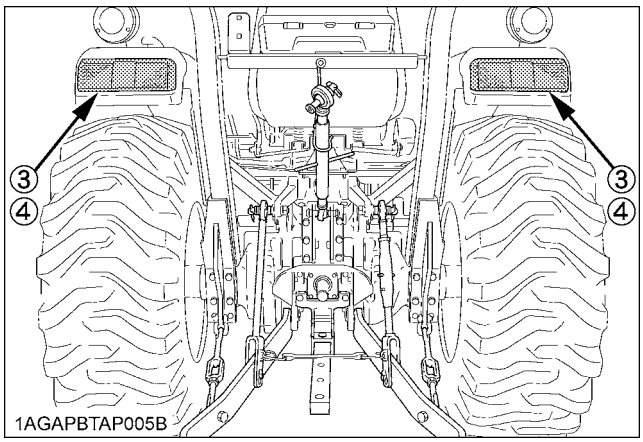

3. Checking the brake pedal.

■Brake Pedals (Right and Left)

WARNING

To avoid personal injury or death:

- **Be sure to interlock the right and left pedals. Applying only one rear wheel brake at high speeds could cause the tractor to swerve or roll-over.**
- **Be sure brake pedals have equal adjustment when using locked together. Incorrect or unequal brake pedal adjustment can cause the tractor to swerve or roll-over.**

WARNING

To avoid personal injury or death:

- **Do not make brake suddenly. An accident may occur as a result of a heavy towed load shifting forward or loss of control.**
- **To avoid skidding and loss of steering control when driving on icy, wet, or loose surfaces, make sure the tractor is correctly ballasted, operated at reduced speed, operated with front wheel drive engaged (if equipped).**
- **The braking characteristics are different between 2 and 4-wheel drive. Be aware of the difference and use carefully.**

1. Before operating the tractor on the road or before applying the parking brake, be sure to interlock the right and left pedals as illustrated below.
2. Use individual brakes to assist in making sharp turns at slow speeds (Field Operation Only). Disengage the brake pedal lock and depress only one brake pedal.
3. Be sure brake pedals have equal adjustment when using locked together.

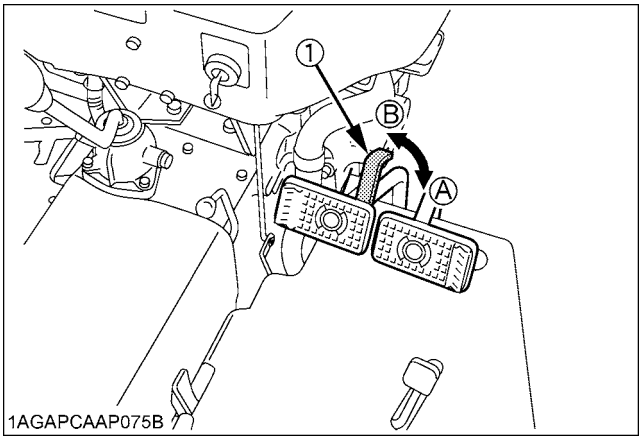

(1) Brake pedal lock *(A) "LOCK"* *(B) "RELEASE"*

https://truckmanualshub.com/

4. Raise the implement.
(See "HYDRAULIC UNIT" section.)

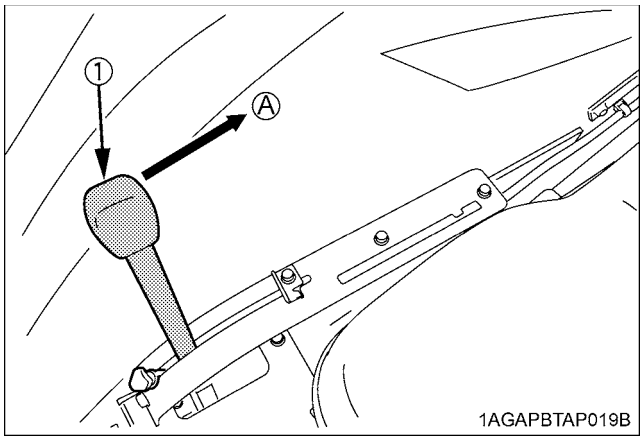

(1) Position control lever (A) "UP"

5. Depress the clutch pedal.

■Clutch Pedal

WARNING

To avoid personal injury or death:

- **Sudden release of the clutch may cause the tractor to lunge in an unexpected manner.**

The clutch is disengaged when the clutch pedal is fully pressed down.

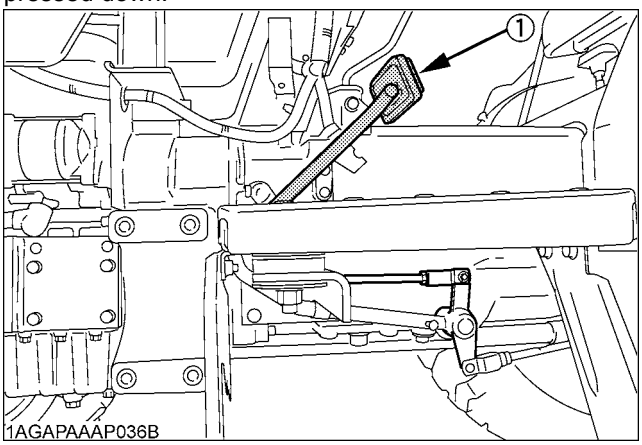

(1) Clutch pedal

IMPORTANT :

To help prevent premature clutch wear:

- The clutch pedal must be quickly disengaged and be slowly engaged.
- Avoid operating the tractor with your foot resting on the clutch pedal.
- Select proper gear and engine speed depending on the type of job.

https://truckmanualshub.com/

6. Selecting the Travel Speed.

[Manual Transmission Type]

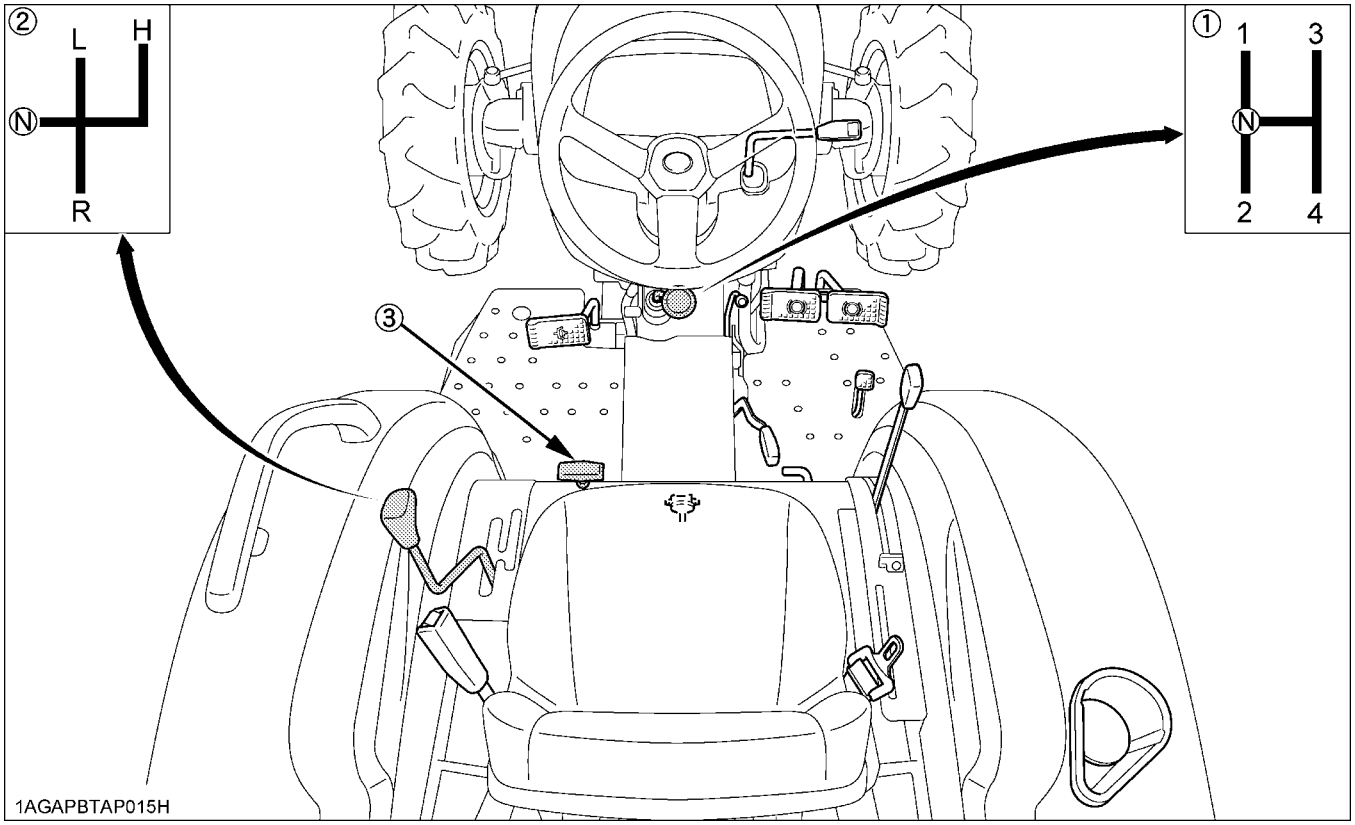

(1) Main gear shift lever
(2) Range gear shift lever (Shuttle shift lever)
(3) Front wheel drive lever
(L) "LOW"
(N) "NEUTRAL"
(H) "HIGH"
(R) "REVERSE"

■Main Gear Shift Lever & Range Gear Shift Lever

The main gear shift lever pattern is in the form of a "H". The range gear shift lever moves in the form of a "┣" in 3 stages, "HIGH", "LOW" and "REVERSE".

By combination and use of the main gear shift lever and the range gear shift lever, 8 forward speeds and 4 reverse speeds are obtained.

IMPORTANT :

- To change speeds, press the clutch pedal completely down and stop the tractor before attempting to proceed with speed change.

NOTE :

- When you stand up from the seat with the range gear shift lever at "FORWARD" or "REVERSE", the engine will stop regardless of whether the machine is moving or not.
  This is because the tractor is equipped with Operator Presence Control system (OPC).

■Front Wheel Drive Lever

[4WD]

WARNING

To avoid personal injury or death:

- **Do not engage the front wheel drive when traveling at road speed.**
- **When driving on icy, wet, or loose surfaces, make sure the tractor is correctly ballasted to avoid skidding and loss of steering control. Operate at reduced speed and engage front wheel drive.**
- **An accident may occur if the tractor is suddenly braked, such as by heavy towed loads shifting forward or loss of control.**
- **The braking characteristics are different between 2 and 4-wheel drive. Be aware of the difference and use carefully.**

https://truckmanualshub.com/

Use the lever to engage the front wheels with the tractor stopped. Shift the lever to "ON" to engage the front wheel drive.

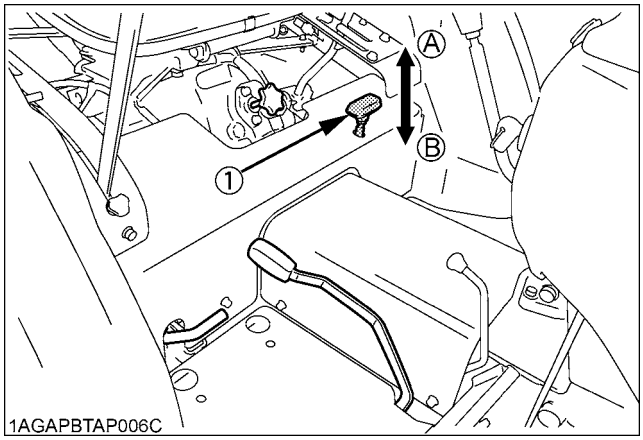

(1) Front wheel drive lever *(A) "ON"* *(B) "OFF"*

IMPORTANT :

- Depress the clutch pedal before engaging the front wheel drive lever.
- If the front wheel drive lever is difficult to set to OFF, stop the tractor, turn the steering wheel and move the lever.
- Tires will wear quickly if front wheel drive is engaged on paved roads.

◆ **Front wheel drive is effective for the following jobs:**

1. When greater pulling force is needed, such as working in a wet field, when pulling a trailer, or when working with a front-end loader.
2. When working in sandy soil.
3. When working on a hard soil where a rotary tiller might push the tractor forward.
4. For increased braking at reduced speed.

7. Accelerate the engine.

■Hand Throttle Lever

Pulling the throttle lever back increases engine speed, and pushing it forward decreases engine speed.

■Foot Throttle

Use the foot throttle when traveling on the road. Press down on it for higher speed. The foot throttle is interlocked with the hand throttle lever; when using the foot throttle, keep the hand throttle lever in low idling position.

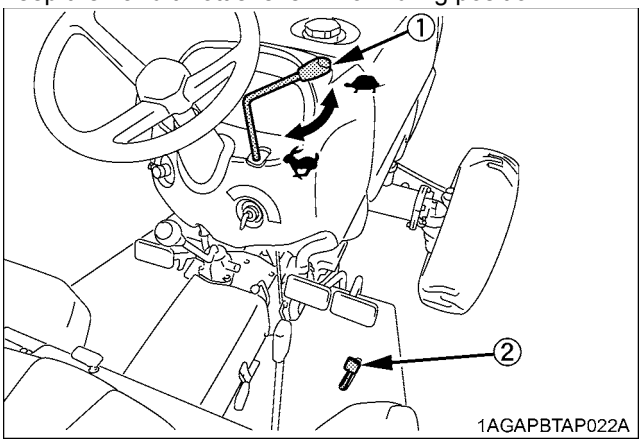

(1) Hand throttle lever *"INCREASE"*
(2) Foot throttle *"DECREASE"*

8. Unlock the parking brake and slowly release the clutch.

■Parking Brake

To release the parking brake, depress the brake pedals again.

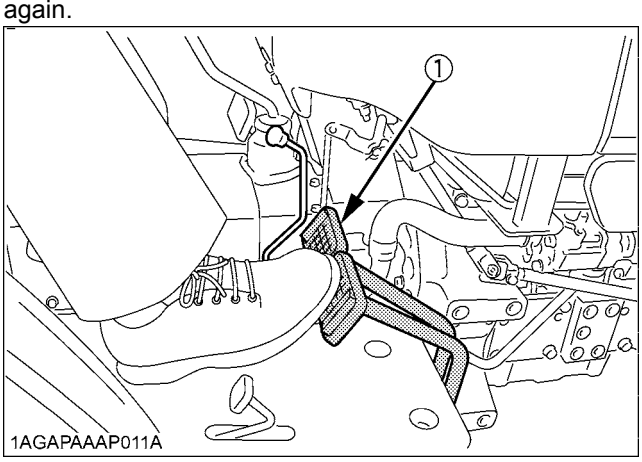

(1) Brake pedals

https://truckmanualshub.com/

6. Selecting the Travel Speed.

[HST Type]

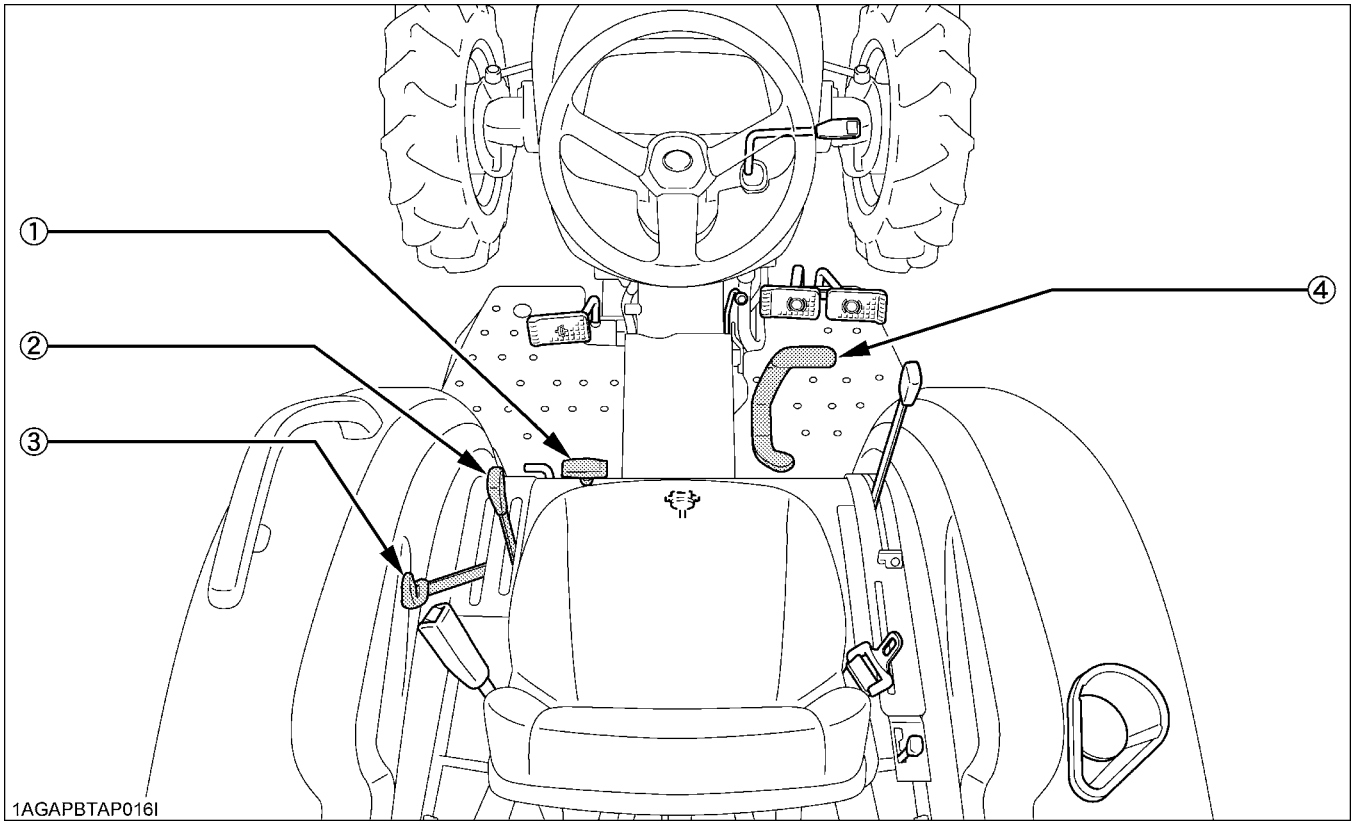

(1) Front wheel drive lever
(2) Range gear shift lever
(3) Cruise control lever (if equipped)
(4) Speed control pedal

■Range Gear Shift Lever (L-M-H)

The range gear shift can only be shifted when the tractor is completely stopped and the speed control pedal is in the neutral position.

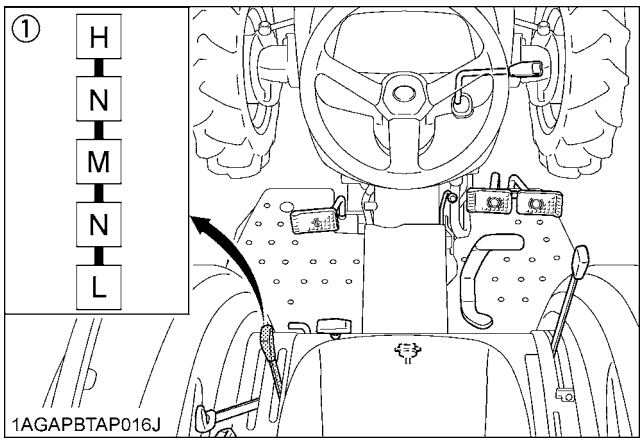

(1) Range gear shift lever (L-M-H)
(H) "HIGH"
(M) "MIDDLE"
(L) "LOW"
(N) "NEUTRAL POSITION"

IMPORTANT:

To avoid transmission and shift linkage damage when shifting:

- Completely stop the tractor using the brake pedals.
- Do not force the range gear shift lever.
- If it is difficult to shift the lever into L, M, or H from neutral position:
  On slopes be sure to set the parking brake before starting the procedure.
  (1) Slightly depress the speed control pedal to rotate the gears inside of the transmission.
  (2) Release the speed control pedal to the neutral position.
  (3) Depress the clutch pedal, wait for a moment and then shift the lever.

https://truckmanualshub.com/

■Front Wheel Drive Lever

WARNING

To avoid personal injury or death:

- **Do not engage the front wheel drive when traveling at road speed.**
- **When driving on icy, wet or loose surfaces, make sure the tractor is correctly ballasted to avoid skidding and loss of steering control. Operate at reduced speed and engage front wheel drive.**
- **An accident may occur if the tractor is suddenly braked, such as by heavy towed loads shifting forward or loss of control.**
- **The braking characteristics are different between 2 and 4-wheel drive. Be aware of the difference and use carefully.**

Use the lever to engage the front wheels with the tractor stopped. Shift the lever to "ON" to engage the front wheel drive.

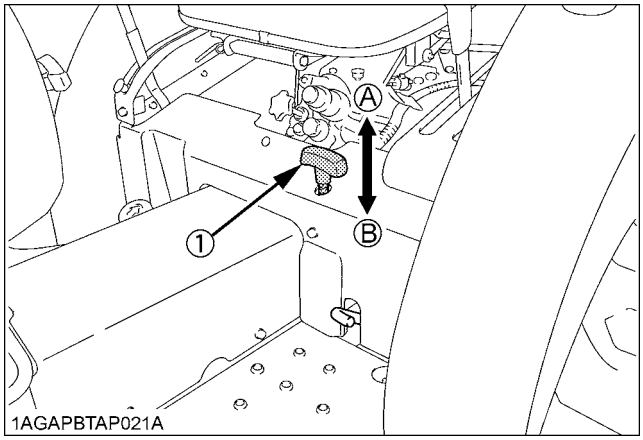

(1) Front wheel drive lever *(A) "ON"* *(B) "OFF"*

IMPORTANT :

- Depress the clutch pedal before engaging the front wheel drive lever.
- If the front wheel drive lever is difficult to set to OFF, stop the tractor, turn the steering wheel and move the lever.
- Tires will wear quickly if front wheel drive is engaged on paved roads.

◆ **Front wheel drive is effective for the following jobs:**

1. When greater pulling force is needed, such as working in a wet field, when pulling a trailer, or when working with a front-end loader.
2. When working in sandy soil.
3. When working on a hard soil where a rotary tiller might push the tractor forward.
4. For increased braking at reduced speed.

7. Accelerate the engine.

■Hand Throttle Lever

Pulling the throttle lever back increases engine speed, and pushing it forward decreases engine speed.

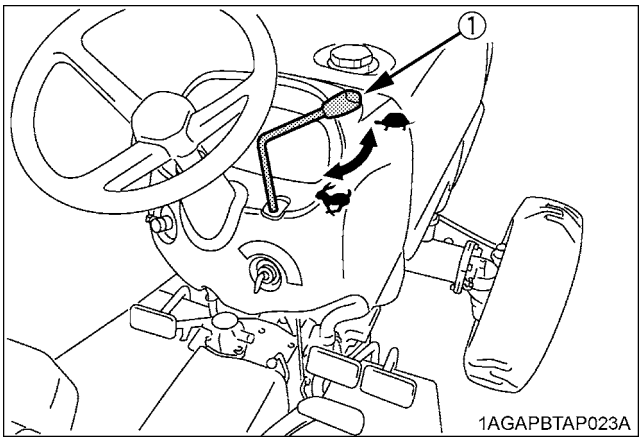

(1) Hand throttle lever *"INCREASE"* *"DECREASE"*

8. Unlock the parking brake and slowly release the clutch.

■Parking Brake

To release the parking brake, depress the brake pedals again.

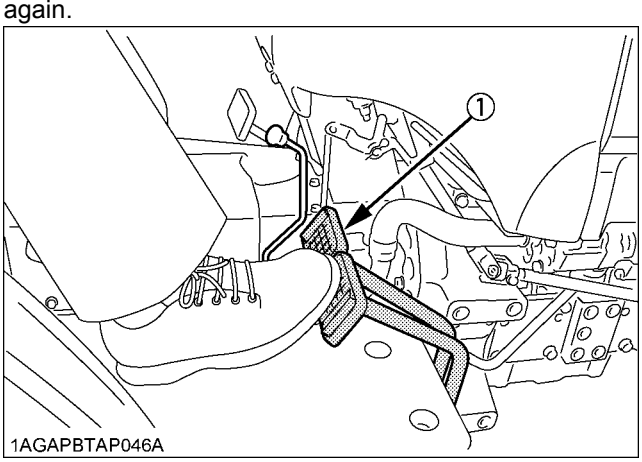

(1) Brake pedals

https://truckmanualshub.com/

9. Depress the Speed Control Pedal. [HST Type]

■Speed Control Pedal

WARNING

To avoid personal injury or death:
- **Do not operate if tractor moves on level ground with foot off of Speed Control Pedal.**
- **Consult your local KUBOTA Dealer.**

Forward Pedal

Depress the speed control pedal with the toe of your right foot to move forward.

Reverse Pedal

Depress the speed control pedal with the heel of your right foot to move backward.

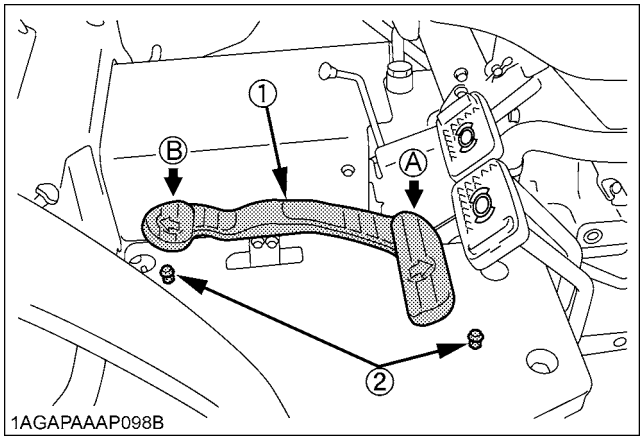

(1) Speed control Pedal *(A) "FORWARD"*
(2) Stopper bolt *(B) "REVERSE"*

IMPORTANT :
- To prevent serious damage to the HST, do not adjust the stopper bolts.

NOTE :
- When you stand up from the seat with the speed control pedal stepped on or the cruise control lever engaged (ON), the engine will stop regardless of whether the tractor is moving or not. This is because the tractor is equipped with Operator Presence Control system (OPC).

■Cruise Control Lever

[if equipped]

WARNING

To avoid personal injury or death:
- **Pull the cruise control lever completely to the rear before starting the engine.**
- **Do not use the cruise control when driving on the road.**
- **Be sure to connect both the left and the right brakes to release the cruise control. The speed cruise control won't be released with single brake activation.**

Cruise control is designed for tractor operating efficiency and operator comfort, This device will provide a constant forward operating speed by mechanically holding the cruise control lever at the selected position.

◆ To engage Cruise Control Device

1. The proper forward speed will be maintained if you apply the cruise control lever at any position.
2. To operate faster than the set speed, depress the speed control pedal further down in this condition. The set speed will be resumed if you release the pedal.

◆ To disengage Cruise Control Device

- Move the lever all the way back and then to "OFF" position to release the cruise control.
- Depress both brake pedals.

NOTE :
- Cruise control will be disengaged automatically when both brake pedals are depressed.
- The cruise control device does not disengage when the individual right or left brake is applied.
- Cruise control device will not operate in reverse.
- Preferably set the cruise control lever, while holding down the speed control pedal. This makes the setting smoother.

https://truckmanualshub.com/

- When releasing the cruise mode, be sure to return the cruise control lever fully backward.

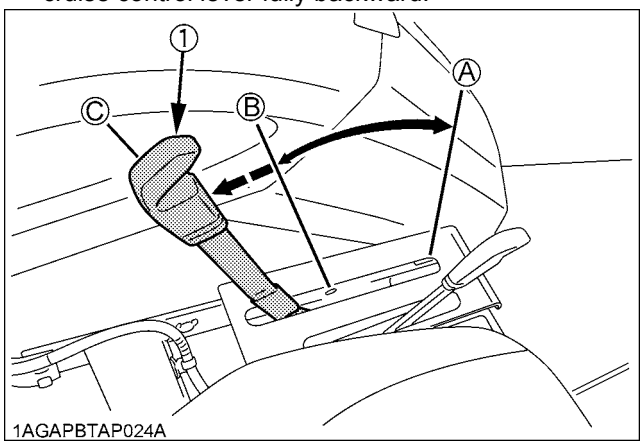

(1) Cruise control lever

(A) "INCREASE"
(B) "DECREASE"
(C) "OFF"

NOTE :

- When you stand up from the seat with the speed control pedal stepped on or the cruise control lever engaged (ON), the engine will stop regardless of whether the tractor is moving or not. This is because the tractor is equipped with Operator Presence Control system (OPC).

https://truckmanualshub.com/

STOPPING

■Stopping

1. Slow down the engine.
2. Step on the clutch and brake pedal.
3. After the tractor has stopped, disengage the PTO, lower the implement to the ground, shift the transmission to neutral, release the clutch pedal, and set the parking brake.

CHECK DURING DRIVING

■Immediately Stop the Engine if:

- The engine suddenly slows down or accelerates.
- Unusual noises are suddenly heard.
- Exhaust fumes suddenly become very dark.

■Easy Checker(TM)

If the indicators in the Easy Checker(TM) come on during operation, immediately stop the engine, and find the cause as shown below.
Never operate the tractor while Easy Checker(TM) lamp is on.

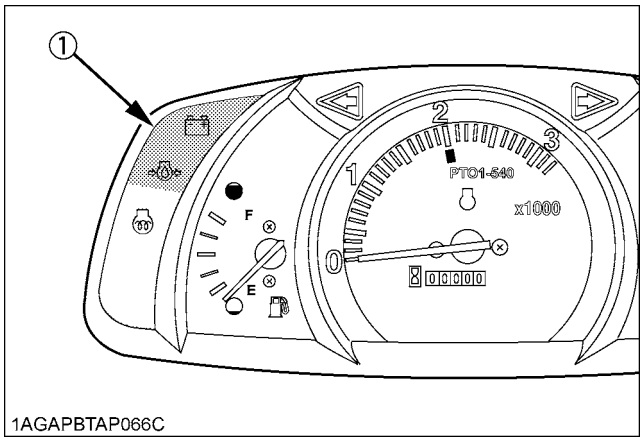

1AGAPBTAP066C

(1) Easy checker(TM)

Engine oil pressure
If the oil pressure in the engine goes below the prescribed level, the indicator in the Easy Checker(TM) will come on.
If this should happen during operation, and it does not go off when the engine is accelerated to more than 1000 rpm, check level of engine oil.
(See "Checking Engine Oil Level" in "DAILY CHECK" in "PERIODIC SERVICE" section.)

Electrical charge
If the alternator is not charging the battery, the indicator in the Easy Checker(TM) will come on.
If this should happen during operation, check the electrical charging system or consult your local KUBOTA Dealer.

NOTE :
- For checking and servicing of your tractor, consult your local KUBOTA Dealer for instructions.

■Fuel Gauge

When the key switch is on, the fuel gauge indicates the fuel level.
Be careful not to empty the fuel tank. Otherwise air may enter the fuel system.
Should this happen, the system should be bled. (See "Bleeding Fuel System" in "SERVICE AS REQUIRED" in "PERIODIC SERVICE" section.)

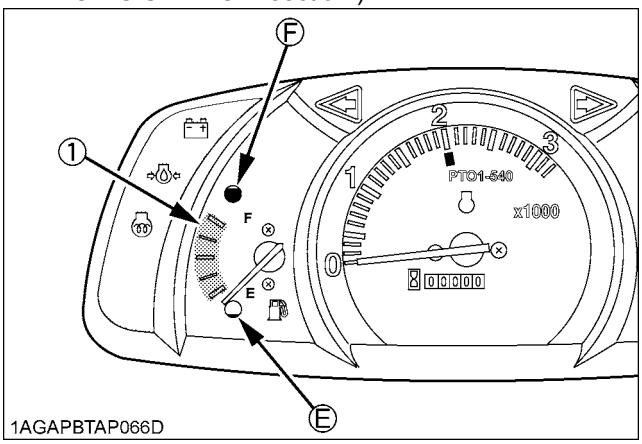

1AGAPBTAP066D

(1) Fuel gauge *(E) "EMPTY"* *(F) "FULL"*

https://truckmanualshub.com/

■Coolant Temperature Gauge

WARNING

To avoid personal injury or death:

- **Do not remove radiator cap until coolant temperature is well below its boiling point. Then loosen cap slightly to the stop to relieve any pressure before removing cap completely.**

1. With the key switch at "ON", this gauge indicates the temperature of the coolant. "C" for "cold" and "H" for "hot".
2. If the indicator reaches the red zone position, engine coolant is overheated. Check the tractor by referring to "TROUBLESHOOTING" section.

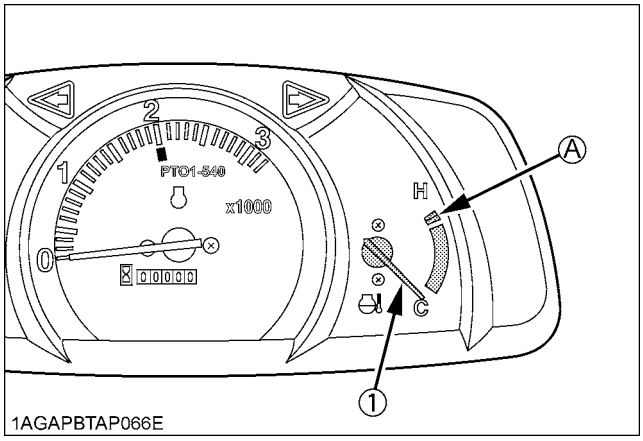

(1) Coolant temperature gauge (A) "RED ZONE"

■Hourmeter/Tachometer

This meter gives readings for engine speed, PTO shaft speed and the hours the tractor has been operated.

1. The tachometer indicates the engine speed and the 540 PTO shaft speed location on the dial.
2. The hourmeter indicates in 5 digits the hours the tractor has been used; the last digit indicates 1/10 of an hour.

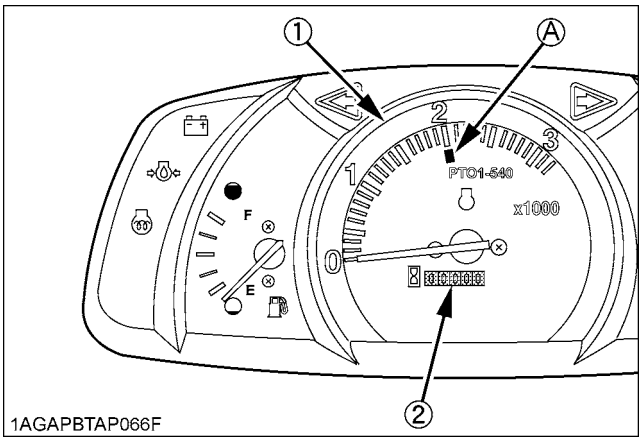

(1) Engine revolution (A) PTO : 540 rpm
(2) Hours used

https://truckmanualshub.com/

PARKING

■Parking

WARNING

To avoid personal injury or death:
BEFORE DISMOUNTING TRACTOR

- **ALWAYS SET PARKING BRAKE AND LOWER ALL IMPLEMENTS TO THE GROUND.**
  Leaving transmission in gear with the engine stopped will not prevent tractor with HST transmission from rolling.
- **STOP THE ENGINE AND REMOVE THE KEY.**

1. When parking, be sure to set the parking brake.
   To set the parking brake;
   (1) Interlock the brake pedals.
   (2) Depress the brake pedals.
   (3) Latch the brake pedals with the parking brake lever.

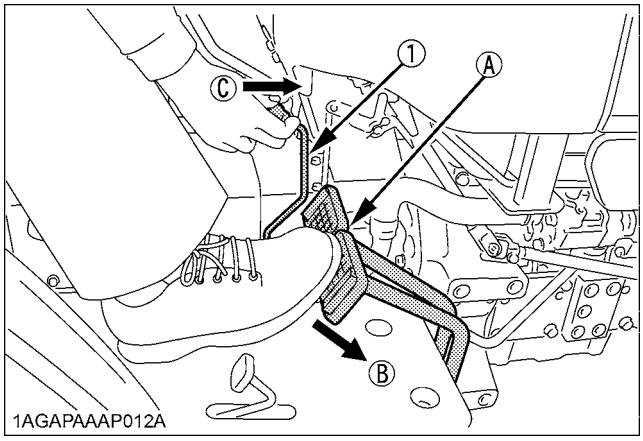

(1) Parking brake lever
(A) Interlock the brake pedals
(B) "DEPRESS"
(C) "PUSH"

IMPORTANT :

- To prevent damage to the parking brake lever, make sure that brake pedals are fully depressed before pushing the parking brake lever.

2. Before getting off the tractor, disengage the PTO, lower all implements to the ground, place all control levers in their neutral positions, set the parking brake, stop the engine and remove the key.
3. If it is necessary to park on an incline, be sure to chock the wheels to prevent accidental rolling of the machine.

OPERATING TECHNIQUES

■Differential Lock

WARNING

To avoid personal injury or death due to loss of steering control:

- **Do not operate the tractor at high speed with differential lock engaged.**
- **Do not attempt to turn with the differential lock engaged.**
- **Be sure to release the differential lock before making a turn in field conditions.**

If one of the rear wheels should slip, step on the differential lock pedal. Both wheels will turn together, then reduce slippage.
Differential lock is maintained only while the pedal is depressed.

[Manual Transmission Type]

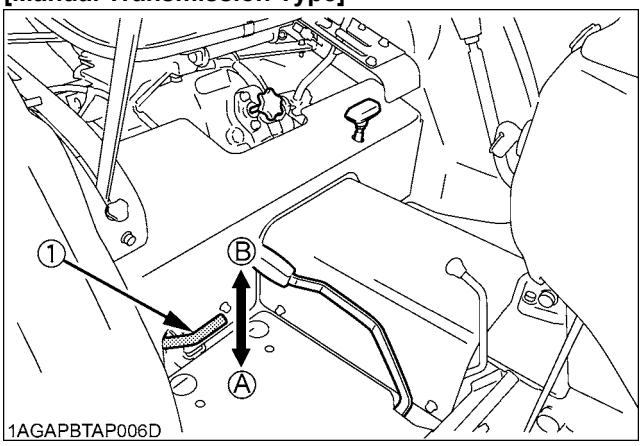

[HST Type]

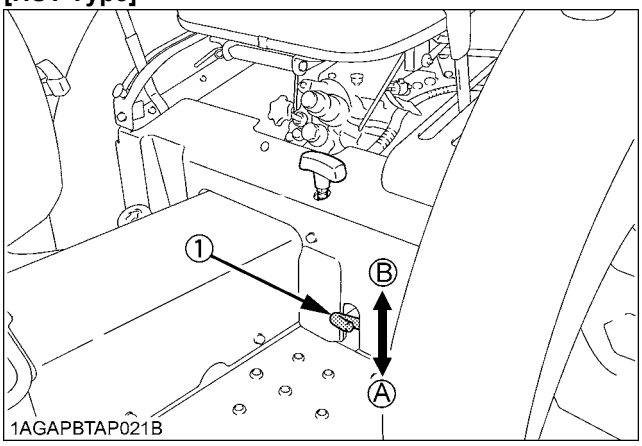

(1) Differential lock pedal
(A) Press to "ENGAGE"
(B) Release to "DISENGAGE"

https://truckmanualshub.com/

IMPORTANT :
- When using the differential lock, always slow the engine down.
- To prevent damage to power train, do not engage differential lock when one wheel is spinning and the other is completely stopped.
- If the differential lock cannot be released, step lightly on the brake pedals alternately.

■Operating the Tractor on a Road

WARNING

To avoid personal injury or death:
- **To help assure straight line stops when driving at transport speeds, lock the brake pedals together. Uneven braking at road speeds could cause the tractor to roll-over.**
- **When traveling on road with 3-point hitch mounted implement attached, be sure to have sufficient front weight on the tractor to maintain steering ability.**

Be sure SMV emblem and warning lamps are clean and visible. If towed or rear-mounted equipment obstructs these safety devices, install SMV emblem and warning lamps on equipment.
Consult your local KUBOTA Dealer for further details.

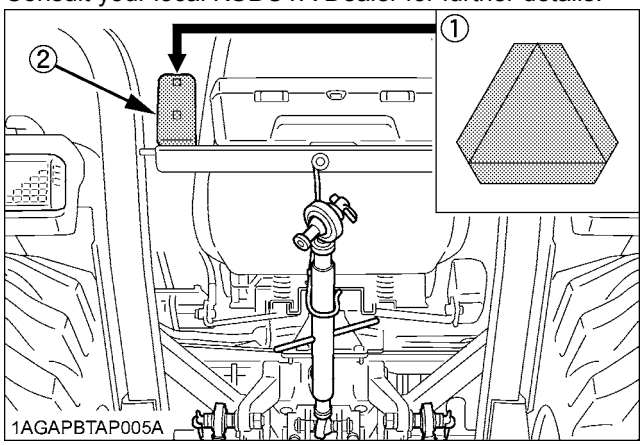

(1) SMV emblem
(2) Bracket

■Operating on Slopes and Rough Terrain

WARNING

To avoid personal injury or death:
- **Always back up when going up a steep slope. Driving forward could cause the tractor to tip over backward. Stay off hills and slopes too steep for safe operation.**
- **Avoid changing gears when climbing or descending a slope.**
- **If operating on a slope, never disengage the clutch or shift levers to neutral. Doing so could cause loss of control.**
- **Do not drive the tractor close to the edges of ditches or banks which may collapse under the weight of the tractor. Especially when the ground is loose or wet.**

1. Be sure wheel tread is adjusted to provide maximum stability.
   (See "WHEEL ADJUSTMENT" in "TIRES, WHEELS AND BALLAST" section.)
2. Slow down for slopes, rough ground, or sharp turns, especially when transporting heavy, rear mounted equipment.
3. Before descending a slope, shift to a gear low enough to control speed without using brakes.

■Transport the Tractor Safely

1. The tractor, if damaged, must be carried on a truck. Secure the tractor tightly with ropes.
2. Follow the instruction below when towing the tractor: Otherwise, the tractor's powertrain may get damaged.
   - Set the all shift levers to "NEUTRAL" position.
   - If possible, start engine and select 2WD, if creep speed is fitted ensure that it is disengaged.
   - Tow the tractor using its front hitch or drawbar.
   - Never tow faster than "10 km/h (6.2 mph)".

■Directions for Use of Power Steering

1. Power steering is activated only while the engine is running. Slow engine speeds make the steering a little heavier. While the engine is stopped, the tractor functions in the same manner as tractors without power steering.
2. When the steering wheel is turned all the way to the stop, the relief valve is activated. Do not hold the steering wheel in this position for a long period of time.
3. Avoid turning the steering wheel while the tractor is stopped, or tires may wear out sooner.
4. The power steering mechanism makes the steering easier. Be careful when driving on a road at high speeds.

https://truckmanualshub.com/

PTO

PTO OPERATION

WARNING

To avoid personal injury or death:

- **Disengage PTO, stop engine, and allow all rotating components to come to a complete stop before connecting, disconnecting, adjusting, or cleaning any PTO driven equipment.**

■PTO Gear Shift Lever

1. The tractor has a 540 rpm speed position.
2. PTO shifting needs clutch operation. Press the clutch pedal down completely to stop the tractor movement and any PTO driven equipment movement before shifting the PTO gear shift lever.

[Manual Transmission Type]

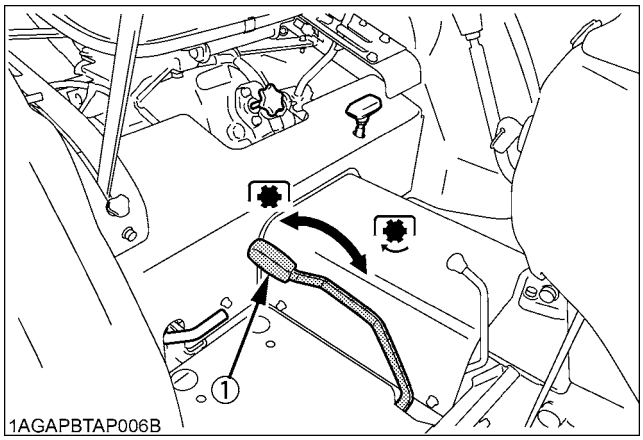

[HST Type]

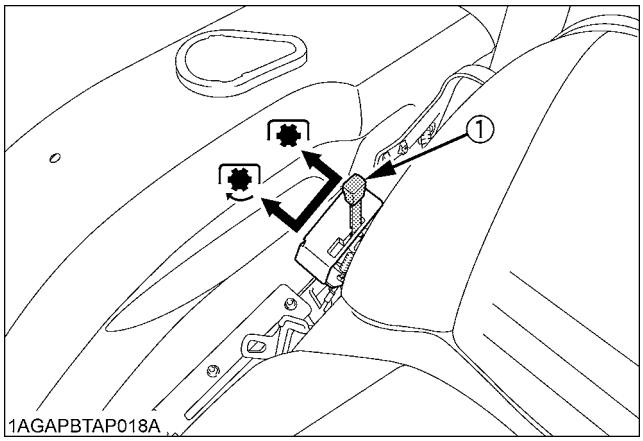

(1)PTO gear shift lever *"ON"* *"OFF"*

IMPORTANT :

- To avoid shock loads to the PTO, reduce engine speed when engaging the PTO, then open the throttle to the recommended speed:
- To avoid damage of transmission, before shifting the PTO gear shift lever, fully disengage the main clutch.

NOTE :

- There is a PTO-1 (540 rpm) indicated mark on the tachometer board.
- Tractor engine will not start if PTO gear shift lever is in the engaged "ON" position.

https://truckmanualshub.com/

■Stationary PTO

To park the tractor and use the PTO system (for chipper or pump, for example), start the PTO system in the following steps.

1. Apply the parking brakes and place blocks at the tires.
2. Make sure the shift levers are at NEUTRAL, and start the engine.
3. Set the PTO gear shift lever to engage "ON".
4. Set the engine speed to provide recommended PTO speed.
5. Dismount the seat and tilt up quickly (engine will stop if there is a delay in tilting up the seat).

[Manual Transmission Type]

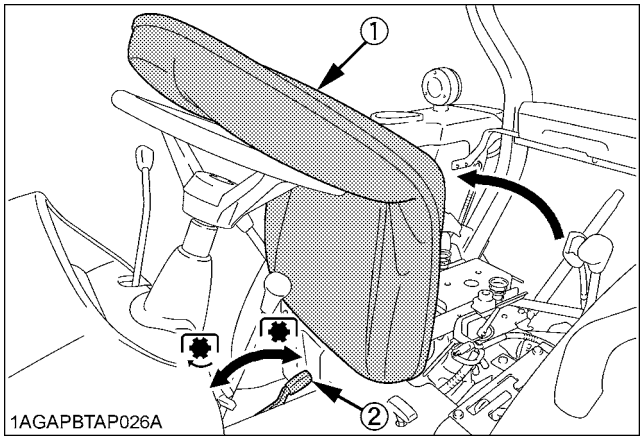

[HST Type]

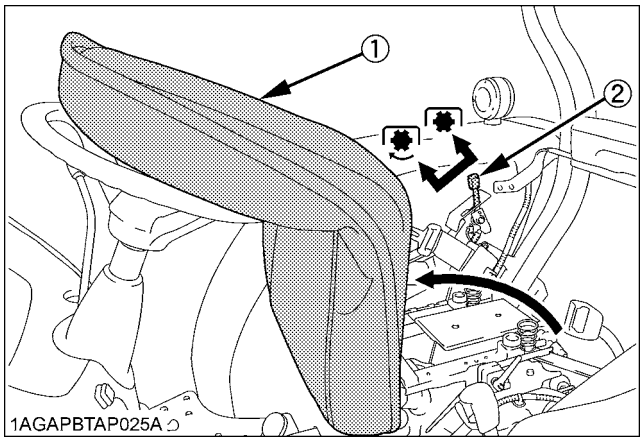

(1) Seat *"ON"*
(2) PTO gear shift lever *"OFF"*

NOTE :

- If the PTO system is engaged and you stand up from the seat or the seat is not tilted forward, the engine stops automatically after standing up.

■PTO Shaft Cover and Shaft Cap

Keep the PTO shaft cover in place at all times.
Replace the PTO shaft cap when the shaft is not in use.
When connecting or disconnecting the joint to PTO shaft, raise up the PTO shaft cover.

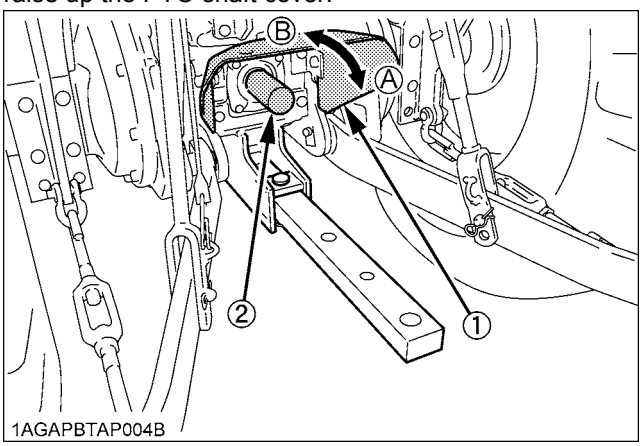

(1) PTO shaft cover *(A) "NORMAL POSITION"*
(2) PTO shaft cap *(B) "RAISED POSITION"*

IMPORTANT :

- The universal joint of the PTO drive shaft is technically limited in its moving angle. Refer to the PTO Drive Shaft Instructions for proper use.

https://truckmanualshub.com/

3-POINT HITCH & DRAWBAR

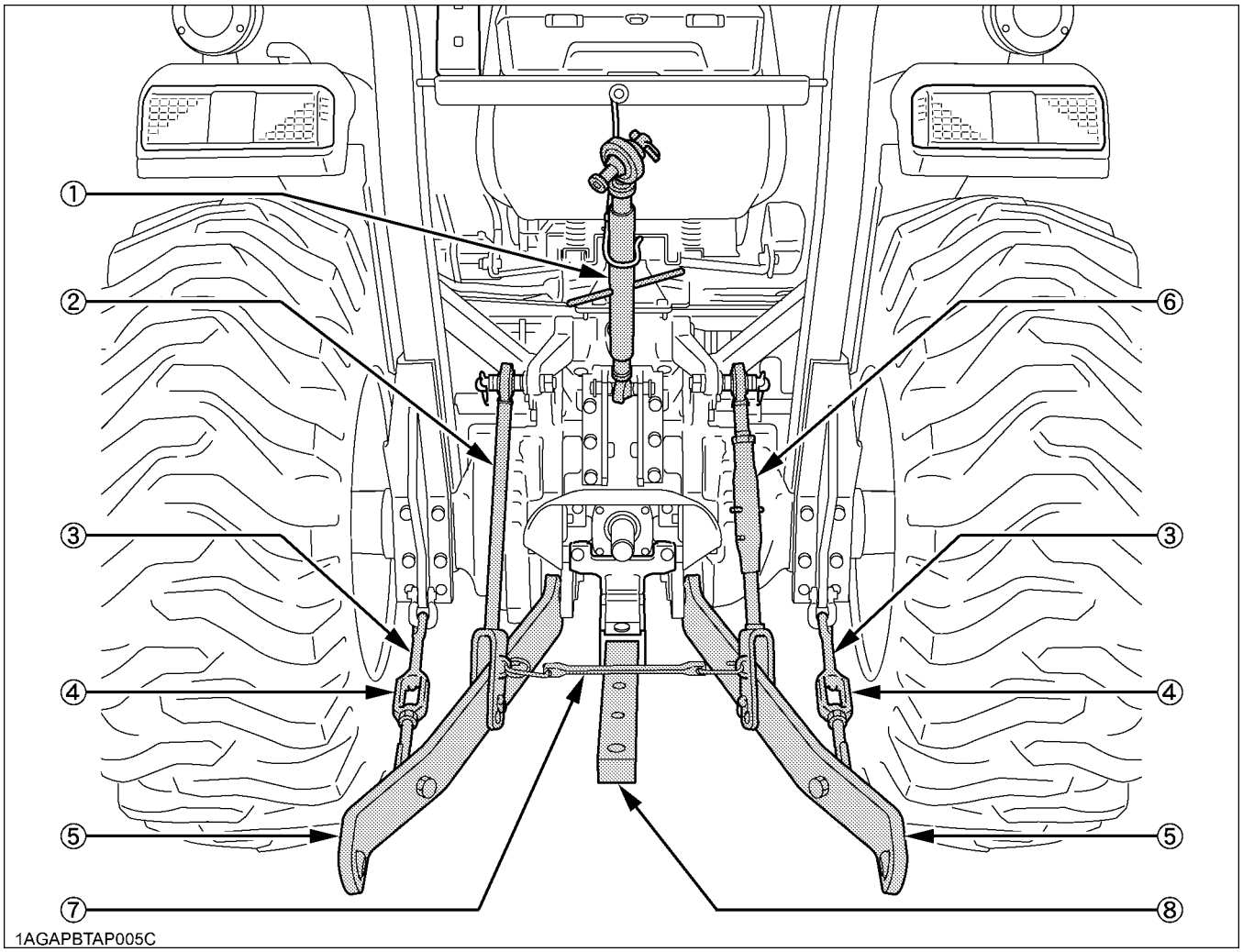

(1) Top link
(2) Lifting rod (Left)
(3) Check chains
(4) Turn buckle
(5) Lower link
(6) Lifting rod (Right)
(7) Lower link holder
(8) Drawbar

https://truckmanualshub.com/

3-POINT HITCH

1. Make preparations for attaching implement.

■Selecting the holes of Lower Links

There are 2 holes in the lower links. For most operations the lifting rods should be attached to the (B) hole.

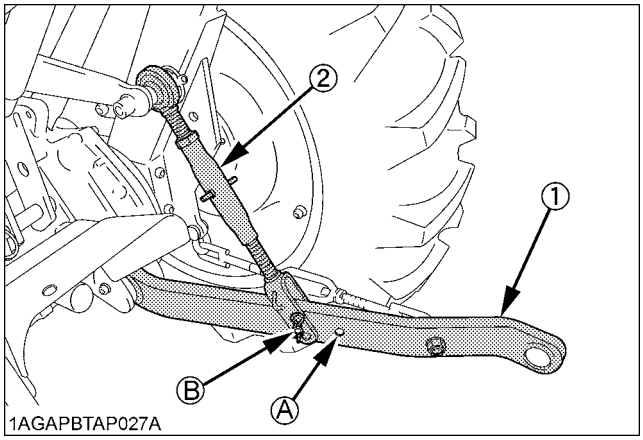

(1) Lower link holes: (A), (B)
(2) Lifting rod

NOTE :
- The lifting rods may be attached to (A) for greater lifting force.

■Selecting the top link mounting holes

Select the proper set of holes by referring to the "Hydraulic Control Unit Use Reference Chart" in "HYDRAULIC UNIT" section.

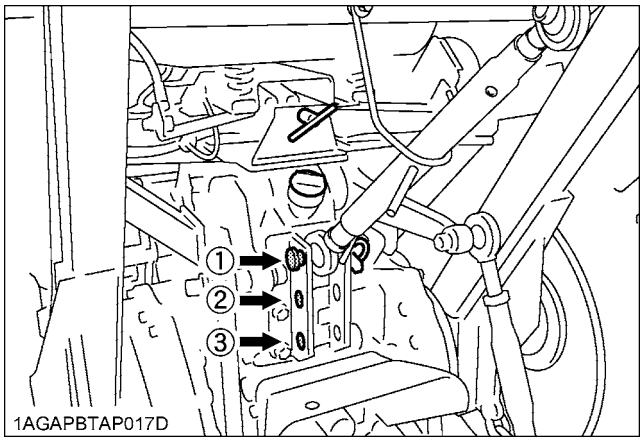

■Drawbar

Remove the drawbar if a close mounted implement is attached.

2. Attaching and detaching implements

WARNING

To avoid personal injury or death:
- **Be sure to stop the engine.**
- **Do not stand between tractor and implement unless parking brake is applied.**
- **Before attaching or detaching implement, locate the tractor and implement on a firm level surface.**
- **Whenever an implement or other attachment is connected to the tractor 3-point hitch, check full range of operation for interference, binding or PTO separation.**

■Lifting Rod (Right)

Level a 3-point mounted implement from side to side by turning the adjusting handle to shorten or lengthen the adjustable lifting rod with the implement on the ground. After adjustment, tighten the lock nut securely.

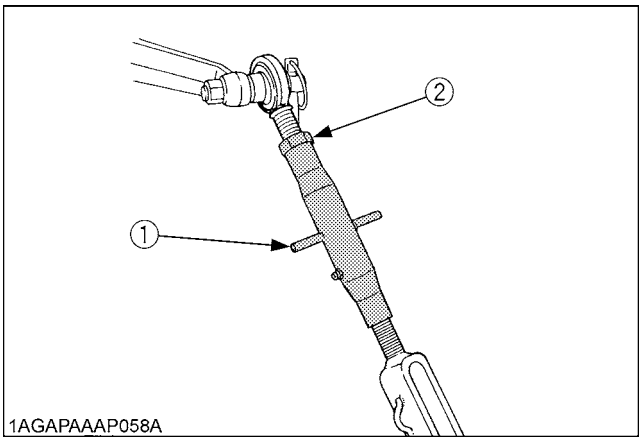

(1) Adjusting handle
(2) Lock nut

■Top Link

1. Adjust the angle of the implement to the desired position by shortening or lengthening the top link. After adjustment, tighten the lock nut securely.
2. The proper length of the top link varies according to the type of implement being used.

https://truckmanualshub.com/

■Check Chains

Adjust the turnbuckle to control horizontal sway of the implement. See "Hydraulic Control Unit Use Reference Chart" in "AUXILIARY HYDRAULICS" in "HYDRAULIC UNIT" section.
After adjustment, retighten the lock nut.

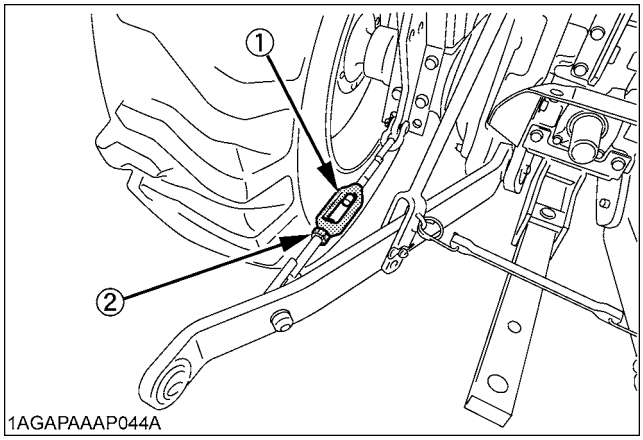

(1) Turnbuckle
(2) Lock nut

■Lower link holder

When operating the tractor without a 3-point hitch implement, it is necessary to lock the lower links to prevent them from hitting the tractor rear wheels.

DRAWBAR

WARNING

To avoid personal injury or death:

- **Never pull from the top link, the rear axle or any point above the drawbar. Doing so could cause the tractor to tip over rearward causing personal injury or death.**

■Adjusting Drawbar Length

When towing an implement, recommend use of (B) hole in drawbar.
The drawbar load is referred to "IMPLEMENT LIMITATIONS" section.

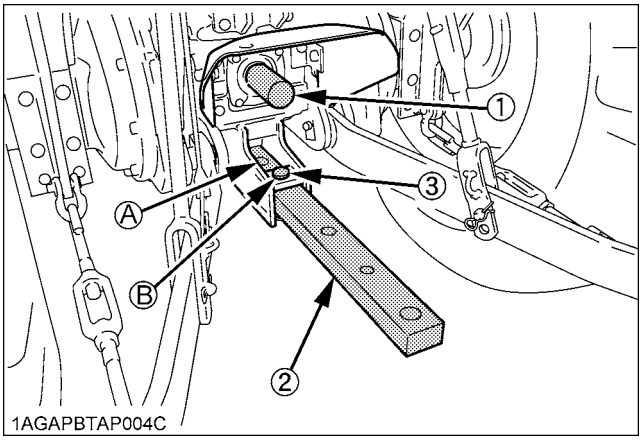

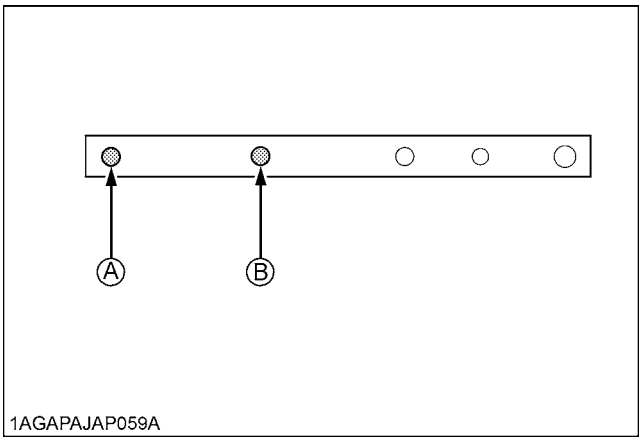

(1) PTO shaft *Holes : (A),(B)*
(2) Drawbar
(3) Pivot pin

https://truckmanualshub.com/

HYDRAULIC UNIT

IMPORTANT :
- Do not operate until the engine is warmed up. If operation is attempted when the engine is still cold, the hydraulic system may be damaged.
- If noises are heard when implement is lifting after the hydraulic control lever has been activated, the hydraulic mechanism is not adjusted properly. Unless corrected, the unit will be damaged. Contact your KUBOTA Dealer for adjustment.

3-POINT HITCH CONTROL SYSTEM

WARNING

To avoid personal injury or death:
- **Before using the 3-point hitch controls, ensure that no person or object is in the area of the implement or 3-point hitch. Do not stand on or near the implement or between the implement and tractor when operating the 3-point hitch controls.**

■Position Control

This will control the working depth of 3-point hitch mounted implement regardless of the amount of pull required.

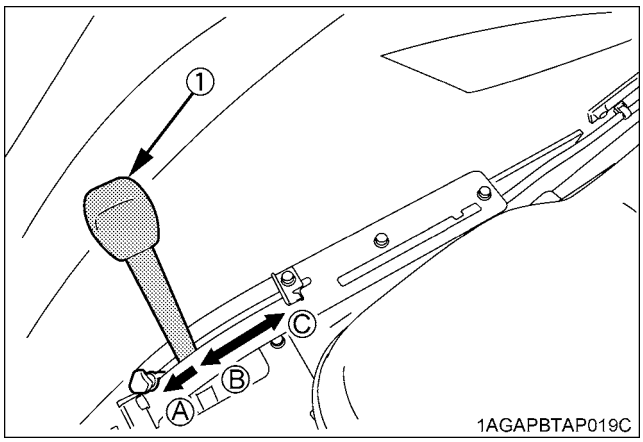

(1) Position control lever
(A) "FLOAT"
(B) "DOWN"
(C) "UP"

■Float Control

Place the position control lever in the float position to make the lower links move freely along with the ground conditions.

■3-point Hitch Lowering Speed

WARNING

To avoid personal injury or death:
- **Fast lowering speed may cause damage or injury. Lowering speed of implement should be adjusted to 2 or more seconds.**

The lowering speed of the 3-point hitch can be controlled by adjusting the 3-point hitch lowering speed knob.

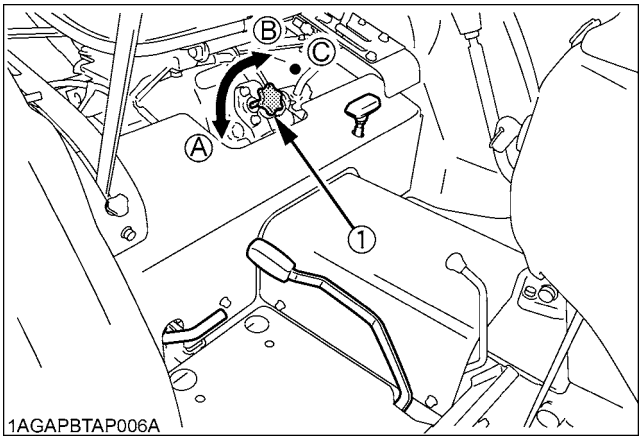

(1) 3-point hitch lowering speed knob
(A) "FAST"
(B) "SLOW"
(C) "LOCK"

https://truckmanualshub.com/

AUXILIARY HYDRAULICS

■Hydraulic Block Type Outlet

Hydraulic block type outlet is useful when adding hydraulically operated implement such as: front end loader, front blade, etc.

When implement is attached

1. Remove the block cover.
2. Route the implement inlet, outlet, and return hoses as shown in the illustration.

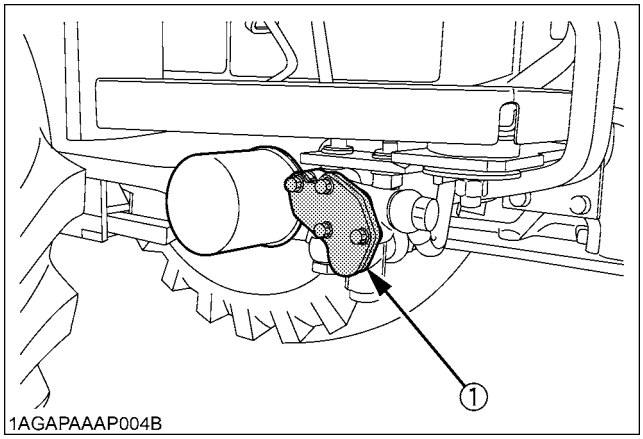

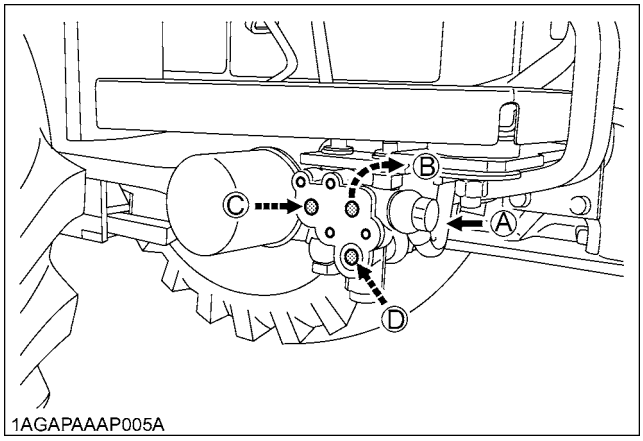

(1) Block cover

(A) From gear pump
(B) To implement
Max flow
19.5L/min (5.15 gals./min)
Max pressure
15.2 Mpa (155 kgf/cm², 2205 psi)
(C) From implement (Outlet)
(D) From implement (Tank port)

https://truckmanualshub.com/

■Hydraulic Control Unit Use Reference Chart

In order to handle the hydraulics properly, the operator must be familiar with the following. Though this information may not be applicable to all types of implements and soil conditions, it is useful for general conditions.

Implement	1AGAMAAAP314A Soil condition	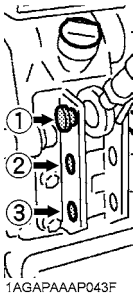 1AGAPAAAP043F Top link mounting holes	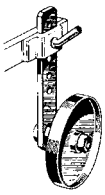 1AGAMAAAP316A Gauge wheel	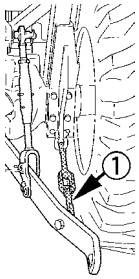 1AGAPAAAP041D (1) Check chains	Remarks
Moldboard plow	Light soil Medium soil Heavy soil	1 or 2 2 or 3 3	YES/NO	Loose	Adjust the check chains so that the implement can move 5 to 6 cm (2.0 to 2.4 in.) laterally. Check chains should be tight enough to prevent excessive implement movement when implement is in raised position.
Disc plow	---	2 or 3			
Harrow (spike, springtooth, disc type)	---	2 or 3			
Sub-soiler ...					
Weeder, ridger...	---	3	YES	Tighten	
Earthmover, digger, scraper, manure fork, rear carrier.....			YES/NO		With implements with gauge wheels, lower the position control lever all the way.
Mower (mid- and rear-mount type)			NO		

https://truckmanualshub.com/

TIRES, WHEELS AND BALLAST

TIRES

WARNING

To avoid personal injury or death:

- **Do not attempt to mount a tire on a rim. This should be done by a qualified person with the proper equipment.**
- **Always maintain the correct tire pressure. Do not inflate tires above the recommended pressure shown in the operator's manual.**

IMPORTANT :

- Do not use tires other than those approved by KUBOTA.

■Inflation Pressure

Though the tire pressure is factory-set to the prescribed level, it naturally drops slowly in the course of time. Thus, check it everyday and inflate as necessary.

NOTE :

- Maintain the maximum pressure in front tires, if using a front loader or when equipped with a full load of front weights.

	Tire sizes	Inflation Pressure
Rear	11.2-24, 4PR	100 kPa (1.0 kgf/cm^2, 14 psi)
	13.6-16, 4PR	100 kPa (1.0 kgf/cm^2, 14 psi)
	15-19.5, 6PR	210 kPa (2.1 kgf/cm^2, 30 psi)
Front	5.00-15, 4PR	220 kPa (2.2 kgf/cm^2, 32 psi)
	7.2-16, 6PR	180 kPa (1.8 kgf/cm^2, 26 psi)
	23 x 8.50-12, 4PR	160 kPa (1.6 kgf/cm^2, 23 psi)
	25 x 8.50-14, 6PR	160 kPa (1.6 kgf/cm^2, 23 psi)
	27 x 8.50-15, 6PR	210 kPa (2.1 kgf/cm^2, 30 psi)

■Dual Tires

Dual tires are not approved.

WHEEL ADJUSTMENT

WARNING

To avoid personal injury or death:

- **When working on slopes or when working with trailer, set the wheel tread as wide as practical for maximum stability.**
- **Support tractor securely on stands before removing a wheel.**
- **Do not work under any hydraulically supported devices. They can settle, suddenly leak down, or be accidentally lowered. If necessary to work under tractor or any machine elements for servicing or adjustment, securely support them with stands or suitable blocking beforehand.**
- **Never operate tractor with a loose rim, wheel, or axle.**

■Front Wheels

Front tread can not be adjusted.

IMPORTANT :

- Do not turn front discs to obtain wider tread.
- When re-fitting or adjusting a wheel, tighten the bolts to the following torques then recheck after driving the tractor 200 m (200 yards) and 10 times of shuttle movement by 5 m (5 yards), and thereafter according to service interval.
  (See "MAINTENANCE" section.)

◆ **2WD Front Wheel**

5-15 Farm	23 x 8.5-12 Turf
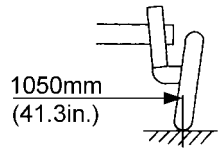 1AGAPAAAP053A	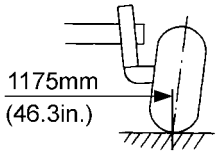 1AGAPAAAP054A

https://truckmanualshub.com/

◆ **4WD Front Wheel**

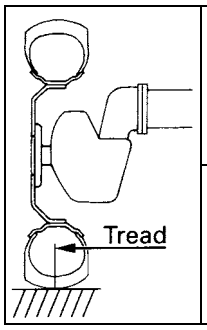	Tire	7.2-16 Farm	25 x 8.5-14 Turf	27 x 8.5-15 IND
	Tread	1095mm (43.1in.)	1105mm (43.5in.)	1115mm (43.9in.)

NOTE :
- IND...for Industrial

WARNING

To avoid personal injury or death:
- **Before jacking up the tractor, park it on a firm and level ground and chock the rear wheels.**
- **Fix the front axle to keep it from pivoting.**
- **Select jacks that withstand the machine weight and set them up as shown below.**

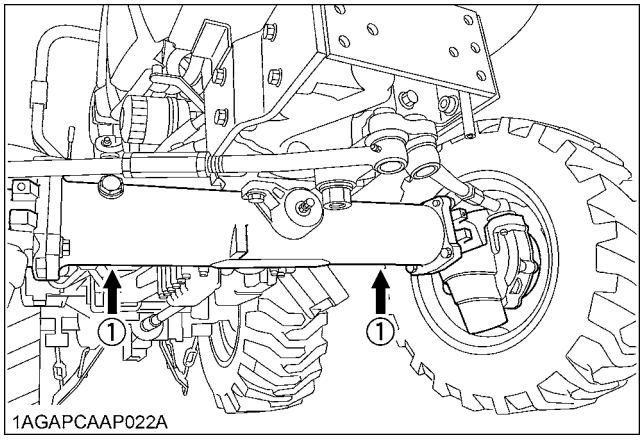

(1) Jack points

■Rear Wheels

Rear tread width can be adjusted with the tires listed below.

To change the tread width
1. Remove the wheel rim and / or disk mounting bolts.
2. Change the position of the rim and / or disk (right and left) to the desired position, and tighten the bolts.

IMPORTANT :
- Always attach wheels as shown in the drawings.
- If not attached as illustrated, transmission parts may be damaged.
- When re-fitting or adjusting a wheel, tighten the bolts to the following torques then recheck after driving the tractor 200 m (200 yards) and 10 times of shuttle movement by 5 m (5 yards), and thereafter according to service interval.
  (See "MAINTENANCE" section.)

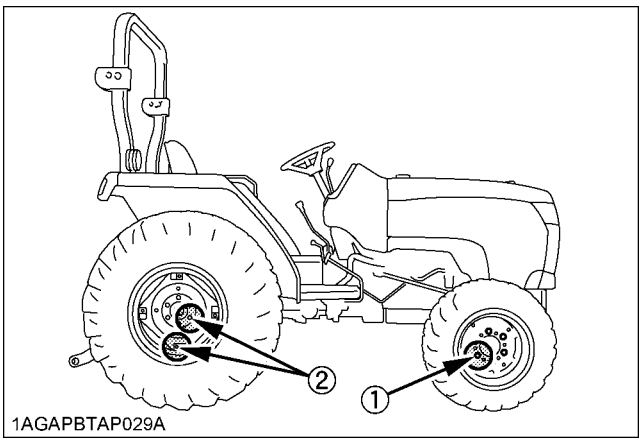

(1) 137 N-m (14 kgf-m, 100 ft-lbs)
(2) 215 N-m (22 kgf-m, 160 ft-lbs)

https://truckmanualshub.com/

15-19.5 Industry	13.6-16 Turf
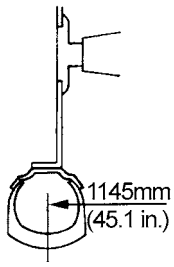	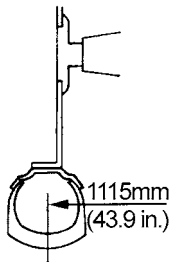

11.2-24 Farm		
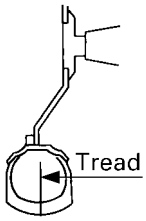	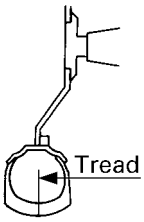	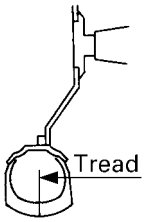
1115mm (43.8in.)	1195mm (47.1in.)	1290mm (50.8in.)

WARNING

To avoid personal injury or death:

- **Before jacking up the tractor, park it on a firm and level ground and chock the front wheels.**
- **Fix the front axle to keep it from swinging.**
- **Select a jack that withstands the machine weight and set it up as shown below.**

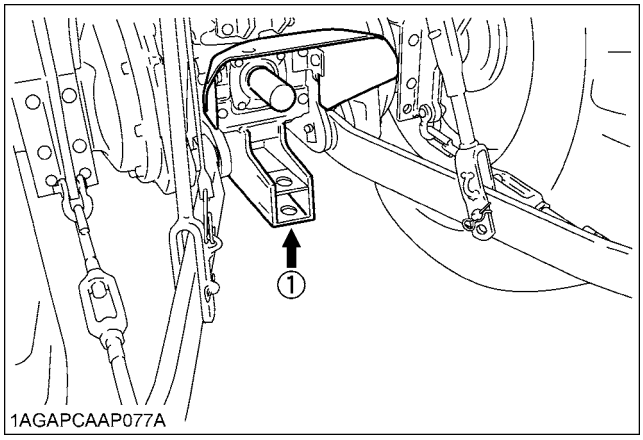

(1) Jack point

BALLAST

WARNING

To avoid personal injury or death:

- **Additional ballast will be needed for transporting heavy implements. When the implement is raised, drive slowly over rough ground, regardless of how much ballast is used.**
- **Do not fill the front wheels with liquid to maintain steering control.**

■Front Ballast

Add weights if needed for stability (2WD, 4WD models) and improve traction (4WD model). Heavy pulling and heavy rear mounted implements tend to lift front wheels. Add enough ballast to maintain steering control and prevent tip over. Remove weight when no longer needed.

◆ Front End Weights (option)

The front end weights can be attached to the bumper. See your implement operator's manual for required number of weights or consult your local KUBOTA Dealer to use.

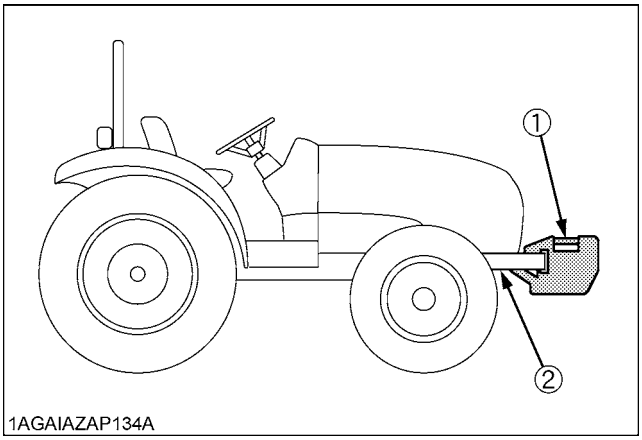

(1) Front end weights
(2) Bumper

IMPORTANT :

- Do not overload tires.
- Add no more weight than indicated in chart.

NOTE :

- The front end weights can be attached to the bumper (option on 4WD models - North America only).

Maximum weight	25 kg x 5 pieces (275 lbs.)

https://truckmanualshub.com/

■Rear Ballast

Add weight to rear wheels if needed to improve traction or for stability. The amount of rear ballast should be matched to job and the ballast should be removed when it is not needed.
The weight should be added to the tractor in the form of liquid ballast, rear wheel weights or a combination of both.

◆ Rear Wheel Weights (option)

The rear wheel weights can be attached to the rear wheel. See your implement operator's manual for required number of weights or consult your local KUBOTA Dealer to use.

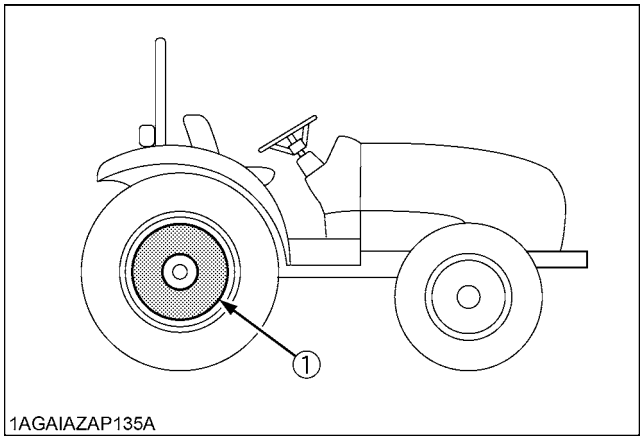

(1) Rear wheel weights

IMPORTANT :
- Do not overload tires.
- Add no more weight than indicated in chart.

Maximum weight per wheel	28 kg x 3 Pieces (185 lbs.)

■Liquid Ballast in Rear Tires

Water and calcium chloride solution provides safe economical ballast. Used properly, it will not damage tires, tubes or rims. The addition of calcium chloride is recommended to prevent the water from freezing. Use of this method of weighting the wheels has the full approval of the tire companies. See your tire dealer for this service.

Liquid weight per tire (75 Percent filled)

Tire sizes	11.2 - 24	15 - 19.5
Slush free at -10 ℃ (14 ℉) Solid at -30 ℃ (-22 ℉) [Approx. 1 kg (2 lbs.) $CaCl_2$ per 4 L (1 gal) of water]	105 kg (230 lbs.)	140 kg (309 lbs.)
Slush free at -24 ℃ (-11 ℉) Solid at -47 ℃ (-52 ℉) [Approx. 1.5 kg (3.5 lbs.) $CaCl_2$ per 4 L (1 gal) of water]	110 kg (240 lbs.)	150 kg (331 lbs.)
Slush free at -47 ℃ (-52 ℉) Solid at -52 ℃ (-62 ℉) [Approx. 2.25 kg (5 lbs.) $CaCl_2$ per 4 L (1 gal) of water]	115 kg (253 lbs.)	160 kg (353 lbs.)

IMPORTANT :
- Do not fill tires with water or solution more than 75% of full capacity (to the valve stem level at 12 o'clock position).

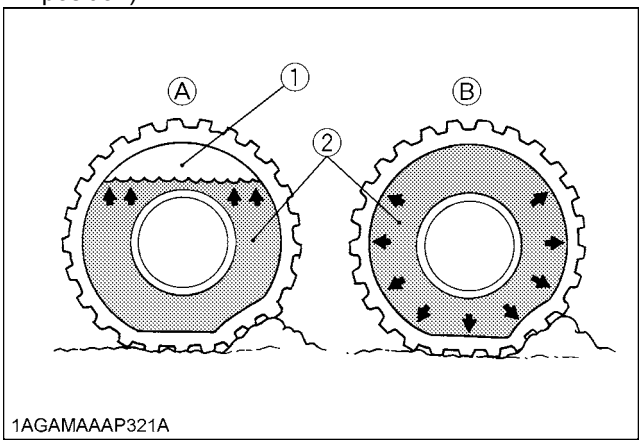

(1) Air
(2) Water
(A) Correct-75% Air compresses like a cushion
(B) Incorrect-100% Full Water can not be compressed

https://truckmanualshub.com/

MAINTENANCE

SERVICE INTERVALS

No.	Items		Indication on hour meter														Interval	Ref. page		
			50	100	150	200	250	300	350	400	450	500	550	600	650	700				
1	Greasing	-	○	○	○	○	○	○	○	○	○	○	○	○	○	○	every 50 Hr	55		
2	Engine start system	Check	○	○	○	○	○	○	○	○	○	○	○	○	○	○	every 50 Hr	57		
3	Operator presence control	Check	○	○	○	○	○	○	○	○	○	○	○	○	○	○	every 50 Hr	58		
4	Wheel bolt torque	Check	○	○	○	○	○	○	○	○	○	○	○	○	○	○	every 50 Hr	58		
5	Air cleaner element	Clean		○		○		○		○		○		○		○	every 100 Hr	59	*1	@
		Replace															every 1000 Hr or 1 year	68	*4	
6	Fuel filter element	Clean		○		○		○		○		○		○		○	every 100 Hr	59		@
		Replace								○							every 400 Hr	67		
7	Fan belt	Adjust		○		○		○		○		○		○		○	every 100 Hr	60		
8	Clutch	Adjust	◎	○		○		○		○		○		○		○	every 100 Hr	60		
9	Brake	Adjust		○		○		○		○		○		○		○	every 100 Hr	61		
10	Battery condition	Check		○		○		○		○		○		○		○	every 100 Hr	61	*3	
11	Transmission oil filter [HST]	Replace	◎			○				○				○			every 200 Hr	63		
12	Toe-in	Adjust				○				○				○			every 200 Hr	64		
13	Engine oil	Change	◎							○							every 400 Hr	65		
14	Engine oil filter	Replace	◎							○							every 400 Hr	65		
15	Hydraulic oil filter [HST]	Replace	◎							○							every 400 Hr	66		
16	Hydraulic oil filter [Except HST]	Replace								○							every 400 Hr	66		
17	Transmission fluid	Change								○							every 400 Hr	66		
18	Greasing (2WD front wheel hub)	-								○							every 400 Hr	67		
19	Front axle pivot	Adjust												○			every 600 Hr	67		
20	Front axle case oil (4WD)	Change															every 800 Hr	68		
21	Engine valve clearance	Adjust															every 800 Hr	68	*2	
22	Fuel injection nozzle Injection pressure	Check															every 1500 Hr	68	*2	@
23	Cooling system	Flush															every 2000 Hr or 2 year	69	*5	

https://truckmanualshub.com/

No.	Items		Indication on hour meter														Interval	Ref. page		
			50	100	150	200	250	300	350	400	450	500	550	600	650	700				
24	Coolant	Change															every 2000 Hr or 2 year	69	*5	
25	Injection pump	Check															every 3000 Hr	70	*2	@
26	Fuel line	Check															every 1 year	70		@
		Replace															every 4 year	72	*2 *6	
27	Intake air line	Check															every 1 year	70		@
		Replace															every 4 year	72	*2 *6	
28	Radiator hose and clamp	Check															every 1 year	71		
		Replace															every 4 year	72	*6	
29	Power steering oil line	Check															every 1 year	71		
		Replace															every 4 year	72	*2 *6	
30	Oil cooler line [HST]	Check															every 1 year	71		
		Replace															every 4 year	72	*2 *6	
31	Fuel system	Bleed															Service as required	72		
32	Clutch housing water	Drain																72		
33	Fuse	Replace																73		
34	Light bulb	Replace																73		
35	Head lamp	Replace																74		
36	Radiator hose and clamp	Replace																74	*6	
37	Fuel line	Replace																74	*2 *6	@
38	Intake air line	Replace																74	*2 *6	@
39	Power steering line	Replace																74	*2 *6	
40	Oil cooler line [HST]	Replace																74	*2 *6	

IMPORTANT :

- The jobs indicated by ◎ must be done after the first 50 hours of operation.

*1 Air cleaner should be cleaned more often in dusty conditions than in normal conditions.

*2 Consult your local KUBOTA Dealer for this service.

*3 When the battery is used for less than 100 hours per year, check the battery condition by reading the indicator annually.

*4 Every 1,000 hours or every 1 year, whichever comes first.

*5 Every 2,000 hours or every 2 years, whichever comes first.

*6 Replace if any deterioration (crack, hardening, scar or deformation) or damage occurred.
However, must be replaced every 4 years regardless of the condition.

- The items listed above (@ marked) are registered as emission related critical parts by KUBOTA in the U.S.EPA nonroad emission regulation. As the engine owner, you are responsible for the performance of the required maintenance on the engine according to the above instruction.
  Please see Warranty Statement in detail.

https://truckmanualshub.com/

LUBRICANTS, FUEL AND COOLANT

No.	Locations		Capacities L2501	Lubricants	
1	Fuel		38.0 L (10.0 U.S.gals.)	No. 2-D diesel fuel No. 1-D diesel fuel if temperature is below -10 ℃(14℉)	
2	Coolant		6.0 L (6.3 U.S.qts.)	Fresh clean soft water with anti-freeze	
3	Engine crankcase (with filter)		5.7 L (6.0 U.S.qts.)	● Engine oil : Refer to next page	
				Above 25℃ (77℉)	SAE30, SAE10W-30 or 15W-40
				-10℃ to 25℃ (14 to 77℉)	SAE20, SAE10W-30 or 15W-40
				Below -10℃ (14℉)	SAE10W-30
4	Transmission case	Manual Transmission, 2WD	27.0 L (7.1 U.S. gals.)	● KUBOTA SUPER UDT-2 fluid	
		Manual Transmission, 4WD	27.5 L (7.3 U.S. gals.)		
		HST, 4WD	23.5 L (6.2 U.S. gals.)		
5	Front axle case [4WD]		4.5 L (4.8 U.S.qts.)	● KUBOTA SUPER UDT-2 fluid or SAE 80 - SAE 90 gear oil	
6	Greasing		No. of greasing points	Capacity	Type of grease
	● Front wheel hub		2 [2WD only]	A small amount	Bearing grease
	● Knuckle shaft		2 [2WD only]	Until grease overflows.	Multipurpose Grease NLGI-2 OR NLGI-1 (GC-LB)
	● Front axle support		2 [4WD only]		
	● Clutch pedal		1		
	● Brake pedal		1		
	● Pedal shaft		1		
	● Battery terminals		2		
	● Lift rod		1		
	● Tie rod end		4 [4WD only]		

NOTE :

The product name of KUBOTA genuine UDT fluid may be different from that in the Operator's Manual depending on countries or territories. Consult your local KUBOTA Dealer for further details.

https://truckmanualshub.com/

For North American market

NOTE :

◆ **Engine Oil:**

- Oil used in the engine should have an American Petroleum Institute (API) service classification and Proper SAE Engine Oil according to the ambient temperatures as shown above:

- Refer to the following table for the suitable API classification engine oil according to the engine type (with internal EGR, external EGR or non-EGR) and the fuel.

Fuel used	Engine oil classification (API classification)	
	Oil class of engines except external EGR	Oil class of engines with external EGR
Ultra Low Sulfur Fuel [<0.0015% (15 ppm)]	**CF, CF-4, CG-4, CH-4** or **CI-4**	**CF** or **CI-4** (Class CF-4, CG-4 and CH-4 engine oils cannot be used on EGR type engines)

EGR: Exhaust Gas Re-circulation

- The CJ-4 engine oil is intended for DPF (Diesel Particulate Filter) type engines, and cannot be used on this tractor.

	except external EGR	with external EGR
Model	L2501	---

◆ **Fuel:**

- Cetane number of 45 is minimum. Cetane number greater than 50 is preferred, especially for temperatures below -20℃ (-4℉) or elevations above 1500 m (5000 ft).
- Diesel fuels specified to EN 590 or ASTM D975 are recommended.
- No.2-D is a distillate fuel of lower volatility for engines in industrial and heavy mobile service. (SAE J313 JUN87)

◆ **Transmission Oil:**

*KUBOTA Super UDT-2: For an enhanced ownership experience, we highly recommend Super UDT-2 to be used instead of standard hydraulic/transmission fluid.
Super UDT-2 is a proprietary KUBOTA formulation that delivers superior performance and protection in all operating conditions.
Regular UDT is also permitted for use in this machine.

- Indicated capacities of water and oil are manufacturer's estimate.

https://truckmanualshub.com/

For other than North American market

NOTE :

◆ **Engine Oil:**

- Oil used in the engine should have an American Petroleum Institute (API) service classification and Proper SAE Engine Oil according to the ambient temperatures as shown above:
- With the emission control now in effect, the CF-4 and CG-4 lubricating oils have been developed for use of a low-sulfur fuel on on-road vehicle engines. When an off-road vehicle engine runs on a high-sulfur fuel, it is advisable to employ the "CF or better" lubricating oil with a high Total Base Number (TBN of 10 minimum).

- Refer to the following table for the suitable API classification engine oil according to the engine type (with internal EGR, external EGR or non-EGR) and the fuel (low-sulfur or high-sulfur fuel).

Fuel used	Engine oil classification (API classification)	
	Oil class of engines except external EGR	Oil class of engines with external EGR
High Sulfur Fuel [≧ 0.05% (500 ppm)]	**CF** (If the "CF-4, CG-4, CH-4 or CI-4" lubricating oil is used with a high-sulfur fuel, change the lubricating oil at shorter intervals. (approximately half))	---
Low Sulfur Fuel [<0.05% (500 ppm)] or Ultra Low Sulfur Fuel [<0.0015% (15 ppm)]	**CF, CF-4, CG-4, CH-4** or **CI-4**	**CF** or **CI-4** (Class CF-4, CG-4 and CH-4 engine oils cannot be used on EGR type engines)

EGR: Exhaust Gas Re-circulation

- The CJ-4 engine oil is intended for DPF (Diesel Particulate Filter) type engines, and cannot be used on this tractor.

	except external EGR	with external EGR
Model	L2501	---

◆ **Fuel:**

- Cetane number of 45 is minimum. Cetane number greater than 50 is preferred, especially for temperatures below -20℃ or elevations above 1500 m.
- If diesel fuel with sulfur content greater than 0.5% (5000 ppm) sulfur content is used, reduce the service interval for engine oil and filter by 50%.
- NEVER use diesel fuel with sulfur content greater than 0.05% (500 ppm) for EXTERNAL EGR type engine.
- DO NOT use diesel fuel with sulfur content greater than 1.0% (10000 ppm).
- Diesel fuels specified to EN 590 or ASTM D975 are recommended.
- No.2-D is a distillate fuel of lower volatility for engines in industrial and heavy mobile service. (SAE J313 JUN87)

◆ **Transmission Oil:**

The oil used to lubricate the transmission is also used as hydraulic fluid. To insure proper operation of the hydraulic system and to complete lubrication of the transmission, it is important that a multi-grade transmission fluid is used in this system. We recommend the use of **KUBOTA UDT or SUPER UDT fluid** for optimum protection and performance. (Consult your local KUBOTA Dealer for further detail.)
Do not mix different brands together.

- Indicated capacities of water and oil are manufacturer's estimate.

https://truckmanualshub.com/

PERIODIC SERVICE

WARNING

To avoid personal injury or death:

- **Do not work under any hydraulically supported devices. They can settle, suddenly leak down, or be accidentally lowered. If necessary to work under tractor or any machine elements for servicing or adjustment, securely support them with stands or suitable blocking beforehand.**

HOW TO OPEN THE HOOD

WARNING

To avoid personal injury or death from contact with moving parts;

- **Never open the hood or engine side cover while the engine is running.**
- **Do not touch muffler or exhaust pipes while they are hot; Severe burns could result.**
- **Hold the hood with other hand while unlocking release lever.**

■Hood

To open the hood, hold the hood and pull the release lever and open the hood.

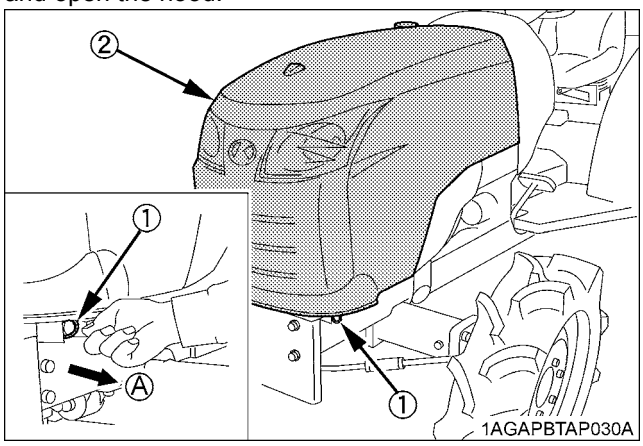

(1) Release lever *(A) "PULL"*
(2) Hood

NOTE :

- To close the hood, push the hood into position using both hands.

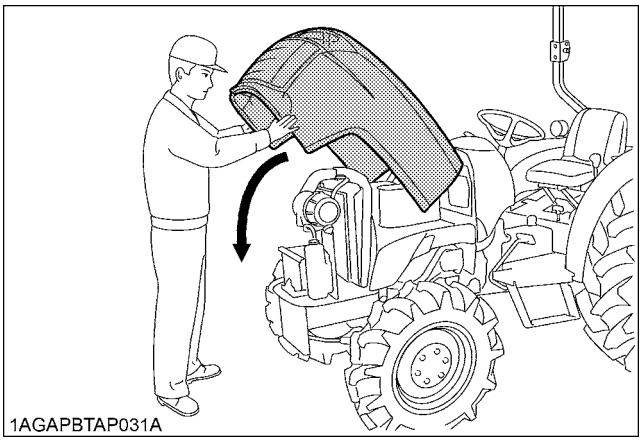

■Side Cover

1. Remove the bolts at the both sides and detach the side cover.
2. To attach the side cover, insert the bottom pin of side cover first, and then tighten the bolts.

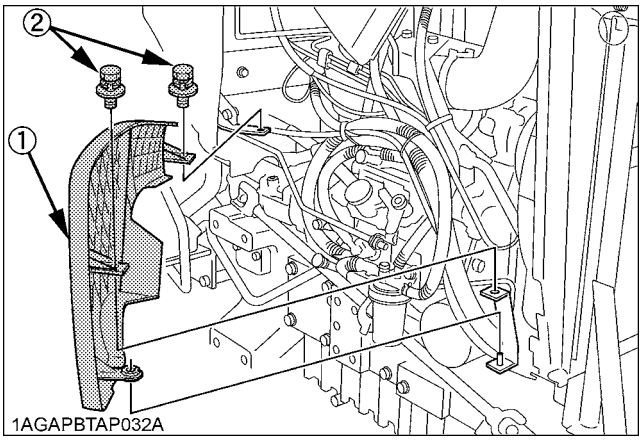

(1) Side cover
(2) Bolt

https://truckmanualshub.com/

DAILY CHECK

For your own safety and maximum service life of the machine, make a thorough daily inspection before operating the machine to start the engine.

WARNING

To avoid personal injury or death:

- **Be sure to check and service the tractor on a level surface with the engine shut off and the parking brake "ON" and implement lowered to the ground.**

■Walk Around Inspection

Look around and under the tractor for such items as loose bolts, trash build-up, oil or coolant leaks, broken or worn parts.

■Checking and Refueling

WARNING

To avoid personal injury or death:

- **Do not smoke while refueling.**
- **Be sure to stop the engine before refueling.**

1. Turn the key switch to "ON", check the amount of fuel by fuel gauge.
2. Fill fuel tank when fuel gauge shows 1/4 or less fuel in tank.

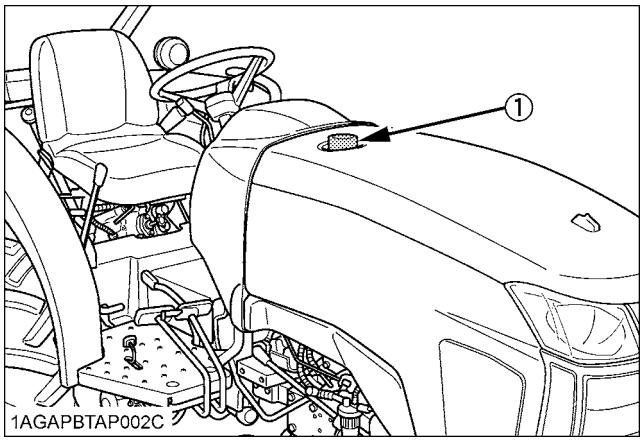

(1) Fuel tank cap

Fuel tank capacity	38.0 L (10.0 U.S.gals.)

IMPORTANT :

- Do not permit dirt or trash to get into the fuel system.
- Be careful not to let the fuel tank become empty, otherwise air will enter the fuel system, necessitating bleeding before next engine start.
- Be careful not to spill during refueling. If a spill should occur, wipe it off at once, or it may cause a fire.
- To prevent condensation (water) accumulation in the fuel tank, fill the tank before parking overnight.

■Checking Engine Oil Level

WARNING

To avoid personal injury or death:

- **Be sure to stop the engine before checking the oil level.**

1. Park the machine on a flat surface.
2. Check engine oil before starting the engine or 5 minutes or more after the engine has stopped.
3. To check the oil level, draw out the dipstick, wipe it clean, replace it, and draw it out again. Check to see that the oil level lines between the 2 notches.
   If the level is too low, add new oil to the prescribed level at the oil inlet.
   (See "LUBRICANTS" in "MAINTENANCE" section.)

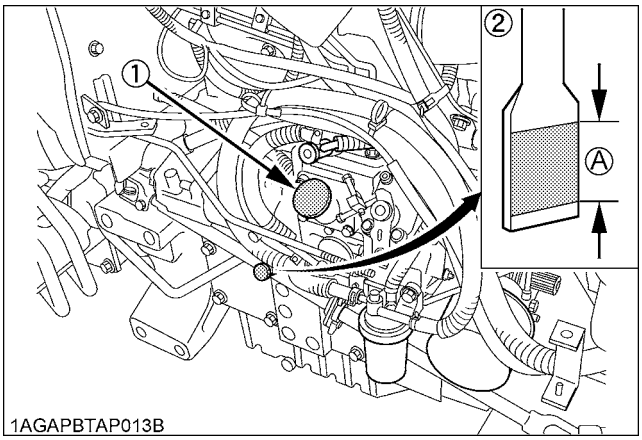

(1) Oil inlet *(A) Oil level is acceptable within this range.*
(2) Dipstick

IMPORTANT :

- When using an oil of different maker or viscosity from the previous one, remove all of the old oil.
  Never mix two different types of oil.
- If oil level is low, do not run engine.

https://truckmanualshub.com/

■Checking Transmission Fluid Level

1. Park the machine on a flat surface, lower the implement and shut off engine.
2. View the fluid level through the fluid level gauge.
   If the level is too low, add new oil to the prescribed level at the oil inlet.
   (See "LUBRICANTS" in "MAINTENANCE" section.)

[Manual Transmission Type]

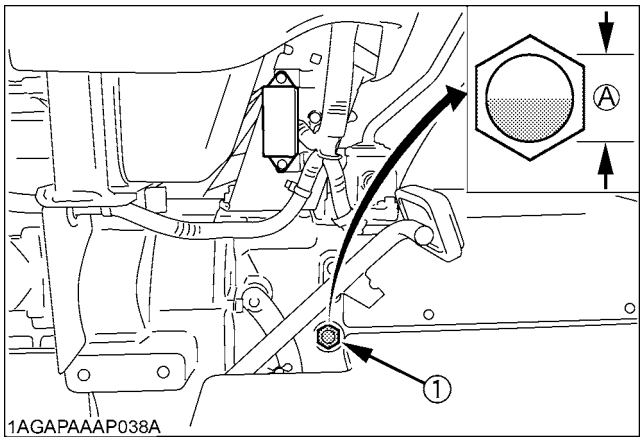

[HST Type]

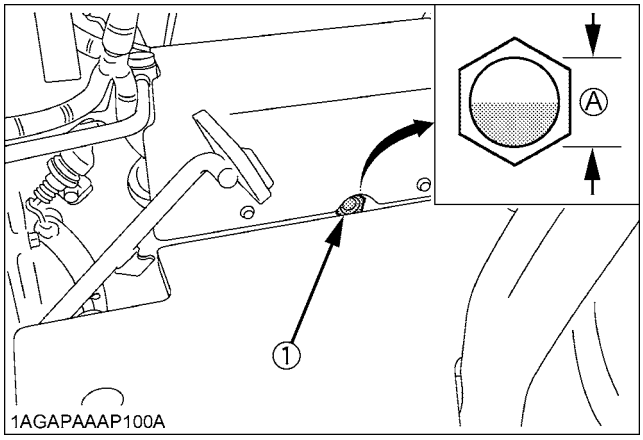

(1) Gauge *(A) Oil level is acceptable within this range.*

IMPORTANT :
- If oil level is low, do not run engine.

■Checking Coolant Level

WARNING

To avoid personal injury or death:
- **Do not remove radiator cap while coolant is hot. When cool, slowly rotate cap to the first stop and allow sufficient time for excess pressure to escape before removing the cap completely.**

1. Check to see that the coolant level is between the "FULL" and "LOW" marks of recovery tank.
2. When the coolant level drops due to evaporation, add soft water only up to the full level.
   In case of leakage, add anti-freeze and soft water in the specified mixing ratio up to the full level.
   (See "Flushing Cooling System and Changing Coolant" in "EVERY 2000 HOURS OR 2 YEARS" in "PERIODIC SERVICE" section.)
3. When the coolant level is lower than "LOW" mark of recovery tank, remove the radiator cap and check to see that the coolant level is just below the port. If level is low, add coolant.

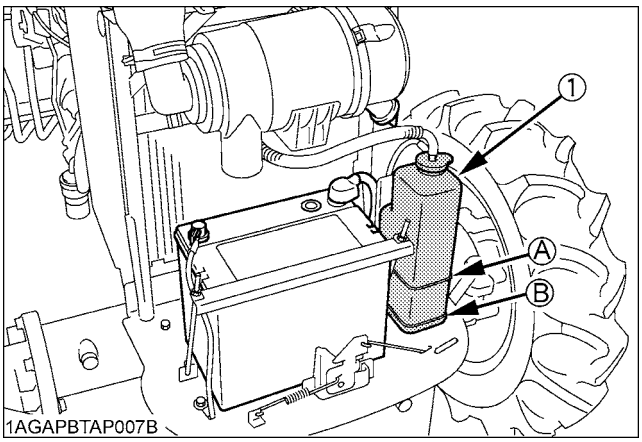

(1) Recovery tank *(A) "FULL"*
(B) "LOW"

IMPORTANT :
- If the radiator cap has to be removed, follow the caution above and securely retighten the cap.
- Use clean, fresh soft water and anti-freeze to fill the radiator.
- If coolant should leak, consult your local KUBOTA Dealer.

https://truckmanualshub.com/

■Cleaning Evacuator Valve

Open the evacuator valve to get rid of large particles of dust and dirt.

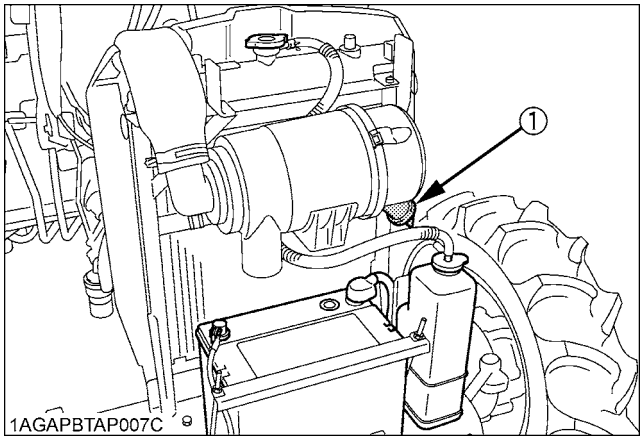

(1) Evacuator valve

■Cleaning Grill, Radiator Screen and Oil Cooler

WARNING

To avoid personal injury or death:

- **Be sure to stop the engine before removing the screen.**

1. Check front grill and side screens to be sure they are clean of debris.
2. Detach the screen with the fixed spring being held up and remove all foreign materials and clean the front of radiator completely.

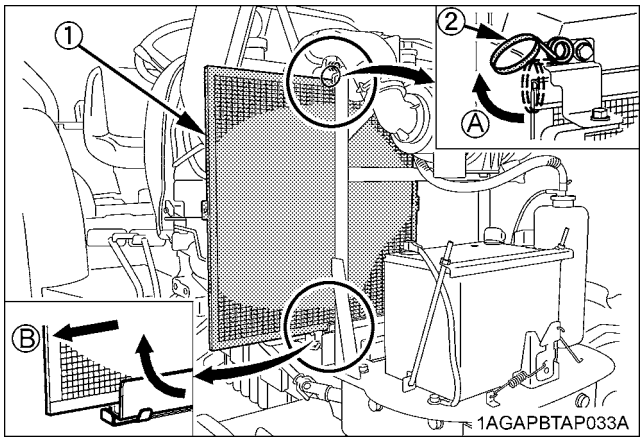

(1) Radiator screen *(A) "HOLD UP"*
(2) Fixed spring *(B) "DETACH"*

[HST Type]

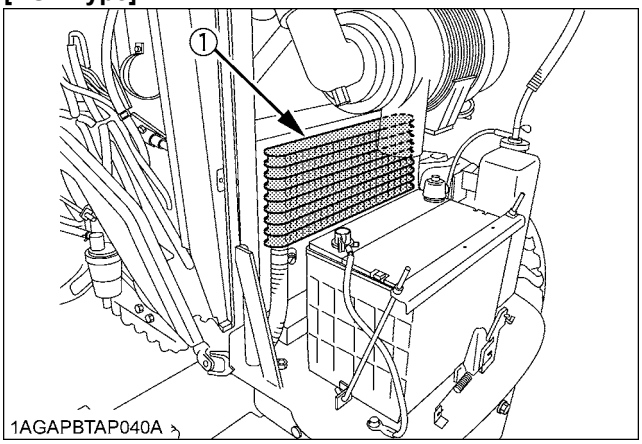

(1) Oil cooler

IMPORTANT :

- Grill and screen must be clean from debris to prevent engine from overheating and to allow good air intake for the air cleaner.

■Checking Brake Pedals and Clutch Pedal

WARNING

To avoid personal injury or death:

- **Be sure brake pedals have equal adjustment when using locked together. Incorrect or unequal brake pedal adjustment can cause the tractor to swerve or roll-over.**

1. Inspect the brake and clutch pedals for free travel, and smooth operation.
2. Adjust if incorrect measurement is found:
   (See "Adjusting Clutch Pedal" and "Adjusting Brake Pedal" in "EVERY 100 HOURS" in "PERIODIC SERVICE" section.)

■Checking Gauges, Meter and Easy Checker(TM)

1. Inspect the instrument panel for broken gauge(s), meter(s) and Easy Checker(TM) lamps.
2. Replace if broken.

■Checking Head Light, Turn Signal / Hazard Light etc.

1. Inspect the lights for broken bulbs and lenses.
2. Replace if broken.

■Checking Seat Belt and ROPS

1. Always check condition of seat belt and ROPS attaching hardware before operating tractor.
2. Replace if damaged.

https://truckmanualshub.com/

■Checking and Cleaning of Electrical Wiring and Battery Cables

WARNING

To avoid personal injury or death:

- **A loosened terminal or connector, or damaged wire may affect the performance of electrical components or cause short circuits. Leakage of electricity could result in a fire hazard, a dead battery or damage to electrical components.**
- **Replace damaged wires or connections promptly.**
- **If a fuse blows soon after replacement, DO NOT USE A LARGER THAN RECOMMENDED FUSE OR BYPASS THE FUSE SYSTEM.**
- **Many wiring connections are protected by waterproof plugs, plug and unplug these connections carefully and make sure they are sealed correctly after assembly.**
- **Accumulation of dust, chaff and spilled fuel deposits around the battery, electrical wiring, engine or exhaust system are fire hazards. CLEAN THESE AREAS BEFORE STARTING WORK. To avoid premature electrical malfunctions DO NOT APPLY high pressure water directly to battery, wiring, connectors, electrical components or instrument panel.**

Inspect the following regularly:

1. Check wiring for chafed or cracked insulation.
2. Check wiring harness clamps. Replace if necessary.
3. Check connectors and terminals for looseness, contamination or overheated (discolored) connections.
4. Check instrument panel for correct operation of switches and gauges.

Consult your KUBOTA Dealer regarding maintenance, diagnosis and repair.

■Checking Movable Parts

If any of the movable parts, such as levers and pedals, is not smoothly moved because of rust or sticky material, do not attempt to force it into motion.
In the above case, remove the rust or the sticky material, and apply oil or grease on the relevant spot.
Otherwise, the machine may get damaged.

EVERY 50 HOURS

■Lubricating Grease Fittings

Apply a small amount of multipurpose grease to the following points every 50 hours:
If you operated the machine in extremely wet and muddy conditions, lubricate grease fittings more often.

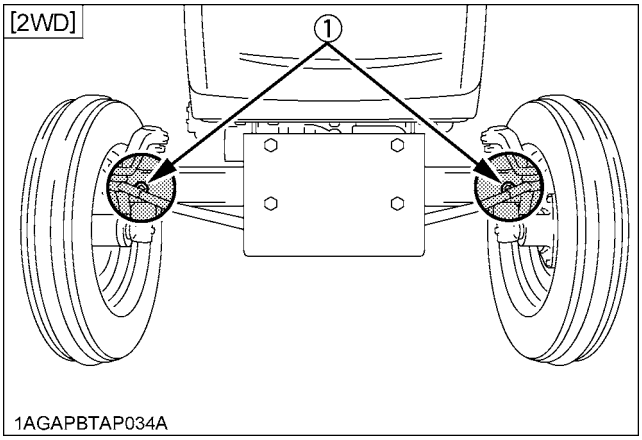

(1) Grease fitting (Knuckle shaft)[RH, LH]

When apply grease to forward front axle support, remove the breather plug and apply grease until grease overflows from breather plug port.
After greasing reinstall the breather plug.

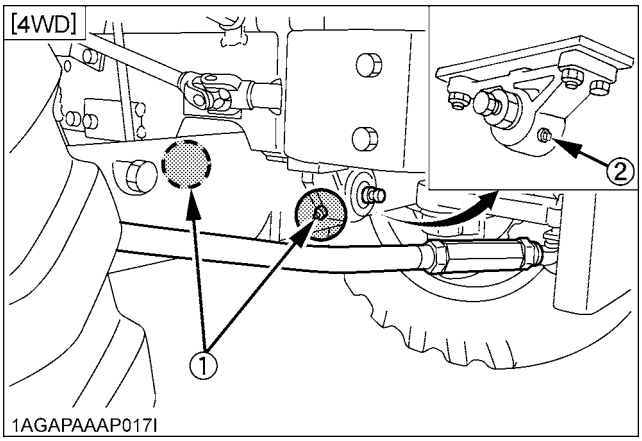

(1) Grease fitting (Front axle support)
(2) Breather plug

https://truckmanualshub.com/

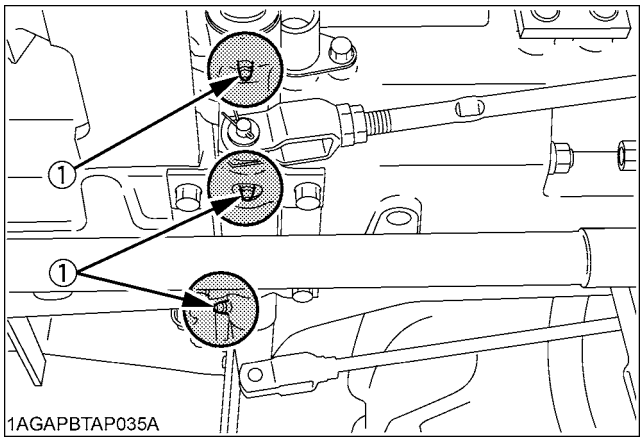

(1) Grease fitting (Pedal shaft)

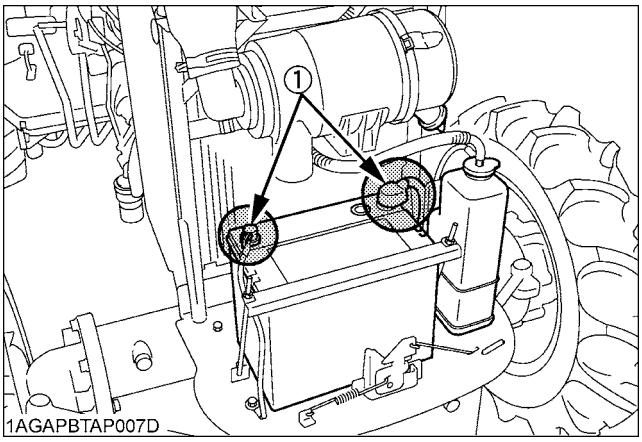

(1) Battery terminals

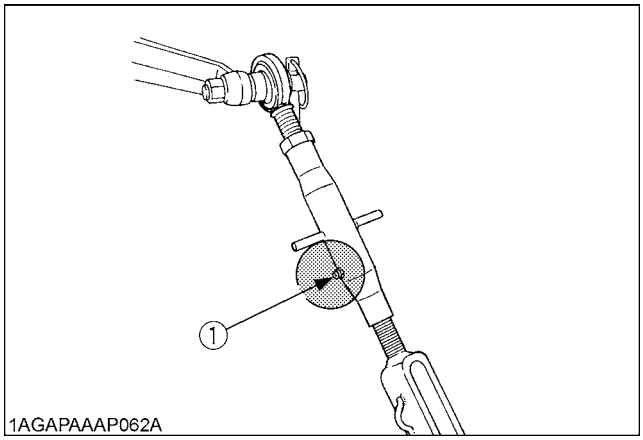

(1) Grease fitting (Lifting rod) [RH]

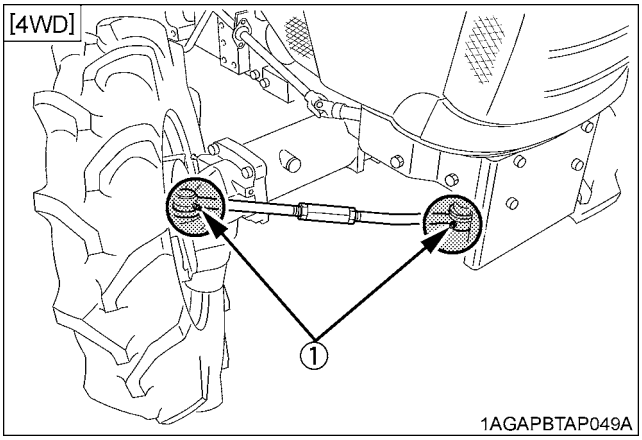

(1) Grease fitting (Tie-rod ends)

https://truckmanualshub.com/

■Checking Engine Start System

WARNING

To avoid personal injury or death:

- **Do not allow anyone near the tractor while testing.**
- **If the tractor does not pass the test, do not operate the tractor.**

◆ **Preparation before testing.**

1. Place all control levers in the "NEUTRAL" position.
2. Set the parking brake and stop the engine.

[Manual Transmission Type]

◆ **Test : Switch for the range gear shift lever.**

1. Sit on the operator's seat.
2. Shift the range gear shift lever to "L", "H" or "R" position.
3. Depress the clutch pedal fully.
4. Disengage the PTO gear shift lever.
5. Turn the key to "START" position.
6. The engine must not crank.
7. If it cranks, consult your local KUBOTA Dealer for this service.

◆ **Test : Switch for the PTO gear shift lever.**

1. Sit on the operator's seat.
2. Engage the PTO gear shift lever.
3. Depress the clutch pedal fully.
4. Shift the range gear shift lever to the neutral position.
5. Turn the key to "START" position.
6. The engine must not crank.
7. If it cranks, consult your local KUBOTA Dealer for this service.

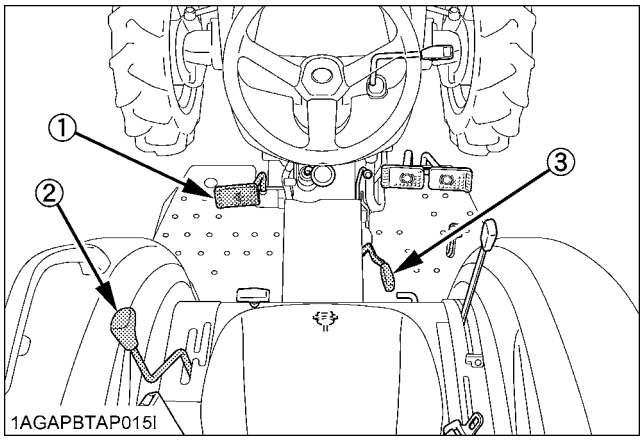

(1) Clutch pedal
(2) Range gear shift lever (Shuttle shift lever)
(3) PTO gear shift lever

[HST Type]

◆ **Test: Switch for the speed control pedal.**

1. Sit on the operator's seat.
2. Depress the speed control pedal to the desired direction.
3. Depress the clutch pedal fully.
4. Disengage the PTO gear shift lever.
5. Turn the key to "START" position.
6. The engine must not crank.
7. If it cranks, consult your local KUBOTA Dealer for this service.

◆ **Test : Switch for the PTO gear shift lever.**

1. Sit on the operator's seat.
2. Engage the PTO gear shift lever.
3. Depress the clutch pedal fully.
4. Place the speed control pedal in neutral position.
5. Turn the key to "START" position.
6. The engine must not crank.
7. If it cranks, consult your local KUBOTA Dealer for this service.

◆ **Test : Switch for the clutch pedal.**

1. Sit on the operator's seat.
2. Disengage the PTO gear shift lever.
3. Place the speed control pedal in neutral position.
4. Release the clutch pedal.
5. Turn the key to "START" position.
6. The engine must not crank.
7. If it cranks, consult your local KUBOTA Dealer for this service

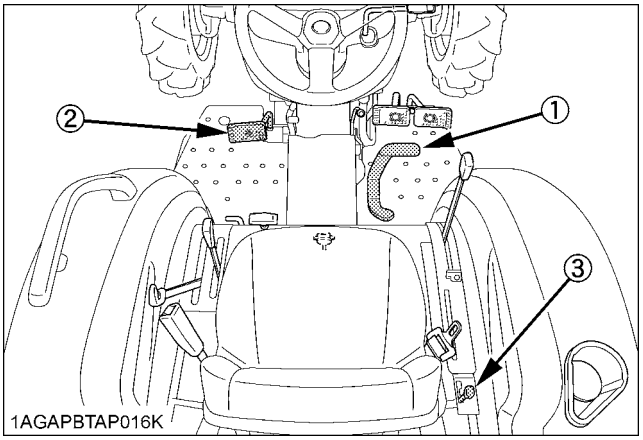

(1) Speed control pedal
(2) Clutch pedal
(3) PTO gear shift lever

https://truckmanualshub.com/

■Checking Operator Presence Control

WARNING

To avoid personal injury or death:

- **Do not allow anyone near the tractor while testing.**
- **If the tractor does not pass the test, do not operate the tractor.**

◆ **Preparation before testing.**

1. Place all control levers in the "NEUTRAL" position.
2. Set the parking brake and stop the engine.

◆ **Test : Switch for the operator's seat**

1. Sit on the operator's seat.
2. Start the engine.
3. Engage the PTO gear shift lever.
4. Stand up. (Do not get off the machine.)
5. The engine must shut off after approximately 1 second.
6. If it does not stop, consult your local KUBOTA Dealer for this service.

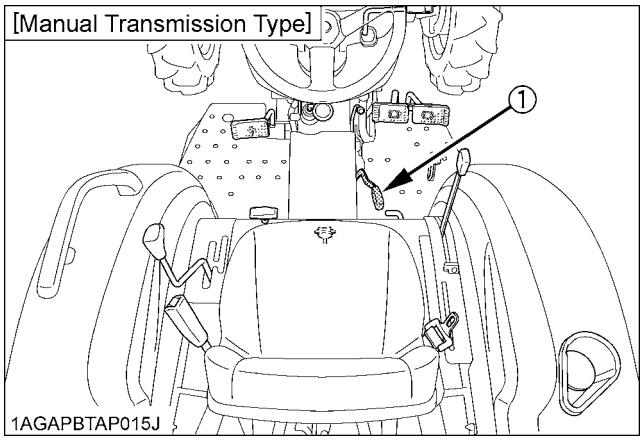

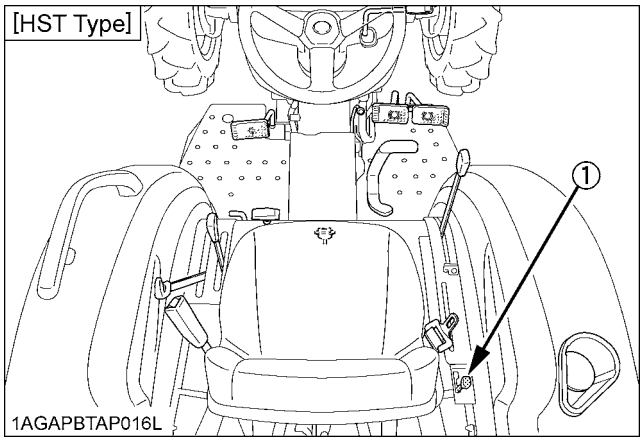

(1) PTO gear shift lever

■Checking Wheel Bolt Torque

WARNING

To avoid personal injury or death:

- **Never operate tractor with a loose rim, wheel, or axle.**
- **Any time bolts and nuts are loosened, retighten to specified torque.**
- **Check all bolts and nuts frequently and keep them tight.**

Check wheel bolts and nuts regularly especially when new. If they are loose, tighten them as follows.

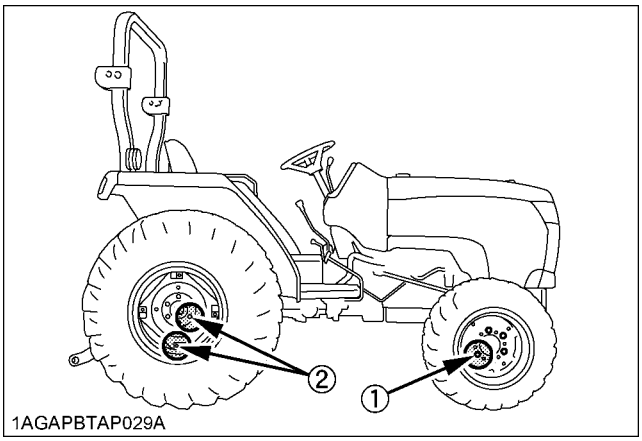

(1) 137 N-m (14 kgf-m, 100 ft-lbs)
(2) 215 N-m (22 kgf-m, 160 ft-lbs)

https://truckmanualshub.com/

EVERY 100 HOURS

■Cleaning Air Cleaner Element [Single Element Type]

1. Remove the element.
2. Clean the element:
   (1) When dry dust adheres to the element, blow compressed air from the inside, turning the element. Pressure of compressed air must be under 205 kPa (2.1 kgf/cm^2, 30 psi).
   (2) When carbon or oil adheres to the element, soak the element in detergent for 15 minutes then wash it several times in water, rinse with clean water and dry it naturally. After element is fully dried, inspect inside of the element with a light and check if it is damaged or not. (referring to the instructions on the label attached to the case.)
3. Replace air cleaner element:
   Once yearly or after every sixth cleaning, whichever comes first.

NOTE :
- Check to see if the evacuator valve is blocked with dust.

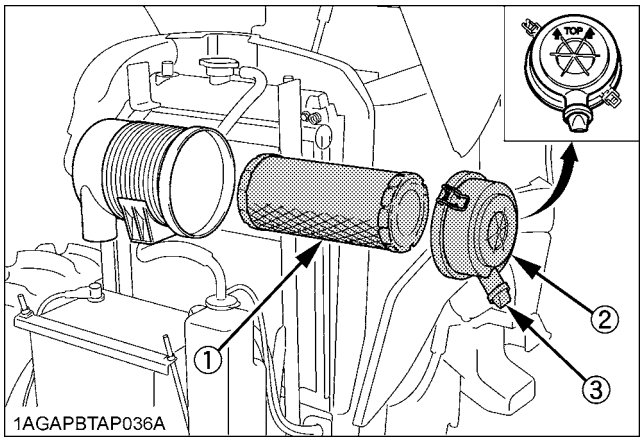

(1) Elements
(2) Cover
(3) Evacuator valve

IMPORTANT :
- The air cleaner uses a dry element, never apply oil.
- Do not run the engine with filter element removed.
- Be sure to refit the cover with the arrow ⬆ (on the rear) upright. If the cover is improperly fitted, dust passed by the baffle and directly adheres to the element.

◆ Evacuator Valve

Open the evacuator valve once a week under ordinary conditions - or daily when used in a dusty place - to get rid of large particles of dust and dirt.

■Cleaning Fuel Filter

This job should not be done in the field, but in a clean place.

1. Loosen and remove the filter bowl, and rinse the inside with kerosene.
2. Take out the element and dip it in the kerosene to rinse.
3. After cleaning, reassemble the fuel filter, keeping out dust and dirt.
4. Bleed the fuel system.
   (See "SERVICE AS REQUIRED" in "PERIODIC SERVICE" section.)

IMPORTANT :
- When the fuel filter bowl has been removed, fuel stops flowing from the fuel tank. If the fuel tank is almost full, however, the fuel will flow back from the fuel return pipe to the fuel filter. Before checking, make sure the fuel tank is less than half-full.

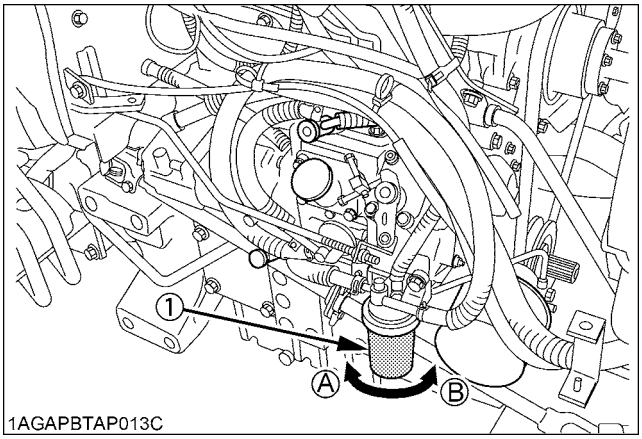

(1) Fuel filter bowl
(A) "LOOSEN"
(B) "TIGHTEN"

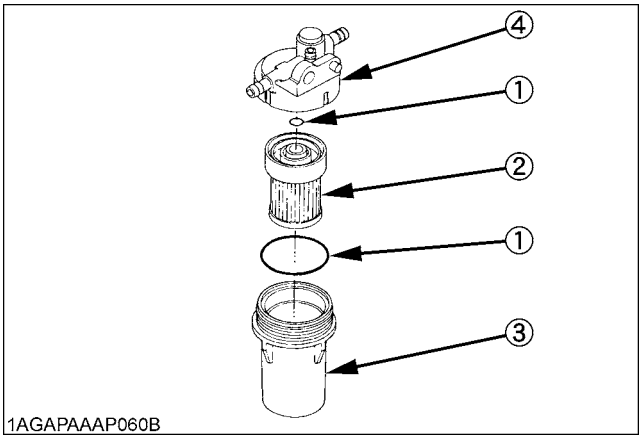

(1) O ring
(2) Filter element
(3) Filter bowl
(4) Body (built-in fuel check valve)

https://truckmanualshub.com/

IMPORTANT :
- If dust, dirt or water enters the fuel system, the fuel pump and injection nozzles are subject to premature wear. To prevent this, be sure to clean the fuel filter bowl and element periodically.

■Adjusting Fan Belt Tension

WARNING

To avoid personal injury or death:
- **Be sure to stop the engine before checking belt tension.**

Proper fan belt tension	A deflection is 7 to 9 mm (0.28 to 0.35 in.) when the belt is pressed (98 N [10 kgf, 22 lbs.]) in the middle of the span.

1. Stop the engine and remove the key.
2. Apply moderate thumb pressure to belt between pulleys.
3. If tension is incorrect, loosen the alternator mounting bolts and, using a lever placed between the alternator and the engine block, pull the alternator out until the deflection of the belt falls within acceptable limits.
4. Replace fan belt if it is damaged.

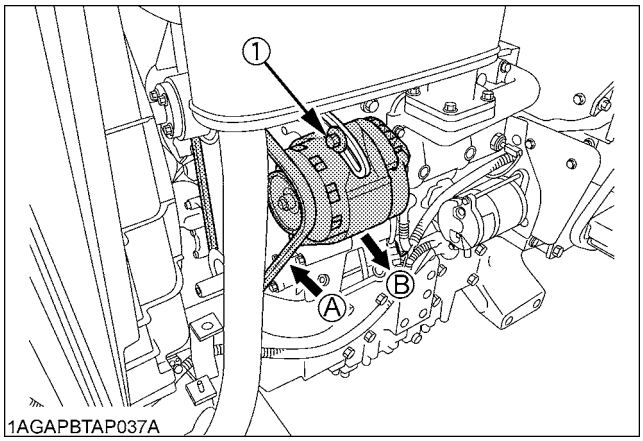

(1) Bolt
(A) Check the belt tension
(B) To tighten

■Adjusting Clutch Pedal

Proper clutch pedal free travel	20 to 30 mm (0.8 to 1.2 in.) on the pedal

1. Stop the engine and remove the key.
2. Slightly depress the clutch pedal and measure free travel at the top of pedal stroke.
3. If adjustment is needed, loosen the lock nut and turn the clutch rod to adjust the rod length within acceptable limits.
4. Retighten the lock nut.

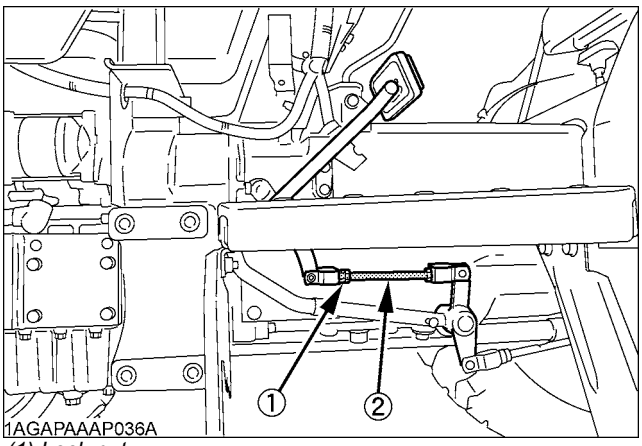

(1) Lock nut
(2) Clutch rod

https://truckmanualshub.com/

■Adjusting Brake Pedal

WARNING

To avoid personal injury or death:

- **Stop the engine and chock the wheels before checking brake pedal.**

Proper brake pedal free travel	15 to 20 mm (0.6 to 0.8 in.) on the pedal
	Keep the free travel in the right and left brake pedals equal.

1. Release the parking brake.
2. Slightly depress the brake pedals and measure free travel at top of pedal stroke.
3. If adjustment is needed, loosen the lock nut and turn the brake rod to adjust the rod length within acceptable limits.
4. Retighten the lock nut.

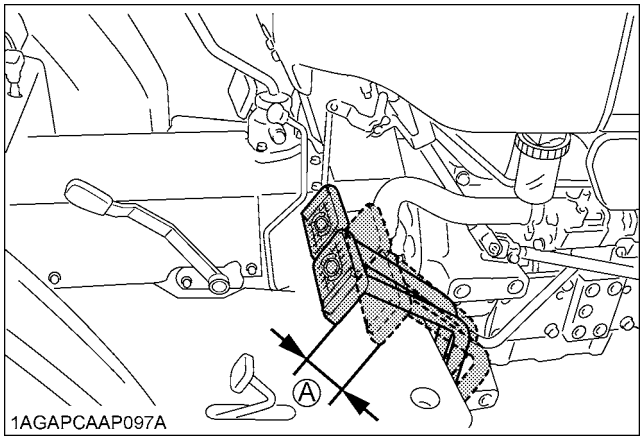

(A) "FREE TRAVEL"

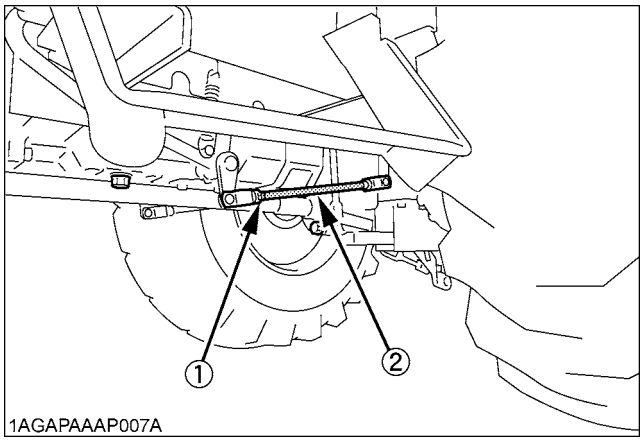

(1) Lock nut
(2) Brake rod

■Checking Battery Condition

DANGER

To avoid the possibility of battery explosion:
For the refillable type battery, follow the instructions below.

- **Do not use or charge the refillable type battery if the fluid level is below the LOWER (lower limit level) mark. Otherwise, the battery component parts may prematurely deteriorate, which may shorten the battery's service life or cause an explosion. Check the fluid level regularly and add distilled water as required so that the fluid level is between the UPPER and LOWER levels.**

WARNING

To avoid personal injury or death:

- **Never remove the battery cap while the engine is running.**
- **Keep electrolyte away from eyes, hands and clothes. If you are spattered with it, wash it away completely with water immediately and get medical attention.**
- **Keep open sparks and flames away from the battery at all times. Hydrogen gas mixed with oxygen becomes very explosive.**
- **Wear eye protection and rubber gloves when working around battery.**

The factory-installed battery is of non-refillable type. If the indicator turns white, do not charge the battery but replace it with new one.

Mishandling the battery shortens the service life and adds to maintenance costs.
The original battery is maintenance free, but needs some servicing.
If the battery is weak, the engine will be difficult to start and the lights will be dim. It is important to check the battery periodically.

https://truckmanualshub.com/

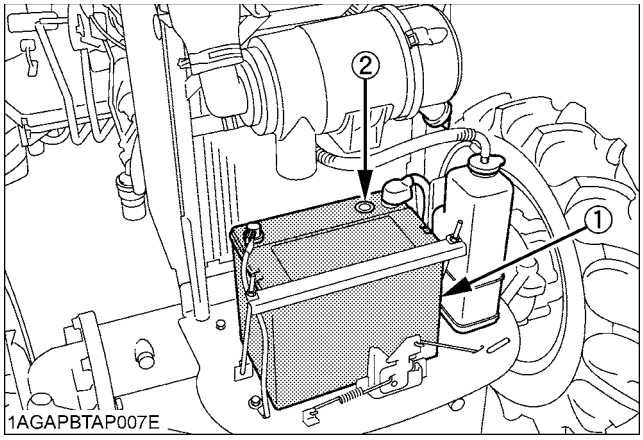

(1) Battery
(2) Indicator

◆ **How to read the indicator**

Check the battery condition by reading the indicator.

State of indicator display	
Green	Specific gravity of electrolyte and quality of electrolyte are both in good condition.
Black	Needs charging battery.
White	Needs replacing battery.

◆ **Battery Cable Connections**

1. Be sure to wire the battery cable as shown in the figure.
2. Fix the positive cable in the cord band.
3. Tighten the terminal until the stopper comes in contact.

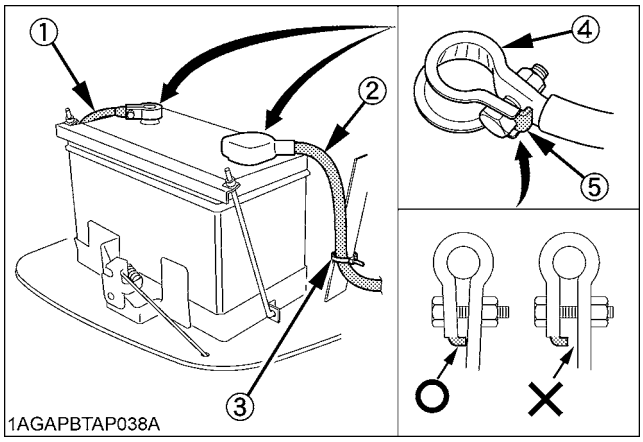

(1) Negative cable
(2) Positive cable
(3) Cord band
(4) Terminal
(5) Stopper

◆ **Battery Charging**

WARNING

To avoid personal injury or death:

- **When the battery is being activated, hydrogen and oxygen gases in the battery are extremely explosive. Keep open sparks and flames away from the battery at all times, especially when charging the battery.**
- **When charging the battery, ensure the vent caps are securely in place. (if equipped)**
- **When disconnecting the cable from the battery, start with the negative terminal first.**
  When connecting the cable to the battery, start with the positive terminal first.
- **Never check battery charge by placing a metal object across the posts.**
  Use a voltmeter or hydrometer.

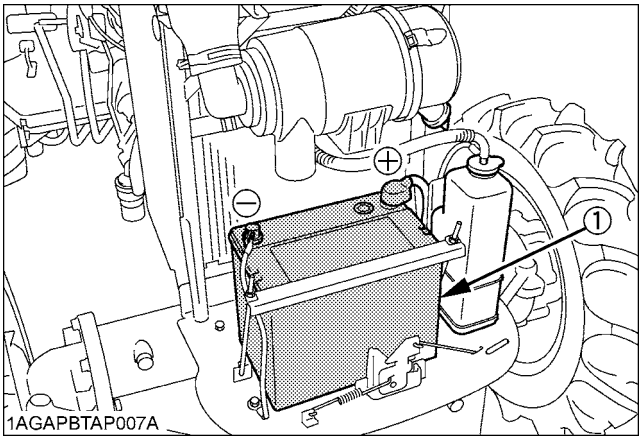

(1) Battery

1. To slow charge the battery, connect the battery positive terminal to the charger positive terminal and the negative to the negative, then recharge in the standard fashion.
2. A boost charge is only for emergencies. It will partially charge the battery at a high rate and in a short time.
   When using a boost-charged battery, it is necessary to recharge the battery as early as possible.
   Failure to do this will shorten the battery's service life.
3. The battery is charged if the indicator display turns green from black.
4. When exchanging an old battery for a new one, use battery of equal specification shown in **table 1**.

Table 1

Battery TYPE	volts (V)	Reserve capacity (min)	CCA (SAE) (A)	Normal Charging Rate (A)
75D26R	12	123	490	6.5

CCA : Cold Cranking Ampere

https://truckmanualshub.com/

◆ **Direction for Storage**

1. When storing the tractor for long periods of time, remove the battery from tractor, adjust the electrolyte to the proper level and store in a dry place out of direct sunlight.
2. The battery self-discharges while it is stored.
   Recharge it once every 3 months in hot seasons and once every 6 months in cold seasons.

EVERY 200 HOURS

■Replacing Transmission Oil Filter [HST Type]

WARNING

To avoid personal injury or death:

- **Be sure to stop the engine before changing the oil filter cartridge.**
- **Allow engine to cool down sufficiently, oil can be hot and can burn.**

1. Place the oil pan underneath the transmission oil filter and remove the filter.
   Do not remove the hydraulic oil filter. Otherwise, the oil comes out.

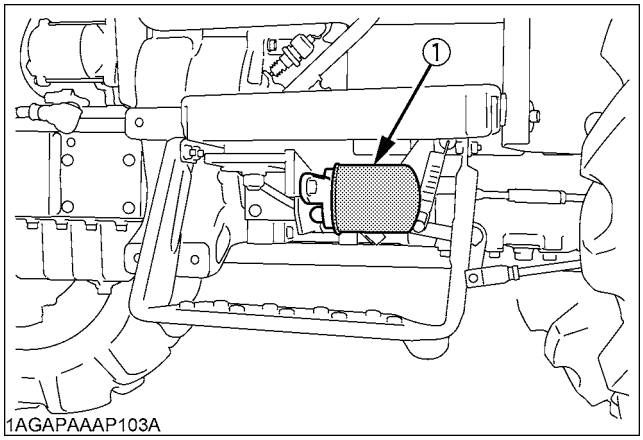

(1) Transmission oil filter [HST Type]

2. Put a film of clean transmission oil on the rubber seal of the new filter.
3. Quickly tighten the filter until it contacts the mounting surface, then, with a filter wrench, tighten it an additional 1 turn only.
4. After the new filter has been replaced, fill with the transmission oil up to the upper line of the gauge.

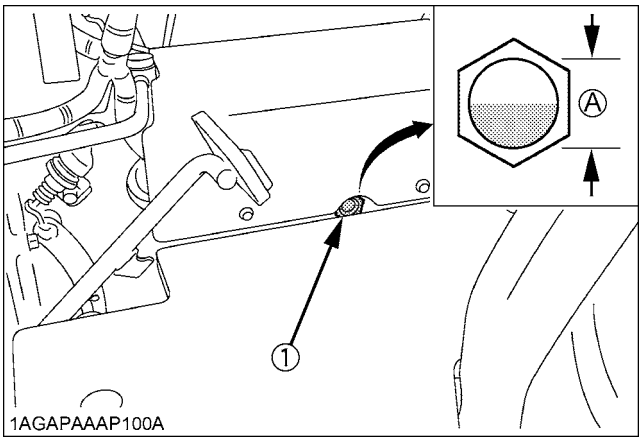

(1) Gauge *(A) Oil level is acceptable within this range.*

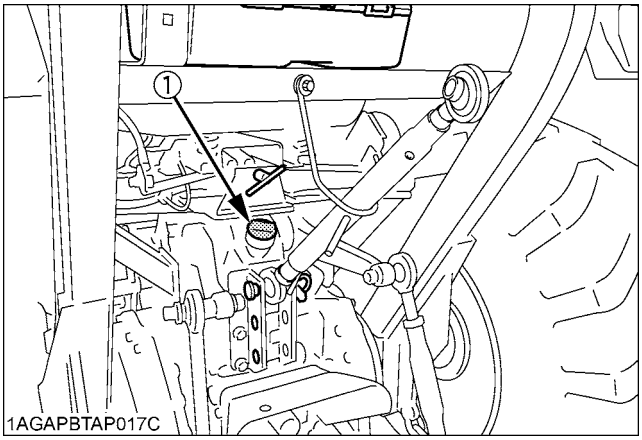

(1) Oil inlet

5. After running the engine for a few minutes, stop the engine and check the oil level again, add oil to the prescribed level.
6. Make sure that the transmission fluid doesn't leak past the seal on the filter.

IMPORTANT :

- To prevent serious damage to the hydraulic system, use only a KUBOTA genuine filter.
- Do not operate the tractor immediately after changing the transmission fluid.
  Run the engine at medium speed for a few minutes to prevent damage to the transmission.

https://truckmanualshub.com/

■Adjusting Toe-in

Proper toe-in	2 to 8 mm (0.08 to 0.31 in.)

1. Park tractor on a flat place.
2. Turn steering wheel so front wheels are in the straight ahead position.
3. Lower the implement, lock the park brake and stop the engine.
4. Measure distance between tire beads at front of tire, at hub height.
5. Measure distance between tire beads at rear of tire, at hub height.
6. Front distance should be shorter than rear distance. If not, adjust tie rod length.

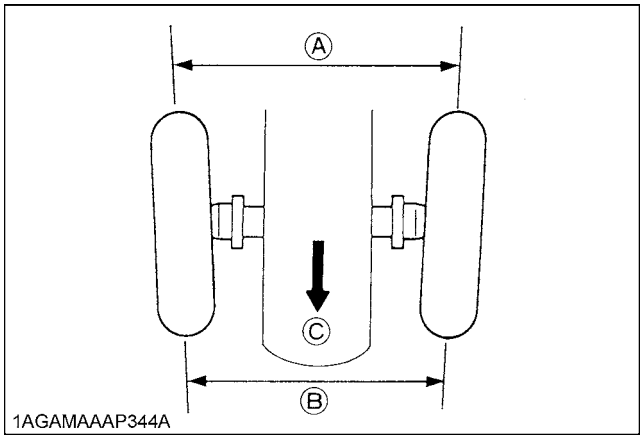

(A) Wheel - to - wheel distance at rear
(B) Wheel - to - wheel distance at front
(C) "FRONT"

◆ **Adjusting procedure**

1. Loosen the lock nut and turn the turnbuckle to adjust the rod length until the proper toe-in measurement is obtained.
2. Retighten the lock nuts.

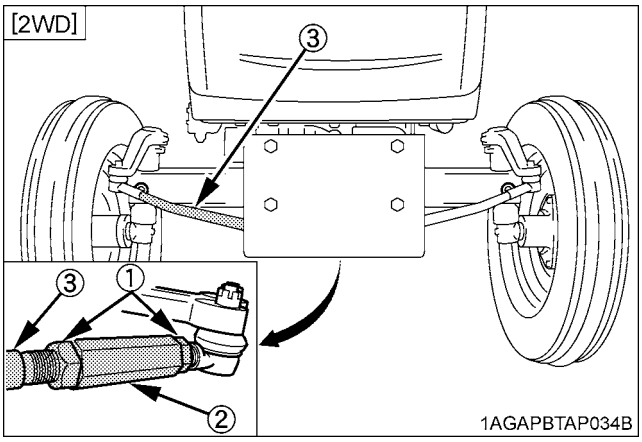

(1) Lock nuts (2) Turnbuckle (3) Tie rod

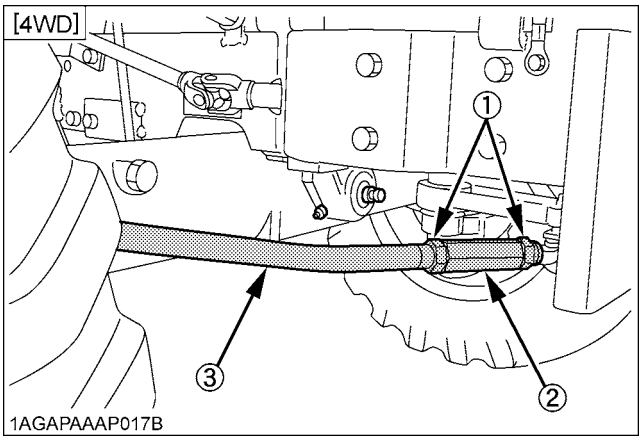

(1) Lock nuts (2) Turnbuckle (3) Tie rod

https://truckmanualshub.com/

EVERY 400 HOURS

■Changing Engine Oil

WARNING

To avoid personal injury or death:

- **Be sure to stop the engine before changing the oil.**
- **Allow engine to cool down sufficiently, oil can be hot and can burn.**

1. To drain the used oil, remove the drain plug at the bottom of the engine and drain the oil completely into the oil pan.
   All the used oil can be drained out easily when the engine is still warm.
2. After draining reinstall the drain plug.
3. Fill with the new oil up to the upper notch on the dipstick.
   (See "LUBRICANTS" in "MAINTENANCE" section.)

Oil capacity with filter	5.7 L (6.0 U.S.qts.)

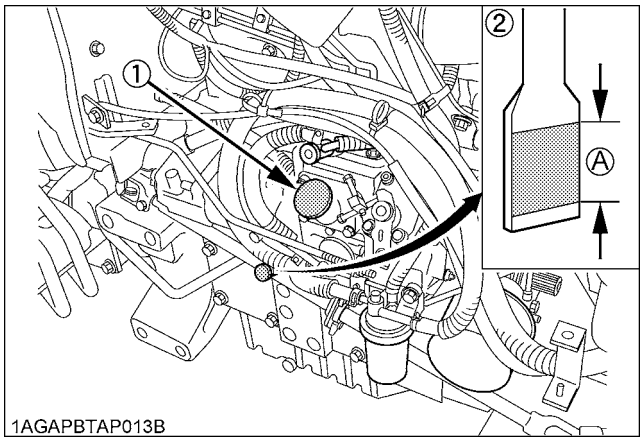

(1) Oil inlet (A) Oil level is acceptable within this range
(2) Dipstick

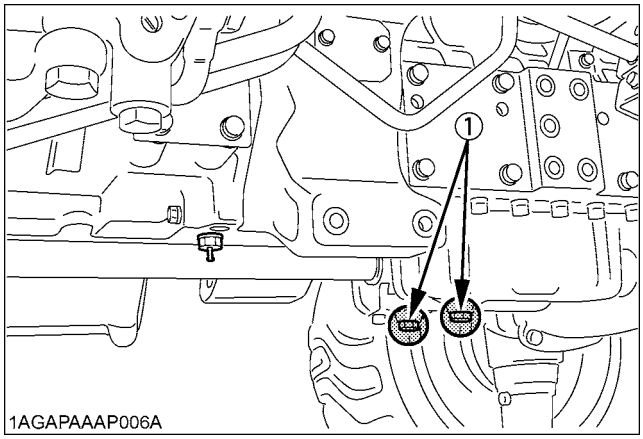

(1) Drain plug

■Replacing Engine Oil Filter

WARNING

To avoid personal injury or death:

- **Be sure to stop the engine before replacing the oil filter cartridge.**
- **Allow engine to cool down sufficiently, oil can be hot and can burn.**

1. Remove the oil filter.
2. Put a film of clean engine oil on the rubber seal of the new filter.
3. Tighten the filter quickly until it contacts the mounting surface.
   Tighten filter by hand an additional 1/2 turn only.
4. After the new filter has been replaced, the engine oil normally decreases a little. Make sure that the engine oil does not leak through the seal and be sure to check the oil level on the dipstick. Then, replenish the engine oil up to the prescribed level.

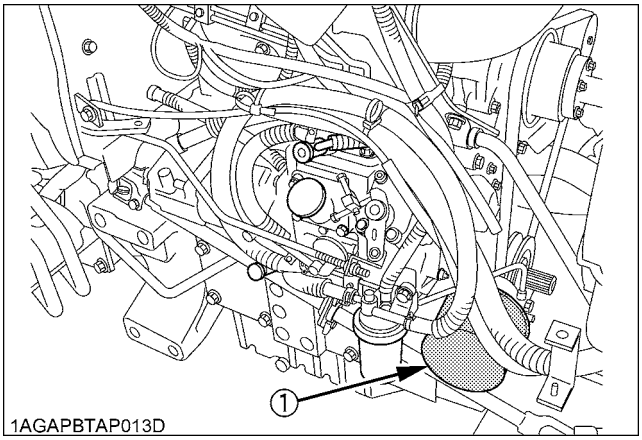

(1) Engine oil filter

IMPORTANT :

- To prevent serious damage to the engine, use only a KUBOTA genuine filter.

https://truckmanualshub.com/

■Changing Transmission Fluid / Replacing Hydraulic Oil Filter

◆ Cleaning Magnetic Filter

WARNING

To avoid personal injury or death:

- **Be sure to stop the engine before changing the oil filter cartridge.**
- **Allow engine to cool down sufficiently, oil can be hot and can burn.**

1. Remove the drain plugs at the bottom of the transmission case and drain the oil completely into the oil pan.
2. After draining reinstall the drain plugs.

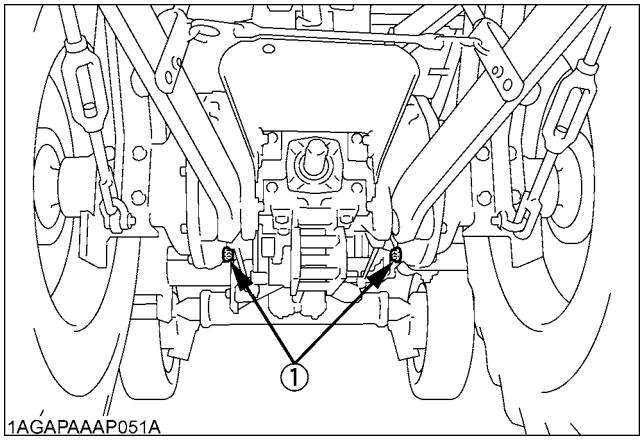

(1) Drain plugs

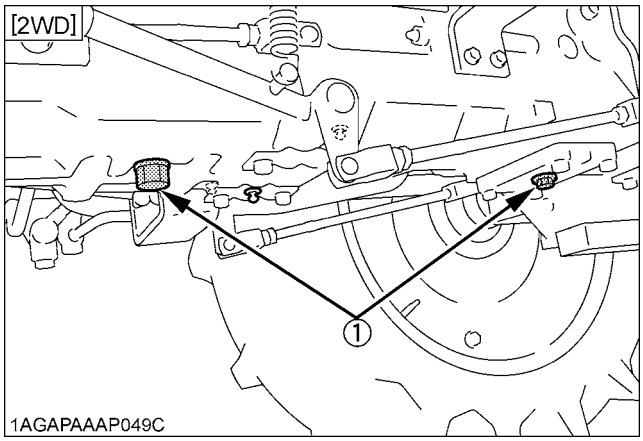

(1) Drain plugs

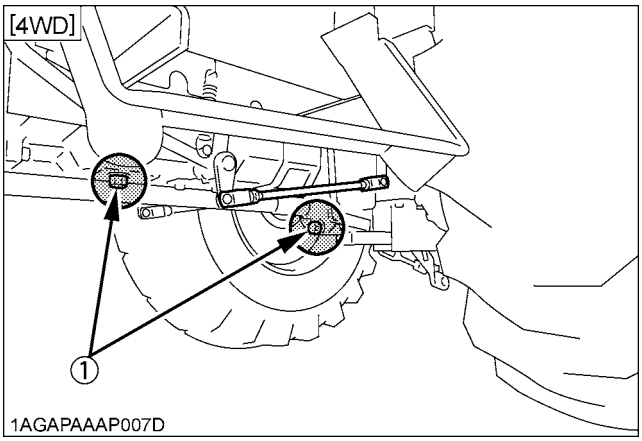

(1) Drain plugs

3. Remove the oil filter.
4. Wipe off metal filings from the magnetic filter with a clean rag.

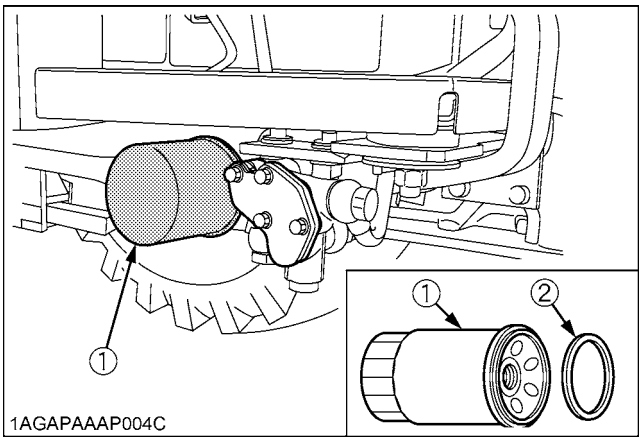

(1) Hydraulic oil filter
(2) Magnetic filter (Wipe off metal filings)

5. Put a film of clean transmission oil on the rubber seal of the new filter.
6. Quickly tighten the filter until it contacts the mounting surface, then tighten it by hand an additional 1/2 turn only.
7. After the new filter has been replaced, fill with oil up to the upper line of the gauge.
8. After running the engine for a few minutes, stop the engine and check the oil level again, add oil to the prescribed level.
9. Make sure that the transmission fluid doesn't leak past the seal on the filter.

Oil capacity	Manual Transmission	2WD	27.0 L (7.1 U.S.gals.)
		4WD	27.5 L (7.3 U.S.gals.)
	HST	4WD	23.5 L (6.2 U.S.gals.)

https://truckmanualshub.com/

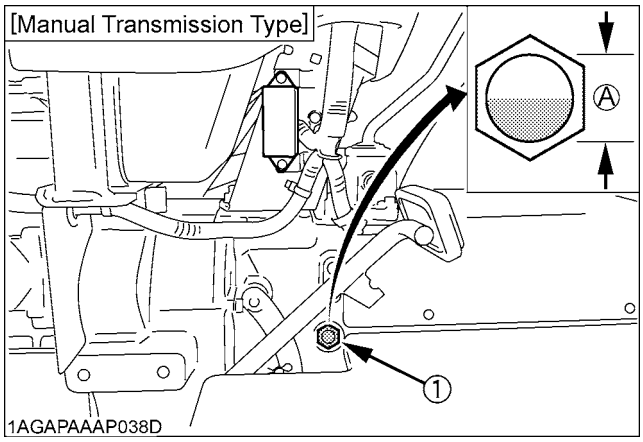

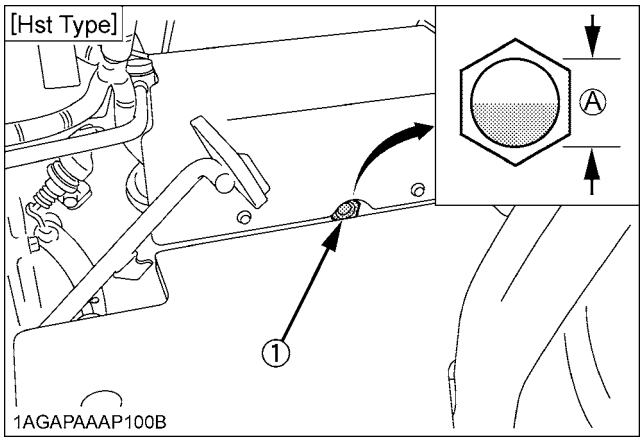

(1) Gauge *(A) Oil level is acceptable within this range.*

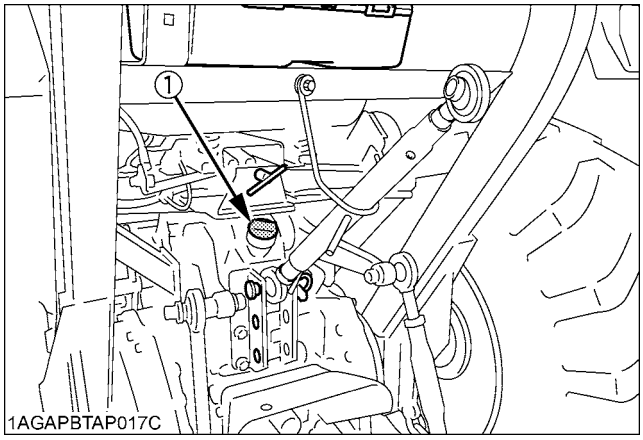

(1) Oil inlet

IMPORTANT :

- To prevent serious damage to the hydraulic system, use only a KUBOTA genuine filter.
- Do not operate the tractor immediately after changing the transmission fluid.
  Run the engine at medium speed for a few minutes to prevent damage to the transmission.

■Replacing Fuel Filter Element

(See "Cleaning Fuel Filter" in "EVERY 100 HOURS" in "PERIODIC SERVICE" section.)

■Lubricating Grease Fitting [2WD Model]

Detach the cover, and apply bearing grease.

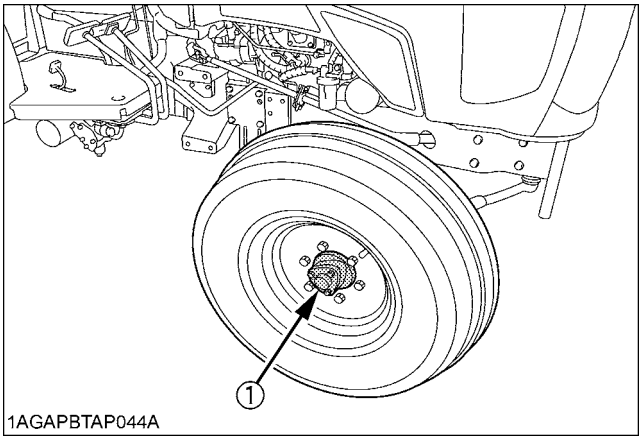

(1) Front wheel hub cover

EVERY 600 HOURS

■Adjusting Front Axle Pivot

If the front axle pivot pin adjustment is not correct, front wheel vibration can occur causing vibration in the steering wheel.

◆ Adjusting procedure

Loosen the lock nut, screw-in the adjusting screw until seated, then tighten the screw with an additional 1/6 turn. Re-tighten the lock nut.

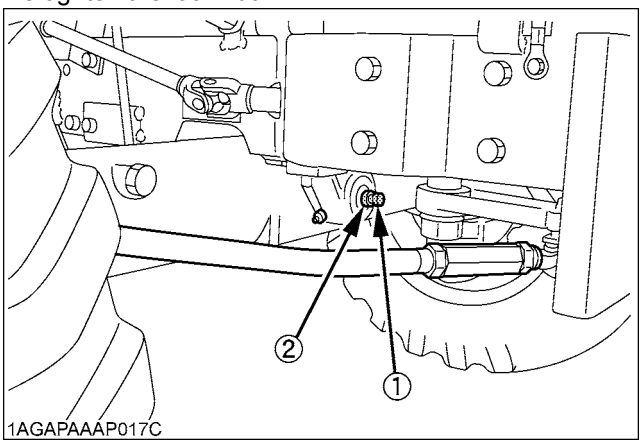

(1) Adjusting screw
(2) Lock nut

https://truckmanualshub.com/

EVERY 800 HOURS

■Changing Front Axle Case Oil

[4WD]

1. To drain the used oil, remove the right and left drain plugs and filling plug at the front axle case and let out the oil completely into the oil pan.
2. After draining, reinstall the drain plugs.
3. Gently pour new oil through the filling port. Required oil quantities are written in the table below. Make sure to pour the specified amounts. If oil overflows before pouring any of the specified amounts, wait a couple of minutes and try again.
   (See "LUBRICANTS" in "MAINTENANCE" section.)
4. After filling, reinstall the filling plug.
5. Run the vehicle a few minutes in order for the oil to flow through the front axle case.
6. Remove the oil level check plug and check to see if the oil flows out of its port. If not, add the oil through the filling port until it flows out of the oil level check port.
7. Reinstall and tighten the oil level check plug and filling plug.

Oil capacity	4.5 L (4.8 U.S.qts.)

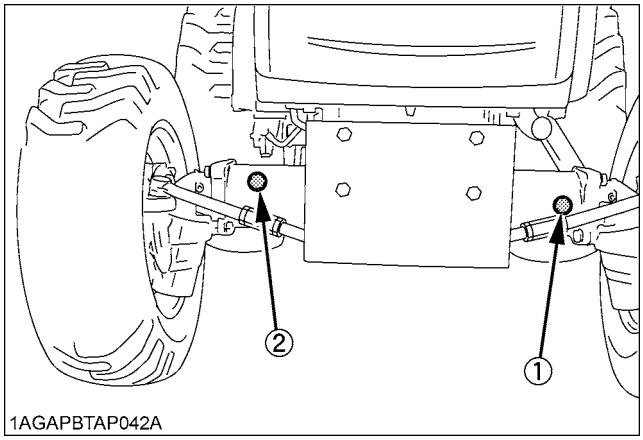

(1) Check plug
(2) Filling plug

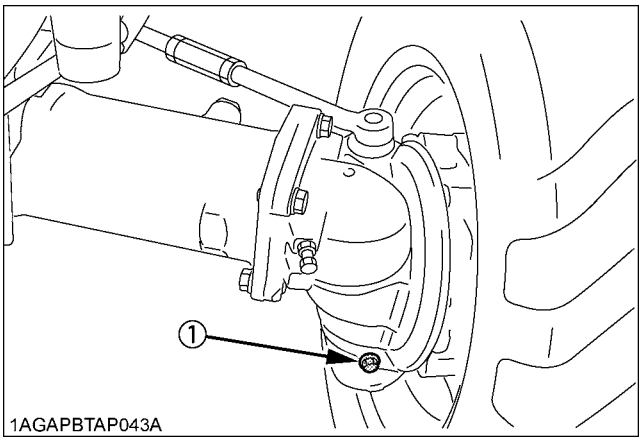

(1) Drain plug

■Adjusting Engine Valve Clearance

Consult your local KUBOTA Dealer for this service.

EVERY 1000 HOURS or 1 YEAR

Be sure to do the following servicing once every 1000 hours or yearly, whichever comes first.

■Replacing Air Cleaner Element

(See "Cleaning Air Cleaner Element" in "EVERY 100 HOURS" in "PERIODIC SERVICE" section.)

EVERY 1500 HOURS

■Checking Fuel Injection Nozzle (Injection Pressure)

Consult your local KUBOTA Dealer for this service.

https://truckmanualshub.com/

EVERY 2000 HOURS or 2 YEARS

Be sure to do the following servicing once every 2000 hours or biennially, whichever comes first.

■Flushing Cooling System and Changing Coolant

WARNING

To avoid personal injury or death:

- **Do not remove radiator cap while coolant is hot. When cool, slowly rotate cap to the first stop and allow sufficient time for excess pressure to escape before removing the cap completely.**

1. Stop the engine, remove the key and let it cool down.
2. To drain the coolant, open the radiator drain plug and remove radiator cap. The radiator cap must be removed to completely drain the coolant.
3. After all coolant is drained, reinstall the drain plug.
4. Fill with clean soft water and cooling system cleaner.
5. Follow directions of the cleaner instruction.
6. After flushing, fill with clean soft water and anti-freeze until the coolant level is just below the radiator cap. Install the radiator cap securely.
7. Fill with coolant up to the "FULL" mark of recovery tank.
8. Start and operate the engine for few minutes.
9. Stop the engine, remove the key and let cool.
10. Check coolant level of recovery tank and add coolant if necessary.
11. Properly dispose of used coolant.

	Coolant capacity
Radiator	6.0 L (6.3 U.S.qts.)
Recovery tank	0.6 L (0.6 U.S.qts.)

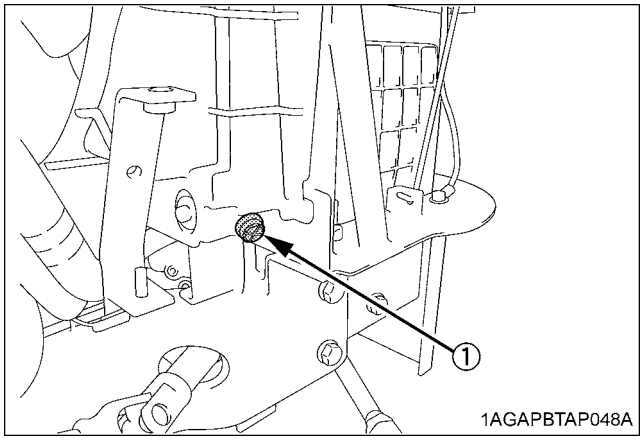

(1) Drain plug

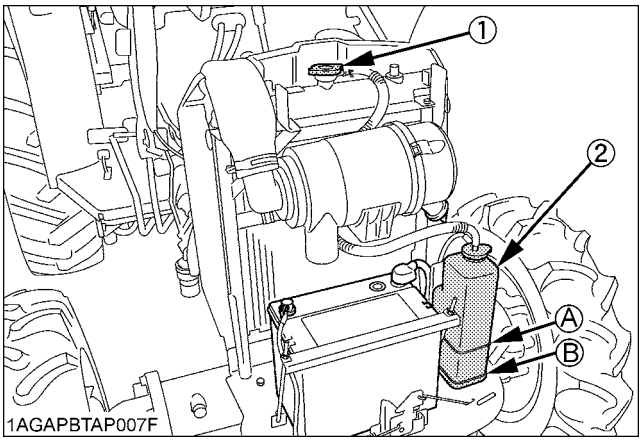

(1) Radiator cap *(A) "FULL"*
(2) Recovery tank *(B) "LOW"*

IMPORTANT :

- Do not start engine without coolant.
- Use clean, fresh soft water and anti-freeze to fill the radiator and recovery tank.
- When mixing the anti-freeze with water, the anti-freeze mixing ratio is 50 %.
- Securely tighten radiator cap. If the cap is loose or improperly fitted, water may leak out and the engine could overheat.

■Anti-Freeze

WARNING

To avoid personal injury or death:

- **When using antifreeze, put on some protection such as rubber gloves. (Antifreeze contains poison.)**
- **If it is swallowed, seek immediate medical help. Do NOT make a person throw up unless told to do so by poison control or a health care professional. Use standard first aid and CPR for signs of shock or cardiac arrest. Call your local Poison Control Center or your local emergency number for further assistance.**
- **When antifreeze comes in contact with the skin or clothing, wash it off immediately.**
- **Do not mix different types of Antifreeze. The mixture can produce chemical reaction causing harmful substances.**
- **Antifreeze is extremely flammable and explosive under certain conditions. Keep fire and children away from antifreeze.**
- **When draining fluids from the engine, place some container underneath the engine body.**
- **Do not pour waste onto the ground, down a drain, or into any water source.**
- **Also, observe the relevant environmental protection regulations when disposing of antifreeze.**

https://truckmanualshub.com/

Always use a 50/50 mix of long-life coolant and clean soft water in KUBOTA engines.
Consult your local KUBOTA Dealer concerning coolant for extreme conditions.

1. Long-life coolant (hereafter LLC) comes in several types. Use ethylene glycol (EG) type for this engine.
2. Before employing LLC-mixed cooling water, fill the radiator with fresh water and empty it again.
   Repeat this procedure 2 or 3 times to clean up the inside.
3. Mixing the LLC
   Premix 50% LLC with 50% clean soft water. When mixing, stir it up well, and then fill into the radiator.
4. The procedure for the mixing of water and antifreeze differs according to the make of the antifreeze and the ambient temperature. Refer to SAE J1034 standard, more specifically also to SAE J814c.

Vol % Anti-freeze	Freezing Point		Boiling Point*	
	℃	℉	℃	℉
50	-37	-34	108	226

∗ At 1.013 x 10^5Pa (760mmHg) pressure (atmospheric). A higher boiling point is obtained by using a radiator pressure cap which permits the development of pressure within the cooling system.

5. Adding the LLC
   (1) Add only water if the mixture reduces in amount by evaporation.
   (2) If there is a mixture leak, add the LLC of the same manufacturer and type in the same mixture percentage.
   ∗ Never add any long-life coolant of different manufacturer. (Different brands may have different additive components, and the engine may fail to perform as specified.)
6. When the LLC is mixed, do not employ any radiator cleaning agent. The LLC contains anticorrosive agent. If mixed with the cleaning agent, sludge may build up, adversely affecting the engine parts.
7. Kubota's genuine long-life coolant has a service life of 2 years. Be sure to change the coolant every 2000 hours or every 2 years whichever comes faster.

NOTE :
- The above data represent industry standards that necessitate a minimum glycol content in the concentrated antifreeze.

EVERY 3000 HOURS

■Checking Injection Pump

Consult your local KUBOTA Dealer for this service.

EVERY 1 YEAR

■Checking Fuel Line

1. Check to see that all lines and hose clamps are tight and not damaged.
2. If hoses and clamps are found worn or damaged, replace or repair them at once.

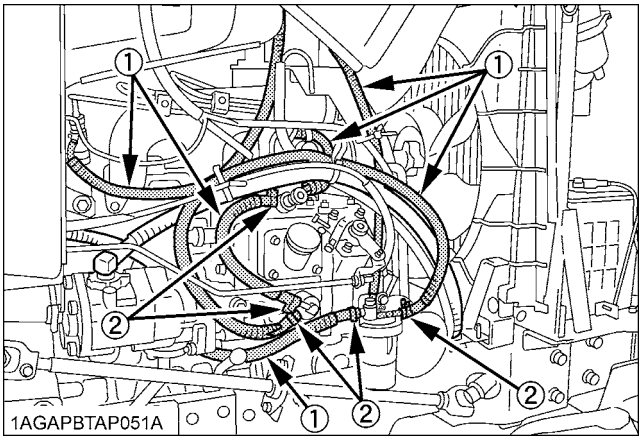

(1) Fuel lines
(2) Clamp bands

NOTE :
- If the fuel line is removed, be sure to properly bleed the fuel system.
  (See "Bleeding Fuel System" in "SERVICE AS REQUIRED" in "PERIODIC SERVICE" section.)

■Checking Intake Air Line

1. Check to see that hoses and hose clamps are tight and not damaged.
2. If hoses and clamps are found worn or damaged, replace or repair them at once.

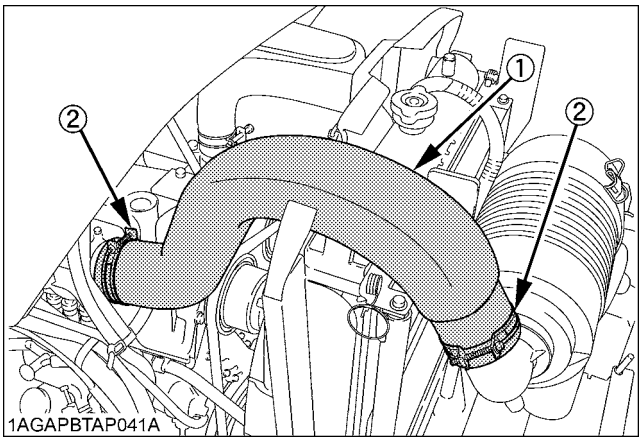

(1) Hose
(2) Hose clamps

https://truckmanualshub.com/

■Checking Radiator Hose and Clamp

Check to see if radiator hoses are properly fixed every year.

1. If hose clamps are loose or water leaks, tighten bands securely.
2. Replace hoses and tighten hose clamps securely, if radiator hoses are swollen, hardened or cracked.

Replace hoses and hose clamps every 4 years or earlier if checked and found that hoses are swollen, hardened or cracked.

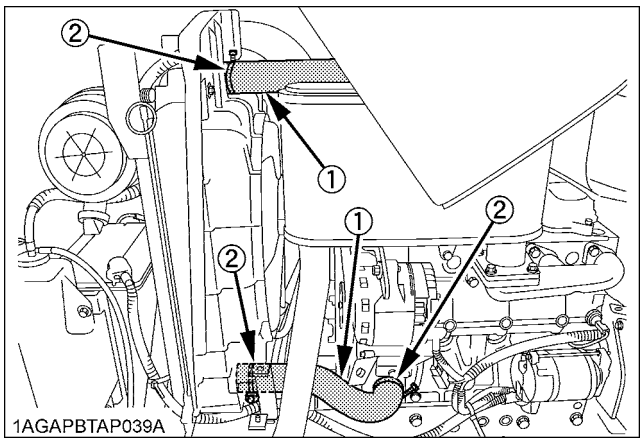

(1) Radiator hoses
(2) Clamp bands

◆ **Precaution at Overheating**

Take the following actions in the event the coolant temperature is nearly or more than the boiling point, what is called "Overheating"

1. Park the tractor in a safe place and keep the engine unloaded idling.
2. Don't stop the engine suddenly, but stop it after about 5 minutes of unloaded idling.
3. Keep yourself well away from the machine for further 10 minutes or while the steam blows out.
4. Check that there are no dangers such as burns. Get rid of the causes of overheating according to the manual, see "TROUBLESHOOTING" section, and then, start again the engine.

■Checking Power Steering Line

[Manual Transmission Type]

1. Check to see that all lines and hose clamps are tight and not damaged.
2. If hoses and clamps are found worn or damaged, replace or repair them at once.

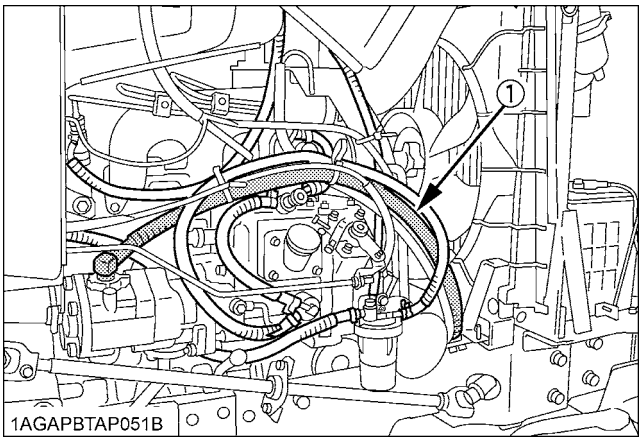

(1) Power steering pressure hoses

■Checking Oil Cooler Line

[HST Type]

1. Check to see that all lines and hose clamps are tight and not damaged.
2. If hoses and clamps are found worn or damaged, replace or repair them at once.

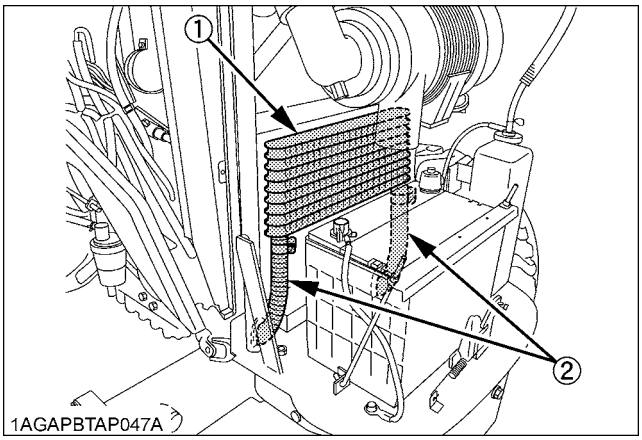

(1) Oil cooler
(2) Oil cooler line

https://truckmanualshub.com/

EVERY 4 YEARS

■Replacing Radiator Hose (Water pipes)

Replace the hoses and clamps.
(See "Checking Radiator Hose and Clamp" in "EVERY 1 YEAR" in "PERIODIC SERVICE" section.)

■Replacing Fuel Hose

Consult your local KUBOTA Dealer for this service.

■Replacing Intake Air Line

Consult your local KUBOTA Dealer for this service.

■Replacing Oil Cooler Line

[HST Type]
Consult your local KUBOTA Dealer for this service.

■Replacing Power Steering Hose

Consult your local KUBOTA Dealer for this service.

SERVICE AS REQUIRED

■Bleeding Fuel System

Air must be removed:
1. When the fuel filter or lines are removed.
2. When the tank is completely empty.
3. After the tractor has not been used for a long period of time.

◆ **Bleeding procedure is as follows:**
1. Fill the fuel tank with fuel.
2. Open the air vent shutoff-valve on the fuel injection pump.

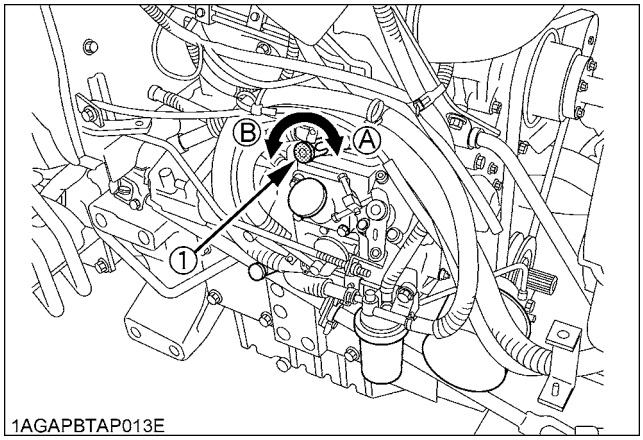

(1) Air vent shutoff-valve *(A) CLOSE* *(B) OPEN*

3. Start the engine and run for about 30 seconds, and then stop the engine.
4. Close the air vent shutoff-valve.

IMPORTANT :
- Always close the air vent shutoff-valve except for bleeding fuel lines.
  Otherwise, engine runs irregularly or stalls frequently.

■Draining Clutch Housing Water

The tractor is equipped with split pin plug under the clutch housing.
After operating in rain, snow or tractor has been washed, water may get into the clutch housing. Check it by pushing in the split pin.
If water has entered into the clutch housing, remove the plug and drain the water, then install the plug again.

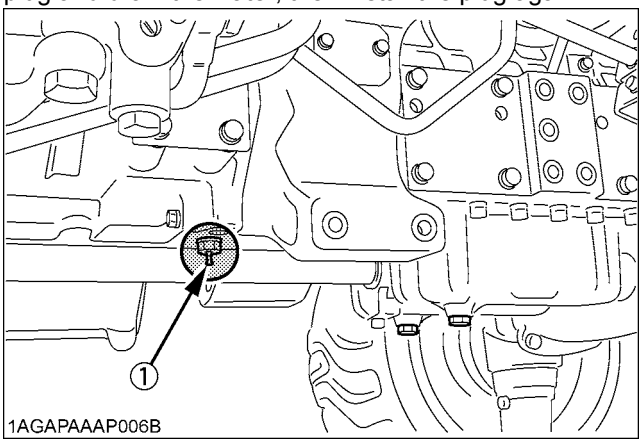

(1) Split pin plug

https://truckmanualshub.com/

■Replacing Fuse

The tractor electrical system is protected from potential damage by fuses.
A blown fuse indicates that there is an overload or short somewhere in the electrical system.
If any of the fuses should blow, replace with a new one of the same capacity.

IMPORTANT :

- Before replacing a blown fuse, determine why the fuse blew and make any necessary repairs. Failure to follow this procedure may result in serious damage to the tractor electrical system. Refer to the "TROUBLESHOOTING" section of this manual or your local KUBOTA Dealer for specific information dealing with electrical problems.

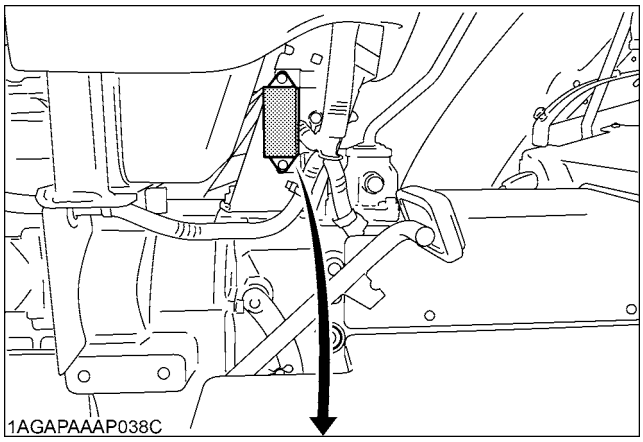

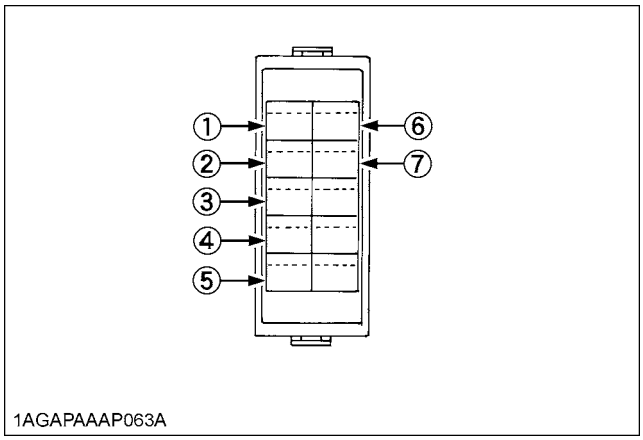

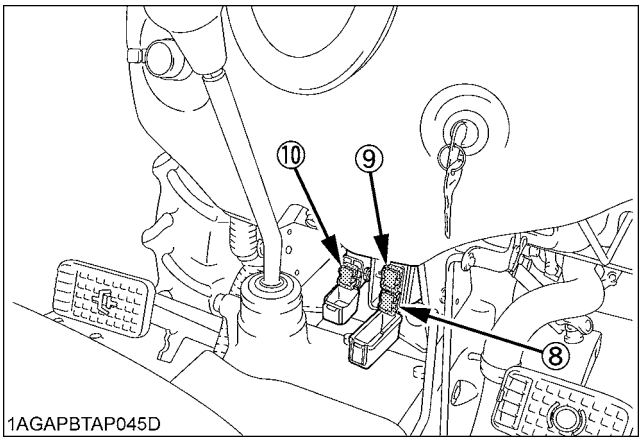

FUSE No.	CAPACITY(A)	Protected circuit
(1)	15	Hazard
(2)	10	Work light
(3)	10	Panel
(4)	15	Head light
(5)	5	Key stop
(6)	5	Glow lamp
(7)	5	Starter relay
(8)	40	Main
(9)	30	Key stop
(10)	40	Key switch

■Replacing Light Bulb

Light	Capacity
Head light	25W / 25W
Tail light	5W
Turn signal / Hazard light (rear)	21W
Turn signal / Hazard light (front)	23W
Instrument panel light	1.7W

https://truckmanualshub.com/

■Replacing Head Lamp

WARNING

To avoid personal injury or death:

- **Be careful not to drop the bulb, hit anything against the lamp, apply excess force, and get the lamp scratched. If broken, glass may cause injury.**
- **Before replacing the lamp, be sure to turn off the light and wait until the bulb cools down, otherwise, you may get burned.**

◆ **Removing Bulb**

1. Remove the rubber boot.
2. Turn the socket counterclockwise while pressing and remove it.
3. Remove the bulb.

◆ **Attaching Bulb**

1. Align (A) of the bulb with (B) of the lamp case and attach the bulb.
2. Align (C) of the socket with (D) of the lamp case and attach the socket.
3. Attach the rubber boot.

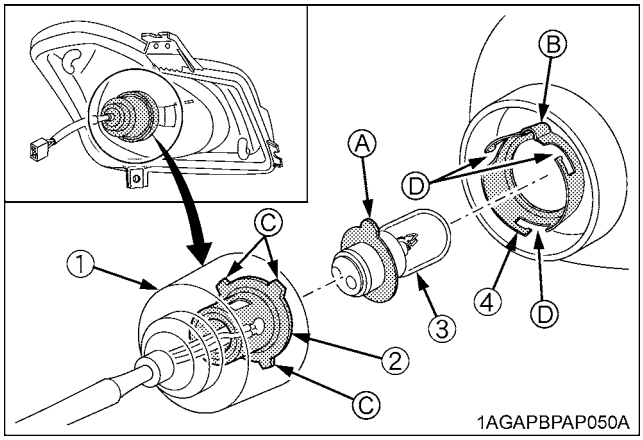

(1) Rubber boot
(2) Socket
(3) Bulb
(4) Lamp Case
(A) "Align to (B)"
(C) "Align to (D)"

IMPORTANT :

- Be sure to use a new bulb of the specified wattage.
- Never touch the bulb surface (glass) with bare hands. Fingerprints, for example, may break the bulb.

■Replacing Radiator Hose (Water pipes)

Replace the hoses and clamps.
(See "Checking Radiator Hose and Clamp" in "EVERY 1 YEAR" in "PERIODIC SERVICE" section.)

■Replacing Fuel Hose

Consult your local KUBOTA Dealer for this service.

■Replacing Intake Air Line

Consult your local KUBOTA Dealer for this service.

■Replacing Power Steering Hose

Consult your local KUBOTA Dealer for this service.

■Replacing Oil Cooler Line

[HST Type]

Consult your local KUBOTA Dealer for this service.

https://truckmanualshub.com/

STORAGE

WARNING

To avoid personal injury or death:

- **Do not clean the machine while the engine is running.**
- **To avoid the danger of exhaust fume poisoning, do not operate the engine in a closed building without proper ventilation.**
- **When storing, remove the key from the key switch to avoid unauthorized persons from operating the tractor and getting injured.**

TRACTOR STORAGE

If you intend to store your tractor for an extended period of time, follow the procedures outlined below.

These procedures will insure that the tractor is ready to operate with minimum preparation when it is removed from storage.

1. Check the bolts and nuts for looseness, and tighten if necessary.
2. Apply grease to tractor areas where bare metal will rust also to pivot areas.
3. Detach the weights from the tractor body.
4. Inflate the tires to a pressure a little higher than usual.
5. Change the engine oil and run the engine to circulate oil throughout the engine block and internal moving parts for about 5 minutes.
6. Keep the clutch disengaged. If the clutch is left engaged for a long period of time, the clutch plate may rust, making clutch disengagement impossible at the next operation.

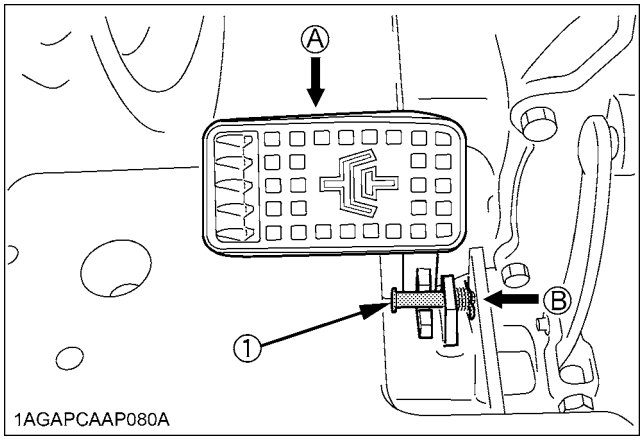

(1) Lock pin
(A) "DEPRESS"
(B) "HOOK TO LOCK"

7. With all implements lowered to the ground, coat any exposed hydraulic cylinder piston rods with grease.
8. Remove the battery from the tractor. Store the battery following the battery storage procedures.
   (See "Checking Battery Condition" in "EVERY 100 HOURS" in "PERIODIC SERVICE" section.)
9. Keep the tractor in a dry place where the tractor is sheltered from the elements. Cover the tractor.
10. Store the tractor indoors in a dry area that is protected from sunlight and excessive heat. If the tractor must be stored outdoors, cover it with a waterproof tarpaulin.
    Jack the tractor up and place blocks under the front and rear axles so that all 4 tires are off the ground. Keep the tires out of direct sunlight and extreme heat.

IMPORTANT :

- When washing the tractor, be sure to stop the engine. Allow sufficient time for the engine to cool before washing.
- Cover the tractor after the muffler and the engine have cooled down.

REMOVING THE TRACTOR FROM STORAGE

1. Check the tire air pressure and inflate the tires if they are low.
2. Jack the tractor up and remove the support blocks from under the front and rear axles.
3. Install the battery. Before installing the battery, be sure it is fully charged.
4. Check the fan belt tension.
5. Check all fluid levels (engine oil, transmission/ hydraulic oil, engine coolant and any attached implements).
6. Start the engine. Observe all gauges. If all gauges are functioning properly and reading normal, move the tractor outside. Once outside, park the tractor and let the engine idle for at least 5 minutes. Shut the engine off and walk around tractor and make a visual inspection looking for evidence of oil or water leaks.
7. With the engine fully warmed up, release the parking brake and test the brakes for proper adjustment as you move forward. Adjust the brakes as necessary.

https://truckmanualshub.com/

TROUBLESHOOTING

ENGINE TROUBLESHOOTING

If something is wrong with the engine, refer to the table below for the cause and its corrective measure.

Trouble		Cause	Countermeasure
Engine is difficult to start or won't start.		● No fuel flow.	● Check the fuel tank and the fuel filter. Replace filter if necessary.
		● Air or water is in the fuel system.	● Check to see if the fuel line coupler bolt and nut are tight. ● Bleed the fuel system. (See "Bleeding Fuel System" in "SERVICE AS REQUIRED" in "PERIODIC SERVICE" section.)
		● In winter, oil viscosity increases, and engine revolution is slow.	● Use oils of different viscosities, depending on ambient temperatures. ● Use engine block heater. (Optional)
		● Battery becomes weak and the engine does not turn over quick enough.	● Clean battery cables & terminals. ● Charge the battery. ● In cold weather, always remove the battery from the engine, charge and store it indoors. Install it on the tractor only when the tractor is going to be used.
		● Preheat (glow plug) system trouble.	● Check to see if the preheat (glow plug) functions in cold weather.
Insufficient engine power.		● Insufficient or dirty fuel. ● The air cleaner is clogged.	● Check the fuel system. ● Clean or replace the element.
Engine stops suddenly.		● Insufficient fuel.	● Refuel. ● Bleed the fuel system if necessary.
Exhaust fumes are colored.	Black	● Fuel quality is poor. ● Too much oil. ● The air cleaner is clogged.	● Change the fuel and fuel filter. ● Check the proper amount of oil. ● Clean or replace the element.
	Blue white	● The inside of exhaust muffler is damp with fuel. ● Injection nozzle trouble. ● Fuel quality is poor.	● Heat the muffler by applying load to the engine. ● Check the injection nozzle. ● Change the fuel and fuel filter.
Engine overheats		● Engine overloaded.	● Shift to lower gear or reduce load.
		● Low coolant level.	● Fill cooling system to the correct level; check radiator and hoses for loose connections or leaks.
		● Loose or defective fan belt.	● Adjust or replace fan belt.
		● Dirty radiator core or grille screens.	● Remove all trash.
		● Coolant flow route corroded.	● Flush cooling system.

If you have any questions, consult your local KUBOTA Dealer.

https://truckmanualshub.com/

OPTIONS

Consult your local KUBOTA Dealer for further details.

- Engine Block Heater
  For extremely cold weather starting
- Front end weights
  For front ballast
- Front bumper
- Rear Wheel Weights
  For rear ballast
- Cruise Control
- Sunshade
- Front grill guard
- Double Acting Remote Hydraulic Control Valve
- Stabilizer kit (for lower link)
- Swinging Drawbar
- Clevis for Drawbar
- Work Light
  High visibility for night work

https://truckmanualshub.com/

APPENDICES

INDEX

3-point Hitch Lowering Speed 39
Air Cleaner Element 68
Air Cleaner Element [Single Element Type] 59
Anti-Freeze 69
Battery Condition 61
Brake Pedal 61
Brake Pedals (Right and Left) 22
Brake Pedals and Clutch Pedal 54
Check Chains 38
Clutch Pedal 23
Clutch Pedal 60
Coolant Level 53
Coolant Temperature Gauge 31
Cruise Control Lever 28
Differential Lock 32
Directions for Use of Power Steering 33
Do not Operate the Tractor at Full Speed for the First 50 Hours 18
Draining Clutch Housing Water 72
Drawbar 37
Drawbar Length 38
Dual Tires 42
Easy Checker(TM) 30
Electrical Wiring and Battery Cables 55
Engine Oil 65
Engine Oil Filter 65
Engine Oil Level 52
Engine Start System 57
Engine Valve Clearance 68
Evacuator Valve 54
Fan Belt Tension 60
Float Control 39
Flushing Cooling System and Coolant 69
Foldable ROPS 20
Foot Throttle 25
Front Axle Case Oil 68
Front Axle Pivot 67
Front Ballast 44
Front Wheel Drive Lever 24
Front Wheel Drive Lever 27
Front Wheels 42
Fuel Filter 59
Fuel Filter Element 67
Fuel Gauge 30
Fuel Hose 72
Fuel Hose 74
Fuel Injection Nozzle (Injection Pressure) 68
Fuel Line 70
Fuel System 72
Fuse 73
Gauges, Meter and Easy Checker(TM) 54
Grill, Radiator Screen and Oil Cooler 54
Hand Throttle Lever 25
Hand Throttle Lever 27
Head Lamp 74
Head Light / Turn Signal / Hazard Light Switch21
Head Light, Turn Signal / Hazard Light etc. 54
Hood 51
Hourmeter/Tachometer 31
Hydraulic Block Type Outlet 40
Hydraulic Control Unit Use Reference Chart 41
Immediately Stop the Engine if: 30
Inflation Pressure 42
Injection Pump 70
Intake Air Line 70
Intake Air Line 72
Intake Air Line 74
Lifting Rod (Right) 37
Light Bulb 73
Liquid Ballast in Rear Tires 45
Lower link holder 38
Lubricating Grease Fitting [2WD Model] 67
Lubricating Grease Fittings 55
Lubricating Oil for New Tractors 18
Main Gear Shift Lever & Range Gear Shift Lever 24
Movable Parts 55
Oil Cooler Line 71
Oil Cooler Line 72
Oil Cooler Line 74
Operating on Slopes and Rough Terrain 33
Operating the Tractor on a Road 33
Operator Presence Control 58
Operator's Seat 20
Parking 32
Parking Brake 25
Parking Brake 27
Position Control 39
Power Steering Hose 72

https://truckmanualshub.com/

Power Steering Hose 74
Power Steering Line 71
PTO Gear Shift Lever.....34
PTO Shaft Cover and Shaft Cap 35
Radiator Hose (Water pipes).....72
Radiator Hose (Water pipes).....74
Radiator Hose and Clamp 71
Range Gear Shift Lever (L-M-H) 26
Rear Ballast.....45
Rear Wheels.....43
Refueling 52
Seat Belt.....21
Seat Belt and ROPS.....54
Selecting the holes of Lower Links.....37
Selecting the top link mounting holes.....37
Side Cover.....51
Speed Control Pedal 28
Stationary PTO.....35
Stopping 30
To Fold the ROPS 18
To Raise the ROPS to Upright Position 19
Toe-in 64
Top Link.....37
Tractor Lights 22
Transmission Fluid / Hydraulic Oil Filter.....66
Transmission Fluid Level.....53
Transmission Oil Filter [HST Type] 63
Transport the Tractor Safely.....33
Walk Around Inspection 52
Warm-Up Transmission Oil in the Low Temperature Range 16
Wheel Bolt Torque.....58