https://truckmanualshub.com/

MANITOU BF
BP 10249
44158 ANCENIS CEDEX - FRANCE
TEL: + 33 (0)2 40 09 10 11

YOUR DEALER

647533 EN (09/10/2015)

MAN' GO 12

OPERATOR'S MANUAL

(ORIGINAL INSTRUCTIONS MANUAL)

https://truckmanualshub.com/

647533 (09/10/2015)
MAN'GO 12

https://truckmanualshub.com/

IMPORTANT

Carefully read and understand this instruction manual before using the lifting platform.

It contains all information relating to operation, handling and lifting platform equipment, as well as important recommendations to be followed.

This document also contains precautions for use, as well as information on the servicing and routine maintenance required to ensure the lift truck's continued safety of use and reliability.

WHENEVER YOU SEE THIS SYMBOL IT MEANS:

⚠ IMPORTANT ⚠

WARNING ! BE CAREFUL ! YOUR SAFETY OR THE SAFETY OF THE LIFTING PLATFORM IS AT RISK.

- This manual has been produced on the basis of the equipment list and the technical characteristics given at the time of its design.
- The level of equipment of the lifting platform depends on the options chosen and the country of sale.
- According to the lifting platform options and the date of sale, certain items of equipment/functions described herein may not be available.
- Descriptions and figures are non binding.
- MANITOU reserves the right to change its models and their equipment without being required to update this manual.
- The MANITOU network, consisting exclusively of qualified professionals, is at your disposal to answer all your questions.
- This manual is an integral part of the lifting platform.
- It is to be kept in its storage space at all times for ease of reference.
- Hand this manual to the new owner if the lift truck is resold.

03/06/2015	**1st DATE OF ISSUE**
09/10/2015	**Update**

THE TEXTS AND ILLUSTRATIONS IN THIS DOCUMENT MUST NOT BE REPRODUCED EITHER WHOLLY OR IN PART.

647533 (09/10/2015)
MAN'GO 12

https://truckmanualshub.com/

1 - OPERATING AND SAFETY INSTRUCTIONS

2 - DESCRIPTION

3 - MAINTENANCE

https://truckmanualshub.com/

1 - OPERATING AND SAFETY INSTRUCTIONS

https://truckmanualshub.com/

TABLE OF CONTENTS

1 - OPERATING AND SAFETY INSTRUCTIONS

INSTRUCTIONS TO THE COMPANY MANAGER 4

PREAMBLE 4

THE SITE 4

THE OPERATOR 4

THE PLATFORM 4

THE INSTRUCTIONS 5

THE MAINTENANCE 5

INSTRUCTIONS FOR THE OPERATOR 6

PREAMBLE 6

GENERAL INSTRUCTIONS 6

A - OPERATOR'S MANUAL 6

B - AUTHORISATION FOR USE IN FRANCE 6

C - MAINTENANCE 6

D - MODIFICATION THE PLATFORM 6

E - IC PLATFORM AXLES. 7

DRIVING INSTRUCTIONS 7

A - BEFORE STARTING THE PLATFORM 7

B - DRIVER'S OPERATING INSTRUCTIONS 7

C - ENVIRONMENT 8

D - VISIBILITY 10

E - STARTING THE PLATFORM 10

F - DRIVING THE PLATFORM 11

G - STOPPING THE PLATFORM. 11

INSTRUCTIONS FOR WELDING AND BLOW TORCH WORK ON THE EXTERNAL STRUCTURE 12

A - WITH ELECTRIC WELDING EQUIPMENT 12

B - WITH A BLOW TORCH 12

PLATFORM MAINTENANCE INSTRUCTIONS 14

GENERAL INSTRUCTIONS 14

MAINTENANCE 14

LUBRICANT AND FUEL LEVELS 14

LEVEL OF ELECTROLYTE IN THE BATTERY 14

HYDRAULIC 14

ELECTRICITY 14

WELDING ON THE ACCESS PLATFORM 15

WASHING THE PLATFORM 15

IF THE PLATFORM IS NOT TO BE USED FOR A LONG TIME 16

INTRODUCTION 16

PREPARING THE PLATFORM 16

PROTECTING THE I.C. ENGINE 16

CHARGING THE BATTERIES 16

PROTECTING THE PLATFORM 16

BRINGING THE PLATFORM BACK INTO SERVICE 17

https://truckmanualshub.com/

SCRAPPING THE PLATFORM 18

RECYCLING OF MATERIALS 18
METALS . . . 18
PLASTICS . . . 18
RUBBER . . . 18
GLASS . . . 18

ENVIRONMENTAL PROTECTION 18
WORN OR DAMAGED PARTS . . . 18
USED OIL . . . 18
USED BATTERIES . . . 18

https://truckmanualshub.com/

INSTRUCTIONS TO THE COMPANY MANAGER

PREAMBLE

⚠ IMPORTANT ⚠

Whenever you see this symbol it means :

Warning ! Be careful ! Your safety or the safety of the platform is at risk.

THE SITE

Good personal control of the lifting platform's operating area reduces the risk of accidents:

- The floor must not be unnecessarily broken or cluttered,
- No excessive slopes,
- Controlled pedestrian traffic, etc.

THE OPERATOR

Only qualified, authorized personnel can use the platform. This authorization is given in writing by the appropriate person in the establishment with respect to the use of platform and must be carried permanently by the operator.

⚠ IMPORTANT ⚠

On the basis of experience, there are a number of possible situations in which operating the platform is contra-indicated. Such foreseeable abnormal uses, the main ones being listed below, are strictly forbidden.

The foreseeable abnormal behaviour resulting from ordinary neglect, but does not result from any wish to put the machinery to any improper use.

The reflex reactions of a person in the event of a malfunction, incident, fault, etc. during operation of the platform.

Behaviour resulting from application of the "principle of least action" when performing a task.

For certain machines, the foreseeable behaviour of such persons as : apprentices, teenagers, handicapped persons, trainees tempted to drive a platform, operator tempted to operate a truck to win a bet, in competition or for their own personal experience.

The person in charge of the equipment must take these criteria into account when assessing whether or not a person will make a suitable driver.

⚠ IMPORTANT ⚠

OBTAIN INFORMATION ON :

How to behave when there is a fire.

The location of the nearest first aid kit and fire extinguisher.

The emergency telephone numbers for calling (the doctors, ambulance, hospital and fire brigade).

THE PLATFORM

The platform's suitability for us

MANITOU has ensured that this platform is suitable for use under the standard operating conditions defined in this operator's manual, with an overload test coefficient of 1,25 and an operational test coefficient of 1,1, as stipulated in standardised norm EN 280 for MPLPs (Mobile Personnel Lifting Platforms).

Before commissioning, the company manager must make sure that the platform is appropriate for the work to be done, and perform certain tests (in accordance with current legislation).

Adaptating the platform to the usual environmental conditions

- In addition to series equipment mounted on your platform, many options are available, such as : flashing light, working headlight, etc. Contact your dealer.
- Take into account climatic and atmospheric conditions of the site of utilisation.
  - Protection against frost (see chapter 3 - MAINTENANCE, LUBRICANTS page).
  - Adaptation of lubricants (ask your dealer for information).
  - I.C. engine filtration (see chapter 3 - MAINTENANCE, FILTER ELEMENTS page).
- The machines designed by MANITOU are designed to be used in the following temperature range:
  - Minimum temperature: -15°C
  - Maximum temperature: +35°C
- Special features are available, as an option, for particularly cold environments.

https://truckmanualshub.com/

⚠ IMPORTANT ⚠

For operation under average climatic conditions, i.e. : between -15 °C and + 35 °C, correct levels of lubricants in all the circuits are checked in production. For operation under more severe climatic conditions, before starting up, it is necessary to drain all the circuits, then ensure correct levels of lubricants using lubricants properly suited to the relevant ambient temperatures. It is the same for the cooling liquid.

- A platform operating in an area without fire extinguishing equipment must be equipped with an individual extinguisher. There are solutions, consult your dealer.

⚠ IMPORTANT ⚠

Your platform is designed for outdoor use (see chapter: 2 - DESCRIPTION, CHARACTERISTICS pages) under normal atmospheric conditions and indoor use in suitably aerated and ventilated premises. It is prohibited to use the platform in areas where there is a risk of fire or which are potentially explosive (e.g. Refineries, fuel or gas depots, stores of inflammable products…). For use in these areas, specific equipment is available (ask your dealer for information).

Modifying the platform

- For your safety and that of others, you must not change the structure and settings of the various components used in your platform (hydraulic pressure, calibrating limiters, I.C. engine speed, addition of extra equipment, addition of counterweight, unapproved attachments, alarm systems, etc.) yourself. In this event, the manufacturer cannot be held responsible.
- Your lifting platform is delivered with standard wheels or all-terrain wheels. It is FORBIDDEN to switch from one type of wheels to another: RISK OF THE LIFTING PLATFORM BECOMING UNSTABLE.

THE INSTRUCTIONS

- The operator's manual must always be in good condition and kept in the place provided on the platform and in the language used by the operator.
- You must necessarily replace the instructions manual, as well as any plates or stickers, if they are no longer legible or are missing or damaged.

THE MAINTENANCE

- Maintenance or repairs other than those detailed in the chapter 3 - MAINTENANCE must be carried out by qualified personnel (consult your dealer) and under the necessary safety conditions to maintain the health of the operator and any third party.

⚠ IMPORTANT ⚠

Your patform must be inspected periodically to ensure that it remains in compliance. The frequency of this inspection is defined by current legislation in the country in which the platform is use

- Example for France : The manager of the compagny using the platform must set up a maintenance book for each machine and keep up-to-date (Ministerial Order of 2nd March 2004).

https://truckmanualshub.com/

INSTRUCTIONS FOR THE OPERATOR

PREAMBLE

⚠ IMPORTANT ⚠

The risk of accident while using, servicing or repairing your lifting platform can be restricted if you follow the safety instructions and safety measures detailed in these instruction.

Failure to respect the safety and operating instructions, or the instructions for repairing or servicing your lifting platform may lead to serious, even fatal accident.

- Only the operations and manœuvres described in these operator's manual must be performed. The manufacturer cannot predict all possible risky situations. Consequently, the safety instructions given in the operator's manual and on the platform itself are not exhaustive.
- At any time, as an operator, you must envisage, within reason, the possible risk to yourself, to others or to the platform itself when you use it.

GENERAL INSTRUCTIONS

A - OPERATOR'S MANUAL

- Carefully read and understand the operator's manual.
- The operator's manual must always be kept in the place provided for it on the platform and be written in the language used by the operator.
- Any operations or manoeuvres not described in the operator's manual must necessarily be forbidden right from the start.
- Follow the safety advice and the instructions on the platform.
- Ypu must necessarily replace the operator's manual, as well as any plates or stickers, if they are no longer legible or are damaged.
- A second operator must necessaily be present on the ground as a safety measure when using the platform.
- Familiarise yourself with the platform on the terrain it has to travel over.
- The machine must also be used in accordance with good engineering practice.
- Do not use the platform if the wind speed is over 45 km/h. The platform's arms must not be subjected to a lateral force of more than 40 kg (platforms for indoor use must not be used outside the building).

B - AUTHORISATION FOR USE IN FRANCE

(or see current legislation in other countries).

- Only qualified, authorized personnel may use the platform. This authorization is given in writing by the appropriate person in the company, in charge of using the platform, and must be permanently carried by the operator.
- The operator is not competent to authorise the driving of the platform by another person.

C - MAINTENANCE

- The operator must immediately advise his superior if his platform is not in good working order or does not comply with the safety notice.
- The operator is prohibited from carrying out any repairs or adjustments himself, unless he has been trained for this purpose. He must keep the platform properly cleaned if this is among his responsibilities.
- The operator must carry out daily maintenance (see chapter : 3 - MAINTENANCE, A - DAILY pages).
- The operator must ensure tyres are adapted to the nature of the ground (see area of the contact surface of the tyres in the chapter : 2 - DESCRIPTION : CHARACTERISTICS pages). There are optional solutions, consult your dealer.

⚠ IMPORTANT ⚠

Do not use the platform if the tyres are damaged or excessively worn, because this could put your own safety or that of others at risk, or cause damage to the platform itself.

⚠ IMPORTANT ⚠

In the case of electric platforms, the operator must ensure that:

- The batteries are not replaced with lighter ones (compromising stability).

- Safety goggles are always worn when charging the batteries.

- The batteries are not charged in an explosive environment.

- There is no smoking and no naked flame directed towards the batteries when they are being handled during removal, re-installation and checking the levels.

D - MODIFICATION THE PLATFORM

- For your safety and that of others, you must not change the structure and settings of the various components used in your platform yourself:
  - hydraulic pressure,
  - calibrating limiters,
  - I.C. engine speed,
  - addition of extra equipment,

https://truckmanualshub.com/

- addition of counterweight,
- unapproved attachments,
- alarm systems, etc...

- In this event, the manufacturer cannot be held responsible.

⚠ IMPORTANT ⚠

Your lifting platform is delivered with standard wheels or all-terrain wheels. It is FORBIDDEN to switch from one type of wheels to another: RISK OF THE LIFTING PLATFORM BECOMING UNSTABLE.

E - IC PLATFORM AXLES

- Standard axle :

⚠ IMPORTANT ⚠

The chassis is rigid, so the platform can have a ground reach on only three wheels.

- Oscillating axle (if this option is available) :

⚠ IMPORTANT ⚠

An oscillating axle enables the platform, when in transport position, to have a ground reach on four wheels. When moving in working position over uneven terrain, the oscillating axle is locked (the chassis is rigid) so the platform can have a ground reach on only three wheels.

DRIVING INSTRUCTIONS

A - BEFORE STARTING THE PLATFORM

- Ensure that the intermediate rail is fully in the locked position before operating the platform from the basket.
- If the platform is new, see the paragraph : before starting the platform for the first time in Chapter : 1 - safety advice and instructions.
- Carry out daily maintenance (see chapter 3 - MAINTENANCE, A - DAILY pages).
- Before starting the platform, check the levels :

• IC PLATFORMS :	• ELECTRIC PLATFORMS :
• IC engine oil	• Hydraulic reservoir oil
• Hydraulic reservoir oil	• Battery charge level
• Fuel	
• Coolant	

- The lifting platform must be in transport position (with the arms completely folded back or the scissors in the low position) before you enter it.
- Make sure the horn works.
- Check before you use the lifting platform that the access door is properly locked.

B - DRIVER'S OPERATING INSTRUCTIONS

- Whatever his experience, the operator is advised to familiarize himself with the position and operation of all the controls and instruments before operating the platform.
- Wear suitable clothing for driving the platform, do not wear baggy clothes.
- Make sure you have the appropriate protective equipment for the job to be done.
- Prolonged exposure to high noise levels may cause hearing problems. It is recommended to wear ear muffs to protect against excessive noise.
- Always pay attention when using the platform. Do not listen to the radio or music using headphones or earphones
- For increased comfort, adopt the correct position in the driver's cab.
- The operator must always be in his normal position in the driver's seat : extending arms or legs (or, in general, any part of the body), outside the basket is forbidden.
- Safety helmets must be worn.
- MANITOU recommends a safety harness in the operator's size be provided when the platform is in use (for the harness attachement in the basket , see chapter 2 - DESCRIPTION, CHECKING AND CONTROL INSTRUMENTS pages).
- The control units must never in any event be used for any other than their intended purposes (e.g. climbing onto or down from the platform, coat-rack, etc.).
- In the case of scissors-type platforms, it is forbidden to use the platform without the guardrails in place.
- Suspending a load under the basket or on any part of the lifting apparatus is strictly forbidden.
- The operator must not climb into or get down from the basket unless it is at ground level (with the lifting system folded).
- If the nacelle is equipped with a step, the basket must be situated directly below it before mounting or dismounting.
- The platform must not be fitted with any accessory increasing the machine's wind profile.
- Do not use a ladder or any improvised constructions in the basket to reach greater heights.
- Do not climb on the sides of the basket to reach greater heights.
- Never use the lifting platform with wet or greasy hands and shoes.

https://truckmanualshub.com/

C - ENVIRONMENT

- Comply with site safety regulations.
- The platform can be manoeuvred from the ground: ensure that you forbid access.
- If you have to use the platform in a dark area or at night, make sure it is equipped with working lights.
- The platforms may not be used as cranes or elevators for the permanent transport of people or materials, nor as jacks or supports.
- When operating, ensure that there is no one or anything impeding the platform's progress ans operation.
- When raising the platform, ensure that no one or anything inpedes the platform's operation and do not perform any inappropriate manœuvres.
- Do not allow anybody to come near the working area of the platform or pass beneath an elevated load. To do this, mark your operating area with warning signs.
- Travelling on a longitudinal slope :
  - Ensure that you adapt the platform's travelling speed by controlling the speed with the travelling manipulator.
- Take into account the platform's dimensions and its load before trying to negotiate a narrow or low passageway.
- Never move onto a loading platform without having first checked :
  - That it is suitably positioned and made fast.
  - That the unit to which it is connected (wagon, lorry, etc.) will not shift.
  - That this platform is prescribed for the size and the total weight of the platform.
  - That the slope is not greater than the platform's maximum authorised slope.
- Never move onto a foot bridge, floor or freight lift, without being certain that they are prescribed for the weight and size of the platform to be loaded and without having checked that they are in sound working order.
- Be careful in the area of loading bays, trenches, scaffolding, soft land and manholes.
- Ensure that the ground under the wheels and/or stabilisers is firm and stable before raising the basket.
- Do not attempt any operations outside the plarform's capabilities.
- Ensure that the materials on the platform (pipes, cables, containers, etc ...) cannot slip off and fall. Do not heap up these materials to the pint where you have to step over them.

⚠ IMPORTANT ⚠

If the basket must remain stationary over a structure for a long period, there is a risk that the basket will rest on this structure because of the oil cooling in the cylinders or a minor leak in the cylinder locking system. To eliminate this risk :

- Regularly check the distance between the basket and the structure and re-adjust if necessary.

- If possible use the platform at an oil temperature as close as possible to ambient temperature.

- In the case of work near aerial lines, ensure that the safety distance is sufficient between the working area of the platform and the aerial line.

⚠ IMPORTANT ⚠

You must consult your local electrical agency. You could be electrocuted or seriously injured if you operate or park the platform too close to power cables.

⚠ IMPORTANT ⚠

If the platform comes into contact with electric wires, press the Emergency Stop button. If you can, jump from the basket without simultaneously being in contact with the basket and the ground.

If not, call for help, wam people not to touch the basket and to switch off the power supply to the wires or have it switched off.

- It is forbidden to use the lifting platform close to electrical power lines; observe the safety distances.

NOMINAL VOLTAGE IN VOLTS	DISTANCE ABOVE THE GROUND OR THE FLOOR IN METRES
50 < U < 1000	2,30 M
1000 < U < 30000	2,50 M
30000 < U < 45000	2,60 M
45000 < U < 63000	2,80 M
63000 < U < 90000	3,00 M
90000 < U < 150000	3,40 M
150000 < U < 225000	4,00 M
225000 < U < 400000	5,30 M
400000 < U < 750000	7,90 M

https://truckmanualshub.com/

⚠ IMPORTANT ⚠

If the wind is in excess of 45Km/h, do not perform any movements liable to endanger the lifting platform's stability.

- To recognise this speed by eye, please refer to the empirical wind evaluation scale below:

BEAUFORT scale (wind speed at a height of 10m over flat terrain)						
Degree	Type of wind	Speed (knots)	Speed (km/h)	Speed (m/s)	Ground effects	Sea conditions
0	Calm	0 - 1	0 - 1	< 0,3	Smoke rises vertically.	The sea is like a mirror.
1	Very light breeze	1 - 3	1 - 5	0,3 - 1,5	The smoke drift indicates the wind direction.	Some wavelets, like fish scales, but no foam.
2	Light breeze	4 - 6	6 - 11	1,6 - 3,3	Wind felt on exposed skin, leaves rustle.	Small but noticeable wavelets.
3	Gentle breeze	7 - 10	12 - 19	3,4 - 5,4	Leaves and small twigs constantly moving.	Very small waves, crests beginning to break.
4	Moderate breeze	11 - 16	20 - 28	5,5 - 7,9	The wind raises dust and scraps of paper, it moves small branches.	Small waves stretching, many sheeps.
5	Fresh breeze	17 - 21	29 - 38	8 - 10,7	Small trees in leaf start to sway.	Wavelets form on stretches of water, moderate waves of some length.
6	Strong breeze	22 - 27	39 - 49	10,8 - 13,8	Large branches are moved, overhead wires whistle, umbrella use becomes difficult.	Waves form with white foam crests and airborne spray.
7	High wind	28 - 33	50 - 61	13,9 - 17,1	Whole trees are moving, effort required to walk against the wind.	The sea heaps up; some foam from breaking waves is blown into streaks in the wind direction.
8	Gale	34 - 40	62 - 74	17,2 - 20,7	The wind breaks off twigs, walking against the wind is very difficult.	Moderate height longer waves with breaking crests forming spindrift.
9	Strong gale	41 - 47	75 - 88	20,8 - 24,4	The wind damages roofs (chimneys, tiles, etc.).	Large waves, dense spindrift wrenched from the waves, airborne spray reducing visibility.
10	Storm	48 - 55	89 - 102	24,5 - 28,4	Rarely seen on land, trees uprooted, dwellings incur significant damage.	Very large waves, foam forming large amounts of airborne spray, reducing visibility.
11	Violent storm	56 - 63	103 - 117	28,5 - 32,6	Very rare, extensive damage.	Waves of exceptional height capable of sinking medium-sized ships, reduced visibility.
12	Hurricane	64 +	118 +	32,7 +	Disastrous damage.	Sea completely white, air full of spray and foam, severely reduced visibility.

https://truckmanualshub.com/

D - VISIBILITY

- Maintain permanently good visibility throughout the route. To increase your visibility, you can move forwards with the pendular arm slightly raised (pay attention to the risk of falls in the basket from knocking into a low doorway, overhead electric wires, travelling cranes, highway bridges, tracks or any obstacle in the area in front of the platform). In reverse, look directly behind you. In any case, avoid reversing over long distances.
- If visibility of your road is inadequate, ask someone to help, standing outside the area in which the platform will be moving, and make sure you always have a good view of this person.

E - STARTING THE PLATFORM

• PLATFORMS WITH IC ENGINES

SAFETY NOTICE

- Do not pull or push the lifting platform to start it. This type of manoeuvre would cause severe damage to the transmission. In cases of necessity, towing requires that the lifting platform be placed in freewheeling mode (See chapter 3 - MAINTENANCE).
- If using an emergency battery for start-up, use a battery with the same characteristics and respect battery polarity when connecting it. Connect at first the positive terminals before the negative terminals.

⚠ IMPORTANT ⚠

Failure to respect polarity between batteries can cause serious damage to the electrical circuit. The electrolyte in the battery may produce an explosive gas. Avoid flames and generation of sparks close to the batteries.

Never disconnect a battery while it is charging.

INSTRUCTIONS

- Check the closing and locking of the hood(s).
- Turn the ignition key to notch I to switch on the electrical power, which automatically starts the pre-heating system (all the bars must be displayed), the message "OK" is displayed.
- Check that everything is operating correctly by ensuring that no fault pages are displayed on the screen and no warning about the fuel level
- (a pump icon is present on the screen)
- (see chapter 2 - DESCRIPTION, CHECKING AND CONTROL INSTRUMENTS pages).
- To start, turn the ignition switch to position I.
- Press the starter button.
- Do not engage the starter motor for more than 15 seconds and carry out the preheating for 10 seconds between unsuccessful attempts.
- Check all control instruments when the I.C. engine is warm and at regular intervals during use, so as to quickly detect any faults and to be able to correct them without any delay.
- If any faults are displayed on the screen, stop the engine and immediately take the necessary measures.

• ELECTRIC PLATFORMS

SAFETY NOTICE

- Do not use the platform if the battery is discharged to the point that movements are slowed down. In certain cases, the platform may stop (see chapter 3 - MAINTENANCE : EVERY DAY OR EVERY 10 HOURS FOR OPERATION pages, for the minimum permissible charge level).

INSTRUCTIONS

- Set the battery cut-out to the ON position.
- Check the closing and locking of the hood(s).
- Turn the ignition key to the basket position.
- Check that everything is operating correctly by ensuring that no error messages are displayed on the screen and that the machine maintenance light is not flashing (see chapter 2 - DESCRIPTION, CHECKING AND CONTROL INSTRUMENTS pages).

NB: For machines not fitted with a display or a maintenance warning light, faults can be identified from the light directly on the variable speed drive unit (to access: open the cowl on the control size, remove the casing from the variable speed drive and see whether the light is flashing).

- If any error messages are constantly displayed or the machine maintenance light is flashing, return the key to the neutral position.
- Set the battery cut-off to the OFFposition.
- Immediately take the necessary measures.

https://truckmanualshub.com/

F - DRIVING THE PLATFORM

SAFETY NOTICE

⚠ IMPORTANT ⚠

Operators should be aware of the risks connected with using the platform, notably:
- Risk of losing control.

- Risk of losing lateral and frontal stability of the platform.
The operator must remain in control of the platform.

- Do not carry out operations which exceed the capacities of your platform.
- Familiarise yourself with the platform on the terrain where it will be used.
- Ensure that the brakes work efficiently when stopping a travelling movement, taking into account the braking distances.
- Drive smoothly at an appropriate speed for the operating conditions (land configuration, load in the basket).
- Take extreme care if manoeuvring the platform with the basket in the high position. Ensure you have adequate visibility.
- Take bends slowly.
- In all circumstances make sure you are in control of your speed.
- Travel slowly on damp, slippery or uneven terrain or on truck ramps.
- Always remember that the hydraulic form of steering is very sensitive to movements.
- Never leave the I.C. engine on when the platform is unattended.
- Look where you are going and always make sure you have good visibility along the route.
- Drive round obstacles.
- Never drive on the edge of a ditch or steep slope.
- Whatever your travelling speed, you must reduce the speed as much as possible before stopping.
- The lifting platform must work in an obstacle-free area, where there is no danger descending to the ground.
- The operator using the lifting platform must be assisted by an appropriately instructed person on the ground.
- Comply with the limits shown on the lifting platform's load graph.

INSTRUCTIONS

- When moving the platform a long distance, always travel with the arms folded or the scissors in the low position.
- Engage the appropriate gear (see chapter 2 - DESCRIPTION, CHECKING AND CONTROL INSTRUMENTS pages).

G - STOPPING THE PLATFORM

SAFETY NOTICE

- Never leave the ignition key in the platform during the operator's absence.
- Make sure that the platform is not stopped in any position that will interfere with the traffic flow and at less than one meter from the track of a railway.
- In the event of prolonged parking on a site, protect the platform from bad weather, particularly from frost (check the level of antifreeze), close and lock all the platform accesses (cowls…).
- Park the lifting platform on a flat surface or on a slight slope of less than 10%.

INSTRUCTIONS

• PLATFORMS WITH IC ENGINES

- Before stopping the platform after a long working period, leave the I.C. engine idling for a few moments, to allow the coolant liquid and oil to lower the temperature of the I.C. engine and transmission.

⚠ IMPORTANT ⚠

Do not forget this precaution, in the event of frequent stops or warm stalling of the I.C. engine, or else the temperature of certain parts will rise significantly due to the stopping of the cooling system, with the risk of badly damaging such parts.

- Stop the I.C. engine with the ignition switch.
- Remove the ignition key.
- Check that all the accesses on the platform are closed and locked (cowls…).

• ELECTRIC PLATFORMS

- - Remove the ground/platform control selection key.
- - Check that all the accesses on the platform are closed and locked (cowls…).
- - Set the battery cut-out to the OFF position (ELECTRIC PLATFORM).

https://truckmanualshub.com/

INSTRUCTIONS FOR WELDING AND BLOW TORCH WORK ON THE EXTERNAL STRUCTURE

⚠ IMPORTANT ⚠

Ensure that there are no hydraulic or electrolyte leaks on the platform.

⚠ IMPORTANT ⚠

When welding, work in the opposite direction from the control console to avoid sparks damaging it.

Any welding and cutting (blow torch) work from the basket on a building's metallic structures requires the following precautions to be taken:

A - WITH ELECTRIC WELDING EQUIPMENT

- It is essential that the machine has a discharge braid connecting the platform's chassis to the ground.
- It is also essential that the external structure to be welded is connected to the earth. If the above conditions are observed, the platform can, in this case, be in contact with the structure or the elements to be welded without damaging the electronic components.
- The power supply to the welding equipment must be via an earthed socked and any extension required just also be earthed.
- In all cases, ensure that there are no electrical arcs in the basket or on the platform (contact between the brazing rod or the torch and the welding equipment's earth). To ensure this, at any time the welding equipment's earth must not be positioned on the platform's basket but instead only as close as possible to the element to be welded.
- Switch off the welding equipment before disconnecting the earth clamp from the element or elements to be welded.

B - WITH A BLOW TORCH

- Attach the blow torch's bottles to the basket's handrails.
- instructions for welding and blow torch work on the external structure
- Do not set the blow torch down on the lip of the basket while it is still operating or point it towards the control console or its power cables.

https://truckmanualshub.com/

https://truckmanualshub.com/

PLATFORM MAINTENANCE INSTRUCTIONS

GENERAL INSTRUCTIONS

- Ensure the area is sufficiently ventilated before starting the platform.
- Wear clothes suitable for the maintenance of the platform, avoid wearing jewellery and loose clothes. Tie and protect your hair, if necessary.
- Stop the I.C. engine before conducting any work on the platform, remove the ignition key and disconnect the "Minus" battery terminal.
- Set the battery cut-out to the OFF position (ELECTRIC PLATFORM).
- Read the operator's manual carefully.
- Carry out all repairs immediately, even if the repairs concerned are minor.
- Repair all leaks immediately, even if the leak concerned is minor.
- Make sure that the disposal of process materials and of spare parts is carried out in total safety and in a ecological way.
- Be careful of the risk of burning and splashing (exhaust, radiator, I.C. engine, etc.).

MAINTENANCE

- Perform the periodic service (see : 3 - MAINTENANCE) to keep your platform in good working conditions. Failure to perform the periodic service may cancel the contractual guarantee.

MAINTENANCE LOG

- The maintenance work performed following the recommendations in Part 3 - MAINTENANCE and the other inspection, servicing, repair and modification work performed on the lifting platform must be recorded in a maintenance log. A note must be made, for each operation, of the date of the work, the names of the persons or companies that have performed them, the nature of the 'operation and, where applicable, the maintenance intervals. When components in the lifting platform have to be replaced, the components' references must be noted.

LUBRICANT AND FUEL LEVELS

- Use the recommended lubricants (never use contaminated lubricants).
- Do not fill the fuel tank when the I.C. engine is running.
- Only fill up the fuel tank in areas specified for this purpose.
- Do not fill the fuel tank to the maximum level.
- Do not smoke or approach the platform with a flame, when the fuel tank is open or is being filled.

LEVEL OF ELECTROLYTE IN THE BATTERY

- Check the level of the battery or batteries.

⚠ IMPORTANT ⚠

When doing this, ensure you take all the safety precautions (See : 3 - MAINTENANCE).

HYDRAULIC

- Do not fill the fuel tank to the maximum level.
- Do not smoke or approach the platform with a flame, when the fuel tank is open or is being filled.

⚠ IMPORTANT ⚠

BALANCING VALVE : It is dangerous to change the setting and remove the balancing valves or safety valves which may be fitted to your platform cylinders. These operations must only be performed by approved personnel (consult your dealer).

⚠ IMPORTANT ⚠

Ensure that all consumables and replacement parts are disposed of safety, in an environmentally friendly manner.

⚠ IMPORTANT ⚠

The HYDRAULIC ACCUMULATORS that can be fitted on your lifting platform are pressurised components; removal of these components and their hoses can be a dangerous operation. It should only be performed by accredited personnel (please contact your dealer).

ELECTRICITY

- Do not drop metallic items on the battery (between the "Plus" and "Minus terminals").
- Disconnect the battery or batteries before working on the electrical circuit.
- The electrical box must only be opened by authorized personnel.

https://truckmanualshub.com/

WELDING ON THE ACCESS PLATFORM

- Disconnect the battery or batteries before welding on the platform.
- When carrying out electric welding work on the platform, connect the negative cable from the equipment directly to the part being welded, so as to avoid high tension current passing through the alternator or the live ring.
- If the platform is equipped with an electronic control unit, disconnect this before starting to weld, to avoid the risk of causing irreparable damage to electronic components.

⚠ IMPORTANT ⚠

Welding operations on the structure for maintenance or repair operations must only be performed by MANITOU-certified personnel.

WASHING THE PLATFORM

- Clean the platform or at least the area concerned before any intervention.
- Remember to close and lock all accesses to the platform (cowls…).
- When cleaning with a pressure washer, avoid the articulation joints, and the electrical components and connections.
- If necessary, protect components likely to be damaged, and in particular the electrical components (variable speed drive, charger) and connections and the injection pump from penetration by water, steam or cleaning products.
- Dry the electrical components.
- Clean the platform of any fuel, oil or grease trace.
- Grease the shafts.

FOR ANY INTERVENTION OTHER THAN REGULAR MAINTENANCE, CONSULT YOUR DEALER.

https://truckmanualshub.com/

IF THE PLATFORM IS NOT TO BE USED FOR A LONG TIME

INTRODUCTION

The following recommendations are intended to prevent the platform from being damaged when it is withdrawn from service for an extended period.
For these operations, we recommend the use of a MANITOU protective product, reference 603726.
Instructions for using the product are given on the packaging.

⚠ IMPORTANT ⚠

Procedures to follow if the lift truck is not to be used for a long time and for starting it up again afterwards must be performed by your dealership.

PREPARING THE PLATFORM

- Clean the platform thoroughly.
- Check and repair any leakage of fuel, oil, water or air.
- Replace or repair any worn or damaged parts.
- Wash the painted surfaces of the platform in clear and cold water and wipe them.
- Touch up the paintwork if necessary.
- Shut down the platform (see vacuous and in load DRIVING INSTRUCTIONS).
- Make sure the cylinder rods are all in retracted position.
- Release the pressure in the hydraulic circuits.

PROTECTING THE I.C. ENGINE

- Fill the tank with fuel (see : 3 - MAINTENANCE).
- Empty and replace the cooling liquid (see : 3 - MAINTENANCE).
- Leave the I.C. engine running at idling speed for a few minutes, then switch off.
- Replace the I.C. engine oil and oil filter (see : 3 - MAINTENANCE).
- Add the protective product to the engine oil.
- Run the I.C. engine for a short time so that the oil and cooling liquid circulate inside.
- Disconnect the battery and store it in a safe place away from the cold, after charging it to a maximum.
- Remove the injectors and spray the protective product into each cylinder for two seconds with the piston in low neutral position.
- Turn the crankshaft once slowly and refit the injectors (see I.C. engine REPAIR MANUAL).
- Remove the intake hose from the manifold or turbocharger and spray the protective product into the manifold or turbocharger.
- Cap the intake manifold hole with waterproof adhesive tape.
- Remove the exhaust pipe and spray the protective product into the exhaust manifold.
- Refit the exhaust pipe and block the outlet with waterproof adhesive tape.

NB : The spray time is noted on the product packaging.

- Open the filler plug, spray the protective product around the rocker arm shaft and refit the filler plug.
- Cap the fuel tank using waterproof adhesive tape.
- Remove the drive belts and store them in a safe place.
- Disconnect the engine cut-off solenoid on the injection pump and carefully insulate the connection.

CHARGING THE BATTERIES

- In the case of electric platforms, in order to preserve the batteries'life and their capacity, check them periodically and keep the charge level constant (see : 3 - MAINTENANCE).

PROTECTING THE PLATFORM

- Protect cylinder rods which will not be retracted, from corrosion.
- Wrap the tyres.

NB : If the platform is to be stored outdoors, cover it with a waterproof tarpaulin.

https://truckmanualshub.com/

BRINGING THE PLATFORM BACK INTO SERVICE

- Remove the waterproof adhesive tape from all the holes.
- Refit the intake hose.
- Reconnect the engine cut-off solenoid.
- Refit and reconnect the battery.
- Remove the protection from the cylinder rods.
- Perform the daily service (see : 3 - MAINTENANCE
- Empty and replace the fuel and replace the fuel filter (see : 3 - MAINTENANCE).
- Refit and set the tension in the drive belts (see : 3 - MAINTENANCE).
- Turn the I.C. engine using the starter, to allow the oil pressure to rise.
- Lubricate the platform completely (see : 3 - MAINTENANCE, MAINTENANCE TABLE).

⚠ IMPORTANT ⚠

Make sure the area is adequately ventilated before starting up the platform.

- Start up the platform, following the safety instructions and regulations (see DRIVING INSTRUCTIONS).
- Carry out all the lifting system's hydraulic movements right up to the limit switches for each cilinder.

https://truckmanualshub.com/

SCRAPPING THE PLATFORM

MANITOU complies with the regulations issued under the directive 2000/53/CE relating to the end of the life of the platform. This platform does not contain any substance or material forbidden by the directive 2000/53/CE.

NOTE: Before scrapping the nacelle, consult your dealer.

RECYCLING OF MATERIALS

METALS

- Metals are 100 % recoverable and recyclable.

PLASTICS

- Plastic parts are identified with a marking in accordance with current regulations.
- A limited range of materials is used to simplify the recycling process.
- The majority of plastic components are made of "thermoplastic" plastics, that are easily recycled by melting, granulating or grinding.

RUBBER

- Tyres and seals can be ground for use in cement manufacture or to obtain reusable granules.

GLASS

- Glass items can be removed and collected for processing by glaziers.

ENVIRONMENTAL PROTECTION

By entrusting the maintenance of your platform to the MANITOU network, the risk of pollution is limited and the contribution to environmental protection contribution is made.

WORN OR DAMAGED PARTS

- Do not dump them in the countryside.
- MANITOU and its network have signed-up to a scheme of environmental protection through recycling.

USED OIL

- The MANITOU network organises the collection and processing of used oil products.
- By handing over your waste oil to MANITOU, the risk of pollution is limited.

USED BATTERIES

- Do not throw away batteries, as they contain metals that are harmful for the environment.
- Return them to the MANITOU network or any other approved collection point.

NOTE: MANITOU aims to manufacture platform that provide the best performance and limit polluting emissions.

https://truckmanualshub.com/

2 - DESCRIPTION

https://truckmanualshub.com/

https://truckmanualshub.com/

TABLE OF CONTENTS

2 - DESCRIPTION

«EC» DECLARATION OF CONFORMITY 4

SAFETY PLATES AND STICKERS 6

LIFTING PLATFORM ID 14

CHARACTERISTICS 16

DIMENSIONS 20

LIFTING PLATFORM OPERATION 22

BASE CONTROL INSTRUMENTATION 24

BASKET CONTROL INSTRUMENTATION 26

GROUND MAINTENANCE AND EMERGENCY STATION 28

BASKET CONTROL STATION 33

SCREEN DISPLAY - DESCRIPTION OF THE PAGES 40

DESCRIPTION OF THE SUB-MENUS 42

USING THE LIFTING PLATFORM 44

RESCUE PROCEDURE 48

DESCRIPTION AND USE OF THE OPTIONS 50

https://truckmanualshub.com/

1) DÉCLARATION «CE» DE CONFORMITÉ (originale)
« EC» DECLARATION OF CONFORMITY (original)

2) La société, ***The company*** : MANITOU BF

3) Adresse, ***Address*** : 430, rue de l'Aubinière - BP 10249 - 44158 - ANCENIS CEDEX - FRANCE

4) Dossier technique,***Technical file*** : MANITOU BF - 430, rue de l'Aubinière
BP 10249 - 44158 - ANCENIS CEDEX - FRANCE

5) Constructeur de la machine décrite ci-après, ***Manufacturer of the machine described below*** :

MAN GO 12

6) Déclare que cette machine, ***Declares that this machine*** :

7) Est conforme aux directives suivantes et à leurs transpositions en droit national, ***Complies with the following directives and their transpositions into national law*** :

2006/42/CE

8) Pour les machines annexe IV , ***For annex IV machines*** :

9) Numéro d'attestation, ***Certificate number*** : 0062 5131 760 04 15 0314

10) Organisme notifié, ***Notified body*** : VERITAS
61/71 Boulevard du Château
92 571 NEUILLY SUR SEINE FRANCE

2000/14/CE + 2005/88/CE

11) Numéro d'attestation, ***Certificate number*** :

10) Organisme notifié, ***Notified body*** :

12) Niveau de puissance acoustique, ***Sound power level*** :

13) Mesuré, ***Measured :*** 99 dB (A)

14) Garanti, ***Guaranteed*** : 100 dB (A)

2004/108/CE

11) Numéro d'attestation, ***Certificate number*** :

10) Organisme notifié, ***Notified body*** :

15) Normes harmonisées utilisées, ***Harmonised standards used*** : EN12895

16) Normes ou dispositions techniques utilisées, ***Standards or technical provisions used*** :

17) Fait à, ***Done at*** : Ancenis

18) Date, ***Date*** :

19) Nom du signataire, ***Name of signatory*** : **Fernand MIRA**

20) Fonction, ***Function*** : **Président division MHA**

21) Signature, ***Signature*** :

https://truckmanualshub.com/

bg : 1) удостоверение за « CE » съответствие (оригинална), 2) Фирмата, 3) Адрес, 4) Техническо досие, 5) Фабрикант на описаната по-долу машина, 6) Обявява, че тази машина, 7) Отговаря на следните директиви и на тяхното съответствие национално право, 8) За машините към допълнение IV, 9) Номер на удостоверението, 10) Наименувана фирма, 15) хармонизирани стандарти използвани, 16) стандарти или технически правила, използвани, 17) Изработено в, 18) Дата, 19) Име на разписалия се, 20) Функция, 21) Функция.

cs : 1) ES prohlášení o shodě (původní), 2) Název společnosti, 3) Adresa, 4) Technická dokumentace, 5) Výrobce níže uvedeného stroje, 6) Prohlašuje, že tento stroj, 7) Je v souladu s následujícími směrnicemi a směrnicemi transponovanými do vnitrostátního práva, 8) Pro stroje v příloze IV, 9) Číslo certifikátu, 10) Notifikační orgán, 15) harmonizované normy použity, 16) Norem a technických pravidel používaných, 17) Místo vydání, 18) Datum vydání, 19) Jméno podepsaného, 20) Funkce, 21) Podpis.

da : 1) EF Overensstemmelseserklæring (original), 2) Firmaet, 3) Adresse, 4) tekniske dossier, 5) Konstruktør af nedenfor beskrevne maskine, 6) Erklærer, at denne maskine, 7) Overholder nedennævnte direktiver og disses gennemførelse til national ret, 8) For maskiner under bilag IV, 9) Certifikat nummer, 10) Bemyndigede organ, 15) harmoniserede standarder, der anvendes, 16) standarder eller tekniske regler, 17) Udfærdiget i, 18) Dato, 19) Underskrivers navn, 20) Funktion, 21) Underskrift.

de : 1) EG-Konformitätserklärung (original), 2) Die Firma, 3) Adresse, 4) Technischen Unterlagen, 5) Hersteller der nachfolgend beschriebenen Maschine, 6) Erklärt, dass diese Maschine, 7) den folgenden Richtlinien und deren Umsetzung in die nationale Gesetzgebung entspricht, 8) Für die Maschinen laut Anhang IV, 9) Bescheinigungsnummer, 10) Benannte Stelle, 15) angewandten harmonisierten Normen, 16) angewandten sonstigen technischen Normen und Spezifikationen, 17) Ausgestellt in, 18) Datum, 19) Name des Unterzeichners, 20) Funktion, 21) Unterschrift.

el : 1) Δήλωση συμμόρφωσης CE (πρωτότυπο), 2) Η εταιρεία, 3) Διεύθυνση, 4) τεχνικό φάκελο, 5) Κατασκευάστρια του εξής περιγραφόμενου μηχανήματος, 6) Δηλώνει ότι αυτό το μηχάνημα, 7) Είναι σύμφωνο με τις εξής οδηγίες και τις προσαρμογές τους στο εθνικό δίκαιο, 8) Για τα μηχανήματα παραρτήματος IV, 9) Αριθμός δήλωσης, 10) Κοινοποιημένος φορέας, 15) εναρμονισμένα πρότυπα που χρησιμοποιούνται, 16) Πρότυπα ή τεχνικούς κανόνες που χρησιμοποιούνται, 16) Είναι σύμφωνο με τα εξής πρότυπα και τεχνικές διατάξεις, 17) Εν, 18) Ημερομηνία, 19) Όνομα του υπογράφοντος, 20) Θέση, 21) Υπογραφή.

es : 1)Declaración DE de conformidad (original), 2) La sociedad, 3) Dirección, 4) expediente técnico, 5) Constructor de la máquina descrita a continuación, 6) Declara que esta máquina, 7) Está conforme a las siguientes directivas y a sus transposiciones en derecho nacional, 8) Para las máquinas anexo IV, 9) Número de certificación, 10) Organismo notificado, 15) normas armonizadas utilizadas, 16) Otras normas o especificaciones técnicas utilizadas, 17) Hecho en, 18) Fecha, 19) Nombre del signatario, 20) Función, 21) Firma.

et : 1) EÜ vastavusdeklaratsioon (algupärane), 2) Äriühing, 3) Aadress, 4) Tehniline dokumentatsioon, 5) Seadme tootja, 6) Kinnitab, et see toode, 7) On vastavuses järgmiste direktiivide ja nende riigisisesesse õigusesse ülevõtmiseks vastuvõetud õigusaktidega, 8) IV lisas loetletud seadmete puhul, 9) Tunnistuse number, 10) Sertifitseerimisasutus, 15) kasutatud ühtlustatud standarditele, 16) Muud standardites või spetsifikatsioonides kasutatakse, 17) Väljaandmise koht, 18) Väljaandmise aeg, 19) Allkirjastaja nimi, 20) Amet, 21) Allkiri.

fi : 1) EY-vaatimustenmukaisuusvakuutus (alkuperäiset), 2) Yritys, 3) Osoite, 4) teknisen eritelmän, 5) Jäljessä kuvatun koneen valmistaja, 6) Vakuuttaa, että tämä kone, 7) Täyttää seuraavien direktiivien sekä niitä vastaavien kansallisten säännösten vaatimukset, 8) Liitteen IV koneiden osalta, 9) Todistuksen numero, 10) Ilmoitettu laitos, 15) yhdenmukaistettuja standardeja käytetään, 16) muita standardeja tai eritelmät, 17) Paikka, 18) Aika, 19) Allekirjoittajan nimi, 20) Toimi, 21) Allekirjoitus.

ga : 1) « EC »dearbhú comhréireachta (bunaidh), 2) An comhlacht, 3) Seoladh, 4) comhad teicniúil, 5) Déantóir an innill a thuairiscítear thíos, 6) Dearbhaíonn sé go bhfuil an t-inneall, 7) Go gcloíonn sé le na treoracha seo a leanas agus a trasuímh isteach i ndlí náisiúnta, 8) Le haghaidh innill an aguisín IV, 9) Uimhir teastais, 10) Comhlacht a chuireadh i bhfios, 15) caighdeán comhchuibhithe a úsáidtear, 16) caighdeáin eile nó sonraíochtaí teicniúla a úsáidtear, 17) Déanta ag, 18) Dáta, 19) Ainm na tsínitheora, 20) Feidhm, 21) Síniú.

hu : 1) CE megfelelőségi nyilatkozat (eredeti), 2) A vállalat, 3) Cím, 4) műszaki dokumentáció, 5) Az alábbi gép gyártója, 6) Kijelenti, hogy a gép, 7) Megfelel az alábbi irányelveknek valamint azok honosított előírásainak, 8) A IV. melléklet gépeihez, 9) Bizonylati szám, 10) Értesített szervezet, 15) felhasznált harmonizált szabványok, 16) egyéb felhasznált műszaki szabványok és előírások hivatkozásai, 17) Kelt (hely), 18) Dátum, 19) Aláíró neve, 20) Funkció, 21) Aláírás.

is : 1) (Samræmisvottorð ESB (upprunalega), 2) Fyrirtækið, 3) Aðsetur, 4) Tæknilegar skrá, 5) Smiður tækisins sem lýst er hér á eftir, 6) Staðfestir að tækið, 7) Samræmist eftirfarandi stöðlum og staðfærslu þeirra með hliðsjón af þjóðarrétti, 8) Fyrir tækin í aukakafla IV, 9) Staðfestingarnúmer, 10) Tilkynnt til, 15) samhæfða staðla sem notaðir, 16) önnur staðlar eða forskriftir notað, 17) Staður, 18) Dagsetning, 19) Nafn undirritaðs, 20) Staða, 21) Undirskrift.

it : 1) Dichiarazione CE di conformità (originale), 2) La società, 3) Indirizzo, 4) fascicolo tecnico, 5) Costruttore della macchina descritta di seguito, 6) Dichiara che questa macchina, 7) È conforme alle direttive seguenti e alle relative trasposizioni nel diritto nazionale, 8) Per le macchine Allegato IV, 9) Numero di Attestazione, 10) Organismo notificato, 15) norme armonizzate applicate, 16) altre norme e specifiche tecniche applicate, 17) Stabilita a, 18) Data, 19) Nome del firmatario, 20) Funzione, 21) Firma.

lt : 1) CE atitikties deklaracija (originalas), 2) Bendrovė, 3) Adresas, 4) Techninė byla, 5) Žemiau nurodytas įrenginio gamintojas, 6) Pareiškia, kad šis įrenginys, 7) Atitinka toliau nurodytas direktyvas ir į nacionalinius teisės aktus perkeltas jų nuostatas, 8) IV priedas dėl mašinų, 9) Sertifikato Nr, 10) Paskelbtoji įstaiga, 15) suderintus standartus naudojamus, 16) Kiti standartai ir technines specifikacijas, 17) Pasirašyta, 18) Data, 19) Pasirašiusio asmens vardas ir pavardė, 20) Pareigos, 21) Parašas.

lv : 1) EK atbilstības deklarācija (oriģināls), 2) Uzņēmums, 3) Adrese, 4) tehniskās lietas, 5) Tālāk aprakstītās iekārtas ražotājs, 6) Apliecina, ka šī iekārta, 7) Ir atbilstoša tālāk norādītajām direktīvām un to transpozīcijai nacionālajā likumdošanā, 8) Iekārtām IV pielikumā, 9) Apliecības numurs, 10) Reģistrētā organizācija, 15) lietotajiem saskaņotajiem standartiem, 16) lietotajiem tehniskajiem standartiem un specifikācijām, 17) Sastādīts, 18) Datums, 19) Parakstītāja vārds, 20) Amats, 21) Paraksts.

mt : 1) Dikjarazzjoni ta' Konformità KE (oriġinali), 2) Il-kumpanija, 3) Indirizz, 4) fajl tekniku, 5) Manifattrici tal-magna deskritta hawn isfel, 6) Tiddikjara li din il-magna, 7) Hija konformi hija konformi mad-Direttivi segwenti u l-liġijiet li jimplimentawhom fil-liġi nazzjonali, 8) Għall-magni fl-Anness IV, 9) Numru taċ-ċertifikat, 10) Entità nnotifikata, 15) l-istandards armonizzati użati, 16) standards tekniċi u speċifikazzjonijiet oħra użati, 17) Magħmul f', 18) Data, 19) Isem il-firmatarju, 20) Kariga, 21) Firma.

nl : 1) EG-verklaring van overeenstemming (oorspronkelijke), 2) Het bedrijf, 3) Adres, 4) technisch dossier, 5) Constructeur van de hierna genoemde machine, 6) Verklaart dat deze machine, 7) In overeenstemming is met de volgende richtlijnen en hun omzettingen in het nationale recht, 8) Voor machines van bijlage IV, 9) Goedkeuringsnummer, 10) Aangezegde instelling, 15) gehanteerde geharmoniseerde normen, 16) andere gehanteerde technische normen en specificaties, 17) Opgemaakt te, 18) Datum, 19) Naam van ondergetekende, 20) Functie, 21) Handtekening.

no : 1) CE-samsvarserklæring (original), 2) Selskapet, 3) Adresse, 4) tekniske arkiv, 5) Fabrikant av følgende maskin, 6) Erklærer at denne maskinen, 7) Oppfyller kravene i følgende direktiver, med nasjonale gjennomføringsbestemmelser, 8) For maskinene i tillegg IV, 9) Attestnummer, 10) Notifisert organ, 15) harmoniserte standarder som brukes, 16) Andre standarder og spesifikasjoner brukt, 17) Utstedt i, 18) Dato, 19) Underskriverens navn, 20) Stilling, 21) Underskrift.

pl : 1) Deklaracja zgodności CE (oryginalne), 2) Spółka, 3) Adres, 4) dokumentacji technicznej, 5) Wykonawca maszyny opisanej poniżej, 6) Oświadcza, że ta maszyna, 7) Jest zgodna z następującymi dyrektywami i odpowiadającymi przepisami prawa krajowego, 8) Dla maszyn załącznik IV, 9) Numer certyfikatu, 10) Jednostka certyfikująca, 15) zastosowanych norm zharmonizowanych, 16) innych zastosowanych norm technicznych i specyfikacji, 17) Sporządzono w, 18) Data, 19) Nazwisko podpisującego, 20) Stanowisko, 21) Podpis.

pt : 1) Declaração de conformidade CE (original), 2) A empresa, 3) Morada, 4) processo técnico, 5) Fabricante da máquina descrita abaixo, 6) Declara que esta máquina, 7) Está em conformidade às directivas seguintes e às suas transposições para o direito nacional, 8) Para as máquinas no anexo IV, 9) Número de certificado, 10) Entidade notificada, 15) normas harmonizadas utilizadas, 16) outras normas e especificações técnicas utilizadas, 17) Elaborado em, 18) Data, 19) Nome do signatário, 20) Cargo, 21) Assinatura.

ro : 1) Declaraţie de conformitate CE (originală), 2) Societatea, 3) Adresa, 4) cărtii tehnice, 5) Constructor al maşinii descrise mai jos, 6) Declară că prezenta maşină, 7) Este conformă cu directivele următoare şi cu transpunerea lor în dreptul naţional, 8) Pentru maşinile din anexa IV, 9) Număr de atestare, 10) Organism notificat, 15) standardele armonizate utilizate, 16) alte standarde si specificatii tehnice utilizate, 17) Întocmit la, 18) Data, 19) Numele persoanei care semnează, 20) Funcţia, 21) Semnătura.

sk : 1) ES vyhlásenie o zhode (pôvodný), 2) Názov spoločnosti, 3) Adresa, 4) technickej dokumentácie, 5) Výrobca nižšie opísaného stroja, 6) Vyhlasuje, že tento stroj, 7) Je v súlade s nasledujúcimi smernicami a smernicami transponovanými do vnútroštátneho práva, 8) Pre stroje v prílohe IV, 9) Číslo certifikátu, 10) Notifikačný orgán, 15) použité harmonizované normy, 16) použité iné technické normy a predpisy, 17) Miesto vydania, 18) Dátum vydania, 19) Meno podpisujúceho, 20) Funkcia, 21) Podpis.

sl : 1) ES Izjava o ustreznosti (izvirna), 2) Družba. 3) Naslov. 4) tehnične dokumentacije, 5) Proizvajalac tukaj opisanega stroja, 6) Izjavlja, da je ta stroj, 7) Ustreza naslednjim direktivam in njihovi transpoziciji v državno pravo, 8) Za stroje priloga IV, 9) Številka potrdila, 10) Obvestilo organu, 15) uporabljene harmonizirane standarde, 16) druge uporabljene tehnične standarde in zahteve, 17) V, 18) Datum, 19) Ime podpisnika, 20) Funkcija, 21) Podpis.

sv : 1) CE-försäkran om överensstämmelse (original), 2) Företaget, 3) Adress, 4) tekniska dokumentationen, 5) Konstruktör av nedan beskrivna maskin, 6) Försäkrar att denna maskin, 7) Överensstämmer med nedanstående direktiv och införlivandet av dem i nationell rätt, 8) För maskinerna i bilaga IV, 9) Nummer för godkännande, 10) Organism som underrättats, 15) Harmoniserade standarder som använts, 16) andra tekniska standarder och specifikationer som använts, 17) Upprättat i, 18) Datum, 19) Namn på den som undertecknat, 20) Befattning, 21) Namnteckning.

647533 (09/10/2015)
MAN'GO 12

https://truckmanualshub.com/

SAFETY PLATES AND STICKERS

⚠ IMPORTANT ⚠

Clean all the safety plates and stickers to make them legible.
It is essential to replace safety plates and stickers which are illegible or damaged.
Check the presence of safety plates and stickers after replacing any spare parts.

EXTERNAL PLATES AND STICKERS

ITEM	PART NO.	DESCRIPTION
1	498327	- White arrow
2	498326	- Black arrow
3	52531372	- Wheel load
4	52531385	- Manual control procedure
5	52531387	- Repairing travelling procedure
6	685608	- Safety instructions / Towing / Washing recommendations
7	833041	- Tie-down hook
8	52530068	- Basket instructions / Load capacity
9	833291	- Lifting hook
10	597652	- Hydraulic oil
11	683437	- Diesel
12	598897	- Location of the platform key
13	679450	- Danger keep away
14	683112	- Risk of burn
15	676988	- Risk of being crushed
16	679452	- Danger of being crushed
17	286970	- Made in France
18	597649	- Anti-freeze
19	313672	- Recommendations for washing
20	834438	- Safety attachments
21	683108	- Moving part
22	52509705	- Battery symbol
23	52530106	- Diagram of stability
24	52536099	- Sensors and coils

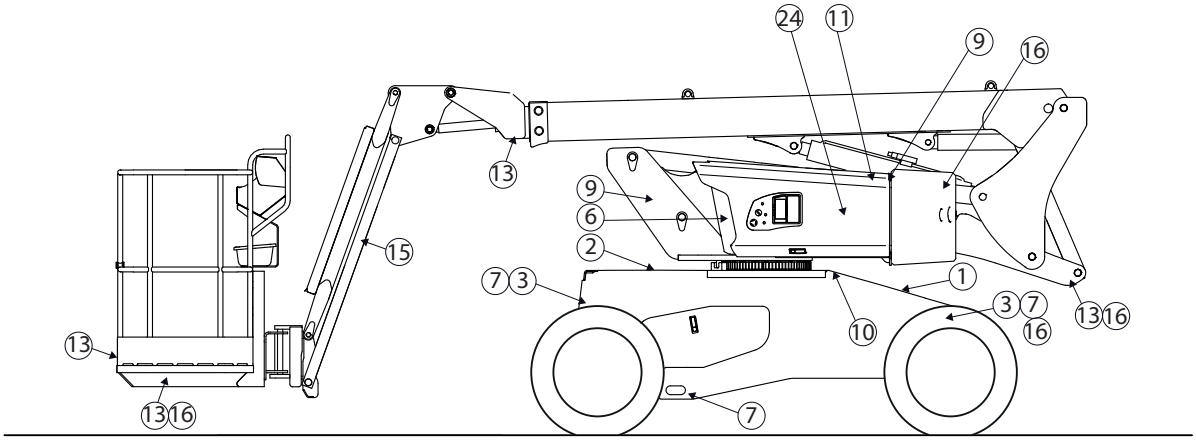

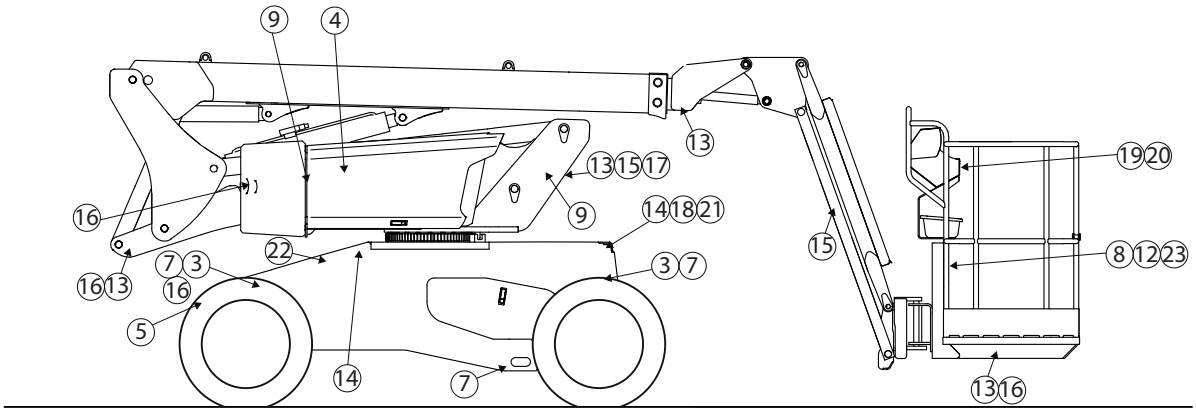

https://truckmanualshub.com/

1 - White arrow

This indicates the translation direction when moving forward.

⚠ IMPORTANT ⚠

Identify the forward direction by looking at the arrows on the chassis and those on the basket control console.

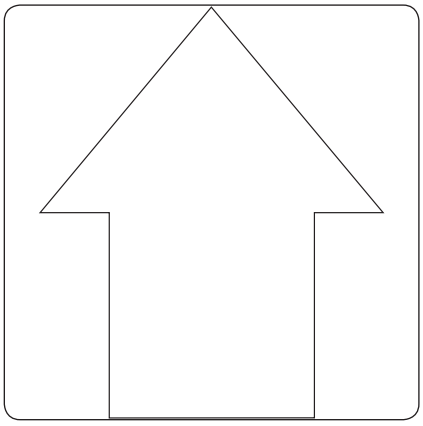

2 - Black arrow

This indicates the translation direction when reversing.

⚠ IMPORTANT ⚠

Identify the forward direction by looking at the arrows on the chassis and those on the basket control console.

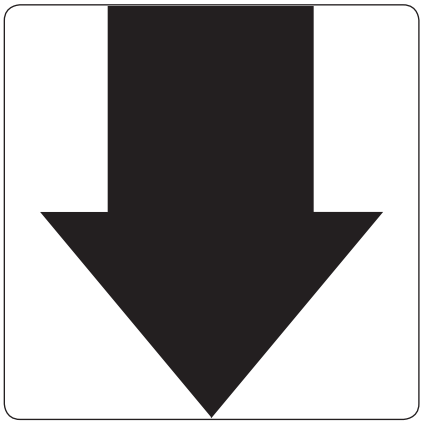

3 - Wheel load

This shows the maximum load that a wheel may exert on the ground (see 2 - DESCRIPTION: CHARACTERISTICS for the value).

4 - Manual control procedure

This describes the procedure for performing movements with the emergency pump and the manual controls when an accident or breakdown occurs that makes the electrical control box inoperative.

(see the description in SECTION 2).

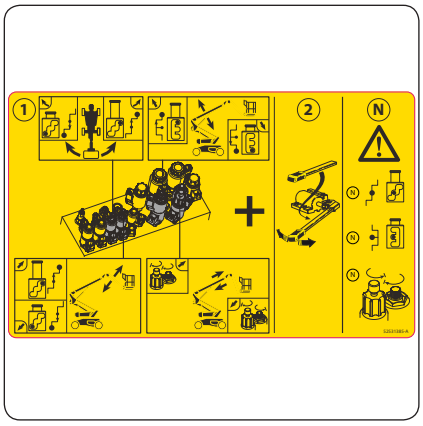

https://truckmanualshub.com/

5 - Repairing travelling procedure

This describes the procedure for towing the platform in case of failure.

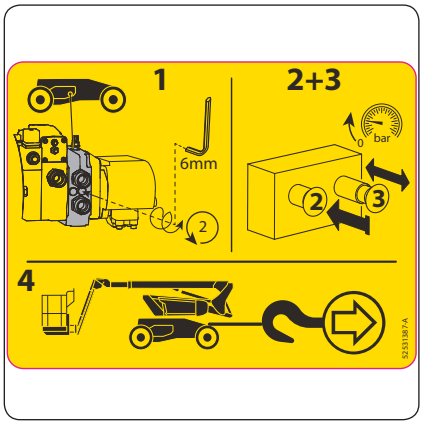

6 - 6a - Safety advice

Read and take note of the operating instructions and safety measures before starting the lifting platform.

6b - Towing

This sticker states that the machine must not be towed if it breaks down.

6c - Washing recommendations

It is strictly forbidden to use a pressure washer to clean the control knobs and the electrical components.

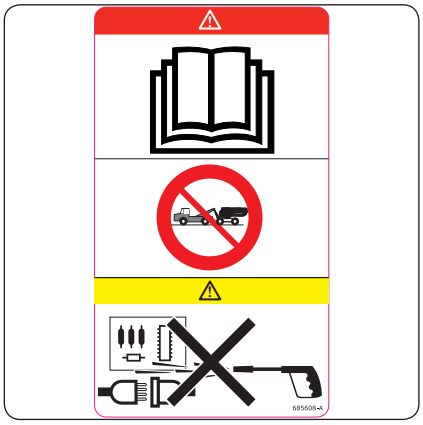

7 - Tie-down hook

This sticker shows the location of the anchoring points for tying the platform on a lorry bed.

(see 3 – OCCASIONAL MAINTENANCE).

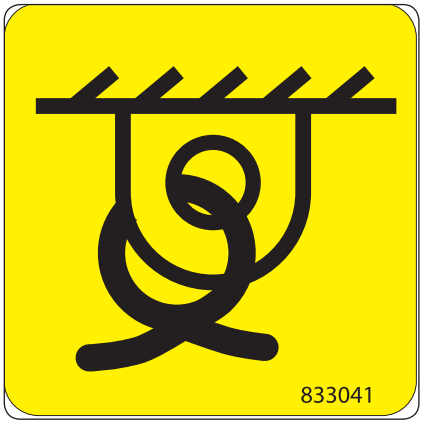

8 - Basket instructions / Load capacity

This describes several points:

- The risks of electric shocks.
- An invitation to check the instructions for more details on the safety instructions.

NOTE: The capacities are individual to each platform; please refer to this sticker for your own machine.

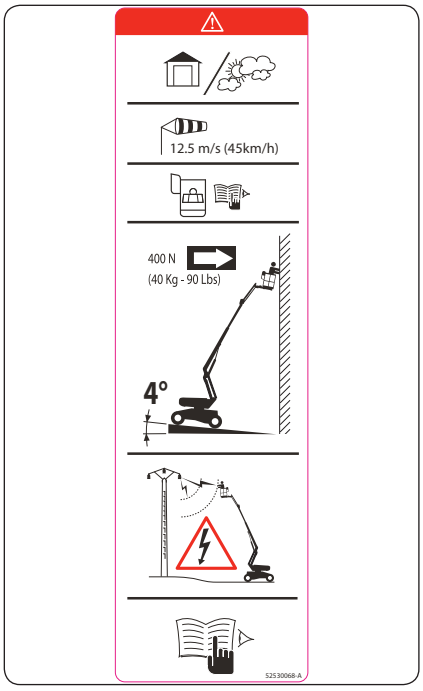

https://truckmanualshub.com/

9 - Lifting hook

This sticker shows the location of the attachment points for lifting the platform.

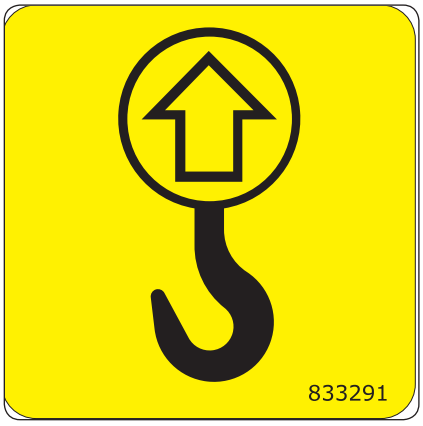

10 - Hydraulic oil

This indicates that this reservoir is designed only to hold hydraulic oil.

NB: see MAINTENANCE: LUBRICANTS

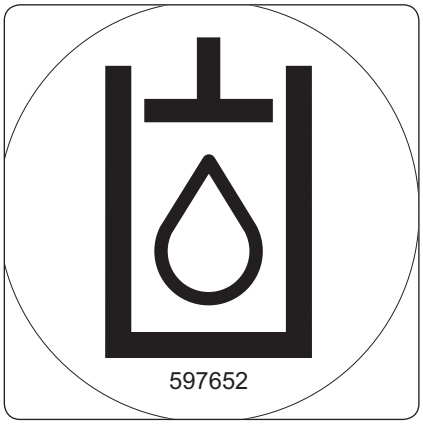

11 - Diesel

This indicates that this reservoir is designed only to hold fuel for diesel vehicles.

12 - Location of the platform key

The duplicate platform keys (ignition, control selection, cover-opening keys...) are stored in this location specially provided.

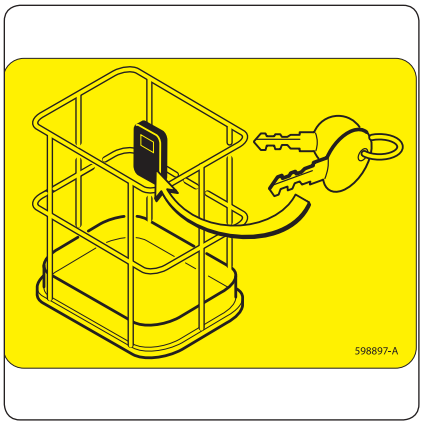

https://truckmanualshub.com/

13 - Danger, keep away

It is strictly forbidden to walk under or park under the structure (arms, jib-mounted platform, basket...) and in the lifting platform's operating area.

14 - Risk of burns

This sticker indicates that there is a significant risk of your being burnt in this region (engine silencer, IC engine, etc.).

15 - Risk of being crushed

It is strictly forbidden to insert your fingers, or any other part of your body, in the lifting structure's components (arms, pendular arm, etc.); there is a risk of being crushed.

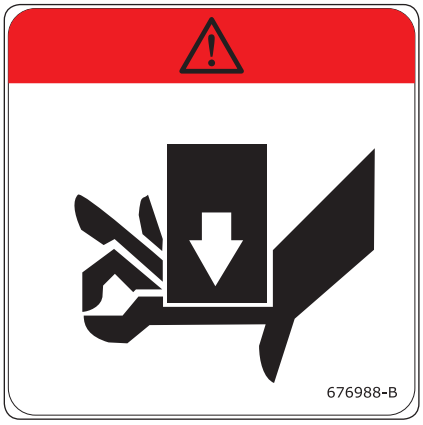

16 - Danger of being crushed

It is strictly forbidden to park in this area when the lifting platform is moving (translation, rotation, etc.). The components to which the stickers are attached could hit you; there is a risk of your being crushed.

https://truckmanualshub.com/

17 - Made in France

This sticker shows that the platform is manufactured in France.

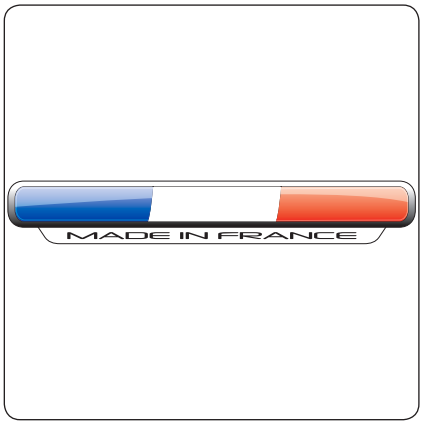

18 - Anti-freeze

This sticker indicates that there is anti-freeze in the engine.

When protection is provided by anti-freeze with properties differing from the original, the -30°or - 40°C box must be ticked.

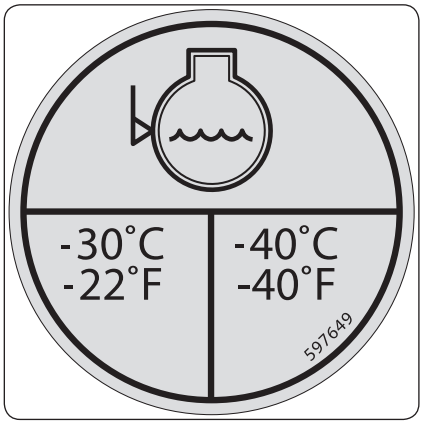

19 - Washing recommendations

It is strictly forbidden to use a pressure washer to clean the control knobs and the electrical components.

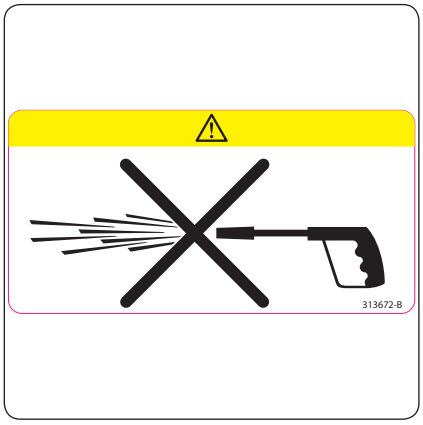

20 - Safety attachments

This sticker shows where the safety harness should be attached and the number of people that can use it.

https://truckmanualshub.com/

21 - Moving parts

This sticker shows the hazard relating to locating hands or fingers at this place; cutting of fingers in the blades of the cooling fan.

22 - Battery location

This sticker shows the location of the battery.

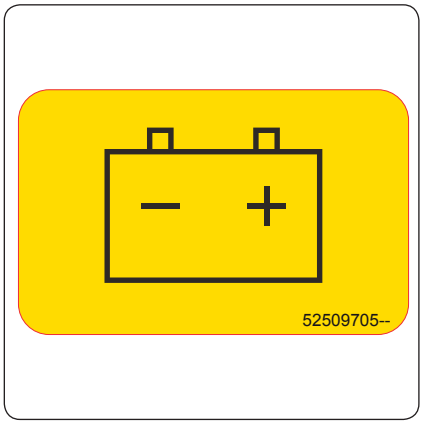

23 - Diagram of stability

This sticker shows the platform capcity for inside and external use.

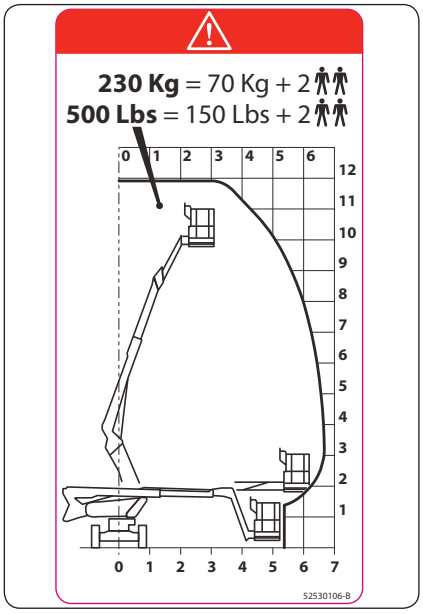

24 - Sensors and coils

This adhesive shows the fault codes and the location of the electrical components, suchas sensors (DS, AS, IS), the solenoid valves (EV) and the solenoid coils (EW).

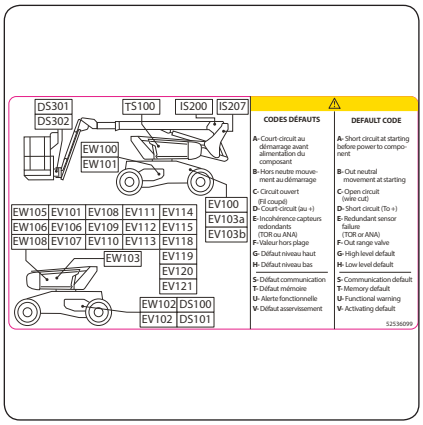

https://truckmanualshub.com/

https://truckmanualshub.com/

LIFTING PLATFORM ID

As our policy is to promote a constant improvement of our products, our range of telescopic lift trucks may undergo certain modifications, without obligation for us to advise our customers.

When you order parts, or when you require any technical information, always specify:

NOTE: For the owner's convenience, it is recommended that a note of these numbers is made in the spaces provided at the time of the delivery of the platform.

LIFTING PLATFORM'S MANUFACTURER'S PLATE

1 - Type
2 - Serial No.
3 - Year of manufature

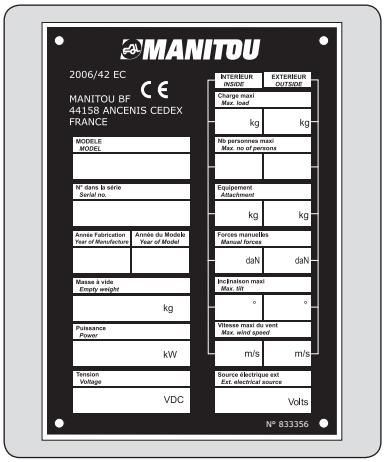

LOCALISATION OF THE MANUFACTURER'S PLATE

The manufacturer's plate is fastened in the lower arm.

IC ENGINE

- Engine No.

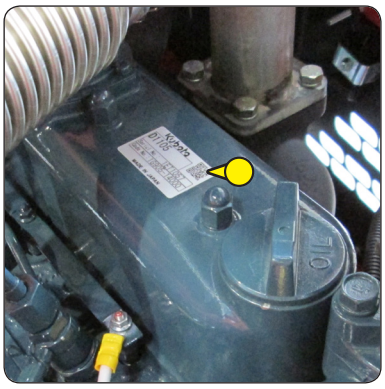

HYDROSTATIC PUMP

- Coding type
- Manufacture No
- Serial No

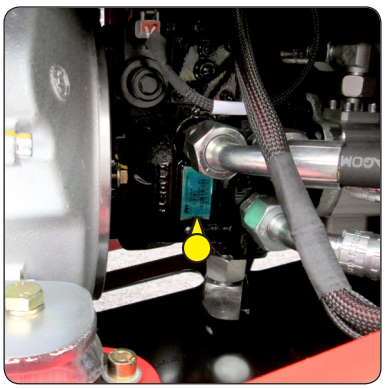

https://truckmanualshub.com/

WHEEL REDUCING GEAR

- Type
- Serial No.

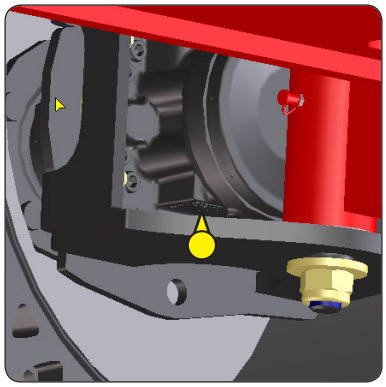

FUSES

- 2 fuses 60A, 32V
- 1 relay 12V

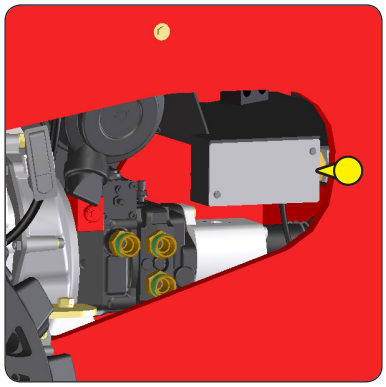

https://truckmanualshub.com/

CHARACTERISTICS

LOAD SPECIFICATIONS		MAN' GO 12	TOL ±
Platform			
Nominal capacity for use indoors (Wind 0 Km/h)	Kg	230	-
Nominal capacity for use outdoors (Wind 45 Km/h)	Kg		-
No. of people in the basket during indoor use		2	-
No. of people in the basket during outdoor use		2	-
Lifting platform unladen weight	Kg	4150	40
Max permissible tilt	°	4	0,1
Traversable slope (+200 Kg)	%	40	-
Work speed	Km/h	1	0,1
Slow transport speed (1)	Km/h	3,2	0,2
Ramp transport speed (2)	Km/h	3,8	0,2
Fast transport speed (3)	Km/h	5,2	0,2
Wheels			
Front wheel radius under load (transport position)	mm	352	5
Rear wheel radius under load (transport position)	mm	352	5
Load on one front wheel (transport position)	Kg	1142	20
Load on one rear wheel (transport position)	Kg	933	20
Max load on one wheel	Kg	2700	50
Contact surface on the ground (hard / soft ground)	Cm^2	180 - 417	10
Surface punch-through (hard / soft ground)	daN/cm^2	15 - 6,5	-
LwA acoustic pressure level	db	100	-

HYDRAULIC MOVEMENT(basket control)		MAN' GO 12	TOL ±
Arm Movement 3 (Telescope extend)			
- Raising unladen / laden	s	22	5
- Lowering unladen / laden	s	22	5
Arm Movement 3 (Telescope Return)			
- Raising unladen / laden	s	19	5
- Lowering unladen / laden	s	19	5
Telescope Movement			
- Extended unladen / laden	s	9	5
- Lowering unladen / laden	s	9	5
Pendular arm movement			
- Extended unladen / laden	s	22	5
- Lowering unladen / laden	s	24	5
Turret rotation			
- Rotation 360° (Telescope extended / Retracted)	s	80	5
Basket rotation			
- Rotation over 125° (58.5° left + 66.5° right)	s	10	5

INTERNAL COMBUSTION ENGINE		MAN' GO 12	TOL ±
Type		KUBOTA D1105- E2B	
Fuel		Diesel	-
No. of cylinders		3	-
Cubic capacity	Cm3	1 123	-
Idling speed, unladen (factory settings)	tr/mn	1300	20
Max engine revs, unladen (factory settings)	tr/mn	3000	20
Nominal power	kW	19	
Net power intermittent	kW	16,6	-
Max torque	Nm	71	-
Unladen weight	Kg	93	5
Air filtration	µm	-	-
Type of cooling		water	-
Fan		suction	

https://truckmanualshub.com/

TRANSMISSION		MAN' GO 12	TOL ±
Type		MSE02	-
Supplier		POCLAIN	-
Cubic capacity	Cm3	398	-
Max service pressure	bar	400	-
Traction power	daN	1950	-
Reduction ratio		-	-
Number of steering wheels			
Front / Rear		2 / 0	-
Number of driven wheels			
Front / Rear		2 / 2	-
Front axle wheel			
Differential		Hydraulic	-
Tyre		720 x 240 CURED ON	-
Supplier		SOLIDEAL	
Rear axle wheel			
Differential		Hydraulic	-
Tyre		720 x 240 CURED ON	-
Supplier		SOLIDEAL	-

BRAKE CIRCUIT (parking brake)		MAN' GO 12	TOL ±
Type of brake		Disc clutch	-
Type of control		Negative hydraulic	-
Braked wheels REAR / FRONT		2/2	-
Anti-skid system (freewheeling)		yes	-
Brake torque	daN	2118	50

HYDRAULIC CIRCUIT		MAN' GO 12	TOL ±
Principal hydraulic pump			
Type		HP closed circuit	-
Cubic capacity	Cm3	20,4	-
Max flow rate, unladen	l/mn	61,2	-
Max permanent service pressure	bar	350	5
Auxiliary hydraulic pump			
Type		Gears	-
Cubic capacity	Cm3	14	-
Max flow rate, unladen	l/mn	42	-
Pression service maximum	bar	210	5
Filtration			
Return	µm	-	-
Suction	µm	-	-
Pressure	um	10	-
Clogging indicator		no	-

https://truckmanualshub.com/

ELECTRICAL CIRCUIT		MAN' GO 12	TOL ±
Battery			
Supplier (Initial mounting)		Exide	-
C5 capacity	Ah		-
C20 capacity	Ah		-
Nominal voltage	V	12	-
Type		Start-up 110 Amp	-
EARL Cycle		-	-
Alternator			
Type		-	-
Intensité	A	60	-
Tension	V	12	-
Starter			
Type		Electrical	-
Power output	Kw	1,4	-
Voltage	V	12	-

DIMENSIONS		MAN' GO 12	TOL ±
Transport position			
Width	mm	1800	1%
Length	mm	5504	1%
Length (truck transport)	mm	4500	1%
Height	mm	2015	1%
Floor / ground height, during transport	mm	395	1%
Clearance under the chassis FRONT	mm	320	2%
Clearance under the chassis REAR	mm	200	2%
Max chassis clearance angle	%	73 %	1%
Wheel drive gyration radius (2 wheels / 4 wheels)	mm	1715 / -	3%
Wheel drive gyration radius (2 wheels / 4 wheels)	mm	4115 / -	3%
Work position			
Working height	mm	11910	1%
Floor height	mm	9910	1%
Working offset (interior of basket + 500mm)	mm	6690	1%
Tail swing conterweight	mm	190	1%
Pendular arm clearance angle + / -	°	- 70,2 / + 66,5	1%
Overhang, arm at 33°	mm	4800	1%
Basket			
External dimensions	mm	1500 x 987	1%
Floor area	mm	1435 x 710	1%

CAPACITY		MAN' GO 12	TOL ±
Hydraulic oil reservoir	l	60	2
Diesel tank	l	53	2
Engine oil carter	l	5,1	2
Coolant circuit	l	-	2

https://truckmanualshub.com/

EQUIPMENT		MAN' GO 12	TOL ±
Emergency pump			
Type		Manual	-
Cubic capacity	Cm3	20	-
Power output	Kw	-	-
Voltage	V	-	-
Intensity	A	-	-
S2	mn	-	
S3	%	-	
Audible beep on all movements		no	-
Rotating flashing light / Revolving light		yes	-
Hour metre		yes	-
230 V preconfiguration			-
Diesel level proportional display		yes	-
Low fuel level / battery alarm		yes	-
Toolbox in the basket		yes	-
User interface (diagnostic help)		yes	-
Oscillating axle		no	-

https://truckmanualshub.com/

DIMENSIONS

A	mm	5500
A1	mm	4500
B	mm	2000
B1	mm	950
C	mm	2015
C1	mm	2495
D	mm	1800
E	mm	200
E1	mm	320
F	mm	395
G	mm	1715
G1	mm	4115
H	mm	920
I	mm	190
J	mm	2900
K	°/%	36/73

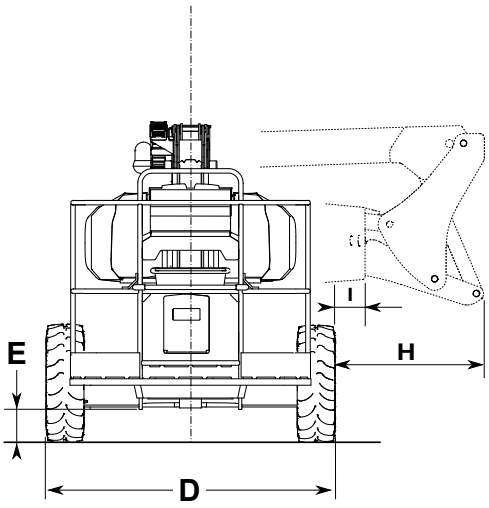

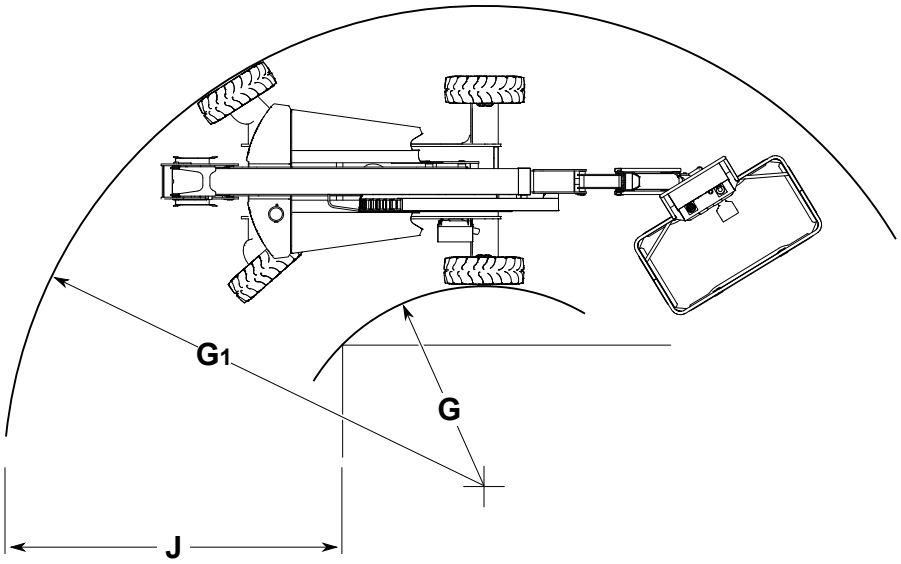

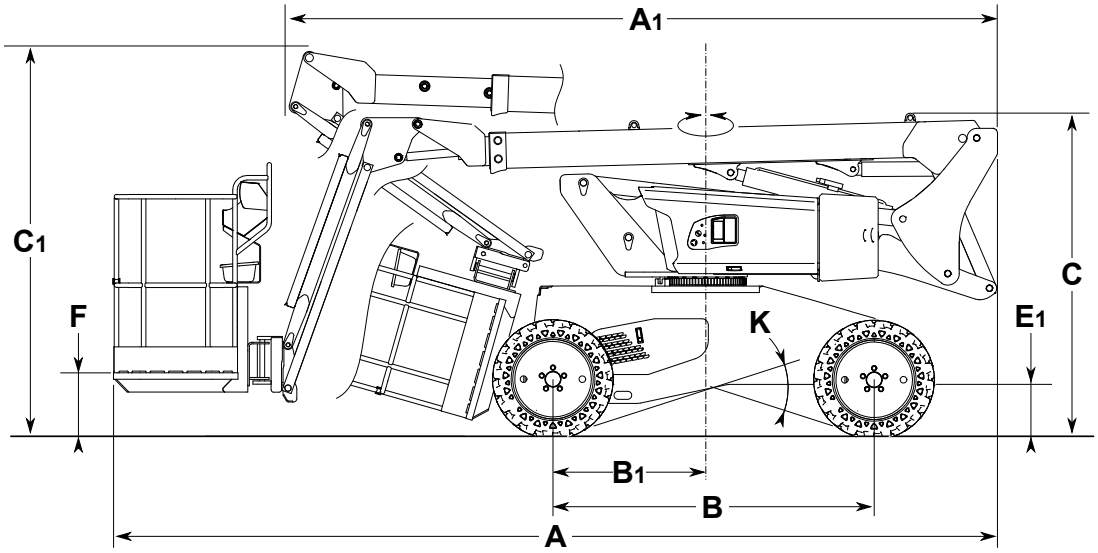

https://truckmanualshub.com/

		Theorical Dimensions	Designation
	H1	1940 mm	Overhang max offset (dimension measured on the floor)
	D1	6190 mm	Max offset
	H2	9905 mm	Max height (dimension measured on the floor)
	D2	3100 mm	Max offset height
S4 = 4 m	H4	5220 mm	Platform offset and height for a building height = 4m
	D4	5830 mm	
S5 = 5 m	H5	6620 mm	Platform offset and height for a building height = 5m
	D5	5410 mm	
S6 = 6 m	H6	7850 mm	Platform offset and height for a building height = 6m
	D6	4720 mm	
S7 = 7,31 m	H7	8565 mm	Platform offset and height for a building height = 7,31m
	D7	3950 mm	

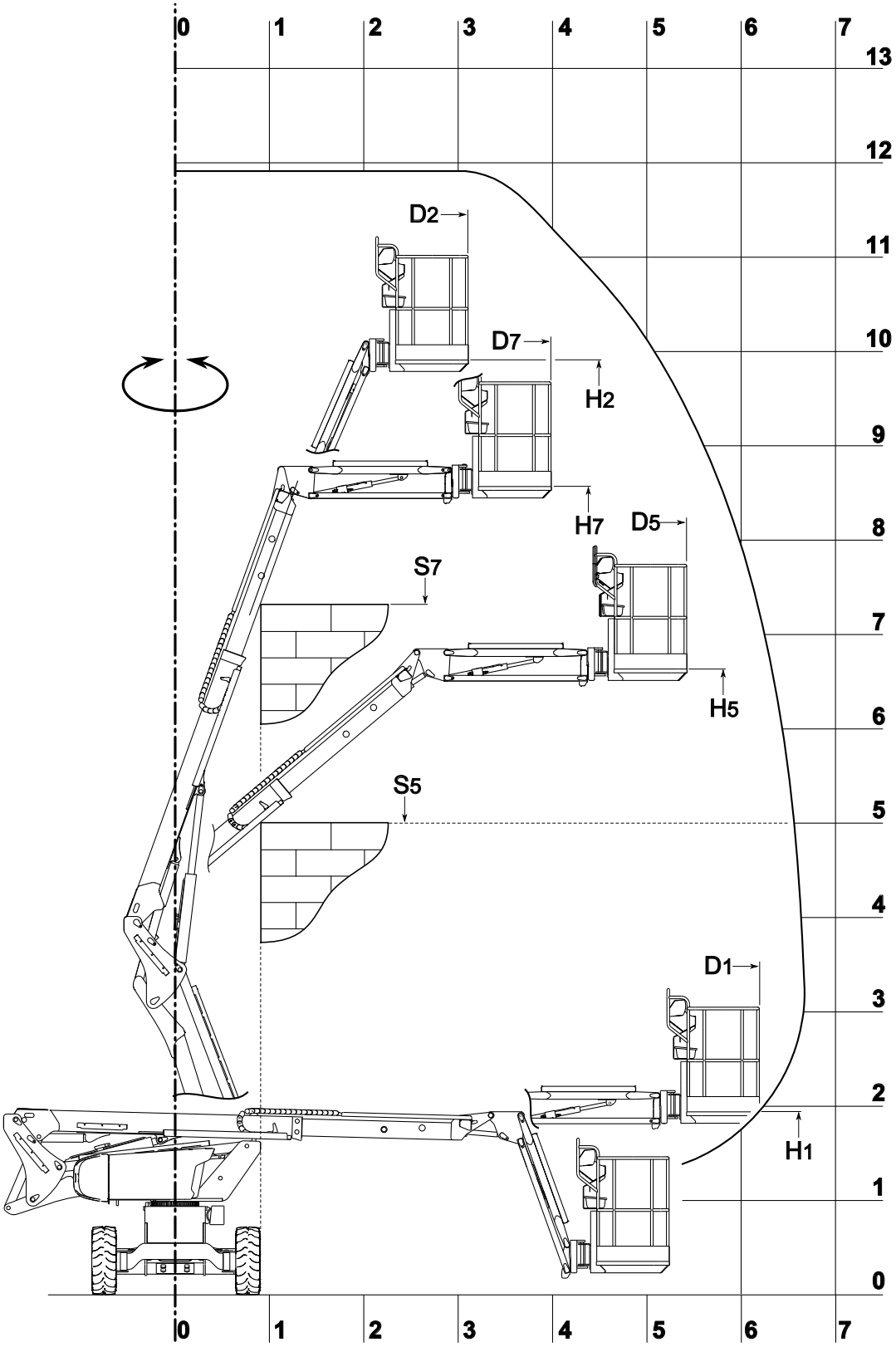

https://truckmanualshub.com/

LIFTING PLATFORM OPERATION

DESCRIPTION

This is a mobile people-lifting platform. It consists of a working platform fixed on the end of a pendular arm, itself fixed to the end of a telescopic arm, the whole assembly being mounted on an articulated arm structure.

MANITOU lifting platforms are solely intended to be used to carry people, with their tools and supplies (up to the authorized weight limit: see the "SPECIFICATIONS" section), to the desired working height, to reach difficult to access areas over installations and buildings.

The lifting platform is fitted with controls in the basket. From this control station, the operator can drive and operate his machine forwards and backwards. The operator can also raise or lower the arm assembly, extend or retract the telescopic arm and turn the turret or the basket to the right or the left.

The basket, arm and turret assembly can rotate through 359 degrees, non-continuously or continuously depending on the type of lifting platform, to the right or left with respect to the parked position.

The lifting platform is also fitted with a ground maintenance and emergency station, from which all the lifting commands can be made, except for translation commands. The base controls are only to be used for rescue purposes, to bring the operator back to the ground if he is incapable of returning there himself.

The operator must check on a daily basis that the ground maintenance and emergency station controls, and then the basket controls, are working correctly.

⚠ IMPORTANT ⚠

Stickers showing the characteristics, safety warnings and the rescue procedure are affixed to the machine. The operator must read these and fully understand their content. To avoid any risk of wrongly interpreting the pictograms, please refer to the paragraph "SAFETY STICKERS" Section 1 – SAFETY INSTRUCTIONS AND ADVICE.

The lifting platform's movements are provided by a hydraulic pump operated by the IC engine. The hydraulic components are controlled by electro-valves actuated by means of contactors on the control joy stick.

The controls on the base console and the basket console are in the form of rocker switches are in either ON or OFF mode.

The base console is fitted with a so called "Dead man's" button Rep. 8*. This one must be maintained in base position simultaneously in the impulse of a base control. Releasing it stops the movement.

The lifting platform is a four-wheel drive machine driven by an IC engine. The drive wheels are fitted with spring brakes with hydraulic release. These brakes activate automatically as soon as the translation joy stick is returned to the Neutral position.

The lifting platform can lift within the limits of its capabilities (see "SPECIFICATIONS" in this section). A load equal to or less than the maximum capacity in the basket enables you to move into any position provided that the machine is on a surface with a slope of no more than the maximum authorised inclination

GENERAL

On the following pages, you will find all the information you require for using the machine. This included the procedures for using, driving, parking, loading and transporting the lifting platform.

https://truckmanualshub.com/

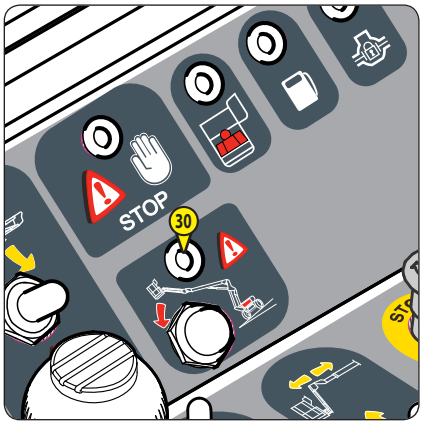

TILT

When the lifting platform reaches the maximum authorised level of tilt (see the CHARACTERISTICS section), LED 30* on the basket console flashes regularly. Also the basket's buzzer 37* sounds intermittently.

All the "AGGRAVATING" movements of raising the arms, extending the telescope and translation are prohibited as a safety measure.

⚠ IMPORTANT ⚠

When recovering controls, only carry out de-aggravating movements:

- return to the safety position by retracting the telescope and lowering the arm, then reposition the access platform on more horizontal ground.

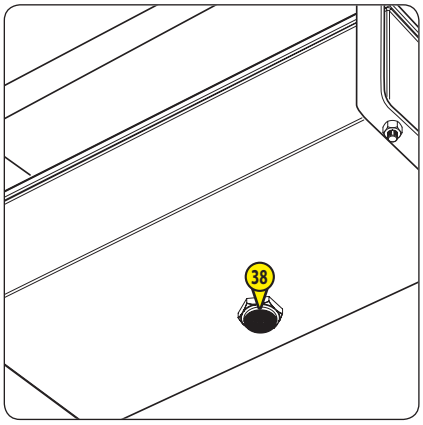

OVERLOAD

When the lifting platform reaches the maximum authorised weight (see the CHARACTERISTICS section), the Overload LED 34* on the basket console flashes regularly. Also the basket's buzzer 42* sounds constantly. All movements are prohibited as a safety measure.

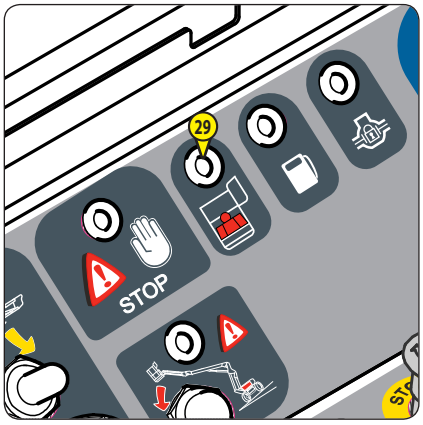

⚠ IMPORTANT ⚠

To resume control:

- Unburden the basket by removing the object or objects causing the overload,

OR

- Ask a person on the ground to perform a descent under manual control (see paragraph "Rescue procedure" in chapter 2 and "Safety stickers" in chapter 1).

* : The above reference numbers also correspond to those used in the description of these components on the following pages.

https://truckmanualshub.com/

BASE CONTROL INSTRUMENTATION

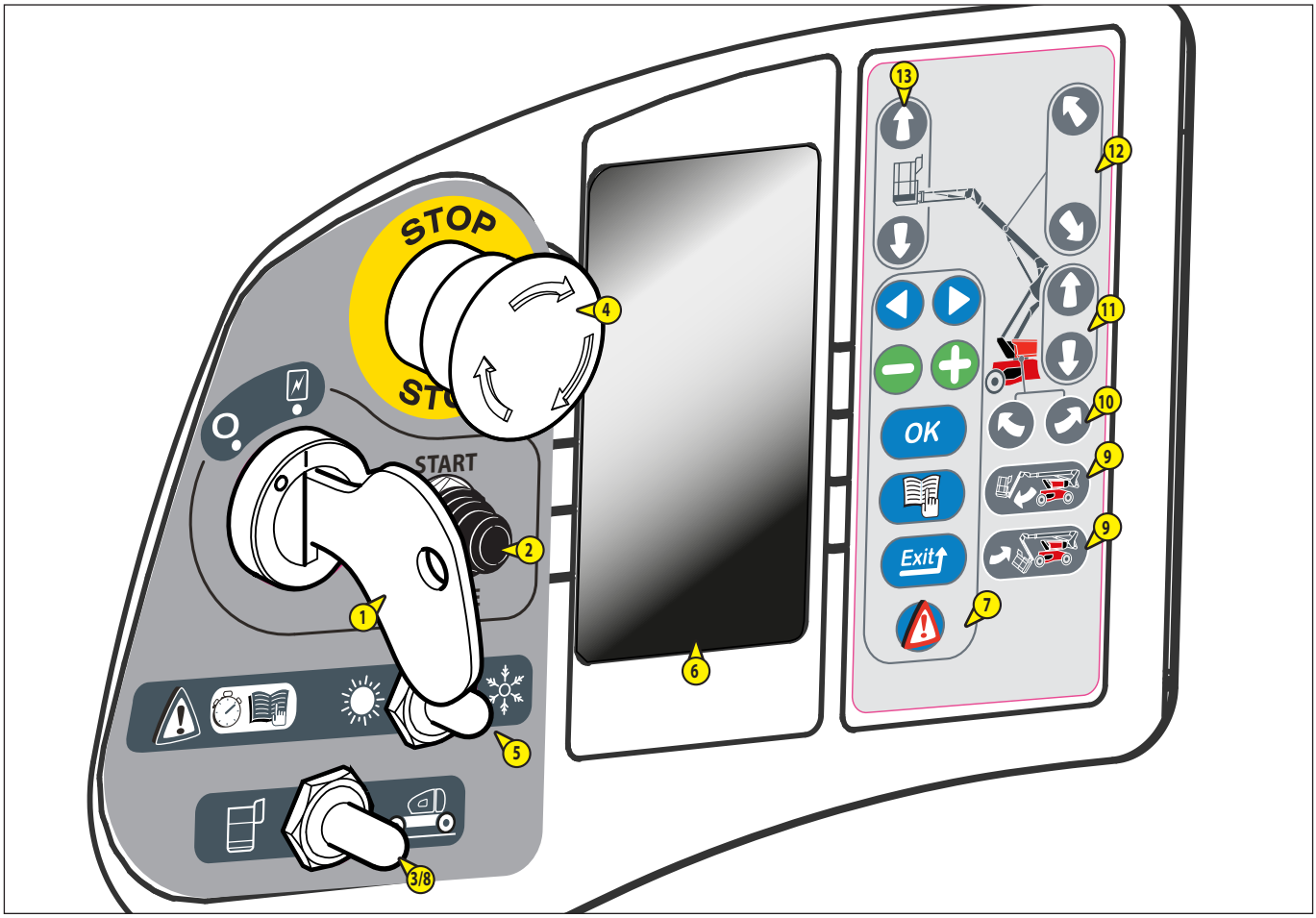

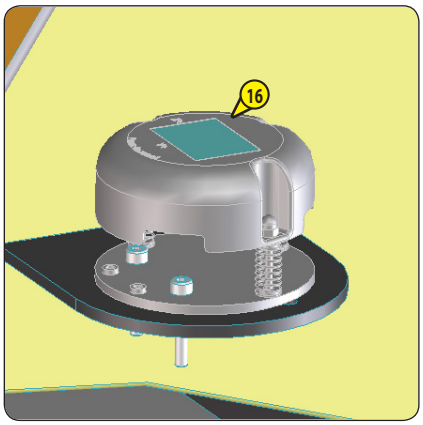

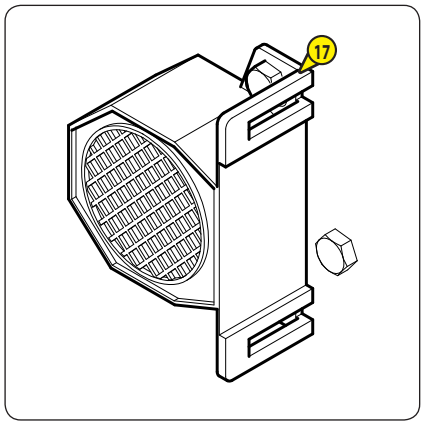

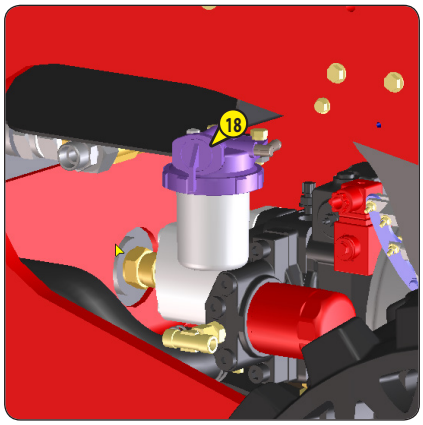

https://truckmanualshub.com/

DESCRIPTION

1 - KEY-OPERATED IGNITION SWITCH
2 - STARTER BUTTON
3 - GROUND OR PLATFORM CONTROL SELECTRO SWITCH
4 - EMERGENCY STOP
5 - ENGINE START-UP ASSISTANCE SELECTOR SWITCH
6 - INTERFACE SCREEN
7 - INFORMATION VALIDATION SCREEN KEYS
8 - DEAD MAN'S BUTTON
9 - BASKET TILT DOWN / TILT UP BUTTON
10 - TURRET ROTATION KEYS
11 - LOWER ARM UP / DOWN BUTTONS
12 - TELESCOP EXTEND / RETRACT BUTTONS
13 - PENDULAR ARM UP / DOWN BUTTONS
14 - BLOCKING TURRET ROTATION
15 - FLASHING LIGHT
16 - TILT SENSOR
17 - BUZZER
18 - FUEL COCK

https://truckmanualshub.com/

BASKET CONTROL INSTRUMENTATION

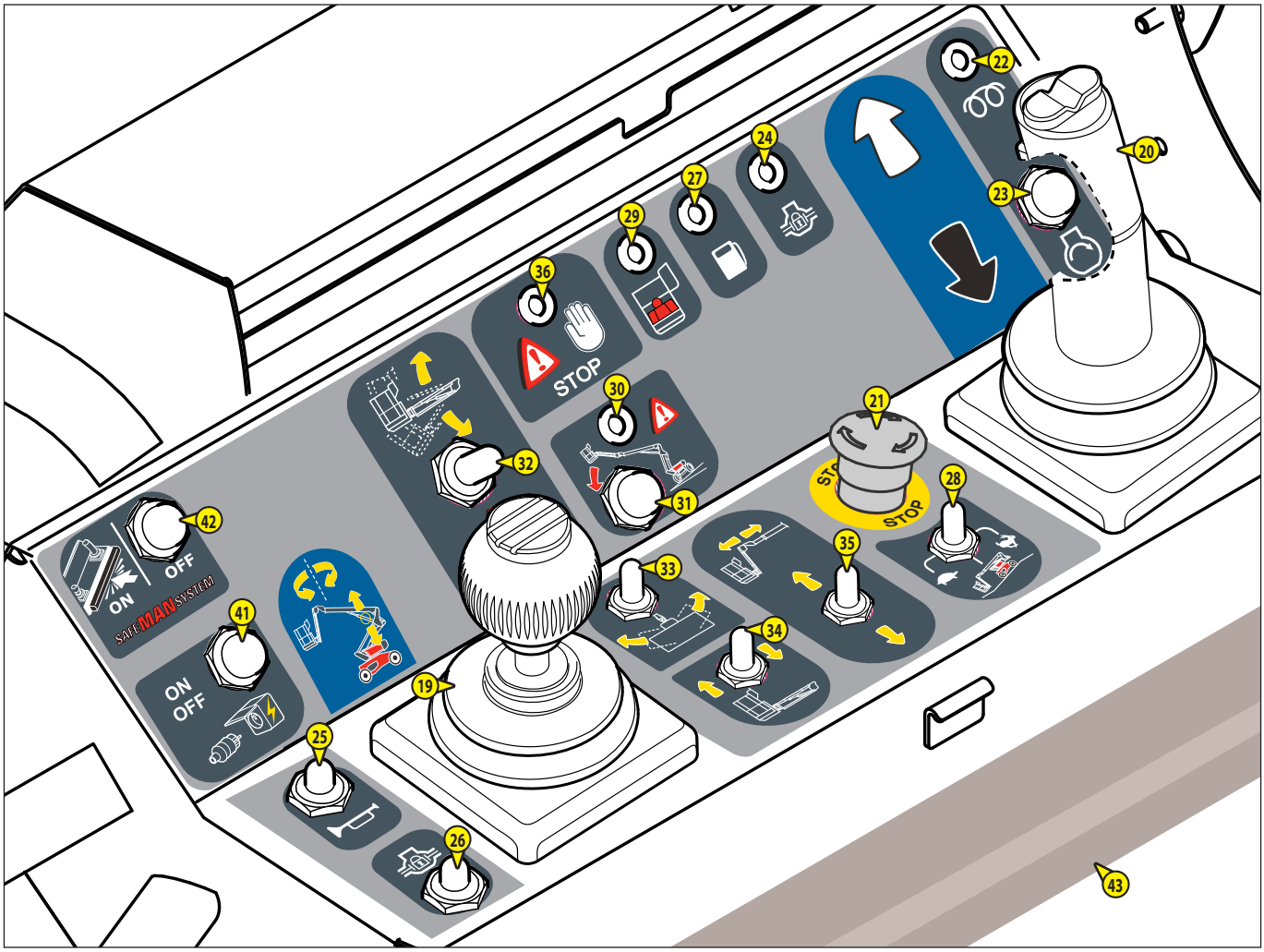

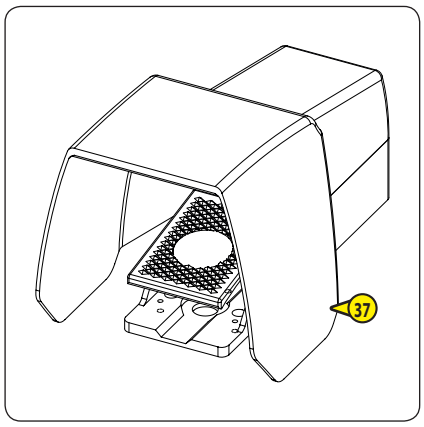

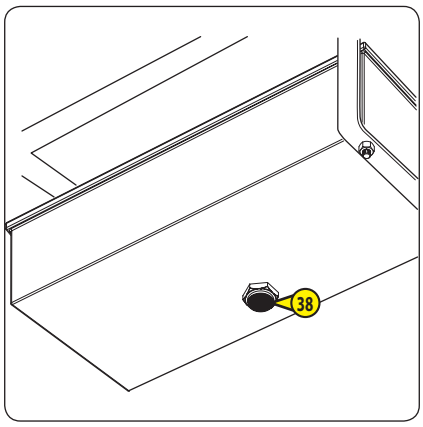

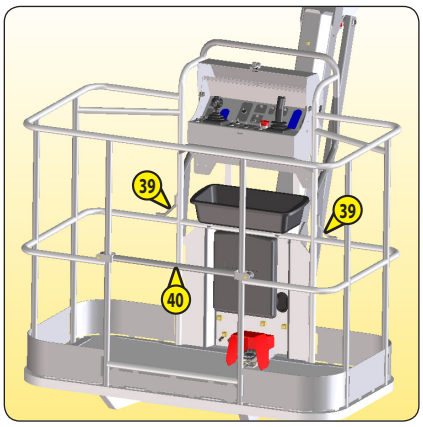

https://truckmanualshub.com/

19 - UPPER ARM UP / DOWN AND TURRET ROTATION CONTROL LEVER
20 - CONTROL LEVER FOR PLATFORM FORWARD/REVERSE MOVEMENT
21 - EMERGENCY STOP
22 - "PREHEATING" INDICATOR LIGHT
23 - START-UP CONTROL BUTTON
24 - DIFFERENTIAL LOCKING CONTROL BUTTON
25 - DIFFERENTIAL LOCKING CONTROL INDICATOR LIGHT
26 - BUZZER CONTROL BUTTON
27 - LOW FUEL LEVEL INDICATOR
28 - TRANSLATION SPEED SELECTION CONTACTOR
29 - "OVERLOAD" INDICATOR LIGHT
30 - "TILT" INDICATOR LIGHT
31 - "USE UNDER TILT" BUTTON
32 - BASKET INCLINATION CONTACTOR
33 - BASKET ROTATION CONTACTOR
34 - PENDULAR ARM CONTACTOR
35 - TELESCOP CONTACTOR
36 - MACHINE FAULT LED
37 - "DEAD MAN'S" PEDAL
38 - BUZZER
39 - SAFETY HARNESS HOOK-UP POINTS
40 - SAFETY RAIL
41 - GENERATOR ACTIVATION BUTTON (OPTION)
42 - REARMING BUTTON (SAFEMANSYSTEM OPTION)
43 - SENSITIVE EDGE (SAFEMANSYSTEM OPTION)
44 - BLUE WARNING LIGHT (SAFEMANSYSTEM OPTION)

NB: The terms RIGHT-LEFT-FRONT-REAR are understood as being for an operator in the lifting platform looking forward with the platform in Transport position

https://truckmanualshub.com/

GROUND MAINTENANCE AND EMERGENCY STATION

1 - KEY-OPERATED IGNITION SWITCH

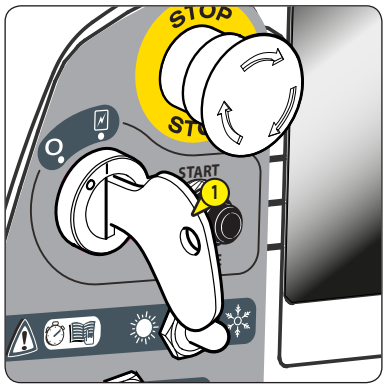

This key-operated contactor has two positions.

POSITION 1

- Engine stop and electrical circuit supply off.

POSITION 2

- Electrical circuit supply on and automatic engine preheating.

2 - STARTER BUTTON

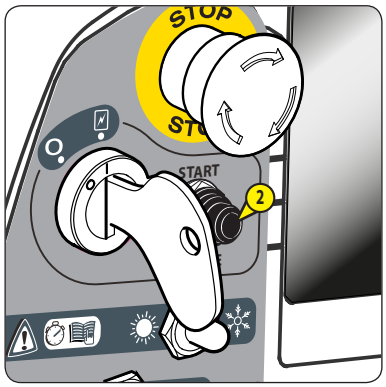

Engine start-up.

3 - GROUND OR PLATFORM CONTROL SELECTION SWITCH

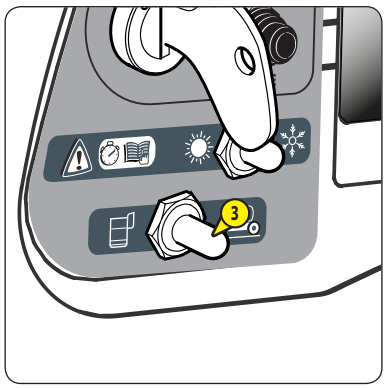

This contactor has two positions.

POSITION 1

- The commands are given from the basket.

POSITION 2

- The commands come from the ground (base control). The button must be held down in position 2 (dead Man's system) to provide power to the base control. Releasing it prevents any movements from being made.

4 - EMERGENCY STOP

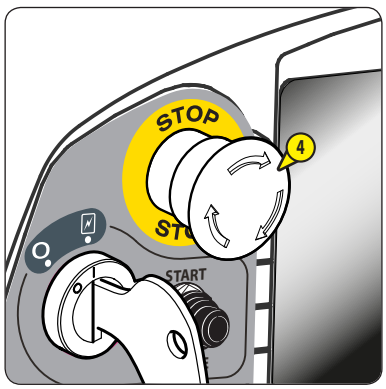

This red mushroom-headed switch cuts off all the machine's movements in the event of an anomaly or any danger.

- Press the knob to cut off the movements.
- Turn the knob a quarter turn to the right to restore the power supply (the switch automatically returns to its initial position).

⚠ IMPORTANT ⚠

In all cases, this command takes precedence, even when the movements are being controlled from the basket control station.

⚠ IMPORTANT ⚠

If the Emergency Stop is activated, the movements may stop very suddenly.

⚠ IMPORTANT ⚠

Do not use the emergency stop to simply shut down the lifting platform. Otherwise, rearm it immediately as no action can be performed on the control panels at ground level or in the basket.

https://truckmanualshub.com/

5 - LOW-TEMPERATURE ENGINE START-UP AID

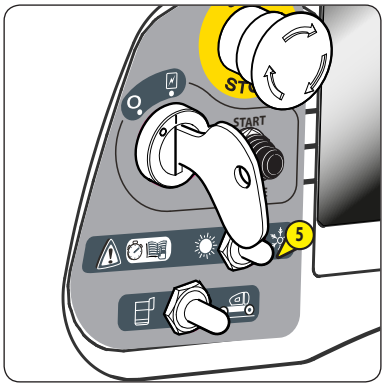

This selector switch has two positions to be selected according to the ambient air temperature.

1 : SUN POSITION

- If the temperature is over - 10°C, start the engine at tickover rpm.

2 : SNOW POSITION

- If the temperature is less than around - 10°C, set the selector switch to this position before starting: the engine will be held at maximum rpm (only for the first start of the day).
- Leave the engine at maximum rpm for 30 to 60 seconds, depending on the temperature (no movement is possible during this time).
- Switch the selector switch from SNOW to SUN position and the rpm drop to tickover level (normal position, warm engine).

6 - INTERFACE SCREEN

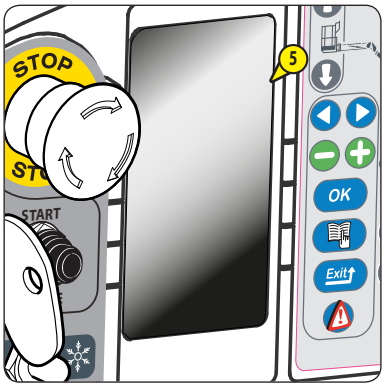

This screen lets you display all stages of start-up and parameters and access certain menus such as :

- Maintenance display,
- Machine maintenance,
- Faults display,
- Faults history,
- Hour metres: internal-combustion engine meter, certain usage time sub-meters, daily usage meter, function activation meter (manufacturer access only).

NOTE:

The current system time is displayed at the top of each page. The serial number of the machine is displayed at the bottom of each page.

7 - INFORMATION VALIDATION SCREEN KEYS

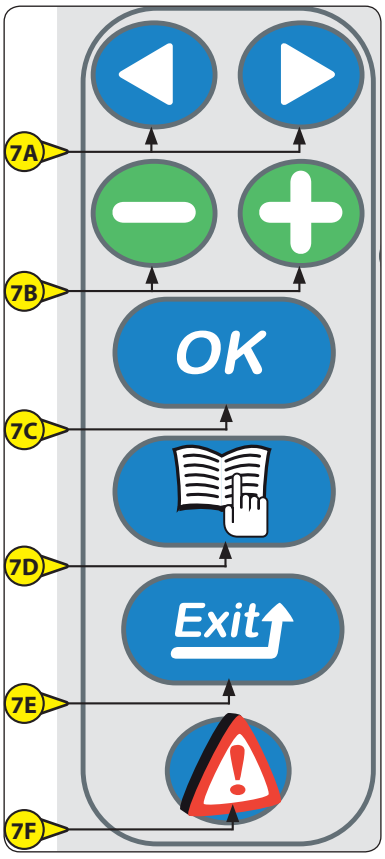

These keys enable you to validate the different information on the screens.

FUNCTIONS OF THE KEYBOARD KEYS:

7A : Selection keys for the proposals on the menu pages.

7B : Selection keys for the proposals on the sub-menu pages.

7C : This "Confirm / OK" key has two functions:

- "Confirmation" key for the selections made by the plus / minus keys,
- Fault acknowledgement key (the fault has been seen; this key enables you to get rid of the screen without necessarily resolving the problem).

7D : This "Menu" key has two functions:

- It enables you to open the "Access Menu" page.
- Enter the code to get the desired menu (this code will be memorised for as long as the lifting platform is receiving power).
- It enables you to exit and return to the work screen page.

7E : The "Exit" key has two functions:

- It cancels a validation in progress.
- It enables you to return to the previous level in a menu.

7F : The "Fault" key displays any faults present on the lifting platform when the fault triangle appears.

https://truckmanualshub.com/

8 - "DEAD MAN'S" FUNCTION

The button must be held down in the Dead Man's position (position 2) to provide power to the base control, at the same time as holding down the lifting and rotation keys.

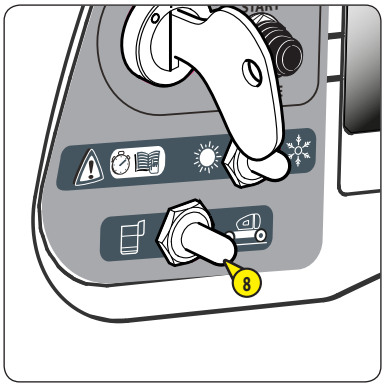

9 - BASKET TILT DOWN / TILT UP BUTTON

Using these keys at the same time as pressing button 8 to the Dead Man's position, control correction of the basket's horizontality or the complete folding back of the basket in Transport position.

9A : TILTING THE BASKET DOWNWARDS
- Hold down the Dead Man's button 8 and press key 9A.

9B : TILTING THE BASKET UPWARDS
- Hold down the Dead Man's button 8 and press key 9B.

10 - TURRET ROTATION KEYS

Using these keys at the same time as pressing button 8 to the Dead Man's position, enable you to rotate the turret.

10A : ROTATING THE TURRET LEFT
- Hold down the Dead Man's button 8 and press key 10A.

10B : ROTATING THE TURRET RIGHT
- Hold down the Dead Man's button 8 and press key 10B.

11 - LOWER ARM LIFTING AND LOWERING KEYS

Using these keys at the same time as pressing button 8 to the Dead Man's position enables the lower arms to be lifted and lowered.

A : LIFTING THE LOWER ARMS
- Hold down the Dead Man's function 8 and press key 11A.

B : LOWERING THE LOWER ARMS
- Hold down the Dead Man's function 8 and press key 11B.

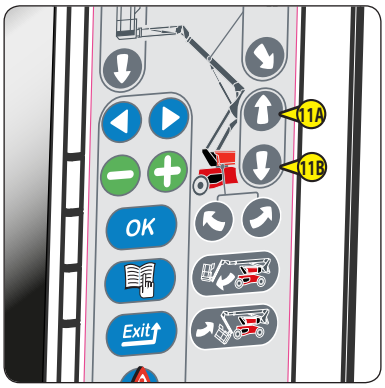

12 - EXTEND / RETRACT TELESCOP KEYS

Using these keys at the same time as pressing button 8 to the Dead Man's position enables the telescop to be extended and retracted.

A : EXTENDING THE TELESCOP
- Hold down the Dead Man's function 8 and press key 12A.

B : RETRACTING THE TELESCOP
- Hold down the Dead Man's function 8 and press key 12B.

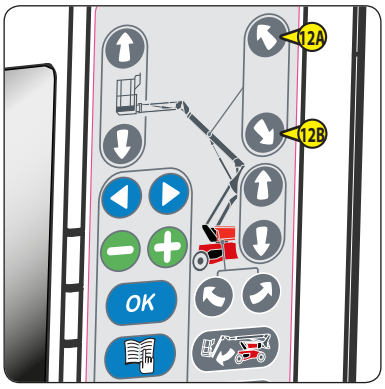

https://truckmanualshub.com/

13 - PENDULAR ARM LIFTING AND LOWERING KEYS

Using these keys at the same time as pressing button 8 to the Dead Man's position enables the pendular arm to be lifted and lowered.

A : LIFTING THE PENDULAR ARM

- Hold down the Dead Man's function 8 and press key 13A.

B : LOWERING THE PENDULAR ARM

- Hold down the Dead Man's function 8 and press key 13B.

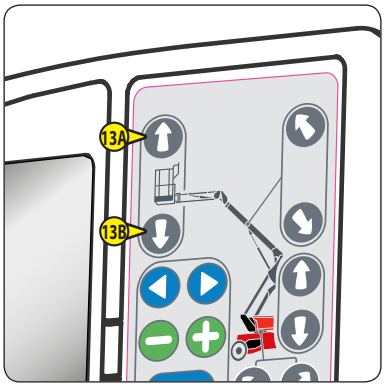

14 - BLOCKING TURRET ROTATION

- This pin must be used when the lifting platform is being transported by truck or some other means of transport (train, etc...), to prevent the turret from rotating.
- Swivel the pin to the right.
- Push the pin into the hole in the turret provided for this purpose.

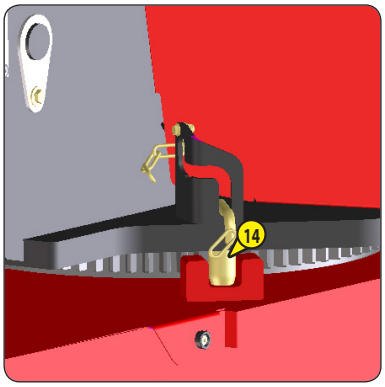

15 - FLASHING LIGHT

The flashing light illuminates automatically when the lifting platform is in translation or making a movement.

16 - TILT SENSOR

- This sensor controls the safety buzzer 37 when the lifting platform has reached the maximum authorised level of tilt. The buzzer sounds intermittently (see the "SAFETIES" section).
- One LED located under the tilt sensor 16 shows its operating status:
  - Green LED lit: maximum permissible tilt not yet reached.
  - Green LED unlit: maximum permissible tilt reached.

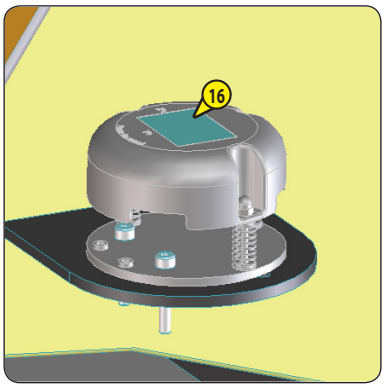

17 - BUZZER

This buzzer (fixed on the outside of the hydraulic box, next to the telescopic arm) is activated when you press push-button 26 on the basket control station.

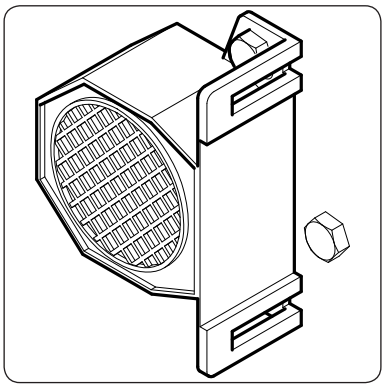

https://truckmanualshub.com/

18 - FUEL COCK

- The fuel cock (18) located on the diesel filter must be in the "ON" position as shown opposite before starting the engine.
- The "OFF" position on the fuel cock shuts off the fuel supply to the engine.

https://truckmanualshub.com/

BASKET CONTROL STATION

19 - UPPER ARM UP / DOWN AND TURRET ROTATION CONTROL LEVER

Lever 19 enables you to raise the upper arm and rotate the turret.

NB: This is a progressive control lever, which provides you with great accuracy in approach. It must be manipulated flexibly, without jerking.

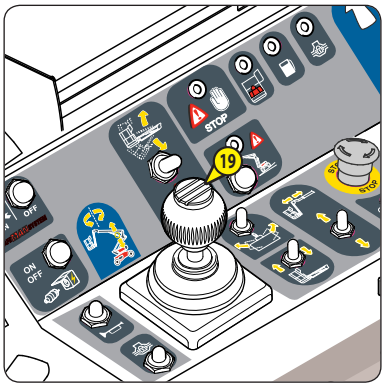

RAISING THE UPPER ARM
- Push the lever upwards.

LOWERING THE UPPER ARM
- Pull the lever downwards.

ROTATING RIGHT
- Push the lever to the right.

ROTATING LEFT
- Push the lever to the left.

20 - LIFTING PLATFORM FORWARD / REVERSE AND RIGHT / LEFT MOVEMENT CONTROL JOYSTICK

Lever 23 enables you to move the lifting platform.

- You must press trigger A together with the Dead Man's pedal (see 36) to perform movements from the lifting platform's control box.
- When the pedal or trigger A is released, no commands can be issued.

NB: This is a progressive control lever, which provides you with great accuracy in approach. It must be manipulated flexibly, without jerking.

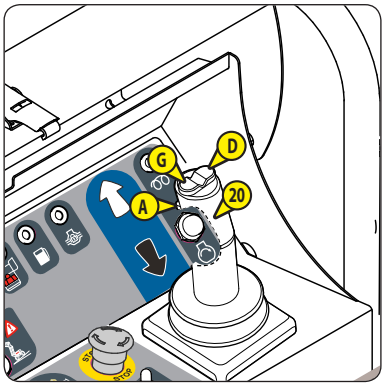

FORWARD TRANSLATION
- Push the lever forwards.

REAR TRANSLATION
- Pull the lever backwards.

STEER RIGHT
- Press button D.

STEER LEFT
- Press button G.

⚠ IMPORTANT ⚠

When the turret / arm structure is rotated more than 90° with respect to the chassis, there is a correspondence between the direction of translation shown by the arrows affixed to the chassis and those on the basket control console (white and black arrows). Always refer to the arrows shown on the machine's chassis to know the direction of movement.

21 - EMERGENCY STOP

This switch enables you to cut off all the machine's movements in the event of an anomaly or danger arising.

Press the knob to cut off all movements.

Turn the knob a quarter turn to the right to deactivate it (the switch will automatically return to its initial position).

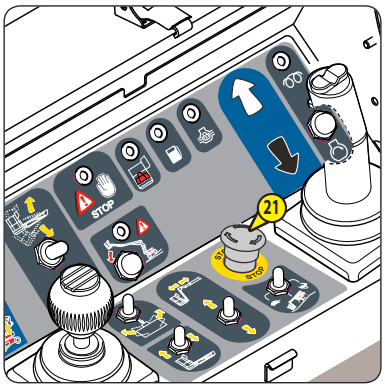

⚠ IMPORTANT ⚠

In all cases, this control has priority; except when movements are being made from the base control station.

⚠ IMPORTANT ⚠

Do not use the emergency stop to simply shut down the nacelle, otherwise, rearm it immediately as no action can be performed on the control panel in the basket.

⚠ IMPORTANT ⚠

To obtain a return to the ground in spite of this engaged basket emergency stop, use the emergency controls (see § Rescue procedure).

https://truckmanualshub.com/

22 - "PREHEATING" INDICATOR LIGHT

- This indicator light illuminates when the machine is supplied with power:
- Either by turning the ignition key on the base (the timing is identical to that shown on the bar graph on the screen).
- Or by rearming the Emergency Stop on the basket console in the lifting platform.
- Wait until the indicator light goes out before operating the starter button.

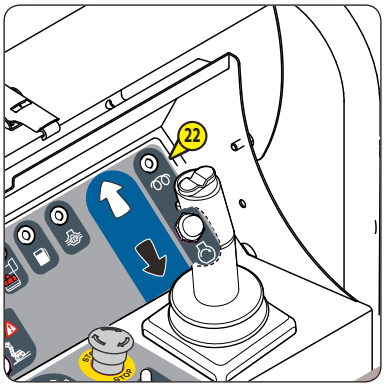

23 - START-UP CONTROL BUTTON

Wait for the "Preheating" light to go out and then press button 23 to start the lifting platform from the basket console.

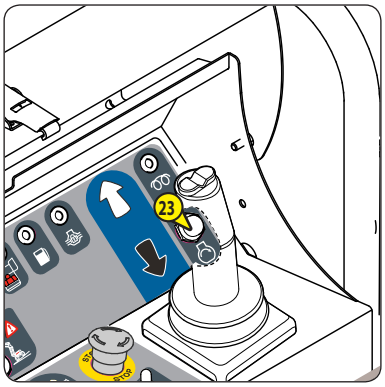

24 - DIFFERENTIAL LOCKING CONTROL BUTTON

NB: This control must be used at the same time as a translation operation.

Differential locking enables the 4 drive wheels to turn at the same speed.

- To use this, press button 24 and release the button to interrupt its use and note a stop in the translation movement.
- Preferably use differential locking while keeping the wheels in the machine's axis.

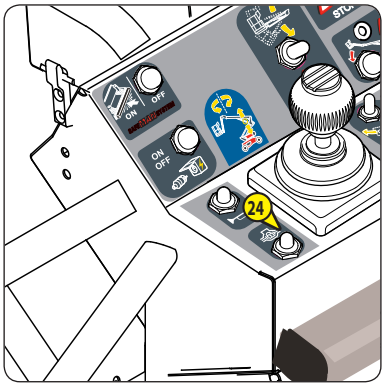

25 - DIFFERENTIAL LOCKING CONTROL INDICATOR LIGHT

This indicator light illuminates when the differential locking control is activated.

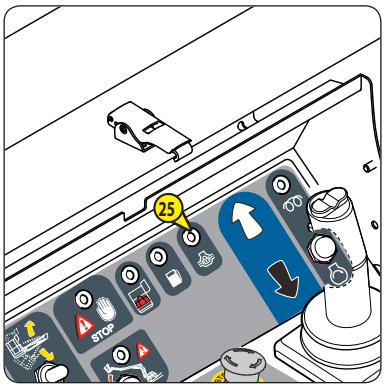

26 - BUZZER CONTROL BUTTON

When you press button 26, buzzer 37 sounds.

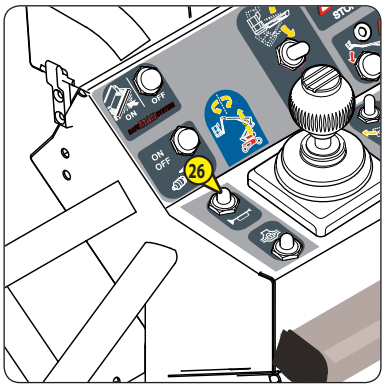

https://truckmanualshub.com/

27 - LOW FUEL LEVEL INDICATOR

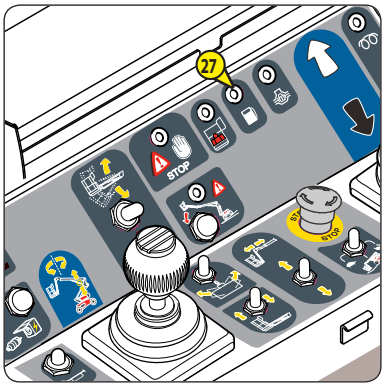

This indicator light illuminates when the fuel level is low and the basket buzzer is activated :

- Level 1 of alarm: 3 beeps every 10 minutes
- Level 2 of alarm: 3 beeps the every 1 minute
- Level 3 of alarm: 3 beeps every 10 seconds and blocking of the movements rises after 5 seconds of activation.

28 - TRANSLATION SPEED SELECTION CONTACTOR

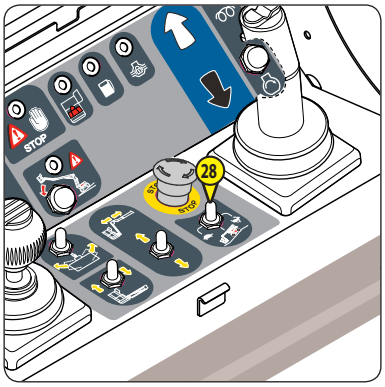

This contactor has 3 positions.

POSITION 1 : TORTOISE (SLOW SPEED)

POSITION 2 : RAMP (SLOW SPEED WITH FULL POWER) Only if crossing a very steep ramp.

POSITION 3 : HARE (HIGH SPEED)

NB: When the selector switch is in position 3 (high speed) and the machine is in 4-wheel drive, the switch moves automatically to position 2 (ramp speed).

29 - "OVERLOAD" INDICATOR LIGHT

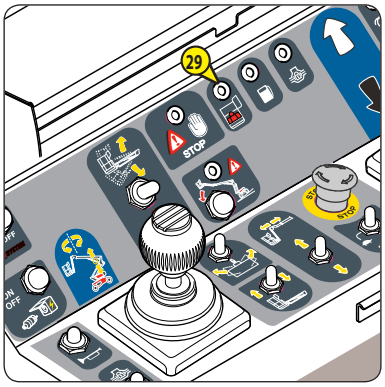

This indicator light illuminates if the basket is overloaded and the buzzer sounds continuously (see the SAFETY SYSTEMS section).

30 - "TILT" INDICATOR LIGHT

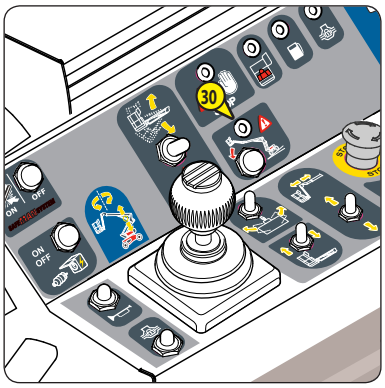

When the lifting platform reaches the maximum authorised tilt, the LED lights up, any movements to raise the arms are blocked and the buzzer sounds with intermittent long beeps.

31 - "USE UNDER TILT" BUTTON

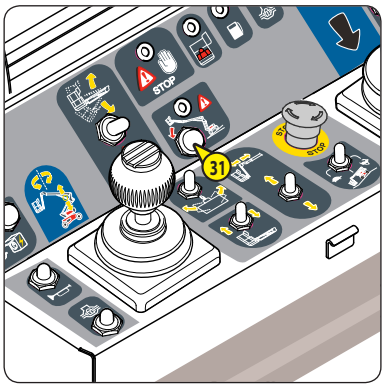

This button enables you to utilise the prohibition on movements when the lifting platform is tilting (see the SAFETY SYSTEMS section").

⚠ IMPORTANT ⚠

Dans le cas d'une utilisation en dévers il y a un risque de perte de stabilité. La surcharge du panier reste néanmoins active.

https://truckmanualshub.com/

32 - BASKET INCLINATION CONTACTOR

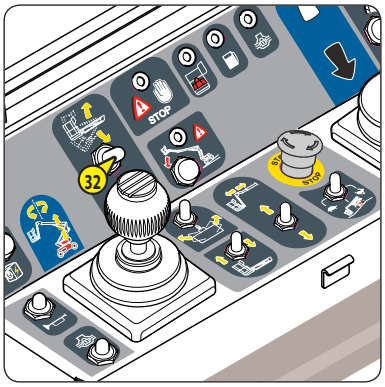

This contactor enables you to correct the basket's horizontality or to fold the basket back completely in Transport position.

CORRECTING THE BASKET UPWARDS

- Push the contactor up.

CORRECTING THE BASKET DOWNWARDS

- Pull the contactor down.

33 - BASKET ROTATION CONTACTOR

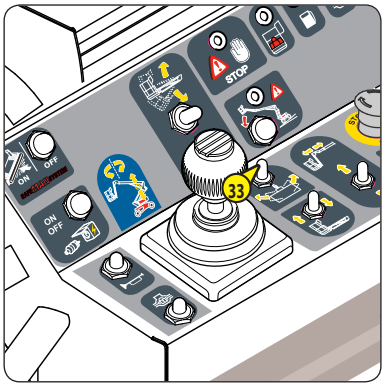

This contactor enables you to rotate the basket left and right

RIGHT ROTATION

- Push the contactor to the right.

LEFT ROTATION

- Push the contactor to the left.

34 - RAISE /LOWER BASKET PENDULAR ARM CONTACTOR

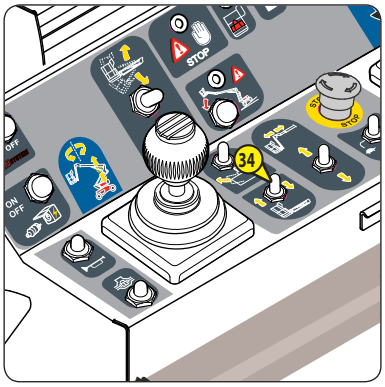

This contactor enables you to raise and lower the basket pendular arm.

RAISING THE PENDULAR ARM

- Push the contactor forwards.

LOWERING THE PENDULAR ARM

- Pull the contactor backwards.

35 - EXTEND / RETRACT TELESCOPE CONTACTOR

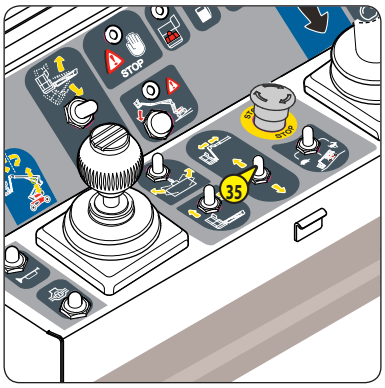

This contactor enables you to extend and retract the pendular unit telescope.

EXTENDING THE TELESCOPE

- Push the contactor forwards.

RETRACTING THE TELESCOPE

- Push the contactor backwards.

36 - MACHINE FAULT LED

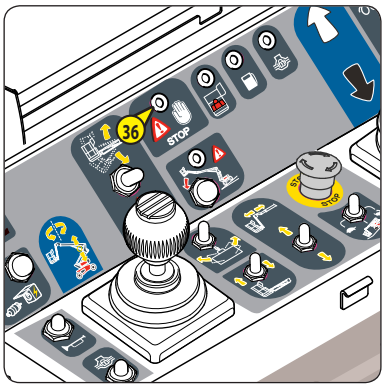

- This indicator light comes on and a short intermittent buzzer signal sounds when a major fault occurs (see the SCREEN DISPLAY paragraph – page descriptions).
- Put the lifting platform out of service immediately.
- See the fault code display on the base screen.

https://truckmanualshub.com/

37 - "DEAD MAN'S" PEDAL

- This pedal is fixed on the platform's floor.
- This pedal must be pressed to perform movements from the basket console.
- When the pedal is released, no control can be used.

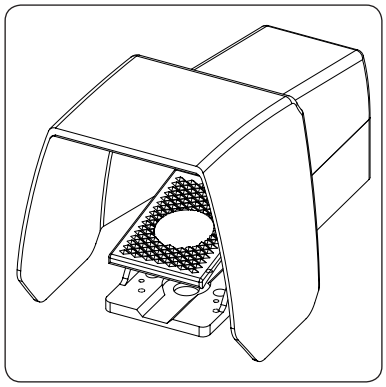

38 - BUZZER

- This buzzer is activated when the machine reaches the maximum authorised level of tilt or is overloaded.
- Sounding intermittently: the machine is tilting. When the authorised tilt limit threshold is crossed, all movements are blocked except for lowering the arms to enable return to an acceptable level.
- Sound continuously: the machine is overloaded. When the platform is overloaded, all movements are blocked. It is essential to unburden the machine so that you can manoeuvre.

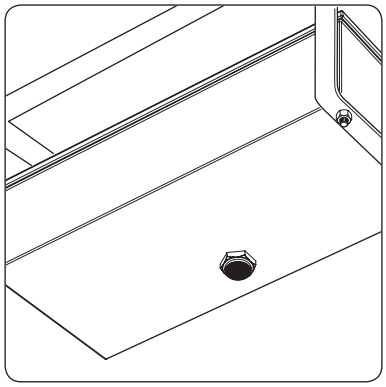

39 - SAFETY HARNESS HOOK-UP POINTS

- These attachments must be used to fasten the harness when operators are in the basket.
- Only one personn is fasten for one safety harness hook-up points.

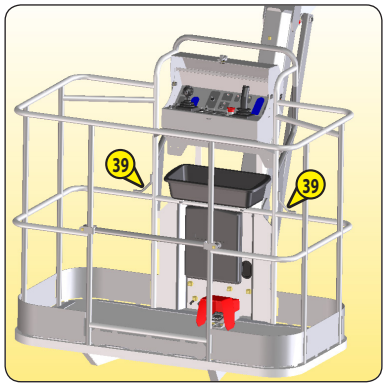

40 - SAFETY RAIL

You must hold the rail to climb into the basket so that the rail does not fall back as the operator climbs in.

⚠ IMPORTANT ⚠

Do not hold the safety rail with a collar or string.

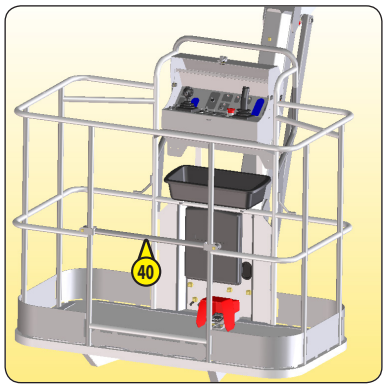

41 - GENERATOR ACTIVATION BUTTON (OPTION)

See the "DESCRIPTION AND USE OF THE OPTIONS" Section, page 2-50.

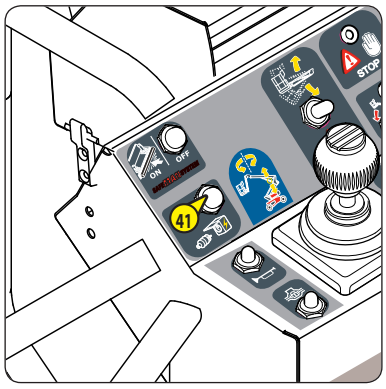

https://truckmanualshub.com/

42 - REARMING BUTTON (SAFEMANSYSTEM OPTION)

See the chapter "DESCRIPTION AND USE OF OPTIONS" page 2-50.

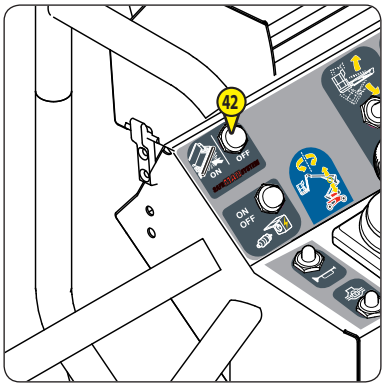

43 - SENSITIVE EDGE (SAFEMANSYSTEM OPTION)

See the chapter "DESCRIPTION AND USE OF OPTIONS" page 2-50.

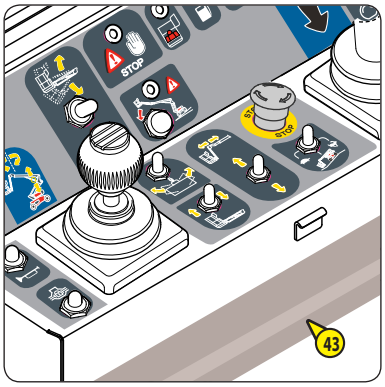

44 - BLUE WARNING LIGHT (SAFEMANSYSTEM OPTION)

See the chapter "DESCRIPTION AND USE OF OPTIONS" page 2-50.

https://truckmanualshub.com/

https://truckmanualshub.com/

SCREEN DISPLAY - DESCRIPTION OF THE PAGES

1 - PRESENTATION PAGE

When you switch on, an initialisation page appears briefly on the screen and then the pre-heating page is displayed.

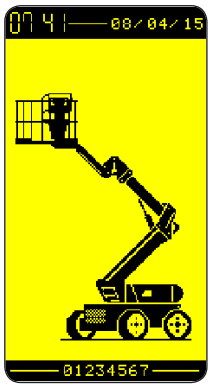

2 - PRE-HEATING PAGES

The Pre-heating page is displayed for the whole of the adjustable pre-heating period and the bar graph increases in increments in proportion to the pre-heating time elapsed.

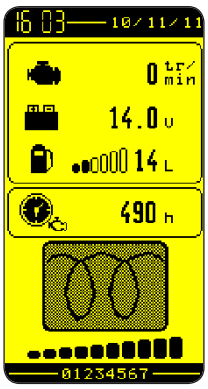

3 - STAR-UP PAGES

When the pre-heating time has expired (bar graph complete), 'OK' is displayed, followed by the Work page or, where applicable, the Fault page.

A: Network search

B: Start-up OK

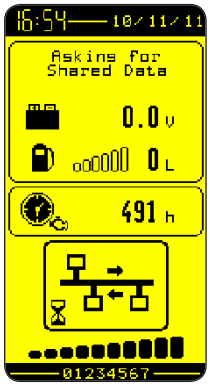

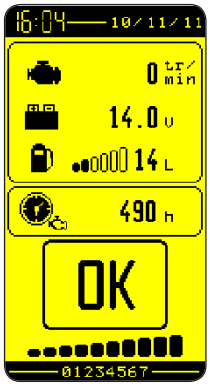

4 - WORK PAGES

Working page from the base with fault present.

Working page from the base with engine oil pressure fault present.

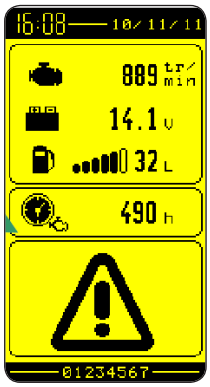

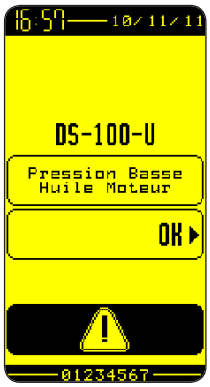

https://truckmanualshub.com/

5 - MENU DISPLAY

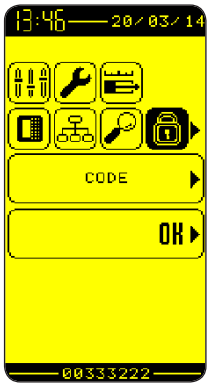

After switching power on,press on to display the page of proposed menus and selesct the chosen menu using the arrows the validate with OK.

6 - TO MODIFY A SUB-MENU

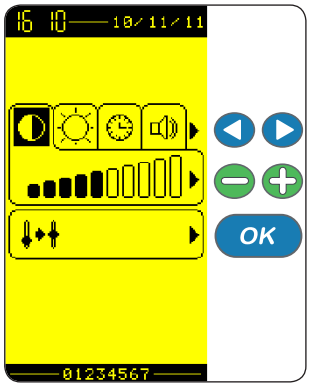

After having chosen the menu, select the various choices of modifications, if required, using the arrows .

Use the buttons to change the value of the selected option, then validate for a first time using OK to display the parameter-modification confirmation message, then press again to validate. To return to the previous page, press on Exit.

https://truckmanualshub.com/

DESCRIPTION OF THE SUB-MENUS

Icons	Menu	Sub-menu	Parameters	User		Dealer / Renters	
				Visu	Maintenance	Visu	Maintenance
	Access codes			Without		****	
	Screen settings	Platform locking (option)			X		
		Settings immobilizer (option)					X
		Settings codes platform locking					X
		Return default locking code					X
	Screen settings	Screen setting: Contrast, Brightness.			X		X
		Date, time, screen beep deactivation			X		X
	Coding	View program and equipment codes		X		X	
		View history of Machine N° per module				X	
	Diagnostic	1 - Engine hour counters	Hire counter	X			X
			Engine hour counter	X			X
		2 - Daily hours, engine running		X			X
		3 - View inputs / outputs		X		X	
		4 - Diagnostic	Faults detection	X		X	
		5 - Fault history	View Fault history	X		X	
	Paramètres	User options	Translation and movement beep options		X		X
			Optional rotating flashing light on switch-on		X		X
		Dealer options	Telescope locking				X
			Prohibition on forward movement during Work mode				X
			Prohibition on basket tilting during Work mode				X
			Activation of wheel realignment				X
			Safe Man System Activation				X
		Manufacturer options	Encoded anti-starting			X	
		Languages > French, English, German, Dutch only				X	
		System parameters	Engine management				X
			Lower arms				X
			Upper arms				X
			Telescope				X
			Telescope end stop				X
			Pendular arm				X
			Turret rotation				X
			Steering control				X
			Basket rotation				X
			Steering control				X
			Maintenance intervals				X
	Maintenance	Maintenance	Visu des prochaines maintenances attendues	X		X	
			Validation des maintenances effectuées				X
		Historique Maintenance	Visu maintenances effectuées			X	

https://truckmanualshub.com/

Icons	Menu	Sub-menu	Parameters	User		Dealer / Renters	
				Visu	Maintenance	Visu	Maintenance
Display of the "CALIBRATION" icon after entry of a code.							
	Calibrations	1 - Engine rpm calibration					x
		2 - Joystick calibration					x
		3 - Speed calibration	Max raising speed for lower arms				x
			Max lowering speed for lower arms				x
			Max raising speed for upper arm				x
			Max lowering speed for upper arm				x
			Max telescope extension speed				x
			Max telescope retraction speed				x
			Max pendular arm raising speed				x
			Max pendular arm lowering speed				x
			Max basket tilt extension speed				x
			Max basket tilt retraction speed				x
			Max turret right rotation speed				x
			Max turret left rotation speed				x
			Max basket right rotation speed				x
			Max basket left rotation speed				x
			Max forward translation speed in Work mode			x	
			Max reverse translation speed in Work mode			x	
		4 - Overload calibration					x
		5 - Generator calibration					x
		6 - Parameter management	Restore machine parameters				x
			Save machine parameters				x
			Return to pre-set factory values				x

https://truckmanualshub.com/

USING THE LIFTING PLATFORM

BEFORE STARTING THE LIFTING PLATFORM

Check the following levels:

- Engine oil
- Oil in the hydraulic reservoir
- Coolant

STARTING THE LIFTING PLATFORM

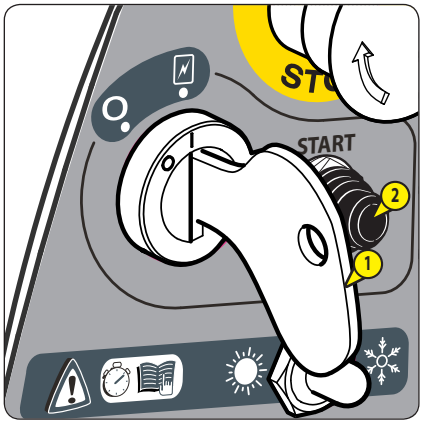

Turn the ignition key 1 to notch to make the electrical contact.

Press button 2 to start up the IC engine.

⚠ IMPORTANT ⚠

Do not operate the starter for more than 30 seconds and run a pre-heating cycle between all failed attempts to start.

Release the button as soon as the engine starts and let the engine run at tickover speed.

⚠ IMPORTANT ⚠

Never try to push or pull the lifting platform to start it. Such an action would cause severe damage to the transmission.

MOVEMENT IN TRANSPORT / WORK MODE

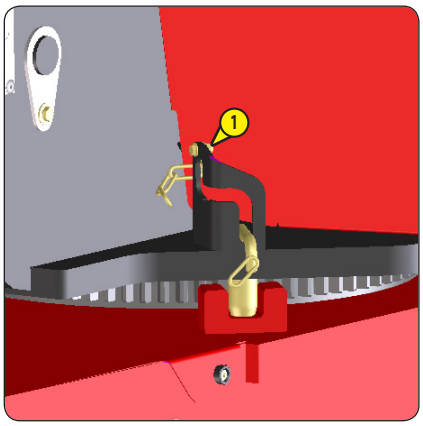

Before moving or using the machine, remove the turret lock 1.

The lifting platform has two separate movement modes: Transport mode and Work mode (direction of forward movement).

Transport mode: the lifting platform's arms are in the Low position and the telescope is retracted; the pendular arm may be raised completely. This mode enables you to move at high speed and operate beyond the tilt limit of the machine (See the CHARACTERISTICS section).

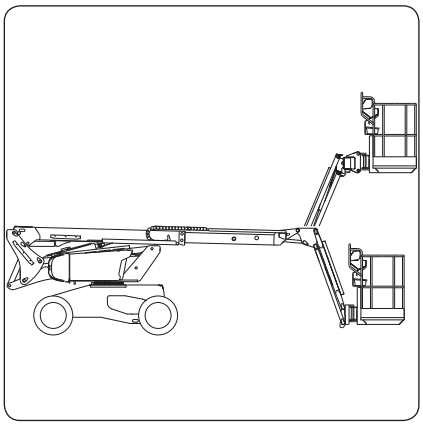

https://truckmanualshub.com/

Work mode : one or more of the lifting platform's arms are raised and/or the telescope is extended. In this mode, translations are made at slow speed and the safety systems for tilt and overload are active.

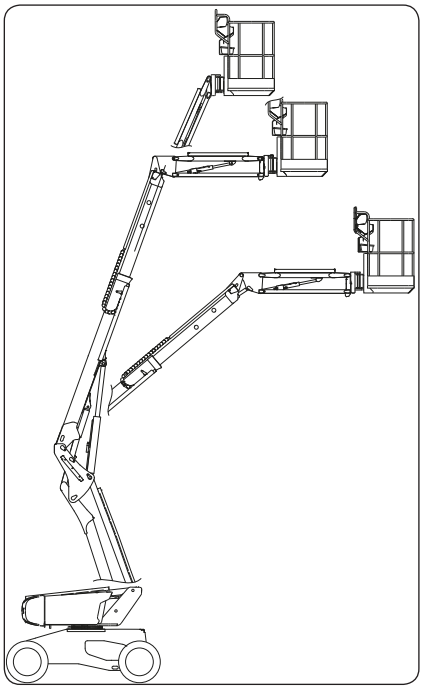

NB: You must use Ramp speed (full power with the speed restricted) to cross over steep slopes or move over very broken ground. This can prove very useful, for instance, if an access ramp must be borrowed to move the lifting platform onto a truck bed.

⚠ IMPORTANT ⚠

In Work mode, any movement over broken ground, loose surfaces, slopes greater than the authorised level of tilt (see the CHARACTERISTICS section) likely to overturn or unbalance the lifting platform is PROHIBITED.

⚠ IMPORTANT ⚠

The turret must be in the lifting platform's axis when making a translation in Hare mode.

⚠ IMPORTANT ⚠

Before driving the lifting platform, ensure that the turret is correctly oriented with respect to the chassis, i.e. in the translation direction (black and white arrows).

In the case of a steep slope: - no load in the basket;

INSTALLATION ON THE WORK SITE AND LIFTING

The lifting platform has been designed to work on a flat, horizontal surface; it is important to clear the space in which the lifting platform will be working.

Bring the lifting platform to the work site.

If necessary, load the equipment to be carried (stack so as not to inconvenience the operator and prevent anything falling).

Climb into the lifting platform.

⚠ IMPORTANT ⚠

Wearing a safety helmet and a harness is compulsory.

Press the "Dead Man's" pedal and start to manoeuvre to position yourself in the work area.

NB: When the lifting platform is free of the chassis, translation switches automatically to slow speed.

Only the pendular arm can be raised completely while maintaining Transport speed.

⚠ IMPORTANT ⚠

When manoeuvring the lifting platform (lifting, rotation...), look around and above you. Pay particular attention to the electric cables and any items that may be in the lifting platform's operating space.

⚠ IMPORTANT ⚠

Familiarise yourself with the instruments on the ground maintenance and emergency station and in the basket, described in the previous pages and in particular the warnings specifying the risks involved in performing certain manoeuvres.

https://truckmanualshub.com/

SAFETY SYSTEMS

- When the lifting platform is overloaded, the buzzer sounds continuously and all movements are blocked.
  - Solution : unburden the basket.

LOWERING

- When the work is complete: retract the telescope and lower the arms to bring the lifting platform back to Transport position.

⚠ IMPORTANT ⚠

Pay attention to the people on the ground when you are descending.

STOPPING THE LIFTING PLATFORM

- When the lifting platform is not being used, cut off the electrical power supply by setting the ignition key to the Neutral position (see 1 – Ignition).

https://truckmanualshub.com/

LOADING / UNLOADING THE LIFTING PLATFORM

⚠ IMPORTANT ⚠

Check that the safety instructions relating to the truck bed have been correctly applied before loading the lifting platform and ensure that the transport vehicle's driver is aware of the lifting platform's dimensional characteristics and its weight.

(see the CHARACTERISTICS section).

- When loading the lifting platform on to a truck bed, the platform must be in Transport position:
  - Counterweight facing the ramp (counterweight above the lifting platform's steering wheels).
  - Upper arm on its stop
  - intermediate arm in the Low position
  - Telescope retracted
  - It is possible to raise the pendular arm so that it does not touch the ground but it is inadvisable to make a translation movement with the basket raised excessively; keep the basket in the lowest possible position during manoeuvres (danger of objects falling or impacts; see 1 - Safety Instructions and Advice; Driving Instructions section).
  - Block the lifting platform's turret from rotating by using the pin 1 (Fig. A (see the CONTROL INSTRUMENTS section, paragraph: BLOCKING TURRET ROTATION)
  - Use "Ramp" speed

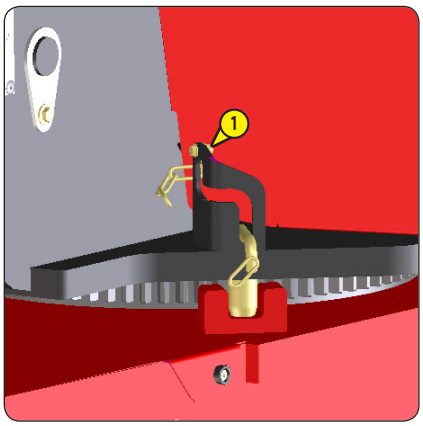

⚠ IMPORTANT ⚠

Ensure that the truck bed is large enough and has a sufficient load capacity to transport the lifting platform. Also check the truck bed's permissible ground contact pressure with regard to the lifting platform.

⚠ IMPORTANT ⚠

There is a risk of the lifting platform losing adherence (sliding or slipping) when going up or down the loading ramps, when these are wet, muddy or damp. It is therefore necessary to ensure the platform's stability with a winch attached to the lash-down points on the machine.

Loading

- Fix the loading ramps to the truck bed so as to have the smallest angle possible for loading the machine.
- Chock the truck bed's wheels 1.

⚠ IMPORTANT ⚠

Please adapt the lifting platform's translation speed by controlling it with the translation joystick.

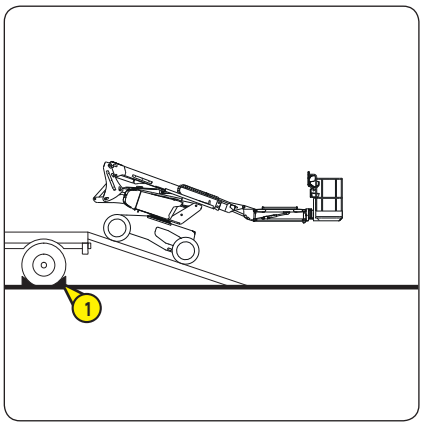

Procedure for folding the lifting platform

- Raise the upper arm.
- Extend slightly the telescop.
- Initiate the basket tilt movement to fold the basket under the upper arm.
- Lower the upper arm, paying attention not to hit the basket on the ground.

Initiate the basket tilt movement again to fold the basket to the maximum under the upper arm.

Lashing down the lifting platform

- Set chocks on the truck bed on each of the lifting platform's tyres, front and rear 1.
- Also set chocks on the truck bed on the inside and the outside of each tyre 2.
- Set chocks under the basket corners.

⚠ IMPORTANT ⚠

Do not lash the basket with ropes.

- Lash the lifting platform down on the truck bed with sufficiently strong ropes 3, to the front and the rear, passing the ropes through the slinging eyes.

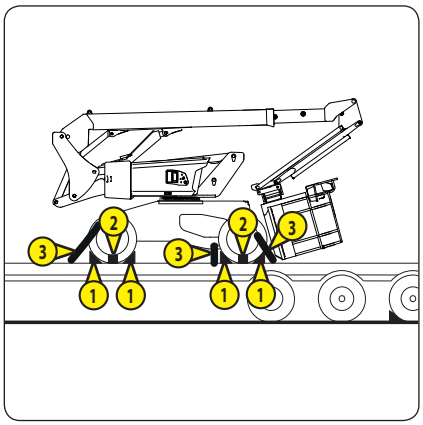

https://truckmanualshub.com/

RESCUE PROCEDURE

This paragraph describes the procedures to follow, the controls to use in the event of a problem (breakdown of the lifting platform or someone trapped in the basket) while the lifting platform is working.

When taking over the machine and regularly afterwards, the details of this procedure must be read and fully understood by the operator and everyone whose duties are centred on activities in contact with the machine.

IN THE EVENT OF THE OPERATOR FALLING ILL – PRIORITY SYSTEM

- In the case where the user accidently triggers the basket emergency stop, the person on the ground can take control of the nacelle from the backup and maintenance control panel.
- Follow the instructions below.
- Switch the contactor 1 to Position A and hold it down to recover control of the platform's movements.
- Restart the engine 2.
- Proceed to lower the platform using the base controls.

⚠ IMPORTANT ⚠

Pay attention to any constructions or objects that may be under the lifting platform.

IN THE EVENT OF AN ACCIDENT OR MACHINE BREAKDOWN – EMERGENCY SYSTEM

Electrical breakdown

- When an accident occurs or a breakdown makes the electrical control boxes unusable, the machine is provided with systems for manually performing all the lifting platform's movements.
- Lift the turret's left hand cover.
- Grab the pump lever 1 and place it in the pomp compartment 2.

⚠ IMPORTANT ⚠

During these operations the system does not control:

The Tilt safety system.

The Basket Overload safety system.

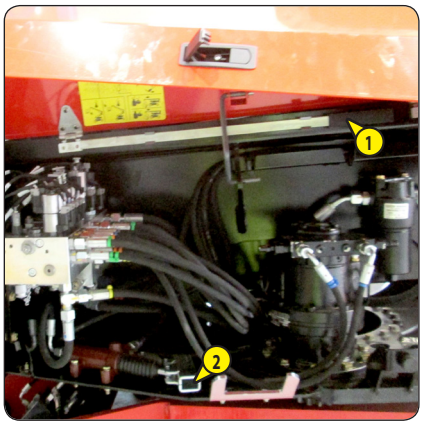

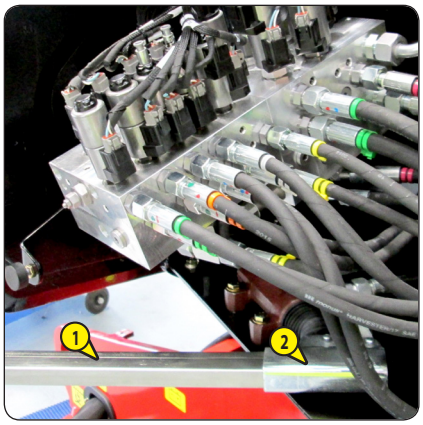

https://truckmanualshub.com/

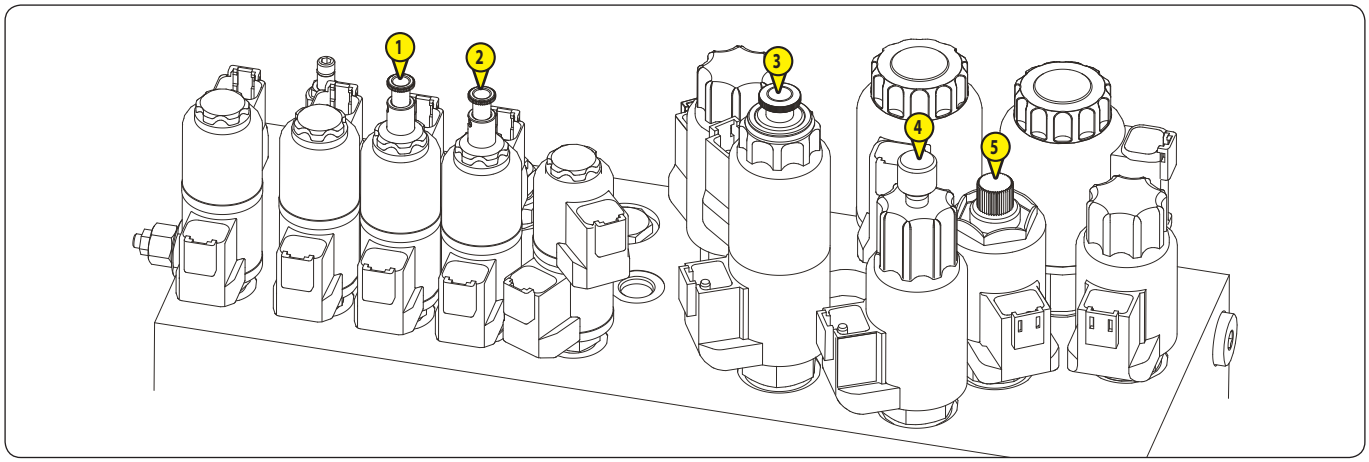

For turret rotation

- Press button 1 and turn a quarter clockwise to block it.
- Pump with the lever.
- The turret turn to the left.
- Pull the button to "neutral" position.
- Pull the button 1 and turn a quarter anti-clockwise to block it.
- Pump with the lever.
- The turret turn to the right.

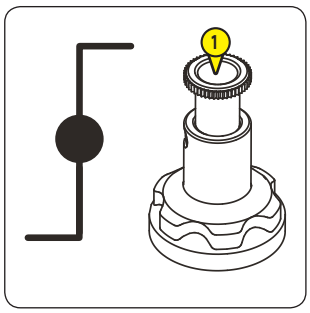

⚠ IMPORTANT ⚠

Put the button back to "neutral" position.

To raise / lower the pendular arm

- Press button 2 and turn a quarter clockwise to block it.
- Pump with the lever.
- The pendular lower.
- Pull the button to "neutral" position.
- Pull the button 2 and turn a quarter anti-clockwise to block it.
- Pump with the lever.
- The pendular raise.

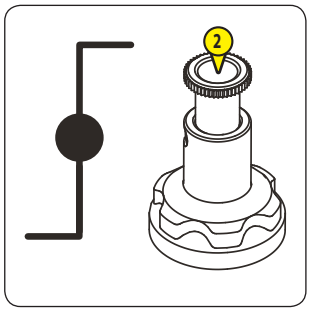

⚠ IMPORTANT ⚠

Put the button back to "neutral" position.

To raise and lower the upper arm

- Press button 3 and turn a quarter clockwise to block it.
- Pump with the lever.
- The upper arm lower.
- Pull the button to "neutral" position.
- Pull the button 3 and turn a quarter anti-clockwise to block it.
- Pump with the lever.
- The upper arm raise.

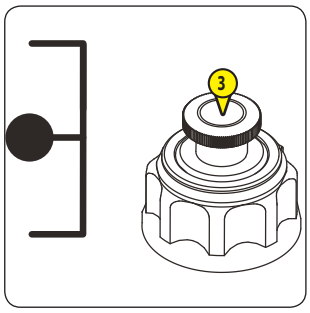

⚠ IMPORTANT ⚠

Put the button back to "neutral" position.

To extend and retract the telescope

- Turn the wheel on valve 4 clockwise.
- Turn the wheel on valve 5 anti-clockwise.
- Pump with the lever.
- The telescope extend.
- Turn the wheel on valve 4 clockwise.
- Turn the wheel on valve 5 clockwise.
- Pump with the lever.
- The telescope retract.

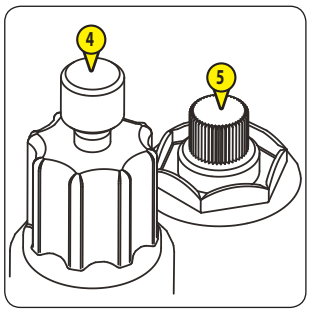

⚠ IMPORTANT ⚠

To put the distributor valves in "neutral" position, turn the wheel 4 anti-clockwise and the wheel 5 clockwise.

https://truckmanualshub.com/

1 - SAFEMANSYSTEM

The SafeManSystem option is a system used to disable all of the basket control panel controls when activated by the lifting platform user.

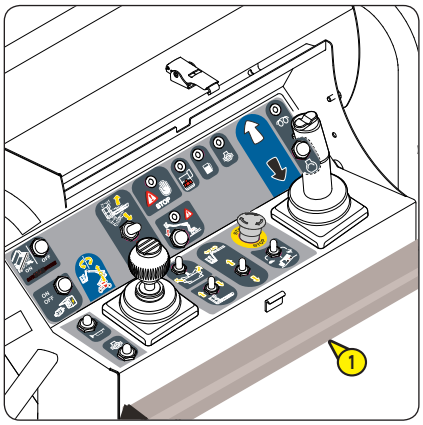

OPERATION

- Each time the lifting platform is switched on, a system test is performed: there is a beep and the blue warning light flashes.
- If the pressure-sensitive edge is pressed, the system cuts all of the lifting platform controls. The blue warning light and an audible alarm are activated.
- If the user releases the pressure-sensitive edge:
- By pressing the nacelle "OFF" rearming button once, the user can regain control of the nacelle controls. The blue warning light and the audible alarm are turned off.
- If the user continues to press on the pressure-sensitive edge:
- By pressing the lifting platform "OFF" rearming button once, the user can regain control of the lifting platform controls. The blue warning light and the audible alarm are turned off when the user releases the pressure-sensitive edge.

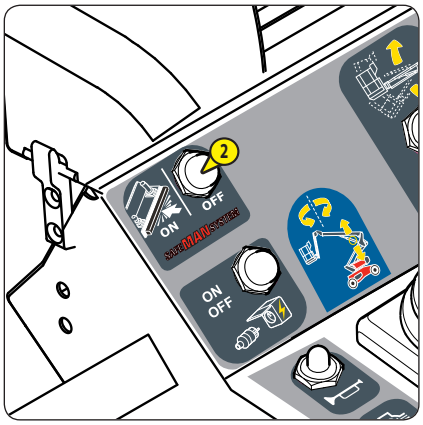

⚠ IMPORTANT ⚠

When the "retracting telescope" option is activated, the telescope retracts automatically when the SafeManSystem is triggered.

2 - GENERATOR

Precautions for use for the operator when using lifting platforms fitted with this option:

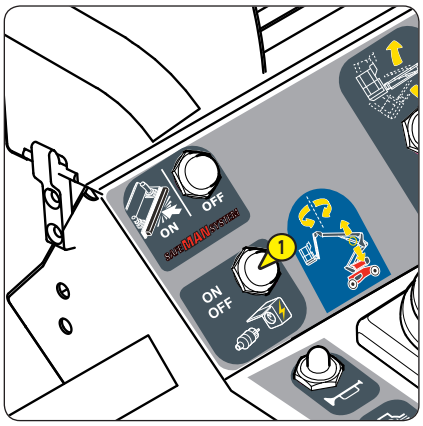

⚠ IMPORTANT ⚠

Do not connect electrical equipment that is not fitted with a shut-off switch. Voltage spikes may occur when starting the generator.

ON: Use the switch on the basket console to activate the generator.

OFF: Press the button to activate or deactivate the generator

The generator stops temporarily during a hydraulic movement (e.g.: an arm movement).

https://truckmanualshub.com/

3 - MAINTENANCE

https://truckmanualshub.com/

https://truckmanualshub.com/

TABLE OF CONTENTS

3 - MAINTENANCE

ORIGINAL MANITOU SPARE PARTS AND EQUIPMENT 4

FILTERS CARTRIDGES AND BELTS 5

LUBRICANTS AND FUEL 6

MAINTENANCE TABLE 8

A - DAILY OR EVERY 10 HOURS OF OPERATION 10

B - EVERY 50 HOURS OF OPERATION 14

C - EVERY 250 HOURS OF OPERATION 18

D - EVERY 500 HOURS OF OPERATION 24

E - EVERY 1000 HOURS OF OPERATION 30

F - EVERY 2000 HOURS OF OPERATION OR TWO YEARS 32

G - OCCASIONAL MAINTENANCE 34

https://truckmanualshub.com/

ORIGINAL MANITOU SPARE PARTS AND EQUIPMENT

OUR PERSONNEL LIFTING PLATFORMS MUST ONLY BE SERVICED USING MANITOU ORIGINAL PARTS.

EN AUTORISANT L'UTILISATION DE PIÈCES NON D'ORIGINE MANITOU, VOUS RISQUEZ :

- Legally -to be held responsible in the event of an accident.
- Technically - to cause operating malfunctions or shorten the life of the lift truck.

⚠ IMPORTANT ⚠

THE USE OF COUNTERFEIT PARTS OR COMPONENTS NOT APPROVED BY THE MANUFACTURER, WILL CAUSE YOU TO LOSE THE BENEFIT OF THE CONTRACTUAL GUARANTEE.

BY USING ORIGINAL MANITOU PARTS FOR MAINTENANCE OPERATIONS, YOU BENEFIT FROM OUR KNOW-HOW

Through its network, MANITOU provides the user with,

- Know-how and competence.
- The guarantee of high-quality work.
- Original replacement parts.
- Help with preventive maintenance.
- Efficient help with diagnosis.
- Improvements due to experience feedback.
- Operator training.
- Only the MANITOU network has detailed knowledge of the design of the lift truck and therefore the best technical ability to provide maintenance.

⚠ IMPORTANT ⚠

ORIGINAL REPLACEMENT PARTS ARE DISTRIBUTED EXCLUSIVELY BY MANITOU AND ITS DEALER NETWORK.

The dealer network list is available on the MANITOU web site www.manitou.com

https://truckmanualshub.com/

FILTERS CARTRIDGES AND BELTS

ENGINE

ENGINE OIL FILTER
Part number: 894022
Change: 500 H

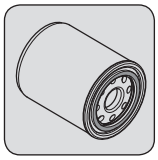

ALTERNATOR BELT
Part number: 942079
Change: 500 H

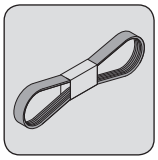

DRY AIR FILTER CARTRIDGE
Part number: 942077
Clean: 50 H
Change: 500 H

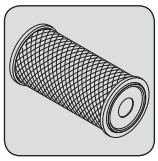

FUEL FILTER CARTRIDGE
Part number: 781909
Change: 500 H

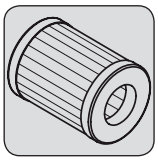

SAFETY DRY AIR FILTER CARTRIDGE
Part number: 942078
Change: 1000 H

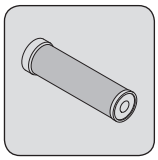

FUEL PRE-FILTER
Part number: 734146

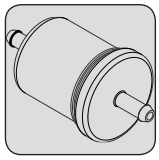

HYDRAULIC SYSTEM

HYDRAULIC RETURN OIL FILTER CARTRIDGE
Part number: 942081
Change: 500 H

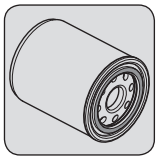

SUCTION STRAINER FOR HYDRAULIC OIL TANK
Part number: 52513197
Clean: 1000 H

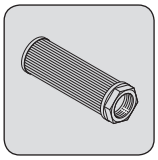

HYDRAULIC RESERVOIR FILLING STRAINER
Part number: 259499

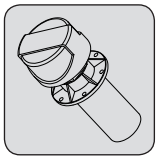

AUXILIARY HYDRAULIC RETURN OIL FILTER CARTRIDGE
Part number: 518251
Change: 500 H

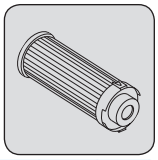

ELECTRICAL COMPONENTS

CAPTEUR DE DEVERS
Part number: 52524733

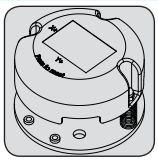

DEAD MAN'S PEDAL
Part number: 831136

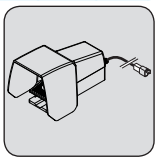

OVERLOAD SENSOR
Part number: 506936

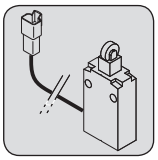

ARM SENSOR
Part number: 833439

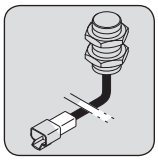

TELESCOPE SENSOR
Part number: 833439

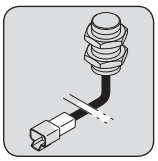

https://truckmanualshub.com/

LUBRICANTS AND FUEL

⚠ IMPORTANT ⚠

USE THE RECOMMENDED LUBRICANTS AND FUEL:

- For topping up, oils may not be miscible.

- For oil changes, MANITOU oils are perfectly appropriate.

DIAGNOSTIC ANALYSIS OF OILS

If a service or maintenance contract has been organized with the dealer, a diagnostic analysis of engine, transmission and axle oils may be requested depending on the rate of use.

(*) RECOMMENDED FUEL SPECIFICATION:

Use a high-quality fuel to obtain optimal performance of the engine.

- Type of diesel fuel EN590
- Type of diesel fuel ASTM D975

ENGINE

ORGANS TO BE LUBRICATED	CAPACITY	RECOMMENDATION	PACKAGING	PART NUMBER
ENGINE	5 Litres	MANITOU Oil **"Engine SAE 15W/40"**	5 l 20 l 55 l 209 l 1000 l	661706 582357 582358 582359 490205
COOLING CIRCUIT	9 Litres	Cooling liquid (protection - 35°)	4 l 20 l 210 l	894967 894968 894969
FUEL TANK	53 Litres	Diesel fuel (*)		

TRANSMISSION

ORGANS TO BE LUBRICATED	RECOMMENDATION	PACKAGING	PART NUMBER
FRONT DIRECTION PIVOT	MANITOU Grease BLUE multi-purpose	400 g 1 kg 5 kg 20 kg 50 kg	161589 720683 554974 499233 489670

LIFTING STRUCTURE

ORGANS TO BE LUBRICATED	RECOMMENDATION	PACKAGING	PART NUMBER
GENERAL LUBRICATION	Graisse MANITOU Haute Performance	Cartouche 400 g	479330
TURRET CROWN GEAR BEARING RACEWAYS LUBRICATION			
TURRET CROWN GEAR TEETH LUBRICATION	Huile shell MALLEUS GL 205		
BRAKE REDUCER ON THE TURRET'S REDUCTION 0,85 Litres	MANITOU SAE80W90 axle / gearbox mechanical transmission oil SAE80W90	2 l 20 l 55 l 220 l	499237 546330 546221 546220

HYDRAULIC

ORGANS TO BE LUBRICATED	CAPACITY	RECOMMENDATION	PACKAGING	PART NUMBER
HYDRAULIC OIL RESERVOIR	61 Litres	MANITOU Hydraulic ISO VG 46 oil	5 l 20 l 55 l 209 l	545500 582297 546108 546109

https://truckmanualshub.com/

https://truckmanualshub.com/

MAINTENANCE TABLE

⚠ IMPORTANT ⚠

(1): MANDATORY 500 HOUR OR 6 MONTH SERVICE. This service must be carried out after approximately the first 500 hours of operation or within the 6 months following the start-up of the machine (whichever occurs first).

(2): The internal-combustion engine oil and its oil filter must be replaced after the first 50 hours of operation, and subsequently every 500 hours of operation.

(3): Contact your dealer.

A = ADJUST, C = CHECK, G = GREASE, N = CLEAN, P = BLEED, R = REPLACE, V = DRAIN	PAGE	(1)	DAILY OR EVERY 10 HOURS OF SERVICE	EVERY 50 HOURS OF SERVICE	EVERY 250 HOURS OF SERVICE	EVERY 500 HOURS OF SERVICE OR EVERY 6 MONTHS	EVERY 1000 HOURS OF SERVICE OR EVERY ONE YEAR	EVERY 2000 HOURS OF SERVICE OR EVERY TWO YEARS	EVERY 4000 HOURS OF SERVICE	OCCASIONALLY
ENGINE										
- Engine oil level (2)	3-11/3-26	V/R	C			V/R				
- Cooling liquid level	3-11/3-32	C	C					V/R		
- Fuel level	3-11	C	C							
- Fuel circuit hose	3-14/3-34			C						P
- Radiator core	3-15	N		N						
- Dry air filter cartridge	3-15/3-24	R		N		R				
- Alternator/crankshaft/fan belt tension	3-14/3-26	C/A		C/A	C/A	R				
- Cooling circuit	3-21	C			C					
- Fuel filter	3-22	N			N					
- Fuel filter cartridge (2)	3-16/3-24	R		R		R				
- Fuel pre-filter	3-24	R				R				
- Engine oil filter (2)	3-27	R				R				
- Fuel tank	3-30						V/N			
- Dry air filter safety cartridge	3-30						R			
- Engine silentblocks	3-31						C (3)			
- I.C. engine rates	3-31						C (3)			
- Valves clearances	3-31	C (3)					C (3)			
- Injectors	3-33							(3)		
- Radiator	3-33							C (3)		
- Water pump and thermostat	3-32							C (3)		
- Alternator and starter	3-32							C (3)		
- Fuel injection pressure	3-32							C (3)		
- Turbocompressor	3-33							C (3)		
- Injection pump	3-33							C (3)		
TRANSMISSION										
- Brakes	3-12/3-26	C	C			C				
- Direction pivots	3-14			C						
- Hydrostatic transmission circuit pressure	3-31						C (3)			
- Start of hydrostatic transmission control	3-31						C/A (3)			
TYRES										
- Condition of the wheels and tyres	3-12	C	C							
- Tightness of the wheel nuts	3-18				C					
- Wheels	3-34									R
LIFTING STRUCTURE										
- Telescope adjustment	3-18				C					
- Brake reducer on the turret reduction gear	3-18/3-28				C	V/R				
- Tightness of the bolts on the turret rotation motor	3-26					C				
HYDRAULIC SYSTEM										
- Hydraulic oil	3-12/3-25	C	C				V/R			
- Hydrostatic transmission oil filter cartridge	3-24	R				R				
- Auxiliary oil filter cartridge	3-25					R				
- Condition of the hoses	3-25					C				
- Hydraulic circuit strainer	3-31						N			
- Hydraulic movement speeds	3-31						C (3)			
- Condition of the cylinders (leaks, rods)	3-30						C (3)			
- Hydraulic oil reservoir	3-32							N		
- Hydraulic circuit pressures	3-32							C (3)		
- Hydraulic circuit flows	3-32							C (3)		
- Manual emergency pump	3-18				C					

https://truckmanualshub.com/

A = RÉGLER, C = CONTRÔLER, G = GRAISSER, N = NETTOYER, P = PURGER, R = REMPLACER, V = VIDANGER	PAGE	(1)	TOUS LES JOURS OU TOUTES LES 10 HEURES DE MARCHE	TOUTES LES 50 HEURES DE MARCHE	TOUTES LES 250 HEURES DE MARCHE	TOUTES LES 500 HEURES DE MARCHE OU 6 MOIS	TOUTES LES 1000 HEURES DE MARCHE OU 1 AN	TOUTES LES 2000 HEURES DE MARCHE OU 2 ANS	TOUTES LES 4000 HEURES DE MARCHE	OCCASIONNELLE
ELECTRICITY										
- Condition of the joystick bellows	3-12		C							
- Level of electrolyte in the battery	3-14	C		C						
- Arm position sensors	3-21	C			C					
- Tilt sensor	3-21	C			C					
- Overload sensors	3-21	C			C					
- Density of the electrolyte in the battery	3-27	C				C				
- Condition of the cable bundles and the cables themselves	3-30	C					C (3)			
CHASSIS										
- Turret orientation crown	3-19	G			G					
- Shafts	3-20				G					
- Tightness of the bolts fixing the axle assemblies on the chassis	3-21	C			C					
- Tightness of the turret orientation crown bolts	3-26	C				C				
LIFTING PLATFORM										
- General inspection	3-10	C	C							
- Functional checks	3-10	C	C							
- Lifting platform stickers	3-22				C					
- Overload	3-22				C					
- Stopping distance	3-22				C					
- Setting in Freewheeling mode	3-35									X
- Transporting the lifting platform on a truck bed	3-34									X
- Hoisting with a sling the lifting platform	3-34									X
OPTION										
- SafeManSystem State	3-12		C							

https://truckmanualshub.com/

A - DAILY OR EVERY 10 HOURS OF OPERATION

A1 – GENERAL INSPECTION

CHECK

Scrupulously inspect the machine and check that there are no cracked welds, corrosion or structural damage, loose or missing nuts and bolts, hydraulic leaks, damaged control cables or loose electrical connections.

Inspect the safety harness hook-up points in the basket and check that there are no cracked welds, corrosion and structural damage.

Inspect the "dead man's" pedal in the platform and check that there is no object in the platform that could stop the good functionning of the pedal.

A2 – FUNCTIONAL CHECKS

CHECK

⚠ IMPORTANT ⚠

Any malfunction of the platform must be detected every day before putting it into service. Identify any malfunction and take the platform out of service if any malfunction is detected.

Choose a testing area on a sturdy level unencumbered surface.

When manoeuvring the platform (raising, rotation...), look all around and above you. Pay particular attention to any electrical cables or other objects that may be in the platform's operating area.

EMERGENCY STOP

- Press the Emergency Stop knobs on the base control station.
  - Result: the engine should stop and no functions should be active.
- Pull the Emergency Stop knob to the Go position and restart the engine.
- Perform the test with the basket Emergency Stop knob with a view to achieving the same result.

DEAD MAN'S FUNCTIONS

- Without pressing the raising confirmation button, the so-called "Dead Man's" button, select a function for raising the platform.
  - Result: the platform should not rise.
- Press the raising confirmation button, the so-called "Dead Man's" button, and select a function for raising the platform.
  - Result: the platform should rise.
- Perform this test on the raising, lowering, turret rotation and translation functions with a view to achieving the same result.

BUZZER

- Press the basket's buzzer
  - Result: the buzzer should sound.

RAISING / LOWERING FUNCTIONS

- Select all the raising functions and then the lowering ones from the base console (lower arm and telescope – pendular unit – pendular unit telescope extension and retraction – telescope arm extension and retraction).
  - Result: the lifting platform should raise and then lower.
- Select all the raising functions and then the lowering ones from the basket console (lower arm and telescope – pendular unit – pendular unit telescope extension and retraction – telescope arm extension and retraction).
  - Result: the lifting platform should raise and then lower.

STEERING

- Remark: when testing the steering and translation functions, stand on the platform and turn in the direction the machine is moving.
- From the basket console, select the steering control.
  - Result: the steering wheels should turn in the instructed direction.

TRANSLATION AND BRAKING

- Select a translation control.
  - Result: the machine should move in the direction indicated by the white arrow for forward motion and by the black arrow for reverse and then stop when the control is released.

TRANSLATION SPEEDS IN WORK MODE

- Raise the lower arm and the telescope and/or extend the telescope and/or extend the pendular unit telescope.
- Perform a translation.
  - Result: translation should be performed at work speed.

https://truckmanualshub.com/

TILT SENSOR

Fold back the arms for this operation.

- Set the lifting platform in such a position that it is tilting more than the authorized amount.
  - Result: the raising and telescope extension movements should be blocked. The Tilt light is lit in the basket and the buzzer is ON intermittently in the basket.

OVERLOAD SENSOR

Fold the arms into transport position for this operation.

- Place a weight in the basket that is heavier than that indicated.
  - Result: all movements should be blocked. The Overload light is lit in the basket and the buzzer is ON continuously in the basket.

A3 – IC ENGINE OIL LEVEL

CHECK

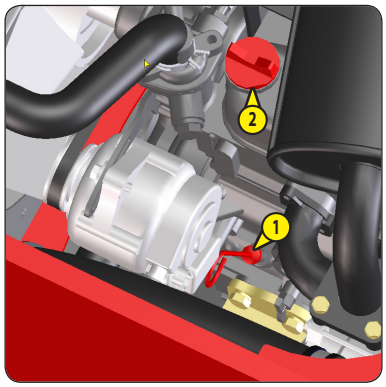

Set the lifting platform on a horizontal surface with the engine switched off and let the oil drain back into the sump.

- Open the rear cover.
- Remove the dipstick 1
- Wipe the dipstick and check that the oil level is between the two upper notches.
- If necessary, add oil (see the LUBRICANTS section) via the filling hole 2.

A4 – COLLANT LEVEL

CHECK

Set the platform on a horizontal surface with the engine off and wait for the engine to cool down.

- Open the rear cover.
- Remove the radiator cap 1.
- Check that the coolant level is up to the supply opening.

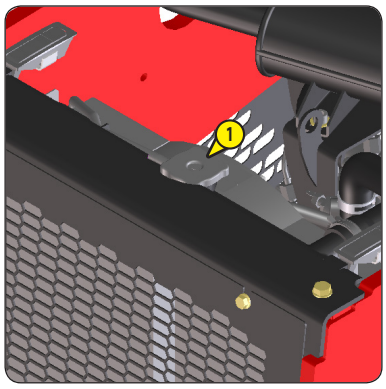

⚠ IMPORTANT ⚠

If the radiator cap must be removed, follow the above precautions and then retighten it securely.

Use pure fresh water and an antifreeze solution to refill the emergency reservoir.

If a water leak occurs, contact your dealer.

Ensure that muddy water or sea water does not get into the radiator.

Do not refill the emergency reservoir with coolant above the 'FULL' marking.

Take care to tighten the cap firmly. If the cap is loose or badly closed, water can escape and the engine can overheat.

⚠ IMPORTANT ⚠

Do not remove the radiator cap when the engine is hot. Then, gently loosen the cap up to the stop to release any excessive pressure before removing the cap completely. If the engine overheats, steam may spurt from the radiator or the emergency reservoir, possibly causing severe burns.

A5 – FUEL LEVEL

CHECK

Keep the fuel tank as full as possible to reduce any condensation due to atmospheric conditions as much as possible.

- Remove ethe cap 1.
- Top up the tank via the filling hole with clean Diesel, filtered through a strainer or a clean, lint-free cloth.

⚠ IMPORTANT ⚠

Do not smoke or bring a naked flame near to the tank during filling or when the tank is open. Never fill the tank with the engine running.

⚠ IMPORTANT ⚠

The fuel tank is vented by the filling cap. When changing the cap, always use an original cap with the vent hole.

https://truckmanualshub.com/

A6 – HYDRAULIC OIL LEVEL

CHECK

- Set the platform on a horizontal surface in transport position with the engine switched off.
- The oil level should be in the middle of the visual indicator 1.
- Make a 90° turret rotation on the left.
- Remove the front cover.
- If necessary, top up the oil (See the "LUBRICANTS section) via the filling hole 2.

⚠ IMPORTANT ⚠

There may be a difference in the oil level of 10 to 20mm between warm and cold oil.

It is advisable to top up the oil when the oil is warm.

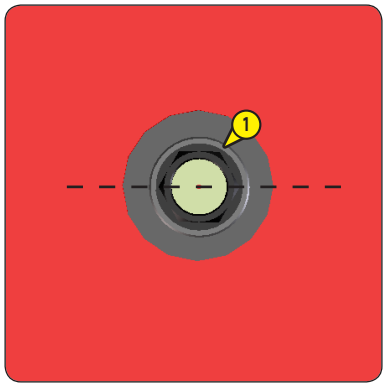

A7 – CONDITION OF THE JOYSTICK BELLOWS

CHECK

To check their condition, climb into the basket with the engine switched off.

- Check that the rubber bellows 1 on the joysticks are in good condition by operating them as if you were making a movement.

The bellows should not have any cracks or tears, through which water could penetrate risking damage to the machine's operation.

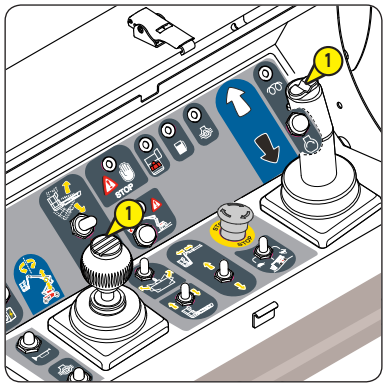

A8 – CONDITION OF THE WHEELS AND TYRES

CHECK

- Check the condition of the tyres for any cuts, tears, bulges, worn patches, etc.

A9 – SAFE MAN SYSTEM (OPTION) STATUS

CHECK

Press on the pressure-sensitive edge 1 and confirm:

- All platform movements stop.
- The blue warning light and the audible alarm operate.
- The operation of the nacelle movements when the "OFF" button is pressed once.

If the pressure-sensitive edge is defective, the blue warning light flashes faster and a special alarm sounds. However, the platform can be operated normally.

If the "OFF" rearming button does not work, use the emergency stop to rearm the platform.

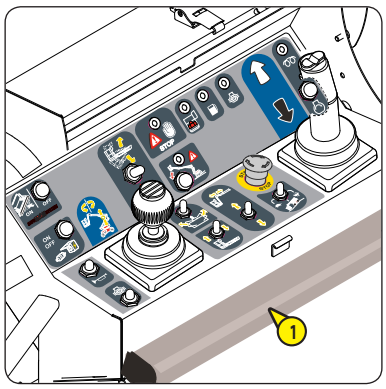

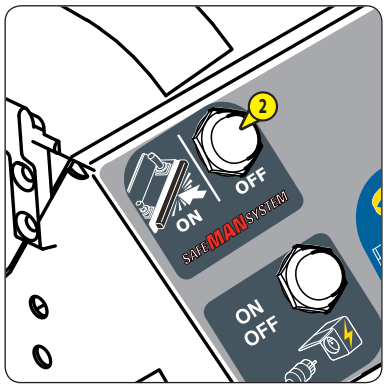

https://truckmanualshub.com/

https://truckmanualshub.com/

B - EVERY 50 HOURS OF OPERATION

Perform the operations described above as well as the following operations.

B1 – LEVEL OF BATTERY ELECTROLYTE

CHECK

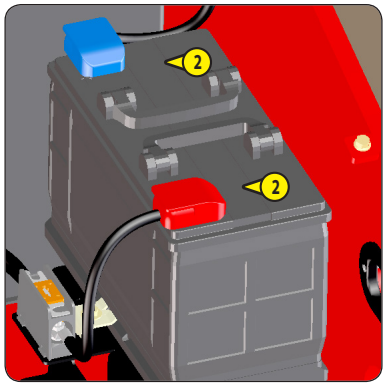

Check the electrolyte level in each battery.

If the ambient temperature is high, check the level more often than every 50 hours of operation.

- Release the caps over the elements 2.
- The level should be 1cm above the battery plates.
- If necessary, top up with distilled water, kept in a glass container.
- Clean and dry the caps 2 (Fig. B1/2) and refit them.
- Check the terminals and apply Vaseline to prevent them from oxidizing.

⚠ IMPORTANT ⚠

Manipulating and servicing a battery can be dangerous; take the following precautions:

Wear protective goggles.

Keep the battery horizontal when manipulating it.

Never smoke or work close to a naked flame.

Work in a sufficiently well-ventilated area.

If some electrolyte splashes onto your skin or in your eyes, rinse the affected area thoroughly with cold water for 15 minutes and call a doctor.

B2 – FUEL CIRCUIT HOSE

CHECK

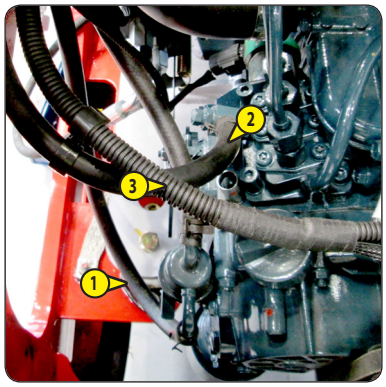

Set the lifting platform on a horizontal surface, with the engine switched off, and wait for the engine to cool down.

⚠ IMPORTANT ⚠

Check the condition of the fuel circuit hoses after switching off the engine. If the fuel supply hoses are damaged, this can cause a fire.

- Open the rear cover. Open the engine support to facilitate access to the engine.
- Visually inspect the condition of the fuel circuit's supply hoses 1, 2 ,3 and the tightening collars. If these are damaged, replace them immediately.

B3 – DIRECTION PIVOTS

GREASE

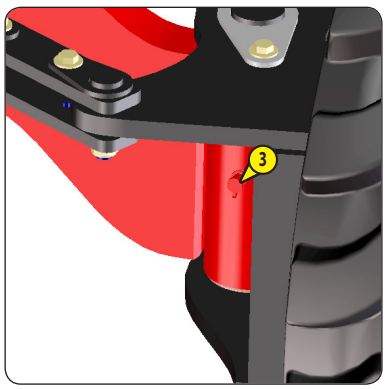

Clean and grease (see: 3 - MAINTENANCE: FILTER ELEMENTS AND BELTS) and remove the excess.

Make the same operation on the second pivot.

https://truckmanualshub.com/

B4 – ALTERNATOR/CRANKSHAFT/FAN BELT TENSION

CONTROL / ADJUST

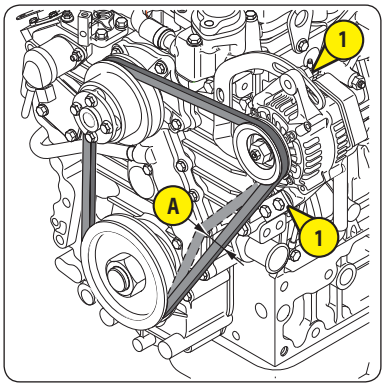

- Open the rear cover.
- Check the condition of the belt for any signs of wear or cracking and replace it, if necessary (see: 3 - MAINTENANCE: FILTER ELEMENTS AND BELTS).
- Check the tension between the crankcase and alternator pulleys.
- Under thumb pressure (98 N), the tension A must be 7 to 9 mm
- Adjust, if necessary.
- Loosen the bolts 1 two or three turns.
- Swivel the alternator assembly to obtain the requisite belt tension.
- Retighten the bolts 1.

⚠ IMPORTANT ⚠

When changing an alternator belt, recheck the tension after the first 20 hours of operation.

B5 – RADIATOR CORE

CLEAN

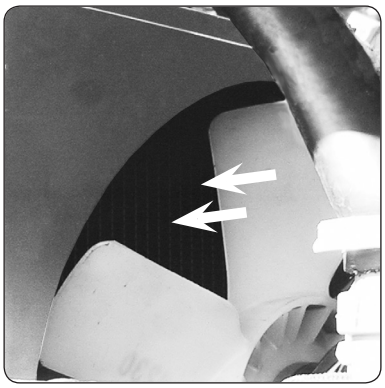

- Open the rear cover.
- To avoid clogging the radiator core, clean it with a jet of compressed air directed from the front towards the back. This is the only way to expel any dirt effectively.

⚠ IMPORTANT ⚠

Clean the radiator core daily when the lifting platform is being used in a very dusty area.

B6 – DRY AIR FILTER CARTRIDGE

CLEAN

If the machine is being used in a very dusty atmosphere, reduce these maintenance intervals and see the FILTER ELEMENTS AND BELTS section.

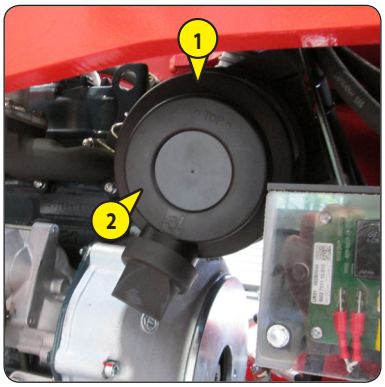

- Open the chassis right cover.
- Locate the air filter 1.
- Unclip the cover 2.
- Release the filter cartridge 3 by pulling it.
- Leave the safety filter 4 in place.
- Use a jet of compressed air to clean the filter cartridge, blowing only from the inside towards the outside.

⚠ IMPORTANT ⚠

Observe the safety distance of 30 mm between the jet of air and the cartridge to avoid tearing or piercing the cartridge. You must not blow out the cartridge near the air filter casing. Never clean the cartridge by tapping it against a hard surface. Protect your eyes during this operation.

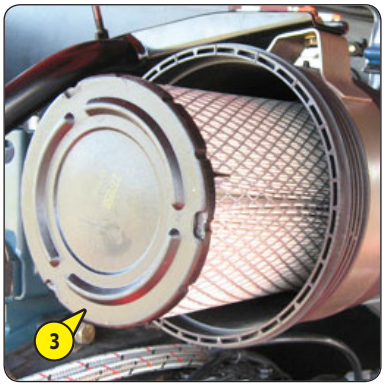

- Clean the inside of the filter with a clean, damp, lint-free cloth.
- Check the condition of the filter cartridge and replace it, if necessary.
- Refit the cartridge and the cover.

⚠ IMPORTANT ⚠

Never wash a dry air filter cartridge. You must not clean the safety cartridge located inside the filter cartridge under any circumstances; replace it with a new one if it is clogged or damaged.

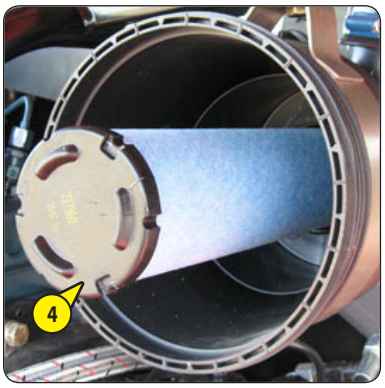

https://truckmanualshub.com/

B7 – FUEL FILTER

REPLACE

- Open the chassis left cover.
- Carefully clean the exterior of the filter and its holder to prevent dust from entering the system.
- Close the fuel tap 1 to the OFF position.
- Unscrew the retaining ring 2, remove the container 3 and clean the interior with a paintbrush impregnated with clean diesel.
- Remove the filter cartridge 4 and plunge it in diesel to rinse it.
- Reinstall the assembly with a new filter (see 3 – MAINTENANCE: FILTER ELEMENTS AND BELTS section).
- Open the fuel tap 1 to the ON position.

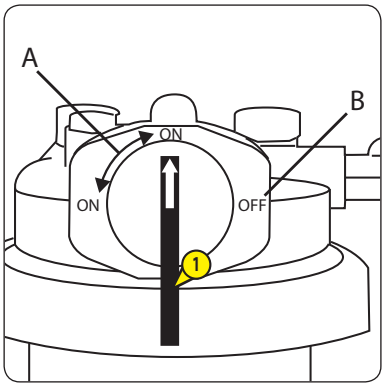

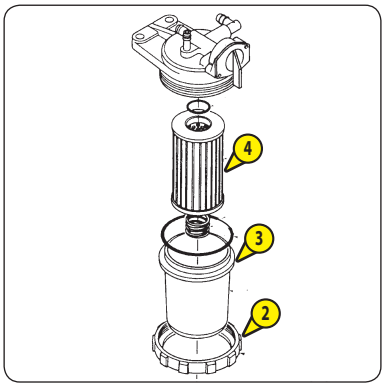

https://truckmanualshub.com/

https://truckmanualshub.com/

C - EVERY 250 HOURS OF OPERATION

Perform the operations described above as well as the following operations.

C1 – WHEELS NUTS TIGHTENING

CHECK

Check the tightness of the wheel nuts: 25 daNm ± 10%

⚠ IMPORTANT ⚠

Failure to observe this instruction may cause the wheel pins to be damaged and break, as well as the wheels to deform.

C2 – EMERGENCY PUMP

CHECK

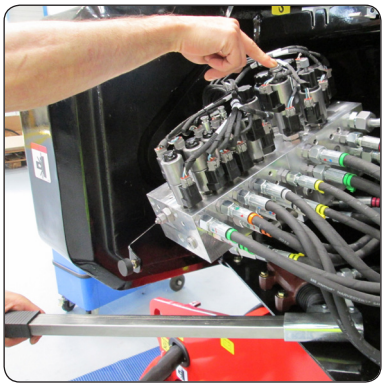

- Switch off the engine.

Check that the emergency pump is operating correctly by performing an arm lowering for example.

⚠ IMPORTANT ⚠

You must not use the lifting platform under any circumstances if the pump is not working.

C3 – ADJUSTMENT OF THE TELESCOPE ARM

CHECK

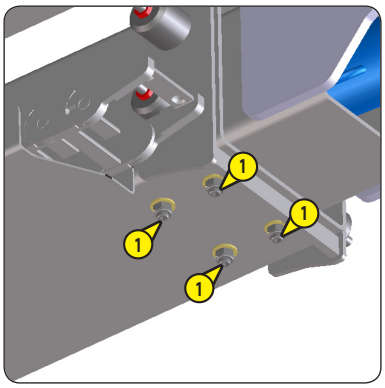

Check the tightness of the four nuts 1 on the telescope skids in the telescop arm.

⚠ IMPORTANT ⚠

Failure to observe this instruction may result in loss of the skids and damage to the telescope.

C4 – LEVEL IN THE BRAKE REDUCER IN THE TURRET'S REDUCTION GEAR

CHECK

Set the platform on a horizontal surface with the engine switched off.

- Open the left hood of the turret.
- The reduction gear has the valve block towards the back.
- Remove the filling-sniffler cap 1.
- The level is correct when the sniffler is full of oil.
- If necessary, top up with a syringe, filling the reducer via the filling-sniffler cap.
- Refit the filling-sniffler cap 1.

https://truckmanualshub.com/

C5 – TURRET ORIENTATION CROWN

GREASE

The bearing raceways and the teeth must be lubricated every 250 hours of operation and after a long stoppage period.

- Grease to be used: See the LUBRICANTS section.
- Open the left hood of the turret.
- Find the 2 grease points1 and grease thoroughly.
- Close the chassis left cover.

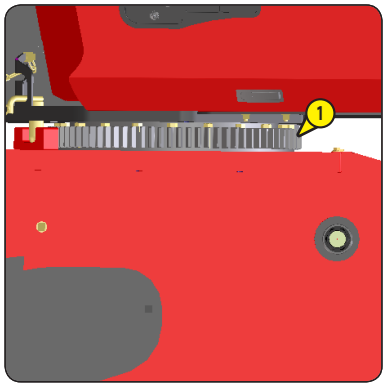

- Spread lubricant over the crown's teeth and the pinion with a paint brush 1.
- Lubricant to be used: See the LUBRICANTS section.

https://truckmanualshub.com/

Clean and then grease the following points (see the LUBRICANTS section for details of the grease) and remove the surplus.

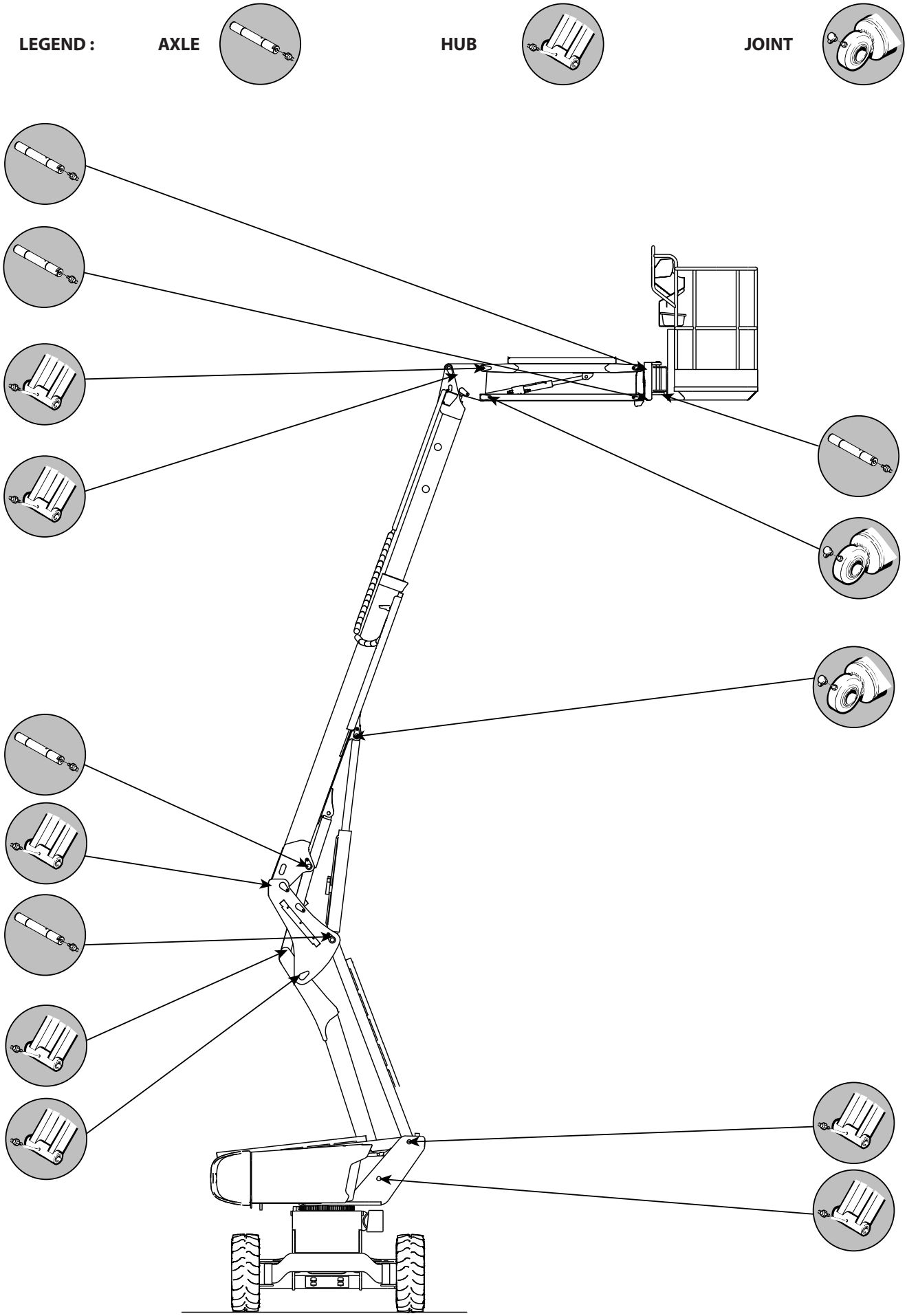

https://truckmanualshub.com/

C7 – TIGHTNESS OF THE HYDRAULIC ENGINE FIXING BOLTS ON THE CHASSIS

CHECK

- The tightness of these bolts must be checked, at the latest, after 50 hours of operation. This check must then be repeated after every 250 hours of operation.
- The bolts' tightening torque is 11,1 daN.m ± 10 %.
- 1 daN = 1 Kg.

C8 – ARM POSITION SENSORS

CHECK

For this operation, fold the arms into transport position.

- Make a translation movement at transport speed
- Raise the arm and the telescope
- Move forward
- The platform should switch to Work speed

⚠ IMPORTANT ⚠

If a malfunction occurs, prohibit use of the platform. Contact your dealer.

C9 – TILT SENSOR

CHECK

For this operation, unfold the arms.

- Set the platform in a position where the tilt is greater than the permissible level (see: 2 – DESCRIPTION: SPECIFICATIONS).
- The movements for extending the telescope and raising the arms should be blocked (the tilt light is lit in the basket; the buzzer is activated intermittently in the basket).

⚠ IMPORTANT ⚠

If a malfunction occurs, prohibit use of the platform. Contact your dealer.

C10 – OVERLOAD SENSOR

CHECK

For this operation, unfold the arms.

- Set the platform in a position where the tilt is greater than the permissible level (see: 2 – DESCRIPTION: SPECIFICATIONS).
- All movements should be blocked (the tilt light is lit in the basket; the buzzer is activated intermittently in the basket).

⚠ IMPORTANT ⚠

If a malfunction occurs, prohibit use of the platform. Contact your dealer.

C11 – COOLANT CIRCUIT HOSES

CHECK

⚠ IMPORTANT ⚠

If the coolant circuit hoses are damaged or the coolant is leaking, this may cause overheating or severe burns.

- Open the rear cover.
- Visually check the condition of the cooling circuit hoses and the tightening collars. If these are blistered, hardened or cracked, replace them immediately. (Contact your dealer)

https://truckmanualshub.com/

C12 – FUEL FILTER

CLEAN

- Set the lifting platform on a horizontal surface, with the engine switched off.
- Open the turret's left cover.
- Close the fuel tap 1 to the OFF position (B).
- Carefully clean the exterior of the filter and its holder to prevent dust from entering the system.
- Unscrew the retaining ring 2, remove the container 3 and clean the interior with a paintbrush impregnated with clean diesel.
- Remove the filter cartridge 4 and plunge it in diesel to rinse it.
- Refit the assembly.
- Open the fuel tap 1 to the ON position. (A).
- Bleed the fuel supply circuit (see: 3 - MAINTENANCE: G1 – FUEL SUPPLY CIRCUIT).

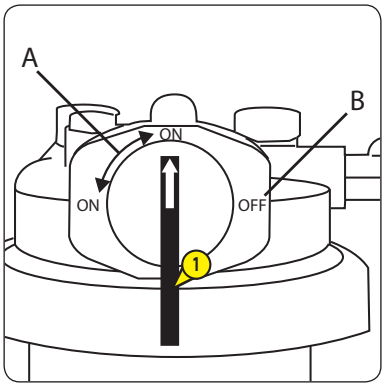

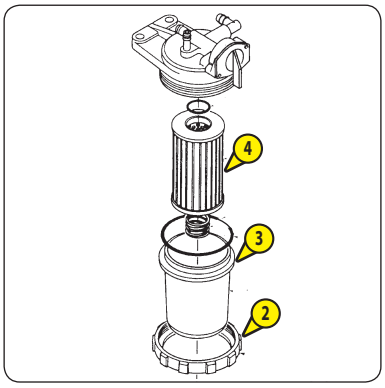

C13 – ALTERNATOR/FAN/CRANKSHAFT BELT TENSION

CHECK / ADJUST

(see: 3 - MAINTENANCE: B4).

C14 – PLATFORM STICKERS

CHECK

Check that the safety stickers are present (see: 1 – SAFETY STICKERS).

C15 – OVERLOAD

CHECK

The overload must activate at between 1.1 and 1.2 times the nominal load (see CHAPTER 2 - General characteristics).

Expected result:

- Nominal load 230 Kg : Activation load between 253 kg and 276 kg.

The overload sensors must activate at the same time.

Refer to the repair manual for information about adjusting the overload

IMPORTANT

In the case of malfunction, forbid usage of the nacelle. Consult your dealership.

https://truckmanualshub.com/

stopping distance on horizontal ground :

- The stopping distance is tested on flat ground with 1.1 times the nominal load in the basket.
- Reach maximum speed and then release the control.

Expected result:

On horizontal ground	Stopping distance
Transport speed	1400 mm +or- 40 mm
Working speed	160 mm +or- 40 mm

Check brake holding on a slope

Place the nacelle on a nominal 25% slope static with 1.1 times the nominal load in the basket.

Expected result: no slipping of the nacelle must be detected after one minute.

https://truckmanualshub.com/

D - EVERY 500 HOURS OF OPERATION

Perform the operations described above as well as the following operations.

D1 – DRY AIR FILTER CARTRIDGE

REPLACE

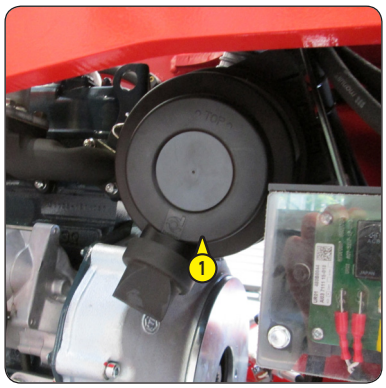

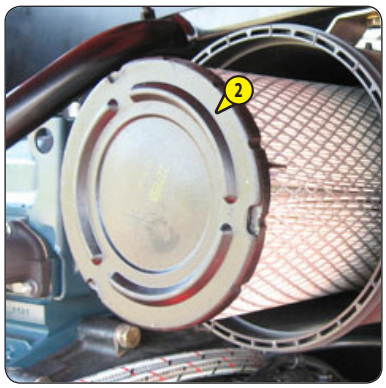

The air used for combustion is purified by a dry air filter. It is therefore forbidden to use the lifting platform with the cartridge removed or damaged.

- Open the right-hand cowl.
- Unclip the clips 1 and remove the cover.
- Carefully remove the cartridge 2 to reduce any dust falling as much as possible.
- Leave the safety cartridge in place.
- Carefully clean the following parts with a clean, damp, lint-free cloth.
  - The interior of the filter and the cover.
  - The interior of the filter inlet hose.
  - The seal holders in the filter and the cover.
- Check the condition of the engine connection pipework and its fasteners as well as the connection and the condition of the clogging indicator on the filter.
- Before fitting, check the condition of the new filter cartridge (see: 3 - MAINTENANCE: FILTER ELEMENTS AND BELTS).
- Insert the cartridge in the axis of the filter and push it in by pressing on the circumference and not on the centre.
- Refit the lid, orienting the valve to the rear.

When using the machine in a very dusty atmosphere, see the FILTER ELEMENTS AND BELTS section.

D2 – FUEL FILTER CARTRIDGE

REPLACE

See : 3 MAINTENANCE: EVERY 50 HOURS OF OPERATION

D3 – FUEL PRE-FILTER CARTRIDGE

REPLACE

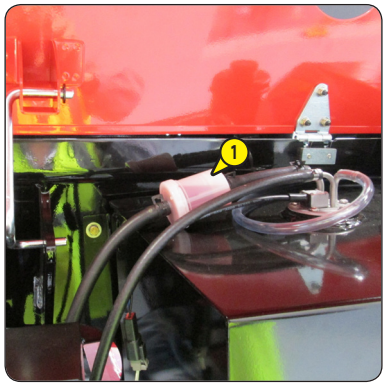

- Open the right turret cover.
- Remove the collars on each end of the diesel pre-filter and remove the pre-filter 1.
- Fit the new diesel pre-filter using new collars.
- Check that there are no leaks of diesel fuel.

D4 – HYDROSTATIC TRANSMISSION OIL FILTER CARTRIDGE

REPLACE

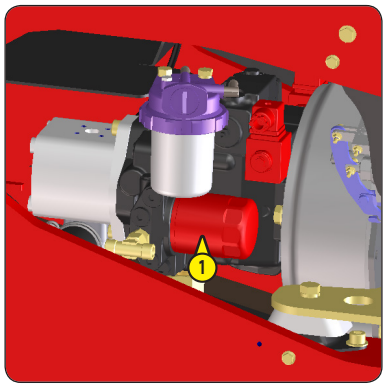

REPLACING THE HYDRAULIC TRANSMISSION OIL FILTER CARTRIDGE

- Switch off the engine.
- Open the chassis left cover.
- Unscrew the filter body 1.
- Remove the hydrostatic transmission oil filter cartridge and replace it with a new one.
- Ensure that the cartridge is correctly positioned and refit the cover.

⚠ IMPORTANT ⚠

Do not operate the lifting platform without a cartridge; this would immediately cause damage to the hydrostatic pump's hydraulic transmission circuit.

CLEANING OUT THE HYDRAULIC CIRCUIT

- Let the engine turn over for 5 minutes without using the lifting platform.

https://truckmanualshub.com/

D5 – AUXILIARY HYDRAULIC OIL FILTER CARTRIDGE

REPLACE

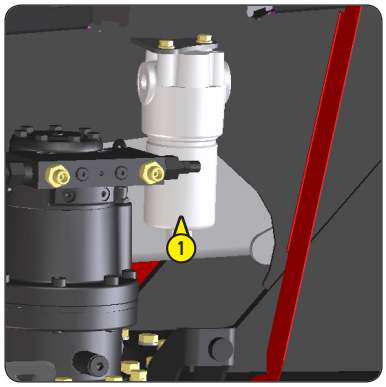

- With the machine stopped and the battery cutout in the OFF position.
- Unscrew the filter body 1.
- Remove the filter cartridge and replace it with a new one (see "FILTER ELEMENT" section).

NB: Pay attention to the direction for fitting.

- Refit the filter body 1.

⚠ IMPORTANT ⚠

Carefully clean the exterior of the filter and its surroundings before performing any work in order to avoid any risk of pollution getting into the hydraulic circuit.

D6 – HYDRAULIC OIL

DRAIN - REPLACE

- Set the lifting platform on a horizontal surface in transport position with the engine off.

DRAINING THE OIL

- Set a receptacle under the drain plug 1.
- Remove the drain plug 1.
- Remove the filling cap to facilitate draining.

CLEANING THE SIEVE

- Remove the sieve 2; clean it with a jet of compressed air.
- Refit the sieve.

CLEANING THE STRAINERS

- Remove the chassis left cover to access the strainers 3 and 4.
- Remove the strainers 3 and 4 and clean them wish a compressed air jet.
- Refit the strainers in place.

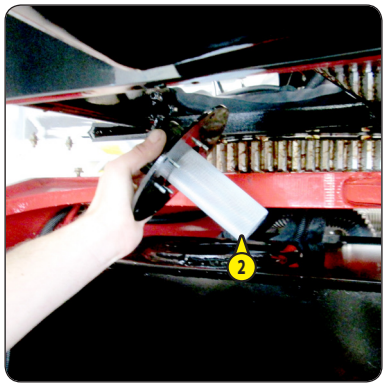

REFILLING THE OIL

⚠ IMPORTANT ⚠

Use an oil bath and a very clean funnel; clean the top of the oil can before filling.

- Refit the drain plug 1 and tighten it.
- Refill with hydraulic oil (see the LUBRICANTS section) via the filling hole.
- The oil level should be above the red mark on the gauge.

⚠ IMPORTANT ⚠

Dispose of the drained oil in an environmentally-friendly manner.

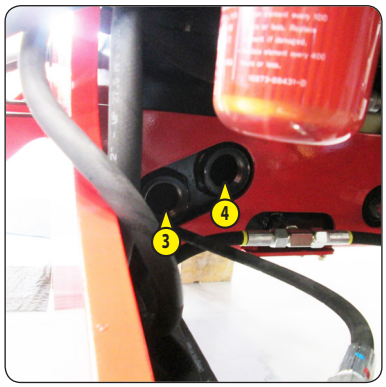

D7 – CONDITION OF THE HOSES

CHECK

- Check the apparent condition (cracking) of the hoses subject to heat stresses and UV; their technical characteristics may have altered (porosities).

⚠ IMPORTANT ⚠

BEWARE OF LEAKS

Hydraulic oil escaping under high pressure can pierce the skin and cause severe lesions. If you are injured by a jet of oil under pressure, immediately consult a doctor.

If you are in doubt about any leak, do not search with your hand: check with a piece of cardboard while protecting your hands and your body.

For your safety's sake, replace worn hose.

https://truckmanualshub.com/

D8 – TIGHTENING THE TURRET ROTATION MOTOR'S BOLTS

CHECK

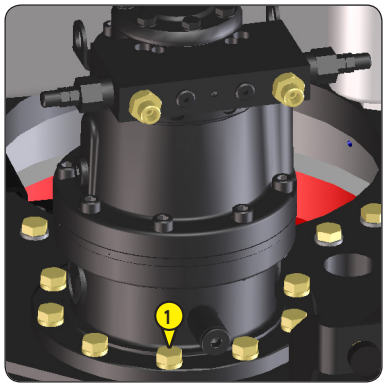

Set the lifting platform on a horizontal surface with the engine switched off.

- Check the tightness of the nine screws 1 : the screws' tightening toque 1 is 8 daN.m ± 10%.

D9 – TIGHTENING THE BOLTS ON THE TURRET ORIENTATION CROWN GEAR

CHECK

- The tightness of the screws must be checked at the latest after 50 hours of operation. This check must then be repeated every 500 hours of operation.
- The tightening torque for the screws is 12 daN.m ± 10 %.

D10 – BRAKING

CHECK

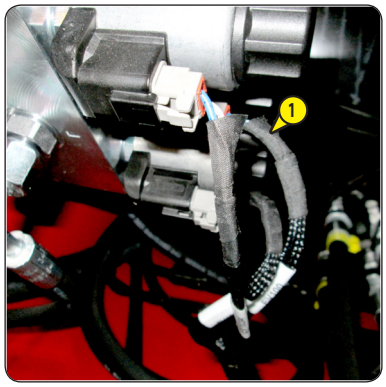

- Check the braking system by disconnecting the coil EV100 from the hydraulic unit on the chassis (to access the unit, remove the casing on the front side of the chassis) and make a translation movement.

⚠ IMPORTANT ⚠

The lifting platform must not move forward.

- After the test, reconnect the coil.

D11 – ALTERNATOR/FAN/CRANKCASE BELT

REPLACE

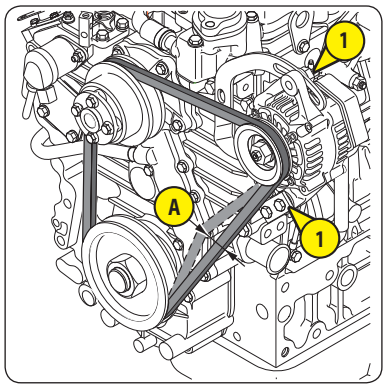

- Open the rear cover.
- Loosen the bolts 1 two or three turns.
- Swivel the alternator assembly to free the belt and the replace it with a new one (see: 3 - MAINTENANCE: FILTER ELEMENTS AND BELTS).
- Adjust the tension between the crankcase and alternator pulleys.
- Under thumb pressure (98 N), the tension should be 7 to 9 mm.
- Retighten the bolts 1.

⚠ IMPORTANT ⚠

Recheck the belt tension after the first 20 hours of operation.

D12 – IC ENGINE OIL

DRAIN / REPLACE

⚠ IMPORTANT ⚠

The internal-combustion engine oil and its oil filter must be replaced after the first 50 hours of operation, and subsequently every 500 hours of operation.

https://truckmanualshub.com/

D13 – IC ENGINE OIL FILTER

REPLACE

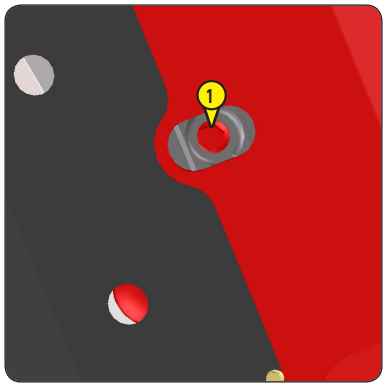

⚠ IMPORTANT ⚠

The internal-combustion engine oil and its oil filter must be replaced after the first 50 hours of operation, and subsequently every 500 hours of operation.

Set the platform on a horizontal surface, leave the engine running at idling speed for a few minutes and then switch it off.

DRAINING THE OIL

- Open the rear cover and the chassis right and left cover.
- Lay a receptacle on the ground.
- Remove the blanking cap 1 located under the engine.
- Remove the filling cap 2 to ensure good drainage.
- When draining is complete, screw the plug back in.

⚠ IMPORTANT ⚠

Dispose of the drained oil in an environmentally friendly manner.

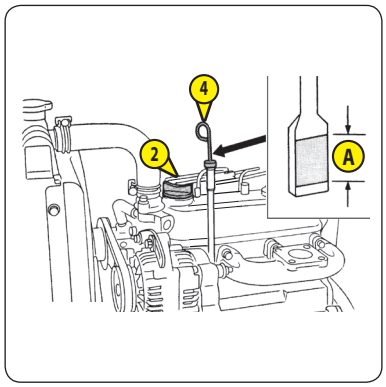

FILTER REPLACEMENT

- Remove the engine oil filter 3 and throw it away, together with its seal.
- Clean the filter bracket with a clean lint-free cloth.
- Lightly oil the new seal.
- Refit the oil filter on its bracket.

⚠ IMPORTANT ⚠

Tighten the oil filter only by hand and then lock it with a quarter turn from the filter wrench.

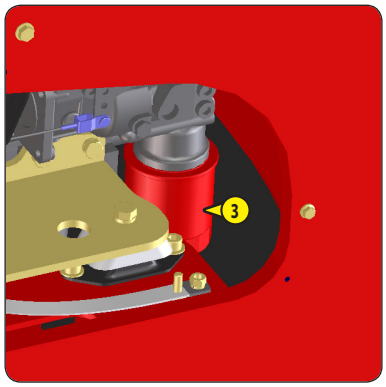

REFILLING WITH OIL

- Ensure that the plug 1 is correctly in place and tighten it.
- Top up with oil (See the LUBRICANTS section) via the filling hole 2.
- Wait a few minutes to let the oil flow into the sump.
- Check the level with a dipstick 4.
- Start the engine and leave it to run for a few minutes.
- Check for any leaks from the drain plug and the engine oil filter.
- Stop the engine, wait a few minutes and check that the level is between the 2 notches on the dipstick A.
- Top up, if necessary.

D14 – BATTERY ELECTROLYTE SPECIFIC GRAVITY

CHECK

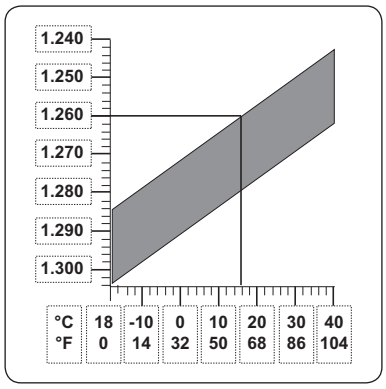

The electrolyte's density varies according to the temperature but a minimum level of 1260 at 16°C must be maintained.

In the hatched section (Fig. D10), the battery is normally charged.

Above the hatched section, the battery must be recharged.

The density must not vary by 0.025 unit from one battery element to another.

- Open the battery cover.
- Check the electrolyte density in each battery element with an acidometer.
- Never check after having added distilled water. Recharge the battery and wait 1 hour before checking the battery electrolyte's density.

⚠ IMPORTANT ⚠

Manipulating and servicing a battery can be dangerous; take the following precautions:

- Wear protective goggles.

- Keep the battery horizontal when manipulating it.

- Never smoke or work close to a naked flame.

- Work in a sufficiently well-ventilated area.

- If some electrolyte splashes onto your skin or in your eyes, rinse the affected area thoroughly with cold water for 15 minutes and call a doctor.

https://truckmanualshub.com/

D15 – TURRET MOTOR REDUCER BRAKE REDUCER

DRAIN / REPLACE

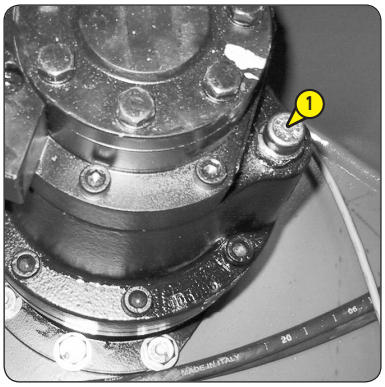

Set the lifting platform on a horizontal surface with the engine switched off.

- Open the left turret cover.
- The motor reducer is presented with the valve unit to the rear.
- Remove the sniffler/filling cap 1 to ensure good drainage.
- Note the drain plug 2 located on the right-hand side reducer unit's sole plate.
- Place a (small) receptacle to catch the oil.
- Unscrew the drain plug.

⚠ IMPORTANT ⚠

Dispose of the drained oil in an environmentally friendly manner.

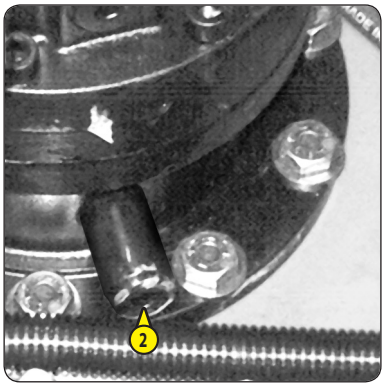

- Refit the drain plug 2
- Use a syringe to fill the reducer via the sniffler/filling hole 2. The oil capacity is 0.85 litres and the level is correct when the sniffler is full of oil.
- Refit the sniffler/filling cap 1.

https://truckmanualshub.com/

https://truckmanualshub.com/

E - EVERY 1000 HOURS OF OPERATION

Perform the operations described above as well as the following operations.

E1 – FUEL TANK

DRAIN / CLEAN

⚠ IMPORTANT ⚠

Never smoke or approach the machine with a naked flame during this operation.

Set the lifting platform on a horizontal surface with the engine off.

- Check visually and by touch the parts likely to have leaks in the fuel circuit and the tank.
- In the even of a leak, contact your dealer.

⚠ IMPORTANT ⚠

Never attempt to make a weld or any other operation by yourself; this could cause an explosion or a fire.

- Set a receptacle under the drain plug 1 and loosen the drain plug.
- Let the diesel flow out and rinse out with ten litres of diesel poured through the filling hole 2.
- Refit and tighten the filling cap 1.
- Refill the fuel tank with clean diesel filtered through a strainer or a clean lint-free cloth and refit the filling cap.

E2 – DRY AIR FILTER SAFETY CARTRIDGE

REPLACE

- Open the chassis right cover.
- Remove the dry air filter cartridge 1 (See § D1).
- Remove the dry air filter safety cartridge 2 and replace it with a new one.
- Refit the assembly (see § D1).

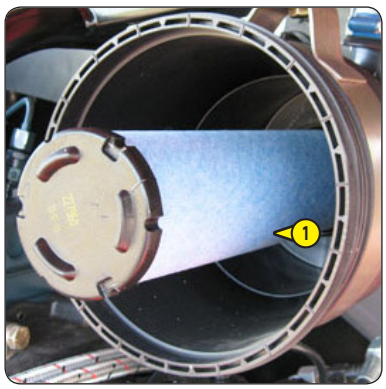

E3 – CONDITION OF THE CYLINDERS (LEAKS, RODS)

CHECK

Check the condition of the cylinders. There must be no:

- Hydraulic leaks from the seals and the valve blocks
- Impacts on the cylinder rods

E4 – CONDITION OF THE CABLE BUNDLES AND THE CABLES THEMSELVES

CHECK

Inspect the following sectors, check the condition of the bundles: no deterioration and nothing loose.

- Base control console,
- Hydraulic block,
- Battery,
- Intermediate joint,
- Basket control console.

https://truckmanualshub.com/

E5 – HYDRAULIC CIRCUIT RACK

CLEAN

- Drain the oil (see CHAPTER D6).

E6 – ENGINE SILENTBLOCKS (*)

CHECK

E7 – ENGINE SPEEDS (*)

CHECK

E8 – HYDROSTATIC TRANSMISSION CIRCUIT PRESSURES (*)

CHECK

E9 – START OF HYDROSTATIC TRANSMISSION CONTROL (*)

CHECK - ADJUST

E10 – MOVEMENT SPEEDS (*)

CHECK

E11 – SET OF VALVES (*)

CHECK - ADJUST

*Consulter votre concessionnaire

https://truckmanualshub.com/

F - EVERY 2000 HOURS OF OPERATION OR TWO YEARS

Perform the operations described above as well as the following operations.

F1 – COOLANT

DRAIN - REPLACE

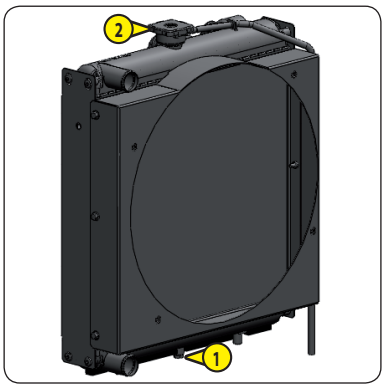

This series of operations must only be performed as necessary or once a year, on the approach of winter. Set the lifting platform on a horizontal surface with the engine switched off and cold.

⚠ IMPORTANT ⚠

Do not remove the radiator cap when the engine is hot. Then, gently loosen the cap up to the stop to release any excessive pressure before removing the cap completely. If the engine overheats, steam may spurt from the radiator or the emergency reservoir, possibly causing severe burns.

DRAINING THE COOLANT

- Open the rear cover and locate the radiator 2 and the drain tap 1.
- To drain the coolant, always open the drain tap 1 and 3 and radiator cap 2 both at the same time.

NB: The coolant cannot drain from the radiator while the radiator cap is still closed.

- Let the coolant circuit drain completely, ensuring that the holes are not blocked.
- Check the conditions of the rubber hoses and the fasteners and change the rubber hoses, if necessary.

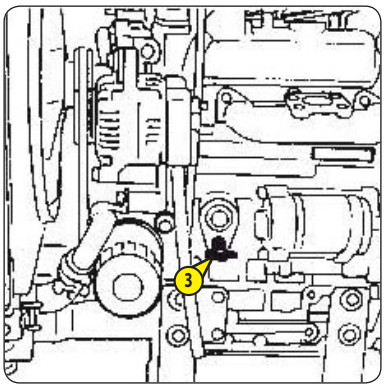

REFILLING WITH COOLANT

- Close the drain cocks 1.
- Prepare the coolant.
- Fill the cooling circuit slowly and completely via the filling hole 2.
- Refit the filling plug 2.
- Turn over the engine at idling speed for a few minutes.
- Check for any leaks.
- Check the level and top up if necessary.

⚠ IMPORTANT ⚠

The engine does not contain any anti-corrosion element and must be filled every year with a mixture containing at least 25% ethyl glycol based antifreeze.

FREEZING POINT BASED ON % OF ANTIFREEZE	
ANTIFREEZE 5110 NF	TEMPERATURE
30 %	-16° C
33 %	-18° C
40 %	-25° C
50 %	-37° C

F2 – WATER PUMP AND THERMOSTAT (*)

CHECK

F3 – ALTERNATOR AND STARTER (*)

CHECK

F4 – HYDRAULIC OIL RESERVOIR (*)

CLEAN

F5 – HYDRAULIC CIRCUIT PRESSURES (*)

CHECK

F6 – HYDRAULIC CIRCUIT OUTPUTS (*)

CHECK

F7 – FUEL INJECTION PRESSURE (*)

CHECK

https://truckmanualshub.com/

F8 – INJECTION PUMP (*)

CHECK

F9 – INJECTORS (*)

CONTACT YOUR DEALER

F10 – RADIATOR (*)

CHECK - DESCALE

*Contact your dealer

https://truckmanualshub.com/

G - OCCASIONAL MAINTENANCE

G1 – FUEL SUPPLY SYSTEM

BLEEDING

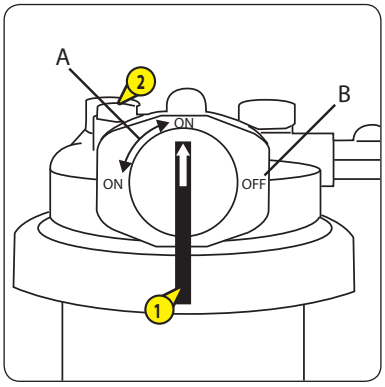

This series of operations should be performed only in the following case:

- A component in the supply circuit needs to be replaced or drained.
- The fuel tank is empty.
- Before the engine is used after a long period of inactivity.

- Ensure that there is sufficient fuel in the tank and turn the ignition key to the second notch to switch the machine on.
- Open the chassis left cover.

BLEEDING THE FUEL FILTER

- Refill the tank.
- Open the fuel filter tap 1.
- Slightly loosen the fuel filter vent plug 2.
- Use the lever 3 to operate the feed pump manually.
- Retighten the plug when no more bubbles form.
- Open the vent plug in the top of the injection pump 3.
- Use the lever 3 to operate the feed pump manually.
- Retighten the plug when no more bubbles form.

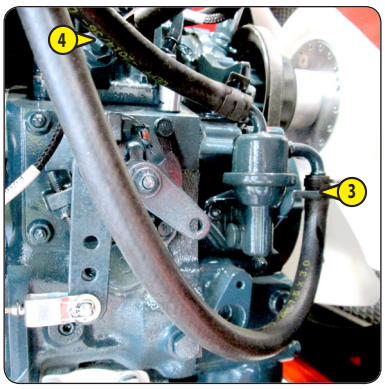

G2 – WHEEL

CHANGE

- Stop the lifting platform on a firm, horizontal surface if possible.
- Proceed to switch off the machine (see: 1 – SAFETY INSTRUCTIONS AND ADVICE: DRIVING INSTRUCTIONS WHILE UNLADEN AND LOADED).
- Chock the lifting platform in both directions on the axle opposite the wheel to be changed.

Reminder :

Load on one wheel : 2700 kg

Recommandations :

For using the MANITOU hydraulic jack Ref. 505507 and the MANITOU safety stay Ref. 554772:

- You are recommended to replace the rear wheels then, after turning the turret half a turn, to replace the front wheels. This operation enables you to distribute the load on the axles by positioning the counterweight on the axle opposite the wheel change.
- Unlock the nuts on the wheel to be changed.
- Set a jack under the axle housing as close as possible to the wheel and adjust the jack.
- Raise the wheel until it is slightly off the ground and place the safety stay under the axle.

⚠ IMPORTANT ⚠

The weight of one wheel is 96 kg.

- Release the wheel by to and fro movements.
- Slip the new wheel over the hub.
- Screw on the nuts by hand, greasing them, if necessary.
- Remove the safety stay and lower the lifting platform with the jack.
- Tighten the wheel nuts with a torque wrench (see: 3 - MAINTENANCE: B - EVERY 250 HOURS OF OPERATION for the tightening torque).

G3 – LIFTING PLATFORM ON A TRUCK BED

TRANSPORT

See Section 2: LOADING / UNLOADING THE LIFTING PLATFORM

https://truckmanualshub.com/

G4 – FREEWHEELING MODE

ACTIVATION

In the event that the lifting platform must be towed, follow the instructions below.

⚠ IMPORTANT ⚠

The lifting platform may only be towed a short distance and necessarily by a machine with significant braking power in order to hold it and with a connection bar between the two machines.

1 - WEDGE THE LIFTING PLATFORM IN PLACE
2 - HYDROSTATIC DECLUTCHING

⚠ IMPORTANT ⚠

Warning: before performing this operation, take the necessary precautions because the machine will no longer have any brakes.

- Open the chassis right cover.
- Identify the hydrostatic pump and the screw 1 between the two hoses.
- Loosen two turns the screw 1 with an Allen key.

3 - MECHANICAL DECLUTCHING
- Identify on the front of the chassis the mechanical declutching block.
- Push and hold firmly the button 2.
- Push and pull the pump button 3 to raise in pressure.

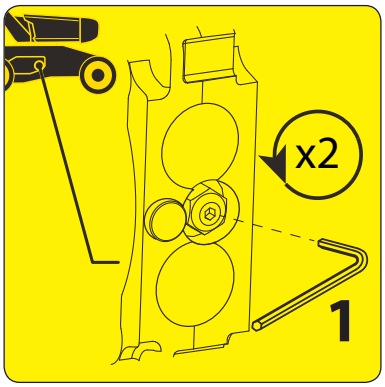

⚠ IMPORTANT ⚠

Failure to follow the procedure can damage the IC wheels.

⚠ IMPORTANT ⚠

Follow the instructions in the other way to desactivate the freewheeling mode.

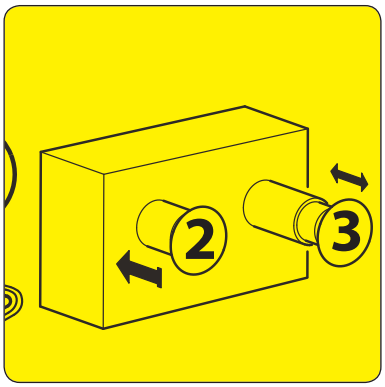

https://truckmanualshub.com/

Note the position of the lifting platform's centre of gravity for lifting it.

Place hooks on the anchoring points provided for this purpose.

Chain 4 legs : 2 legs 1720mm long on the front of the lifting platform 1. 2 legs 1520mm long on the rear of the platform.

(A) Centre of gravity
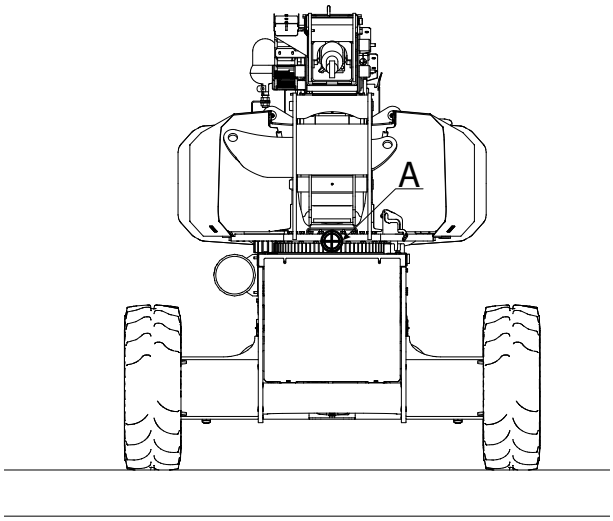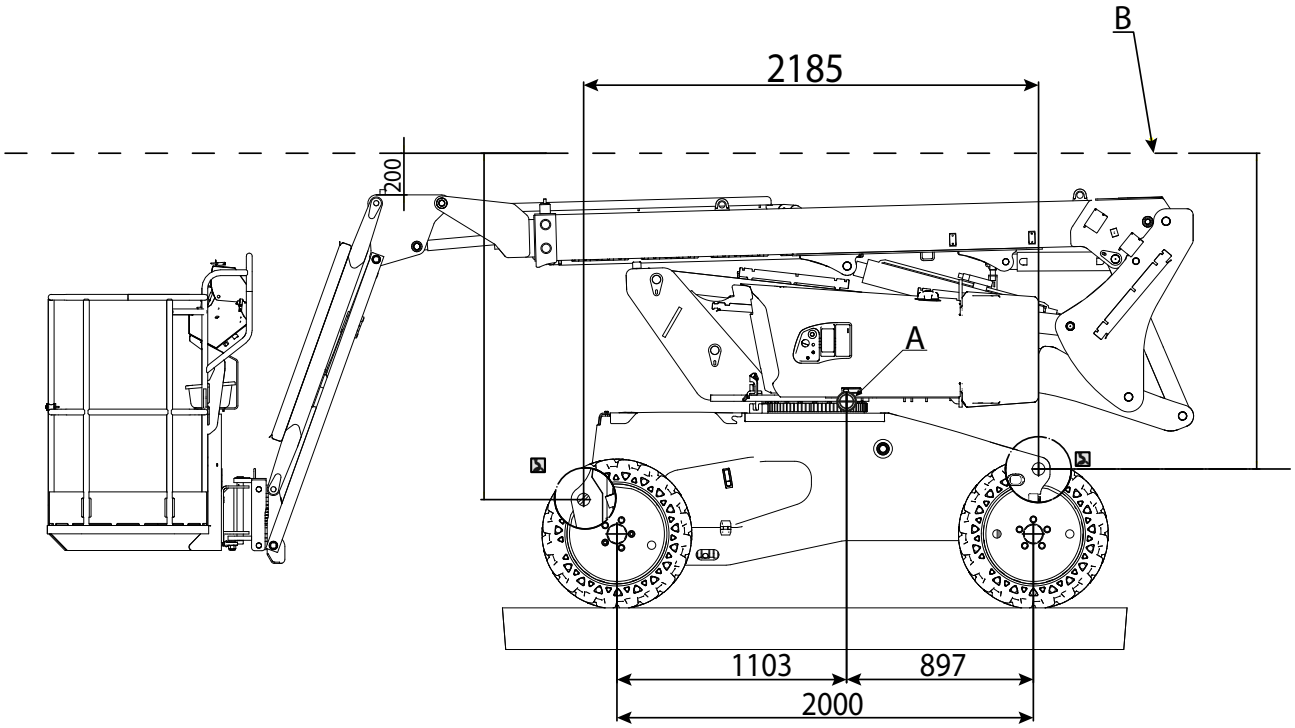
(B) Axis line slinging rings