https://truckmanualshub.com/

JLG®
An Oshkosh Corporation Company

Discount Equipment
www.Discount-Equipment.com

Operation and Safety Manual

Original Instructions - Keep this manual with the machine at all times.

Models
EC600SJ
H600SJ
EC600SJP
H600SJP
PVC 2001

ANSI CE **AS/NZS**

31215027
April 21, 2020 - Rev B

To order go to Discount-Equipment.com

https://truckmanualshub.com/

TO PURCHASE THIS PRODUCT PLEASE CONTACT US

Discount Equipment

Equipment Financing and
Extended Warranties Available

Discount-Equipment.com is your online resource for commercial and industrial quality parts and equipment sales.

561-964-4949

visit us on line @ www.discount-equipment.com

Select an option below to find your Equipment

Search by Manufacturer

Search by Product Type

Request a Quote

We sell worldwide for the brands: Genie, Terex, JLG, MultiQuip, Mikasa, Essick, Whiteman, Mayco, Toro Stone, Diamond Products, Generac Magnum, Airman, Haulotte, Barreto, Power Blanket, Nifty Lift, Atlas Copco, Chicago Pneumatic, Allmand, Miller Curber, Skyjack, Lull, Skytrak, Tsurumi, Husquvarna Target, Stow, Wacker, Sakai, Mi-T-M, Sullair, Basic, Dynapac, MBW, Weber, Bartell, Bennar Newman, Haulotte, Ditch Runner, Menegotti, Morrison, Contec, Buddy, Crown, Edco, Wyco, Bomag, Laymor, EZ Trench, Bil-Jax, F.S. Curtis, Gehl Pavers, Heli, Honda, ICS/PowerGrit, IHI, Partner, Imer, Clipper, MMD, Koshin, Rice, CH&E, General Equipment ,Amida, Coleman, NAC, Gradall, Square Shooter, Kent, Stanley, Tamco, Toku, Hatz, Kohler, Robin, Wisconsin, Northrock, Oztec, Toker TK, Rol-Air, APT, Wylie, Ingersoll Rand / Doosan, Innovatech, Con X, Ammann, Mecalac, Makinex, Smith Surface Prep,Small Line, Wanco, Yanmar

https://truckmanualshub.com/

To order go to Discount-Equipment.com

⚠ WARNING

Operating, servicing and maintaining this vehicle or equipment can expose you to chemicals including engine exhaust, carbon monoxide, phthalates, and lead, which are known to the State of California to cause cancer and birth defects or other reproductive harm. To minimize exposure, avoid breathing exhaust, do not idle the engine except as necessary, service your vehicle or equipment in a well-ventilated area and wear gloves or wash your hands frequently when servicing. For more information go to www.P65Warnings.ca.gov.

https://truckmanualshub.com/

FOREWORD

The Mobile Elevating Work Platform (MEWP) models covered in this manual are designed and tested to meet or exceed various compliance standards. Please refer to the manufacturer's nameplate affixed to the subject MEWP for specific standard compliance information.

This manual is a very important tool! Keep it with the machine at all times.

The purpose of this manual is to provide owners, users, operators, lessors, and lessees with the precautions and operating procedures essential for the safe and proper machine operation for its intended purpose.

Due to continuous product improvements, JLG Industries, Inc. reserves the right to make specification changes without prior notification. Contact JLG Industries, Inc. for updated information.

Refer to www.JLG.com for Warranty, Product Registration, and other machine-related documentation.

To order go to Discount-Equipment.com

https://truckmanualshub.com/

SAFETY ALERT SYMBOLS AND SAFETY SIGNAL WORDS

This is the Safety Alert Symbol. It is used to alert you to the potential personal injury hazards. Obey all safety messages that follow this symbol to avoid possible injury or death.

DANGER

INDICATES AN IMMINENTLY HAZARDOUS SITUATION. IF NOT AVOIDED, WILL RESULT IN SERIOUS INJURY OR DEATH. THIS DECAL WILL HAVE A RED BACKGROUND.

WARNING

INDICATES A POTENTIALLY HAZARDOUS SITUATION. IF NOT AVOIDED, COULD RESULT IN SERIOUS INJURY OR DEATH. THIS DECAL WILL HAVE AN ORANGE BACKGROUND.

CAUTION

INDICATES A POTENTIALLY HAZARDOUS SITUATION. IF NOT AVOIDED, MAY RESULT IN MINOR OR MODERATE INJURY. IT MAY ALSO ALERT AGAINST UNSAFE PRACTICES. THIS DECAL WILL HAVE A YELLOW BACKGROUND.

NOTICE

INDICATES INFORMATION OR A COMPANY POLICY THAT RELATES DIRECTLY OR INDIRECTLY TO THE SAFETY OF PERSONNEL OR PROTECTION OF PROPERTY.

To order go to Discount-Equipment.com

https://truckmanualshub.com/

REVISION LOG

Original Issue	A - November 25, 2019
Revision	B - April 21, 2020

To order go to Discount-Equipment.com

https://truckmanualshub.com/

SECTION - 1 - SAFETY PRECAUTIONS

1.1 GENERAL 1-1
1.2 PRE-OPERATION 1-1
Operator Training and Knowledge 1-1
Workplace Inspection. 1-2
Machine Inspection. 1-3
1.3 OPERATION. 1-3
General 1-3
Trip and Fall Hazards. 1-4
Electrocution Hazards 1-5
Tipping Hazards 1-7
Crushing and Collision Hazards 1-10
1.4 TOWING, LIFTING, AND HAULING. 1-11
1.5 MAINTENANCE. 1-11
Maintenance Hazards. 1-11
Battery Hazards. 1-12

SECTION - 2 - USER RESPONSIBILITIES, MACHINE PREPARATION, AND INSPECTION

2.1 PERSONNEL TRAINING 2-1
Operator Training 2-1
Training Supervision. 2-1
Operator Responsibility. 2-2
Machine Familiarization. 2-2
2.2 PREPARATION, INSPECTION, AND MAINTENANCE 2-2
Pre-Start Inspection. 2-7
Walk-Around Inspection 2-8
GENERAL. 2-9
Function Check. 2-11
SkyGuard Function Test. 2-12

SECTION - 3 - MACHINE CONTROLS AND INDICATORS

3.1 GENERAL 3-1
3.2 CONTROLS AND INDICATORS 3-1
Ground Control Station 3-3
Platform Control Station 3-7
Platform Control Indicator Panel 3-12

SECTION - 4 - MACHINE OPERATION

4.1 DESCRIPTION 4-1
4.2 OPERATING CHARACTERISTICS AND LIMITATIONS 4-1
Capacities 4-1
Platform Load Sensing System (LSS). 4-2
Stability 4-2
4.3 MOTOR OPERATION. 4-5
Power/Emergency Stop. 4-5
Platform/Ground Select Switch 4-5
4.4 TRAVELING (DRIVING) 4-5
Traveling Forward and Reverse 4-7
Traveling on a Grade. 4-8
4.5 STEERING. 4-8
4.6 PLATFORM 4-8
Platform Level Adjustment. 4-8
Platform Rotation. 4-8
4.7 BOOM 4-9
Swinging the Boom 4-9

To order go to Discount-Equipment.com

https://truckmanualshub.com/

Raising and Lowering the Upper Boom 4-9
4.8 GENERATOR (OPTIONAL) 4-10
Automatic Operating Mode 4-10
Battery Only Operating Mode 4-10
Manual (Charge) Operating Mode 4-10
4.9 FUNCTION SPEED CONTROL 4-10
4.10 MACHINE SAFETY SYSTEM OVERRIDE (MSSO) (CE ONLY) 4-11
4.11 SKYGUARD OPERATION 4-11
SkyGuard 4-12
SkyGuard - SkyLine 4-12
SkyGuard - SkyEye 4-12
SkyGuard Function Table 4-13
4.12 OSCILLATING AXLE LOCKOUT TEST (IF EQUIPPED) . . . 4-14
4.13 SHUT DOWN AND PARK 4-14
4.14 LIFTING AND TIE DOWN 4-15
Lifting 4-15
Tie Down 4-15
4.15 TOWING INSTRUCTIONS 4-17
4.16 DRIVE HUB 4-18
Disengaging for Towing 4-18
Engaging after Towing is Complete 4-19

SECTION - 5 - EMERGENCY PROCEDURES

5.1 GENERAL 5-1
5.2 INCIDENT NOTIFICATION 5-1
5.3 EMERGENCY OPERATION 5-1
Operator Unable to Control Machine 5-1
Platform or Boom Caught Overhead 5-2
5.4 EMERGENCY TOWING PROCEDURES 5-2
5.5 MANUAL DESCENT SYSTEM 5-2
5.6 MACHINE SAFETY SYSTEM OVERRIDE (MSSO) (CE ONLY) 5-7

SECTION - 6 - ACCESSORIES

6.1 FALL ARREST PLATFORM 6-2
6.2 SOFT TOUCH 6-2
6.3 BOLT-ON EXTERNAL FALL ARREST 6-4
Inspection Before Use 6-5
6.4 SKYGLAZIER™ 6-7
Capacity Specifications 6-7
Safety Precautions 6-8
Preparation and Inspection 6-8
Operation 6-8

SECTION - 7 - GENERAL SPECIFICATIONS & OPERATOR MAINTENANCE

7.1 INTRODUCTION 7-1
7.2 OPERATING SPECIFICATIONS 7-1
Capacities 7-2
Tires 7-2
Hydraulic Oil 7-3
Major Component Weights 7-8
Serial Number Location 7-8

To order go to Discount-Equipment.com

https://truckmanualshub.com/

7.3 OPERATOR MAINTENANCE 7-10
7.4 OSCILLATING AXLE LOCKOUT TEST (IF EQUIPPED) 7-14
7.5 TIRES & WHEELS. 7-15
Tire Damage. 7-15
Tire Replacement 7-15
Wheel Replacement 7-16
Wheel Installation 7-16
7.6 SUPPLEMENTAL INFORMATION 7-17

SECTION - 8 - INSPECTION AND REPAIR LOG

To order go to Discount-Equipment.com

https://truckmanualshub.com/

2-1. Basic Nomenclature - Sheet 1 of 3 2-4
2-2. Basic Nomenclature - Sheet 2 of 3 2-5
2-3. Basic Nomenclature - Sheet 3 of 3 2-6
3-1. Ground Control Station 3-2
3-2. Platform Control Station 3-6
3-3. Platform Control Indicator Panel. 3-11
4-1. Position of Least Forward Stability 4-3
4-2. Position of Least Backward Stability 4-4
4-3. Grade and Side Slopes 4-6
4-4. Traveling on a Grade 4-8
4-5. Lifting and Tie Down Chart 4-16
4-6. Decal Installation - Sheet 1 of 5 4-20
4-7. Decal Installation - Sheet 2 of 5 4-21
4-8. Decal Installation - Sheet 3 of 5 4-22
4-9. Decal Installation - Sheet 4 of 5 4-23
4-10. Decal Installation - Sheet 5 of 5 4-24
5-1. Manual Descent Decal 5-6
6-1. Soft Touch 6-3
6-2. Bolt-On External Fall Arrest Cable Tension 6-5
6-3. Bolt-On External Fall Arrest System 6-6
7-1. Hydraulic Oil Specification - Sheet 1 of 2 7-6
7-2. Hydraulic Oil Specification - Sheet 2 of 2 7-7
7-3. Serial Number Location 7-8
7-4. Operator Maintenance and Lubrication Diagram 7-9

To order go to Discount-Equipment.com

https://truckmanualshub.com/

1-1 Minimum Approach Distances (M.A.D.) 1-6
1-2 Beaufort Scale (For Reference Only). 1-9
2-1 Inspection and Maintenance Table 2-3
4-1 Decal Legend 4-25
6-1 Available Accessories 6-1
7-1 Operating Specifications 7-1
7-2 Capacities 7-2
7-3 Tires 7-2
7-4 Hydraulic Oil 7-3
7-5 DTE 10 Excel 15 Specs 7-3
7-6 Mobil EAL Envirosyn H 32 Specs 7-4
7-7 Mobil EAL Envirosyn SHC 32 Specs. 7-4
7-8 DTE 10 Excel 32 Specs 7-5
7-9 Component Weights 7-8
7-10 Lubrication Specifications.. 7-10
7-11 Wheel Torque Chart. 7-17
8-1 Inspection and Repair Log. 8-1

To order go to Discount-Equipment.com

https://truckmanualshub.com/

SECTION 1. SAFETY PRECAUTIONS

1.1 GENERAL

This section outlines the necessary precautions for proper and safe machine usage and maintenance. It is mandatory that a daily routine is established based on the content of this manual to promote proper machine usage. A maintenance program, using the information provided in this manual and the Service and Maintenance Manual, must also be established by a qualified person and must be followed to ensure that the machine is safe to operate.

The owner/user/operator/lessor/lessee of the machine must not accept operating responsibility until this manual has been read, training is accomplished, and operation of the machine has been completed under the supervision of an experienced and qualified operator.

This section contains the responsibilities of the owner, user, operator, lessor, and lessee concerning safety, training, inspection, maintenance, application, and operation. If there are any questions with regard to safety, training, inspection, maintenance, application, and operation, please contact JLG Industries, Inc. ("JLG").

⚠ WARNING

FAILURE TO COMPLY WITH THE SAFETY PRECAUTIONS LISTED IN THIS MANUAL COULD RESULT IN MACHINE DAMAGE, PROPERTY DAMAGE, PERSONAL INJURY OR DEATH.

1.2 PRE-OPERATION

Operator Training and Knowledge

- Read, understand, and study the Operation and Safety Manual in its entirety before operating the machine. For clarification, questions, or additional information regarding any portions of this manual, contact JLG Industries, Inc.

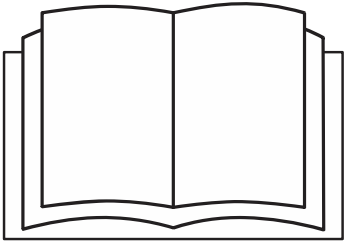

To order go to Discount Equipment.com

https://truckmanualshub.com/

- Only personnel who have received proper training regarding the inspection, application and operation of MEWPs (including recognition and avoiding hazards associated with their operation) shall be authorized to operate a MEWP.
- Only properly trained personnel who have received unit-specific familiarization shall operate a MEWP. The user shall determine if personnel are qualified to operate the MEWP prior to operation.
- Read, understand, and obey all DANGERS, WARNINGS, CAUTIONS, and operating instructions on the machine and in this manual.
- Ensure that the machine is to be used in a manner which is within the scope of its intended application as determined by JLG.
- All operating personnel must have a thorough understanding of the intended purpose and function of the MEWP controls, including platform, ground and emergency descent controls.
- Read, understand, and obey all applicable employer, local, and governmental regulations as they pertain to your utilization and application of the machine.

Workplace Inspection

- Precautions to avoid all hazards in the work area must be taken by the user before and during operation of the machine.
- Do not operate or raise the platform from a position on trucks, trailers, railway cars, floating vessels, scaffolds or other equipment unless the application is approved in writing by JLG.
- Before operation, check work area for overhead hazards such as electric lines, bridge cranes, and other potential overhead obstructions.
- Check operating surfaces for holes, bumps, drop-offs, obstructions, debris, concealed holes, and other potential hazards.
- Check the work area for hazardous locations. Do not operate the machine in hazardous environments unless approved for that purpose by JLG.
- Ensure that the ground conditions are adequate to support the maximum tire load indicated on the tire load decals located on the chassis adjacent to each wheel. Do not travel on unsupported surfaces.

To order go to Discount Equipment.com

https://truckmanualshub.com/

Machine Inspection

- Do not operate this machine until the inspections and functional checks as specified in Section 2 of this manual have been performed.
- Do not operate this machine until it has been serviced and maintained according to the maintenance and inspection requirements as specified in the machine's Service and Maintenance Manual.
- Ensure all safety devices are operating properly. Modification of these devices is a safety violation.

WARNING

MODIFICATION OR ALTERATION OF A MEWP SHALL BE MADE ONLY WITH PRIOR WRITTEN PERMISSION FROM THE MANUFACTURER.

- Do not operate any machine on which the safety or instruction placards or decals are missing or illegible.
- Check the machine for modifications to original components. Ensure that any modifications have been approved by JLG.
- Avoid accumulation of debris on platform floor. Keep mud, oil, grease, and other slippery substances from footwear and platform floor.

1.3 OPERATION

General

- Machine operation requires your full attention. Bring the machine to a full stop before using any device, i.e. cell phones, two-way radios, etc. that will distract your attention from safely operating the machine.
- Do not use the machine for any purpose other than positioning personnel, their tools, and equipment.
- Before operation, the user must be familiar with the machine capabilities and operating characteristics of all functions.
- Never operate a malfunctioning machine. If a malfunction occurs, shut down the machine. Remove the unit from service and notify the proper authorities.
- Do not remove, modify, or disable any safety devices.
- Never slam a control switch or lever through neutral to an opposite direction. Always return switch to neutral and stop before moving the switch to the next function. Operate controls with slow and even pressure.
- Do not allow personnel to tamper with or operate the machine from the ground with personnel in the platform, except in an emergency.

To order go to Discount-Equipment.com

https://truckmanualshub.com/

- Do not carry materials directly on platform railing unless approved by JLG.
- When two or more persons are in the platform, the operator shall be responsible for all machine operations.
- Always ensure that power tools are properly stowed and never left hanging by their cord from the platform work area.
- When driving, always position boom over rear axle in line with the direction of travel. Remember, if boom is over the front axle, steer and drive functions will be reversed.
- Do not assist a stuck or disabled machine by pushing or pulling except by pulling at the chassis tie-down lugs.
- Fully lower platform and shut off all power before leaving machine.
- Remove all rings, watches, and jewelry when operating machine. Do not wear loose fitting clothing or long hair unrestrained which may become caught or entangled in equipment.
- Persons under the influence of drugs or alcohol or who are subject to seizures, dizziness or loss of physical control must not operate this machine.
- Hydraulic cylinders are subject to thermal expansion and contraction. This may result in changes to the platform position while the machine is stationary. Factors affecting thermal movement can include the length of time the machine will remain stationary, hydraulic oil temperature, ambient air temperature, and platform position.

Trip and Fall Hazards

- Prior to operation, ensure all gates are closed and fastened in their proper position.
- During operation, occupants in the platform must wear a full body harness with a lanyard attached to an authorized lanyard anchorage point. Attach only one (1) lanyard per lanyard anchorage point.

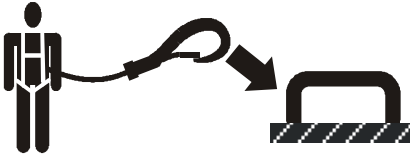

To order go to Discount-Equipment.com

https://truckmanualshub.com/

- Enter and exit only through gate area. Use extreme caution when entering or leaving platform. Ensure that the platform assembly is fully lowered. Face the platform when entering or leaving the platform. Always maintain three point contact with the machine, using two hands and one foot or two feet and one hand at all times during entry and exit.

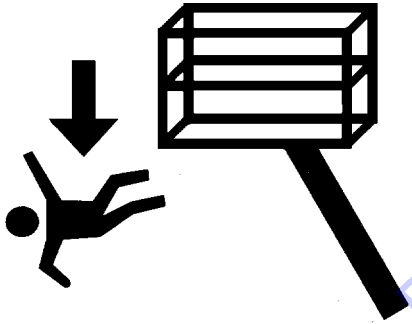

- Keep both feet firmly positioned on the platform floor at all times. Never position ladders, boxes, steps, planks, or similar items on unit to provide additional reach for any purpose.
- Keep oil, mud, and slippery substances cleaned from footwear and the platform floor.

Electrocution Hazards

- This machine is not insulated and does not provide protection from contact or proximity to electrical current.

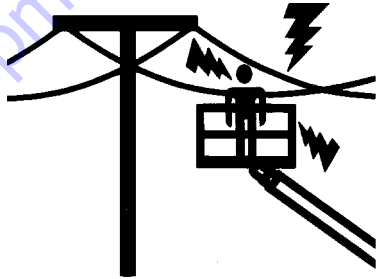

To order go to Discount-Equipment.com

https://truckmanualshub.com/

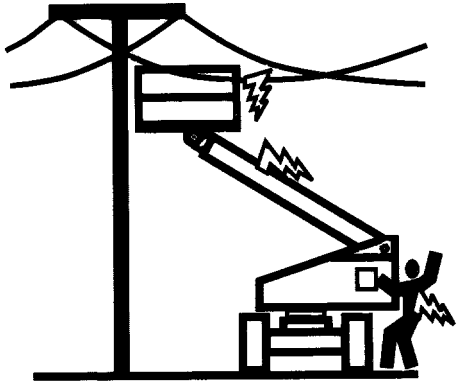

- Maintain distance from electrical lines, apparatus, or any energized (exposed or insulated) parts according to the Minimum Approach Distance (MAD) as shown in Table 1-1.
- Allow for machine movement and electrical line swaying.

Table 1-1. Minimum Approach Distances (M.A.D.)

Voltage Range (Phase to Phase)	MINIMUM APPROACH DISTANCE in Feet (Meters)
0 to 50 KV	10 (3)
Over 50KV to 200 KV	15 (5)
Over 200 KV to 350 KV	20 (6)
Over 350 KV to 500 KV	25 (8)
Over 500 KV to 750 KV	35 (11)
Over 750 KV to 1000 KV	45 (14)

NOTE: ***This requirement shall apply except where employer, local or governmental regulations are more stringent.***

- Maintain a clearance of at least 10 ft. (3m) between any part of the machine and its occupants, their tools, and their equipment from any electrical line or apparatus carrying up to 50,000 volts. One foot additional clearance is required for every additional 30,000 volts or less.

To order go to Discount-Equipment.com

https://truckmanualshub.com/

- The minimum approach distance may be reduced if insulating barriers are installed to prevent contact, and the barriers are rated for the voltage of the line being guarded. These barriers shall not be part of (or attached to) the machine. The minimum approach distance shall be reduced to a distance within the designed working dimensions of the insulating barrier. This determination shall be made by a qualified person in accordance with the employer, local, or governmental requirements for work practices near energized equipment

⚠ DANGER

DO NOT MANEUVER MACHINE OR PERSONNEL INSIDE PROHIBITED ZONE (MAD). ASSUME ALL ELECTRICAL PARTS AND WIRING ARE ENERGIZED UNLESS KNOWN OTHERWISE.

Tipping Hazards

- Ensure that the ground conditions are adequate to support the maximum tire load indicated on the tire load decals located on the chassis adjacent to each wheel. Do not travel on unsupported surfaces.
- The user must be familiar with the operating surface before driving. Do not exceed the allowable sideslope and grade while driving.

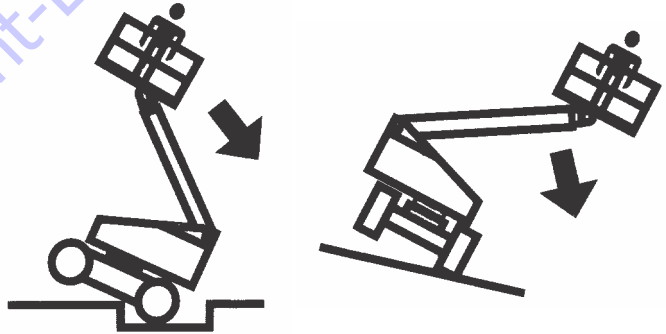

- Do not elevate platform or drive with platform elevated while on or near a sloping, uneven, or soft surface. Ensure machine is positioned on a smooth, firm surface within the limits of the maximum operating slope before elevating platform or driving with the platform in the elevated position.

To order go to Discount-Equipment.com

https://truckmanualshub.com/

- Before driving on floors, bridges, trucks, and other surfaces, check allowable capacity of the surfaces.
- Never exceed the maximum platform capacity as specified on the platform. Keep all loads within the confines of the platform, unless authorized by JLG.
- Keep the chassis of the machine a minimum of 2 ft. (0.6m) from holes, bumps, drop-offs, obstructions, debris, concealed holes, and other potential hazards at the ground level.
- Do not push or pull any object with the boom.
- Never attempt to use the machine as a crane. Do not tie-off machine to any adjacent structure. Never attach wire, cable, or any similar items to platform.
- If boom assembly or platform is in a position that one or more wheels are off the ground, all persons must be removed before attempting to stabilize the machine. Use cranes, forklift trucks, or other appropriate equipment to stabilize machine.
- Do not operate the machine when wind conditions, including gusts, exceed specifications shown in section 7-2 of this manual or as shown on the capacity placard on the platform billboard. Factors affecting wind speed are; platform elevation, surrounding structures, local weather events, and approaching storms.
- Wind speed can be significantly greater at height than at ground level.
- Wind speed can change rapidly. Always consider approaching weather events, the time required to lower the platform, and methods to monitor current and potential wind conditions.
- Do not cover or increase surface area of the platform or the load. Do not carry large surface area items int he platform when operating outdoors. The addition of such items increases the exposed wind area of the machine. Increased areas exposed to wind will decrease stability.
- Do not increase the platform size with unauthorized modifications or attachments.

To order go to Discount-Equipment.com

https://truckmanualshub.com/

NOTICE

DO NOT OPERATE THE MACHINE WHEN WIND CONDITIONS EXCEED SPECIFICATIONS SHOWN IN SECTION 7.2 OR AS SHOWN ON THE CAPACITY PLACARD ON THE PLATFORM BILLBOARD.

Table 1-2. Beaufort Scale (For Reference Only)

Beaufort Number	Wind Speed		Description	Land Conditions
	mph	m/s		
0	0	0-0.2	Calm	Calm. Smoke rises vertically
1	1-3	0.3-1.5	Light air	Wind motion visible in smoke
2	4-7	1.6-3.3	Light breeze	Wind felt on exposed skin. Leaves rustle
3	8-12	3.4-5.4	Gentle breeze	Leaves and smaller twigs in constant motion
4	13-18	5.5-7.9	Moderate breeze	Dust and loose paper raised. Small branches begin to move.
5	19-24	8.0-10.7	Fresh breeze	Smaller trees sway.
6	25-31	10.8-13.8	Strong breeze	Large branches in motion. Flags waving near horizontal. Umbrella use becomes difficult.
7	32-38	13.9-17.1	Near Gale/Moderate Gale	Whole trees in motion. Effort needed to walk against the wind.
8	39-46	17.2-20.7	Fresh Gale	Twigs broken from trees. Cars veer on road.
9	47-54	20.8-24.4	Strong Gale	Light structure damage.

To order go to Discount-Equipment.com

https://truckmanualshub.com/

Crushing and Collision Hazards

- Approved head gear must be worn by all operating and ground personnel.
- Watch for obstructions around machine and overhead when driving. Check clearances above, on sides, and bottom of platform during all operations.

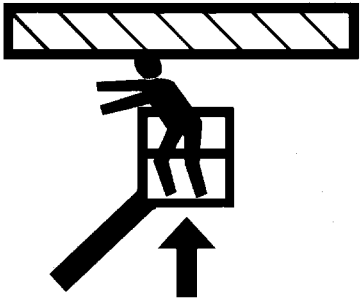

- During operation, keep all body parts inside platform railing.
- Use the boom functions, not the drive function, to position the platform close to obstacles.
- Always post a lookout when driving in areas where vision is obstructed.
- Keep non-operating personnel at least 6 ft. (1.8m) away from machine during all operations.
- Under all travel conditions, the operator must limit travel speed according to conditions of ground surface, congestion, visibility, slope, location of personnel, and other factors.
- Be aware of stopping distances in all drive speeds. When driving in high speed, reduce drive speed before stopping. Travel grades in low speed only.
- Do not use high speed drive in restricted or close quarters or when driving in reverse.
- Exercise extreme caution at all times to prevent obstacles from striking or interfering with operating controls and persons in the platform.
- Ensure operators of other overhead and floor level machines are aware of the MEWP's presence. Disconnect power to overhead cranes.
- Do not operate over ground personnel. Warn personnel not to work, stand, or walk under a raised boom or platform. Position barricades on floor if necessary.

To order go to Discount-Equipment.com

https://truckmanualshub.com/

1.4 TOWING, LIFTING, AND HAULING

- Never allow personnel in platform while towing, lifting, or hauling.
- This machine should not be towed, except in the event of emergency, malfunction, power failure, or loading/unloading. Refer to the Emergency Procedures section of this manual for emergency towing procedures.
- Ensure boom is in the stowed position and, if equipped, the turntable locked prior to towing, lifting or hauling. The platform must be completely empty of tools.
- When lifting machine, lift only at designated areas of the machine. Lift the unit with equipment of adequate capacity.
- Refer to the Machine Operation section of this manual for lifting information.

1.5 MAINTENANCE

This sub-section contains general safety precautions which must be observed during maintenance of this machine. Additional precautions to be observed during machine maintenance are inserted at the appropriate points in this manual and in the Service and Maintenance Manual. It is of utmost importance that maintenance personnel pay strict attention to these precautions to avoid possible injury to personnel or damage to the machine or property. A maintenance program must be established by a qualified person and must be followed to ensure that the machine is safe.

Maintenance Hazards

- Shut off power to all controls and ensure that all moving parts are secured from inadvertent motion prior to performing any adjustments or repairs.
- Never work under an elevated platform until it has been fully lowered to the full down position, if possible, or otherwise supported and restrained from movement with appropriate safety props, blocking, or overhead supports.
- DO NOT attempt to repair or tighten any hydraulic hoses or fittings while the machine is powered on or when the hydraulic system is under pressure.
- Always relieve hydraulic pressure from all hydraulic circuits before loosening or removing hydraulic components.

To order go to Discount-Equipment.com

https://truckmanualshub.com/

- DO NOT use your hand to check for leaks. Use a piece of cardboard or paper to search for leaks. Wear gloves to help protect hands from spraying fluid.

- Use only replacement parts or components that are approved by JLG. To be considered approved, replacement parts or components must be identical or equivalent to original parts or components.
- Never attempt to move heavy parts without the aid of a mechanical device. Do not allow heavy objects to rest in an unstable position. Ensure adequate support is provided when raising components of the machine.
- Do not use machine as a ground for welding.
- When performing welding or metal cutting operations, precautions must be taken to protect the chassis from direct exposure to weld and metal cutting spatter.
- Do not refuel the machine with the engine running.
- Use only approved non-flammable cleaning solvents.
- Do not replace items critical to stability, such as batteries or solid tires, with items of different weight or specification. Do not modify the MEWP in any way to affect stability.
- Refer to the Service and Maintenance Manual for the weights of critical stability items.

WARNING

MODIFICATION OR ALTERATION OF A MEWP SHALL BE MADE ONLY WITH PRIOR WRITTEN PERMISSION FROM THE MANUFACTURER.

Battery Hazards

- Always disconnect batteries when servicing electrical components or when performing welding on the machine.
- Do not allow smoking, open flame, or sparks near battery during charging or servicing.
- Do not contact tools or other metal objects across the battery terminals.
- Always wear hand, eye, and face protection when servicing batteries. Ensure that battery acid does not come in contact with skin or clothing.

CAUTION

BATTERY FLUID IS HIGHLY CORROSIVE. AVOID CONTACT WITH SKIN AND CLOTHING AT ALL TIMES. IMMEDIATELY RINSE ANY CONTACTED AREA WITH CLEAN WATER AND SEEK MEDICAL ATTENTION.

- Charge batteries only in a well ventilated area.
- Avoid overfilling the battery fluid level. Add distilled water to batteries only after the batteries are fully charged.

To order go to Discount-Equipment.com

https://truckmanualshub.com/

SECTION 2. USER RESPONSIBILITIES, MACHINE PREPARATION, AND INSPECTION

2.1 PERSONNEL TRAINING

The Mobile Elevating Work Platform (MEWP) is a personnel handling device; so it is necessary that it be operated and maintained only by trained personnel.

Operator Training

Operator training must cover:

1. Reading and understanding the Operation and Safety Manual.
2. Thorough understanding of the intended purpose and function of the MEWP controls, including platform, ground, and emergency descent controls.
3. Control labels, instructions, and warnings on the machine.
4. Applicable regulations, standards, and safety rules.
5. Use of approved fall protection equipment.
6. Enough knowledge of the mechanical operation of the machine to recognize a malfunction or potential malfunction.
7. The safest means to operate the machine where overhead obstructions, other moving equipment, and obstacles, depressions, holes, and drop-offs exist.
8. Means to avoid the hazards of unprotected electrical conductors.
9. Selection of the appropriate MEWP and available options for the work to be performed considering specific job requirements, with involvement from the MEWP owner, user, and/or supervisor.
10. The responsibility of the operator to ensure all platform occupants have a basic level of knowledge to work safely on the MEWP, and to inform them of applicable regulations, standards, and safety rules.
11. The requirement for familiarization in addition to training.

Training Supervision

Training must be delivered by a qualified person in an open area free of hazards until the trainee has demonstrated the ability to safely control and operate the machine.

To order go to Discount-Equipment.com

https://truckmanualshub.com/

Operator Responsibility

The operator must be instructed that he/she has the responsibility and authority to shut down the machine in case of a malfunction or other unsafe condition of either the machine or the job site.

Machine Familiarization

NOTE: *Responsibilities for familiarization may vary by region.*

Only properly trained personnel who have received unit-specific familiarization shall operate a MEWP. The user shall determine if personnel are qualified to operate the MEWP prior to operation. The user shall ensure that after familiarization, the operator operates the MEWP for a sufficient period of time to achieve proficiency. When authorized by the user, self-familiarization can be achieved, if authorized, by a properly trained operator reading, understanding and following the manufacturer's operator's manual.

Prior to users authorization of an operator to use a specific model of MEWP, the user shall ensure the operator is familiarized on the following:

1. Location of the manual storage compartment and the requirement to ensure the required manual(s) are present on the MEWP;
2. Purpose and function of the machine controls and indicators at the platform and ground control stations;
3. Purpose, location, and function of the emergency controls;
4. Operating characteristics and limitations;
5. Features and devices;
6. Accessories and optional equipment.

2.2 PREPARATION, INSPECTION, AND MAINTENANCE

The following table covers machine inspections and maintenance required by JLG Industries, Inc. Consult local regulations for further requirements for MEWPs. Frequency of inspections and maintenance must be increased as necessary when the machine is used in a harsh or hostile environment, if the machine is used with increased frequency, or if the machine is used in a severe manner.

NOTICE

JLG INDUSTRIES, INC. RECOGNIZES A FACTORY TRAINED SERVICE TECHNICIAN AS A PERSON WHO HAS SUCCESSFULLY COMPLETED THE JLG SERVICE TRAINING SCHOOL FOR THE SPECIFIC JLG PRODUCT MODEL.

To order go to Discount-Equipment.com

https://truckmanualshub.com/

Table 2-1. Inspection and Maintenance Table

Type	Frequency	Primary Responsibility	Service Qualification	Reference
Pre-Start Inspection	Before using each day; or whenever there's an Operator change.	User or Operator	User or Operator	Operator and Safety Manual
Pre-Delivery Inspection (See Note)	Before each sale, lease, or rental delivery.	Owner, Dealer, or User	Qualified JLG Mechanic	Service and Maintenance Manual and applicable JLG inspection form
Frequent Inspection	In service for 3 months or 150 hours, whichever comes first; or Out of service for a period of more than 3 months; or Purchased used.	Owner, Dealer, or User	Qualified JLG Mechanic	Service and Maintenance Manual and applicable JLG inspection form
Annual Machine Inspection	Annually, no later than 13 months from the date of prior inspection.	Owner, Dealer, or User	Factory Trained Service Technician (Recommended)	Service and Maintenance Manual and applicable JLG inspection form
Preventative Maintenance	At intervals as specified in the Service and Maintenance Manual.	Owner, Dealer, or User	Qualified JLG Mechanic	Service and Maintenance Manual

NOTE: *Inspection forms are available from JLG. Use the Service and Maintenance Manual to perform inspections.*

NOTICE

JLG INDUSTRIES, INC. RECOGNIZES A FACTORY TRAINED SERVICE TECHNICIAN AS A PERSON WHO HAS SUCCESSFULLY COMPLETED THE JLG SERVICE TRAINING SCHOOL FOR THE SPECIFIC JLG PRODUCT MODEL.

To order go to Discount-Equipment.com

https://truckmanualshub.com/

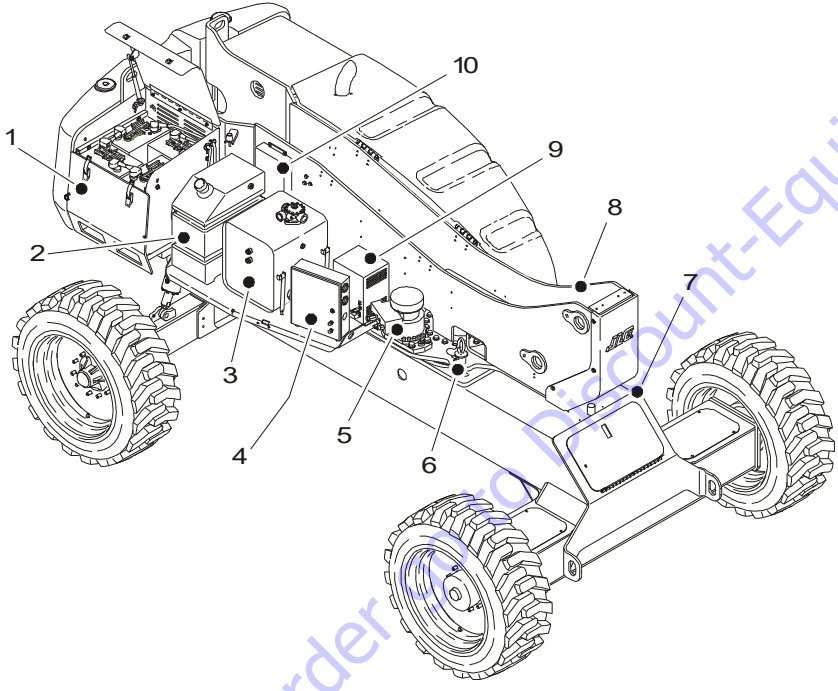

1. Battery Pack
2. Fuel Tank
3. Hydraulic Tank
4. Main Terminal Box
5. Swing Drive
6. Turntable Lock
7. Frame
8. Turntable
9. Battery Charger
10. Generator Control Module (H Models)

Figure 2-1. Basic Nomenclature - Sheet 1 of 3

To order with Discount-Equipment.com

https://truckmanualshub.com/

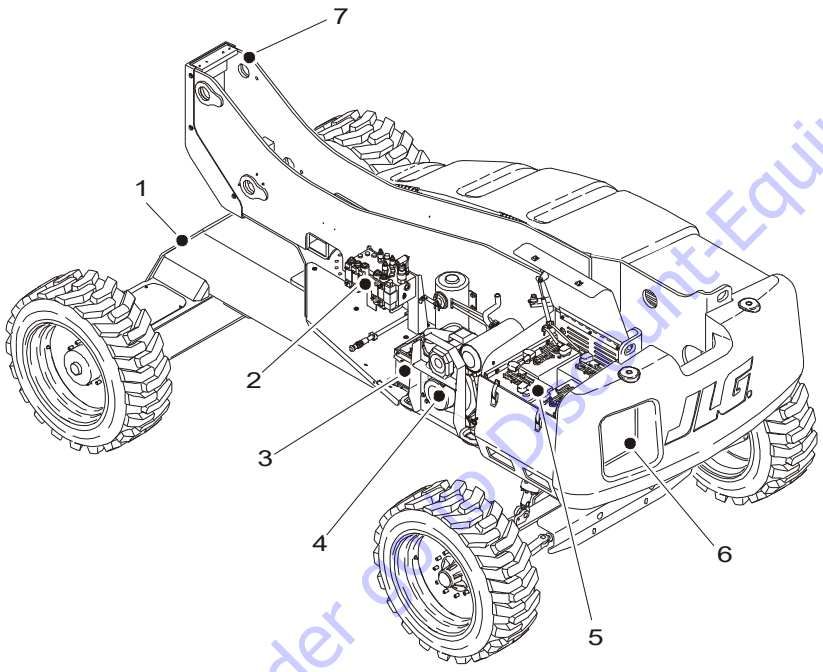

1. Frame
2. Main Valve
3. Generator Start Battery (H Models)
4. Generator (H Models)
5. Battery Pack
6. Ground Control
7. Turntable

Figure 2-2. Basic Nomenclature - Sheet 2 of 3

To order call 800-Discount-Equipment.com

https://truckmanualshub.com/

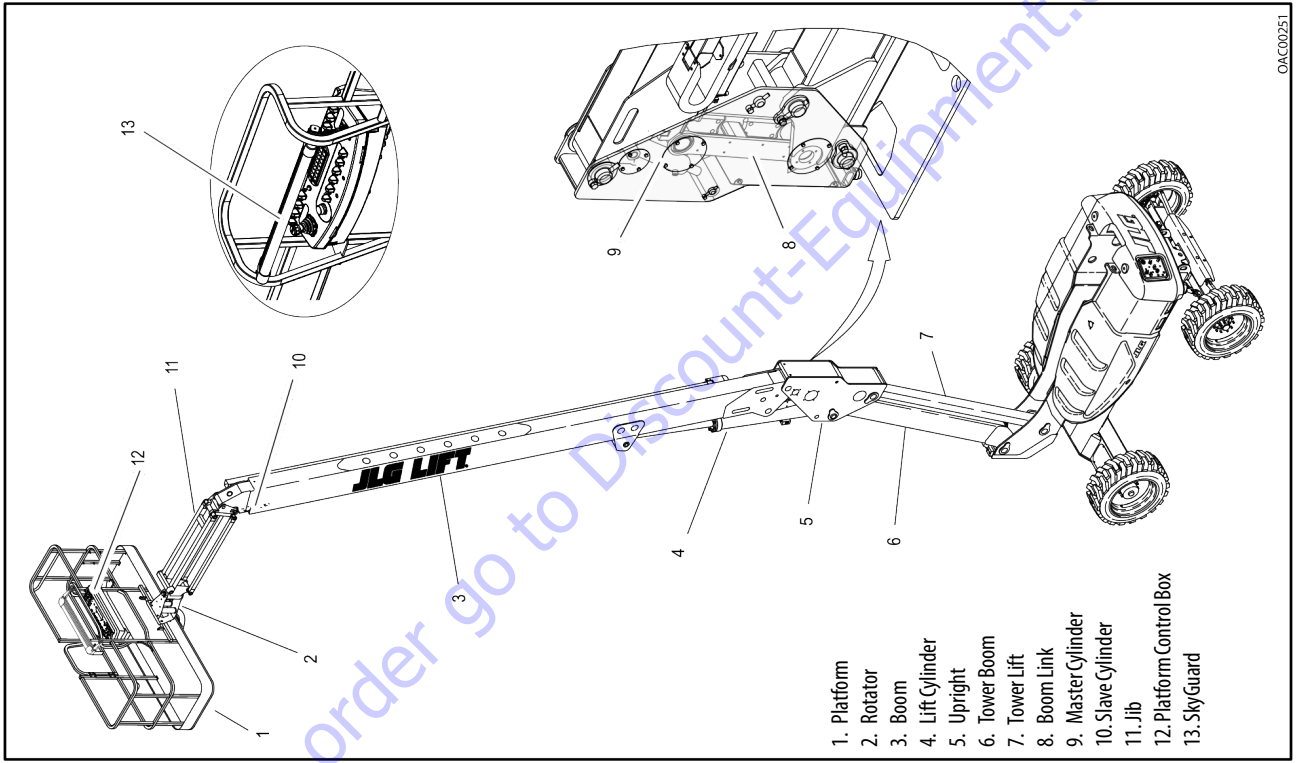

Figure 2-3. Basic Nomenclature - Sheet 3 of 3

To order go to Discount-Equipment.com

https://truckmanualshub.com/

Pre-Start Inspection

The Pre-Start Inspection should include each of the following:

1. **Cleanliness –** Check all surfaces for leakage (oil, fuel, or battery fluid) or foreign objects. Report any leakage to the proper maintenance personnel.
2. **Structure** - Inspect the machine structure for dents, damage, weld or parent metal cracks or other discrepancies.

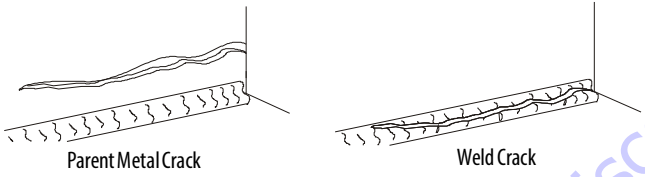

3. **Decals and Placards** – Check all for cleanliness and legibility. Make sure none of the decals and placards are missing. Make sure all illegible decals and placards are cleaned or replaced.
4. **Operation and Safety Manuals** – Make sure a copy of the Operation and Safety Manual, is enclosed in the weather resistant storage container.
5. **Walk-Around Inspection** – Perform as instructed.
6. **Battery –** Charge as required.
7. **Fuel (Combustion Engine Powered Machines)** – Add the proper fuel as necessary.
8. **Hydraulic Oil** – Check the hydraulic oil level. Ensure hydraulic oil is added as required.
9. **Accessories/Attachments** - Refer to the Accessories section in this manual or the accessory installed upon the machine for specific inspection, operation, and maintenance instructions.
10. **Function Check** – Once the Walk-Around Inspection is complete, perform a functional check of all systems in an area free of overhead and ground level obstructions. Refer to Section 4 for more specific operating instructions.
11. **Platform Gate –** Keep gate and surrounding area clean and unobstructed. Verify the gate closes properly and is not bent or damaged. Keep gate closed at all times except when entering/exiting the platform and loading/unloading materials.
12. **Lanyard Attach Points –** During operation, occupants in the platform must wear a full body harness with a lanyard attached to an authorized lanyard anchorage point. Attach only one (1) lanyard per lanyard anchorage point

⚠ WARNING

IF THE MACHINE DOES NOT OPERATE PROPERLY, TURN OFF THE MACHINE IMMEDIATELY! REPORT THE PROBLEM TO THE PROPER MAINTENANCE PERSONNEL. DO NOT OPERATE THE MACHINE UNTIL IT IS DECLARED SAFE FOR OPERATION.

To order go to Discount-Equipment.com

https://truckmanualshub.com/

Walk-Around Inspection

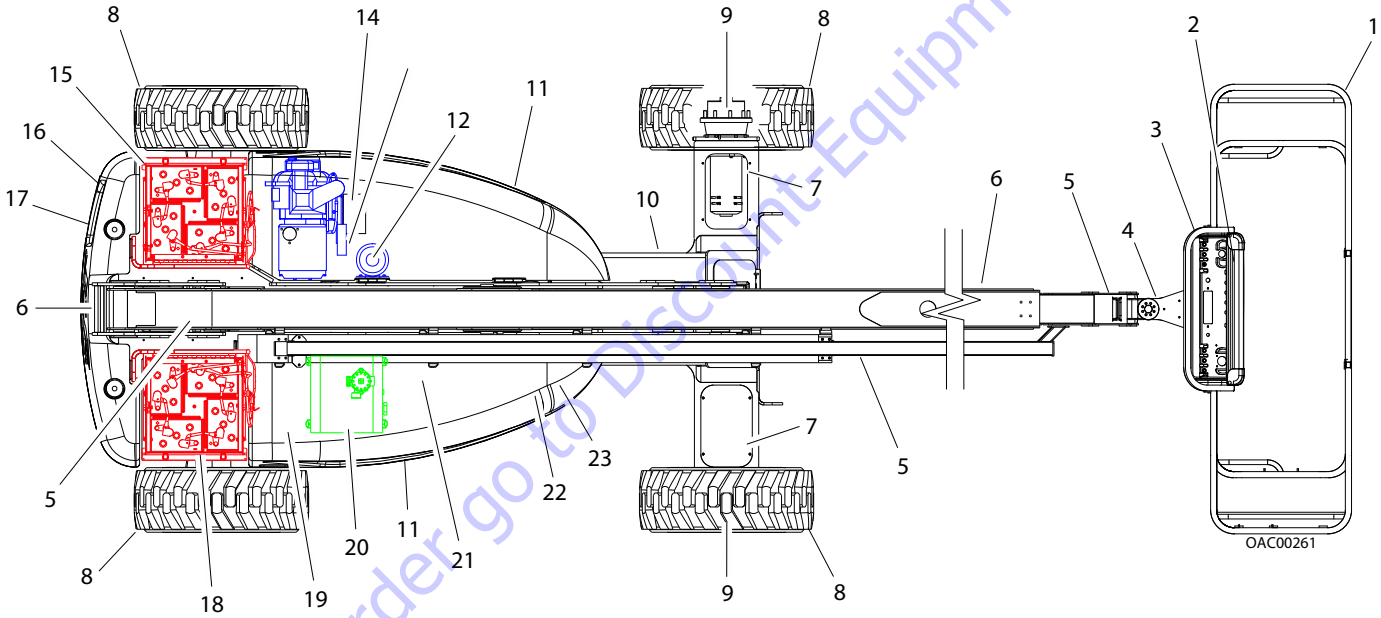

To order go to Discount-Equipment.com

https://truckmanualshub.com/

GENERAL

Begin your Walk-Around Inspection at item 1, as noted on the diagram. Continue to your right (counterclockwise viewed from the top) checking each item in sequence for the conditions listed in the following checklist.

⚠ WARNING

TO AVOID POSSIBLE INJURY, BE SURE MACHINE POWER IS OFF. DO NOT OPERATE MACHINE UNTIL ALL MALFUNCTIONS HAVE BEEN CORRECTED.

NOTICE

DO NOT OVERLOOK VISUAL INSPECTION OF CHASSIS UNDERSIDE. CHECKING THIS AREA MAY RESULT IN DISCOVERY OF CONDITIONS WHICH COULD CAUSE EXTENSIVE MACHINE DAMAGE.

***INSPECTION NOTE**: On all components, make sure there are no loose or missing parts, that they are securely fastened, and no visible damage, leaks or excessive wear exists in addition to any other criteria mentioned.*

1. **Platform Assembly and Gate** - Footswitch works properly, not modified, disabled or blocked. Gate latches and hinges in working condition.
2. **SkyGuard** - See Inspection Note.
3. **Platform Control Console** - Switches and levers return to neutral when activated and released, decals/placards secure and legible, control markings legible.
4. **Platform Rotator** - See Inspection Note.
5. **All Hydraulic Cylinders** - No visible damage; pivot pins and hydraulic hoses undamaged, not leaking.
6. **Boom Sections/Uprights/Turntable** - See Inspection Note.
7. **Drive Axle and Motor** - See Inspection Note.
8. **Wheel/Tire Assemblies** - Properly secured, no missing lug nuts. Inspect for worn tread, cuts, tears or other discrepancies. Inspect wheels for damage and corrosion.
9. **Drive Brake and Hub** - No evidence of leakage.
10. **Frame** - See Inspection Note.
11. **Hood Assemblies** - See Inspection Note.
12. **Hydraulic Pump and Reservoir** - See Inspection Note.
13. **Manual Descent Valve** - See Inspection Note.
14. **Generator Start Battery** - See Inspection Note.
15. **Battery Compartment** - Batteries have proper electrolyte level; cables tight; no visible damage or corrosion.
16. **Counterweight** - No evidence of damage.

To order go to Discount-Equipment.com

https://truckmanualshub.com/

17. **Ground Control Console** - Switches and levers return to neutral when activated and released, decals/placards secure and legible, control markings legible.
18. **Battery Compartment** - Batteries have proper electrolyte level; cables tight; no visible damage or corrosion.
19. **Fuel Tank** - See Inspection Note.
20. **Hydraulic Filter** - See Inspection Note.
21. **Battery Charger** - See Inspection Note.
22. **Turntable Bearing** - Evidence of proper lubrication. No evidence of loose bolts or looseness between bearing and machine.
23. **Swing Motor and Worm Gear** - No evidence of damage.

To order go to Discount-Equipment.com

https://truckmanualshub.com/

Function Check

⚠ WARNING

TO AVOID SERIOUS INJURY, DO NOT OPERATE MACHINE IF ANY CONTROL LEVERS OR TOGGLE SWITCHES CONTROLLING PLATFORM MOVEMENTS DO NOT RETURN TO THE OFF POSITION WHEN RELEASED.

⚠ WARNING

TO AVOID A COLLISION AND INJURY IF PLATFORM DOES NOT STOP WHEN A CONTROL SWITCH OR LEVER IS RELEASED, REMOVE FOOT FROM FOOTSWITCH OR USE EMERGENCY STOP TO STOP MACHINE.

Perform the Function Check as follows:

1. From the ground control console with no load in the platform:
   - **a.** Ensure that all machine functions are disabled when the Emergency Stop Button is pushed in.
   - **b.** Ensure all functions stop when the function switch is released.
   - **c.** Operate all functions and ensure proper operation;
   - **d.** Ensure proper operation of the manual descent controls, as described in Section 5.5 of this manual.
2. From the platform control console:
   - **a.** Ensure that the control console is firmly secured in the proper location
   - **b.** Check that all guards protecting the switches or locks are in place.
   - **c.** Ensure that all machine functions are disabled when the Emergency Stop Button is pushed in.
   - **d.** Ensure that all machine functions stop when the footswitch is released.
   - **e.** Operate all functions and ensure proper operation.
3. With the platform in the stowed position:
   - **a.** Drive the machine on a grade, not to exceed the rated gradeability, and stop to ensure the brakes hold;
   - **b.** Check that the tilt indicator is illuminated to ensure proper operation.
4. Swing the boom over either of the rear tires and ensure that the Drive Orientation indicator illuminates and that the Drive Orientation Override switch must be used for the drive function to operate.
5. With the machine positioned on a smooth, firm surface within the limits of the maximum operating slope, elevate the boom above 11 degrees of horizontal. Select high speed drive mode. Carefully attempt to drive and ensure the drive speed is reduced.

To order go to Discount-Equipment.com

https://truckmanualshub.com/

SkyGuard Function Test

NOTE: *Refer to Section 4.11 for additional information on SkyGuard operation.*

From the Platform Console in an area free from obstructions:

1. Operate the telescope out function.
2. Activate the SkyGuard sensor:
   a. **SkyGuard -** Apply approximately 50 lb (222 Nm) of force to yellow bar.
   b. **SkyGuard - SkyLine -** Press cable to break magnetic connection between the cable and right bracket.
   c. **SkyGuard - SkyEye -** Put arm or hand in path of sensor beam.
3. Once the sensor has been activated, verify the following conditions:
   a. Telescope out function stops and telescope in function operates for a short duration.
   b. The horn sounds.
   c. If equipped with a SkyGuard beacon, the beacon illuminates.
4. Disengage the SkyGuard sensor, release controls, then recycle the footswitch. Ensure normal operation is available.

NOTE: *On machines equipped with SkyLine, reattach magnetic end of the cable to the bracket.*

If SkyGuard remains activated after function reversal or cutout, depress and hold the SkyGuard Override Switch to allow normal use of machine functions until the sensor is disengaged.

To order go to Discount-Equipment.com

https://truckmanualshub.com/

SECTION 3. MACHINE CONTROLS AND INDICATORS

3.1 GENERAL

NOTICE

THE MANUFACTURER HAS NO DIRECT CONTROL OVER MACHINE APPLICATION AND OPERATION. THE USER AND OPERATOR ARE RESPONSIBLE FOR CONFORMING WITH GOOD SAFETY PRACTICES.

This section provides the necessary information needed to understand control functions.

3.2 CONTROLS AND INDICATORS

NOTE: *The indicator panels use different shaped symbols to alert the operator to different types of operational situations that could arise. The meaning of those symbols are explained below.*

Indicates a potentially hazardous situation, which if not corrected, could result in serious injury or death. This indicator will be red.

Indicates an abnormal operating condition, which if not corrected, may result in machine interruption or damage. This indicator will be yellow.

Indicates important information regarding the operating condition, i.e. procedures essential for safe operation. This indicator will be green with the exception of the capacity indicator which will be yellow.

To order go to Discount-Equipment.com

https://truckmanualshub.com/

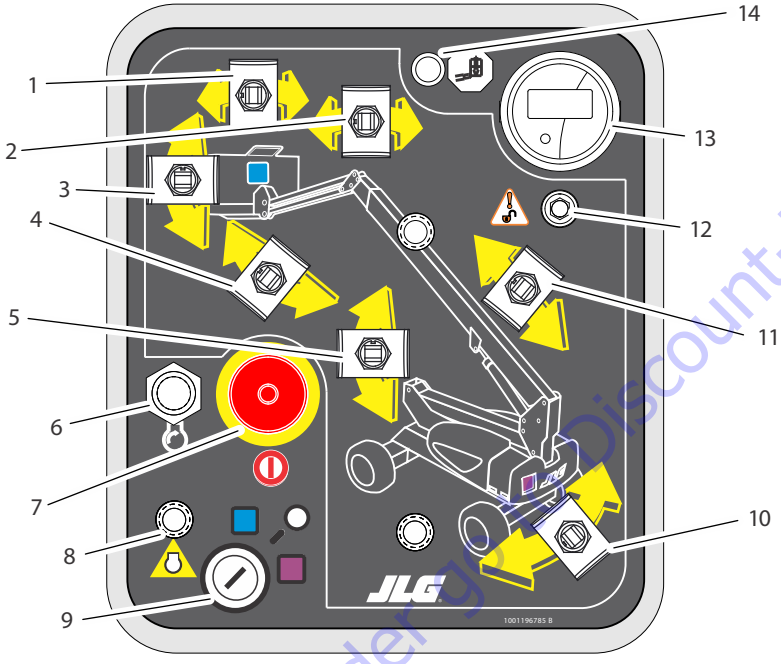

1. Platform Rotate
2. Jib Rotate
3. Platform Leveling Override
4. Jib Lift
5. Boom Lift
6. Generator/Engine Start
7. Power/Emergency Stop
8. Generator Enabled Indicator
9. Platform/Ground Select
10. Swing
11. Telescope
12. Machine Safety System Override (MSSO) (CE Only)
13. Indicator Gauge
14. Platform Overload

Figure 3-1. Ground Control Station

To order go to Discount-Equipment.com

https://truckmanualshub.com/

NOTE: *The optional generator engine will automatically shut down under the following conditions:*

Batteries Fully Charged
High Oil Temperature
Low Oil Pressure
Engine Overspeed
Overvoltage

NOTE: *The optional generator engine will not start if the batteries are fully charged or if the Generator Enable switch on the platform console is not in the On position.*

Ground Control Station

See Figure 3-1.

WARNING

TO AVOID SERIOUS INJURY, DO NOT OPERATE MACHINE IF ANY CONTROL LEVERS OR TOGGLE SWITCHES CONTROLLING PLATFORM MOVEMENT DO NOT RETURN TO THE OFF OR NEUTRAL POSITION WHEN RELEASED.

NOTE: *When machine is shut down the Platform/Ground Select switch and Emergency Stop must be positioned to Off.*

1. Platform Rotate

   Provides rotation of the platform.

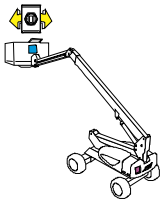

2. Jib Rotate (If Equipped)

   Provides rotation of the jib and platform.

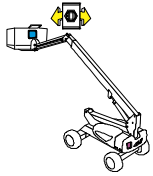

WARNING

ONLY USE THE PLATFORM LEVELING OVERRIDE FUNCTION FOR SLIGHT LEVELING OF THE PLATFORM. INCORRECT USE COULD CAUSE THE LOAD/OCCUPANT TO SHIFT OR FALL. FAILURE TO DO SO COULD RESULT IN DEATH OR SERIOUS INJURY.

3. Platform Leveling Override

   A three position switch allows the operator to adjust the automatic self leveling system. This switch is used to adjust platform level in situations such as ascending/descending a grade.

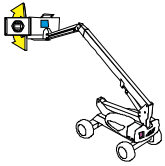

To order, go to Discount-Equipment.com

https://truckmanualshub.com/

4. Jib Lift (If Equipped)

Provides raising and lowering of the jib.

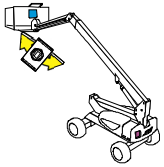

5. Boom Lift

Provides for raising and lowering of the Boom.

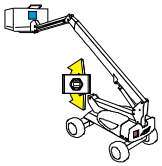

NOTE: *Refer to the Service Manual for the generator fault codes.*

6. Generator/Engine Start Button (if equipped)

The generator/engine start push-button switch allows the generator to be started manually to top-off the battery charge. The generator will start automatically when the batteries reach a low-charge level.

7. Power/Emergency Stop

A two-position red mushroom shaped switch furnishes power to Platform/Ground Select switch when pulled out (on). When pushed in (off), power is shut off to the Platform/Ground Select switch.

8. Generator Enabled Indicator

The generator enabled indicator lights to signify the generator is enabled and may start at any time as the batteries require. If the indicator flashes, it signifies an abnormal condition for the generator engine (high oil temperature or low oil pressure) or, on all electric machines, an electrical system fault.

9. Platform/Ground Select

A three position, key operated switch supplies power to the platform control console when positioned to Platform. With the switch key held in the Ground position, power is shut off to platform and only ground controls are operable.

NOTE: *With Platform/Ground Select switch in the center position, power is shut off to controls at both operating stations.*

To order go to Discount-Equipment.com

https://truckmanualshub.com/

10. Swing

Provides 400 degrees non-continuous turntable rotation.

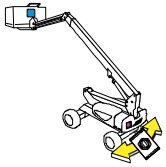

11. Telescope

Provides for extension and retraction of the Boom.

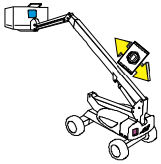

12. Machine Safety System Override (MSSO) (CE Only)

Provides emergency override of function controls that are locked out in the event of Load Sense System activation.

13. Indicator Gauge

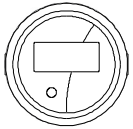

Registers the amount of time the machine has been in use, with functions operating. In the event of a fault, the hourmeter also displays the three digit fault code. Refer to the Service Manual for a listing of fault codes. Additionally, there is a small, red indicator light that will blink when there is a fault on the machine to draw operator attention to the display.

14. Platform Overload

Indicates the platform has been overloaded.

To order go to Discount-Equipment.com

https://truckmanualshub.com/

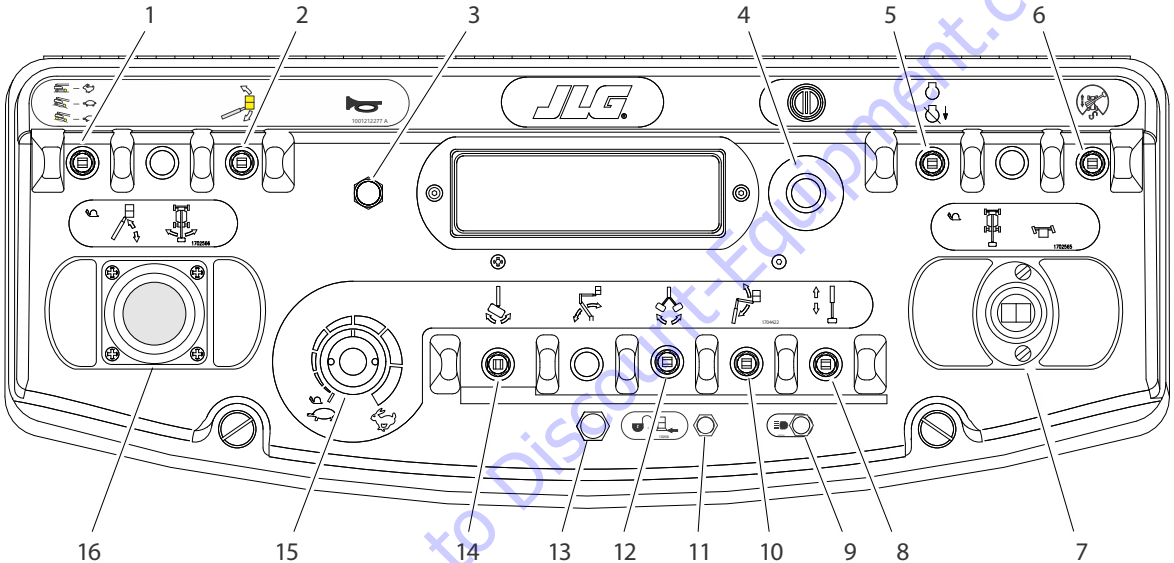

1. Speed Mode
2. Platform Leveling Override
3. Horn
4. Power/Emergency Stop
5. Generator Enable
6. Drive Orientation Override
7. Drive/Steer
8. Telescope
9. Lights
10. Articulating Jib Boom
11. Soft Touch/SkyGuard Override
12. Jib Rotate
13. Soft Touch/SkyGuard Indicator
14. Platform Rotate
15. Function Speed
16. Main Lift/Swing

Figure 3-2. Platform Control Station

To order go to Discount-Equipment.com

https://truckmanualshub.com/

Platform Control Station

(See Figure 3-2., Platform Control Station)

1. Speed Mode

Activating the Speed Mode switch allows the operator to High or Low Speed travel operation.

2WD - On 2WD machines, a two-position switch is used. The forward position selects High Speed travel and the lower position selects Low Speed travel.

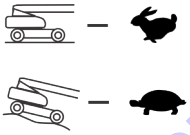

4WD - On 4WD machines, a three-position switch is used. The forward position selects High speed mode. The middle position selects Low Speed mode and Automatic 4WD. The lower position is momentary and selects Manual 4WD. It must be held down as long as Manual 4WD is required.

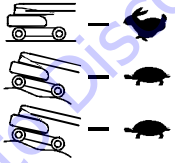

WARNING

ONLY USE THE PLATFORM LEVELING OVERRIDE FUNCTION FOR SLIGHT LEVELING OF THE PLATFORM. INCORRECT USE COULD CAUSE THE LOAD/OCCUPANT TO SHIFT OR FALL. FAILURE TO DO SO COULD RESULT IN DEATH OR SERIOUS INJURY.

2. Platform Leveling Override

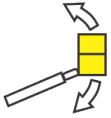

A three position switch allows the operator to adjust the automatic self leveling system. This switch is used to adjust platform level in situations such as ascending/descending a grade.

3. Horn

A push-type Horn switch supplies electrical power to an audible warning device when pressed.

To order go to Discount-Equipment.com

https://truckmanualshub.com/

4. Power/Emergency Stop

A two-position red mushroom shaped switch furnishes power to Platform Controls when pulled out (on). When pushed in (off), power is shut off to the platform functions.

Within about 2 seconds of pulling the switch out, the machine will perform a diagnostic check of the various electrical circuits, and if everything is OK, the platform alarm will beep once. During this time the lights on the indicator panel will also blink once as a bulb check.

⚠ WARNING

TO AVOID SERIOUS INJURY, DO NOT OPERATE MACHINE IF ANY CONTROL LEVERS OR TOGGLE SWITCHES CONTROLLING PLATFORM MOVEMENT DO NOT RETURN TO THE OFF OR NEUTRAL POSITION WHEN RELEASED.

5. Generator Enable Control (if equipped)

This switch allows the operator to prevent the generator engine from starting to charge the batteries when using the machine indoors.

6. Drive Orientation Override

When the boom is swung over the rear tires or further in either direction, the Drive Orientation indicator will illuminate when the drive function is selected. Push and release the switch, and within 3 seconds move the Drive/Steer control to activate drive or steer. Before driving, locate the black/white orientation arrows on both the chassis and the platform controls and match the control direction arrow to the intended chassis direction.

7. Drive/Steer

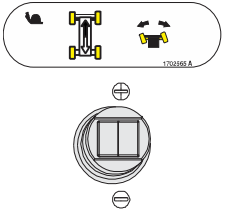

The Drive joystick provides for driving either forward or backward. The controller is 'ramped' to allow variable drive speed.

Steering is controlled by a thumb operated switch on top of the joystick.

8. Telescope Control

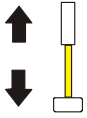

Provides extension and retraction of the main boom.

To order go to Discount-Equipment.com

https://truckmanualshub.com/

9. Lights (If Equipped)

This switch operates the accessory lights package if the machine is so equipped.

10. Jib Lift (If Equipped)

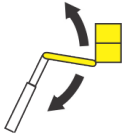

Provides the raising and lowering of the jib.

11. Soft Touch/SkyGuard Override Switch

For machines equipped with SkyGuard:

The SkyGuard override switch enables functions cut out by the Skyguard system to be operated again, allowing the operator to resume use of machine functions.

For machines equipped with both SkyGuard and Soft Touch:

The switch operates like the SkyGuard override switch as described above. The switch also enables the functions cut out by the Soft Touch system to operate again at creep speed, allowing the operator to move the platform away from the obstacle that caused the shutdown situation.

12. Jib Rotate (If Equipped)

Provides rotation of the jib and platform.

13. Soft Touch/SkyGuard Indicator

Indicates the Soft Touch bumper is against an object or the SkyGuard sensor has been activated. All controls are cut out until the override button is pushed. For Soft Touch, controls are then active in the Creep Mode or for SkyGuard, controls will work normally.

To order go to Discount-Equipment.com

https://truckmanualshub.com/

14. Platform Rotate

Provides rotation of the platform.

15. Function Speed Control

Controls the speed of Boom and Swing Functions. Rotate counter clockwise for slower speed and clockwise for faster speed. To adjust to creep, turn knob fully counter clockwise until it clicks.

NOTE: *To operate the Main Boom Lift/Swing joystick, pull up on the locking ring below the handle.*

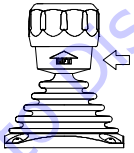

NOTE: *The Main Boom Lift/Swing joystick is spring loaded and will automatically return to neutral (off) position when released.*

16. Main Lift/Swing

Provides main lift and swing. Push forward to lift up, pull backward to boom down. Move right to swing right, move left to swing left. Moving the joystick activates switches to provide the functions selected.

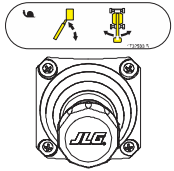

NOTE: *Main lift and swing functions may be selected at the same time. Maximum speed is reduced when both functions are selected.*

To order go to Discount-Equipment.com

https://truckmanualshub.com/

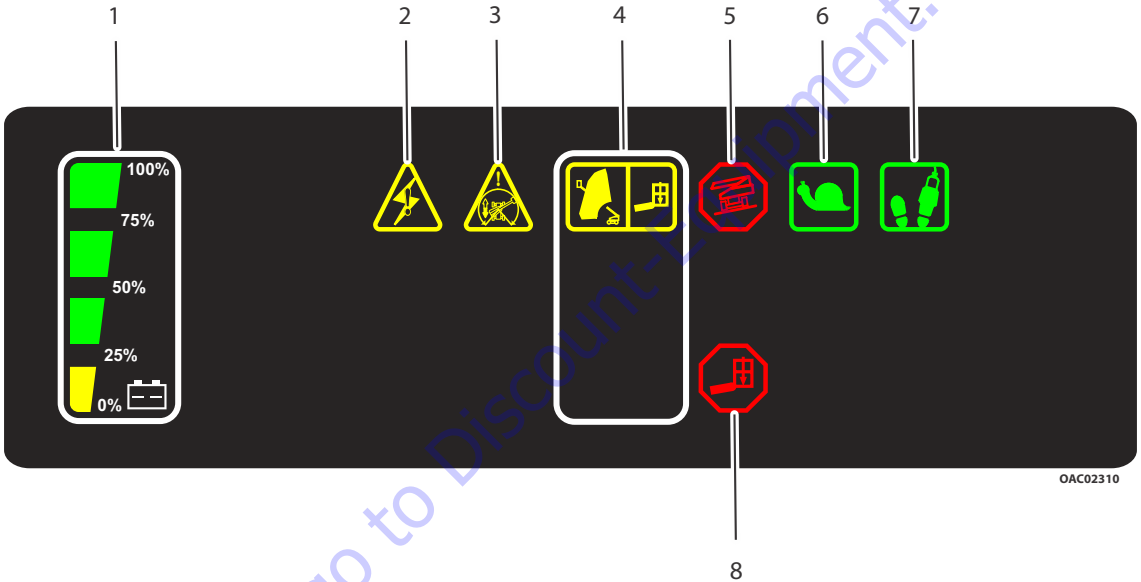

1. Battery Charge
2. System Distress
3. Drive Orientation
4. Capacity Zone Indicator
5. Tilt Alarm Warning
6. Creep Speed
7. Footswitch
8. Platform Overload

Figure 3-3. Platform Control Indicator Panel

To order go to Discount-Equipment.com

https://truckmanualshub.com/

Platform Control Indicator Panel

(See Figure 3-3., Platform Control Indicator Panel)

1. Battery Charge Level Indicator

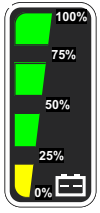

Indicates the state-of-charge of the battery pack.

2. System Distress Indicator

The light indicates the JLG Control System has detected an abnormal condition and a Diagnostic Trouble Code has been set in the system memory. Refer to the Service Manual for instructions concerning the trouble codes and the trouble code retrieval.

3. Drive Orientation Indicator

When the boom is swung beyond the rear drive tires or further in either direction, the Drive Orientation indicator will illuminate when the drive function is selected. This is a signal for the operator to verify that the drive control is being operated in the proper direction (i.e. controls reversed situations).

4. Capacity Zone Indicator

Indicates the platform capacity zone for the current position of the platform. Restricted capacities are permitted at restricted platform positions (shorter boom lengths and higher boom angles).

5. Tilt Warning Light and Alarm

This red illuminator indicates the chassis is on a slope. If the boom is above horizontal and the machine is on a slope, the tilt alarm warning light will illuminate, an alarm will sound, available functions are placed in Creep speed, and drive is cut out in the direction of travel. Drive in the opposite direction may be allowed under certain conditions.

Tilt Angle	Specification
3°	EC600SJP/H600SJP - All Market
4°	EC600SJ/H600SJ - All Markets

To order go to Discount-Equipment.com

https://truckmanualshub.com/

⚠ WARNING

IF TILT WARNING LIGHT IS ILLUMINATED WHEN BOOM IS RAISED OR EXTENDED, RETRACT AND LOWER TO BELOW HORIZONTAL THEN REPOSITION MACHINE SO THAT IT IS WITHIN THE LIMITS OF THE MAXIMUM OPERATING SLOPE BEFORE EXTENDING BOOM OR RAISING BOOM ABOVE HORIZONTAL.

6. Creep Speed Indicator

When the Function Speed Control is turned to the creep position, the indicator acts as a reminder that all functions are set to the slowest speed.

7. Enable Indicator/Footswitch

To operate any function, the footswitch must be depressed and the function selected within seven seconds. The enable indicator shows that the controls are enabled. If a function is not selected within seven seconds, or if a seven second lapse between ending one function and beginning the next function, the enable light will go out and the footswitch must be released and depressed again to enable the controls.

Releasing the footswitch removes power from all controls and stops all functions.

⚠ WARNING

TO AVOID SERIOUS INJURY, DO NOT REMOVE, MODIFY OR DISABLE THE FOOTSWITCH BY BLOCKING OR ANY OTHER MEANS.

8. Platform Overload Indicator

Indicates the platform has been overloaded.

To order go to DiscountEquipment.com

https://truckmanualshub.com/

SECTION 4. MACHINE OPERATION

4.1 DESCRIPTION

This machine is a mobile elevating work platform used to position personnel, along with their necessary tools and materials at work locations.

The primary operator control console is in the platform. From this control console, the operator can drive and steer the machine in both forward and reverse directions. The operator can raise or lower the boom or swing the boom to the left or right. Standard boom swing is 400 degree non-continuous. The machine has a Ground Control Console which will override the Platform Control Station. Ground Controls operate all functions except drive and steer. Except for performing inspections and the Function Check, the ground controls are to be used in an emergency to lower the platform to the ground should the operator in the platform be unable to do so.

4.2 OPERATING CHARACTERISTICS AND LIMITATIONS

Capacities

The boom can be raised above horizontal with or without any load in platform, if:

1. Machine is positioned on a smooth, firm surface within the limits of the maximum operating slope.
2. Load is within manufacturer's rated capacity.
3. All machine systems are functioning properly.
4. Machine is as originally equipped from JLG.

To order go to Discount-Equipment.com

https://truckmanualshub.com/

Platform Load Sensing System (LSS)

The Platform Load Sensing System provides the platform capacity to the control system.

If the LSS system senses an overload condition, boom functions will be disabled, the overload indicator is illuminated at both control stations, and the overload alarm will sound. Reduce the weight in the platform to not exceed the rated workload indicated on the capacity decal, then the controls will work again.

Stability

Machine stability is based on two (2) conditions which are called FORWARD and BACKWARD stability. The machine's position of least FORWARD stability is shown in (See Figure 4-1.), and its position of least BACKWARD stability is shown in (See Figure 4-2.)

⚠ WARNING

TO AVOID FORWARD OR BACKWARD TIPPING, DO NOT OVERLOAD MACHINE OR OPERATE THE MACHINE BEYOND THE LIMIT OF THE MAXIMUM OPERATING SLOPE.

To order go to Discount Equipment.com

https://truckmanualshub.com/

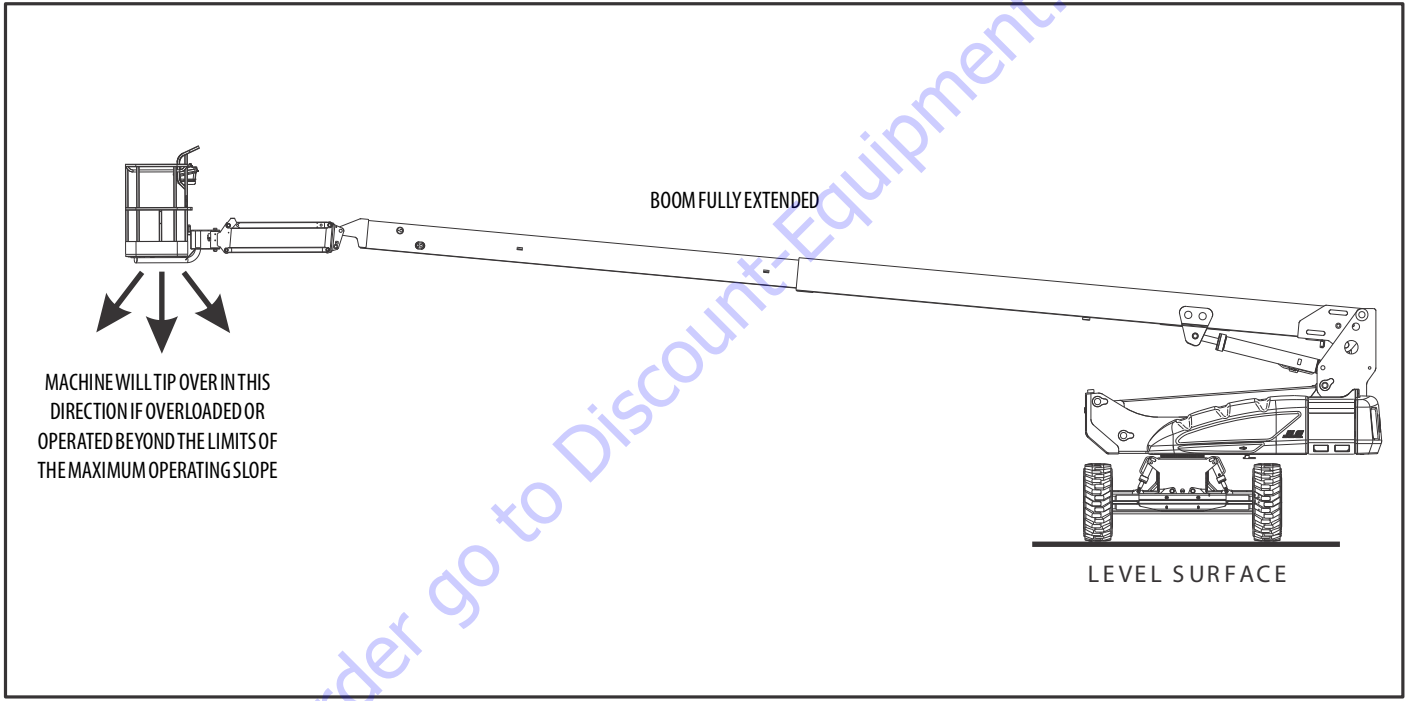

Figure 4-1. Position of Least Forward Stability

To order go to Discount-Equipment.com

https://truckmanualshub.com/

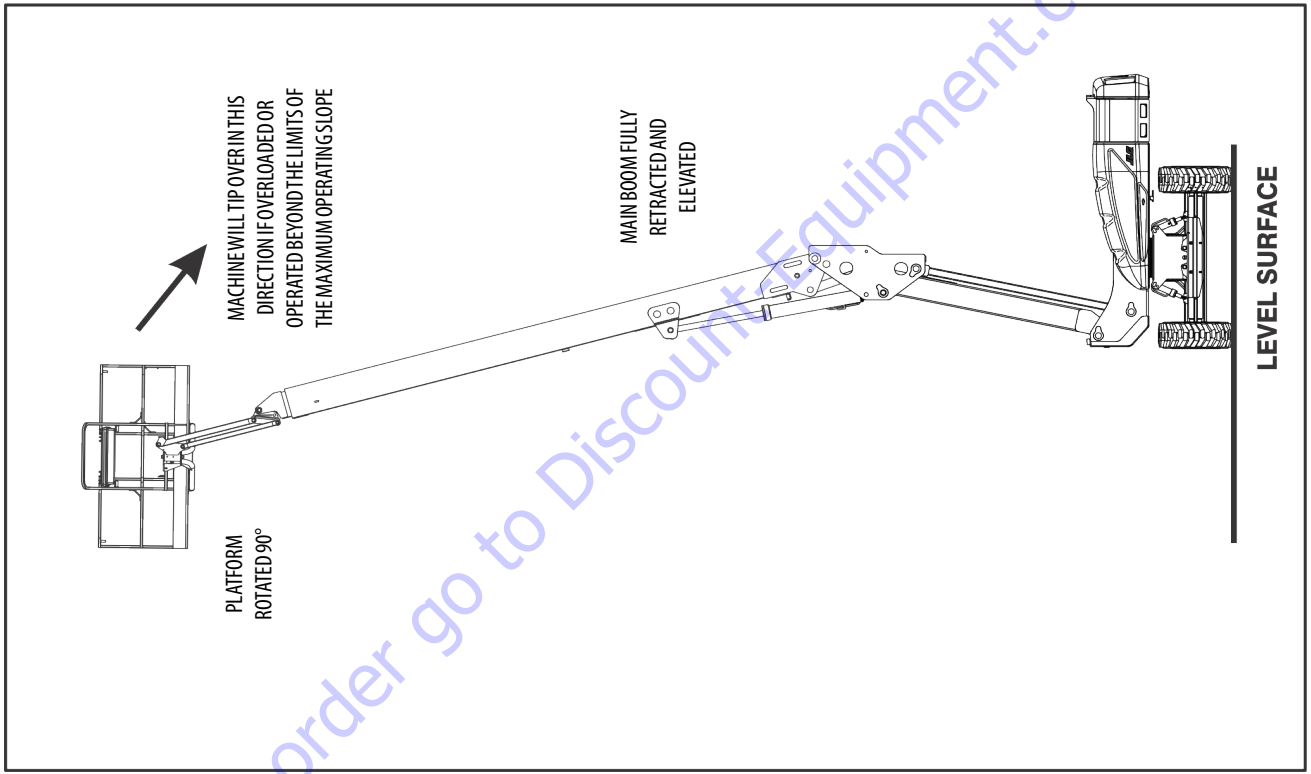

Figure 4-2. Position of Least Backward Stability

To order go to Discount Equipment.com

https://truckmanualshub.com/

4.3 MOTOR OPERATION

Power/Emergency Stop

This red, mushroom-shaped switch provides battery power, when pulled out (On), for all machine functions. The switch should be pushed in (Off) when recharging the batteries or parking the machine overnight.

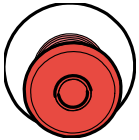

Platform/Ground Select Switch

The Platform/Ground Select switch functions to direct battery power to the desired control station when the Power/Emergency Stop switch is pulled out (on). With the switch in the Ground position, battery power is supplied to the ground control station. When the switch is in the Platform position, battery power is supplied to the platform control station.

4.4 TRAVELING (DRIVING)

NOTE: *When the upper boom is raised approximately 11 degrees above horizontal, the high drive function will automatically be in low drive.*

⚠ WARNING

DO NOT DRIVE THE MEWP OUT OF TRANSPORT MODE EXCEPT ON A SMOOTH, FIRM SURFACE WITHIN THE LIMITS OF THE MAXIMUM OPERATING SLOPE.

TO AVOID LOSS OF TRAVEL CONTROL OR TIP OVER, DO NOT DRIVE MACHINE ON GRADES EXCEEDING THOSE SPECIFIED IN THE OPERATING SPECIFICATIONS SECTION OF THIS MANUAL.

DO NOT DRIVE ON SIDESLOPES WHICH EXCEED 4 DEGREES.

USE EXTREME CAUTION WHEN DRIVING IN REVERSE AND AT ALL TIMES WHEN DRIVING WITH THE PLATFORM ELEVATED.

BEFORE DRIVING, LOCATE THE BLACK/WHITE ORIENTATION ARROWS ON BOTH THE CHASSIS AND THE PLATFORM CONTROLS. MOVE THE DRIVE CONTROLS IN A DIRECTION MATCHING THE DIRECTIONAL ARROWS FOR THE INTENDED DIRECTION OF TRAVEL.

To order go to Discount-Equipment.com

https://truckmanualshub.com/

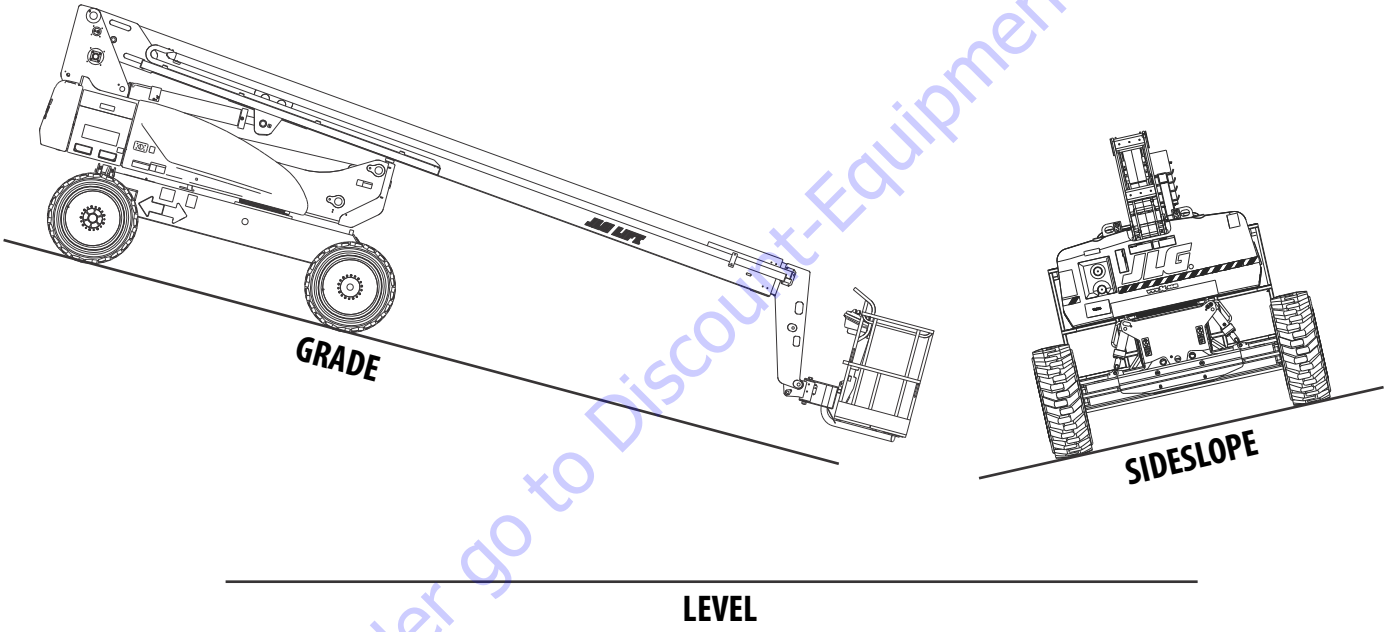

Figure 4-3. Grade and Side Slopes

To order go to Discount-Equipment.com

https://truckmanualshub.com/

Traveling Forward and Reverse

1. At Platform Controls, pull out Emergency Stop switch and activate footswitch.

2. Position Drive controller to Forward or Reverse as desired.

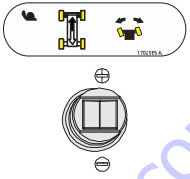

This machine is equipped with a Drive Orientation Indicator. The yellow light on the platform control console indicates that the boom is swung beyond the rear drive tires and the machine may Drive/Steer in the opposite direction from the movement of the controls. If the indicator is illuminated, operate the Drive function in the following manner:

1. Match the black and white direction arrows on both platform control panel and the chassis to determine the direction the machine will travel.

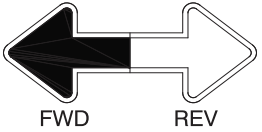

2. Push and release the Drive Orientation Override switch. Within 3 seconds, slowly move the Drive control toward the arrow matching the intended direction of machine travel. The indicator light will flash during the 3 second interval until the drive function is selected.

To order go to Discount-Equipment.com

https://truckmanualshub.com/

Traveling on a Grade

When traveling a grade, maximum braking and traction are obtained with the boom stowed, in position over the rear (drive) axle, and in line with the direction of travel. Drive the machine forward when climbing a grade, and in reverse when descending a grade. Do not exceed the machine's maximum rated gradeability.

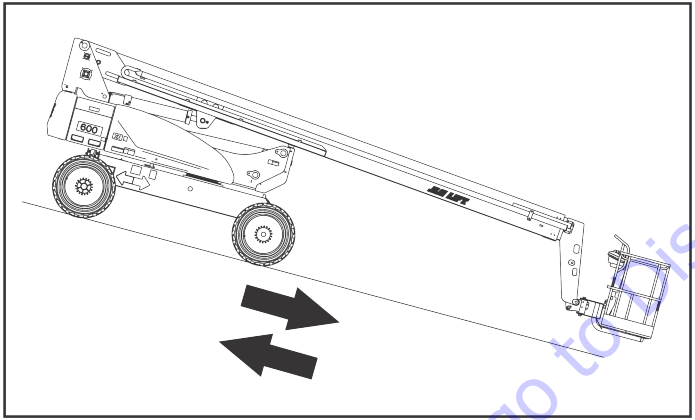

Figure 4-4. Traveling on a Grade

NOTICE

IF THE BOOM IS OVER THE FRONT (STEER) AXLE, DIRECTION OF STEER AND DRIVE MOVEMENT WILL BE OPPOSITE FROM THE MOVEMENT OF THE CONTROLS.

4.5 STEERING

Position thumb switch on Drive/Steer controller to Right for steering right, or to Left for steering left.

4.6 PLATFORM

Platform Level Adjustment

To manually Level Up or Down - Position the Platform/Level control switch Up or Down and hold until the platform is level.

WARNING

ONLY USE THE PLATFORM LEVELING OVERRIDE FUNCTION FOR SLIGHT LEVELING OF THE PLATFORM. INCORRECT USE COULD CAUSE THE LOAD/OCCUPANT TO SHIFT OR FALL. FAILURE TO DO SO COULD RESULT IN DEATH OR SERIOUS INJURY.

Platform Rotation

To rotate the platform to the left or right, use the Platform Rotate control switch to select the direction and hold until desired position is reached.

To Order go to DiscountEquipment.com

https://truckmanualshub.com/

4.7 BOOM

WARNING

A RED TILT WARNING LIGHT IS LOCATED ON THE CONTROL CONSOLE WHICH LIGHTS WHEN THE CHASSIS IS ON AN EXCESSIVE SLOPE. DO NOT SWING OR RAISE BOOM ABOVE HORIZONTAL WHEN LIGHT IS LIT.

DO NOT DEPEND ON TILT ALARM AS A LEVEL INDICATOR FOR THE CHASSIS. TILT ALARM INDICATES CHASSIS IS ON AN EXCESSIVE SLOPE (4 DEGREE OR GREATER). CHASSIS MUST BE LEVEL BEFORE SWINGING, OR RAISING BOOM ABOVE HORIZONTAL OR DRIVING WITH THE BOOM ELEVATED.

TO AVOID TIP OVER IF RED TILT WARNING LIGHTS LIGHT WHEN THE BOOM IS RAISED ABOVE HORIZONTAL, LOWER PLATFORM TO GROUND LEVEL. THEN REPOSITION MACHINE SO THAT CHASSIS IS LEVEL BEFORE RAISING BOOM.

TRAVELING WITH BOOM BELOW HORIZONTAL IS PERMITTED ON GRADES AND SIDE SLOPES SPECIFIED ON SERIAL NAMEPLATE ON THE FRAME.

WARNING

TO AVOID SERIOUS INJURY, DO NOT OPERATE MACHINERY IF ANY CONTROL LEVER OR TOGGLE SWITCH CONTROLLING PLATFORM MOVEMENT DOES NOT RETURN TO THE OFF OR NEUTRAL POSITION WHEN RELEASED.

CAUTION

TO AVOID A COLLISION AND INJURY IF PLATFORM DOES NOT STOP WHEN A CONTROL SWITCH OR LEVER IS RELEASED, REMOVE FOOT FROM FOOTSWITCH OR USE EMERGENCY STOP SWITCH TO STOP THE MACHINE.

Swinging the Boom

To swing boom, use Swing control switch to select Right or Left direction.

NOTICE

WHEN SWINGING THE BOOM MAKE SURE THERE IS AMPLE ROOM FOR THE BOOM TO CLEAR SURROUNDING WALLS, PARTITIONS AND EQUIPMENT.

Raising and Lowering the Upper Boom

To raise or lower the Upper Boom, use Upper Boom Lift switch to select Up or Down movement.

To order go to Discount-Equipment.com

https://truckmanualshub.com/

4.8 GENERATOR (OPTIONAL)

Automatic Operating Mode

The generator will operate in automatic mode when:

1. Ground Control Emergency Stop is pulled out (On), **and**:
2. The Generator Enable switch on the platform control console is in the On or Enable position.

When the above conditions apply, the generator's controller will monitor status of the batteries, will turn on automatically when the battery voltage drops as a result of discharge and will turn off when batteries are fully charged.

Battery Only Operating Mode

The machine will operate in the battery only mode when:

1. Ground Control Emergency Stop is pulled out, **and**:
2. The switch on the platform control console is in the Off or Disable position.

The batteries can be used until they are fully discharged.

Manual (Charge) Operating Mode

The generator will operate in manual mode when:

1. Ground Control Emergency Stop is pulled out, **and**:
2. The switch on the platform control console is in the On or Enable position **and**:
3. The Manual Charge push button is activated.

Activation of the Manual Charge button will start the engine and begin the charging cycle even if the batteries are charged above the level of automatic start.

4.9 FUNCTION SPEED CONTROL

This control affects the speed of all boom functions and Platform Rotate. When in the counter cloackwise maximum position, Drive is placed in Creep speed.

To order go to Discount-Equipment.com

https://truckmanualshub.com/

4.10 MACHINE SAFETY SYSTEM OVERRIDE (MSSO) (CE ONLY)

The Machine Safety System Override (MSSO) is used to override function controls for Emergency Platform Retrieval only. Refer to Section 5.6, Machine Safety System Override (MSSO) (CE Only)for operating procedures.

4.11 SKYGUARD OPERATION

SkyGuard provides enhanced control panel protection. When the SkyGuard sensor is activated, functions in use at the time of actuation will reverse or cutout. The SkyGuard Function Table provides more details on these functions.

During activation, the horn will sound and, if equipped with a SkyGuard beacon, the beacon will illuminate until sensor and footswitch are disengaged.

If the SkyGuard sensor remains activated after function reversal or cutout, depress and hold the SkyGuard Override Switch to allow normal functions until the sensor is disengaged.

Consult the following illustrations to determine which type of SkyGuard the machine has and how it is activated. Regardless of type, SkyGuard function according to the SkyGuard Function Table does not change.

To order go to Discount-Equipment.com

https://truckmanualshub.com/

SkyGuard

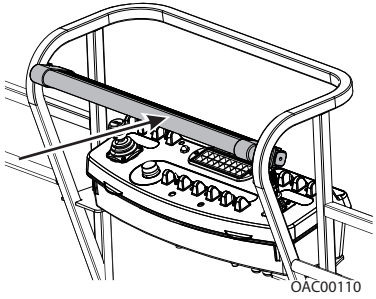

Approximately 50 lb (222 Nm) of force is applied to yellow bar.

SkyGuard - SkyLine

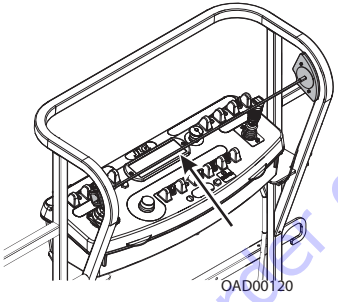

Cable is pressed, breaking the magnetic connection between the cable and right bracket.

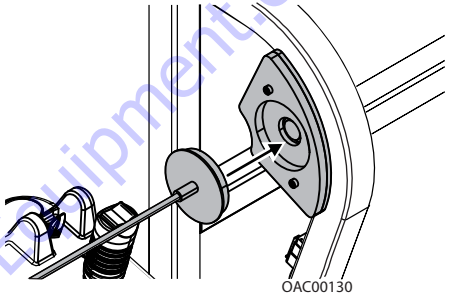

Reattach magnetic end of cable to bracket if it becomes disconnected.

SkyGuard - SkyEye

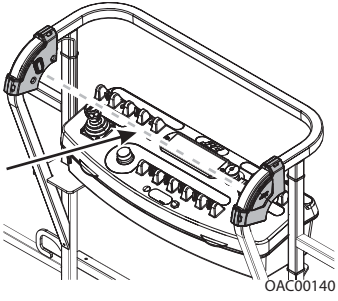

Operator passes through path of sensor beam.

To order go to Discount-Equipment.com

https://truckmanualshub.com/

SkyGuard Function Table

Drive Forward	Drive Reverse	Steer	Swing	Boom Lift Up	Boom Lift Down	Boom Tele Out	Boom Tele In	Jib Lift	Jib Swing	Basket Level	Basket Rotate
R*/C**	R	C	R	R	C	R	C	C	C	C	C
R = Indicates Reversal is Activated											
C = Indicates Cutout is Activated											
* DOS Enabled											
** DOS Not Enabled, machine is driving straight without steering, and any other hydraulic function is active											

To order go to Discount-Equipment.com

https://truckmanualshub.com/

4.12 OSCILLATING AXLE LOCKOUT TEST (IF EQUIPPED)

NOTICE

LOCKOUT SYSTEM TEST MUST BE PERFORMED QUARTERLY, ANY TIME A SYSTEM COMPONENT IS REPLACED, OR WHEN IMPROPER SYSTEM OPERATION IS SUSPECTED.

Refer to Section 7.4, Oscillating Axle Lockout Test (If Equipped) for procedure.

4.13 SHUT DOWN AND PARK

NOTE: *When parking overnight, batteries should be charged properly to ensure readiness for following workday.*

NOTE: *Electric machines are equipped with a static strap due to static electricity build-ups. Strap is located under rear of machine chassis.*

The preferred procedures to shut down and park the machine are as follows:

1. Drive machine to a reasonably well protected area.
2. Ensure boom is fully retracted and lowered over rear axle.
3. Shut down Emergency Stop at Platform Controls.
4. Shut down Emergency Stop at Ground Controls. Position Platform/Ground Select switch to center Off (center position).
5. If necessary, cover Platform Controls to protect instruction placards, warning decals, and operating controls from hostile environment.

NOTICE

IF PARKING A MEWP WITH THE BOOM ELEVATED IN AN EFFORT TO CONSERVE SPACE, BOOMS MAY BE ELEVATED, BUT SHALL NOT BE EXTENDED. IT IS THE OPERATOR'S RESPONSIBILITY TO ENSURE ALL SAFETY PRECAUTIONS IN SECTION 1 OF THIS MANUAL ARE FOLLOWED FOR EACH UNIQUE SITUATION.

To order go to Discount-Equipment.com

https://truckmanualshub.com/

4.14 LIFTING AND TIE DOWN

Lifting

1. Refer to the Machine Serial Number Plate, call JLG Industries, or weigh the individual unit to find out the Gross Vehicle Weight.
2. Place the boom in the stowed position.
3. Remove all loose items from the machine.
4. Properly adjust the rigging to prevent damage to the machine and so the machine remains level.

Tie Down

NOTICE

WHEN TRANSPORTING THE MACHINE, THE BOOM MUST BE FULLY LOWERED INTO THE BOOM REST.

1. Place the boom in the stowed position.
2. Remove all loose items from the machine.
3. Secure the chassis and the platform using straps or chains of adequate strength.

To order go to Discount-Equipment.com

https://truckmanualshub.com/

IMPORTANT

LIFTING INSTRUCTIONS

1. See the Operators and Safety Manual for approximate gross weight of machine as originally manufactured.
2. Place boom in the stowed position with turntable locked
3. Remove all loose items from machine.
4. Properly adjust rigging to prevent damage to machine and so machine remains level.

TIE DOWN INSTRUCTIONS

1. Place boom in the stowed position with turntable locked.
2. Remove all loose items from machine.
3. Secure the chassis and the platform using straps or chains of adequate strength.

Refer to the Operators and Safety Manual for more information.

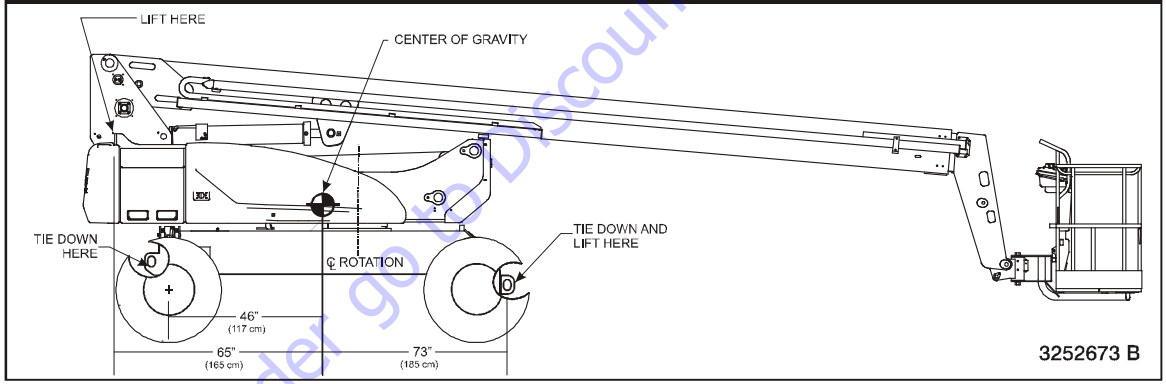

Figure 4-5. Lifting and Tie Down Chart

To order go to Discount-Equipment.com

https://truckmanualshub.com/

4.15 TOWING INSTRUCTIONS

WARNING

THE MACHINE HAS NO TOWING BRAKES. THE TOWING VEHICLE MUST BE ABLE TO CONTROL THE MACHINE AT ALL TIMES. TOWING IS NOT PERMITTED ON HIGHWAY.

WARNING

KEEP ALL BODY PARTS AWAY FROM MOVING COMPONENTS.
FAILURE TO FOLLOW THESE INSTRUCTIONS COULD RESULT IN DEATH OR SERIOUS INJURY.

CAUTION

MAXIMUM TOWING SPEED: 5 MPH (8 KM/H) FOR A DISTANCE OF 5 MILES (8K).

MAXIMUM TOWING GRADE: 25%

The following instructions are for towing using the optional tow bar.

1. Lock the turntable in the travel position, with the boom fully lowered and retracted.
2. Lower the tow bar to the towing position and connect to the towing vehicle.
3. Disengage the drive hubs.
4. Position the steer/tow selector to the towing (out) position.

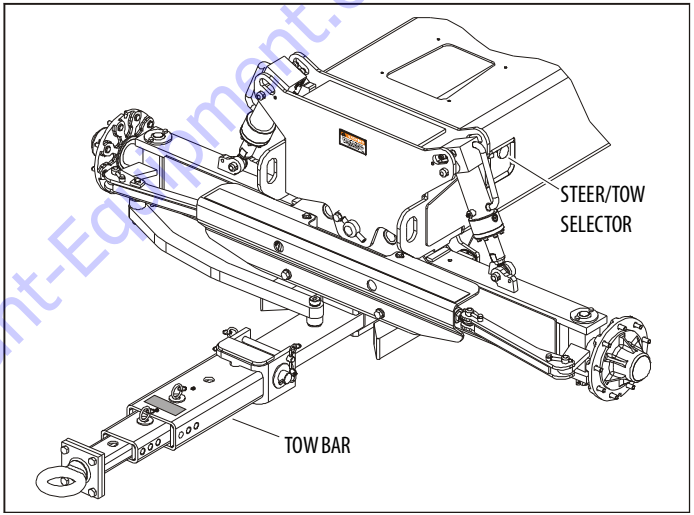

5. To return the machine to the self-propelled mode, follow the above steps in the reverse order.

To order go to Discount-Equipment.com

https://truckmanualshub.com/

4.16 DRIVE HUB

Disengaging for Towing

CAUTION

MAKE SURE THE DISCONNECT MECHANISM IS ONLY OPERATED WITH THE MACHINE AT A STANDSTILL.

1. Remove the two hex head bolts from the cover.

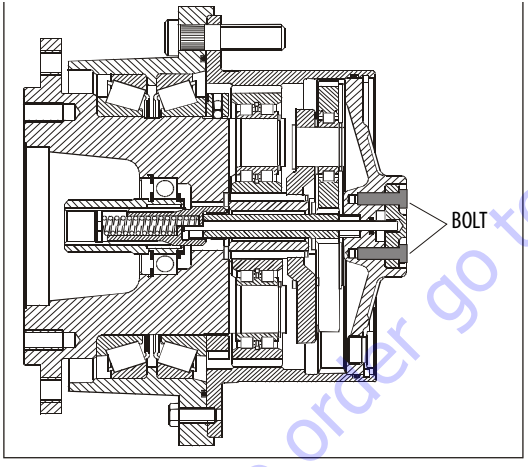

2. Remove the cover.

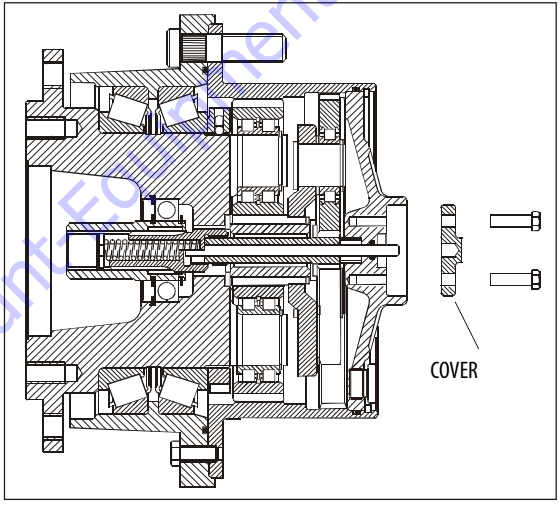

To order go to Discount-Equipment.com

https://truckmanualshub.com/

3. Rotate the cover to show the inside diameter

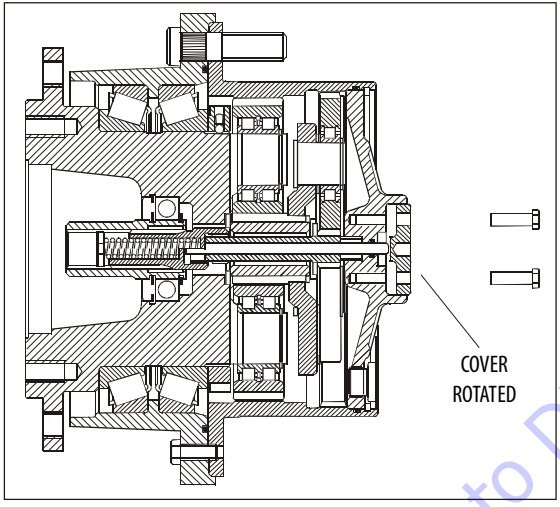

4. Install the bolts and torque 6.3 ft. lb (8.8 Nm) until they are flush with the cover.
5. The machine is ready to be towed.

WARNING

BEFORE THE MACHINE IS SEPARATED FROM THE TOWING VEHICLE, EITHER THE DRIVE HUB HAS TO BE REENGAGED OR PROPER STEPS MUST BE TAKEN TO PREVENT THE MACHINE FROM MOVING.

Engaging after Towing is Complete

WARNING

THE COVER IS UNDER SPRING FORCE

1. Remove the 2 hex head bolts securing the cover evenly and remove the cover.
2. Rotate the cover 180 degrees and secure with the two hex head bolts.
3. Torque the hex head bolts 6.3 ft. lb. (8.8 Nm).
4. The gear drive should now be reengaged and the machine can be disconnected from the towing vehicle.

To order go to Discount-Equipment.com

https://truckmanualshub.com/

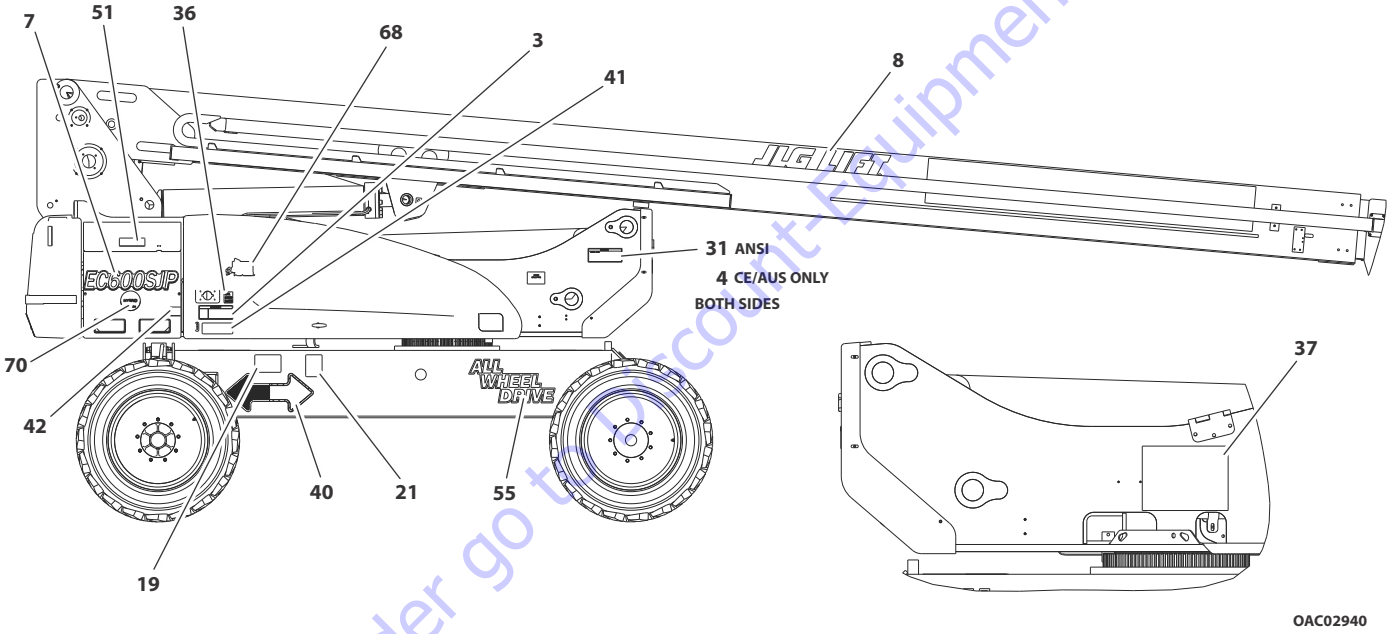

Figure 4-6. Decal Installation - Sheet 1 of 5

To order go to: Discount-Equipment.com

https://truckmanualshub.com/

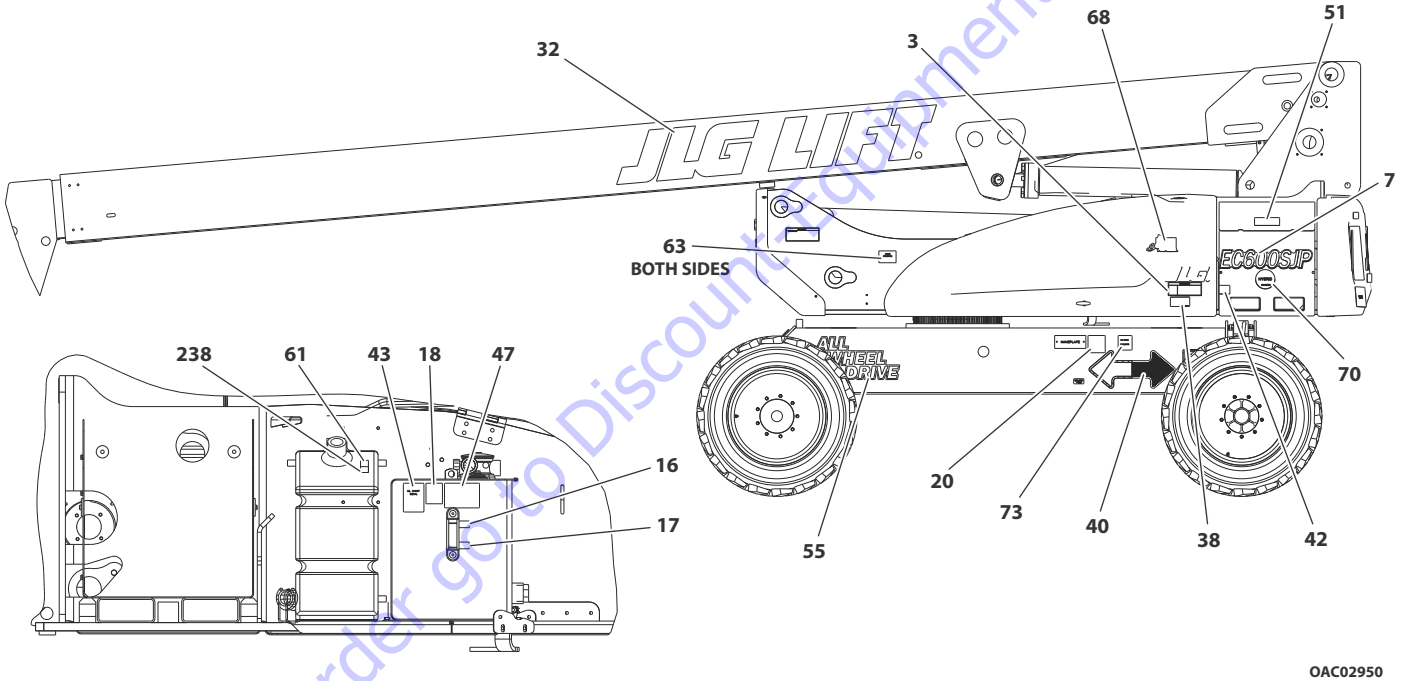

Figure 4-7. Decal Installation - Sheet 2 of 5

To order go to Discountequipment.com

https://truckmanualshub.com/

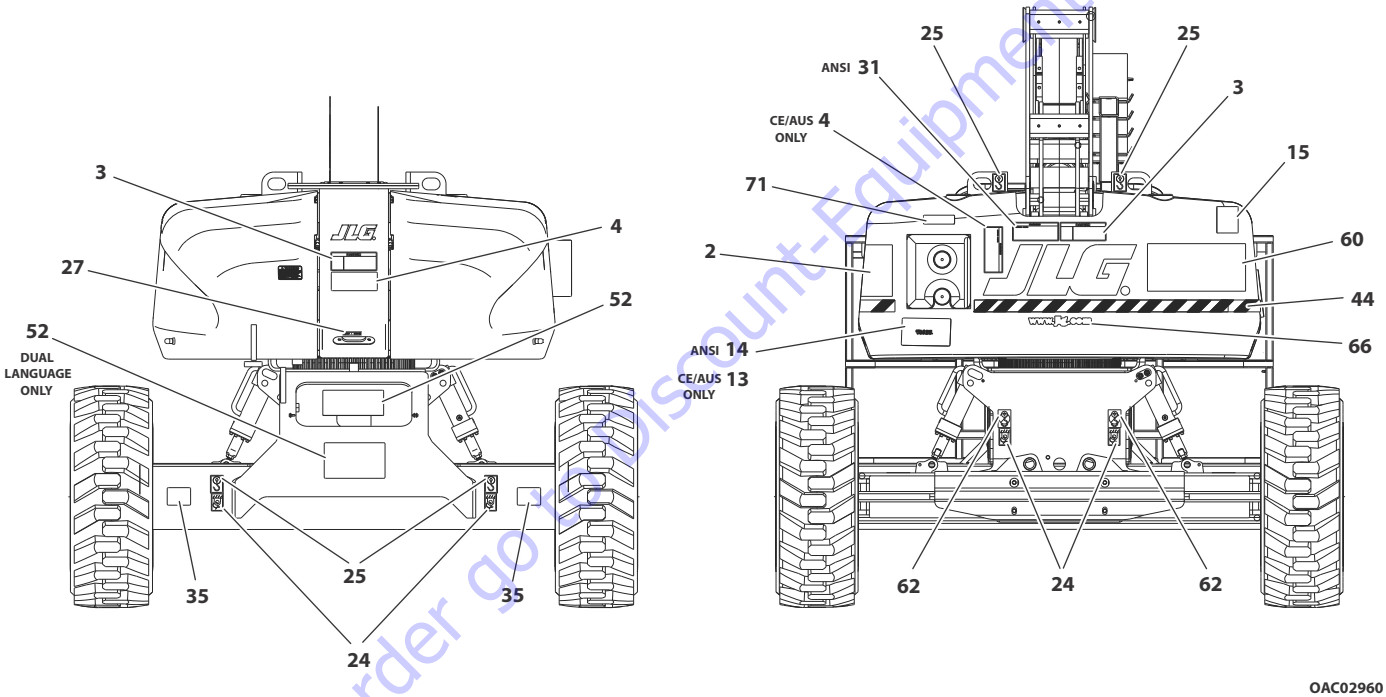

Figure 4-8. Decal Installation - Sheet 3 of 5

To order go to Discount-Equipment.com

https://truckmanualshub.com/

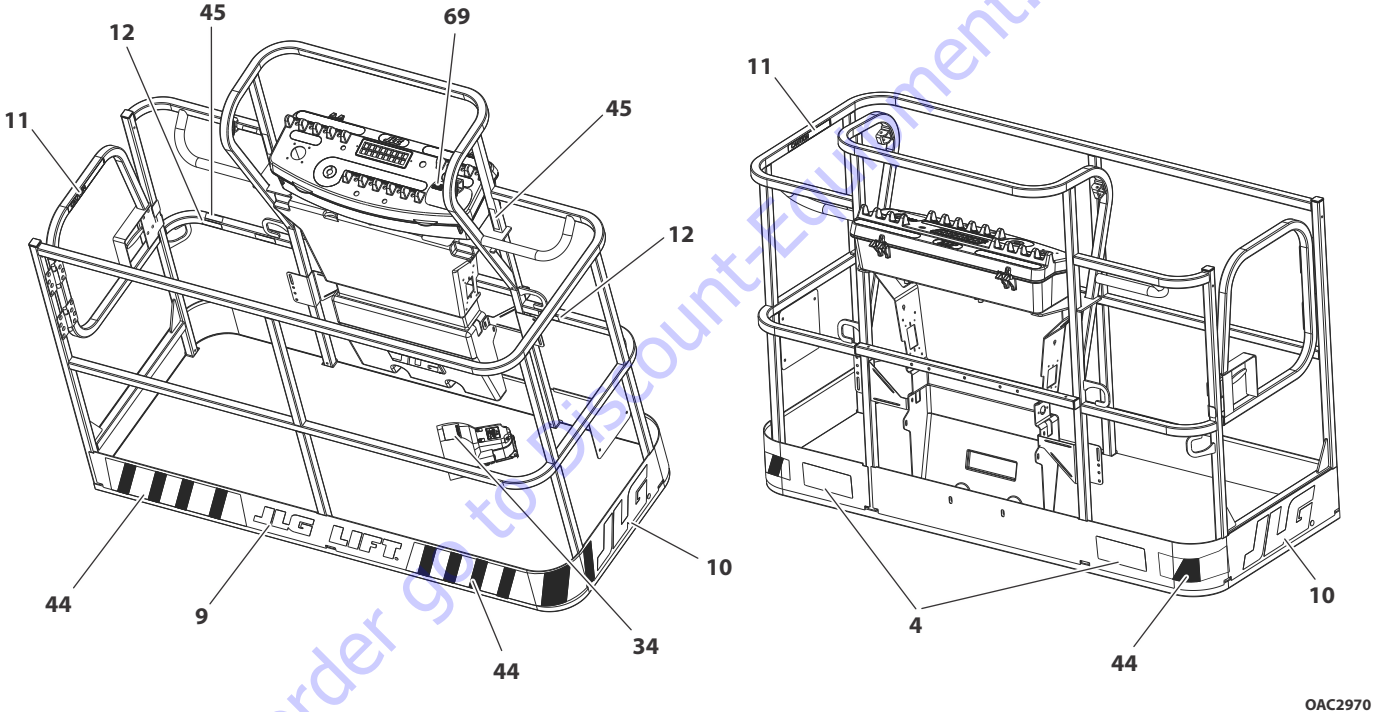

Figure 4-9. Decal Installation - Sheet 4 of 5

To order go to Discount-Equipment.com

https://truckmanualshub.com/

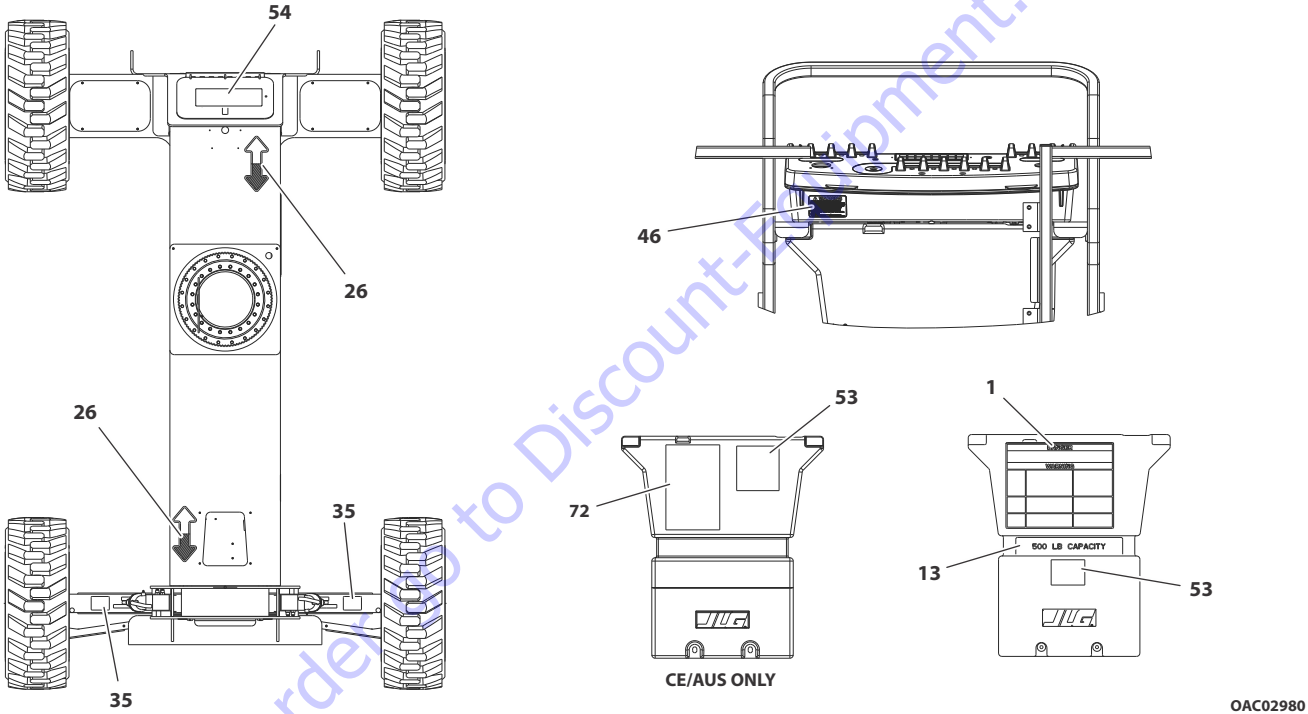

Figure 4-10. Decal Installation - Sheet 5 of 5

To order go to Discount-Equipment.com

https://truckmanualshub.com/

Table 4-1. Decal Legend

Item #	ANSI 1001248325-B	CE/Aus 1001248326-A	Japan 1001248327-B	Korean/Eng 1001248328-B	Eng/Spanish 1001248329-B	Eng/French 1001248330-B	Chinese/Eng 1001248331-B	Port./Spa 1001248332-B
1	1703797	1705921	1703926	1703927	1703923	1703924	1703925	1703928
2	1704575	1705822	1704667	1704668	--	--	--	--
3	1703805	--	1703938	1703939	1703935	1703936	1703937	1703940
4	1703804	1701518	1703950	1703951	1703947	1703948	1703949	1703952
7-EC600SJ	1001256649	1001256649	1001256649	1001256649	1001256649	1001256649	1001256649	1001256649
7-H600SJ	1001256650	1001256650	1001256650	1001256650	1001256650	1001256650	1001256650	1001256650
7-EC600SJP	1001256652	1001256652	1001256652	1001256652	1001256652	1001256652	1001256652	1001256652
7-H600SJP	1001256651	1001256651	1001256651	1001256651	1001256651	1001256651	1001256651	1001256651
8	1702860	1702860	1702860	1702860	1702860	1702860	1702860	1702860
9	1702774	1702774	1702774	1702774	1702774	1702774	1702774	1702774
10	1702773	1702773	1702773	1702773	1702773	1702773	1702773	1702773
11	1702868	--	--	--	1704001	1704000	1001116846	1704002
12	1704277	1704277	1704277	1704277	1704277	1704277	1704277	1704277
13	1001253920	1705978	1001253932	1001253924	1001253930	1001253922	1001253926	1001253928
14	1001253921	--	1001253933	1001253925	1001253931	1001253923	1001253927	1001253929
15	3251813	1705084	--	--	--	3251813	--	--
16	1701502	1701502	1701502	1701502	1701502	1701502	1701502	1701502

To order go to Discount-Equipment.com

https://truckmanualshub.com/

Table 4-1. Decal Legend

Item #	ANSI 1001248325-B	CE/Aus 1001248326-A	Japan 1001248327-B	Korean/Eng 1001248328-B	Eng/Spanish 1001248329-B	Eng/French 1001248330-B	Chinese/Eng 1001248331-B	Port./Spa 1001248332-B
17	1701503	1701503	1701503	1701503	1701503	1701503	1701503	1701503
18	1701504	1701504	1701504	1701504	1701504	1701504	1701504	1701504
20	1702631	1702631	1702631	1702631	1702631	1702631	1702631	1702631
21	1001131269	--	--	--	--	1001131269	--	--
22	1001253997	1001253993/ 1001253994	1001253997	1001253997	1001253997	1001253997	1001253997	1001253997
23	1701509	1701509	1701509	1701509	1701509	1701509	1701509	1701509
24	1702300	1702300	1702300	1702300	1702300	1702300	1702300	1702300
25	1701500	1701500	1701500	1701500	1701500	1701500	1701500	1701500
26	1701529	1701529	1701529	1701529	1701529	1701529	1701529	1701529
27	3251243	--	--	--	3251243	3251243	--	3251243
28	0860520	0860520	0860520	0860520	0860520	0860520	0860520	0860520
31	1703953	--	1703944	1703945	1703941	1703942	1703943	1703946
32	1702861	1702861	1702861	1702861	1702861	1702861	1702861	1702861
34	3252347	1705828	1703980	1703981	1703983	1703984	1703982	1703985
35	1704708	1704708	1704708	1704708	1704708	1704708	1704708	1704708
36	1701644	1701644	1701644	1701644	1701644	1701644	1701644	1701644
37	1704705	1704705	1704705	1704705	1704705	1704705	1704705	1704705
38	1702901	1706392	1704119	1704120	1704117	1704116	1704121	1704118

To order go to Discount-Equipment.com

https://truckmanualshub.com/

Table 4-1. Decal Legend

Item #	ANSI 1001248325-B	CE/Aus 1001248326-A	Japan 1001248327-B	Korean/Eng 1001248328-B	Eng/Spanish 1001248329-B	Eng/French 1001248330-B	Chinese/Eng 1001248331-B	Port./Spa 1001248332-B
40	1701501	1701501	1701501	1701501	1701501	1701501	1701501	1701501
41	1704248	1706378	1704331	1704332	1704328	1704329	1704333	1704330
42	1702155	1702155	1702155	1702155	1702155	1702155	1702155	1702155
43	1704412	1704412	1704412	1704412	1704412	1704412	1704412	1704412
44	4420051	4420051	4420051	4420051	4420051	4420051	4420051	4420051
46	1001231801	--	--	--	--	--	--	--
47	1704174	1704174	1704174	1704174	1704174	1704174	1704174	1704174
51	1703813	1705670	1704342	1704343	1704339	1704340	1704344	1704341
52	1706377	1706377	1706377	1706377	1706377	1706377	1706377	1706377
53	1704286	1001093687	1704369	1704370	1704371	1704368	1704372	1704373
54	1001209679	100209679	1001209679	1001209679	1001209679	1001209679	1001209679	1001209679
55	1704724	1704724	1704724	1704724	1704724	1704724	1704724	1704724
62	1701499	1701499	1701499	1701499	1701499	1701499	1701499	1701499
63	1702391	1701517	1701517	1701517	1701517	1701517	1701517	1701517
64	1704725	1704728	1704671	1704670	1704732	1704733	1704731	1704618
66	1704885	1704885	1704885	1704885	1704885	1704885	1704885	1704885
68	1705358	--	--	1705358	1705358	1705358	1705358	1705358
69	1705351	--	1705426	1705427	1705910	1705429	1705430	1001113680

To order go to Discount-Equipment.com

https://truckmanualshub.com/

Table 4-1. Decal Legend

Item #	ANSI 1001248325-B	CE/Aus 1001248326-A	Japan 1001248327-B	Korean/Eng 1001248328-B	Eng/Spanish 1001248329-B	Eng/French 1001248330-B	Chinese/Eng 1001248331-B	Port./Spa 1001248332-B
70	1001121510	1001121510	1001121510	1001121510	1001121510	1001121510	1001121510	1001121510
71	--	1001189882	--	--	--	--	--	--
73	1001223055	--	1001224053	1001224048	1001224049	1001223971	1001224050	1001224052
74	1001228370	--	--	--	--	1001228370	--	--

To order go to Discount-Equipment.com

https://truckmanualshub.com/

SECTION 5. EMERGENCY PROCEDURES

5.1 GENERAL

This section explains the steps to be taken in case of an emergency situation while operating.

5.2 INCIDENT NOTIFICATION

JLG Industries, Inc. must be notified immediately of any incident involving a JLG product. Even if no injury or property damage is evident, the factory should be contacted by telephone and provided with all necessary details.

- USA: 877-JLG-SAFE (554-7233)
- EUROPE: (32) 0 89 84 82 20
- AUSTRALIA: (61) 2 65 811111
- E-mail: ProductSafety@JLG.com

Failure to notify the manufacturer of an incident involving a JLG Industries product within 48 hours of such an occurrence may void any warranty consideration on that particular machine.

NOTICE

FOLLOWING ANY ACCIDENT, THOROUGHLY INSPECT THE MACHINE AND TEST ALL FUNCTIONS FIRST FROM THE GROUND CONTROLS, THEN FROM THE PLATFORM CONTROLS. DO NOT LIFT ABOVE 10 FT (3 M) UNTIL YOU ARE SURE THAT ALL DAMAGE HAS BEEN REPAIRED, IF REQUIRED, AND THAT ALL CONTROLS ARE OPERATING CORRECTLY.

5.3 EMERGENCY OPERATION

Operator Unable to Control Machine

IF THE PLATFORM OPERATOR IS PINNED, TRAPPED OR UNABLE TO OPERATE OR CONTROL MACHINE:

1. Other personnel should operate the machine from ground controls only as required.
2. Other qualified personnel on the platform may use the platform controls. DO NOT CONTINUE OPERATION IF CONTROLS DO NOT FUNCTION PROPERLY.
3. Cranes, forklift trucks or other equipment can be used to remove platform occupants and stabilize motion of the machine.

To order go to Discount-Equipment.com

https://truckmanualshub.com/

Platform or Boom Caught Overhead

If the platform or boom becomes jammed or snagged in overhead structures or equipment, do the following:

1. Shut off the machine.
2. Rescue all people in the platform before freeing the machine. Personnel must be out of the platform before operating any controls on the machine.
3. Use cranes, forklifts, or other equipment to stabilize motion of the machine to prevent a tip over as required.
4. From the ground controls, use the Auxiliary Power System (if equipped) to carefully free the platform or boom from the object.
5. Once clear, restart the machine and return the platform to a safe position.
6. Inspect the machine for damage. If the machine is damaged or does not operate properly, turn off the machine immediately. Report the problem to the proper maintenance personnel. Do not operate the machine until it is declared safe for operation.

5.4 EMERGENCY TOWING PROCEDURES

Towing this machine is prohibited, unless properly equipped. However, provisions for moving the machine have been incorporated. For specific procedures, refer to Section 4.

5.5 MANUAL DESCENT SYSTEM

The manual descent system is used, in the event of total power failure, to lower the boom using gravity. To operate the manual descent system, proceed as follows:

To order go to Discount Equipment.com

https://truckmanualshub.com/

Telescoping In and Lowering the Boom

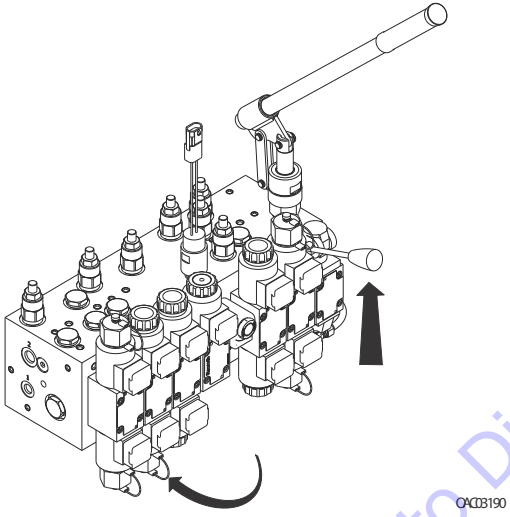

1. Install the spool plug in the location shown and push the control lever on the valve up.
2. Install the handle into the hand pump and pump the handle until the desired platform position is reached.
3. Push the control lever down when complete. Remove the handle from the hand pump and the spool plug from the valve.

Lowering the Boom

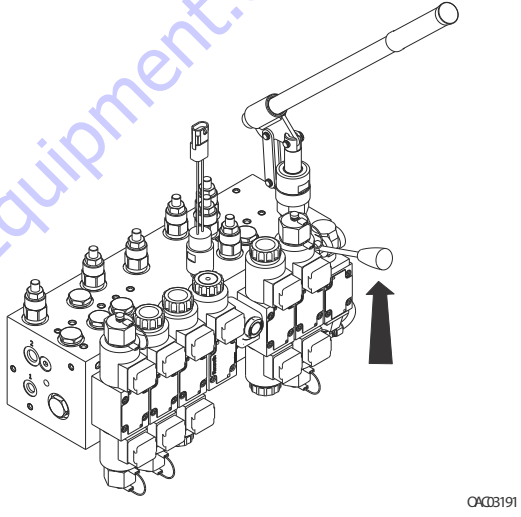

1. Push the control lever on the valve up.
2. Install the handle into the hand pump and pump the handle until the desired platform position is reached.
3. Push the control lever down when complete. Remove the handle from the hand pump.

To order go to Discount-Equipment.com

https://truckmanualshub.com/

Swing Right

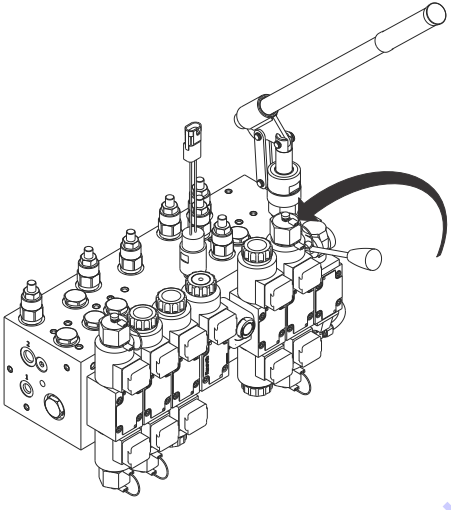

1. Install the spool plug in the location shown.
2. Install the handle into the hand pump and pump the handle until the desired platform position is reached.
3. Remove the handle from the hand pump.

Swing Left

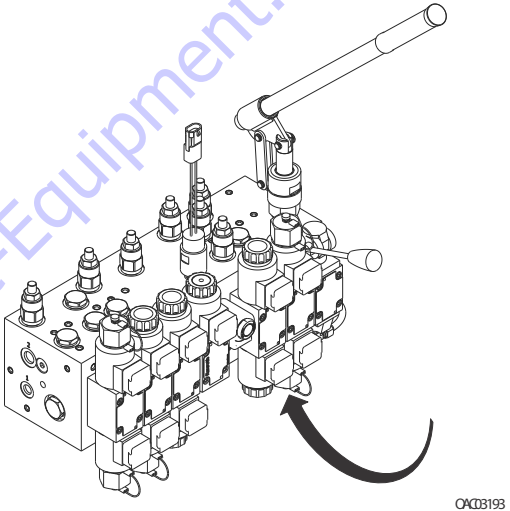

1. Install the spool plug in the location shown.
2. Install the handle into the hand pump and pump the handle until the desired platform position reached.
3. Remove the handle from the hand pump.

To order go to Discount-Equipment.com

https://truckmanualshub.com/

Jib Up

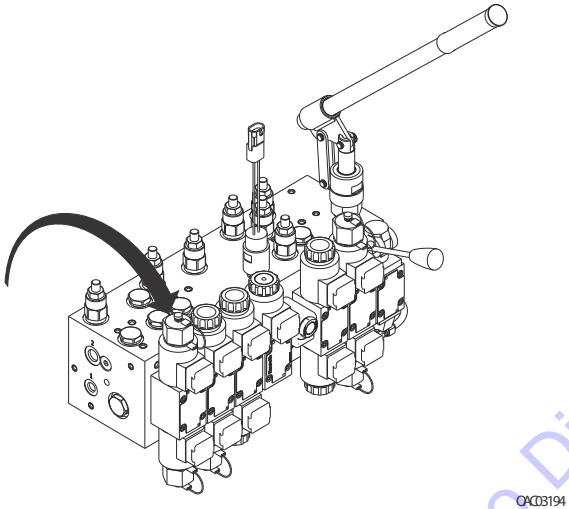

1. Install the spool plug in the location shown.
2. Install the handle into the hand pump and pump the handle until the desired platform position is reached.
3. Remove the handle from the hand pump.

Jib Down

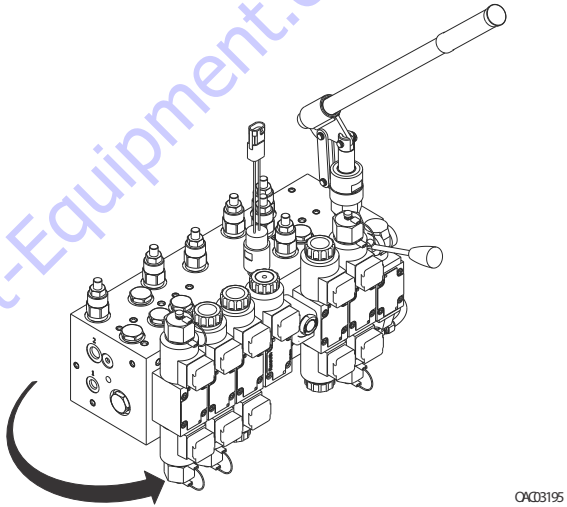

1. Install the spool plug in the location shown.
2. Install the handle into the hand pump and pump the handle until the desired platform position is reached.
3. Remove the handle from the hand pump.

CAUTION

REMOVE ALL SPOOL PLUGS BEFORE RETURNING UNIT TO SERVICE.

To order go to Discount-Equipment.com

https://truckmanualshub.com/

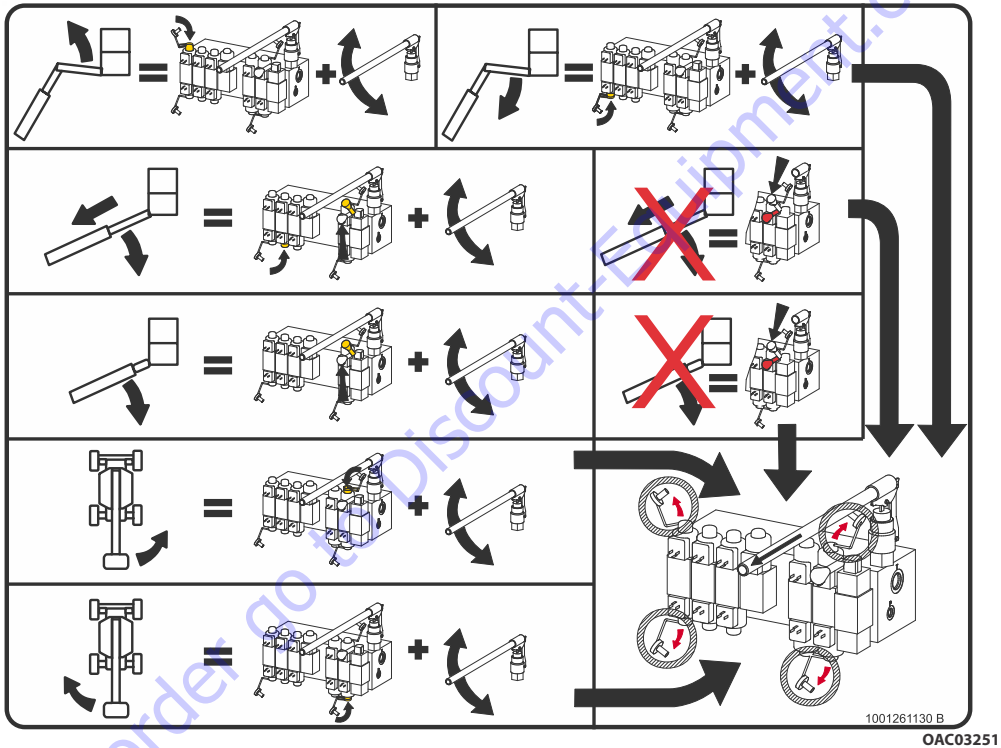

Figure 5-1. Manual Descent Decal

To order go to Discount-Equipment.com

https://truckmanualshub.com/

5.6 MACHINE SAFETY SYSTEM OVERRIDE (MSSO) (CE ONLY)

The Machine Safety System Override (MSSO) is only to be used to retrieve an operator that is pinned, trapped, or unable to operate the machine and function controls are locked out from the platform due to a platform overload situation.

NOTE: *If the MSSO functionality is used, a fault code is set in the JLG Control System which must be reset by a qualified JLG Service Technician.*

NOTE: *No functional checks of the MSSO system are necessary. The JLG Control system will set a Diagnostic Trouble Code if the control switch is faulty.*

To operate the MSSO:

1. From the ground control console, place the Platform/ Ground Select switch in the Ground position.
2. Pull out the Power/Emergency Stop control.
3. Start the engine.
4. Press and hold the MSSO switch and the control switch for the desired function.

To order go to Discount-Equipment.com

https://truckmanualshub.com/

SECTION 6. ACCESSORIES

Table 6-1. Available Accessories

Accessory	Market						
	ANSI (USA Only)	ANSI	CSA	CE	AUS	Japan	China
Soft Touch	√	√	√	√		√	√
SkyGlazier™	√	√	√	√	√		
Fall Arrest Platform (36x60)		√					√
Fall Arrest Platform (36x72)	√	√	√			√	√
Bolt-On External Fall Arrest (36x72)	√	√	√	√	√	√	√
Bolt-On External Fall Arrest (36x96)	√	√	√	√	√	√	√

To order go to Discount-Equipment.com

https://truckmanualshub.com/

6.1 FALL ARREST PLATFORM

NOTE: *Refer to JLG External Fall Arrest System manual (P/N-3128935) for more detailed information.*

The external fall arrest system is designed to provide a lanyard attach point while allowing the operator to access areas outside the platform. Exit/Enter the platform through the gate area only. The system is designed for use by one person.

Personnel must use fall protection at all times. A full body harness is required with lanyard not to exceed 6 ft. (1.8 M) in length, that limits the maximum arrest force to 900 lb (408 kg) for the trans-fastener type and 1350 lb (612 kg) for the shuttle type fall arrest system.

WARNING

DO NOT OPERATE ANY MACHINE FUNCTIONS WHILE OUTSIDE OF PLATFORM. BE CAREFUL WHEN ENTERING/EXITING THE PLATFORM AT ELEVATION.

6.2 SOFT TOUCH

A padding kit is mounted to the platform rails and to a frame suspended below the platform. Limit switches deactivate platform functions when the padded framework contacts an adjacent structure. A button on the platform console allows override of the system.

To order go to Discount-Equipment.com

https://truckmanualshub.com/

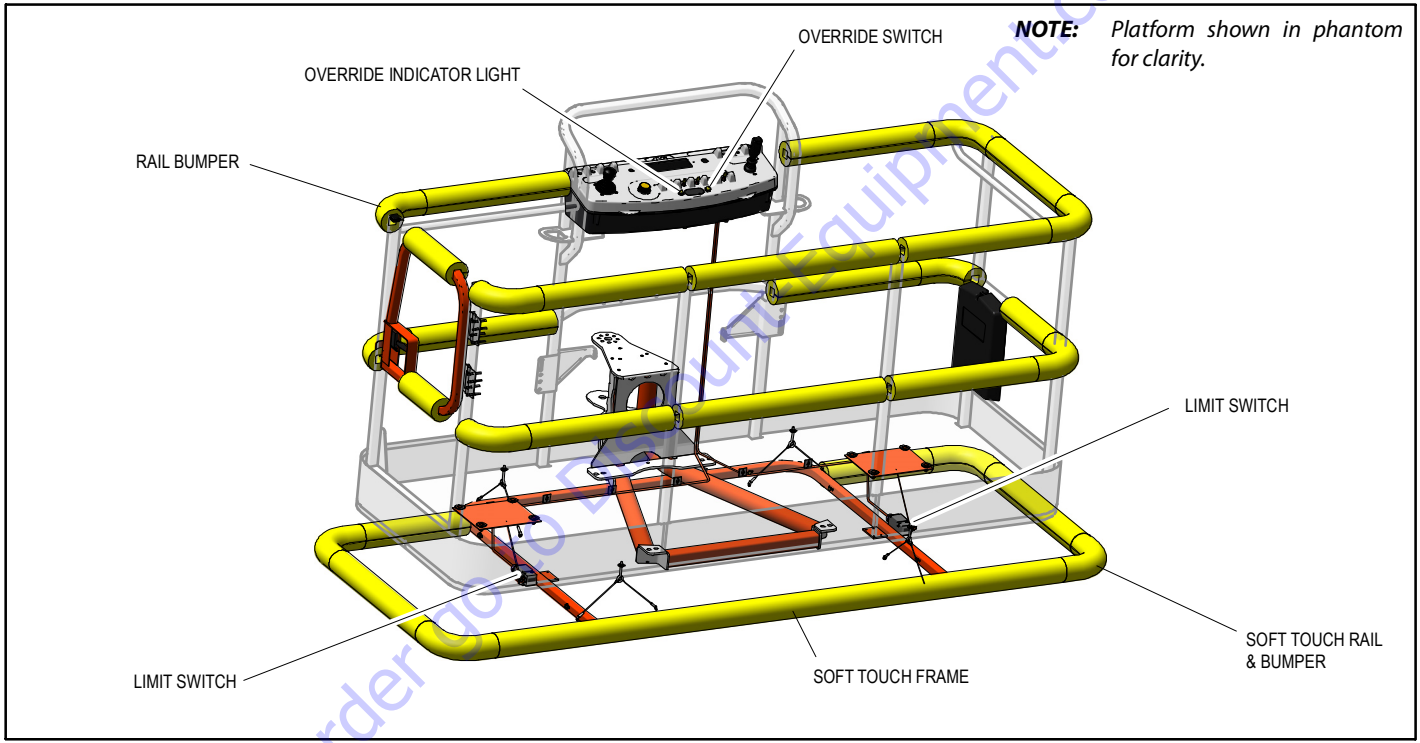

NOTE: *Platform shown in phantom for clarity.*

Figure 6-1. Soft Touch

To order go to EquipmentEquipment.com

https://truckmanualshub.com/

6.3 BOLT-ON EXTERNAL FALL ARREST

The bolt-on external fall arrest system is designed to provide a lanyard attach point while allowing the operator to access areas outside the platform. Exit/Enter the platform through the gate area only. The system is designed for use by one person.

Personnel must use fall protection at all times. A full body harness is required with lanyard not to exceed 6 ft. (1.8 M) in length, that limits the maximum arrest force to 900 lb (408 kg).

External Fall Arrest System capacity is 310 lb (140 kg) - one (1) person maximum.

Do not move platform during use of the external fall arrest system.

WARNING

DO NOT OPERATE ANY MACHINE FUNCTIONS WHILE OUTSIDE OF PLATFORM. BE CAREFUL WHEN ENTERING/EXITING THE PLATFORM AT ELEVATION.

WARNING

IF THE EXTERNAL FALL ARREST SYSTEM IS USED TO ARREST A FALL OR IS OTHERWISE DAMAGED, THE ENTIRE SYSTEM MUST BE REPLACED AND THE PLATFORM FULLY INSPECTED BEFORE RETURNING TO SERVICE. REFER TO THE SERVICE MANUAL FOR REMOVAL AND INSTALLATION PROCEDURES.

NOTICE

THE EXTERNAL FALL ARREST SYSTEM REQUIRES AN ANNUAL INSPECTION AND CERTIFICATION. THE ANNUAL INSPECTION AND CERTIFICATION MUST BE PERFORMED BY A QUALIFIED PERSON OTHER THAN THE USER.

To order go to Discount-equipment.com

https://truckmanualshub.com/

Inspection Before Use

The external fall arrest system must be inspected before each use of the aerial work platform. Replace components if there are any signs of wear or damage.

Before each use, perform a visual inspection of the following components:

- Cable: Inspect cable for proper tension, broken strands, kinks, or any signs of corrosion.

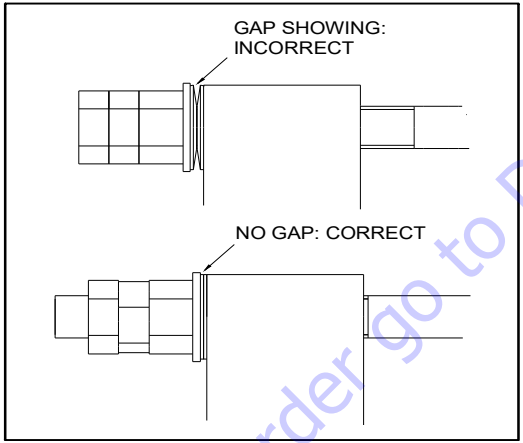

Figure 6-2. Bolt-On External Fall Arrest Cable Tension

- Fittings & Brackets: Ensure all fittings are tight and there are no signs of fractures. Inspect brackets for any damage.
- Attachment Ring: No cracks or signs of wear are acceptable. Any signs of corrosion requires replacement.
- Attaching Hardware: Inspect all attaching hardware to ensure there are no missing components and hardware is properly tightened.
- Platform Rails: No visible damage is acceptable.

To order go to Discount-Equipment.com

https://truckmanualshub.com/

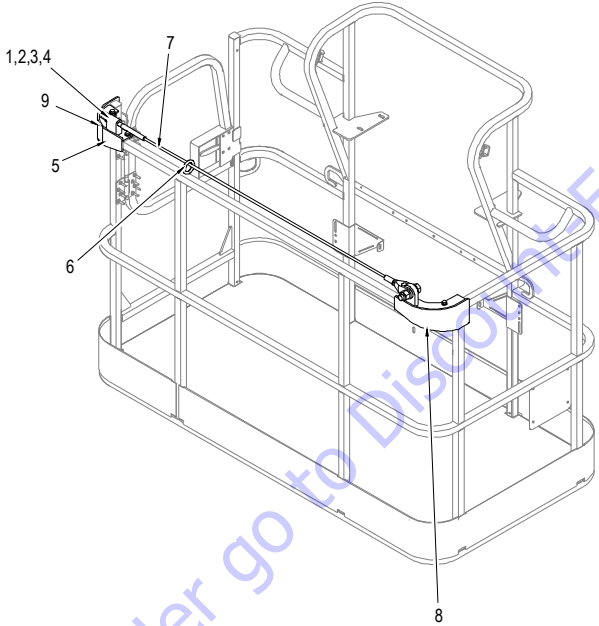

1. Belleville Washer
2. Washer
3. Hex Nut
4. Jam Nut
5. LH Bracket
6. Attachment Ring
7. Cable
8. RH Bracket
9. Decal

Figure 6-3. Bolt-On External Fall Arrest System

To order go to Discount-Equipment.com

https://truckmanualshub.com/

6.4 SKYGLAZIER™

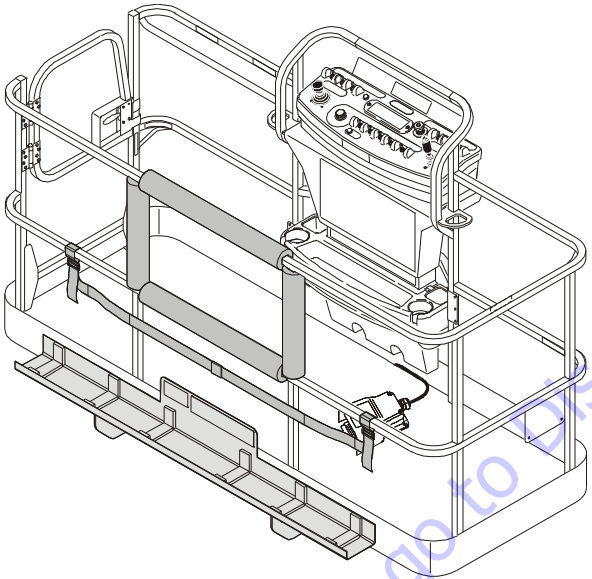

SkyGlazier™ allows glaziers to position panels efficiently. The glazier package consists of a tray that attaches the bottom of the platform. The panel rests on the tray and against top-rail of the platform, which is padded to prevent damage. SkyGlazier™ includes a strap to secure the panel to the platform rail.

Capacity Specifications

Capacity Zone	Rated Capacity Platform	Rated Capacity SkyGlazier™
500 lb/230 kg	250 lb 113 kg	150 lb 68kg
*Total Platform Capacity is defined as platform capacity + tray capacity.		
* Refer to the capacity decals installed on the machine for capacity zone information.		
Required Platform Type: Side-Entry		
Max. Dimensions of Panel: 32 sq ft (3 sq m)		

⚠ WARNING

INSTALLING OR REMOVING APPROVED ACCESSORIES OR CHANGING PLATFORM SIZE REQUIRES RECALIBRATION OF THE BOOM CONTROL SYSTEM. (REFER TO SERVICE AND MAINTENANCE MANUAL).

To order go to Discount-Equipment.com

https://truckmanualshub.com/

Safety Precautions

⚠ WARNING

ENSURE PANEL IS SECURED WITH STRAP.

⚠ WARNING

DO NOT OVERLOAD TRAY OR PLATFORM. TOTAL MACHINE CAPACITY IS REDUCED WHEN TRAY IS INSTALLED.

⚠ WARNING

WITH SKYGLAZIER™ INSTALLED, THE ORIGINAL PLATFORM CAPACITY RATINGS ARE REDUCED AS SPECIFIED IN THE SPECIFICATIONS TABLE ABOVE. DO NOT EXCEED THE NEW PLATFORM CAPACITY RATING. REFER TO CAPACITY DECAL LOCATED ON TRAY.

⚠ WARNING

AN INCREASE OF THE AREA EXPOSED TO THE WIND WILL DECREASE STABILITY. LIMIT PANEL AREA TO 32 SQ FT (3 SQ M).

- Ensure no personnel are beneath platform.
- Do not exit platform over rails or stand on rails.
- Remove tray when not in use.
- Use this option only on approved models.

Preparation and Inspection

- Check for cracked welds and damage to tray.
- Ensure tray is properly secured to platform.
- Ensure strap is not torn or frayed.

Operation

1. Load SkyGlazier™ tray with panel.
2. Route the adjustable strap around the panel and tighten until secure.
3. Position panel to its desired location.

To order go to Discount Equipment.com

https://truckmanualshub.com/

SECTION 7. GENERAL SPECIFICATIONS & OPERATOR MAINTENANCE

7.1 INTRODUCTION

This section of the manual provides additional necessary information to the operator for proper operation and maintenance of this machine.

The maintenance portion of this section is intended as information to assist the machine operator to perform daily maintenance tasks only, and does not replace the more thorough Preventive Maintenance and Inspection Schedule included in the Service and Maintenance Manual.

Other Publications Available:

Service and Maintenance Manual 31215028

Illustrated Parts Manual 31215029

7.2 OPERATING SPECIFICATIONS

Table 7-1. Operating Specifications

Maximum Work Load (Capacity) ANSI Markets Unrestricted:	 500 lb (227 kg)
Maximum Work Load (Capacity) CE & Australia Markets Unrestricted:	 500 lb (230 kg)
Maximum Operating Slope EC600SJP/H600SJP EC600SJ/H600SJ	 3° 4°
Maximum Travel Grade (Gradeability)	30%
Maximum Travel Grade (Side Slope) EC600SJP/H600SJP EC600SJ/H600SJ	 3° 4°
Maximum Vertical Platform Height:	60 ft. (18.29 m)
Maximum Horizontal Platform Reach EC600SJP/H600SJP EC600SJ/H600SJ	 43 ft. (13.11 m) 42 ft. 9 in. (13.11 m)

To order go to Discount-Equipment.com

https://truckmanualshub.com/

Table 7-1. Operating Specifications

Machine Width 2WD 4WD	 7 ft. 11 7/16 in. (2.42 m) 7 ft. 11 3/8 in. (2.42 m)
Machine Length EC600SJ/H600SJ EC600SJP/H600SJP	 30 ft. 8 15/16 in. (9.37 m) 33 ft. 3 3/4 in. (10.15 m)
Turning Radius (outside)	15 ft. 3 in. (4.65 m)
Turning Radius (inside)	4 ft. (1.23 m)
Maximum Tire Load:	7700 lb (3493 kg)
Maximum Ground Bearing Pressure EC600SJ/H600SJ EC600SJP/H600SJP	 52 psi (3.7 kg/cm$^{2)}$ 51 psi (3.6 kg/cm$^{2)}$
Maximum Drive Speed:	3.0 mph (1.3 m/s)
Electrical System Voltage	48 volts
Maximum Hydraulic System Pressure	3200 psi (221 Bar)
Maximum Wind Speed	28 mph (12.5 m/s)
Maximum Manual Force	400N
Gross Machine Weight (Platform Empty) EC600SJ/H600SJ EC600SJP/H600SJP	 16,710 lb (7,580 kg) 17,210 lb (7,806 kg)

Capacities

Table 7-2. Capacities

Generator Fuel Tank (H Models Only)	13 gallons (49.2 liters)
Hydraulic Tank	15.9 gal. (60.2 L) 12.4 gal. (46.9 L) to full mark
Drive Hub	0.4 gal. (1.5 liters)

Tires

Table 7-3. Tires

Size	Type	Pressure
36/14 LL-22.5	Foam Filled	N/A

To order go to Discount-Equipment.com

https://truckmanualshub.com/

Hydraulic Oil

Table 7-4. Hydraulic Oil

Hydraulic System Operating Temperature Range	S.A.E. Viscosity Grade
+0° to +180° F (-18° to +83° C)	10W
+0° to +210° F (-18° to +99° C)	10W-20, 10W30
+50° to +210° F (+10° to +99° C	20W-20

NOTE: *Hydraulic oils must have anti-wear qualities at least to API Service Classification GL-3, and sufficient chemical stability for mobile hydraulic system service.*

Aside from JLG recommendations, it is not advisable to mix oils of different brands or types, as they may not contain the same required additives or be of comparable viscosities. If use of hydraulic oil other than standard UTTO is desired, contact JLG Industries for proper recommendations.

Table 7-5. DTE 10 Excel 15 Specs

ISO Viscosity Grade	#15
Pour Point, Max	-65°F (-54°C)
Flash Point, Min.	360°F (182°C)
Viscosity	
at 40° C	15.8 cSt
at 100° C	4.1cSt
at 100° F	15.8 cSt
at 210° F	4.1 cSt
Viscosity Index	168

To order go to Discount-Equipment.com

https://truckmanualshub.com/

Table 7-6. Mobil EAL Envirosyn H 32 Specs

Type	Synthetic Biodegradable
ISO Viscosity Grade	32
Density at 15°C	.869
Pour Point, Max	-38°F (-39°C)
Flash Point, Min.	514°F (268°C)
Viscosity	
at 40°C	33.1 cSt
at 100°C	6.36 cSt
Viscosity Index	147

Table 7-7. Mobil EAL Envirosyn SHC 32 Specs

Type	Synthetic Biodegradable
ISO Viscosity Grade	32
Density at 15°C	.936
Pour Point, Max	-27°F (-33°C)
Flash Point, Min.	540°F (282°C)
Viscosity	
at 40°C	33.1 cSt
at 100°C	6.2 cSt
Viscosity Index	152

To order go to Discount-Equipment.com

https://truckmanualshub.com/

Table 7-8. DTE 10 Excel 32 Specs

ISO Viscosity Grade	32
Pour Point, Max	-65°F (-54°C)
Flash Point, Min.	482°F (250°C)
Viscosity	
at 40° C	32.7 cSt
at 100° C	6.63cSt
at 100° F	32.7 cSt
at 212° F	6.63cSt
Viscosity Index	164

To order go to Discount-Equipment.com

https://truckmanualshub.com/

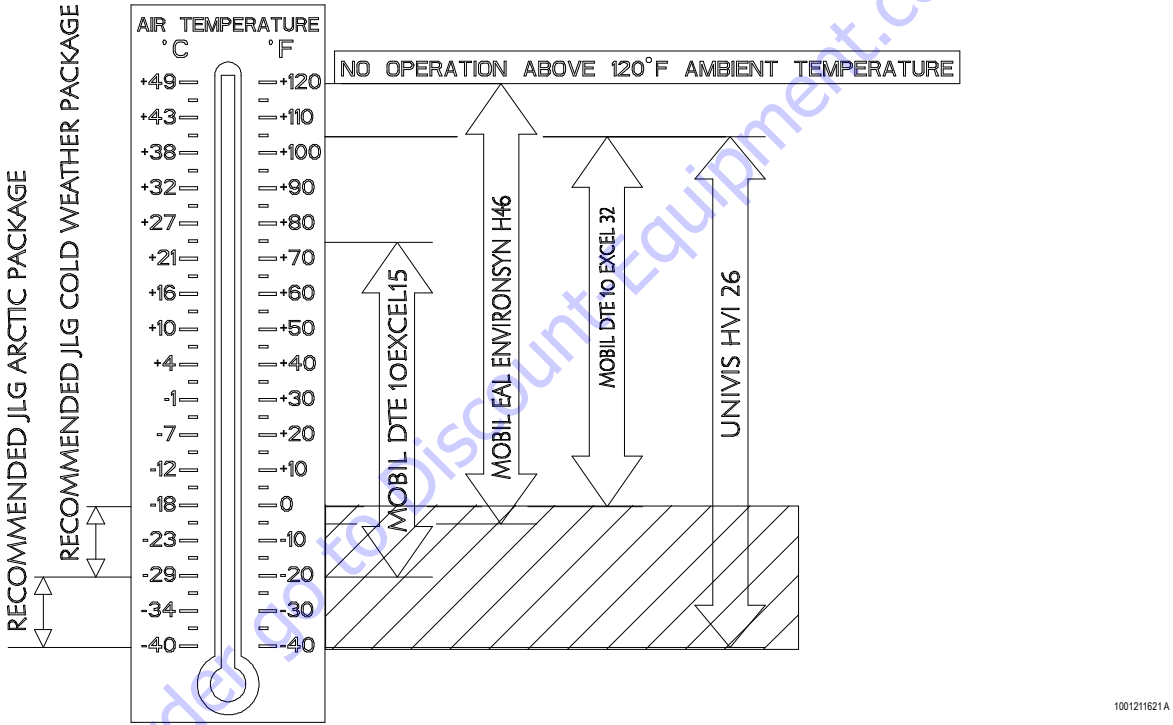

Figure 7-1. Hydraulic Oil Specification - Sheet 1 of 2

To order go to Discount Equipment.com

https://truckmanualshub.com/

Fluid	Properties		Base					Classi?cation		
Description	Visc @ 40 C	Visc Index	Mineral Oils	Vegetable Oils	Synthetic	Synthetic Polyol Esters	Water Glycol	Readilly Biodegradeable*	Virtually Non-toxic**	Fire Resistant***
Mobil DTE 10Excel32	32	141	X							
UNIVIS HVI 26	26	376	X							
Mobil EAL Env H 46	46	145			X			X	X	
Mobil DTE 10EXCEL15	15	168	X							

NOTES:
DRIVE PERFORMANCE MAY BE REDUCED BELOW 0 DEG F

NOTICE:
MACHINE OPERATION USING NON-JLG APPROVED HYDRAULIC FLUIDS OR OPERATION OUTSIDE OF THE TEMPERATURE BOUNDARIES OUTLINES IN THE "HYDRAULIC FLUID OPERATION CHART" MAY RESULT IN PREMATURE WEAR OR DAMAGE TO COMPONENTS OF THE HYDRAULIC SYSTEM.

* Readily biodegradable classi?cation indicates one of the following:
CO2 Conversion>60% per EPA 560/6-82-003
CO2 Conversion>80% per CEC-L-33-A-93

** Virtually Non-toxic classi?cation indicates an LC50>5000 ppm per OECD 203

*** Fire Resistant classi?cation indicates Factory Mutual Research Corp. (FMRC) Approval

1001211621 A

Figure 7-2. Hydraulic Oil Specification - Sheet 2 of 2

To order go to Discount-Equipment.com

https://truckmanualshub.com/

Major Component Weights

Table 7-9. Component Weights

Component	Pounds	Kilograms
Frame (bare)	1381	626
T/T (bare)	2093	950
Boom Assembly (E/M 600)	4464	2025
Boom Assembly (E/M 600J)	4464	2025
Tire & Wheel	226	102.5
Swing Drive	70	32
Swing Bearing	100	45.4
Platform Console	25	11
Side Entry Platform - 30x72 (bare)	175	80
Side Entry Platform - 30x48 (bare)	144	66
Counterweight	2560	1161

Serial Number Location

A serial number plate is affixed to the right side of the frame. If the serial number plate is damaged or missing, the machine serial number is stamped on the left side of the frame at the top.

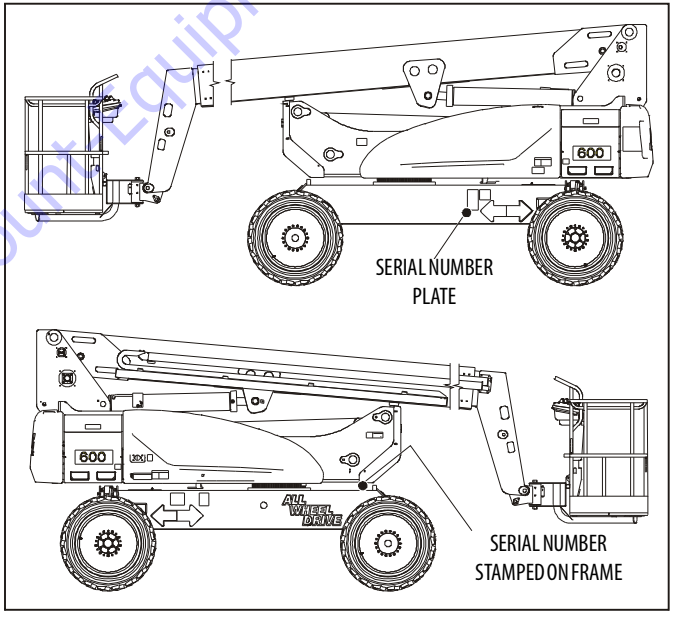

Figure 7-3. Serial Number Location

To order go to Discount-Equipment.com

https://truckmanualshub.com/

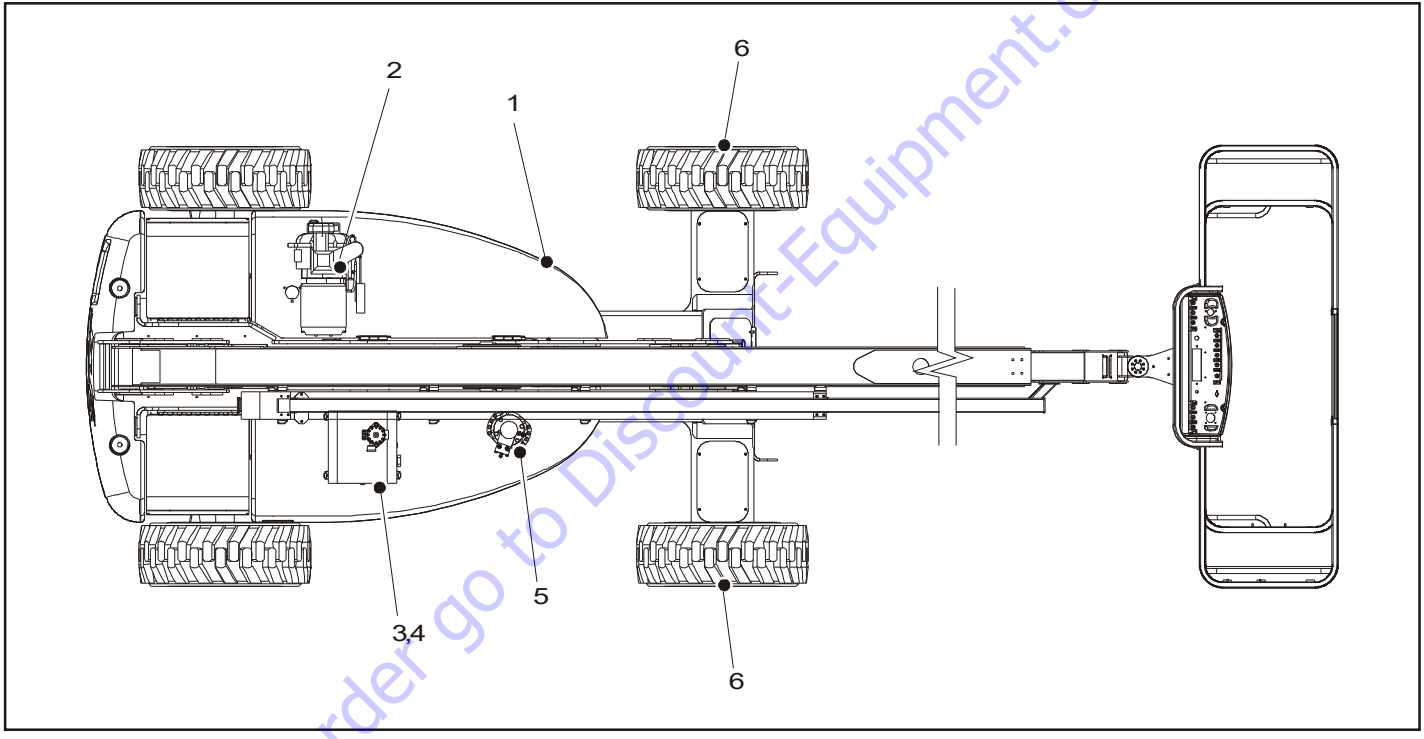

Figure 7-4. Operator Maintenance and Lubrication Diagram

To order go to Discount-Equipment.com

https://truckmanualshub.com/

7.3 OPERATOR MAINTENANCE

NOTE: *The following numbers correspond to those in Figure 7-4., Operator Maintenance and Lubrication Diagram.*

Table 7-10. Lubrication Specifications.

KEY	SPECIFICATIONS
MPG	Multipurpose Grease having a minimum dripping point of 350 degrees F. Excellent water resistance and adhesive qualities; and being of extreme pressure type (Timken OK 40 pounds minimum).
EPGL	Extreme Pressure Gear Lube (oil) meeting API Service Classification GL-5 or Mil-Spec Mil-L-2105.
HO	Hydraulic Oil. Mobil DTE-11M
OG*	Open Gear Lube - Tribol Molub-Alloy 936 Open Gear Compound. (JLG Part No. 3020027)
BG*	Bearing Grease (JLG Part No. 3020029) Mobilith SHA 460.
LL	Synthetic Lithium Lubricant, Gredag 741 Grease. (JLG Part No. 3020022)
EO	Engine (crankcase) Oil. Gas - API SF/SG class, MIL-L-2104. Diesel - API CC/CD class, MIL-L-2104B/MIL-L-2104C.

*MPG may be substituted for these lubricants, if necessary, but service intervals will be reduced.

NOTICE

LUBRICATION INTERVALS ARE BASED ON MACHINE OPERATION UNDER NORMAL CONDITIONS. FOR MACHINES USED IN MULTI-SHIFT OPERATIONS AND/OR EXPOSED TO HOSTILE ENVIRONMENTS OR CONDITIONS, LUBRICATION FREQUENCIES MUST BE INCREASED ACCORDINGLY.

NOTE: *It is recommended as a good practice to replace all filters at the same time.*

1. Swing Bearing - Internal Ball Bearing

Lube Point(s) - 1 Grease Fittings
Capacity - A/R
Lube - MPG
Interval - Every 3 months or 150 hrs of operation

To order go to Discount-Equipment.com

https://truckmanualshub.com/

2. Generator Engine (If Equipped)

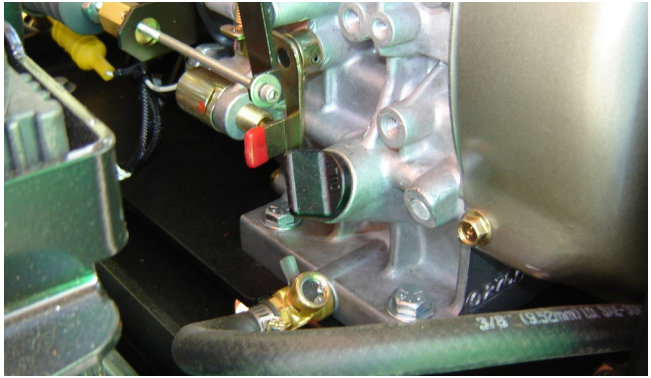

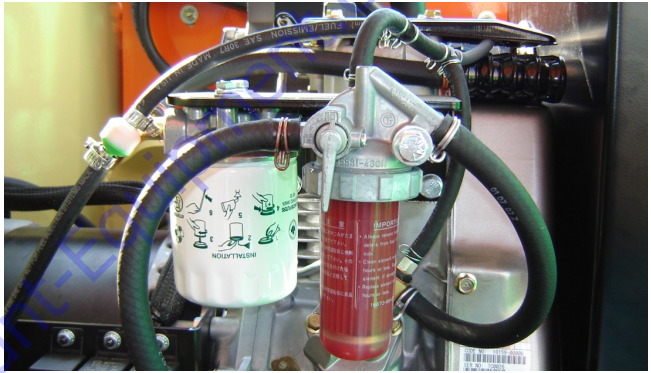

Lube Point(s) - Fill Cap
Capacity - Refer to engine manual
Lube - EO
Interval - Check daily. Change in accordance with engine manual.

To order go to Discount-Equipment.com

https://truckmanualshub.com/

3. Hydraulic Tank

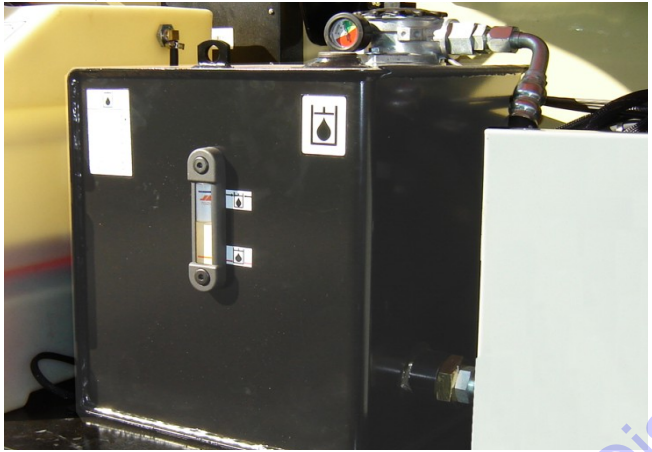

Lube Point(s) - Fill Cap
Capacity - 15.9 gal. system (56.7L) 12.4 gal. (46.9 L) to Full Mark
Lube - HO
Interval - Check Level daily; Change every 2 years or 1200 hours of operation.

4. Hydraulic Filter

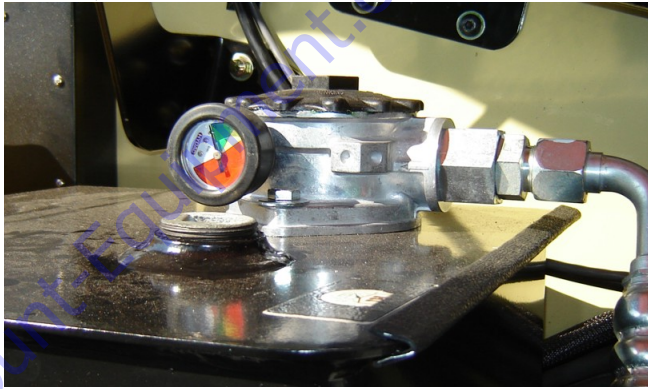

Interval - Change after first 50 hrs. and every 6 months or 300 hrs. thereafter or as indicated by Condition Indicator.
Comments - Under certain conditions, it may be necessary to replace the filter on a more frequent basis.

To order go to Discount-Equipment.com

https://truckmanualshub.com/

5. Swing Drive Hub

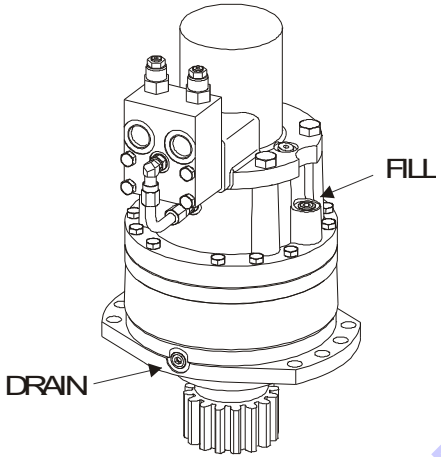

Lube Point(s) - Level/Fill Plug
Capacity - 24 oz. (0.7 L)
Lube - EPGL
Interval - Check level every 3 months or 150 hrs of operation; change every 2 years or 1200 hours of operation

6. Wheel Drive Hub

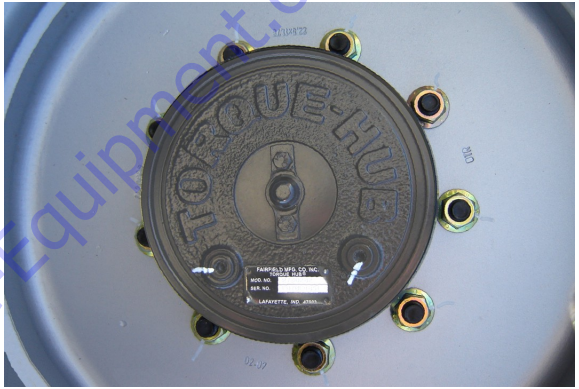

Lube Point(s) - Level/Fill Plug
Capacity - 0.4 gal. (1.5 L)
Lube - EPGL
Interval - Check level every 3 months or 150 hrs of operation; change every 2 years or 1200 hours of operation

To order go to Discount-Equipment.com

https://truckmanualshub.com/

7.4 OSCILLATING AXLE LOCKOUT TEST (IF EQUIPPED)

NOTICE

LOCKOUT SYSTEM TEST MUST BE PERFORMED QUARTERLY, ANY TIME A SYSTEM COMPONENT IS REPLACED, OR WHEN IMPROPER SYSTEM OPERATION IS SUSPECTED.

NOTE: *Ensure boom is fully retracted, lowered, and centered between drive wheels prior to beginning lockout cylinder test.*

1. Place a 6 inch (15.2 cm) high block with ascension ramp in front of left front wheel.
2. From platform control station, start engine
3. Place the Drive control lever to the forward position and carefully drive machine up ascension ramp until left front wheel is on top of block.
4. Carefully activate Swing control lever and position boom over right side of machine.
5. With boom over right side of machine, place Drive control lever to Reverse and drive machine off of block and ramp.
6. Have an assistant check to see that left front or right rear wheel remains elevated in position off of ground.
7. Carefully activate Swing control lever and return boom to stowed position (centered between drive wheels). When boom reaches center, stowed position, lockout cylinders should release and allow wheel to rest on ground, it may be necessary to activate Drive to release cylinders.
8. Place the 6 inch (15.2 cm) high block with ascension ramp in front of right front wheel.
9. Place Drive control lever to Forward and carefully drive machine up ascension ramp until right front wheel is on top of block.
10. With boom over left side of machine, place Drive control lever to Reverse and drive machine off of block and ramp.
11. Have an assistant check to see that right front or left rear wheel remains elevated in position off of ground.
12. Carefully activate Swing control lever and return boom to stowed position (centered between drive wheels). When boom reaches center, stowed position, lockout cylinders should release and allow wheel to rest on ground, it may be necessary activate Drive to release cylinders.
13. If lockout cylinders do not function properly, have qualified personnel correct the malfunction prior to any further operation.

To order go to Discount-Equipment.com

https://truckmanualshub.com/

7.5 TIRES & WHEELS

Tire Damage

For polyurethane foam filled tires, JLG Industries, Inc. recommends that when any of the following are discovered, measures must be taken to remove the JLG product from service immediately and arrangements must be made for replacement of the tire or tire assembly.

- a smooth, even cut through the cord plies which exceeds 3 inches (7.5 cm) in total length
- any tears or rips (ragged edges) in the cord plies which exceeds 1 inch (2.5 cm) in any direction
- any punctures which exceed 1 inch in diameter
- any damage to the bead area cords of the tire

If a tire is damaged but is within the above noted criteria, the tire must be inspected on a daily basis to insure the damage has not propagated beyond the allowable criteria.

Tire Replacement

JLG recommends a replacement tire be the same size, ply and brand as originally installed on the machine. Please refer to the JLG Parts Manual for the part number of the approved tires for a particular machine model. If not using a JLG approved replacement tire, we recommend that replacement tires have the following characteristics:

- Equal or greater ply/load rating and size of original
- Tire tread contact width equal or greater than original
- Wheel diameter, width, and offset dimensions equal to the original
- Approved for the application by the tire manufacturer (including inflation pressure and maximum tire load)

Unless specifically approved by JLG Industries Inc. do not replace a foam filled or ballast filled tire assembly with a pneumatic tire. When selecting and installing a replacement tire, ensure that all tires are inflated to the pressure recommended by JLG. Due to size variations between tire brands, both tires on the same axle should be the same.

To order go to Discount-Equipment.com

https://truckmanualshub.com/

Wheel Replacement

The rims installed on each product model have been designed for stability requirements which consist of track width, tire pressure, and load capacity. Size changes such as rim width, center piece location, larger or smaller diameter, etc., without written factory recommendations, may result in an unsafe condition regarding stability.

Wheel Installation

It is extremely important to apply and maintain proper wheel mounting torque.

⚠ WARNING

WHEEL NUTS MUST BE INSTALLED AND MAINTAINED AT THE PROPER TORQUE TO PREVENT LOOSE WHEELS, BROKEN STUDS, AND POSSIBLE DANGEROUS SEPARATION OF WHEEL FROM THE AXLE. BE SURE TO USE ONLY THE NUTS MATCHED TO THE CONE ANGLE OF THE WHEEL.

Tighten the lug nuts to the proper torque to prevent wheels from coming loose. Use a torque wrench to tighten the fasteners. If you do not have a torque wrench, tighten the fasteners with a lug wrench, then immediately have a service garage or dealer tighten the lug nuts to the proper torque. Over-tightening will result in breaking the studs or permanently deforming the mounting stud holes in the wheels. The proper procedure for attaching wheels is as follows:

1. Start all nuts by hand to prevent cross threading. DO NOT use a lubricant on threads or nuts.
2. Tighten nuts in the following sequence:

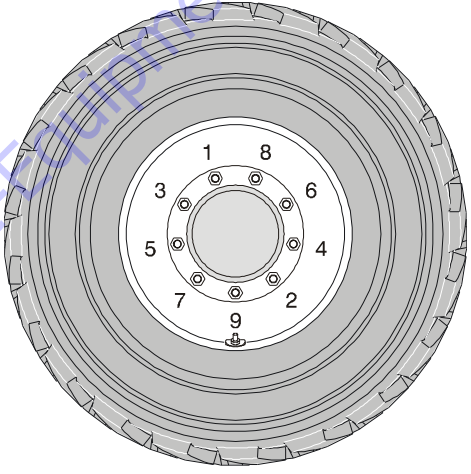

3. The tightening of the nuts should be done in stages. Following the recommended sequence, tighten nuts per wheel torque chart.
4. Wheel nuts should be torqued after first 50 hours of operation and after each wheel removal. Check torque every 3 months or 150 hours of operation.

To order go to Discount-Equipment.com

https://truckmanualshub.com/

Table 7-11. Wheel Torque Chart

TORQUE SEQUENCE		
1st Stage	2nd Stage	3rd Stage
40 ft. lbs. (55 Nm)	100 ft. lbs. (130 Nm)	170 ft. lbs. (255 Nm)

7.6 SUPPLEMENTAL INFORMATION

The following information is provided in accordance with the requirements of the European Machinery Directive 2006/42/EC and is only applicable to CE machines.

For electric powered machines, the equivalent continuous A-Weighted sound pressure level at the work platform is less than 70dB(A)

For combustion engine powered machines, guaranteed Sound Power Level (LWA) per European Directive 2000/14/EC (Noise Emission in the Environment by Equipment for Use Outdoors) based on test methods in accordance with Annex III, Part B, Method 1 and 0 of the directive, is 104 dB.

The vibration total value to which the hand-arm system is subjected does not exceed 2,5 m/s^2. The highest root mean square value of weighted acceleration to which the whole body is subjected does not exceed 0,5 m/s^2.

To order go to Discount-Equipment.com

https://truckmanualshub.com/

TO PURCHASE THIS PRODUCT PLEASE CONTACT US

Discount Equipment

Equipment Financing and
Extended Warranties Available

Discount-Equipment.com is your online resource for commercial and industrial quality parts and equipment sales.

561-964-4949

visit us on line @ www.discount-equipment.com

Select an option below to find your Equipment

Search by Manufacturer

Search by Product Type

Request a Quote

We sell worldwide for the brands: Genie, Terex, JLG, MultiQuip, Mikasa, Essick, Whiteman, Mayco, Toro Stone, Diamond Products, Generac Magnum, Airman, Haulotte, Barreto, Power Blanket, Nifty Lift, Atlas Copco, Chicago Pneumatic, Allmand, Miller Curber, Skyjack, Lull, Skytrak, Tsurumi, Husquvarna Target, Stow, Wacker, Sakai, Mi-T-M, Sullair, Basic, Dynapac, MBW, Weber, Bartell, Bennar Newman, Haulotte, Ditch Runner, Menegotti, Morrison, Contec, Buddy, Crown, Edco, Wyco, Bomag, Laymor, EZ Trench, Bil-Jax, F.S. Curtis, Gehl Pavers, Heli, Honda, ICS/PowerGrit, IHI, Partner, Imer, Clipper, MMD, Koshin, Rice, CH&E, General Equipment ,Amida, Coleman, NAC, Gradall, Square Shooter, Kent, Stanley, Tamco, Toku, Hatz, Kohler, Robin, Wisconsin, Northrock, Oztec, Toker TK, Rol-Air, APT, Wylie, Ingersoll Rand / Doosan, Innovatech, Con X, Ammann, Mecalac, Makinex, Smith Surface Prep,Small Line, Wanco, Yanmar

https://truckmanualshub.com/

JLG®

An Oshkosh Corporation Company

Discount Equipment

www.Discount-Equipment.com

To order go to Discount-Equipment.com